SECTION AV

AUDIO VISUAL, NAVIGATION & TELEPHONE SYSTEM

CONTENTS

PRECAUTIONS

PFP:00001

Precautions for Supplemental Restraint System (SRS) “AIR BAG” and “SEAT BELT PRE-TENSIONER”

AKS007X5

The Supplemental Restraint System such as “AIR BAG” and “SEAT BELT PRE-TENSIONER”, used along with a front seat belt, helps to reduce the risk or severity of injury to the driver and front passenger for certain types of collision. This system includes seat belt switch inputs and dual stage front air bag modules. The SRS system uses the seat belt switches to determine the front air bag deployment, and may only deploy one front air bag, depending on the severity of a collision and whether the front occupants are belted or unbelted.
Information necessary to service the system safely is included in the SRS and SB section of this Service Manual.

WARNING:

- **To avoid rendering the SRS inoperative, which could increase the risk of personal injury or death in the event of a collision which would result in air bag inflation, all maintenance must be performed by an authorized NISSAN/INFINITI dealer.**
- **Improper maintenance, including incorrect removal and installation of the SRS, can lead to personal injury caused by unintentional activation of the system. For removal of Spiral Cable and Air Bag Module, see the SRS section.**
- **Do not use electrical test equipment on any circuit related to the SRS unless instructed to in this Service Manual. SRS wiring harnesses can be identified by yellow and/or orange harnesses or harness connectors.**

PREPARATION

PFP:00002

Commercial Service Tools

AKS007VR

Tool name	Description
Power tool 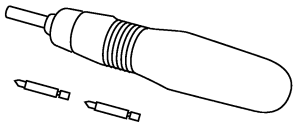 PBIC0191E	Loosening bolts and nuts

AUDIO

PFP:28111

Component Parts and Harness Connector Location

AKS007I1

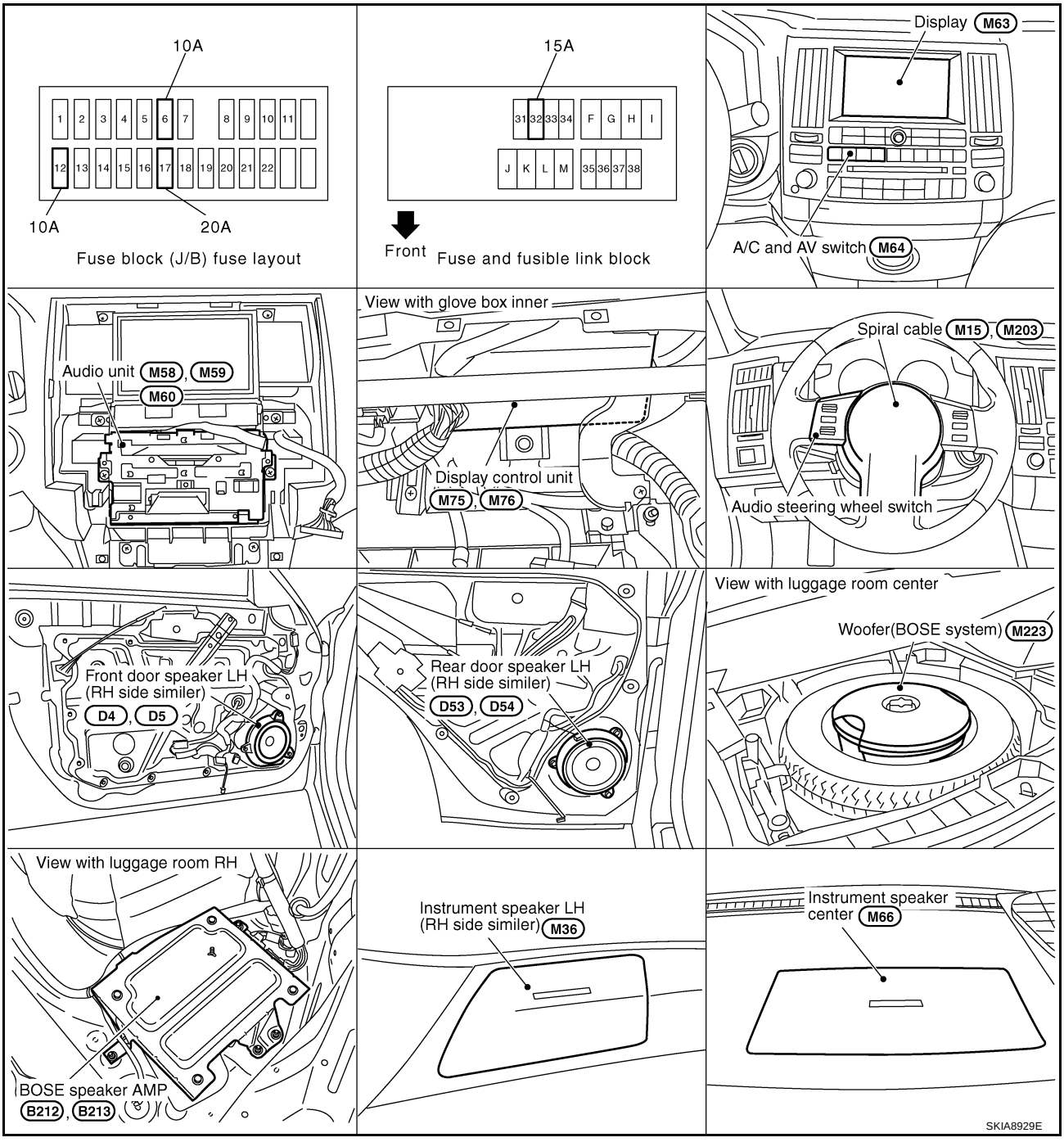

System Description

AKS005T3

BASE SYSTEM

Refer to Owner's Manual for audio system operating instructions.
Power is supplied at all times

- through 15A fuse (No. 32, located in the fuse and fusible link block)
- to audio unit terminal 6
- to A/C and AV switch terminal 1
- to display unit terminal 1 and
- to option connector–2 for satellite radio receiver terminal 12.

With the ignition switch in the ACC or ON position, power is supplied

- through 10A fuse [No. 6, located in the fuse block (J/B)]
- to audio unit terminal 10
- to A/C and AV switch terminal 2
- to display unit terminal 2 and
- to option connector–2 for satellite radio receiver terminal 11.

Ground is supplied through the case of the audio unit.
Ground is also supplied

- to A/C and AV switch terminal 5 and
- to display unit terminal 6 and 15
- through body ground M35, M45 and M85,
- to option connector–2 for satellite radio receiver terminal 10
- through body ground B203 and B210.

Audio unit, A/C and audio controller are connected by FPC (Flexible Print Circuit).
A/C and audio controller integrates A/C switches and audio switches.
When A/C and audio controller is pushed to audio switch, it sends audio signal to audio unit. Then audio signals are supplied

- through audio unit terminals 1, 2, 3, 4, 13, 14, 15, and 16
- to terminals 1 and 2 of front door speaker LH and RH
- to terminals 1 and 2 of rear door speaker LH and RH and
- to terminals 1 and 2 of instrument speaker LH and RH.

When one of audio steering wheel switch is pushed to volume up, seek up, or mode ON, resistance in steering switch circuit changes depending on which button is pushed.
When one of audio steering wheel switch is pushed to volume down, seek down, or power ON, resistance in audio steering wheel switch circuit changes depending on which button is pushed.

BOSE SYSTEM

Refer to Owner's Manual for audio system operating instructions.
Power is supplied at all times

- through 15A fuse (No. 32, located in the fuse and fusible link block)
- to audio unit terminal 6
- to woofer terminal 1
- to A/C and AV switch terminal 1
- to display control unit terminal 1 (with navigation system) or display unit terminal 1 (without navigation system) and
- to option connector–2 for satellite radio receiver terminal 12
- through 20A fuse [No.17, located in the fuse block (J/B)]
- to BOSE speaker amp. terminal 1.

With the ignition switch in the ACC or ON position, power is supplied

- through 10A fuse [No. 6, located in the fuse block (J/B)]
- to audio unit terminal 10
- to A/C and AV switch terminal 2

- to display control unit terminal 10 (with navigation system) or display unit terminal 2 (without navigation system) and
- to option connector–2 for satellite radio receiver terminal 11.

Ground is supplied through the case of the audio unit.
Ground is also supplied

- to BOSE speaker amp. terminal 17
- to woofer terminal 2 and
- to option connector–2 for satellite radio receiver terminal 10
- through body ground B203 and B210,
- to A/C and AV switch terminal 5
- to display control unit terminal 3 and 13 (with navigation system)
- to display terminal 1 (with navigation system) and
- to display unit terminal 6 and 15 (without navigation system)
- through body ground M35, M45 and M85.

Audio unit, A/C and audio controller are connected by FPC (Flexible Print Circuit).
A/C and audio controller integrates A/C switches and audio switches.
When A/C and audio controller is pushed to audio switch, it send audio signal to audio unit.
Then audio signals are supplied

- through audio unit terminals 1, 2, 3, 4, 13, 14, 15, and 16
- to BOSE speaker amp. terminals 23, 24, 25, 26, 27, 28, 29, and 30.

Audio signals are amplified by the BOSE speaker amp.
The amplified audio signals are supplied

- through BOSE speaker amp. terminals 2, 3, 4, 9,10,11,12, 13, 14, 15, 16, 18, 19 and 20
- to terminals 1 and 2 of front door speaker LH and RH
- to terminals 1 and 2 of rear door speaker LH and RH
- to terminals 1 and 2 of tweeter LH and RH
- to terminals 1 and 2 of instrument speaker LH, RH, and CENTER, and
- to terminals 7 and 8 of woofer.

When one of audio steering wheel switch is pushed to volume up, seek up, or mode ON, resistance in audio steering wheel switch circuit changes depending on which button is pushed.
When one of audio steering wheel switch is pushed to volume down, seek down, or power ON, resistance in audio steering wheel switch circuit changes depending on which button is pushed.

SPEED SENSITIVE VOLUME SYSTEM

Volume level of this system gone up and down automatically in proportion to the vehicle speed. And the control level can be selected by the customer.

Schematic - Base System -

AKS005T4

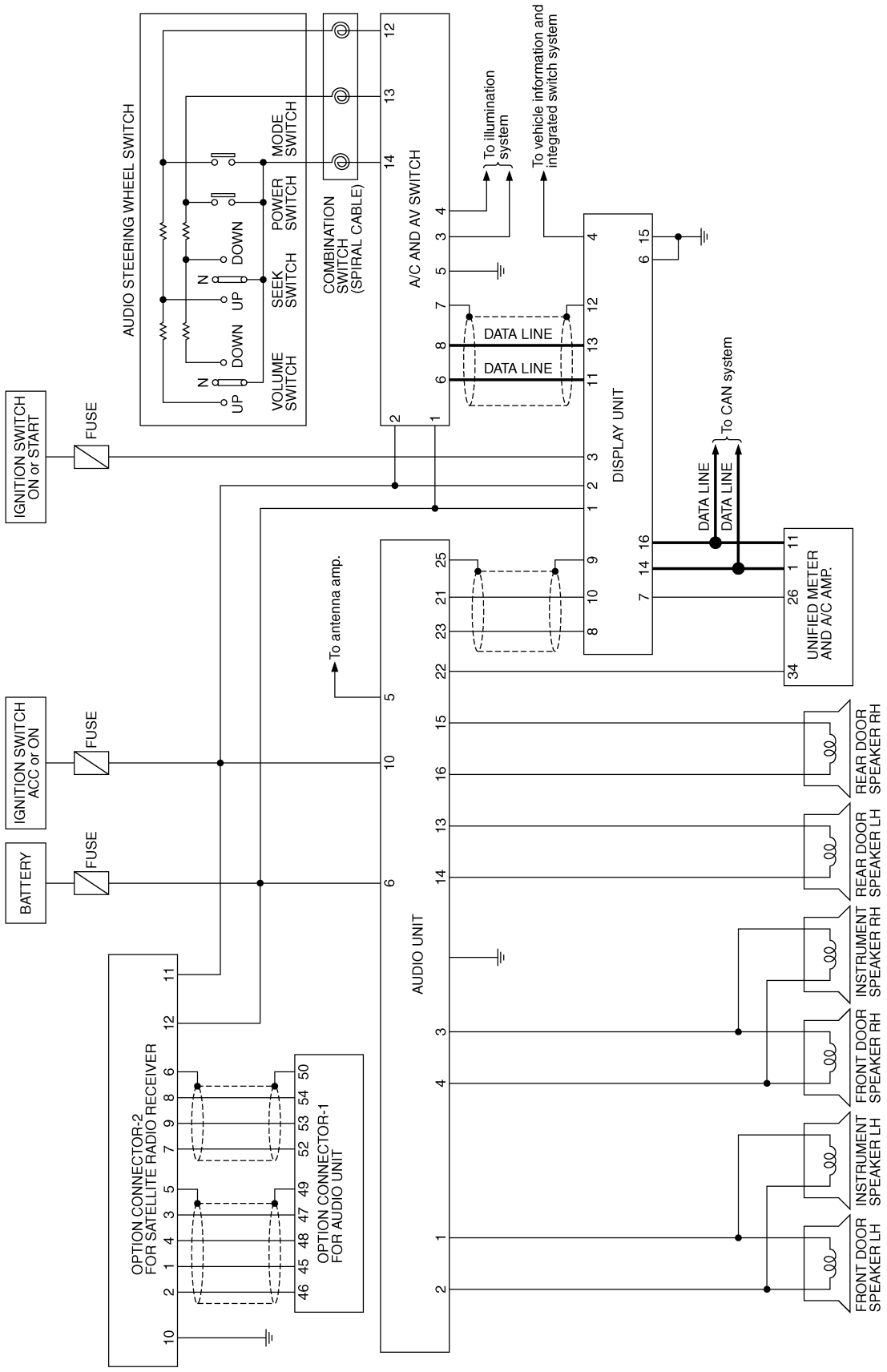

TKWM2069E

Wiring Diagram - AUDIO - / Base System

AKS007X2

AV-AUDIO-01

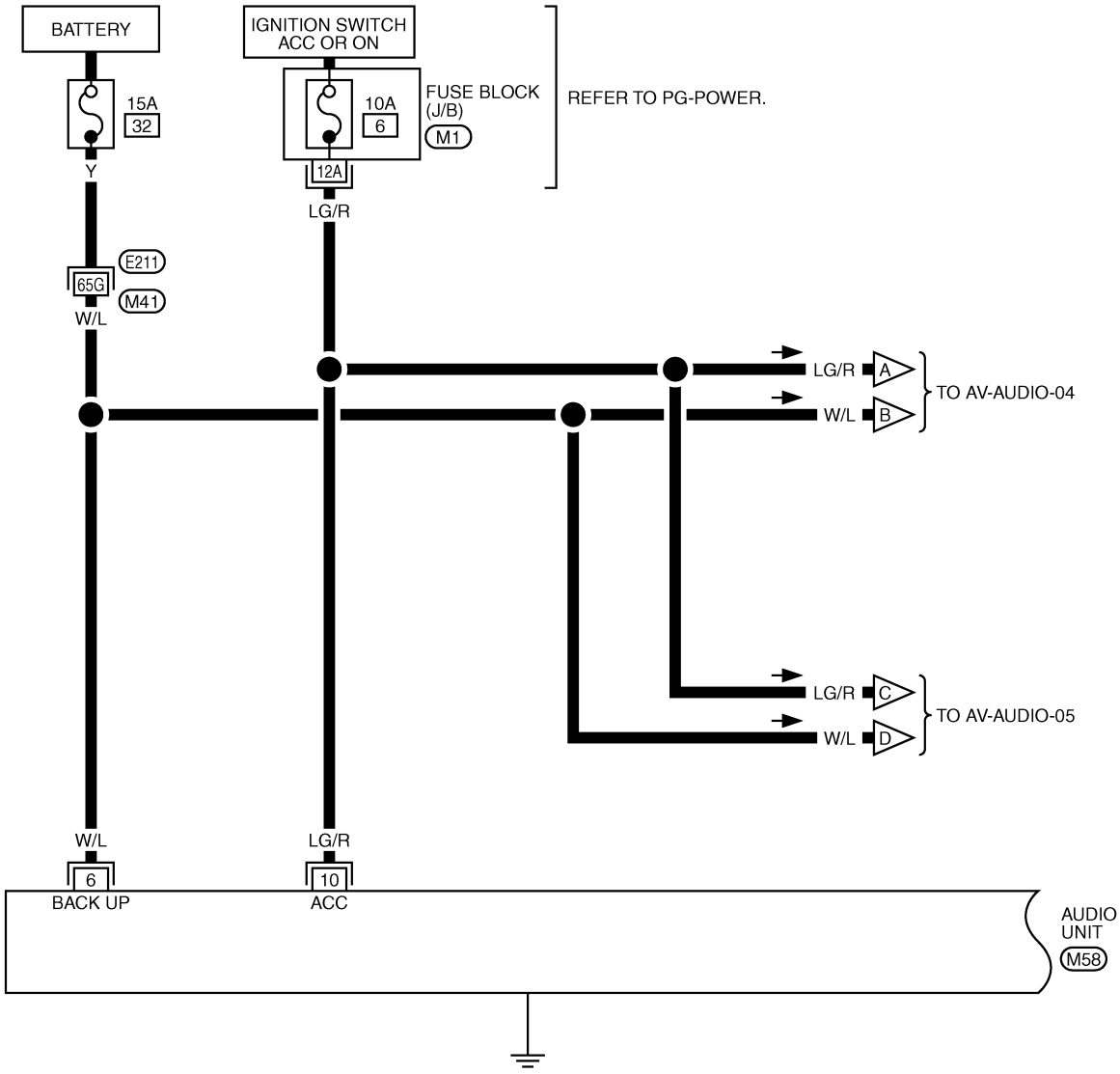

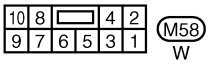

REFER TO THE FOLLOWING.

E211 -SUPER MULTIPLE JUNCTION (SMJ)

M1 -FUSE BLOCK-JUNCTION BOX (J/B)

TKWM2070E

AV-AUDIO-02

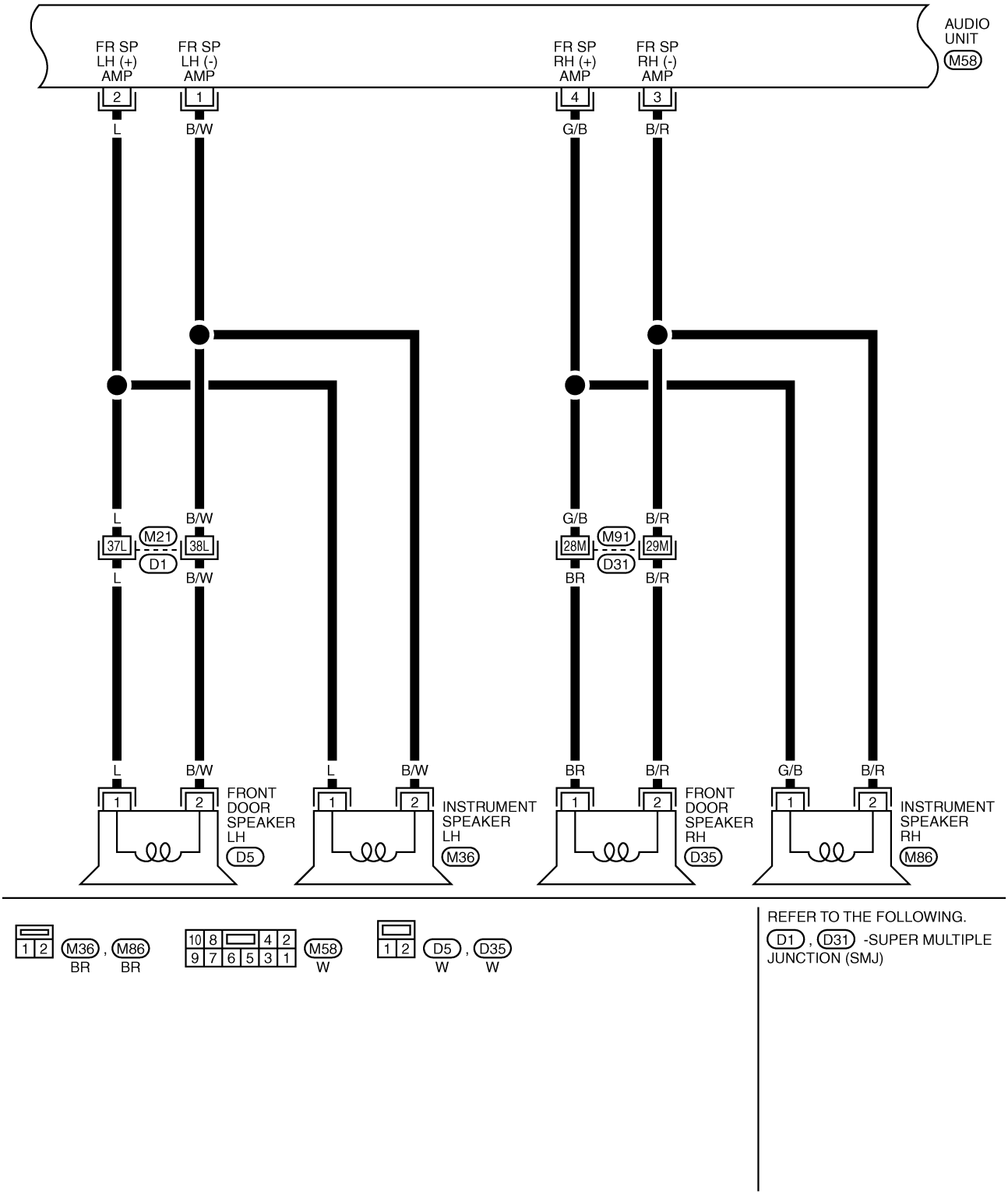
AUDIO UNIT
M58
FR SP LH (+) AMP
FR SP LH (-) AMP
FR SP RH (+) AMP
FR SP RH (-) AMP
2
1
4
3
L
B/W
G/B
B/R
M21
D1
37L
38L
M91
D31
28M
29M
BR
FRONT DOOR SPEAKER LH
D5
INSTRUMENT SPEAKER LH
M36
FRONT DOOR SPEAKER RH
D35
INSTRUMENT SPEAKER RH
M86
M36 , M86
BR BR
M58
W
D5 , D35
W W
REFER TO THE FOLLOWING.
D1 , D31 -SUPER MULTIPLE JUNCTION (SMJ)
TKWM2071E

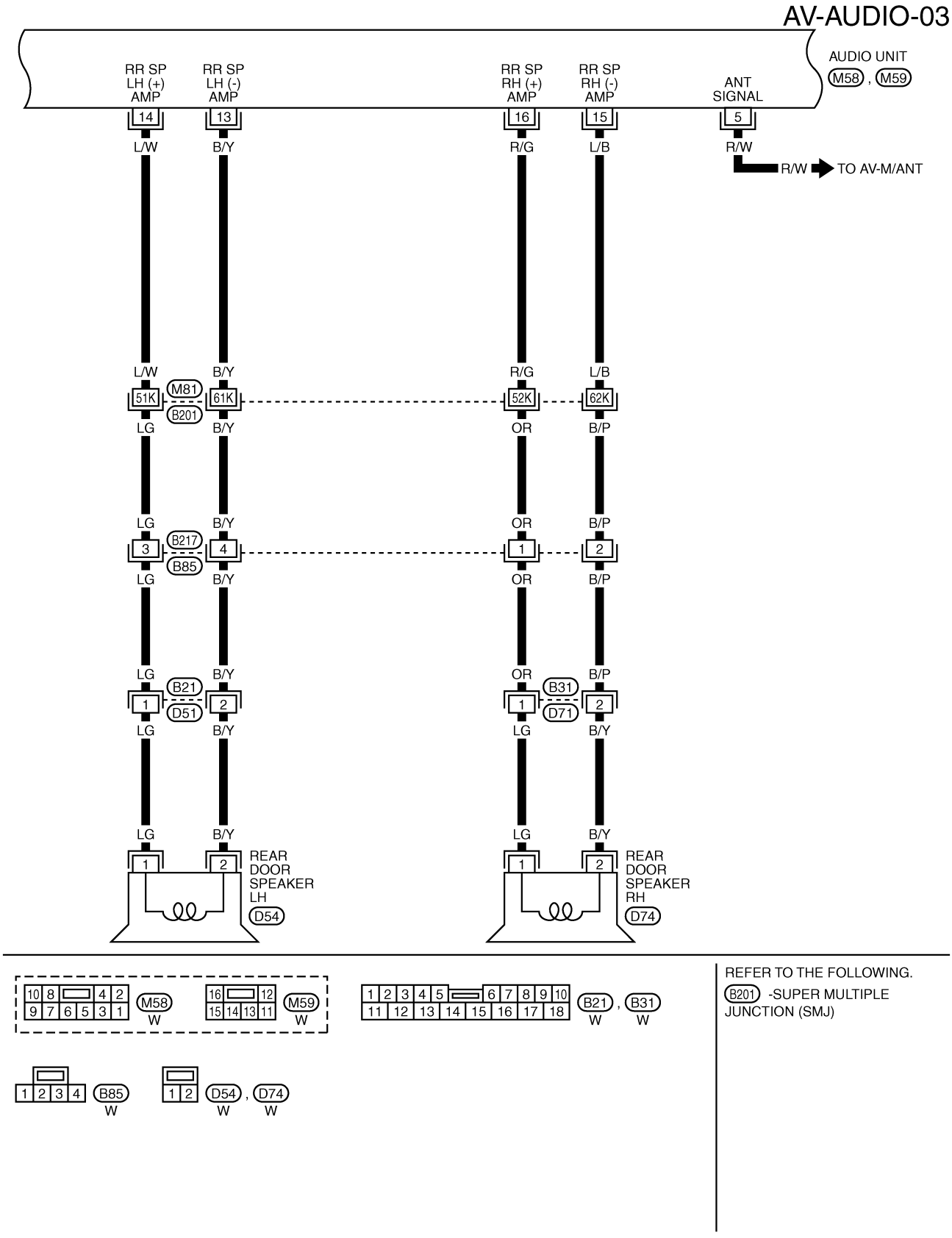
AV-AUDIO-03
AUDIO UNIT
M58 , M59
RR SP LH (+) AMP
RR SP LH (-) AMP
RR SP RH (+) AMP
RR SP RH (-) AMP
ANT SIGNAL
14
13
16
15
5
L/W
B/Y
R/G
L/B
R/W
R/W
TO AV-M/ANT
M81
B201
51K
61K
52K
62K
LG
B/Y
OR
B/P
B217
B85
3
4
1
2
B21
D51
B31
D71
REAR DOOR SPEAKER LH
D54
REAR DOOR SPEAKER RH
D74
M58
W
M59
W
B21 , B31
W
W
B85
W
D54 , D74
W
W
REFER TO THE FOLLOWING.
B201 -SUPER MULTIPLE JUNCTION (SMJ)
TKWM2072E

AV-AUDIO-04

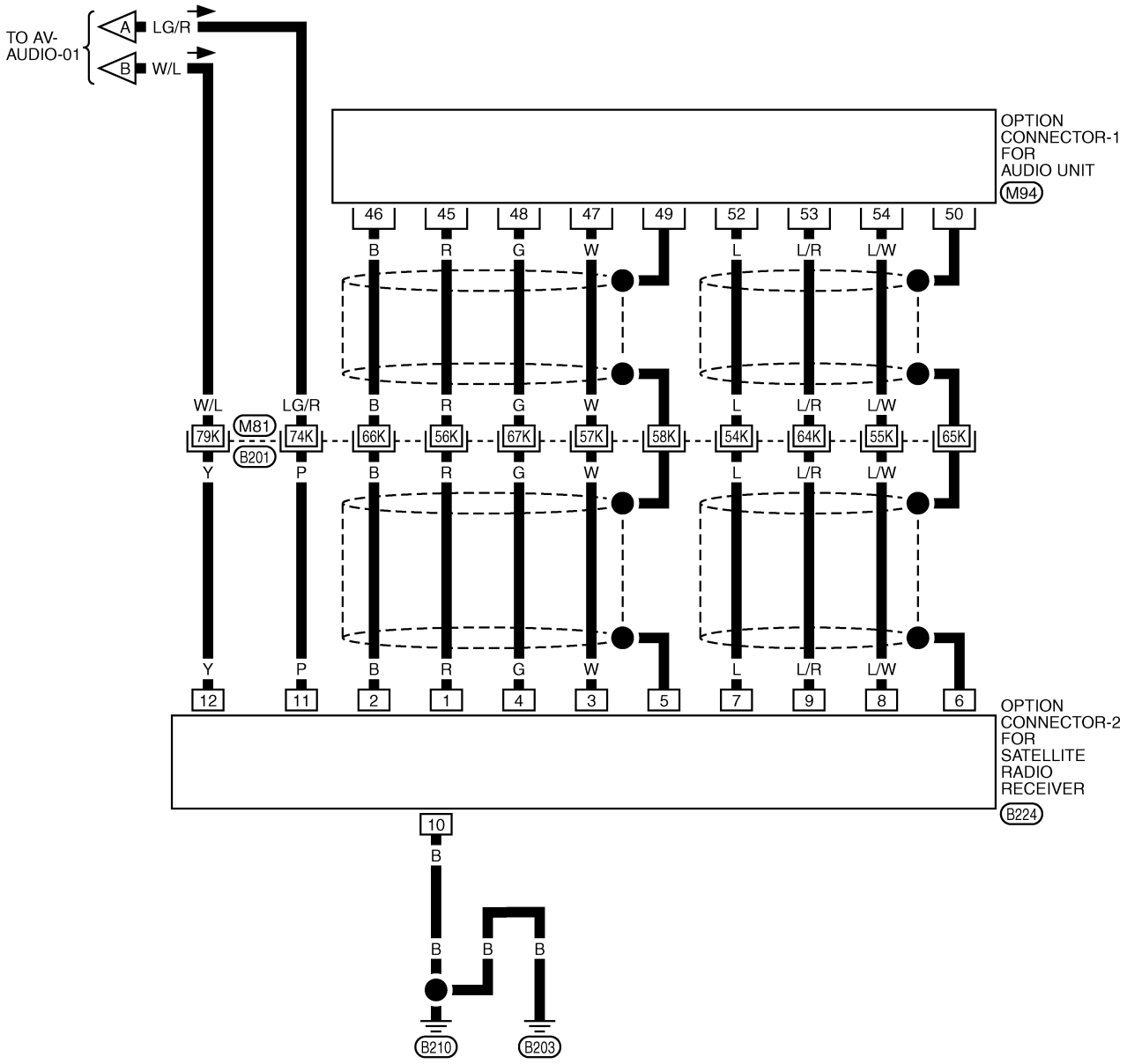

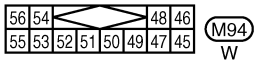

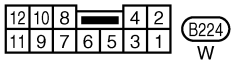

REFER TO THE FOLLOWING.

B201 -SUPER MULTIPLE JUNCTION (SMJ)

TKWH0257E

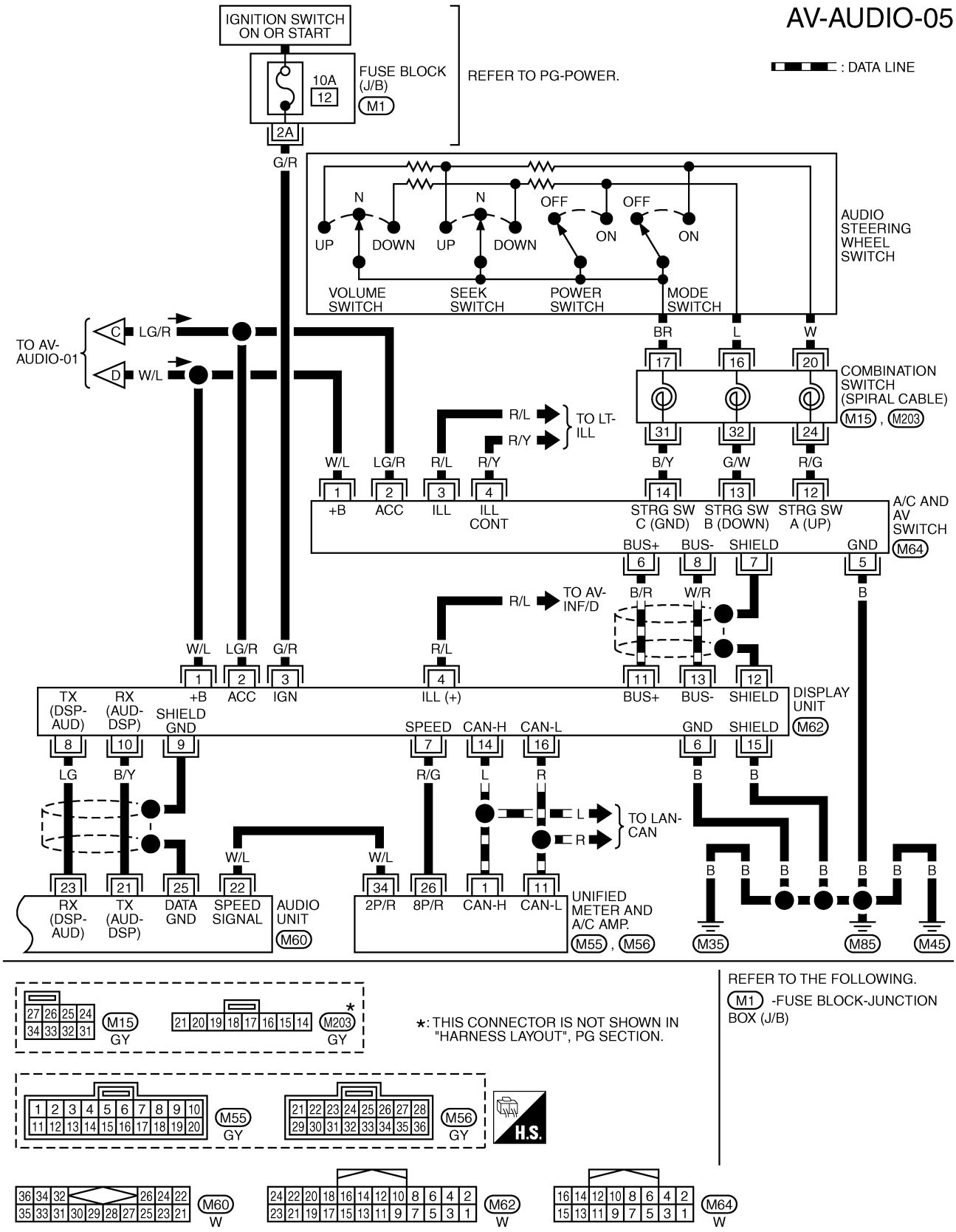
AV-AUDIO-05
: DATA LINE
IGNITION SWITCH ON OR START
FUSE BLOCK (J/B)
M1
10A
12
2A
REFER TO PG-POWER.
G/R
AUDIO STEERING WHEEL SWITCH
UP
DOWN
N
OFF
ON
VOLUME SWITCH
SEEK SWITCH
POWER SWITCH
MODE SWITCH
TO AV-AUDIO-01
LG/R
W/L
BR
L
W
COMBINATION SWITCH (SPIRAL CABLE)
M15 , M203
TO LT-ILL
R/L
R/Y
B/Y
G/W
R/G
+B
ACC
ILL
ILL CONT
STRG SW C (GND)
STRG SW B (DOWN)
STRG SW A (UP)
A/C AND AV SWITCH
M64
BUS+
BUS-
SHIELD
GND
B/R
W/R
TO AV-INF/D
IGN
ILL (+)
DISPLAY UNIT
M62
TX (DSP-AUD)
RX (AUD-DSP)
SHIELD GND
SPEED
CAN-H
CAN-L
LG
TO LAN-CAN
RX (DSP-AUD)
TX (AUD-DSP)
DATA GND
SPEED SIGNAL
AUDIO UNIT
M60
2P/R
8P/R
UNIFIED METER AND A/C AMP.
M55 , M56
M35
M85
M45
M15
GY
M203
*: THIS CONNECTOR IS NOT SHOWN IN "HARNESS LAYOUT", PG SECTION.
REFER TO THE FOLLOWING.
M1 -FUSE BLOCK-JUNCTION BOX (J/B)
H.S.
M60
W
M62
W
M64
W
TKWM2073E

Schematic - BOSE System - With Navigation System

AKS007X3

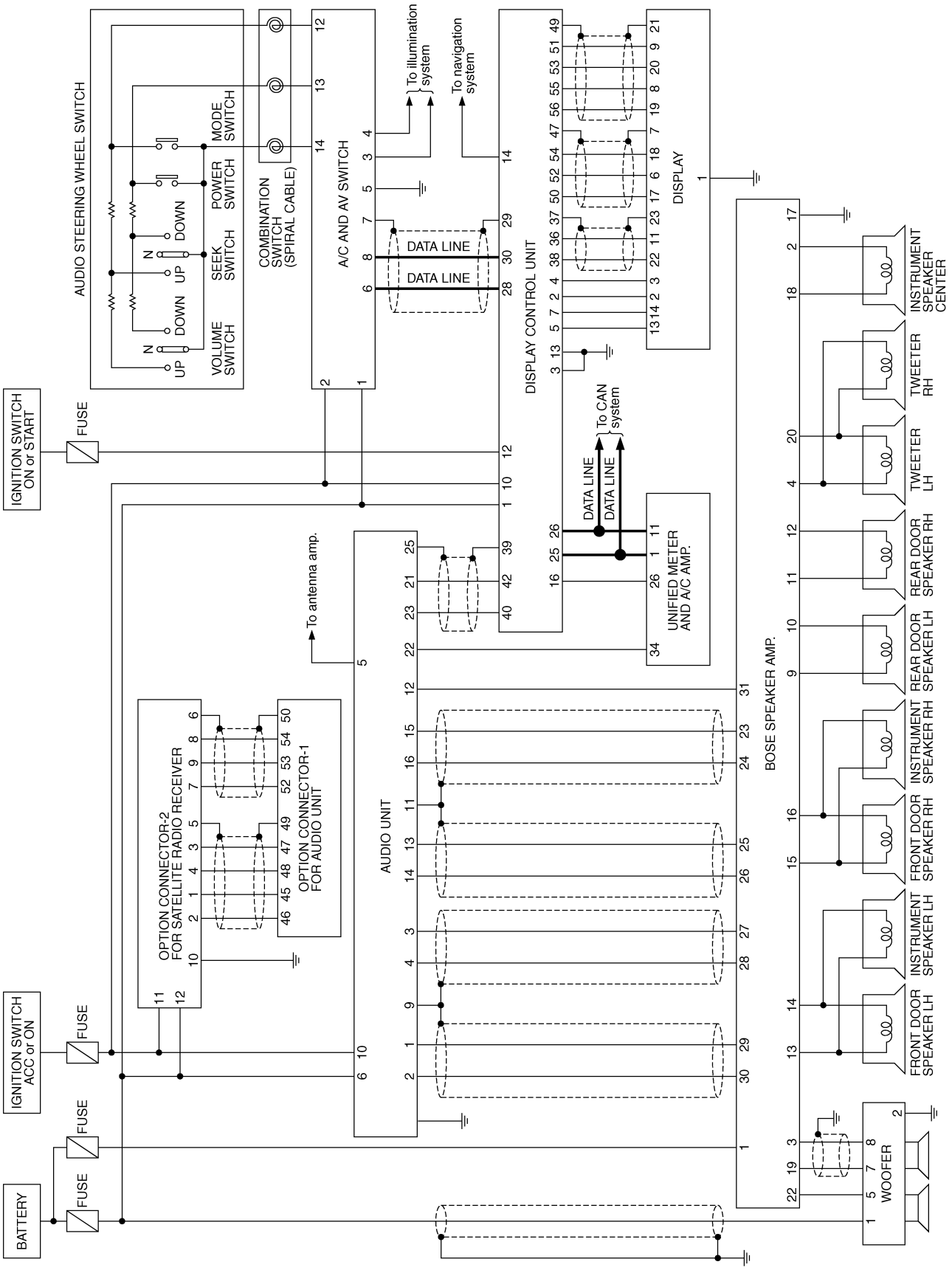

TKWH0258E

Wiring Diagram – AUDIO – / BOSE System With Navigation System

AKS00CNK

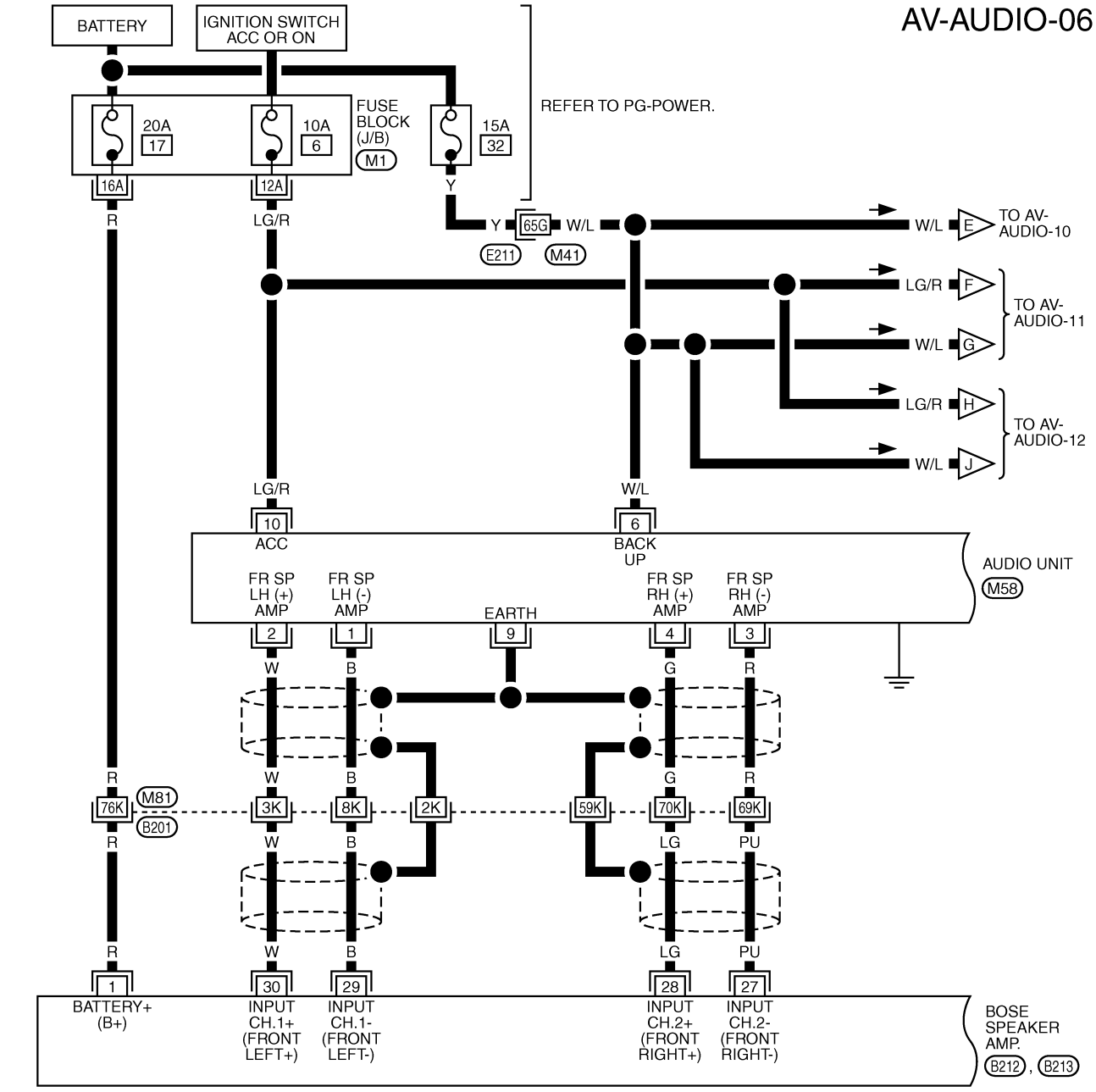

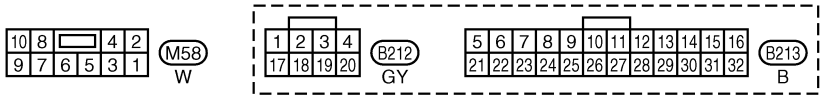

REFER TO THE FOLLOWING.

E211 , B201 -SUPER MULTIPLE JUNCTION (SMJ)

M1 -FUSE BLOCK-JUNCTION BOX (J/B)

TKWM2074E

AV-AUDIO-07

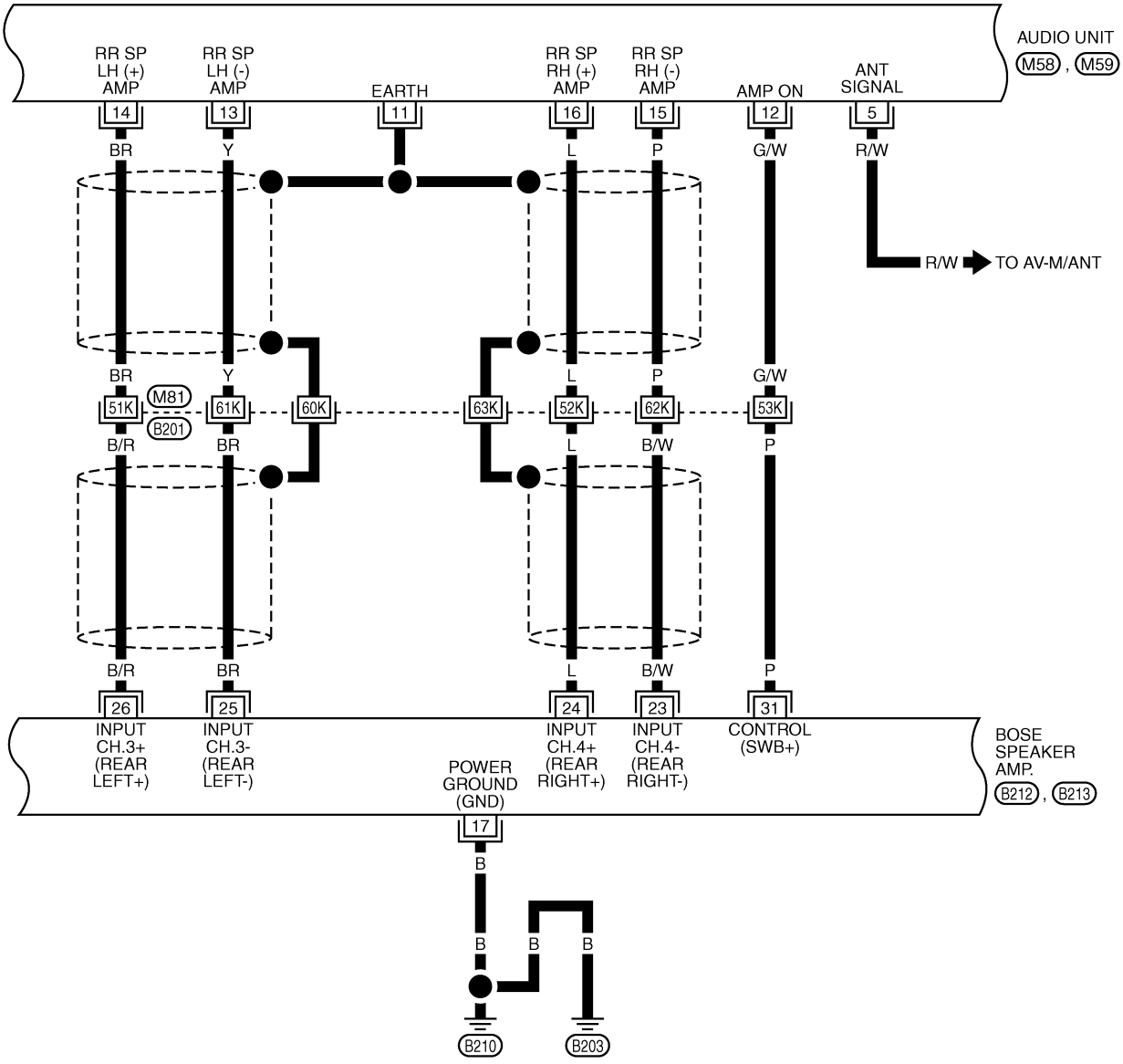

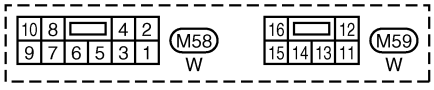

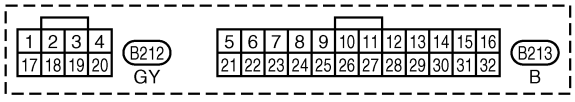

REFER TO THE FOLLOWING.

B201 -SUPER MULTIPLE JUNCTION (SMJ)

TKWM2075E

AV-AUDIO-08

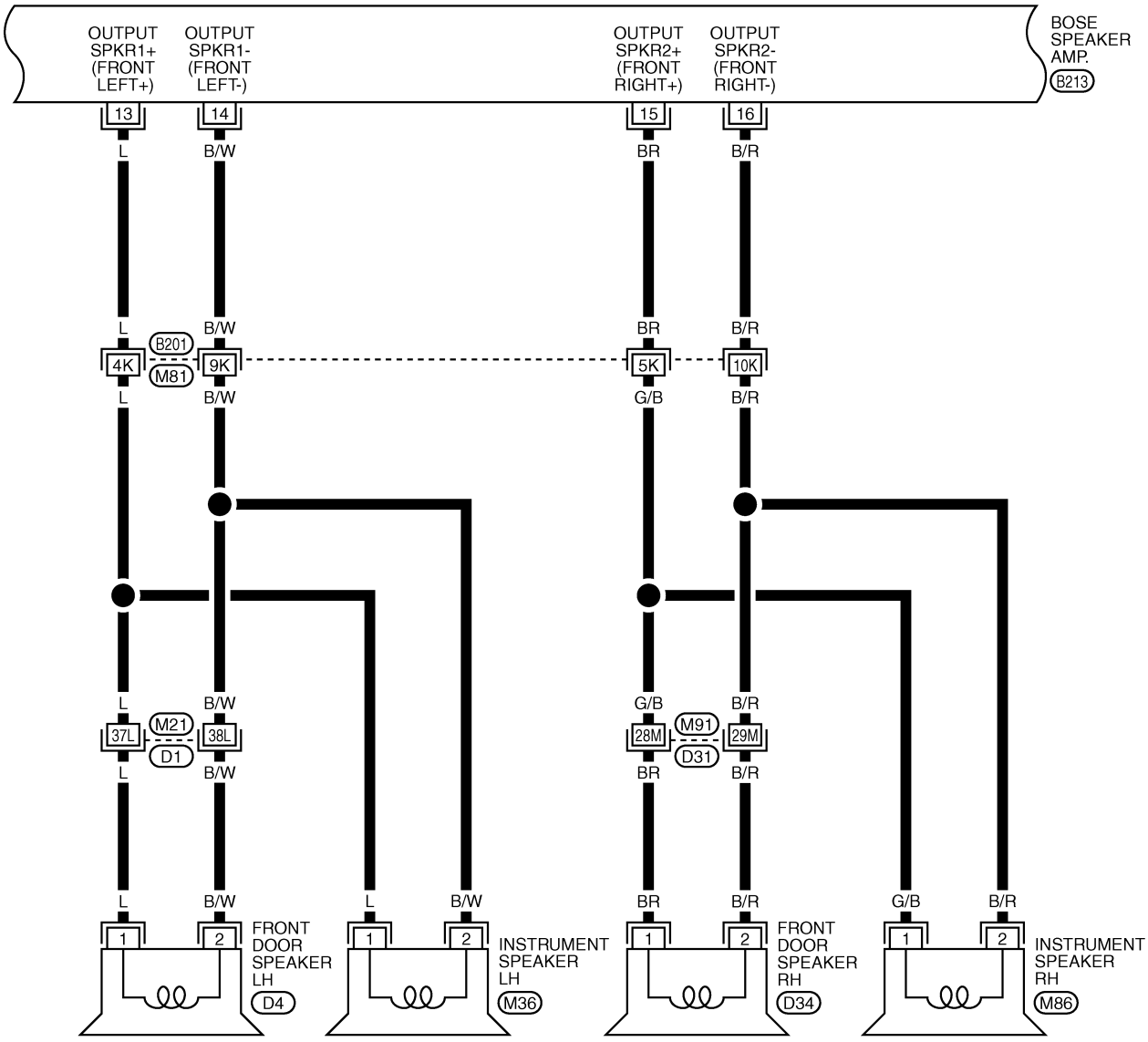

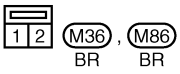

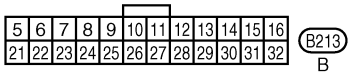

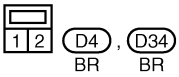

REFER TO THE FOLLOWING.
B201 , D1 , D31 -SUPER MULTIPLE JUNCTION (SMJ)

TKWM2076E

AV-AUDIO-09

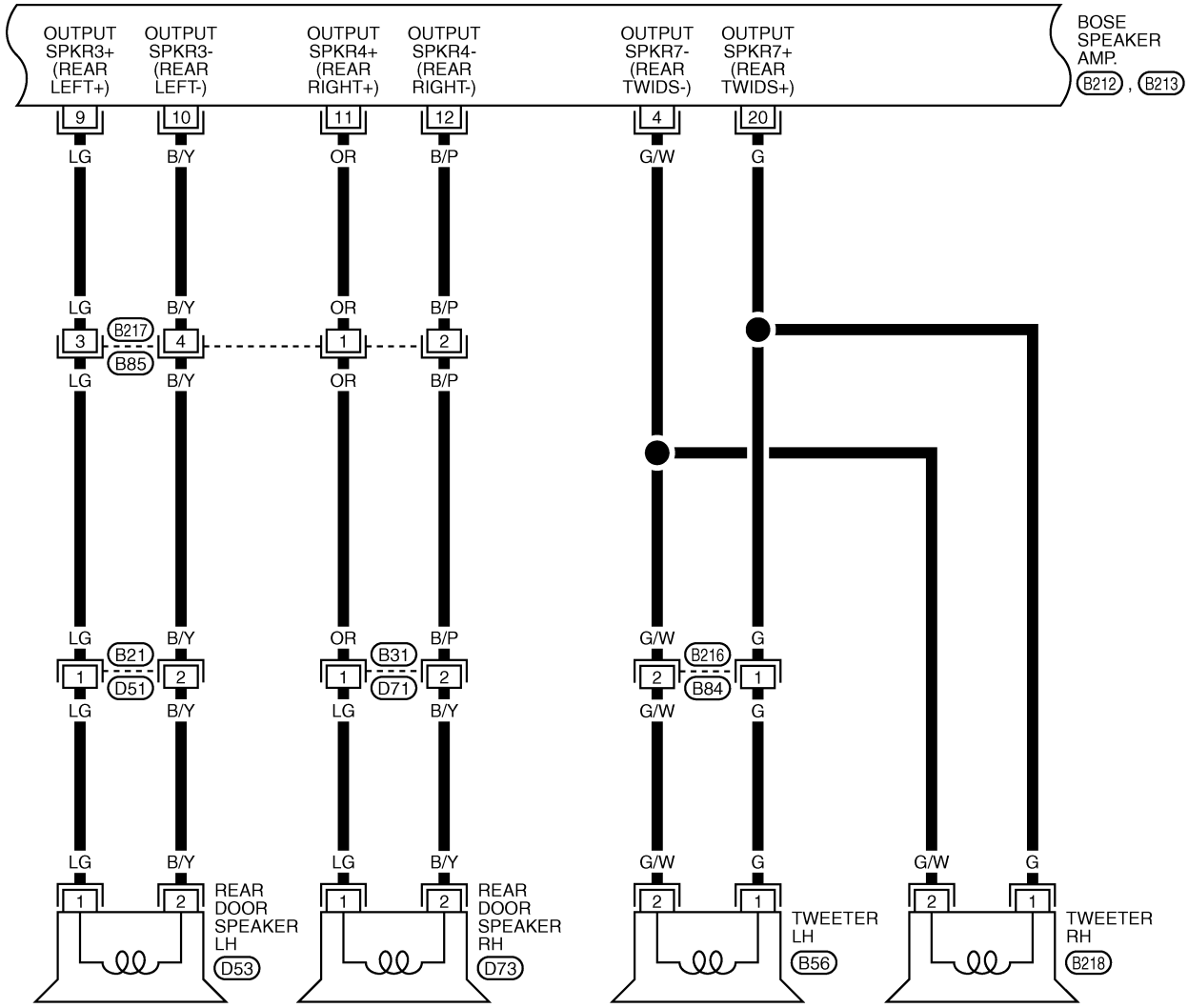

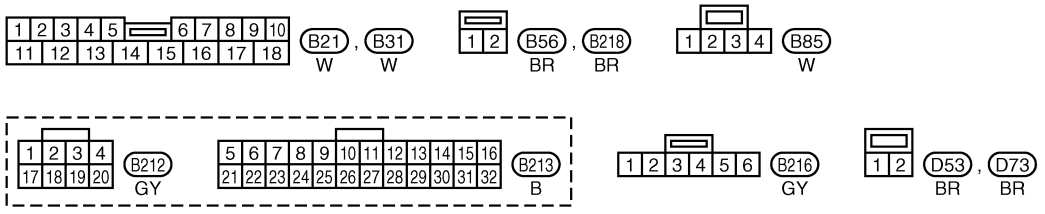

TKWM2077E

AV-AUDIO-10

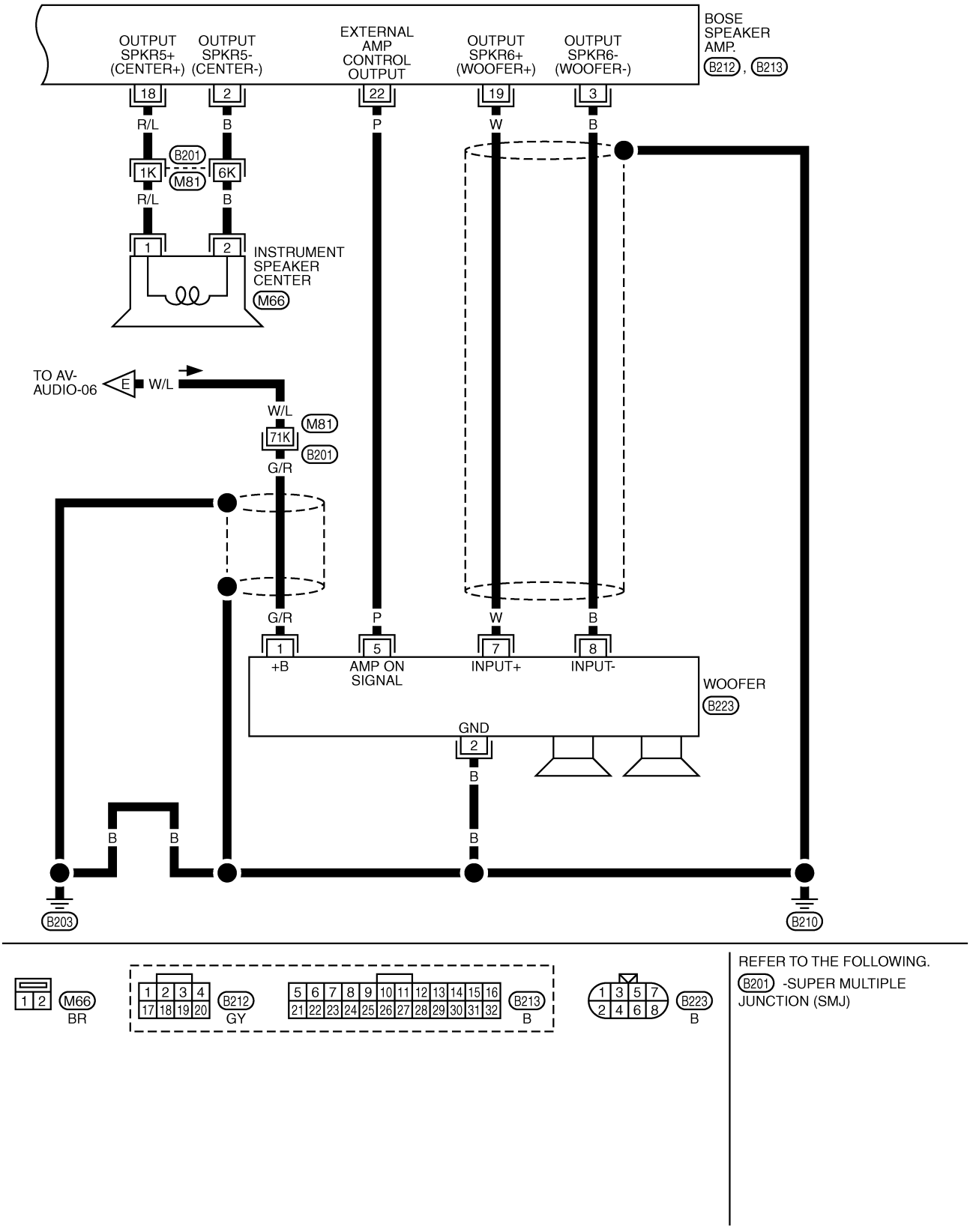

REFER TO THE FOLLOWING.
B201 -SUPER MULTIPLE JUNCTION (SMJ)

TKWM2078E

AV-AUDIO-11

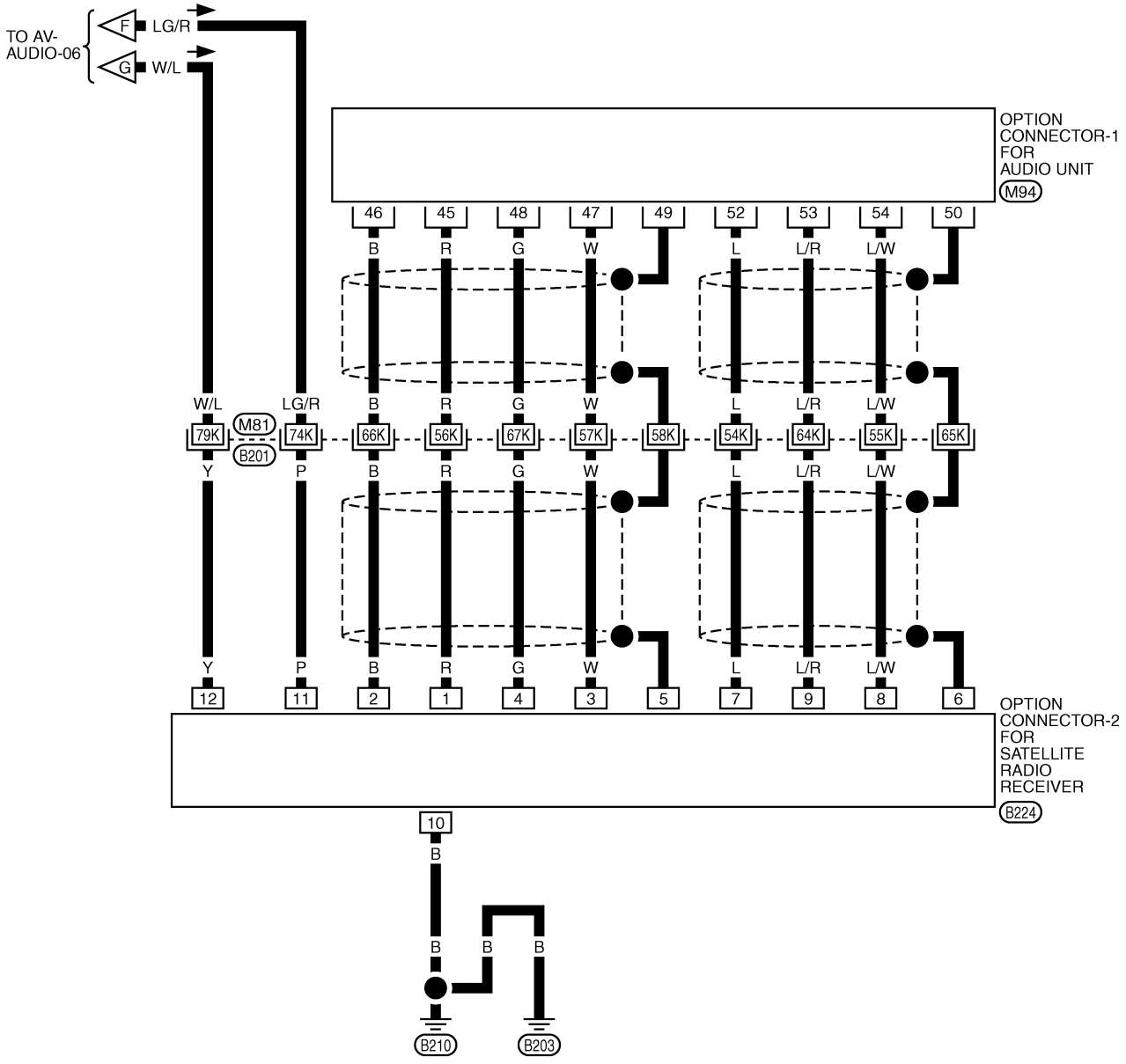

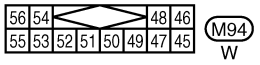

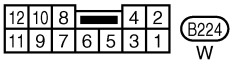

REFER TO THE FOLLOWING.
B201 -SUPER MULTIPLE JUNCTION (SMJ)

TKWM2079E

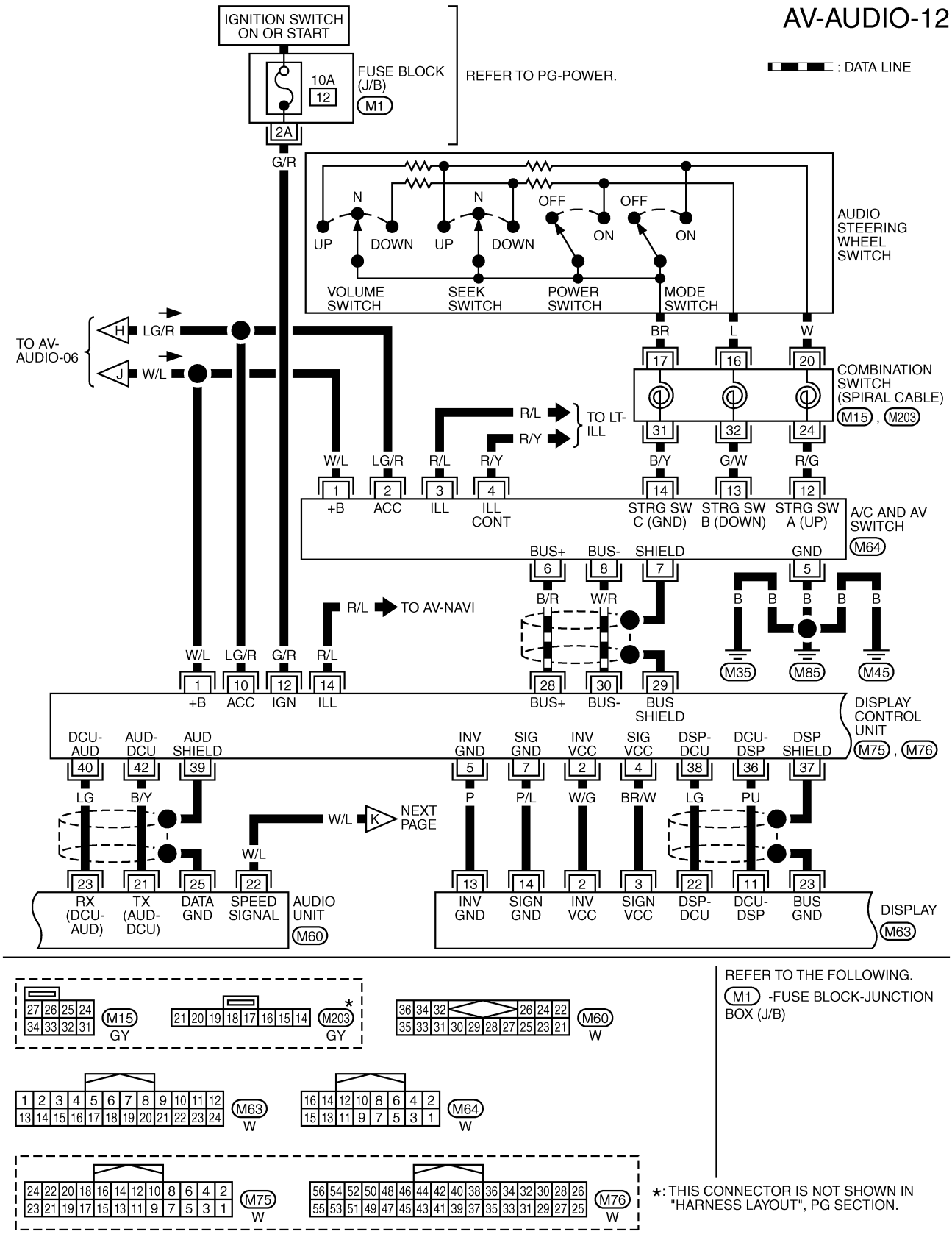
AV-AUDIO-12
: DATA LINE
IGNITION SWITCH ON OR START
FUSE BLOCK (J/B)
M1
10A
12
2A
REFER TO PG-POWER.
G/R
AUDIO STEERING WHEEL SWITCH
UP
DOWN
N
OFF
ON
VOLUME SWITCH
SEEK SWITCH
POWER SWITCH
MODE SWITCH
TO AV-AUDIO-06
H
J
LG/R
W/L
BR
L
W
COMBINATION SWITCH (SPIRAL CABLE)
M15
M203
R/L
R/Y
TO LT-ILL
B/Y
G/W
R/G
+B
ACC
ILL
ILL CONT
STRG SW C (GND)
STRG SW B (DOWN)
STRG SW A (UP)
A/C AND AV SWITCH
M64
BUS+
BUS-
SHIELD
GND
B/R
W/R
TO AV-NAVI
IGN
M35
M85
M45
DISPLAY CONTROL UNIT
M75
M76
DCU-AUD
AUD-DCU
AUD SHIELD
INV GND
SIG GND
INV VCC
SIG VCC
DSP-DCU
DCU-DSP
DSP SHIELD
LG
P
P/L
W/G
BR/W
PU
NEXT PAGE
RX (DCU-AUD)
TX (AUD-DCU)
DATA GND
SPEED SIGNAL
AUDIO UNIT
M60
SIGN GND
SIGN VCC
BUS GND
DISPLAY
M63
REFER TO THE FOLLOWING.
M1 -FUSE BLOCK-JUNCTION BOX (J/B)
GY
W
M75
M76
*: THIS CONNECTOR IS NOT SHOWN IN "HARNESS LAYOUT", PG SECTION.
TKWM2080E

AV-AUDIO-13

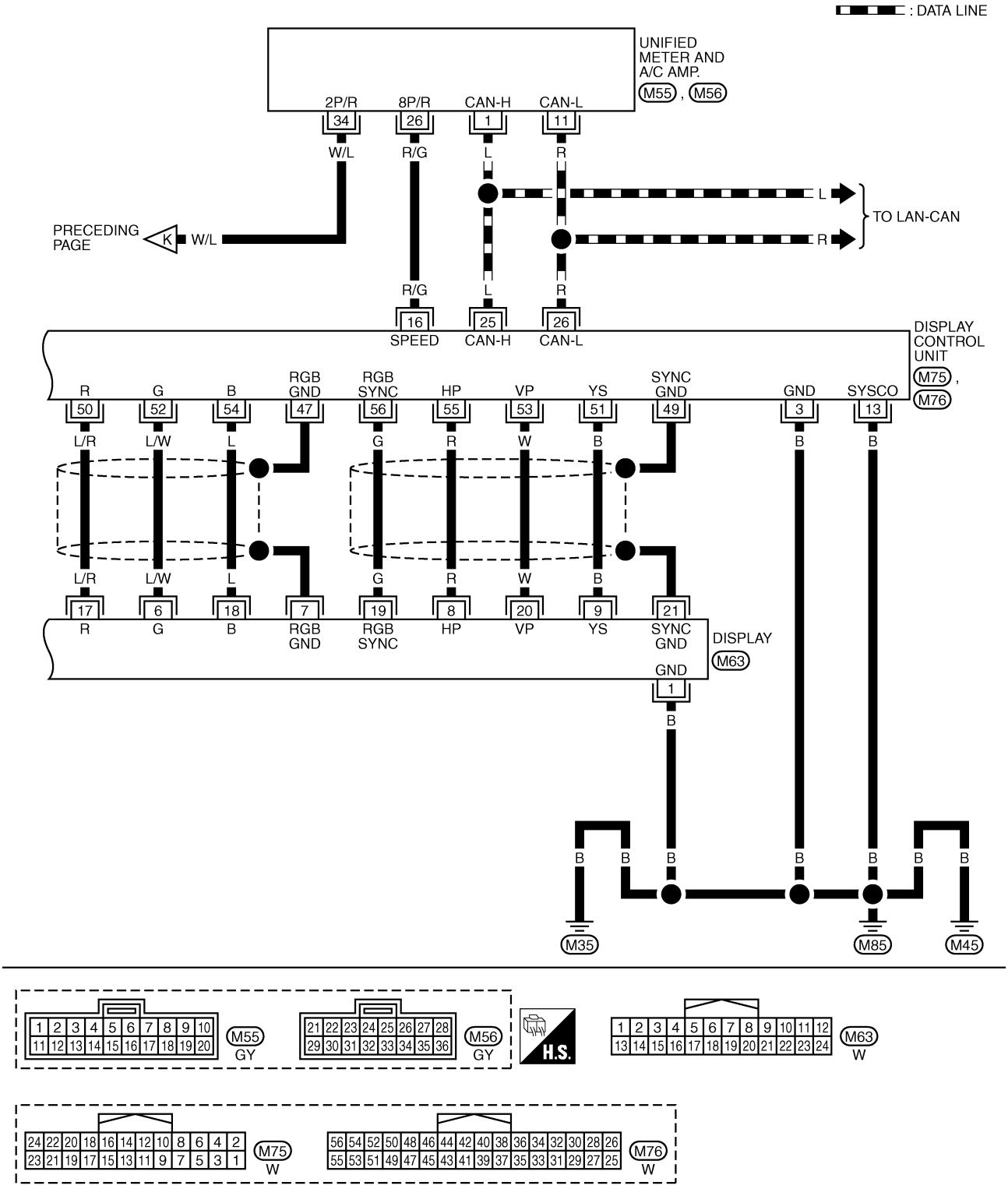

TKWM2081E

Schematic - BOSE System - Without Navigation System

AKS00CNL

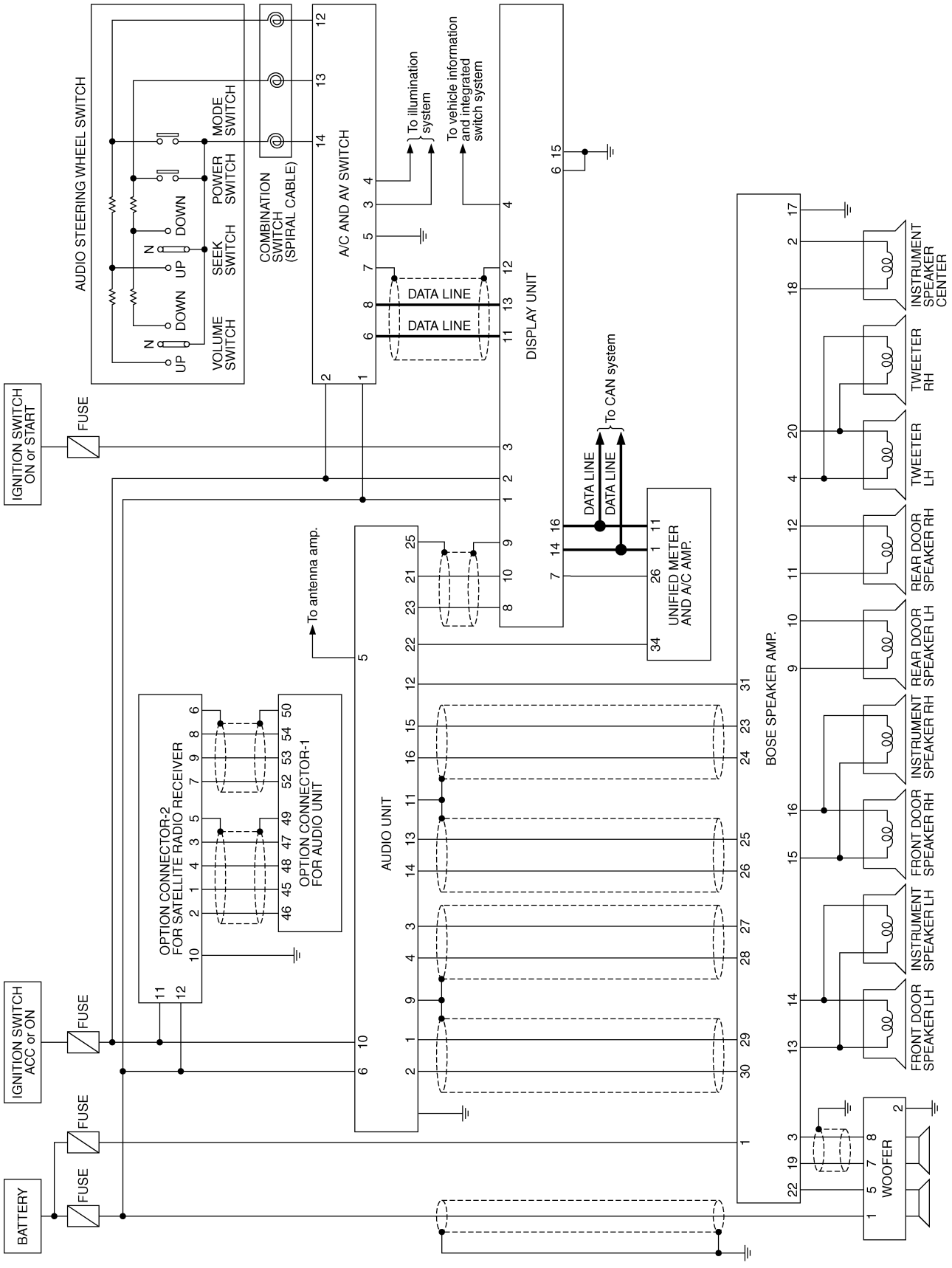

TKWH0259E

Wiring Diagram – AUDIO – / BOSE System Without Navigation System

AKS00CNM

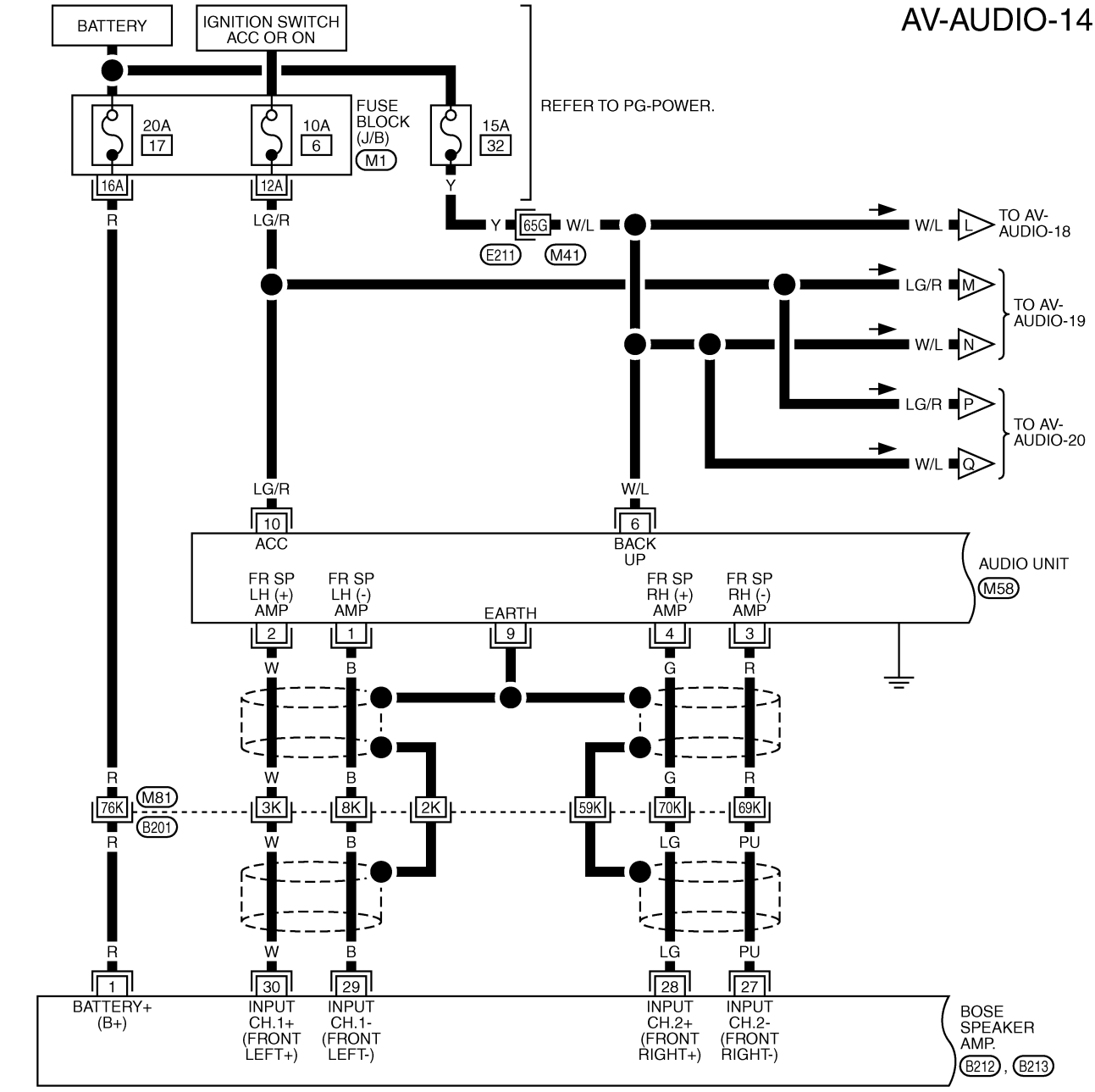

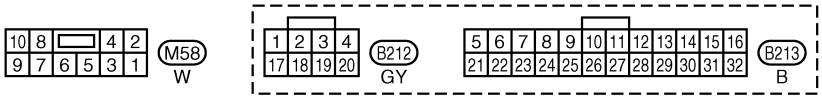

REFER TO THE FOLLOWING.

E211 , B201 -SUPER MULTIPLE JUNCTION (SMJ)

M1 -FUSE BLOCK-JUNCTION BOX (J/B)

TKWM2485E

AV-AUDIO-15

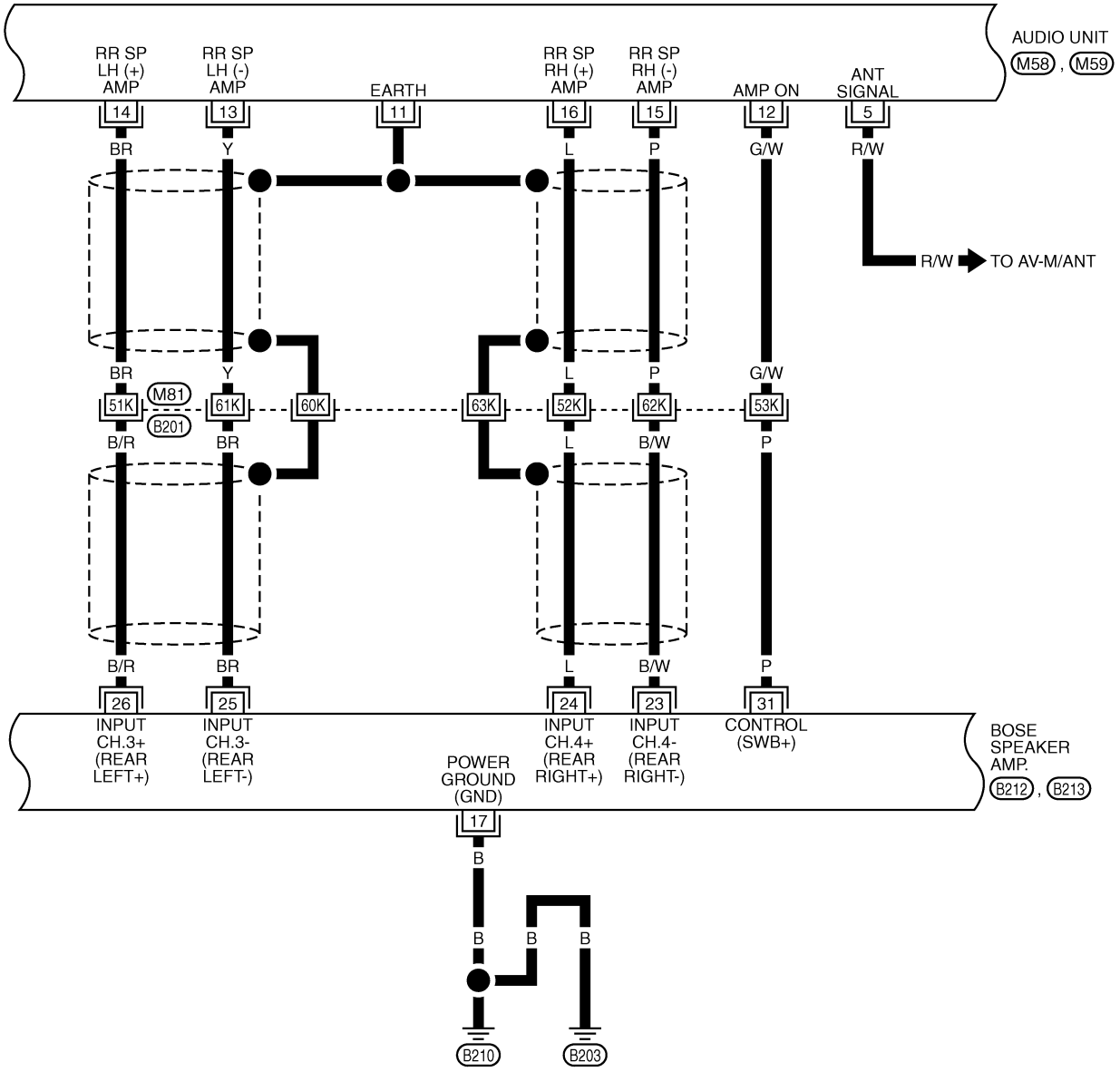

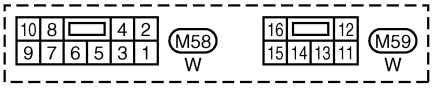

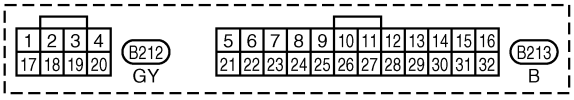

REFER TO THE FOLLOWING.
B201 -SUPER MULTIPLE JUNCTION (SMJ)

TKWM2486E

AV-AUDIO-16

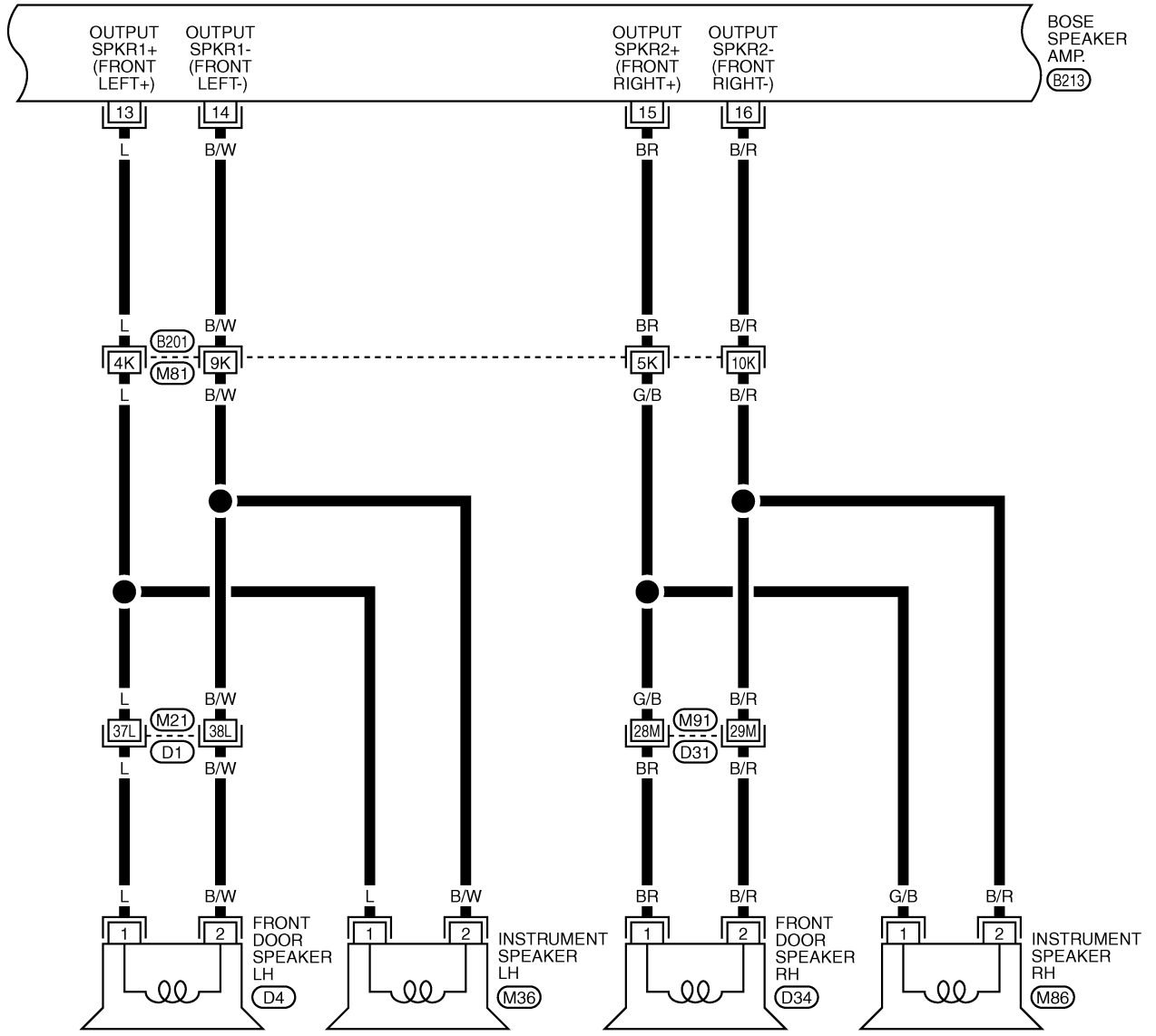

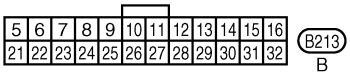

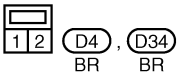

REFER TO THE FOLLOWING.
B201 , D1 , D31 -SUPER MULTIPLE JUNCTION (SMJ)

TKWM2487E

AV-AUDIO-17

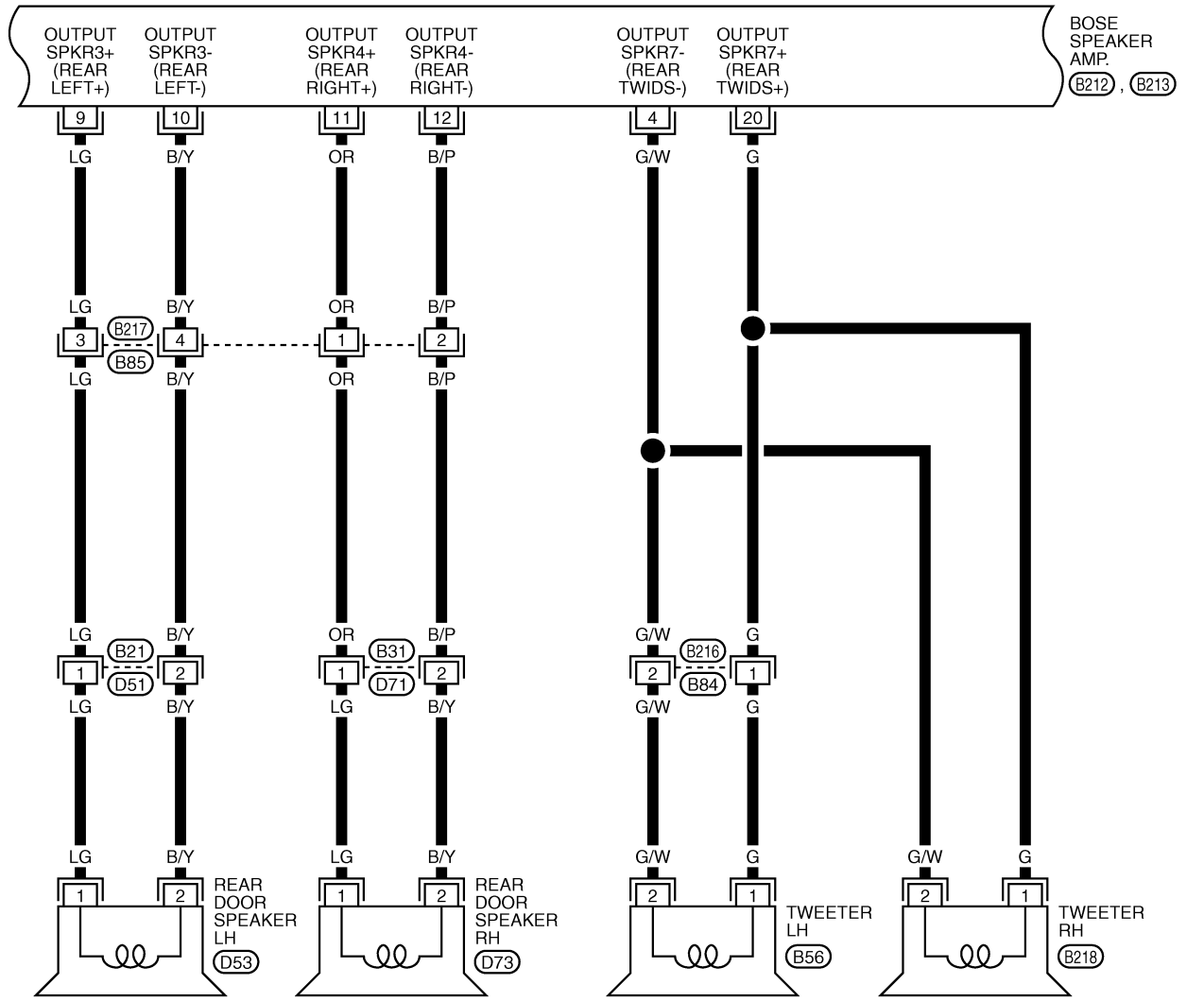

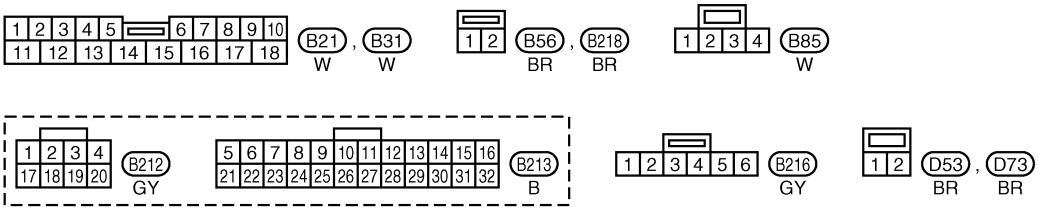

TKWM2488E

AV-AUDIO-18

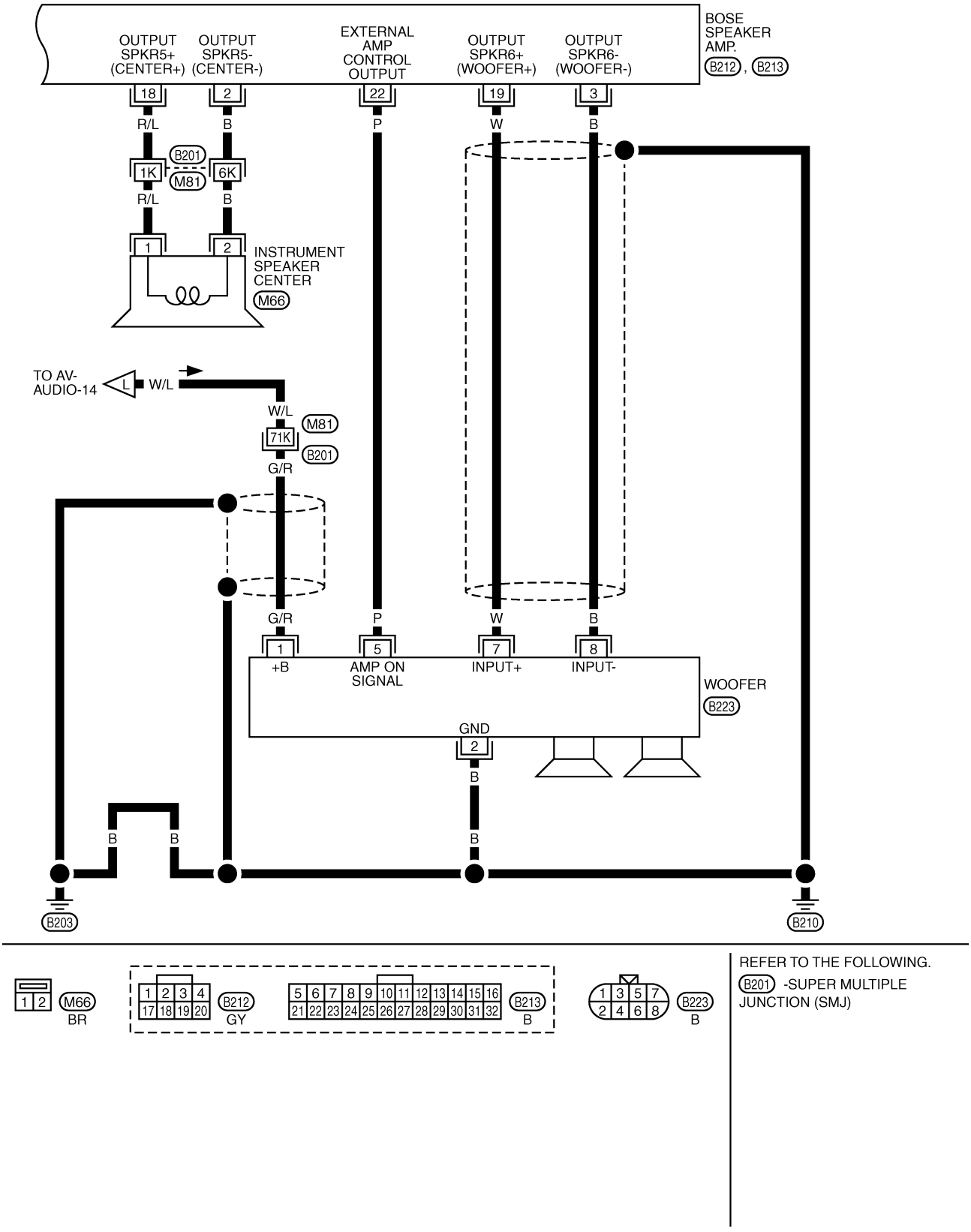

REFER TO THE FOLLOWING.

B201 -SUPER MULTIPLE JUNCTION (SMJ)

TKWM2489E

AV-AUDIO-19

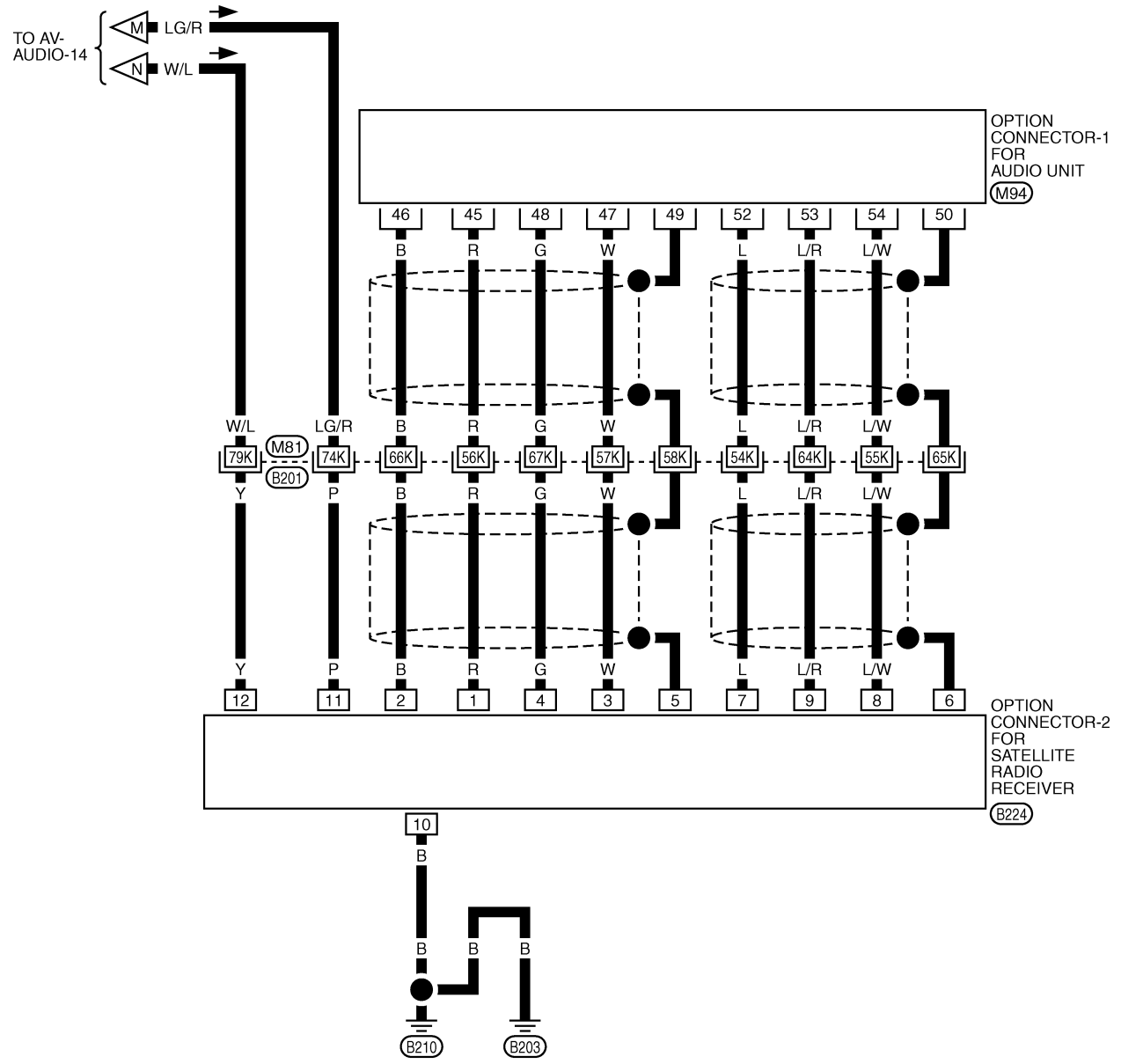

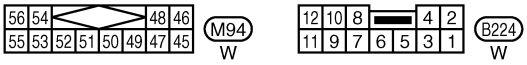

REFER TO THE FOLLOWING.
B201 -SUPER MULTIPLE JUNCTION (SMJ)

TKWM2490E

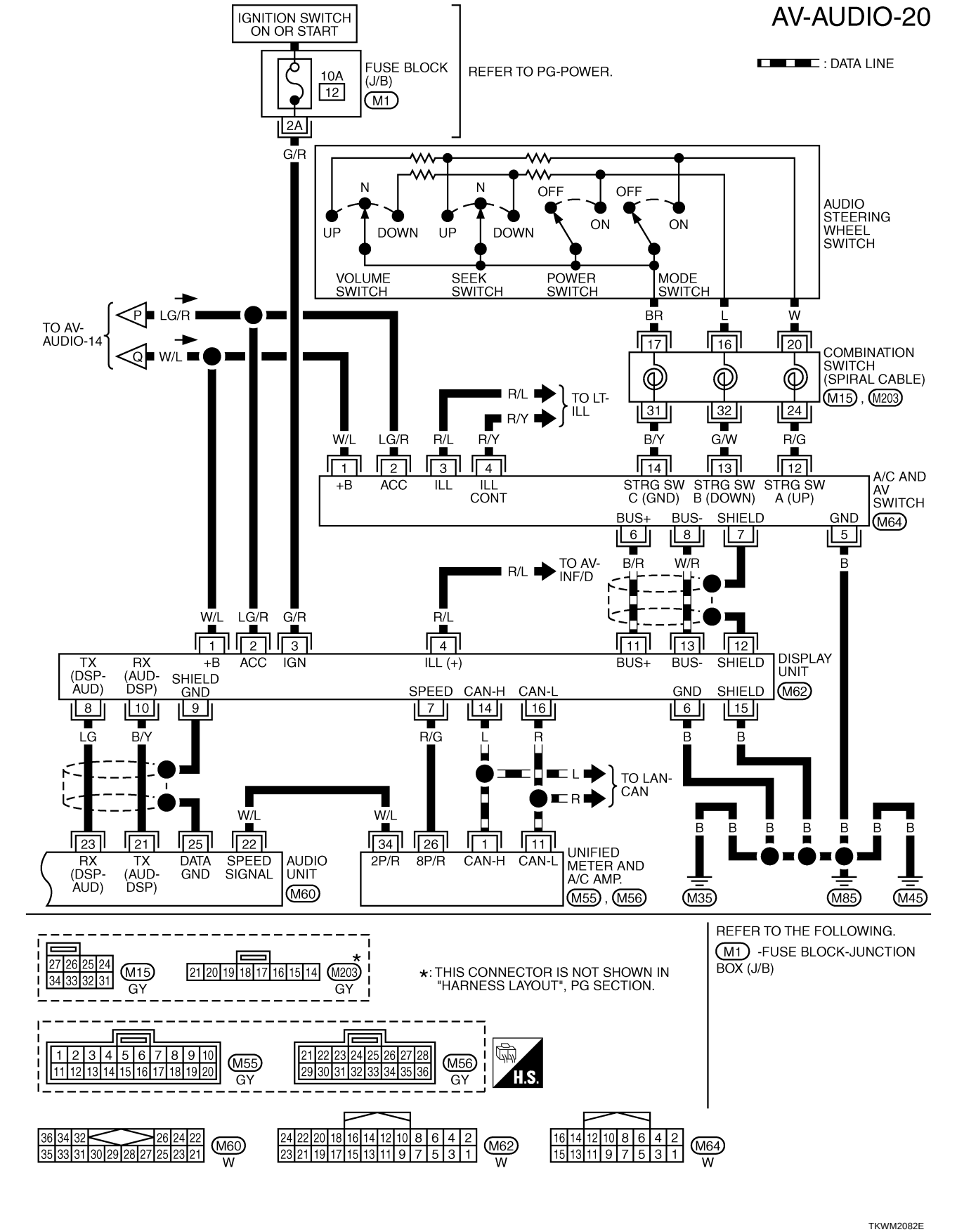
AV-AUDIO-20
: DATA LINE
IGNITION SWITCH ON OR START
FUSE BLOCK (J/B)
M1
10A
12
2A
REFER TO PG-POWER.
G/R
AUDIO STEERING WHEEL SWITCH
UP
DOWN
N
OFF
ON
VOLUME SWITCH
SEEK SWITCH
POWER SWITCH
MODE SWITCH
TO AV-AUDIO-14
P
Q
LG/R
W/L
BR
L
W
COMBINATION SWITCH (SPIRAL CABLE)
M15 , M203
R/L
R/Y
TO LT-ILL
B/Y
G/W
R/G
+B
ACC
ILL
ILL CONT
STRG SW C (GND)
STRG SW B (DOWN)
STRG SW A (UP)
A/C AND AV SWITCH
M64
BUS+
BUS-
SHIELD
GND
B/R
W/R
TO AV-INF/D
B
IGN
ILL (+)
DISPLAY UNIT
M62
TX (DSP-AUD)
RX (AUD-DSP)
SHIELD GND
SPEED
CAN-H
CAN-L
LG
R/G
TO LAN-CAN
RX (DSP-AUD)
TX (AUD-DSP)
DATA GND
SPEED SIGNAL
AUDIO UNIT
M60
2P/R
8P/R
UNIFIED METER AND A/C AMP.
M55 , M56
M35
M85
M45
M15
GY
M203
*: THIS CONNECTOR IS NOT SHOWN IN "HARNESS LAYOUT", PG SECTION.
M55
M56
H.S.
M60
W
M62
M64
REFER TO THE FOLLOWING.
M1 -FUSE BLOCK-JUNCTION BOX (J/B)
TKWM2082E

Terminals and Reference Value for Audio Unit

AKS00AM1

Terminal (Wire color) +	Terminal (Wire color) –	Item	Signal input/ output	Condition: Ignition switch	Condition: Operation	Reference value	Example of symptom
2 (W)*1 , (L)*2	1 (B)*1 , (B/W)*2	Audio sound signal (Front LH)	Output	ACC	Receive audio signal	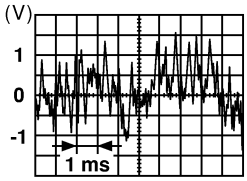 SKIA0177E	No sound from front door speaker LH or instrument speaker LH.
4 (G)*1 , (G/B)*2	3 (R)*1 , (B/R)*2	Audio sound signal (Front RH)	Output	ACC			No sound from front door speaker RH or instrument speaker RH.
5 (R/W)	Ground	Antenna signal	Output	ACC	—	Approx. 12 V	Antenna amp. does not work properly.
6 (W/L)	Ground	Battery power supply	Input	OFF	—	Battery voltage	System will not work properly.
9*1	—	Shield	—	—	—	—	—
10 (LG/R)	Ground	ACC power supply	Input	ACC	—	Battery voltage	System does not work properly
11*1	—	Shield	—	—	—	—	—
12*1 (G/W)	Ground	Amp ON signal	Output	ACC	—	Approx. 12 V	BOSE speaker amp. does not work properly.
14(BR)* , (L/W)*2	13 (Y)*1 , (B/Y)*2	Audio sound signal (Rear LH)	Output	ACC	Receive audio signal	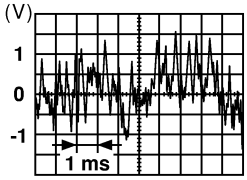 SKIA0177E	No sound from rear door speaker LH.
16 (L)*1 , (R/G)*2	15 (P)*1 , (L/B)*2	Audio sound signal (Rear RH)	Output	ACC			No sound from rear door speaker RH.
21 (B/Y)	Ground	Audio TX signal (AUD - DCU,DSP)	Output	ACC	Operate audio volume	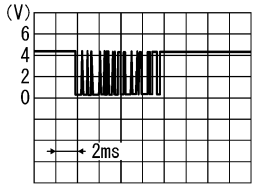 SKIA4402E	Audio does not operate properly.
22 (W/L)	Ground	Vehicle speed signal (2 pulse)	Input	ON	When vehicle speed is approx. 40 km/h (25MPH)	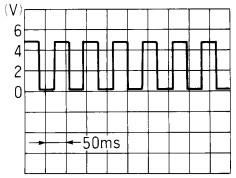 ELF1080D	speed sensitive volume system dose not work properly.
23 (LG)	Ground	Audio RX signal (DCU,DSP - AUD)	Input	ACC	Operate audio volume	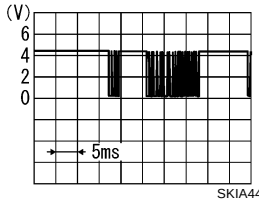 SKIA4403E	Audio does not operate properly.
25	—	Shield	—		—	—	—

*1: BOSE system
*2: BASE system

Terminals and Reference Value for BOSE Speaker Amp.

AKS005T8

Terminal (Wire color)		Item	Signal input/ output	Condition		Reference value	Example of symptom
+	–			Ignition switch	Operation		
1 (R)	Ground	Battery power supply	Input	OFF	—	Battery voltage	System does not work properly.
9 (LG)	10 (B/Y)	Audio sound signal (Rear LH)	Output	ACC	Receive audio signal	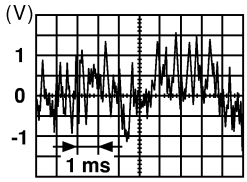 SKIA0177E	No sound from rear door speaker LH.
11 (OR)	12 (B/P)	Audio sound signal (Rear RH)	Output	ACC			No sound from rear door speaker RH.
13 (L)	14 (B/W)	Audio sound signal (Front LH)	Output	ACC	Receive audio signal	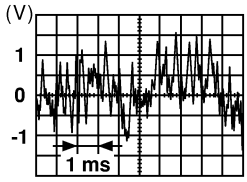 SKIA0177E	No sound from front door speaker LH and instrument speaker LH
15 (BR)	16 (B/R)	Audio sound signal (Front RH)	Output	ACC			No sound from front door speaker RH and instrument speaker RH.
17 (B)	Ground	Ground (Power)	—	ON	—	Approx. 0 V	BOSE speaker amp. dose not work properly.
18 (R/L)	2 (B)	Audio sound signal (Instrument CENTER)	Output	ACC	Receive audio signal	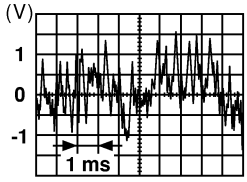 SKIA0177E	No sound from instrument speaker CENTER.
19 (W)	3 (B)	Woofer signal	Output	ACC	Receive audio signal	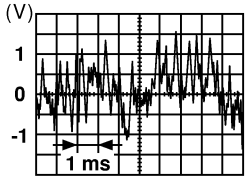 SKIA0177E	No sound from woofer.
20 (G)	4 (G/W)	Tweeter signal	Output	ACC	Receive audio signal	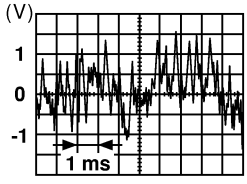 SKIA0177E	No sound from tweeter.
22 (P)	Ground	Amp ON signal (woofer)	Output	ACC	—	Approx. 12 V	Woofer does not work properly.

Terminal (Wire color)		Item	Signal input/ output	Condition		Reference value	Example of symptom
+	–			Ignition switch	Operation		
24 (L)	23 (B/W)	Audio sound signal (Rear RH)	Input	ACC	Receive audio signal	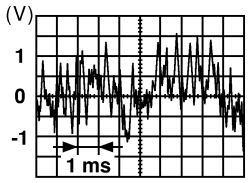 SKIA0177E	No sound from rear door speaker RH.
26 (B/R)	25 (BR)	Audio sound signal (Rear LH)	Input	ACC			No sound from rear door speaker LH.
28 (LG)	27 (PU)	Audio sound signal (Front RH)	Input	ACC	Receive audio signal	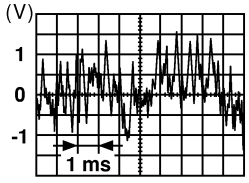 SKIA0177E	No sound from front door speaker RH or instrument speaker RH.
30 (W)	29 (B)	Audio sound signal (Front LH)	Input	ACC			No sound from front door speaker LH or instrument speaker LH.
31 (P)	Ground	Control signal	Input	ACC	—	Approx. 12 V	BOSE speaker amp. does not work properly.

Terminals and Reference Value for A/C and AV Switch

AKS00A2B

Terminal No. (Wire color)		Item	Signal input/ output	Condition		Voltage	Example of symptom
+	–			Ignition switch	Operation		
1 (W/L)	Ground	Battery power supply	Input	OFF	—	Battery voltage	System does not work properly.
2 (LG/R)	Ground	ACC power supply	Input	ACC	—	Battery voltage	System does not work properly.
3 (R/L)	Ground	Illumination signal	Input	OFF	Lighting switch is ON (position 1).	Approx. 12 V	A/C and AV switch illumination does not come on when lighting switch is ON (position 1).
					Turn lighting switch OFF.	Approx. 0 V	
4 (R/Y)	Ground	Illumination control signal	Output	ON	Illumination control switch is operated by lighting switch in 1st or 2nd position.	Changes between approx.0 V and approx.12 V	Audio unit illumination can not be controlled.
5 (B)	Ground	Ground	—	ON	—	Approx. 0 V	—
6 (B/R)	Ground	Communication signal (+)	Input/ Output	ON	—	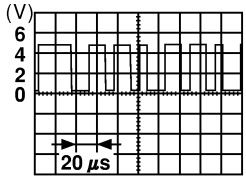 SKIA0175E	System does not work properly.
7	—	Shield	—	—	—	—	—
8 (W/R)	Ground	Communication signal (–)	Input/ Output	ON	—	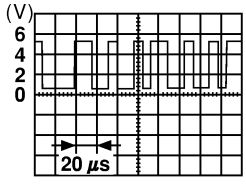 SKIA0176E	System does not work properly.
12 (R/G)	Ground	Steering SW A	Input	ON	Press MODE switch.	Approx. 0 V	Steering wheel audio controls do not function
					Press SEEK UP switch.	Approx. 1.7 V	
					Press VOL UP switch.	Approx. 3.3 V	
					Except for above	Approx. 5 V	
13 (G/W)	Ground	Steering SW B	Input	ON	Press POWER switch.	Approx. 0 V	Steering wheel audio controls do not function
					Press SEEK DOWN switch.	Approx. 1.7 V	
					Press VOL DOWN switch.	Approx. 3.3 V	
					Except for above	Approx. 5 V	
14 (B/Y)	—	Steering SW ground	—	—	—	—	Steering wheel audio controls do not function.

Terminals and Reference Value for Woofer

AKS00AM2

Terminal No. (Wire color)		Item	Signal input/ output	Condition		Voltage	Example of symptom
+	–			Ignition switch	Operation		
1 (G/R)	Ground	Battery power Supply	Input	OFF	—	Battery voltage	No sound from woofer.
2 (B)	Ground	Ground	—	ON	—	Approx. 0 V	No sound from woofer.
5 (P)	Ground	Amp ON signal	Input	ACC	—	Approx. 12 V	No sound from woofer.
7 (W)	8 (B)	Woofer sound signal	Input	ACC	Receive audio signal	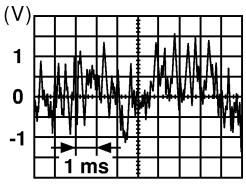 SKIA0177E	No sound from woofer.

A/C and AV Switch Self-Diagnosis Function

AKS007OE

It can check ON/OFF operation of each switch in the A/C and AV switch and diagnose the input signals to the audio steering wheel switch.

STARTING THE SELF-DIAGNOSIS MODE

1. Turn ignition switch from OFF to ACC.
2. Within 10 seconds press and hold the switches “MUTE/**II** ” and “MAP ”simultaneously for 3 seconds.

Then the self-diagnosis operates.

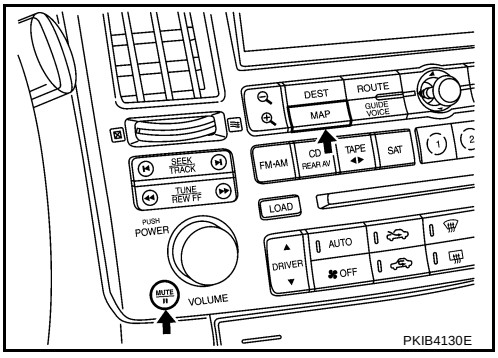

EXITING THE SELF-DIAGNOSIS MODE

- Turn ignition switch OFF. Then the self-diagnosis ends.

DIAGNOSIS FUNCTION

- It can illuminate all the indicators (LED) in the A/C and AV switch.
- It can check for continuity of the switches by sounding the buzzer when the A/C and AV switch is pressed.
- It can check for continuity of harness between A/C and AV switch and audio steering wheel switch.

Trouble Diagnosis

AKS005TB

The majority of the audio malfunctions are the result of outside causes (bad CD/cassette, electromagnetic interference, etc.). Check the inspection items below to diagnose the malfunction.

MALFUNCTION WITH RADIO, TAPE AND CD

Symptom	Possible cause
Inoperative	● Audio power supply circuit. Refer to AV-41, "Power Supply Circuit Inspection" . ● Audio communication line check (Without Navigation System). Refer to AV-82, "Audio Communication Line Inspection" . ● Audio communication line check (With Navigation System). Refer to AV-149, "AV Communication Line Check (Between Display Control Unit and NAVI Control Unit)" . ● A/C and AV switch check. Refer toAV-44, "A/C and AV Switch Inspection" . If above systems are OK, replace audio unit.
Audio steering wheel switch does not operate.	● Audio steering wheel switch check. Refer to AV-42, "Audio Steering Wheel Switch Inspection" . If above systems are OK, replace audio unit.
Audio display is not shown.	● Audio communication line check (Without Navigation System). Refer to AV-82, "Audio Communication Line Inspection" . ● Audio communication line check (With Navigation System). Refer to AV-150, "Audio Communication Line Check (Between Display Control Unit and Audio Unit)" . If above systems are OK, replace audio unit.
All speaker do not sound.	● Replace audio unit (Base system). Refer to AV-47, "Removal and Installation of Audio Unit" .
	● BOSE speaker amp. power supply. Refer to AV-41, "Power Supply Circuit Inspection" . ● BOSE speaker amp. circuit. Refer to AV-44, "BOSE Speaker Amp. Inspection" . If above systems are OK, replace BOSE speaker amp.
Speed sensitive volume system dose not work.	● Vehicle speed signal check. Refer to AV-45, "Vehicle Speed Signal Inspection" . If above system is OK, replace audio unit.
Poor sound	● Replace audio unit (Base system). Refer to AV-47, "Removal and Installation of Audio Unit" .
	● BOSE speaker amp (BOSE system). check. Refer to AV-44, "BOSE Speaker Amp. Inspection" . If above systems are OK, replace BOSE speaker amp.
Noisy	● Noise check. Refer to AV-40, "Noise Inspection" . If above systems are OK, replace audio unit.

FOR RADIO ONLY

Symptom	Possible cause
No sound	● Antenna feeder check (For open or short). Refer to AV-54, "Location of Antenna" . ● Window antenna check. Refer to AV-54, "CHECK ELEMENT" . If above systems are OK, replace audio unit.
Noisy	● Antenna feeder check (For open or short). Refer to AV-54, "Location of Antenna" . ● Antenna amp. check. Refer to AV-53, "Antenna Amp. Inspection" . ● Window antenna check. Refer to AV-54, "CHECK ELEMENT" . ● Noise prevention parts check. ● Each electrical equipment check. ● Wire harness of each piece of electrical equipment check. If above systems are OK, replace antenna amp.
Selected radio stations stored in memory are deleted.	● Replace audio unit.

NOTE:

1. The cause is a reduction in the receiving sensitivity of the window antenna.
2. This is noise resulting from variations in field strength, such as fading noise and multi-path noise, or external noise from trains and other sources. It is not a malfunction.

- Fading noise: This noise occurs because of variations in the field strength in a narrow range due to mountains or buildings blocking the signal.
- Multi-path noise: This noise results from the waves sent directly from the broadcast station arriving at the antenna at a different time from the waves which reflect off of mountains or buildings.

FOR CASSETTE PLAYER ONLY

Symptom	Possible cause
Cassette tape cannot be inserted.	● Audio unit. Refer to AV-47, "Removal and Installation of Audio Unit" . ● Cassette tape.
Cassette tape cannot be ejected.	
Auto reverse does not work, or the tape direction changes in the middle of play.	● Audio unit. Refer to AV-47, "Removal and Installation of Audio Unit" .
There is much noise.	
The sound is not clear.	
Sound fluctuates/tape speed not correct	
No sound.	

FOR CD ONLY

Symptom	Possible cause
CD cannot be inserted.	● Audio unit. Refer to AV-47, "Removal and Installation of Audio Unit" .
CD cannot be ejected.	
The CD cannot be played.	
The sound skips, stops suddenly, or is distorted.	

Noise Inspection

AKS005TC

The vehicle itself can be a source of noise if noise prevention parts or electrical equipment is malfunction. Check if noise is caused and/or changed by engine speed, ignition switch turned to each position, and operation of each piece of electrical equipment, and determine the cause.

NOTE:
The source of the noise can be found easily by listening to the noise while removing the fuses of electrical components, one by one.

TYPE OF NOISE AND POSSIBLE CAUSE

Occurrence condition		Possible cause
Occurs only when engine is ON.	A continuous growling noise occurs. The speed of the noise varies with changes in the engine speed.	● Ignition condenser
	A whistling noise occurs while the engine speed is high. A booming noise occurs while the engine is running and the lighting switch is ON.	● Alternator
The occurrence of the noise is linked with the operation of the fuel pump.		● Fuel pump condenser
Noise only occurs when various electrical components are operating.	A cracking or snapping sound occurs with the operation of various switches.	● Relay malfunction, radio malfunction
	The noise occurs when various motors are operating.	● Motor case ground ● Motor
The noise occurs constantly, not just under certain conditions.		● Rear window defogger coil malfunction ● Open circuit in printed heater ● Poor ground of antenna amplifier or antenna feeder line ● Mirror type film is attached on the rear window glass ● After-market TV antenna and/or electrical accessories such as radio are attached on the rear window glass.
A cracking or snapping sound occurs while the vehicle is being driven, especially when it is vibrating excessively.		● Poor ground of audio parts ● Poor ground due to incorrect installation of parts ● Poor wiring connections or a short circuit

Power Supply Circuit Inspection

AKS005TD

1. CHECK FUSE

Check that the following fuses of the BOSE speaker amp., woofer, and audio unit are not blown.

Unit	Terminal (Wire color)	Signal name	Fuse No.
Audio unit	6 (W/L)	Battery power supply	32
	10(LG/R)	ACC power supply	6
BOSE speaker amp.	1(R)	Battery power supply	17
Woofer	1(G/R)	Battery power supply	32

OK or NG

OK >> GO TO 2.

NG >> If fuse is blown, be sure to eliminate cause of malfunction before installing new fuse. Refer to PG-3, "POWER SUPPLY ROUTING CIRCUIT" .

2. CHECK POWER SUPPLY CIRCUIT

1. Check voltage between the audio unit connector and ground.

Unit	Terminal No.			Ignition switch	Voltage
	(+)		(–)		
	Connector	Terminal (Wire color)			
Audio unit	M58	6 (W/L)	Ground	OFF	Battery voltage
		10 (LG/R)	Ground	ACC	Battery voltage

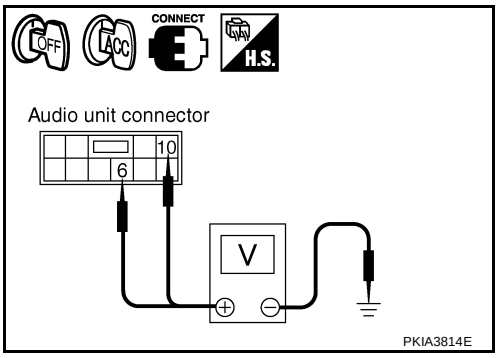

2. Check voltage between BOSE speaker amp.connector or woofer connector and ground.

Unit	Terminal No.			Ignition switch	Voltage
	(+)		(–)		
	Connector	Terminal (Wire color)			
BOSE speaker amp.	B212	1 (R)	Ground	OFF	Battery voltage
Woofer	B223	1 (G/R)	Ground	OFF	Battery voltage

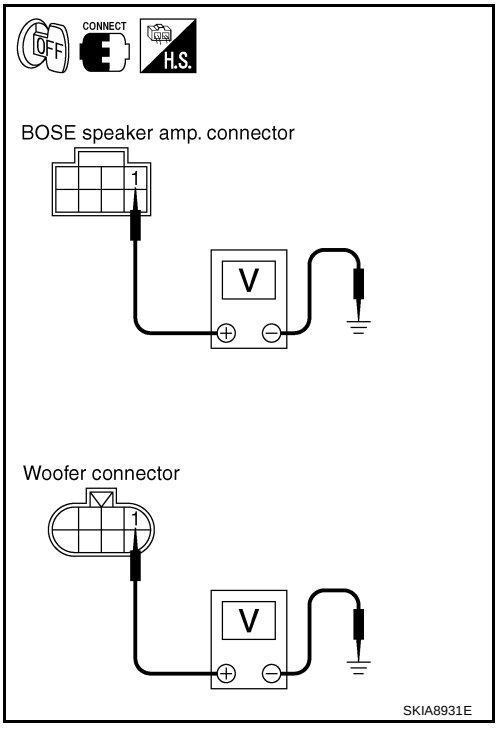

OK or NG

OK >> ● INSPECTION END (Audio unit is OK.)
● GO TO 3. (BOSE speaker amp. and woofer)

NG >> Repair harness or connector between each unit and fuse.

3. CHECK GROUND CIRCUIT

1. Disconnect BOSE speaker amp. connector and woofer connector.
2. Check continuity between BOSE speaker amp. harness connector B212 terminal 17 (B) and ground.

17 (B) – Ground : Continuity should exist.

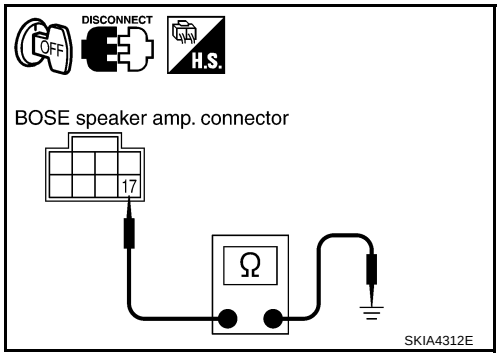

3. Check continuity between woofer harness connector B223 terminal 2 (B) and ground.

2 (B) – Ground : Continuity should exist.

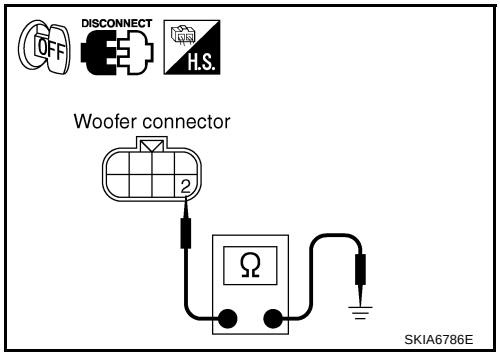

OK or NG

OK >> INSPECTION END (System is OK.)
NG >> Repair harness or connector.

Audio Steering Wheel Switch Inspection

AKS00AUL

1. CHECK A/C AND AV SWITCH SELF-DIAGNOSIS FUNCTION

1. Start A/C and AV switch self-diagnosis function. Refer to AV-77, "A/C and AV Switch Self-Diagnosis Function" .
2. Operate audio steering wheel switch.

Does audio steering wheel switch operate normally?

YES >> INSPECTION END
NO >> GO TO 2.

2. CHECK HARNESS

1. Turn ignition switch OFF.
2. Disconnect A/C and AV switch connector and spiral cable connector.
3. Check continuity between spiral cable harness connector terminals and A/C and AV switch harness connector terminals.

Terminals				Continuity
A/C and AV switch		Spiral cable		
Connector	Terminal (Wire color)	Connector	Terminal (Wire color)	
M64	12 (R/G)	M15	24 (R/G)	Yes
	13 (G/W)		32 (G/W)	
	14 (B/Y)		31 (B/Y)	

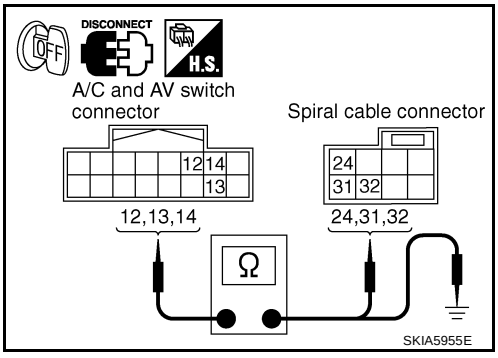

4. Check continuity between A/C and AV switch and ground.

Terminals			Continuity
A/C and AV switch		—	
Connector	Terminal (Wire color)		
M64	12 (R/G)	Ground	No
	13 (G/W)		
	14 (B/Y)		

OK or NG

OK >> GO TO 3.
NG >> Repair harness or connector.

3. CHECK SPIRAL CABLE

1. Disconnect spiral cable connector (Audio steering wheel switch harness side).
2. Check continuity between spiral cable connector terminal 24, 31, 32 and terminal 20, 17, 16.

Terminals				Continuity
Spiral cable				
Connector	Terminal	Connector	Terminal	
M15	24	M203	20	Yes
	32		16	
	31		17	

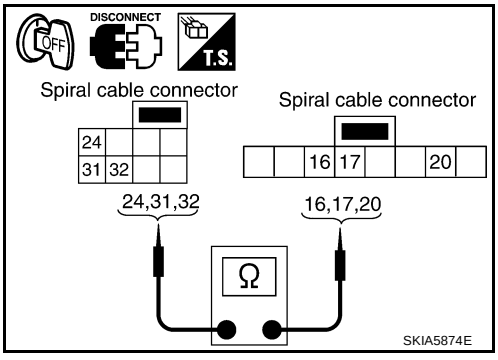

OK or NG

OK >> GO TO 4.
NG >> Replace spiral cable.

4. CHECK AUDIO STEERING WHEEL SWITCH RESISTANCE

Check resistance audio steering wheel switch terminals.

Terminal (Wire color)		Signal name	Condition	Resistance (Ω)
16 (L)	17 (BR)	Power	Depress power switch.	Approx. 0
		Seek down	Depress (station) down switch.	Approx. 165
		Volume (down)	Depress volume down switch.	Approx. 652
20 (W)		Mode	Depress mode switch.	Approx. 0
		Seek up	Depress (station) up switch.	Approx. 165
		Volume (up)	Depress volume up switch.	Approx. 652

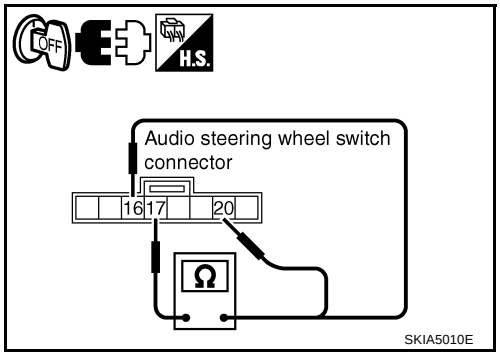

OK or NG

OK >> INSPECTION END
NG >> Replace audio steering wheel switch.

A/C and AV Switch Inspection

AKS007H9

1. A/C AND AV SWITCH SELF-DIAGNOSIS FUNCTION

1. Start A/C and AV switch self-diagnosis function. Refer to AV-37, "A/C and AV Switch Self-Diagnosis Function" .
2. Operate A/C and AV switch.

Does the A/C and AV switch is operated normally?

YES >> INSPECTION END (System is OK)
NO >> Replace A/C and AV switch.

BOSE Speaker Amp. Inspection

AKS007WD

1. CHECK HARNESS

1. Disconnect audio unit connector and BOSE speaker amp. connector.
2. Check continuity between audio unit harness connector M59 terminal 12 (G/W) and BOSE speaker amp. harness connector B213 terminal 31 (P).

   12 (GW) – 31 (P) : Continuity should exist.

3. Check continuity between audio unit harness connector M59 terminal 12 (G/W) and ground.

   12 (GW) – Ground : Continuity should not exist.

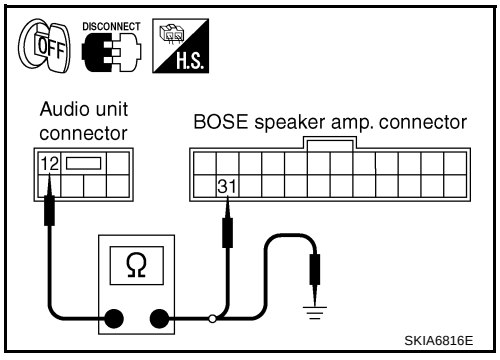

OK or NG

OK >> GO TO 2.
NG >> Repair harness or connector.

2. CHECK AMP. ON SIGNAL

1. Connect audio unit connector.
2. Turn the ignition switch ACC.
3. Check voltage between audio unit harness connector M59 terminal 12 (G/W) and ground.

12 (G/W) – Ground : Approx. 12 V

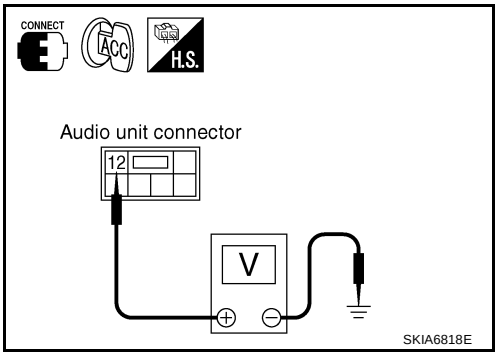

OK or NG

OK >> INSPECTION END (System is OK.)
NG >> Replace audio unit.

Vehicle Speed Signal Inspection

AKS007VI

1. CHECK VEHICLE SPEED OPERATION

Start engine and drive vehicle.

Dose speedometer is operated normally?

Yes >> GO TO 2.
No >> Check combination meter trouble diagnosis. Refer to DI-15, "Trouble Diagnosis" .

2. CHECK HARNESS

1. Turn the ignition switch OFF.
2. Disconnect audio unit connector and unified meter and A/C amp. connector.
3. Check continuity between audio unit harness connector M60 terminal 22 (W/L) and unified meter and A/C amp. harness connector M56 terminal 34 (W/L).

22 (W/L) – 34(W/L) : Continuity should exist.

4. Check continuity between audio unit harness connector M60 terminal 22 (W/L) and ground.

22 (W/L) – Ground : Continuity should not exist.

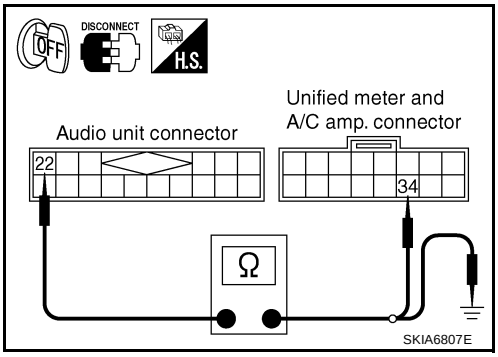

OK or NG

OK >> GO TO 3.
NG >> Repair harness or connector.

3. CHECK VEHICLE SPEED SIGNAL

1. Connect unified meter and A/C amp. connector.
2. Start engine and drive vehicle at more than 40 km/h (25MPH).
3. Check the signal between audio unit harness connector M60 terminal 22 (W/L) and ground with CONSULT-II or oscilloscope.

Terminal (+)	Terminal (–)	Condition	Reference signal
22 (W/L)	Ground	When vehicle speed is approx.40 km/h (25MPH)	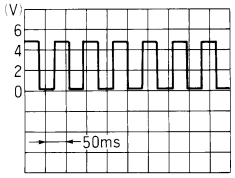 ELF1080D

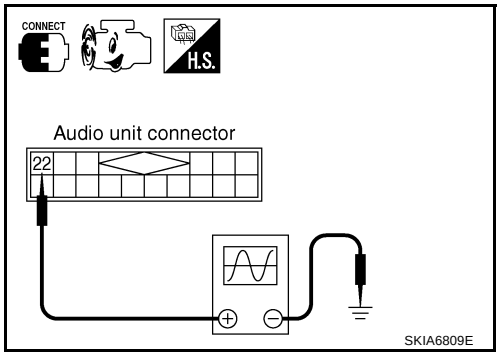

OK or NG

OK >> INSPECTION END (System is OK.)
NG >> Replace unified meter and A/C amp.

Locking CD Auto-Changer Mechanism

AKS007GD

CAUTION:

- **Prior to removing a malfunctioning CD auto-changer unit that will be shipped for repair, the changer mechanism MUST BE LOCKED to prevent the mechanism from being damaged during shipping.**
- **If a CD is jammed or unable to be removed from the unit, do NOT lock the changer mechanism. If the unit is to be shipped for repair, carefully package the unit to prevent vibration and shock.**

DAMPER LOCK PROCEDURE

1. Eject and remove any CDs from the audio unit.
2. Turn ignition switch OFF. Wait until audio unit display is off and mechanism stops moving (mechanism sound stops).
3. Press any one of the disc selection buttons once. When a display shows on the audio unit, press the same disc selection button again within 5 seconds.
   - The changer mechanism will lock itself within 10 seconds.
4. After mechanism stops moving (mechanism sound stops), open the driver and passenger window, and then disconnect negative battery cable.

NOTE:
After installing a new or remanufactured audio unit, switching the audio unit ON will automatically unlock the mechanism. A special unlocking procedure is not required.

Removal and Installation of Audio Unit

AKS005TO

REMOVAL

1. Perform damper lock operation. Refer toAV-46, "Locking CD Auto-Changer Mechanism" .
2. Remove cluster lid C. Refer to IP-11, "Removal and Installation" .
3. Remove screws (6) with power tool, and remove audio unit with display and unified meter and A/C amp. from instrument panel.

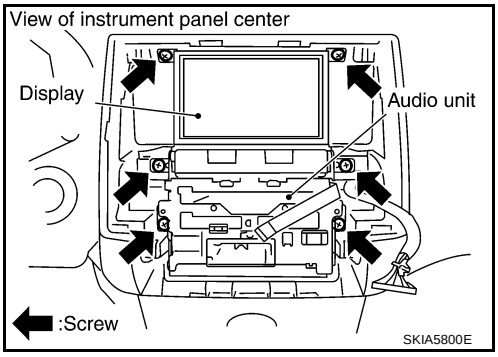

INSTALLATION

Installation is the reverse order of removal.

Disassembly and Assembly for Audio Unit

AKS007YV

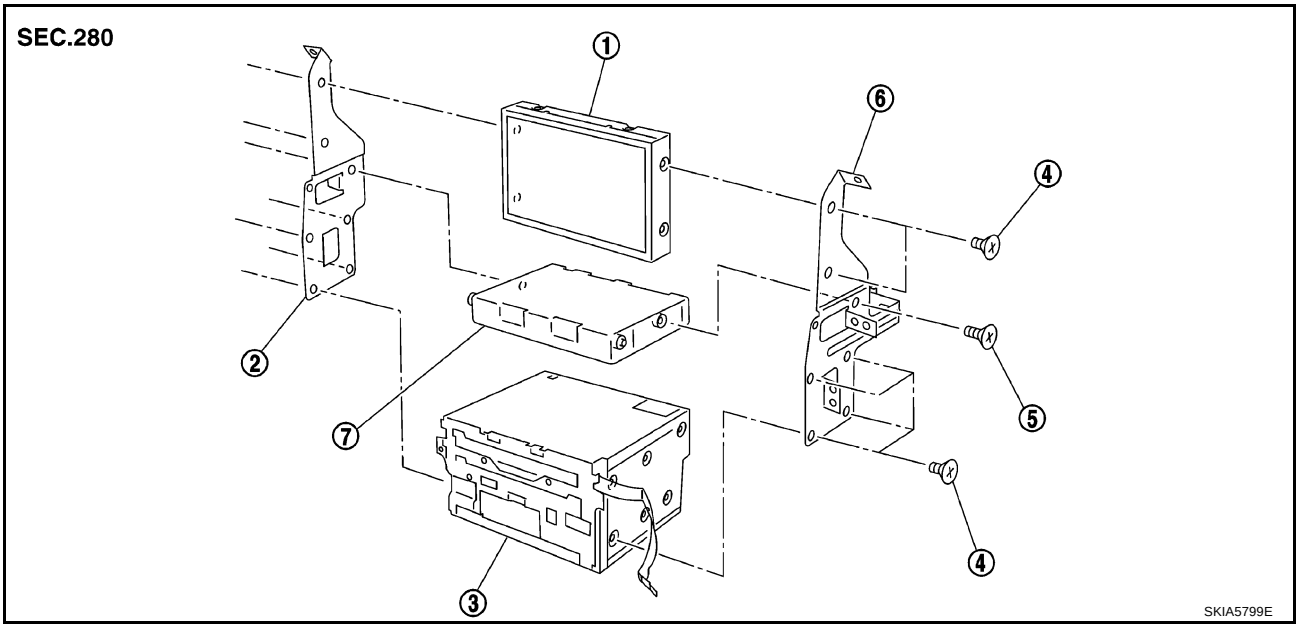

1. Display
2. Bracket (LH)
3. Audio unit
4. Screw (For metal)
5. Screw (For plastic)
6. Bracket (RH)
7. Unified meter and A/C amp.

DISASSEMBLY

Remove audio unit screws (8) and display screws (4) and unified meter and A/C amp. screws (2) with power tool and remove bracket.

CAUTION:

- **When carrying audio unit body, do not touch internal mechanism access from cassette tape slot.**
- **Be careful not to allow foreign matter from cassette tape slot.**

ASSEMBLY

Assembly is the reverse order of disassembly.

NOTE:

Use appropriate screws for each, as screws for audio unit and display unit are different from that for unified meter and A/C amp.

Removal and Installation for A/C and AV Switch

AKS005TP

REMOVAL

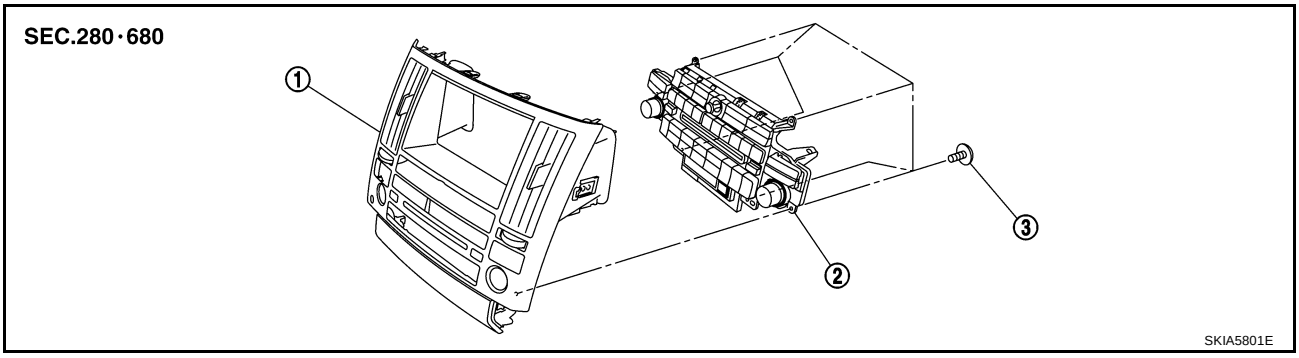

1. Cluster lid C
2. A/C and AV switch
3. Screws

1. Remove cluster lid C. Refer to IP-11, "Removal and Installation" .
2. Remove screws (6) and remove A/C and AV switch from cluster lid C.

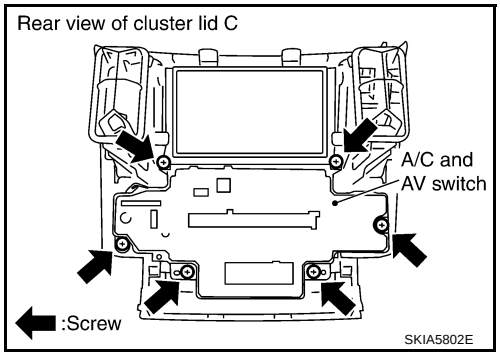

INSTALLATION

Installation is the reverse order of removal.

Removal and Installation for Front Door Speaker

AKS005TQ

REMOVAL

1. Remove front door finisher. Refer to EI-34, "Removal and Installation" .
2. Remove screws (3) and remove front door speaker.

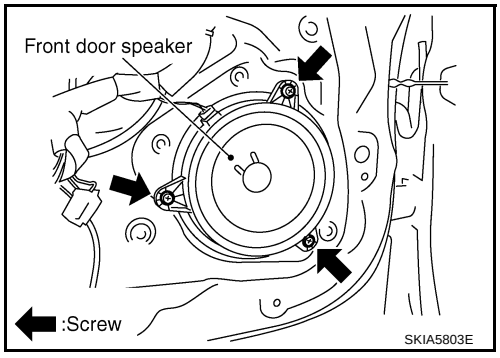

INSTALLATION

Installation is the reverse order of removal.

Removal and Installation for Rear Door Speaker

AKS005TS

REMOVAL

1. Remove rear door finisher. Refer to EI-34, "Removal and Installation" .
2. Remove screws (3) and remove rear door speaker.

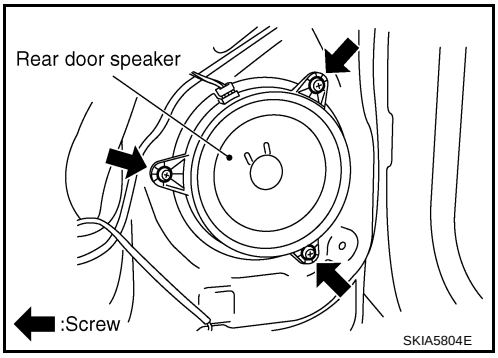

INSTALLATION

Installation is the reverse order of removal.

Removal and Installation for Instrument Speaker

AKS005TU

REMOVAL

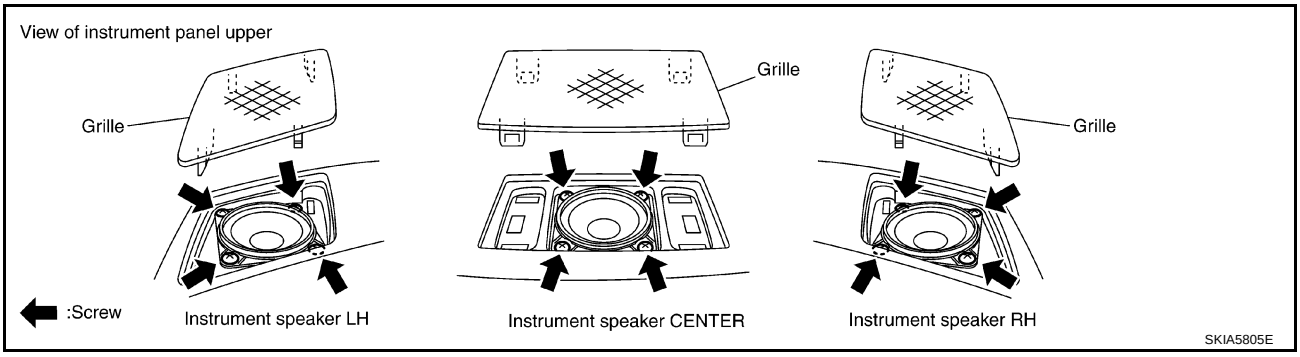

1. Remove grille from instrument panel.
2. Remove screws (4) and disconnect connector.
3. Remove instrument speaker.

INSTALLATION

Installation is the reverse order of removal.

Removal and Installation for Tweeter

AKS005TV

REMOVAL

1. Remove rear pillar upper garnish assembly. Refer to EI-43, "Removal and Installation" .
2. Remove screws (4), and disconnect connector.
3. Remove tweeter.

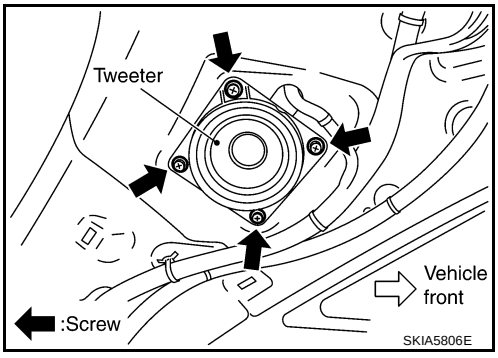

INSTALLATION

Installation is the reverse order of removal.

Removal and Installation for Woofer (BOSE System)

AKS007GE

REMOVAL

1. Open luggage floor board.
2. Remove speaker clamp and harness clip.
3. Disconnect connector.
4. Remove woofer.

CAUTION:
Connectors must be placed in the left side, when installed.

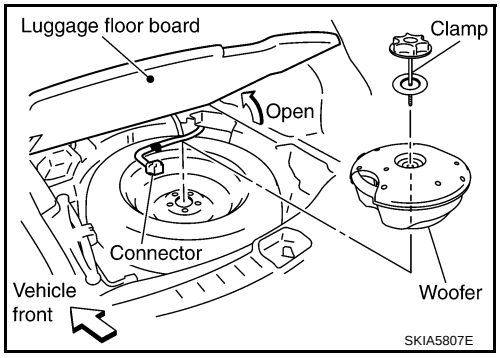

INSTALLATION

Installation is the reverse order of removal.

Removal and Installation for BOSE Speaker Amp.

AKS007GF

REMOVAL

1. Remove luggage side box assembly. Refer to EI-43, "Removal and Installation" .
2. Remove nuts (3) with power tool, and remove BOSE speaker amp. from luggage room floor.

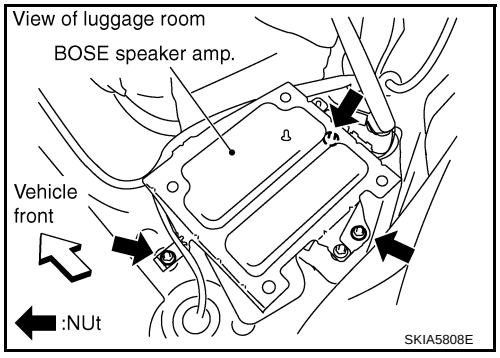

3. Remove nuts (2) with power tool, and remove assist bracket.
4. Remove nuts (4) with power tool, and remove bracket.

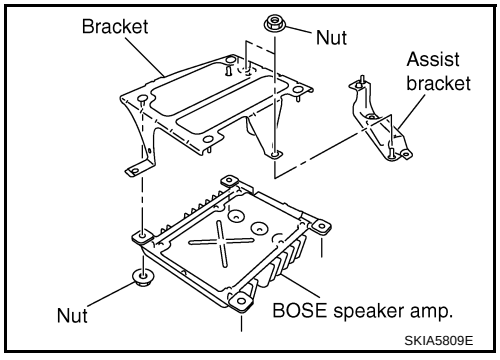

INSTALLATION

Installation is the reverse order of removal.

AUDIO ANTENNA

PFP:28200

System Description

AKS007WE

With the ignition switch in ACC or ON, power is supplied

- through 10A fuse [No. 6, located in the fuse block (J/B)]
- to audio unit terminal 10.

Ground is supplied through the case of the antenna amp.
When the radio switch is turned ON, antenna signal is supplied

- through audio unit terminal 5
- to the antenna amp.

Then the antenna amp. is activated.
The amplified radio signals are supplied to the audio unit through the antenna amp.

Wiring Diagram — M/ANT —

AKS007WF

AV-M/ANT-01

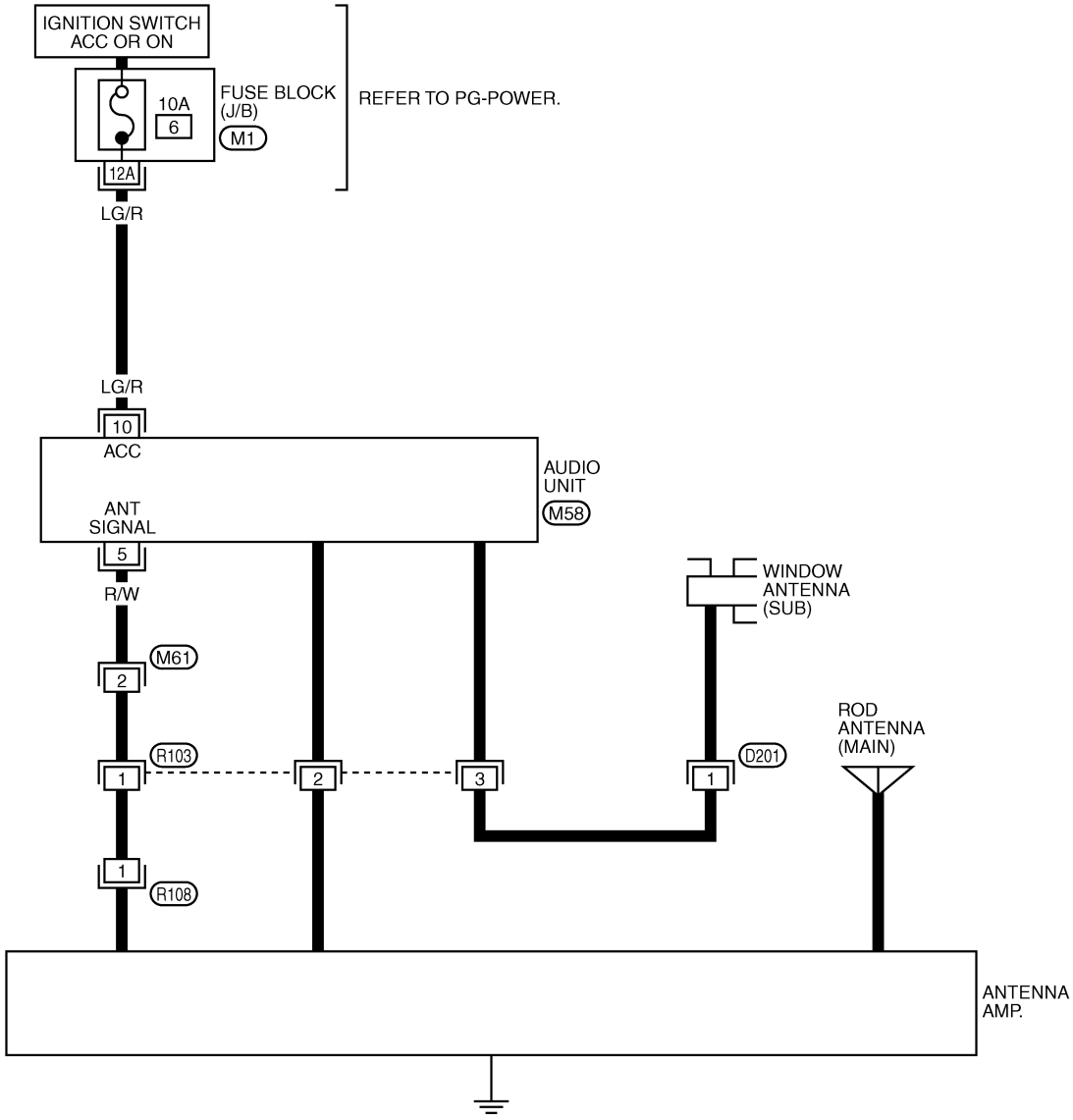

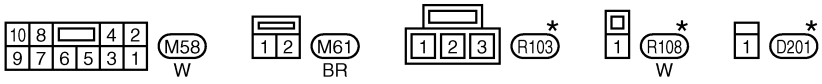

*: THIS CONNECTOR IS NOT SHOWN IN "HARNESS LAYOUT", PG SECTION.

REFER TO THE FOLLOWING.
M1 -FUSE BLOCK-JUNCTION BOX (J/B)

TKWM0569E

Terminals and Reference Value for Audio Unit

AKS007WW

Terminal (Wire color)		Item	Signal input/ output	Condition		Reference value	Example of symptom
+	–			Ignition switch	Operation		
5 (R/W)	Ground	Antenna signal	Input	ACC	—	Approx. 12 V	Receiving status of radio broadcast becomes bad.
10 (LG/R)	Ground	ACC power supply	Input	ACC	—	Battery voltage	System does not work properly.

Antenna Amp. Inspection

AKS007WX

1. CHECK ANTENNA FEEDER

Check with visual observation if antenna feeder between audio unit and antenna amp. has disconnection or malfunction on the mounting part (engagement, looseness of shield earth, etc.).

OK or NG

OK >> GO TO 2
NG >> Replace antenna feeder.

2. CHECK ANTENNA SIGNAL

1. Turn the ignition switch ACC.
2. Check voltage between audio unit harness connector M58 terminal 5 (R/W) and ground.

5 (R/W) – Ground : Approx. 12 V

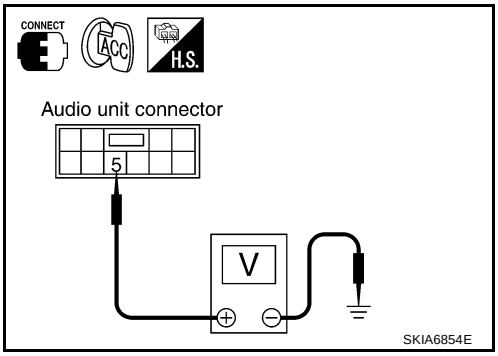

OK or NG

OK >> INSPECTION END (System is OK.)
NG >> Replace audio unit.

Location of Antenna

AKS005TX

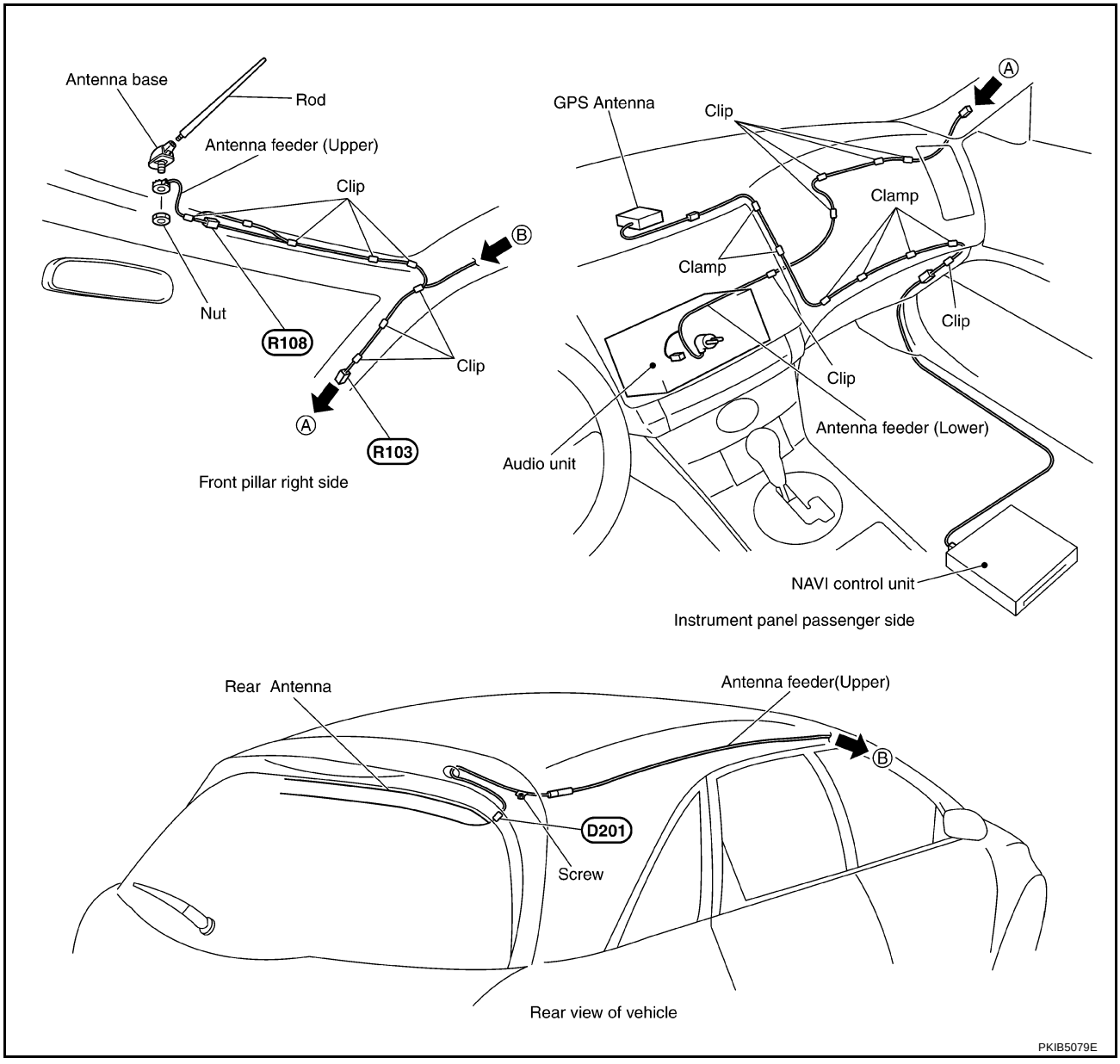

Window Antenna Repair

AKS005TY

CHECK ELEMENT

1. Attach probe circuit tester (ohm setting) to antenna terminal on each side.

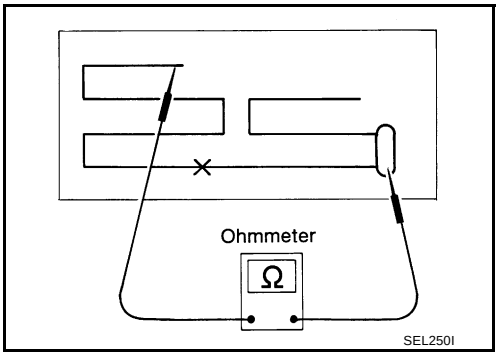

- **When measuring continuity, wrap tin foil around the top of probe. Then, press the foil against the wire with your finger.**

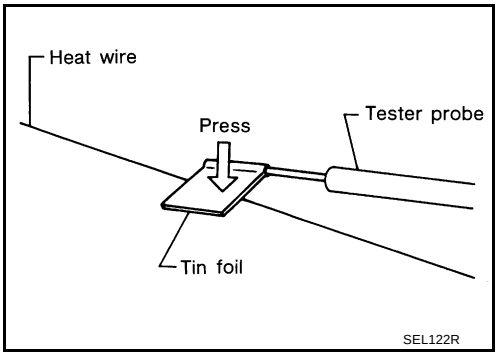

2. If an element is broken, no continuity will exist.

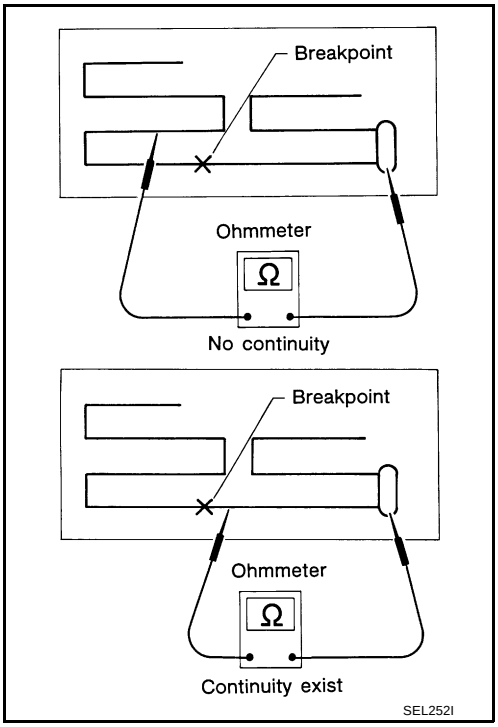

3. To locate a break, move probe along element. Tester needle will swing abruptly when probe passes the broken point.

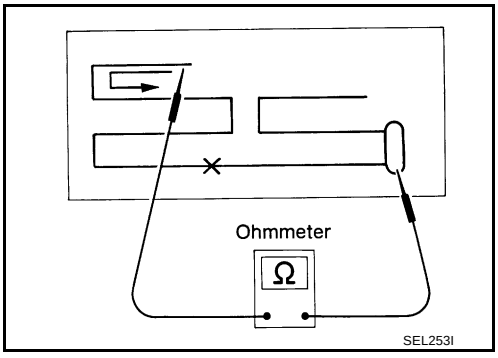

Removal and Installation of Roof Antenna

AKS005TZ

REMOVAL

1. Remove head lining. Refer to EI-41, "HEADLINING" .
2. Remove nut and remove rod and antenna base.

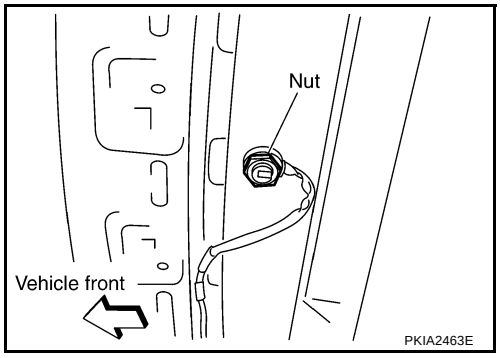

3. Remove instrument panel. Refer to IP-10, "INSTRUMENT PANEL ASSEMBLY" .
4. Disassembly antenna feeder (upper) and antenna feeder (lower).
5. Disengaged the clips (7) to separate antenna feeder (upper) from vehicle.
6. Pull off antenna feeder (lower) from audio unit.
7. Disengaged the clips (5) to separate antenna feeder (lower) from vehicle.

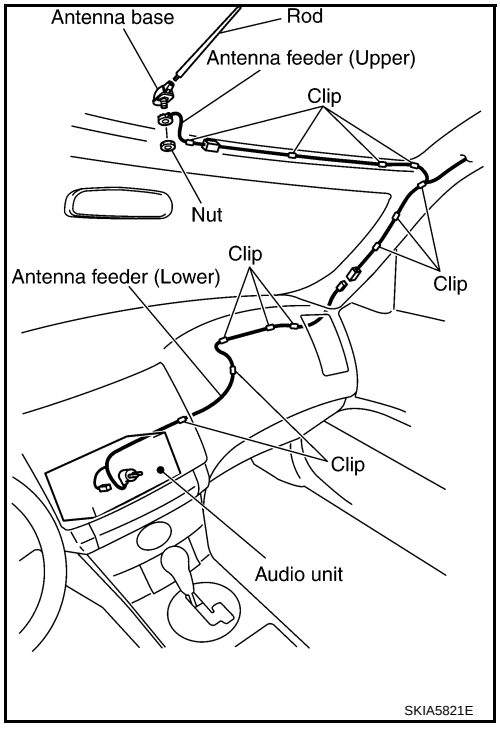

INSTALLATION

Installation is the reverse order of removal.

INTEGRATED DISPLAY SYSTEM

PFP:28090

System Description

AKS005U0

A/C AND AV SWITCH SYSTEM

Refer to Owner's Manual for A/C and AV switch operating instructions.
Using the A/C and AV switch at the center of the instrument panel, the controls of the following systems are centralized:

- Integrated display system (Drive computer, setting screen, etc.)
- Auto A/C system
- Audio system

PRECAUTION OF LCD MONITOR

- In order to use LED for backlight of a display, by interior temperature, brightness may change. In low temperature, the refreshing rate of the picture also becomes low because of the low response of the LCD monitor. When the interior becomes warm, however, the LCD recovers the normal display.
- Backlight sometimes flickers or darkens according to the wearing out of LCD and the number of times switched ON and OFF. In this case, display unit should be replaced. (Exchange only of backlight is impossible.)

POWER SUPPLY AND GROUND

Power is supplied at all times

- through 15A fuse (No. 32, located in fuse and fusible link box)
- to audio unit terminal 6
- to display unit terminal 1 and
- to A/C and AV switch terminal 1.

When ignition switch is in ACC or ON position, power is supplied

- through 10A fuse [No. 6, located in fuse block (J/B)]
- to unified meter and A/C amp. terminal 35
- to audio unit terminal 10
- to display unit terminal 2 and
- to A/C and AV switch terminal 2.

When ignition switch is in ON or START position, power is supplied

- through 10A fuse [No. 12, located in fuse block (J/B)]
- to unified meter and A/C amp. terminal 22 and
- to display unit terminal 3.

Ground is supplied

- to unified meter and A/C amp. terminals 29, 30
- to display unit terminals 6 and 15 and
- to A/C and AV switch terminal 5
- through body grounds M35, M45 and M85.

Ground is supplied through the case of the audio unit.

DRIVE COMPUTER

Refer to Owner's Manual for drive computer operating instructions.

TRIP Switch

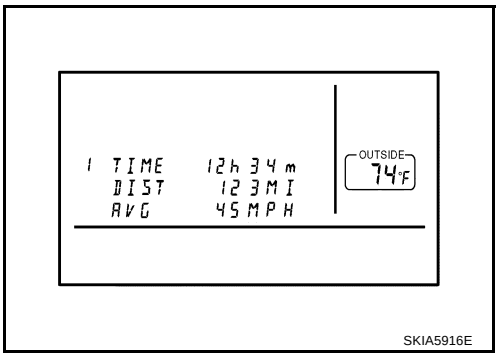

When "TRIP" switch is pressed, display TRIP screen. As TRIP information, it indicates journey time (TIME), trip odometer (DIST), average vehicle speed (AVG).
Pressing "TRIP" switch once cycles display from TRIP 1→TRIP 2→Display OFF→TRIP 1.

"TIME"

- Journey time indication is performed by reset or battery connection.
- When pushing "TRIP RESET" or "TRIP" switch more than approximately 1.5 seconds, journey time will be reset.
- If journey time is reset, journey distance and average speed will be reset at the same time.

"DIST"

- Trip odometer indication is performed by vehicle speed signal.
- When pushing "TRIP RESET" or "TRIP" switch more than approximately 1.5 seconds, driving distance will be reset.
- If trip odometer is reset, journey time and average speed will be reset at the same time.

"AVG"

- Average speed indication is performed by running distance and running time.
- Indication will be renewed every 30 seconds.
- When pushing "TRIP RESET" or "TRIP" switch more than approximately 1.5 seconds, average speed will be reset.
- After reset operation, the displays shows "*" for 30 seconds.

FUEL ECON Switch

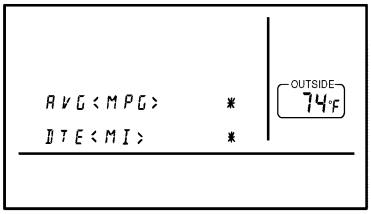

When "FUEL ECON" switch is pressed, display FUEL ECON screen. As FUEL ECON information, it indicates average fuel consumption (AVG), distance to empty (DTE).
Pressing "FUEL ECON" switch once cycles display from FUEL ECON→Display OFF→FUEL ECON.

"AVG" (Average Fuel Consumption)

- Average fuel consumption indication is performed by fuel consumption signal and vehicle speed signal after system is reset.
- Indication will be renewed every 30 seconds.
- When pushing "TRIP RESET" or "FUEL ECON" switch more than approximately 1.5 seconds, average fuel economy will be reset.
- After reset operation, the display shows "*.*" until the vehicle is driven 500 m (1,600 ft.) or 30 seconds has passed.

"DTE" (Distance to Empty)

- Distance to empty receives via CAN communication and indicates values calculated by meter.
- Display range is max 999 miles (max 999 km).
- If low-fuel WARNING is received from meter via CAN communication, distance to empty indication will be "*".
- Indication will be renewed every 30 seconds.

MAINT Switch (Maintenance Switch)

- When “MAINT” switch is pressed, display vehicle information screen. As vehicle information, it indicates engine oil, tire rotation, tire pressure.
- Pressing “MAINT” switch once cycles display from engine oil→tire rotation→tire pressure→display OFF→engine oil.

Engine Oil and Tire Rotation

- Operating the joystick left/right, replace distance can be set.
- When journey distance is the same as replace distance, alert is displayed. (SERVICE ALERT setting is ON.)
- Selected replace distance is 0 - 7,500 miles (0 - 12,000 km) in increments of 500 mile (800 km).
- Press and hold “TRIP RESET or MAINT” switch for 1.5 seconds or longer, reset present journey distance.
- During driving, cannot change settings.

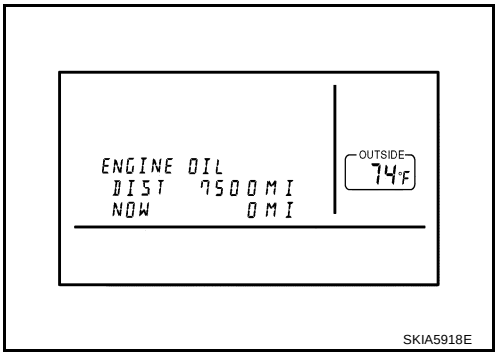

Tire Pressure

- Tire pressure signal is received from BCM through CAN communication line.
- Tire pressure is displayed.
- When FLAT TIRE signal is received from BCM, “FLAT TIRE” is displayed.

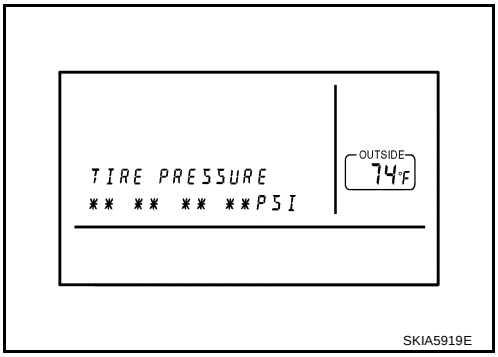

E/M SWITCH

When “E/M” (English/Metric) switch is pressed, change the unit as followings.

Unit	US	Mile, °F, MPG
	Metric	km, °C, l/100km

SETTING SCREEN

- Setting of electric status can be changed by A/C and AV switch. The signal is sent to BCM through display unit to change vehicle electric system setting.
- Display unit is communicating with driver seat control unit.
- Pressing “SETTING” switch once cycles display from DISPLAY→LANGUAGE→BEEP SET→SERVICE ALERT→PERSONALIZED SETTINGS MENU→DISPLAY OFF→DISPLAY.
- Using the joystick, setting of each item will become possible.

Adjustable Vehicle Status

Setting items		Setting variations	Initial setting	Operation
DISPLAY		ON/OFF	ON	It switches displayed/Non-displayed of the screen.
LANGUAGE		ENGLISH/ FRANCAIS	–	It switches displayed language.
BEEP SET		ON/OFF	ON	It selects beep sound ON/OFF during switch operation. However, even if beep is set OFF, beep for NO OPERATION and for screen interception are not reset.
SERVICE ALERT		ON/OFF	OFF	It switches displayed/Non-displayed of alert indication. ● When the setting is ON, if engine oil or tire rotation will be replace distance, alert is displayed. ● When the setting is OFF, alert is not displayed.
PERSONALIZED SETTING MENU	SLIDE BACK DR SEAT ON EXIT	ON/OFF	ON[NOTE]	The driver’s seat automatically moves back and returns to the original position for exceptional ease of exit and entry. (Models with automatic drive positioner.)
	LIFT STEERING WHEEL ON EXIT	ON/OFF	ON[NOTE]	The steering column automatically tilts up and returns to the original position for exceptional ease of entry and exit. (Models with automatic drive positioner.)
	REMOTE UNLOCK DOOR LOGIC	DR-1ST/ALL	DR-1ST	This key can switch the unlock doors of the 1st unlocking operation as follows: ● Only the driver side door⇔All the doors
	HORN CHIRP WITH REMOTE	ON/OFF	ON	This key changes the horn chirp mode occurring when pressing the LOCK button on the keyfob.
	LAMPS FLASH WITH REMOTE	ALL/LOCK/ UNLOCK/OFF	ALL	This key changes the hazard indicator flash mode occurring when pressing the LOCK or UNLOCK button on the keyfob.
	AUTO RE-LOCK TIME	5m/1m/OFF	1m	The length of auto door re-lock time can be set. Select the “Auto Re-Lock timer” key, then move the joystick to adjust the time.
	AUTO HEADLAMP SENSITIVITY	LEVEL 1/2/3/4	LEVEL 2	Automatic light illumination can be set as desired. Select the “Auto Headlamp Sensitivity” key, then move the joystick to the left (lower) or right (higher).
	AUTO HEADLAMP OFF DELAY	OFF/30/45/60/ 90/120/150/ 180 SEC	45 SEC	This key can control how long it takes the automatic turn off timer to extinguish the headlamps in “AUTO” position. Select the “Auto Headlamp Off Delay” key, then move the joystick to the left or right to adjust the timer.
	SPEED SENSING WIPER INTERVAL	ON/OFF	ON	This key turns on and off the driving speed dependent intermittent wiper function.
	CONFIRM RESET SETTINGS	YES/NO	NO	When this key is selected and turned on using the “ENTER” button, all settings mode by PERSONALIZED SETTINGS will return to the initial conditions.

NOTE:
Setting in factory shipment is ON.

D/N SCREEN

- Turning on “DAY/NIGHT” switch, DAY MODE or NIGHT MODE is indicated for present mode.
- If press “DAY/NIGHT” again when display adjustment luminance, change DAY-NIGHT (NIGHT-DAY) mode (screen of adjustment luminance).
  As follows:

NOW	Change display
DAY	DAY→NIGHT→DAY→·····
NIGHT	NIGHT→DAY→NIGHT→·····

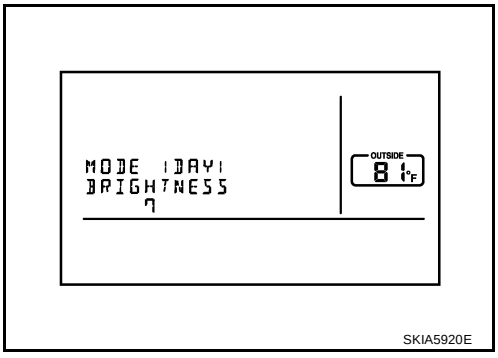

- Press “PREV” or not operate for 10sec. when displayed screen of adjustment luminance, back to default screen (same mode).
- Can adjust luminance by “DISP” switch. Light can be adjusted by pressing “+” (bright) or “–” (dark).
- Adjustment range is a 12 stage (MIN to MAX) and default set value is 10 (DAY) and 4 (NIGHT).

WARNING INDICATIONS

When BCM receives warning signal from some control units or sensors, then combination meter warning lamp is illuminated.
Then BCM sends warning signal to display unit warning indications on the screen.

Warning indicators	Warning lamps in instrument panel	Warning detection and cancel conditions		Cases of malfunction
DOOR OPEN	Door	Detection condition	Vehicle is running [approx. 3.5 km/h (2 MPH) or faster] and door ajar of any of the doors is detected.	Door is open.
		Cancel condition	Vehicle is stopped and all the doors close.	

AV COMMUNICATION LINE

Display unit is controlled by the following unit with AV communication line.

- A/C and AV switch

CAN Communication System Description

AKS007Z5

CAN (Controller Area Network) is a serial communication line for real time application. It is an on-vehicle multiplex communication line with high data communication speed and excellent error detection ability. Many electronic control units are equipped onto a vehicle, and each control unit shares information and links with other control units during operation (not independent). In CAN communication, control units are connected with 2 communication lines (CAN H line, CAN L line) allowing a high rate of information transmission with less wiring. Each control unit transmits/receives data but selectively reads required data only.

CAN Communication Unit

AKS007YZ

Refer to LAN-30, "CAN Communication Unit" .

Component Parts and Harness Connector Location

AKS005U2

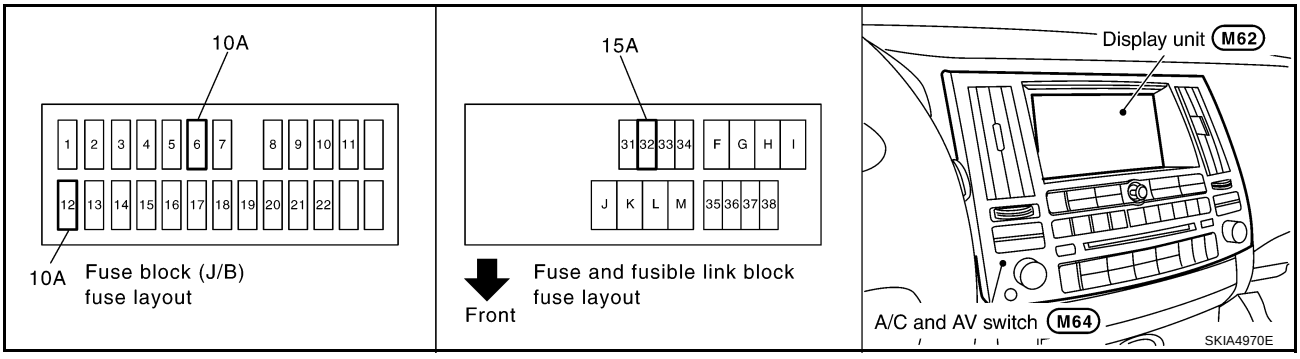

Schematic

AKS005U3

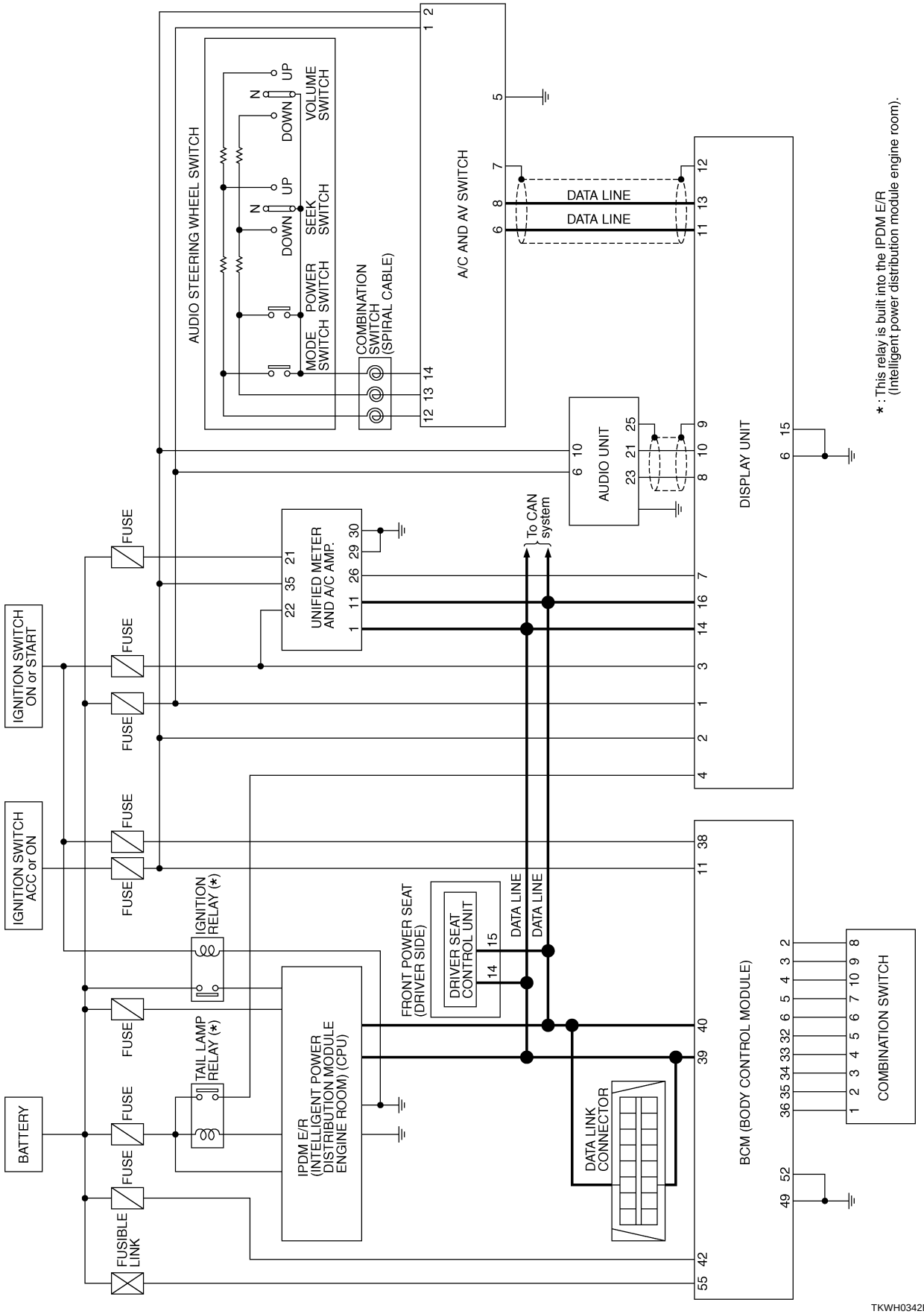

TKWH0342E

Wiring Diagram — INF/D —

AKS005U4

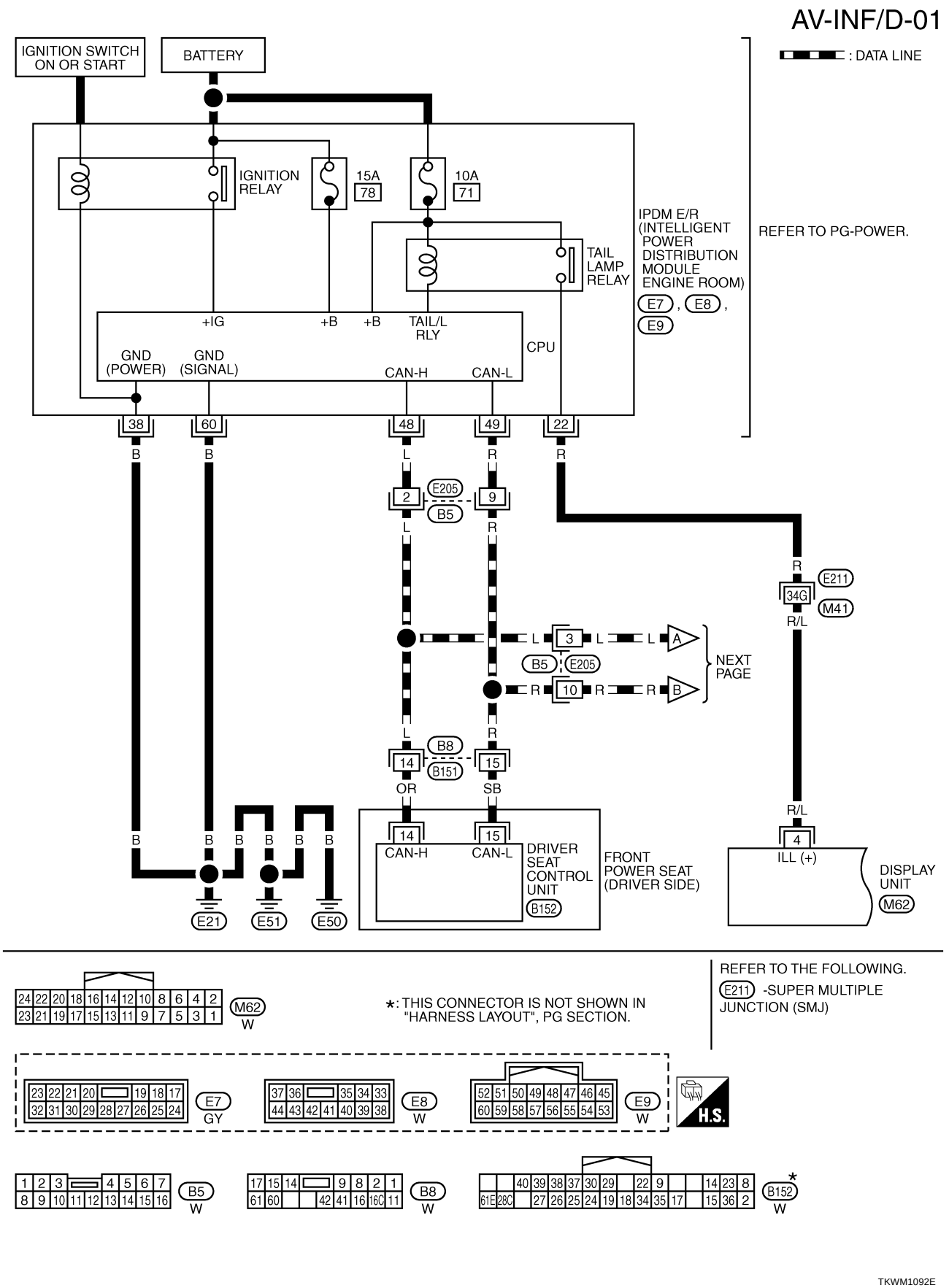

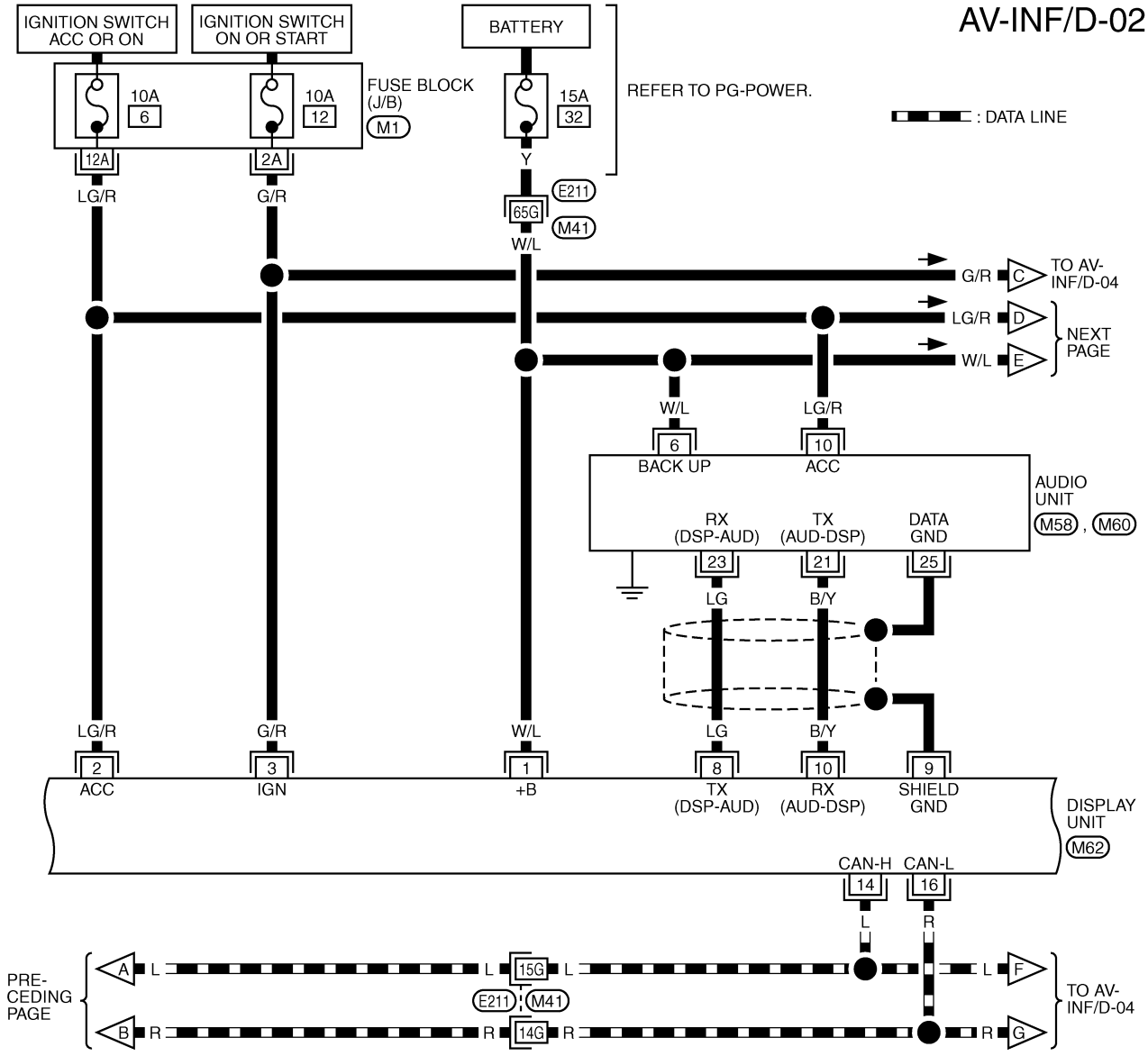

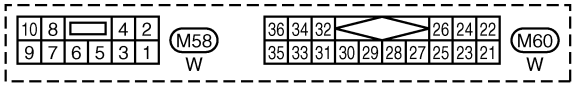

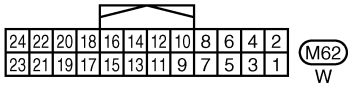

REFER TO THE FOLLOWING.

E211 -SUPER MULTIPLE JUNCTION (SMJ)

M1 -FUSE BLOCK-JUNCTION BOX (J/B)

TKWM0581E

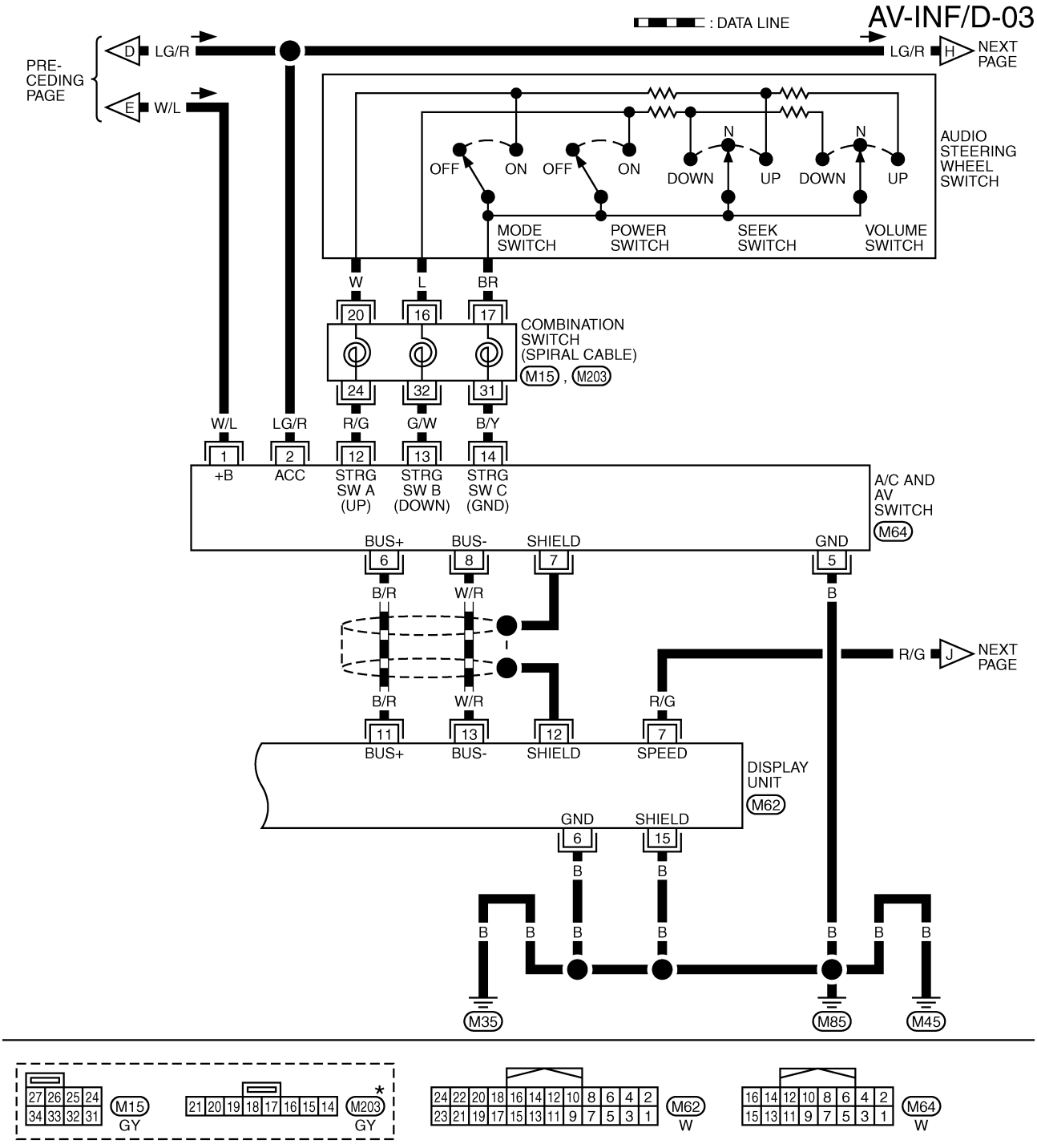

*: THIS CONNECTOR IS NOT SHOWN IN "HARNESS LAYOUT", PG SECTION.

TKWM0582E

AV-INF/D-04

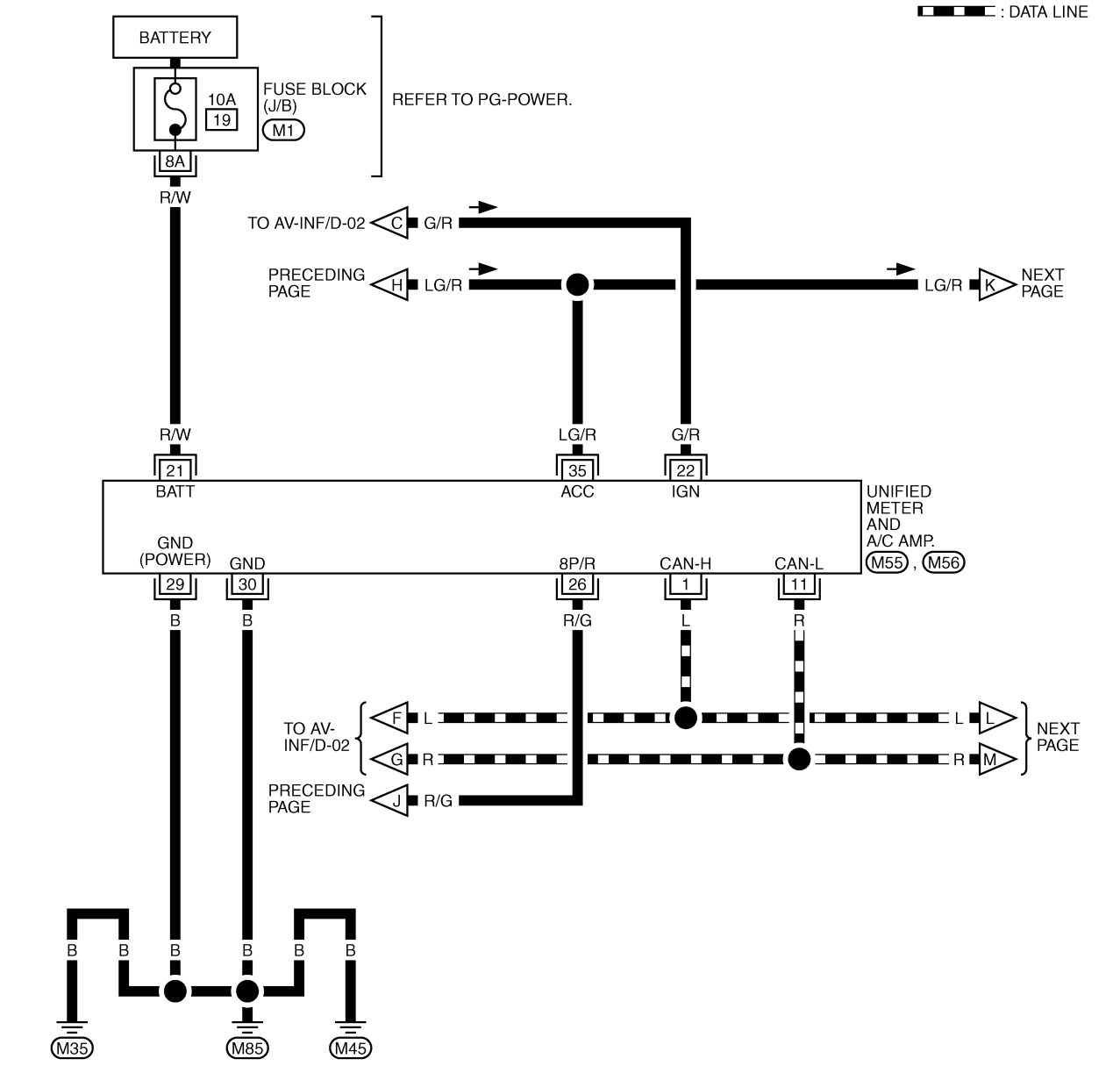

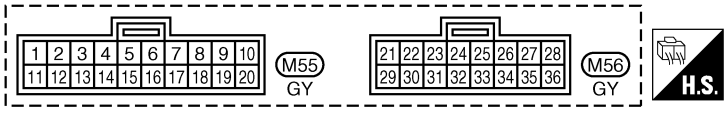

REFER TO THE FOLLOWING.
M1 -FUSE BLOCK-JUNCTION BOX (J/B)

TKWM2436E

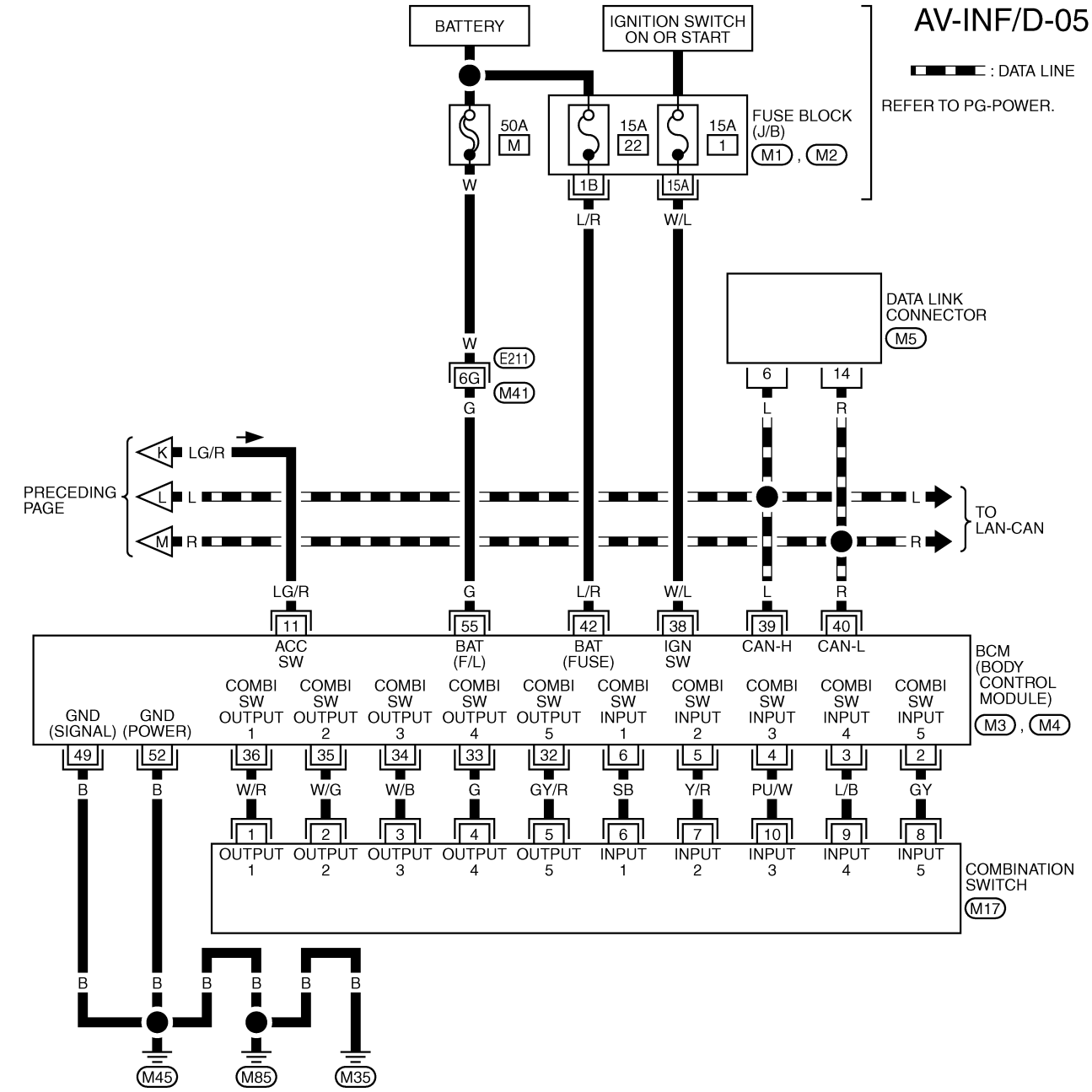
AV-INF/D-05
: DATA LINE
REFER TO PG-POWER.
BATTERY
IGNITION SWITCH ON OR START
50A M
15A 22
15A 1
FUSE BLOCK (J/B) M1 , M2
1B
15A
W
L/R
W/L
DATA LINK CONNECTOR M5
6
14
E211
6G
M41
G
L
R
PRECEDING PAGE
K LG/R
L L
M R
TO LAN-CAN
LG/R
G
L/R
W/L
L
R
11 ACC SW
55 BAT (F/L)
42 BAT (FUSE)
38 IGN SW
39 CAN-H
40 CAN-L
BCM (BODY CONTROL MODULE) M3 , M4
GND (SIGNAL) 49
GND (POWER) 52
COMBI SW OUTPUT 1 36
COMBI SW OUTPUT 2 35
COMBI SW OUTPUT 3 34
COMBI SW OUTPUT 4 33
COMBI SW OUTPUT 5 32
COMBI SW INPUT 1 6
COMBI SW INPUT 2 5
COMBI SW INPUT 3 4
COMBI SW INPUT 4 3
COMBI SW INPUT 5 2
B
B
W/R
W/G
W/B
G
GY/R
SB
Y/R
PU/W
L/B
GY
OUTPUT 1 1
OUTPUT 2 2
OUTPUT 3 3
OUTPUT 4 4
OUTPUT 5 5
INPUT 1 6
INPUT 2 7
INPUT 3 10
INPUT 4 9
INPUT 5 8
COMBINATION SWITCH M17
B B B B B B
M45
M85
M35
16 15 14 13 12 11 10 9
8 7 6 5 4 3 2 1
M5
W
7 8 9 10 13 12
6 5 4 3 2 1 11 14
M17
W
REFER TO THE FOLLOWING.
E211 -SUPER MULTIPLE JUNCTION (SMJ)
M1 , M2 -FUSE BLOCK-JUNCTION BOX (J/B)
M3 , M4 -ELECTRICAL UNITS

TKWM0811E

Schematic

AKS0069E

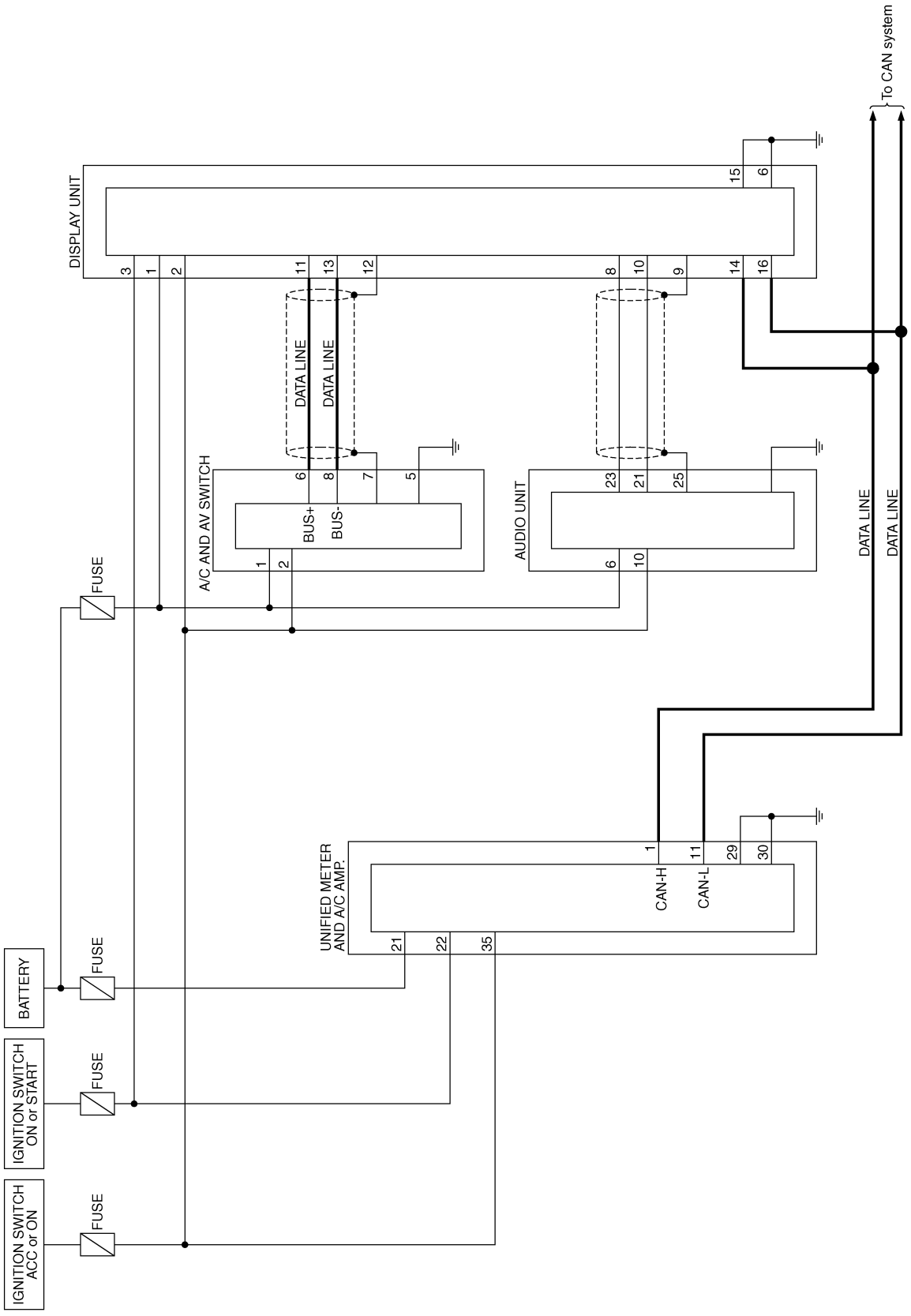

TKWM0591E

Wiring Diagram — COMM —

AKS005U5

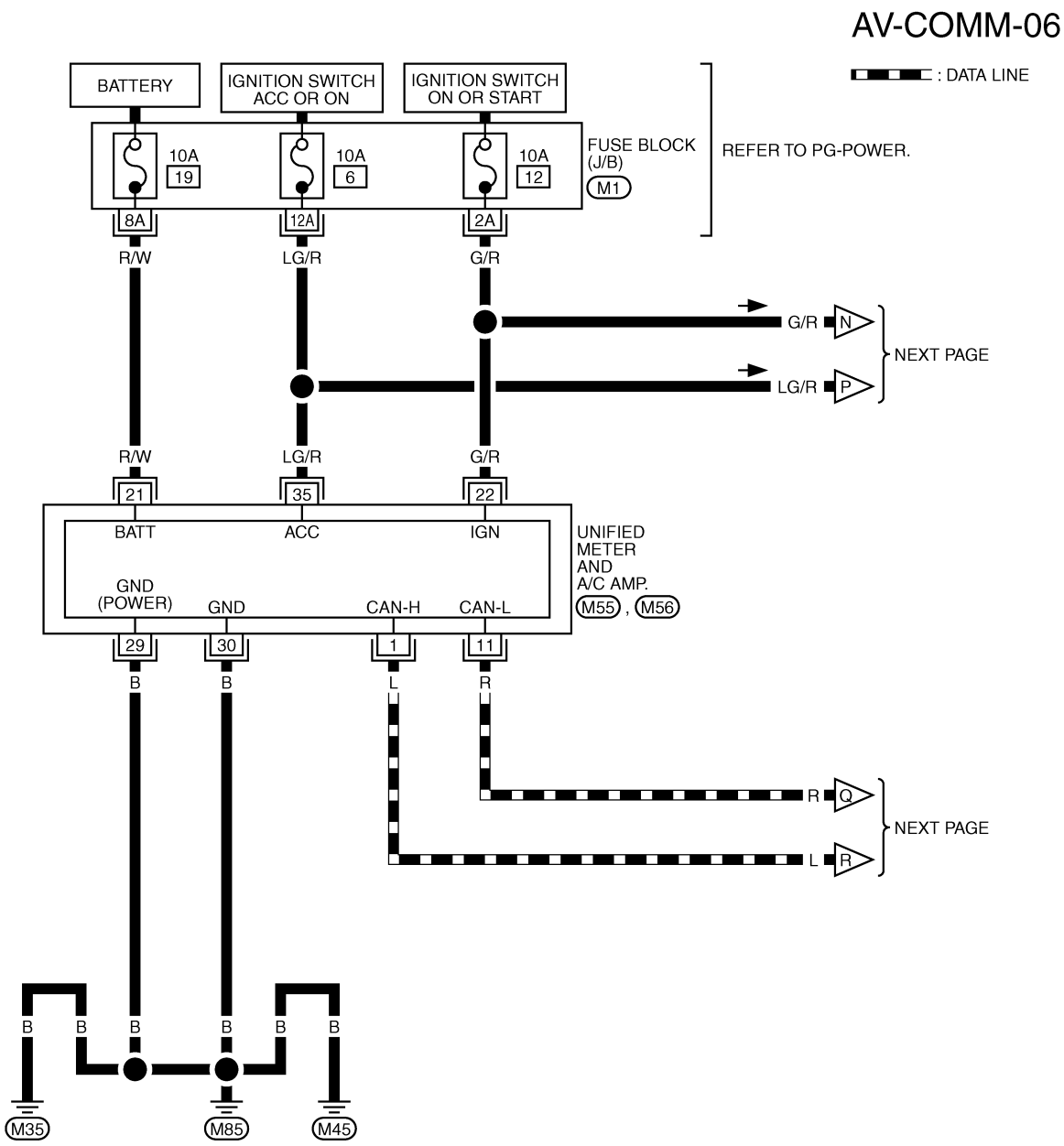

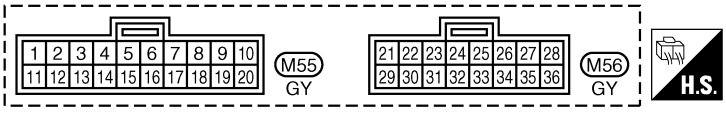

REFER TO THE FOLLOWING.
M1 -FUSE BLOCK-JUNCTION BOX (J/B)

TKWM2437E

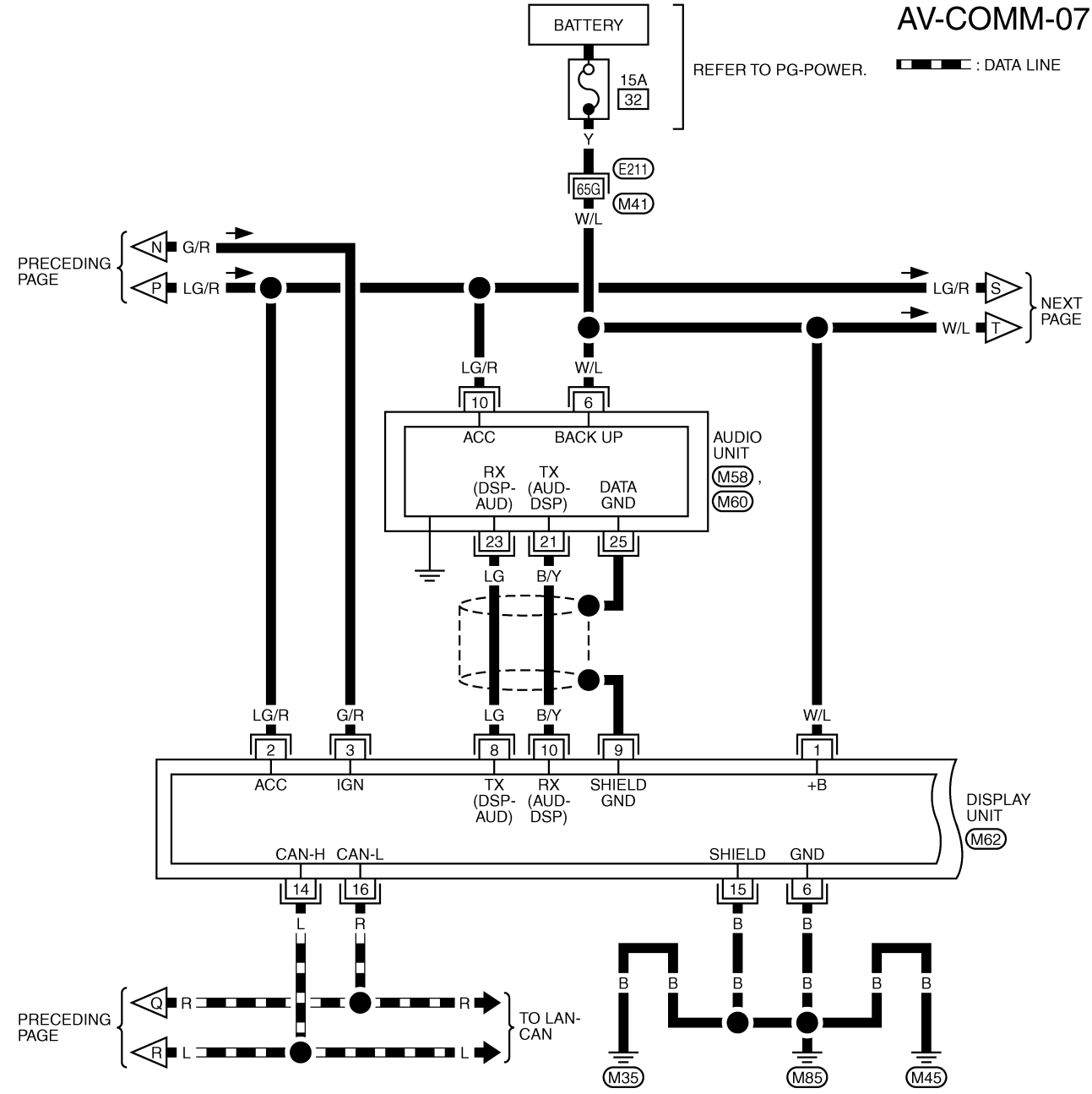

REFER TO THE FOLLOWING.
E211 -SUPER MULTIPLE JUNCTION (SMJ)

TKWM0593E

AV-COMM-08

: DATA LINE

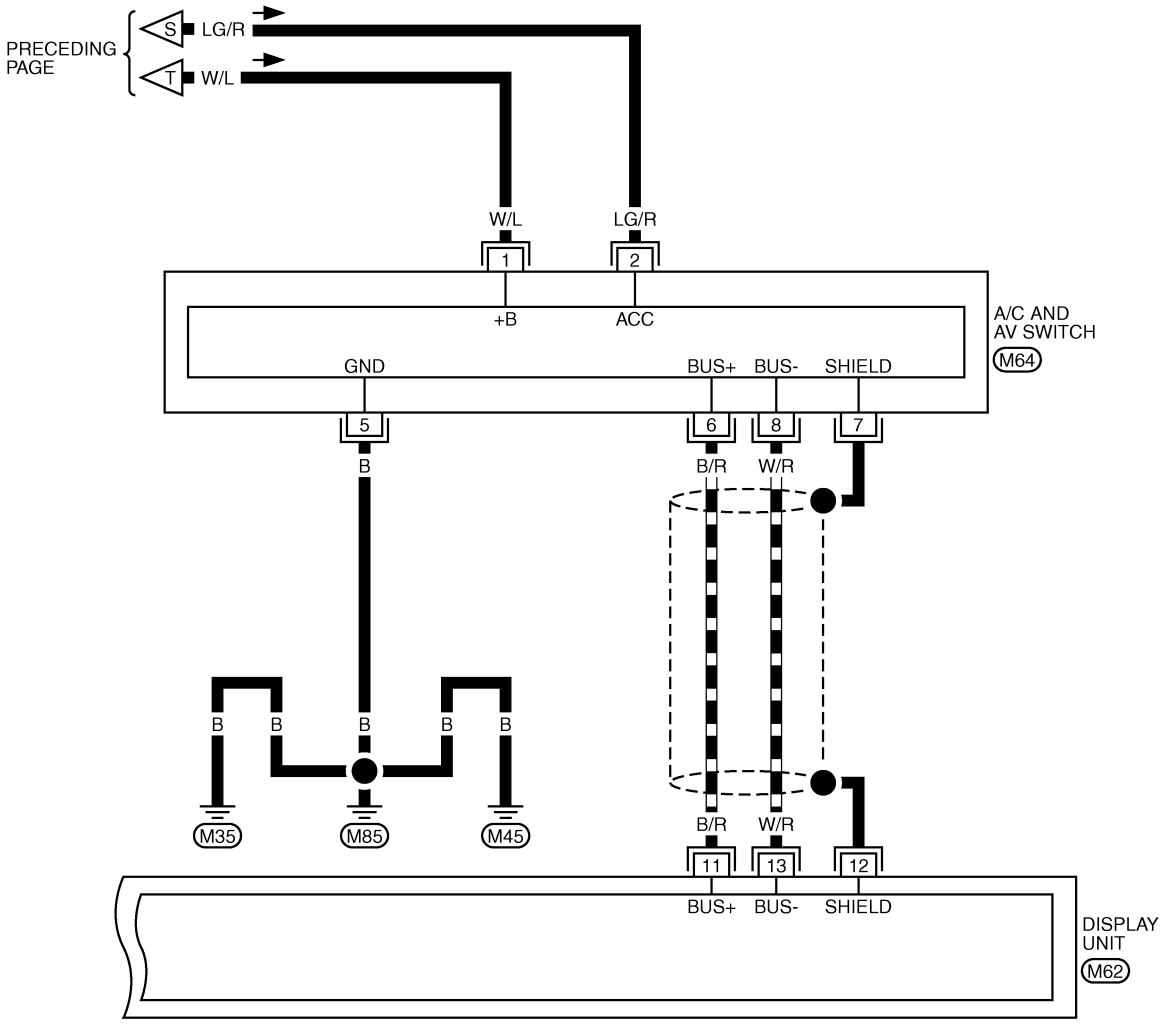

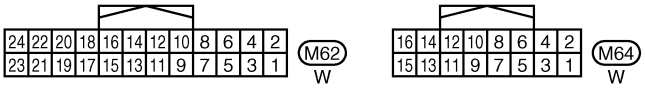

TKWM0594E

Terminals and Reference Value for Display Unit

AKS005U6

Terminal No. (Wire color)		Item	Signal input/ output	Condition		Voltage	Example of symptom
+	–			Ignition switch	Operation		
1 (W/L)	Ground	Battery power supply	Input	OFF	—	Battery voltage	System does not work properly.
2 (LG/R)	Ground	ACC power supply	Input	ACC	—	Battery voltage	System does not work properly.
3 (G/R)	Ground	Ignition signal	Input	ON	—	Battery voltage	A/C operation is not possible. Vehicle information setting is not possible.
4 (R/L)	Ground	Illumination signal	Input	OFF	Lighting switch is ON (1st position).	Approx. 12 V	Audio unit illumination does not come on when lighting switch is ON (1st position).
					Turn lighting switch OFF.	Approx. 0 V	
6 (B)	Ground	Ground	—	ON	—	Approx. 0 V	—
7 (R/G)	Ground	Vehicle speed signal (8-pulse)	Input	ON	When vehicle speed is approx. 40 km/h (25 MPH)	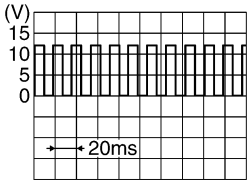 PKIA1935E	Drive computer item is not displayed correctly.
8 (LG)	Ground	Audio TX (DSP-AUD)	Output	ON	Operate audio volume.	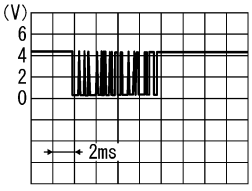 SKIA4402E	Audio does not operate properly.
9	—	Shield ground	—	—	—	—	—
10 (B/Y)	Ground	Audio RX (AUD-DSP)	Input	ON	Operate audio volume.	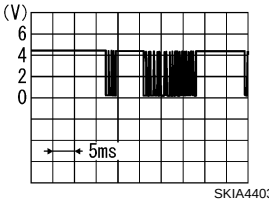 SKIA4403E	Audio does not operate properly.
11 (B/R)	Ground	Communication signal (+)	Input/ output	ON	—	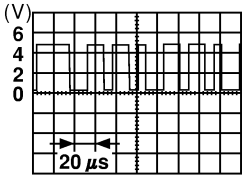 SKIA0175E	System does not work properly.
12	—	Shield ground	—	—	—	—	—

Terminal No. (Wire color)		Item	Signal input/ output	Condition		Voltage	Example of symptom
+	–			Ignition switch	Operation		
13 (W/R)	Ground	Communication signal (-)	Input/ output	ON	—	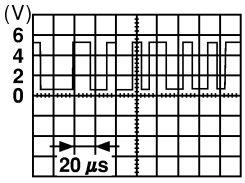 SKIA0176E	System does not work properly.
14 (L)	—	CAN-H	—	—	—	—	—
15 (B)	—	Shield ground	—	—	—	—	—
16 (R)	—	CAN-L	—	—	—	—	—

Terminals and Reference Value for A/C and AV Switch

AKS005U7

Terminal No. (Wire color)		Item	Signal input/ output	Condition		Voltage	Example of symptom
+	–			Ignition switch	Operation		
1 (W/L)	Ground	Battery power supply	Input	OFF	—	Battery voltage	System does not work properly.
2 (LG/R)	Ground	ACC power supply	Input	ACC	—	Battery voltage	System does not work properly.
5 (B)	Ground	Ground	—	ON	—	Approx. 0 V	—
6 (B/R)	Ground	Communication signal (+)	Input/ output	ON	—	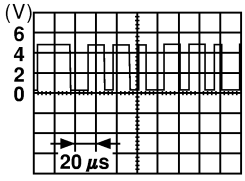 SKIA0175E	System does not work properly.
7	—	Shield ground	—	—	—	—	—
8 (W/R)	Ground	Communication signal (-)	Input/ output	ON	—	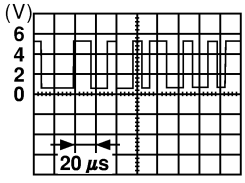 SKIA0176E	System does not work properly.
12 (R/G)	Ground	Steering SW A	Input	ON	Press MODE switch.	Approx. 0 V	Audio steering wheel switches do not function.
					Press SEEK UP switch.	Approx. 1.7 V	
					Press VOL UP switch.	Approx. 3.3 V	
					Except for above	Approx. 5 V	

Terminal No. (Wire color)		Item	Signal input/ output	Condition		Voltage	Example of symptom
+	–			Ignition switch	Operation		
13 (G/W)	Ground	Steering SW B	Input	ON	Press POWER switch.	Approx. 0 V	Audio steering wheel switches do not function.
					Press SEEK DOWN switch.	Approx. 1.7 V	
					Press VOL DOWN switch.	Approx. 3.3 V	
					Except for above	Approx. 5 V	
14 (B/Y)	—	Steering SW ground	—	—	—	—	Audio steering wheel switches do not function.

On Board Self-Diagnosis Function

AKS005U8

DESCRIPTION

- Diagnosis function consists of the self-diagnosis mode performed automatically.
- Self-diagnosis mode checks for connections between the units constituting this system, analyzes each individual unit at the same time, and displays the results on the LCD screen.

DIAGNOSIS ITEM

Mode	Item	Description	Reference page
Self-diagnosis	NETWORK CHECK	Check network between control unit and switch connected from display unit via communication line.	AV-75, "NETWORK CHECK"
	PARTS CHECK	● Perform diagnosis and setting of display unit. ● Perform self-diagnosis for auto air conditioner system.	AV-75, "PARTS CHECK"
	VERSION CHECK	Displays version of each unit.	AV-76, "VERSION CHECK"
	CAN DIAG MNTR	Display unit displays CAN communication status.	AV-76, "CAN DIAG MNTR (CAN DIAG MONITOR)"

Self-Diagnosis Mode

AKS005U9

OPERATION PROCEDURES

1. Start the engine.
2. Turn the audio system off.
3. While pressing the “MUTE/**II** ” switch, turn the volume control dial clockwise or counterclockwise for 30 clicks or more. (When the self-diagnosis mode is started, a short beep will be heard.)
4. Display unit connection check screen.

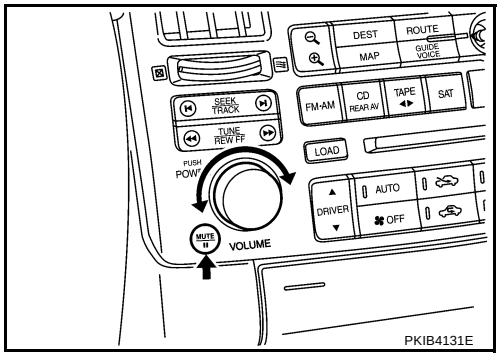

5. Select each connecting unit (CHANGER, SATELLITE RADIO).

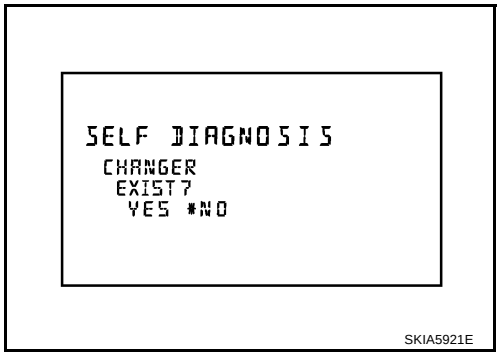

6. Self-diagnosis screen is displayed.
   - Using the joystick, select each item, and perform diagnosis.

   CAUTION:
   If self-diagnosis cannot activated, refer to AV-78, "Trouble Diagnosis Chart by Symptom" .

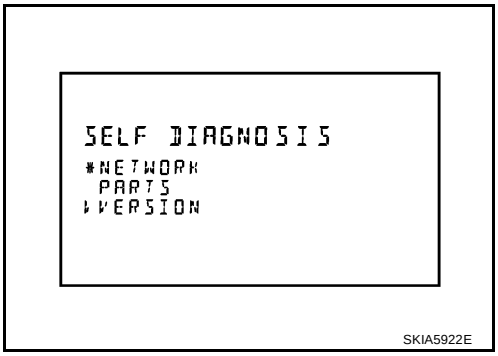

NETWORK CHECK

Selecting NETWORK CHECK on self-diagnosis screen, display self-diagnostic results.

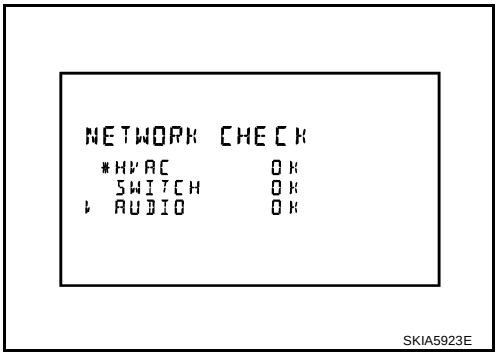

Diagnosis item	Contents	DTC return condition	Reference at error
HVAC	OK/NG	Communication error between unified meter and A/C amp. and display unit.	AV-85, "CAN Communication Line Inspection"
SWITCH	OK/NG	Communication error between A/C and AV switch and display unit.	AV-84, "AV Communication Line Inspection"
AUDIO	OK/NG	Communication error between audio and display unit.	AV-82, "Audio Communication Line Inspection"

PARTS CHECK

- Selecting PARTS CHECK on self-diagnosis screen, display selection screen.
- Select DISPLAY, indicate DISPLAY DETAIL screen. Display diagnosis and setting can be performed.
- Select HVAC, Indicate HVAC DETAIL screen. Auto air conditioner system self-diagnosis can be performed.

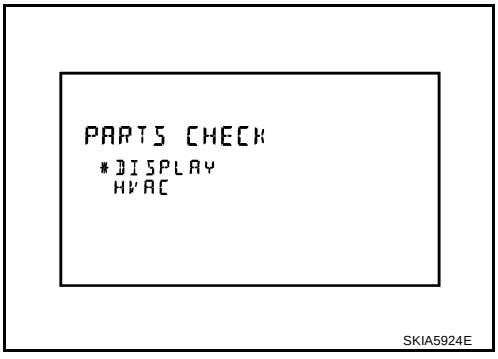

Display Detail Screen

Items	Description
FULL BLINK	All display unit segments turn ON.
BLANK–ADJ	Adjust the display time-out for 5 to 15 seconds. (Default is 10 seconds.)NOTE
WARNING	Select warning indication ON/OFF. (Default is ON.)

NOTE:
Except an audio screen.

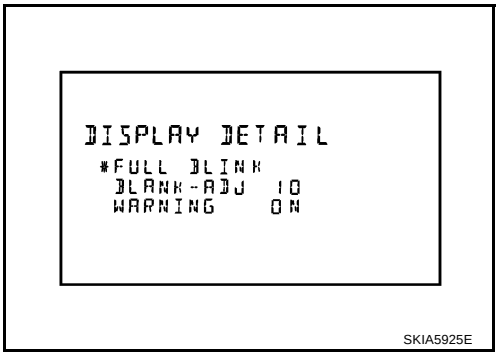

HVAC DETAIL SCREEN

Press the joystick, start auto air conditioner system self-diagnosis. Refer to ATC-53, "Self-diagnosis Function" .

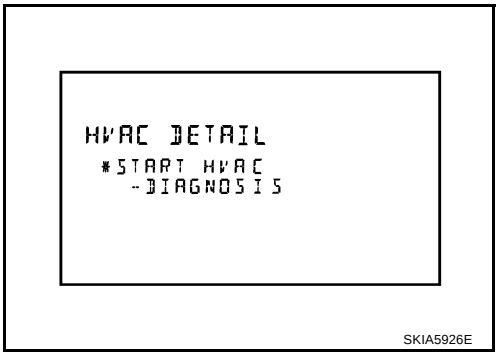

VERSION CHECK

Check ID and version of display, A/C and AV switch, audio, IVCS, changer, and Satellite Radio.

CAN DIAG MNTR (CAN DIAG MONITOR)

Display CAN communication status.

Items shown	Contents
CANCOMM	OK/NG
CAN1	OK/UNKWN
CAN2	OK/UNKWN
CAN3	OK/UNKWN
CAN4	OK/UNKWN
CAN5	OK/UNKWN
CAN6	OK/UNKWN
CAN7	OK/UNKWN
CAN8	OK/UNKWN
CAN9	OK/UNKWN

A/C and AV Switch Self-Diagnosis Function

AKS005UA

It can check ON/OFF operation of each switch in the A/C and AV switch and diagnose the input signals to the steering switch (audio).

STARTING THE SELF-DIAGNOSIS MODE

1. Turn ignition switch from OFF to ACC.
2. Within 10 seconds press and hold the switches “MUTE/**II** ” and “PREV ”simultaneously for 3 seconds.

Then the self-diagnosis operates.

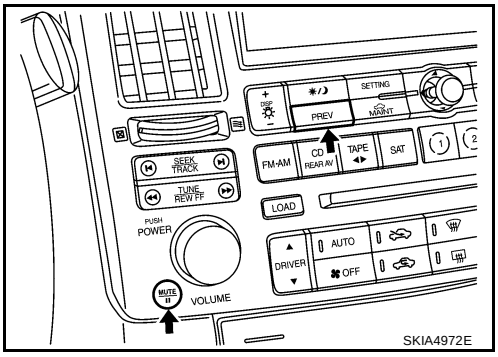

EXITING THE SELF-DIAGNOSIS MODE

Turn ignition switch OFF. Then the self-diagnosis ends.

DIAGNOSIS FUNCTION

- It can illuminate all the indicators (LED) in the A/C and AV switch.
- It can check for continuity of the switches by sounding the buzzer when the A/C and AV switch is pressed.
- It can check for continuity of harness between A/C and AV switch and steering switch (audio).

Trouble Diagnosis Chart by Symptom

AKS005UB

Symptom	Suspect Systems and reference
No screen is shown.	Refer to AV-79, "Power Supply and Ground Circuit Check for Display Unit" . If above is normal, replace display unit.
Screen does not switch to nighttime mode after the lighting switch is turned 1st.	Refer to AV-81, "Illumination Signal Inspection" .
TRIP and FUEL ECON screen do not appear.	Refer to AV-82, "Ignition Signal Inspection" .
Journey distance (DIST) is not added up.	Refer to AV-80, "Vehicle Speed Signal Inspection" .
Average vehicle speed (AVG) is not displayed.	
Average fuel consumption (AVG) is not displayed.	● Refer to AV-80, "Vehicle Speed Signal Inspection" . ● Refer to AV-85, "CAN Communication Line Inspection" . If above is normal, replace display unit.
Distance to empty (DTE) is not displayed.	● Check if speedometer operates. If it does not operate, go to AV-80, "Vehicle Speed Signal Inspection" . ● Check if fuel gauge operates. If it does not operate, go to DI-22, "Fuel Level Sensor Signal Inspection" . ● Refer to AV-85, "CAN Communication Line Inspection" . If above is normal, replace display unit.
Tire pressure is not displayed.	● Check BCM (Body Control Module). Refer to BCS-3, "BCM (BODY CONTROL MODULE)" . ● Refer to AV-85, "CAN Communication Line Inspection" . If above is normal, replace display unit.
Door warning screen does not appear.	● Refer to AV-80, "Vehicle Speed Signal Inspection" . ● Refer to AV-85, "CAN Communication Line Inspection" . If above is normal, replace display unit.
A/C and AV switch and all switch operation are not possible. (Do not start self-diagnosis.)	● Refer to AV-80, "Power Supply and Ground Circuit Check for A/C and AV Switch" . ● Refer to AV-77, "A/C and AV Switch Self-Diagnosis Function" . ● Refer to AV-84, "AV Communication Line Inspection" . If above is normal, replace display unit.
Audio operation is not possible.	● Refer to AV-77, "A/C and AV Switch Self-Diagnosis Function" . ● Refer to AV-82, "Audio Communication Line Inspection" .
Audio steering wheel switches do not function.	Refer to AV-86, "Audio Steering Wheel Switch Inspection" . If above is normal, replace AV and A/C switch.
Air conditioner operation is not possible.	● Refer to AV-77, "A/C and AV Switch Self-Diagnosis Function" . ● Refer to AV-85, "CAN Communication Line Inspection" .

Power Supply and Ground Circuit Check for Display Unit

AKS005UC

1. CHECK FUSE

Check if the following fuses in display unit are blown.

Unit	Power souse	Fuse No.
Display	Battery	32
	Ignition switch ACC or ON	6
	Ignition switch ON or START	12

OK or NG

OK >> GO TO 2.

NG >> If fuse is blown be sure to eliminate case of malfunction before installing new fuse. Refer to PG-3, "POWER SUPPLY ROUTING CIRCUIT" .

2. CHECK POWER SUPPLY CIRCUIT

Check voltage between display unit connector and ground.

Terminals			Ignition switch position		
(+)		(–)	OFF	ACC	ON
Connector	Terminal (Wire color)				
M62	1 (W/L)	Ground	Battery voltage	Battery voltage	Battery voltage
	2 (LG/R)	Ground	0 V	Battery voltage	Battery voltage

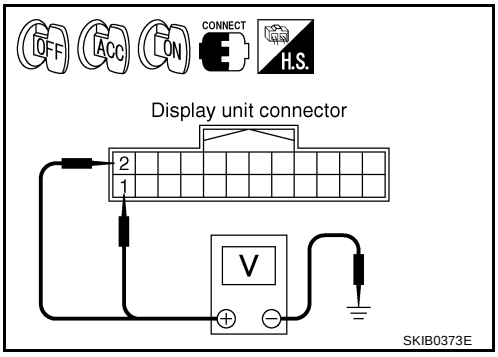

OK or NG

OK >> GO TO 3.

NG >> Check harness for open or short between display unit and fuse.

3. CHECK GROUND CIRCUIT

1. Turn ignition switch OFF.
2. Disconnect display unit connector.
3. Check continuity between display unit harness connector M62 terminals 6 (B), 15 (B) and ground.

Continuity should exist.

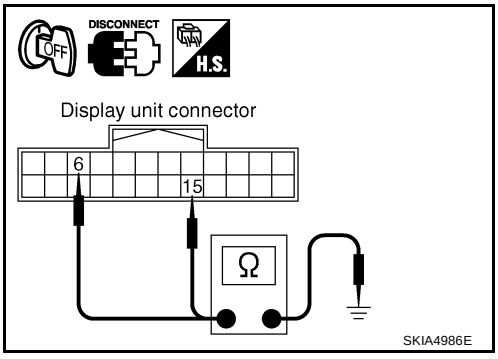

OK or NG

OK >> INSPECTION END

NG >> Check ground harness.

Power Supply and Ground Circuit Check for A/C and AV Switch

AKS005UD

1. CHECK FUSE

Check if the following fuses in A/C and AV switch are blown.

Unit	Power source	Fuse No.
A/C and AV switch	Battery	32
	Ignition switch ACC or ON	6

OK or NG

OK >> GO TO 2.
NG >> If fuse is blown be sure to eliminate case of malfunction before installing new fuse. Refer to PG-3, "POWER SUPPLY ROUTING CIRCUIT" .

2. CHECK POWER SUPPLY CIRCUIT

Check voltage between A/C and AV switch connector and ground.

Terminals			Ignition switch position		
(+)		(–)	OFF	ACC	ON
Connector	Terminal (Wire color)				
M64	1 (W/L)	Ground	Battery voltage	Battery voltage	Battery voltage
	2 (LG/R)	Ground	0 V	Battery voltage	Battery voltage

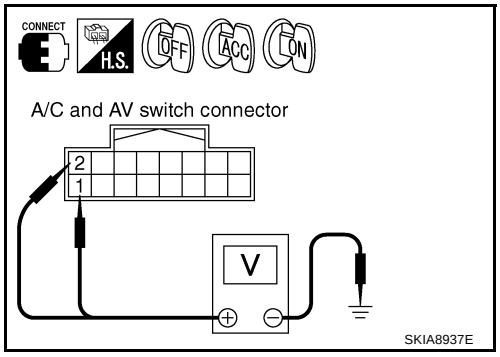

OK or NG

OK >> GO TO 3.
NG >> Check harness for open or short between A/C and AV switch and fuse.

3. CHECK GROUND CIRCUIT

1. Turn ignition switch OFF.
2. Disconnect A/C and AV switch connector.
3. Check continuity between A/C and AV switch harness connector M64 terminal 5 (B) and ground.

Continuity should exist.

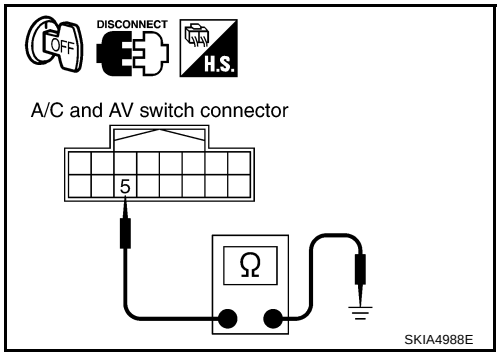

OK or NG

OK >> INSPECTION END
NG >> Check ground harness.

Vehicle Speed Signal Inspection

AKS005UE

1. VEHICLE SPEED OPERATION CHECK

Does speedometer is operated normally?

YES or NO

YES >> GO TO 2.
NO >> Check combination meter trouble diagnosis. Refer to DI-15, "Trouble Diagnosis" .

2. CHECK HARNESS

1. Turn ignition switch OFF.
2. Disconnect display unit connector and unified meter and A/C amp. connector.
3. Check continuity between display unit harness connector M62 terminal 7 (R/G) and unified meter and A/C amp. harness connector M56 terminal 26 (R/G).

   Continuity should exist.

4. Check continuity between display unit harness connector M62 terminal 7 (R/G) and ground.

   Continuity should not exist.

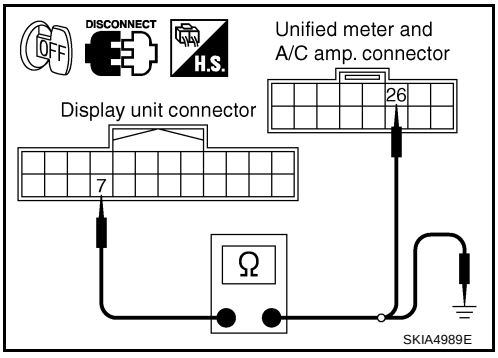

OK or NG

OK >> GO TO 3.
NG >> Repair harness or connector.

3. CHECK VEHICLE SPEED SIGNAL

1. Connect unified meter and A/C amp. connector.
2. Drive vehicle at a constant speed.
3. Check the signal between display unit harness connector M62 terminal 7 (R/G) and ground with CONSULT-II or oscilloscope.

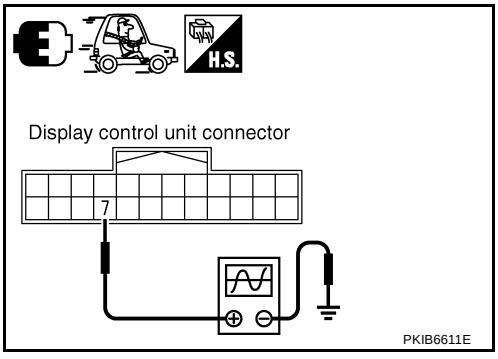

7 (R/G) - Ground:

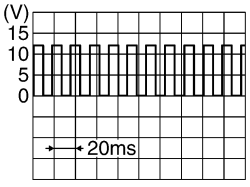

PKIA1935E

OK or NG

OK >> Replace display unit.
NG >> Check unified meter and A/C amp. system. Refer to DI-20, "Vehicle Speed Signal Inspection" .

Illumination Signal Inspection

AKS005UF

1. CHECK ILLUMINATION SIGNAL

1. Turn ignition switch ON.
2. Check voltage between display unit and ground.

Terminals			Lighting switch position	
(+)		(–)		
Connector	Terminal (Wire color)		1st or 2nd position	OFF
M62	4 (R/L)	Ground	Approx.12 V	Approx. 0 V

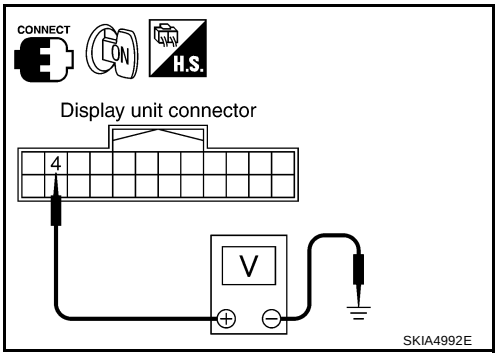

OK or NG

OK >> Replace display unit.
NG >> Check harness for open or short between display unit and IPDM E/R.

Ignition Signal Inspection

AKS005UG

1. CHECK IGNITION SIGNAL

1. Turn ignition switch ON.
2. Check voltage between display unit harness connector M62 terminal 3 (G/R) and ground.

Battery voltage should exist.

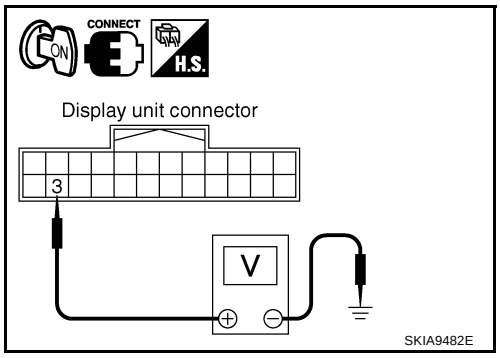

OK or NG

OK >> Replace display unit.
NG >> Check harness for open or short between display unit and fuse.

Audio Communication Line Inspection

AKS005UH

1. CHECK HARNESS

1. Turn ignition switch OFF.
2. Disconnect audio unit connector and display unit connector.
3. Check continuity between audio unit and display unit.

Terminals				Continuity
Display unit		Audio unit		
Connector	Terminal (Wire color)	Connector	Terminal (Wire color)	
M62	8 (LG)	M60	23 (LG)	Yes
	10 (B/Y)		21 (B/Y)	
	9		25	

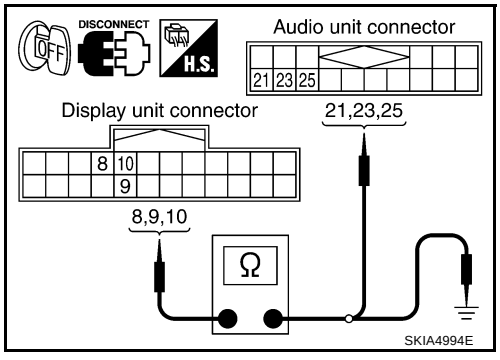

4. Check continuity between display unit and ground.

Terminals			Continuity
Display unit		—	
Connector	Terminal (Wire color)		
M62	8 (LG)	Ground	No
	10 (B/Y)		

OK or NG

OK >> GO TO 2.
NG >> Repair harness or connector.

2. CHECK AUDIO COMMUNICATION SIGNAL(DSP–AUD)

1. Connect display unit connector.
2. Turn ignition switch ON.
3. Check voltage between display unit harness connector M62 terminal 8 (LG) and ground.

Approx. 3.5V or more

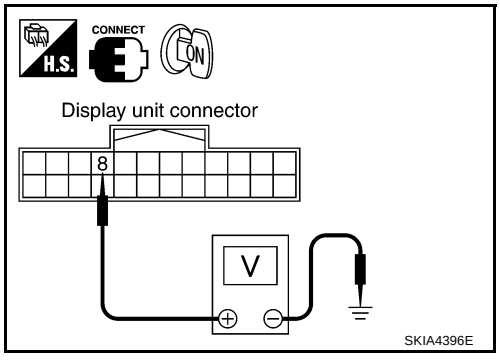

OK or NG

OK >> GO TO 3.
NG >> Replace display unit.

3. CHECK AUDIO COMMUNICATION SIGNAL(AUD–DSP)

1. Turn ignition switch OFF and connect audio unit connector.
2. Turn ignition switch ON.
3. Check voltage between audio unit harness connector M60 terminal 21 (B/Y) and ground.

Approx. 3.5 V or more

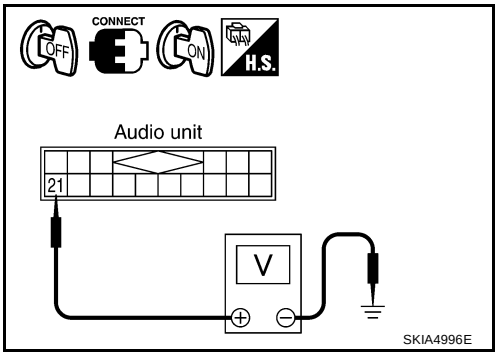

OK or NG

OK >> GO TO 4.
NG >> Replace audio unit.

4. CHECK AUDIO COMMUNICATION SIGNAL(DSP–AUD)

1. Turn ignition switch ON.
2. Check the signal between display unit harness connector M62 terminal 8 (LG) and ground with CONSULT-II or oscilloscope.

8 (LG) - Ground:

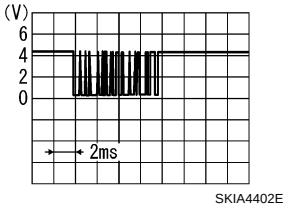

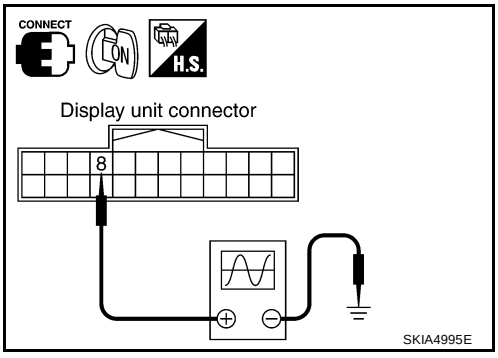

OK or NG

OK >> GO TO 5.
NG >> Replace display unit.

5. CHECK AUDIO COMMUNICATION SIGNAL(AUD–DSP)

1. Turn ignition switch ON.
2. Check the signal between display unit harness connector M62 terminal 10 (B/Y) and ground with CONSULT-II or oscilloscope.

10 (B/Y) - Ground:

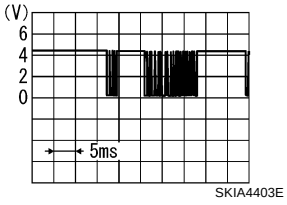

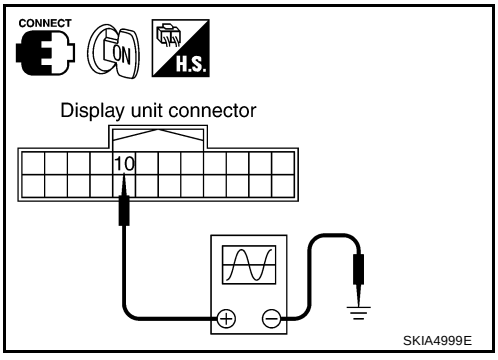

OK or NG

OK >> INSPECTION END
NG >> Replace audio unit.

AV Communication Line Inspection

AKS005UI

1. CHECK A/C AND AV SWITCH CIRCUIT

1. Turn ignition switch OFF.
2. Disconnect display unit connector and A/C and AV switch connector.
3. Check continuity between display unit and A/C and AV switch.

Terminals				Continuity
Display unit		A/C and AV switch		
Connector	Terminal (Wire color)	Connector	Terminal (Wire color)	
M62	11 (B/R)	M64	6 (B/R)	Yes
	13 (W/R)		8 (W/R)	
	12		7	

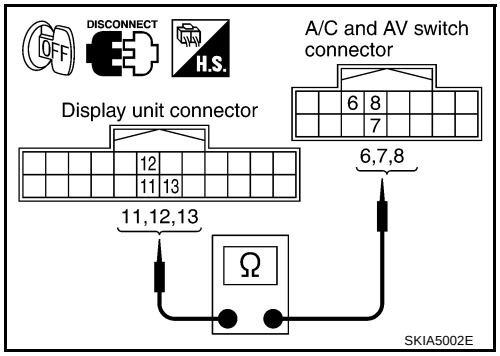

4. Check continuity between display unit and ground.

Terminals			Continuity
Connector	Terminal (Wire color)	Terminal	
M62	11 (B/R)	Ground	No
	13 (W/R)		

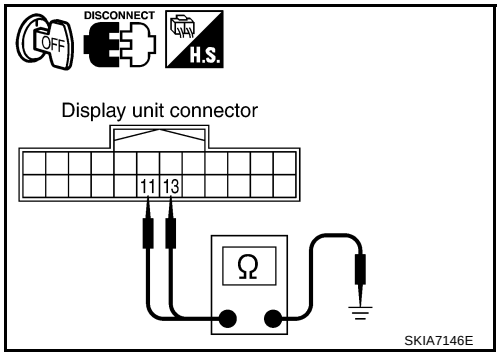

OK or NG

OK >> GO TO 2.
NG >> Repair harness or connector.

2. CHECK OF A/C AND AV SWITCH

Replace same normal A/C and AV switch and recheck the symptom.

Is the function normal?

YES >> Replace A/C and AV switch.
NO >> Replace display unit.

CAN Communication Line Inspection

AKS005UJ

1. CHECK MONITOR DESCRIPTION

1. Start display unit self-diagnosis. Refer to AV-74, "Self-Diagnosis Mode" .
2. Select “CAN DIAG MNTR”. Refer to AV-76, "CAN DIAG MNTR (CAN DIAG MONITOR)" .

Diagnosis item	Data monitor display description	
	Normal condition	Abnormal condition (example)
CANCOMM	OK	NG
CAN1	OK	UNKWN
CAN2	OK	UNKWN
CAN3	OK	UNKWN
CAN4	OK	UNKWN
CAN5	OK	UNKWN
CAN6	OK	UNKWN
CAN7	OK	UNKWN
CAN8	OK	UNKWN
CAN9	OK	UNKWN

3. Record each item display description (OK/NG/UKNWN) displayed on the following CAN DIAG MONITOR Check Sheet.

CAN DIAG MONITOR Check Sheet

Diagnosis item	Screen display		Diagnosis item	Screen display	
CANCOMM	OK	NG	CAN5	OK	UNKWN
CAN1	OK	UNKWN	CAN6	OK	UNKWN
CAN2	OK	UNKWN	CAN7	OK	UNKWN
CAN3	OK	UNKWN	CAN8	OK	UNKWN
CAN4	OK	UNKWN	CAN9	OK	UNKWN

>> After filling in CAN DIAG MONITOR Check Sheet, go to LAN-5, "Precautions When Using CONSULT-II" .

Audio Steering Wheel Switch Inspection

AKS005UK

Refer to AV-42, "Audio Steering Wheel Switch Inspection" .

Removal and Installation of Display

AKS005UL

REMOVAL

1. Remove audio unit. Refer to AV-47, "Removal and Installation of Audio Unit" .
2. Remove screws (4), and remove display.

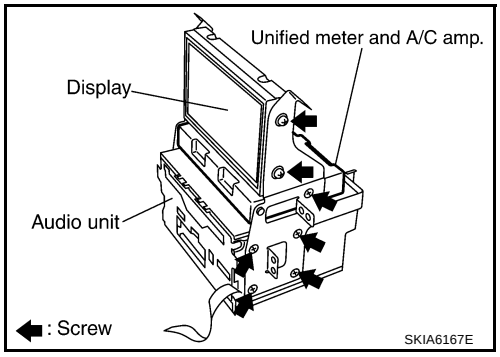

INSTALLATION

Installation is the reverse order of removal.

Removal and Installation of A/C and AV Switch

AKS005UM

Refer to AV-48, "Removal and Installation for A/C and AV Switch" .

NAVIGATION SYSTEM

PFP:25915

System Description

AKS007IQ

The navigation system periodically calculates the vehicle's current position according to the following three signals: Travel distance of the vehicle as determined by the vehicle speed sensor, turning angle of the vehicle as determined by the gyroscope (angular velocity sensor), and the direction of vehicle travel as determined by the GPS antenna (GPS information).
The current position of the vehicle is then identified by comparing the calculated vehicle position with map data read from the map DVD-ROM, which is stored in the DVD-ROM drive (map-matching), and indicated on the screen with a current-location mark.

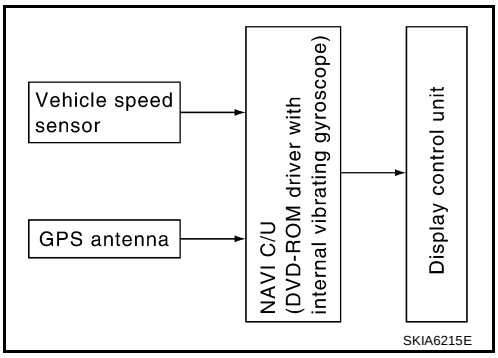

By comparing the vehicle position detection results found by the GPS and by map-matching, more accurate vehicle position data can be used.
The current vehicle position will be calculated by detecting the distance the vehicle moved from the previous calculation point and its direction.

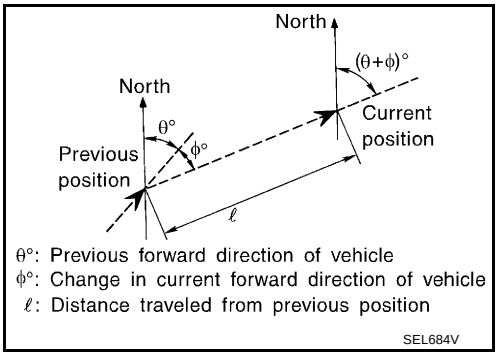

TRAVEL DISTANCE

Travel distance calculations are based on the vehicle speed sensor input signal. Therefore, the calculation may become incorrect as the tires wear down. To prevent this, an automatic distance fine adjustment function has been adopted.

TRAVEL DIRECTION

Change in the travel direction of the vehicle is calculated by a gyroscope (angular velocity sensor) and a GPS antenna (GPS information). As the gyroscope and GPS antenna have both merit and demerit, input signals from them are prioritized in each situation. However, this order of priority may change in accordance with more detailed travel conditions so that the travel direction is detected more accurately.

Type	Advantage	Disadvantage
Gyroscope (angular velocity sensor)	● Can detect the vehicle's turning angle quite accurately.	● Direction errors may accumulate when the vehicle is driven for long distances without stopping.
GPS antenna (GPS information)	● Can detect the vehicle's travel direction (North/South/East/West).	● Correct direction cannot be detected when the vehicle speed is low.

MAP-MATCHING

Map-matching is a function that repositions the vehicle on the road map when a new location is judged to be the most accurate. This is done by comparing the current vehicle position, calculated by the method described in the position detection principle, with the road map data around the vehicle, read from the map DVD-ROM stored in the DVD-ROM drive.
Therefore, the vehicle position may not be corrected after the vehicle is driven over a certain distance or time in which GPS information is hard to receive. In this case, the current location mark on the display must be corrected manually.

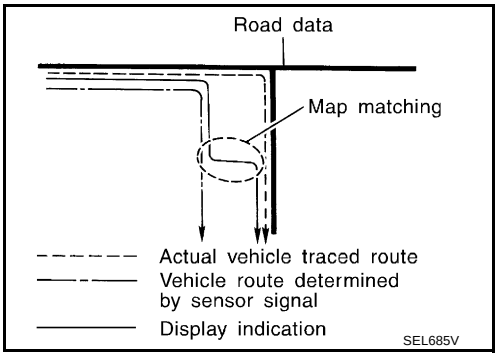

CAUTION:
The road map data is based on data stored in the map DVD-ROM.

- In map-matching, alternative routes to reach the destination will be shown and prioritized, after the road on which the vehicle is currently driven has been judged and the current-location mark has been repositioned.
  If there is an error in distance and/or direction, the alternative routes will be shown in different order of priority, and the wrong road can be avoided.
  If two roads are running in parallel, they are of the same priority. Therefore, the current-location mark may appear on either of them alternately, depending on maneuvering of the steering wheel and configuration of the road.

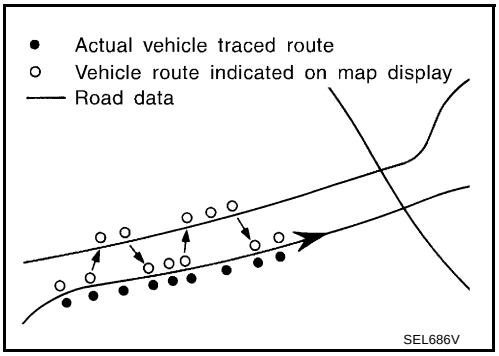

- Map-matching does not function correctly when the road on which the vehicle is driving is new and not recorded in the map DVD-ROM, or when the road pattern stored in the map data and the actual road pattern are different due to repair.
  When driving on a road not present in the map, the map-matching function may find another road and position the current-location mark on it. Then, when the correct road is detected, the current-location mark may leap to it.
- Effective range for comparing the vehicle position and travel direction calculated by the distance and direction with the road data read from the map DVD-ROM is limited. Therefore, when there is an excessive gap between the current vehicle position and the position on the map, correction by map-matching is not possible.

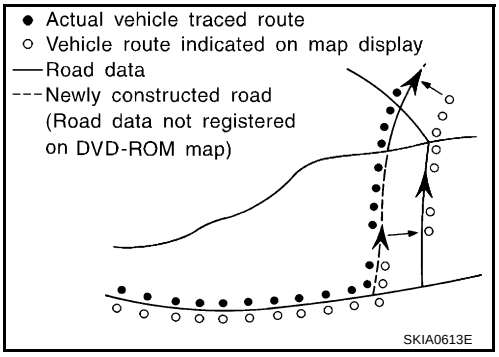

GPS (GLOBAL POSITIONING SYSTEM)

GPS (Global Positioning System) has been developed and controlled by the US Department of Defense. The system utilizes GPS satellite (NAVSTAR), sending out radio waves while flying on an orbit around the earth at the height of approx. 21,000 km (13,000 miles).
The GPS receiver calculates the vehicle's position in three dimensions (latitude/longitude/altitude) according to the time lag of the radio waves received from four or more GPS satellites (three-dimensional positioning). If radio waves were received only from three GPS satellites, the GPS receiver calculates the vehicle's position in two dimensions (latitude/longitude), utilizing the altitude data calculated previously by using radio waves from four or more GPS satellites (two–dimensional positioning).

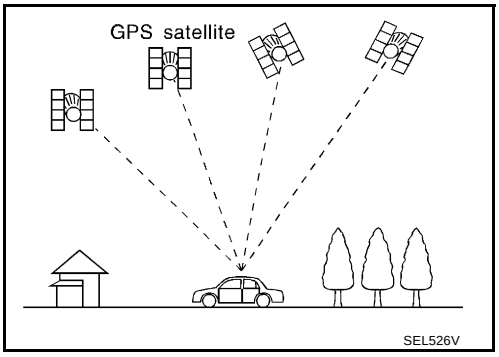

Accuracy of the GPS will deteriorate under the following conditions.

- In two–dimensional positioning, the GPS accuracy will deteriorate when the altitude of the vehicle position changes.
- There may be an error of approximately 10 m (30 ft) in position detected by three-dimensional positioning, which is more accurate than two–dimensional positioning. The accuracy can be even lower depending on the arrangement of the GPS satellites utilized for the positioning.
- Position detection is not possible when the vehicle is in an area where radio waves from the GPS satellite do not reach, such as in a tunnel, parking lot in a building, and under an elevated highway. Radio waves from the GPS satellites may not be received when some object is located over the GPS antenna.
- Position correction by GPS is not available while the vehicle is stopped.

COMPONENT DESCRIPTION

NAVI Control Unit

- The gyro (angular speed sensor) and the DVD-ROM drive are built-in units that control the navigation functions.
- Signals are received from the gyro, the vehicle speed sensor, and the GPS antenna. Vehicle location is determined by combining this data with the data contained in the DVD-ROM map. Locational information is shown on LCD panel.

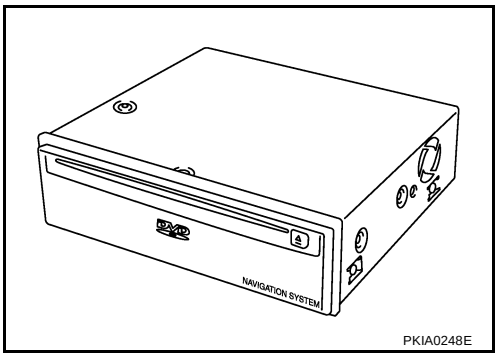

DVD-ROM Drive

Maps, traffic control regulations, and other pertinent information can be easily read from the DVD-ROM disc.

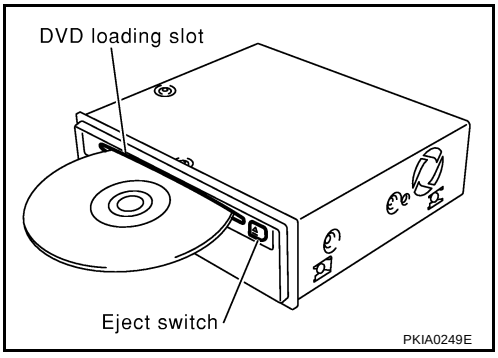

Map DVD-ROM

- The map DVD-ROM has maps, traffic control regulations, and other pertinent information.
- To improve DVD-ROM map matching and route determination functions, the DVD-ROM uses an exclusive Nissan format. Therefore, the use of a DVD-ROM provided by other manufacturers cannot be used.

Gyro (Angular Speed Sensor)

- The oscillator gyro sensor is used to detect changes in vehicle steering angle.
- The gyro is built into the navigation (NAVI) control unit.

BIRDVIEW™

The BIRDVIEW™ provides a detailed and easily seen display of road conditions covering the vehicle's immediate to distant area.

- MAP DISPLAY

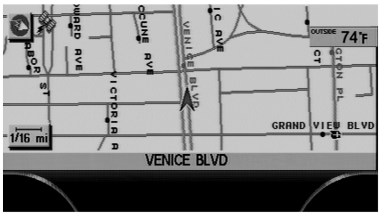

- BIRDVIEW™

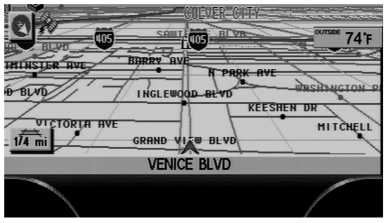

SKIA6099E

Description

- Display area: Trapezoidal representation showing approximate distances (Wn, D, and Wd).
- Ten horizontal grid lines indicate display width while six vertical grid lines indicate display depth and direction.
- Pushing the “ZOOM IN” button during operation displays the scale change and the view point height on the left side of the screen.
  The height of the view point increases or decreases when “ZOOM” or “WIDE” is selected with the joystick.

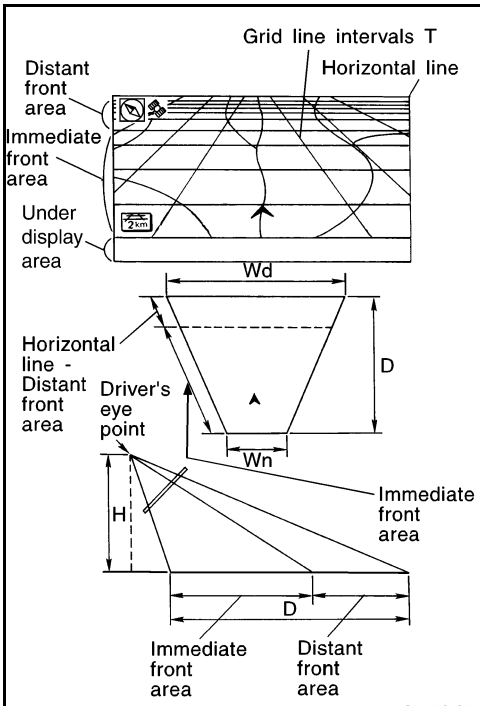

SKIA5613E

MAP DISPLAY

Function of each icon is as follows:

1. Azimuth indication
2. Position marker
   - The tip of the arrow shows the current location. The shaft of the arrow indicates the direction in which the vehicle is traveling.
3. GPS reception signal (indicates current reception conditions.)
4. Distance display (shows the distance in a reduced scale.)

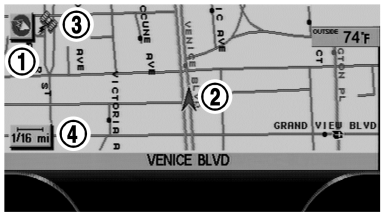

SKIA6100E

FUNCTION OF CENTER SWITCH

Display with Pushed “DEST” Button

- Easy Mode

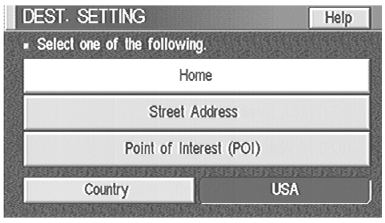

SKIB3188E

- Expert Mode

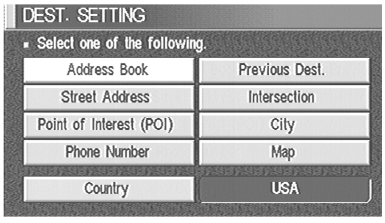

SKIB3189E

The function of each icon is as follows:

Icon	Mode		Description
	Easy	Expert	
Address Book		×	Favorite place can be saved to memory.
Street Address	×	×	The destination can be searched from the address.
Point of Interest (POI)	×	×	The destination of favorite facility can be searched.
Previous Dest.		×	The previous ten destinations stored in memory are displayed.
Intersection		×	The destination can be searched from the intersection.
City		×	The destination can be searched from city name.
Map		×	The destination can be searched from the map.
Phone Number		×	When two or more countries are included in one DVD-ROM, the destination can be searched for under the country name.
Home	×		Sets the home as a destination.
Help	×		Explanation of navigational functions appear on the display.
Country	×	×	Select country (USA, CANADA).

Display with Pushed “ROUTE” Button

- Easy Mode

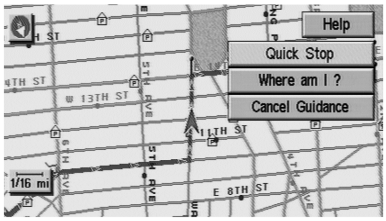

SKIA4494E

- Expert Mode

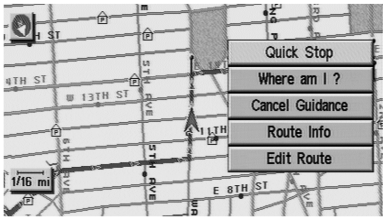

SKIA4495E

The function of each icon is as follows:

Icon	Mode		Description
	Easy	Expert	
Quick Stop	×	×	The selected facility is set as the destination or waypoint. (Route guidance has been turned OFF or the destination has been reached.)
Where am I?	×	×	Next, current and previous street names can be displayed.
Cancel Guidance	×	×	The following can be set. ● All Destinations ● Way point ● Not Cancel
Route Info.*		×	The following can be set. ● Complete Route ● Turn List ● Route Simulation (Displayed only when the destination area has been set.)
Edit Route*		×	Change the destination or add the transit points of the route set in the route guide. (Displayed only when the automatic reroute function has been turned OFF and the recommended route is not followed.)
Help	×		Explanation of navigational functions appear on the display.

*: When destinations have been entered, route guidance has been turned OFF or destination has been reached, “Route Info.” and “Edit Route” are not displayed.

Display with Pushed “SETTING” Button

The function of each icon is as follows:

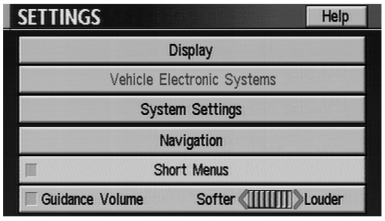

SKIA4496E

Icon	Description
Display	Settings of display can be performed.
Vehicle Electronic Systems	Settings of vehicle electrical equipment can be performed.
System Settings	Settings of linguistic select , time adjusting and beep sound can be performed.
Navigation	Settings and adjusting of navigation can be performed.
Short Menus	Easy Mode and Expert Easy Mode can be switched.
Guidance Volume	The volume and/or on/off of voice prompt can be controlled by the joystick.
Help (only easy mode)	Explanation of navigational functions appear on the display.

Display Settings

How To Perform Display Setting

1. Start the engine.
2. Push “SETTING” button.
3. Select “Display”.
4. Push “Enter” switch.

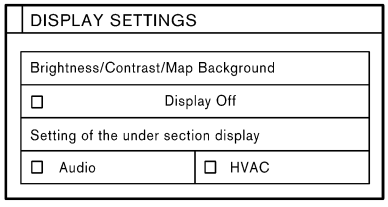

SKIA5791E

Application Items

Icon	Description	Reference page
Brightness/Contrast/Map Background	Brightness, Contrast and Map Background can be set.	AV-93
Display Off	Display sleep mode ON/OFF can be switched.	AV-93
Setting of the under section display	The setting status of A/C or AV can be shown.	AV-93

Brightness/ Contrast/ Map Back Ground

Select “Brightness/Contrast/Map Background”.

- Brightness, Contrast and Back ground are shown at the lower part of the screen, and it can be set by pushing joystick.

Display Off

Select “Display Off”.

- When setting is turned on (Indicator light ON), the display will be under sleep mode.

Setting of the Under Section Display

Select “Setting of the under section display”.

- The setting status that is selected from A/C or AV is shown at the lower part of the screen.

Vehicle Electronic Systems

How To Perform Vehicle Electronic Systems

1. Start the engine.
2. Push “SETTING” button.
3. Select “Vehicle Electronic Systems”.
4. Push “Enter” switch.

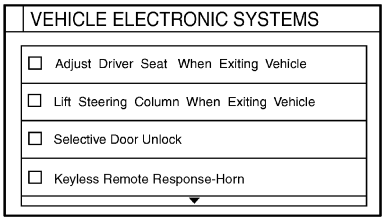

PKIB6603E

Application Items

Icon	Description	Reference page
Adjust Driver Seat When Exiting Vehicle	The driver's seat automatically moves back and returns to the original position.	AV-94
Lift Steering Column When Exiting Vehicle	This function can be performed to On or Off.	AV-94
Selective Door Unlock	This key can switch the unlock doors of the 1st unlocking operation as follows. ● Only the driver side door (On)⇔All the doors (Off)	AV-94
Keyless Remote Response-Horn	This key changes the horn chirp mode occurring when pressing the Lock button on the Intelligent Key or keyfob.	AV-95
Keyless Remote Response-Lights	This key changes the hazard indicator flash mode occurring when pressing the Lock or Unlock button on the Intelligent Key or keyfob.	AV-95
Auto Re-Lock Time	The length of auto door relock time can be set. (Setting value: OFF, 1min or 5min)	AV-95
Sensitivity of Automatic Headlights	Sensitivity of automatic light can be set as desired.	AV-95
Automatic Headlights Off Delay	You can control how long it takes the automatic turn off timer to extinguish the headlights in AUTO position. (Setting value: OFF, 30sec, 45sec, 60sec, 90sec, 120sec, 150sec or 180sec)	AV-95
Speed Dependent wiper	This function can be performed to On or Off.	AV-95
Intelligent Key Lock Response-Sound	The sound pattern of the Intelligent Key operation can be set as desired. (Setting value:OFF, Beeper or Horn chirp)	AV-95
Intelligent Key Unlock Response-Beep Sound	The beep sound when unlocking door with the intelligent key operation can be turned On or Off.	AV-95
Intelligent Key Lock/Unlock Function	The door handle request switch lock/unlock operation with the Intelligent Key can be canceled or activated.	AV-95
Return All Settings to Default	The all settings made by VEHICLE ELECTRONICS will return to default.	AV-95

Adjust Driver Seat When Exiting Vehicle

1. Select “Adjust Driver Seat When Exiting Vehicle”.
2. Push “Enter” switch.
   - The indicator light alternately turns on and off each time the “Enter” switch is pressed.

Lift Steering Column When Exiting Vehicle

1. Select “Lift Steering Column When Exiting Vehicle”.
2. Push “Enter” switch.
   - The indicator light alternately turns on and off each time the “Enter” switch is pressed.

Selective Door Unlock (With Intelligent Key)

1. Select “Selective Door Unlock”.

2. Push “Enter” switch.
   - The indicator light alternately turns on and off each time the “Enter” switch is pressed.

Keyless Remote Response -Horn

1. Select “Keyless Remote Response-Horn”.
2. Push “Enter” switch.
   - The indicator light alternately turns on and off each time the “Enter” switch is pressed.

Keyless Remote Response -Lights

1. Select “Keyless Remote Response-Light”.
2. Push “Enter” switch.

Auto Re-Lock Time

1. Select “Auto Re-Lock Time”.
2. Move the joystick and push “Enter” switch to adjust the time.

Sensitivity of Automatic Headlights

1. Select “Sensitivity of Automatic Headlights”.
2. Move the joystick to left (lower) or right (higher) and push “Enter” switch.

Automatic Headlights Off Delay

1. Select “Automatic Headlights Off Delay”.
2. Move the joystick left or right to adjust the timer and push “Enter” switch.

Speed Dependent Wiper

1. Select “Speed Dependent Wiper”.
2. Push “Enter” switch.
   - The indicator light alternately turns on and off each time the “Enter” switch is pressed.

Intelligent Key Lock Response-Sound

1. Select “Intelligent Key Lock Response-Sound”.
2. Push “Enter” switch to change the sound pattern.

Intelligent Key Unlock Response-Beep Sound

1. Select “Intelligent Key Unlock Response-Sound”.
2. Push “Enter” switch to change the sound pattern.

Intelligent Key Lock/Unlock Function

1. Select “Intelligent Key Lock/Unlock”.
2. Push “Enter” switch.
   - The indicator light alternately turns on and off each time the “Enter” switch is pressed.

Return All Settings to Default

1. Select “Return All Settings to Default”.
2. Push “Enter” switch.
   - The indicator light alternately turns on and off each time the “Enter” switch is pressed.

System Settings

How To Perform System Settings

1. Start the engine.
2. Push “SETTING” button.
3. Select “System Settings”.

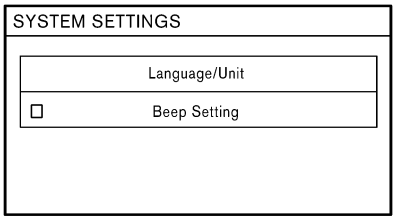

SKIA5988E

Application Items

Icon	Description	Reference page
Language/Unit	Settings of Language or unit can be performed.	AV-96
Beep Setting	Settings of Beep sound can be performed.	AV-96

Language Setting

Select “Language/Unit”.

- Language setting can be switched.
- Unit setting can be changed.

SKIA2065E

Beep Setting

Select “Beep Setting”.

- When Beep Setting is on (indicator light on), a beep will sound if the button is pushed.

NOTE:
Items in exception of Beep Setting ON/OFF.

- An error beep
- An interrupted-screen beep

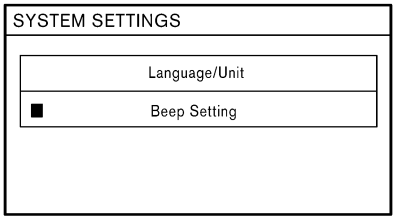

SKIA5989E

Navigation Settings

How To Perform Navigation Settings

1. Start the engine.
2. Push “SETTING” button.
3. Select “Navigation”.

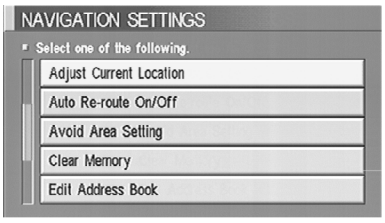

SKIA0551E

Application Items

Icon	Description	Reference page
View	Map display mode can be switched.	AV-97
Heading	Heading of the map display can be customized for either north heading or the actual driving direction of the vehicle.	AV-98
Nearby Display Icons	Icons of facilities can be displayed. Facilities to be displayed can be selected from the variety selections.	AV-98
Save Current Location	Current vehicle location can be registered in Address Book.	AV-98
Adjust Current Location	Current location of position marker can be adjusted. Direction of position marker also can be calibrated when heading direction of the vehicle on the display is not matched with the actual direction.	AV-98
Auto Re-route On/Off	ON/OFF of Auto Re-route can be switched.	AV-99
Avoid Area Setting	A particular area can be avoided when routing.	AV-99
Clear Memory	Address Book, Previous destination or Avoid area can be deleted.	AV-99
Edit Address Book	Address Book can be edited.	AV-100
GPS Information	The GPS data includes longitude, latitude and altitude (distance above sea level) of the present vehicle position, and current date and time for the area in which the vehicle is being driven. Also indicated are the GPS reception conditions and the GPS satellite position.	AV-100
Quick Stop Customer Setting	One facility of your selection can be added to your quick stop.	AV-100
Set Average Speed for Estimated Journey Time	Average vehicle speed can be set to calibrate estimated journey time for the destination.	AV-100
Tracking On/Off	Tracking to the present vehicle position can be displayed.	AV-101

“VIEW” MODE

- To open the map screen display with Birdview™, select “Birdview™”.
- To open the map screen display with Plan View, select “Plan View”.

SKIA0554E

“HEADING” MODE

- To display north heading, select “North up”.
- To display the actual driving direction of the vehicle, select “Heading up”.

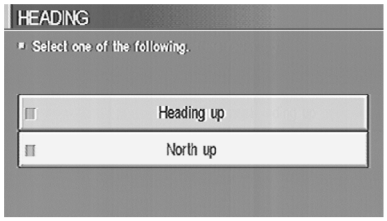

SKIA0561E

“NEARBY DISPLAY ICONS” MODE

- Select an icon to display on the map screen.

SKIA0562E

“SAVE CURRENT LOCATION” MODE

- The current vehicle location can be registered in “Address Book”.

  NOTE:
  “Address Book” can store 50 items max.

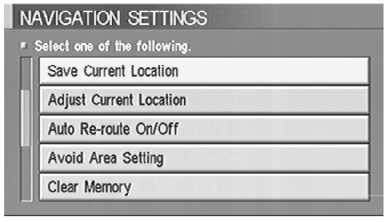

SKIA0556E

“ADJUST CURRENT LOCATION” MODE

1. Select an icon “right” or “left” to calibrate the heading direction. (Arrow marks will rotate corresponding to the calibration key.)

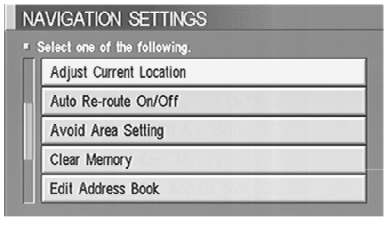

SKIA0563E

2. Select “Set”. Then the vehicle mark will be matched to the arrow mark.

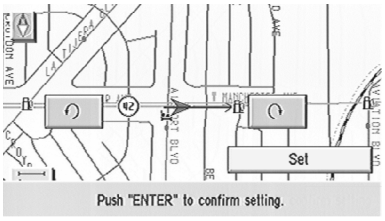

SKIA0564E

“AUTO RE-ROUTE” MODE

- To activate “AUTO RE-ROUTE” mode, select “On”.
- To inactivate “AUTO RE-ROUTE” mode, select “Off”.

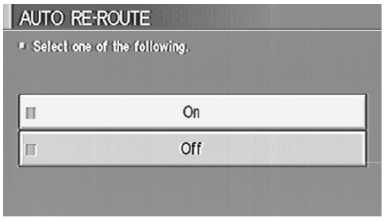

SKIA0558E

“AVOID AREA SETTING” MODE

- Areas to avoid can be registered.

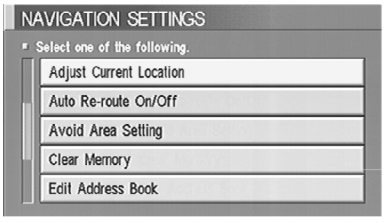

SKIA0563E

“CLEAR MEMORY” MODE

- To delete all the stored places in “Address Book”, “Avoid Area” and “Previous Destinations”, select “Yes”.

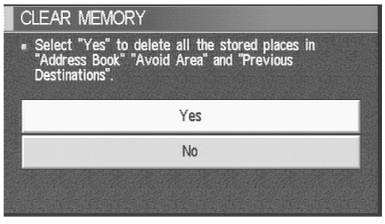

SKIA3572E

“EDIT ADDRESS BOOK” MODE

- Edit the items registered in Address Book.

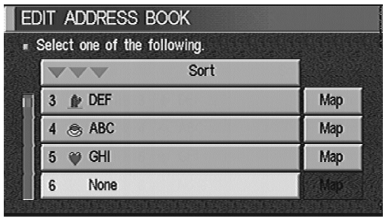

SKIA3511E

“GPS INFORMATION” MODE

- Latitude, longitude, altitude, receiving state (telemetry), and satellite location are displayed as GPS information.

  NOTE:
  Altitude is displayed only in three–dimensional status.

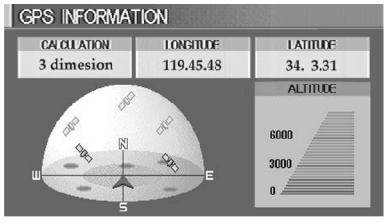

SKIA0555E

“QUICK STOP CUSTOMER SETTING” MODE

- Select a category for the “Quick Stop” menu.

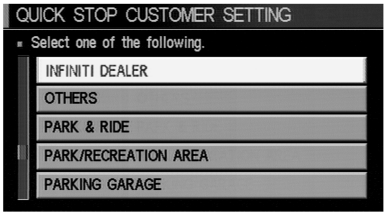

SKIA5996E

“SET AVERAGE SPEED” MODE

- Set the average vehicle speed to calibrate the estimated journey time for the destination.
- Set three items; “Freeway”, “Main Roads”, and “Ordinary Roads”.

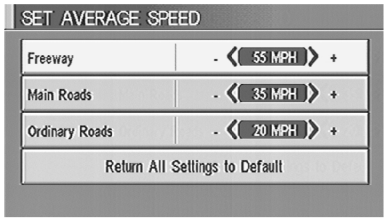

SKIA0565E

“TRACKING” MODE

- To delete the tracking marks on the map, select “Off”.
- To leave the tracking marks on the map, select “On”.

NOTE:
When a trail display is turned OFF, trail data is erased from the memory.

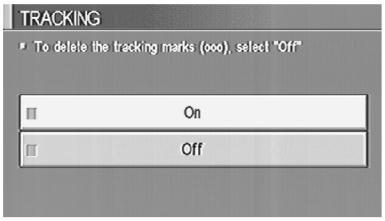

SKIA0559E

GUIDANCE VOLUME

Description

Following guidance volume setting can be changed.

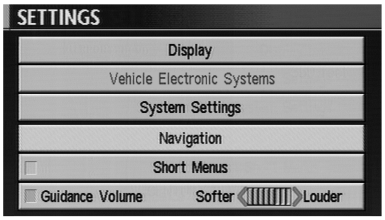

SKIA4497E

Activation/Deactivation Setting

- The voice prompt can be turned on/off by pressing the “Guidance Volume” button.

Voice Volume Setting

- Volume of the voice can be controlled by bending the joystick to left/right.

DISPLAY WITH PUSHED “TRIP” BUTTON

- When the “TRIP” button is pushed, the following models will display on the screen.
- Warning message (if there are any) →TRIP1→TRIP2→FUEL ECONOMY→MAINTENANCE→OFF.

Display items	Display/Setting contents		Reference page
Trip1 or Trip2	Elapsed Time	Displays driving time with a range of 0000:00:00 to 9999:59:59.	AV-102, "TRIP 1 OR TRIP 2"
	Driving Distance [(km) or (miles)]	Displays driving distance with a range of 00000.0 to 99999.9.	
	Average speed [(km/h) or (MPH)]	Displays average speed with a range of 000.0 to 999.9.	
Fuel Economy	Average Fuel Economy [(MPG) or (l/100km)]	Displays fuel economy with ignition switch ON, average fuel economy each 30 minutes.	AV-102, "FUEL ECONOMY"
	Distance to Empty [(km) or (miles)], [(MPG) or (l/100km)]	Displays possible driving distance with remaining fuel.	
	Fuel Economy (MPG)	Displays fuel economy each approx. 100 ms.	
Maintenance	Engine oil	Maintenance intervals of engine oil and setting of oil change cycle.	AV-102, "MAINTENANCE"
	Tire rotation	Maintenance intervals of tire and setting of tire replacement cycle.	
	Tire pressure	Tire pressure displayed as tire pressure information.	

TRIP 1 OR TRIP 2

- Elapsed Time, Driving Distance and Average Speed are displayed as Trip 1 information or Trip 2 information.
- The way to reset is by pushing the “Reset” switch or by keeping pushing “TRIP” button more than 1.5 seconds.

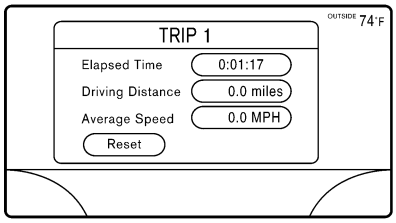

SKIA5990E

FUEL ECONOMY

- Average Fuel Economy, Distance to Empty, Fuel Economy are displayed as Fuel Economy information.
- The way to reset is by pushing the “Reset” switch or by keeping pushing “TRIP” button more than 1.5 seconds.

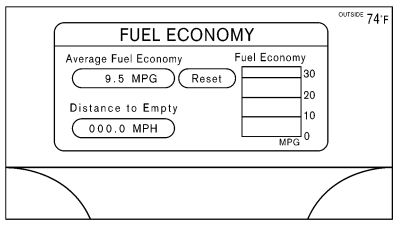

SKIA5991E

MAINTENANCE

- Engine Oil, Tire Rotation and Tire Pressure are displayed as Maintenance information.

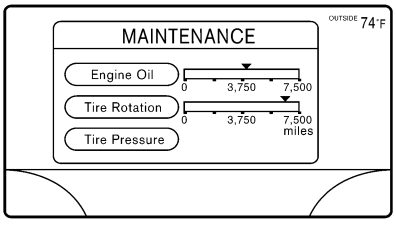

SKIA5992E

ENGINE OIL OR TIRE ROTATION

- Possible to set up interval of engine oil and tire rotation by moving joystick right and left.

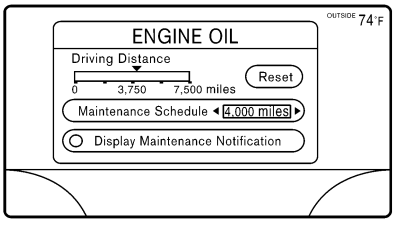

SKIA5993E

TIRE PRESSURE

- Pressure indication in ** psi on the screen indicates that the pressure is being measured. After a few driving trips, the pressures for all four tires will be displayed.
- The order of tire pressure figures displayed on the screen does not correspond with the actual order of the tire position.
- Tire pressure rises and falls depending on the heat caused by the vehicle's traveling condition and the temperature.
- FLAT TIRE–very low tire air pressure.

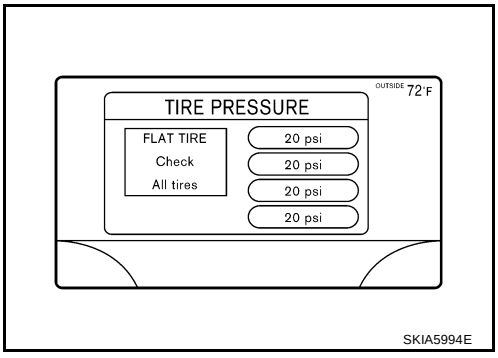

NOTE:

- In a case of FLAT TIRE pressure, interrupt screen is not shown on the display.
- On the screen of TIRE PRESSURE, “FLAT TIRE”, “Check”, “All tire” is displayed.

WARNING INDICATIONS

Warning signal (door switch signal) is received from BCM through CAN communication line.

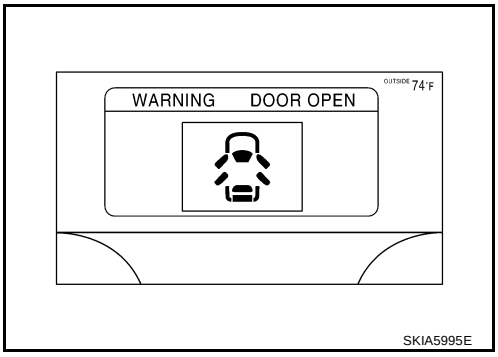

Warning indicators	Warning lamps in instrument panel	Warning detection and cancel conditions		Cases of malfunction
DOOR OPEN	Door	Detection condition	Vehicle is running [approx. 5km/h (3 MPH) or faster] and door ajar of any of the doors is detected.	Door is open.
		Cancel condition	Vehicle is stopped and all the doors lock.	

CAN Communication System Description

AKS007Z3

CAN (Controller Area Network) is a serial communication line for real time application. It is an on-vehicle multiplex communication line with high data communication speed and excellent error detection ability. Many electronic control units are equipped onto a vehicle, and each control unit shares information and links with other control units during operation (not independent). In CAN communication, control units are connected with 2 communication lines (CAN H line, CAN L line) allowing a high rate of information transmission with less wiring. Each control unit transmits/receives data but selectively reads required data only.

CAN Communication Unit

AKS007Z0

Refer to LAN-30, "CAN Communication Unit" .

Component Parts Location and Harness Connector Location

AKS007IR

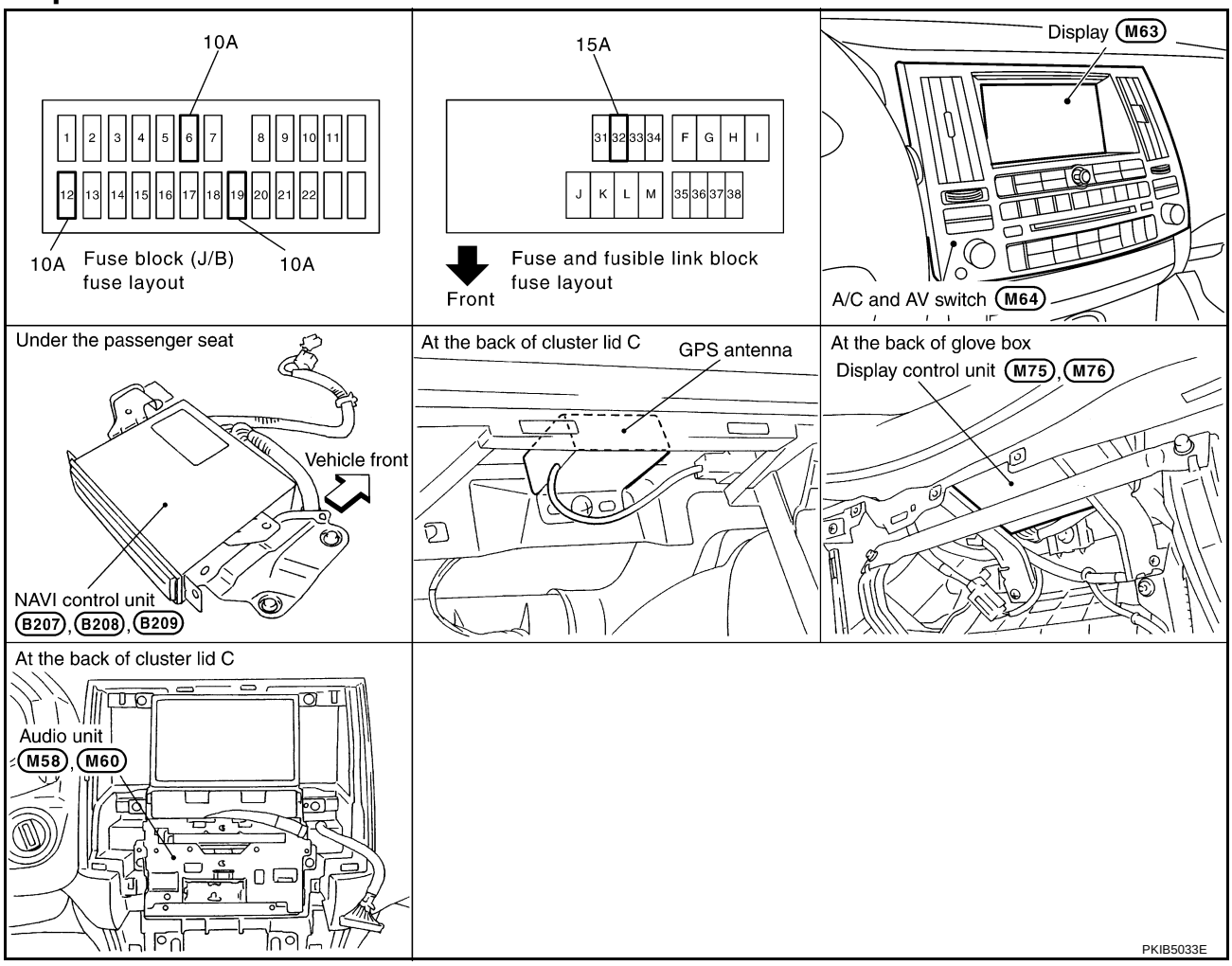

Schematic—NAVI—

AKS007IS

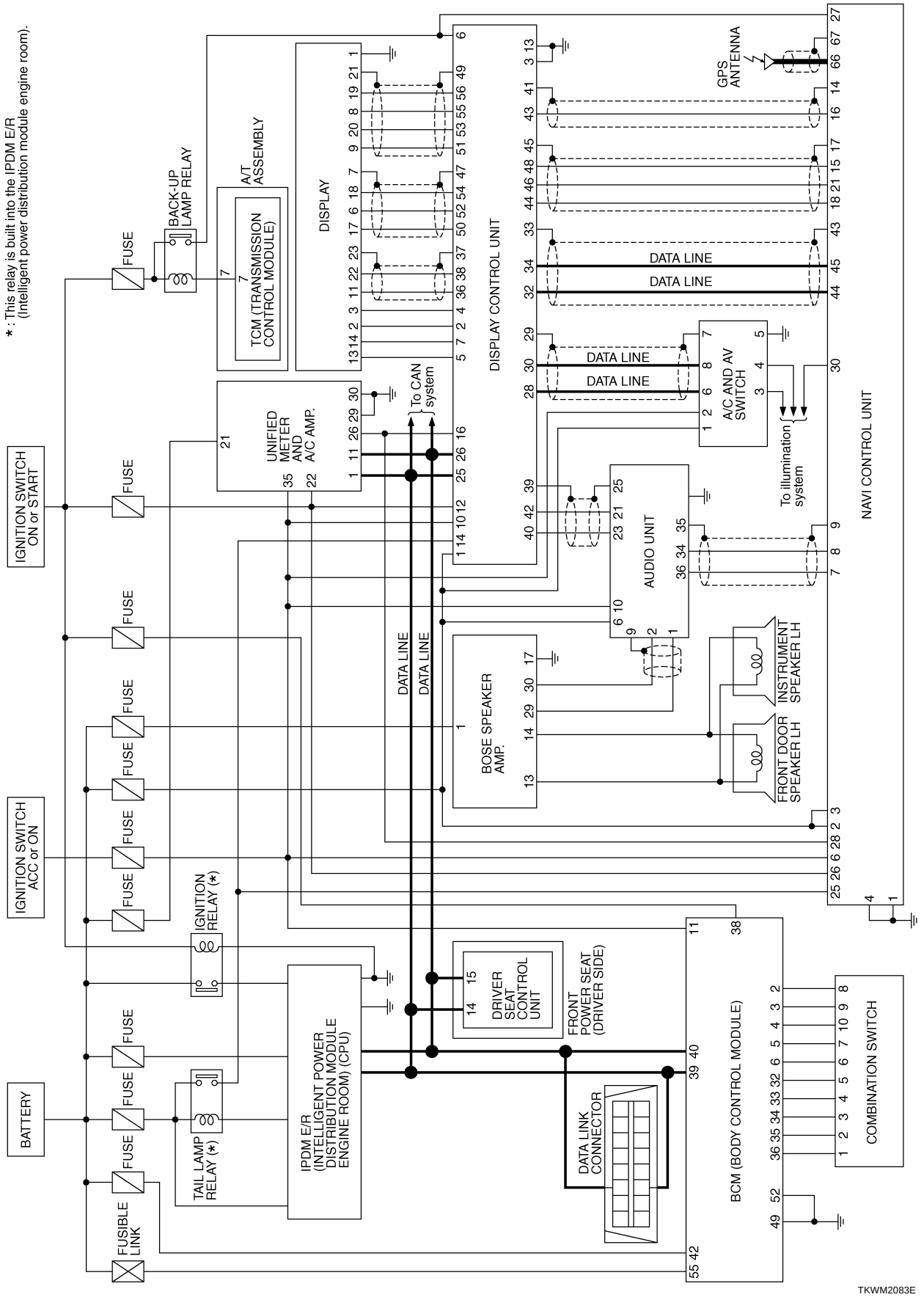

Wiring Diagram —NAVI—

AKS007IT

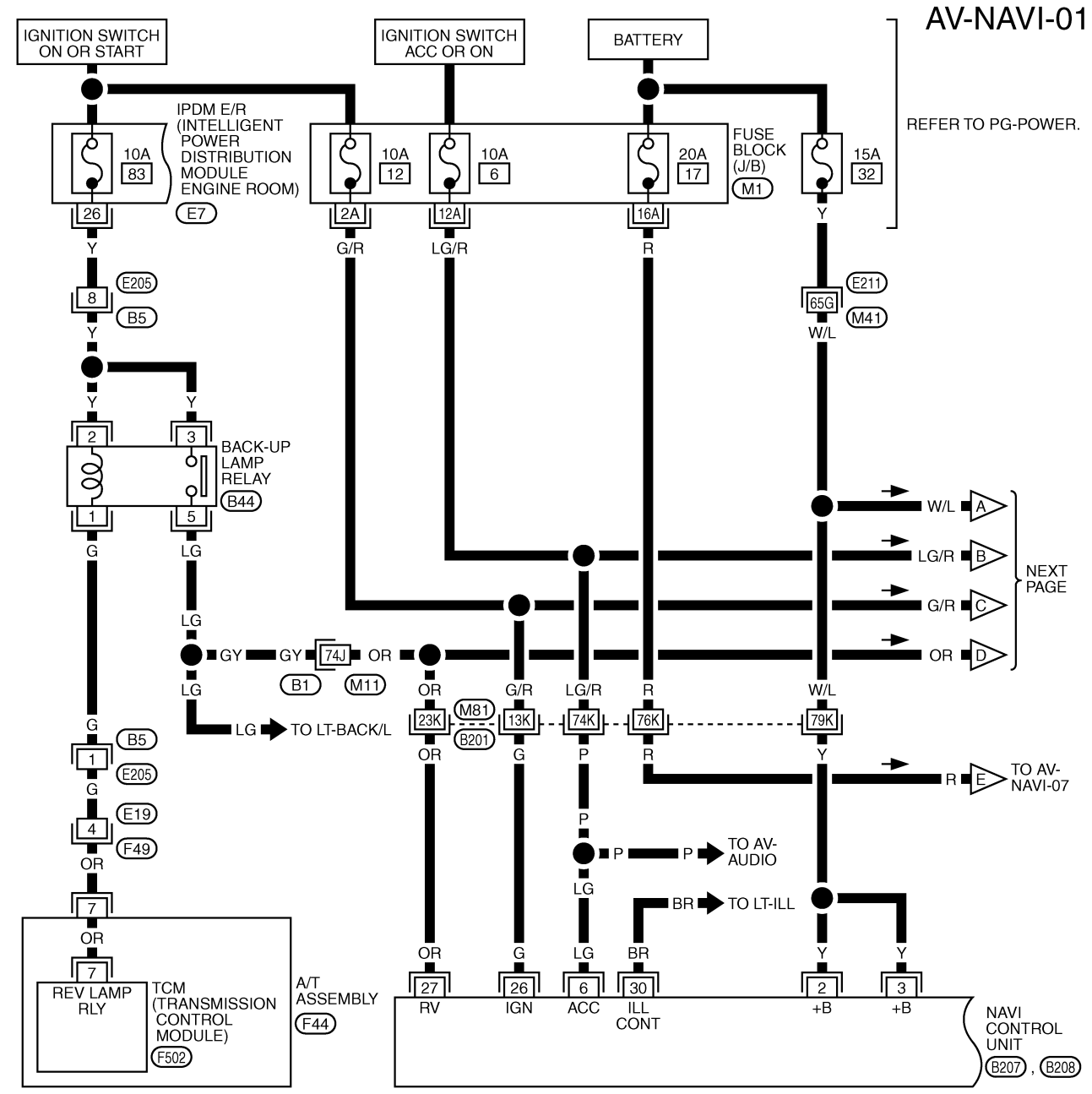

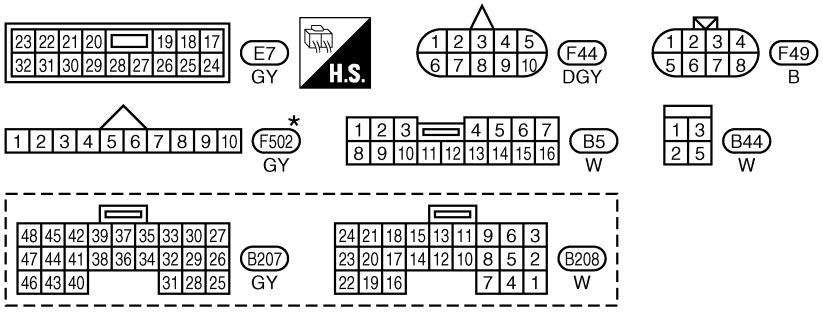

REFER TO THE FOLLOWING.
E211 , B1 , B201 -SUPER MULTIPLE JUNCTION (SMJ)
M1 -FUSE BLOCK-JUNCTION BOX (J/B)

*: THIS CONNECTOR IS NOT SHOWN IN "HARNESS LAYOUT", PG SECTION.

TKWM2084E

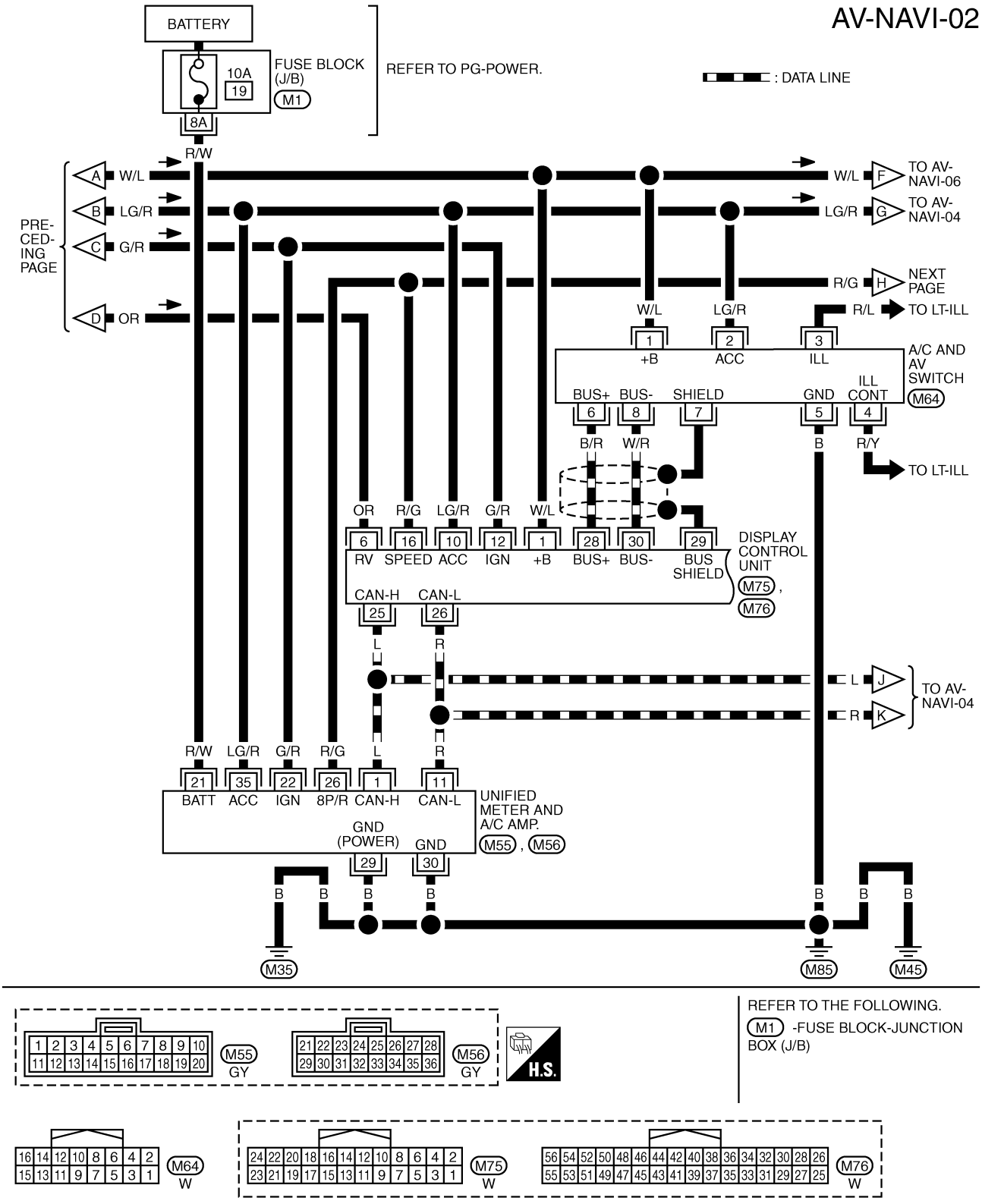
AV-NAVI-02
BATTERY
10A
19
FUSE BLOCK (J/B)
M1
8A
REFER TO PG-POWER.
: DATA LINE
R/W
PRE-CED-ING PAGE
A W/L
B LG/R
C G/R
D OR
W/L F TO AV-NAVI-06
LG/R G TO AV-NAVI-04
R/G H NEXT PAGE
R/L TO LT-ILL
W/L LG/R
1 +B
2 ACC
3 ILL
A/C AND AV SWITCH
M64
BUS+ BUS- SHIELD GND ILL CONT
6 8 7 5 4
B/R W/R B R/Y
TO LT-ILL
OR R/G LG/R G/R W/L
6 16 10 12 1 28 30 29
RV SPEED ACC IGN +B BUS+ BUS- BUS SHIELD
DISPLAY CONTROL UNIT
M75 , M76
CAN-H CAN-L
25 26
L R
L J
R K
TO AV-NAVI-04
R/W LG/R G/R R/G L R
21 35 22 26 1 11
BATT ACC IGN 8P/R CAN-H CAN-L
UNIFIED METER AND A/C AMP.
M55 , M56
GND (POWER) GND
29 30
B B B B B B B
M35 M85 M45
M55 GY
M56 GY
H.S.
REFER TO THE FOLLOWING.
M1 -FUSE BLOCK-JUNCTION BOX (J/B)
M64 W
M75 W
M76 W

TKWM2085E

AV-NAVI-03

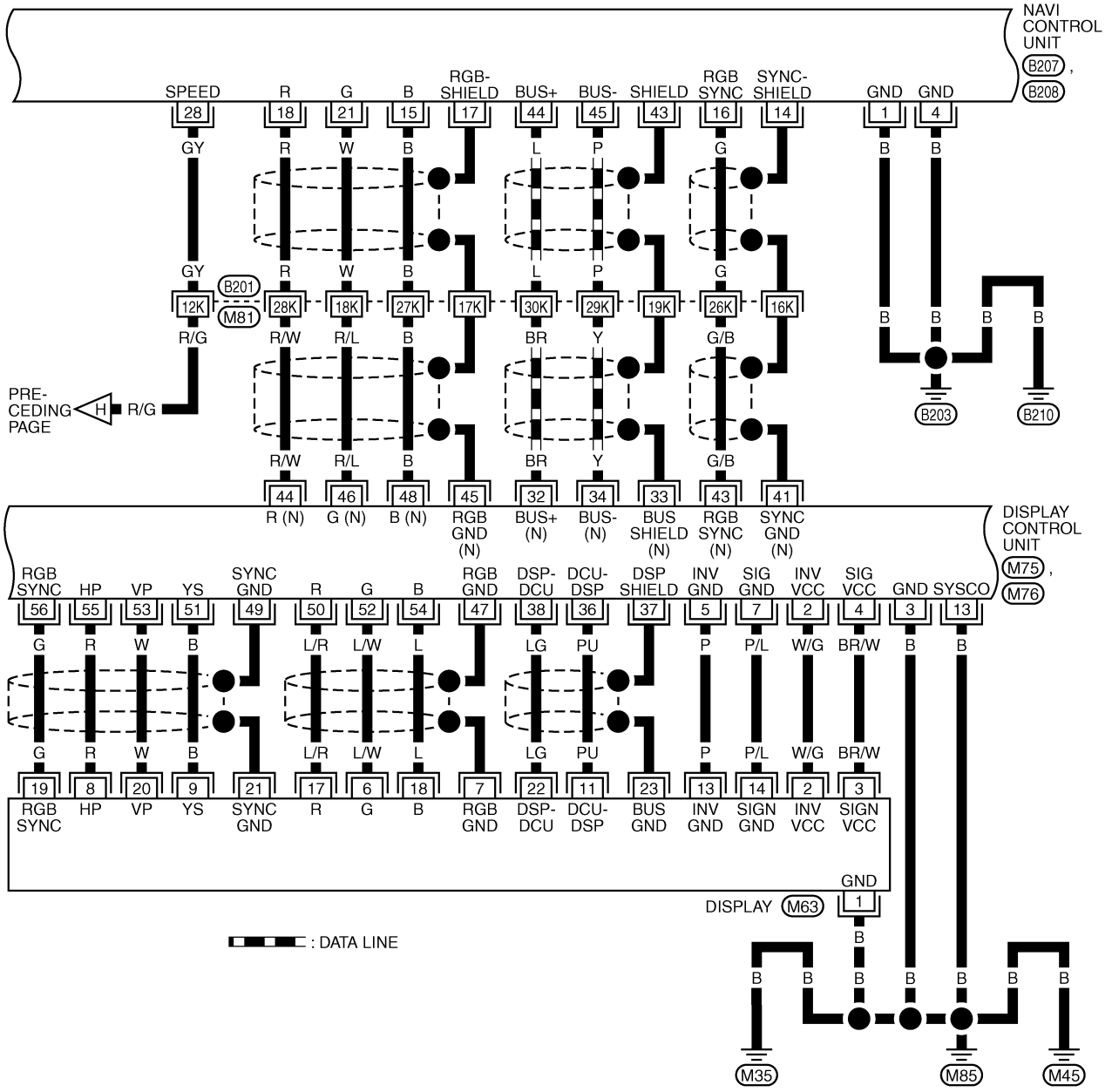

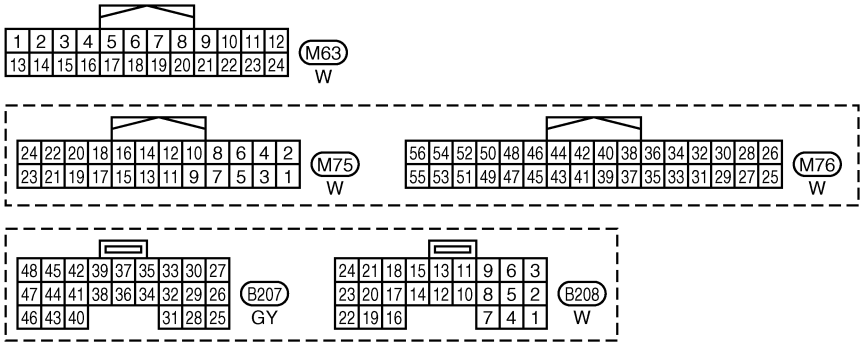

REFER TO THE FOLLOWING.

B201 -SUPER MULTIPLE JUNCTION (SMJ)

TKWH0268E

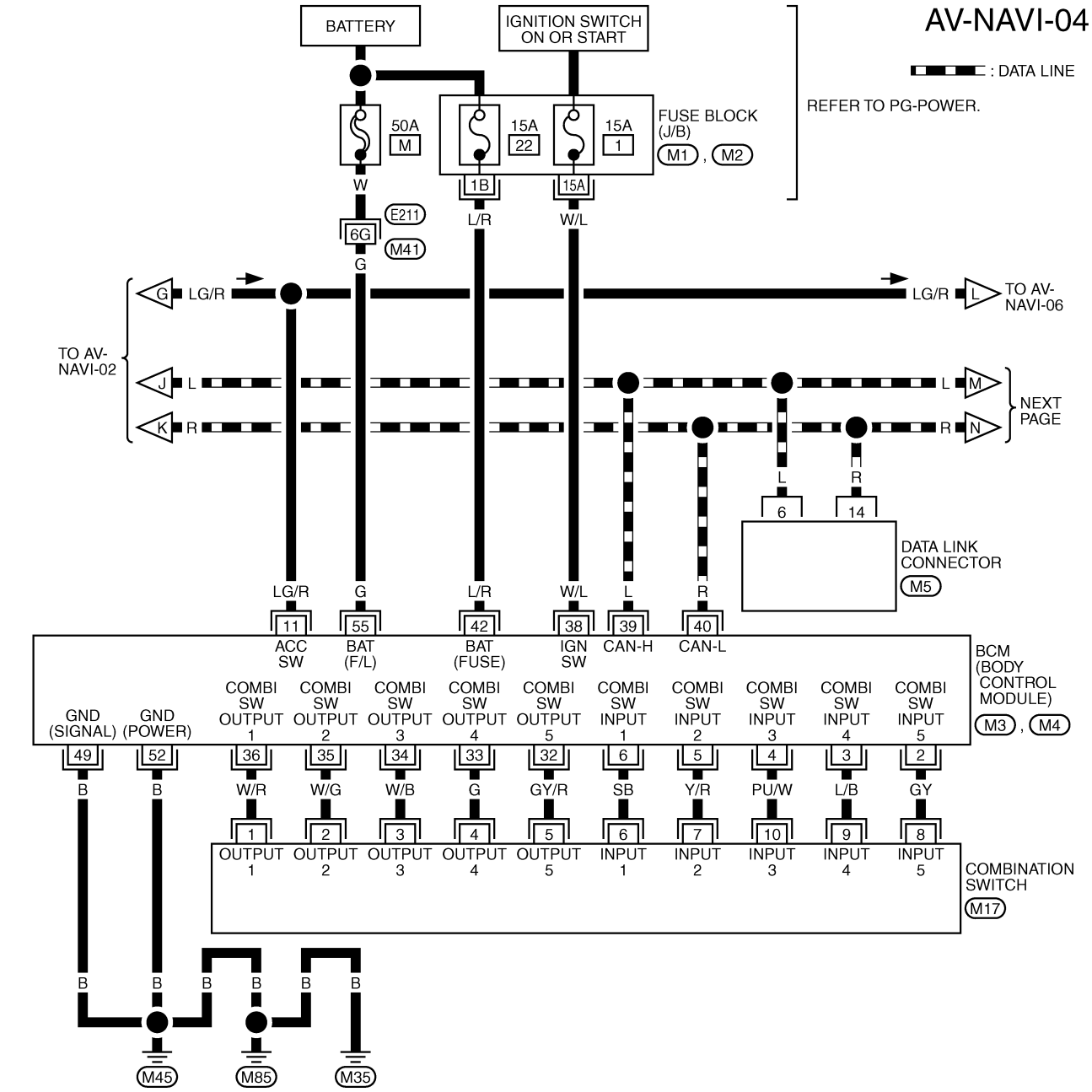

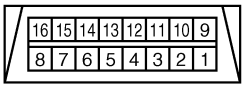

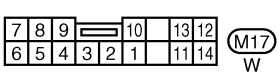

REFER TO THE FOLLOWING.

E211 -SUPER MULTIPLE JUNCTION (SMJ)

M1 , M2 -FUSE BLOCK-JUNCTION BOX (J/B)

M3 , M4 -ELECTRICAL UNITS

TKWM0810E

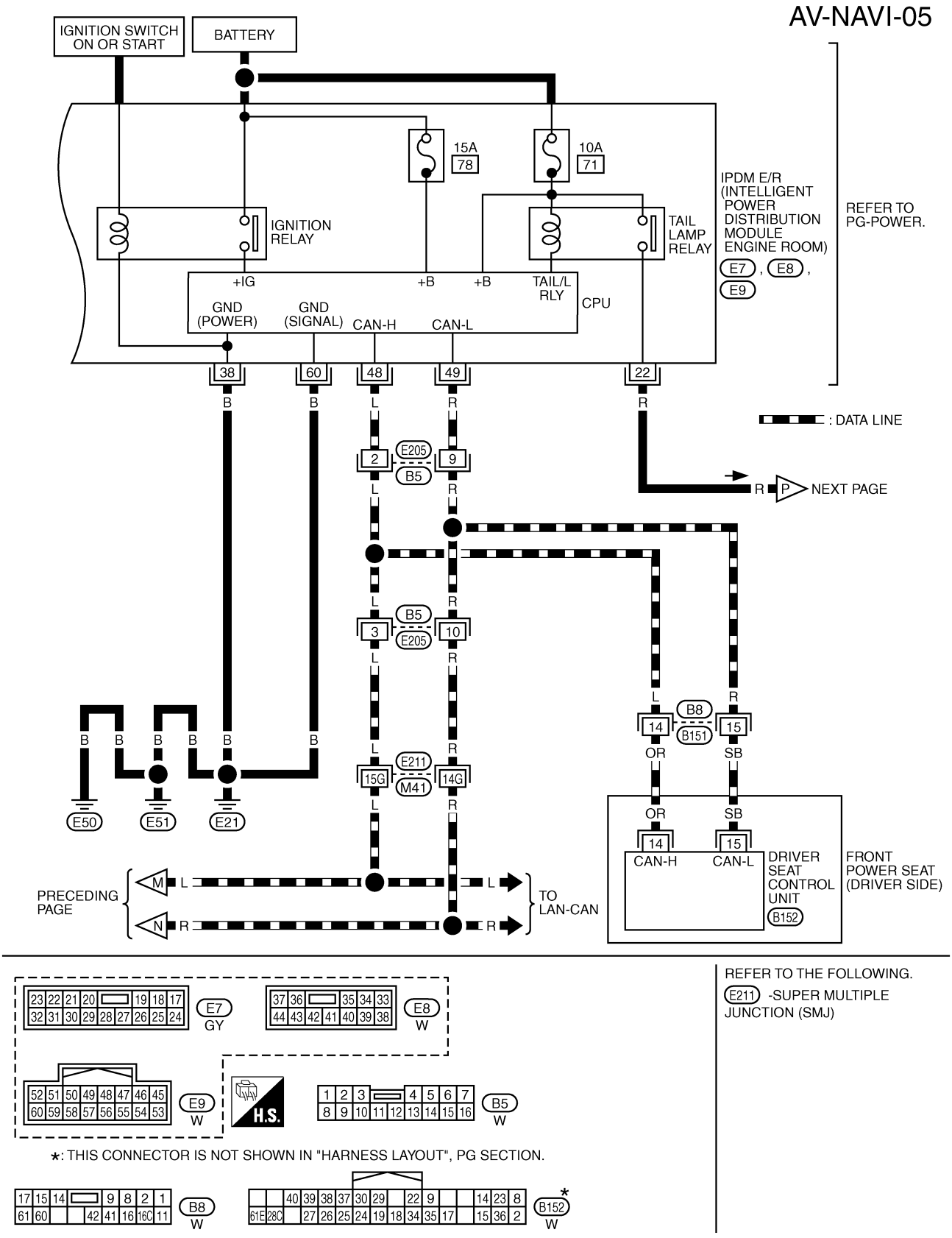
AV-NAVI-05
IGNITION SWITCH ON OR START
BATTERY
15A
78
10A
71
IPDM E/R (INTELLIGENT POWER DISTRIBUTION MODULE ENGINE ROOM)
E7 , E8 , E9
REFER TO PG-POWER.
IGNITION RELAY
TAIL LAMP RELAY
+IG
+B
+B
TAIL/L RLY
CPU
GND (POWER)
GND (SIGNAL)
CAN-H
CAN-L
38
60
48
49
22
: DATA LINE
E205
B5
NEXT PAGE
E211
M41
E50
E51
E21
PRECEDING PAGE
TO LAN-CAN
B8
B151
OR
SB
CAN-H
CAN-L
DRIVER SEAT CONTROL UNIT
B152
FRONT POWER SEAT (DRIVER SIDE)
E7 GY
E8 W
E9 W
H.S.
B5 W
*: THIS CONNECTOR IS NOT SHOWN IN "HARNESS LAYOUT", PG SECTION.
B8 W
B152 W
REFER TO THE FOLLOWING.
E211 -SUPER MULTIPLE JUNCTION (SMJ)
TKWM0575E

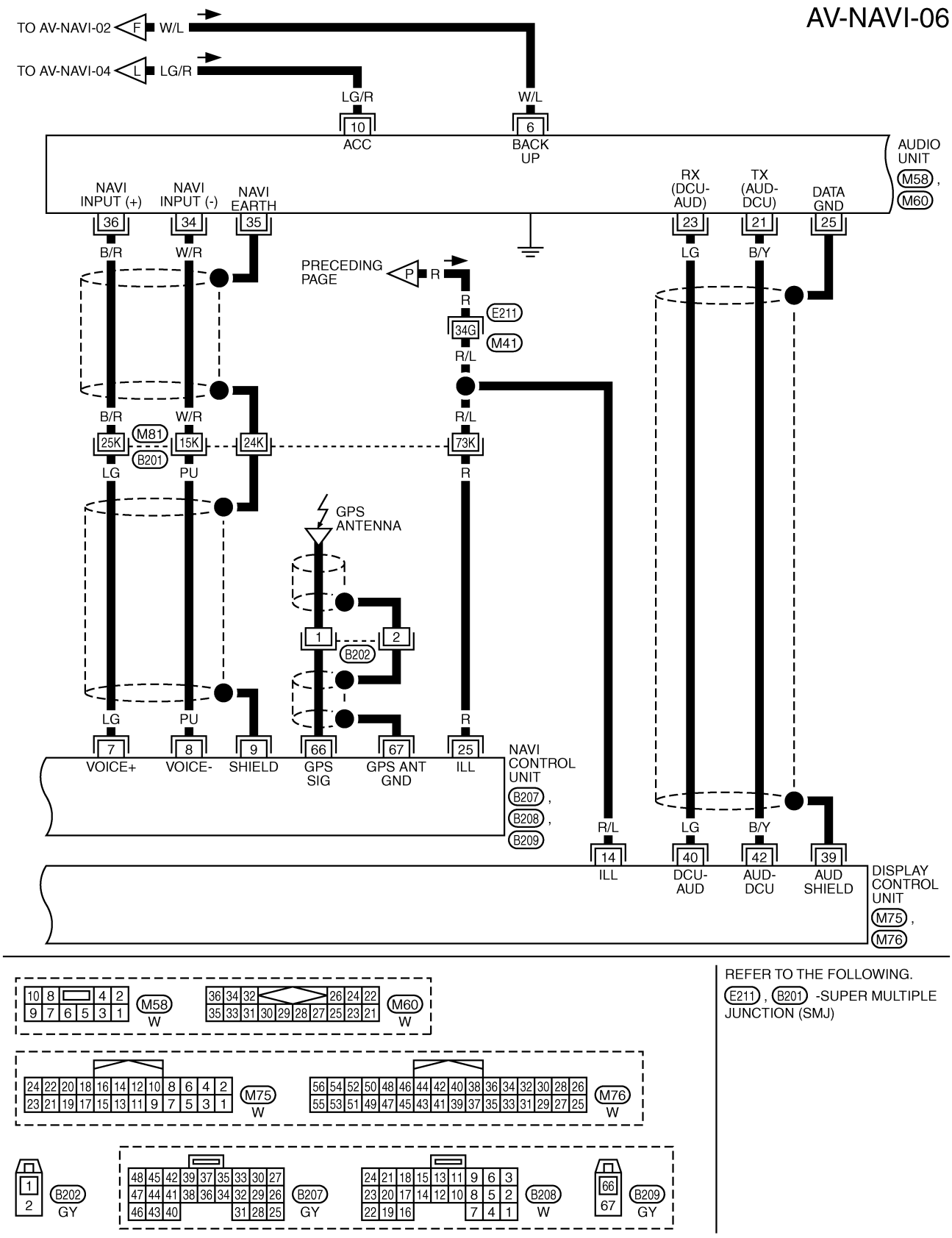

REFER TO THE FOLLOWING.
E211 , B201 -SUPER MULTIPLE JUNCTION (SMJ)

TKWM1094E

AV-NAVI-07

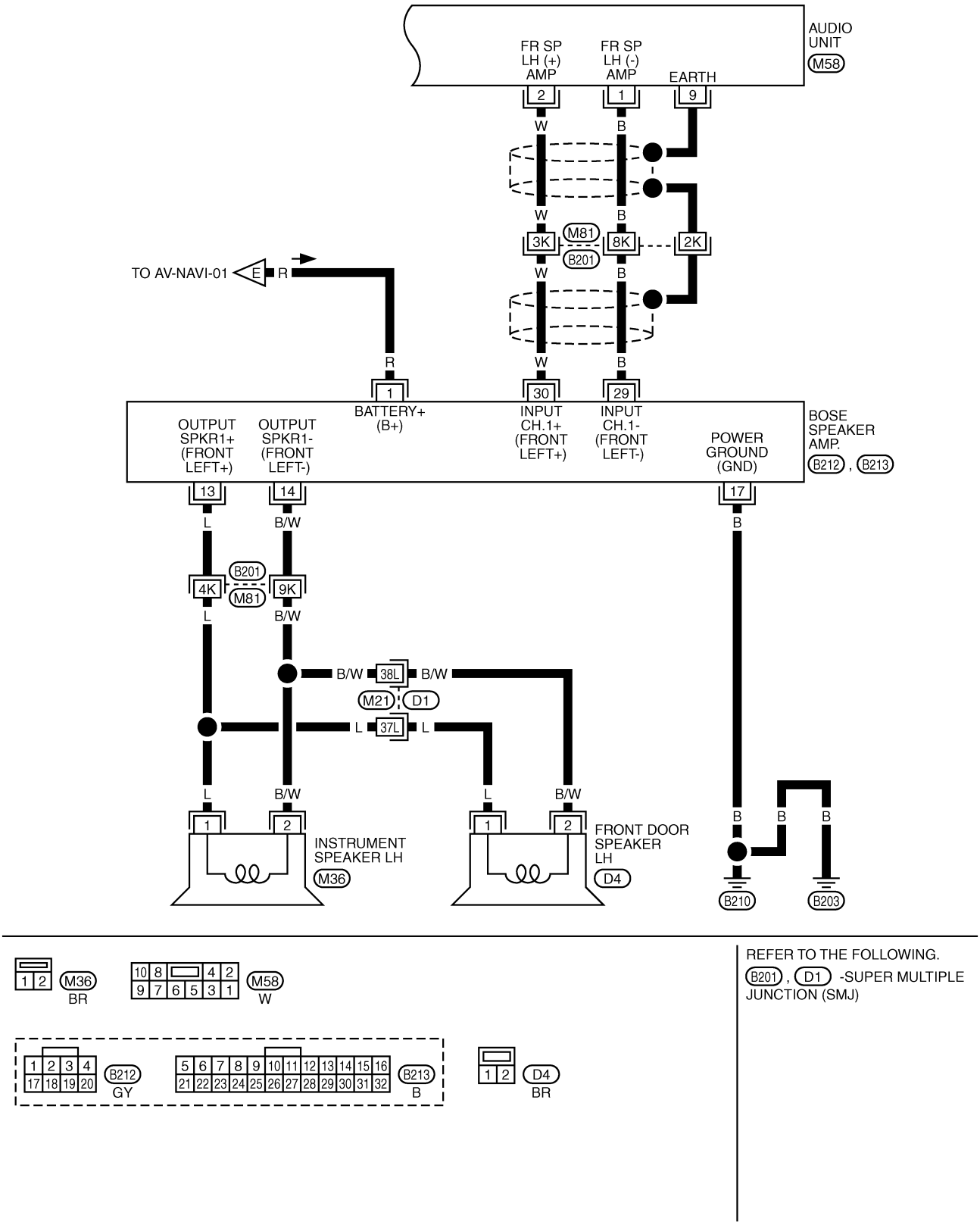
AUDIO UNIT
M58
FR SP LH (+) AMP
FR SP LH (-) AMP
EARTH
2
1
9
W
B
3K
M81
8K
2K
B201
TO AV-NAVI-01
E
R
1
30
29
BATTERY+ (B+)
INPUT CH.1+ (FRONT LEFT+)
INPUT CH.1- (FRONT LEFT-)
OUTPUT SPKR1+ (FRONT LEFT+)
OUTPUT SPKR1- (FRONT LEFT-)
POWER GROUND (GND)
BOSE SPEAKER AMP.
B212 , B213
13
14
17
L
B/W
4K
9K
38L
37L
M21
D1
INSTRUMENT SPEAKER LH
M36
FRONT DOOR SPEAKER LH
D4
B210
B203
M36
BR
M58
W
B212
GY
B213
B
D4
BR
REFER TO THE FOLLOWING.
B201 , D1 -SUPER MULTIPLE JUNCTION (SMJ)
TKWM2086E

Schematic — COMM —

AKS00812

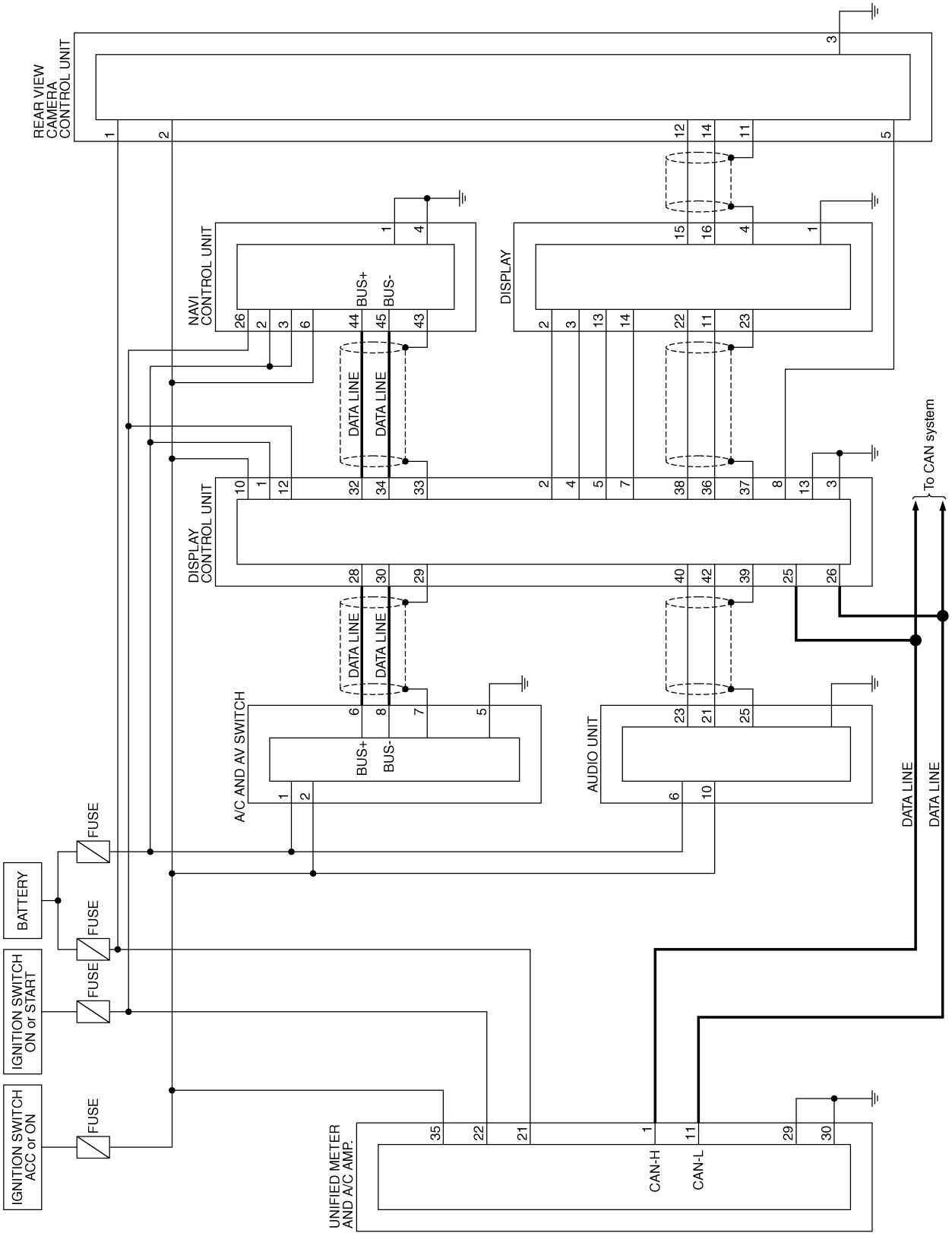

TKWM2087E

Wiring Diagram — COMM —

AKS007IU

AV-COMM-01

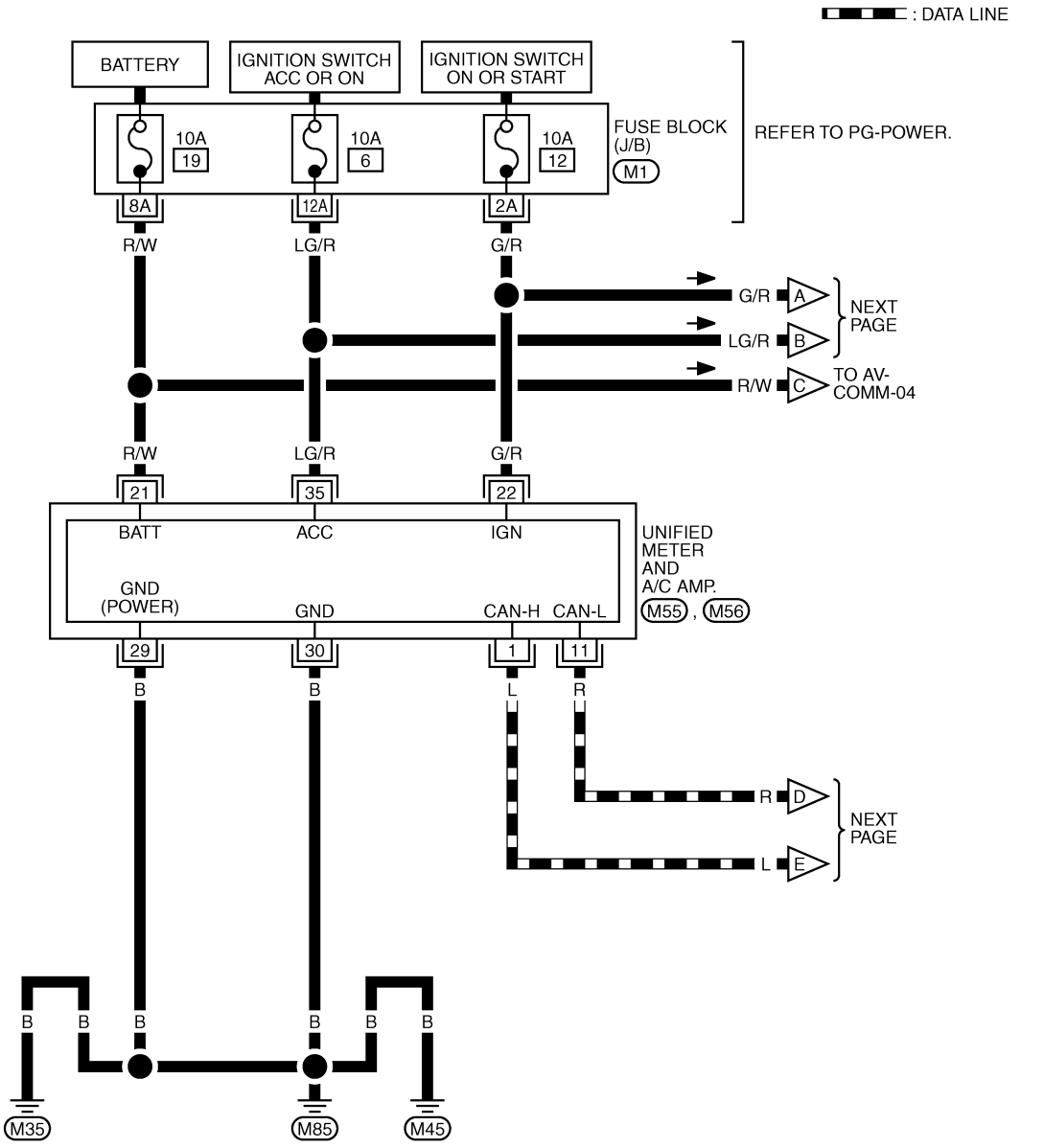

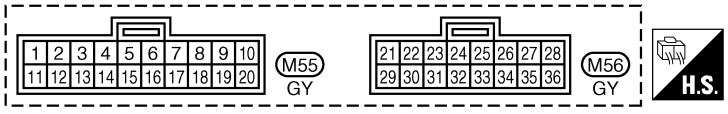

REFER TO THE FOLLOWING.
M1 -FUSE BLOCK-JUNCTION BOX (J/B)

TKWM2088E

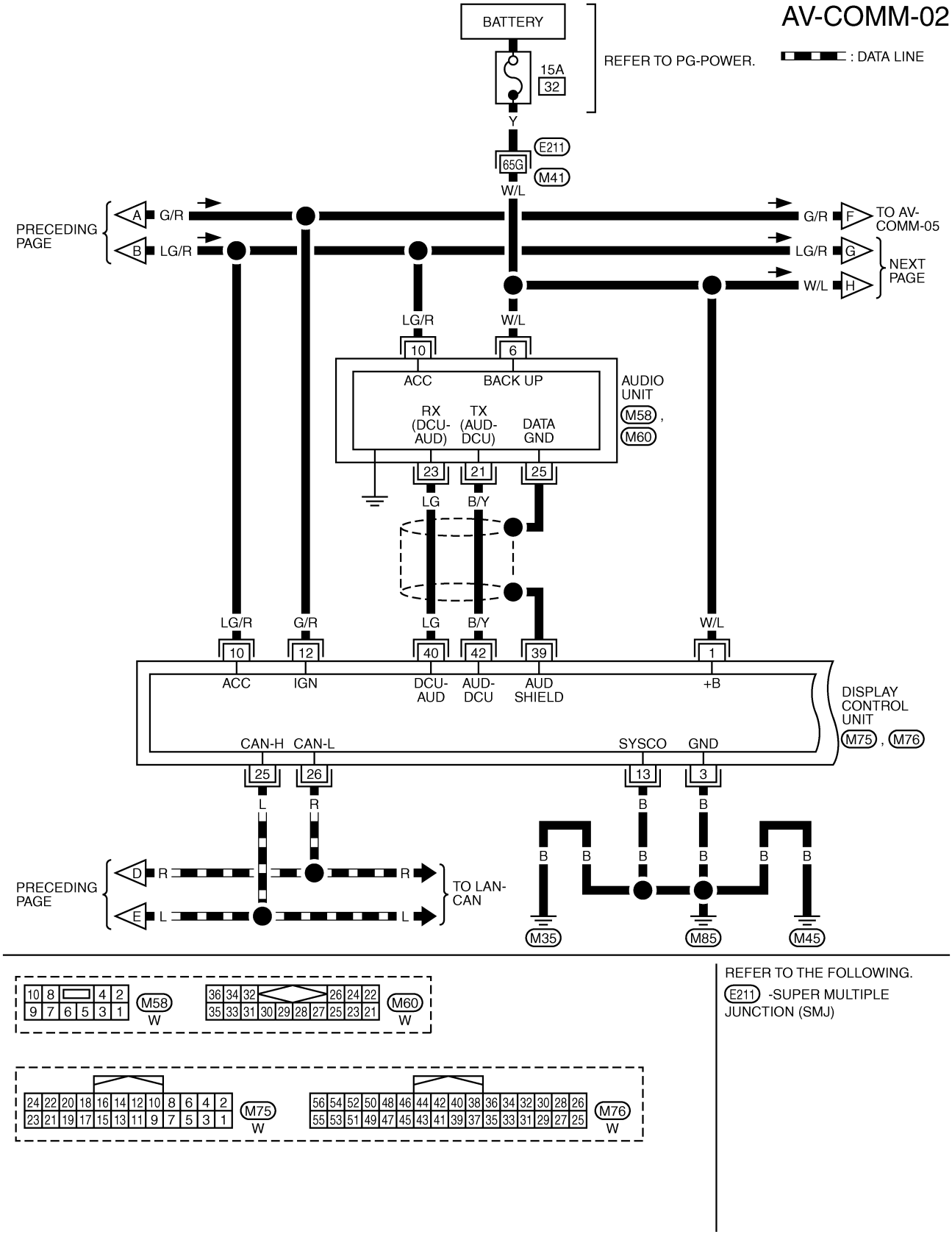
AV-COMM-02
: DATA LINE
BATTERY
15A
32
REFER TO PG-POWER.
Y
E211
65G
M41
W/L
PRECEDING PAGE
A
G/R
B
LG/R
G/R
F
TO AV-COMM-05
LG/R
G
W/L
H
NEXT PAGE
LG/R
W/L
10
6
ACC
BACK UP
RX (DCU-AUD)
TX (AUD-DCU)
DATA GND
AUDIO UNIT
M58 , M60
23
21
25
LG
B/Y
LG/R
G/R
LG
B/Y
W/L
10
12
40
42
39
1
ACC
IGN
DCU-AUD
AUD-DCU
AUD SHIELD
+B
DISPLAY CONTROL UNIT
M75 , M76
CAN-H
CAN-L
SYSCO
GND
25
26
13
3
L
R
B
B
PRECEDING PAGE
D
R
E
L
TO LAN-CAN
M35
M85
M45
M58
W
M60
W
M75
W
M76
W
REFER TO THE FOLLOWING.
E211 -SUPER MULTIPLE JUNCTION (SMJ)
TKWM0587E

AV-COMM-03

: DATA LINE

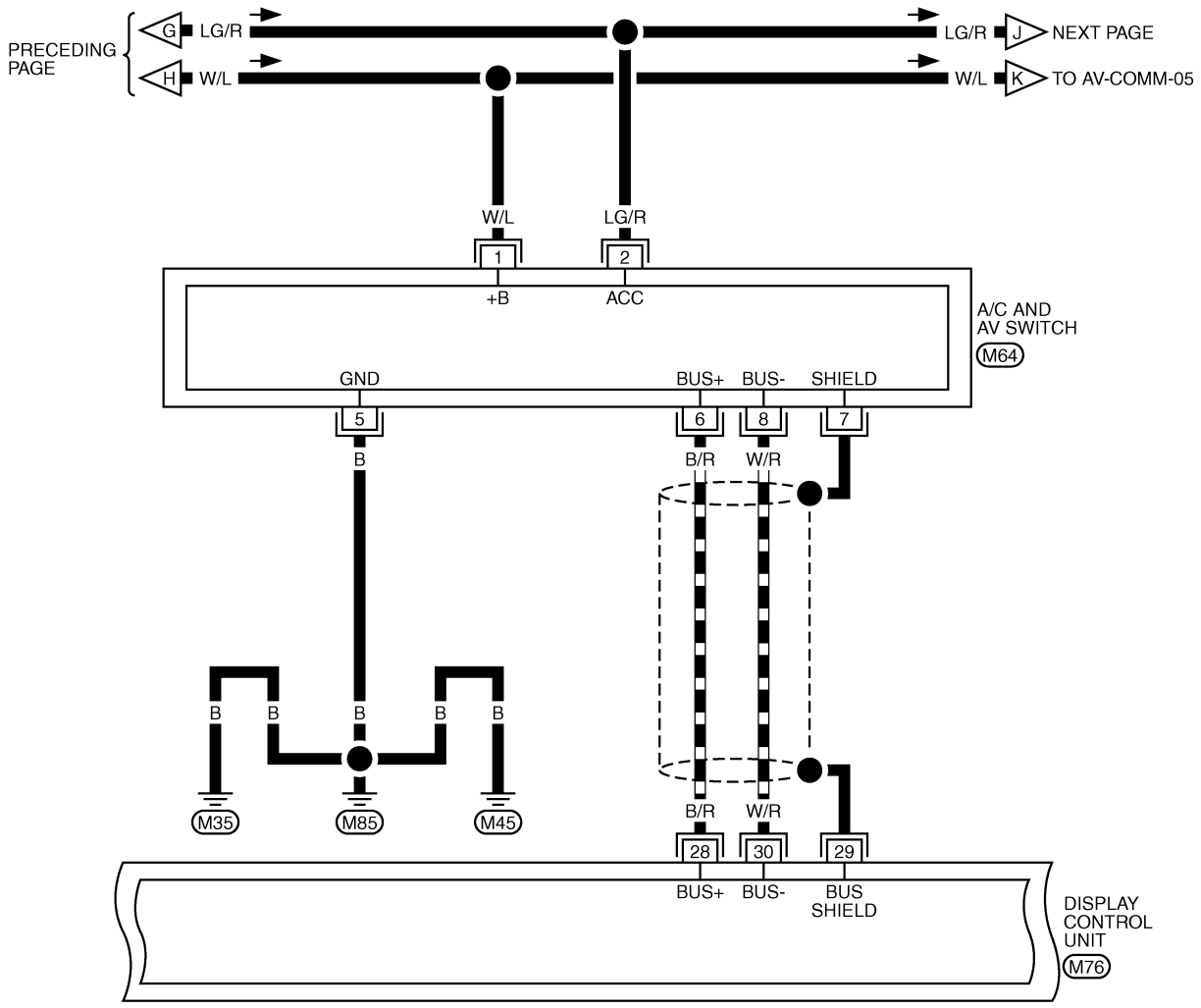

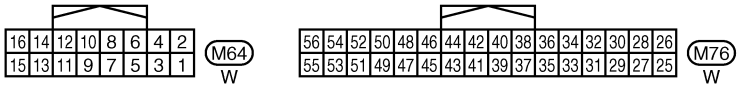

TKWM0588E

AV-COMM-04

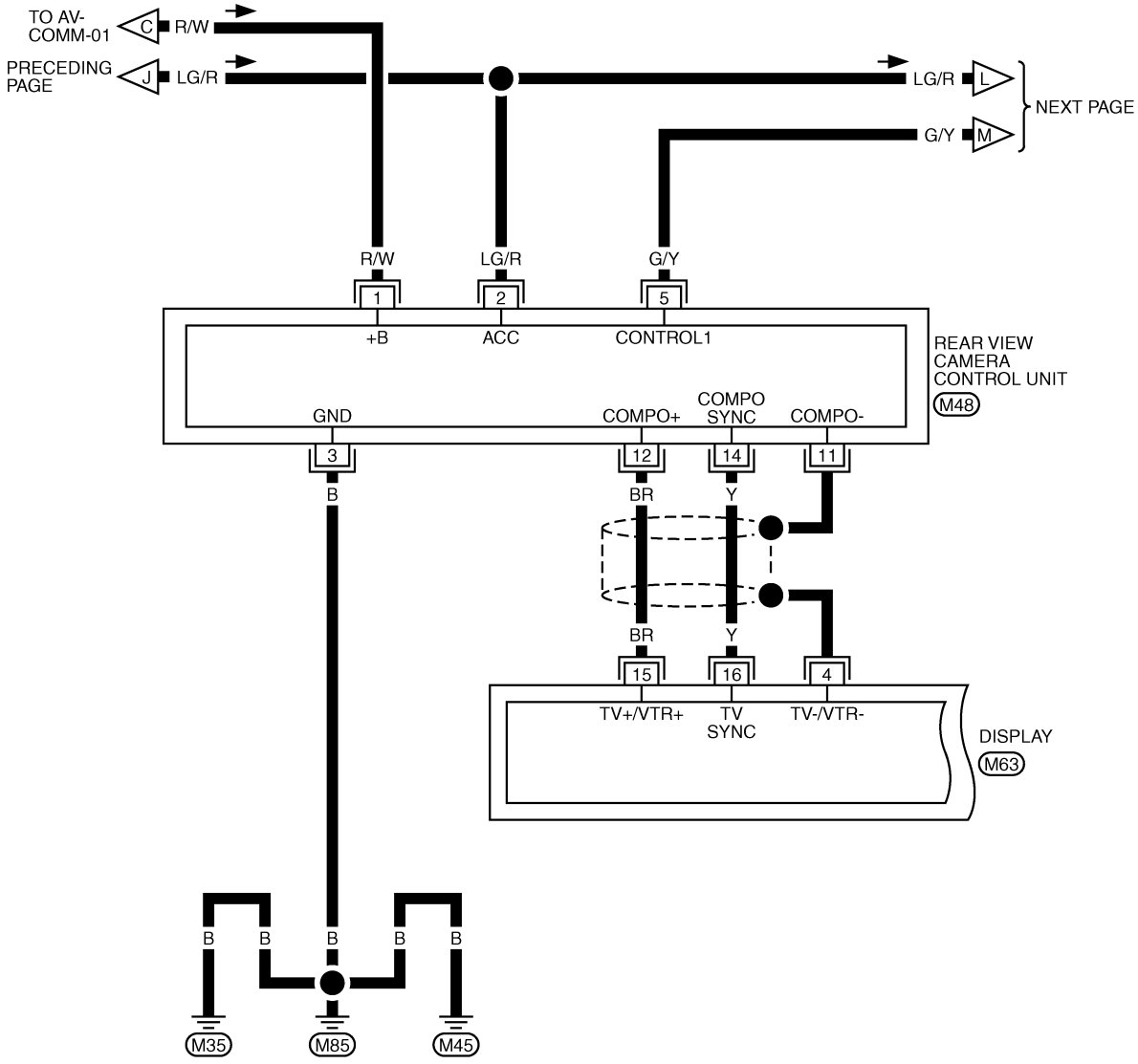

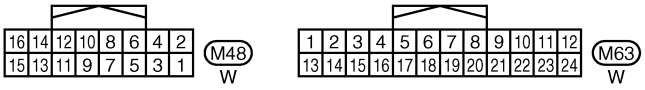

TKWM0589E

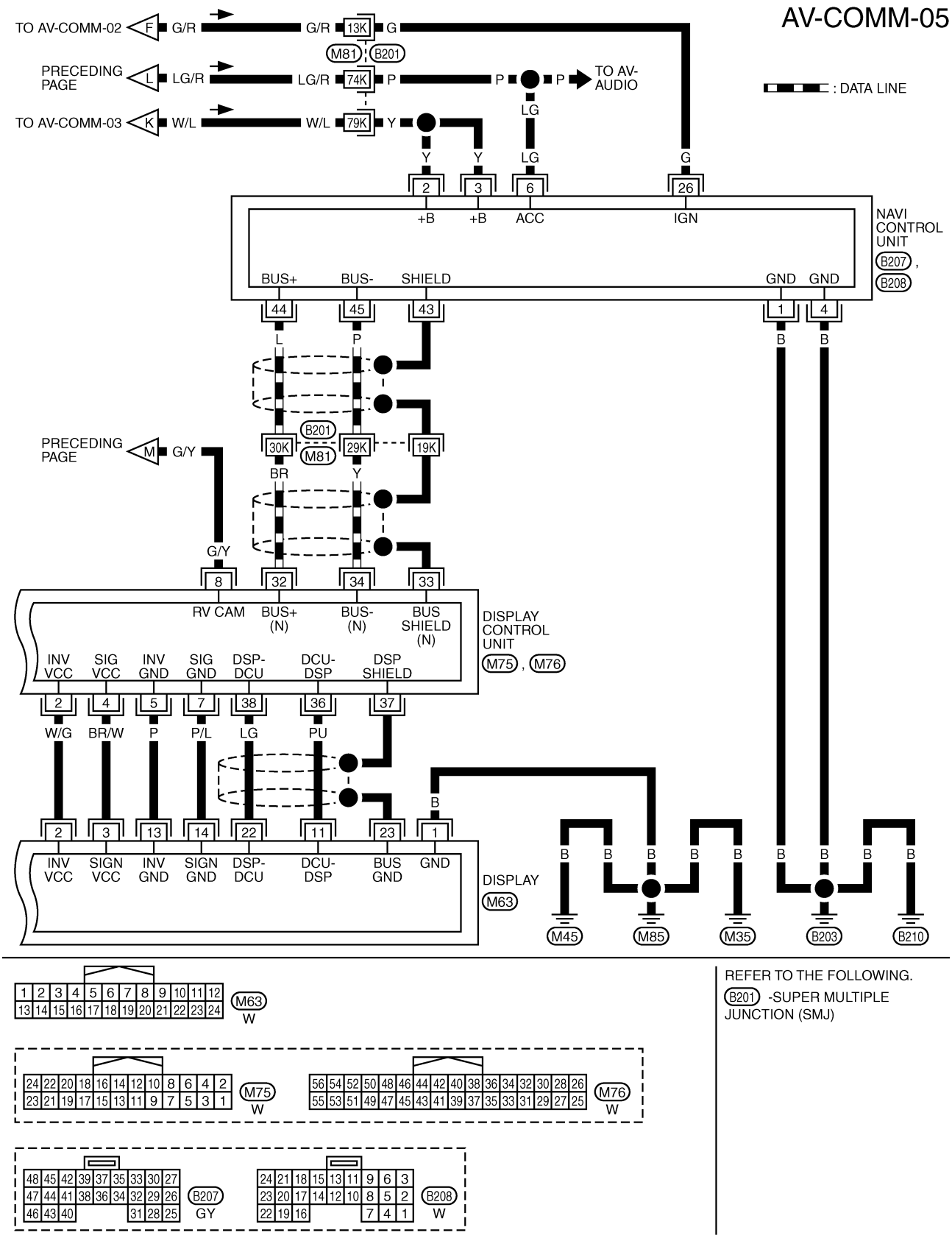

REFER TO THE FOLLOWING.

B201 -SUPER MULTIPLE JUNCTION (SMJ)

TKWH0272E

Terminals and Reference Value for NAVI Control Unit

AKS007IV

Terminal No. (Wire color) +	Terminal No. (Wire color) –	Item	Signal input/ output	Condition: Ignition switch	Condition: Operation	Voltage	Example of symptom
1 (B)	Ground	Ground	—	ON	—	Approx. 0 V	—
2 (Y) 3 (Y)	Ground	Battery power supply	Input	OFF	—	Battery voltage	System does not work properly.
4 (B)	Ground	Ground	—	ON	—	Approx. 0 V	—
6 (LG)	Ground	ACC power supply	Input	ACC	—	Battery voltage	System does not work properly.
7 (LG)	8 (PU)	Voice guide signal	Output	ON	Press the “GUIDE/ VOICE” button.	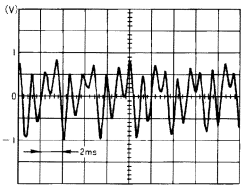 SKIA0171J	Only route guide and operation guide are not heard.
9	—	Shield ground	—	—	—	—	—
14	—	Shield ground	—	—	—	—	—
15 (B)	17	RGB signal (B: blue)	Output	ON	Select “Display Diagnosis (NAVI)” of CONFIRMATION/ ADJUSTMENT function.	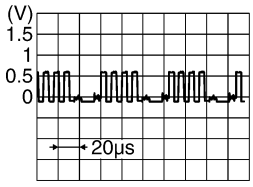 SKIA4979E	RGB screen looks yellowish.
16 (G)	14	RGB synchronizing signal	Output	ON	Press the “MAP” button.	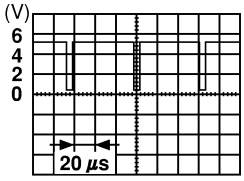 SKIA0164E	RGB screen is rolling.
17	—	Shield ground	—	—	—	—	—
18 (R)	17	RGB signal (R: red)	Output	ON	Select “Display Diagnosis (NAVI)” of CONFIRMATION/ ADJUSTMENT function.	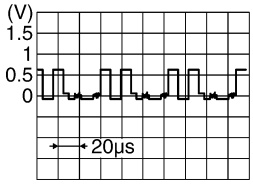 SKIA4977E	RGB screen looks bluish.
21 (W)	17	RGB signal (G: green)	Output	ON	Select “Display Diagnosis (NAVI)” of CONFIRMATION/ ADJUSTMENT function.	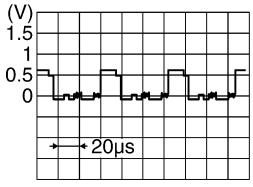 SKIA4978E	RGB screen looks reddish.
25 (R)	Ground	Illumination signal	Input	OFF	Lighting switch position 1st or 2nd	Approx. 12 V	Night illumination for switches does not illuminate.
					Lighting switch position OFF	Approx. 0 V	

Terminal No. (Wire color)		Item	Signal input/ output	Condition		Voltage	Example of symptom
+	–			Ignition switch	Operation		
26 (G)	Ground	Ignition signal	Input	ON	—	Battery voltage	System does not work properly.
27 (OR)	Ground	Reverse signal	Input	ON	Selector lever in R position	Approx. 12 V	The navigation current-location mark moves strangely when the vehicle is moving backwards.
					Selector lever not in R position	Approx. 0 V	
28 (GY)	Ground	Vehicle speed signal (8-pulse)	Input	ON	When vehicle speed is approx. 40 km/h (25 MPH)	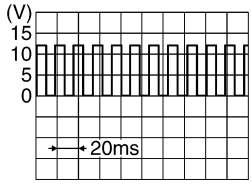 PKIA1935E	Navigation current-location mark does not indicate the correct position.
30 (BR)	Ground	Illumination signal control	—	—	—	Approx. 0 V	—
43	—	Shield ground	—	—	—	—	—
44 (L)	Ground	Communication signal (+)	Input/ output	ON	—	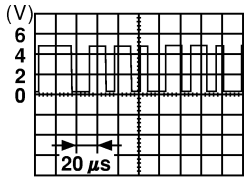 SKIA0175E	System does not work properly.
45 (P)	Ground	Communication signal (–)	Input/ output	ON	—	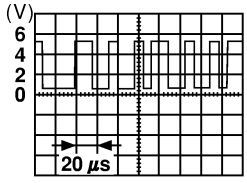 SKIA0176E	System does not work properly.
66	67	GPS signal	Input	ON	Connector is not connected.	Approx. 5 V	Navigation system GPS correction is not possible.

Terminals and Reference Value for Display Control Unit

AKS007IW

Terminal No. (Wire color) +	Terminal No. (Wire color) –	Item	Signal input/ output	Condition: Ignition switch	Condition: Operation	Voltage	Example of symptom
1 (W/L)	Ground	Battery Power supply	Input	OFF	—	Battery voltage	System does not work properly.
2 (W/G)	Ground	Power Supply (Inverter)	Output	ON	—	Approx. 9 V	Screen is not shown.
3 (B)	Ground	Ground	—	ON	—	Approx. 0 V	—
4 (BR/W)	Ground	Power Supply (Signal)	Output	ON	—	Approx. 9 V	Screen is not shown.
5 (P)	Ground	(Inverter) Ground	—	ON	—	Approx. 0 V	—
6 (OR)	Ground	Reverse signal	Input	ON	Selector lever in R position	Approx. 12 V	Impossible to gain direction of vehicle.
					Selector lever not in R position	Approx. 0 V	
7 (P/L)	Ground	(Signal) Ground	—	ON	—	Approx. 0 V	—
10 (LG/R)	Ground	ACC power supply	Input	ACC	—	Battery voltage	System does not work properly.
12 (G/R)	Ground	Ignition signal	Input	ON	—	Battery voltage	A/C operation is not possible. Vehicle information setting is not possible.
13 (B)	Ground	Sysco	—	ON	—	Approx. 0 V	—
14 (R/L)	Ground	Illumination signal	Input	OFF	Lighting switch position 1st or 2nd	Approx. 12 V	Audio unit illumination does not come on when lighting switch is ON (position 1).
					Lighting switch position OFF	Approx. 0 V	
16 (R/G)	Ground	Vehicle speed signal (8–pulse)	Input	ON	When vehicle speed is approx. 40 km/h (25 MPH)	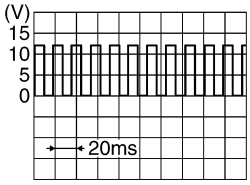 PKIA1935E	Value of vehicle information is not accurately displayed.
25 (L)	—	CAN H	—	—	—	—	—
26 (R)	—	CAN L	—	—	—	—	—
28 (B/R)	Ground	Communication signal (+)	Input/ Output	ON	—	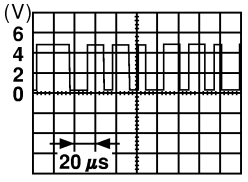 SKIA0175E	System does not work properly.
29	—	Shield ground	—	—	—	—	—

Terminal No. (Wire color)		Item	Signal input/ output	Condition		Voltage	Example of symptom
+	–			Ignition switch	Operation		
30 (W/R)	Ground	Communication signal (–)	Input/ output	ON	—	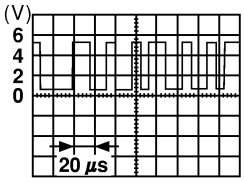 SKIA0176E	System does not work properly.
32 (BR)	Ground	Communication signal (+)	Input/ output	ON	—	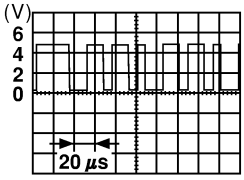 SKIA0175E	System does not work properly.
33	—	Shield ground	—	—	—	—	—
34 (Y)	Ground	Communication signal (–)	Input/ output	ON	—	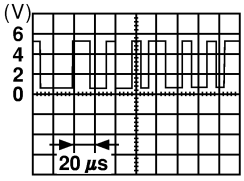 SKIA0176E	System does not work properly.
36 (PU)	Ground	Display Communication signal (DCU-DSP)	Output	ON	Press the “TRIP” button.	 SKIA4364E	Though a screen is displayed, it is impossible to adjust brightness.
37	—	Shield ground	—	—	—	—	—
38 (LG)	Ground	Display Communication signal (DSP-DCU)	Input	ON	Press the “TRIP” button.	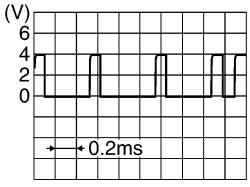 SKIA4363E	Though a screen is displayed, it is impossible to adjust brightness.
39	—	Shield ground	—	—	—	—	—
40 (LG)	Ground	Audio Communication signal	Output	ON	Operate audio volume.	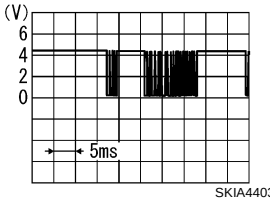 SKIA4403E	Audio dose not operate properly.
41	—	Shield ground	—	—	—	—	—

Terminal No. (Wire color)		Item	Signal input/ output	Condition		Voltage	Example of symptom
+	–			Ignition switch	Operation		
42 (B/Y)	Ground	Audio communica-tion signal	Input	ON	Operate audio volume.	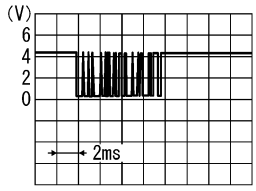 SKIA4402E	Audio dose not operate properly.
43 (G/B)	41	RGB synchro-nizing signal	Input	ON	Press the “MAP” button.	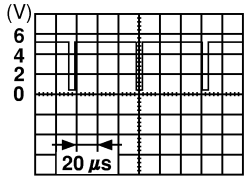 SKIA0164E	RGB screen is rolling.
44 (R/W)	45	RGB signal (R: red)	Input	ON	Select “Display Diagnosis (NAVI)” of CONFIRMA-TION/ADJUST-MENT function.	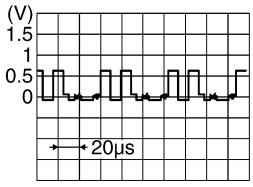 SKIA4977E	RGB screen looks bluish.
45	—	Shield ground	—	—	—	—	—
46 (R/L)	45	RGB signal (G: green)	Input	ON	Select “Display Diagnosis (NAVI)” of CONFIRMA-TION/ADJUST-MENT function.	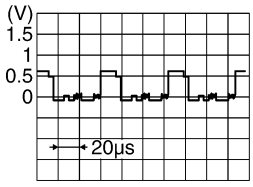 SKIA4978E	RGB screen looks reddish.
47	—	Shield ground	—	—	—	—	—
48 (B)	45	RGB signal (B: blue)	Input	ON	Select “Display Diagnosis (NAVI)” of CONFIRMA-TION/ADJUST-MENT function.	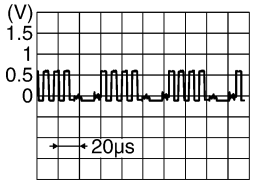 SKIA4979E	RGB screen looks yellowish.
49	—	Shield ground	—	—	—	—	—
50 (L/R)	47	RGB signal (R: red)	Output	ON	Select “Display Diagnosis (DCU)” of CONFIRMA-TION/ADJUST-MENT function.	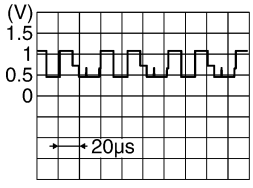 SKIA4980E	RGB screen looks bluish.

Terminal No. (Wire color)		Item	Signal input/ output	Condition		Voltage	Example of symptom
+	–			Ignition switch	Operation		
51 (B)	49	RGB area (YS) signal	Output	ON	Press the“TRIP” button.	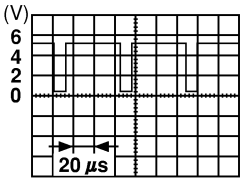 SKIA0162E	RGB screen is not shown.
52 (L/W)	47	RGB signal (G: green)	Output	ON	Select “Display Diagnosis (DCU)” of CONFIRMA-TION/ADJUST-MENT function.	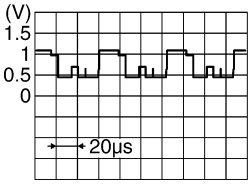 SKIA4981E	RGB screen looks reddish.
53 (W)	49	Vertical syn-chronizing (VP) signal	Input	ON	Selector lever in R position.	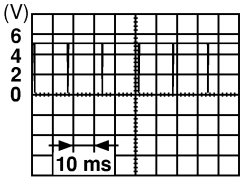 SKIA0161E	Rear view monitor screen is rolling.
54 (L)	47	RGB signal (B: blue)	Output	ON	Select “Display Diagnosis (DCU)” of CONFIRMA-TION/ADJUST-MENT function.	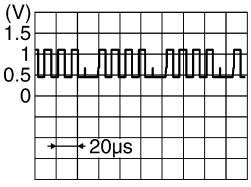 SKIA4982E	RGB screen looks yellowish.
55 (R)	49	Horizontal synchroniz-ing (HP) sig-nal	Input	ON	—	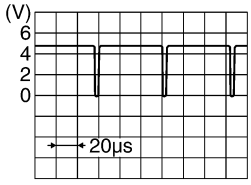 SKIA4983E	RGB screen is not shown.
56 (G)	49	RGB synchro-nizing signal	Output	ON	Press the “TRIP” button.	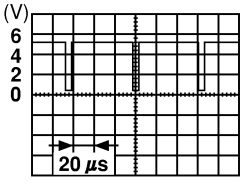 SKIA0164E	RGB screen is rolling.

Terminals and Reference Value for Display

AKS007IX

Terminal No. (Wire color)		Item	Signal input/ output	Condition		Voltage	Example of symptom
+	–			Ignition switch	Operation		
1 (B)	Ground	Ground	—	ON	—	Approx. 0 V	—
2 (W/G)	Ground	Power supply (Inverter)	Input	ON	—	Approx. 9 V	Screen is not shown.
3 (BR/W)	Ground	Power supply (Signal)	Input	ON	—	Approx. 9 V	Screen is not shown.
6 (L/W)	7	RGB signal (G: green)	Input	ON	Select “Display Diagnosis (DCU)” of CONFIRMATION/ADJUSTMENT function.	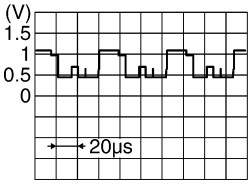 SKIA4981E	RGB screen looks reddish.
7	—	Shield ground	—	—	—	—	—
8 (R)	21	Horizontal synchronizing (HP) signal	Output	ON	—	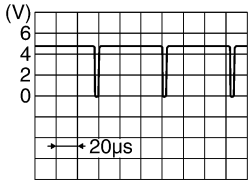 SKIA4983E	RGB screen is not shown.
9 (B)	21	RGB area (YS) signal	Input	ON	Press the “TRIP” button.	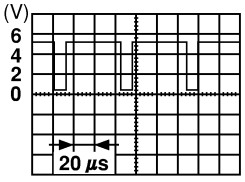 SKIA0162E	RGB screen is not shown.
11 (PU)	23	Display communication signal (DCU-DSP)	Input	ON	—	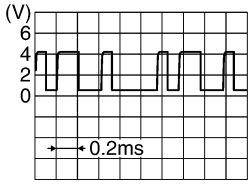 SKIA4364E	Though a screen is displayed, it is impossible to adjust brightness.
13 (P)	Ground	(Inverter) Ground	—	ON	—	Approx. 0 V	—
14 (P/L)	Ground	(Signal) Ground	—	ON	—	Approx. 0 V	—
17 (L/R)	7	RGB signal (R: red)	Input	ON	Select “Display Diagnosis (DCU)” of CONFIRMATION/ADJUSTMENT function.	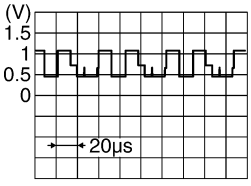 SKIA4980E	RGB screen looks bluish.

Terminal No. (Wire color)		Item	Signal input/ output	Condition		Voltage	Example of symptom
+	–			Ignition switch	Operation		
18 (L)	7	RGB signal (B: blue)	Input	ON	Select “Display Diagnosis (DCU)” of CONFIRMATION/ADJUSTMENT function.	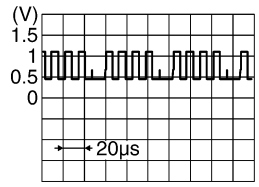 SKIA4982E	RGB screen looks yellowish.
19 (G)	21	RGB synchronizing signal	Input	ON	Press the “TRIP” button.	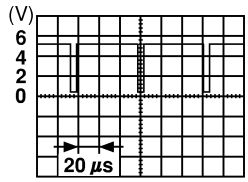 SKIA0164E	RGB screen is rolling.
20 (W)	21	Vertical synchronizing (VP) signal	Output	ON	Selector lever in R position.	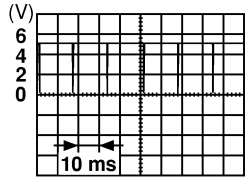 SKIA0161E	Rear view monitor screen is rolling.
21	—	Shield ground	—	—	—	—	—
22 (LG)	23	Display communication signal (DSP-DCU)	Output	ON	–	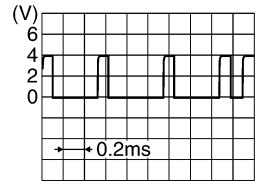 SKIA4363E	Though a screen is displayed, it is impossible to adjust brightness.
23	—	Shield ground	—	—	—	—	—

Terminals and Reference Value for A/C and AV Switch

AKS007IY

Terminal No. (Wire color)		Item	Signal input/ output	Condition		Voltage	Example of symptom
+	–			Ignition switch	Operation		
1 (W/L)	Ground	Battery power supply	Input	OFF	—	Battery voltage	System does not work properly.
2 (LG/R)	Ground	ACC power supply	Input	ACC	—	Battery voltage	System does not work properly.
3 (R/L)	Ground	Illumination signal	Input	OFF	Lighting switch is ON (position 1).	Approx. 12 V	A/C and AV switch illumination does not come on when lighting switch is ON(position 1).
					Turn lighting switch OFF.	Approx. 0 V	
4 (R/Y)	Ground	Illumination control signal	Output	ON	Illumination control switch is operated by lighting switch in 1st or 2nd position.	Changes between approx.0 V and approx.12 V	Audio unit illumination can not be controlled.
5 (B)	Ground	Ground	—	ON	—	Approx. 0 V	—
6 (B/R)	Ground	Communication signal (+)	Input/ Output	ON	—	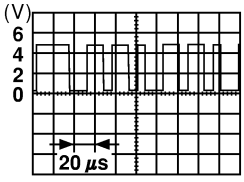 SKIA0175E	System does not work properly.
7	—	Shield ground	—	—	—	—	—
8 (W/R)	Ground	Communication signal (–)	Input/ Output	ON	—	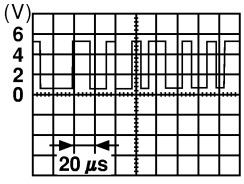 SKIA0176E	System does not work properly.

On Board Self-Diagnosis Function

AKS007IZ

DESCRIPTION

- Diagnosis function consists of the self-diagnosis mode performed automatically and the CONFIRMATION/ADJUSTMENT mode operated manually.
- Self-diagnosis mode checks for connections between the units constituting this system, analyzes each individual unit at the same time, and displays the results on the LCD screen.
- CONFIRMATION/ADJUSTMENT mode is used to perform trouble diagnosis that require operation and judgment by an operator (malfunction that cannot be automatically judged by the system), to check/change the set value, and to display the History of Errors of the navigation system.

DIAGNOSIS ITEM

Mode				Description
Self-diagnosis (DCU)				Display control unit diagnosis
Self-diagnosis (NAVI)				● NAVI Control unit diagnosis (DVD-ROM drive will not be diagnosed when no map DVD-ROM is in it.) ● Analyzes connection between the NAVI control unit and the GPS antenna connection between the NAVI control unit and each unit, and operation of each unit.
Confirmation/Adjustment	Display diagnosis			On display control unit mode, color tone and shading of the screen can be checked by the display of a color bar and a gray scale.
	Vehicle signals			On display control unit mode, analyzes the following vehicle signals: Vehicle speed signal, light signal[NOTE] , ignition switch signal, and reverse signal.
	Auto Climate Control			A/C self-diagnosis of A/C system.
	Navigation	Display diagnosis		On NAVI C/U mode, color tone and shading of the screen can be checked by the display of a color bar and a gray scale.
		Vehicle signals		On NAVI C/U mode, analyzes the following vehicle signals: Vehicle speed signal, light signal, ignition switch signal, and reverse signal.
		History of Errors		Diagnosis results previously stored in the memory (before turning ignition switch ON) are displayed in this mode. Time and location when/where the errors occurred are also displayed.
		Navigation	Display Longitude & Latitude	Display the map. Use the joystick to adjust position. Longitude and latitude will be displayed.
			Speed Calibration	Under ordinary conditions, the navigation system distance measuring function will automatically compensate for minute decreases in wheel and tire diameter caused by tire wear or low -pressure. Speed calibration immediately restores system accuracy in cases such as when distance calibration is needed because of the use of tire chains in inclement weather.
			Angle adjustment	Corrects difference between actual turning angle of a vehicle and turning angle of the car mark on the display.
			Initialize Location	This mode is for initializing the current location. Use when the vehicle is transported a long distance on a trailer, etc.
CAN DIAG SUPPOPT MONITOR				Display status of CAN communication.

NOTE:
Make the status that is set by D/N function be shown.

Self-Diagnosis Mode (DCU)

AKS007J0

OPERATION PROCEDURE

1. Start the engine.
2. Turn the audio system off.
3. While pressing the “MUTE/**II** ” button, turn the volume control dial clockwise or counterclockwise for 30 clicks or more. (When the self-diagnosis mode is started, a short beep will be heard.)
   - Shifting from current screen to previous screen is performed by pressing “PREV” button.

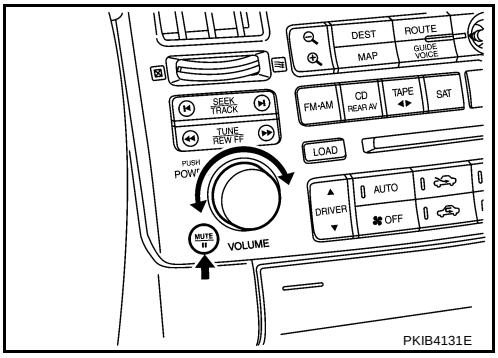

4. The initial trouble diagnosis screen will be shown, and items “Self-Diagnosis (DCU)”,“Self-Diagnosis (NAVI)”, “Confirmation/Adjustment” and “CAN DIAG SUPPORT MONITOR” will become selective.

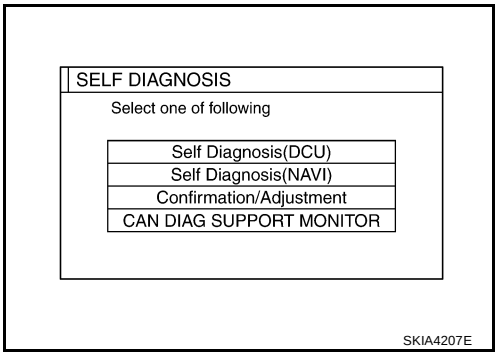

5. Perform self-diagnosis by selecting the “Self-diagnosis (DCU)”.
   - Self-diagnosis subdivision screen will be shown and the operation enters the self-diagnosis mode.
   - A bar graph shown below the self-diagnosis subdivision screen indicates progress of the diagnosis.

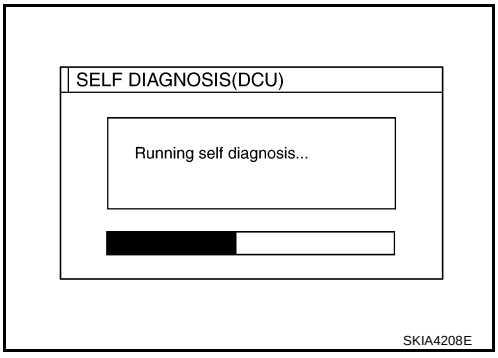

6. When the self-diagnosis completes, optional part confirmation screen will be shown.
   - When connection of an optional part is judged error, a screen to check if the optional part is actually fitted on the vehicle or not will be shown. When fitted, select the switch of the part on the screen and press “End”. Then the “SELF DIAGNOSIS” screen will be shown.
   - When the optional part is connected normally, the switch for the part will not appear on the screen.

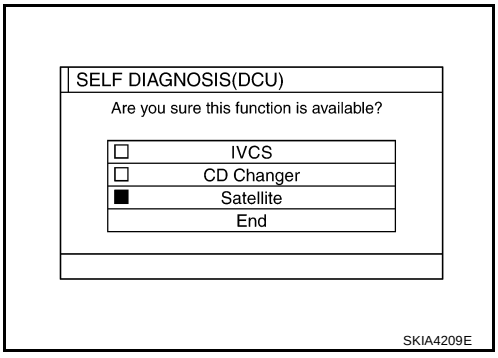

7. On the “SELF DIAGNOSIS” screen, each unit name will be colored according to the diagnosis result, as follows.

   Green : No malfunctioning.

   Yellow : Cannot be judged by self-diagnosis results.

   Red : Unit is malfunctioning.

   Gray : Diagnosis has not been done.

   - If several malfunctions are present in a unit, color of its switch on the screen will be either red, yellow, or gray, determined by the malfunction of the highest priority.

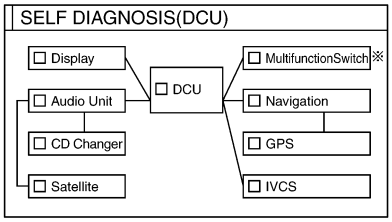

※ Multifunction Switch = A/C and AV switch

SKIA4210E

8. Select a switch on the “SELF DIAGNOSIS” screen and comments for the diagnosis results will be shown.
   - When the switch is green, the following comment will be shown. “Self-diagnosis was successful. Further diagnosis and adjustments are recommended. Follow the “confirmation/ adjustments” menu or refer to the service manual.”.
   - When the switch is yellow, the following comment will be shown. “Connection to the following unit is abnormal. See the service manual for further details”.
   - When the switch is red, the following comment will be shown. “DCU is abnormal”.

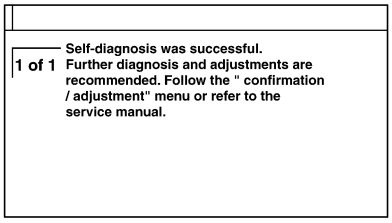

SKIA4211E

SELF–DIAGNOSIS RESULT

Quick Reference Table

1. Select an malfunctioning diagnosis No. in the diagnosis result quick reference table.
2. Find estimated malfunctioning system in the diagnosis number table and perform check by referring to AV-114, "Wiring Diagram — COMM —" .
3. Turn the ignition switch OFF and perform self-diagnosis again.

Screen switch						Diagnosis No.
Switch color	DCU*	Display	Audio unit	Navigation	GPS antenna	
Red	×					1
Yellow	x	x				2
	×		×			3
	×			×	×	4

*: DCU = Display control unit

CAUTION:

- **When A/C and AV switch has a malfunction, self–diagnosis cannot be started.**
- **When display has a malfunction, self–diagnosis cannot be started.**
- **Check the following when the self-diagnosis mode cannot be used.**
  - **AV communication line between display control unit and A/C and AV switch. Refer to AV-154, "AV Communication Line Check (Between Display Control Unit and A/C and AV Switch)" .**
  - **A/C and AV switch power supply and ground circuit. Refer to AV-145, "Power Supply and Ground Circuit Check for A/C and AV Switch" .**
  - **Display power supply and ground circuit. Refer to AV-144, "Power Supply and Ground Circuit Check for Display" .**

Self-Diagnosis Codes

Diagnosis No.	Possible cause	Reference page
1	Display control unit malfunction	AV-181
2	Display communication line between display control unit and display.	AV-152
3	Audio unit power supply and ground circuit. Audio communication line between display control unit and audio unit.	AV-150
4	AV communication line check (between display control unit and NAVI control unit)	AV-149

Self-Diagnosis Mode (NAVI)

AKS007J1

OPERATION PROCEDURE

1. Start the engine.
2. Turn the audio system off.
3. While pressing the “MUTE/**II** ” button, turn the volume control dial clockwise or counterclockwise for 30 clicks or more. (When the self-diagnosis mode is started, a short beep will be heard.)
   - Shifting from current screen to previous screen is performed by pressing “PREV” button.

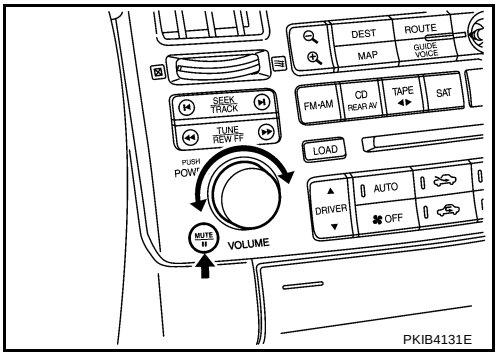

4. The initial trouble diagnosis screen will be shown, and items “Self-Diagnosis (DCU)”, “Self-Diagnosis (NAVI)”, “Confirmation/Adjustment” and “CAN DIAG SUPPORT MONITOR” will become selective.

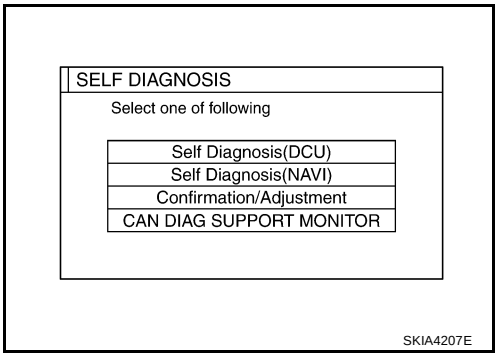

5. Perform self-diagnosis by selecting the “Self-diagnosis (NAVI)”.
   - Self-diagnosis subdivision screen will be shown and the operation enters the self-diagnosis mode.
   - A bar graph shown below the self-diagnosis subdivision screen indicates progress of the diagnosis.

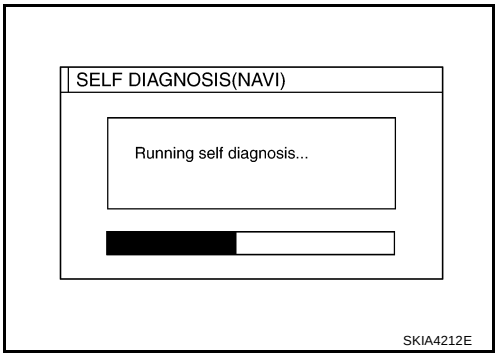

6. On the “SELF DIAGNOSIS” screen, each unit name will be colored according to the diagnosis result, as follows.

   Green : No malfunctioning.

   Yellow : Cannot be judged by self-diagnosis results.

   Red : Unit is malfunctioning.

   Gray : Diagnosis has not been done.

   - If several malfunctions are present in a unit, color of its switch on the screen will be either red, yellow, or gray, determined by the malfunction of the highest priority.

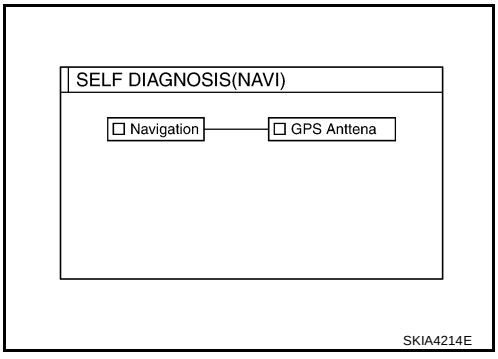

7. Select a switch on the “SELF DIAGNOSIS” screen and comments for the diagnosis results will be shown.
   - When the switch is green, the following comment will be shown. “Self-diagnosis was successful. Further diagnosis and adjustments are recommended. Follow the “confirmation adjustments” menu or refer to the service manual.”.
   - When the switch is yellow, the following comment will be shown. “Connection to the following unit is abnormal. See the service manual for further details”.
   - When the switch is red, the following comment will be shown. “Center Control Unit is abnormal”.
   - When the switch is gray, the following comment will be shown. “Self-diagnosis for DVD-ROM DRIVER of NAVI was not performed because no DVD-ROM was available.”.

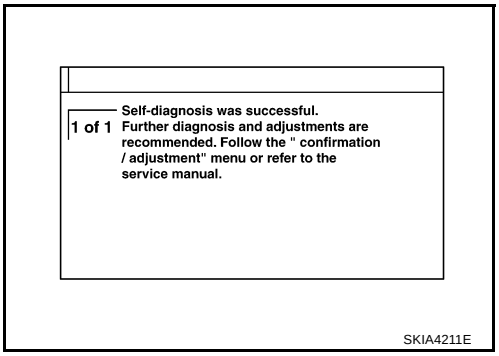

SELF–DIAGNOSIS RESULT

Quick Reference Table

1. Select an malfunctioning diagnosis number. in the diagnosis result quick reference table.
2. Find estimated malfunctioning system in the diagnosis number table and perform check by referring to AV-114, "Wiring Diagram — COMM —" .
3. Turn the ignition switch OFF and perform self-diagnosis again.

Screen switch			Diagnosis No.
Switch color	Navigation*	GPS antenna	
Red	×		1
Gray	×		2
Yellow	×		3
	×		4
	×	×	5

*: Navigation = NAVI control unit

CAUTION:

- **When A/C and AV switch has a malfunction, self–diagnosis cannot be started.**
- **When display has a malfunction, self–diagnosis cannot be started.**
- **Check the following when the self-diagnosis mode cannot be used.**
  - **NAVI control unit power supply and ground circuit. Refer to AV-142, "Power Supply and Ground Circuit Check for NAVI Control Unit" .**
  - **AV communication line between display control unit and NAVI control unit. Refer to AV-149, "AV Communication Line Check (Between Display Control Unit and NAVI Control Unit)" .**
  - **AV communication line between display control unit and A/C and AV switch. Refer to AV-154, "AV Communication Line Check (Between Display Control Unit and A/C and AV Switch)" .**
  - **A/C and AV switch power supply and ground circuit. Refer to AV-145, "Power Supply and Ground Circuit Check for A/C and AV Switch" .**
  - **Display power supply and ground circuit. Refer to AV-144, "Power Supply and Ground Circuit Check for Display" .**

Self-diagnosis Codes

Diagnosis No.	Possible cause	Reference page
1	NAVI control unit malfunction	AV-180
2	No map DVD-ROM is inserted in the NAVI control unit.	AV-155

Diagnosis No.	Possible cause	Reference page
3	When “DVD-ROM error. Please check disc.” is shown. 1. Eject map DVD-ROM and check if it is compatible with the system. 2. Check ejected DVD-ROM for dirt, damage, and warpage. 3. If no error is found, insert a known good map DVD-ROM of the same type and perform self-diagnosis again. If same result is shown, the NAVI control unit is malfunctioning. If result is normal, the map DVD-ROM is malfunctioning.	AV-155
4	If “Error found in DVD-ROM or DVD-ROM driver in control unit. Please perform diagnosis in accordance with service manual” is shown, carry out same inspection as diagnosis No. 3.	AV-155
5	GPS antenna system 1. Visually check for a broken wire in the GPS antenna coaxial cable. 2. Disconnect GPS antenna connector, and make sure approximately 5V is supplied from the NAVI control unit. If not, the NAVI control unit is malfunctioning. If 5V is supplied, replace the GPS antenna. If the connection is still malfunction after the replacement of the GPS antenna, the NAVI control unit is malfunctioning.	AV-156

Confirmation/Adjustment Mode

AKS007J2

OPERATION PROCEDURE

1. Start the engine.
2. Turn the audio system off.
3. While pressing the “MUTE/**II** ” button, turn the volume control dial clockwise or counterclockwise for 30 clicks or more. (When the self-diagnosis mode is started, a short beep will be heard.)
   - Shifting from current screen to previous screen is performed by pressing “PREV” button.

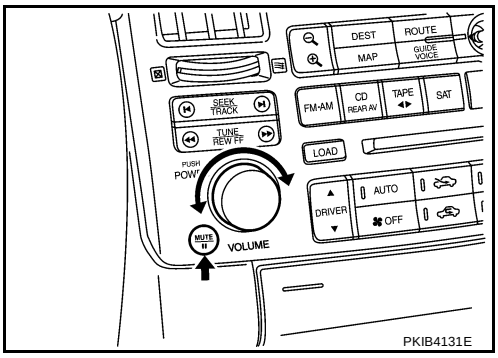

4. The initial trouble diagnosis screen will be shown, and items “Self-Diagnosis (DCU)”,“Self-Diagnosis (NAVI)”,“Confirmation/Adjustment” and “CAN DIAG SUPPORT MONITOR” will become selective.

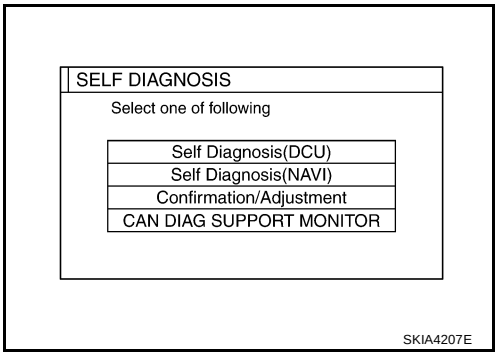

5. When “Confirmation/Adjustment” is selected on the initial trouble diagnosis screen, the operation will enter the CONFIRMATION/ADJUSTMENT mode. In this mode, check and adjustment of each item will become possible.
6. The initial screen will be shown, and items “Display Diagnosis”,“Vehicle Signals”,“Auto Climate Control” and “Navigation” will become selective.
7. Select each switch on “CONFIRMATION/ADJUSTMENT” screen to display the relevant diagnosis screen.

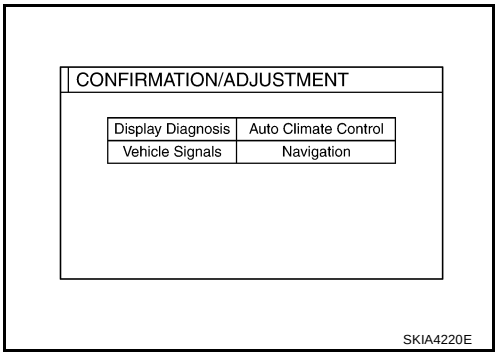

DISPLAY DIAGNOSIS

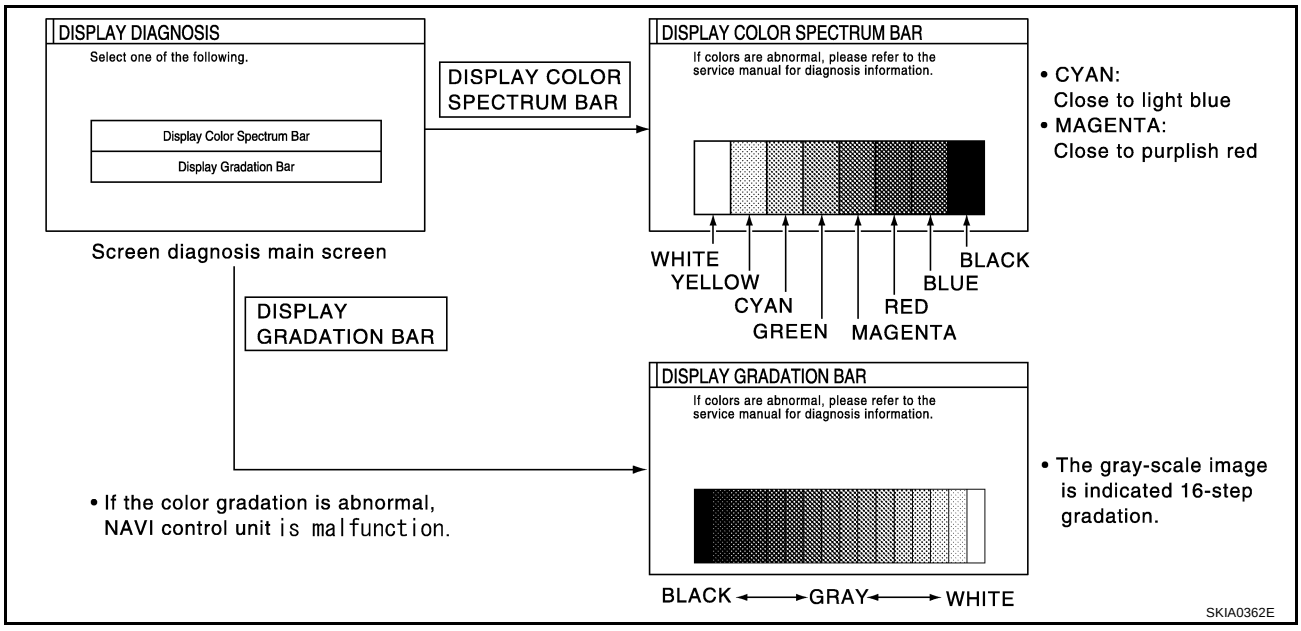

- When RGB signal error occurred in the RGB system, tone of the color bar will change as follows.

  R (red) signal error : Screen looks bluish
  G (green) signal error : Screen looks reddish
  B (blue) signal error : Screen looks yellowish

- When the color of the screen looks unusual, refer to AV-160, "Color of RGB Image Is Not Proper (All Screens Looks Bluish)" , AV-161, "Color of RGB ImageIs Not Proper (All Screens Looks Reddish)" and AV-162, "Color of RGB Image Is Not Proper (All Screens Looks Yellowish)" .

VEHICLE SIGNALS

- A comparison check can be made of each actual vehicle signal and the signals recognized by the system.

  CAUTION:
  In case of confirming light signal, set D/N mode to ON/OFF of lighting switch (normal setting).
  - **OFF: D (Day mode)**
  - **ON: N (Night mode)**

  Unless above setting, light signal (ON/OFF) may not be accurately displayed.

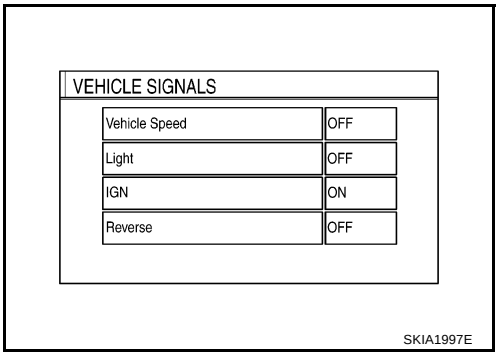

Diagnosis item	Display	Condition	Remarks
Vehicle speed	ON	Vehicle speed > 0km/h (0MPH)	Changes in indication may be delayed by approx. 1.5 seconds. This is normal.
	OFF	Vehicle speed = 0km/h (0MPH)	
	–	Ignition switch in ACC position	
Light	ON	Lighting switch ON	–
	OFF	Lighting switch OFF	
IGN	ON	Ignition switch ON	–
	OFF	Ignition switch ACC	
Reverse	ON	Selector lever in R position	Changes in indication may be delayed by approx. 1.5 seconds. This is normal.
	OFF	Selector lever in other than R position	
	–	Ignition switch in ACC position	

- If vehicle speed is NG, refer to AV-146, "Vehicle Speed Signal Check for Display Control Unit" .
- If light is NG, refer to AV-148, "Illumination Signal Check for Display Control Unit" .
- If IGN is NG, refer to AV-148, "Ignition Signal Check for Display Control Unit" .
- If reverse is NG, refer to AV-149, "Reverse Signal Check for Display Control Unit" .

AUTO CLIMATE CONTROL

Refer to ATC Automatic Air Conditioner ATC-53, "Self-diagnosis Function" for details.

NAVIGATION

1. The initial screen will be shown, and items “Display Diagnosis”, “Vehicle Signals”, “History of Errors” and “Navigation” will become selective.
2. Select each switch on “CONFIRMATION/ADJUSTMENT” screen to display the relevant diagnosis screen.

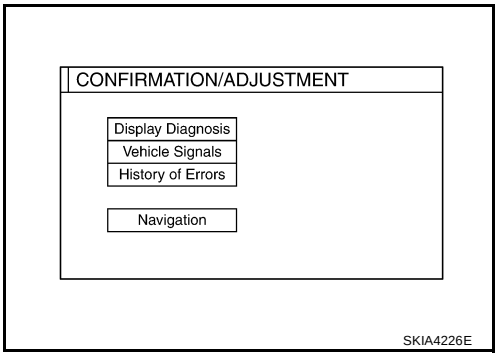

DISPLAY DIAGNOSIS

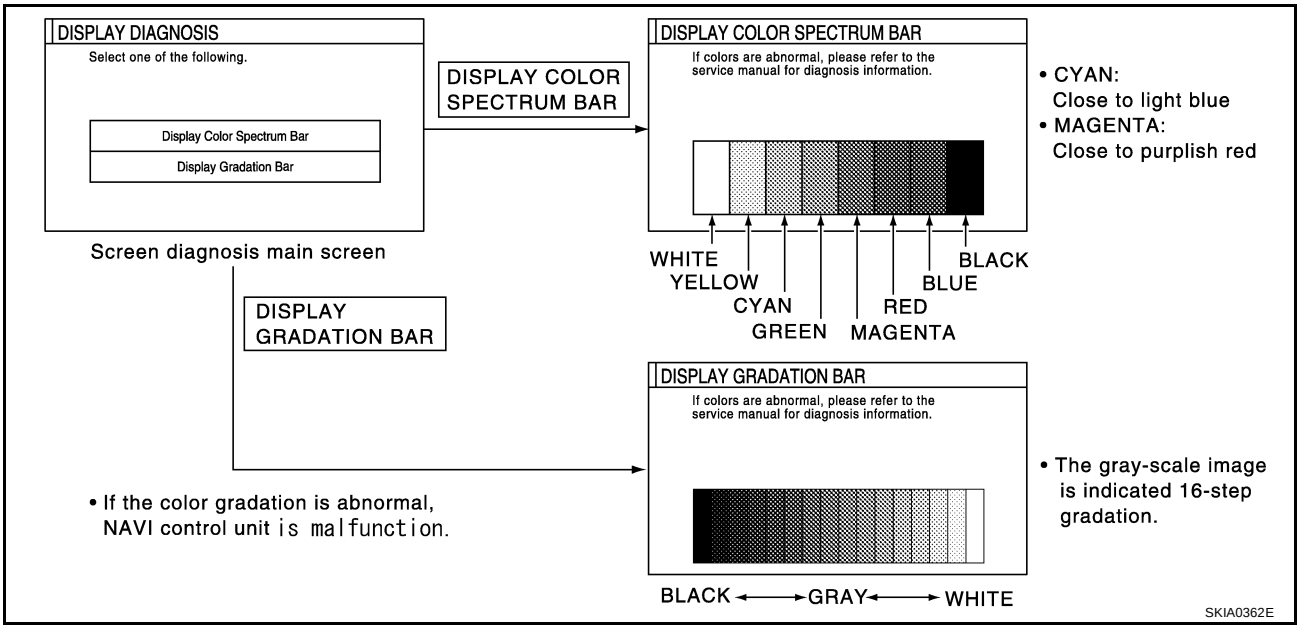

- When RGB signal error occurred in the RGB system, tone of the color bar will change as follows.

R (red) signal error	**: Screen looks bluish**
G (green) signal error	**: Screen looks reddish**
B (blue) signal error	**: Screen looks yellowish**

- When the color of the screen looks unusual, refer to AV-157, "Color of RGB Image Is Not Proper (NAVI Screen Looks Bluish)" , AV-158, "Color of RGB Image Is Not Proper (NAVI Screen Looks Reddish)" and AV-159, "Color of RGB Image Is Not Proper (NAVI Screen Looks Yellowish)" .

VEHICLE SIGNALS

- A comparison check can be made of each actual vehicle signal and the signals recognized by the system.

  CAUTION:
  In case of confirming light signal, set D/N mode to ON/OFF of light switch (normal setting).
  - **OFF: D (Day mode)**
  - **ON: N (Night mode)**

  Unless above setting, light signal (ON/OFF) may not be accurately displayed.

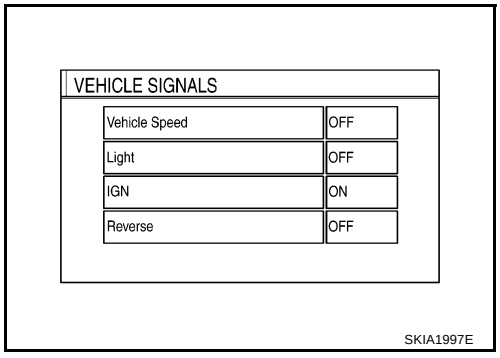

Diagnosis item	Display	Condition	Remarks
Vehicle speed	ON	Vehicle speed > 0km/h (0 MPH)	Changes in indication may be delayed by approx. 1.5 seconds. This is normal.
	OFF	Vehicle speed = 0km/h (0 MPH)	
	—	Ignition switch in ACC position	
Light	ON	Lighting switch ON	—
	OFF	Lighting switch OFF	
IGN	ON	Ignition switch ON	—
	OFF	Ignition switch ACC	
Reverse	ON	Selector lever in R position	Changes in indication may be delayed by approx. 1.5 seconds. This is normal.
	OFF	Selector lever in other than R position	
	—	Ignition switch in ACC position	

- If vehicle speed is NG, refer to AV-145, "Vehicle Speed Signal Check for NAVI Control Unit" .
- If light is NG, refer to AV-148, "Illumination Signal Check for Display Control Unit" .
- If IGN is NG, refer to AV-148, "Ignition Signal Check for NAVI Control Unit" .
- If reverse is NG, refer to AV-148, "Reverse Signal Check for NAVI Control Unit" .

HISTORY OF ERRORS

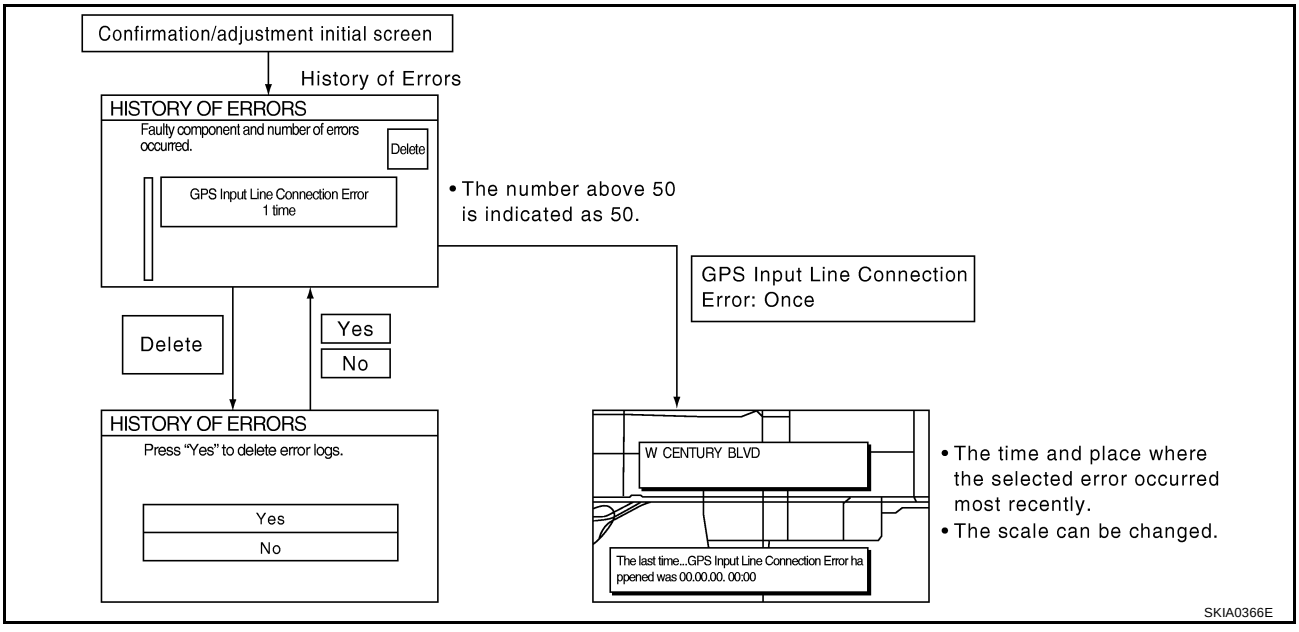

DIAGNOSIS BY HISTORY OF ERRORS

The “Self-diagnosis” results indicate whether an error occurred during the period from when the ignition switch is turned to ON until “Self-diagnosis” is completed.
If an error occurred before the ignition switch was turned to ON and does not occur again until the “Self-diagnosis” is completed, the diagnosis result will be judged normal. Therefore, those errors in the past, which cannot be found by the “Self-diagnosis”, must be found by diagnosing the “History of Errors”.
The History of Errors displays the time and place of the most recent occurrence of that error. However, take note of the following points.

- Correct time of the error occurrence may not be displayed when the GPS antenna substrate within the NAVI control unit has malfunctioned.
- Place of the error occurrence is represented by the position of the current-location mark at the time when the error occurred. If the current-location mark has deviated from the correct position, then the place of the error occurrence max be located correctly.
- The maximum number of occurrences which can be stored is 50. For the 51st and later occurrences, the displayed number remains 50.

When a reproducible malfunction occurred but its cause cannot be identified because several errors are present, record the item, number and place (longitude/latitude) of error occurrence (or delete the History of Errors), then turn the ignition switch from OFF to ON to reproduce the malfunction. Check the History of Errors to find the items which show an increased number of occurrences, and diagnose the item.

Error item	Possible causes Action/symptom	Example of symptom
Gyro sensor disconnected	Communications malfunction between NAVI control unit and internal gyro ● Perform self-diagnosis. ● When the NAVI control unit is judged normal by self-diagnosis, the symptom may be intermittent, caused by strong radio interference.	● Navigation location detection performance has deteriorated. (Angular velocity cannot be detected.)
GPS disconnected	Communication error between NAVI control unit and internal GPS substrate ● Perform self-diagnosis. ● When the NAVI control unit is judged normal by self-diagnosis, the symptom may be intermittent, caused by strong radio interference.	● Navigation location detection performance has deteriorated. (Location correction using GPS is not performed.) ● GPS receiving status remains gray.
GPS transmission cable malfunction	Malfunctioning transmission wires to NAVI control unit and internal GPS substrate ● Perform self-diagnosis. ● When the NAVI control unit is judged normal by self-diagnosis, the symptom may be intermittent, caused by strong radio interference.	● During self-diagnosis, GPS diagnosis is not performed.
GPS input line connection error	Malfunctioning receiving wires to NAVI control unit and internal GPS substrate ● Perform self-diagnosis. ● When the NAVI control unit is judged normal by self-diagnosis, the symptom may be intermittent, caused by strong radio interference.	● Navigation location detection performance has deteriorated. (Location correction using GPS is not performed.) ● GPS receiving status remains gray.
GPS TCX0 over GPS TCX0 under	Oscillating frequency of the GPS substrate frequency synchronizing oscillation circuit exceeded (or below) the specification ● Perform self-diagnosis. ● When the NAVI control unit is judged normal by self-diagnosis, the symptom may be intermittent, caused by strong radio interference, or the control unit may have been subjected to excessively high or low temperatures.	● Navigation location detection performance has deteriorated. (Location correction using GPS is not performed.) ● GPS receiving status remains gray.

Error item	Possible causes Action/symptom	Example of symptom
GPS ROM malfunction GPS RAM malfunction	Contents of ROM (or RAM) in GPS substrate are malfunctioning. ● Perform self-diagnosis. ● When the NAVI control unit is judged normal by self-diagnosis, the symptom may be intermittent, caused by strong radio interference.	● Location detection accuracy of the navigation system will deteriorate, depending on the error area in the memory, because GPS cannot make correct positioning. (Location correction using GPS is not performed.)
GPS RTC malfunction	Clock IC in GPS substrate is malfunctioning. ● Perform self-diagnosis. ● When the NAVI control unit is judged normal by self-diagnosis, the symptom may be intermittent, caused by strong radio interference.	● Correct time may not be displayed. ● After the power is turned on, the system always takes some time until GPS positioning becomes possible. (The GPS receiver starts positioning without re-collecting the whole satellite information when it judged the data stored in the receiver is correct.) ● Correct time of error occurrence may not be stored in the ″History of Errors″.
GPS antenna disconnected	Malfunctioning connection between GPS substrate in NAVI control unit and GPS antenna. ● Perform self-diagnosis. ● When connection between NAVI control unit and GPS antenna is judged normal by self-diagnosis, the symptom may be intermittent, caused by impact or vibration.	● Navigation location detection performance has deteriorated. (Location correction using GPS is not performed.) ● GPS receiving status remains gray.
Low voltage of GPS	The power voltage supplied to the GPS circuit board has decreased. ● Perform self-diagnosis. ● When connection between NAVI control unit and GPS antenna is judged normal by self-diagnosis, the symptom may be intermittent, caused by impact or vibration.	● Navigation location detection performance has deteriorated. (Location correction using GPS is not performed.) ● GPS receiving status remains gray.
DVD-ROM Malfunction DVD-ROM Read error DVD-ROM Response Error	Malfunctioning NAVI control unit	—
	Dedicated map DVD-ROM is in the system, but the data cannot be read. ● Is map DVD-ROM damaged, warped, or dirty? – If damaged or warped, the map DVD-ROM is malfunctioning. – If dirty, wipe the DVD-ROM clean with a soft cloth. ● Perform self-diagnosis. ● When NAVI control unit is judged normal by self-diagnosis, the symptom is judged intermittent, caused by vibration.	● The map of a particular location cannot be displayed. ● Specific guidance information cannot be displayed. ● Map display is slow. ● Guidance information display is slow. ● System has been affected by vibration.

NAVIGATION

1. The initial screen will be shown, and items “Display Longitude & Latitude”,“Speed Calibration”,“Angle Adjustment” and “Initialize Location” will become selective.
2. Select each switch on “NAVIGATION” screen to display the relevant diagnosis screen.

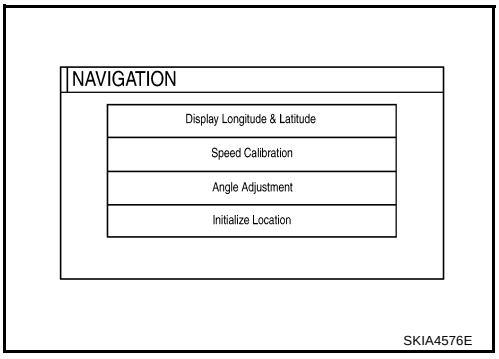

Display Longitude and Latitude

Able to confirm/adjust longitude and latitude.

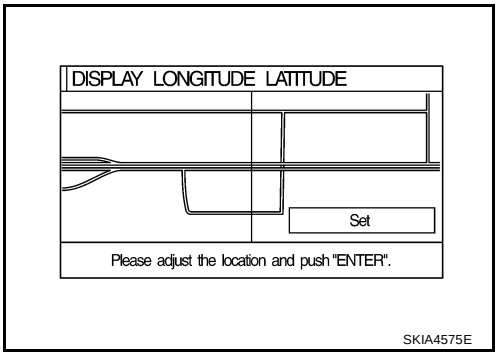

Angle Adjustment

Adjusts turning angle output detected by the gyroscope.

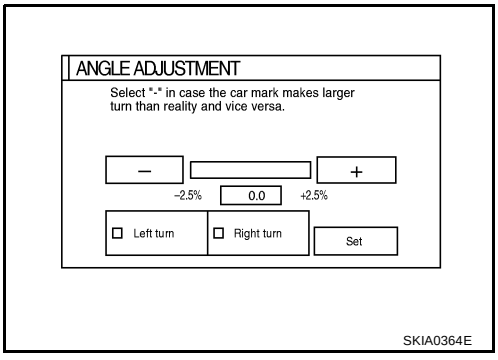

Speed Calibration

During normal driving, distance error caused by tire wear and tire pressure change is automatically adjusted for by the automatic distance correction function. This function, on the other hand, is for immediate adjustment, in cases such as driving with tire chain fitted on tires.

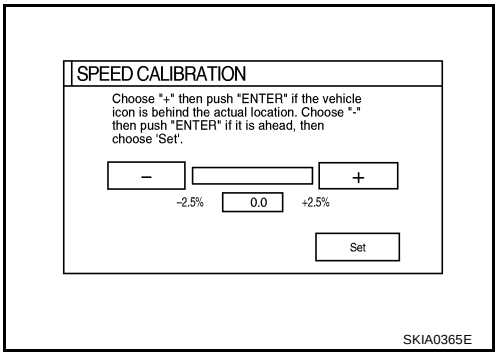

Initialize Location

This mode is for initializing the current location.

CAN Diag Support Monitor

AKS007J3

OPERATION PROCEDURE

1. Start the engine.
2. Turn the audio system off.
3. While pressing the “MUTE/**II** ” button, turn the volume control dial clockwise or counterclockwise for 30 clicks or more. (When the self-diagnosis mode is started, a short beep will be heard.)
   - Shifting from current screen to previous screen is performed by pressing “PREV” button.

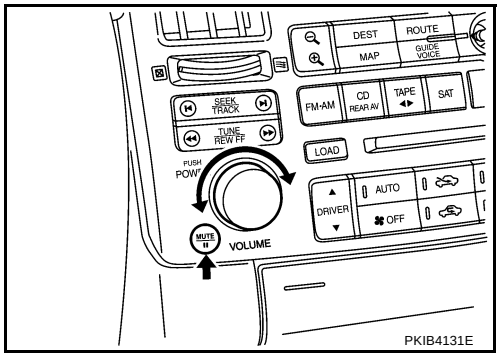

4. The initial trouble diagnosis screen will be shown, and items “Self-Diagnosis (DCU)”, “Self-Diagnosis (NAVI)”, “Confirmation/ Adjustment” and “CAN DIAG SUPPORT MONITOR” will become selective.
5. Select “CAN DIAG SUPPORT MONITOR”.

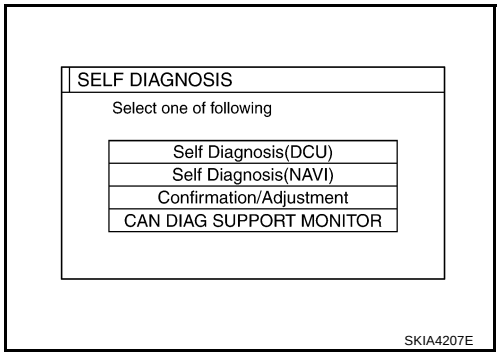

6. Display status of CAN communication.

Item	Content	Error counter (Reference value)
CANCOMM	OK/NG	0-50
CAN_CIRC_1	OK/UNKWN	0-50
CAN_CIRC_2	OK/UNKWN	0-50
CAN_CIRC_3	OK/UNKWN	0-50
CAN_CIRC_4	OK/UNKWN	0-50
CAN_CIRC_5	OK/UNKWN	0-50
CAN_CIRC_6	OK/UNKWN	0-50
CAN_CIRC_7	OK/UNKWN	0-50
CAN_CIRC_8	OK/UNKWN	0-50
CAN_CIRC_9	OK/UNKWN	0-50

NOTE:
Counter shows the status of CAN communication

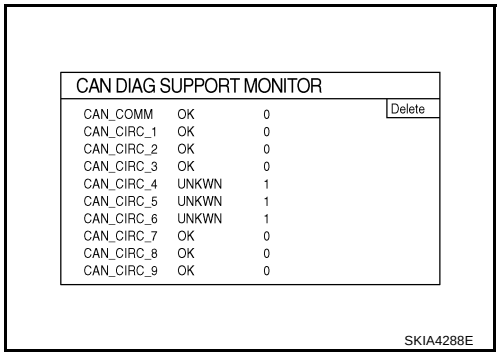

A/C and AV Switch Self-Diagnosis Function

AKS007J4

DESCRIPTION

It can check ON/OFF operation of each switch in the A/C and AV switch and diagnose the input signals to the steering switch (audio).

Starting the Self-Diagnosis Mode

1. Turn ignition switch from OFF to ACC.
2. Within 10 seconds press and hold the witches “MUTE/**II** ” and “PREV” simultaneously for 3 seconds.

Then the self-diagnosis operates.

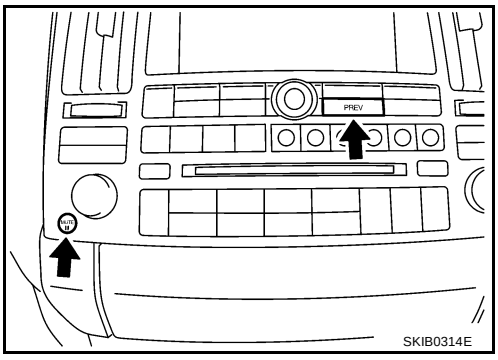

Exiting the Self-Diagnosis Mode

Turn ignition switch OFF. Then the self-diagnosis ends.

Diagnosis Function

- It can illuminate all the indicators (LED) in the A/C and AV switch.
- It can check for continuity of the switches by sounding the buzzer when the A/C and AV switch is pressed.
- It can check for continuity of harness between A/C and AV switch and steering switch (audio).

Power Supply and Ground Circuit Check for NAVI Control Unit

AKS007J5

1. CHECK FUSE

Make sure the following fuses of the NAVI control unit are not blown.

Terminals		Power source	Fuse No.
Connector	Terminal (Wire color)		
B208	2 (Y), 3 (Y)	Battery power	32
	6 (LG)	ACC power	6

OK or NG

OK >> GO TO 2.

NG >> If fuse is blown, be sure to eliminate case of malfunction before installing new fuse. Refer to PG-3, "POWER SUPPLY ROUTING CIRCUIT" .

2. CHECK POWER SUPPLY CIRCUIT

Check voltage between connector terminals and ground as follows.

Terminals			Ignition switch position		
(+)		(–)	OFF	ACC	ON
Connector	Terminal (Wire color)				
B208	2 (Y), 3 (Y)	Ground	Battery voltage	Battery voltage	Battery voltage
	6 (LG)		0 V	Battery voltage	Battery voltage

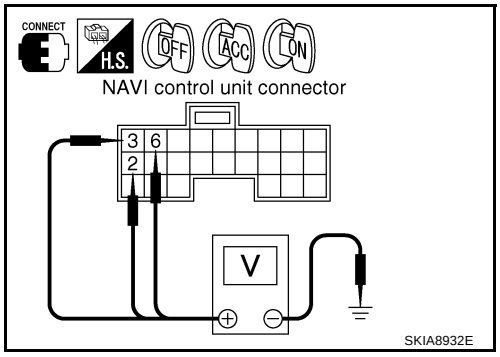

OK or NG

OK >> GO TO 3.

NG >> Check harness for open or short between NAVI control unit and fuse.

3. CHECK GROUND CIRCUIT

1. Turn ignition switch OFF.
2. Disconnect NAVI control unit connector.
3. Check continuity between the following NAVI control unit and ground.

Terminals			Ignition switch	Continuity
Connector	Terminal (Wire color)	Ground	OFF	Yes
B208	1 (B), 4 (B)			

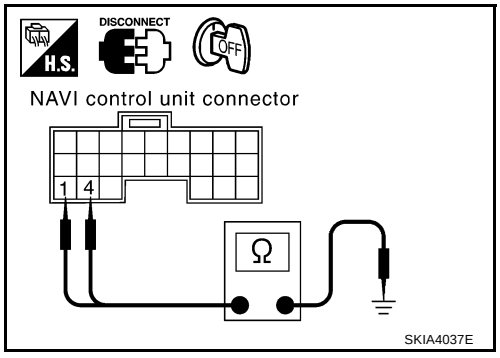

OK or NG

OK >> INSPECTION END

NG >> Repair harness or connector.

Power Supply and Ground Circuit Check for Display Control Unit

AKS007J6

1. CHECK FUSE

Make sure the following fuses of the display control unit are not blown.

Terminals		Power source	Fuse No.
Connector	Terminal (Wire color)		
M75	1 (W/L)	Battery power	32
	10 (LG/R)	ACC power	6

OK or NG

OK >> GO TO 2.

NG >> If fuse is blown, be sure to eliminate case of malfunction before installing new fuse. Refer to PG-3, "POWER SUPPLY ROUTING CIRCUIT" .

2. CHECK POWER SUPPLY CIRCUIT

Check voltage between connector terminals and ground as follows.

Terminals			Ignition switch position		
(+)		(–)	OFF	ACC	ON
Connector	Terminal (Wire color)				
M75	1 (W/L)	Ground	Battery voltage	Battery voltage	Battery voltage
	10 (LG/R)		0 V	Battery voltage	Battery voltage

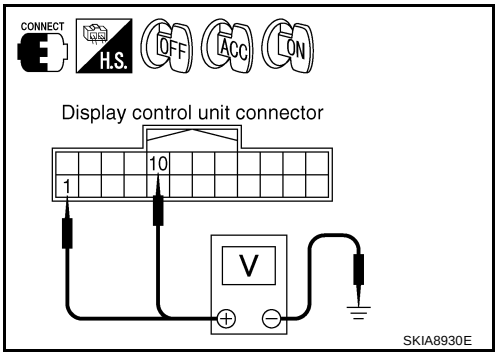

OK or NG

OK >> GO TO 3.

NG >> Check harness for open or short between display control unit and fuse.

3. CHECK GROUND CIRCUIT

1. Turn ignition switch OFF.
2. Disconnect display control unit connector.
3. Check continuity between the following display control unit and ground.

Terminals			Ignition switch	Continuity
Cnnector	Terminal (Wire color)	Ground	OFF	Yes
M75	3 (B)			

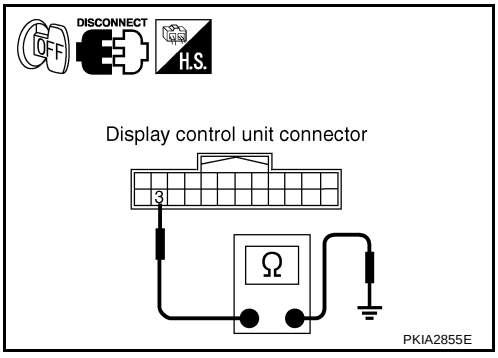

OK or NG

OK >> INSPECTION END

NG >> Repair harness or connector.

Power Supply and Ground Circuit Check for Display

AKS007J7

1. CHECK1: POWER SUPPLY CIRCUIT

1. Turn ignition switch ON.
2. Check voltage between display harness connector M63 terminals 2 (W/G), 3 (BR/W) and ground.

Approx. 9 V

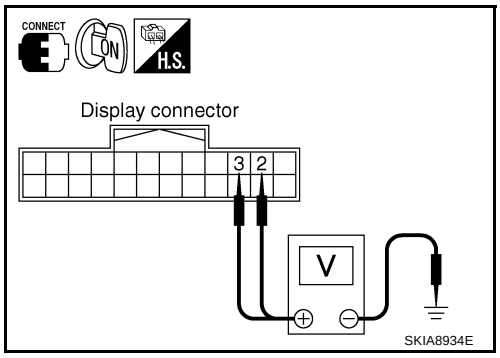

OK or NG

OK >> GO TO 3.
NG >> GO TO 2.

2. CHECK POWER SUPPLY CIRCUIT

Check voltage between display control unit harness connector M75 terminals 2 (W/G), 4 (BR/W) and ground.

Approx. 9 V

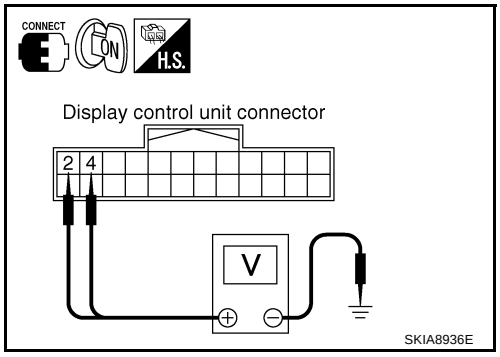

OK or NG

OK >> Repair harness or connector.
NG >> Replace display control unit.

3. CHECK GROUND CIRCUIT

1. Turn ignition switch OFF.
2. Disconnect display connector.
3. Check continuity between display and ground as follows.

Terminals			Ignition switch	Continuity
Cnnector	Terminal (Wire color)			
M63	1 (B)	Ground	OFF	Yes
	13 (P)			

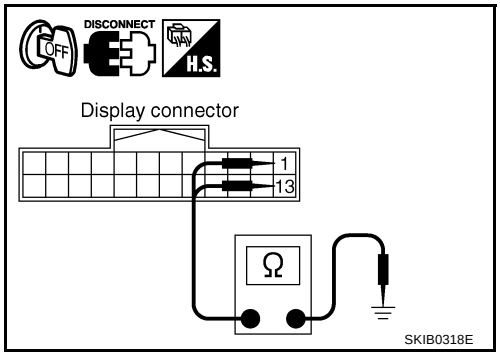

OK or NG

OK >> INSPECTION END.
NG >> Repair harness or connector.

Power Supply and Ground Circuit Check for A/C and AV Switch

AKS007J8

1. CHECK FUSE

Make sure the following fuses of the A/C and AV switch are not blown.

Terminals		Power source	Fuse No.
Connector	Terminal (Wire color)		
M64	1 (W/L)	Battery power	32
	2 (LG/R)	ACC power	6

OK or NG

OK >> GO TO 2.

NG >> If fuse is blown, be sure to eliminate case of malfunction before installing new fuse. Refer to PG-3, "POWER SUPPLY ROUTING CIRCUIT" .

2. CHECK POWER SUPPLY CIRCUIT

Check voltage between connector terminals and ground as follows.

Terminals			Ignition switch position		
(+)		(–)	OFF	ACC	ON
Connector	Terminal (Wire color)				
M64	1 (W/L)	Ground	Battery voltage	Battery voltage	Battery voltage
	2 (LG/R)		0 V	Battery voltage	Battery voltage

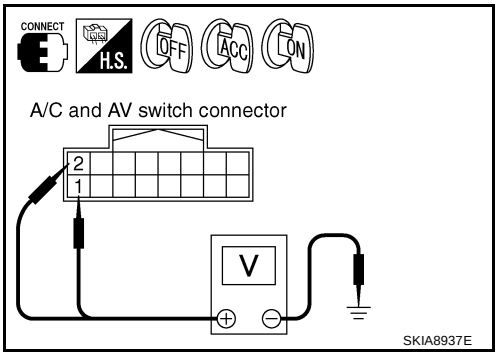

OK or NG

OK >> GO TO 3.

NG >> Check harness for open or short between A/C and AV switch and fuse.

3. CHECK GROUND CIRCUIT

1. Turn ignition switch OFF.
2. Disconnect A/C and AV switch connector.
3. Check continuity between A/C and AV switch and ground as follows.

Terminals			Ignition switch	Continuity
Connector	Terminal (Wire color)	Ground	OFF	Yes
M64	5 (B)			

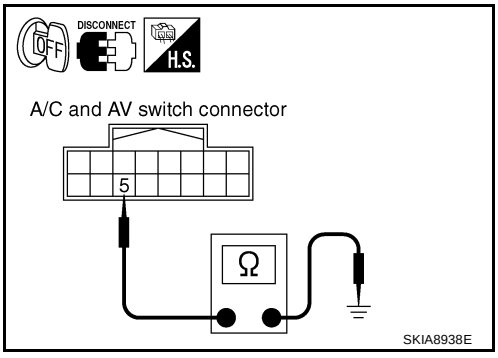

OK or NG

OK >> INSPECTION END

NG >> Repair harness or connector.

Vehicle Speed Signal Check for NAVI Control Unit

AKS007J9

1. VEHICLE SPEED OPERATION CHECK

Is speedmeter operated normally?

YES or NO

YES >> GO TO 2.

NO >> Check combination meter trouble diagnosis. Refer to DI-15, "Trouble Diagnosis" .

2. CHECK HARNESS

1. Turn ignition switch OFF.
2. Disconnect NAVI control unit connector and unified meter and A/C amp. connector.
3. Check continuity between NAVI control unit harness connector B207 terminal 28 (GY) and unified meter and A/C amp. harness connector M56 terminal 26 (R/G).

   Continuity should exist.

4. Check continuity between NAVI control unit harness connector B207 terminal 28 (GY) and ground.

   Continuity should not exist.

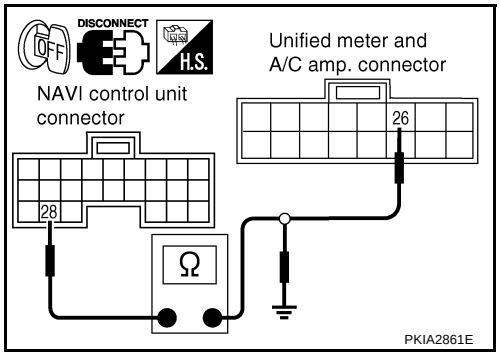

OK or NG

OK >> GO TO 3.
NG >> Repair harness or connector.

3. CHECK VEHICLE SPEED SIGNAL

1. Connect NAVI control unit connector and unified meter and A/C amp. connector.
2. Start engine.
3. Drive vehicle at a constant speed.
4. Check signal between NAVI control unit harness connector B207 terminal 28 (GY) and ground with CONSULT-II or oscilloscope.

   28 (GY) - Ground : Refer to AV-119, "Terminals and Reference Value for NAVI Control Unit" .

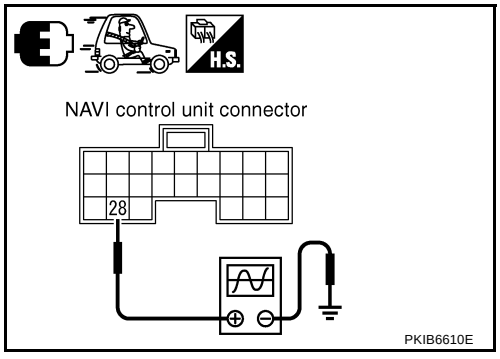

OK or NG

OK >> Replace NAVI control unit.
NG >> Check combination meter system. Refer to DI-20, "Vehicle Speed Signal Inspection" .

Vehicle Speed Signal Check for Display Control Unit

AKS007JA

1. VEHICLE SPEED OPERATION CHECK

Is speedmeter operated normally?

YES or NO

YES >> GO TO 2.
NO >> Check combination meter trouble diagnosis. Refer to DI-15, "Trouble Diagnosis" .

2. CHECK HARNESS

1. Turn ignition switch OFF.
2. Disconnect display control unit connector and unified meter and A/C amp. connector.
3. Check continuity between display control unit harness connector M75 terminal 16 (R/G) and unified meter and A/C amp. harness connector M56 terminal 26 (R/G).

   Continuity should exist.

4. Check continuity between display control unit harness connector M75 terminal 16 (R/G) and ground.

   Continuity should not exist.

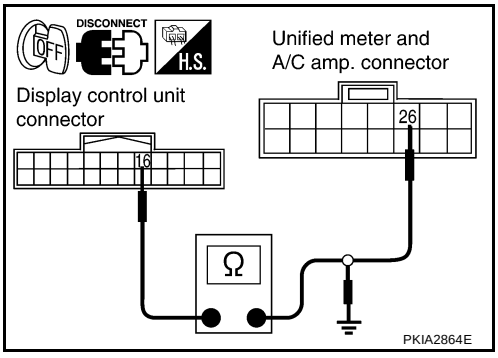

OK or NG

OK >> GO TO 3.
NG >> Repair harness or connector.

3. CHECK VEHICLE SPEED SIGNAL

1. Connect display control unit connector and unified meter and A/C amp. connector.
2. Start the engine.
3. Drive vehicle at a constant speed.
4. Check signal between display control unit harness connector M75 terminal 16 (R/G) and ground with CONSULT-II or oscilloscope.

   16 (R/G) – Ground : Refer to AV-121, "Terminals and Reference Value for Display Control Unit" .

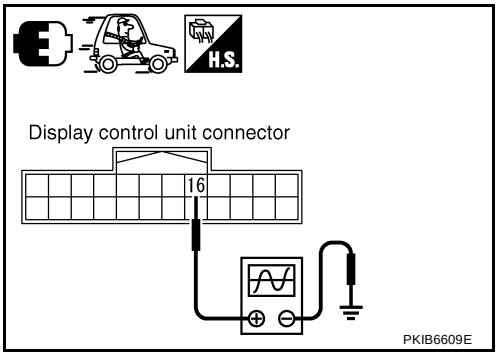

OK or NG

OK >> Replace display control unit.
NG >> Check unified meter and A/C amp. system. Refer to DI-20, "Vehicle Speed Signal Inspection" .

Illumination Signal Check for NAVI Control Unit

AKS00AUM

1. CHECK ILLUMINATION SIGNAL

Check voltage between NAVI control unit and ground.

Terminals			Condition	Voltage
(+)		(–)		
Connector	Terminal (Wire color)			
B207	25 (R)	Ground	Lighting switch position 1st or 2nd position	Approx. 12 V
			Lighting switch OFF	Approx. 0 V

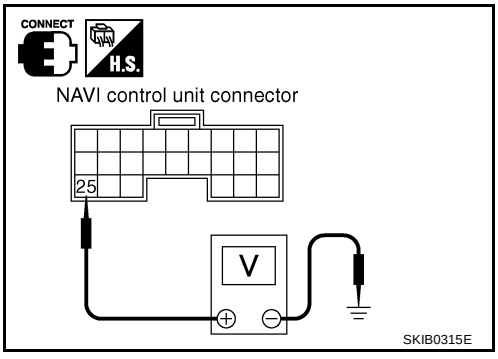

OK or NG

OK >> Replace NAVI control unit.
NG >> Check harness for open or short between NAVI control unit and IPDM E/R.

Illumination Signal Check for Display Control Unit

AKS007JC

1. CHECK ILLUMINATION SIGNAL

Check voltage between display control unit and ground.

Terminals			Condition	Voltage
(+)		(–)		
Connector	Terminal (Wire color)			
M75	14 (R/L)	Ground	Lighting switch position 1st or 2nd position	Approx. 12 V
			Lighting switch OFF	Approx. 0 V

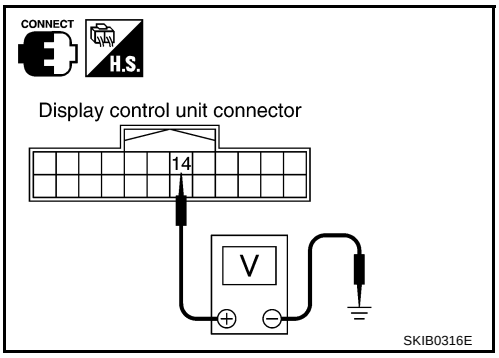

OK or NG

OK >> Replace display control unit.
NG >> Check harness for open or short between display control unit and IPDM E/R.

Ignition Signal Check for NAVI Control Unit

AKS007JD

1. CHECK IGNITION SIGNAL

1. Turn ignition switch ON.
2. Check voltage between NAVI control unit harness connector B207 terminal 26 (G) and ground.

Battery voltage should exist.

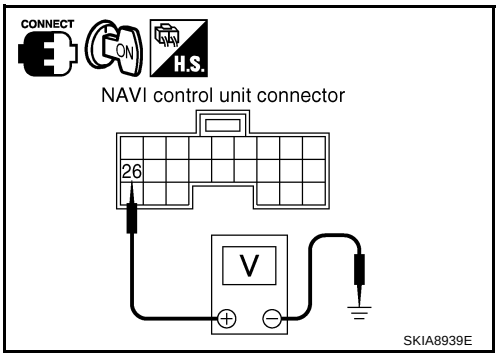

OK or NG

OK >> Replace NAVI control unit.
NG >> Check harness for open or short between NAVI control unit and fuse.

Ignition Signal Check for Display Control Unit

AKS007JE

1. CHECK IGNITION SIGNAL

1. Turn ignition switch ON.
2. Check voltage between display control unit harness connector M75 terminal 12 (G/R) and ground.

Battery voltage should exist.

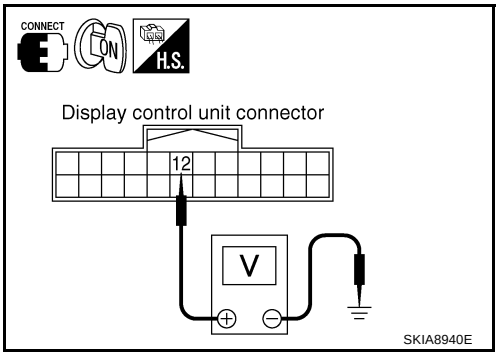

OK or NG

OK >> Replace display control unit.
NG >> Check harness for open or short between display control unit and fuse.

Reverse Signal Check for NAVI Control Unit

AKS007JF

1. CHECK REVERSE LAMP

1. Turn ignition switch ON.
2. Selector lever into R-position.

Does “R” in the shift position indicator come on?

YES >> GO TO 2.
NO >> Check back-up lamp system. Refer to LT-127, "BACK-UP LAMP" .

2. CHECK REVERSE SIGNAL

With the selector lever in R-position, check voltage between NAVI control unit and ground.

Terminals			Condition		Voltage
(+)		(–)			
Connector	Terminal (Wire color)				
B207	27 (OR)	Ground	Select lever	R-position	Approx. 12 V
				Other than above	Approx. 0 V

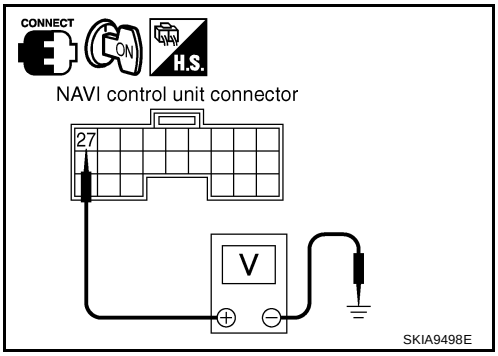

OK or NG

OK >> Replace NAVI control unit.
NG >> Check harness for open or short between NAVI control unit and back-up lamp relay.

Reverse Signal Check for Display Control Unit

AKS007JG

1. CHECK REVERSE LAMP

1. Turn ignition switch ON.
2. Selector lever into R-position.

Does “R” in the shift position indicator come on?

YES >> GO TO 2.
NO >> Check back-up lamp system. Refer to LT-127, "BACK-UP LAMP" .

2. CHECK REVERSE SIGNAL

With the selector lever in R-position, check voltage between display control unit and ground.

Terminals			Condition		Voltage
(+)		(–)			
Connector	Terminal (Wire color)				
M75	6 (OR)	Ground	Select lever	R-position	Approx. 12 V
				Other than above	Approx. 0 V

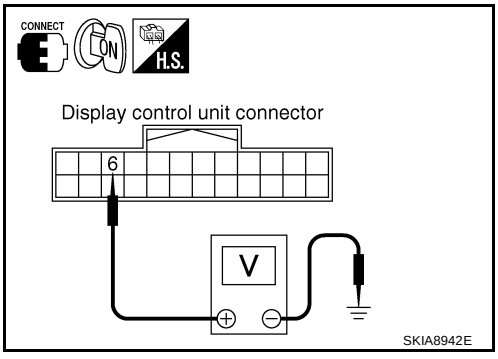

OK or NG

OK >> Replace display control unit.
NG >> Check harness for open or short between display control unit and back-up lamp relay.

AV Communication Line Check (Between Display Control Unit and NAVI Control Unit)

AKS007JH

1. CHECK POWER SUPPLY AND GROUND CIRCUIT

Check system of power supply and ground circuit NAVI control unit. Refer to AV-142, "Power Supply and Ground Circuit Check for NAVI Control Unit" .

OK or NG

OK >> GO TO 2.
NG >> Check the malfunctioning parts.

2. CHECK HARNESS

1. Turn ignition switch OFF.
2. Disconnect NAVI control unit connector and display control unit connector.
3. Check continuity between NAVI control unit and display control unit.

Terminals				Continuity
NAVI control unit		Display control unit		
Connector	Terminal (Wire color)	Connector	Terminal (Wire color)	
B207	44 (L)	M76	32 (BR)	Yes
	45 (P)		34 (Y)	

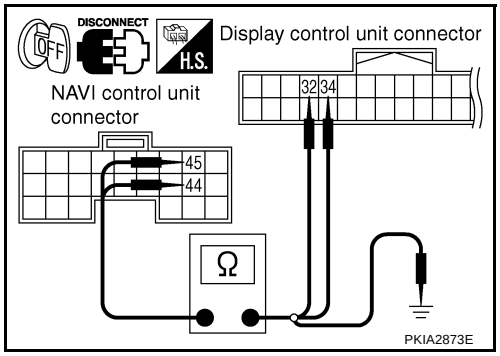

4. Check continuity between NAVI control unit and ground.

Terminals			Continuity
NAVI control unit			
Connector	Terminal (Wire color)	Terminal	
B207	44 (L)	Ground	No
	45 (P)		

OK or NG

OK >> GO TO 3.
NG >> Repair harness or connector.

3. SELF-DIAGNOSIS OF DCU

1. Replace same normal display control unit.
2. Connect NAVI control unit connector and display control unit connector.
3. Turn ignition switch ON.
4. Start self-diagnosis of DCU, and check the self-diagnosis result.

OK or NG

OK >> Replace display control unit.
NG >> Replace NAVI control unit.

Audio Communication Line Check (Between Display Control Unit and Audio Unit)

AKS007JI

1. CHECK POWER SUPPLY AND GROUND CIRCUIT

Check power supply and ground circuit of audio unit. Refer to AV-41, "Power Supply Circuit Inspection" .

OK or NG

OK >> GO TO 2.
NG >> Check the malfunctioning parts.

2. CHECK HARNESS

1. Turn ignition switch OFF.
2. Disconnect audio unit connector and display control unit connector.
3. Check continuity between audio unit and display control unit.

Terminals				Continuity
Display control unit		Audio unit		
Connector	Terminal (Wire color)	Connector	Terminal (Wire color)	
M76	40 (LG)	M60	23 (LG)	Yes
	42 (B/Y)		21 (B/Y)	

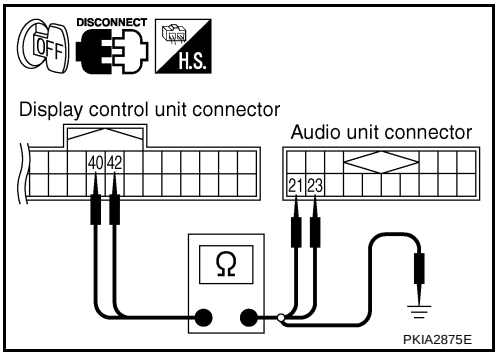

4. Check continuity between display control unit and ground.

Terminals			Continuity
Display control unit		—	
Connector	Terminal (Wire color)		
M76	40 (LG)	Ground	No
	42 (B/Y)		

OK or NG

OK >> GO TO 3.
NG >> Repair harness or connector.

3. CHECK 1: AUDIO-TX COMMUNICATION SIGNAL

1. Connect display control unit connector.
2. Turn ignition switch ON.
3. Check voltage between display control unit harness connector M76 terminal 40 (LG) and ground.

Approx. 3.5 V or more

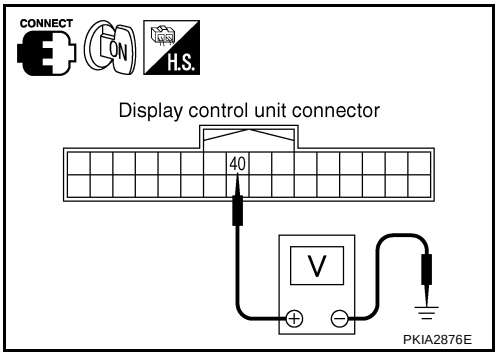

OK or NG

OK >> GO TO 4.
NG >> Replace display control unit.

4. CHECK 2: AUDIO-RX COMMUNICATION SIGNAL

1. Turn ignition switch OFF.
2. Connect audio unit connector.
3. Turn ignition switch ON.
4. Check voltage between display control unit harness connector M76 terminal 42 (B/Y) and ground.

Approx. 3.5 V or more

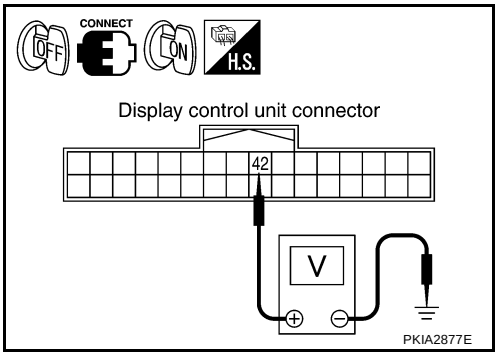

OK or NG

OK >> GO TO 5.
NG >> Replace audio unit.

5. CHECK 3: AUDIO-TX COMMUNICATION SIGNAL

Check signal between display control unit harness connector M76 terminal 40 (LG) and ground with CONSULT-II or oscilloscope.

40 (LG) - Ground : **Refer to AV-121, "Terminals and Reference Value for Display Control Unit" .**

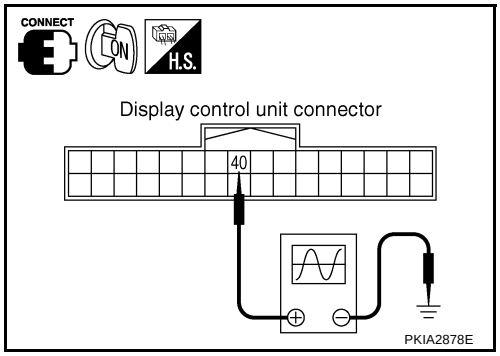

OK or NG

OK >> GO TO 6.
NG >> Replace audio unit.

6. CHECK 4: AUDIO-RX COMMUNICATION SIGNAL

Check signal between display control unit harness connector M76 terminal 42 (B/Y) and ground with CONSULT-II or oscilloscope.

42 (B/Y) - Ground : **Refer to AV-121, "Terminals and Reference Value for Display Control Unit" .**

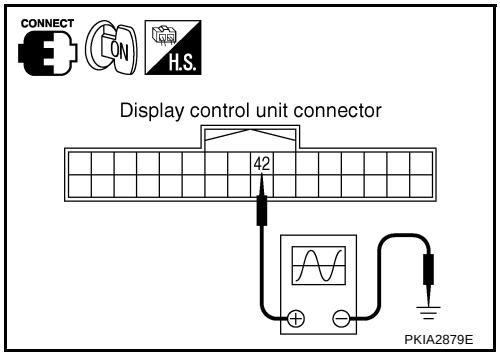

OK or NG

OK >> Replace audio unit.
NG >> Replace display control unit.

Display Communication Line Check (Between Display Control Unit and Display)

AKS007JJ

1. CHECK HARNESS

1. Turn ignition switch OFF.
2. Disconnect display connector and display control unit connector.
3. Check continuity between display control unit and Display.

Terminals				Continuity
Display control unit		Display		
Connector	Terminal (Wire color)	Connector	Terminal (Wire color)	
M76	36 (PU)	M63	11 (PU)	Yes
	38 (LG)		22 (LG)	

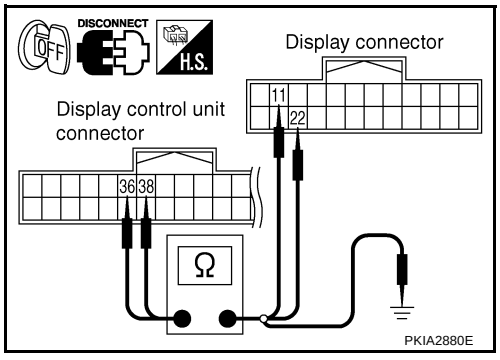

4. Check continuity between display control unit and ground.

Terminals			Continuity
Display control unit		Terminal	
Connector	Terminal (Wire color)		
M76	36 (PU)	Ground	No
	38 (LG)		

OK or NG

OK >> GO TO 2.
NG >> Repair harness or connector.

2. CHECK 1: COMMUNICATION SIGNAL (DCU–DSP)

1. Connect display connector.
2. Turn ignition switch ON.
3. Check voltage between display control unit harness connector M76 terminal 36 (PU) and ground.

Approx. 4.2 V

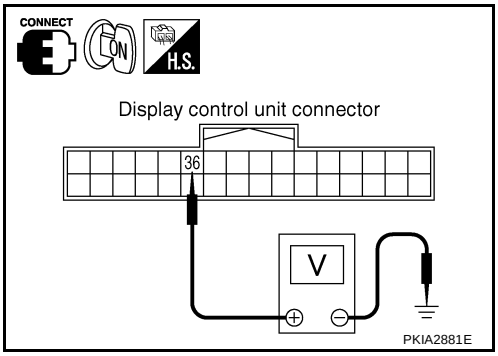

OK or NG

OK >> GO TO 3.
NG >> Replace display control unit.

3. CHECK 2: COMMUNICATION SIGNAL (DSP–DCU)

1. Turn ignition switch OFF.
2. Disconnect display connector.
3. Connect display control unit connector.
4. Turn ignition switch ON.
5. Check voltage between display control unit harness connector M76 terminal 38 (LG) and ground.

Approx. 4.2 V

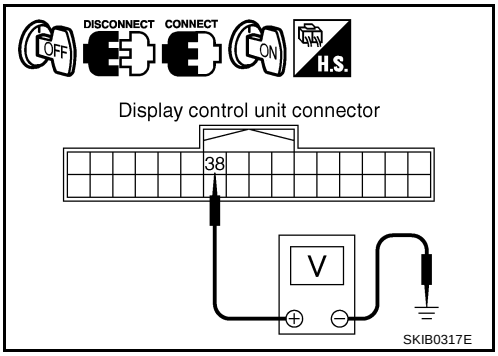

OK or NG

OK >> GO TO 4.
NG >> Replace display control unit.

4. CHECK 3: COMMUNICATION SIGNAL (DCU–DSP)

1. Turn ignition switch OFF.
2. Connect display connector.
3. Turn ignition switch ON.
4. Check signal between display control unit harness connector M76 terminal 36 (PU) and ground with CONSULT-II or oscilloscope.

36 (PU) - Ground : Refer to AV-121, "Terminals and Reference Value for Display Control Unit" .

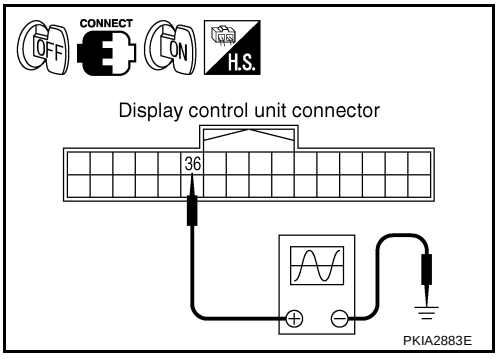

OK or NG

OK >> GO TO 5.
NG >> Replace display control unit.

5. CHECK 4: COMMUNICATION SIGNAL (DSP–DCU)

Check signal between display control unit harness connector M76 terminal 38 (LG) and ground with CONSULT-II or oscilloscope.

38 (LG) - Ground : Refer to AV-121, "Terminals and Reference Value for Display Control Unit" .

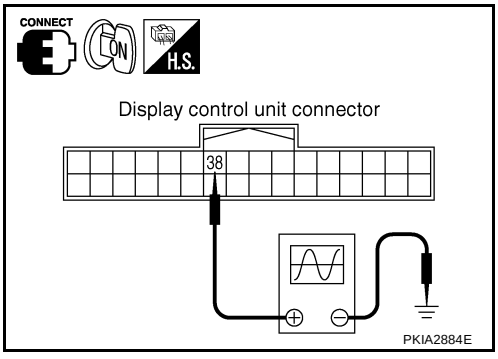

OK or NG

OK >> Replace display control unit.
NG >> Replace display.

AV Communication Line Check (Between Display Control Unit and A/C and AV Switch)

AKS007JK

1. CHECK A/C AND AV SWITCH CIRCUIT

1. Turn ignition switch OFF.
2. Disconnect display control unit connector and A/C and AV switch connector.
3. Check continuity between display control unit and A/C and AV switch.

Terminals				Continuity
Display control unit		A/C and AV switch		
Connector	Terminal (Wire color)	Connector	Terminal (Wire color)	
M76	28 (B/R)	M64	6 (B/R)	Yes
	30 (W/R)		8 (W/R)	

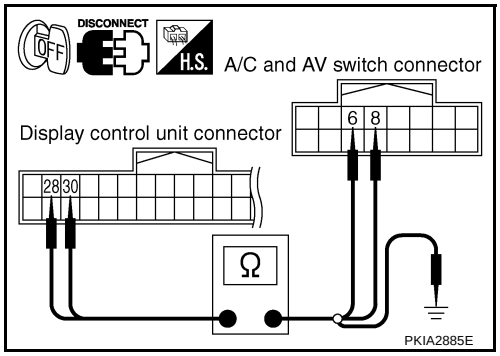

4. Check continuity between display control unit and ground.

Terminals			Continuity
Display control unit		—	
Connector	Terminal (Wire color)		
M76	28 (B/R)	Ground	No
	30 (W/R)		

OK or NG

OK >> GO TO 2.
NG >> Repair harness or connector.

2. SELF-DIAGNOSIS OF DCU

1. Replace same normal A/C and AV switch.
2. Connect display control unit connector and A/C and AV switch connector.
3. Turn ignition switch ON.
4. Start self-diagnosis of DCU, and check the self-diagnosis result.

OK or NG

OK >> Replace A/C and AV switch.
NG >> Replace display control unit.

CAN Communication Line Check

AKS007JL

1. CHECK MONITOR DESCRIPTION

1. Start display control unit self-diagnosis. Refer to AV-129, "Self-Diagnosis Mode (DCU)"
2. Select “CAN DIAG SUPPORT MONITOR”. Refer to AV-140, "CAN Diag Support Monitor" .

Item	content		Error counter (Reference value)
	Normal condition	Error (Example)	
CANCOMM	OK	NG	0-50
CAN_CIRC_1	OK	UNKWN	0-50
CAN_CIRC_2	OK	UNKWN	0-50
CAN_CIRC_3	OK	UNKWN	0-50
CAN_CIRC_4	OK	UNKWN	0-50
CAN_CIRC_5	OK	UNKWN	0-50
CAN_CIRC_6	OK	UNKWN	0-50
CAN_CIRC_7	OK	UNKWN	0-50
CAN_CIRC_8	OK	UNKWN	0-50
CAN_CIRC_9	OK	UNKWN	0-50

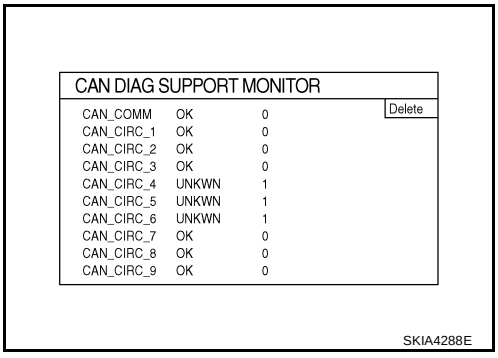

3. Record each item display description (OK/NG/UNKWN) displayed on the following CAN DIAG SUPPORT MONITOR Check Sheet.

CAN DIAG SUPPORT MONITOR Check Sheet

Diagnosis item	Screen display		Diagnosis item	Screen display	
CANCOMM	OK	NG	CAN_CIRC_5	OK	UNKWN
CAN_CIRC_1	OK	UNKWN	CAN_CIRC_6	OK	UNKWN
CAN_CIRC_2	OK	UNKWN	CAN_CIRC_7	OK	UNKWN
CAN_CIRC_3	OK	UNKWN	CAN_CIRC_8	OK	UNKWN
CAN_CIRC_4	OK	UNKWN	CAN_CIRC_9	OK	UNKWN

>> After filling in CAN DIAG SUPPORT MONITOR Check Sheet. Go to LAN-5, "Precautions When Using CONSULT-II" .

If NAVI Control Unit Detects That DVD-ROM Map Is Not Inserted

AKS007JM

1. CHECK DVD-ROM

Make sure identified DVD-ROM map is inserted.

OK or NG

OK >> Replace NAVI control unit.
NG >> Insert identified DVD-ROM map.

If NAVI Control Unit Detects That Inserted DVD-ROM Map Malfunctioning Or If It Is Impossible to Load Data from DVD-ROM Map

AKS007JN

1. CHECK 1: DVD-ROM

Remove inserted DVD-ROM map to make sure it is identified.

OK or NG

OK >> GO TO 2.
NG >> Replace identified DVD-ROM map.

2. CHECK 2: DVD-ROM

Check removed DVD-ROM that there are dirt, scratch and warp.

OK or NG

OK >> GO TO 3.
NG >> Replace DVD-ROM map.

3. CHECK 3: DVD-ROM

Insert same DVD-ROM to make sure same diagnosis result is found as last self-diagnosis.

OK or NG

OK >> Replace NAVI control unit.
NG >> Replace DVD-ROM map.

If Connection Between NAVI Control Unit and GPS Antennals Malfunctioning

AKS007JO

1. CHECK GPS ANTENNA

Check cable for GPS antenna by watching out to see that cable is malfunctioning.

OK or NG

OK >> GO TO 2.
NG >> Replace GPS antenna.

2. CHECK BY REPLACEMENT OF GPS ANTENNA

Replace other functional GPS antenna to try self-diagnosis again.

Result of self-diagnosis; Found same result?

YES >> Replace NAVI control unit.
NO >> Replace GPS antenna.

RGB Screen Is Not Shown

AKS007JP

1. CHECK HARNESS

1. Turn ignition switch OFF.
2. Disconnect display control unit connector and display connector.
3. Check continuity between display control unit harness connector M76 terminal 51 (B) and display harness connector M63 terminal 9 (B).

   Continuity should exist.

4. Check continuity between display control unit harness connector M76 terminal 55 (R) and display harness connector M63 terminal 8 (R).

   Continuity should exist.

5. Check continuity between display control unit harness connector M76 terminal 51 (B), 55 (R) and ground.

   Continuity should not exist.

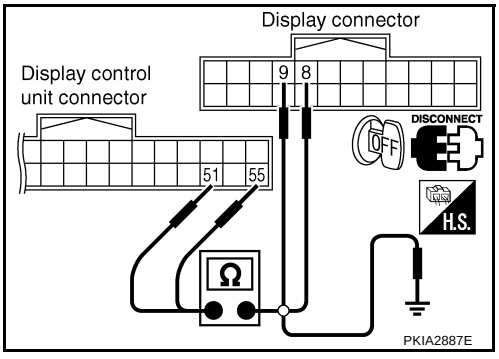

OK or NG

OK >> GO TO 2.
NG >> Repair harness or connector.

2. CHECK HORIZONTAL SYNCHRONIZATION SIGNAL

1. Connect display control unit connector and display connector.
2. Turn ignition switch ON.
3. Check signal between display control unit connector M76 terminals 55 (R) and 49 with CONSULT-II or oscilloscope.

55 (R) - 49 : Refer to AV-121, "Terminals and Reference Value for Display Control Unit" .

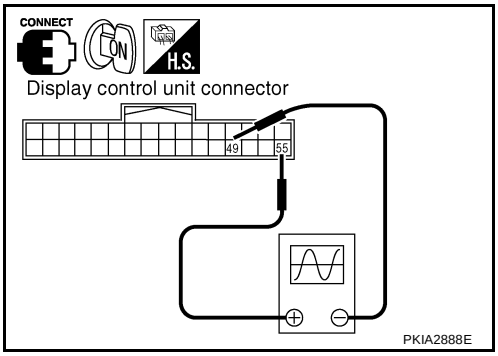

OK or NG

OK >> GO TO 3.
NG >> Replace display.

3. CHECK RGB AREA SIGNAL

1. Press the “TRIP” button.
2. Check signal between display control unit connector M76 terminals 51 (B) and 49 with CONSULT-II or oscilloscope.

51 (B) - 49 : Refer to AV-121, "Terminals and Reference Value for Display Control Unit" .

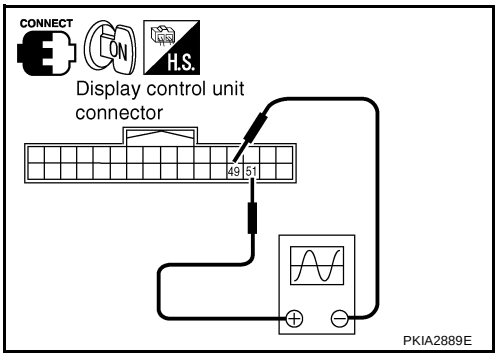

OK or NG

OK >> Replace display.
NG >> Replace display control unit.

Color of RGB Image Is Not Proper (NAVI Screen Looks Bluish)

AKS007JQ

1. CHECK RGB HARNESS

1. Turn ignition switch OFF.
2. Disconnect NAVI control unit connector and display control unit connector.
3. Check continuity between NAVI control unit and display control unit.
4. Check continuity between NAVI control unit and ground.

- **When the screen looks bluish**

Terminals				Continuity
NAVI control unit		Display control unit		
Connector	Terminal (Wire color)	Connector	Terminal (Wire color)	
B208	18 (R)	M76	44 (R/W)	Yes
	17		45	

Terminals			Continuity
NAVI control unit		—	
Connector	Terminal (Wire color)		
B208	18 (R)	Ground	No
	17		

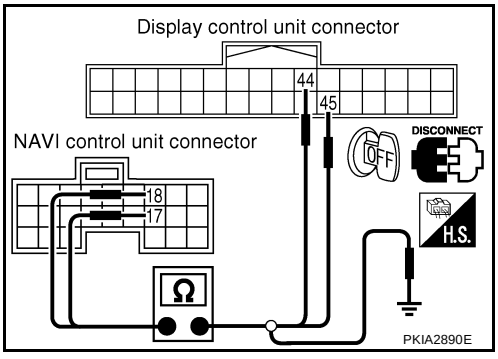

OK or NG

OK >> GO TO 2.
NG >> Repair harness or connector.

2. CHECK RGB SIGNAL

1. Connect NAVI control unit connector and display control unit connector.
2. Turn ignition switch ON.
3. Display “Color bar” by “CONFIRMATION/ADJUSTMENT” mode.
4. Check the following with CONSULT-II or oscilloscope.

- **When the screen looks bluish**
  Voltage signal between NAVI control unit connector B208 terminal 18 (R) and 17.

  18 (R) - 17 **: Refer to AV-119, "Terminals and Reference Value for NAVI Control Unit" .**

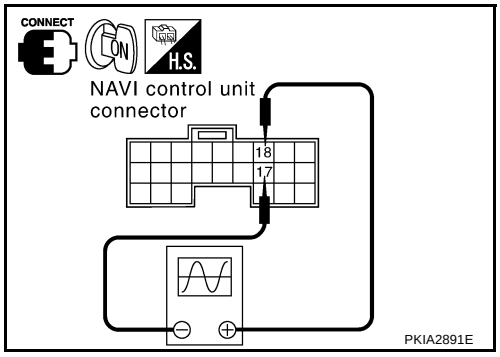

OK or NG

OK >> Replace display control unit.
NG >> Replace NAVI control unit.

Color of RGB Image Is Not Proper (NAVI Screen Looks Reddish)

AKS007JR

1. CHECK RGB HARNESS

1. Turn ignition switch OFF.
2. Disconnect NAVI control unit connector and display control unit connector.
3. Check continuity between NAVI control unit and display control unit.
4. Check continuity between NAVI control unit and ground.

- **When the screen looks reddish**

Terminals				Continuity
NAVI control unit		Display control unit		
Connector	Terminal (Wire color)	Connector	Terminal (Wire color)	
B208	21 (W)	M76	46 (R/L)	Yes
	17		45	

Terminals			Continuity
NAVI control unit		—	
Connector	Terminal (Wire color)		
B208	21 (W)	Ground	No
	17		

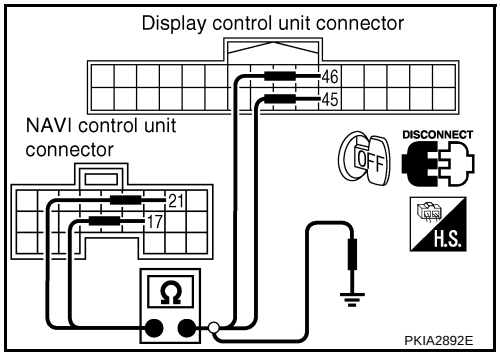

OK or NG

OK >> GO TO 2.
NG >> Repair harness or connector.

2. CHECK RGB SIGNAL

1. Connect NAVI control unit connector and display control unit connector.
2. Turn ignition switch ON.
3. Display ″Color bar″ by″CONFIRMATION/ADJUSTMENT″ mode.
4. Check the following with CONSULT-II or oscilloscope.

- **When the screen looks reddish**
  Voltage signal between NAVI control unit connector B208 terminal 21 (W) and 17.

  21 (W) - 17 **: Refer to AV-119, "Terminals and Reference Value for NAVI Control Unit" .**

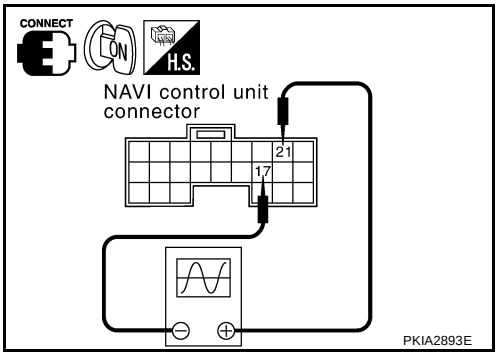

OK or NG

OK >> Replace display control unit.
NG >> Replace NAVI control unit.

Color of RGB Image Is Not Proper (NAVI Screen Looks Yellowish)

AKS007JS

1. CHECK RGB HARNESS

1. Turn ignition switch OFF.
2. Disconnect NAVI control unit connector and display control unit connector.
3. Check continuity between NAVI control unit and display control unit.
4. Check continuity between NAVI control unit and ground.

- **When the screen looks yellowish**

Terminals				Continuity
NAVI control unit		Display control unit		
Connector	Terminal (Wire color)	Connector	Terminal (Wire color)	
B208	15 (B)	M76	48 (B)	Yes
	17		45	

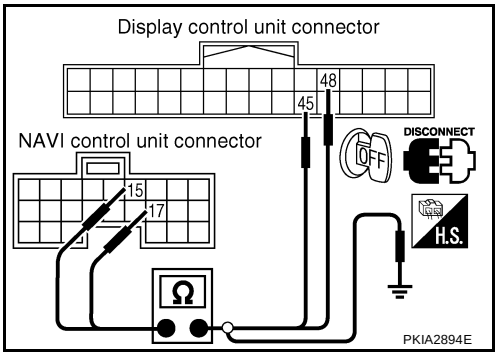

Terminals			Continuity
NAVI control unit		—	
Connector	Terminal (Wire color)		
B208	15 (B)	Ground	No
	17		

OK or NG

OK >> GO TO 2.
NG >> Repair harness or connector.

2. CHECK RGB SIGNAL

1. Connect NAVI control unit connector and display control unit connector.
2. Turn ignition switch ON.
3. Display ″Color bar″ by″CONFIRMATION/ADJUSTMENT″ mode.
4. Check the following with CONSULT-II or oscilloscope.

- **When the screen looks yellowish**
  Voltage signal between NAVI control unit connector B208 terminal 15 (B) and 17.

  15 (B) - 17 : **Refer to AV-119, "Terminals and Reference Value for NAVI Control Unit" .**

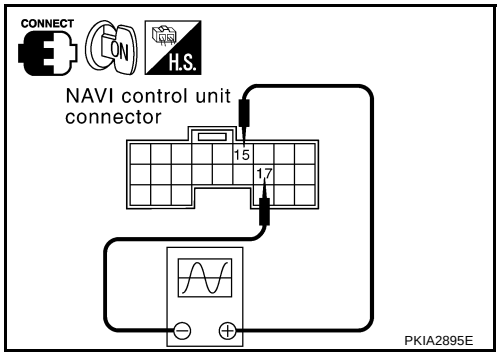

OK or NG

OK >> Replace display control unit.
NG >> Replace NAVI control unit.

Color of RGB Image Is Not Proper (All Screens Looks Bluish)

AKS007JT

1. CHECK RGB HARNESS

1. Turn ignition switch OFF.
2. Disconnect display control unit connector and display connector.
3. Check continuity between display control unit and display.
4. Check continuity between display control unit and ground.

- **When the screen looks bluish**

Terminals				Continuity
Display control unit		Display		
Connector	Terminal (Wire color)	Connector	Terminal (Wire color)	
M76	50 (L/R)	M63	17 (L/R)	Yes
	47		7	

Terminals			Continuity
Display control unit		—	
Connector	Terminal (Wire color)		
M76	50 (L/R)	Ground	No
	47		

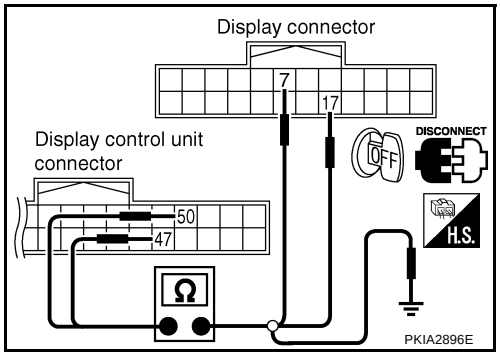

OK or NG

OK >> GO TO 2.
NG >> Repair harness or connector.

2. CHECK RGB SIGNAL

1. Connect display control unit connector and display connector.
2. Turn ignition switch ON.
3. Display “Color bar” by “CONFIRMATION/ADJUSTMENT” mode.
4. Check the following with CONSULT-II or oscilloscope.

- **When the screen looks bluish**
  Voltage signal between display control unit connector M76 terminal 50 (L/R) and 47.

  50 (L/R) - 47 : Refer to AV-121, "Terminals and Reference Value for Display Control Unit" .

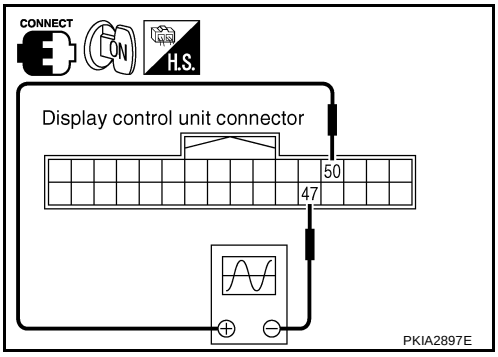

OK or NG

OK >> Replace display.
NG >> Replace display control unit.

Color of RGB ImageIs Not Proper (All Screens Looks Reddish)

AKS007JU

1. CHECK RGB HARNESS

1. Turn ignition switch OFF.
2. Disconnect display control unit connector and display connector.
3. Check continuity between display control unit and display.
4. Check continuity between display control unit and ground.

- **When the screen looks reddish**

Terminals				Continuity
Display control unit		Display		
Connector	Terminal (Wire color)	Connector	Terminal (Wire color)	
M76	52 (L/W)	M63	6 (L/W)	Yes
	47		7	

Terminals			Continuity
Display control unit		—	
Connector	Terminal (Wire color)		
M76	52 (L/W)	Ground	No
	47		

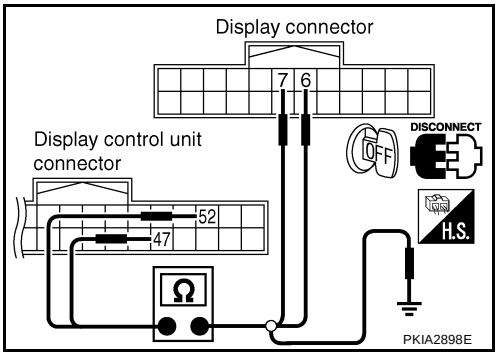

OK or NG

OK >> GO TO 2.
NG >> Repair harness or connector.

2. CHECK RGB SIGNAL

1. Connect display control unit connector and display connector.
2. Turn ignition switch ON.
3. Display “Color bar” by “CONFIRMATION/ADJUSTMENT” mode.
4. Check the following with CONSULT-ll or oscilloscope.

- **When the screen looks reddish**
  Voltage signal between display control unit connector M76 terminal 52 (L/W) and 47.

  52 (L/W) - 47 : **Refer to** **AV-121, "Terminals and Reference Value for Display Control Unit"** **.**

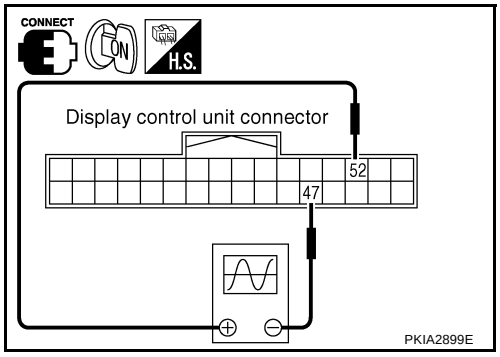

OK or NG

OK >> Replace display.
NG >> Replace display control unit.

Color of RGB Image Is Not Proper (All Screens Looks Yellowish)

AKS007JV

1. CHECK RGB HARNESS

1. Turn ignition switch OFF.
2. Disconnect display control unit connector and display connector.
3. Check continuity between display control unit and display.
4. Check continuity between display control unit and ground.

- **When the screen looks yellowish**

Terminals				Continuity
Display control unit		Display		
Connector	Terminal (Wire color)	Connector	Terminal (Wire color)	
M76	54 (L)	M63	18 (L)	Yes
	47		7	

Terminals			Continuity
Display control unit		—	
Connector	Terminal (Wire color)		
M76	54 (L)	Ground	No
	47		

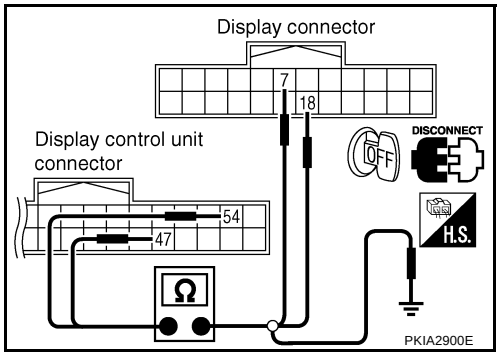

OK or NG

OK >> GO TO 2.
NG >> Repair harness or connector.

2. CHECK RGB SIGNAL

1. Connect display control unit connector and display connector.
2. Turn ignition switch ON.
3. Display “Color bar” by “CONFIRMATION/ADJUSTMENT” mode.
4. Check the following with CONSULT-II or oscilloscope.

- **When the screen looks yellowish**
  Voltage signal between display control unit connector M76 terminal 54 (L) and 47.

  54 (L) - 47 : Refer to AV-121, "Terminals and Reference Value for Display Control Unit" .

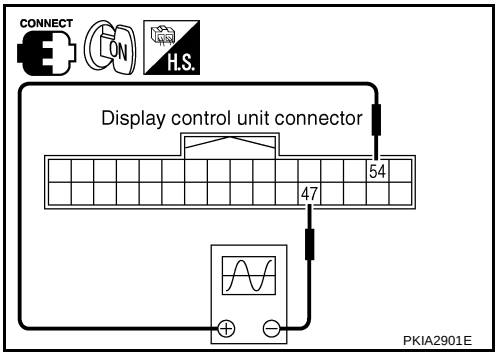

OK or NG

OK >> Replace display.
NG >> Replace display control unit.

RGB Screen Is Rolling (NAVI Screen)

AKS007JW

1. CHECK HARNESS

1. Turn ignition switch OFF.
2. Disconnect NAVI control unit connector and display control unit connector.
3. Check continuity between NAVI control unit and display control unit.

Terminals				Continuity
NAVI control unit		Display control unit		
Connector	Terminal (Wire color)	Connector	Terminal (Wire color)	
B208	16 (G)	M76	43 (G/B)	Yes
	14		41	

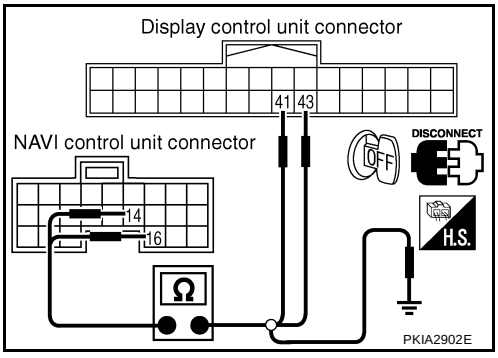

4. Check continuity between NAVI control unit and ground.

Terminals			Continuity
NAVI control unit		—	
Connector	Terminal (Wire color)		
B208	16 (G)	Ground	No
	14		

OK or NG

OK >> GO TO 2.
NG >> Repair harness or connector.

2. CHECK RGB SYNCHRONIZING SIGNAL

1. Connect NAVI control unit connector and display control unit connector.
2. Turn ignition switch ON.
3. Check signal between NAVI control unit connector B208 terminals 16 (G) and 14 with CONSULT-II or oscilloscope.

16 (G) - 14 **: Refer to** **AV-119, "Terminals and Reference Value for NAVI Control Unit"** **.**

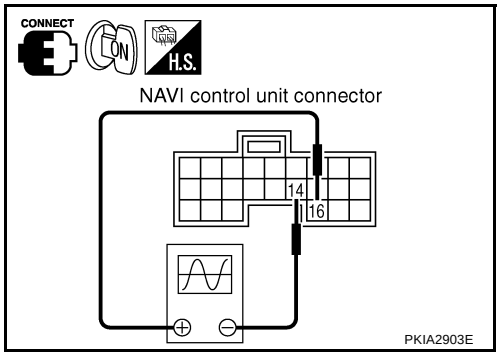

OK or NG

OK >> Replace display control unit.
NG >> Replace NAVI control unit.

RGB Screen Is Rolling (Excepting NAVI Screen)

AKS007JX

1. CHECK HARNESS

1. Turn ignition switch OFF.
2. Disconnect display control unit connector and display connector.
3. Check continuity between display control unit and display.

Terminals				Continuity
Display control unit		Display		
Connector	Terminal (Wire color)	Connector	Terminal (Wire color)	
M76	56 (G)	M63	19 (G)	Yes

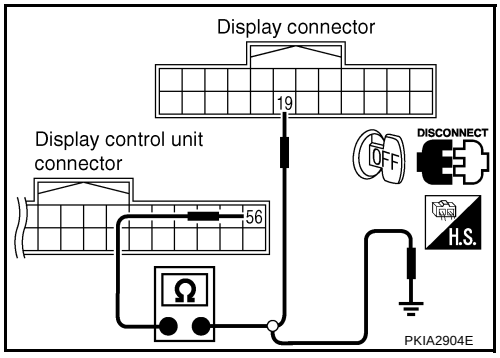

4. Check continuity between display control unit and ground.

Terminals			Continuity
Display control unit		—	
Connector	Terminal (Wire color)		
M76	56 (G)	Ground	No

OK or NG

OK >> GO TO 2.
NG >> Repair harness or connector.

2. CHECK RGB SYNCHRONIZING SIGNAL

1. Connect display control unit connector and display connector.
2. Turn ignition switch ON.
3. Check signal between display connector M63 terminals 19 (G) and 21 with CONSULT-II or oscilloscope.

19 (G) - 21 **: Refer to** **AV-125, "Terminals and Reference Value for Display"** **.**

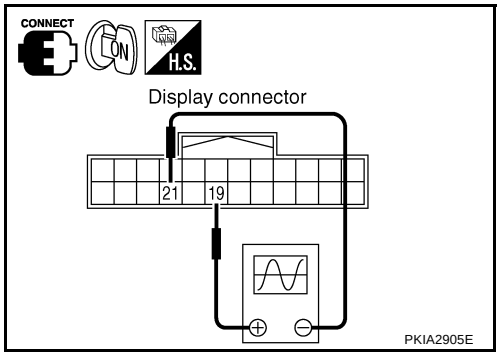

OK or NG

OK >> Replace display.
NG >> Replace display control unit.

Guide Sound Is Not Heard

AKS007JY

1. CHECK VOICE GUIDE SETTING

- While driving in the dark pink route, voice guide does not operate. (NOTE)
- Is volume setting not switched ON?

NOTE:
Voice guide is only available at intersections that satisfy certain conditions. Therefore, guidance may not be given even when the route on the map changes direction.

YES or NO

YES >> GO TO 2.
NO >> Switch the setting ON and turn the volume up.

2. CHECK HARNESS

1. Turn ignition switch OFF.
2. Disconnect NAVI control unit connector and audio unit connector.
3. Check continuity between NAVI control unit and audio unit.

Terminals				Continuity
NAVI control unit		Audio unit		
Connector	Terminal (Wire color)	Connector	Terminal (Wire color)	
B208	7 (LG)	M60	36 (B/R)	Yes
	8 (PU)		34 (W/R)	

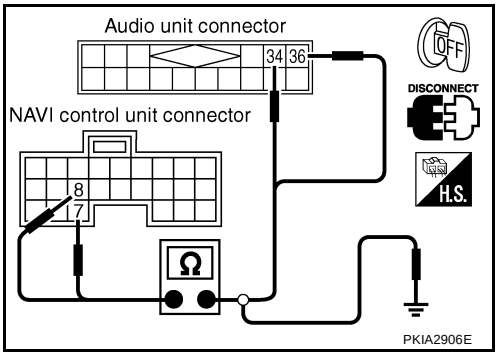

4. Check continuity between NAVI control unit and ground.

Terminals			Continuity
NAVI control unit		—	
Connector	Terminal (Wire color)		
B208	7 (LG)	Ground	No
	8 (PU)		

Ok or NG

OK >> GO TO 3.
NG >> Repair harness or connector.

3. CHECK VOICE GUIDE

1. Connect NAVI control unit connector and audio unit connector.
2. Turn ignition switch ON.
3. Check signal between NAVI control unit harness connector B208 terminal 7 (LG) and 8 (PU) with CONSULT-II or oscilloscope.

7 (LG) - 8 (PU) **: Refer to AV-119, "Terminals and Reference Value for NAVI Control Unit" .**

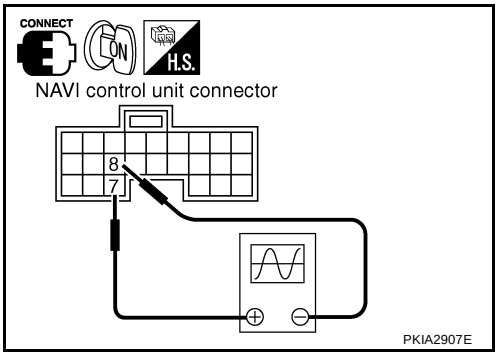

OK or NG

OK >> Replace audio unit.
NG >> Replace NAVI control unit.

Screen Is Not Shown

AKS007JZ

1. CHECK POWER SUPPLY AND GROUND CIRCUIT

Check power supply and ground circuit. Refer to AV-144, "Power Supply and Ground Circuit Check for Display" .

OK or NG

OK >> Replace display.
NG >> Check the malfunctioning parts.

Audio Screen Is Not Shown (NAVI Screen Is Shown)

AKS007K0

1. CHECK 1: COMMUNICATION LINE

Check audio communication line. Refer to AV-150, "Audio Communication Line Check (Between Display Control Unit and Audio Unit)" .

OK or NG

OK >> GO TO 2.
NG >> Check the malfunctioning parts.

2. CHECK 2: COMMUNICATION LINE

Check display communication line. Refer to AV-152, "Display Communication Line Check (Between Display Control Unit and Display)" .

OK or NG

OK >> Replace display.
NG >> Check the malfunctioning parts.

A/C Screen Is Not Shown (NAVI Screen Is Shown)

AKS007K1

1. CHECK CAN COMMUNICATION LINE

Check CAN communication line. Refer to AV-155, "CAN Communication Line Check" .

OK or NG

OK >> GO TO 2.
NG >> After filling out CAN DIAG SUPPORT MONITOR check sheet, GO TO LAN-5, "Precautions When Using CONSULT-II" .

2. CHECK COMMUNICATION LINE

Check display communication line. Refer to AV-152, "Display Communication Line Check (Between Display Control Unit and Display)" .

OK or NG

OK >> Replace display.
NG >> Check the malfunctioning parts.

TRIP, FUEL ECON and MAINTENANCE Screens Are Not Shown

AKS007K2

1. CHECK IGNITION SIGNAL

Check ignition signal. Refer to AV-148, "Ignition Signal Check for Display Control Unit" .

OK or NG

OK >> GO TO 2.
NG >> Check the malfunctioning parts.

2. CHECK POWER SUPPLY AND GROUND CIRCUIT

Check power supply circuit for display. Refer to AV-144, "Power Supply and Ground Circuit Check for Display" .

OK or NG

OK >> GO TO 3.
NG >> Check the malfunctioning parts.

3. CHECK COMMUNICATION LINE

Check display communication line. Refer to AV-152, "Display Communication Line Check (Between Display Control Unit and Display)" .

OK or NG

OK >> Replace display.
NG >> Check the malfunctioning parts.

Average Fuel Economy Displayed Is Not Shown

AKS007K3

1. CHECK VEHICLE SPEED SIGNAL

Check vehicle speed signal. Refer to AV-146, "Vehicle Speed Signal Check for Display Control Unit" .

OK or NG

OK >> GO TO 2.
NG >> Check the malfunctioning parts.

2. CHECK CAN COMMUNICATION LINE

Check CAN communication line. Refer to AV-155, "CAN Communication Line Check" .

OK or NG

OK >> GO TO 3.
NG >> After filling out CAN DIAG SUPPORT MONITOR check sheet, GO TO LAN-5, "Precautions When Using CONSULT-II" .

3. CHECK COMMUNICATION LINE

Check display communication line. Refer to AV-152, "Display Communication Line Check (Between Display Control Unit and Display)" .

OK or NG

OK >> Replace display.
NG >> Check the malfunctioning parts.

Driving Distance or Average Speed Displayed Is Not Shown

AKS007K5

1. CHECK VEHICLE SPEED SIGNAL

Check vehicle speed signal. Refer to AV-146, "Vehicle Speed Signal Check for Display Control Unit" .

OK or NG

OK >> GO TO 2.
NG >> Check the malfunctioning parts.

2. CHECK CAN COMMUNICATION LINE

Check CAN communication line. Refer to AV-155, "CAN Communication Line Check" .

OK or NG

OK >> GO TO 3.
NG >> After filling out CAN DIAG SUPPORT MONITOR check sheet, GO TO LAN-5, "Precautions When Using CONSULT-II" .

3. CHECK COMMUNICATION LINE

Check display communication line. Refer to AV-152, "Display Communication Line Check (Between Display Control Unit and Display)" .

OK or NG

OK >> Replace display.
NG >> Check the malfunctioning parts.

WARNING DOOR OPEN Screen Is Not Shown

AKS007K6

1. CHECK VEHICLE SPEED SIGNAL

Check vehicle speed signal. Refer to AV-146, "Vehicle Speed Signal Check for Display Control Unit" .

OK or NG

OK >> GO TO 2.
NG >> Check the malfunctioning parts.

2. CHECK CAN COMMUNICATION LINE

Check CAN communication line. Refer to AV-155, "CAN Communication Line Check" .

OK or NG

OK >> GO TO 3.
NG >> After filling out CAN DIAG SUPPORT MONITOR check sheet, GO TO LAN-5, "Precautions When Using CONSULT-II" .

3. CHECK COMMUNICATION LINE

Check display communication line. Refer to AV-152, "Display Communication Line Check (Between Display Control Unit and Display)" .

OK or NG

OK >> Replace display.
NG >> Check the malfunctioning parts.

Tire Pressure Is Not Displayed

AKS007K7

1. CHECK BCM (BODY CONTROL MODULE)

Check BCM (Body Control Module). Refer to BCS-3, "BCM (BODY CONTROL MODULE)" .

OK or NG

OK >> GO TO 2.
NG >> Check the malfunctioning parts.

2. CHECK CAN COMMUNICATION LINE

Check CAN communication line. Refer to AV-155, "CAN Communication Line Check" .

OK or NG

OK >> GO TO 3.
NG >> After filling out CAN DIAG SUPPORT MONITOR check sheet, GO TO LAN-5, "Precautions When Using CONSULT-II" .

3. CHECK COMMUNICATION LINE

Check display communication line. Refer to AV-152, "Display Communication Line Check (Between Display Control Unit and Display)" .

OK or NG

OK >> Replace display.
NG >> Check the malfunctioning parts.

Unable to Operate All of A/C and AV Switch (Unable to Start Self-Diagnosis)

AKS007K8

1. CHECK POWER SUPPLY AND GROUND CIRCUIT

Check power supply and ground circuit. Refer to AV-145, "Power Supply and Ground Circuit Check for A/C and AV Switch" .

OK or NG

OK >> GO TO 2.
NG >> Check the malfunctioning parts.

2. A/C AND AV SWITCH SELF-DIAGNOSIS

A/C and AV switch self-diagnosis. Refer to AV-141, "A/C and AV Switch Self-Diagnosis Function" .

OK or NG

OK >> GO TO 3.
NG >> Check the malfunctioning parts.

3. CHECK COMMUNICATION LINE

Check communication line. Refer to AV-154, "AV Communication Line Check (Between Display Control Unit and A/C and AV Switch)" .

OK or NG

OK >> Replace A/C and AV switch.
NG >> Replace display control unit.

Navigation System Does Not Activate

AKS007KB

1. SELF-DIAGNOSIS (DISPLAY CONTROL UNIT)

“Self-diagnosis mode” of the self-diagnosis function. Refer toAV-129, "Self-Diagnosis Mode (DCU)" .

OK or NG

OK >> AV-149, "AV Communication Line Check (Between Display Control Unit and NAVI Control Unit)".
NG >> AV-130, "SELF–DIAGNOSIS RESULT".

Position of Current-Location Mark Is Not Correct

AKS007KE

1. SELF-DIAGNOSIS

“Self-diagnosis mode” of the self-diagnosis function. Refer to AV-131, "Self-Diagnosis Mode (NAVI)" .

OK or NG

OK >> GO TO 2.
NG >> Check the malfunctioning parts.

2. HISTORY OF ERRORS DIAGNOSIS

Was any error stored in AV-136, "HISTORY OF ERRORS" of the CONFIRMATION/ADJUSTMENT mode?

YES or NO

YES >> AV-137, "DIAGNOSIS BY HISTORY OF ERRORS".
NO >> AV-170, "Driving Test".

Driving Test

AKS007KG

1. DRIVING TEST 1

1. Scroll the map screen to display the area to make correction. Press “ENTER” and select “CURRENT LOCATION CORRECTION”.
2. Correct direction of the vehicle mark.
3. Perform the distance correction of the CONFIRMATION/ADJUSTMENT mode.
   Note: Normally, adjustment is not necessary because this system has automatic distance correction function. However, when a tire chain is fitted, adjustment in accordance with the tire diameter ratio must be made.
4. Are symptoms malfunctioning to the AV-171, "Example of Symptoms Judged Not Malfunction" present after driving the vehicle?

YES or NO

YES >> Limit of the location detection capacity of the navigation system.
NO >> GO TO 2.

2. DRIVING TEST 2

Did any malfunction occur when the proper test in the following test patterns is performed?

- Test pattern
  Driving test finds the difference between the symptoms monitored with and without each sensor.
  - Test pattern 1: Test method with no GPS location correction
    Disconnect GPS antenna connector (GT5) connected to the NAVI control unit. Accurately adjust the current location and the direction, and then drive the vehicle.
  - Test pattern 2: Test method with no map-matching
    Accurately adjust the current location and the direction. Eject the map DVD-ROM from the NAVI control unit with ignition switch turned to OFF, and then drive the vehicle. After driving, insert the map DVD-ROM back in the unit, display the track of the vehicle on the map screen and compare it with the actual road configuration.
- Sample tests
  - <To determine if the current-location mark skips at the same position, if so, whether it is caused by map-matching or by GPS>
    Perform test pattern 1.
  - <To determine if the pattern of streets displayed is correct or not>;
    Perform test pattern 1 and 2.
    Compare the track of the vehicle on the map screen and the actual road configuration. For fairly accurate tracking, plotting shall be made every several hundred meters.
  - <When the distance is adjusted accurately>;
    Perform test pattern 1 and 2.
    Drive on a road of which distance is accurately known (by utilizing distance posts on a highway). Calculate the rate of change (increased/decreased) of the distance by comparing with the actual distance.
    Correction = A/B
    A: Distance shown on the screen
    B: Actual distance

YES or NO

YES >>
- If adjustment is insufficient, perform adjustment again.
- If any error is found in the map, please let us know.
- Replace NAVI control unit.

NO >> Limit of the location detection capacity of the navigation system.

Example of Symptoms Judged Not Malfunction

AKS007KH

BASIC OPERATION

Symptom	Cause	Remedy
No image is shown.	Display brightness adjustment is set fully to DARK side.	Adjust the display brightness.
No guide sound is heard. Audio guide volume is too low or too high.	Volume control is set to OFF, MIN or MAX.	Adjust the audio guide volume.
	Audio guidance is not available while the vehicle is driving on a dark pink route.	System is not malfunction.
Screen is too dark. Motion of the image is too slow.	Temperature inside the vehicle is low.	Wait until the temperature inside the vehicle reaches the proper temperature.
Small black or bright spots appear on the screen.	Symptom peculiar to a liquid crystal display.	System is not malfunction.

VEHICLE MARK

Symptom	Cause	Remedy
Map screen and BIRDVIEW™ Name of the place vary with the screen.	Some thinning of the character data is done to prevent the display becoming to complex. In some cases and in some locations, the display contents may differ. The same place name, street name, etc. may not be displayed every time on account of the data processing.	System is not malfunction.
Vehicle mark is not positioned correctly.	Vehicle is transferred by ferry or by towing after its ignition switch is turned to OFF.	Drive the vehicle for a while in the GPS satellite signal receiving condition.
Screen will not switch to nighttime mode after the lighting switch is turned ON.	The daytime screen is selected by the “SWITCH SCREENS” when the last time the screen dimming setting is done. Switching between daytime/nighttime screens may be inhibited by the automatic illumination adjustment function.	Perform screen dimming and select the nighttime screen by “SWITCH SCREENS”.
Map screen will not scroll in accordance with the vehicle travel.	Current location is not displayed.	Press “MAP” button to display the current location.
Vehicle mark will not be shown.	Current location is not displayed.	Press “MAP” button to display the current location.
Accuracy indicator (GPS satellite mark) on the map screen stays gray.	GPS satellite signal is intercepted because the vehicle is in or behind a building.	Move the vehicle out to an open space.
	GPS satellite signal cannot be received because an obstacle is placed on top of the display.	Do not place anything in the center on top of the display.
	GPS satellites are located badly.	Wait until the location becomes better.
Vehicle location accuracy is low.	Accuracy indicator (GPS satellite mark) on the map screen stays gray.	Current location is not determined.
	Vehicle speed setting by the vehicle speed pulse has been deviated (advanced or retarded) from the actual vehicle speed because tire chain is fitted or the system has been used on another vehicle.	Drive the vehicle for a while [for approx. 30 minutes at approx. 30 km/h (19 MPH)] and the deviation will be automatically adjusted. If advancement or retard still occur, perform the distance adjustment by CONFIRMATION/ADJUSTMENT mode of diagnosis function.
	Map data has error or omission. (Vehicle mark is always deviated to the same position.)	As a rule, an updated map DVD-ROM will be released once a year.

DESTINATION, PASSING POINTS, AND MENU ITEMS CANNOT BE SELECTED/SET

Symptom	Cause	Remedy
Destination cannot be set.	Destination to be set is on an expressway.	Set the destination on an ordinary road.
Passing point is not searched when re-searching the route.	The vehicle has already passed the passing point, or the system judged so.	To include the passing points that have been passed into the route again, set the route again.
Route information will not be displayed.	Route searching has not been done.	Set the destination and perform route searching.
	Vehicle mark is not on the recommended route.	Drive on the recommended route.
	Route guide is turned OFF.	Turn route guide ON.
	Route information is not available on the dark pink route.	System is not malfunction.
After the route searching, no guide sign will appear as the vehicle goes near the entrance/exit to the toll road.	Vehicle mark is not on the recommended route. (On the display, only guide signs related to the recommended route will be shown.)	Drive on the recommended route.
Automatic route searching is not possible.	Vehicle is driving on a highway (gray route), or no recommended route is available.	Drive on a road to be searched. Or re–search the route manually. In this case, however, the whole route will be searched.
Performed automatic detour search (or detour search). However, the result is the same as that of the previous search.	Performed search with every condition considered. However, the result is the same as that of the previous search.	System is not malfunction.
Passing points cannot be set.	More than five passing points were set.	Passing points can be set up to five. To stop at more than five points, perform sharing in several steps.
When setting the route, the starting point cannot be selected.	The current vehicle location is always set as the starting point of a route.	System is not malfunction.
Some menu items cannot be selected.	The vehicle is being driven.	Stop the vehicle at a safe place and then operate the system.

VOICE GUIDE

Symptom	Cause	Remedy
Voice guide will not operate.	Note: Voice guide is only available at intersections that satisfy certain conditions . Therefore, guidance may not be given even when the route on the map changes direction.	System is not malfunction.
	The vehicle is not on the recommended route.	Return to the recommended route or research the route.
	Voice guide is turned OFF.	Turn voice guide ON.
	Route guide is turned OFF.	Turn route guide ON.
Voice guide does not match the actual road pattern.	Voice guide may vary with the direction to which the vehicle is turn and the connection of the road to other roads.	Drive in conformity to the actual traffic rules.

ROUTE SEARCH

Symptom	Cause	Remedy
No route is shown.	No road to be searched is found around the destination.	Find wider road (orange road or wider) nearby and reset the destination and passing points onto it. Take care of the traveling direction when there are separate up and down roads.
	Starting point and the destination are too close.	Set the destination at more distant point.
	Conditional traffic regulation (day of the week/ time of the day) is set at the area around the current location or the destination.	Turn the time-regulating search conditions OFF. Turn “Avoid regulation time” in the search conditions OFF.

Symptom	Cause	Remedy
Indicated route is intermittent.	In some areas, highways (gray routes) are not used for the search(Note) Therefore, the route to the current location or the passing points may be intermittent.	System is not malfunction.
When the vehicle has passed the recommended route, it is deleted from the screen.	A recommended route is controlled by each section. When the vehicle has passed the passing point 1, then the map data from the starting point up to the passing point 1 will be deleted. (The data may remain undeleted in some area.)	System is not malfunction.
Detouring route is recommended.	In some areas, highways (gray routes) are not used for the search.(Note) Therefore, detour route may be recommended.	Set the route closer to the basic route (gray route).
	A detour route may be shown when some traffic regulation (one-way traffic, etc.) is set at the area around the starting point or the destination.	Slightly move the starting point or the destination, or set the passing point on the route of your choice.
	In the area where highways (gray routes) are used for the search, left turn has priority around the current location and the destination (passing points). For this reason, the recommended route may be detouring.	System is not malfunction.
Landmarks on the map do not match the actual ones.	This can be happen due to omission or error in the map data.	As a rule, an updated map DVD-ROM will be released once a year. Wait until the latest map has become available.
Recommended route is far from the starting point, passing points, and destination.	Starting point, passing points, and destination of the route guide were set far from the desired points because route searching data around these area were not stored.	Reset the destination onto the road nearby. If this road is one of the highways (gray routes), an ordinary road nearby may be displayed as the recommended route.

NOTE:
Except for the ordinance-designated cities and the prefectural capitals (Malfunctioning areas may be changed in the updated map disc.)

EXAMPLES OF CURRENT-LOCATION MARK DISPLACEMENT

Vehicle's travel amount is calculated by reading its travel distance and turning angle. Therefore, if the vehicle is driven in the following manner, an error will occur in the vehicle's current location display. If correct location has not been restored after driving the vehicle for a while, perform location correction.

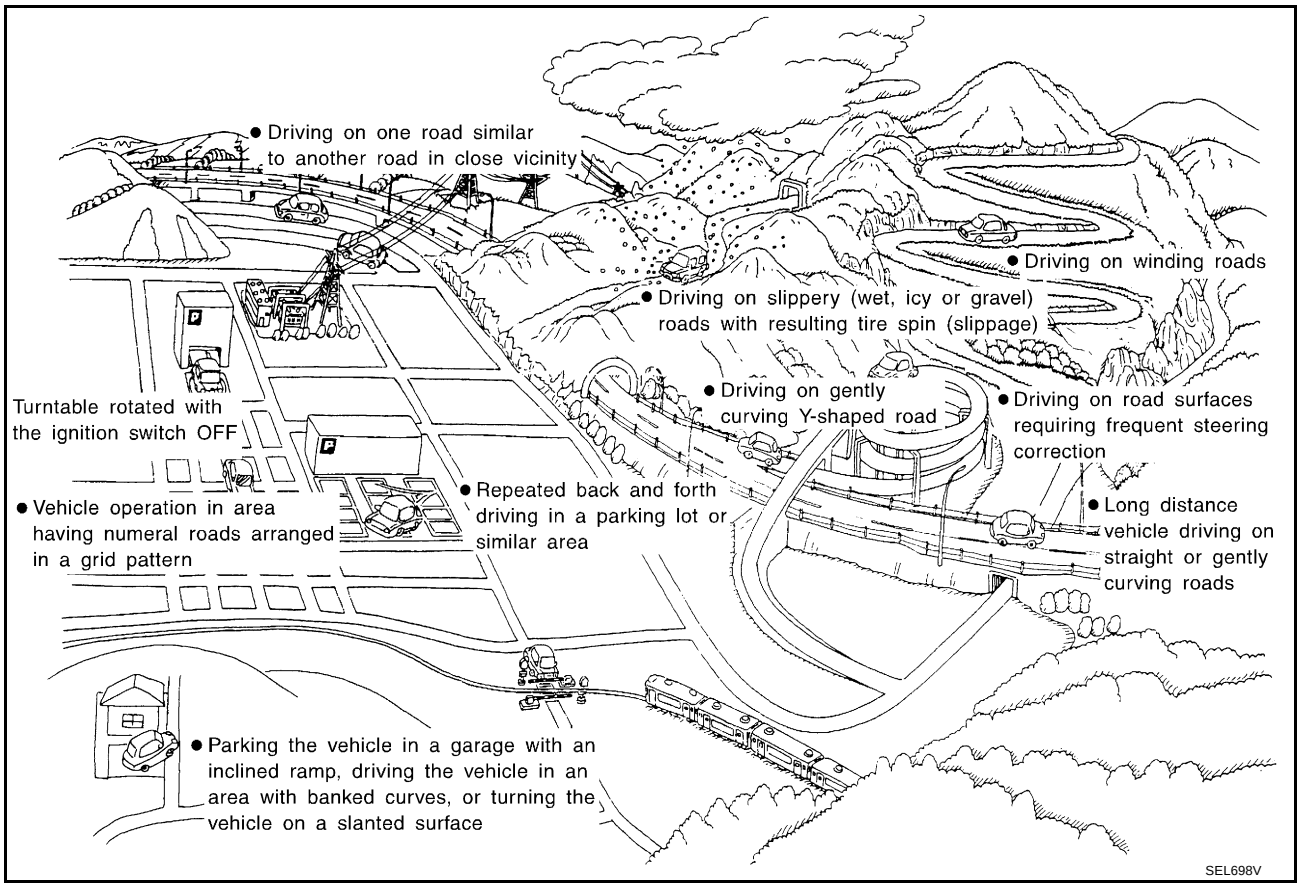

Cause (condition) –: While driving ooo: Display		Driving condition	Remarks (correction, etc.)
Road configuration	Y–intersections 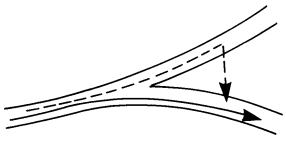 ELK0192D	At a Y intersection or similar gradual division of roads, error the direction of travel deduced by the sensor may result in the current-location mark appearing on the wrong road.	If after traveling about 10 km (6 miles) the correct location has not been restored, perform location correction and, if necessary, direction correction.
	Spiral roads 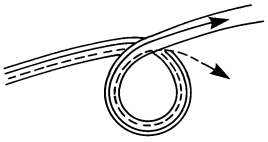 ELK0193D	When driving on a large, continuous spiral road (such as loop bridge), turning angle error is accumulated and the vehicle mark may deviate from the correct location.	
	Straight roads 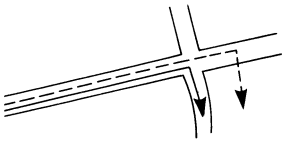 ELK0194D	When driving on a long, straight road and slow curve without stopping, map-matching does not work effectively enough and distance errors may accumulate. As a result, the vehicle mark may deviate from the correct location when the vehicle turned at a corner.	
	Zigzag roads 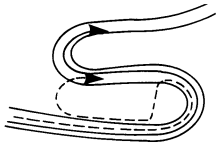 ELK0195D	When driving on a zigzag road, the map may be matched to other roads in the similar direction nearby at every turn, and the vehicle mark may deviate from the correct location.	
	Roads laid out in a grid pattern 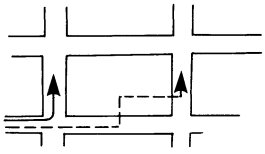 ELK0196D	When driving at where roads are laid out in a grid pattern, where many roads are running in the similar direction nearby, the map may be matched to them by mistake and the vehicle mark may deviate from the correct location.	
	Parallel roads 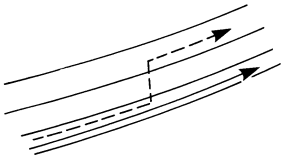 ELK0197D	When two roads are running in parallel (such as highway and sideway), the map may be matched to the other road by mistake and the vehicle mark may deviate from the correct location.	

Cause (condition) –: While driving ooo: Display		Driving condition	Remarks (correction, etc.)
Place	In a parking lot 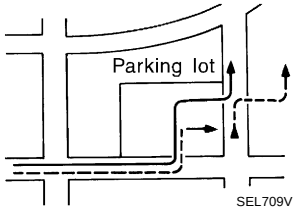 	When driving in a parking lot, or other location where there are no roads on the map, matching may place the vehicle mark on a nearby road. When the vehicle returns to the road, the vehicle mark may have deviated from the correct location. When driving in circle or turning the steering wheel repeatedly, direction errors accumulate, and the vehicle mark may deviate from the correct location.	If after traveling about 10km (6miles) the correct location has not been restored, perform location correction and, if necessary, direction correction.
	Turn table 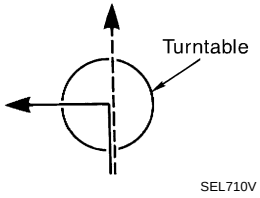 	When the ignition switch is OFF, the navigation system cannot get the signal from the gyroscope (angular speed sensor). Therefore, the displayed direction may be wrong and the correct road may not be easily returned to after rotating the vehicle on a turn table with the ignition OFF.	
	Slippery roads	On snow, wet roads, gravel, or other roads where tires may slip easily, accumulated mileage errors may cause the vehicle mark to deviate from the correct road.	
	Slopes	When parking in sloped garages, when traveling on banked roads, or in other cases where the vehicle turns when tilted, an error in the turning angle will occur, and the vehicle mark may deviate from the road.	
Map data	Road not displayed on the map screen 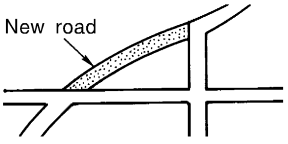 	When driving on new roads or other roads not displayed on the map screen, map matching does not function correctly and matches the location to a nearby road. When the vehicle returns to a road which is on the map, the vehicle mark may deviate from the correct road.	
	Different road pattern (Changed due to repair) 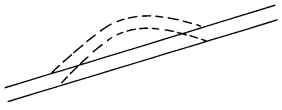 	If the road pattern stored in the map data and the actual road pattern are different, map matching does not function correctly and matches the location to a nearby road. The vehicle mark may deviate from the correct road.	
Vehicle	Use of tire chains	When tire chains are used, the mileage is not correctly detected, and the vehicle mark may deviate from the correct road.	Drive the vehicle for a while. If the distance is still deviated, adjust it by using the distance adjustment function. (If the tire chain is removed, recover the original value.)

Cause (condition) –: While driving ooo: Display		Driving condition	Remarks (correction, etc.)
Precautions for driving	Just after the engine is started	If the vehicle is driven off just after the engine is started when the gyroscope (angular speed sensor) correction is not completed, the vehicle can lose its direction and may have deviated from the correct location.	Wait for a short while before driving after starting the engine.
	Continuous driving without stopping	When driving long distances without stopping, direction errors may accumulate, and the current-location mark may deviate from the correct road.	Stop and adjust the orientation.
	Abusive driving	Spinning the wheels or engaging in other kinds of abusive driving may result in the system being unable perform correct detection, and may cause the vehicle mark to deviate from the correct road.	If after traveling about 10 km (6 miles) the correct location has not been restored, perform location correction and, if necessary, direction correction.
How to correct location	Position correction accuracy 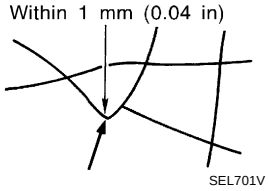	If the accuracy of location settings is poor, accuracy may be reduced when the correct road cannot be found, particularly in places where there are many roads.	Enter in the road displayed on the screen with an accuracy of approx. 1mm. Caution: Whenever possible, use detailed map for the correction.
	Direction when location is corrected 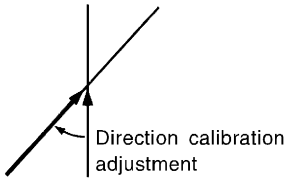	If the accuracy of location settings during correction is poor, accuracy may be reduced afterwards.	Perform direction correction.

CURRENT LOCATION MARK SHOWS A POSITION WHICH IS COMPLETELY WRONG

In the following cases, the current-location mark may appear on completely different position in the map depending on the GPS satellite signal receiving conditions. In this case, perform location correction and direction correction.

- When location correction has not been done
  - If the receiving conditions of the GPS satellite signal is poor, if the current-location mark becomes out of place, it may move to a completely different location and not come back if location correction is not done. The position will be corrected if the GPS signal can be received.
- When the vehicle has traveled by ferry, or when the vehicle has been being towed
  - Because calculation of the current location cannot be done when traveling with the ignition OFF, for example when traveling by ferry or when being towed, the location before travel is displayed. If the precise location can be detected with GPS, the location will be corrected.

CURRENT-LOCATION MARK JUMPS

In the following cases, the current-location mark may appear to jump as a result of automatic correction of the current location.

- When map matching has been done
  - If the current location and the current-location mark are different when map matching is done, the current-location mark may seem to jump. At this time, the location may be “corrected” to the wrong road or to a location which is not on a road.
- When GPS location correction has been done
  - If the current location and the current-location mark are different when the location is corrected using GPS measurements, the current-location mark may seem to jump. At this time, the location may be “corrected” to a location which is not on a road.

CURRENT LOCATION MARK IS IN A RIVER OR SEA

The navigation system moves the current-location mark with no distinction between land and rivers or sea. If the location mark is somehow out of place, it may appear that the vehicle is driving in a river or the sea.

WHEN DRIVING ON SAME ROAD, SOMETIMES CURRENT-LOCATION MARK IS IN RIGHT PLACE AND SOMETIMES IT IS WRONG PLACE

The conditions of the GPS antenna (GPS data) and gyroscope (angular speed sensor) change gradually. Depending on the road traveled and the operation of the steering wheel, the location detection results will be different. Therefore, even on a road on which the location has never been wrong, conditions may cause the vehicle mark to deviate.

LOCATION CORRECTION BY MAP-MATCHING IS SLOW

- The map matching function needs to refer to the data of the surrounding area. It is necessary to drive some distance for the function to work.
- Because map matching operates on this principle, when there are many roads running in similar directions in the surrounding area, no matching determination may be made. The location may not be corrected until some special feature is found.

ALTHOUGH GPS RECEIVING DISPLAY IS GREEN, VEHICLE MARK DOES NOT RETURN TO CORRECT LOCATION

- The GPS accuracy has an error of approximately 10 m (30 ft). In some cases the current-location mark may not be on the correct street, even when GPS location-correction is done.
- The navigation system compares the results of GPS location detection with the results from map-matching location detection. The one which is determined to have higher accuracy is used.
- GPS location correction may not be performed when the vehicle is stopped.

NAME OF CURRENT PLACE IS NOT DISPLAYED

The current place name may not be displayed if there are no place names displayed on the map screen.

CONTENTS OF DISPLAY DIFFER FOR BIRDVIEW™ AND THE (FLAT) MAP SCREEN

Difference of the BIRDVIEW™ screen from the Flat Map Screen are as Follows.

- The current place name displays names which are primarily in the direction of vehicle travel.
- The amount of time before the vehicle travel or turn angle is updated on the screen is longer than for the (flat) map display.
- The conditions for display of place names, roads, and other data are different for nearby areas and for more distant areas.
- Some thinning of the character data is done to prevent the display becoming to complex. In some cases and in some locations, the display contents may differ.
- The same place name, street name, etc. may be displayed multiple times.

Program Loading of NAVI Control Unit

AKS007KI

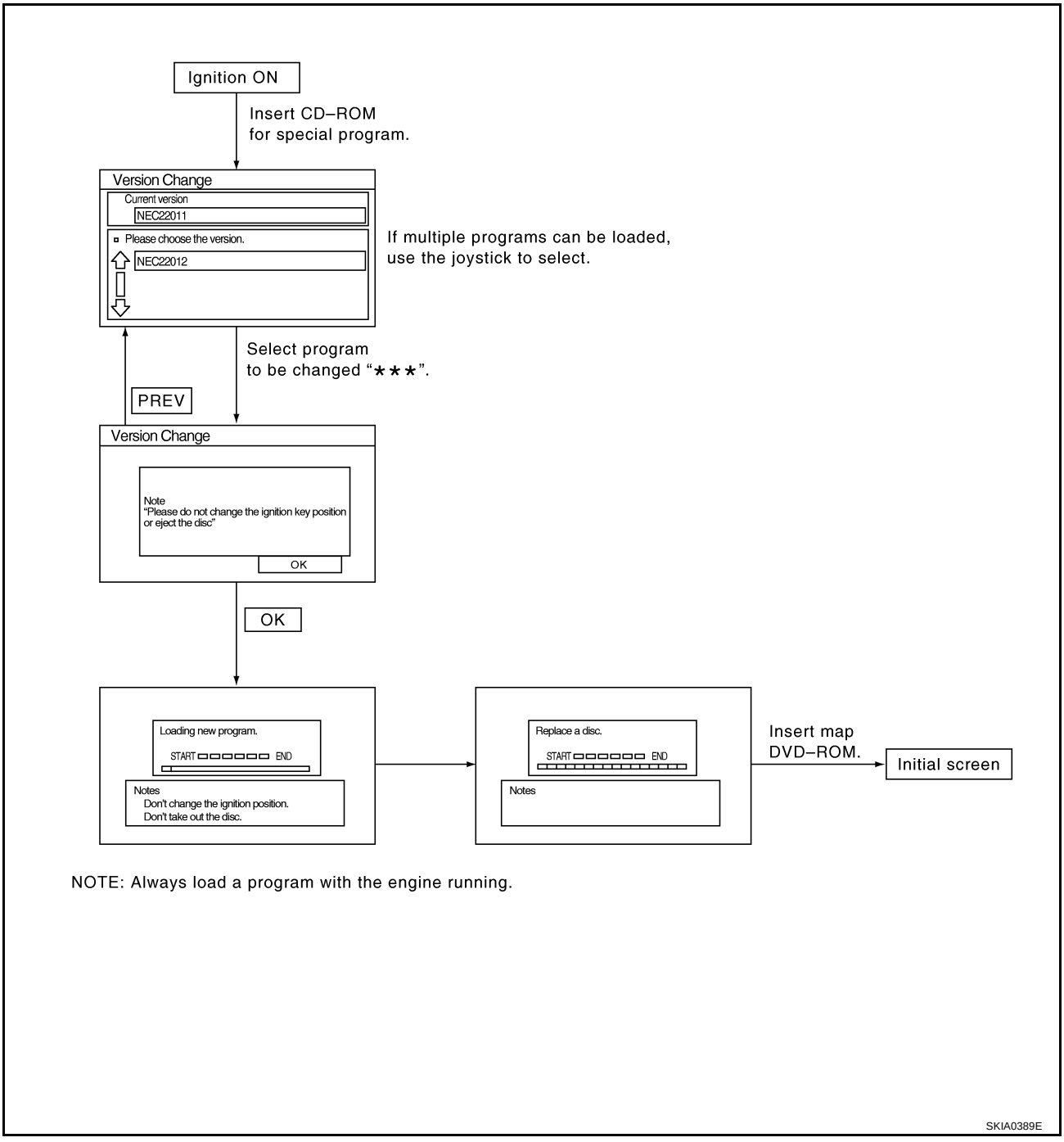

NOTE: Always load a program with the engine running.

Removal and Installation of NAVI Control Unit

AKS007O9

REMOVAL

1. Remove passenger side seat. Refer to SE-100, "Removal and Installation"
2. Remove clips (4), and remove NAVI control unit cover.

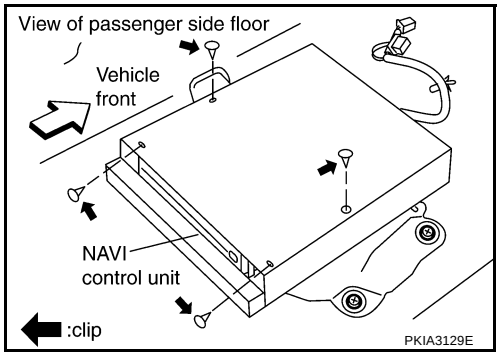

3. Remove screws (2) and nut (1) with power tool, and remove NAVI control unit.

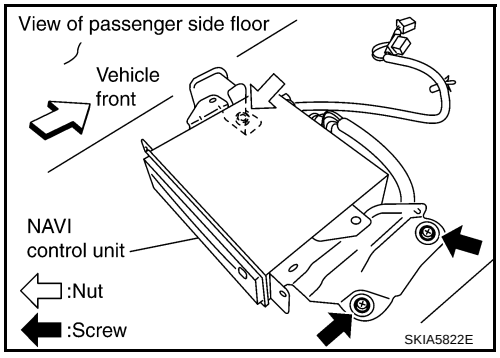

4. Remove screws (4) with power tool and remove bracket.

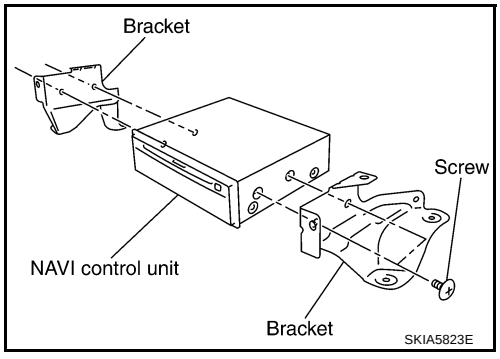

INSTALLATION

Installation is the reverse order of removal.

Removal and Installation of GPS Antenna

AKS007OA

REMOVAL

1. Remove audio unit. Refer to AV-47, "Removal and Installation of Audio Unit" .
2. Remove screw (1) and remove GPS antenna.

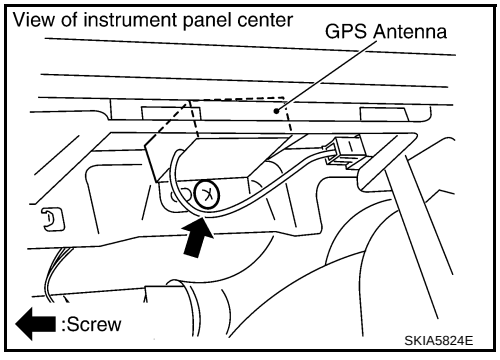

INSTALLATION

Installation is the reverse order of removal.

Removal and Installation of A/C and AV Switch

AKS007OB

For A/C and AV switch removal and installation procedures, refer to AV-48, "Removal and Installation for A/C and AV Switch" .

Removal and Installation of Display Unit

AKS007OC

For display unit removal and installation procedures, refer to AV-47, "Removal and Installation of Audio Unit" .

Removal and Installation of Display Control Unit

AKS007OD

REMOVAL

1. Remove instrument passenger lower panel. Refer to IP-11, "Removal and Installation" .
2. Remove screws (2) with power tool and remove display control unit.

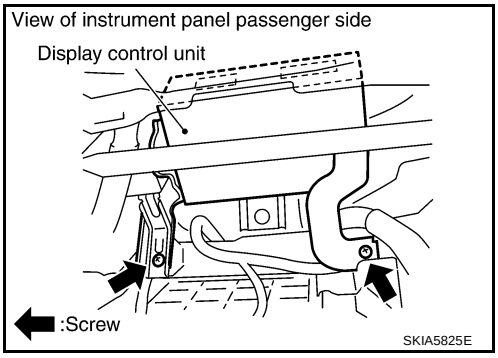

3. Remove screws (4) with power tool and remove bracket.

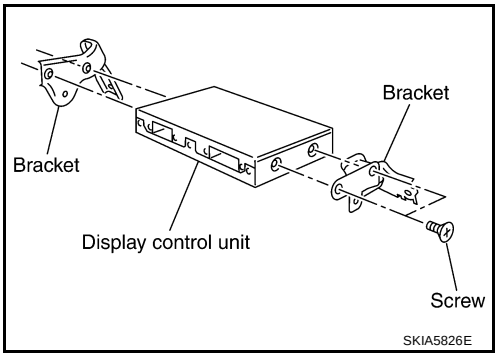

INSTALLATION

Installation is the reverse order of removal.

INFINITI MOBILE ENTERTAINMENT SYSTEM

PFP:28184

System Description

AKS007WH

Refer to Owner's Manual for mobile entertainment system operating instructions.
Power is supplied at all times

- through 15A fuse (No. 32, located in the fuse and fusible link block)
- to DVD player terminal 16
- through DVD player terminals 31 and 32
- to DVD display terminals 15 and 16.

With the ignition switch in the ACC or ON position, power is supplied

- through 10A fuse [No. 6, located in the fuse block (J/B)]
- to DVD player terminal 15
- through DVD player terminal 21
- to DVD display terminal 5.

Ground is supplied

- to DVD player terminal 22
- through body ground B15 and B45
- to DVD player terminals 19, 27
- through DVD display terminals 6, 10 and 12.

When DVD player power switch is ON, power is supplied

- through DVD player terminal 9
- to audio unit terminal 38 and
- through audio unit terminal 40
- to DVD player terminal 11.

When DVD player power switch is ON, DVD sound signals are supplied

- through DVD player terminals 17, 18, and 20
- to DVD display terminals 1, 2 and 4.

DVD sound can be heard by the head phone.
When rear AV switch is ON, audio signals are supplied

- through DVD player terminals 1, 2, 3, and 4
- to audio unit terminals 37, 39, 43, and 42.

DVD sound can be heard from the speaker.
When DVD player power switch is ON, video signals are supplied

- through DVD player terminals 23 and 24
- to DVD display terminals 7 and 8.

When remote controller is operated, operation signals are supplied

- through DVD display terminal 14
- to DVD player terminal 30 and
- through DVD player terminal 29
- to DVD display terminal 13.

Component Parts and Harness Connector Location

AKS007WG

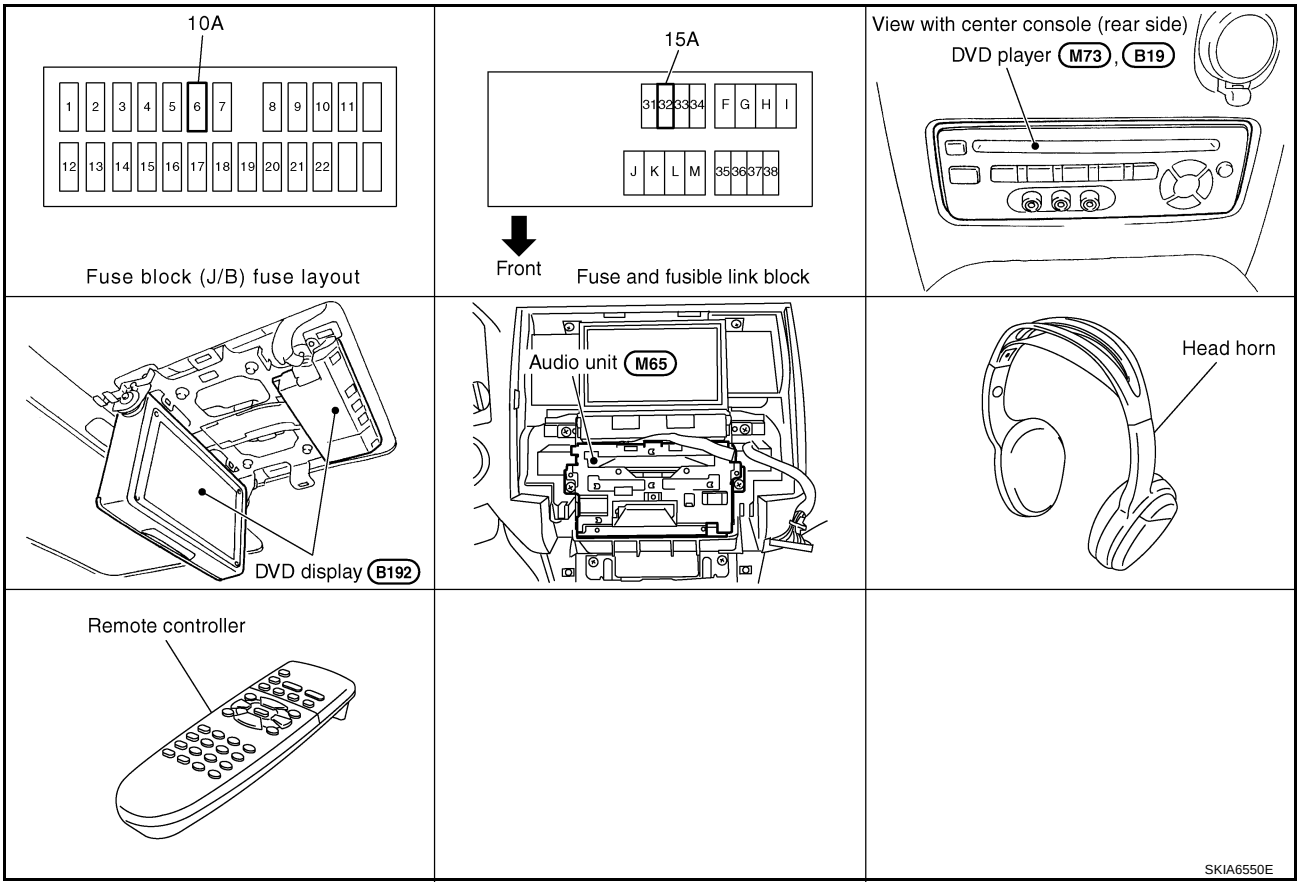

Wiring Diagram – MES –

AKS007WI

AV-MES-01

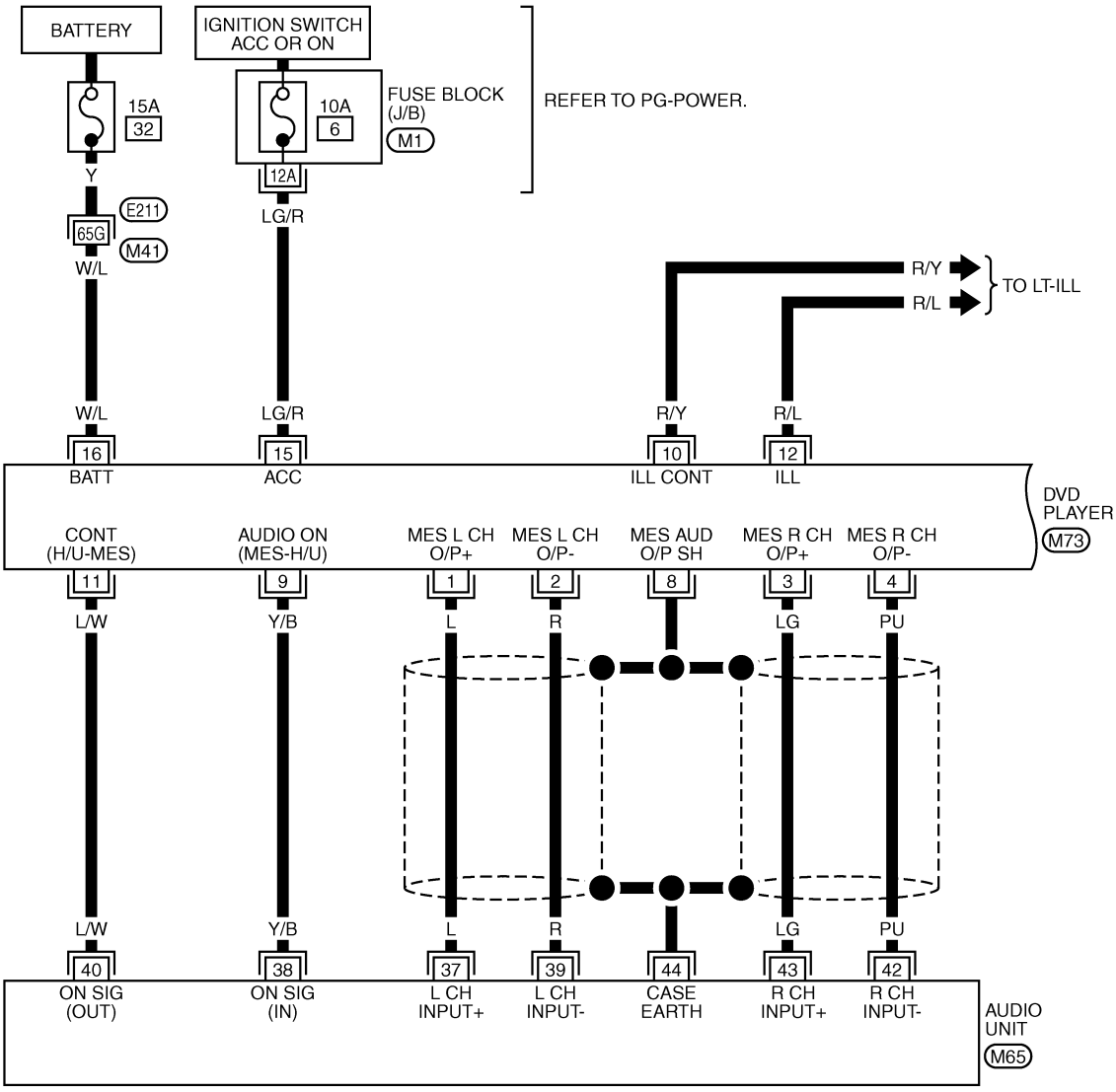

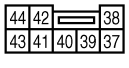

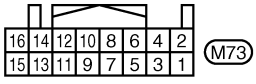

REFER TO THE FOLLOWING.

E211 -SUPER MULTIPLE JUNCTION (SMJ)

M1 -FUSE BLOCK-JUNCTION BOX (J/B)

TKWM0595E

AV-MES-02

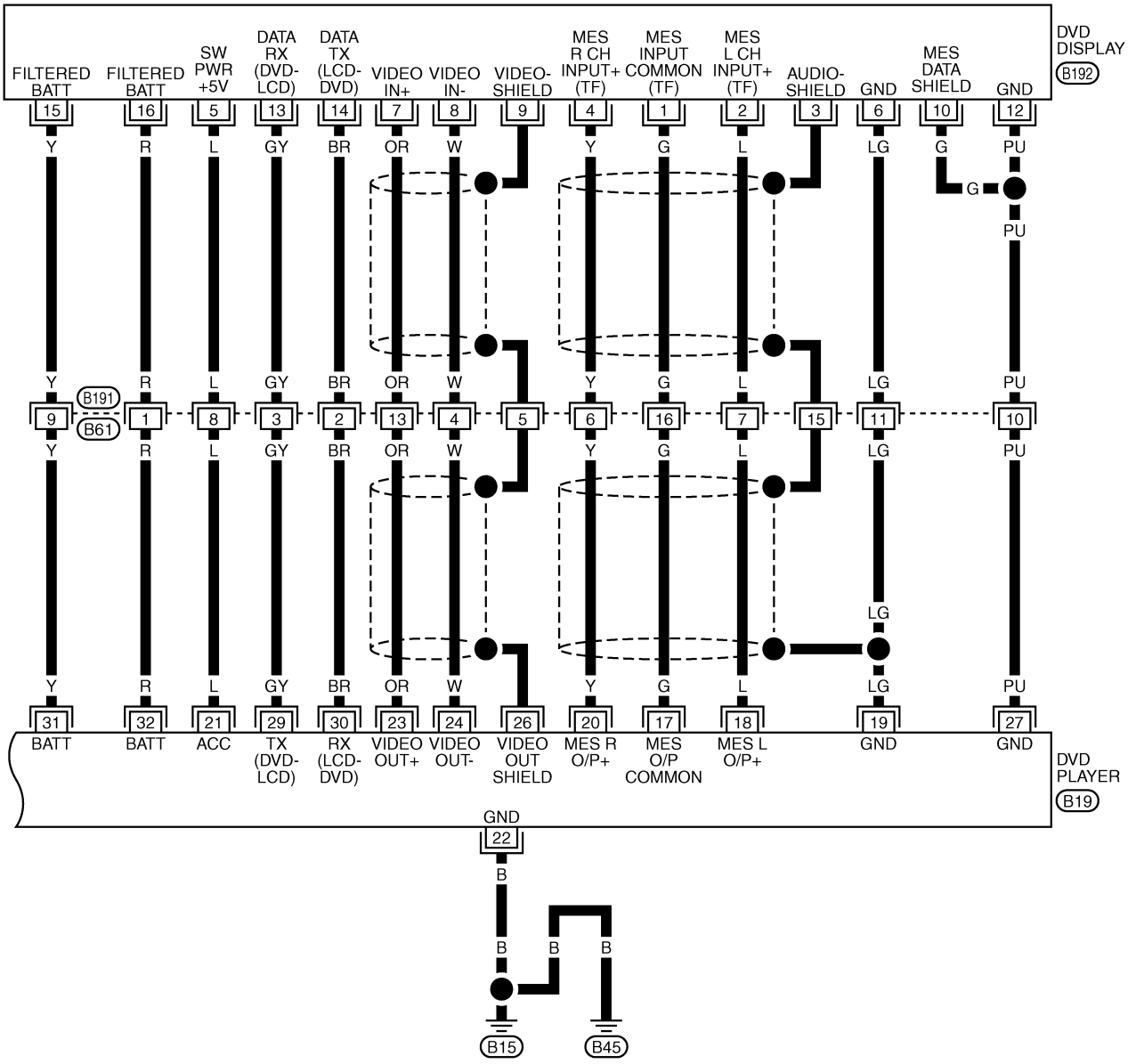

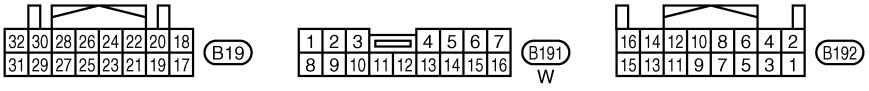

TKWM1095E

Terminals and Reference Value for DVD Player

AKS007WJ

Terminal (Wire color) (+)	Terminal (Wire color) (–)	Item	Signal input/ output	Condition: Ignition switch	Condition: Operation	Reference value	Example of symptom
1 (L)	2 (R)	MES output signal (LH)	Output	ACC	Rear AV switch is ON	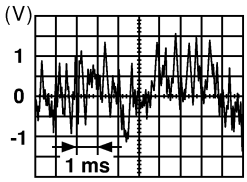 SKIA0177E	No sound from speaker LH
3 (LG)	4 (PU)	MES output signal (RH)					No sound from speaker RH
8	—	Shield	—	—	—	—	—
9 (Y/B)	Ground	Audio ON signal (MES - H/U)	Output	ACC	Push “POWER” switch of DVD player	Approx. 5 V	System dose not work properly.
10 (R/Y)	Ground	Illumination control signal	Input	OFF	Illumination control switch is operated by lighting switch in 1st position.	Changes between approx. 0 V and approx. 12 V.	DVD display illumination cannot be controlled.
11 (L/W)	Ground	Control signal (H/U - MES)	Input	ACC	Push “POWER” switch of DVD player	Approx. 5 V	System dose not work properly.
12 (R/L)	Ground	Illumination signal	Input	OFF	Lighting switch is ON (1st position).	Approx. 12 V	DVD display illumination dose not come on when lighting switch is ON (1st position).
					Lighting switch OFF.	Approx. 0 V	
15 (LG/R)	Ground	ACC power supply	Input	ACC	—	Battery voltage	System does not work properly.
16 (W/L)	Ground	Battery power supply	Input	OFF	—	Battery voltage	System dose not work properly.
17 (G)	19 (LG)	MES output signal (Common)	Output	ACC	Play CD or DVD video	Approx. 0 V	—
18 (L)	19 (LG)	MES output signal (L+)	Output	ACC	Play CD or DVD video	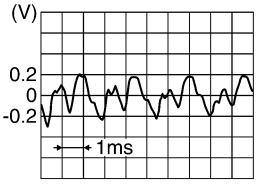 SKIA5828E	No sound from head phone LH
19 (LG)	Ground	Ground	—	ON	—	Approx. 0 V	—
20 (Y)	19 (LG)	MES output signal (R+)	Output	ACC	Play CD or DVD video	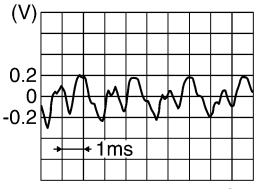 SKIA5828E	No sound from head phone RH
21 (L)	Ground	ACC power supply	Output	ACC	—	Approx. 5 V	Display does not work properly.
22 (B)	Ground	Ground	—	ON	—	Approx. 0 V	—

Terminal (Wire color) (+)	Terminal (Wire color) (–)	Item	Signal input/ output	Condition: Ignition switch	Condition: Operation	Reference value	Example of symptom
23 (OR)	24 (W)	VIDEO output signal	Output	ACC	Play DVD video	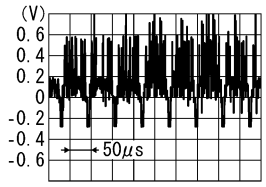 SKIA8863J	No picture
26	Ground	Shield (Video)	—	ON	—	Approx. 0 V	—
27 (PU)	Ground	Ground	—	ON	—	Approx. 0 V	—
29 (GY)	Ground	DVD communication signal TX (DVD - LCD)	Output	ACC	Push “POWER” switch of DVD player	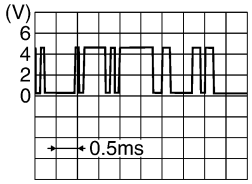 SKIB0322E	Display does not work properly.
30 (BR)	Ground	DVD communication signal RX (LCD - DVD)	Input	ACC	Push “POWER” switch DVD player	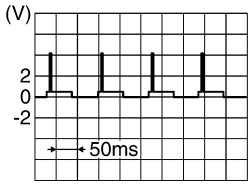 SKIA5832E	Remote controller does not work.
31 (Y) 32 (R)	Ground	Battery power supply	Output	—	—	Battery voltage	Display dose not work properly.

Terminals and Reference Value for DVD Display

AKS007WK

Terminal (Wire color) (+)	Terminal (Wire color) (–)	Item	Signal input/ output	Condition: Ignition switch	Condition: Operation	Reference value	Example of symptom
1 (G)	3	MES input signal (common)	Input	ACC	Play CD or DVD video	Approx. 0 V	—
2 (L)	3	MES input signal (L+)	Input	ACC	Play CD or DVD video	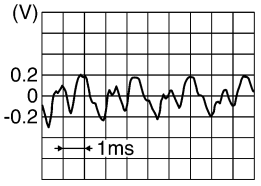 SKIA5828E	No sound from head phone LH
3	Ground	Shield	—	ON	—	Approx. 0 V	—
4 (Y)	3	MES input signal (R+)	Input	ACC	Play cd or DVD video	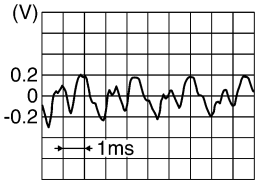 SKIA5828E	No sound from head phone RH
5 (L)	Ground	Switch power	Input	ACC	—	Approx. 5 V	Display does not work properly.

Terminal (Wire color)		Item	Signal input/ output	Condition		Reference value	Example of symptom
(+)	(–)			Ignition switch	Operation		
6 (LG)	Ground	Ground	—	ON	—	Approx. 0 V	—
7 (OR)	8 (W)	VIDEO input signal	Input	ACC	Play DVD video	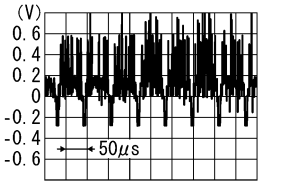 SKIA8863J	No picture
9	Ground	Shield (Video)	—	ON	—	Approx. 0 V	—
10 (G)	Ground	Shield (MES data)	—	ON	—	Approx. 0 V	—
12 (PU)	Ground	Ground	—	ON	—	Approx. 0 V	—
13 (GY)	10 (G)	DVD communication signal RX (DVD - LCD)	Input	ACC	Push “POWER” switch of DVD player	 SKIB0322E	Display does not work properly.
14 (BR)	10 (G)	DVD communication signal TX (LCD - DVD)	Output	ACC	Push “POWER” switch of DVD player	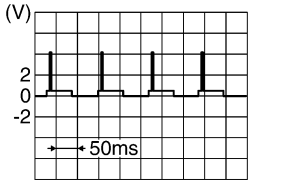 SKIA5832E	Remote controller does not work.
15 (Y)	Ground	Battery power supply	Input	OFF	—	Battery voltage	Display dose not work properly.
16 (R)							

DVD Player Does Not Work

AKS007WO

1. CHECK FUSE

Check that the following fuse of the DVD player are not blown.

Unit	Signal	Fuse NO.
DVD player	Battery power supply	32
	ACC power supply	6

OK or NG

OK >> GO TO 2.
NG >> If fuse is blown be sure to eliminate case of problem before installing new fuse, refer to PG-3, "POWER SUPPLY ROUTING CIRCUIT" .

2. CHECK POWER SUPPLY CIRCUIT

Check voltage between connector terminals and ground as follows.

Terminals			Condition	Reference value
(+)		(–)		
Connector	Terminal (Wire color)			
M73	16 (W/L)	Ground	Ignition switch OFF	Battery voltage
	15 (LG/R)		Ignition switch ACC	Battery voltage

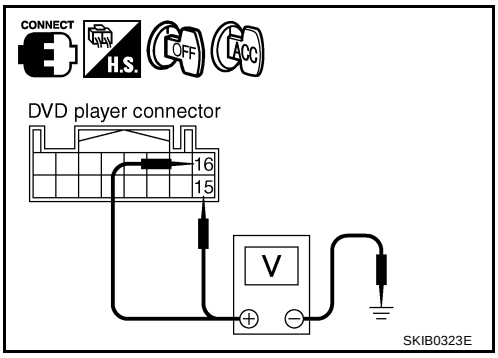

OK or NG

OK >> GO TO 3.
NG >> Repair harness or connector between DVD player and fuse.

3. CHECK GROUND CIRCUIT

1. Turn ignition switch OFF.
2. Disconnect DVD player connector.
3. Check continuity between the following DVD player harness connector B19 terminal 22 (B) and ground.

22 (B) – Ground : Continuity should exist.

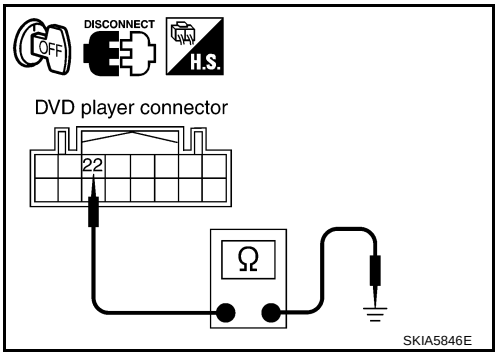

OK or NG

OK >> GO TO 4.
NG >> Repair or harness or connector.

4. CHECK HARNESS

1. Disconnect audio unit connector.
2. Check continuity between DVD player harness connector M73 terminal 9 (Y/B), 11 (L/W) and audio unit harness connector M65 terminal 38 (Y/B), 40 (L/W).

9 (Y/B) - 38 (Y/B) : Continuity should exist.
11 (L/W) - 40 (L/W) : Continuity should exist.

3. Check continuity between DVD player harness connector M73 terminal 9 (Y/B), 11 (L/W) and ground.

9 (Y/B), 11 (L/W) - Ground : Continuity should not exist.

OK or NG

OK >> GO TO 5.
NG >> Repair harness or connector.

5. CHECK CONTROL SIGNAL

1. Connect DVD player connector and audio unit connector.
2. Turn ignition switch ACC.
3. Check voltage between DVD player harness connector M73 terminal 9 (Y/B) and ground.

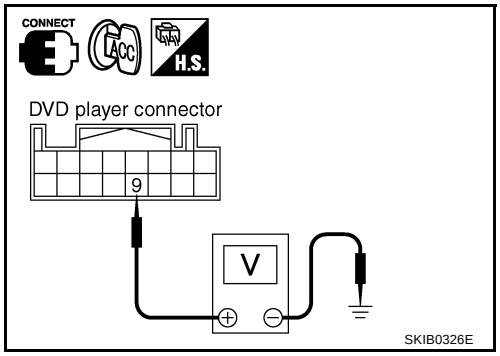

Terminals			Condition	Reference value
(+)		(–)		
Connector	Terminal (Wire color)	Ground		
M73	9 (Y/B)	Ground	Push “power” switch of DVD player	Approx. 5 V

OK or NG

OK >> GO TO 6.
NG >> Replace DVD player.

6. CHECK CONTROL SIGNAL

Check voltage between DVD player harness connector M73 terminal 11 (L/W) and ground.

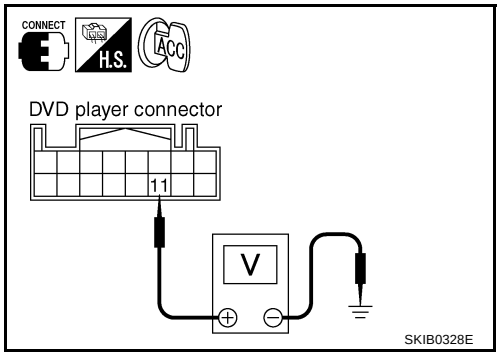

Terminals			Condition	Reference value
(+)		(–)		
Connector	Terminal (Wire color)	Ground		
M73	11 (L/W)	Ground	Push “power” switch of DVD player	Approx. 5 V

OK or NG

OK >> Replace DVD player.
NG >> Replace audio unit.

Screen Is Not Shown (While Sounds Come Out of an Audio Speaker, Did Not Do of a Head Phone)

AKS00CPV

1. CHECK POWER SUPPLY CIRCUIT

1. Check voltage between DVD player harness connector B19 terminal 31 (Y), 32 (R) and ground.

31 (Y), 32 (R) – Ground : Battery voltage

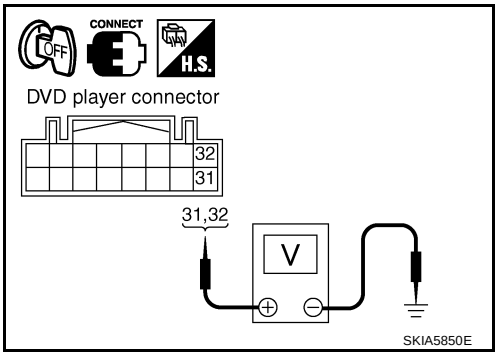

2. Turn ignition switch ACC.
3. Check voltage between DVD player harness connector B19 terminal 21 (L) and ground.

21 (L) – Ground : Approx. 5 V

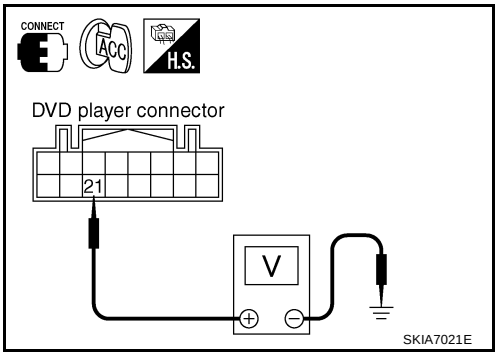

OK or NG

OK >> GO TO 2.
NG >> Replace DVD player.

2. CHECK HARNESS

1. Turn ignition switch OFF.
2. Disconnect DVD display connector.
3. Check continuity between DVD player harness connector B19 terminal 21 (L), 31 (Y), 32 (R) and DVD display harness connector B192 terminal 5 (L), 15 (Y), 16 (R).

   21 (L) – 5 (L) : Continuity should exist.
   31 (Y) – 15 (Y) : Continuity should exist.
   32 (R) – 16 (R) : Continuity should exist.

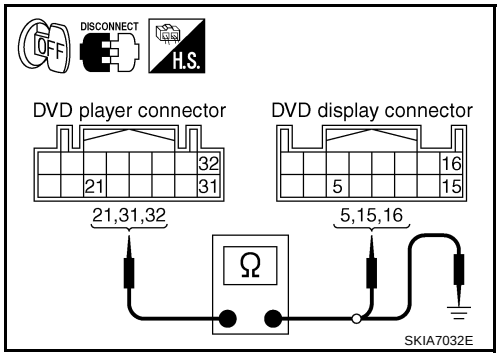

4. Check continuity between DVD player harness connector B19 terminal 21(L), 31 (Y), 32 (R) and ground.

   21 (L), 31 (Y), 32 (R) – Ground : Continuity should not exist.

5. Check continuity between DVD player harness connector B19 terminal 19 (LG), 27 (PU) and DVD display harness connector B192 terminal 6(LG),10 (G), 12 (PU).

   19 (LG) – 6 (LG) : Continuity should exist.
   27 (PU) – 10 (G),12 (PU) : Continuity should exist.

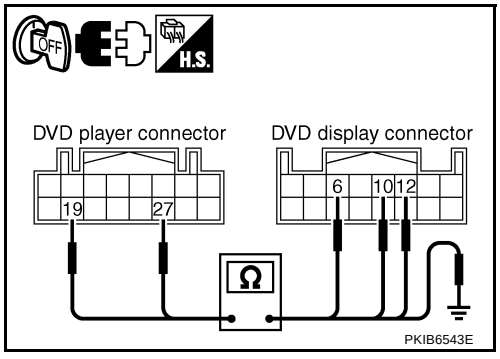

6. Check continuity between DVD player harness connector B19 terminal 19 (LG), 27 (PU) and ground.

   19 (LG), 27 (PU) – Ground : Continuity should not exist.

OK or NG

OK >> Replace DVD display.
NG >> Repair harness or connector.

Screen Is not Shown (Sounds Come Out of Both an Audio Speaker and a Head Phone)

AKS007X1

1. CHECK HARNESS

1. Turn ignition switch OFF.
2. Disconnect DVD player connector and DVD display connector.
3. Check continuity between DVD player harness connector B19 terminal 23 (OR), 24 (W) and DVD display harness connector B192 terminal 7 (OR), 8 (W).

   23 (OR) – 7 (OR) : Continuity should exist.
   24 (W) – 8 (W) : Continuity should exist.

4. Check continuity between DVD player harness connector B19 terminal 23(OR), 24 (W) and ground.

   23 (OR), 24 (W) – Ground : Continuity should not exist.

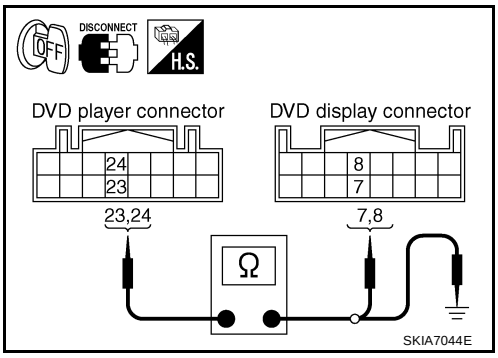

OK or NG

OK >> GO TO 2.
NG >> Repair harness or connector.

2. CHECK VIDEO SIGNAL

1. Connect DVD player connector and DVD display connector.
2. Turn ignition switch ACC.
3. Check the signal between DVD player harness connector B19 terminal 23 (OR) and 24 (W) with CONSULT-II or oscilloscope.

Terminal		Condition	Reference value
(+)	(–)		
23 (OR)	24 (W)	Play DVD video	Refer to AV-186, "Terminals and Reference Value for DVD Player" .

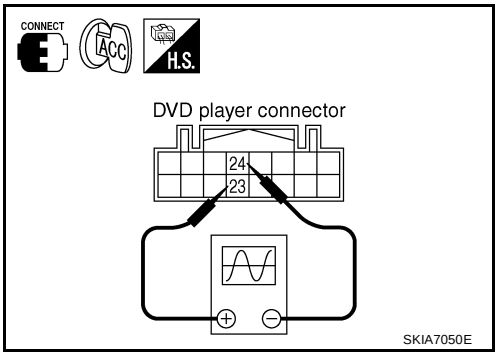

OK or NG

OK >> GO TO 3.
NG >> Replace DVD player.

3. CHECK HARNESS

1. Turn ignition switch OFF.
2. Disconnect DVD player connector and DVD display connector.
3. Check continuity between DVD player harness connector B19 terminal 29 (GY) and DVD display harness connector B192 terminal 13 (GY).

   29 (GY) - 13 (GY) : Continuity should exist.

4. Check continuity between DVD player harness connector B19 terminal 29 (GY) and ground.

   29 (GY) - Ground : Continuity should not exist.

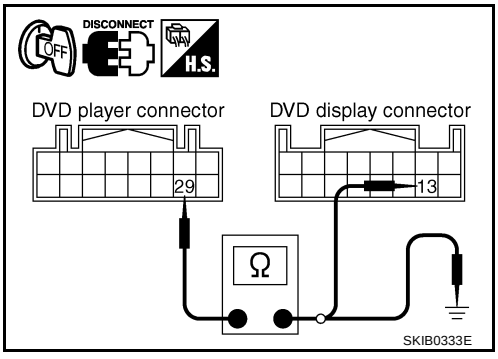

OK or NG

OK >> GO TO 4.
NG >> Repair harness or connector.

4. CHECK DATA (DVD – LCD) SIGNAL

1. Connect DVD display connector and DVD player connector.
2. Turn ignition switch ACC.
3. Check voltage between DVD display harness connector B192 terminal 13 (GY) and ground.

13 (GY) – Ground	**: Refer to AV-186, "Terminals and Reference Value for DVD Player" .**

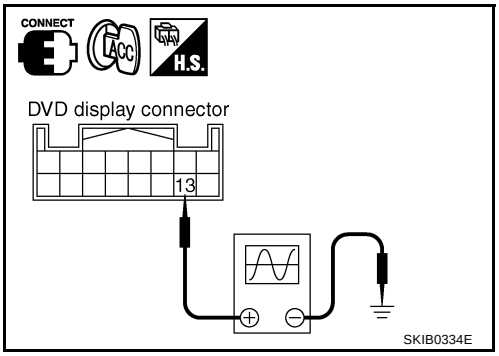

OK or NG

OK >> Replace DVD display.
NG >> Replace DVD player.

Head Phone Does Not Sound

AKS007WR

1. CHECK HEAD PHONE AND SIGNAL

Check the inspection items below to diagnose the malfunction.

- Check that the signal is received at the rear seat.
- Check that transmission part has any seals or dirt that interrupts signal.
- Check that the head phone battery has run down.

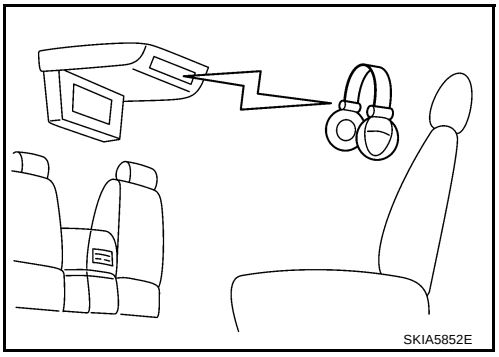

OK or NG

OK >> GO TO 2.
NG >>
- Receive signal with head phone at the rear seat.
- Remove seal or dirt that is interrupting signal.
- If the battery has run down, replace it with new one.

2. CHECK HEAD PHONE

Check that sound is heard with another head phone.

OK or NG

OK >> Replace malfunction head phone.
NG >> GO TO 3.

3. CHECK HARNESS

1. Turn ignition switch OFF.
2. Disconnect DVD player connector and DVD display connector.
3. Check continuity between DVD player harness connector B19 terminal 17 (G), 18 (L), 19 (LG), 20 (Y) and DVD display harness connector B192 terminal 1 (G), 2 (L), 3, 4 (Y).

17 (G) – 1 (G)	**: Continuity should exist.**
18 (L) – 2 (L)	**: Continuity should exist.**
19 (LG) – 3	**: Continuity should exist.**
20 (Y) – 4 (Y)	**: Continuity should exist.**

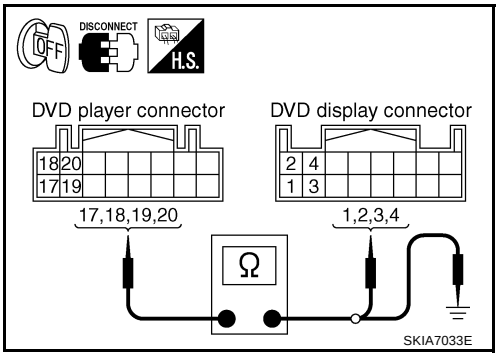

4. Check continuity between DVD player harness connector B19 terminal 17 (G), 18 (L), 19 (LG), 20 (Y) and ground.

17 (G), 18 (L), 19 (LG), 20 (Y) – Ground	**: Continuity should not exist.**

OK or NG

OK >> GO TO 4.
NG >> Repair harness or connector.

4. CHECK MES SOUND SIGNAL

1. Connect DVD player connector and DVD display connector.
2. Turn the ignition switch ACC and push “POWER” switch of DVD player.
3. Check the signal between DVD player harness connector B19 terminal 17 (G), 18 (L), 20 (Y) and 19 (LG) with CONSULT-II or oscilloscope.

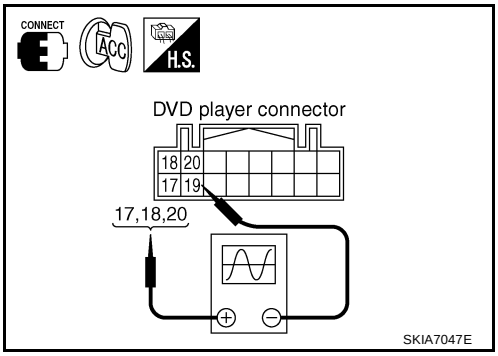

Terminal		Condition	Reference value
(+)	(–)		
17 (G)	19 (LG)	Play CD or DVD video.	Refer to AV-186, "Terminals and Reference Value for DVD Player" .
18 (L)			
20(Y)			

OK or NG

OK >> Replace DVD display.
NG >> Replace DVD player.

Remote Controller Does Not Work

AKS007WT

1. CHECK DVD PLAYER OPERATION SWITCH

1. Turn ignition switch ACC.
2. Push “POWER” switch of DVD player and operate DVD player switch.

Dose the DVD player switches work?

YES >> Replace remote controller.
NO >> GO TO 2.

2. CHECK REMOTE CONTROLLER AND SENSOR

Check the inspection items below to diagnose the malfunction.

- Check that remote controller is facing to the sensor.
- Check that sensor does not have any seals or dirt that is interrupting signal.
- Check that the remote controller battery has run down.

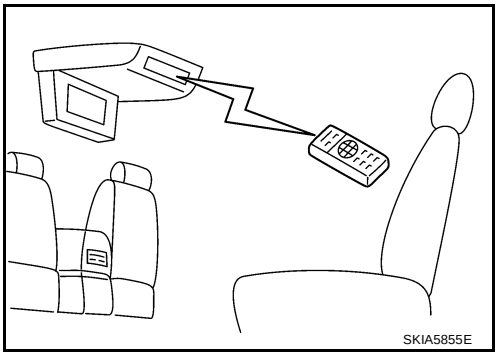

OK or NG

OK >> GO TO 3.
NG >>
- When operating, face remote controller to the sensor.
- Remove seal or dirt that is interrupting signal.
- If the battery has run down, replace it with new one.

3. CHECK HARNESS

1. Turn ignition switch OFF.
2. Disconnect DVD player connector and DVD display connector.
3. Check continuity between DVD player harness connector B19 terminal 30 (BR) and DVD display harness connector B192 terminal 14 (BR).

   30 (BR) – 14 (BR) : Continuity should exist.

4. Check continuity between DVD player harness connector B19 terminal 30 (BR) and ground.

   30 (BR) – Ground : Continuity should not exist.

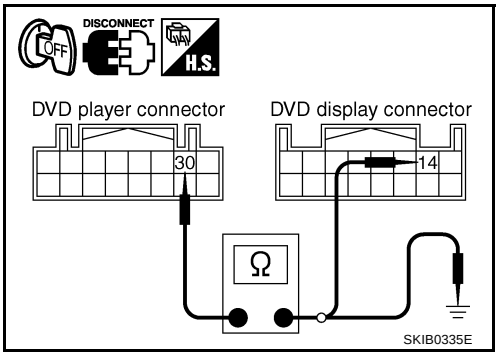

OK or NG

OK >> GO TO 4.
NG >> Repair harness or connector.

4. CHECK DATA (LCD – DVD) SIGNAL

1. Connect DVD display connector.
2. Turn ignition switch ACC.
3. Check the signal between DVD player harness connector B19 terminal 30 (BR) and ground.

   30 (BR) – Ground : Refer to AV-186, "Terminals and Reference Value for DVD Player" .

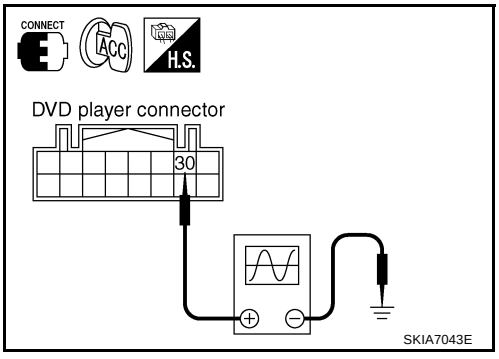

OK or NG

OK >> Replace DVD player.
NG >> Replace DVD display.

No CD·DVD Sound From All Speakers

AKS007WS

1. VERIFY THE PHENOMENON

1. Turn ignition switch ACC.
2. Turn on the radio, receive radio program, check that the sound is heard from all the speakers.

OK or NG

OK >> GO TO 2.
NG >> Replace audio unit.

2. CHECK A/C AND AV SWITCH SELF-DIAGNOSIS

A/C and AV switch self-diagnosis. Check “REAR AV” switch. Refer to AV-37, "A/C and AV Switch Self-Diagnosis Function" .

OK or NG

OK >> GO TO 3.
NG >> Replace A/C and AV switch.

3. CHECK HARNESS

1. Turn ignition switch OFF.
2. Disconnect DVD player connector and audio unit connector.
3. Check continuity between DVD player harness connector M73 terminal 1 (L), 2 (R), 3(LG), 4 (PU) and audio unit harness connector M65 terminal 37 (L), 39 (R), 43 (LG), 42 (PU).

   1 (L) – 37 (L) : Continuity should exist.
   2 (R) – 39 (R) : Continuity should exist.
   3 (LG) – 43 (LG) : Continuity should exist.
   4 (PU) – 42 (PU) : Continuity should exist.

4. Check continuity between DVD player harness connector M73 terminal 1 (L), 2 (R), 3(LG), 4 (PU) and ground.

   1 (L), 2 (R), 3 (LG), 4 (PU) – Ground : Continuity should not exist.

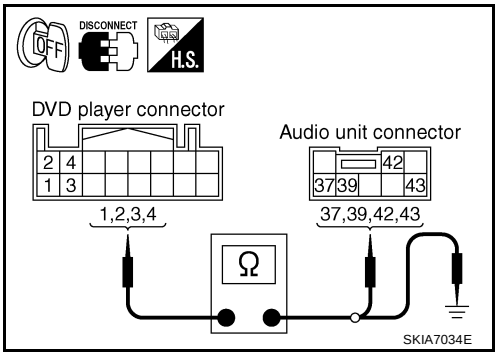

OK or NG

OK >> GO TO 4.
NG >> Repair harness or connector.

4. CHECK MES SOUND SIGNAL

1. Connect DVD player connector and audio unit connector.
2. Turn ignition switch ACC and push “POWER” switch of DVD player.
3. Check the signal between DVD player harness connector M73 terminal 1 (L) and 2 (R), 3 (LG) and 4 (PU) with CONSULT-II or oscilloscope.

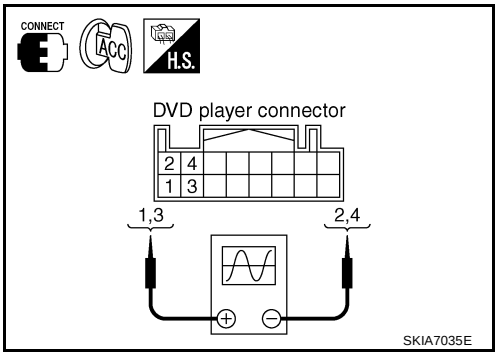

Terminal		Condition	Reference value
(+)	(–)		
1 (L)	2 (R)	Play CD or DVD video.	Refer to AV-186, "Terminals and Reference Value for DVD Player" .
3 (LG)	4 (PU)		

OK or NG

OK >> Replace audio unit.
NG >> Replace DVD player.

Removal and Installation for DVD Player

AKS007WU

REMOVAL

1. Remove center console. Refer to IP-11, "Removal and Installation" .
2. Remove center console rear finisher. Refer to IP-11, "Removal and Installation" .
3. Remove screws (2) with power tool and remove DVD player.

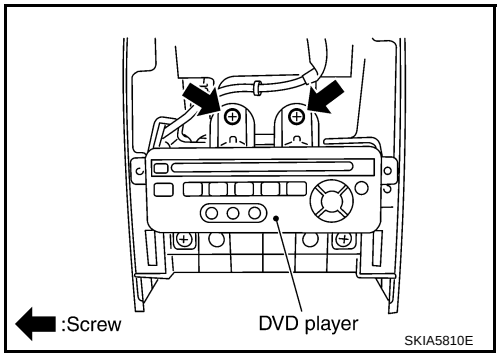

4. Remove screws (4) with power tool and remove bracket.

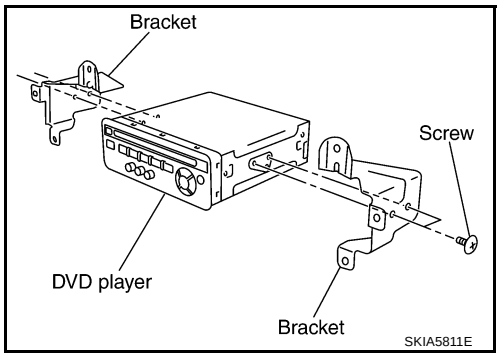

INSTALLATION

Installation is the reverse order of removal.

Removal and Installation for DVD Display Unit

AKS007WV

REMOVAL

1. Insert cloth-covered driver into gaps between rear display cover and head lining, and remove rear display cover.

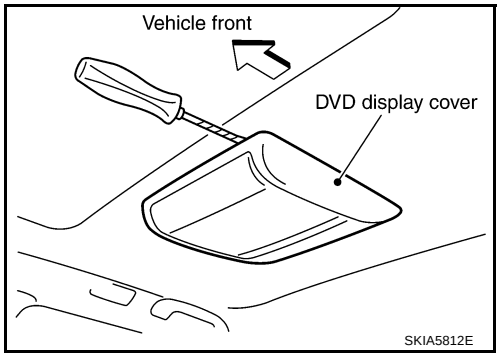

2. Press pawl on rear side and remove inner cover.

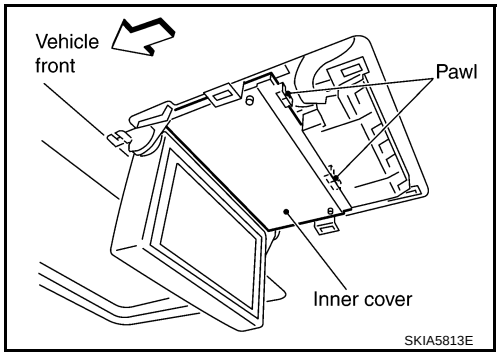

3. Remove screws (4) with power tool.

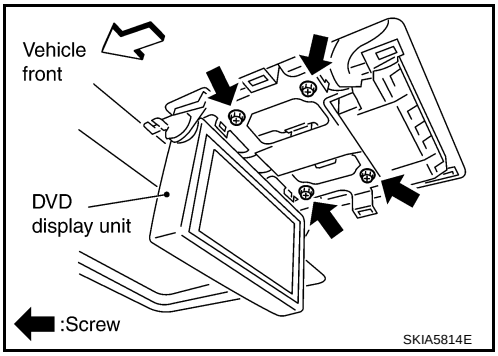

4. Pull DVD display unit to downside, and remove rear display unit from mounting plate.

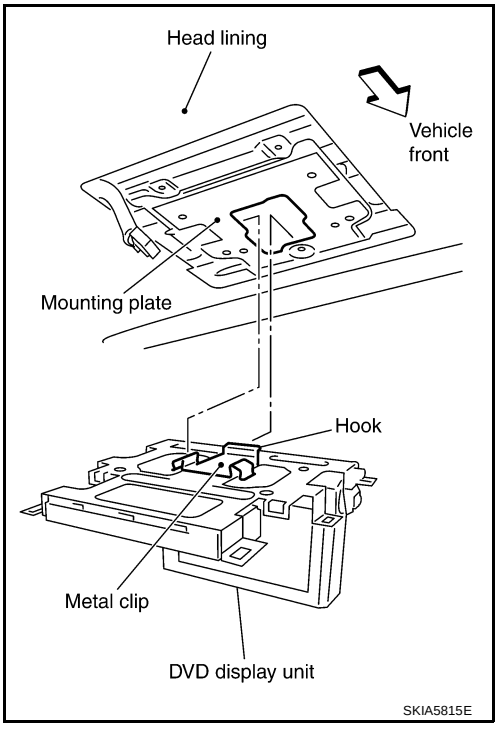

INSTALLATION

Installation is the reverse order of removal.

CAUTION:

Put metal clip hook in mounting plate, and press it securely.