SECTION BR

CONTENTS

CONTENTS (Cont'd.)

When you read wiring diagrams:
- **Read GI section, "HOW TO READ WIRING DIAGRAMS".**
- **See EL section, "POWER SUPPLY ROUTING" for power distribution circuit.**

When you perform trouble diagnoses, read GI section, "HOW TO FOLLOW FLOW CHART IN TROUBLE DIAGNOSES" and "HOW TO PERFORM EFFICIENT DIAGNOSIS FOR AN ELECTRICAL INCIDENT".

Supplemental Restraint System (SRS) "AIR BAG"

The Supplemental Restraint System "AIR BAG", used along with a seat belt, helps to reduce the risk or severity of injury to the driver and front passenger in a frontal collision. The Supplemental Restraint System consists of air bag modules (located in the center of the steering wheel and in the instrument panel on the passenger side), a diagnosis sensor unit, a crash zone sensor (4WD models), warning lamp, wiring harness and spiral cable.

The vehicle is equipped with a passenger air bag deactivation switch. Because no rear seat exists where a rear-facing child restraint can be placed, the switch is designed to turn off the passenger air bag so that a rear-facing child restraint can be used in the front passenger seat. The switch is located in the center of the instrument panel, near the ashtray. When the switch is turned to the ON position, the passenger air bag is enabled and could inflate in a frontal collision. When the switch is turned to the OFF position, the passenger air bag is disabled and will not inflate in a frontal collision. A passenger air bag OFF indicator on the instrument panel lights up when the passenger air bag is switch OFF. The driver air bag always remains enabled and is not affected by the passenger air bag deactivation switch.

Information necessary to service the system safely is included in the **RS section** of this Service Manual.

WARNING:

- **To avoid rendering the SRS inoperative, which could increase the risk of personal injury or death in the event of a collision which would result in air bag inflation, all maintenance should be performed by an authorized NISSAN dealer.**
- **Improper maintenance, including incorrect removal and installation of the SRS, can lead to personal injury caused by unintentional activation of the system.**
- **Do not use electrical test equipment on any circuit related to the SRS unless instructed to in this Service Manual. SRS wiring harnesses are covered with yellow insulation either just before the harness connectors or on the complete harness, for easy identification.**
- **The vehicle is equipped with a passenger air bag deactivation switch which can be operated by the customer. When the passenger air bag is switched OFF, the passenger air bag is disabled and will not inflate in a frontal collision. When the passenger air bag is switched ON, the passenger air bag is enabled and could inflate in a frontal collision. After SRS maintenance or repair, make sure the passenger air bag deactivation switch is in the same position (ON or OFF) as when the vehicle arrived for service.**

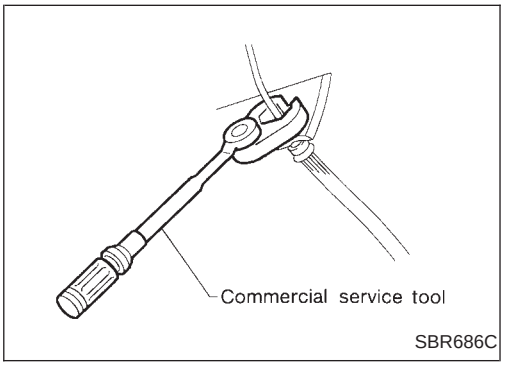

Precautions for Brake System

- **Use brake fluid DOT 3.**
- **Never reuse drained brake fluid.**
- **Be careful not to splash brake fluid on painted areas; it may cause paint damage. If brake fluid is splashed on painted areas, wash it away with water immediately.**
- **To clean master cylinder parts, disc brake caliper parts or wheel cylinder parts, use clean brake fluid.**
- **Never use mineral oils such as gasoline or kerosene. They will ruin rubber parts of the hydraulic system.**
- **Use flare nut wrench when removing and installing brake tubes.**
- **Always torque brake lines when installing.**
- **Burnish the brake contact surfaces after refinishing or replacing drums or rotors, after replacing pads or linings, or if a soft pedal occurs at very low mileage. Refer to "Brake Burnishing Procedure", "ON-VEHICLE SERVICE", BR-6.**

WARNING:

- **Clean brakes with a vacuum dust collector to minimize the hazard of airborne materials.**

Commercial Service Tools

Tool name	Description	
① Flare nut crowfoot ② Torque wrench	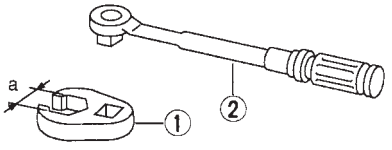 NT360	Removing and installing each brake piping **a: 10 mm (0.39 in)**
Brake fluid pressure gauge	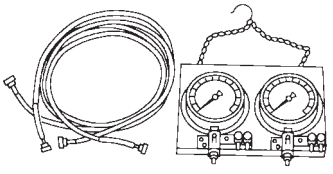 NT151	Measuring brake fluid pressure

NVH Troubleshooting Chart

Use the chart below to help you find the cause of the symptom. If necessary, repair or replace these parts.

Reference page			BR-21, 27	BR-21, 27	BR-25	BR-22	—	—	BR-23, 27	—	—	—	BR-24	BR-27	NVH in PD section	NVH in PD section	NVH in FA, RA section	NVH in FA section	NVH in FA section	NVH in RA section	NVH in ST section
Possible cause and SUSPECTED PARTS			Linings or pads - damaged	Linings or pads - uneven wear	Return spring damaged	Shims damaged	Rotor or drum imbalance	Rotor or drum damage	Rotor or drum runout	Rotor or drum deformation	Rotor or drum deflection	Rotor or drum rust	Rotor thickness variation	Drum out of round	PROPELLER SHAFT	DIFFERENTIAL	AXLE AND SUSPENSION	TIRES	ROAD WHEEL	DRIVE SHAFT	STEERING
Symptom	BRAKE	Noise	X	X	X	X									X	X	X	X	X	X	X
		Shake					X								X		X	X	X	X	X
		Shimmy, Judder					X	X	X	X	X	X	X	X			X	X	X		X

X: Applicable

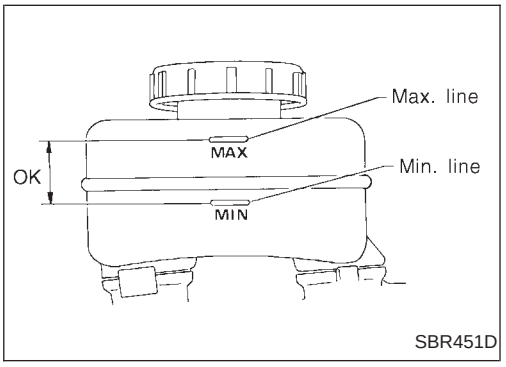

Checking Brake Fluid Level

- Check fluid level in reservoir tank. It should be between Max and Min lines on reservoir tank.
- If fluid level is extremely low, check brake system for leaks.
- If the brake warning lamp comes on, check brake fluid level switch and parking brake switch.

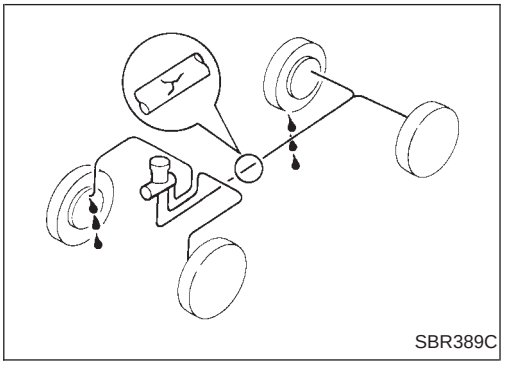

Checking Brake Line

CAUTION:

If leakage occurs around joints, retighten or, if necessary, replace damaged parts.

1. Check brake lines (tubes and hoses) for cracks, deterioration or other damage. Replace any damaged parts.
2. Check for oil leakage by fully depressing brake pedal while engine is running.

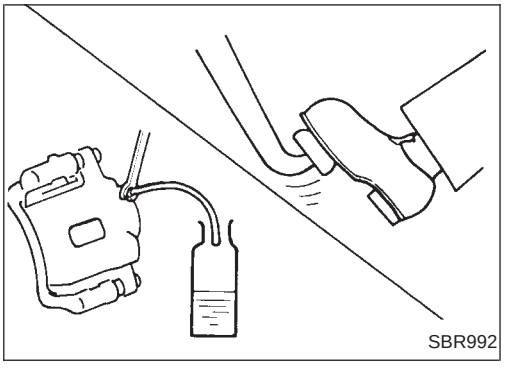

Changing Brake Fluid

CAUTION:

- **Refill with new brake fluid DOT 3.**
- **Always keep fluid level higher than minimum line on reservoir tank.**
- **Never reuse drained brake fluid.**
- **Be careful not to splash brake fluid on painted areas; it may cause paint damage. If brake fluid is splashed on painted areas, wash it away with water immediately.**

1. Clean inside of reservoir tank, and refill with new brake fluid.
2. Connect a vinyl tube to each air bleeder valve.
3. Drain brake fluid from each air bleeder valve by depressing brake pedal.
4. Refill until brake fluid comes out of each air bleeder valve. Use same procedure as in bleeding hydraulic system to refill brake fluid. Refer to ‘‘Bleeding Brake System’’, BR-7.

Brake Burnishing Procedure

Burnish the brake contact surfaces according to the following procedure after refinishing or replacing drums or rotors, after replacing pads or linings, or if a soft pedal occurs at very low mileage.

CAUTION:

Only perform this procedure under safe road and traffic conditions. Use extreme caution.

1. Drive the vehicle on a straight smooth road at 50 km/h (31 MPH).
2. Use medium brake pedal/foot effort to bring the vehicle to a complete stop from 50 km/h (31 MPH). Adjust brake pedal/foot pressure such that vehicle stopping time equals 3 to 5 seconds.
3. To cool the brake system, drive the vehicle at 50 km/h (31 MPH) for 1 minute without stopping.
4. Repeat steps 1 to 3, 10 times or more to complete the burnishing procedure.

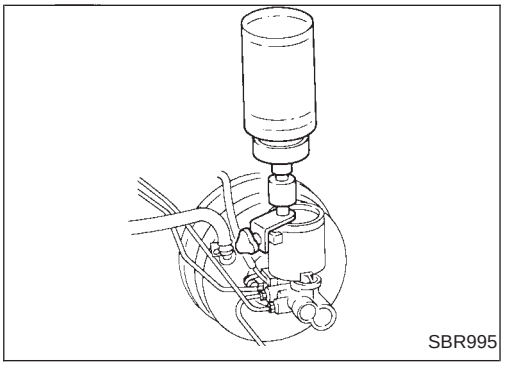
SBR995

Bleeding Brake System

CAUTION:

- **Carefully monitor brake fluid level at master cylinder during bleeding operation.**
- **If master cylinder is suspected to have air inside, bleed air from master cylinder first. Refer to "Installation", "MASTER CYLINDER", BR-17.**
- **Fill reservoir with new brake fluid DOT 3. Make sure it is full at all times while bleeding air out of system.**
- **Place a container under master cylinder to avoid spillage of brake fluid.**
- **Turn ignition switch OFF and disconnect ABS actuator (2WD)/ABS actuator and electric unit (4WD) connector or battery cable.**
- Bleed air in the following order.
  a. LSV air bleeder (Models equipped with LSV)
  b. Left rear brake
  c. Right rear brake
  d. Left front brake
  e. Right front brake
  f. ABS actuator (2WD) or ABS actuator and electric unit (4WD)

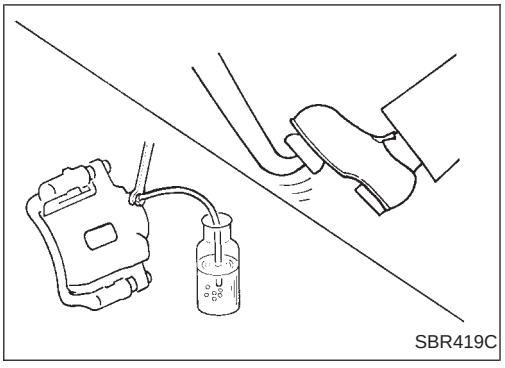
SBR419C

1. Connect a transparent vinyl tube to air bleeder valve.
2. Fully depress brake pedal several times.
3. With brake pedal depressed, open air bleeder valve to release air.
4. Close air bleeder valve.
5. Release brake pedal slowly.
6. Repeat steps 2 through 5 until clear brake fluid comes out of air bleeder valve.
7. Tighten air bleeder to the specified torque.
   : 7 - 9 N·m (0.7 - 0.9 kg-m, 61 - 78 in-lb)

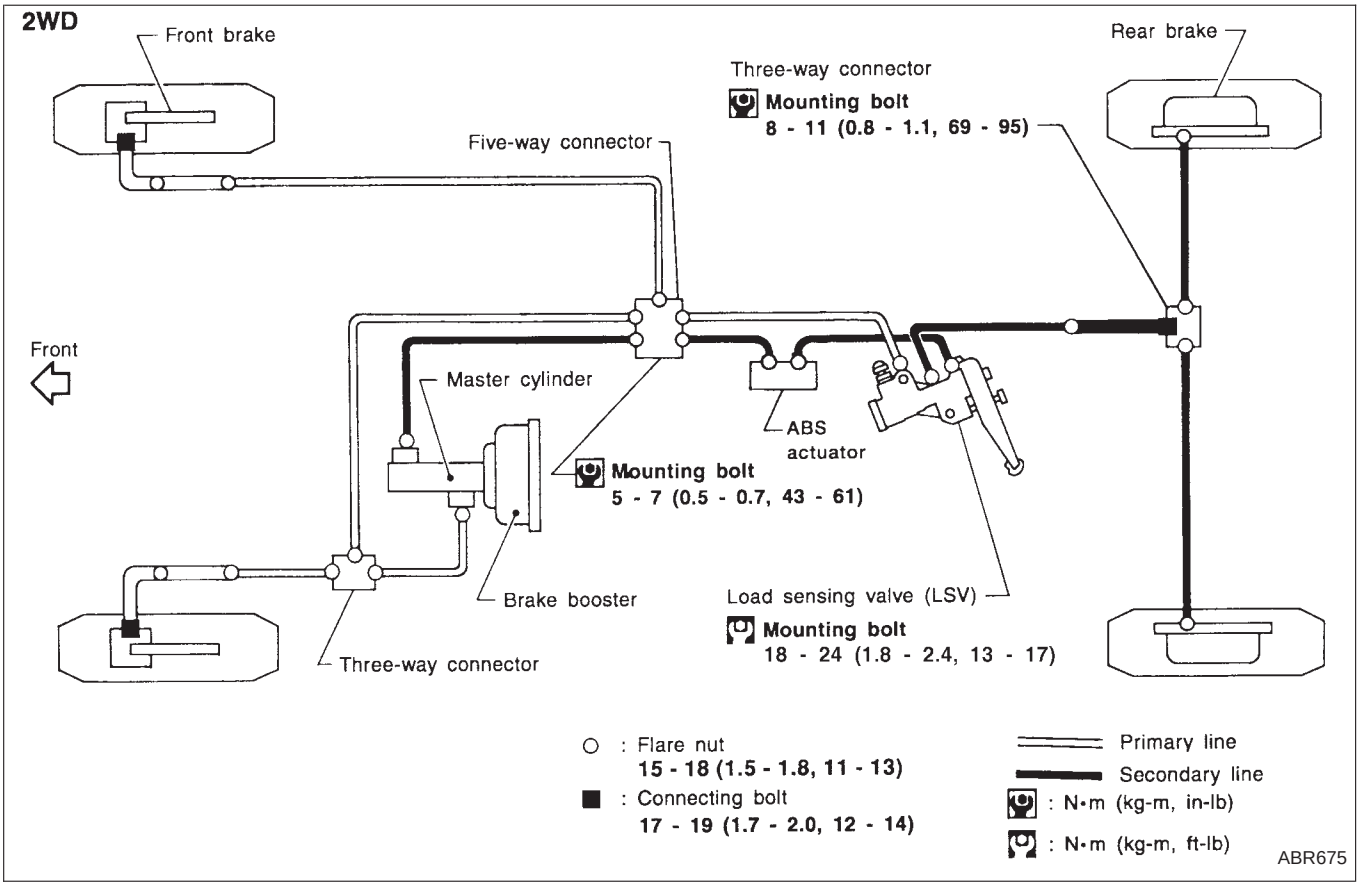
2WD
Front brake
Rear brake
Three-way connector
Mounting bolt
8 - 11 (0.8 - 1.1, 69 - 95)
Five-way connector
Front
Master cylinder
ABS actuator
Mounting bolt
5 - 7 (0.5 - 0.7, 43 - 61)
Brake booster
Load sensing valve (LSV)
Mounting bolt
18 - 24 (1.8 - 2.4, 13 - 17)
Three-way connector
○ : Flare nut
15 - 18 (1.5 - 1.8, 11 - 13)
■ : Connecting bolt
17 - 19 (1.7 - 2.0, 12 - 14)
Primary line
Secondary line
: N•m (kg-m, in-lb)
: N•m (kg-m, ft-lb)
ABR675

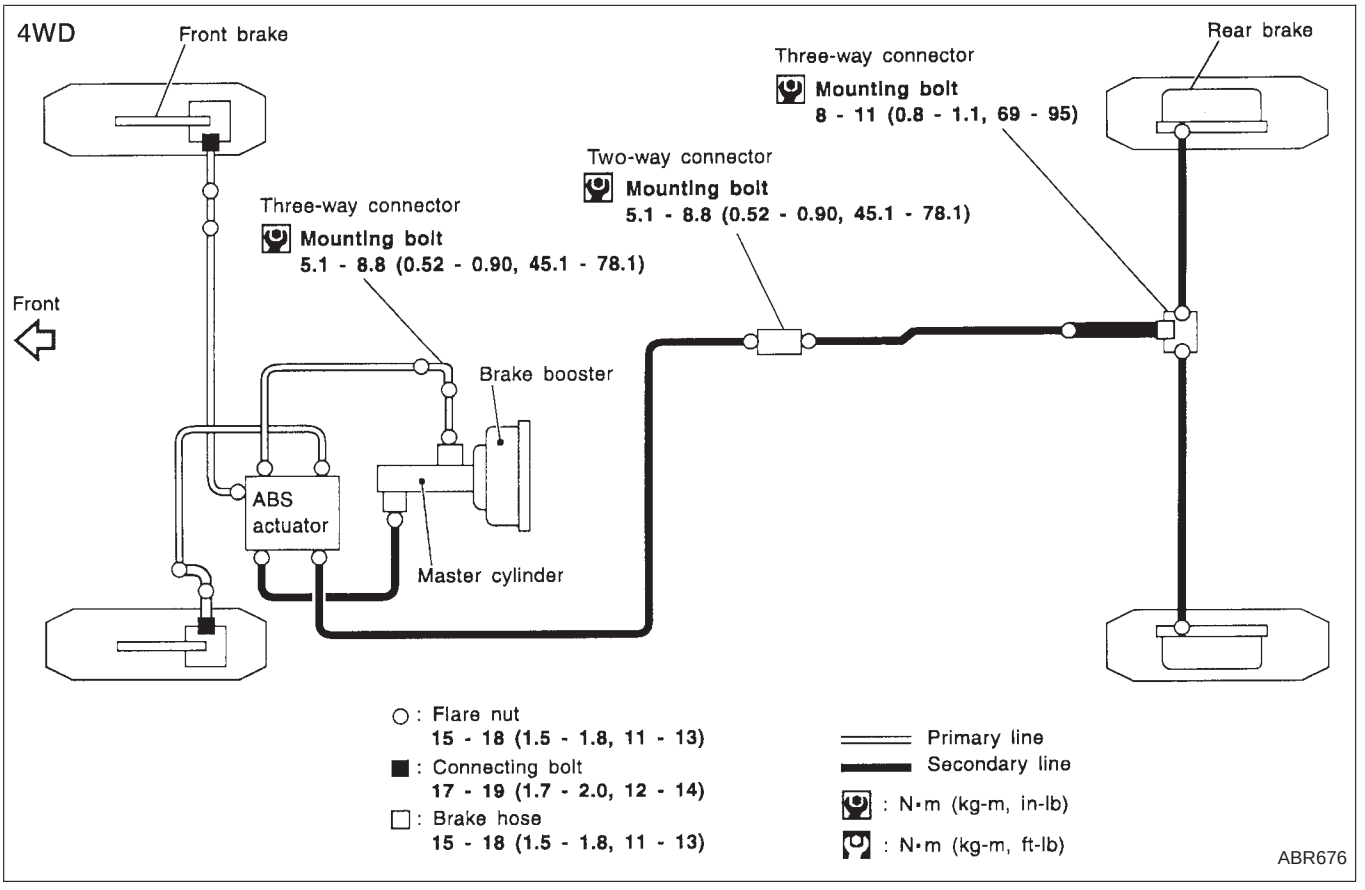
4WD
Front brake
Rear brake
Three-way connector
Mounting bolt
8 - 11 (0.8 - 1.1, 69 - 95)
Two-way connector
Mounting bolt
5.1 - 8.8 (0.52 - 0.90, 45.1 - 78.1)
Three-way connector
Mounting bolt
5.1 - 8.8 (0.52 - 0.90, 45.1 - 78.1)
Front
Brake booster
ABS actuator
Master cylinder
○ : Flare nut
15 - 18 (1.5 - 1.8, 11 - 13)
■ : Connecting bolt
17 - 19 (1.7 - 2.0, 12 - 14)
□ : Brake hose
15 - 18 (1.5 - 1.8, 11 - 13)
Primary line
Secondary line
: N•m (kg-m, in-lb)
: N•m (kg-m, ft-lb)
ABR676

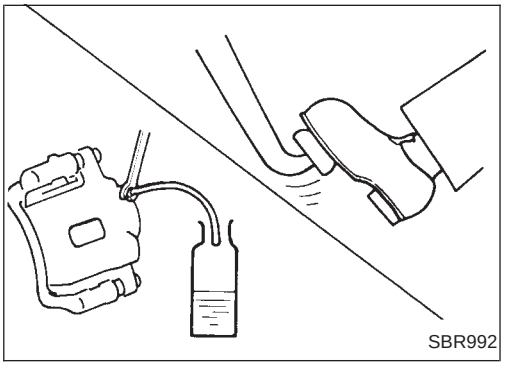

REMOVAL

CAUTION:

- **Be careful not to splash brake fluid on painted areas; it may cause paint damage. If brake fluid is splashed on painted areas, wash it away with water immediately.**
- **All hoses must be free from excessive bending, twisting and pulling.**

1. Connect vinyl tube to air bleeder valve.
2. Drain brake fluid from each air bleeder valve by depressing brake pedal.
3. Remove flare nut connecting brake tube and hose, then withdraw lock spring.
4. Cover openings to prevent entrance of dirt whenever disconnecting brake line.

INSPECTION

Check brake lines (tubes and hoses) for cracks, deterioration or other damage. Replace any damaged parts.

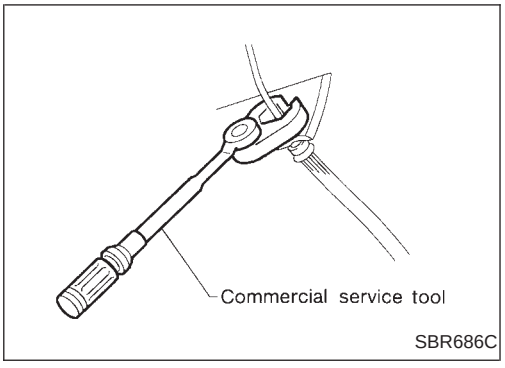

INSTALLATION

CAUTION:

- **Refill with new brake fluid DOT 3.**
- **Never reuse drained brake fluid.**

1. Tighten all flare nuts and connecting bolts.
   Flare nut:
   : 15 - 18 N·m (1.5 - 1.8 kg-m, 11 - 13 ft-lb)
   Connecting bolt:
   : 17 - 19 N·m (1.7 - 2.0 kg-m, 12 - 14 ft-lb)
2. Refill until new brake fluid comes out of each air bleeder valve.
3. Bleed air. Refer to “Bleeding Brake System”, BR-7.

Load Sensing Valve (2WD)

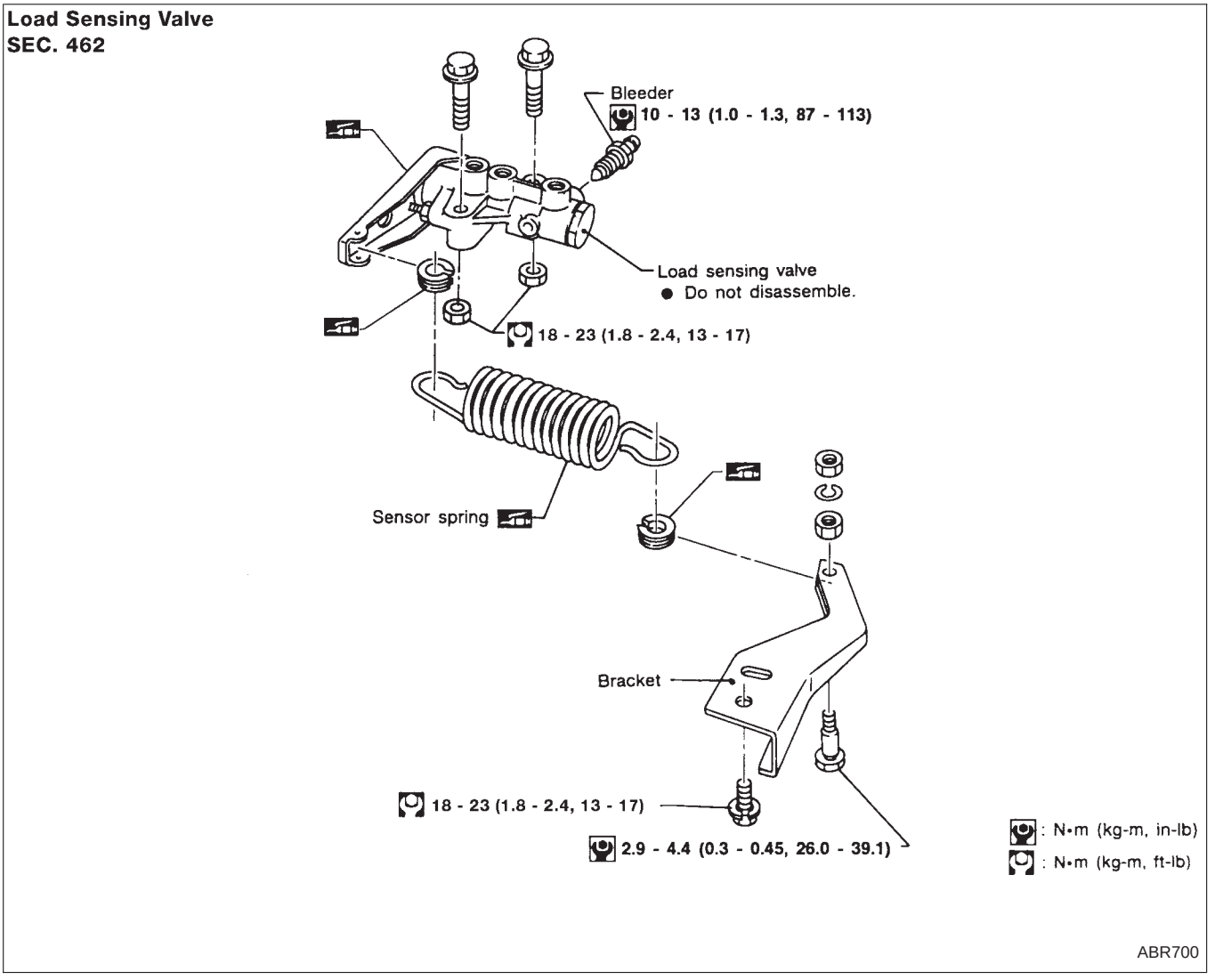

REMOVAL AND INSTALLATION

CAUTION:

- **Refill with new brake fluid DOT 3.**
- **Be careful not to splash brake fluid on painted areas; it may cause paint damage. If brake fluid is splashed on painted areas, wash it away with water immediately.**

1. Replace damaged load sensing valve linkage as an assembly.
2. When disassembling, apply multi-purpose grease to linkage.
3. Tighten all flare nuts and bolts.
   : 15 - 18 N·m (1.5 - 1.8 kg-m, 11 - 13 ft-lb)
4. Bleed air. Refer to “Bleeding Brake System”, BR-7.

Load Sensing Valve (2WD) (Cont'd)

INSPECTION

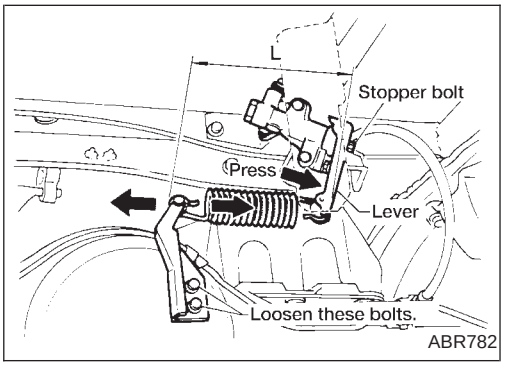

1. Ensure vehicle is unladen condition*.
   * Fuel, radiator coolant and engine oil full. Spare tire, jack, hand tools and mats in designated positions.
2. Have a driver sit in the driver's seat and one person sit on the rear of the vehicle. Then have the person on the rear of the vehicle slowly get off. This is necessary to stabilize suspension deflection.
3. Adjust length "L" as follows:

a. Press lever to the stopper bolt, then check length "L".
   Length "L":
   Approx. 203 mm (7.99 in)

b. If length "L" is not within specification, adjust spring length.

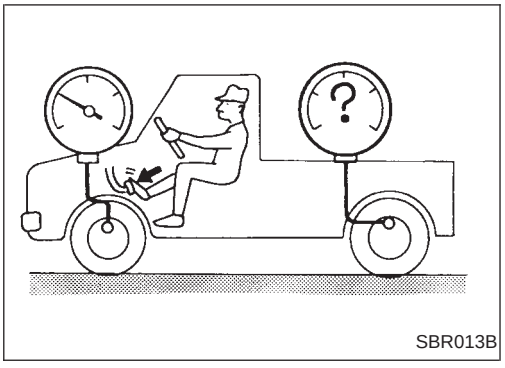

4. Install pressure gauge to front and rear brake air bleeder.
5. Bleed air from the Tool.
6. Raise front brake pressure to 4,904 kPa (49.0 bar, 50 kg/cm^2, 711 psi) and 9,807 kPa (98.1 bar, 100 kg/cm^2, 1,422 psi) and check rear brake pressure.
   Rear brake pressure:
   Refer to table below.

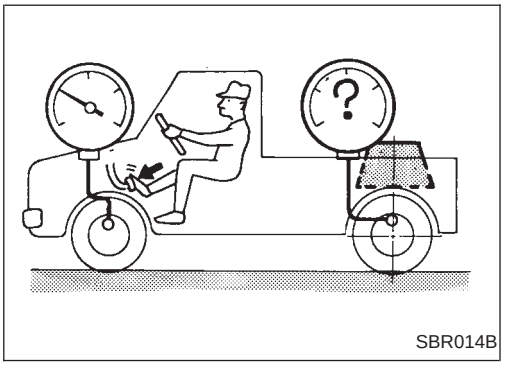

7. Set down weight slowly over axle center so that sensor spring length becomes the same as when in loaded condition (refer to table below). Check rear brake pressure in the same way described in step 6.

Unit: kPa (bar, kg/cm^2, psi)

Front brake pressure	Rear brake pressure	
	Unladen condition L = 203 mm (7.99 in)	Loaded condition L = 208.0 mm (8.19 in)
4,904 (49.0, 50, 711)	1,667 - 2,648 (16.7 - 26.5, 17 - 27, 242 - 384)	3,334 - 4,315 (33.3 - 43.2, 34 - 44, 483 - 626)
9,807 (98.1, 100, 1,422)	2,844 - 3,825 (28.4 - 38.2, 29 - 39, 412 - 555)	3,629 - 5,590 (36.3 - 55.9, 37 - 57, 526 - 811)

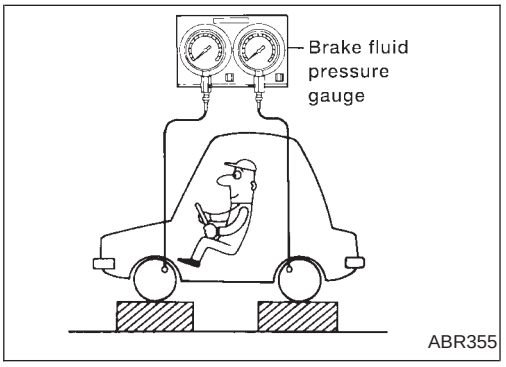

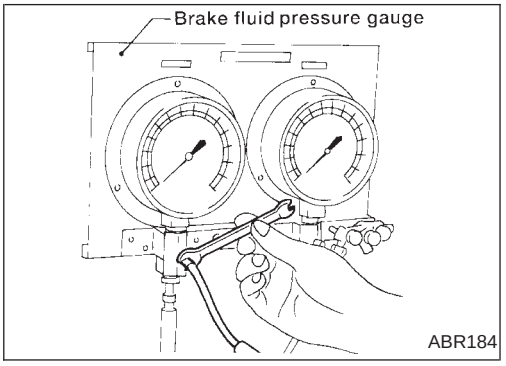

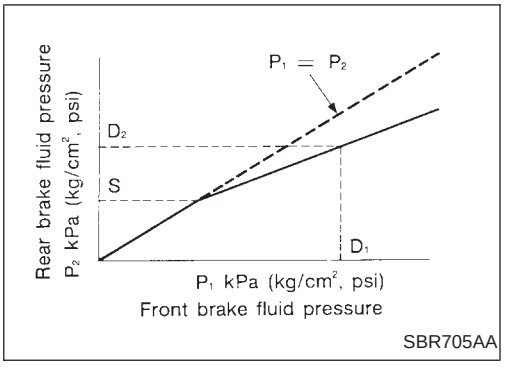

Proportioning Valve (4WD)

INSPECTION

CAUTION:

- **Carefully monitor brake fluid level at master cylinder.**
- **Use new brake fluid "DOT 3".**
- **Be careful not to splash brake fluid on painted areas; it may cause paint damage. If brake fluid is splashed on painted areas, wash it away with water immediately.**
- **Depress pedal slowly when raising front brake pressure.**
- **Check rear brake pressure 2 seconds after front brake pressure reaches specified value.**
- **Disconnect harness connector from ABS actuator and electric unit before checking.**

1. Remove front LH tire.
2. Connect tool to air bleeders on front LH brake caliper and rear LH or RH brake wheel cylinder.
3. Install front LH tire.

Before installing front LH tire, confirm the tool is not touching the front LH wheel.

4. Bleed air from the tool.
5. Check fluid pressure by depressing brake pedal.

Unit: kPa (kg/cm^2, psi)

Applied pressure (Front brake)	D_1	6,375 (65, 924)
Output pressure (Rear brake)	D_2	3,334 - 3,825 (34 - 39, 484 - 555)

If output pressure is out of specification, replace master cylinder assembly.

6. Bleed air after disconnecting the tool. Refer to "Bleeding Brake System", BR-7.
7. Install front LH tire.

REMOVAL AND INSTALLATION

Always replace together with master cylinder as an assembly.

- Refer to "MASTER CYLINDER", BR-15.

Removal and Installation

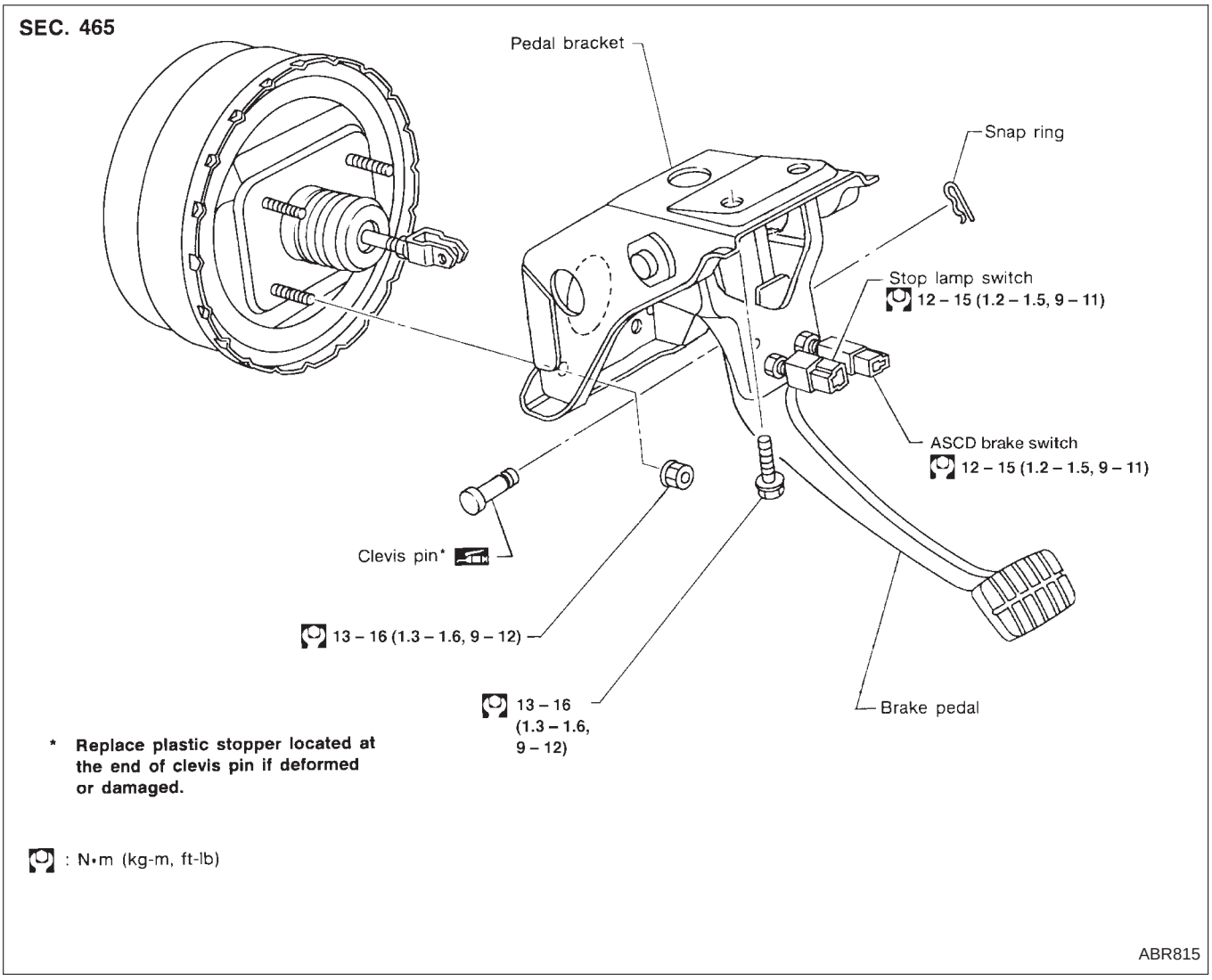

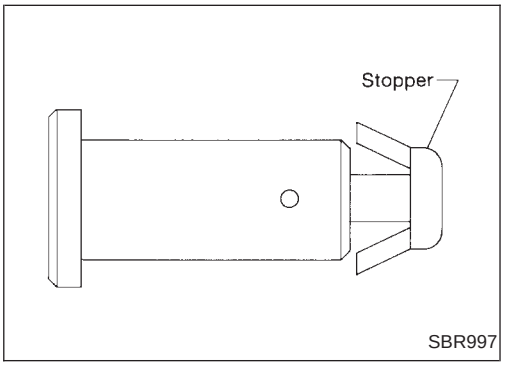

Inspection

Check brake pedal for following items:

- Brake pedal bend
- Clevis pin deformation
- Crack of any welded portion
- Crack or deformation of clevis pin stopper

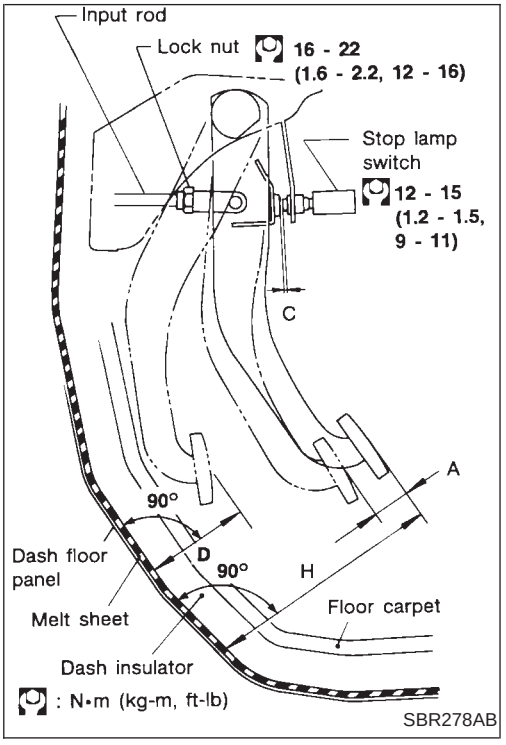

Adjustment

Check brake pedal free height from metal floor.

H: Free height
Refer to SDS, BR-96.
D: Depressed height
Refer to SDS, BR-96.
Under force of 490 N (50 kg, 110 lb) with engine running
C: Clearance between pedal stopper and threaded end of stop lamp switch
0.3 - 1.0 mm (0.012 - 0.039 in)
A: Pedal free play at pedal pad
1 - 3 mm (0.04 - 0.12 in)

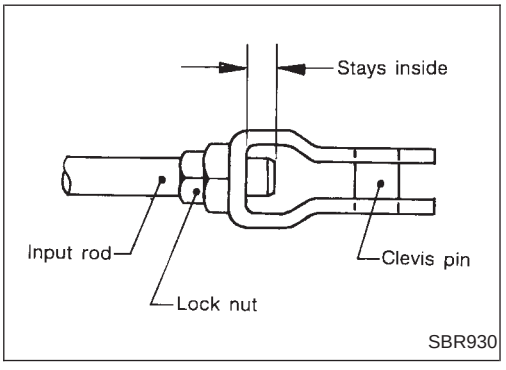

If necessary, adjust brake pedal free height.

1. Loosen lock nut and adjust pedal free height by turning brake booster input rod. Then tighten lock nut.

- **Make sure that the tip of input rod stays inside.**

2. Loosen lock nut and adjust clearance "C" with stop lamp switch respectively, then tighten lock nut.
3. Check pedal free play.

- **Make sure that stop lamp is off when pedal is released.**

4. Check brake pedal's depressed height while engine is running. If lower than specification, check for leaks, air in system, or damage to components (master cylinder, wheel cylinder, etc.). Make necessary repairs.

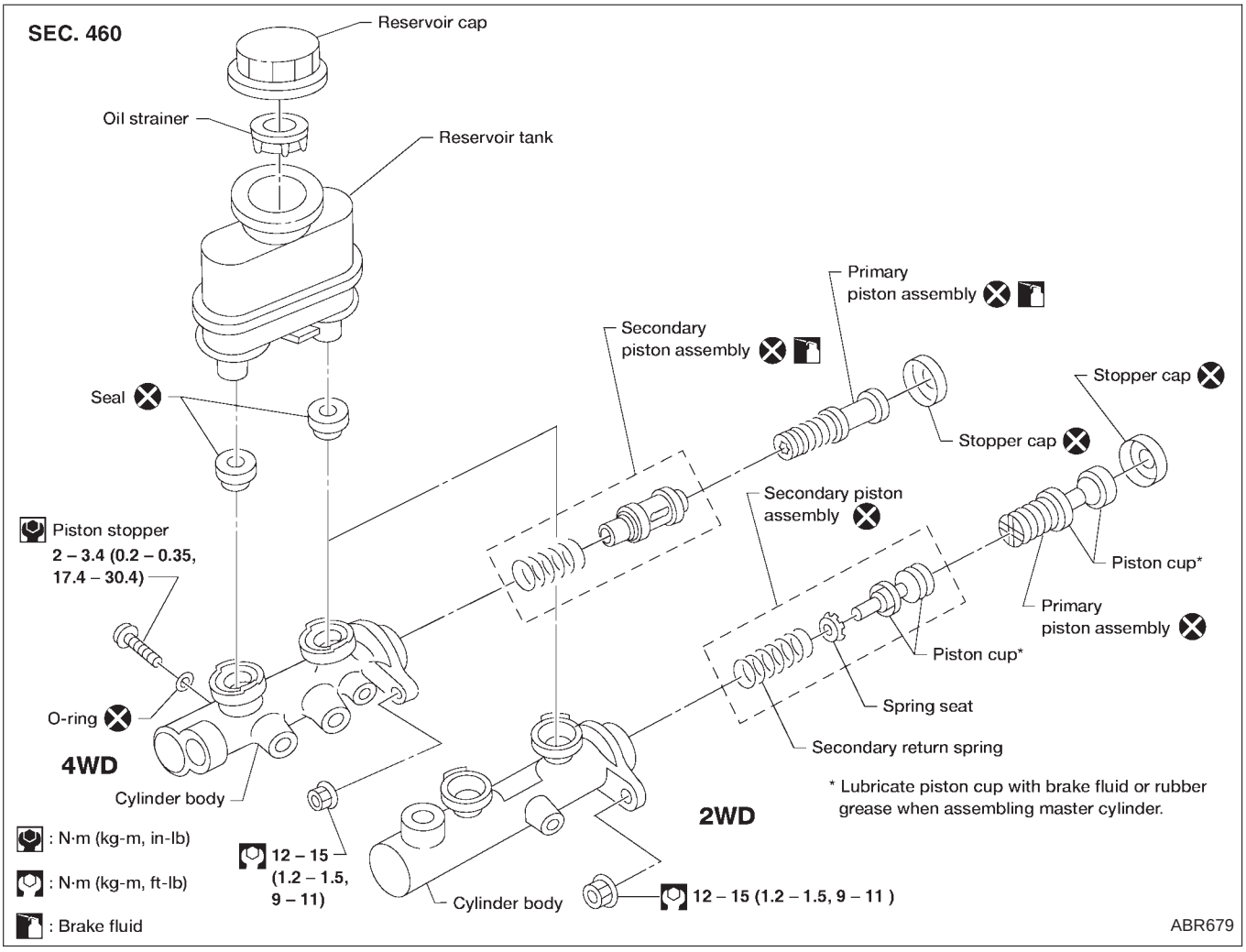

Removal

CAUTION:

- **Be careful not to splash brake fluid on painted areas; it may cause paint damage. If brake fluid is splashed on painted areas, wash it away with water immediately.**
- **In the case of brake fluid leakage from the master cylinder, disassemble the cylinder. Then check piston cups for deformation or scratches and replace necessary parts.**

1. Connect a vinyl tube to air bleeder valve.
2. Drain brake fluid from each air bleeder valve, depressing brake pedal to empty fluid from master cylinder.
3. Remove brake pipe flare nuts.
4. Remove master cylinder mounting nuts.

Disassembly

1. Bend claws of stopper cap outward.

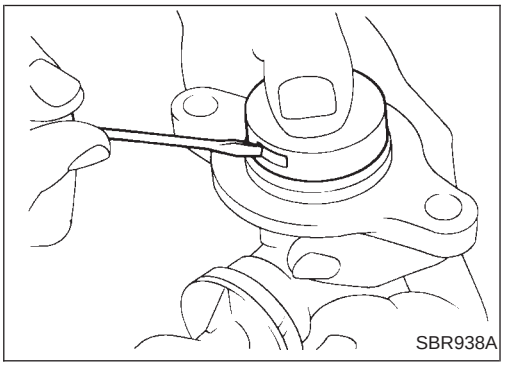

Disassembly (Cont'd)

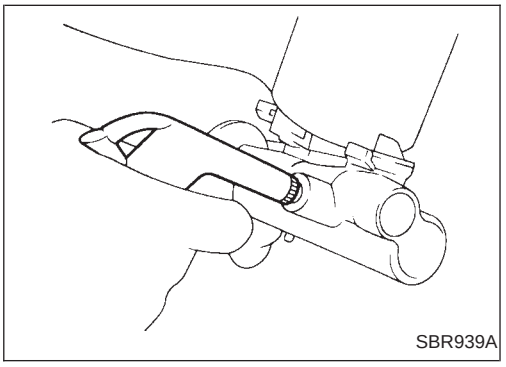
SBR939A

2. Remove piston assemblies.
- **If it is difficult to remove secondary piston assembly, gradually apply compressed air through fluid outlet.**
3. Draw out reservoir tank.

Inspection

Check master cylinder inner wall for pin holes or scratches. Replace if damaged.

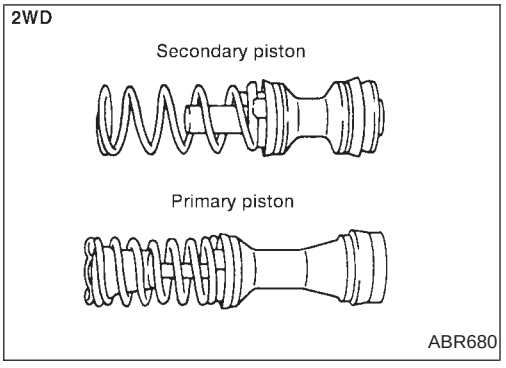

ABR680

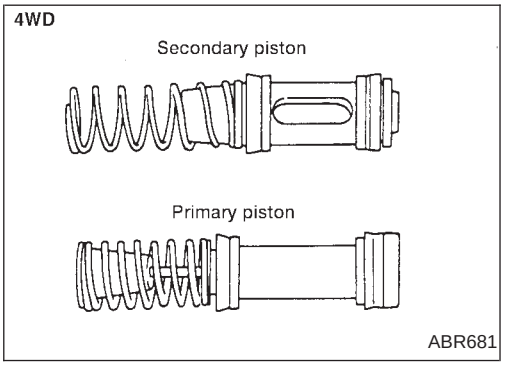

ABR681

Assembly

1. Insert secondary piston assembly. Then insert primary piston assembly.
- **Pay attention to direction of piston cups in figure at left. Also, insert pistons squarely to avoid scratches on cylinder bore.**

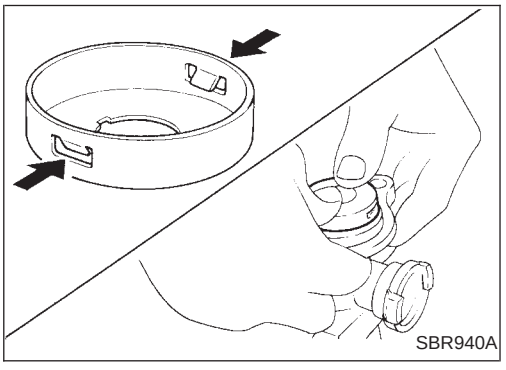
SBR940A

2. Install stopper cap.
- **Before installing stopper cap, ensure that claws are bent inward.**
3. Push reservoir tank seals into cylinder body.
4. Push reservoir tank into cylinder body.

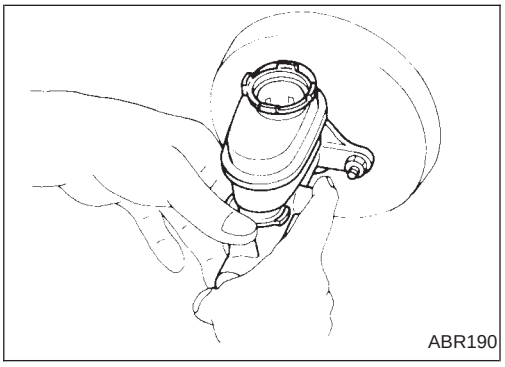

Installation

CAUTION:

- **Refill with new brake fluid DOT 3.**
- **Never reuse drained brake fluid.**

1. Place master cylinder onto brake booster and secure mounting nuts lightly.
2. Tighten mounting nuts.
   : 12 - 15 N·m (1.2 - 1.5 kg-m, 9 - 11 ft-lb)
3. Fill up reservoir tank with new brake fluid.
4. Plug all ports on master cylinder with fingers to prevent air suction while releasing brake pedal.
5. Have driver depress brake pedal slowly several times until no air comes out of master cylinder.
6. Fit brake lines to master cylinder.
7. Tighten flare nuts.
   : 15 - 18 N·m (1.5 - 1.8 kg-m, 11 - 13 ft-lb)
8. Bleed air from brake system. Refer to ‘‘Bleeding Brake System’’, BR-7.

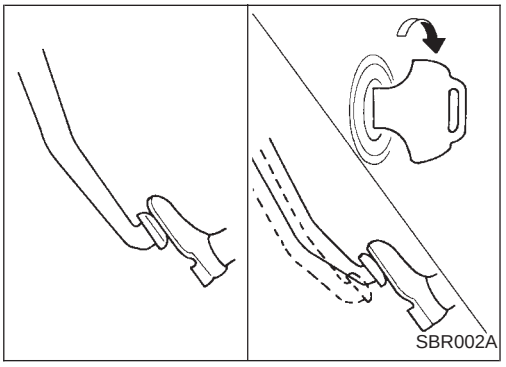

On-vehicle Service

OPERATING CHECK

- Depress brake pedal several times with engine off. After exhausting vacuum, make sure there is no change in pedal stroke.
- Depress brake pedal, then start engine. If pedal goes down slightly, operation is normal.

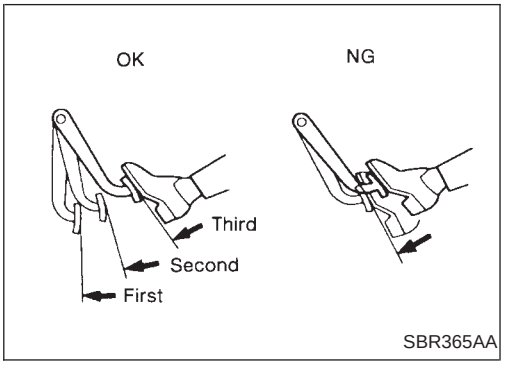

AIRTIGHT CHECK

- Start engine, and stop it after one or two minutes. Depress brake pedal several times slowly. Booster is airtight if pedal stroke is less each time.
- Depress brake pedal while engine is running, and stop engine with pedal depressed. The pedal stroke should not change after holding pedal down for **30 seconds**.

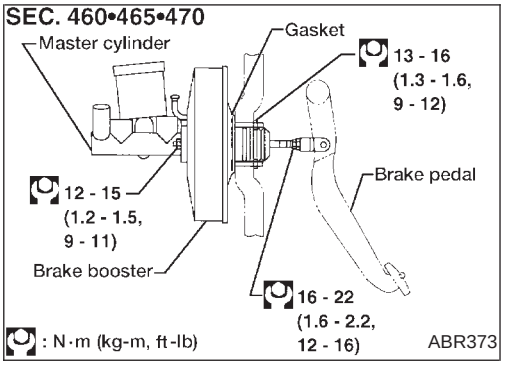

Removal

CAUTION:

- **Be careful not to splash brake fluid on painted areas; it may cause paint damage. If brake fluid is splashed on painted areas, wash it away with water immediately.**
- **Be careful not to deform or bend brake pipes during removal of booster.**

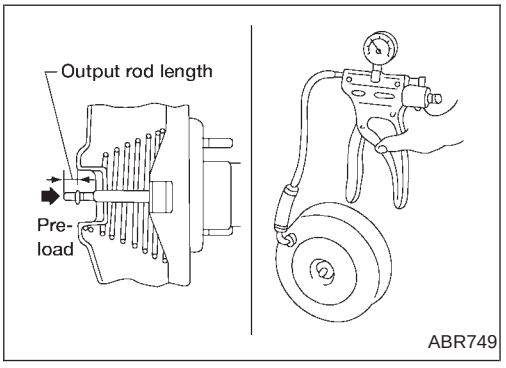

Inspection

OUTPUT ROD LENGTH CHECK

1. Apply vacuum of −66.7 kPa (−500 mmHg, −19.69 inHg) to brake booster with a handy vacuum pump.
2. Add preload of 19.6 N (2 kg, 4.4 lb) to output rod.
3. Check output rod length.

   Specified length:

   10.275 - 10.525 mm (0.4045 - 0.4144 in)

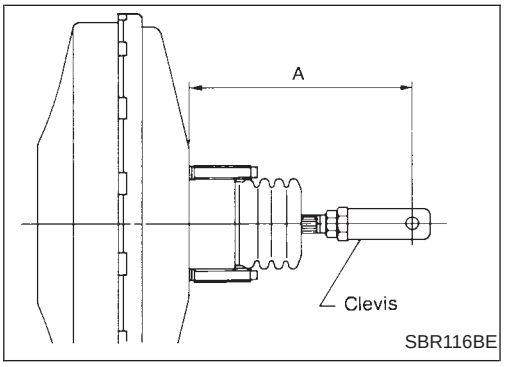

Installation

CAUTION:

- **Be careful not to deform or bend brake pipes during installation of booster.**
- **Replace clevis pin if damaged.**
- **Refill with new brake fluid DOT 3.**
- **Never reuse drained brake fluid.**
- **Take care not to damage brake booster mounting bolt threads when installing. Due to the narrow angle of installation, the threads can be damaged by the dash panel.**

  A: 2WD
  160 mm (6.30 in)
  4WD
  165 mm (6.50 in)

1. Before fitting booster, temporarily adjust clevis to dimension shown.
2. Fit booster, then secure mounting nuts (brake pedal bracket to brake booster) lightly.
3. Connect brake pedal and booster input rod with clevis pin.
4. Secure mounting nuts.
   : 13 - 16 N·m (1.3 - 1.6 kg-m, 9 - 12 ft-lb)
5. Install master cylinder. Refer to ‘‘Installation’’, ‘‘MASTER CYLINDER’’, BR-17.
6. Adjust brake pedal height and free play. Refer to BR-14.
7. Secure lock nut for clevis.
   : 16 - 22 N·m (1.6 - 2.2 kg-m, 12 - 16 ft-lb)
8. Bleed air. Refer to ‘‘Bleeding Brake System’’, BR-7.

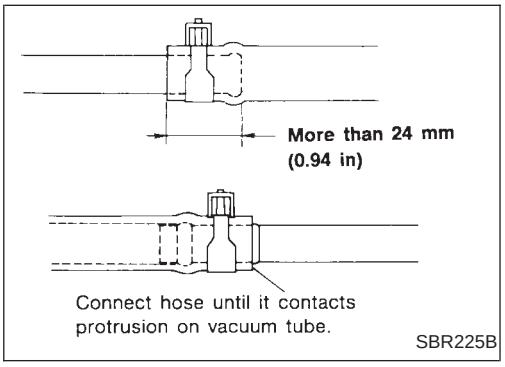

Removal and Installation

CAUTION:

When installing vacuum hoses, pay attention to the following points.

- **Do not apply any oil or lubricants to vacuum hose and check valve.**
- **Insert vacuum tube into vacuum hose as shown.**

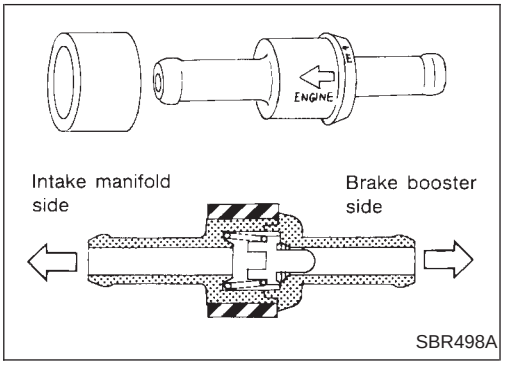

- **Install check valve, paying attention to its direction.**

Inspection

HOSES AND CONNECTORS

Check vacuum lines and connections and check valve for airtightness, improper attachment, chafing and deterioration.

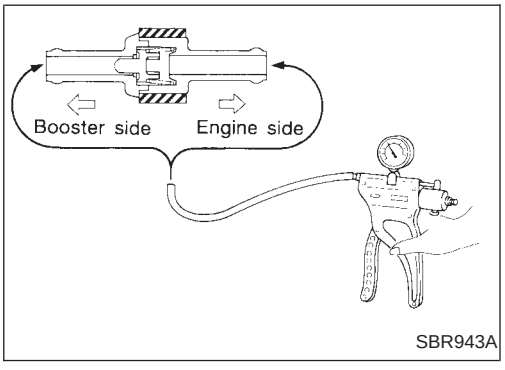

CHECK VALVE

Check vacuum with a vacuum pump.

Connect to booster side	Vacuum should exist.
Connect to engine side	Vacuum should not exist.

Pad Replacement

WARNING:

Clean brake pads with a vacuum dust collector to minimize the hazard of airborne materials.

CAUTION:

- **When cylinder body is open, do not depress brake pedal or caliper piston will pop out.**
- **Be careful not to damage piston boot or get oil on rotor. Always replace shims when replacing pads.**
- **If shims are rusted or show peeling of the rubber coat, replace them with new shims.**
- **It is not necessary to remove connecting bolt except for disassembly or replacement of caliper assembly. In this case, suspend cylinder body with wire so as not to stretch brake hose.**
- **Burnish the brake contact surfaces after refinishing or replacing drums or rotors, after replacing pads or linings, or if a soft pedal occurs at very low mileage. Refer to "Brake Burnishing Procedure", "ON-VEHICLE SERVICE", BR-6.**

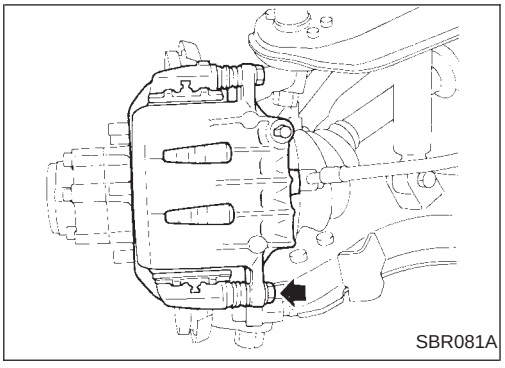

1. Remove master cylinder reservoir cap.
2. Remove lower pin bolt.

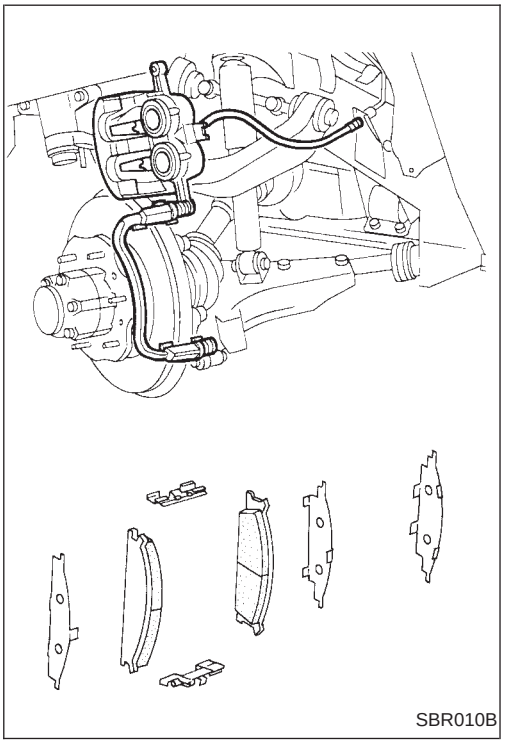

3. Open cylinder body upward. Then remove pad retainers, return spring and inner and outer shims.
   Standard pad thickness:
   10 mm (0.39 in)
   Pad wear limit:
   2.0 mm (0.079 in)

- **Carefully monitor brake fluid level because brake fluid will return to reservoir when pushing back piston.**

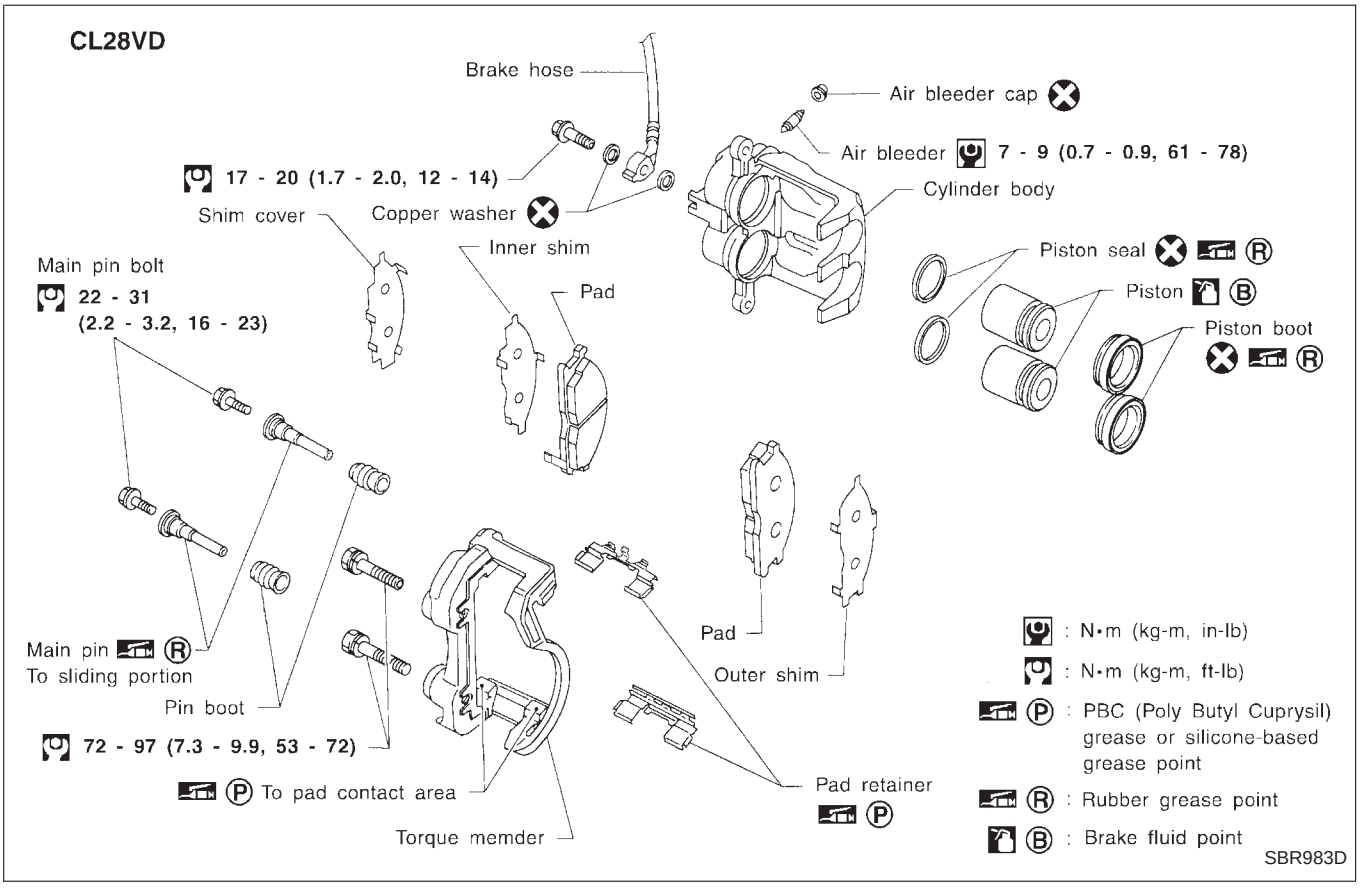

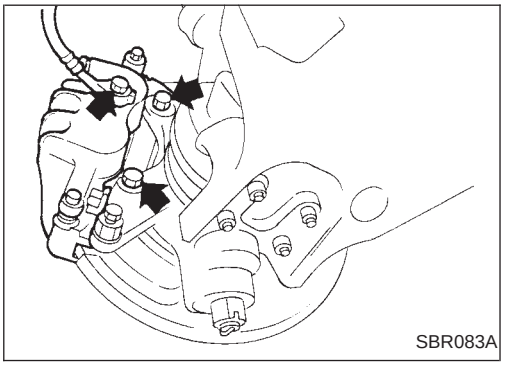

Removal

WARNING:

Clean brake pads with a vacuum dust collector to minimize the hazard of airborne materials.

CAUTION:

Suspend caliper assembly with wire so as not to stretch brake hose.

Remove torque member fixing bolts and connecting bolt.

- **It is not necessary to remove connecting bolt except for disassembly or replacement of caliper assembly. In this case, suspend caliper assembly with wire so as not to stretch brake hose.**

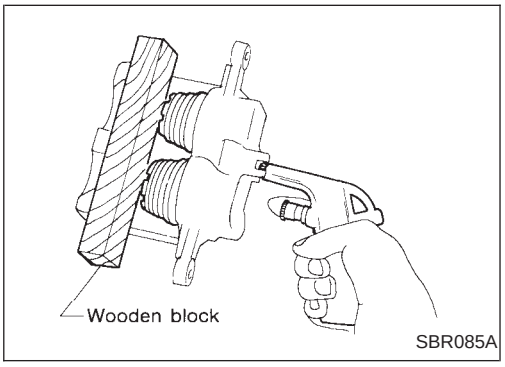

Disassembly

WARNING:
Do not place your fingers in front of piston.

CAUTION:
- **Do not scratch or score cylinder wall.**
- **CL28VD type front disc brake uses plastic pistons. Handle them carefully.**

1. Push out pistons and dust covers with compressed air.
   Use a wooden block so that both pistons come out evenly.
2. Remove piston seals with a suitable tool.

Inspection — Caliper

CYLINDER BODY

- Check inside surface of cylinders for scores, rust, wear, damage or presence of foreign objects. If any of the above conditions are observed, replace cylinder body.
- Minor damage from rust or foreign objects may be eliminated by polishing the surface with a fine emery sandpaper. Replace cylinder body if necessary.

CAUTION:
Use brake fluid to clean. Never use mineral oil.

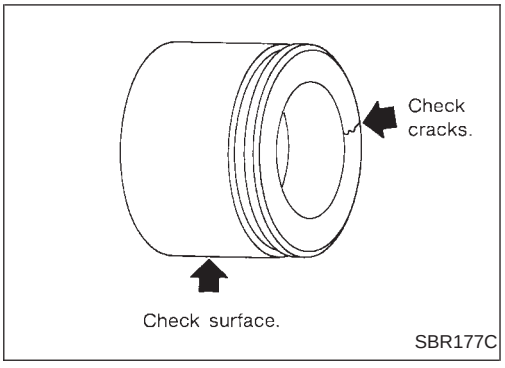

PISTON

CAUTION:
Piston sliding surface is plated. Do not polish with emery sandpaper even if rust or foreign objects are stuck to sliding surface.

Check pistons for uneven surface, chips or cracks. Replace if any of these conditions are observed.

SLIDE PIN, PIN BOLT AND PIN BOOT

Check for wear, cracks or other damage. Replace if any of these conditions are observed.

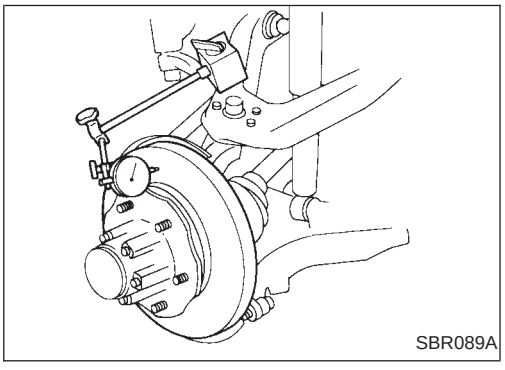

Inspection — Rotor

RUNOUT

1. Check runout using a dial indicator.
   - **Make sure that wheel bearing axial end play is within specification before measuring. Refer to FA section (“Front Wheel Bearing”, “ON-VEHICLE SERVICE”).**
   Maximum runout:
   0.07 mm (0.0028 in)
2. If the runout is out of specification, machine rotor with on-car brake lathe (“MAD, DL-8700”, “AMMCO 700 and 705” or equivalent).

Inspection — Rotor (Cont'd)

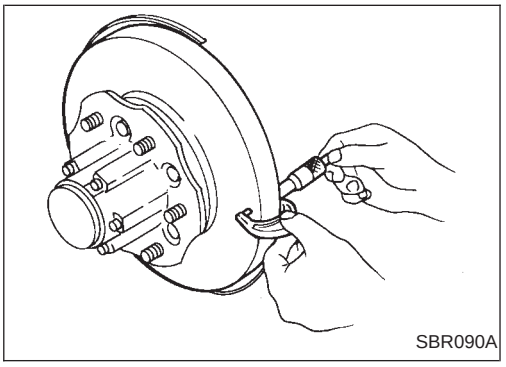
SBR090A

THICKNESS

Thickness variation (At least 8 positions):
Maximum 0.02 mm (0.0008 in)

If thickness variation exceeds specification, machine rotor with on-car brake lathe.

Rotor repair limit:
24.0 mm (0.945 in)

Assembly

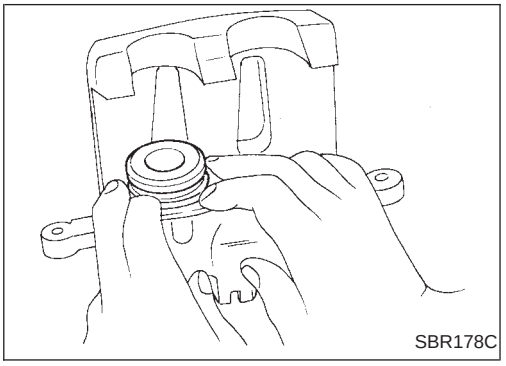
SBR178C

1. Insert piston seal into groove on cylinder body.
2. With piston boot fitted to piston, insert piston boot into groove on cylinder body and install piston.
3. Properly secure piston boot.

CAUTION:

- **Secure dust seal properly.**
- **Lubricate with new brake fluid before installing plastic pistons into cylinder body.**

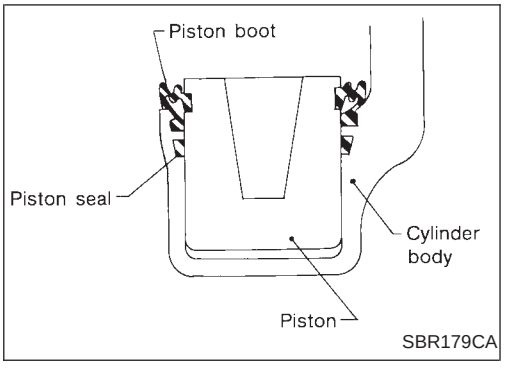

SBR179CA

Installation

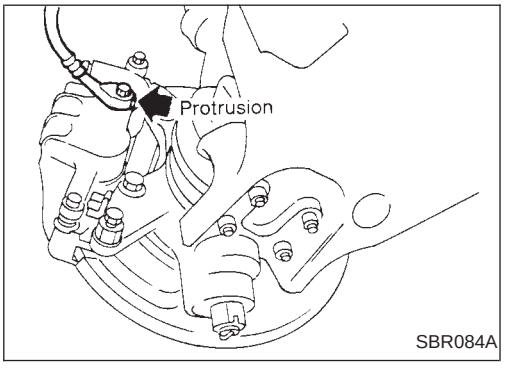

SBR084A

CAUTION:

- **Refill with new brake fluid DOT 3.**
- **Never reuse drained brake fluid.**

1. Install caliper assembly.
2. Install brake hose to caliper securely.
3. Install all parts and secure all bolts.
4. Bleed air. Refer to "Bleeding Brake System", BR-7.

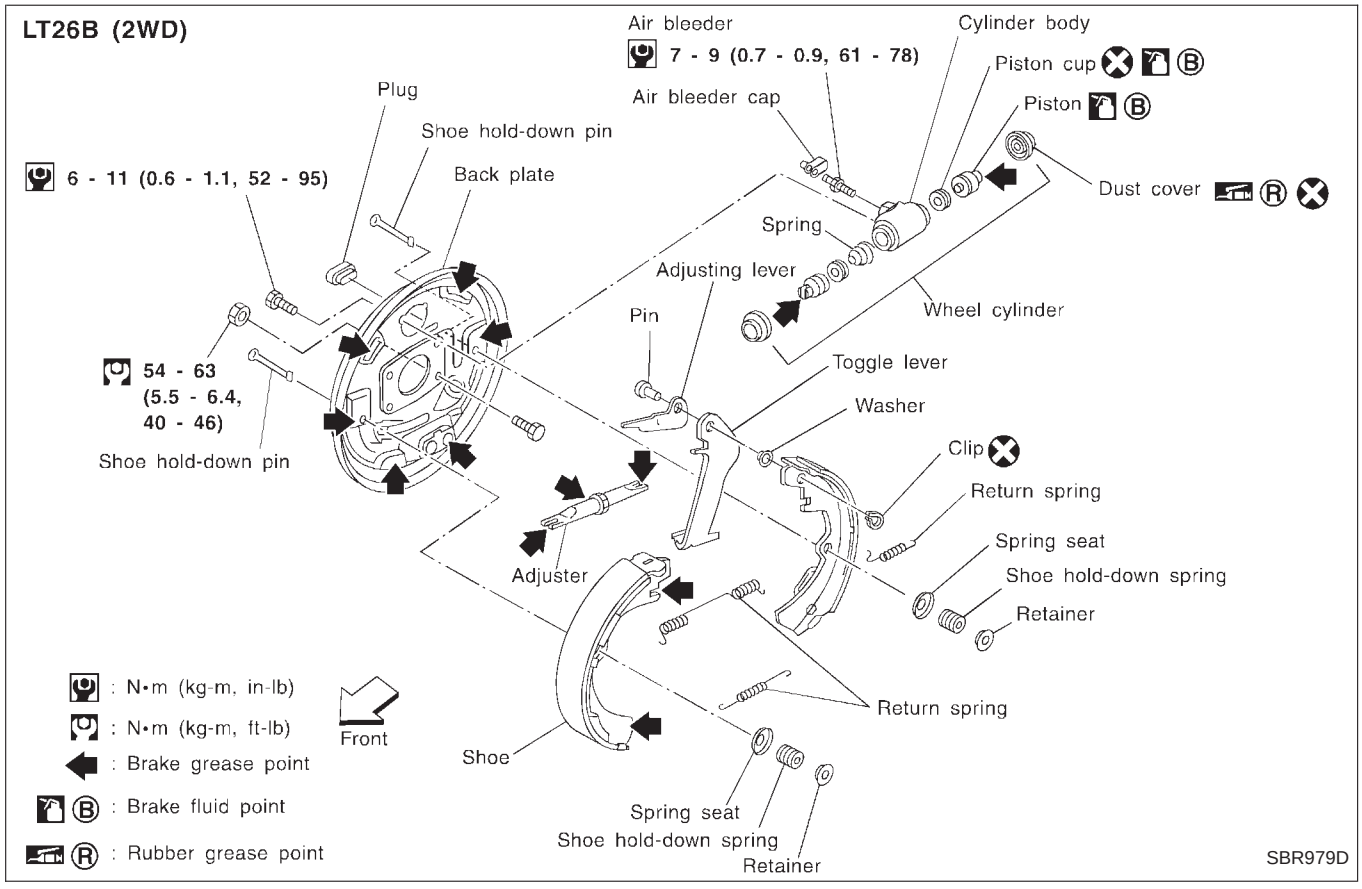
LT26B (2WD)
Air bleeder
7 - 9 (0.7 - 0.9, 61 - 78)
Cylinder body
Piston cup
Piston
Air bleeder cap
Plug
Shoe hold-down pin
Back plate
6 - 11 (0.6 - 1.1, 52 - 95)
Dust cover
Spring
Adjusting lever
Wheel cylinder
Pin
Toggle lever
54 - 63
(5.5 - 6.4,
40 - 46)
Washer
Shoe hold-down pin
Clip
Return spring
Spring seat
Shoe hold-down spring
Adjuster
Retainer
: N•m (kg-m, in-lb)
: N•m (kg-m, ft-lb)
: Brake grease point
: Brake fluid point
: Rubber grease point
Front
Return spring
Shoe
Spring seat
Shoe hold-down spring
Retainer
SBR979D

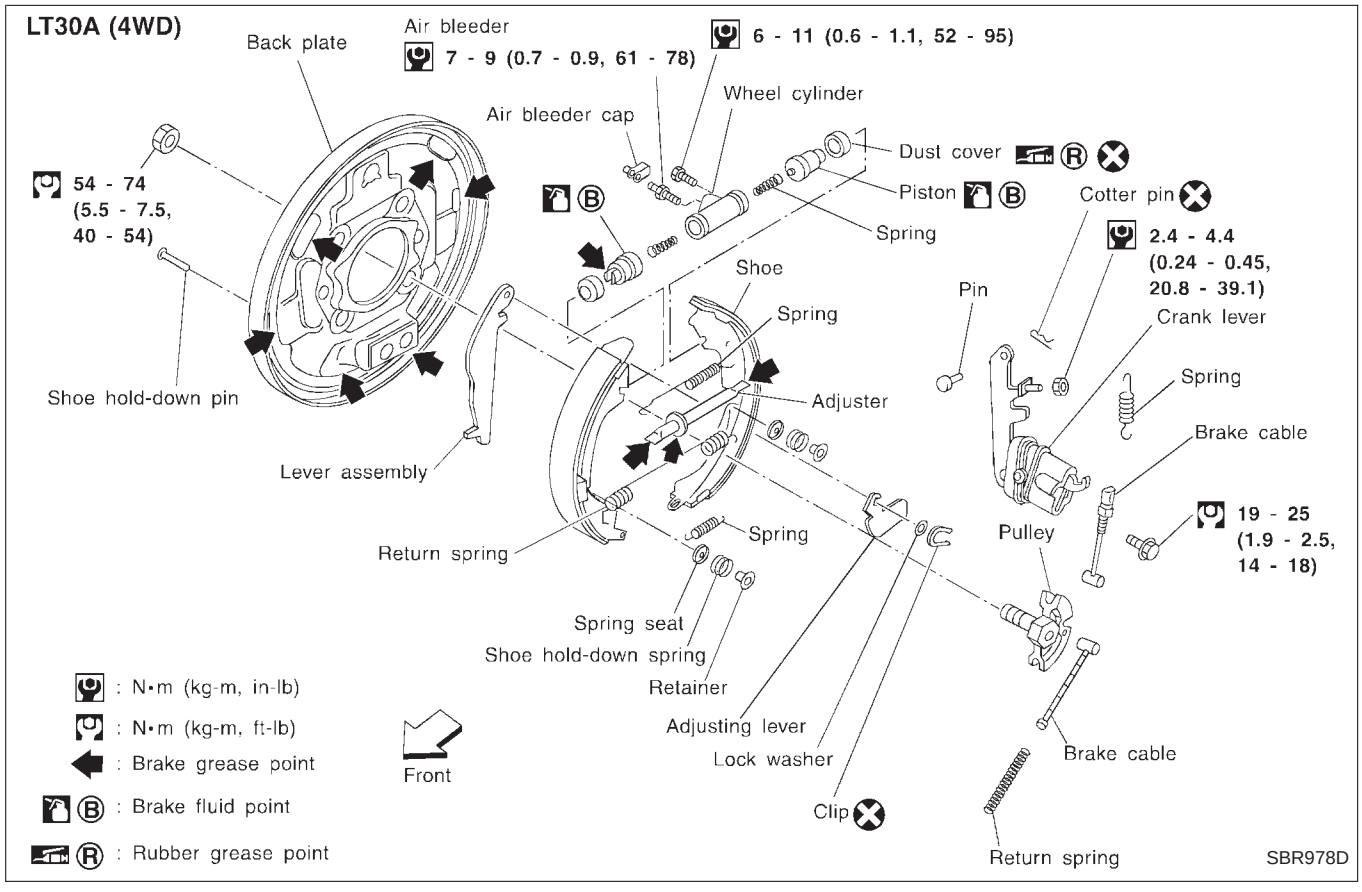
LT30A (4WD)
Back plate
Air bleeder
7 - 9 (0.7 - 0.9, 61 - 78)
6 - 11 (0.6 - 1.1, 52 - 95)
Wheel cylinder
Air bleeder cap
Dust cover
54 - 74
(5.5 - 7.5,
40 - 54)
Piston
Cotter pin
Spring
2.4 - 4.4
(0.24 - 0.45,
20.8 - 39.1)
Shoe
Pin
Spring
Crank lever
Spring
Shoe hold-down pin
Adjuster
Brake cable
Lever assembly
19 - 25
(1.9 - 2.5,
14 - 18)
Spring
Pulley
Return spring
Spring seat
Shoe hold-down spring
Retainer
: N•m (kg-m, in-lb)
: N•m (kg-m, ft-lb)
: Brake grease point
: Brake fluid point
: Rubber grease point
Front
Adjusting lever
Lock washer
Brake cable
Clip
Return spring
SBR978D

Removal

WARNING:

Clean brake lining with a vacuum dust collector to minimize the hazard of airborne materials.

CAUTION:

Make sure parking brake lever is completely released.

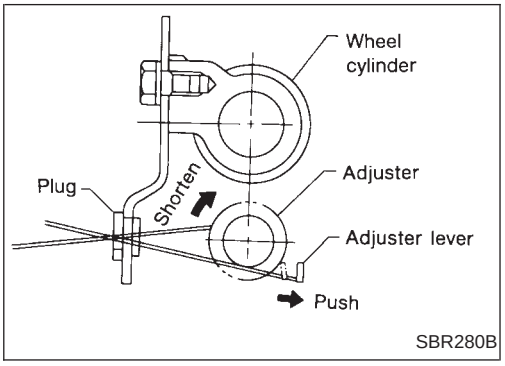

1. Release parking brake lever fully, then remove drum.

- **If drum is hard to remove, the following procedure should be carried out.**

a. **Remove plug, then shorten adjuster to make clearance between brake shoe and drum.**

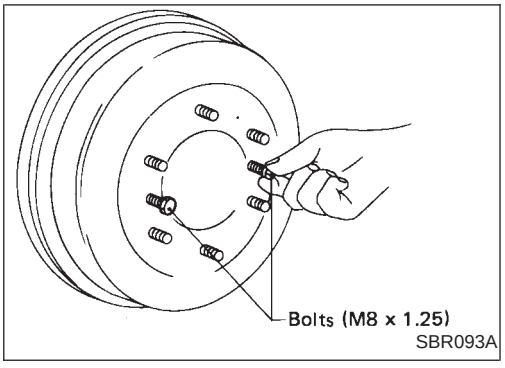

b. **Install two bolts as shown. Tighten the two bolts gradually.**

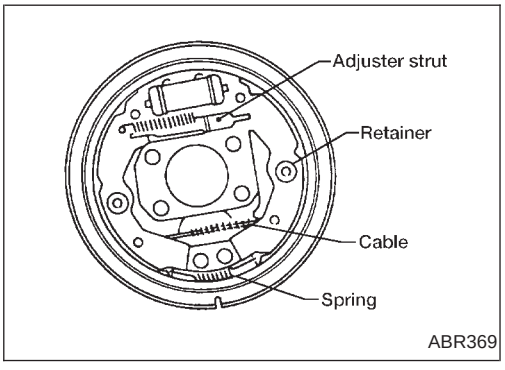

2. After removing retainer, remove spring by rotating shoes.

- **Be careful not to damage wheel cylinder piston boots.**
- **Be careful not to damage parking brake cable when separating it.**

3. Remove adjuster.
4. Disconnect parking brake cable from toggle lever.

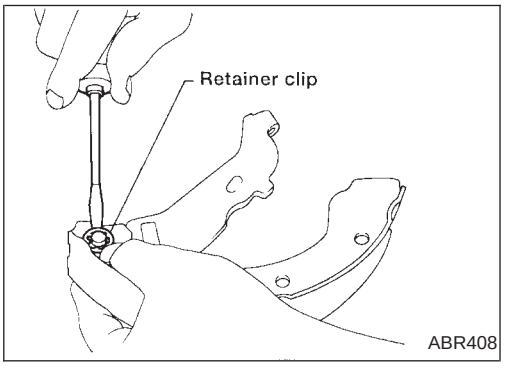

5. Remove retainer clip with a suitable tool. Then separate toggle lever and brake shoe.

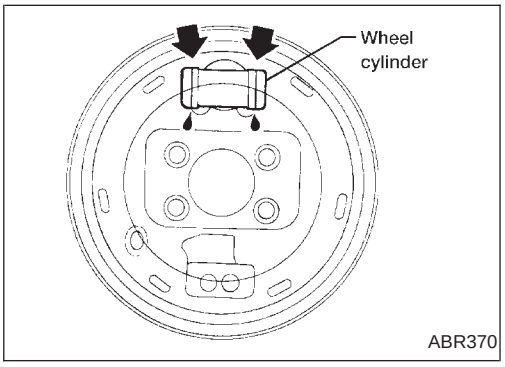

Inspection — Wheel Cylinder

- Check wheel cylinder for leakage.
- Check for wear, damage and loose conditions. Replace if any such condition exists.

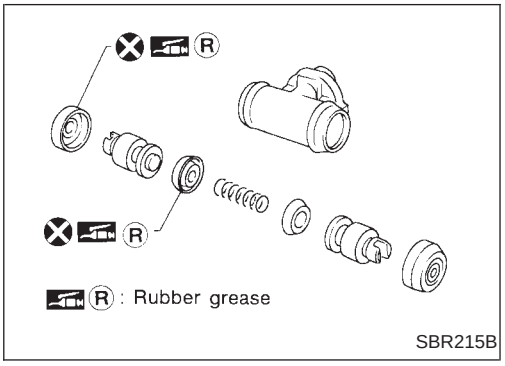

Wheel Cylinder Overhaul

- Check all internal parts for wear, rust and damage. Replace if necessary.
- Pay attention not to scratch cylinder when installing pistons.

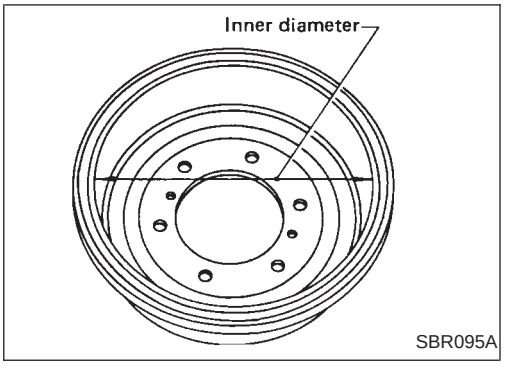

Inspection — Drum

Maximum inner diameter (Repair limit):
LT26B 261.5 mm (10.30 in)
LT30A 296.5 mm (11.67 in)

- Contact surface should be finished with No. 120 to 150 emery sandpaper.
- Using a brake lathe, machine brake drum if it shows score marks, partial wear or stepped wear.
- After brake drum has been completely reconditioned or replaced, check drum and shoes for proper contact pattern.

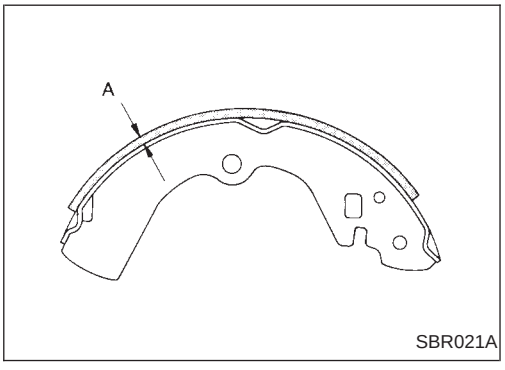

Inspection — Lining

Check lining thickness.

Standard lining thickness:
LT26B 5.5 mm (0.217 in)
LT30A 6.1 mm (0.240 in)
Lining wear limit (A):
LT26B 1.5 mm (0.059 in)
LT30A 1.5 mm (0.059 in)

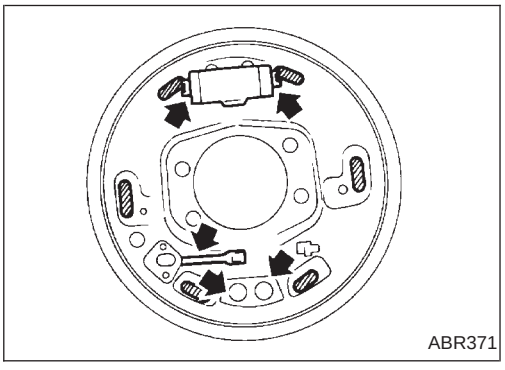

Installation

- **Always perform shoe clearance adjustment. Refer to BR-30.**
- **Burnish the brake contact surfaces after refinishing or replacing drums or rotors, after replacing pads or linings, or if a soft pedal occurs at very low mileage. Refer to "Brake Burnishing Procedure", "ON-VEHICLE SERVICE", BR-6.**

1. Fit toggle lever to brake shoe with retainer clip.
2. Apply brake grease to the contact areas shown at left.

Installation (Cont'd)

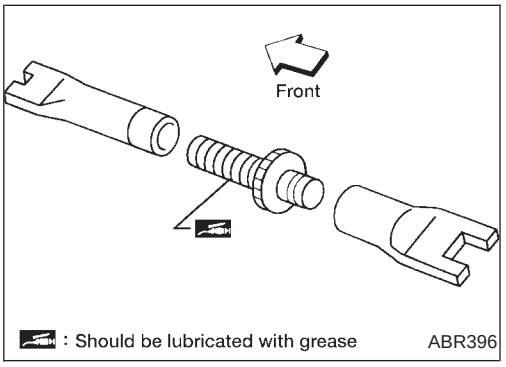

3. Shorten adjuster by rotating it.
- **Pay attention to direction of adjuster.**

Wheel	Screw
Left	Left-hand thread
Right	Right-hand thread

4. Connect parking brake cable to toggle lever.
5. Install all parts.
- **Be careful not to damage wheel cylinder piston boots.**

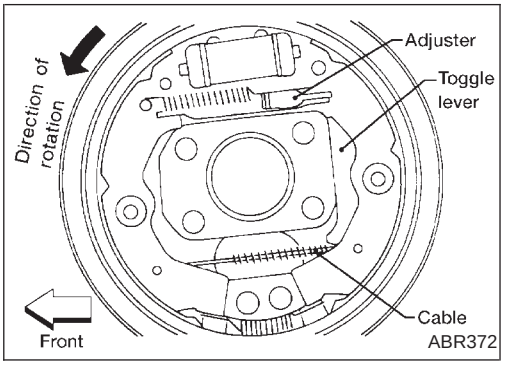

6. Check all parts are installed properly.
- **After installation is completed, adjust shoe-to-drum clearance.**
7. Install brake drum.
8. When installing new wheel cylinder or overhauling wheel cylinder, bleed air. Refer to "Bleeding Brake System", BR-7.
9. Adjust parking brake. Refer to BR-30.
- Install all the parts by referring to the figure below.

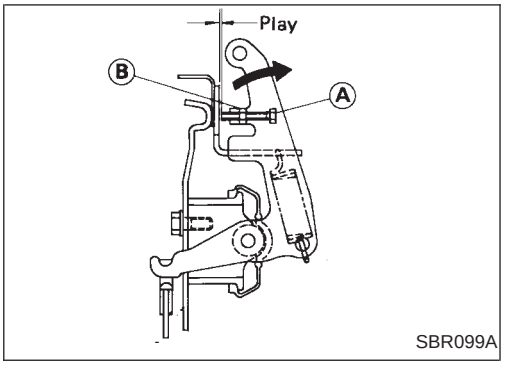

LT30A model

- After installing crank lever on back plate, make sure that there is no play between crank lever and back plate. If play exists, adjust bolt Ⓐ and lock nut Ⓑ.

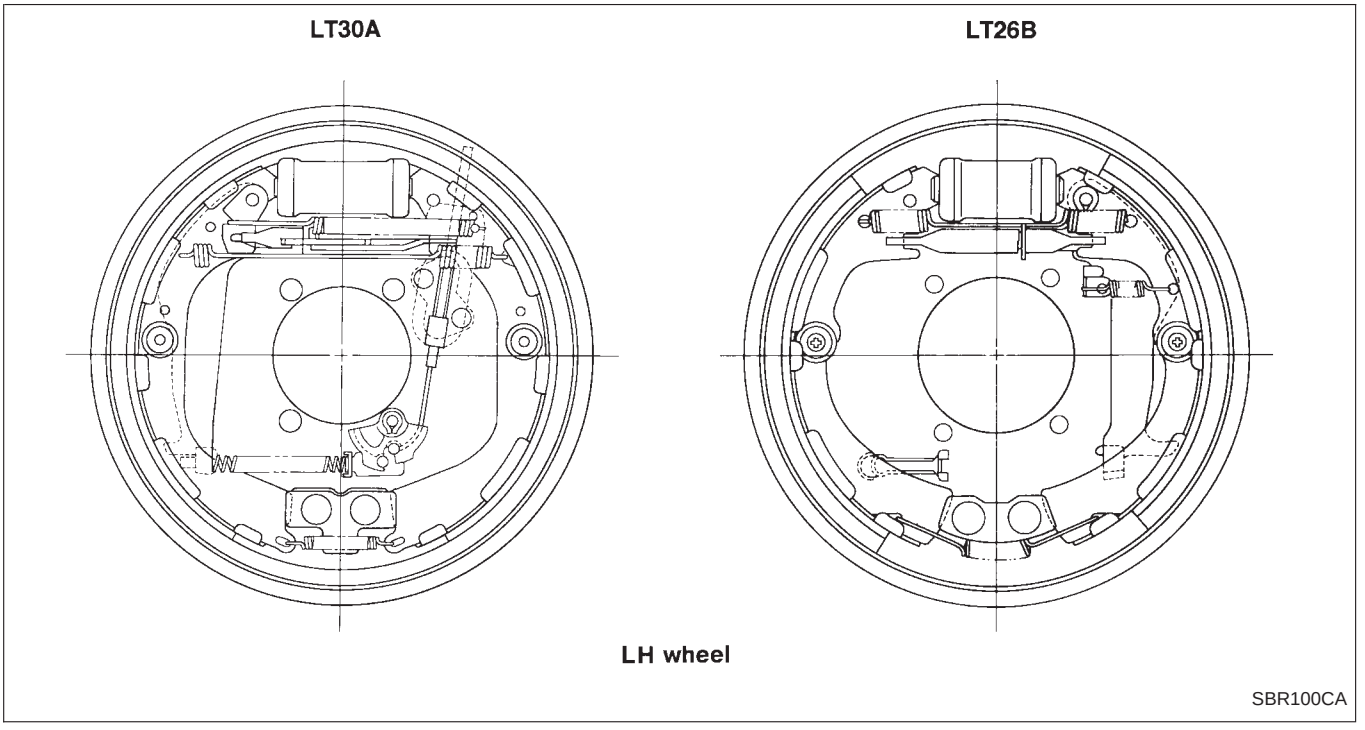

2WD

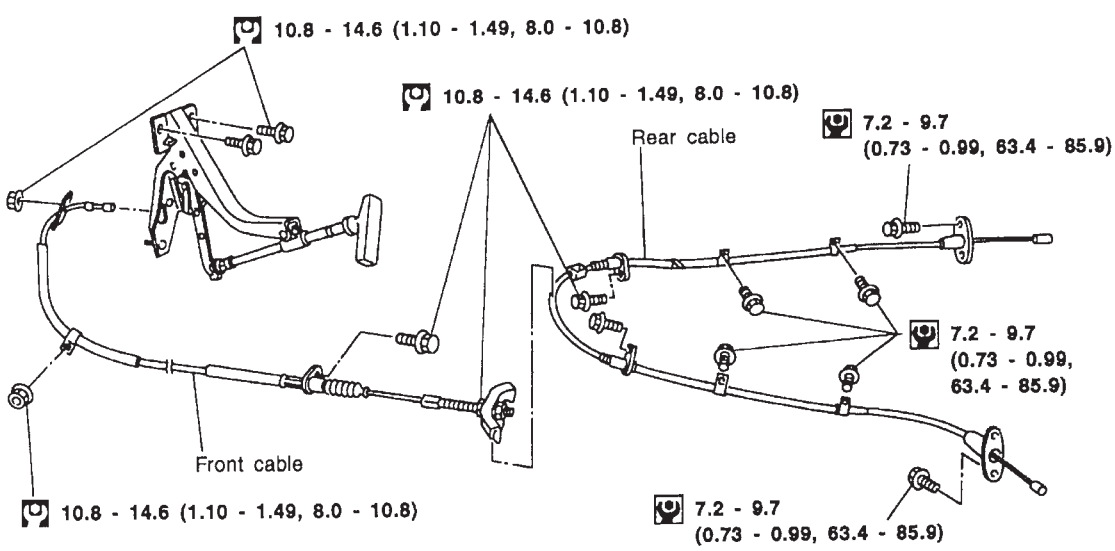

4WD Stick type

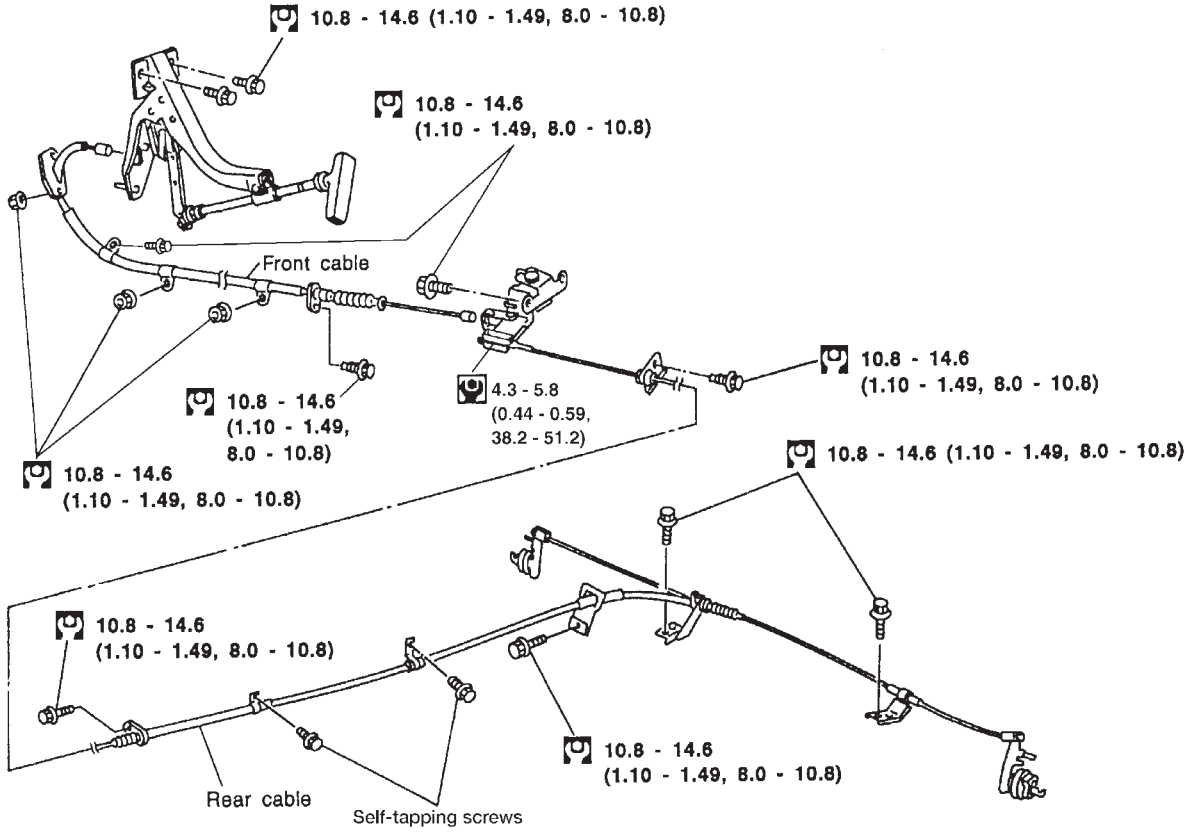

: N•m (kg-m, in-lb)

: N•m (kg-m, ft-lb)

ABR814

Removal and Installation

- Be careful not to damage cable.
- Make sure there is no free play after installation.

Inspection

1. Check control lever for wear or other damage. Replace if necessary.
2. Check wires for discontinuity or deterioration. Replace if necessary.
3. Check warning lamp and switch. Correct if necessary.
4. Check part at each connecting portion and, if found deformed or damaged, replace.

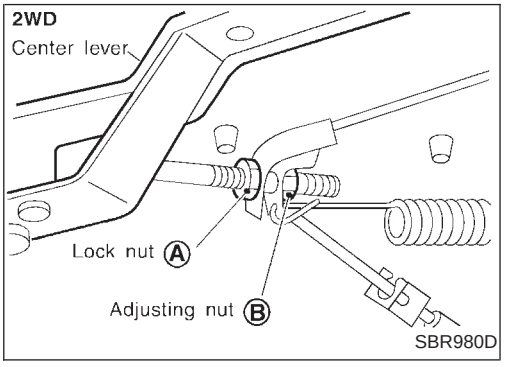

Adjustment

Adjust parking brake as follows:

1. Fully release parking brake lever.
2. Loosen Ⓐ and rotate Ⓑ until parking brake cable loosens.
3. Depress brake pedal several times until clicking sound does not occur from rear brakes.
4. Adjust clearance between rear brake shoe and drum.
5. Adjust parking brake lever stroke by rotating Ⓑ.
6. Pull parking brake lever with specified force. Check lever stroke and ensure smooth operation.
7. Readjust clearance between rear brake shoe and drum.

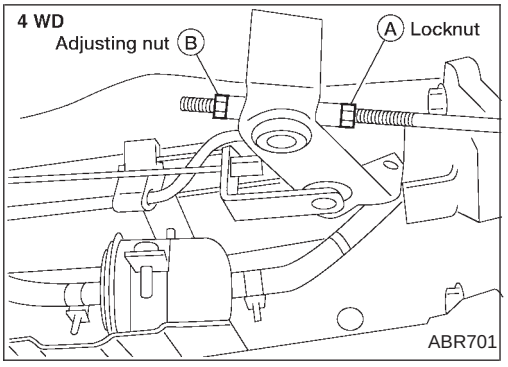

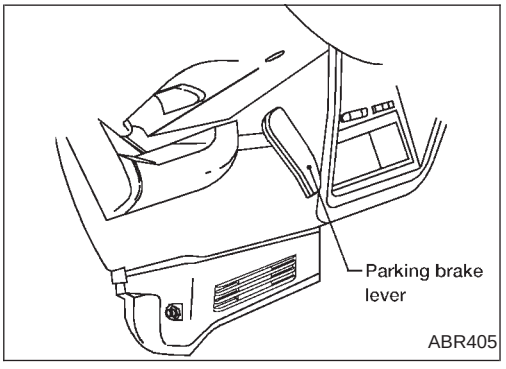

Purpose

The Rear Wheel Anti-Lock Brake System (ABS) consists of electronic and hydraulic components. It controls rear braking force so locking of the rear wheels can be avoided.
The ABS:
1) Improves proper tracking performance during severe braking.
2) Eases obstacle avoidance during severe braking.
3) Improves vehicle stability.

Operation

- When the vehicle speed is less than 10 km/h (6 MPH) this system does not work.
- The Rear Wheel Anti-Lock Brake System (ABS) has self-test capabilities. The system turns on the ABS warning lamp for a few seconds each time the ignition switch is turned ON. After the engine is started, the ABS warning lamp turns off. The system performs a circuit check when the ignition switch is first turned ON. If a malfunction is found during this check, the ABS warning lamp will stay on.
- While driving, a mechanical noise may be heard and slight pedal pulsation may be felt during ABS operation. This is a normal condition.

ABS Hydraulic Circuit

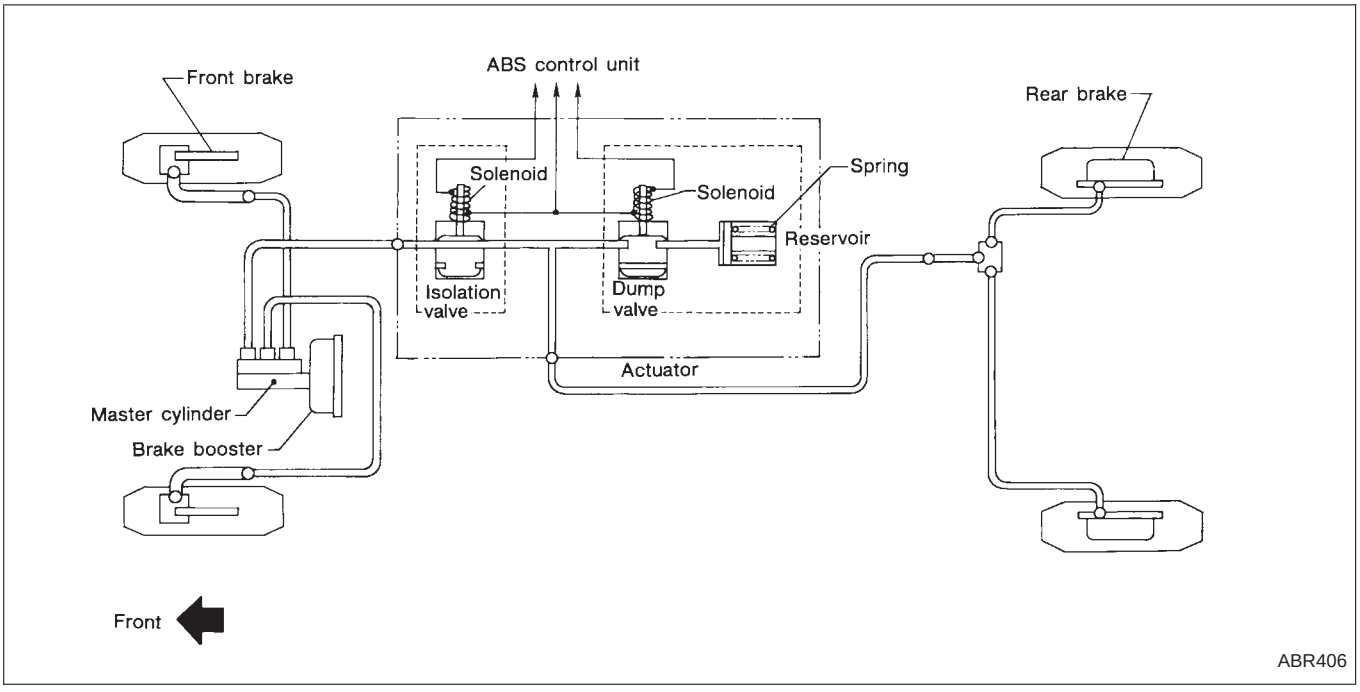

System Components

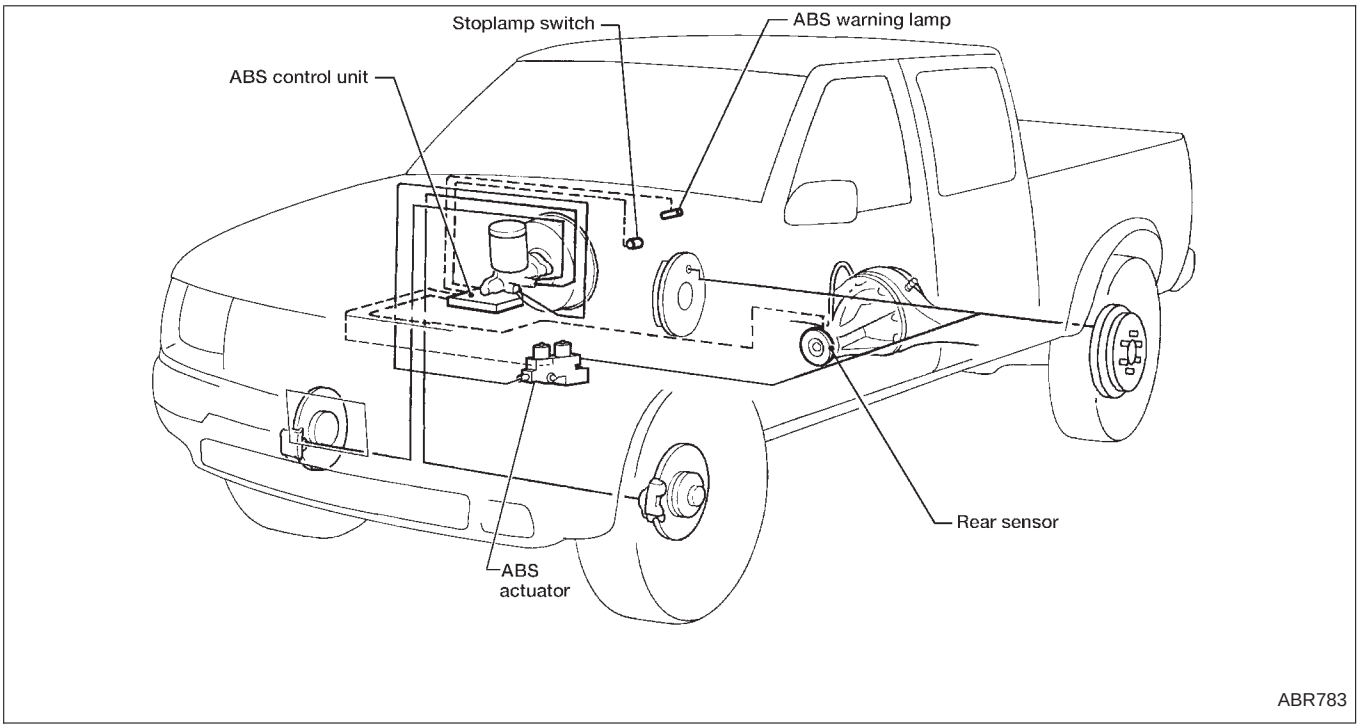

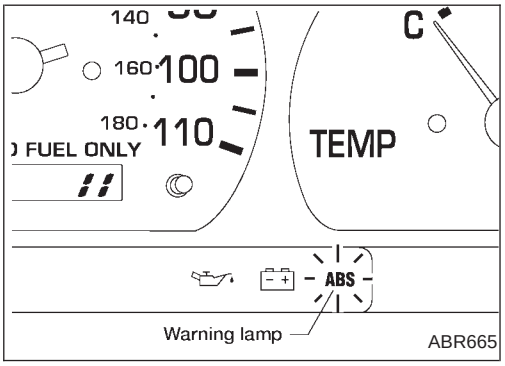

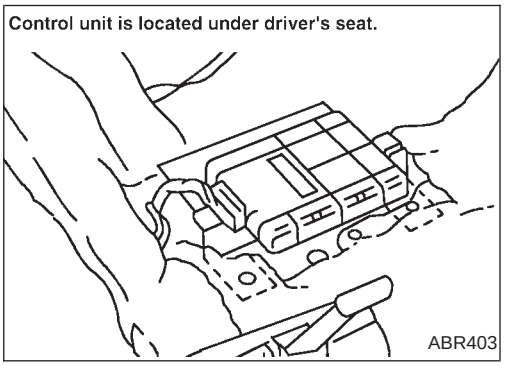

System Description

REAR SENSOR

The rear sensor unit consists of a gear-shaped sensor rotor and a sensor unit. The sensor unit consists of a bar magnet around which a coil is wound. The sensor rotor is installed on the companion flange and the sensor unit is installed on the rear axle housing. A sine-wave current is generated by the rear sensor unit as the rear axle pinion rotates. The frequency and voltage increase as the rotating speed increases.

ABS CONTROL UNIT

The ABS control unit computes the rear axle pinion rotating speed by reading the signal from the rear sensor unit. Then it supplies a DC current to the ABS actuator. If any electrical malfunction is detected in the system, the ABS control unit causes the ABS warning lamp to turn on. In this condition, the ABS system will be deactivated by the ABS control unit, and the vehicle's brake system reverts to normal operation.

Removal and Installation

CAUTION:

Be careful not to damage sensor edge and sensor rotor teeth. In case the final drive assembly needs to be removed, disconnect the ABS sensor from the assembly and move it away. Failure to do so may result in damage to the sensor wires making the sensor inoperative.

For final drive models using collapsible spacer (H190A, C200), bearing preload must be adjusted whenever companion flange is removed. Therefore, final drive overhaul is required.

REAR SENSOR AND CONTROL UNIT

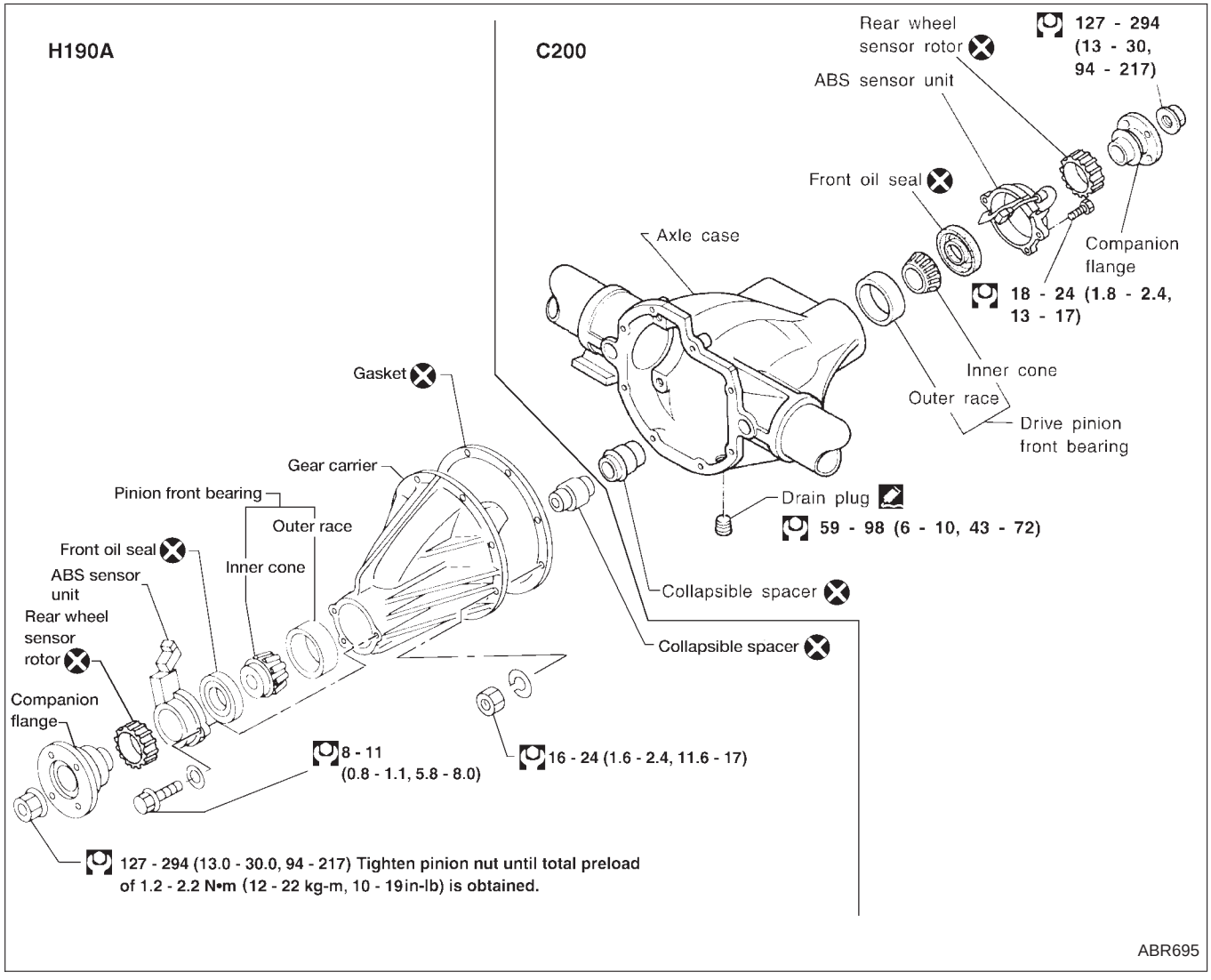

Removal and Installation (Cont'd)

ACTUATOR

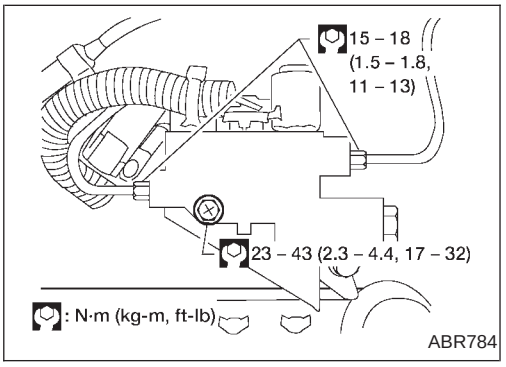

Removal

1. Disconnect battery cable.
2. Drain brake fluid.
   Refer to ''Changing Brake Fluid'', BR-6.
3. Disconnect connectors, brake pipes and remove fixing bolts and flare nuts.

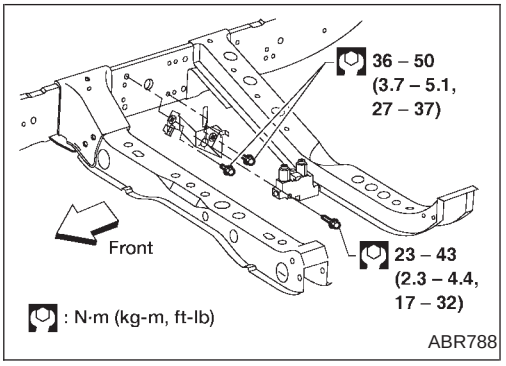

Installation

CAUTION:

After installation, refill brake fluid. Then bleed air. Refer to ''Bleeding Procedure'', BR-7.

1. Connect brake pipes temporarily.
2. Secure fixing bolts.
3. Torque brake pipe flare nuts.
4. Connect connectors and battery cable.

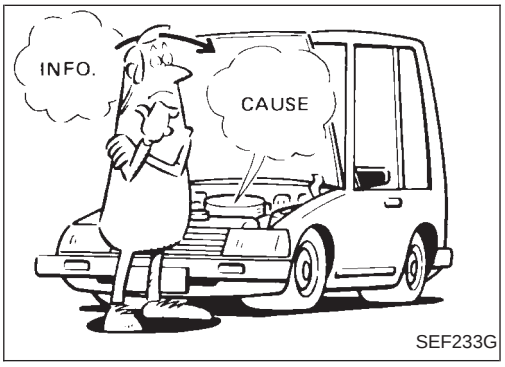

SEF233G

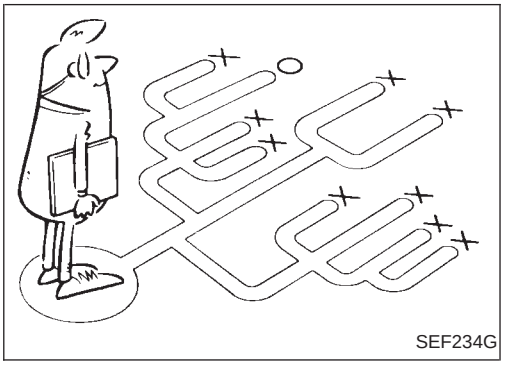
SEF234G

How to Perform Trouble Diagnoses for Quick and Accurate Repair

INTRODUCTION

The ABS system has an electronic control unit to control major functions. The control unit accepts input signals from sensors and instantly drives the actuators. It is essential that both kinds of signals are proper and stable. It is also important to check for conventional problems such as air leaks in booster lines, lack of brake fluid, or other problems with the brake system.

It is much more difficult to diagnose a problem that occurs intermittently rather than continuously. Most intermittent problems are caused by poor electric connections or faulty wiring. In this case, careful checking of suspicious circuits may help prevent the replacement of good parts.

A visual check only may not find the cause of the problems, so a road test should be performed.

Before undertaking actual checks, take a few minutes to talk with a customer who approaches with an ABS complaint. The customer is a very good source of information on such problems; especially intermittent ones. Through the talks with the customer, find out what symptoms are present and under what conditions they occur. Start your diagnosis by looking for ‘‘conventional’’ problems first. This is one of the best ways to troubleshoot brake problems on an ABS controlled vehicle.

Also check related service bulletins for information.

How to Perform Trouble Diagnoses for Quick and Accurate Repair (Cont'd)

WORK FLOW

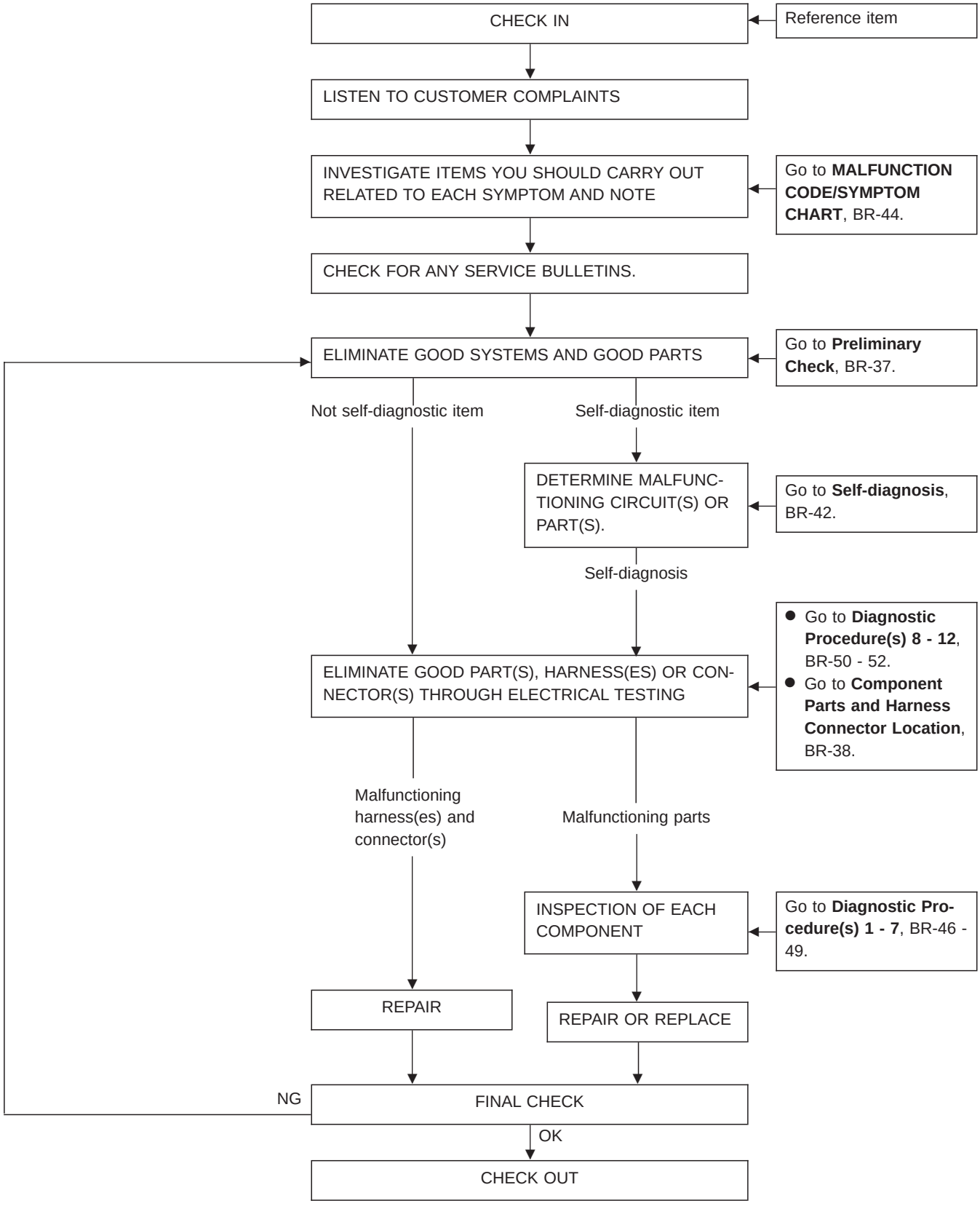

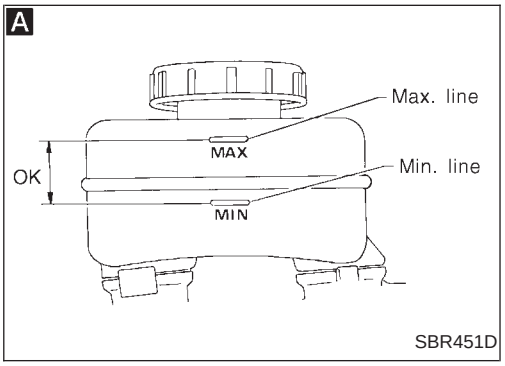

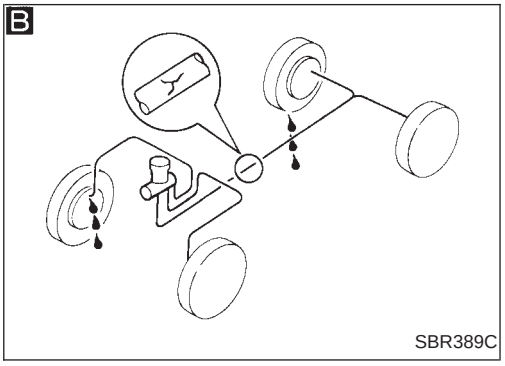

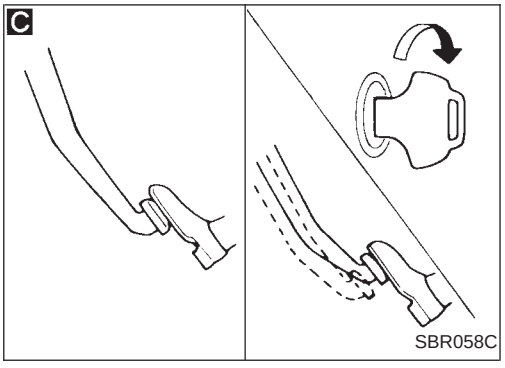

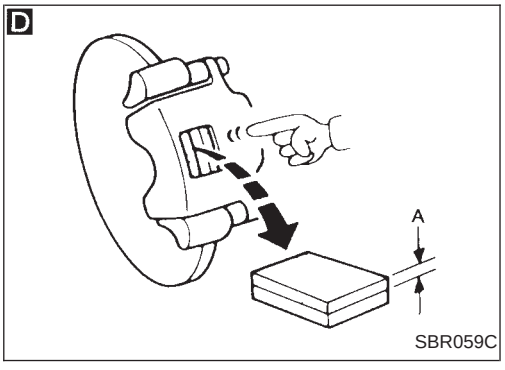

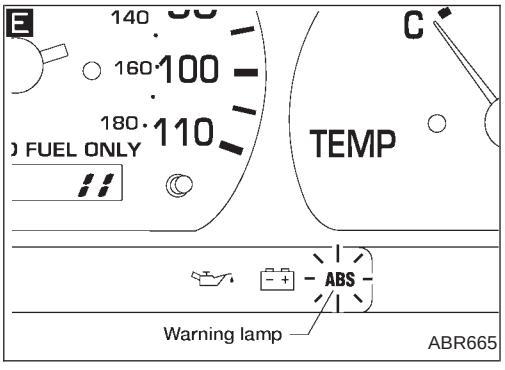

Preliminary Check

A

Check brake fluid level in reservoir tank.
Low fluid level may indicate brake pad wear or leakage from brake line.

↓

B

Check brake line for leakage. → NG → Repair.

OK ↓

C

Check brake booster for operation and air tightness. Refer to BR-19. → NG → Replace.

OK ↓

D

Check brake pads, rotors, linings and drums. Refer to BR-27. → NG → Replace.

OK ↓

A

Check brake fluid level in reservoir tank again. → NG → Fill up brake fluid.

OK ↓

E

Check warning lamp activation.
When ignition switch is turned ON, warning lamp turns on. → NG → Check fuse, warning lamp bulb and warning lamp circuit.

OK ↓

Check warning lamp for deactivation after engine is started. → NG → Go to Self-diagnosis, BR-42.

OK ↓

Drive vehicle at speeds over 40 km/h (25 MPH) for at least one minute.

↓

Ensure warning lamp remains off while driving. → NG → Go to Self-diagnosis, BR-42.

OK ↓

END

Component Parts and Harness Connector Location

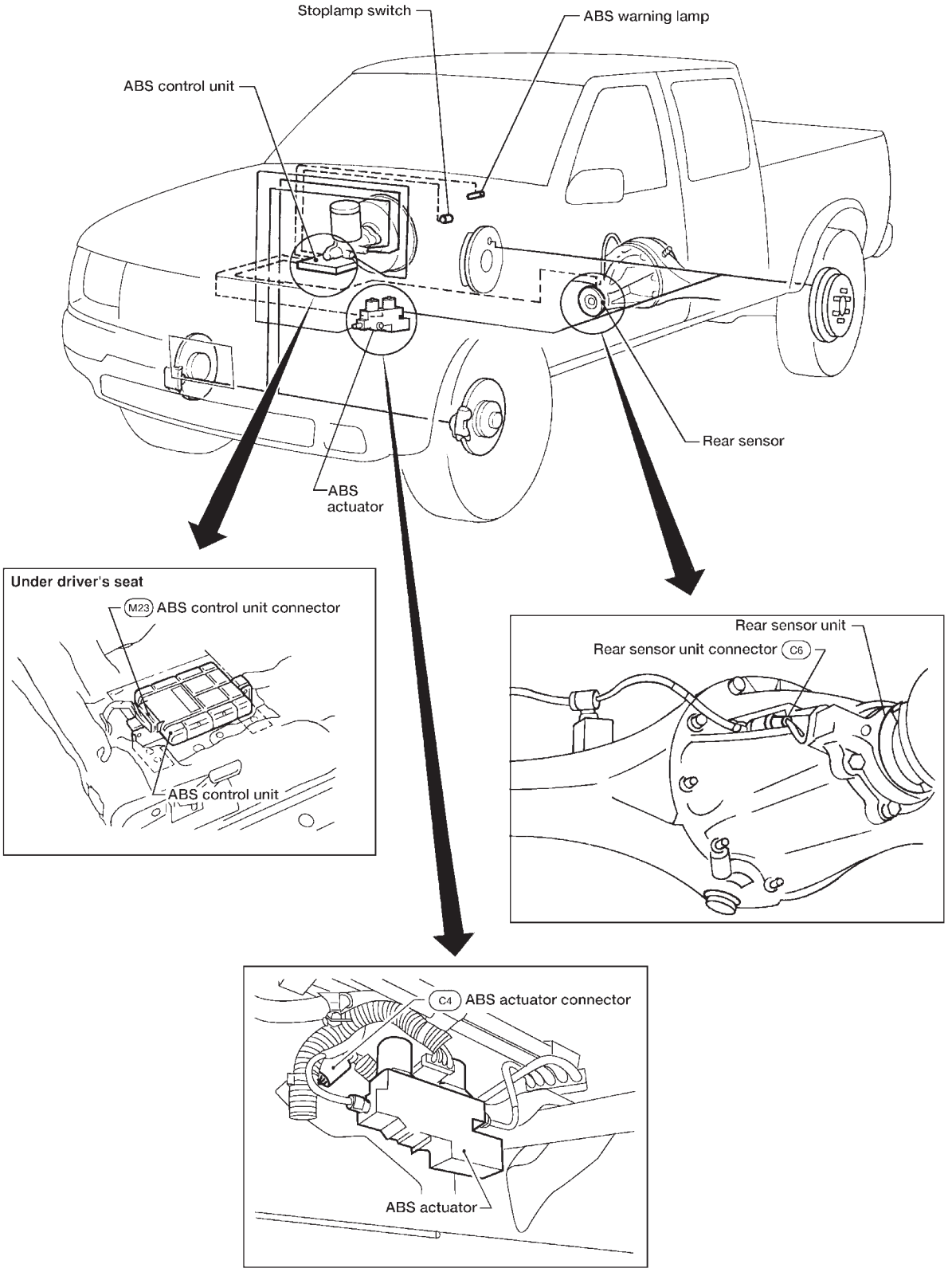

ABR785

Schematic

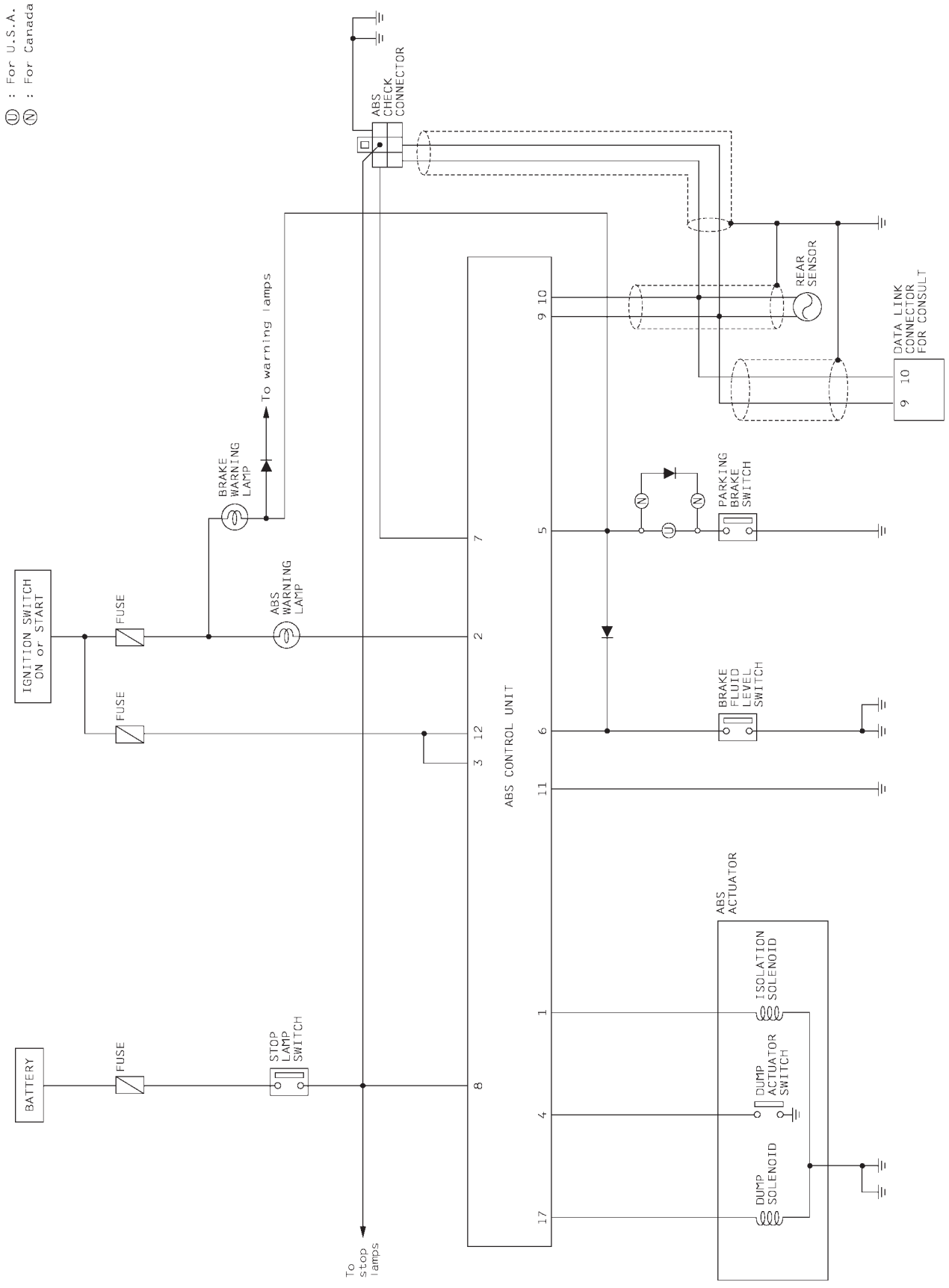

ABR567

Wiring Diagram –ABS–

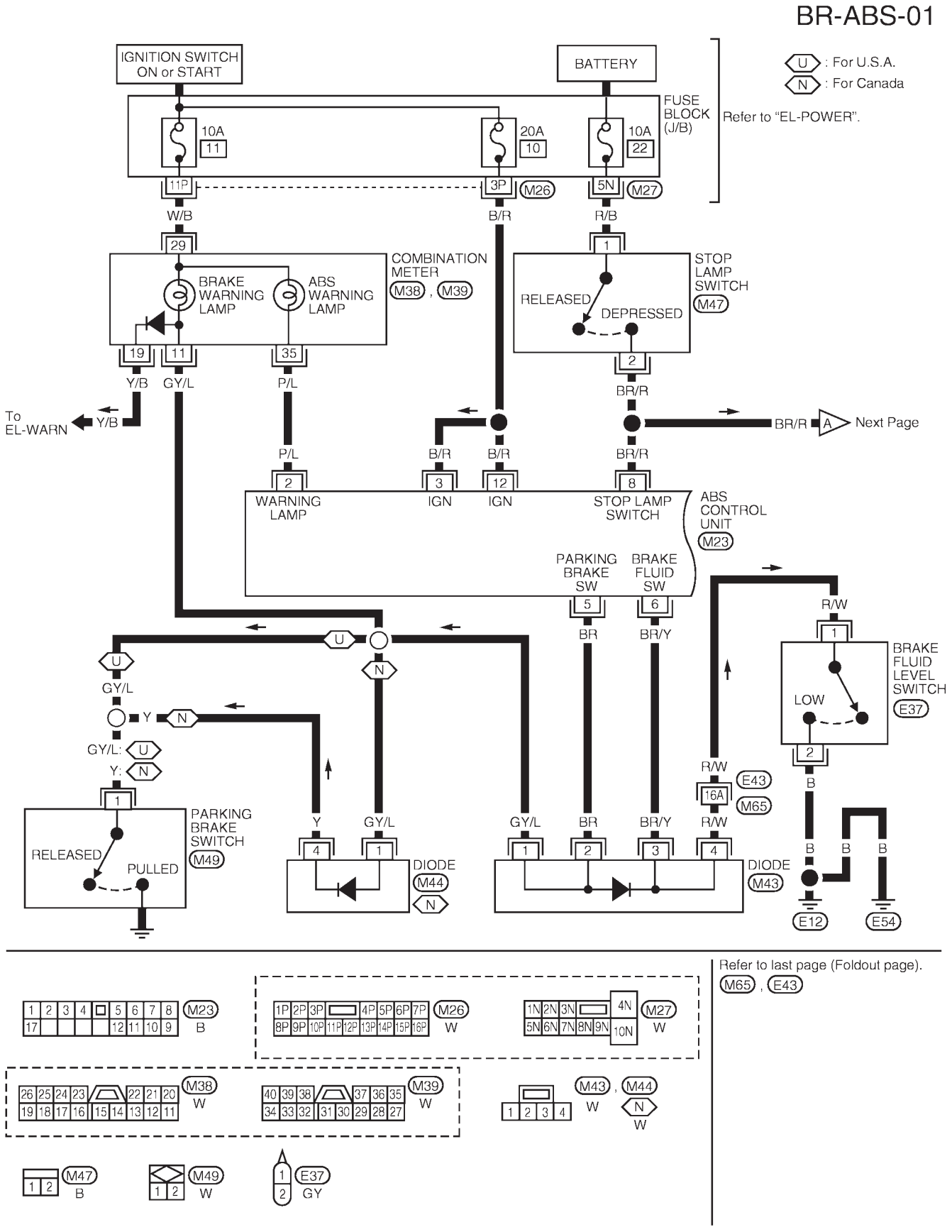

ABR571

Wiring Diagram –ABS– (Cont'd)

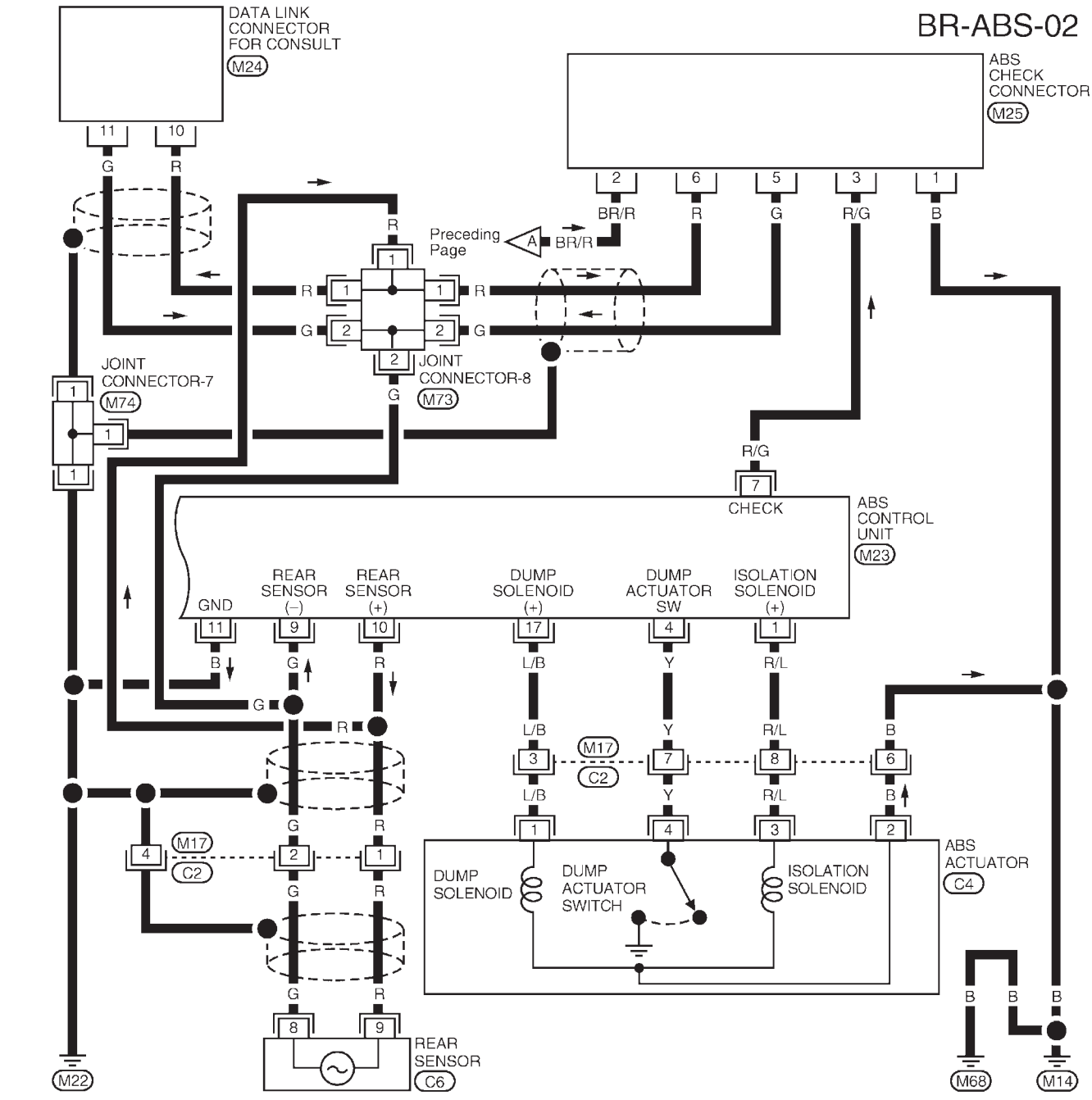

Refer to last page (Foldout page).
M73 , M74

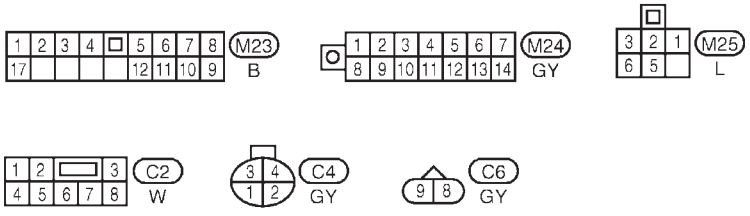

ABR808

Self-diagnosis

CHECKING THE NUMBER OF WARNING LAMP FLASHES

When a problem occurs in the ABS, the ABS warning lamp on the instrument panel turns on. As shown in the table, the control unit performs self-diagnosis.

To obtain satisfactory self-diagnosing results, the vehicle must be driven above 40 km/h (25 MPH) for at least one minute before the self-diagnosis is performed. After the vehicle has been stopped, the number of ABS warning lamp flashes is counted by grounding the check terminal, with the engine running, thereby identifying a malfunctioning part or unit by the number of flashes.

If more than two parts or units malfunction at the same time, the ABS warning lamp will flash to indicate one of the malfunctioning parts or units. After the part or unit has been repaired, the ABS warning lamp will then flash to indicate that the other part or unit is malfunctioning.

Self-diagnosis (Cont'd)

SELF-DIAGNOSIS PROCEDURE 1

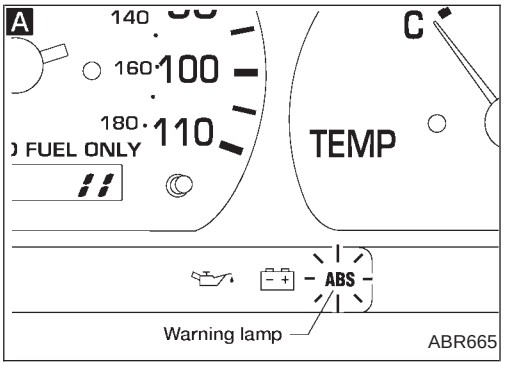

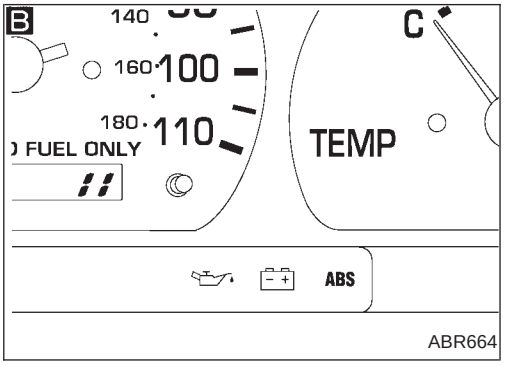

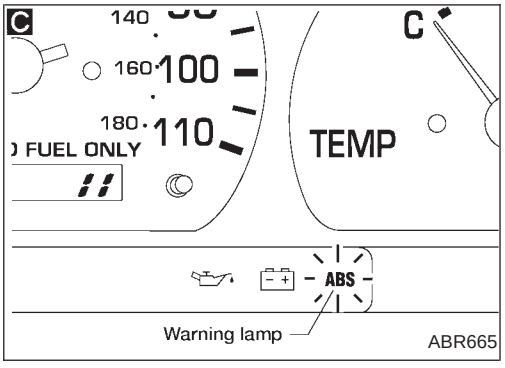

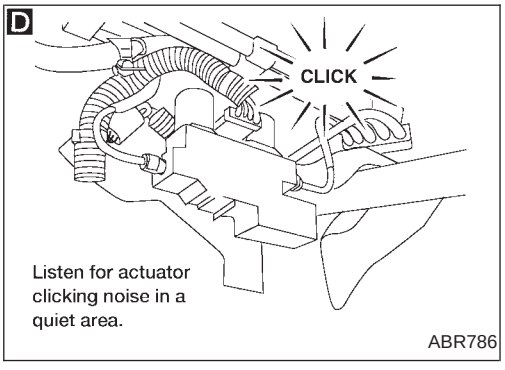

A

1. Turn ignition switch ON.
2. Check warning lamp activation.
   When ignition switch is turned on, warning lamp should turn on.

NG → Go to **Main Power Supply and Ground Circuit Check**, BR-45.
If OK, replace ABS control unit.

OK ↓

B

Check warning lamp deactivates within a few seconds.

NG → Go to **Self-Diagnosis Procedure 2**, BR-44.

OK ↓

C

Check warning lamp reactivation.

NG → Go to **Self-Diagnosis Procedure 2**, BR-44.

OK ↓

Drive vehicle for 1 minute or more at 40 km/h (25 MPH) or more.
Does warning lamp activate again?

Yes → Go to **Self-Diagnosis Procedure 2**, BR-44.

No ↓

D

1. Stop engine.
2. Turn ignition switch ON.
   Check actuator clicking noise, when warning lamp turns off.

OK → Self-operating function is OK.

NG ↓

Check actuator.
Go to Electrical Component Inspection, BR-53.

Self-diagnosis (Cont'd)

SELF-DIAGNOSIS PROCEDURE 2

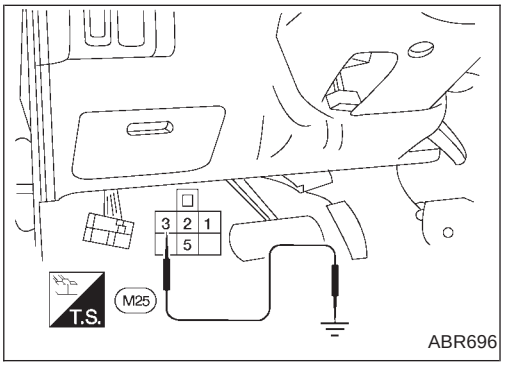

1. Start engine.
2. Ground the check terminal of check connector.
3. Check the warning lamp flashing.

No → Check brake fluid level. Go to **Main Power Supply and Ground Circuit Check**, BR-45.

OK → Replace ABS control unit.

Yes → Count the number of flashes. Go to **MALFUNCTION CODE/SYMPTOM CHART** below.

MALFUNCTION CODE/SYMPTOM CHART

Code No./Symptom (No. of warning lamp flashes)	Malfunctioning part	Diagnostic Procedure
2	Actuator ISO solenoid (open-circuit)	1
7	Actuator ISO solenoid (short-circuit)	1
4	Actuator ISO solenoid (blocked)	2
3	Actuator DUMP solenoid (open-circuit)	3
8	Actuator DUMP solenoid (short-circuit)	3
9	Rear sensor (open-circuit)	4
10	Rear sensor (short-circuit)	4
6	Rear sensor (erratic)	5
13	Control unit	6
14		
15		
16	None (system OK)	None
5	Other	7
Pedal vibration or noise	—	12
Long stopping distance	—	10
Brake pedal stroke is large	—	9
ABS does not work	—	11
ABS works frequently	—	8

Main Power Supply and Ground Circuit Check

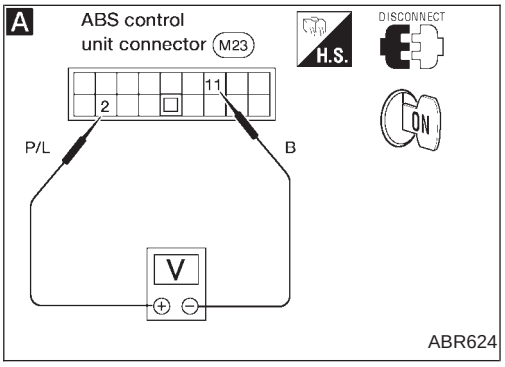

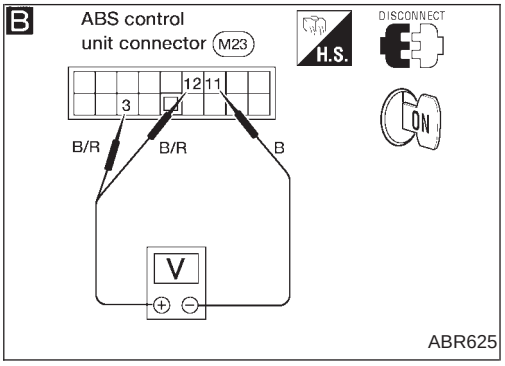

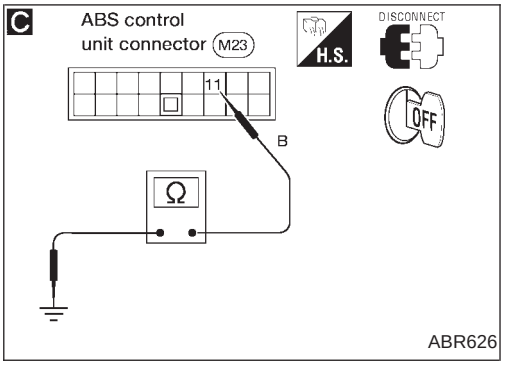

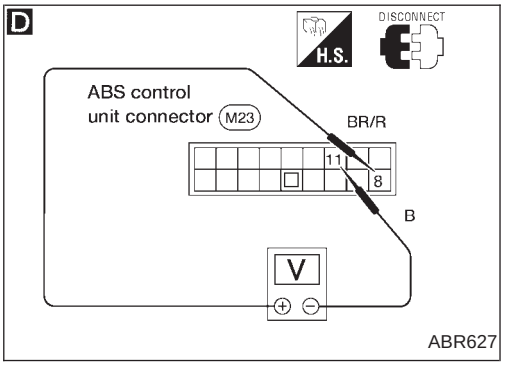

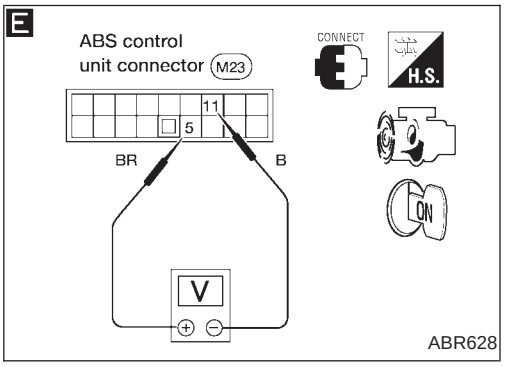

A

CHECK WARNING LAMP POWER SUPPLY.
1. Connect battery cable and confirm battery voltage is 12V.
2. Disconnect ABS control unit connector.
3. Turn ignition switch ON.
4. Do approx. 12 volts exist between ABS control unit connector terminals ② and ⑪?

No → **C**

Yes ↓

C

CHECK GROUND CIRCUIT.
Check harness continuity between ABS control unit terminal ⑪ and suitable body ground.
Continuity should exist.

OK → Check and replace fuse or warning lamp if necessary. Repair ignition harness, relay and warning lamp connectors.

NG → Repair harness or connectors.

B

CHECK ABS CONTROL UNIT POWER SUPPLY.
1. Turn ignition switch ON.
2. Do approx. 12 volts exist between ABS control unit connector terminals ⑫, ③ and ⑪?

No → Check and replace fuse or repair harness and connectors.

Yes ↓

D

CHECK STOP LAMP SWITCH POWER SUPPLY.
1. Depress brake pedal.
2. Do approx. 12 volts exist between ABS control unit connector terminals ⑧ and ⑪?

No → Adjust stop lamp switch if necessary. Replace stop lamp switch, if necessary, or repair harness or connectors.

Yes ↓

E

CHECK PARKING BRAKE SWITCH POWER SUPPLY.
1. Confirm that brake fluid level is adequate.
   If necessary, refill it.
2. Start engine.
3. Do approx. 12 volts exist between ABS control unit connector terminals ⑤ and ⑪ without parking brake applied?
   Do approx. 0 volts exist with parking brake applied?

No → Adjust parking brake switch, if necessary. Replace parking brake switch, if necessary, or repair harness or connectors.

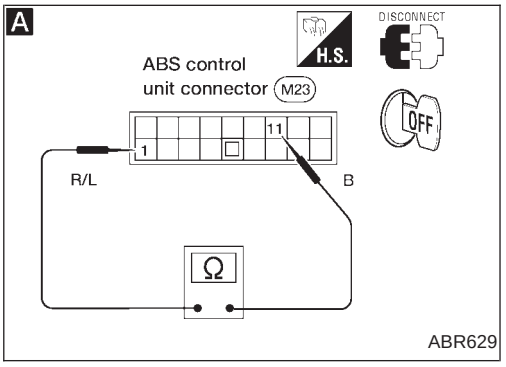

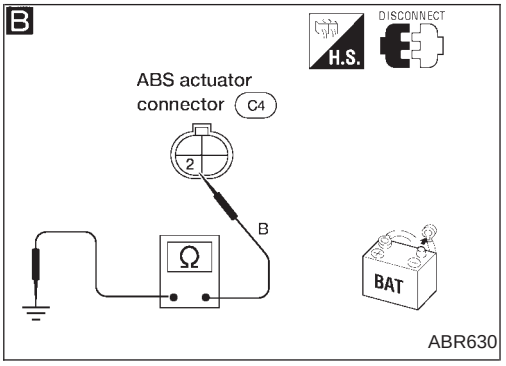

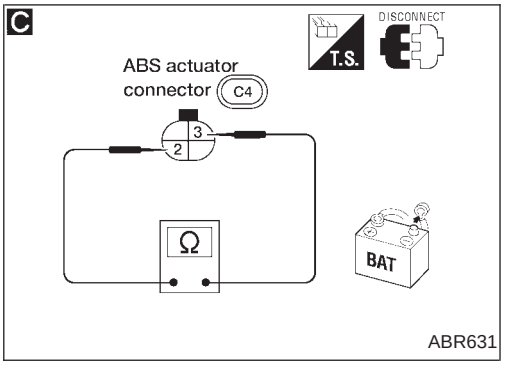

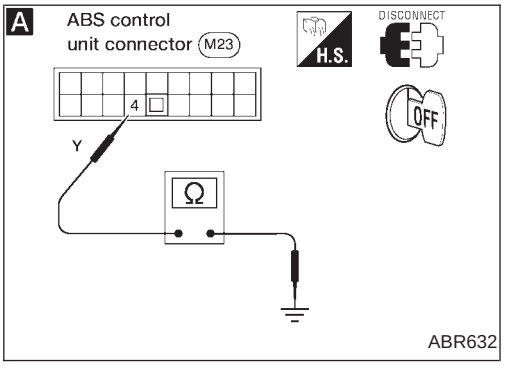

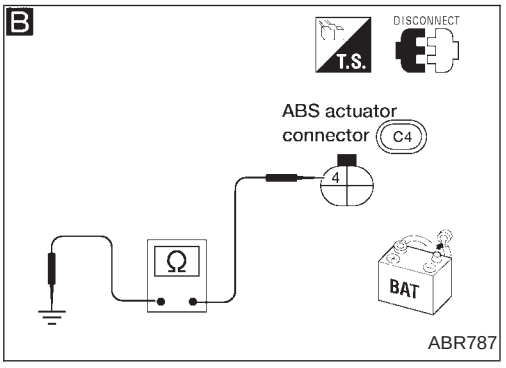

Diagnostic Procedure 1

ABS ACTUATOR ISO SOLENOID SHORT CIRCUIT OR OPEN (Warning lamp flashing number 2 or 7)

Remove battery negative terminal connector.

↓

A

CHECK ISO SOLENOID.
Check resistance between ABS control unit connector terminals ① and ⑪.
Resistance: Approximately 4Ω

- OK → Replace ABS control unit.
- NG ↓

CHECK ABS CONTROL UNIT GROUND CIRCUIT.
Go to **Main Power Supply and Ground Circuit Check**, BR-45.

- NG → Repair harness or connectors.
- OK ↓

B

CHECK ABS ACTUATOR GROUND CIRCUIT.
Check harness continuity between ABS actuator terminal ② and suitable body ground.

- NG → Repair harness or connectors.
- OK ↓

C

CHECK ISO SOLENOID.
Check resistance between ABS actuator connector terminals ② and ③.
Resistance: Approximately 4Ω

- OK → Repair harness and connectors between ISO solenoid and ABS control unit.
- NG ↓

Replace ABS actuator.

Diagnostic Procedure 2

ABS ACTUATOR ISO SOLENOID BLOCKED (Warning lamp flashing number 4)

Remove battery negative terminal connector.

↓

A

CHECK ABS ACTUATOR SWITCH.
Does continuity exist between ABS control unit terminal ④ and suitable body ground?
Continuity should not exist.

- OK → Replace ABS control unit.
- NG ↓

B

Does continuity exist between ABS actuator terminal ④ and suitable body ground?
Continuity should not exist.

- NG → Replace ABS actuator.
- OK ↓

Repair harness and connectors between ABS actuator and ABS control unit.

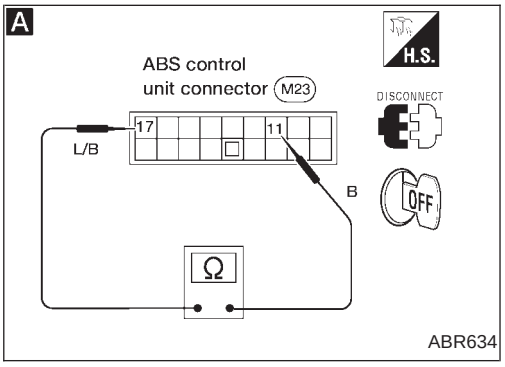

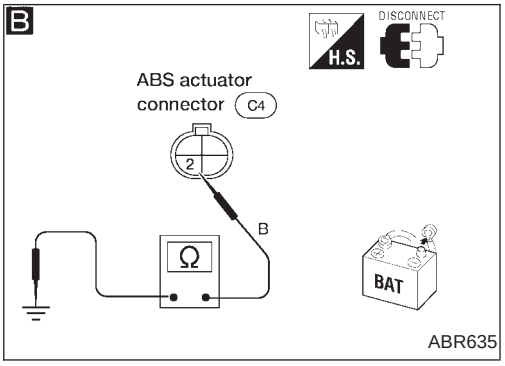

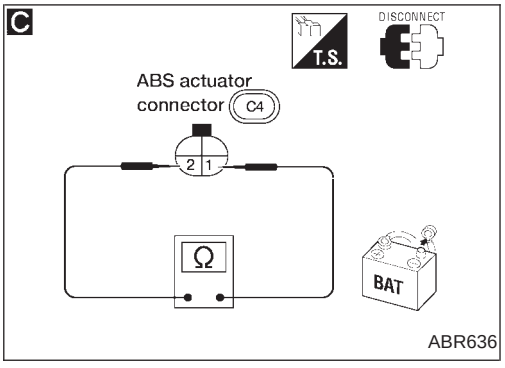

Diagnostic Procedure 3

ABS ACTUATOR DUMP SOLENOID SHORT CIRCUIT OR OPEN (Warning lamp flashing number 3 or 8)

Remove battery negative terminal connector.

↓

A

CHECK DUMP SOLENOID.
Check resistance between ABS control unit connector terminals ⑰ and ⑪.
Resistance:
Approximately 1.5Ω

OK → Replace ABS control unit.

NG ↓

CHECK ABS CONTROL UNIT GROUND CIRCUIT.
Go to **Main Power Supply and Ground Check**, BR-45.

NG → Repair harness or connectors.

OK ↓

B

CHECK ABS ACTUATOR GROUND CIRCUIT.
Check harness continuity between ABS actuator terminal ② and suitable body ground.

NG → Repair harness or connectors.

OK ↓

C

CHECK DUMP SOLENOID.
Check resistance between ABS actuator connector terminals ① and ②.
Resistance:
Approximately 1.5Ω

OK → Repair harness or connectors between dump solenoid and ABS control unit.

NG ↓

Replace ABS actuator.

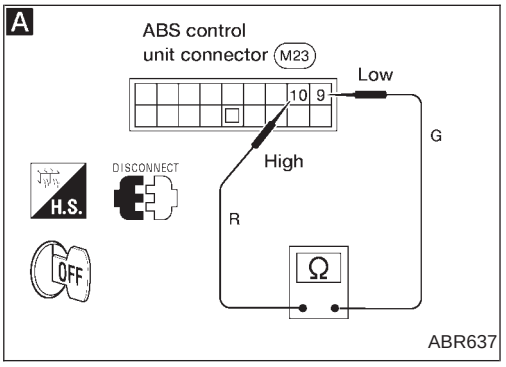

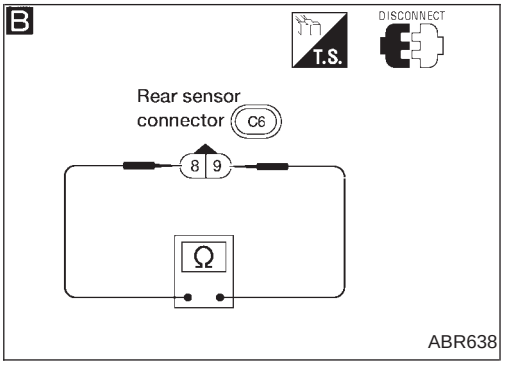

Diagnostic Procedure 4

REAR SENSOR OPEN OR SHORT CIRCUIT (Warning lamp flashing number 9 or 10)

Remove battery negative terminal connector.

↓

A

CHECK REAR SENSOR.
Check resistance between ABS control unit connector terminals ⑩ and ⑨.
Resistance:
1.05 - 1.35 kΩ

OK → Replace ABS control unit.

NG ↓

B

Check resistance between rear sensor unit connector terminals ⑧ and ⑨.
Resistance:
1.05 - 1.35 kΩ

OK → Repair harness or connectors between ABS control unit and rear sensor.

NG ↓

Replace rear sensor unit.

Diagnostic Procedure 5

SENSOR SIGNAL ERRATIC (Warning lamp flashing number 6)

CHECK REAR SENSOR ROTOR TOOTH CONDITION.
1. Remove propeller shaft.
2. Remove companion flange, refer to "DISASSEMBLY" in PD section.
3. Check rotor on companion flange.

NG → Replace rear sensor rotor with companion flange.

OK ↓

Replace ABS control unit.

Diagnostic Procedure 6

ABS CONTROL UNIT (Warning lamp flashing 13, 14 or 15)

ABS control unit malfunction.

↓

Replace ABS control unit.

Diagnostic Procedure 7 (Warning lamp flashing 5)

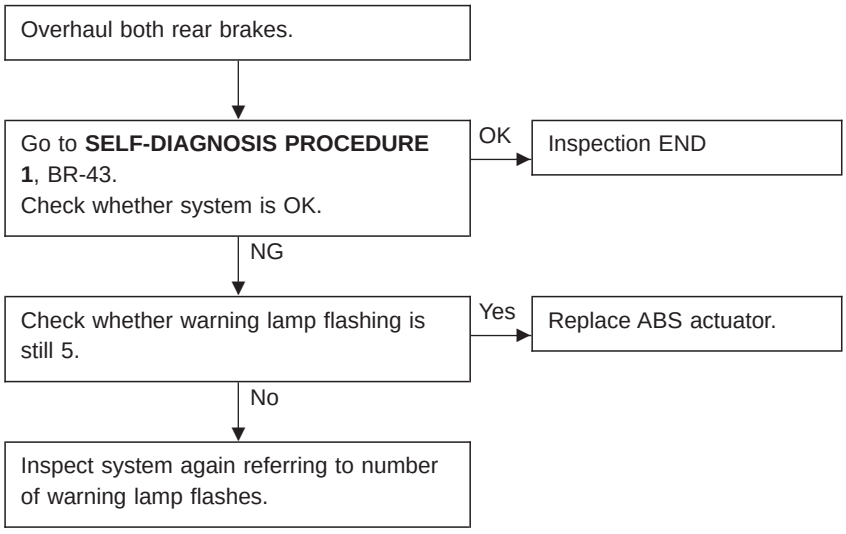

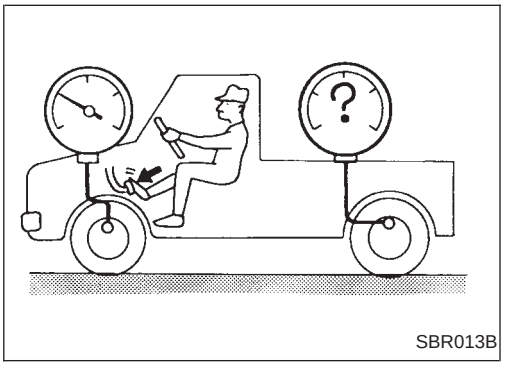

Diagnostic Procedure 8 (ABS works frequently)

CHECK BRAKE FLUID PRESSURE.
Check whether brake fluid pressure distribution is normal.
Refer to BR-12.

NG → Replace master cylinder.

OK ↓

Perform usual brake inspection.

NG → Repair.

OK ↓

When wheel lock occurs frequently due to hard braking operation, the ABS operates at each occurrence of wheel lock. Accordingly, frequent ABS operation is normal under severe braking conditions where wheel lock would occur frequently due to braking.

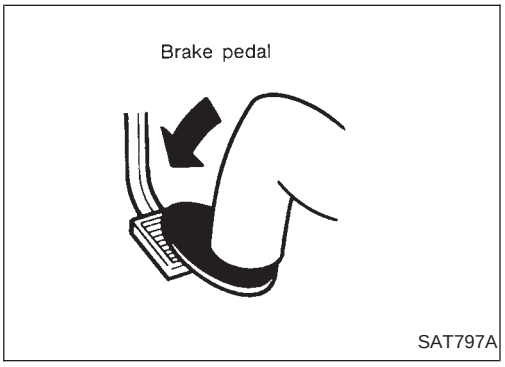

Diagnostic Procedure 9 (Brake pedal stroke is large)

Check whether the symptom usually appears.
- No → Vehicles equipped with ABS may have a tendency to increase pedal stroke during operation.
- Yes ↓

Check for accumulation of air by trying to bleed air.
- No → Perform brake inspection. Refer to BR-21.

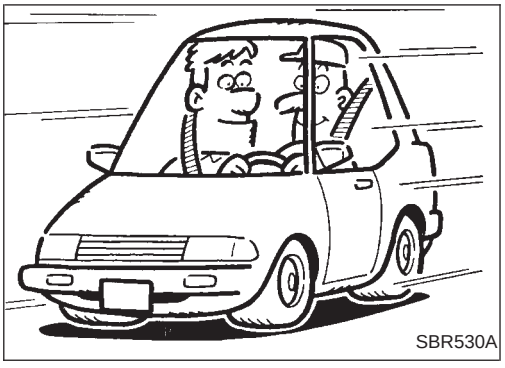

Diagnostic Procedure 10 (Long stopping distance)

Check if road condition is slippery with snow or gravel.
- Yes → Stopping distance may be longer than vehicles which are not equipped with ABS.
- No ↓

Disconnect ABS actuator connector and check whether stopping distance is still long.
- No → Connect ABS actuator connector. Go to **Self-Diagnosis Procedure 1**, BR-43.
- Yes ↓

Perform usual brake inspection and air bleeding.

Diagnostic Procedure 11 (ABS does not work.)

Check whether warning lamp activates.
Go to **Self-Diagnosis Procedure 1**, BR-43.

- Yes → Go to **Self-Diagnosis Procedure 2**, BR-44.
- No ↓

Check whether vehicle speed is under 10 km/h (6 MPH).

- Yes → ABS does not work in this condition.
- No ↓

Check ABS actuator and rear sensor.
Go to **Electrical Component Inspection**, BR-53.

- NG → Replace damaged parts.
- OK ↓

Check main power supply and ground circuit.
Go to **Main Power Supply and Ground Circuit Check**, BR-45.

- NG → Repair faulty part.
- OK ↓

Check operation of ABS.
Refer to B in **Electrical Component Inspection**, BR-53.

- NG → Replace ABS control unit.

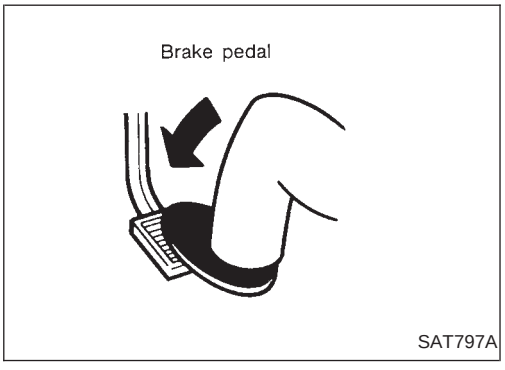

Diagnostic Procedure 12 (Pedal vibration or noise)

Check whether the symptom appears only when brake is applied suddenly.

- Yes → When brake is suddenly applied, ABS works and produces pedal vibration or noise.
- No ↓

Check whether the noise only appears and warning lamp only activates and deactivates when the ignition switch is turned on.

- Yes → Self-operation of ABS functions properly.

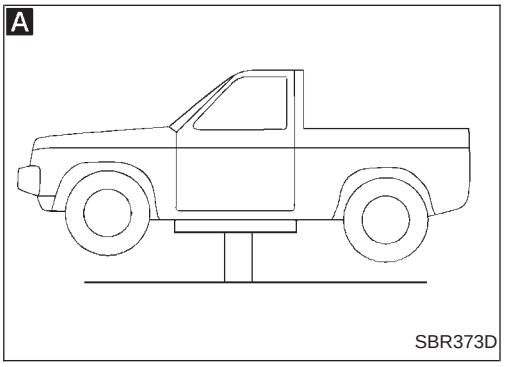

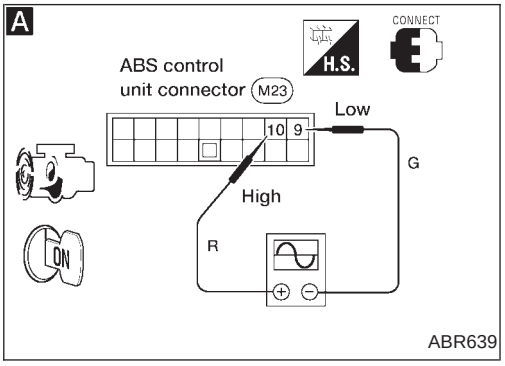

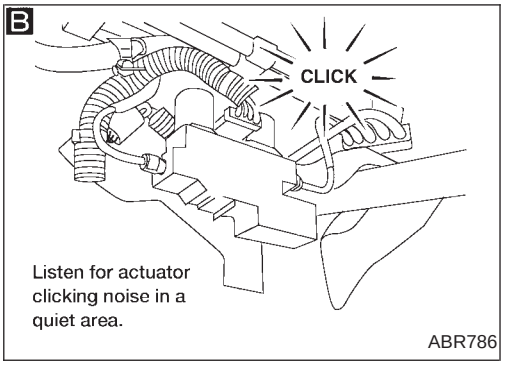

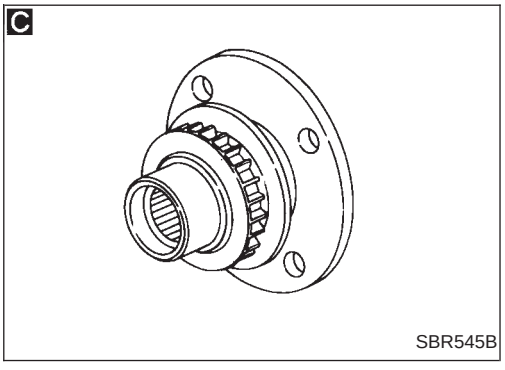

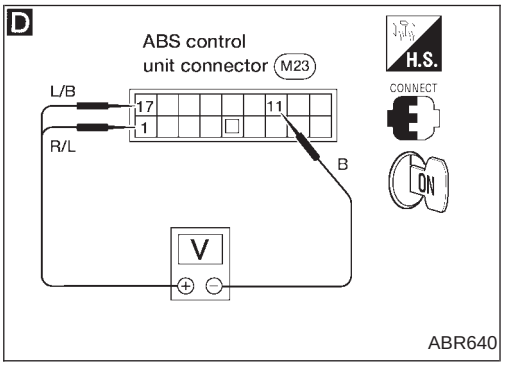

Electrical Components Inspection

REAR SENSOR UNIT AND ACTUATOR

A

CHECK REAR SENSOR SIGNAL.
1. Raise vehicle. Confirm it is safe to rotate rear wheels.
2. Start engine and rotate rear wheels with transmission in D position or first gear position.
3. Check rear sensor signal voltage between control unit terminals ⑩ and ⑨ with AC voltmeter.

Voltage: 0.4V or more
M/T at 700 rpm
A/T at 850 rpm

NG → **C**

OK ↓

C

CHECK REAR SENSOR ROTOR for following points:
- Tooth condition
- Installation on companion flange
- Deformation
- Wear
- Looseness

NG → Replace rear sensor rotor with companion flange.

OK → Replace rear sensor unit.

B

CHECK ABS ACTUATOR OPERATION.
Go to **Self-diagnosis Procedure 2**, BR-44. Clicking noise sounds from actuator, when the ignition switch is turned on with battery cable connected.

NG → **D**

OK ↓

D

CHECK PULSING VOLTAGE FROM ABS CONTROL UNIT.
Check pulsing voltage for ISO and DUMP solenoid between ABS control unit terminals ⑰ and ⑪, and terminals ① and ⑪.
Voltage: 0.3 - 3.5V for approx. 13 msec.
Use suitable digital voltmeter. Pulsing voltage appears when ABS warning lamp goes off after ignition is turned on.

NG → Replace ABS control unit.

OK → Replace ABS actuator.

CHECK ABS OPERATION as follows:
1. Perform ABS check in a safe place without obstacles in the vicinity.
2. Drive the vehicle for more than one minute at speeds over 40 km/h (25 MPH), then check that the warning lamp does not light on the instrument panel. After this, check for operation.
3. Check if ordinary braking effect occurs, and also check that the rear wheels do not lock when abrupt braking causes the front wheels to lock.

OK → ABS is in good condition.

NG → Replace ABS actuator.

Purpose

The Anti-Lock Brake System (ABS) consists of electronic and hydraulic components. It allows for control of braking force so locking of the wheels can be avoided.
The ABS:
1) Improves proper tracking performance through steering wheel operation.
2) Eases obstacle avoidance through steering wheel operation.
3) Improves vehicle stability.

Operation

- When the vehicle speed is less than 10 km/h (6 MPH) this system does not work.
- The Anti-Lock Brake System (ABS) has a self-test function. The system turns on the ABS warning lamp for 1 second each time the ignition switch is turned ‘‘ON’’. After the engine is started, the ABS warning lamp turns off. The system performs a test the first time the vehicle reaches 6 km/h (4 MPH). A mechanical noise may be heard as the ABS performs this self-test. This is a normal part of the self-test feature. If a malfunction is found during this check, the ABS warning lamp will stay on.
- While driving, a mechanical noise may be heard during ABS operation. This is a normal condition.

ABS Hydraulic Circuit

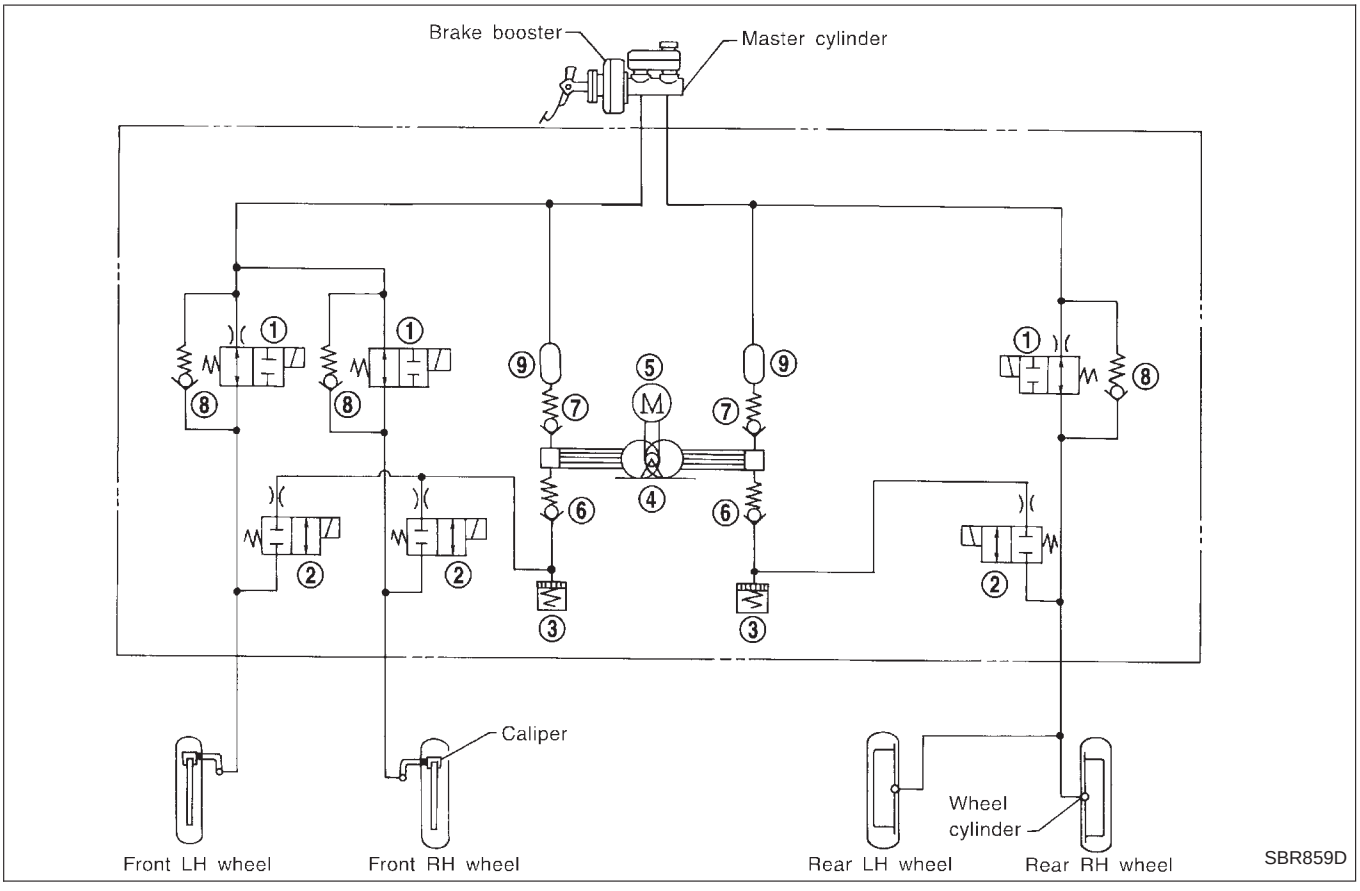

① Inlet solenoid valve
② Outlet solenoid valve
③ Reservoir
④ Pump
⑤ Motor
⑥ Inlet valve
⑦ Outlet valve
⑧ Bypass check valve
⑨ Damper

System Components

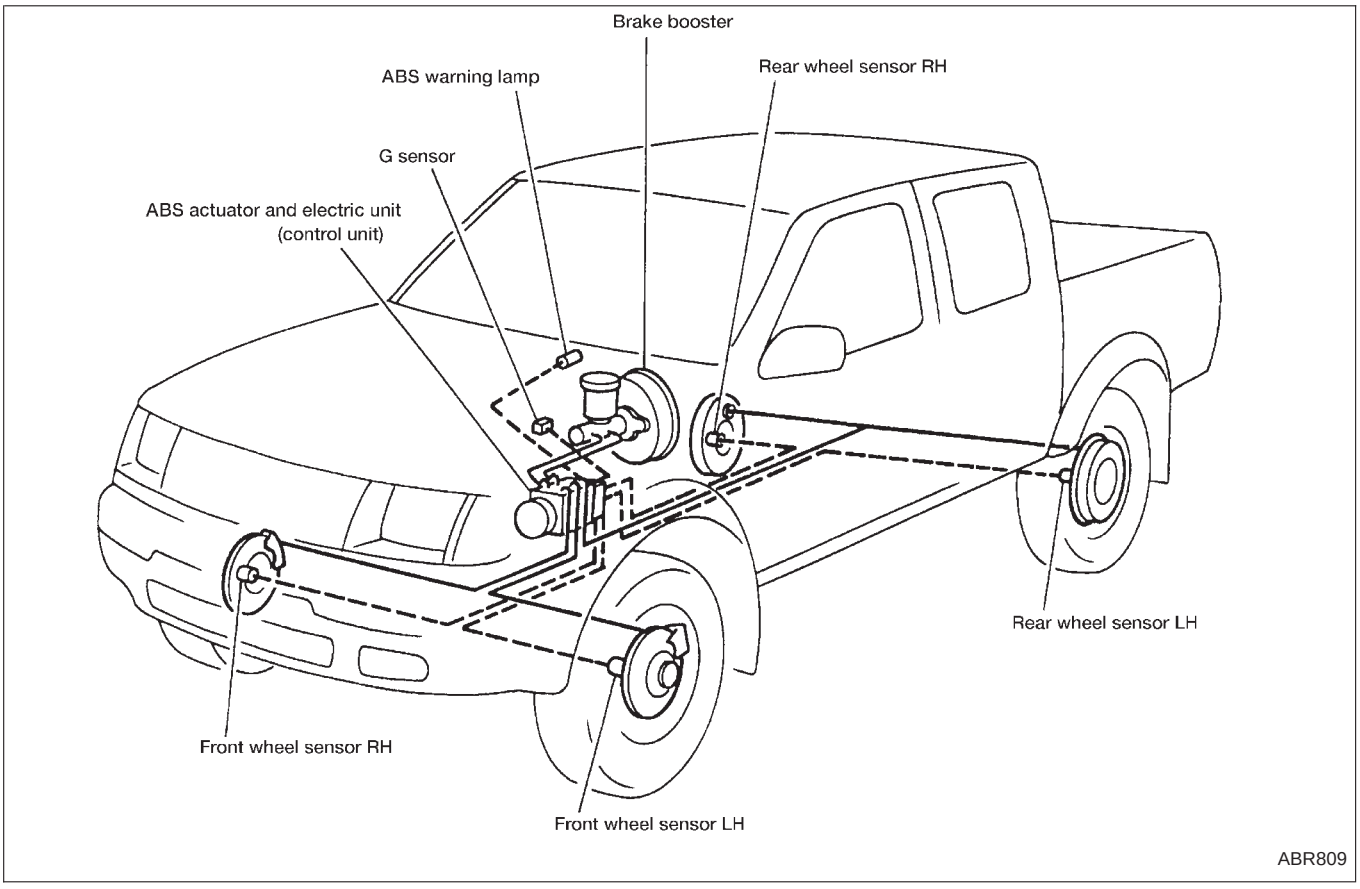

System Description

WHEEL SENSOR

The sensor unit consists of a gear-shaped sensor rotor and a sensor element. The element contains a bar magnet around which a coil is wound. The sensor is installed on the back of the brake rotor and the back of the rear brake drum. As the wheel rotates, the sensor generates a sine-wave pattern. The frequency and voltage increase(s) as the rotating speed increases.

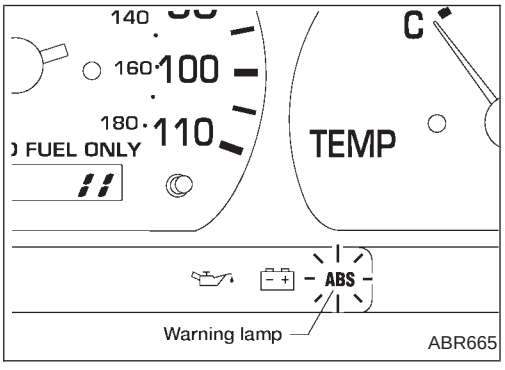

CONTROL UNIT (built-in ABS actuator and electric unit)

The control unit computes the wheel rotating speed by the signal current sent from the sensor. Then it supplies a DC current to the actuator solenoid valve. It also controls ON-OFF operation of the valve relay and motor relay. If any electrical malfunction should be detected in the system, the control unit causes the warning lamp to light up. In this condition, the ABS will be deactivated by the control unit, and the vehicle's brake system reverts to normal operation. (For control unit layout, refer to ABS ACTUATOR AND ELECTRIC UNIT, BR-56.)

System Description (Cont'd)

G SENSOR

The G sensor senses deceleration during braking to determine whether the vehicle is being driven on a high µ road (asphalt road, etc.) or a low µ road (snow-covered road, etc.). It then sends a signal to the ABS control unit.

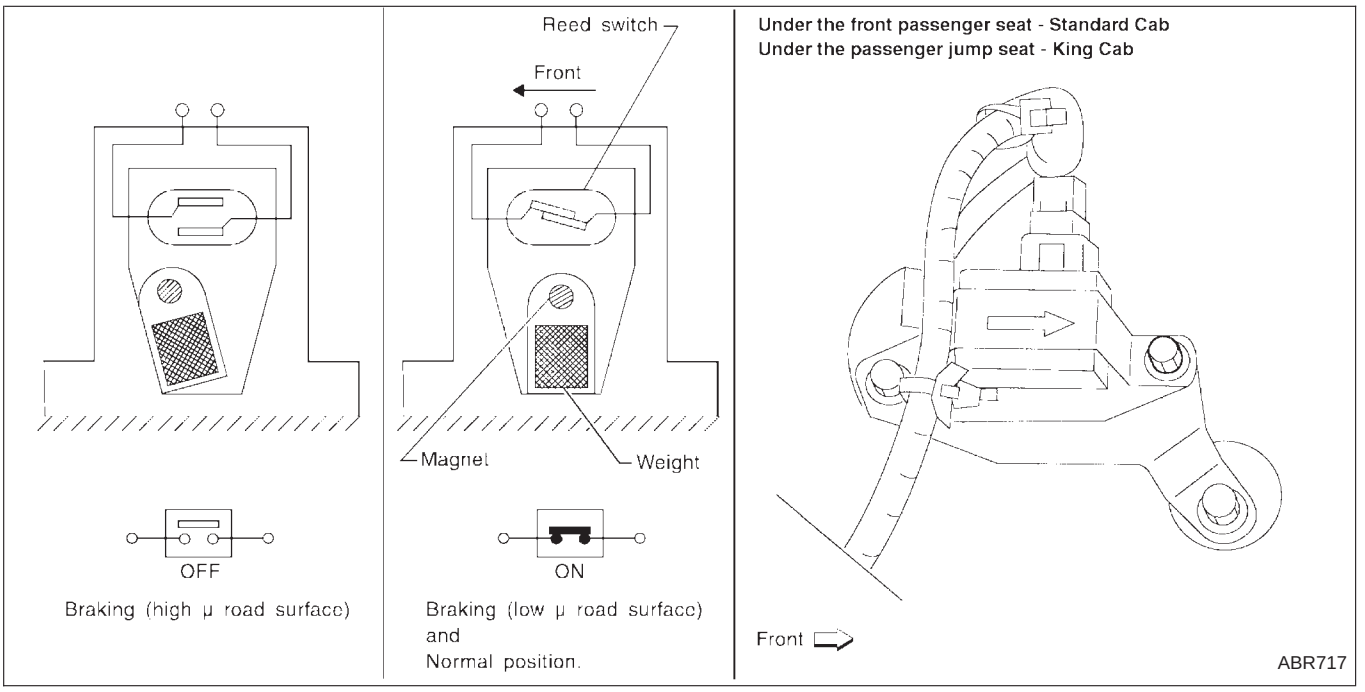

The reed switch turns on when it is affected by a magnetic field. During sudden deceleration (braking on a high µ road), the weight moves and the magnet in the weight moves away from the reed switch. The magnetic field then diminishes and the reed switch turns off.

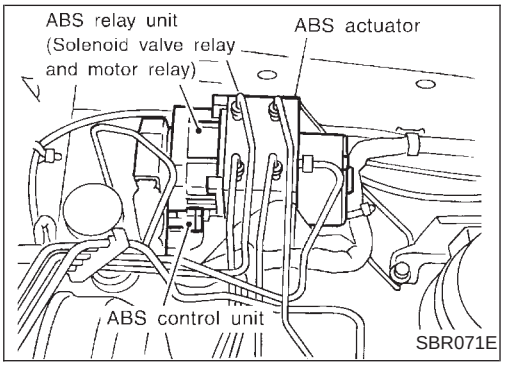

ABS ACTUATOR AND ELECTRIC UNIT

The ABS actuator and electric unit contains:

- An electric motor and pump
- Two relays
- Six solenoid valves, each inlet and outlet for
  - — LH front
  - — RH front
  - — Rear
- ABS control unit

This component controls the hydraulic circuit and increases, holds or decreases hydraulic pressure to all or individual wheels. The ABS actuator and electric unit is serviced as an assembly.

ABS actuator operation

		Inlet solenoid valve	Outlet solenoid valve	
Normal brake operation		OFF (Open)	OFF (Closed)	Master cylinder brake fluid pressure is directly transmitted to wheel cylinder via the inlet solenoid valve.
ABS operation	Pressure hold	ON (Closed)	OFF (Closed)	Hydraulic circuit is shut off to hold the wheel cylinder brake fluid pressure.
	Pressure decrease	ON (Closed)	ON (Open)	Wheel cylinder brake fluid is sent to reservoir via the outlet solenoid valve. Then it is pushed up to the master cylinder by pump.
	Pressure increase	OFF (Open)	OFF (Closed)	Master cylinder brake fluid pressure is transmitted to wheel cylinder.

Removal and Installation

CAUTION:

Be careful not to damage sensor edge and sensor rotor teeth. When removing the front wheel hub or rear axle shaft assembly, disconnect the ABS wheel sensor from the assembly and move it away.

FRONT WHEEL SENSOR

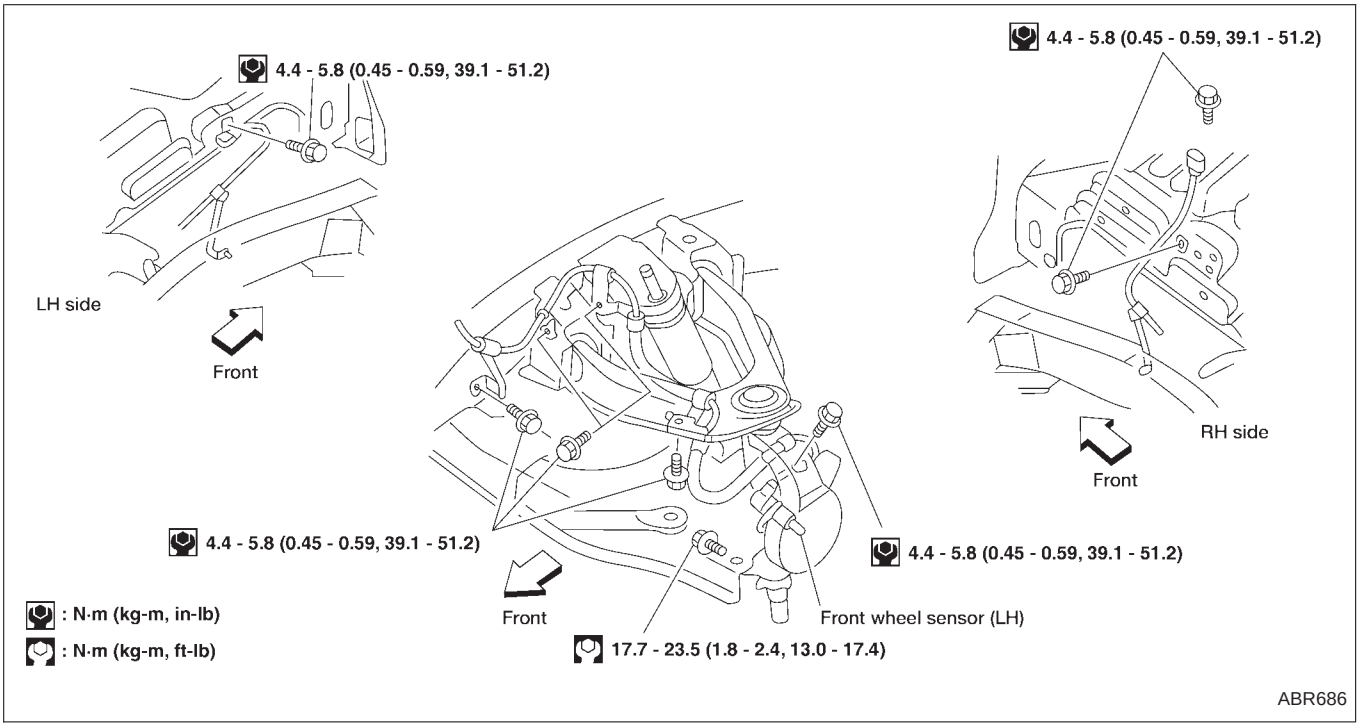

Removal and Installation (Cont'd)

REAR WHEEL SENSOR

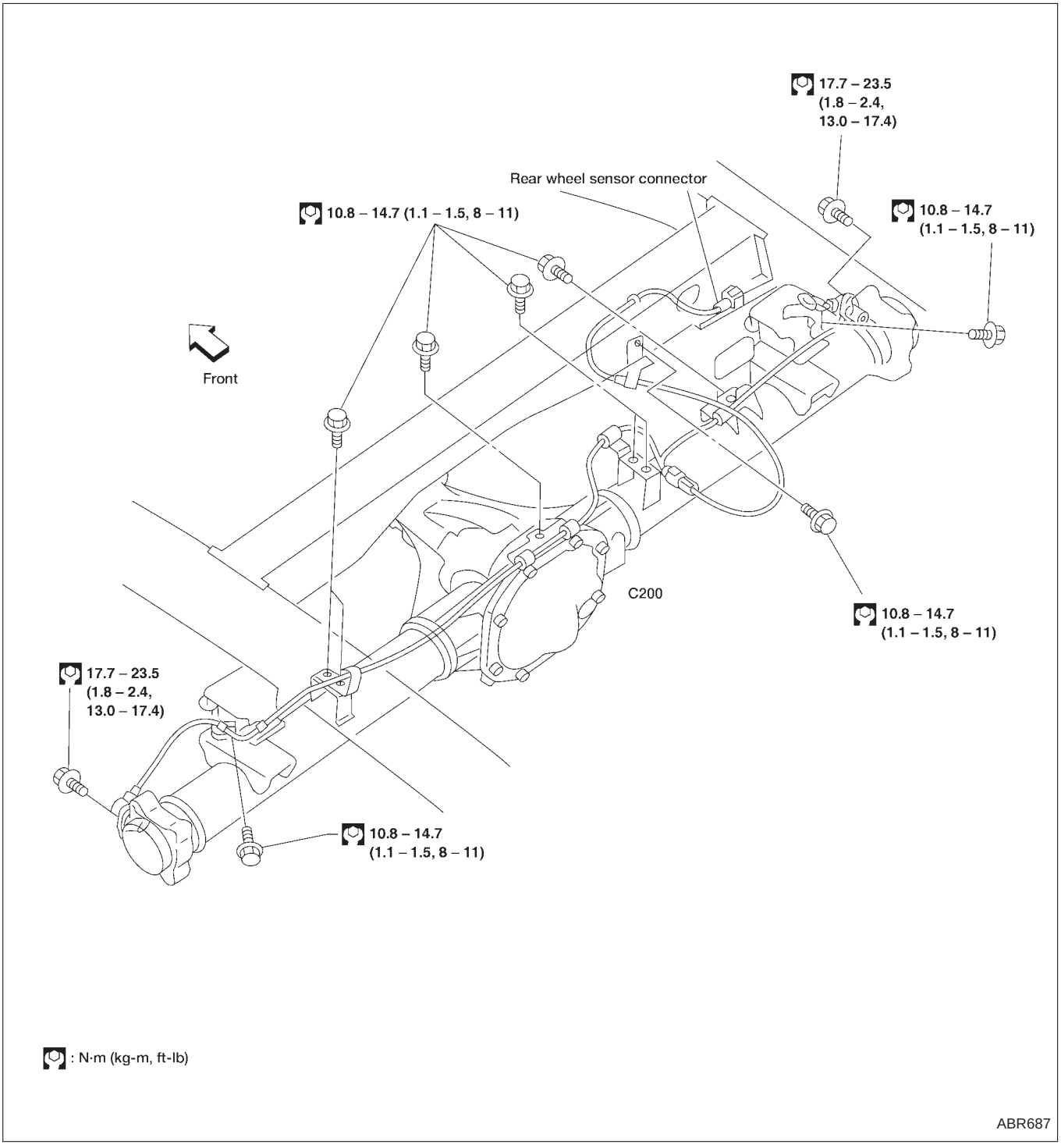

Removal and Installation (Cont'd)

G SENSOR

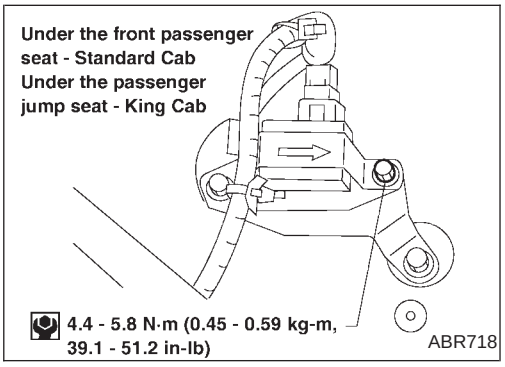

Always replace G sensor if bumped or dropped. Otherwise, performance characteristics of G sensor will be changed, which in turn changes ABS control performance characteristics.

ABS ACTUATOR AND ELECTRIC UNIT

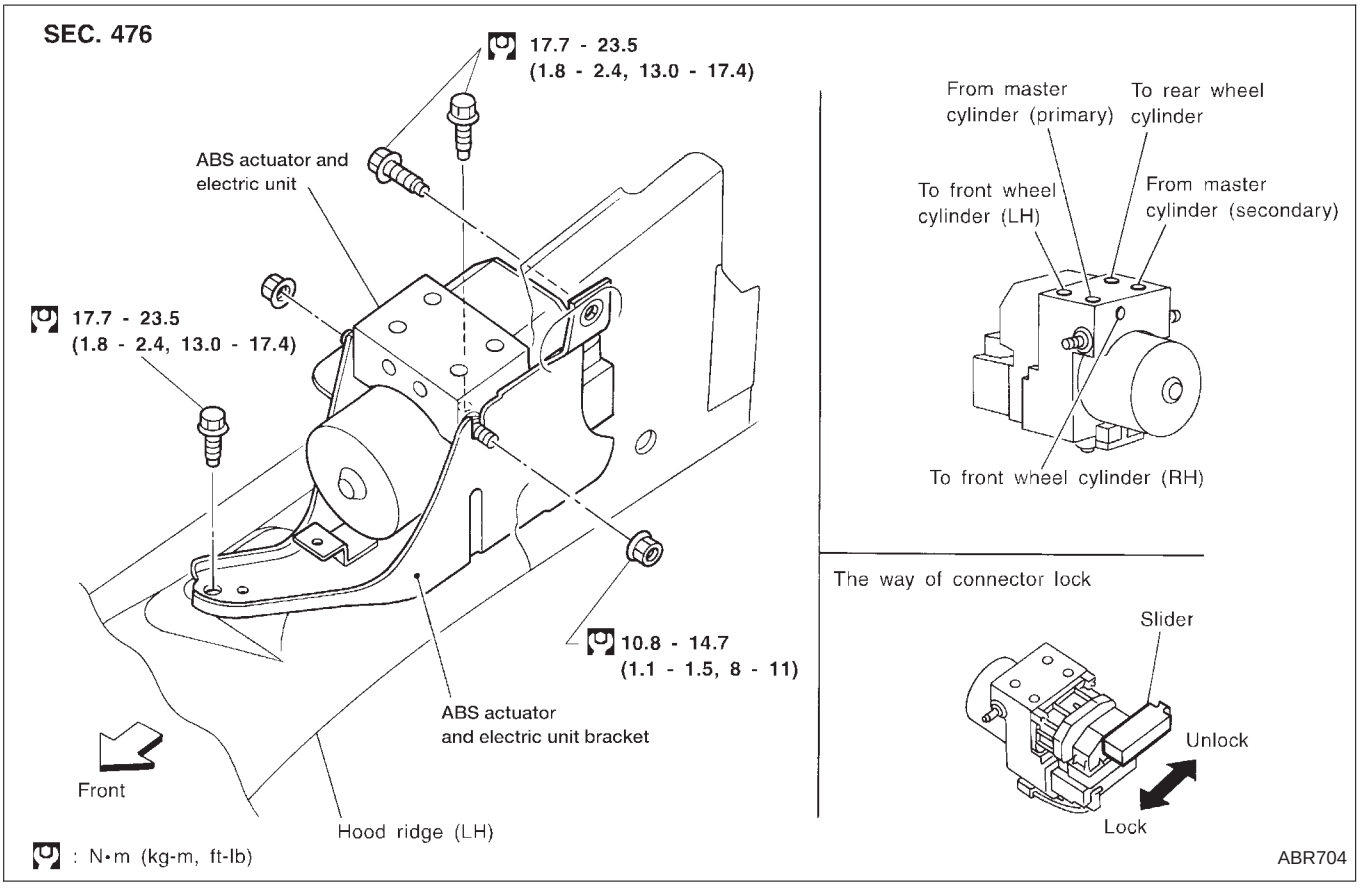

Removal

1. Disconnect battery cable.
2. Drain brake fluid. Refer to "Changing Brake Fluid", BR-6.
3. Remove mounting bracket fixing bolts and nuts.
4. Disconnect connector, brake pipes and remove fixing nuts.

Installation

CAUTION:

After installation, refill brake fluid. Then bleed air. Refer to "Bleeding Brake System", BR-7.

1. Connect brake pipes temporarily.
2. Tighten fixing bolts and nuts.
3. Tighten brake pipes.
4. Connect connector and battery cable.

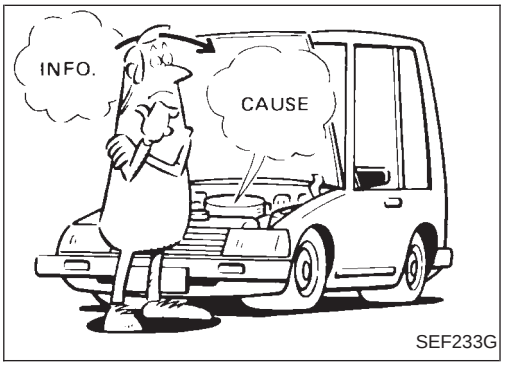

SEF233G

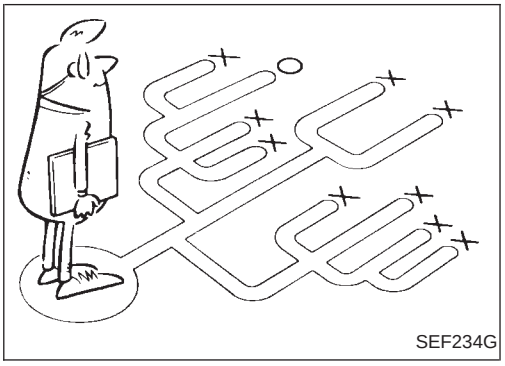
SEF234G

How to Perform Trouble Diagnoses for Quick and Accurate Repair

INTRODUCTION

The ABS system has an electronic control unit to control major functions. The control unit accepts input signals from sensors and instantly drives the actuators. It is essential that both kinds of signals are proper and stable. It is also important to check for conventional problems such as air leaks in booster lines, lack of brake fluid, or other problems with the brake system.

It is much more difficult to diagnose a problem that occurs intermittently rather than continuously. Most intermittent problems are caused by poor electric connections or faulty wiring. In this case, careful checking of suspicious circuits may help prevent the replacement of good parts.

A visual check only may not find the cause of the problems, so a road test should be performed.

Before undertaking actual checks, take a few minutes to talk with a customer who approaches with an ABS complaint. The customer is a very good source of information on such problems; especially intermittent ones. Through the talks with the customer, find out what symptoms are present and under what conditions they occur. Start your diagnosis by looking for ‘‘conventional’’ problems first. This is one of the best ways to troubleshoot brake problems on an ABS controlled vehicle.

Also check related service bulletins for information.

How to Perform Trouble Diagnoses for Quick and Accurate Repair (Cont'd)

WORK FLOW

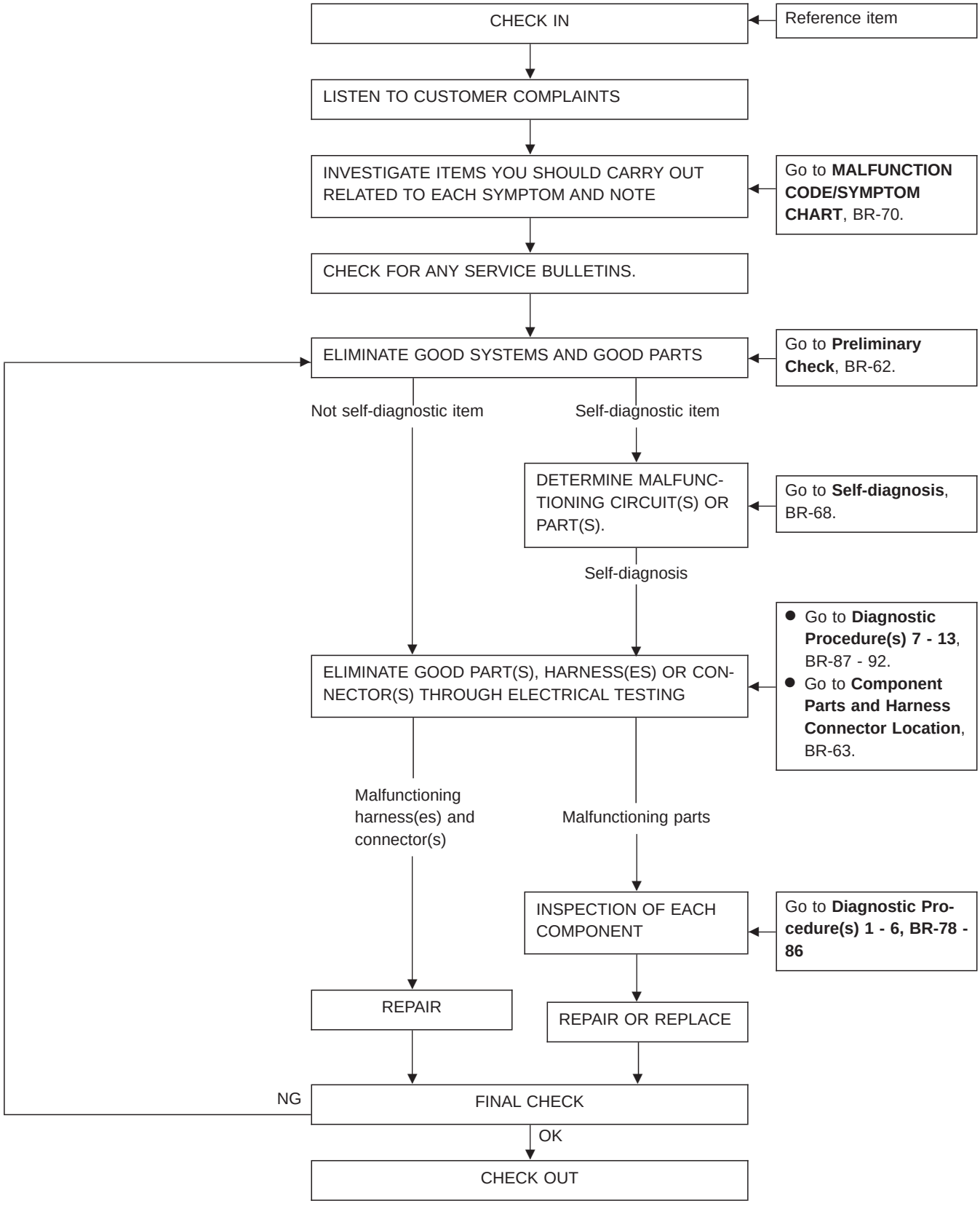

A

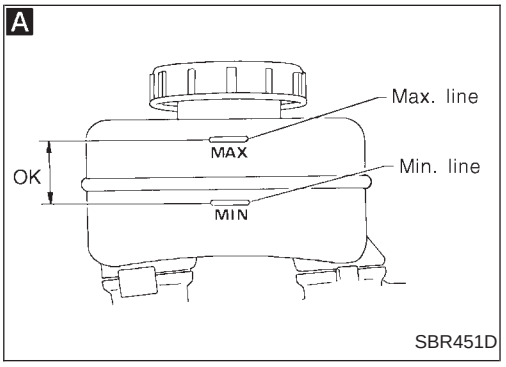

B

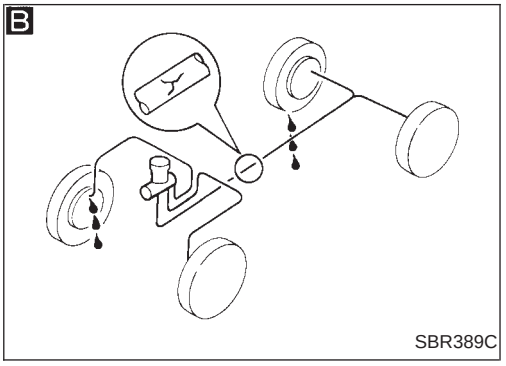

C

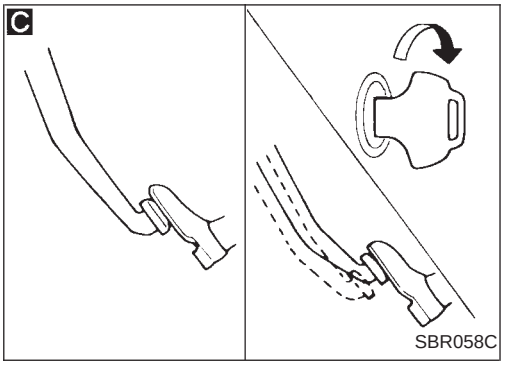

D

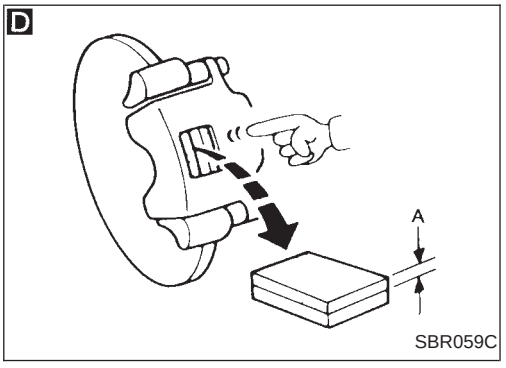

E

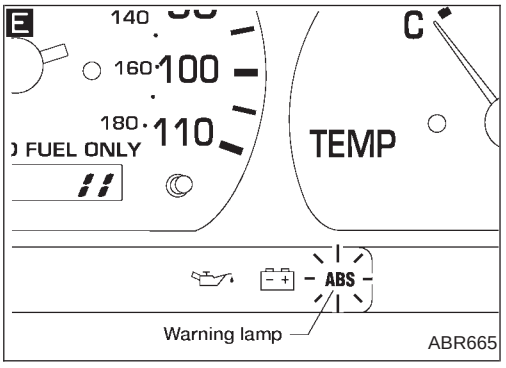

Preliminary Check

A

Check brake fluid level in reservoir tank.
Low fluid level may indicate brake pad wear or leakage from brake line.

↓

B

Check brake line for leakage. → NG → Repair.
OK ↓

C

Check brake booster for operation and air tightness. Refer to BR-19. → NG → Replace.
OK ↓

D

Check brake pads, rotors, linings and drums. Refer to BR-27. → NG → Replace.
OK ↓

A

Check brake fluid level in reservoir tank again. → NG → Fill up brake fluid.
OK ↓

E

Check warning lamp activation.
When ignition switch is turned ON, warning lamp turns on. → NG → Check fuse, warning lamp bulb and warning lamp circuit.
OK ↓

Check warning lamp for deactivation after engine is started. → NG → Go to Self-diagnosis, BR-68, 72.
OK ↓

Drive vehicle at speeds over 30 km/h (19 MPH) for at least one minute.

↓

Ensure warning lamp remains off while driving. → NG → Go to Self-diagnosis, BR-68, 72.
OK ↓

END

Component Parts and Harness Connector Location

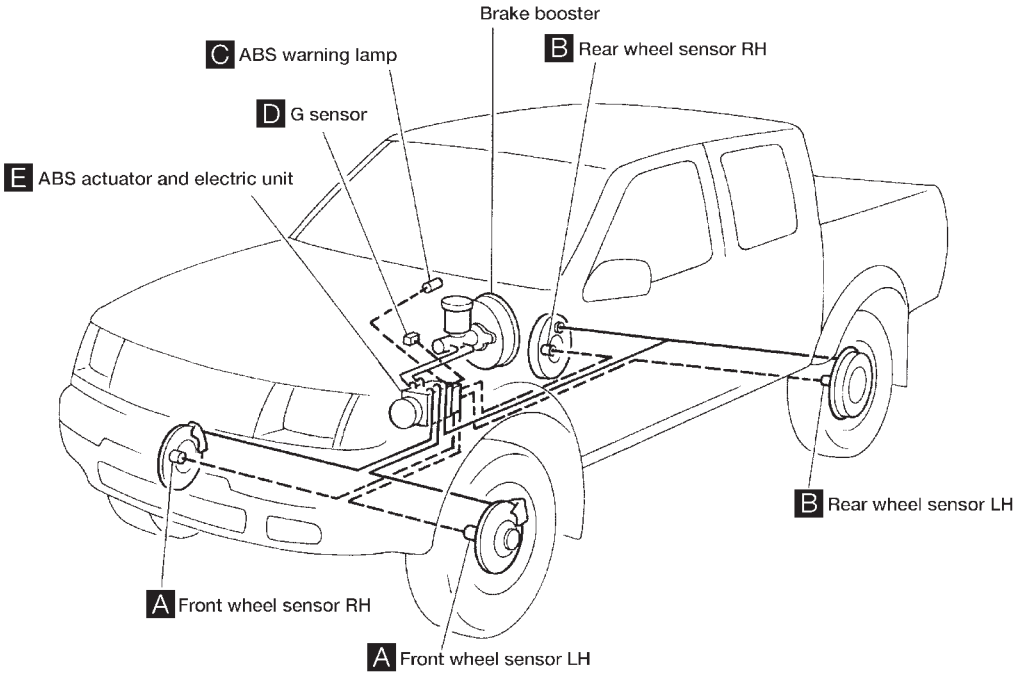

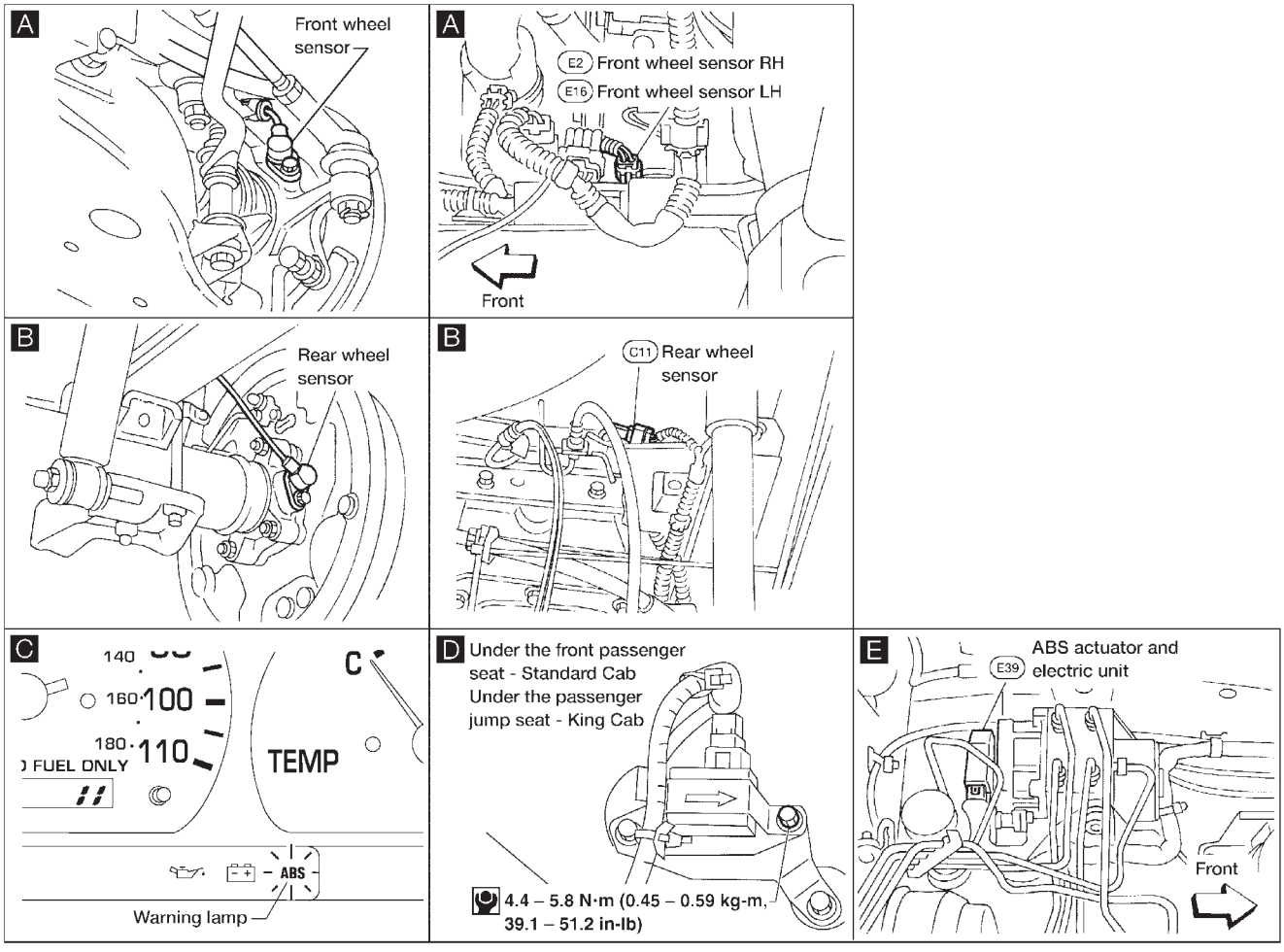

ABR813

Schematic

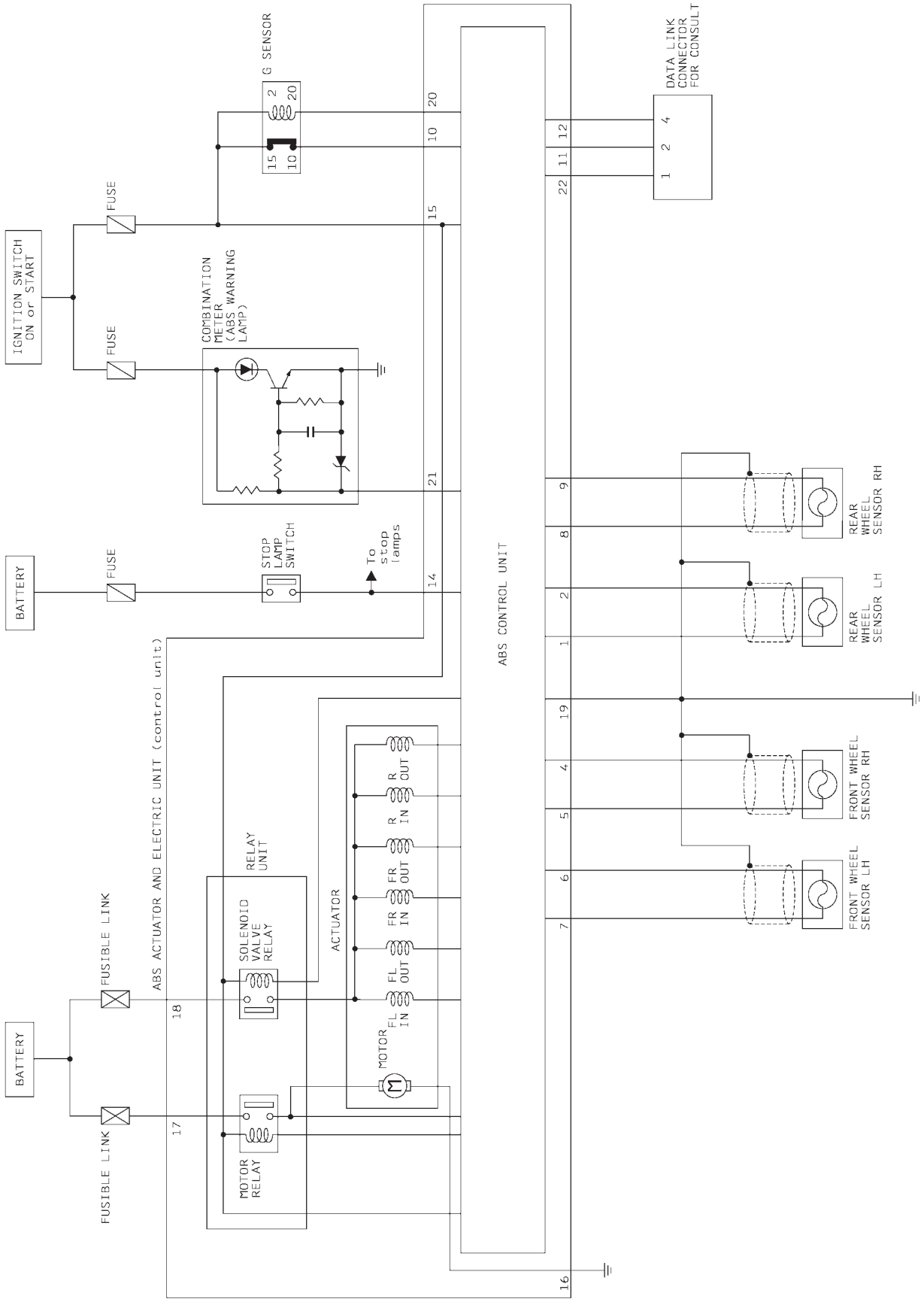

ABR566

Wiring Diagram — ABS —

BR-ABS-03

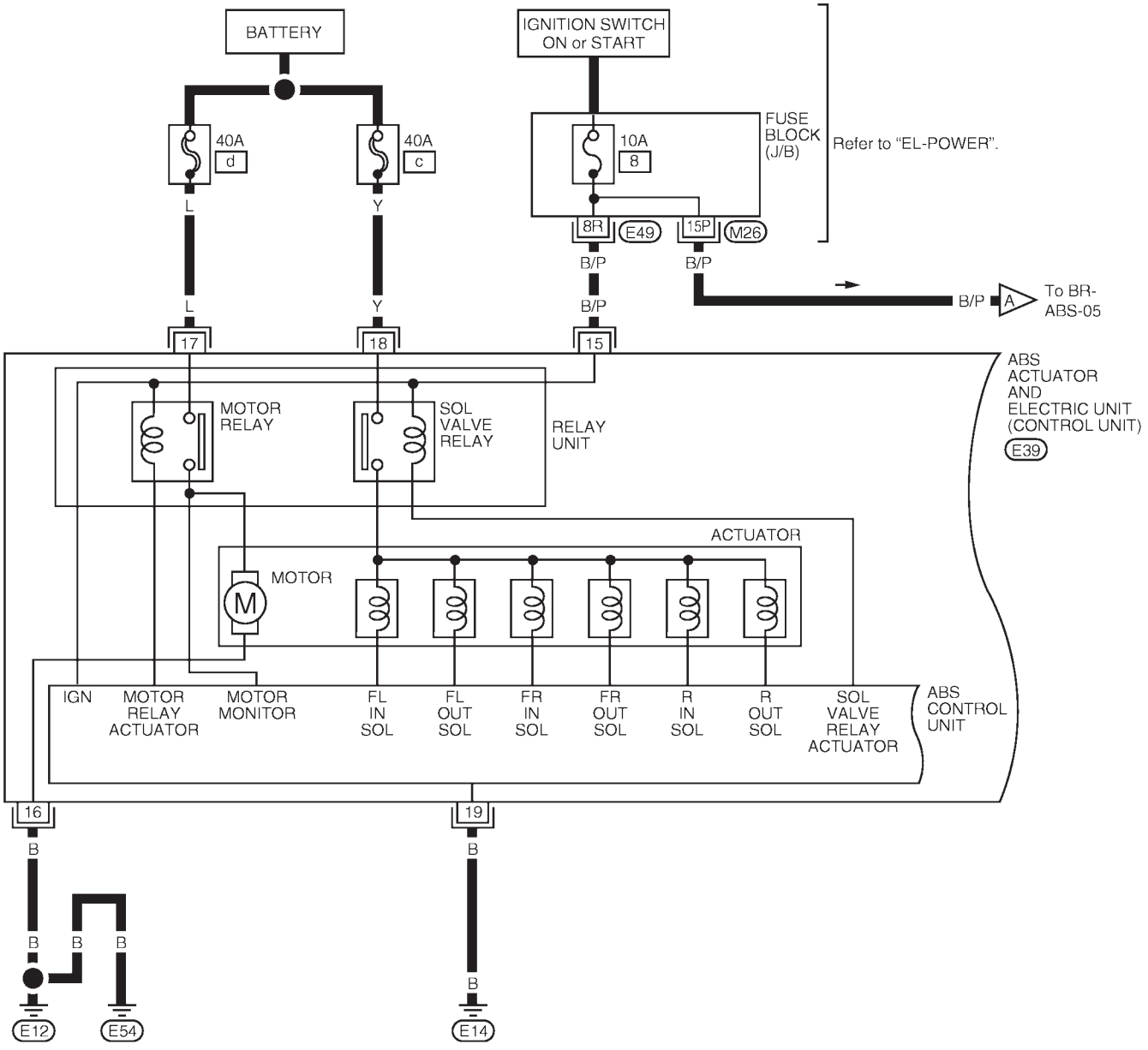

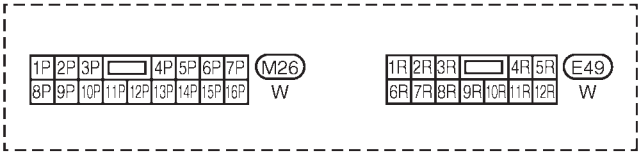

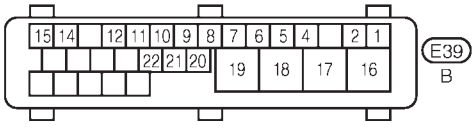

ABR568

Wiring Diagram — ABS — (Cont'd)

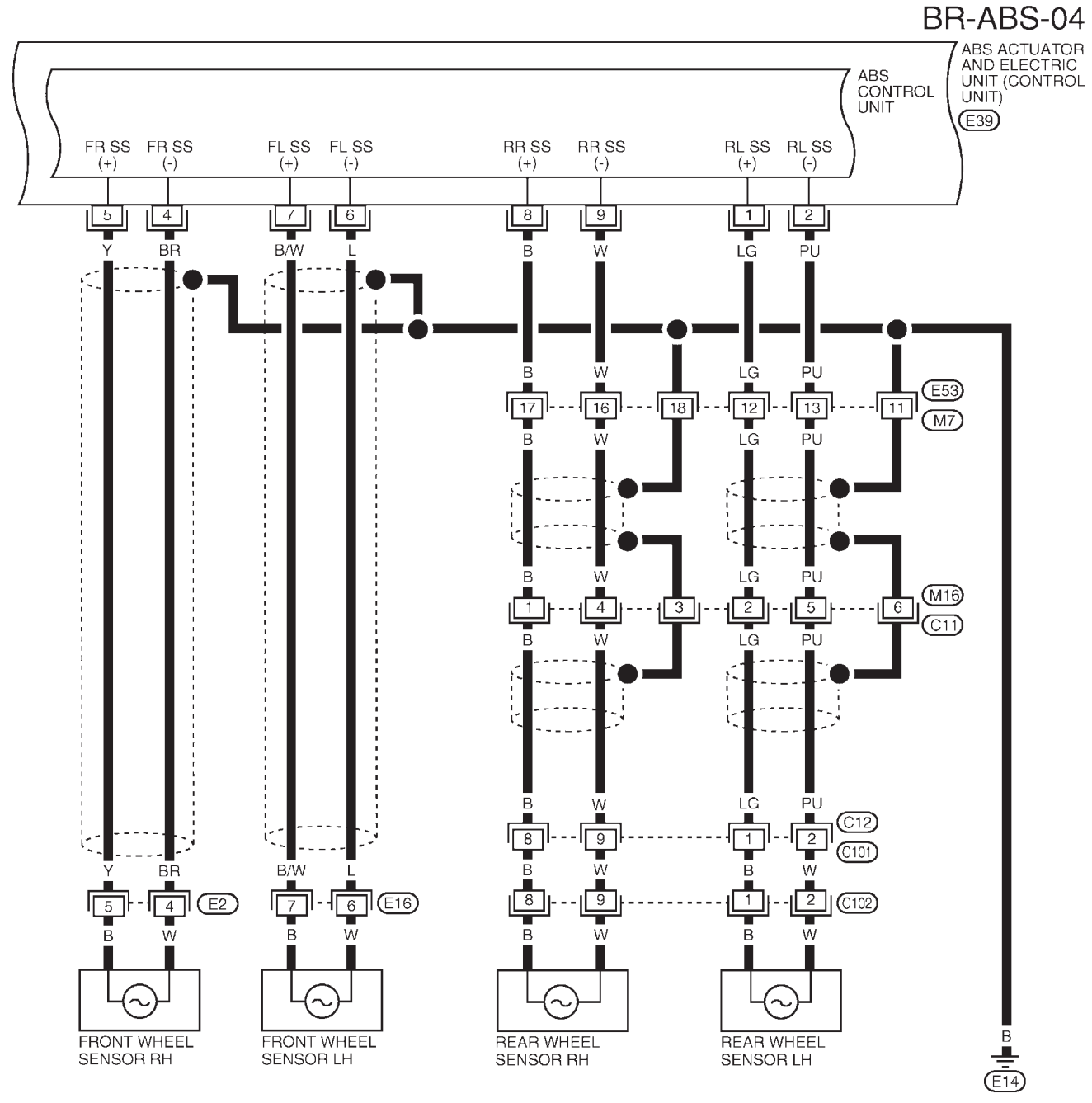

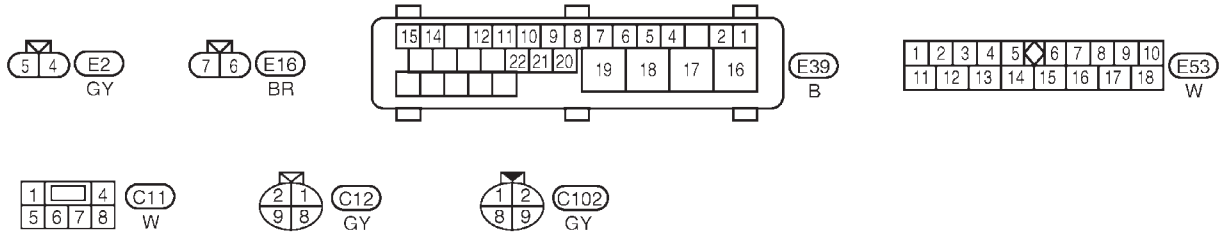

ABR781

Wiring Diagram — ABS — (Cont'd)

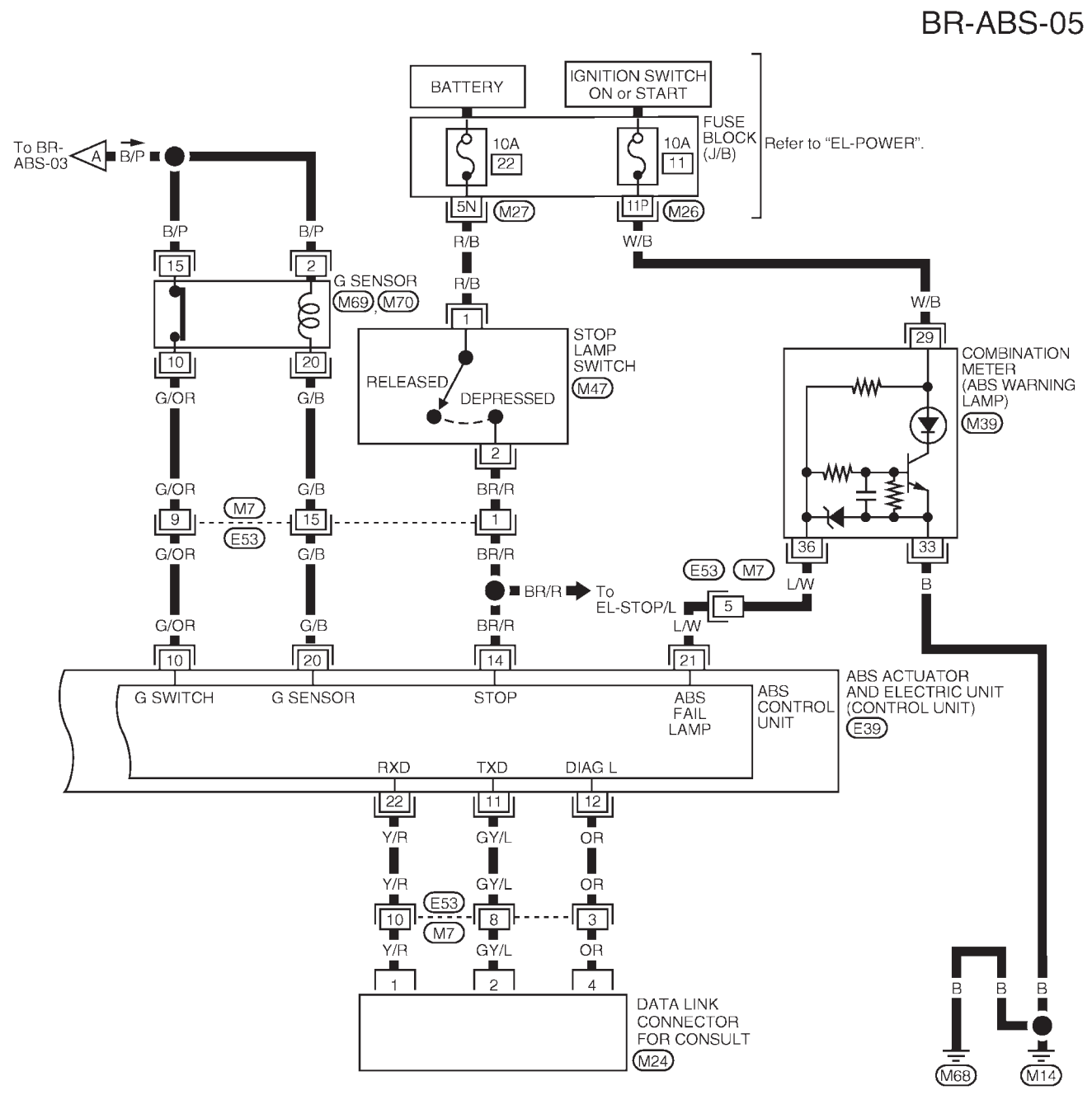

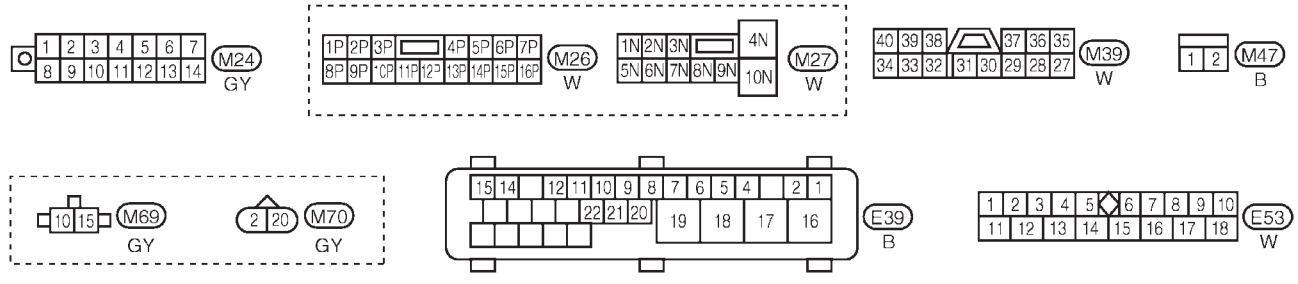

ABR719

Self-diagnosis

FUNCTION

- When a problem occurs in the ABS, the warning lamp on the instrument panel comes on. To start the self-diagnostic results mode, ground the self-diagnostic (check) terminal located on "Data Link Connector for CONSULT". The location of the malfunction is indicated by the warning lamp flashing.

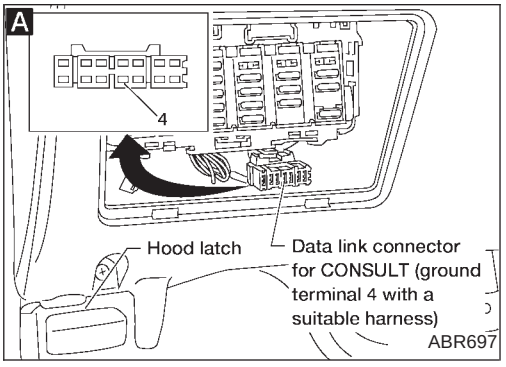

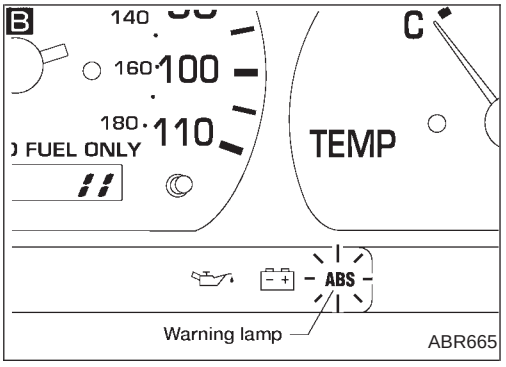

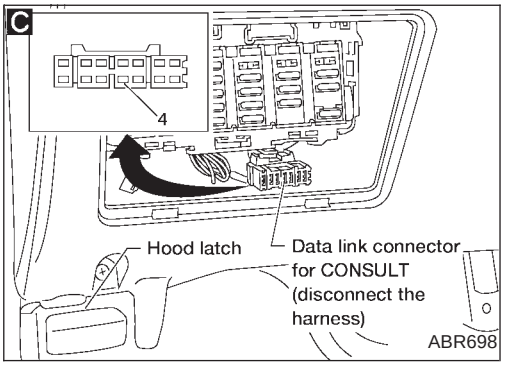

SELF-DIAGNOSIS PROCEDURE

Drive vehicle over 30 km/h (19 MPH) for at least one minute.

↓

Turn ignition switch "OFF".

↓

A

Ground terminal "4" of "Data link connector for CONSULT" with a suitable harness.

↓

Turn ignition switch "ON" while grounding terminal "4".
Do not depress brake pedal.

↓

B

After 3.0 seconds, the warning lamp starts flashing to indicate the malfunction code No. (See NOTE.)

↓

Verify the location of the malfunction with the malfunction code chart. Refer to BR-70. Then make the necessary repairs following the diagnostic procedures.

↓

After the malfunctions are repaired, erase the malfunction codes stored in the control unit. Refer to BR-69.

↓

Rerun the self-diagnostic results mode to verify that the malfunction codes have been erased.

↓

C

Disconnect the check terminal from the ground. The self-diagnostic results mode is now complete.

↓

Ⓐ
(Go to next page.)

NOTE: The indication terminates after five minutes. However, when the ignition switch is turned from "OFF" to "ON", the indication starts flashing again.

Self-diagnosis (Cont'd)

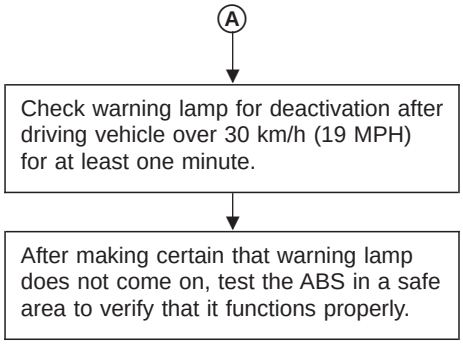

HOW TO READ SELF-DIAGNOSTIC RESULTS (Malfunction codes)

- Determine the code No. by counting the number of times the warning lamp flashes on and off.
- When several malfunctions occur at one time, up to three code numbers can be stored; the latest malfunction will be indicated first.
- The indication begins with the start code 12. After that a maximum of three code numbers appear in the order of the latest one first. The indication then returns to the start code 12 to repeat (the indication will stay on for five minutes at the most).
- The malfunction code chart is on the next page.

Example: Code No. 32 REAR SENSOR SHORT-CIRCUIT

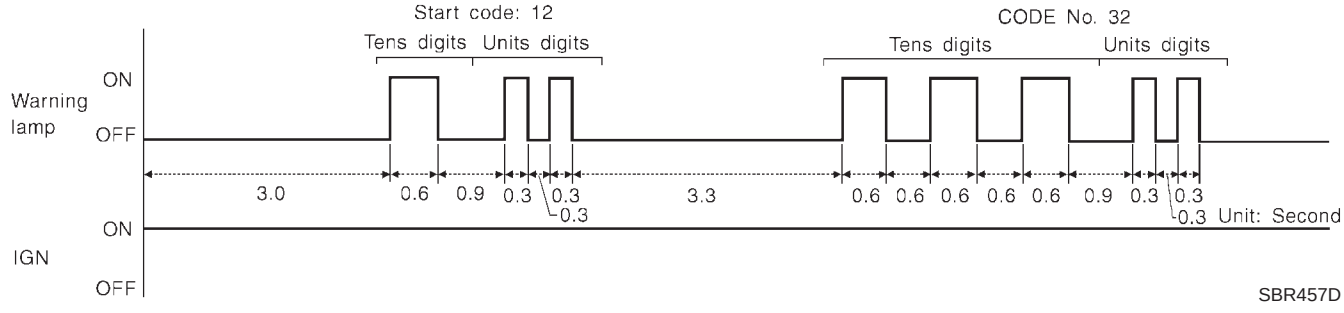

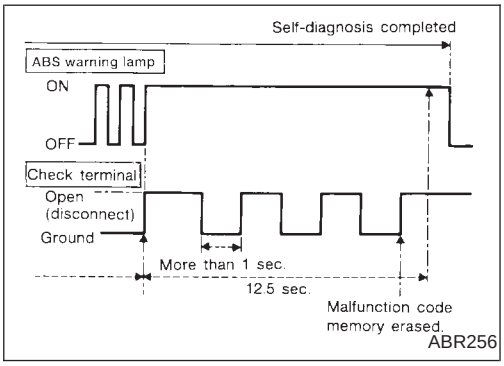

HOW TO ERASE SELF-DIAGNOSTIC RESULTS (Malfunction codes)

1. Disconnect the check terminal from ground (ABS warning lamp will stay lit).
2. Within 12.5 seconds, ground the check terminal 3 times. Each terminal ground must last more than 1 second. The ABS warning lamp goes out after the erase operation has been completed.
3. Perform self-diagnosis again. Refer to BR-68. Only the start-code should appear, with no malfunction codes.

Self-diagnosis (Cont'd)

MALFUNCTION CODE/SYMPTOM CHART

Code No./Symptom (No. of warning lamp flashes)	Malfunctioning part	Diagnostic procedure
45	Actuator front left outlet solenoid valve	2
46	Actuator front left inlet solenoid valve	2
41	Actuator front right outlet solenoid valve	2
42	Actuator front right inlet solenoid valve	2
55	Actuator rear outlet solenoid valve	2
56	Actuator rear inlet solenoid valve	2
25 ★1	Front left sensor (open-circuit)	1
26 ★1	Front left sensor (short-circuit)	1
21 ★1	Front right sensor (open-circuit)	1
22 ★1	Front right sensor (short-circuit)	1
31 ★1	Rear right sensor (open-circuit)	1
32 ★1	Rear right sensor (short-circuit)	1
35 ★1	Rear left sensor (open-circuit)	1
36 ★1	Rear left sensor (short-circuit)	1
18 ★1	Sensor rotor	1
17	G sensor and circuit	5
61 ★3	Actuator motor or motor relay	3
63	Solenoid valve relay	2
57 ★2	Power supply (Low voltage)	4
71	Control unit	6
Warning lamp stays on when ignition switch is turned ON	Control unit power supply circuit Warning lamp bulb circuit Control unit or control unit connector Solenoid valve relay stuck Power supply for solenoid valve relay coil	13
Warning lamp does not come on when ignition switch is turned ON	Fuse, warning lamp bulb or warning lamp circuit Control unit	12
Pedal vibration and noise	—	11
Long stopping distance	—	9
Unexpected pedal action	—	8
ABS does not work	—	10
ABS works frequently	—	7

★1: If one or more wheels spin on a rough or slippery road for 40 seconds or more, the ABS warning lamp will illuminate. This does not indicate a malfunction. Only in the case of the short-circuit (Code Nos. 26, 22, 32 and 36), after repair the ABS warning lamp also illuminates when the ignition switch is turned "ON". In this case, drive the vehicle at speeds greater than 30 km/h (19 MPH) for approximately 1 minute as specified in "SELF-DIAGNOSIS PROCEDURE", BR-68. Check to ensure that the ABS warning lamp goes out while the vehicle is being driven.

★2: The trouble code "57", which refers to a low power supply voltage, does not indicate that the ABS control unit is malfunctioning. Do not replace the ABS control unit with a new one.

★3: The trouble code "61" can sometimes appear when the ABS motor is not properly grounded. If it appears, be sure to check the condition of the ABS motor ground circuit connection.

CONSULT

CONSULT APPLICATION TO ABS

ITEM	SELF-DIAGNOSTIC RESULTS	DATA MONITOR	ACTIVE TEST
Front right wheel sensor	X	X	—
Front left wheel sensor	X	X	—
Rear right wheel sensor	X	X	—
Rear left wheel sensor	X	X	—
G switch (G sensor)	X	X	X
Stop lamp switch	—	X	—
Front right inlet solenoid valve	X	X	X
Front right outlet solenoid valve	X	X	X
Front left inlet solenoid valve	X	X	X
Front left outlet solenoid valve	X	X	X
Rear inlet solenoid valve	X	X	X
Rear outlet solenoid valve	X	X	X
Actuator solenoid valve relay	X	X	—
Actuator motor relay (ABS MOTOR is shown on the Data Monitor screen.)	X	X	X
ABS warning lamp	—	X	—
Battery voltage	X	X	—

X: Applicable
—: Not applicable

ECU (ABS control unit) part number mode

Ignore the ECU part number displayed in the ECU PART NUMBER MODE. ECU (ABS control unit) is part of the ABS actuator and electric unit, serviced as an assembly.

A Driver side

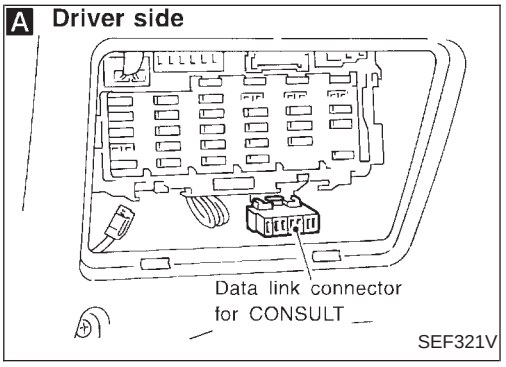

B

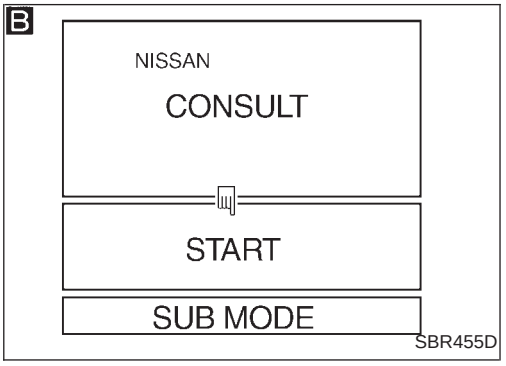

C

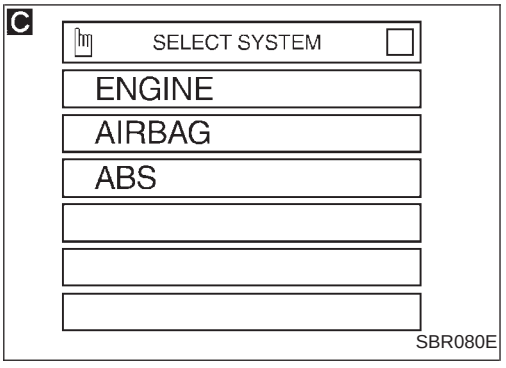

D

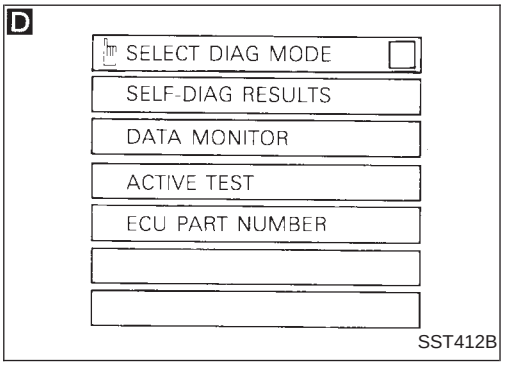

E

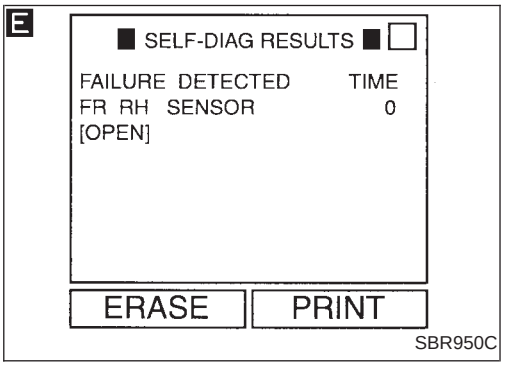

CONSULT Inspection Procedure

SELF-DIAGNOSIS PROCEDURE

A

1) Turn ignition switch OFF.
2) Connect CONSULT to Data Link Connector for CONSULT.

↓

1) Start engine.
2) Drive vehicle over 30 km/h (19 MPH) for at least one minute.

↓

B 1) Stop vehicle with engine running and touch "START" on CONSULT screen.
C 2) Touch "ABS".
D 3) Touch "SELF-DIAG RESULTS".
- The screen shows the detected malfunction and how many times the ignition switch has been turned since the malfunction.

↓

Make the necessary repairs following the diagnostic procedures.

↓

E

After the malfunctions are repaired, erase the self-diagnostic results stored in the control unit by touching "ERASE".

↓

Check warning lamp for deactivation after driving vehicle over 30 km/h (19 MPH) for at least one minute.

↓

Test the ABS in a safe area to verify that it functions properly.

Note: "SELF-DIAG RESULTS" screen shows the detected malfunction and how many times the ignition switch has been turned since the malfunction.

CONSULT Inspection Procedure (Cont'd)

SELF-DIAGNOSTIC RESULTS MODE

Diagnostic item	Diagnostic item is detected when ...	Diagnostic procedure
FR RH SENSOR★ [OPEN]	● Circuit for front right wheel sensor is open. (An abnormally high input voltage is entered.)	1
FR LH SENSOR★ [OPEN]	● Circuit for front left wheel sensor is open. (An abnormally high input voltage is entered.)	1
RR RH SENSOR★ [OPEN]	● Circuit for rear right sensor is open. (An abnormally high input voltage is entered.)	1
RR LH SENSOR★ [OPEN]	● Circuit for rear left sensor is open. (An abnormally high input voltage is entered.)	1
FR RH SENSOR★ [SHORT]	● Circuit for front right wheel sensor is shorted. (An abnormally low input voltage is entered.)	1
FR LH SENSOR★ [SHORT]	● Circuit for front left wheel sensor is shorted. (An abnormally low input voltage is entered.)	1
RR RH SENSOR★ [SHORT]	● Circuit for rear right sensor is shorted. (An abnormally low input voltage is entered.)	1
RR LH SENSOR★ [SHORT]	● Circuit for rear left sensor is shorted. (An abnormally low input voltage is entered.)	1
ABS SENSOR★ [ABNORMAL SIGNAL]	● Teeth damage on sensor rotor or improper installation of wheel sensor. (Abnormal wheel sensor signal is entered.)	1
FR RH IN ABS SOL [OPEN]	● Circuit for front right inlet solenoid valve is open. (An abnormally low output voltage is entered.)	2
FR LH IN ABS SOL [OPEN]	● Circuit for front left inlet solenoid valve is open. (An abnormally low output voltage is entered.)	2
RR IN ABS SOL [OPEN]	● Circuit for rear inlet solenoid valve is open. (An abnormally low output voltage is entered.)	2
FR RH IN ABS SOL [SHORT]	● Circuit for front right inlet solenoid valve is shorted. (An abnormally high output voltage is entered.)	2
FR LH IN ABS SOL [SHORT]	● Circuit for front left inlet solenoid valve is shorted. (An abnormally high output voltage is entered.)	2
RR IN ABS SOL [SHORT]	● Circuit for rear inlet solenoid valve is shorted. (An abnormally high output voltage is entered.)	2
FR RH OUT ABS SOL [OPEN]	● Circuit for front right outlet solenoid valve is open. (An abnormally low output voltage is entered.)	2
FR LH OUT ABS SOL [OPEN]	● Circuit for front left outlet solenoid valve is open. (An abnormally low output voltage is entered.)	2
RR OUT ABS SOL [OPEN]	● Circuit for rear outlet solenoid valve is open. (An abnormally low output voltage is entered.)	2
FR RH OUT ABS SOL [SHORT]	● Circuit for front right outlet solenoid valve is shorted. (An abnormally high output voltage is entered.)	2
FR LH OUT ABS SOL [SHORT]	● Circuit for front left outlet solenoid valve is shorted. (An abnormally high output voltage is entered.)	2
RR OUT ABS SOL [SHORT]	● Circuit for rear outlet solenoid valve is shorted. (An abnormally high output voltage is entered.)	2
ABS ACTUATOR RELAY [ABNORMAL]	● Actuator solenoid valve relay is ON, even if control unit sends off signal. ● Actuator solenoid valve relay is OFF, even if control unit sends on signal.	2
ABS MOTOR RELAY [ABNORMAL]	● Circuit for ABS motor relay is open or shorted. ● Circuit for actuator motor is open or shorted. ● Actuator motor relay is stuck.	3
BATTERY VOLT [VB-LOW]	● Power source voltage supplied to ABS control unit is abnormally low.	4
CONTROL UNIT	● Function of calculation in ABS control unit has failed.	6
G-SENSOR★ [ABNORMAL]	● G sensor circuit is open or shorted.	5

★: If one or more wheels spin on a rough or slippery road for 40 seconds or more, the ABS warning lamp will illuminate. This does not indicate a malfunction. Only in the case of the short-circuit, after repair the ABS warning lamp also illuminates when the ignition switch is turned "ON". In this case, drive the vehicle at speeds greater than 30 km/h (19 MPH) for approximately 1 minute as specified in "SELF-DIAGNOSIS PROCEDURE", BR-68. Check to ensure that the ABS warning lamp goes out while the vehicle is being driven.

CONSULT Inspection Procedure (Cont'd)

DATA MONITOR PROCEDURE

A

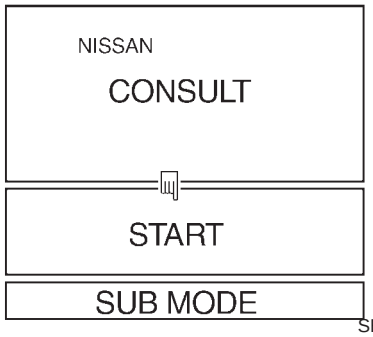

SBR455D

B

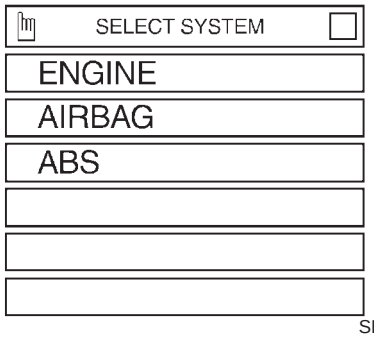

SBR080E

C

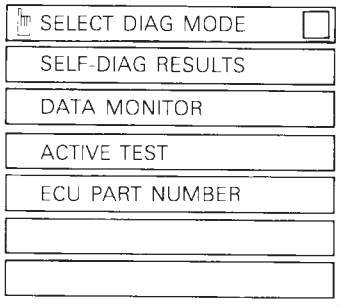

SST412B

D

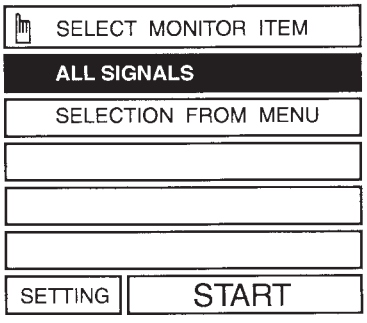

SBR936C

E

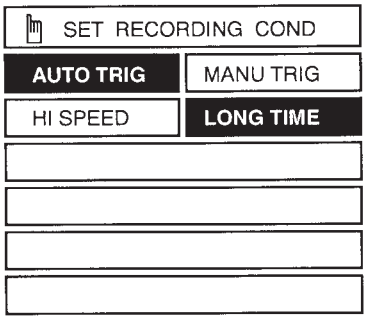

SBR937C

1) Turn ignition switch OFF.
2) Connect CONSULT to Data Link Connector for CONSULT.
3) Turn ignition switch ON.

↓

A 1) Touch "START" on CONSULT screen.
B 2) Touch "ABS".
C 3) Touch "DATA MONITOR".

↓

D 1) Touch "SETTING" on "SELECT MONITOR ITEM" screen.
E 2) Touch "LONG TIME" on "SET RECORDING COND" screen.
D 3) Touch "START" on "SELECT MONITOR ITEM".

CONSULT Inspection Procedure (Cont'd)

ACTIVE TEST PROCEDURE

- When conducting Active test, vehicle must be stationary.
- When ABS warning lamp stays on, never conduct Active test.

1) Turn ignition switch OFF.
2) Connect CONSULT to Data Link Connector for CONSULT.
3) Start engine.

↓

A 1) Touch "START" on CONSULT screen.
B 2) Touch "ABS".
C 3) Touch "ACTIVE TEST".

↓

D 1) Select active test item by touching screen.
E 2) Touch "START".

↓

Carry out the active test by touching screen key.

A

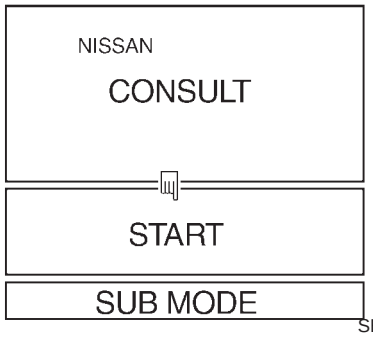

SBR455D

B

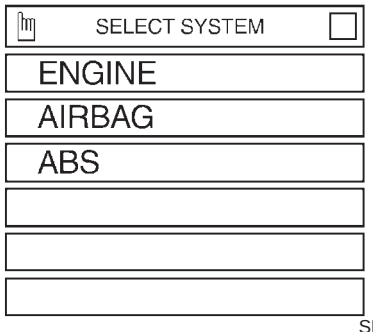

SBR080E

C

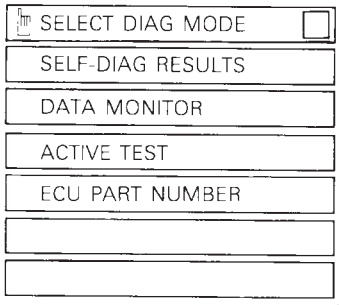

SST412B

D

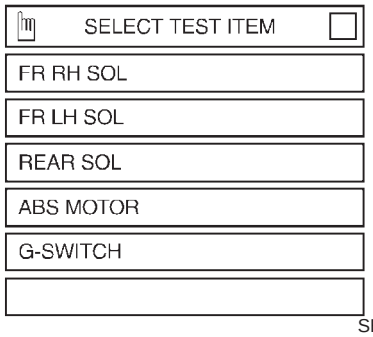

SBR857D

E

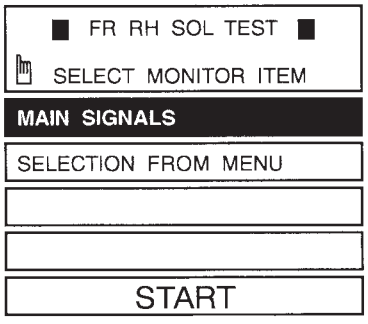

SBR934C

CONSULT Inspection Procedure (Cont'd)

DATA MONITOR MODE

MONITOR ITEM	CONDITION	SPECIFICATION
FR RH SENSOR FR LH SENSOR RR RH SENSOR RR LH SENSOR	Drive vehicle. (Each wheel is rotating.)	Wheel speed signal (Almost the same speed as speedometer.)
STOP LAMP SW	Brake is depressed.	Depress the pedal: ON Release the pedal: OFF
G-SWITCH	Vehicle is driven. Vehicle is stopped. Brake is applied.	During sudden braking while driving on high μ roads (asphalt roads, etc.): ON While vehicle is stopped or during constant-speed driving: OFF
FR RH IN SOL FR RH OUT SOL FR LH IN SOL FR LH OUT SOL RR IN SOL RR OUT SOL	1. Drive vehicle at speeds over 30 km/h (19 MPH) for at least one minute. 2. Engine is running.	Operating conditions for each solenoid valve are indicated. ABS is not operating: OFF
MOTOR RELAY		ABS is not operating: OFF ABS is operating: ON
ACTUATOR RELAY	Ignition switch is ON or engine is running.	Ignition switch ON (Engine stops): OFF Engine running: ON
WARNING LAMP		ABS warning lamp is turned on: ON ABS warning lamp is turned off: OFF
BATTERY VOLT		Power supply voltage for control unit

ACTIVE TEST MODE

TEST ITEM	CONDITION	JUDGEMENT
FR RH SOLENOID FR LH SOLENOID REAR SOLENOID	Engine is running.	Brake fluid pressure control operation IN SOL / OUT SOL UP (Increase): OFF / OFF KEEP (Hold): ON / OFF DOWN (Decrease): ON / ON
ABS MOTOR		ABS actuator motor ON: Motor runs (ABS motor relay ON) OFF: Motor stops (ABS motor relay OFF)
G SWITCH	Ignition switch is ON.	G SWITCH (G SENSOR), ON : Set G SWITCH MONITOR "ON" (G switch circuit is closed.) OFF: Set G SWITCH MONITOR "OFF" (G switch circuit is open.)

Note: Active test will automatically stop ten seconds after the test starts. (LIMIT SIGNAL monitor shows ON.)

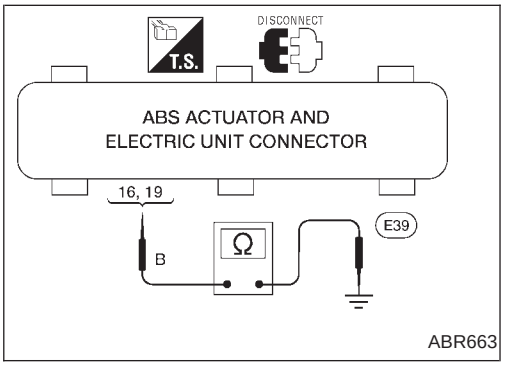

Ground Circuit Check

ABS ACTUATOR AND ELECTRIC UNIT GROUND

- Check resistance between ABS actuator and electric unit connector terminals and ground.
  Resistance: approximately 0Ω

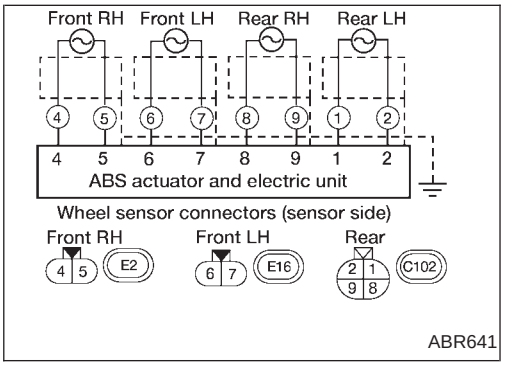

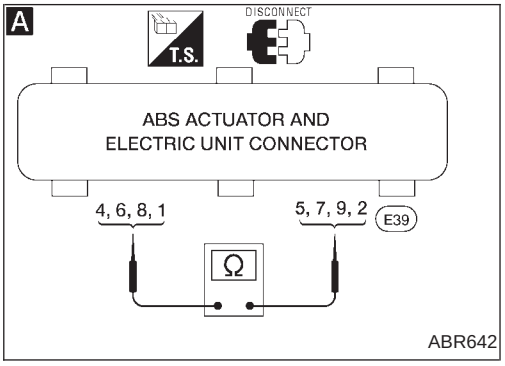

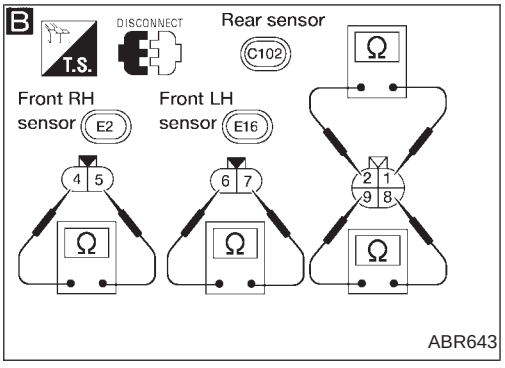

Diagnostic Procedure 1 (Wheel sensor or rotor)

Malfunction code No. 21, 22, 25, 26, 31, 32, 35, 36 or 18

INSPECTION START
1. Disconnect connectors from ABS actuator and electric unit and wheel sensor of malfunction code No. Check terminals for damage or loose connections. Then reconnect connectors.
2. Carry out self-diagnosis again.
Does warning lamp activate again?

No → Inspection end

Yes ↓

A

CHECK WHEEL SENSOR ELECTRICAL.
1. Disconnect ABS actuator and electric unit connector.
2. Check resistance between ABS actuator and electric unit connector (E39) (body side) terminals.
Code No. 21 or 22 (Front RH wheel)
Terminals (4) and (5)
Code No. 25 or 26 (Front LH wheel)
Terminals (6) and (7)
Code No. 31 or 32 (Rear RH wheel)
Terminals (8) and (9)
Code No. 35 or 36 (Rear LH wheel)
Terminals (1) and (2)
Resistance: Front 1.28 - 1.92 kΩ
Rear 1.28 - 1.92 kΩ

OK → (A) (Go to next page.)

NG ↓

B

CHECK WHEEL SENSOR.
Check each sensor for resistance.
Resistance: Front 1.28 - 1.92 kΩ
Rear 1.28 - 1.92 kΩ

OK → Check the following.
- Harness connectors (E2), (E16), (E39), (E53), (C11), (C12), (C102)
- Harness for open or short between wheel sensor connectors and ABS actuator and electric unit

If NG, repair harness or connectors.

NG ↓

REPLACE.
Replace wheel sensor.

Diagnostic Procedure 1 (Wheel sensor or rotor) (Cont'd)

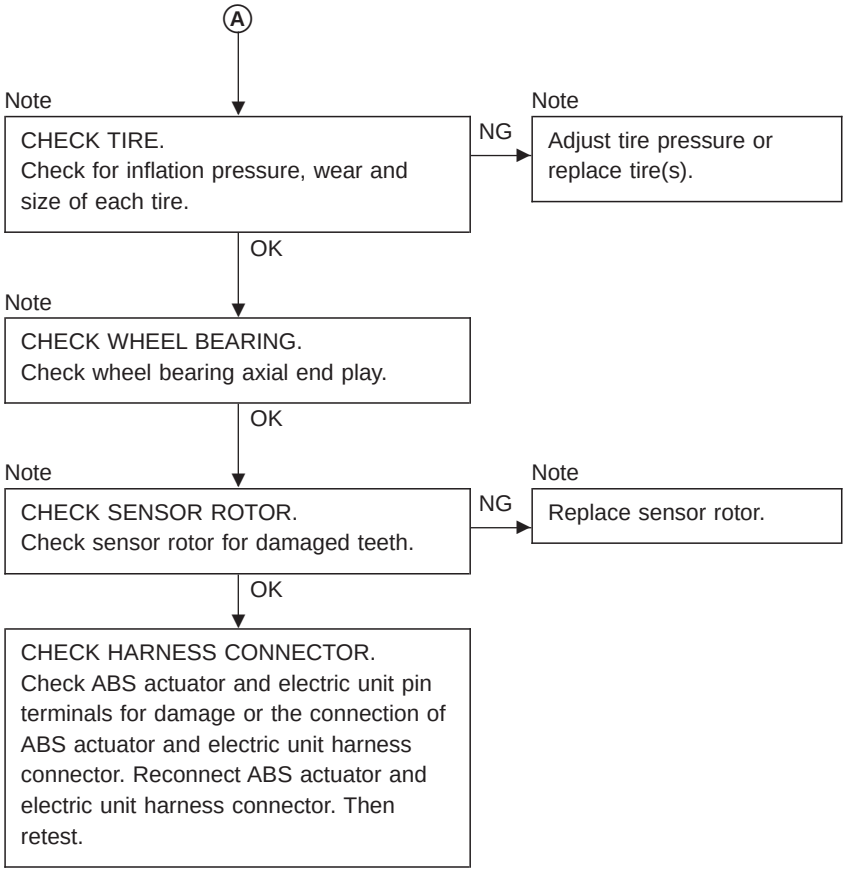

Note: Wheel position should be distinguished by code numbers except code No. 18 (sensor rotor).

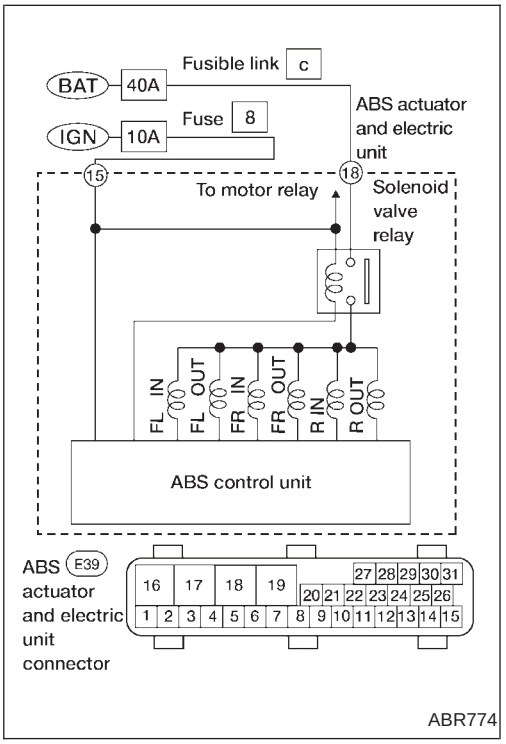

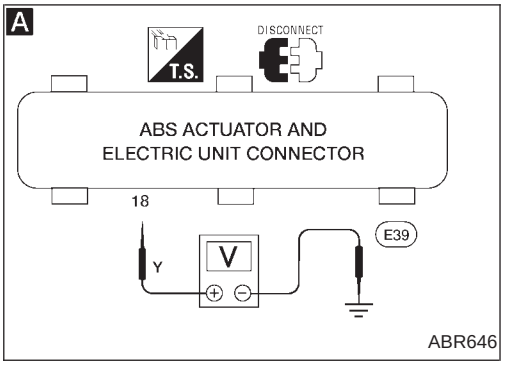

Diagnostic Procedure 2 (ABS actuator solenoid valve and solenoid valve relay)

Malfunction code Nos. 41, 42, 45, 46, 55, 56, 63

CHECK FUSIBLE LINK.
Check 40A fusible link C. For fusible link layout, refer to POWER SUPPLY ROUTING in EL section.

NG → A (Go to next page.)

OK ↓

CHECK CONNECTOR.
1. Disconnect ABS actuator and electric unit connector. Check terminals for damage or loose connection. Then reconnect connector.
2. Carry out self-diagnosis again.
Does warning lamp activate again?

No → Inspection end

Yes ↓

CHECK ABS ACTUATOR AND ELECTRIC UNIT GROUND CIRCUIT.
Refer to ABS ACTUATOR AND ELECTRIC UNIT GROUND in Ground Circuit Check, BR-77.

NG → Repair harness and connector.

OK ↓

A

CHECK SOLENOID VALVE RELAY POWER SUPPLY CIRCUIT.
1. Disconnect ABS actuator and electric unit connector.
2. Check voltage between ABS actuator and electric unit connector E39 (body side) terminal 18 and ground.
Battery voltage should exist.

NG → Check the following.
- Harness connector E39
- Harness for open or short between ABS actuator and electric unit and fusible link

If NG, repair harness or connector.

OK ↓

REPLACE.
Replace ABS actuator and electric unit.

Diagnostic Procedure 2 (ABS actuator solenoid valve and solenoid valve relay) (Cont'd)

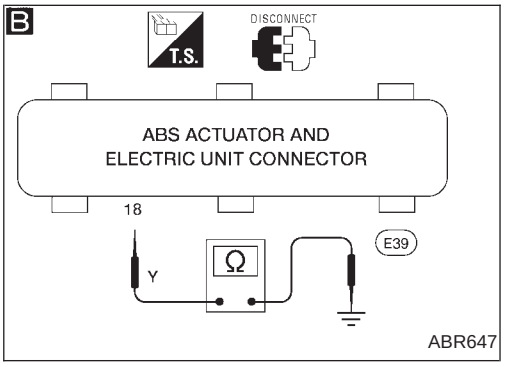

(A)

REPLACE.
Replace fusible link.
Does the fusible link blow out when ignition switch is turned ON?

No → Inspection end

Yes ↓

B

CHECK SOLENOID VALVE RELAY POWER SUPPLY CIRCUIT FOR SHORT.
1. Disconnect battery cable and ABS actuator and electric unit connector.
2. Check continuity between ABS actuator and electric unit connector (E39) (body side) terminal (18) and ground.
Continuity should not exit.

NG →
Check the following.
- Harness connector (E39)
- Harness for open or short between ABS actuator and electric unit and fusible link

If NG, repair harness or connector.

OK ↓

REPLACE.
Replace ABS actuator and electric unit.

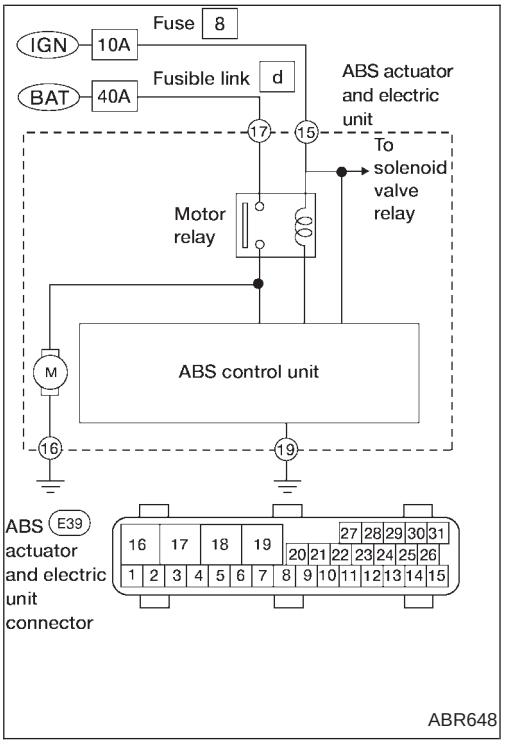

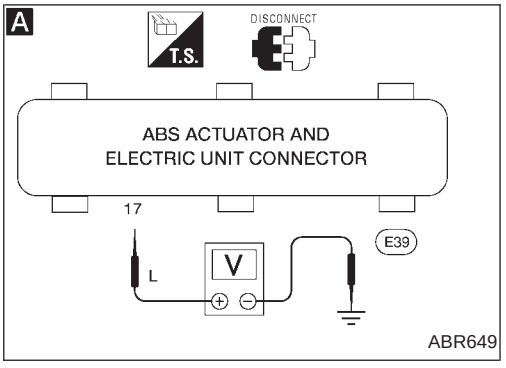

Diagnostic Procedure 3 (Motor relay or motor)

Malfunction code No. 61

CHECK FUSIBLE LINK.
Check 40A fusible link d. For fusible link layout, refer to POWER SUPPLY ROUTING in EL section.

NG → A (Go to next page.)

OK ↓

CHECK CONNECTOR.
1. Disconnect ABS actuator and electric unit connector. Check terminals for damage or loose connection. Then reconnect connector.
2. Carry out self-diagnosis again.
Does warning lamp activate again?

No → Inspection end

Yes ↓

CHECK ABS ACTUATOR AND ELECTRIC UNIT GROUND CIRCUIT.
Refer to ABS ACTUATOR AND ELECTRIC UNIT GROUND in Ground Circuit Check, BR-77.

NG → Repair harness and terminals.

OK ↓

A

CHECK MOTOR RELAY POWER SUPPLY CIRCUIT.
1. Disconnect ABS actuator and electric unit connector.
2. Check voltage between ABS actuator and electric unit connector E39 (body side) terminal 17 and ground.
Battery voltage should exist.

NG → Check the following.
- Harness connector E39
- Harness for open or short between ABS actuator and electric unit and fusible link

If NG, repair harness or connector.

OK ↓

REPLACE.
Replace ABS actuator and electric unit.

Diagnostic Procedure 3 (Motor relay or motor) (Cont'd)

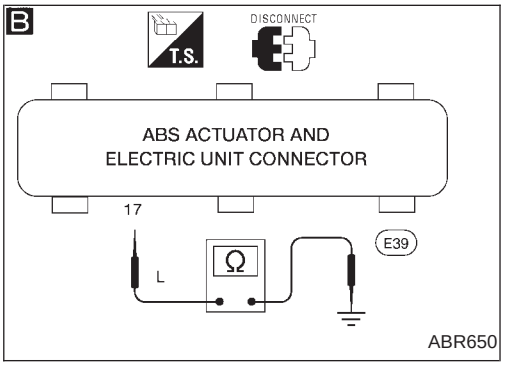

Ⓐ

REPLACE.
Replace fusible link.
Does the fusible link blow out when ignition switch is turned ON?

No → Inspection end

Yes ↓

B

CHECK MOTOR RELAY POWER SUPPLY CIRCUIT FOR SHORT.

1. Disconnect battery cable and ABS actuator and electric unit connector (E39).
2. Check continuity between ABS actuator and electric unit connector (E39) (body side) terminal (17) and ground.
   Continuity should not exist.

NG →
Check the following
- Harness connector (E39)
- Harness for open or short between ABS actuator and electric unit and fusible link

If NG, repair harness or connector.

OK ↓

REPLACE.
Replace ABS actuator and electric unit.

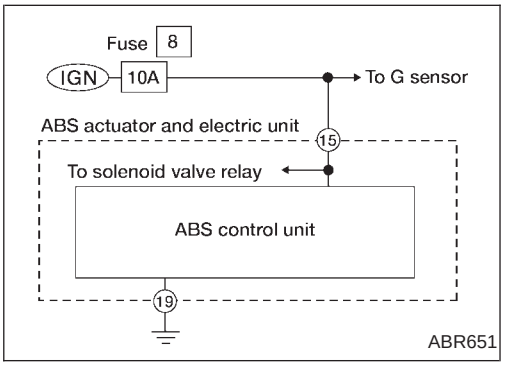

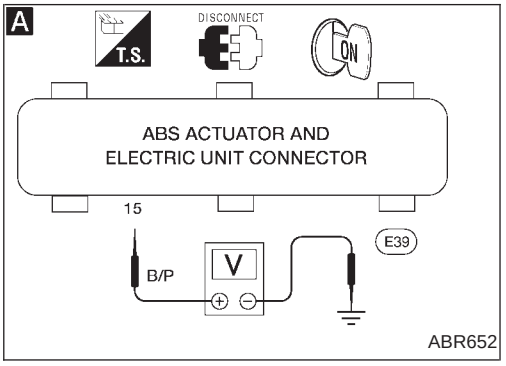

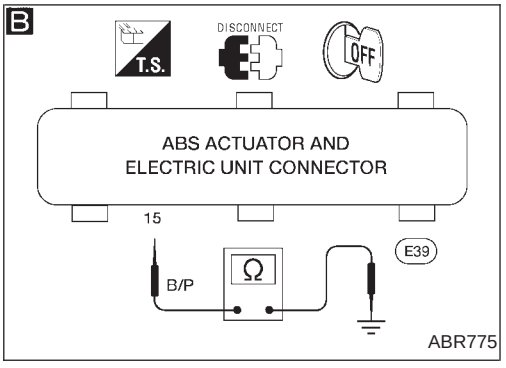

Diagnostic Procedure 4 (Low voltage)

Malfunction code No. 57

CHECK FUSE.
Check 10A fuse 8. For fuse layout, refer to POWER SUPPLY ROUTING in EL section.

NG → A (See below.)

OK ↓

CHECK CONNECTOR.
1. Disconnect ABS actuator and electric unit connector. Check terminals for damage or loose connection. Then reconnect connector.
2. Carry out self-diagnosis again.
Does warning lamp activate again?

No → Inspection end.

Yes ↓

CHECK ABS ACTUATOR AND ELECTRIC UNIT GROUND CIRCUIT.
Refer to ABS ACTUATOR AND ELECTRIC UNIT GROUND in Ground Circuit Check, BR-77.

NG → Repair harness and connector.

OK ↓

A

CHECK ABS ACTUATOR AND ELECTRIC UNIT POWER SUPPLY CIRCUIT.
1. Disconnect ABS actuator and electric unit connector.
2. Check voltage between ABS actuator and electric unit connector E39 (body side) terminal 15 and ground.
Battery voltage should exist when ignition switch is turned ON.

NG → Check the following.
- Harness connector E39
- Harness for open or short between ABS actuator and electric unit and fuse

OK ↓

REPLACE.
Replace ABS actuator and electric unit.

A ↓

REPLACE.
Replace fuse.
Does the fuse blow out when ignition switch is turned ON?

No → Inspection end

YES ↓

B

CHECK ABS ACTUATOR AND ELECTRIC UNIT POWER SUPPLY CIRCUIT FOR SHORT.
1. Disconnect battery cable and ABS actuator and electric unit connector E39.
2. Check continuity between ABS actuator and electric unit connector E39 (body side) terminal 15 and ground.
Continuity should not exist.

NG → Check the following.
- Harness connector E39
- Harness for open or short between ABS actuator and electric unit and fuse

If NG, repair harness or connector.

OK ↓

REPLACE.
Replace ABS actuator and electric unit.

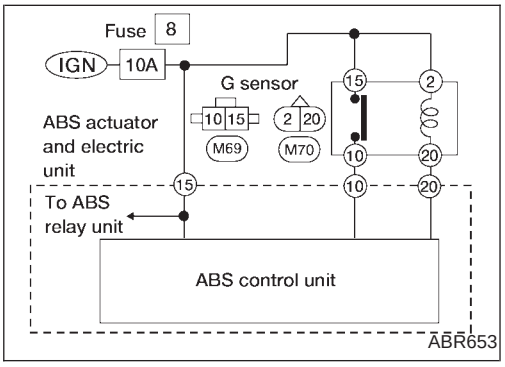

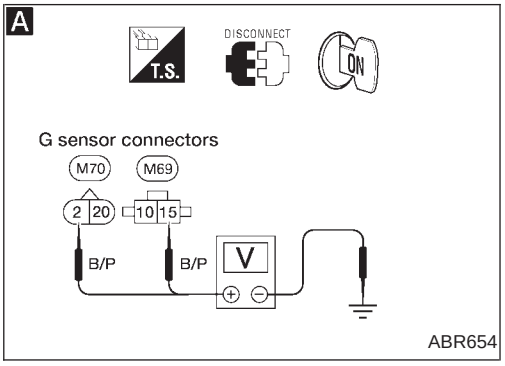

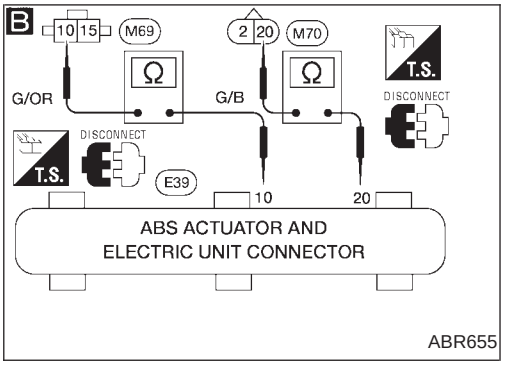

Diagnostic Procedure 5 (G sensor)

Malfunction code No. 17

CHECK CONNECTOR.
1. Disconnect ABS actuator and electric unit connector. Check terminals for damage or loose connection. Then reconnect connector.
2. Carry out self-diagnosis again.
Does warning lamp activate again?

No → Inspection end

Yes ↓

CHECK G SENSOR.
Refer to G SENSOR in Electrical Components Inspection, BR-94.

NG → Replace G sensor.

OK ↓

A

CHECK G SENSOR POWER SUPPLY CIRCUIT.
1. Disconnect G sensor connectors.
2. Check voltage between G sensor connector (M69), (M70) (body side) terminals (2), (15) and ground.
Battery voltage should exist.

NG → Check the following.
- Harness connectors (M69), (M70), (E39)
- Harness for open or short between G sensor and ABS actuator and electric unit

If NG, repair harness or connectors.

OK ↓

B

CHECK G SENSOR CIRCUITS.
1. Disconnect ABS actuator and electric unit connector and G sensor connectors.
2. Check continuity between ABS actuator and electric unit connector (E39) (body side) terminals (10), (20) and G sensor connectors (M69), (M70) (body side) terminals (10), (20).
Continuity should exist.

NG → Check the following.
- Harness connectors (M69), (M70), (E39), (E53)
- Harness for open or short between G sensor and ABS actuator and electric unit

If NG, repair harness or connectors.

OK ↓

REPLACE.
Replace ABS actuator and electric unit.

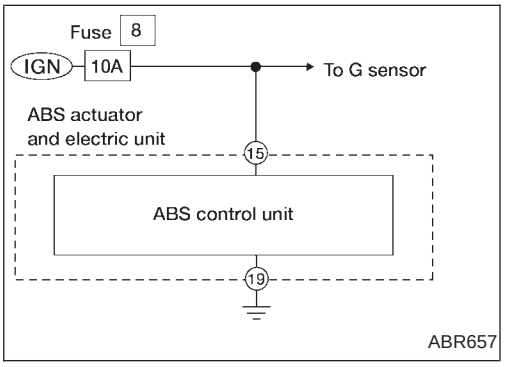

Diagnostic Procedure 6 (Control unit)

Malfunction code No. 71

CHECK CONNECTOR.
1. Disconnect ABS actuator and electric unit connector.
   Check terminals for damage or loose connections. Then reconnect connector.
2. Carry out self-diagnosis again.
   Does warning lamp activate again?

No → Inspection end

Yes ↓

CHECK ABS ACTUATOR AND ELECTRIC UNIT POWER SUPPLY CIRCUIT.
Check voltage. Refer to **A** in Diagnostic Procedure 4, BR-84.

↓

CHECK SELF-DIAGNOSTIC RESULTS.
Does warning lamp indicate code No. 71 again?

Yes → Replace ABS actuator and electric unit.

No ↓

INSPECTION.
Inspect the system according to the code No.

Diagnostic Procedure 7 (ABS works frequently.)

CHECK BRAKE FLUID PRESSURE.
Check brake fluid pressure distribution.
Refer to Proportioning Valve, Inspection, BR-12.

NG → Repair. Then perform Preliminary Check, refer to BR-62.

OK ↓

CHECK WHEEL SENSOR.
1. Check wheel sensor connector for terminal damage or loose connections.
2. Perform wheel sensor mechanical check.
   Refer to CHECK SENSOR ROTOR in Diagnostic Procedure 1, BR-78.

NG → Repair.

OK ↓

CHECK FRONT AXLES.
Check front axles for excessive looseness. Refer to FA section (''Front Wheel Bearing'', ''ON-VEHICLE SERVICE'').

NG → Repair.

OK ↓

Go to B in Diagnostic Procedure 8, BR-88.

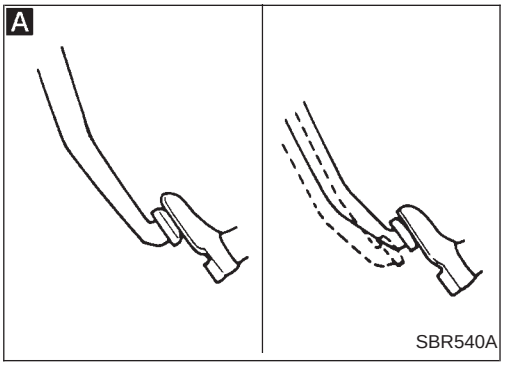

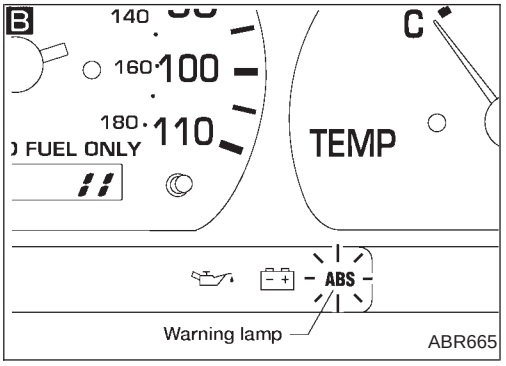

Diagnostic Procedure 8 (Unexpected pedal action)

A

CHECK BRAKE PEDAL STROKE.
Check brake pedal stroke. Is stroke excessively large?

- Yes → Perform Preliminary Check, refer to BR-62.
- No ↓

CHECK MECHANICAL BRAKE SYSTEM PERFORMANCE.
Disconnect ABS actuator and electric unit connector and check whether brake is effective.

- No → Perform Preliminary Check, refer to BR-62.
- Yes ↓

B

CHECK WARNING LAMP ACTIVATE.
Ensure warning lamp remains off while driving.

- NG → Carry out self-diagnosis. Refer to BR-68, 72.
- OK ↓

CHECK WHEEL SENSOR.
1. Check wheel sensor connector for terminal damage or loose connection.
2. Perform wheel sensor mechanical check.
   Refer to CHECK SENSOR ROTOR in Diagnostic Procedure 1, BR-78.

- NG → Repair.
- OK ↓

CHECK HARNESS CONNECTOR.
Check ABS actuator and electric unit pin terminals for damage or the connection of ABS actuator and electric unit harness connector.
Reconnect ABS actuator and electric unit harness connector. Then retest.

Diagnostic Procedure 9 (Long stopping distance)

CHECK ABS PERFORMANCE.
Disconnect ABS actuator and electric unit connector and check whether stopping distance is still long.

- No → Go to **B** in Diagnostic Procedure 8, BR-88.
- Yes ↓

Perform Preliminary Check and air bleeding (if necessary).

Note: Stopping distance may be longer for vehicles without ABS when road condition is slippery.

Diagnostic Procedure 10 (ABS does not work.)

CHECK WARNING LAMP ACTIVATE.
Does the ABS warning lamp activate?

→ Yes: Carry out self-diagnosis. Refer to BR-68, 72.

↓ No: Go to **B** in Diagnostic Procedure 8, BR-88.

Note: ABS does not work when vehicle speed is under 10 km/h (6 MPH).

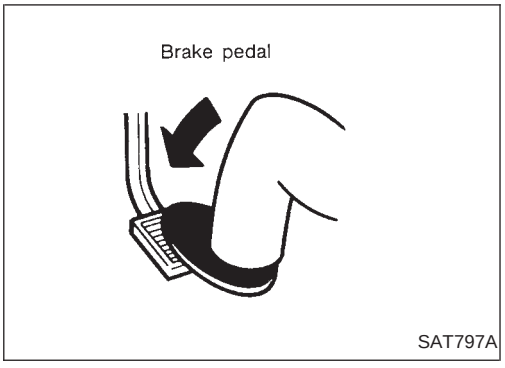

Diagnostic Procedure 11 (Pedal vibration and noise)

INSPECTION START
1. Apply brake.
2. Start engine.
3. Does the symptom appear only when engine is started?

→ Yes: Carry out self-diagnosis. Refer to BR-68, 72.

↓ No:

CHECK IF SYMPTOM APPEARS.
Does the symptom appear when electrical equipment switches (such as headlamp) are operated?

→ No: Go to **B** in Diagnostic Procedure 8, BR-88.

↓ Yes:

CHECK WHEEL SENSOR.
Check wheel sensor shield ground. For location of shield ground, refer to wiring diagram and "HARNESS LAYOUT" in EL section.

→ NG: Repair wheel sensor.

↓ OK:

CHECK HARNESS CONNECTOR.
Check ABS actuator and electric unit pin terminals for damage or the connection of ABS actuator and electric unit harness connector.
Reconnect ABS actuator and electric unit harness connector, then retest.

Diagnostic Procedure 11 (Pedal vibration and noise) (Cont'd)

Note: ABS may operate and cause vibration under any of the following conditions.

- **Applying brake gradually when shifting or operating clutch.**
- **Low friction (slippery) road.**
- **High speed cornering.**
- **Driving over bumps and pot holes.**
- **Engine speed is over 5,000 rpm with vehicle stopped.**

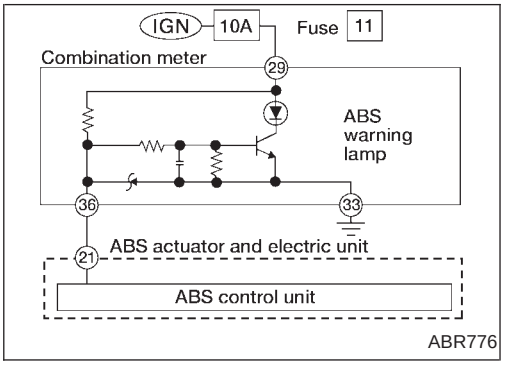

Diagnostic Procedure 12 (Warning lamp does not come on when ignition switch is turned ON.)

CHECK FUSE.
Check 10A fuse 11 . For fuse layout, refer to POWER SUPPLY ROUTING in EL section.

NG → Replace fuse.

OK ↓

A

CHECK WARNING LAMP ACTIVATE.
Disconnect ABS actuator and electric unit connector.
Does the warning lamp activate?

Yes → A (Go to next page.)

No ↓

B

CHECK HARNESS FOR SHORT.
1. Disconnect ABS actuator and electric unit connector and combination meter connector M39.
2. Check continuity between ABS actuator and electric unit connector E39 (body side) terminal 21 and ground.
Continuity should not exist.

NG → Repair harness or connector.

OK ↓

C

CHECK COMBINATION METER (ABS WARNING LAMP) GROUND CIRCUIT.
Check continuity between combination meter connector M39 harness terminal 33 and ground.
Continuity should exist.

NG → Repair harness or connector.

OK ↓

CHECK COMBINATION METER.
Check combination meter. Refer to WARNING LAMPS in EL section.

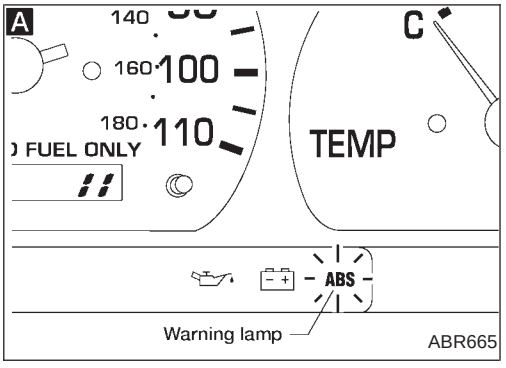

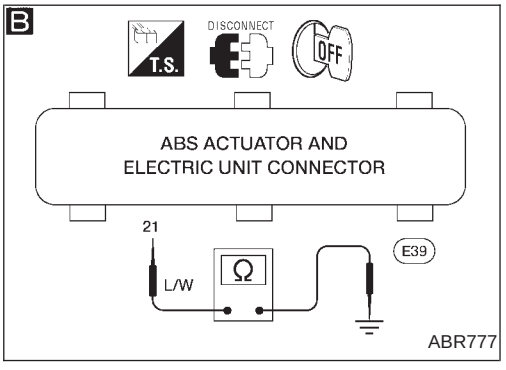

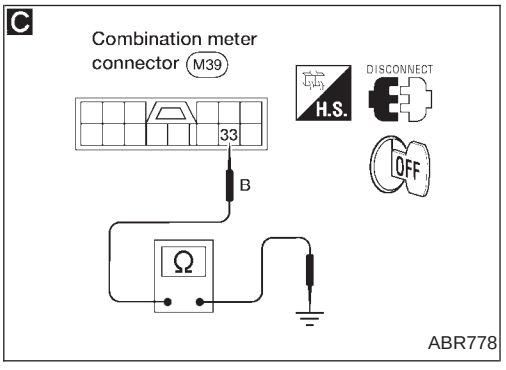

Diagnostic Procedure 12 (Warning lamp does not come on when ignition switch is turned ON.) (Cont'd)

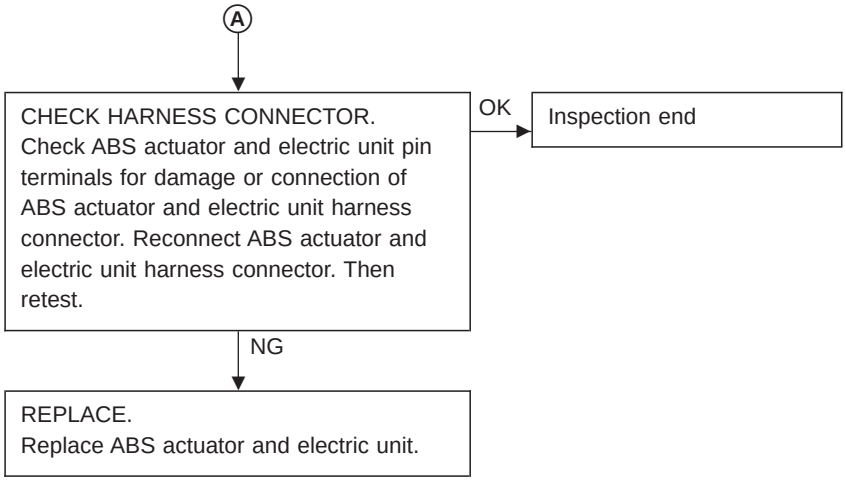

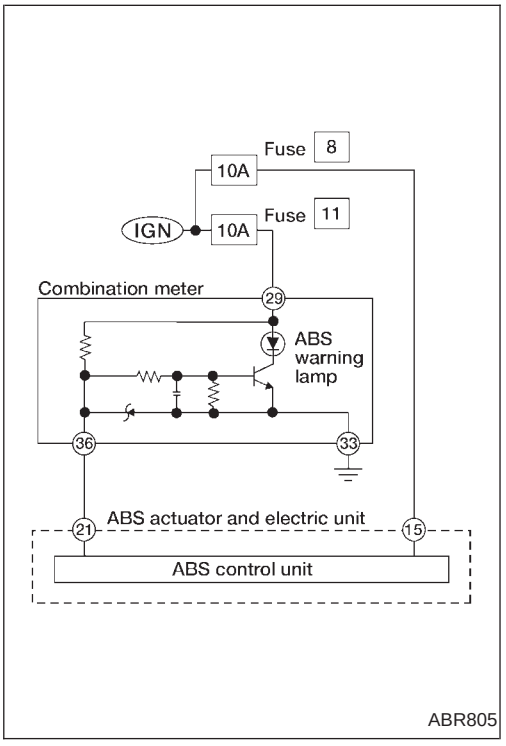

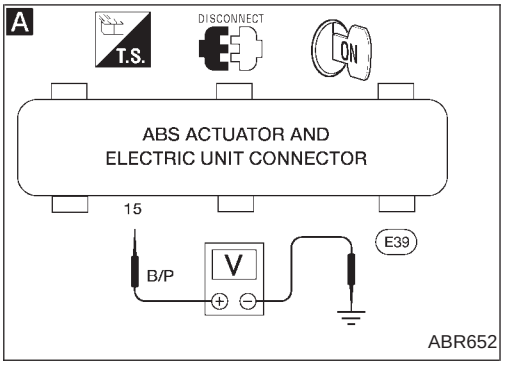

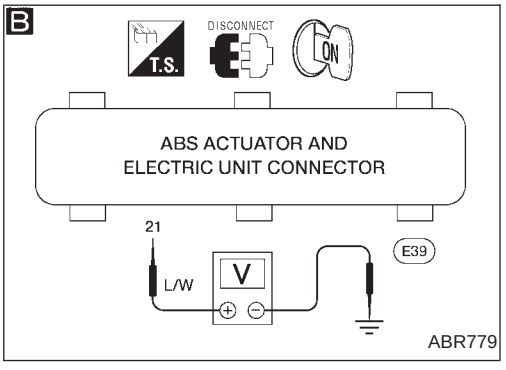

Diagnostic Procedure 13 (Warning lamp stays on when ignition switch is turned ON.)

CHECK FUSE.
Check 10A fuse 8. For fuse layout, refer to POWER SUPPLY ROUTING in EL section.

NG → A (Go to next page.)

OK ↓

CHECK HARNESS CONNECTOR.
Check ABS actuator and electric unit pin terminals for damage or the connection of ABS actuator and electric unit harness connector. Reconnect ABS actuator and electric unit harness connector. Then retest.

OK → Inspection end

NG ↓

CHECK ABS ACTUATOR AND ELECTRIC UNIT GROUND CIRCUIT.
Refer to ABS ACTUATOR AND ELECTRIC UNIT GROUND in Ground Circuit Check, BR-77.

NG → Repair harness and connector.

OK ↓

A

CHECK ABS ACTUATOR AND ELECTRIC UNIT POWER SUPPLY CIRCUIT.
1. Disconnect ABS actuator and electric unit connector.
2. Check voltage between ABS actuator and electric unit connector E39 (body side) terminal 15 and ground.
Battery voltage should exist when ignition switch is turned ON.

NG → Check the following.
- Harness connector E39
- Harness for open or short between ABS actuator and electric unit and fuse

If NG, repair harness or connector.

OK ↓

B

CHECK ABS WARNING LAMP SIGNAL TO ABS ACTUATOR AND ELECTRIC UNIT.
Check voltage between ABS actuator and electric unit connector E39 (body side) terminal 21 and ground.
Approx. 5 volts should exist when ignition switch is turned ON.

NG → B (Go to next page.)

OK ↓

REPLACE.
Replace ABS actuator and electric unit.

Diagnostic Procedure 13 (Warning lamp stays on when ignition switch is turned ON.) (Cont'd)

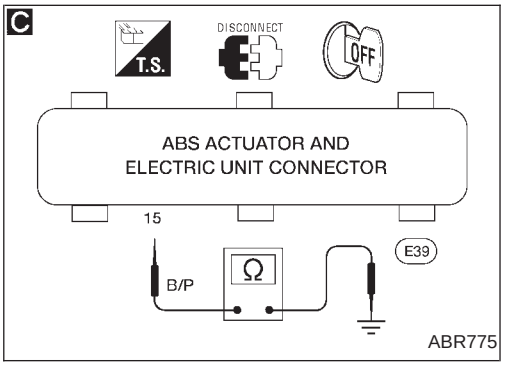

(A)

REPLACE.
Replace fuse.
Does the fuse blow out when ignition switch is turned ON?

No → Inspection end

Yes ↓

C

CHECK ABS ACTUATOR AND ELECTRIC UNIT POWER SUPPLY CIRCUIT FOR SHORT.
1. Disconnect battery cable and ABS actuator and electric unit connector (E39).
2. Check continuity between ABS actuator and electric unit connector (E39) body side terminal (15) and ground.
Continuity should not exist.

NG → Check the following.
- Harness connector (E39)
- Harness for open or short between ABS actuator and electric unit and fuse

If NG, repair harness or connector.

OK ↓

REPLACE.
Replace ABS actuator and electric unit.

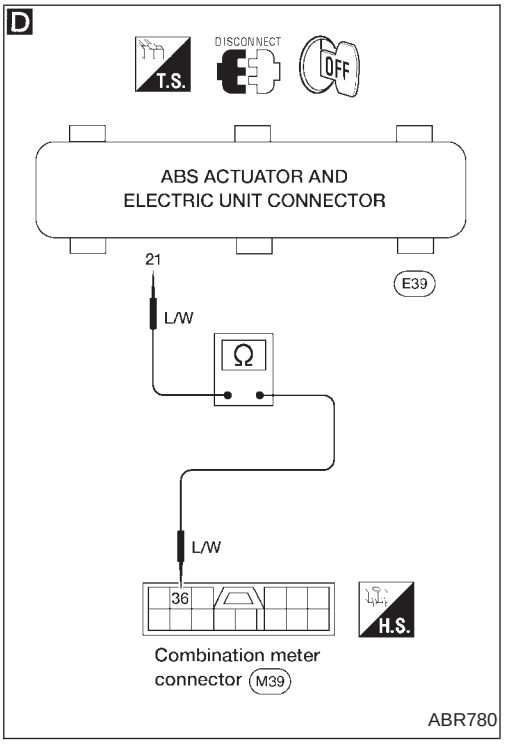

(B)

D

CHECK ABS WARNING LAMP CONTROL CIRCUIT.
1. Disconnect combination meter connector (M39).
2. Check continuity between ABS actuator and electric unit connector (E39) (body side) terminal (21) and combination meter connector (M39) harness terminal (36).
Continuity should exist.

NG → Check the following.
- Harness connectors (E39) and (M39)
- Harness for open or short between ABS actuator and electric unit and combination meter

If NG, repair harness or connectors.

OK ↓

CHECK COMBINATION METER.
Check combination meter. Refer to WARNING LAMPS in EL section.

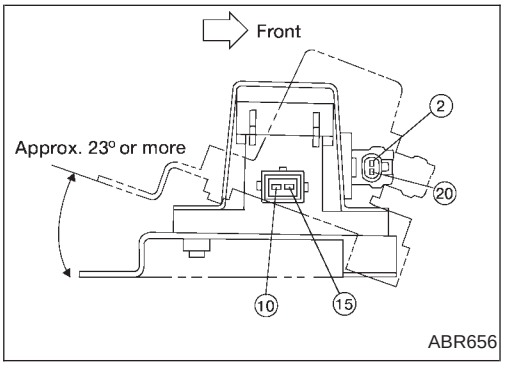

Electrical Components Inspection

G sensor

CAUTION:

The G sensor is easily damaged if it sustains an impact. Be careful not to drop or bump it.

1. Measure resistance between terminals ⑩ and ⑮ of G sensor unit connector.

G sensor condition	Resistance between terminals ⑩ and ⑮	G sensor switch condition
Installed in vehicle	1.4 - 1.6 kΩ	"ON"
Tilted as shown in figure	4.7 - 5.5 kΩ	"OFF"

2. Measure resistance between terminals ② and ⑳ of the G sensor unit connector.

Resistance:	70 - 124 Ω

General Specifications

Applied model	2WD	4WD	
		Standard wheelbase	Long wheelbase
Front brake			
Brake model	CL28VD		
Cylinder bore diameter x number of pistons mm (in)	42.8 (1.685) x 2		
Pad length x width x thickness mm (in)	146.6 x 48.5 x 10 (5.77 x 1.909 x 0.39)		
Rotor outer diameter x thickness mm (in)	260 x 26 (10.2 x 1.02)	277 x 26 (10.9 x 1.02)	
Rear brake			
Brake model	LT26B	LT30A	
Cylinder bore diameter mm (in)	22.22 (7/8)	20.64 (13/16)	
Lining length x width x thickness mm (in)	249.6 x 50 x 5.5 (9.83 x 1.97 x 0.217)	296 x 50 x 6.1 (11.65 x 1.97 x 0.240)	
Drum inner diameter mm (in)	260.0 (10.24)	295.0 (11.61)	
Master cylinder			
Bore diameter mm (in)	25.40 (1)		
Control valve			
Valve model	Linkage type load sensing valve	Proportioning valve within master cylinder	
Split point [kPa (kg/cm^2, psi)] x reducing ratio	(Variable) x 0.23	2,942 (30, 427) x 0.2	3,432 (35, 498) x 0.2
Brake booster			
Booster model	M195T	M215T	
Diaphragm diameter mm (in)	Pri.: 205 (8.07) Sec.: 180 (7.09)	Pri.: 230 (9.06) Sec.: 205 (8.07)	
Recommended brake fluid	DOT 3		

Inspection and Adjustment

DISC BRAKE

Unit: mm (in)

Brake model	CL28VD
Pad wear limit	
Minimum thickness	2.0 (0.079)
Rotor repair limit	
Minimum thickness	24.0 (0.945)

DRUM BRAKE

Unit: mm (in)

Brake model	LT26B	LT30A
Lining wear limit		
Minimum thickness	1.5 (0.059)	
Drum repair limit		
Maximum inner diameter	261.5 (10.30)	296.5 (11.67)
Out-of-round limit	0.03 (0.0012)	

BRAKE PEDAL

Unit: mm (in)

Free height "H"*	M/T 191 - 201 (7.52 - 7.91)
	A/T 201 - 211 (7.91 - 8.31)
Depressed height "D" [under force of 490 N (50 kg, 110 lb) with engine running]	M/T 105 (4.13)
	A/T 115 (4.53)
Clearance "C" between pedal stopper and threaded end of stop lamp switch or ASCD switch	0.3 - 1.0 (0.012 - 0.039)
Pedal free play	
At pedal pad	1.0 - 3.0 (0.039 - 0.118)

*: Measured from surface of dash floor panel to pedal pad.

PARKING BRAKE CONTROL

Control type	Stick lever
Lever stroke [under force of 196 N (20 kg, 44 lb)]	10 - 12
Lever stroke when warning switch comes on	1