FRONT & REAR AXLE

SECTION AX

CONTENTS

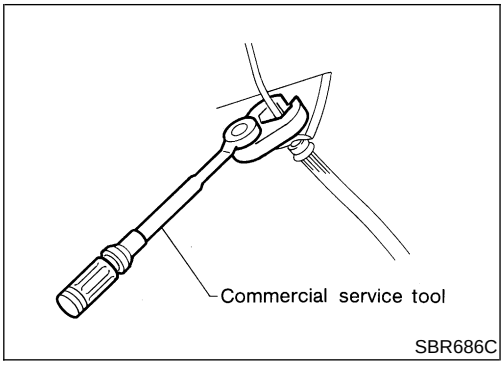

Precautions

PRECAUTIONS

NEAX0001

- **When installing rubber parts, final tightening must be carried out under unladen condition* with tires on ground.**
  ***: Fuel, radiator coolant and engine oil full. Spare tire, jack, hand tools and mats in designated positions.**
- **Use flare nut wrench when removing and installing brake tubes.**
- **After installing removed suspension parts, check wheel alignment and adjust if necessary.**
- **Always torque brake lines when installing.**

Preparation

SPECIAL SERVICE TOOLS

NEAX0002

The actual shapes of Kent-Moore tools may differ from those of special service tools illustrated here.

Tool number (Kent-Moore No.) Tool name	Description	
ST29020001 (J24319-01) Gear arm puller	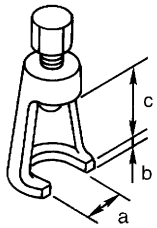 NT694	Removing ball joint for knuckle spindle **a: 34 mm (1.34 in)** **b: 6.5 mm (0.256 in)** **c: 61.5 mm (2.421 in)**
HT72520000 (J25730-B) Ball joint remover	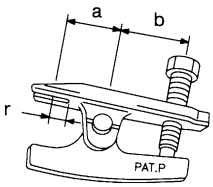 NT546	Removing tie-rod outer end **a: 33 mm (1.30 in)** **b: 50 mm (1.97 in)** **r: R11.5 mm (0.453 in)**
KV401021S0 (—) Bearing race drift	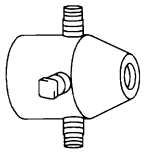 NT153	Installing wheel bearing outer race
KV40105400 (J36001) Wheel bearing lock nut wrench	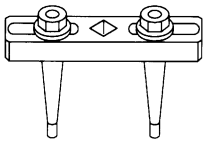 NT154	Removing and installing wheel bearing lock nut (4WD models only)

COMMERCIAL SERVICE TOOLS

NEAX0003

Tool name	Description	
1 Flare nut crowfoot 2 Torque wrench	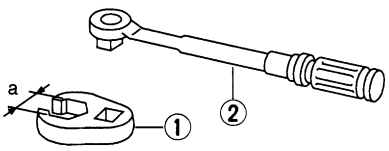 NT360	Removing and installing each brake piping **a: 10 mm (0.39 in)**

Noise, Vibration and Harshness (NVH) Troubleshooting

=NEAX0004

NVH TROUBLESHOOTING CHART

NEAX0004S01

Use the chart below to help you find the cause of the symptom. If necessary, repair or replace these parts.

Possible cause and SUSPECTED PARTS			Excessive joint angle	Joint sliding resistance	Imbalance	Improper installation, looseness	Parts interference	Wheel bearing damage	PROPELLER SHAFT	DIFFERENTIAL	DRIVE SHAFT	AXLE	SUSPENSION	TIRES	ROAD WHEEL	BRAKES	STEERING
Reference page			—	AX-18	—	AX-7, 26	—	AX-4, 26	Refer to NVH, ***PD-4***	Refer to NVH, ***PD-4***	Refer to DRIVE SHAFT in this chart.	Refer to AXLE in this chart.	Refer to NVH, ***SU-3***	Refer to NVH, ***SU-3***	Refer to NVH, ***SU-3***	Refer to NVH, ***BR-7***	Refer to NVH, ***ST-5***
Symptom	DRIVE SHAFT	Noise, Vibration	×	×					×	×		×	×	×	×	×	×
		Shake	×		×				×			×	×	×	×	×	×
	AXLE	Noise				×	×		×	×	×		×	×	×	×	×
		Shake				×	×		×		×		×	×	×	×	×
		Vibration				×	×		×		×		×	×			×
		Shimmy				×	×						×	×	×	×	×
		Judder				×							×	×	×	×	×
		Poor quality ride or handling				×	×	×					×	×	×		

×: Applicable

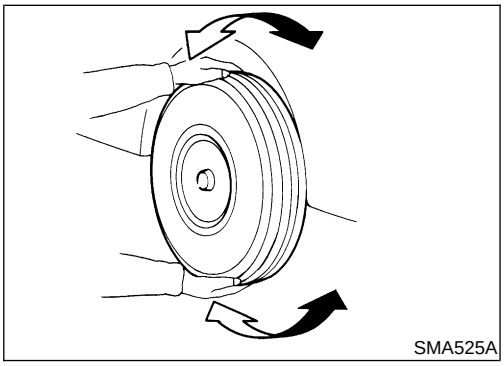

On-vehicle Service

FRONT AXLE PARTS

NEAX0005

Check front axle parts for excessive play, cracks, wear and other damage.

- Shake each front wheel to check for excessive play.
  If looseness is noted, adjust wheel bearing end play, then check ball joint end play.
- Make sure that the cotter pin is inserted.
- Retighten all nuts and bolts to the specified torque.
  : Refer to "FRONT SUSPENSION", *SU-21*.

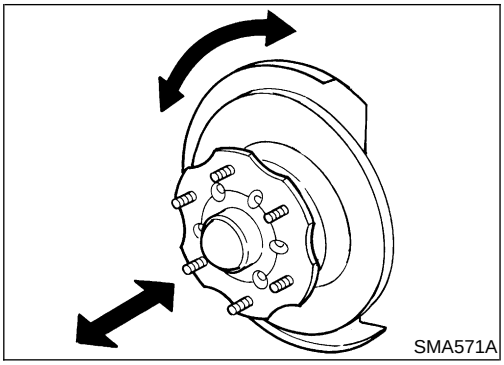

FRONT WHEEL BEARING

NEAX0006

- Check that wheel bearings operate smoothly.
- Check axial end play.

  Axial end play: 0 mm (0 in)
- Adjust wheel bearing preload if there is any axial end play or wheel bearing does not turn smoothly.

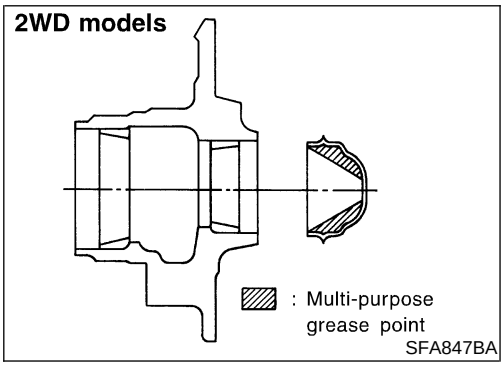

Preload Adjustment (2WD models)

NEAX0006S01

Adjust wheel bearing preload after wheel bearing has been replaced or front axle has been reassembled.

1. Before adjustment, thoroughly clean all parts to prevent dirt entry.
2. Apply multi-purpose grease sparingly to the following parts:
- Threaded area of spindle
- Contact surface between lock washer and outer wheel bearing
- Hub cap (as shown at left) **18 - 22 g (0.63 - 0.78 oz)**
- Grease seal lip

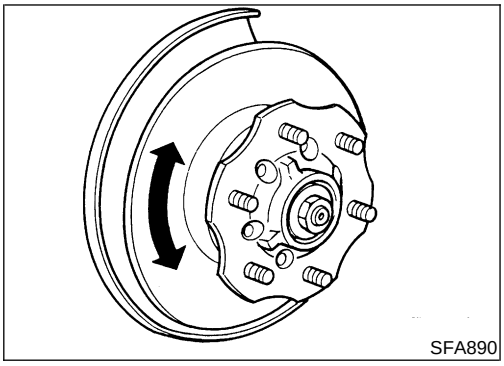

3. Tighten wheel bearing lock nut to the specified torque.

   : 34 - 39 N·m (3.5 - 4.0 kg-m, 25 - 29 ft-lb)
4. Turn wheel hub several times in both directions to seat wheel bearing correctly.
5. Again tighten wheel bearing lock nut to the specified torque.

   : 34 - 39 N·m (3.5 - 4.0 kg-m, 25 - 29 ft-lb)

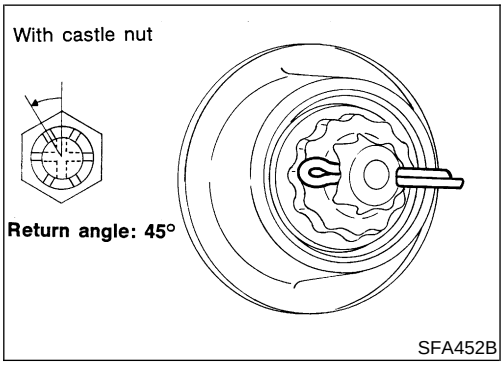

6. Turn wheel bearing lock nut back 45 degrees.
7. Fit adjusting cap and new cotter pin. Align cotter pin slot by loosening nut 15 degrees or less.

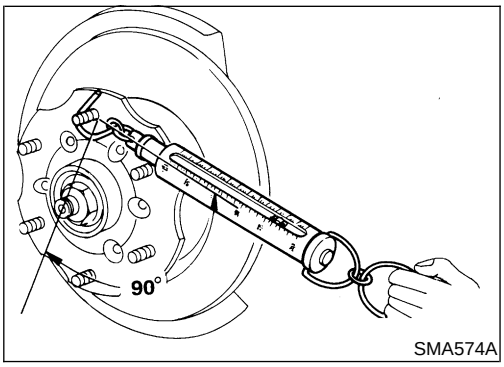

8. Measure wheel bearing preload and axial end play.

   Axial end play: 0 mm (0 in)

   Wheel bearing preload

   (As measured at wheel hub bolt):

   New grease seal

   9.8 - 28.4 N (1.0 - 2.9 kg, 2.2 - 6.4 lb)

   Used grease seal

   9.8 - 23.5 N (1.0 - 2.4 kg, 2.2 - 5.3 lb)

Repeat above procedures until correct bearing preload is obtained.

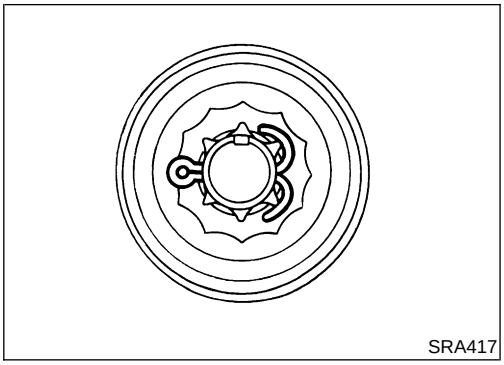
SRA417

9. Spread cotter pin.
10. Install hub cap.

Preload Adjustment (4WD models)

NEAX0006S02

Adjust wheel bearing preload after wheel bearing has been replaced or front axle has been reassembled.

Adjust wheel bearing preload as follows:

1. Before adjustment, thoroughly clean all parts to prevent dirt entry.

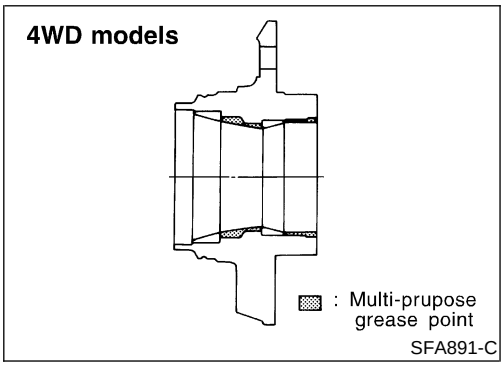

SFA891-C

2. Apply multi-purpose grease sparingly to the following parts:
- Threaded portion of spindle
- Contact surface between wheel bearing washer and outer wheel bearing
- Grease seal lip
- Wheel hub (as shown at left) **18 - 23 g (0.63 - 0.81 oz)**

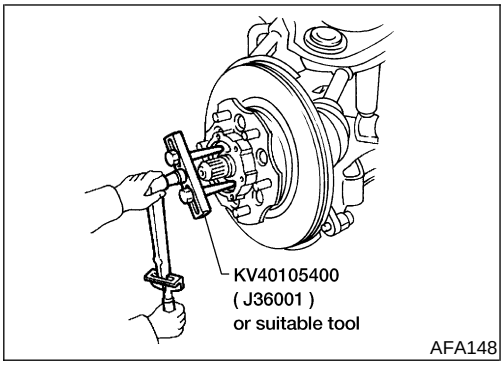

AFA148

3. Tighten wheel bearing lock nut with Tool.
   : 78 - 98 N·m (8 - 10 kg-m, 58 - 72 ft-lb)
4. Turn wheel hub several times in both directions.
5. Loosen wheel bearing lock nut so that torque becomes 0 N·m (0 kg-m, 0 ft-lb).
6. Retighten wheel bearing lock nut with Tool.
   : 0.5 - 1.5 N·m (0.05 - 0.15 kg-m, 4.3 - 13.0 in-lb)

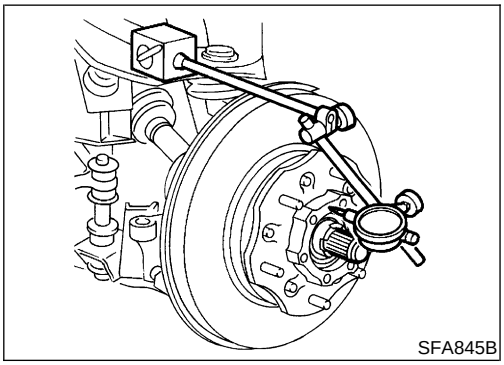
SFA845B

7. Turn wheel hub several times in both directions.
8. Retighten wheel bearing lock nut with Tool.
   : 0.5 - 1.5 N·m (0.05 - 0.15 kg-m, 4.3 - 13.0 in-lb)
9. Measure wheel bearing axial end play.
   Axial end play: 0 mm (0 in)

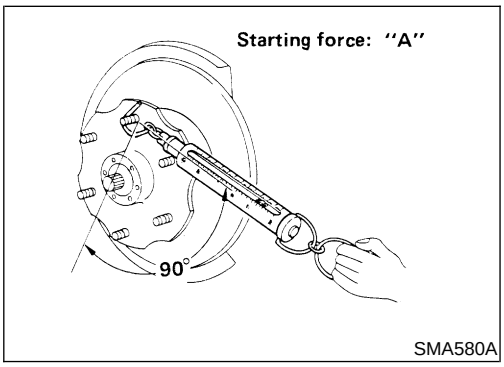

SMA580A

10. Measure starting force "A" at wheel hub bolt.

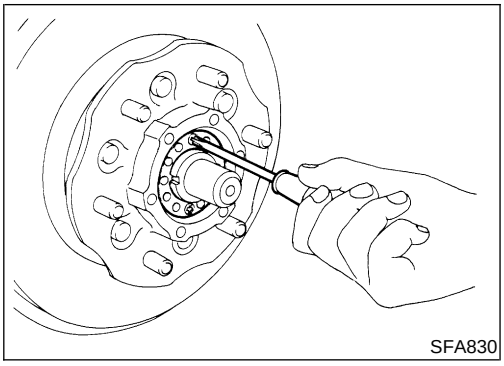

11. Install lock washer by tightening the lock nut within 15 to 30 degrees.
12. Turn wheel hub several times in both directions to seat wheel bearing correctly.
13. Measure starting force "B" at wheel hub bolt. Refer to step 10.
14. Wheel bearing preload "C" can be calculated as shown below.

    C = B − A

    Wheel bearing preload "C":

    7.06 - 20.99 N (0.72 - 2.14 kg, 1.59 - 4.72 lb)
15. Repeat steps 3 through 14 until correct axial end play and wheel bearing preload are obtained.
16. Tighten screws.

    : 1.2 - 1.8 N·m (0.12 - 0.18 kg-m, 10.4 - 15.6 in-lb)
17. Install free-running hub.

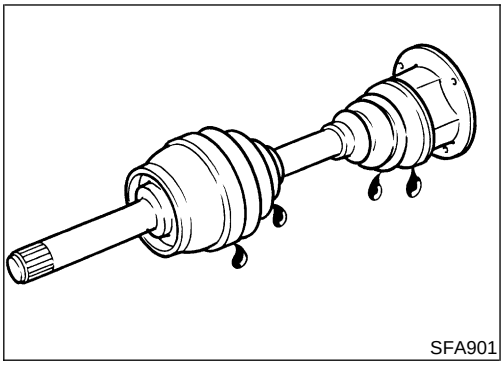

DRIVE SHAFT

NEAX0007

- Check for grease leakage and damage.

Components

NEAX0008

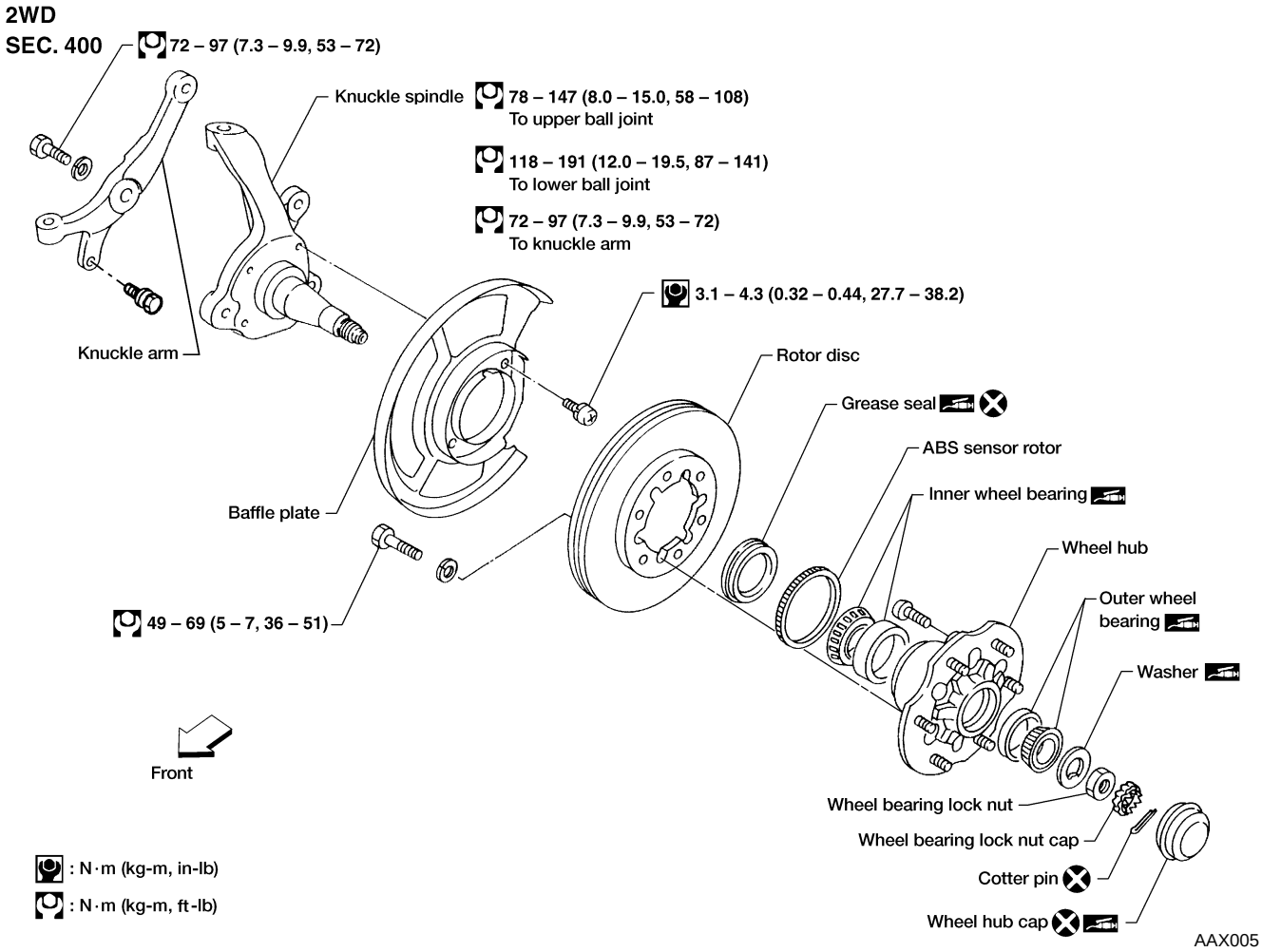

4WD
SEC. 391 • 400

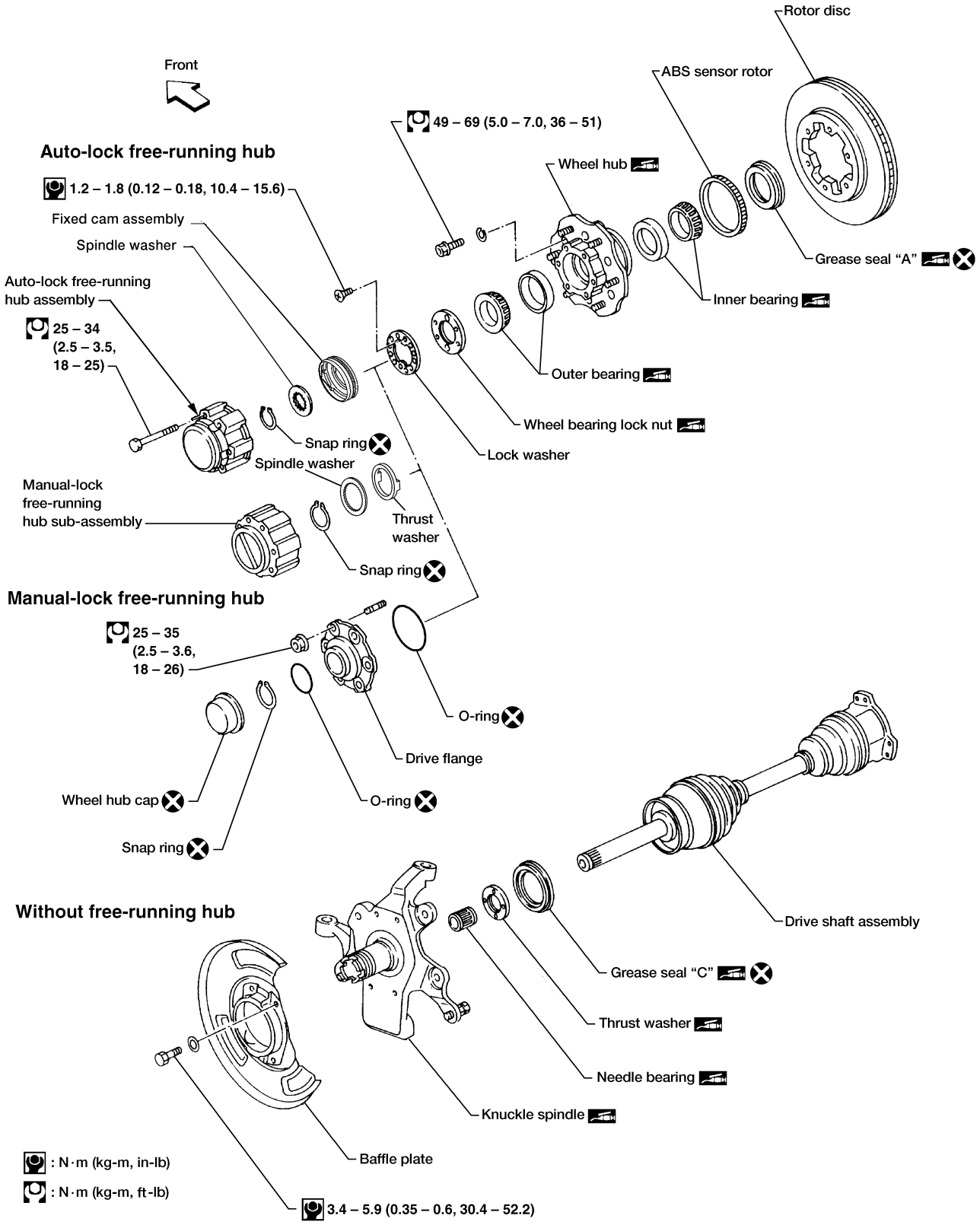

AAX006

Manual-lock Free-running Hub

REMOVAL AND INSTALLATION

NEAX0039

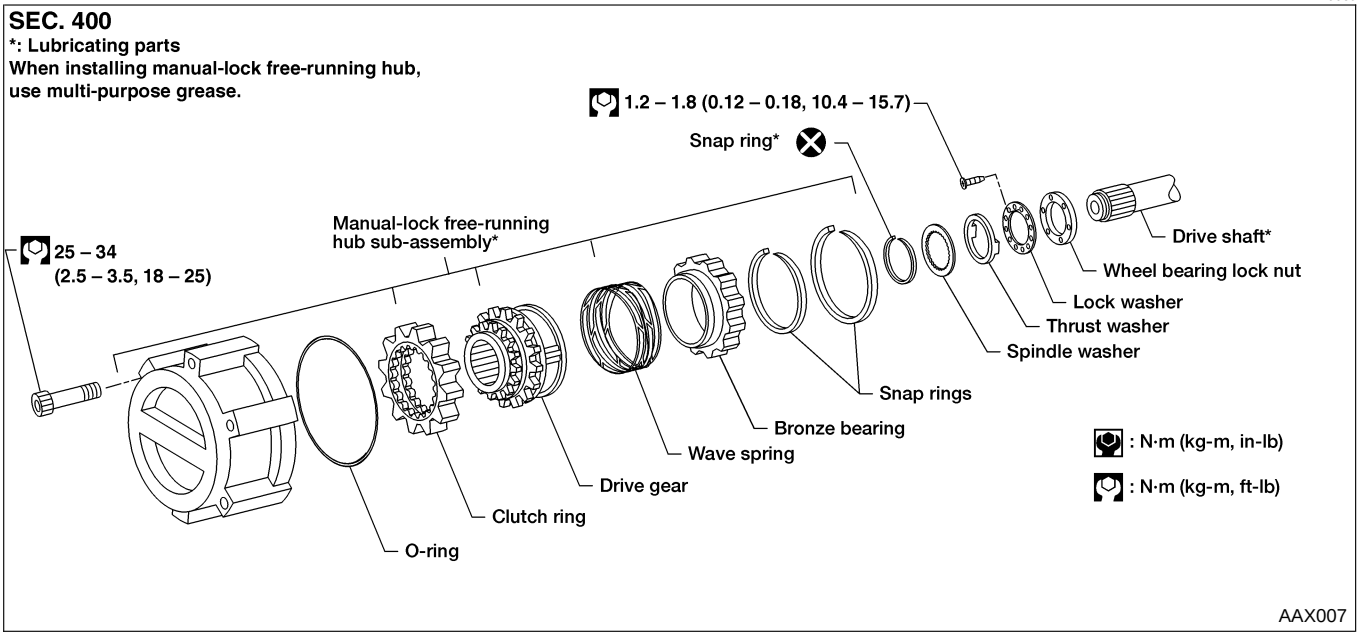

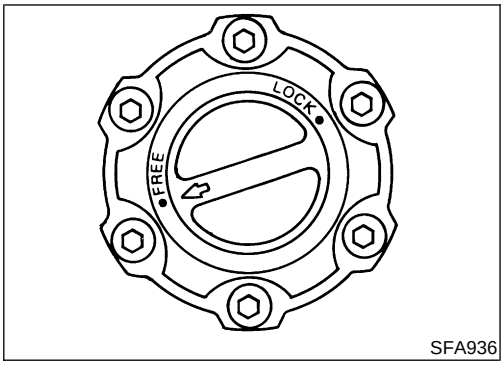

1. Set knob of manual-lock free-running hub in the FREE position.
2. Remove manual-lock free-running hub.
3. When installing manual-lock free-running hub, make sure the hub is in the FREE position.

Apply multi-purpose grease to the parts shown in the above illustration.

4. Check operation of manual-lock free-running hub after installation.

INSPECTION

NEAX0040

- Check that the knob moves smoothly and freely.
- Check that the clutch moves smoothly in the body.

Auto-lock Free-running Hub

DESCRIPTION

NEAX0041

Auto-lock free-running hubs are locked by placing the transfer case into the 4WD mode and moving the vehicle. They are unlocked by placing the transfer case into 2WD mode and moving the vehicle in reverse gear **in a straight line** for at least 2–3 meters (7–10 feet).

In most cases, the “ratcheting” noise sometimes heard in auto-lock free-running hubs occurs when one hub is locked and the opposite hub is unlocked. The noise is heard in the side opposite to the locked hub. For example, if the noise is heard at the left front wheel,

the **right** front hub is still locked and is not unlocking. This condition may be caused by a mechanical condition in one of the hubs or by incorrect operation on the part of the vehicle driver, for example by not backing up in a straight line to unlock the hubs, by not backing up enough, or by shifting into 4WD at too high a vehicle speed, etc.
The ratcheting noise does not necessarily cause damage to the good hub. If the noise is caused by incorrect operation, counsel the driver of the vehicle. If replacement is necessary, replace only the defective parts. It is not necessary to replace auto-lock free-running hubs in pairs.
Use the trouble diagnosis chart to isolate the cause of the noise. Refer to "TROUBLE DIAGNOSIS FOR NOISE", AX-11.

REMOVAL AND INSTALLATION

NEAX0011

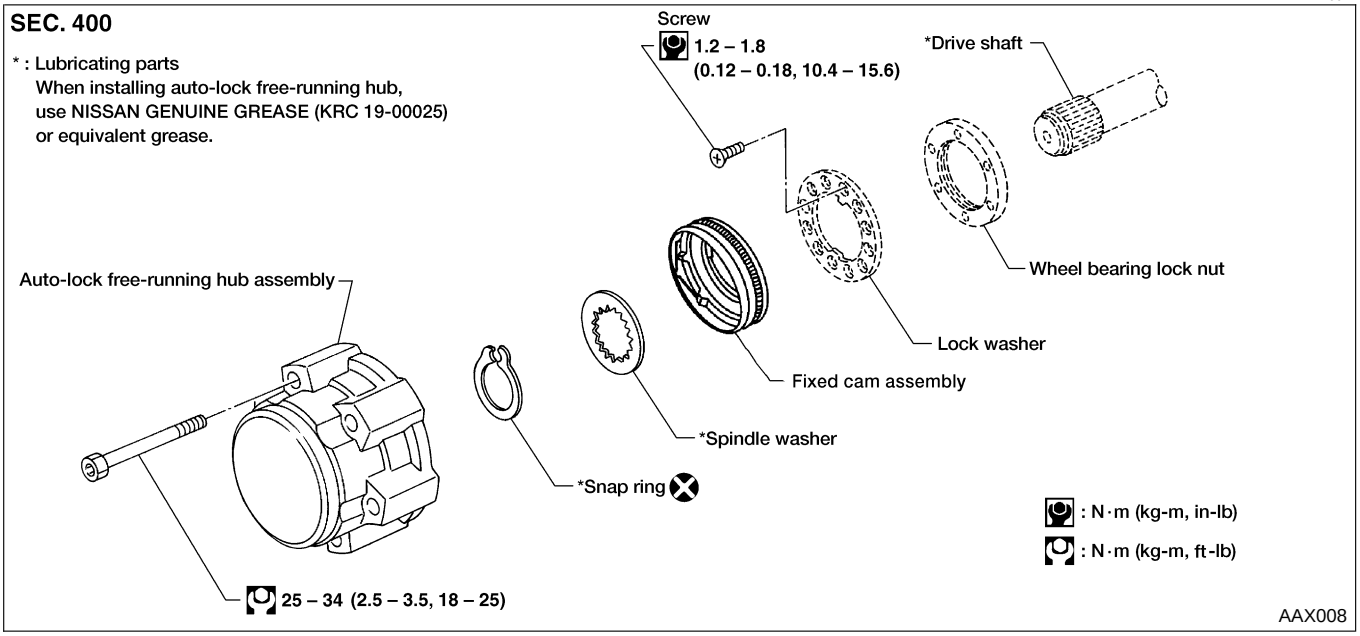

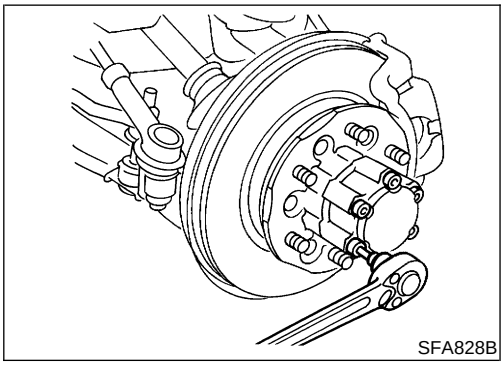

1. Set auto-lock free-running hub in the FREE position.
2. Remove auto-lock free-running hub assembly.

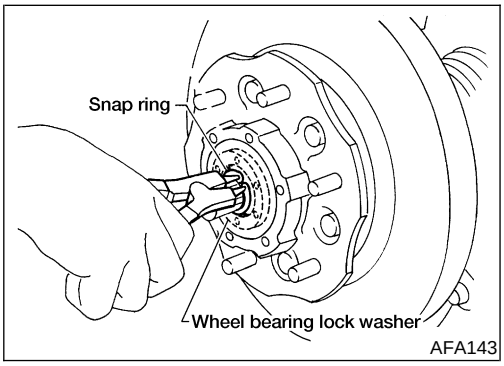

3. Remove snap ring.
4. Remove spindle washer and fixed cam assembly.
5. Install fixed cam assembly.
   Be sure to align the tabs of the fixed cam assembly to the notches of the knuckle.
6. Place the spindle washer and then the snap ring over the axle shaft and position them between between the 2 locking grooves.
7. While supporting the axle shaft behind the knuckle, use an appropriate sized deep socket to securely seat the snap ring into the inner locking groove.

CAUTION:
Visually verify that the snap ring is fully seated into the locking groove.

8. After installing auto-lock free-running hub, check operation.

During installation, apply recommended grease to the parts shown in the above illustration.

INSPECTION

NEAX0042

1. Check axle axial end play. Refer to "INSTALLATION", AX-20.
2. Inspect fixed cam (thrust washer) assembly. If this part shows evidence of galling or heat damage—usually caused by too little axle axial end play—replace as necessary. Check axle axial end play if this part is replaced. Refer to "INSTALLATION", AX-20.
3. Inspect hub assembly. Hold inner splines with a finger and spin the outer body. If the hub shows signs of damage, or if there is excessive metallic clicking when the hub is spun, replace with a new one.

NOTE:
New hubs are greased during manufacture. No additional grease is required.
New hubs are supplied with fixed cam assemblies

CAUTION:
Any hub, the original or a new one, should go onto the axle freely by hand and fit flush against its seat. If it does not fit flush, do not pull the hub into place by tightening the bolts. The hub is possibly misaligned inside and tightening the bolts will cause damage. Remove the hub and turn to align correctly before continuing.

4. Once repair is complete, test drive to check for correct operation and the absence of noise.

TROUBLE DIAGNOSIS FOR NOISE

NEAX0043

Symptom	Possible cause	Repair order
Ratchet noise in hub after shifting the transfer case into 4WD at speeds higher than 40 km/h (25 mph).	1. Shifting into 4WD at higher speeds is difficult and may cause damage to transfer case	1. Stop the vehicle or decrease speed to less than 40 km/h (25 mph). Return the transfer case lever to the 2H position once, then re-shift to the 4H position. Move forward until the hubs lock.
Ratchet noise in hub after shifting or attempting to shift the transfer case into 4WD at speeds less than 40 km/h (25 mph).	1. Transfer case was not fully engaged or shifting was stopped halfway so that only one hub locked	1. Make sure the 4WD lamp on the dash is ″ON″ when shifting into 4WD. Slow or stop the vehicle. Shift into 2H, then back to 4H. Move forward until the hubs lock.
Ratchet noise in hub after shifting the transfer case into 4WD on snowy or muddy roads or on slopes.	1. If the rear wheels slip during the hub locking operation, noise can occur in the hubs	1. Reduce engine speed and drive forward slowly. The hubs will lock evenly and the noise will stop.
Ratchet noise in hub after shifting the transfer case into 2WD and backing up to unlock the hubs.	1. The hubs may not be fully released	1. Stop the vehicle, make sure the transfer case lever is fully in the 2H position, then back up slowly in a straight line at least 2-3 meters (7-10 feet).

Symptom	Possible cause	Repair order
Ratchet noise in hub when driving in extremely cold weather.	1. The viscosity of differential oil grows higher in extreme cold, increasing the possibility that one hub may lock. A lower viscosity differential fluid may be required for extreme cold temperatures. See owner's manual	1. Shift the transfer case into 4H and drive the vehicle for 10 minutes or more to warm the differential oil. Then shift to 2WD and back up in a straight line for at least 2-3 meters (7-10 feet) to disengage the hubs.
Continual ratchet noise in one wheel when moving forward.	1. A hub may be mechanically locked either by damage or misinstallation	1. Remove hubs and inspect. Refer to "INSPECTION", AX-11. Pay special attention to the hub **opposite** the noisy side. The ratcheting does not necessarily cause damage to the good hub.

Wheel Hub and Rotor Disc

REMOVAL AND INSTALLATION

NEAX0012

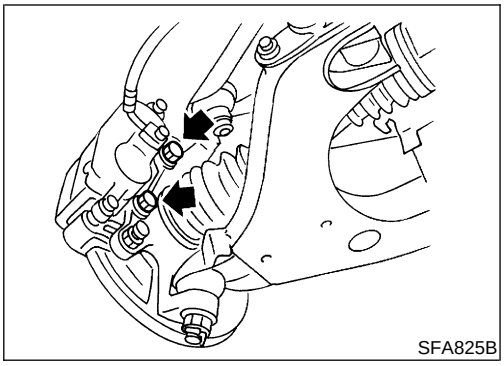

1. Remove free-running hub assembly (4WD models). Refer to "Auto-lock Free-running Hub", AX-10.
2. Remove brake caliper assembly without disconnecting hydraulic line.

Be careful not to depress brake pedal, or piston will pop out. Make sure brake hose is not twisted.

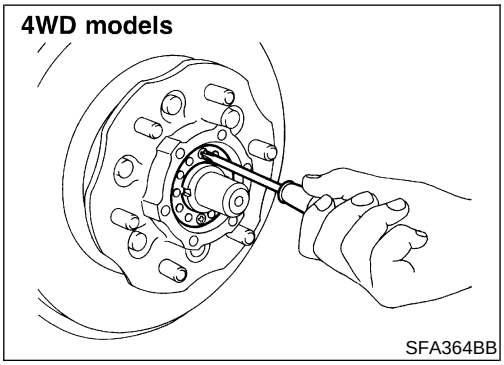

3. Remove lock washer (4WD models).

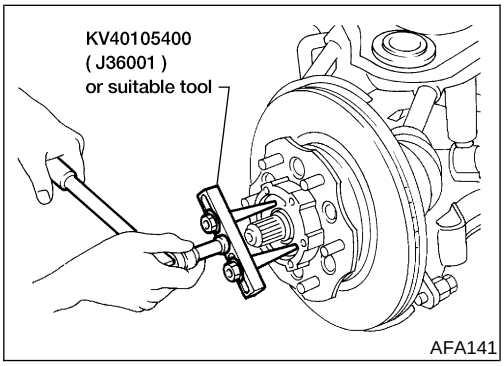

4. Remove wheel bearing lock nut.
   2WD: With suitable tool
   4WD: With Tool

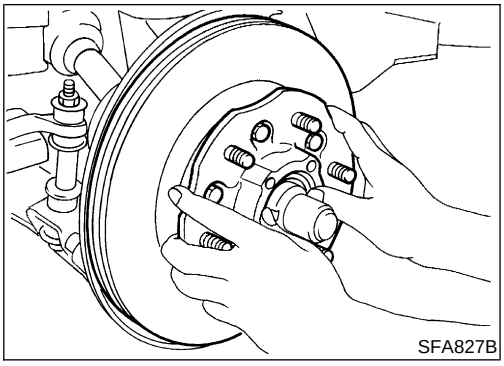
SFA827B

5. Remove wheel hub and wheel bearing.

Be careful not to drop outer bearing.

6. After installing wheel hub and wheel bearing, adjust wheel bearing preload.
   Refer to "Preload Adjustment (2WD models)" and "Preload Adjustment (4WD models)", "FRONT WHEEL BEARING", "On-vehicle Service", AX-4, 5.

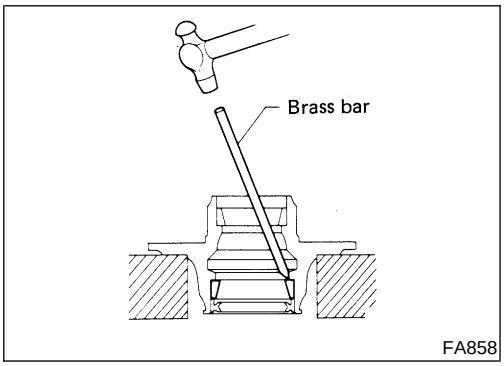

FA858

DISASSEMBLY

NEAX0013

- Remove bearing outer races with suitable brass bar.

INSPECTION

NEAX0014

Thoroughly clean wheel bearings and wheel hub.

Wheel Bearings

NEAX0014S01

- Make sure wheel bearings roll freely and are free from noise, cracks, pitting and wear.

Wheel Hub

NEAX0014S02

- Check wheel hub for cracks by using a magnetic exploration or dyeing test.

ASSEMBLY

NEAX0015

1. Install bearing outer race with Tool until it seats in hub.

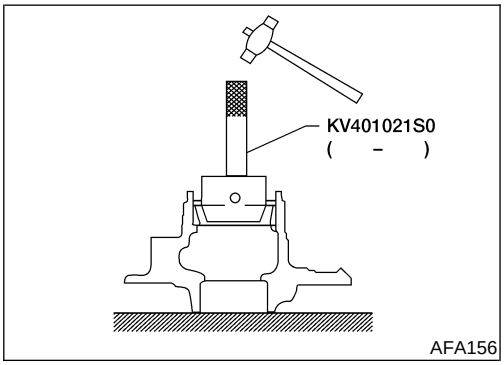

AFA156

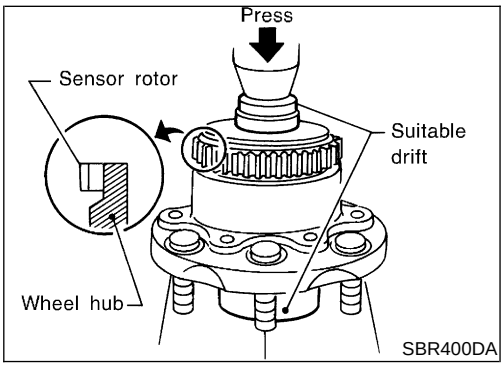

SBR400DA

2. Install the sensor rotor using suitable drift and press.
   Always replace sensor rotor with new one.
   Pay attention to the direction of front sensor rotor as shown in figure.

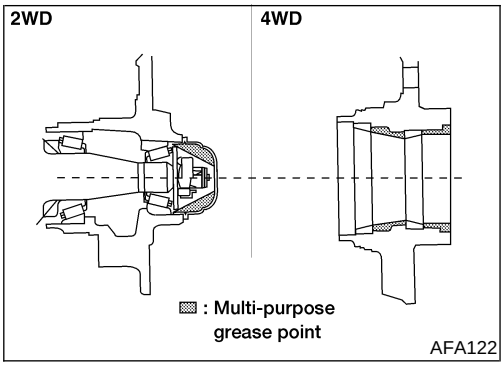

3. Pack multi-purpose grease in wheel hub and hub cap.

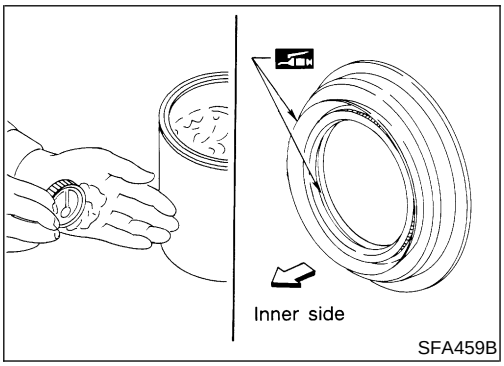

4. Apply multi-purpose grease to each bearing cone.
5. Pack grease seal lip with multi-purpose grease, then install it into wheel hub with suitable drift.

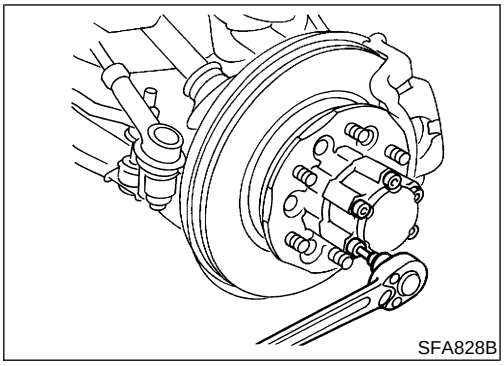

Knuckle Spindle

REMOVAL

NEAX0016

1. Remove free-running hub assembly (4WD models).
   Refer to "Auto-lock Free-running Hub", AX-10.
2. Remove wheel hub and rotor disc.
   Refer to "Wheel Hub and Rotor Disc", AX-12.

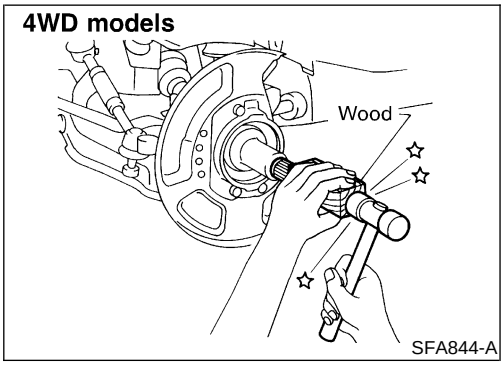

3. Separate drive shaft from knuckle spindle by slightly tapping drive shaft end (4WD models).

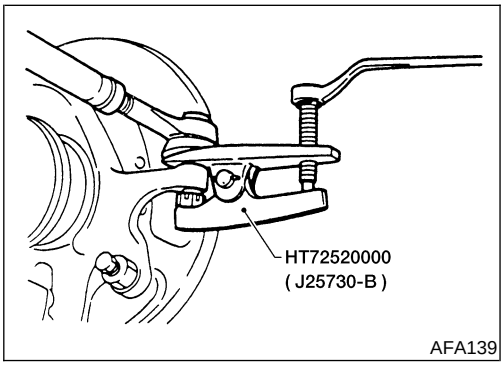

4. Separate tie-rod from knuckle spindle with Tool.

Install stud nut conversely on stud bolt so as not to damage stud bolt.

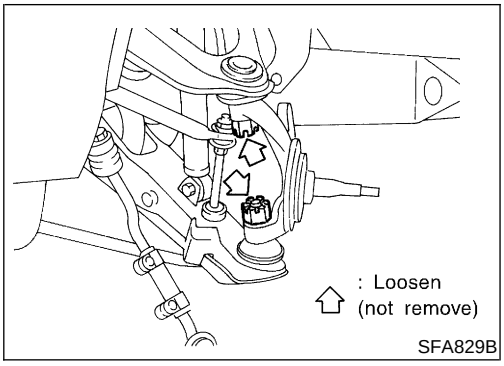

5. Separate knuckle spindle from ball joints.
a. Loosen (do not remove) upper and lower ball joint tightening nuts.

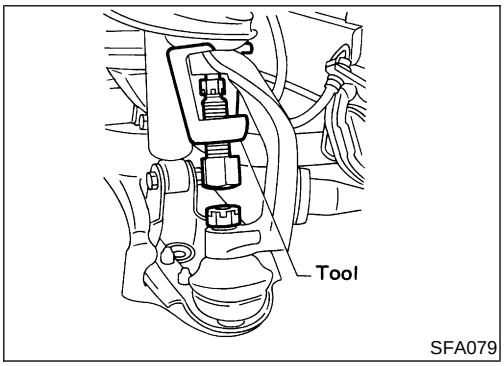

b. Separate knuckle spindle from upper and lower ball joint studs with Tool.
During above operation, never remove ball joint nuts which are loosened in step (a) above.

Tool:
2WD
ST29020001 (J24319-01)
4WD
HT72520000 (J25730-B)

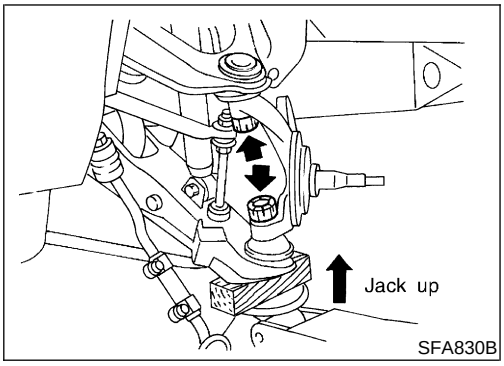

c. Remove ball joint tightening nuts.
Support lower link with jack.
d. Remove knuckle spindle from upper and lower links.

INSPECTION

NEAX0017

Knuckle Spindle

NEAX0017S01

- Check knuckle spindle for deformation, cracks and other damage by using a magnetic exploration or dyeing test.

Bearing Spacer (2WD models)

NEAX0017S02

- Check bearing spacer for damage.

Needle Bearing (4WD models)

NEAX0017S03

- Check needle bearing for wear, scratches, pitting, flaking and burn marks.

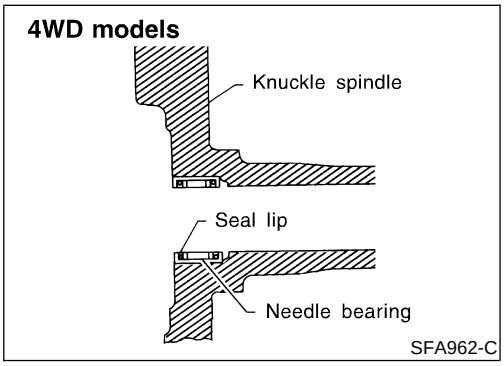

INSTALLATION

NEAX0018

1. Install needle bearing into knuckle spindle (4WD models).

Make sure that needle bearing is facing in the proper direction.
Apply multi-purpose grease.

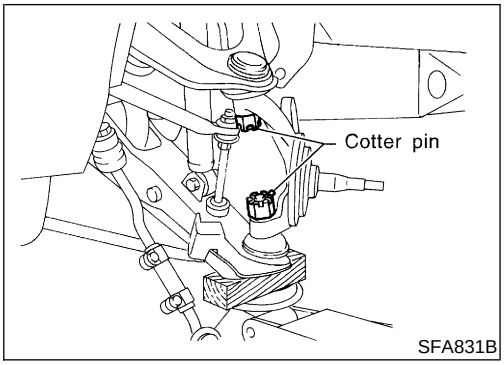

2. Install knuckle spindle to upper and lower ball joints with lower link jacked up.

CAUTION:

Make sure that oil and grease do not come into contact with tapered areas of ball joint, knuckle spindle and threads of ball joint.

3. Connect tie-rod to knuckle spindle.

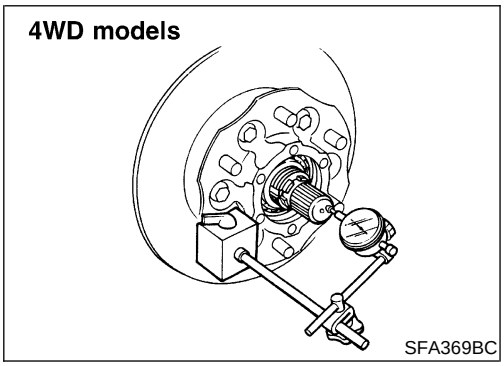

4. After installing knuckle spindle, adjust wheel bearing preload. Refer to "Preload Adjustment (2WD models)" and "Preload Adjustment (4WD models)", "FRONT WHEEL BEARING", "On-vehicle Service", AX-4, 5.
5. After installing drive shaft, check drive shaft axial end play. **Do not reuse snap ring once it has been removed.** Refer to "Drive Shaft", AX-16.

Drive Shaft

COMPONENTS

NEAX0019

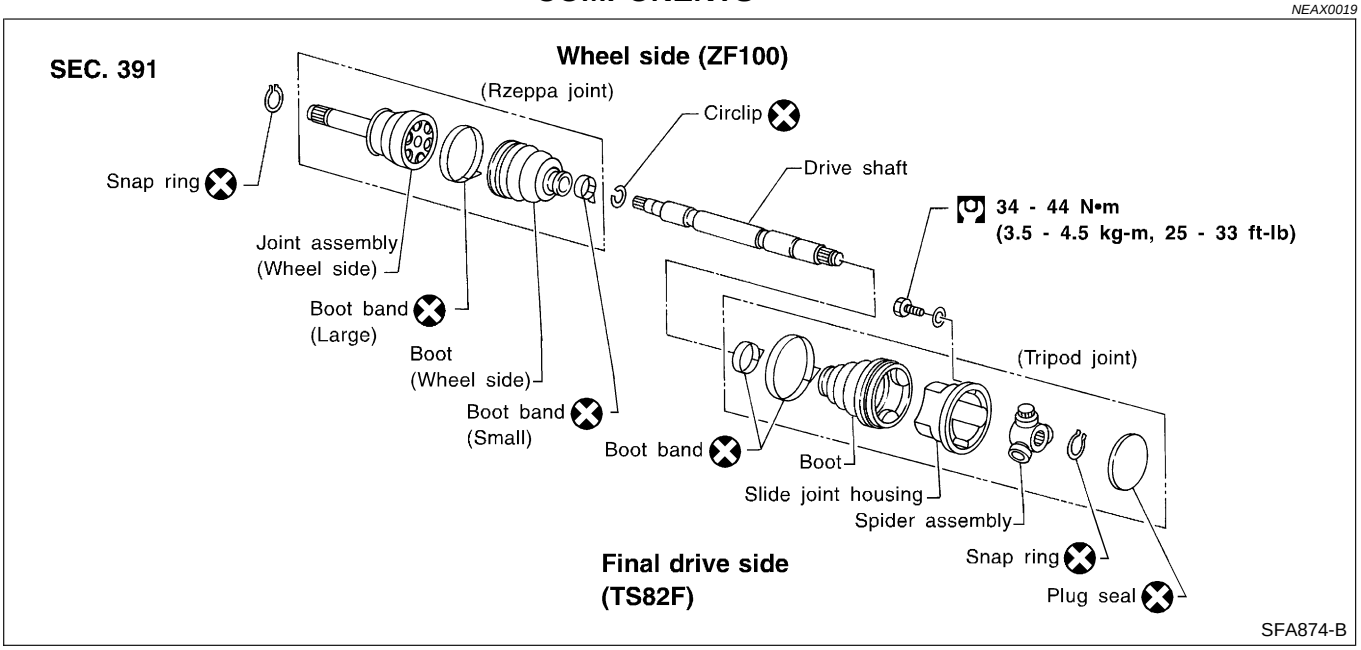

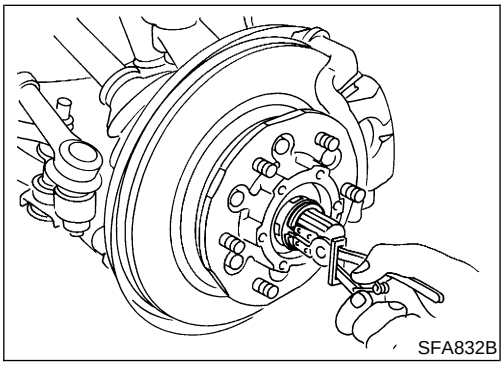

REMOVAL

NEAX0020

1. Remove free-running hub or drive flange and snap ring. Refer to "Auto-lock Free-running Hub", AX-10.
2. Remove torsion bar spring. Refer to "Torsion Bar Spring", ***SU-15***.
3. Remove shock absorber lower fixing bolt.
4. Remove lower link, fixing bolts.

Support lower link with jack.

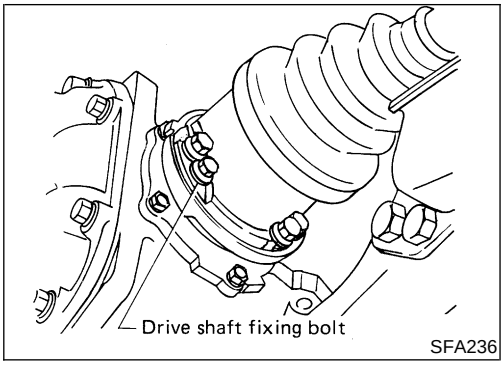

SFA236

5. Remove bolts fixing drive shaft to final drive.

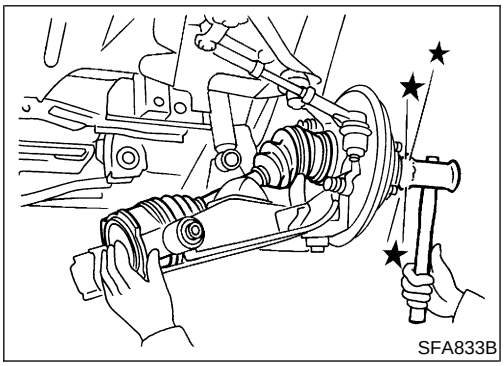
SFA833B

6. Separate drive shaft from knuckle spindle by slightly tapping end of drive shaft.

DISASSEMBLY

NEAX0021

Final Drive Side (TS82F)

NEAX0021S01

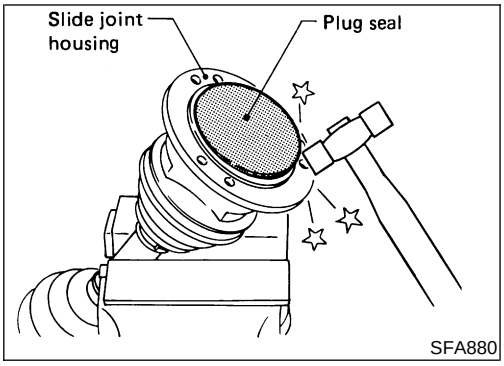

SFA880

1. Remove plug seal from slide joint housing by lightly tapping around slide joint housing.
2. Remove boot bands.

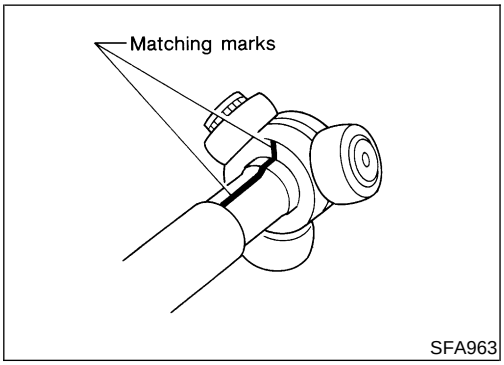

SFA963

3. Move boot and slide joint housing toward wheel side, and put matching marks.

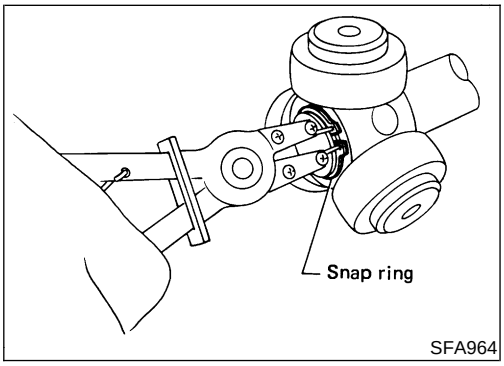

SFA964

4. Remove snap ring.

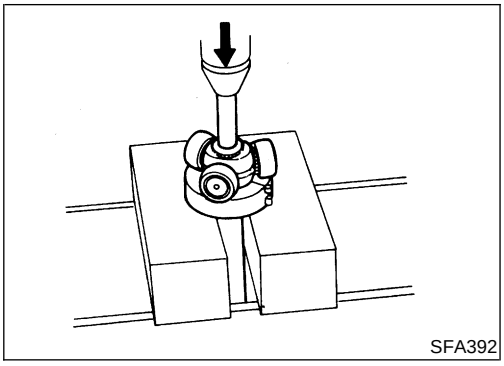
SFA392

5. Detach spider assembly with press.

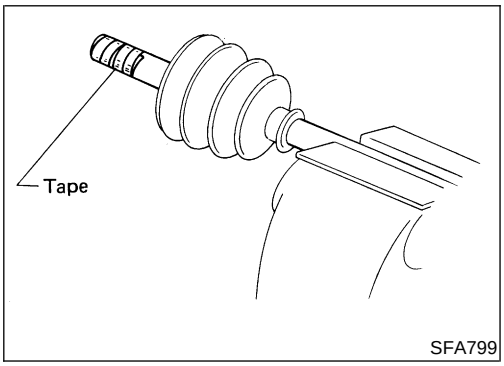

SFA799

6. Draw out boot.

Cover drive shaft serration with tape to prevent damaging the boot.

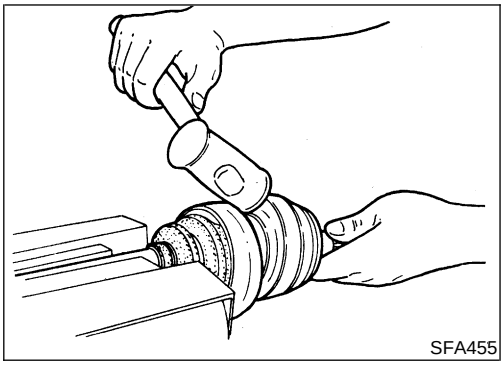
SFA455

Wheel Side (ZF100)

NEAX0021S02

CAUTION:

The joint on the wheel side cannot be disassembled.

- Before separating joint assembly, put matching marks on drive shaft and joint assembly.
- Separate joint assembly with suitable tool.
  Be careful not to damage threads on drive shaft.
- Remove boot bands.

INSPECTION

NEAX0022

Thoroughly clean all parts in cleaning solvent, and dry with compressed air. Check parts for evidence of deformation and other damage.

Drive Shaft

NEAX0022S01

Replace drive shaft if it is twisted or cracked.

Boot

NEAX0022S02

Check boot for fatigue, cracks and wear. Replace boot with new boot bands.

Joint Assembly (Final drive side)

NEAX0022S03

- Replace any parts of double offset joint which show signs of scorching, rust, wear or excessive play.
- Check serration for deformation. Replace if necessary.
- Check slide joint housing for any damage. Replace if necessary.

Joint Assembly (Wheel side)

NEAX0022S04

Replace joint assembly if it is deformed or damaged.

ASSEMBLY

NEAX0023

- **After drive shaft has been assembled, ensure that it moves smoothly over its entire range without binding.**

- **Use NISSAN GENUINE GREASE or equivalent after every overhaul.**

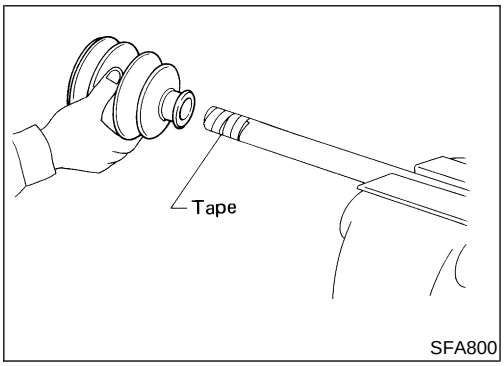

SFA800

Final Drive Side (TS82F)

NEAX0023S01

1. Install new small boot band, boot and side joint housing to drive shaft.

Cover drive shaft serration with tape to prevent damaging boot during installation.

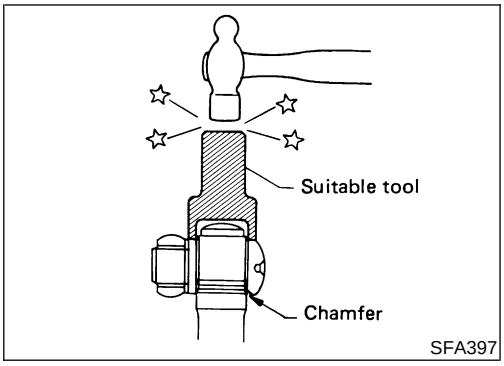

SFA397

2. Install spider assembly securely, making sure marks are properly aligned.

- **Press-fit with spider assembly serration chamfer facing shaft.**

3. Install new snap ring.

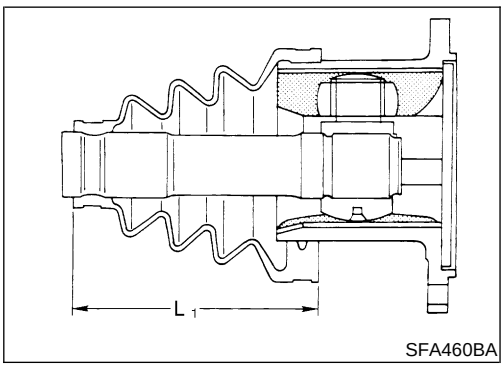

SFA460BA

4. Pack with grease.

   Specified amount of grease:
   95 - 105 g (3.35 - 3.70 oz)

5. Make sure that the boot is properly installed on the drive shaft groove. Set the boot so that it does not swell or deform when its length is "L_1".

   Length "L_1": 95 - 97 mm (3.74 - 3.82 in)

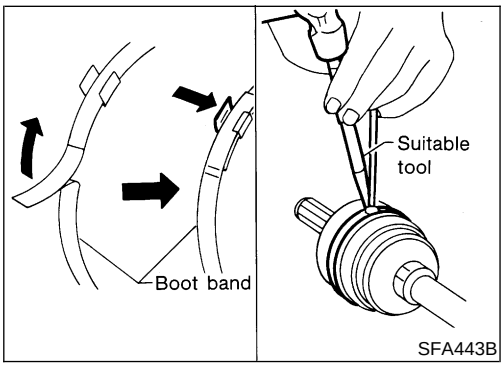

SFA443B

6. Lock new large boot band securely with a suitable tool, then lock new small boot band.
7. Install new plug seal to slide joint housing by lightly tapping it.

Apply sealant to mating surface of plug seal.

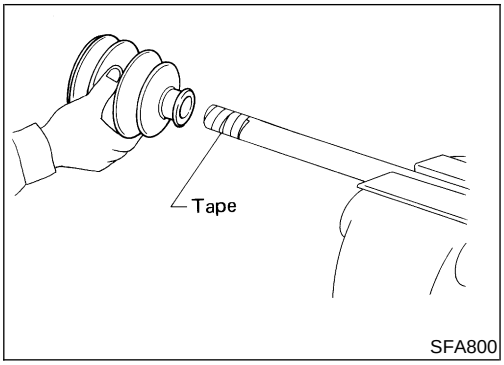

SFA800

Wheel Side (ZF100)

NEAX0023S02

1. Install new small boot band and boot on drive shaft.

Cover drive shaft serration with tape to prevent damaging boot during installation.

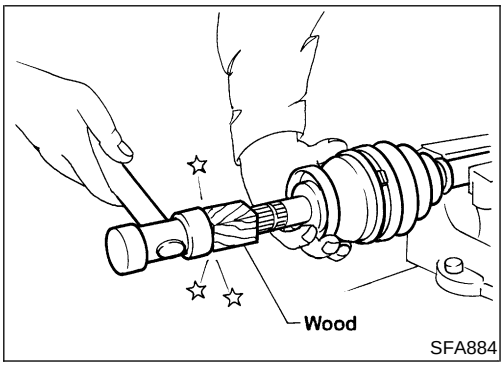

SFA884

2. Set joint assembly onto drive shaft by lightly tapping it. Install joint assembly securely, ensuring that marks which were made during disassembly are properly aligned.

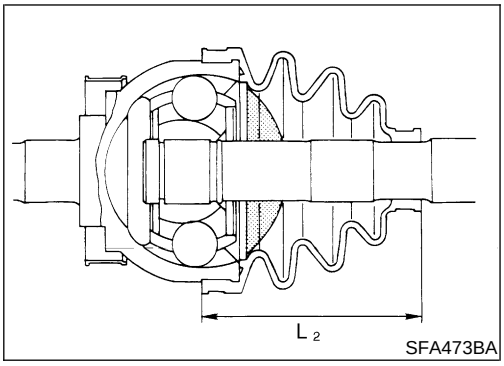

SFA473BA

3. Pack drive shaft with specified amount of grease.

   Specified amount of grease:
   135 - 145 g (4.76 - 5.11 oz)

4. Make sure that the boot is properly installed on the drive shaft groove. Set the boot so that it does not swell or deform when its length is "L_2".

   Length "L_2": 96 - 98 mm (3.78 - 3.86 in)

5. Lock new large boot band securely with a suitable tool.
6. Lock new small boot band.

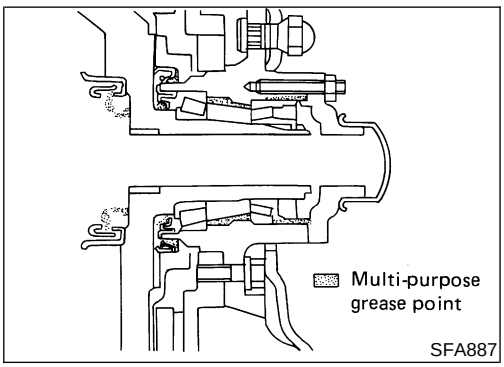

SFA887

INSTALLATION

NEAX0024

1. Apply multi-purpose grease.

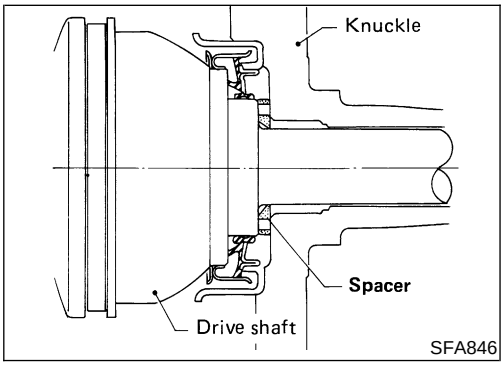

SFA846

2. Install bearing spacer onto drive shaft.

Make sure that the bearing spacer is facing in the proper direction.

3. After installing wheel hub and wheel bearing, adjust wheel bearing preload. Refer to "Preload Adjustment (2WD models)" and "Preload Adjustment (4WD models)", "FRONT WHEEL BEARING", "On-vehicle Service", AX-4, 5.
4. When installing drive shaft, adjust drive shaft axial end play by selecting a suitable snap ring.

a. Install fixed cam assembly and spindle washer.
b. Temporarily install new snap ring on drive shaft in the same

thickness as it was installed before removal.

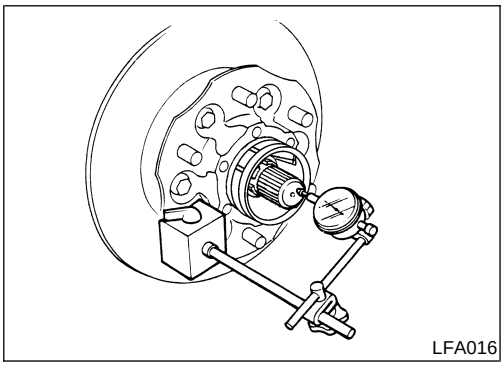

c. Set dial gauge on drive shaft end.
d. Measure axial end play of drive shaft.

Axial end play:
0.10–0.45 mm (0.004–0.0177 in)

e. If axial end play is not within the specified limit, select another snap ring.

1.1 mm (0.043 in) **1.3 mm (0.051 in)** **1.5 mm (0.059 in)** **1.7 mm (0.067 in)**	**1.9 mm (0.075 in)** **2.1 mm (0.083 in)** **2.3 mm (0.091 in)**

Service Data and Specifications (SDS)

WHEEL BEARING (FRONT)

NEAX0025

2WD Models

NEAX0025S01

Wheel bearing axial end play mm (in)		0 (0)
Wheel bearing lock nut	Tightening torque N·m (kg-m, ft-lb)	34 - 39 (3.5 - 4.0, 25 - 29)
	Return angle degree	45° - 60°
Wheel bearing starting torque	At wheel hub bolt With new grease seal N (kg, lb)	9.8 - 28.4 (1.0 - 2.9, 2.2 - 6.4)
	With used grease seal N (kg, lb)	9.8 - 23.5 (1.0 - 2.4, 2.2 - 5.3)

4WD Models

NEAX0025S02

Wheel bearing lock nut	Tightening torque N·m (kg-m, ft-lb)	78 - 98 (8 - 10, 58 - 72)
	Retightening torque after loosening wheel bearing lock nut N·m (kg-m, ft-lb)	0.5 - 1.5 (0.05 - 0.15, 0.4 - 1.1)
	Axial end play mm (in)	0 (0)
	Starting force at wheel hub bolt N (kg, lb)	A
	Turning angle degree	15° - 30°
	Starting force at wheel hub bolt N (kg, lb)	B
Wheel bearing preload at wheel hub bolt N (kg, lb)	B − A	7.06 - 20.99 (0.72 - 2.14, 1.59 - 4.72)

DRIVE SHAFT (4WD MODELS)

NEAX0026

Drive shaft joint type	Final drive side	TS82F
	Wheel side	ZF100
	Fixed joint axial end play limit mm (in)	1 (0.04)
Diameter mm (in)	Wheel side (D_1)	29.0 (1.142)

Grease	Quality		Nissan genuine grease or equivalent
	Capacity g (oz)	Final drive side	95 - 105 (3.35 - 3.70)
		Wheel side	135 - 145 (4.76 - 5.11)
Boot length mm (in)	Final drive side (L_1)		95 - 97 (3.74 - 3.82)
	Wheel side (L_2)		96 - 98 (3.78 - 3.86)

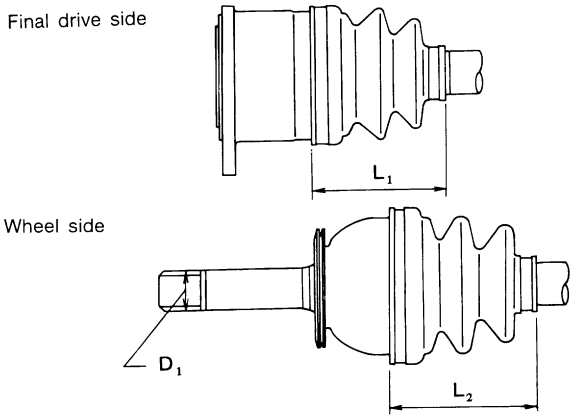

SFA877A

Drive Shaft Axial End Play

NEAX0026S01

Drive shaft axial end play mm (in)	0.10–0.45 (0.004–0.0177)

Drive shaft end snap ring

NEAX0026S02

Thickness mm (in)	Part No.*
1.1 (0.043)	39253-88G10
1.3 (0.051)	39253-88G11
1.5 (0.059)	39253-88G12
1.7 (0.067)	39253-88G13
1.9 (0.075)	39253-88G14
2.1 (0.083)	39253-88G15
2.3 (0.091)	39253-88G16

*: Always check with the Parts Department for the latest parts information.

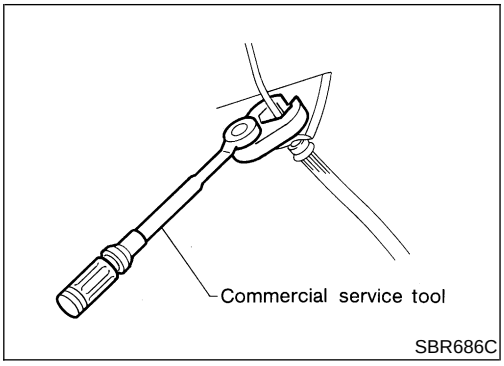

Precautions

PRECAUTIONS

NEAX0027

- **When installing rubber parts, final tightening must be carried out under unladen condition* with tires on ground.**
  ***: Fuel, radiator coolant and engine oil full. Spare tire, jack, hand tools and mats in designated positions.**
- **Use flare nut wrench when removing and installing brake tubes.**
- **After installing removed suspension parts, check wheel alignment and adjust if necessary.**
- **Always torque brake lines when installing.**

Preparation

SPECIAL SERVICE TOOLS

NEAX0028

The actual shapes of Kent-Moore tools may differ from those of special service tools illustrated here.

Tool number (Kent-Moore No.) Tool name	Description	
KV40101000 (J25604-01) Axle stand	 NT159	Removing rear axle shaft
ST36230000 (J25840-A) Sliding hammer	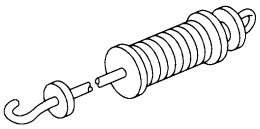 NT126	Removing rear axle shaft
ST38020000 (　　—　　) Bearing lock nut wrench	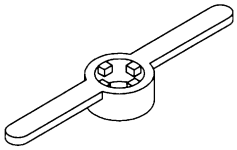 NT160	Removing wheel bearing lock nut
KV40106500 (J25852-B) Rear axle shaft bearing puller	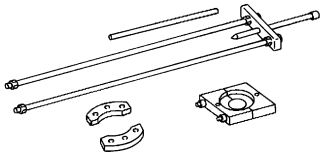 NT683	Removing wheel bearing and ABS sensor rotor
ST37840000 (　　—　　) Rear axle shaft guide	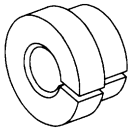 NT162	Installing rear axle shaft

COMMERCIAL SERVICE TOOLS

NEAX0029

Tool name	Description	
1 Flare nut crowfoot 2 Torque wrench	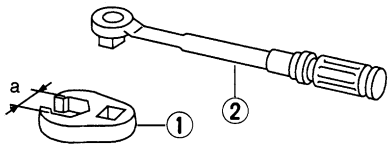 NT360	Removing and installing each brake piping **a: 10 mm (0.39 in)**
Bearing cage oil seal drift	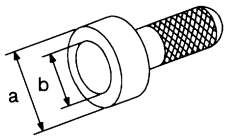 NT115	Installing oil seal **a: 74 mm (2.91 in) dia.** **b: 68 mm (2.68 in) dia.**
Rear axle oil seal drift	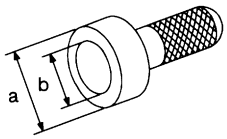 NT115	Installing oil seal **a: 54.5 mm (2.15 in.)** **b: 34.5 mm (1.36 in.)**

Noise, Vibration and Harshness (NVH) Troubleshooting

=NEAX0030

Refer to “Noise, Vibration and Harshness (NVH) Troubleshooting”, “FRONT AXLE”, AX-3.

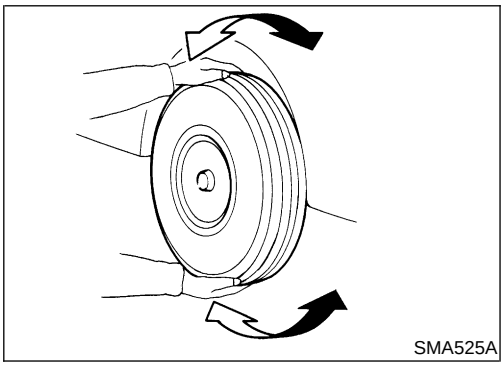
SMA525A

On-vehicle Service

REAR AXLE PARTS

NEAX0031

Check rear axle parts for excessive play, wear and damage.

- Shake each rear wheel to check for excessive play.

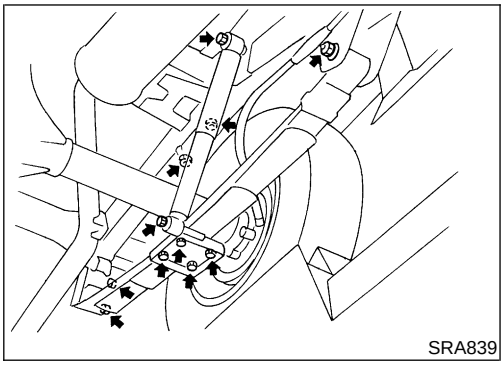
SRA839

- Retighten all nuts and bolts to the specified torque.

  : Refer to “REAR SUSPENSION”, “Service Data and Specifications”, *SU-30*.

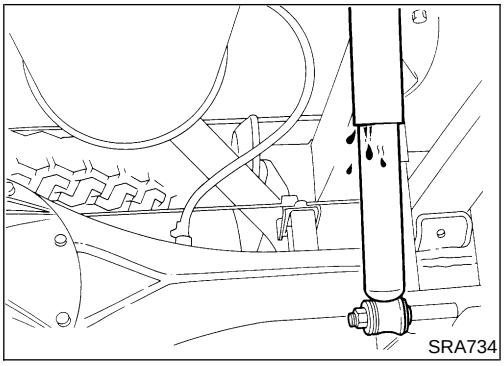

- Check shock absorber for oil leakage and other damage.
- Check shock absorber bushing for excessive wear and other damage.

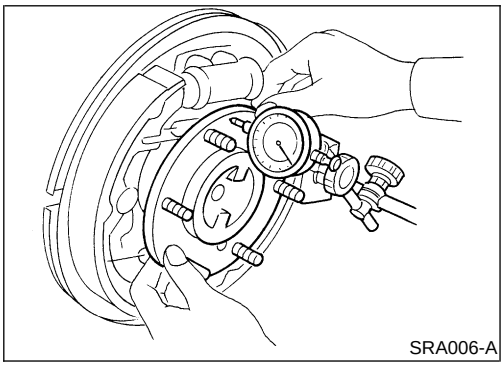

REAR WHEEL BEARING

NEAX0032

- Check that wheel bearings operate smoothly.
- Check axial end play.

Axial end play:

Refer to SDS, AX-30.

Components

NEAX0033

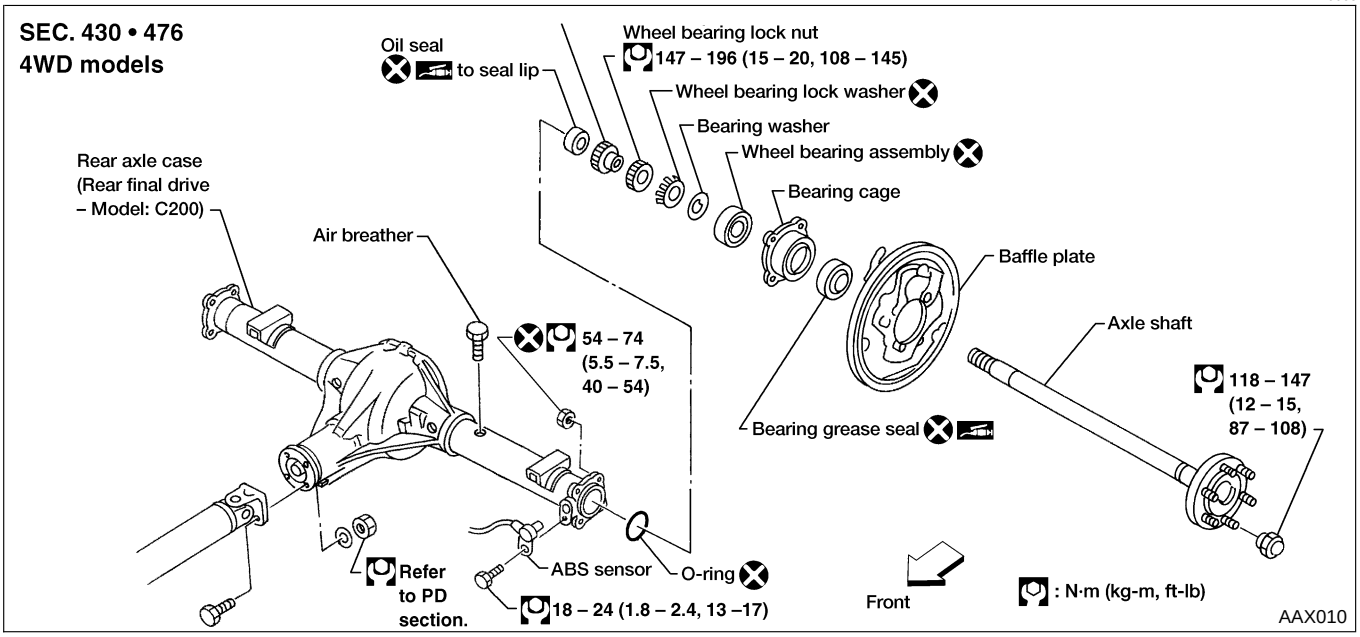

Removal

NEAX0034

- **Before removing the rear axle, disconnect the ABS wheel sensor from the assembly. Then move it away from the axle. Failure to do so may result in damage to the sensor wires and the sensor becoming inoperative.**
- **Wheel bearing does not require maintenance.**
- If growling noise is emitted from wheel bearing during operation, replace wheel bearing assembly.
- If the wheel bearing assembly is removed, it must be replaced. The old assembly must not be re-used.

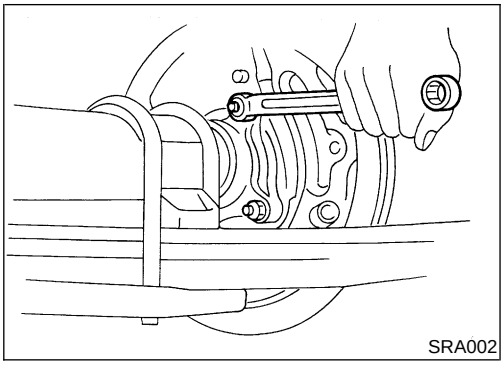

1. Disconnect parking brake cable and brake tube.
2. Remove nuts securing wheel bearing cage with baffle plate.

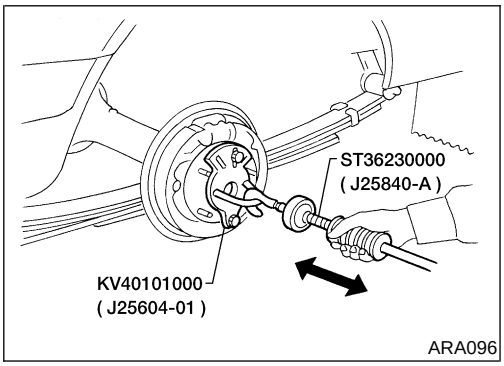

3. Draw out axle shaft with Tool.

When drawing out axle shaft, be careful not to damage oil seal.

4. Remove O-ring.
5. Remove oil seal.

Do not reuse oil seal once it is removed.
Always install new one.

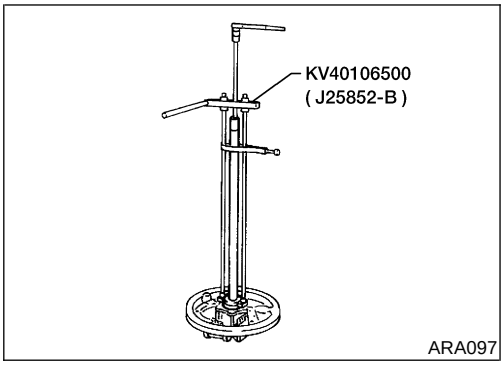

6. Remove ABS sensor rotor.

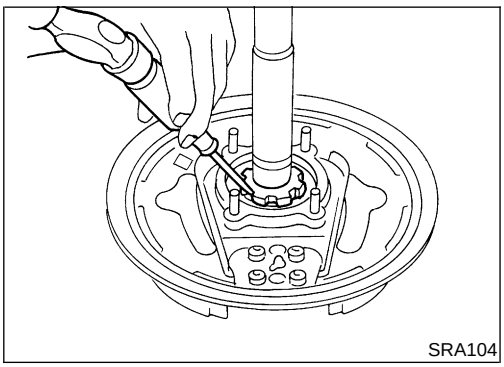

7. Unbend lock washer with a screwdriver.

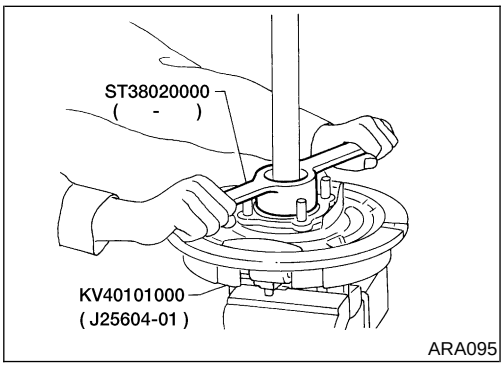

8. Remove bearing lock nut with Tool.

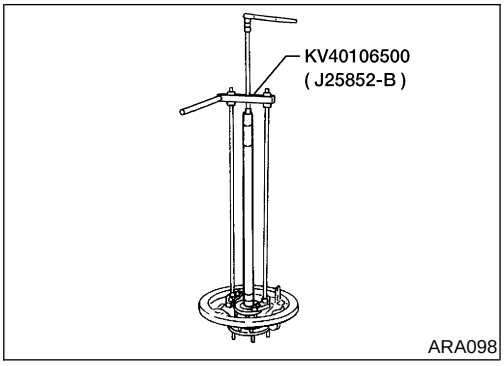

9. Remove wheel bearing together with bearing cage and baffle plate from axle shaft.

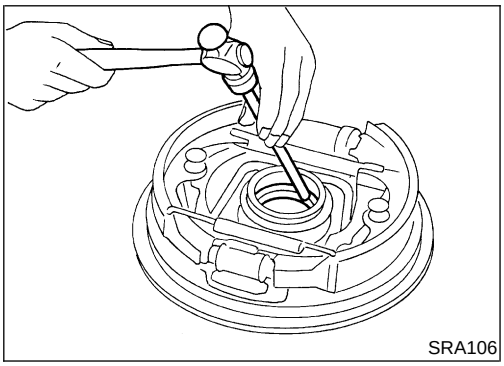

10. Remove grease seal in bearing cage with suitable bar.

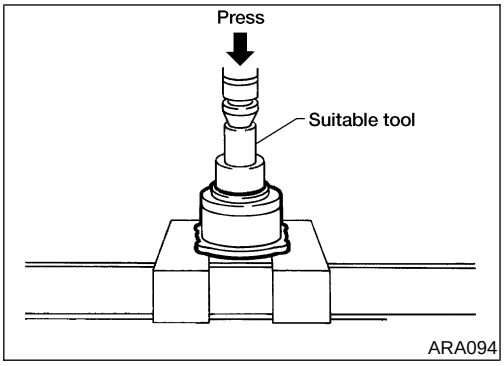

11. Remove wheel bearing assembly.

Inspection

NEAX0035

AXLE SHAFT

NEAX0035S01

- Check axle shaft for straightness, cracks, damage, wear and distortion. Replace if necessary.

WHEEL BEARING

NEAX0035S02

- Make sure wheel bearing rolls freely and is free from noise, cracks, pitting and wear.

AXLE CASE

NEAX0035S03

- Check axle case for yield, deformation and cracks. Replace if necessary.

Installation

NEAX0036

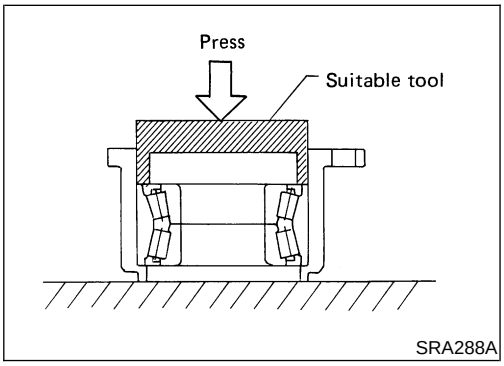

1. Press new wheel bearing until it bottoms end face of bearing cage.

   Maximum load P:

   78 kN (8 ton, 8.8 US ton, 7.9 Imp ton)

Always press outer race of wheel bearing during installation.

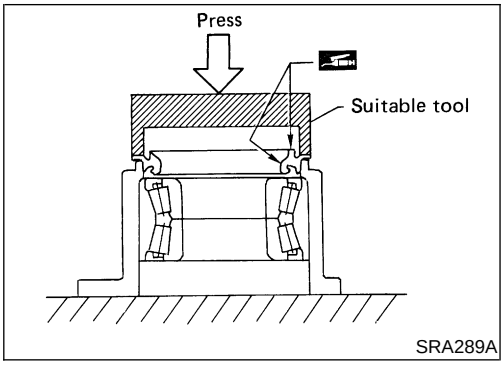

2. Press new grease seal until it bottoms end face of bearing cage.

After installing new grease seal, coat sealing lip with multi-purpose grease.

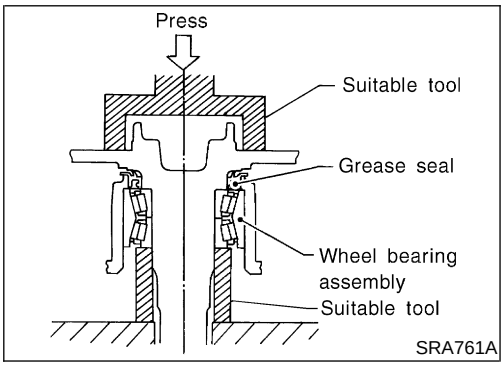

3. Press axle shaft into inner race of wheel bearing.

Maximum load P:

47.1 kN (4.8 ton, 5.3 US ton, 4.72 Imp ton)

Be careful not to damage or deform grease seal.

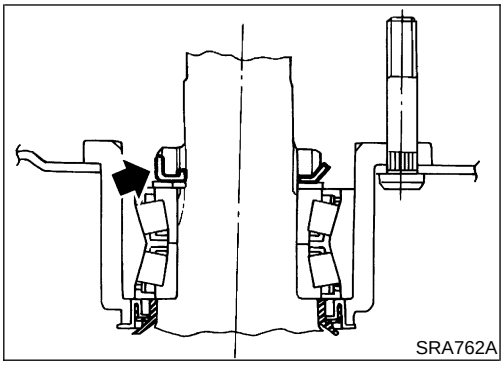

4. Install plain washer and a new wheel bearing lock washer.
5. Tighten wheel bearing lock nut to specified torque.

: 147 - 196 N·m (15 - 20 kg-m, 108 - 145 ft-lb)

Fit wheel bearing lock washer lip in wheel bearing lock nut groove correctly by tightening lock nut. Be sure to bend it up.

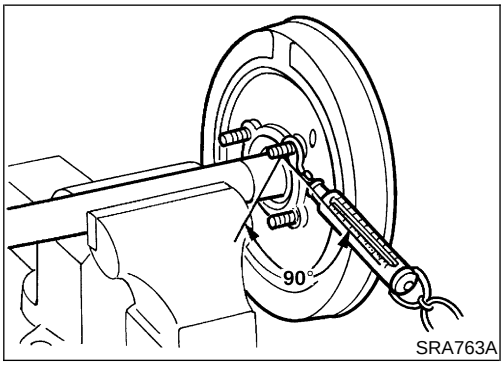

6. Check wheel bearing preload.

a. Turn bearing cage (with respect to axle shaft) two or three times. It must turn smoothly.

b. Attach spring gauge to bearing cage bolt (as shown at left) and pull it at a speed of 10 rpm to measure preload.

Spring gauge indication:

6.9 - 48.1 N (0.7 - 4.9 kg, 1.5 - 10.8 lb)

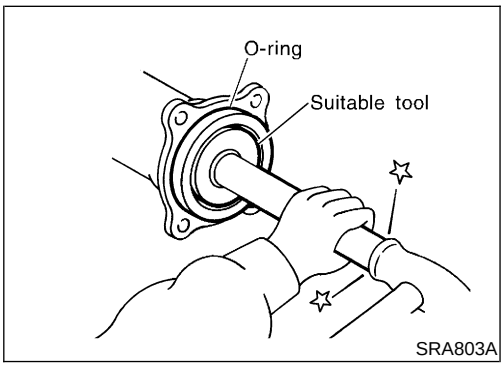

7. Install new oil seal to rear axle housing using a suitable tool.

After installing new oil seal, coat sealing lip with multi-purpose grease.

8. Install new O-ring to rear axle housing.

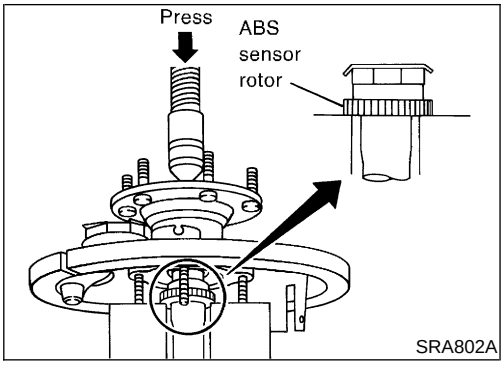

9. Press ABS sensor rotor onto axle shaft until it contacts wheel bearing lock nut.

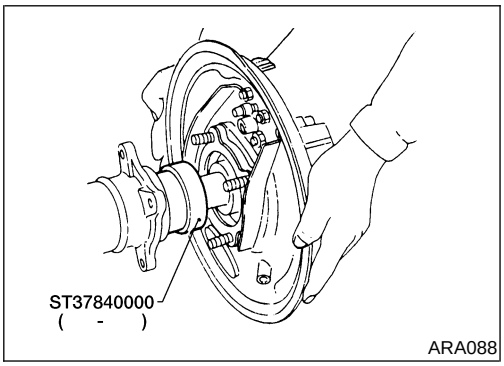

10. Position axle shafts in rear axle housing with Tool as a guide. **Be careful not to damage oil seal.**

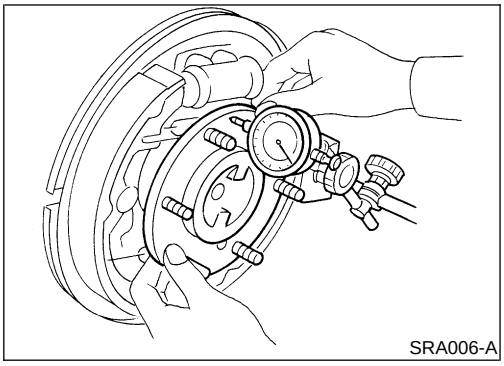

11. Check axial end play.
a. Check that wheel bearings operate smoothly.
b. Check axial end play.

Axial end play:
0 mm (0 in)

Service Data and Specifications (SDS)

WHEEL BEARING (REAR)

NEAX0037

Total end play mm (in)	0 (0)
Wheel bearing preload at bearing cage bolt N (kg, lb)	6.9 - 48.1 (0.7 - 4.9, 1.5 - 10.8)