SECTION EM
ENGINE MECHANICAL

CONTENTS

KA24DE

VG33E and VG33ER

PRECAUTIONS

PFP:00001

Precautions for Supplemental Restraint System (SRS) “AIR BAG” and “SEAT BELT PRE-TENSIONER”

EBS00EXK

The Supplemental Restraint System such as “AIR BAG” and “SEAT BELT PRE-TENSIONER”, used along with a front seat belt, helps to reduce the risk or severity of injury to the driver and front passenger for certain types of collision. This system may include seat belt switch inputs and dual stage front air bag modules. If equipped with dual stage front air bag modules, the SRS system uses the seat belt switches to determine the front air bag deployment, and may only deploy one front air bag, depending on the severity of a collision and whether the front occupants are belted or unbelted. Information necessary to service the system safely is included in the SRS and SB section of this Service Manual.

The vehicle may be equipped with a passenger air bag deactivation switch. Because no rear seat exists where a rear-facing child restraint can be placed, the switch is designed to turn off the passenger air bag so that a rear-facing child restraint can be used in the front passenger seat. The switch is located in the center of the instrument panel, near the ashtray. When the switch is turned to the ON position, the passenger air bag is enabled and could inflate for certain types of collision. When the switch is turned to the OFF position, the passenger air bag is disabled and will not inflate. A passenger air bag OFF indicator on the instrument panel lights up when the passenger air bag is switched OFF. The driver air bag always remains enabled and is not affected by the passenger air bag deactivation switch.

WARNING:

- **To avoid rendering the SRS inoperative, which could increase the risk of personal injury or death in the event of a collision which would result in air bag inflation, all maintenance must be performed by an authorized NISSAN/INFINITI dealer.**
- **Improper maintenance, including incorrect removal and installation of the SRS, can lead to personal injury caused by unintentional activation of the system. For removal of Spiral Cable and Air Bag Module, see the SRS section.**
- **Do not use electrical test equipment on any circuit related to the SRS unless instructed to in this Service Manual. SRS wiring harnesses can be identified by yellow and/or orange harnesses or harness connectors.**
- **The vehicle may be equipped with a passenger air bag deactivation switch which can be operated by the customer. When the passenger air bag is switched OFF, the passenger air bag is disabled and will not inflate. When the passenger air bag is switched ON, the passenger air bag is enabled and could inflate for certain types of collision. After SRS maintenance or repair, make sure the passenger air bag deactivation switch is in the same position (ON or OFF) as when the vehicle arrived for service.**

Parts Requiring Angular Tightening

EBS0093U

- Use an angle wrench for the final tightening of the following engine parts:
  - Cylinder head bolts
  - Connecting rod cap nuts
- Do not use a torque value for final tightening.
- The torque value for these parts are for a preliminary step.
- Ensure thread and seat surfaces are clean and coated with engine oil.

Precautions for Liquid Gasket

EBS00EXM

REMOVAL OF LIQUID GASKET SEALING

- After removing the mounting bolts and nuts, disconnect the component using a seal cutter.

CAUTION:
Be careful not to damage the mating surfaces.

- Use a plastic hammer to lightly tap (1) the areas where the liquid gasket is applied. To advance the cutter, use a plastic hammer (2) to slide the cutter along the joint.

CAUTION:
If for some unavoidable reason a tool such as a flat-bladed screwdriver is used, be careful not to damage the mating surfaces.

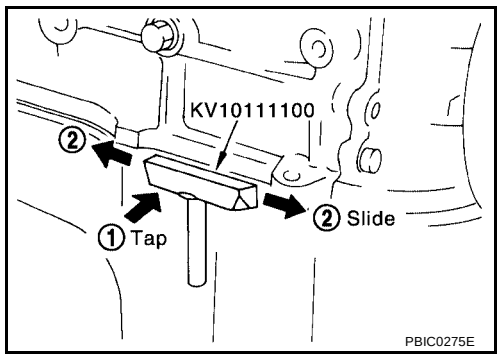

LIQUID GASKET APPLICATION PROCEDURE

1. Using a scraper, remove the old liquid gasket adhering to the gasket application surface and the mating surface.
   - Remove the sealant completely from the groove of the gasket application surface, mounting bolts, and bolt holes.

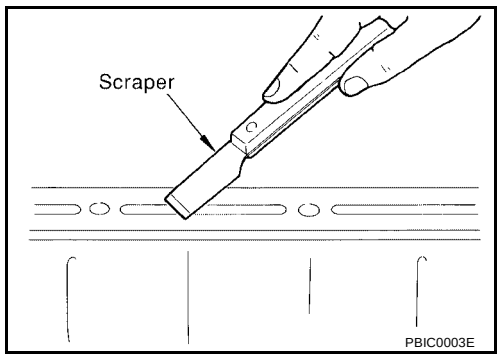

2. Thoroughly clean the gasket application surface and the mating surface and remove adhering moisture, grease and foreign materials.
3. Attach the sealant tube to the tube presser.

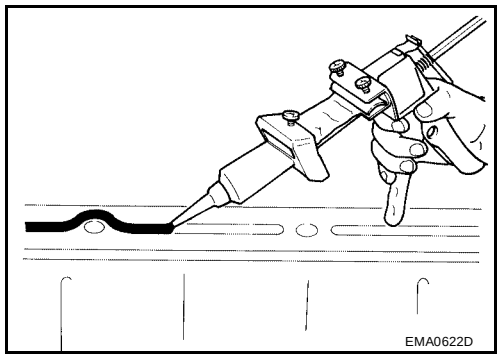

4. Apply the sealant without breaks to the specified location with the specified dimensions.
   - If there is a groove for the sealant application, apply the sealant to the groove.
   - As for the bolt holes, normally apply the sealant inside the holes. If specified, it should be applied outside the holes. Make sure to read the text of this manual.
   - Within five minutes of the sealant application install the mating component.
   - If the sealant protrudes, wipe it off immediately.
   - Do not retighten after the installation.
   - After 30 minutes or more have passed from the installation, fill the engine with the specified oil and coolant. Refer to MA-20, "Changing Engine Oil" and MA-17, "REFILLING ENGINE COOLANT" .

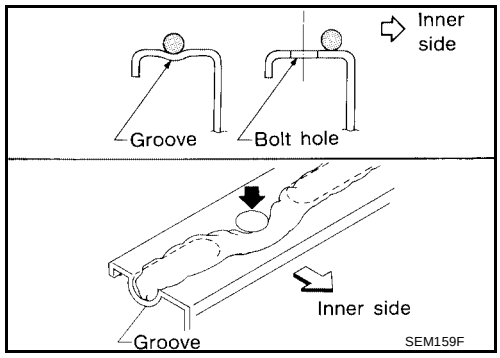

PREPARATION

PFP:00002

Special Service Tools

EBS0093W

The actual shapes of Kent-Moore tools may differ from those of the special service tools illustrated here.

Tool number (Kent-Moore No.) Tool name		Description
ST0501S000 (—) Engine stand assembly **1** ST05011000 (—) Engine stand **2** ST05012000 (—) Base	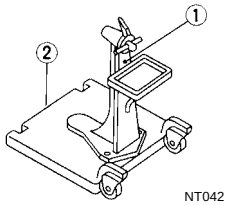 NT042	Disassembling and assembling
KV10105001 (—) Engine attachment	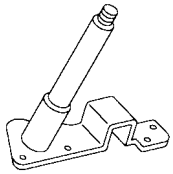 NT031	
KV101092S0 (J26336-B) Valve spring compressor **1** KV10109210 (—) Compressor **2** KV100109220 (—) Adapter	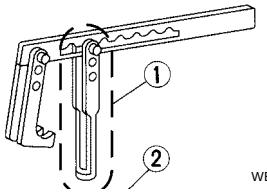 WEM044	Disassembling and assembling valve components
KV10112100 (BT8653-A) Angle wrench	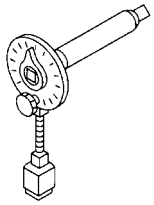 NT014	Tightening bearing cap, cylinder head bolts, etc.
KV10116300 (J-38955) Valve oil seal drift	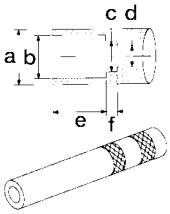 WEM151	Installing valve oil seal **a: 25 (0.98) dia.** **b: 14.4 (0.567) dia.** **c: 11.8 (0.465) dia.** **d: 10 (0.39) dia.** **e: 11 (0.43)** **f: 9 (0.35)**

Tool number (Kent-Moore No.) Tool name	Description
KV10110300 (—) Piston pin press stand assembly **1** KV10110310 (—) Cap **2** KV10110330 (—) Spacer **3** ST13030020 (—) Press stand **4** ST13030030 (—) Spring **5** KV10110340 (—) Drift **6** KV10110320 (—) Center shaft 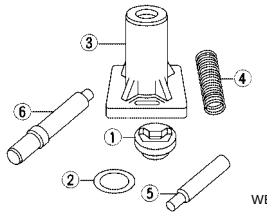 WEM150	Disassembling and assembling piston with connecting rod
EM03470000 (J-8037) Piston ring compressor 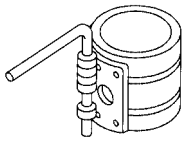 NT044	Installing piston assembly into cylinder bore
(J-36467) Valve oil seal remover 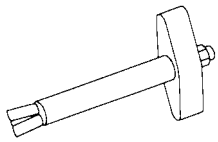 NT034	Removing valve oil seal
ST16610001 (J-23907) Pilot bushing puller 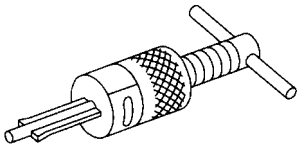 NT045	Removing crankshaft pilot bushing
KV10111100 (J-37228) Seal cutter 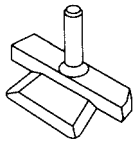 NT046	Removing oil pan
WS39930000 (—) Tube presser 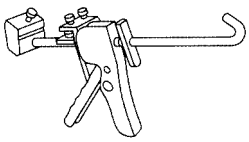 NT052	Pressing the tube of liquid gasket

Tool number (Kent-Moore No.) Tool name		Description
KV101151S0 (J-38972) Lifter stopper set **1** KV10115110 (J-38972-1) Camshaft pliers **2** KV10115120 (J-38972-2) Lifter stopper	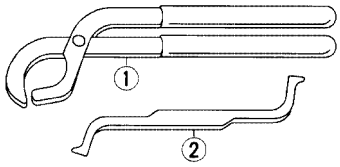 S-NT041	Changing valve lifter shims
KV10117100 (J-36471-A) Front heated oxygen sensor wrench	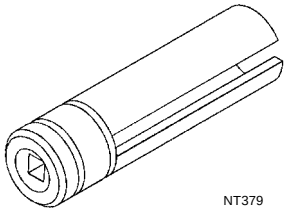 NT379	Loosening or tightening heated oxygen sensor **For 22 mm (0.87 in) hexagon nut**
KV10114700 (J-38139) Main bearing cap remover	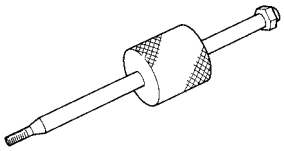 ZZA0023D	Removing crankshaft main bearing cap **For No. 3 and No. 5 bearings**
— (J-45499) Ring gear stopper	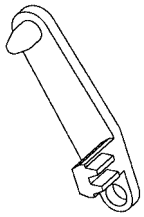 LBIA0362E	Preventing crankshaft rotation

Commercial Service Tools

EBS0093X

Tool name (Kent-Moore No.)		Description
Spark plug wrench	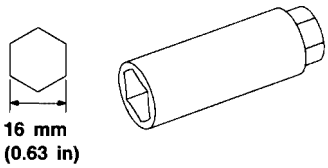 NT047	Removing and installing spark plug
Pulley holder	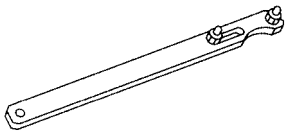 NT035	Holding camshaft pulley while tightening or loosening camshaft bolt

Tool name (Kent-Moore No.)	Description
Valve seat cutter set 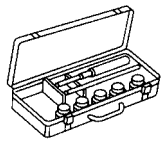 NT048	Finishing valve seat dimensions
Piston ring expander 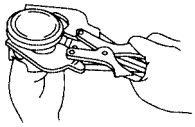 NT030	Removing and installing piston ring
Valve guide drift 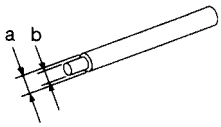 NT015	Removing and installing valve guide **Intake & Exhaust:** **a = 10.5 mm (0.413 in) dia.** **b = 6.6 mm (0.260 in) dia.**
Valve guide reamer 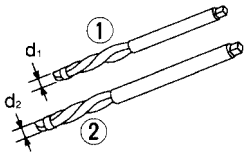 NT016	Reaming valve guide 1 or hole for oversize valve guide 2 **Intake:** **d_1 = 7.0 mm (0.276 in) dia.** **d_2 = 11.2 mm (0.441 in) dia.** **Exhaust:** **d_1 = 8.0 mm (0.315 in) dia.** **d_2 = 12.2 mm (0.480 in) dia.**
Front oil seal drift 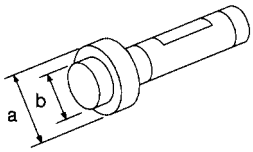 NT049	Installing front oil seal **a: 52 mm (2.05 in) dia.** **b: 44 mm (1.73 in) dia.**
Rear oil seal drift 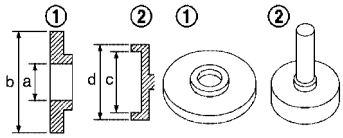 WEM152	Installing rear oil seal **a: 46 mm (1.81 in)** **b: 110 mm (4.33 in)** **c: 84 mm (3.31 in)** **d: 96 mm (3.78 in)**
Thread repair tool for oxygen sensor a: (J-43897-18) b: (J-43897-12) 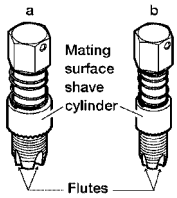 AEM488	**a: 18 mm (0.71 in)** **b: 12 mm (0.47 in)**

Tool name (Kent-Moore No.)	Description
Anti-seize thread compound 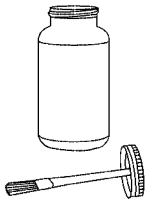 AEM489	For preventing corrosion, seizing, and galling on high temperature applications.
Crankshaft pulley puller 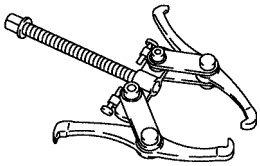 PBIC0887E	Removing crankshaft pulley

NOISE, VIBRATION, AND HARSHNESS (NVH) TROUBLESHOOTING

PFP:00003

Noise, Vibration and Harshness (NVH)

EBS0094Y

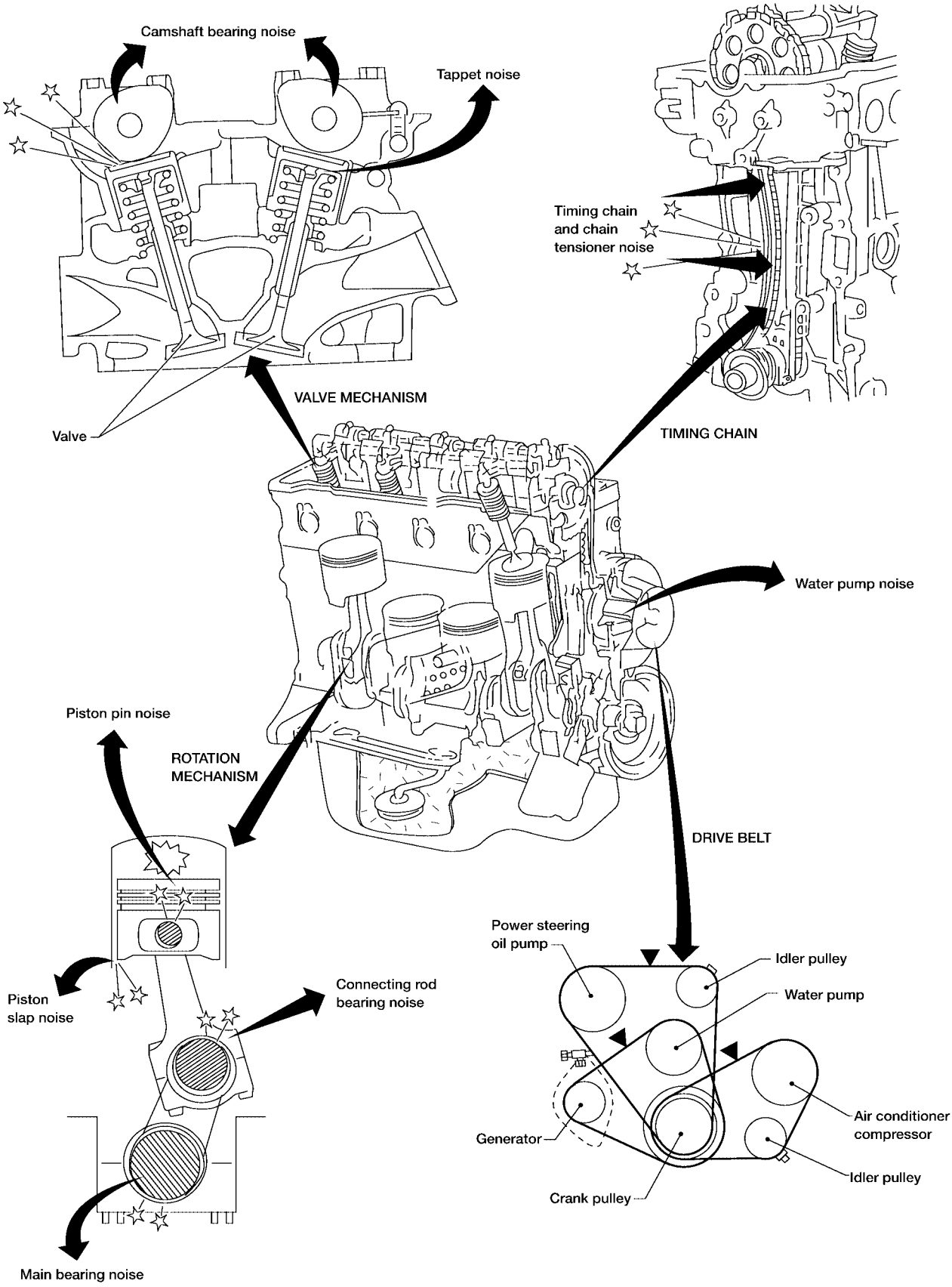

AEM466

NVH TROUBLESHOOTING CHART — ENGINE NOISE

Use the chart below to help you find the cause of the symptom.

1. Locate the area where noise occurs.
2. Confirm the type of noise.
3. Specify the operating condition of the engine.
4. Check the specified noise source.

If necessary, repair or replace these parts.

Location of noise	Type of noise	Operating condition of engine						Source of noise	Check item	Reference page
		Before warm-up	After warm-up	When start-ing	When idling	Whe n rev-ving	While driv-ing			
Top of engine Rocker cover Cylinder head	Ticking or clicking	C	A	—	A	B	—	Tappet noise	Valve clearance	EM-37
	Rattle	C	A	—	A	B	C	Camshaft bearing noise	Camshaft journal clearance Camshaft runout	EM-36
Crank-shaft pulley Cylinder block (upper side of engine) Oil pan	Slap or knock	—	A	—	B	B	—	Piston pin noise	Piston and piston pin clear-ance Connecting rod bushing clearance	EM-50, or EM-57
	Slap or rap	A	—	—	B	B	A	Piston slap noise	Piston ring side clearance Piston ring end gap Connecting rod bend and torsion Piston-to-bore clearance	EM-51, EM-51 , EM-51 , or EM-52
	Knock	A	B	C	B	B	B	Connect-ing rod-bearing noise	Connecting rod bearing clearance (Big end) Connecting rod bushing clearance (Small end)	EM-56, or EM-57
	Knock	A	B	—	A	B	C	Main bear-ing noise	Crankshaft runout Main bearing oil clearance	EM-53, or EM-54
Front of engine Timing chain cover	Tapping or ticking	A	A	—	B	B	B	Timing chain and chain ten-sioner noise	Timing chain cracks and wear	EM-24
Front of engine	Squeak-ing or fizz-ing	A	B	—	B	—	C	Drive belts (Sticking or slipping)	Drive belt deflection	MA-16, "DRIVE BELT DEFLEC-TION AND TENSION"
	Creaking	A	B	A	B	A	B	Drive belts (Slipping)	Idler pulley bearing opera-tion	
	Squall creak	A	B	—	B	A	B	Water pump noise	Water pump operation	CO-11, "Inspec-tion"

A: Closely related B: Related C: Sometimes related —: Not related:

OUTER COMPONENT PARTS

PFP:00100

Removal and Installation

EBS0093Z

Engine Outer Components

SEC. 120 • 140 • 147 • 150 • 163 • 164 • 210 • 220 • 221 • 230 • 231

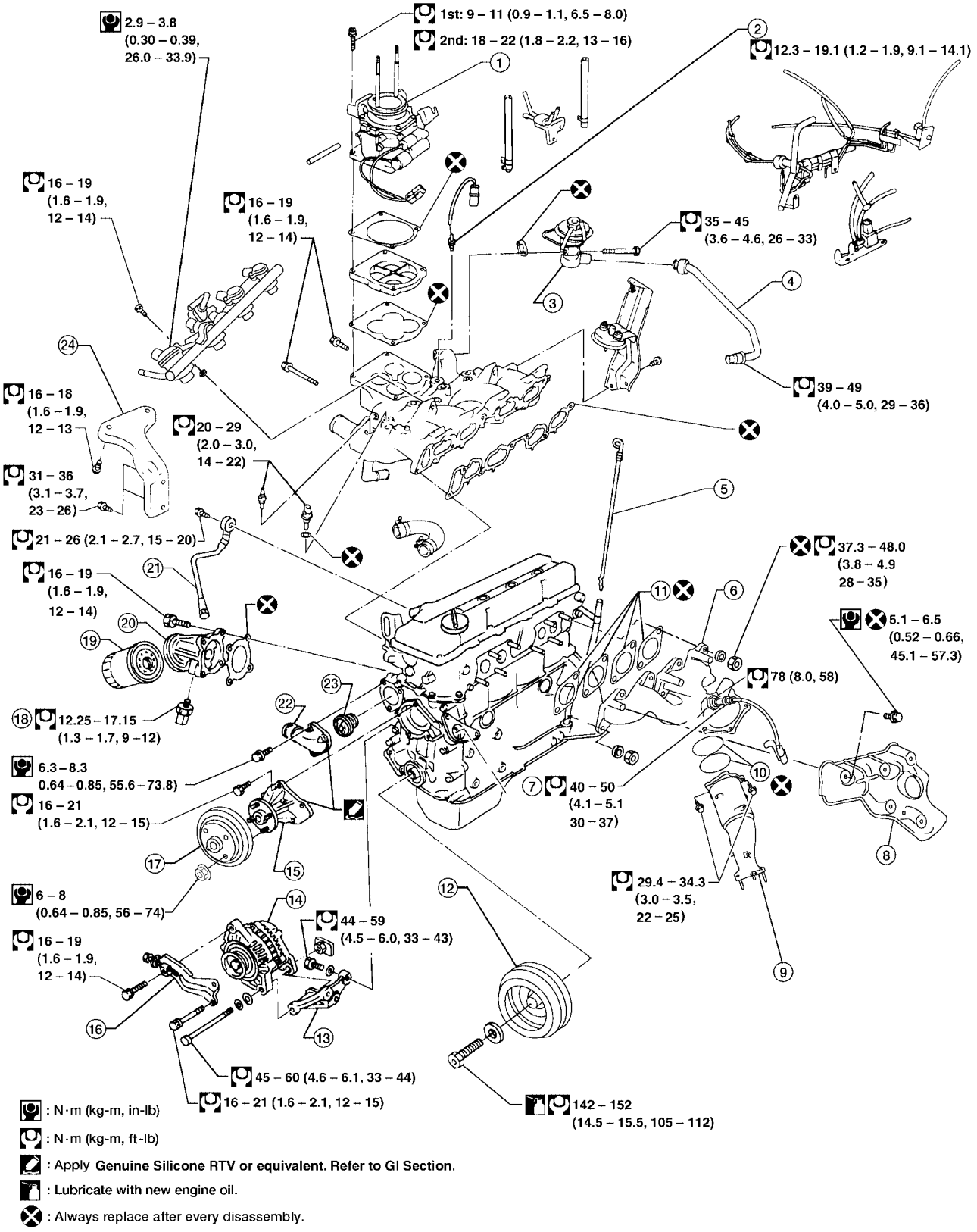

WBIA0445E

1. Throttle body
2. EGR temperature sensor
3. EGR valve
4. EGR tube
5. Oil dipstick
6. Exhaust manifold
7. Heated oxygen sensor 1
8. Exhaust manifold cover
9. TWC (manifold)
10. TWC (manifold) gaskets
11. Exhaust manifold gaskets
12. Crankshaft pulley
13. Generator bracket
14. Generator
15. Water pump
16. Adjusting bar
17. Water pump pulley
18. Oil pressure switch
19. Oil filter
20. Oil filter bracket
21. Knock sensor
22. Water inlet
23. Thermostat
24. Intake manifold bracket

Ignition System Outer Components

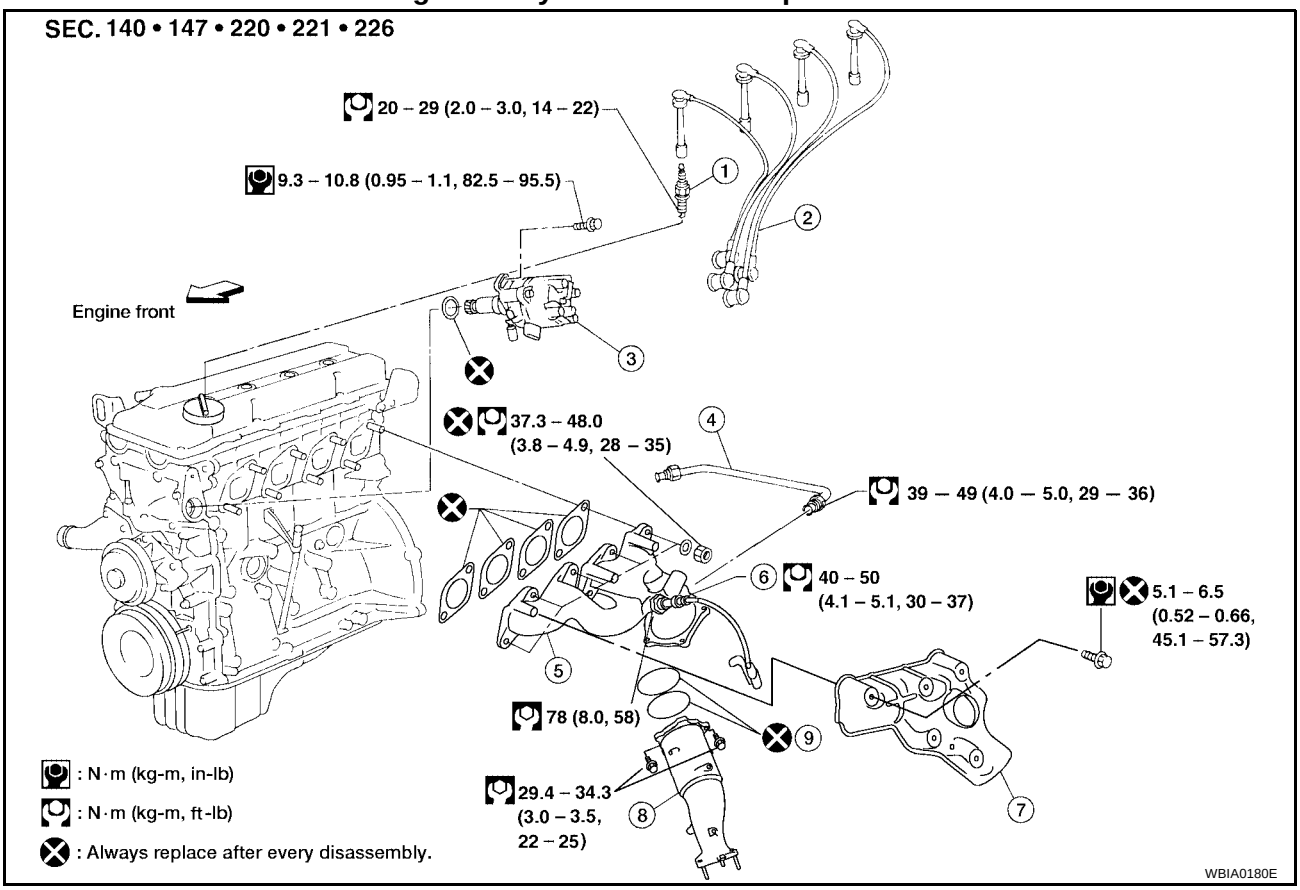

1. Spark plug
2. Ignition wires
3. Camshaft position sensor built into distributor
4. EGR tube
5. Exhaust manifold
6. Heated oxygen sensor 1
7. Exhaust manifold cover
8. TWC (manifold)
9. TWC (manifold) gaskets

Intake manifold

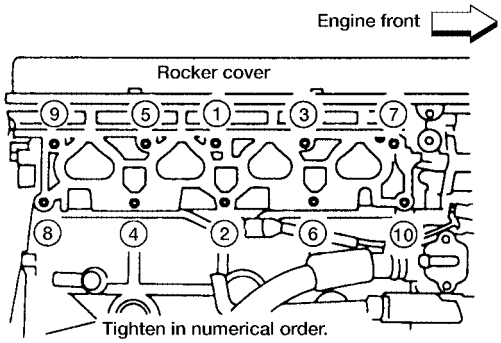

Tighten in numerical order.
Loosen in reverse order.
15.7 – 18.6 (1.6 – 1.9, 11.6 – 13.7)

Exhaust manifold

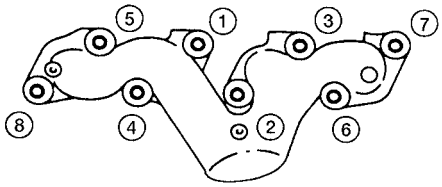

Tighten in numerical order.
Loosen in reverse order.
37.3 – 48.0 (3.8 – 4.9, 27.5 – 35.4)

Throttle body

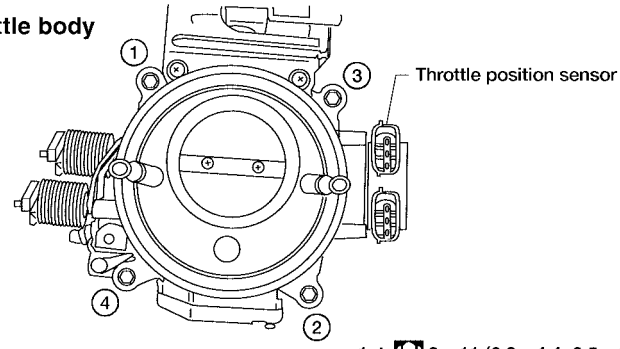

Tighten in numerical order.
Loosen in reverse order.

1st: 9 – 11 (0.9 – 1.1, 6.5 – 8.0)
2nd: 18 – 22 (1.8 – 2.2, 13 – 16)

: N·m (kg-m, ft-lb)

WBIA0099E

OIL PAN

PFP:11110

Components

EBS00941

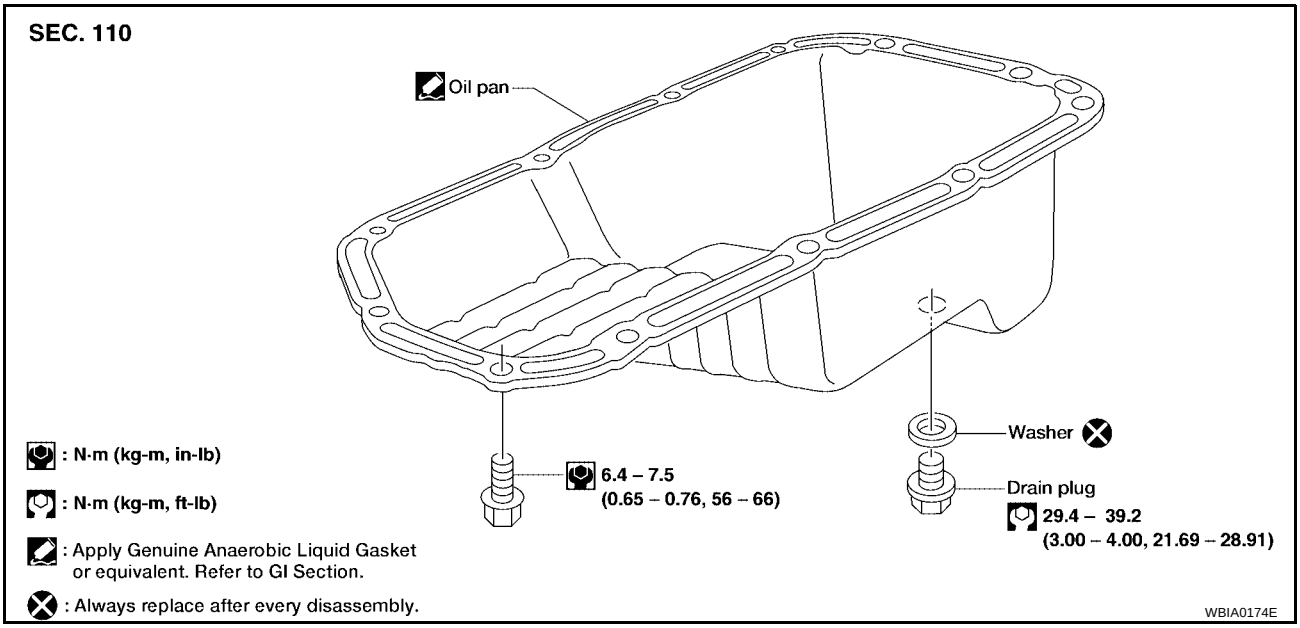

Removal

EBS00942

1. Remove the engine under cover.
2. Drain the engine oil. Refer to MA-20, "Changing Engine Oil" .
3. Remove the front suspension member. Refer to FSU-10, "Front Suspension Parts" .
4. Remove the oil pan bolts in the numerical order as shown.

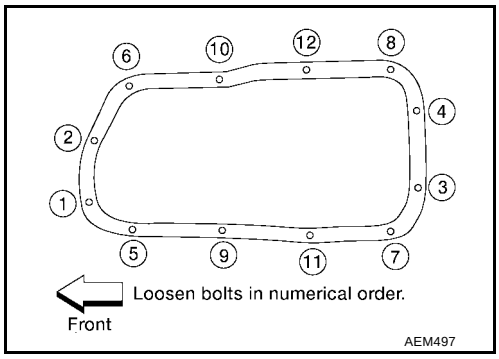

5. Remove the oil pan using Tool as shown.

a. Insert Tool between the cylinder block and oil pan, and separate the oil pan from the engine block by tapping (1) with a plastic hammer as shown.
   - Be careful not to damage the aluminum mating surface.
   - Do not insert a screwdriver, which may damage the oil pan flange.

b. Slide the Tool by tapping on the side (2) of the Tool with a plastic hammer as shown.

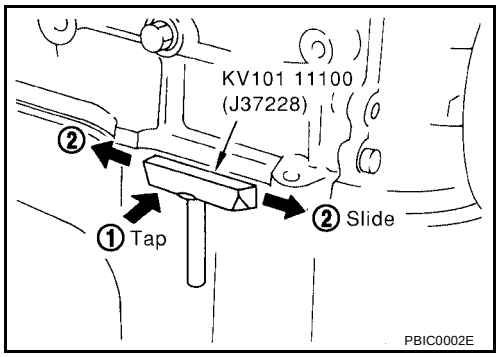

6. Pull the oil pan out from the front side.

Installation

EBS00943

1. Use a scraper to remove the old liquid gasket from the mating surface of the oil pan.
   - Remove all traces of the liquid gasket from the mating surface of the cylinder block.

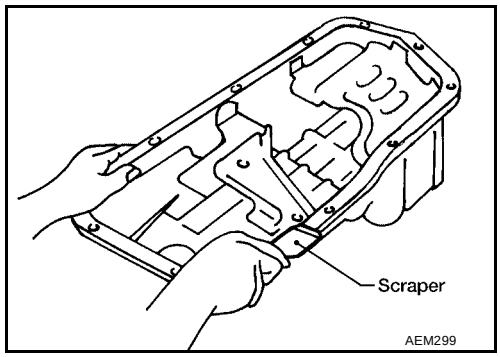

2. Apply a continuous bead of liquid gasket to the mating surface of the oil pan.
   - Use Genuine Anaerobic Liquid Gasket or equivalent. Refer to MA-12, "RECOMMENDED FLUIDS AND LUBRICANTS" .
   - Apply the liquid gasket to the groove on the oil pan mating surface.

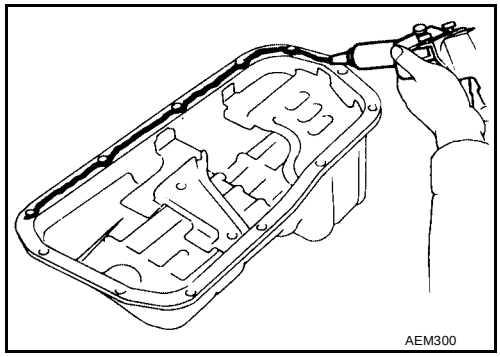

   - Allow a 7 mm (0.28 in) clearance around the bolt holes.

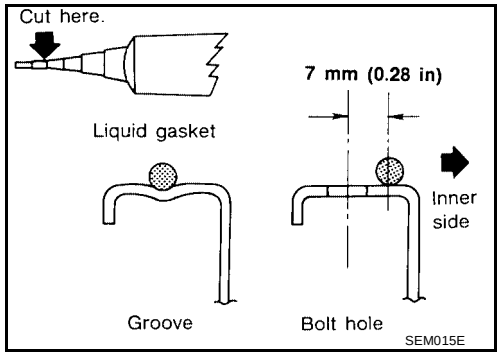

   - Be sure the bead of liquid gasket has a diameter of 3.5 - 4.5 mm (0.138 - 0.177 in).
   - Installation must be done within 5 minutes after applying the liquid gasket.

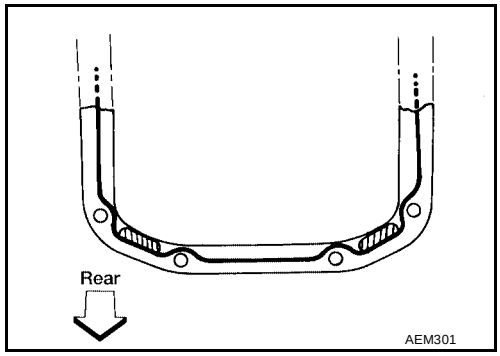

3. Install the oil pan.
   - Wait at least 30 minutes before refilling the engine oil.
   - Tighten the oil pan bolts to specification in numerical order as shown.

     Oil pan bolts : 6.4 - 7.5 N·m (0.65 - 0.76 kg-m, 56 - 66 in-lb)

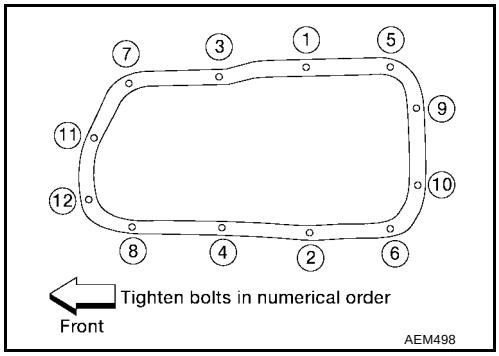

4. Install the remaining parts in the reverse order of removal.

TIMING CHAIN

PFP:13028

Components

EBS00944

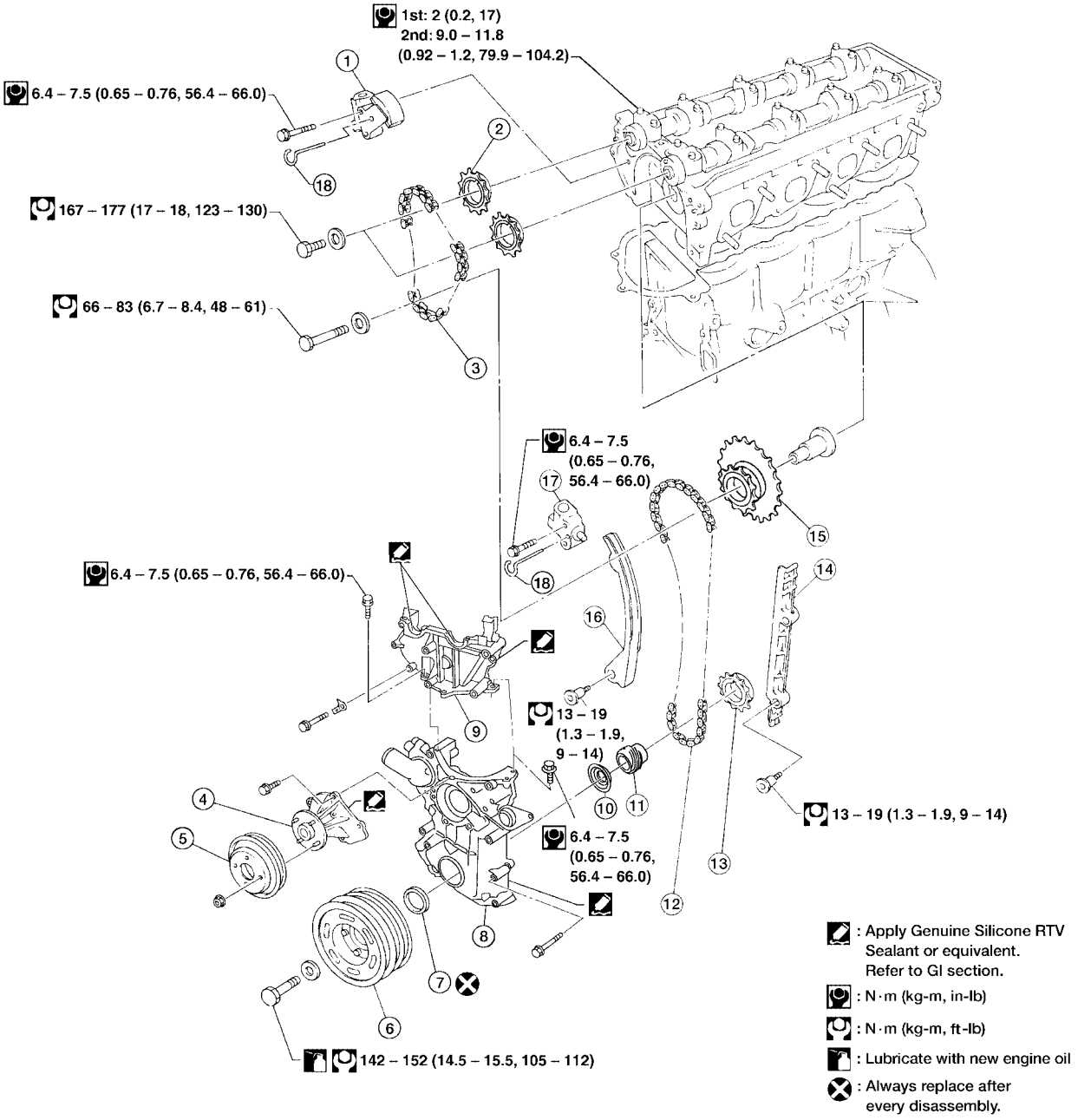

1. Timing chain tensioner (upper)	2. Cam sprocket	3. Timing chain (upper)
4. Water pump	5. Water pump pulley	6. Crankshaft pulley
7. Front oil seal	8. Front cover	9. Camshaft sprocket cover
10. Oil slinger	11. Oil pump drive gear	12. Timing chain (lower)
13. Crankshaft sprocket	14. Chain guide	15. Idler sprocket
16. Chain tension arm	17. Timing chain tensioner (lower)	18. Suitable pin

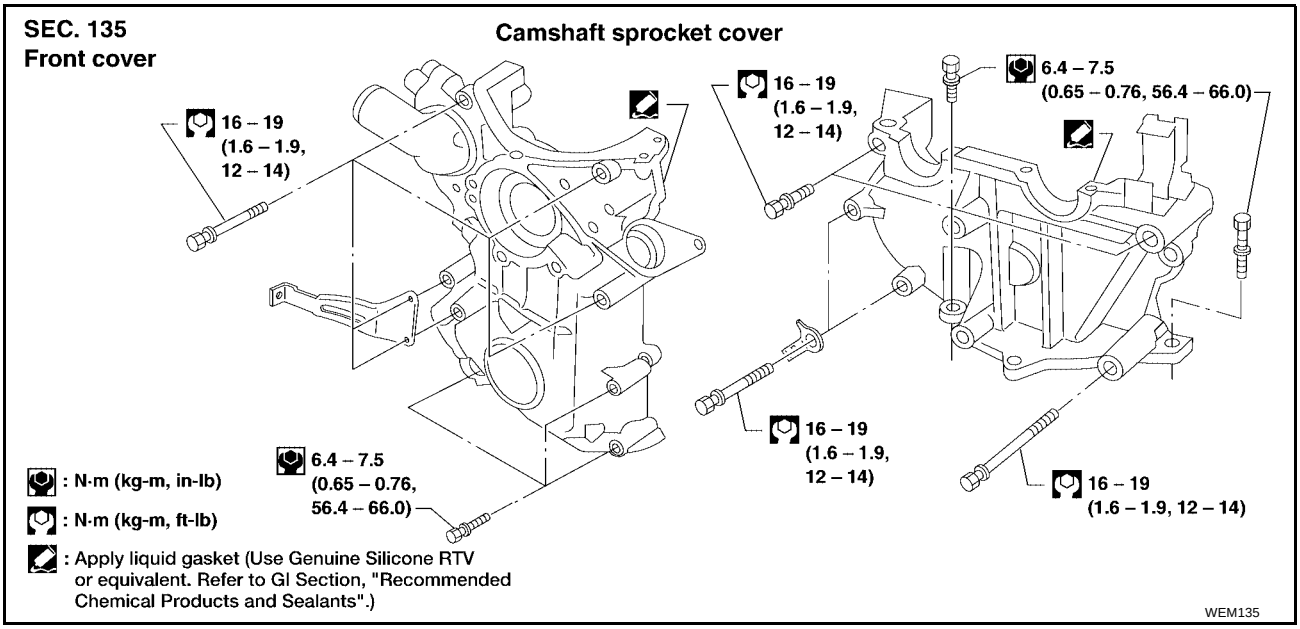

LIQUID GASKET APPLICATION PLACES

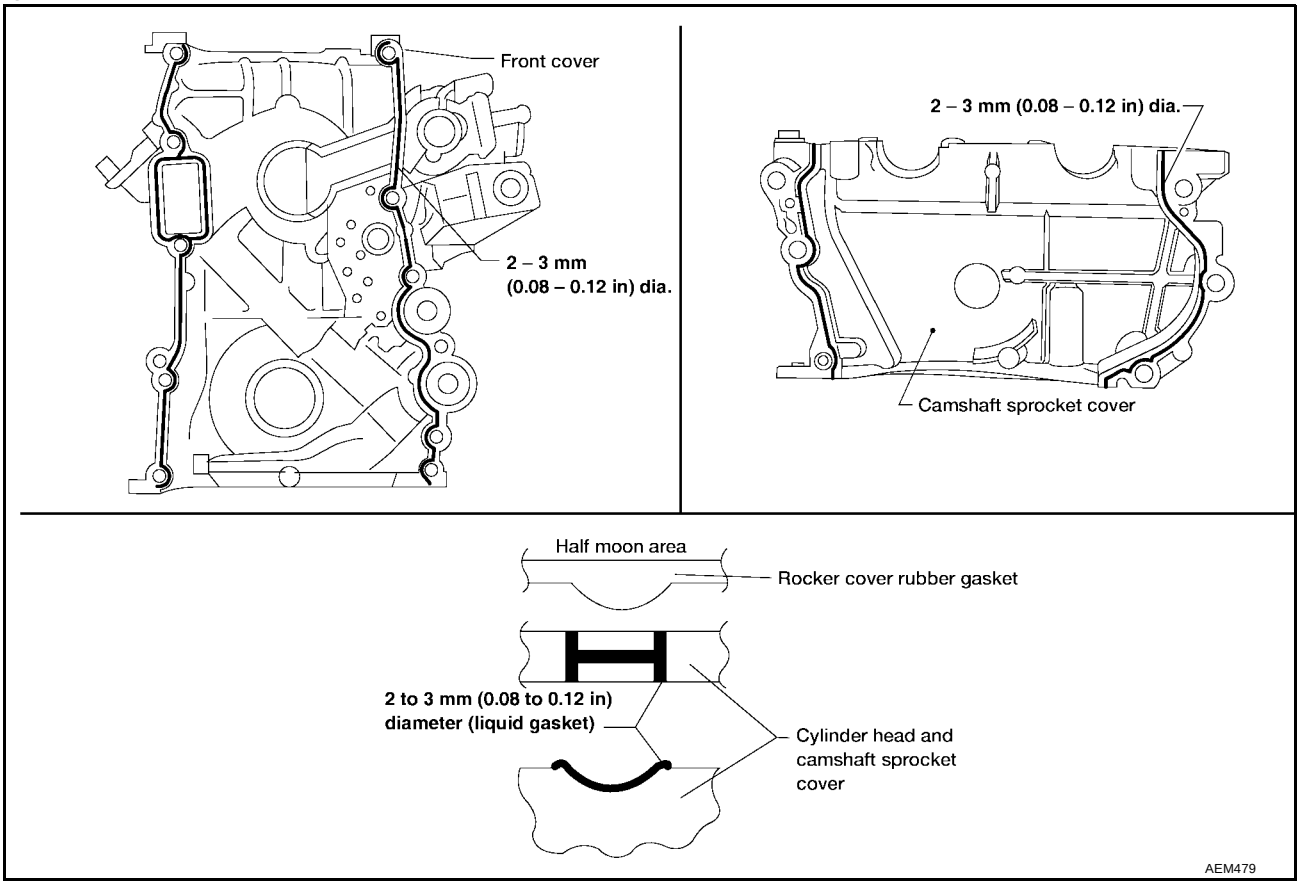

Removal

EBS00945

CAUTION:

- **After removing timing chain, do not turn crankshaft and camshaft separately, or valves will strike piston heads.**
- **When installing chain tensioners or other sliding parts, lubricate contacting surfaces with new engine oil.**
- **Apply new engine oil to bolt threads and seat surfaces when installing camshaft sprockets and crankshaft pulley.**
- **Do not spill engine coolant on drive belts.**

UPPER TIMING CHAIN

1. Remove the air cleaner assembly.
2. Remove the spark plug wires.
3. Set No.1 piston at TDC on its compression stroke.

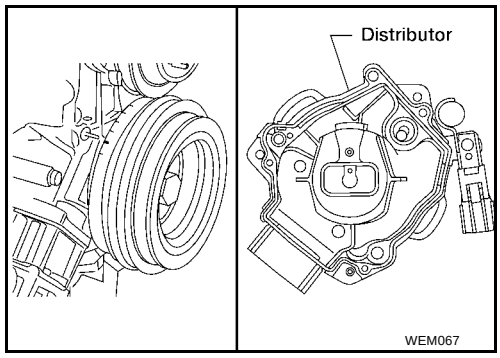

4. Remove the vacuum hoses, electrical harness connectors, and harness clamps.
5. Remove the power steering belt.
6. Remove the power steering pump and position it to one side. Remove the idler pulley and bracket.
7. Remove the rocker cover, loosen and remove the rocker cover bolts in the numerical order as shown.

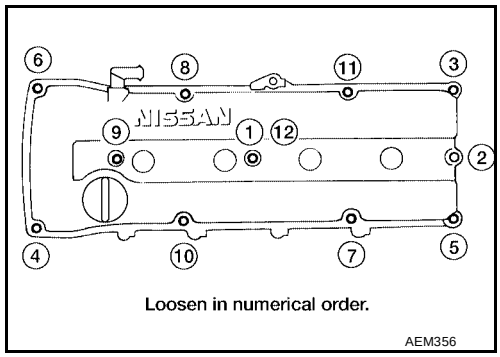

8. Remove the camshaft sprocket cover.

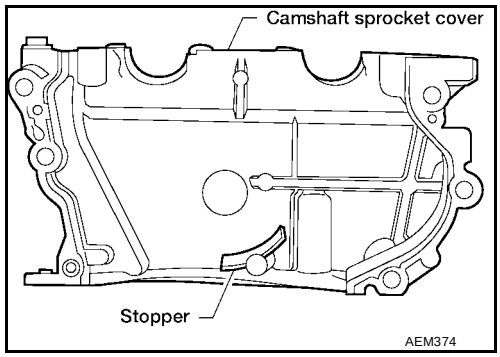

9. Wipe off the links of the timing chain next to the timing marks on the sprockets. Put paint marks on the timing chain, matching them with the timing marks on the cam sprockets and idler sprocket.

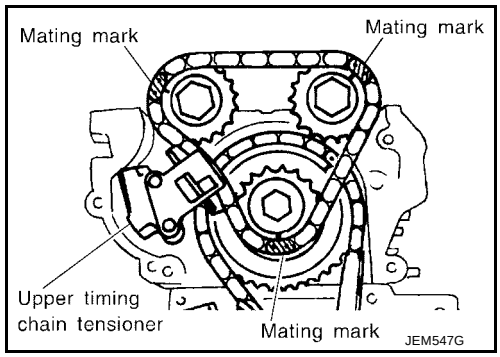

10. Remove cam sprocket bolts, cam sprockets and upper timing chain.

IDLER SPROCKET

1. Remove upper timing chain.

Refer to EM-21, "UPPER TIMING CHAIN" .

2. If not removing the lower cover, support lower timing chain using a suitable tool to prevent the chain tensioner spring from coming out.

   NOTE:
   This step is only to be applied when the lower cover is not being removed.

3. Remove the idler sprocket.

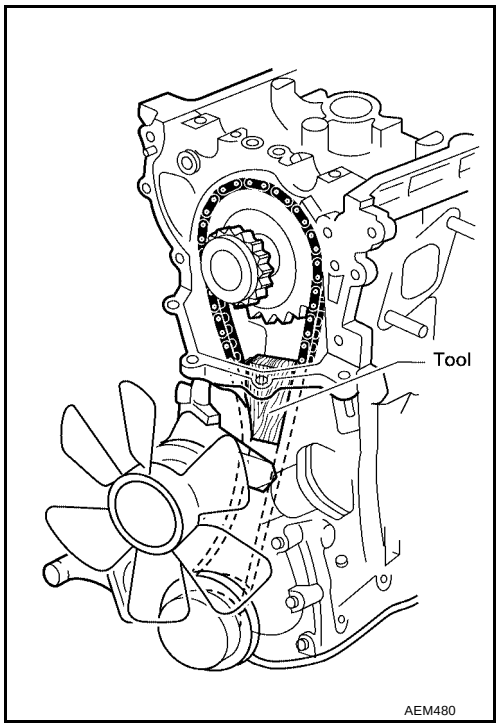

LOWER TIMING CHAIN

1. Drain the coolant by removing the cylinder block drain plug and opening the radiator drain cock. Refer to MA-16, "Changing Engine Coolant" .
2. Drain the engine oil. Refer to MA-20, "Changing Engine Oil" .
3. Remove the intake air duct.
4. Remove the following parts:
   - Generator drive belt
   - A/C compressor drive belt
   - Cooling fan with coupling
   - Radiator shroud
5. Remove the A/C compressor without disconnecting the A/C hoses and position it to the side, supporting it with wire.
6. Remove the idler pulley and bracket.
7. Set the No. 1 piston to TDC on its compression stroke.
8. Remove the distributor.

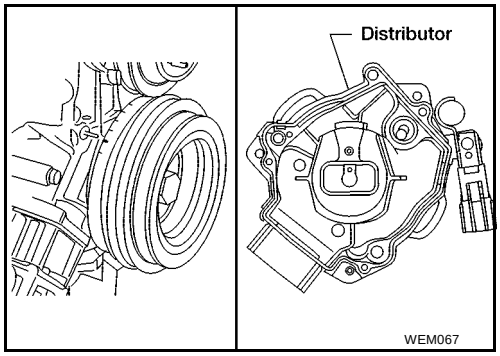

9. Remove the crankshaft bolt.
   - Remove the rear plate and install Tool to prevent crankshaft rotation.

     Tool number : — (J-45499)

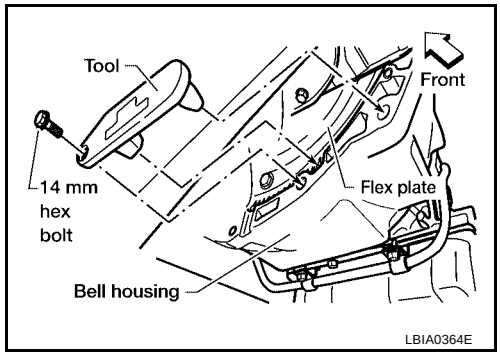

10. Remove the crankshaft pulley with a suitable puller.

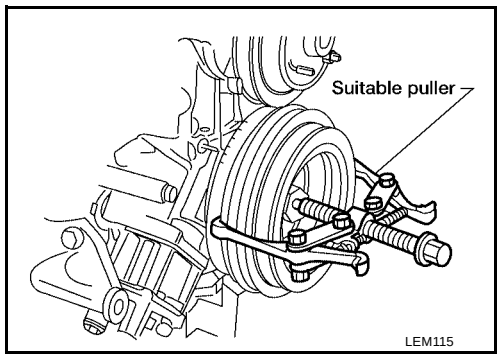

11. Remove the oil pan. Refer to EM-16, "Removal" .
12. Remove the oil pump, distributor drive shaft, and the oil pickup strainer.
13. Remove the front cover.

    CAUTION:
    Be careful not to tear or damage the cylinder head gasket.
14. Remove the following parts.
    - Release the timing chain tensioner by pushing the piston in and inserting a suitable pin into the pin hole.
    - Chain tension arm
    - Lower timing chain guide
    - Air duct

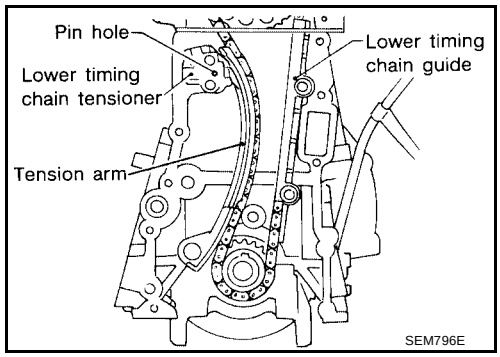

15. Remove the upper timing chain. Refer to EM-21, "UPPER TIMING CHAIN" .

16. Wipe off the links of the timing chain next to the timing marks on the sprockets. Put paint marks on the timing chain, matching them with the timing marks on the crankshaft sprocket and idler sprocket.

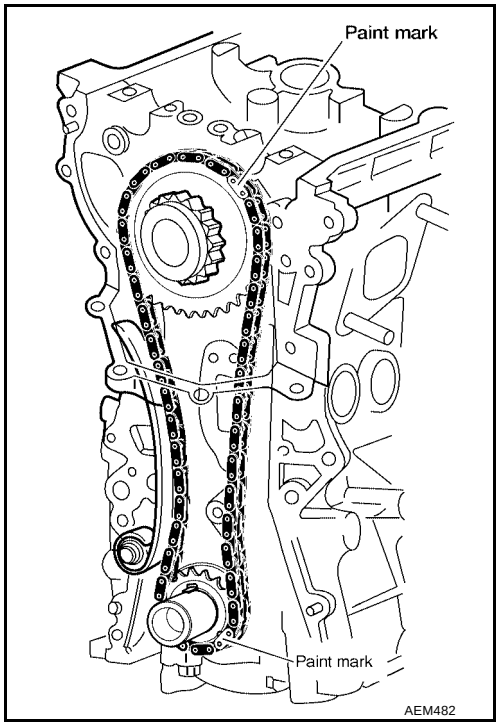

17. Remove the lower timing chain, crankshaft sprocket, and idler sprocket.

Inspection

EBS00946

Check for cracks and excessive wear at the roller links. Replace the chain if necessary.

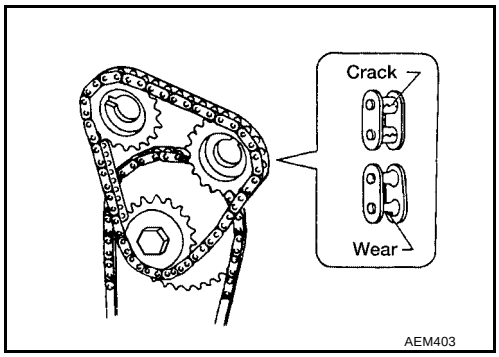

Installation

EBS00947

LOWER TIMING CHAIN

1. Install crankshaft sprocket.
   - Make sure that the mating marks of crankshaft sprocket face the front of the engine.

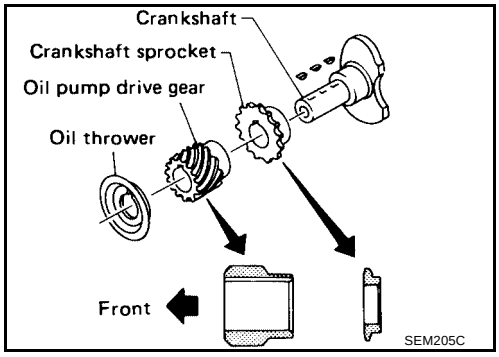

2. Install the idler sprocket and lower timing chain using the mating marks and the paint marks made during the removal process.

   CAUTION:
   Be careful not to tear or damage the cylinder head gasket.

3. Install the chain guide and the chain tension arm.

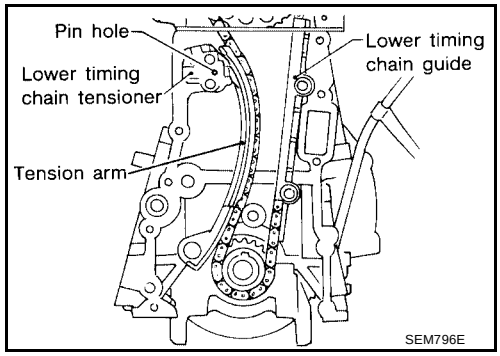

4. Install the lower chain tensioner and remove the pin securing the piston in the tensioner body.
5. Install the front cover and oil seal.
   - Using a scraper or other suitable tool remove all traces of liquid gasket from the cylinder block and front cover mating surfaces.
   - Install a new crankshaft seal in the front cover.
   - Apply a continuous bead of Genuine Silicone RTV Sealant or equivalent, to the front cover. Refer to MA-12, "Recommended Fluids and Lubricants" .

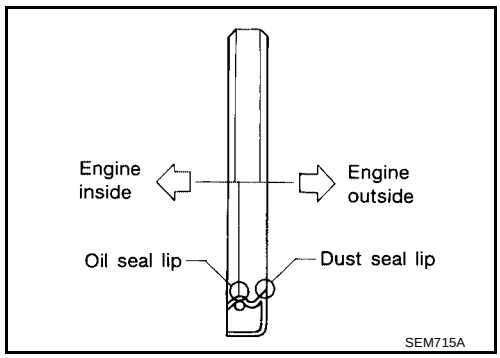

   - Install a new front oil seal using a suitable tool. Refer to EM-28, "FRONT OIL SEAL" .

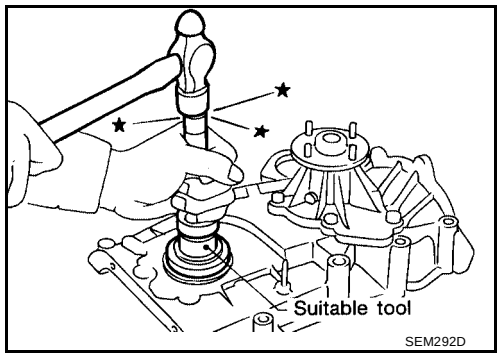

   - Apply Genuine Silicone RTV Sealant on the head gasket surface. Refer to GI-42, "RECOMMENDED CHEMICAL PRODUCTS AND SEALANTS" .
   - Install the front engine cover.
6. Install oil strainer and oil pan. Refer to EM-17, "Installation" .
7. Install the oil pump and distributor drive shaft.
   - Make sure the flat side of the distributor drive shaft is facing the engine. Failure to do so will result in the distributor being out of time.
8. Install the crankshaft pulley and crankshaft pulley bolt. Refer to EM-13, "Removal and Installation" .

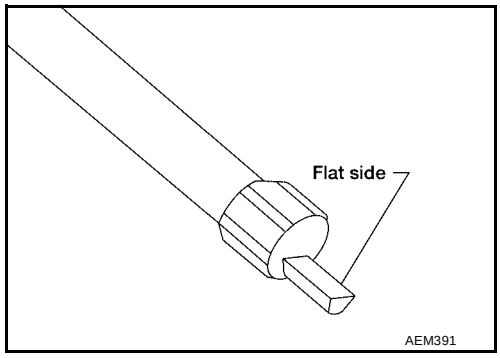

9. If installed, remove Tool.

   Tool number : — (J-45499)

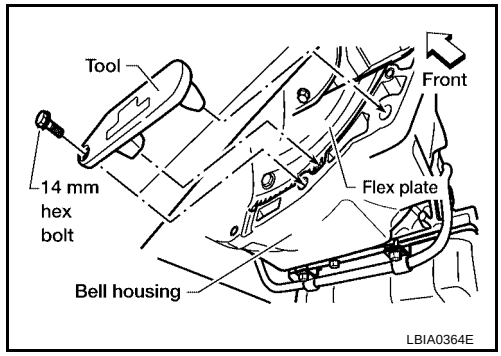

10. Install the rear plate.

    Rear plate bolts

    10 mm hex : 3 - 4 N·m (0.3 - 0.4 kg-m, 32 - 35 in-lb)

    14 mm hex : 16 - 22 N·m (1.6 - 2.2 kg-m, 12 - 16 ft-lb)

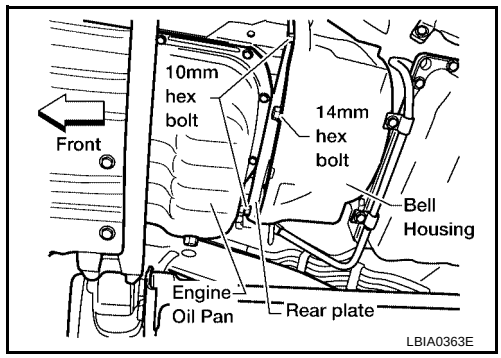

11. Install the A/C compressor and idler pulley bracket. Refer to MTC-69, "Removal and Installation for Compressor" .
12. Install the radiator shroud and cooling fan with coupling. Refer to CO-14, "Removal and Installation" .
13. Install the A/C compressor, generator, and power steering pump drive belts. Refer to MA-15, "Checking Drive Belts" .
14. Install the intake air duct.

IDLER SPROCKET

Install the lower timing chain. Refer to EM-24, "LOWER TIMING CHAIN" .

UPPER TIMING CHAIN

1. Install the lower timing chain and idler sprocket. Refer to EM-24, "LOWER TIMING CHAIN" and EM-26, "IDLER SPROCKET" .

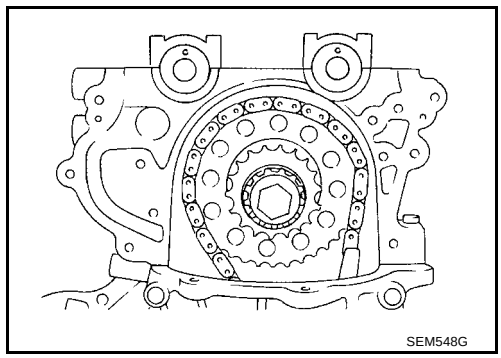

2. Install the upper timing chain and sprockets, aligning the paint marks made during removal as shown.

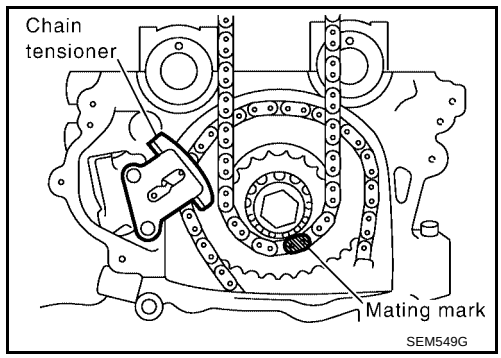

3. Install the chain tensioner. Remove the pin holding the tensioner piston in the bore of the tensioner.
   - Check that the timing chain mating marks are aligned so that the timing chain is correctly installed.

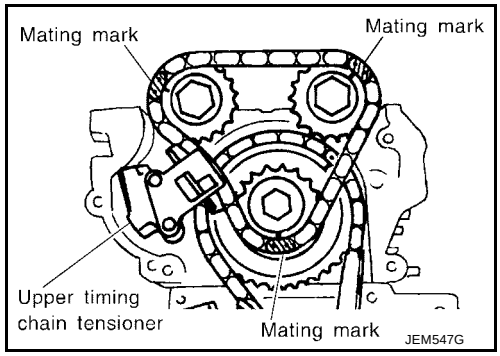

4. Install the camshaft sprocket cover:

   CAUTION:
   Do not to tear or damage the cylinder head gasket.
   Do not let the upper timing chain slip or jump on the sprockets when installing the camshaft sprocket cover.
   - Use a scraper to remove all traces of liquid gasket from mating surfaces of the engine block and camshaft sprocket cover.
   - Apply liquid gasket on the head gasket surface.
   - Apply a continuous bead of liquid gasket to the cylinder head camshaft sprocket cover. Refer to EM-5, "Precautions for Liquid Gasket" . Use Genuine Silicone RTV Sealant or equivalent. Refer to MA-12, "Recommended Fluids and Lubricants" .
5. Install the rocker cover gasket on the rocker cover.
   - Apply a continuous bead of liquid gasket to the cylinder head camshaft sprocket cover. Refer to EM-5, "Precautions for Liquid Gasket" . Use Genuine Silicone RTV Sealant or equivalent. Refer to GI-42, "RECOMMENDED CHEMICAL PRODUCTS AND SEALANTS"
6. Install the rocker cover. Tighten the bolts in the numerical order as shown.

   Rocker cover bolts : 8 - 11 N·m (0.8 - 1.1 kg-m, 69 - 95 in-lb).

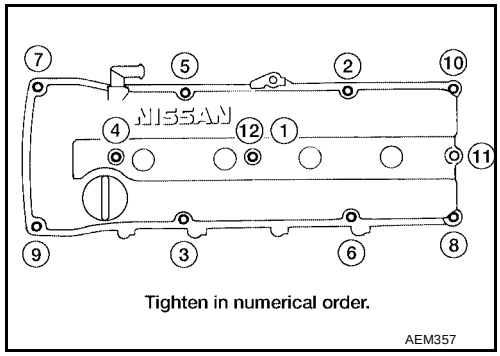

7. Install the distributor, align the distributor to the mark as shown.

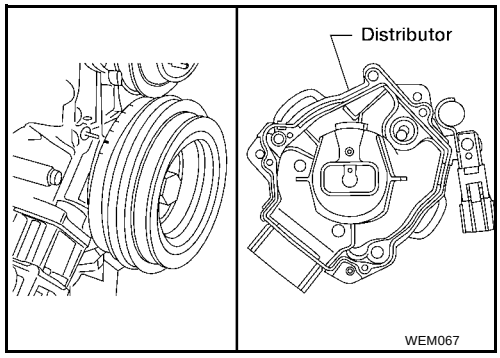

8. Install the vacuum hoses, electrical harnesses, connectors, and harness clamps.

OIL SEAL

PFP:00100

Replacement

EBS00948

VALVE OIL SEAL

1. Remove the rocker cover.
2. Remove the camshaft. Refer to EM-19, "TIMING CHAIN" .
3. Remove valve spring and valve oil seal with Tool or a suitable tool.

   NOTE:
   The piston must be at TDC on the compression stroke to prevent the valve from falling into the combustion chamber.
4. Apply engine oil to new valve oil seal and install it with Tool.

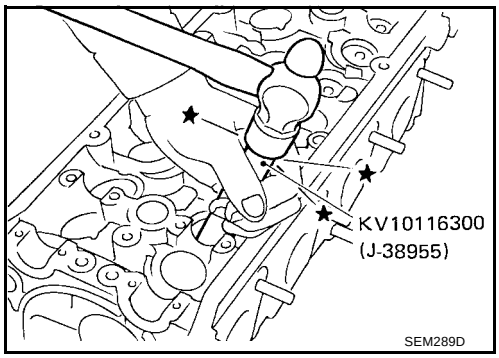

- The valve oil seal must be installed to specification over the valve stem opening as shown.

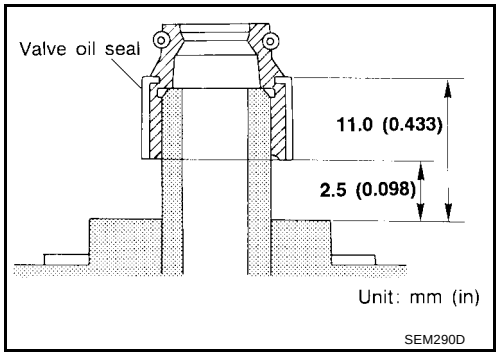

FRONT OIL SEAL

1. Remove radiator shroud. Refer to CO-14, "Components" .
2. Remove the crankshaft bolt.
   - Remove the rear plate and install Tool to prevent crankshaft rotation.

     Tool number : — (J-45499)

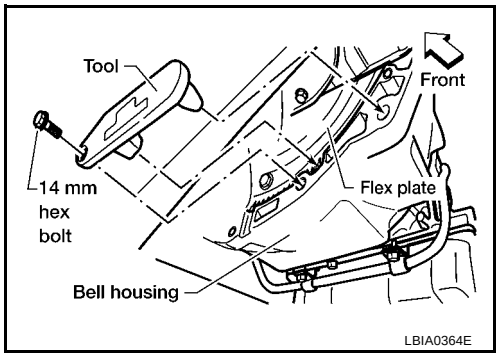

3. Remove the crankshaft pulley with a suitable puller.

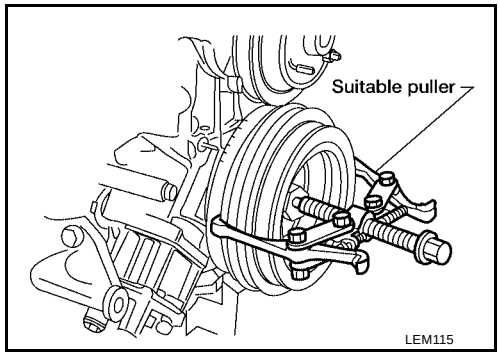

4. Remove front oil seal using suitable tool.

CAUTION:
Be careful not to scratch the front cover.

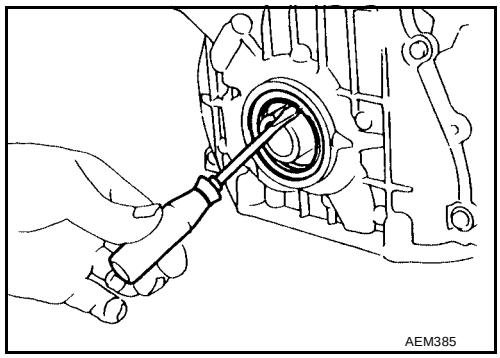

5. Apply engine oil to new oil seal and install it using a suitable tool.

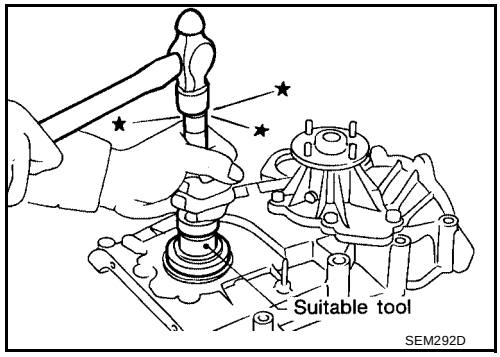

- Install the new oil seal in the direction shown.

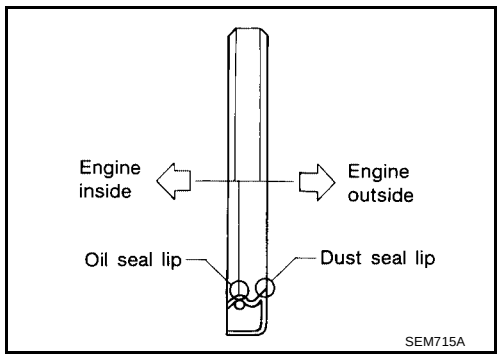

6. Install the crankshaft pulley. Refer to EM-13, "Removal and Installation" .

7. If installed, remove Tool.

   Tool number : — (J-45499)

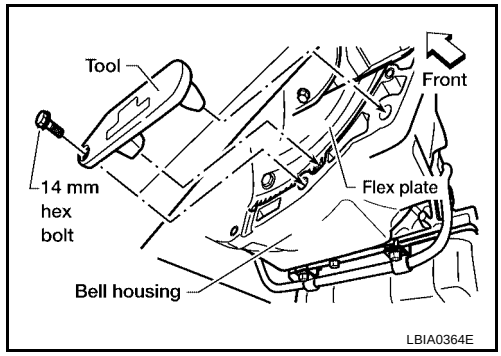

8. Install the rear plate.

   Rear plate bolts

   10 mm hex : 3 - 4 N·m (0.3 - 0.4 kg-m, 32 - 35 in-lb)

   14 mm hex : 16 - 22 N·m (1.6 - 2.2 kg-m, 12 - 16 ft-lb)

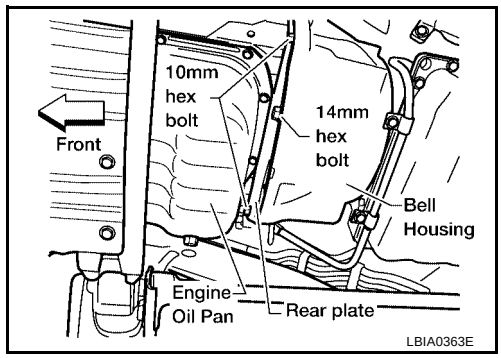

9. Install radiator shroud. Refer to CO-14, "Components" .

REAR OIL SEAL

1. Remove the flywheel (M/T) or drive plate (A/T). Refer to MT-10, "Removal and Installation" (FS5W71C), MT-48, "Removal and Installation" (FS5R30A), AT-62, "REMOVAL AND INSTALLATION" (RL4R01A), AT-407, "REMOVAL AND INSTALLATION" (RE4R01A).
2. Remove the rear oil seal retainer.
3. Remove the rear oil seal from the retainer.

   CAUTION:
   Be careful not to scratch the rear oil seal retainer.

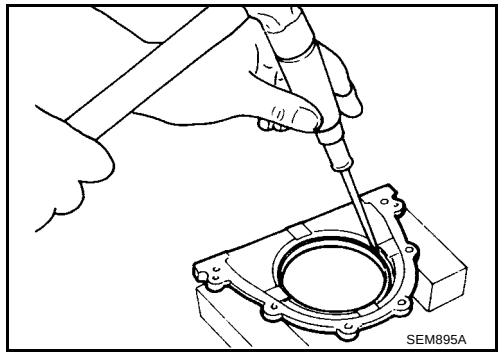

4. Apply engine oil to new oil seal and install it using suitable tool.

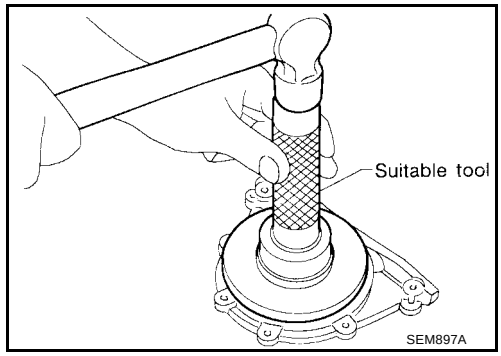

- Install the new oil seal in the direction shown.

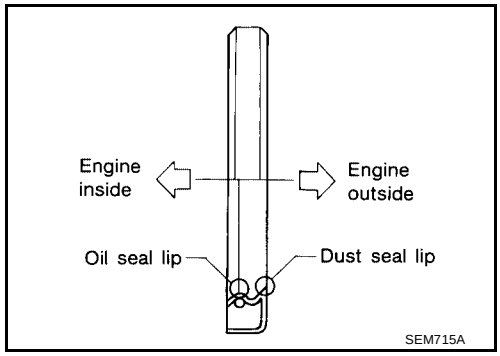

5. Install rear oil seal retainer.

Rear oil seal retainer bolts	**: 6.4 - 7.5 N·m (0.65 - 0.76 kg-m, 56 - 66 in-lb)**

a. Before installing rear oil seal retainer, remove all traces of liquid gasket from mating surface using a scraper as shown. Also remove all traces of the old liquid gasket from the mating surface of the cylinder block.

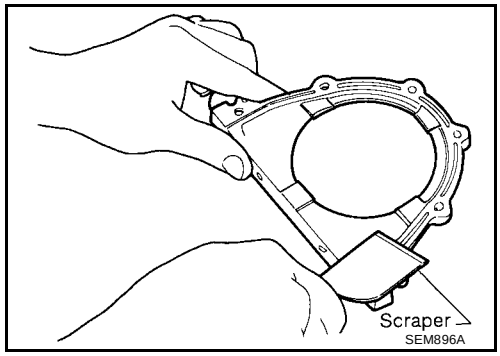

b. Apply a continuous bead of liquid gasket to mating surface of rear oil seal retainer. Use Genuine Silicone RTV Sealant or equivalent. Refer to GI-42, "RECOMMENDED CHEMICAL PRODUCTS AND SEALANTS" .
   - Apply the liquid gasket around the inner side of the bolt holes.

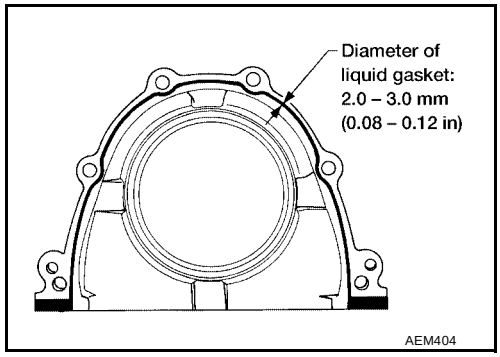

CYLINDER HEAD

PFP:11041

On-Vehicle Service

EBS0094Z

CHECKING COMPRESSION PRESSURE

1. Warm up the engine.
2. Turn the ignition switch OFF.
3. Release the fuel pressure.
   Refer to EC-45, "FUEL PRESSURE RELEASE" .
4. Remove all of the spark plugs.
   - Clean area around plug with compressed air before removing the spark plug.
5. Disconnect the camshaft position sensor harness connector at the distributor.
6. Remove the fuel injector fuse No. **3** on FUSE BLOCK (J/B) behind the driver side instrument lower panel.
7. Attach a compression tester to the No. 1 cylinder as shown.
8. Depress the accelerator pedal fully to keep the throttle valve wide open.
9. Crank the engine and record the highest gauge indication.

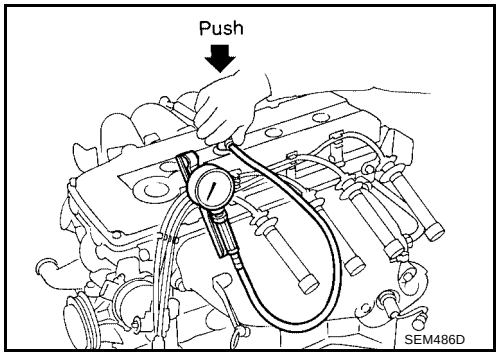

10. Repeat the measurement on each cylinder.
    - Always use a fully-charged battery to obtain specified engine speed.

Compression	**: kPa (kg/cm^2 , psi)/300 rpm**
Standard	**: 1,226 (12.5, 178)**
Minimum	**: 1,030 (10.5, 149)**
Difference limit between cylinders	**: 98 (1.0, 14)**

11. If the compression in one or more cylinders is low:

a. Pour a small amount of engine oil into the cylinders through the spark plug hole.

b. Retest the compression.
   - If adding oil improves cylinder compression, piston rings may be worn or damaged. If so, replace piston rings after checking piston.
   - If pressure stays low, a valve may be sticking or seating improperly. Inspect and repair valve and valve seat. Refer to EM-40, "VALVE DIMENSIONS" , EM-39, "VALVE SEATS" . If valve or valve seat is damaged excessively, replace it.
   - If compression in any two cylinders adjacent cylinders is low, and if adding oil does not improve compression, there is leakage past the gasket surface. If so, replace cylinder head gasket.

12. Reinstall the spark plugs, fuel injector fuse, fuel pump fuse, and reconnect camshaft position sensor harness connector at the distributor.
13. Erase the DTC stored in the ECM.
    Refer to EC-60, "HOW TO ERASE EMISSION-RELATED DIAGNOSTIC INFORMATION" .

    CAUTION:
    Always erase the DTC after checking compression.

Components

EBS00949

SEC. 111 • 130

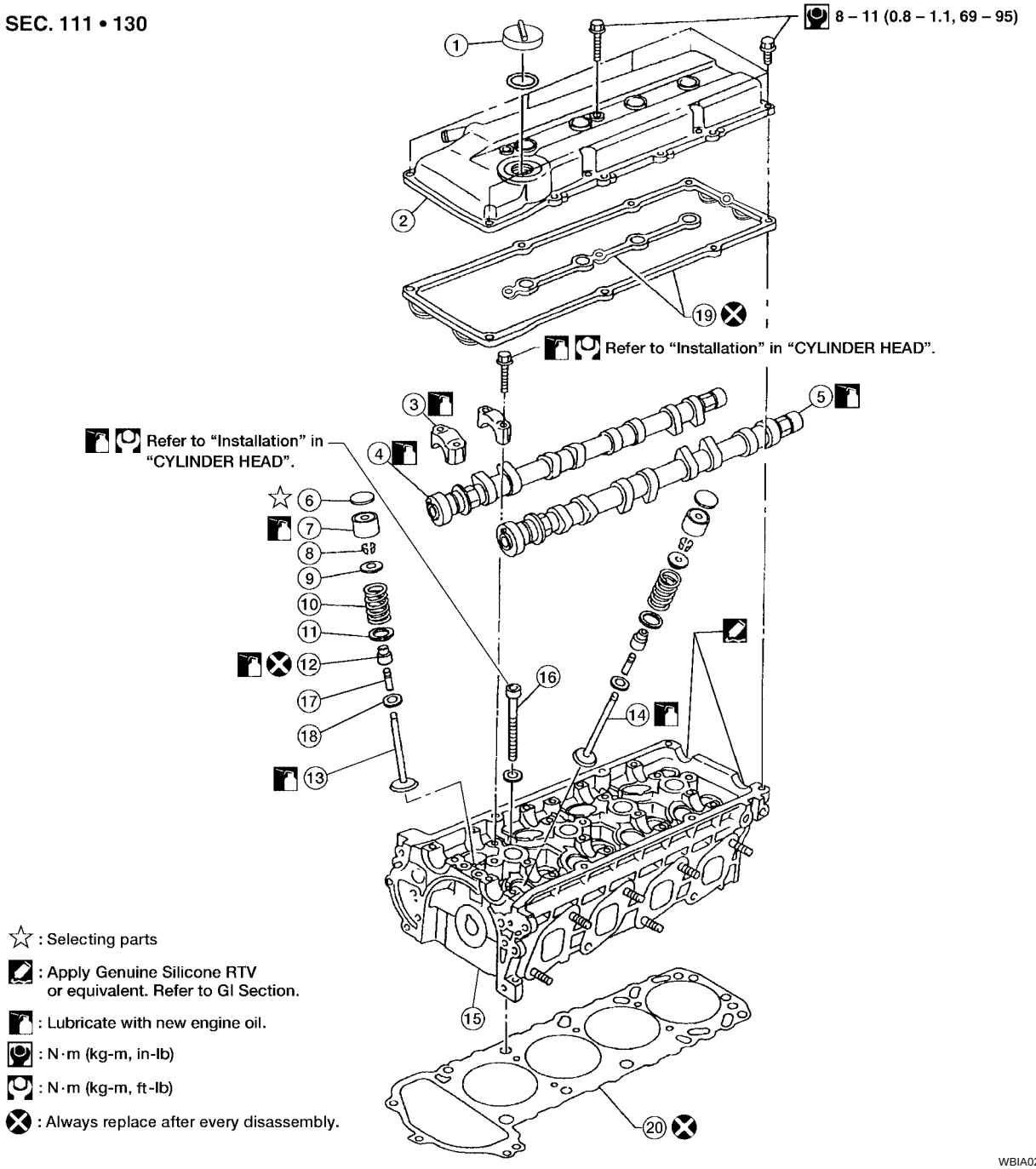

WBIA0233E

1.	Oil filler cap	2.	Rocker cover	3.	Camshaft bracket
4.	Intake camshaft	5.	Exhaust camshaft	6.	Adjusting shim
7.	Valve lifter	8.	Valve cotter	9.	Spring retainer
10.	Valve spring	11.	Spring seat	12.	Valve oil seal
13.	Intake valve	14.	Exhaust valve	15.	Cylinder head
16.	Cylinder head bolt	17.	Valve guide	18.	Valve seat
19.	Rocker cover gaskets	20.	Cylinder head gasket		

Removal

EBS0094A

CAUTION:

- **When installing camshafts, chain tensioners, oil seals, or other sliding parts, lubricate contacting surfaces with new engine oil.**

- **Apply new engine oil to threads and seat surfaces when installing cylinder head, camshaft sprocket, crankshaft pulley, and camshaft bracket.**
- **Attach tags to valve lifters so as not to mix them up.**
- **Before removing camshaft and idler sprockets, apply paint marks to them for re-timing.**

1. Remove upper timing chain and idler sprocket. Refer to EM-21, "UPPER TIMING CHAIN" and EM-21, "IDLER SPROCKET" .
   - For re-timing during cylinder head removal and installation, apply paint marks to the camshaft sprockets, upper timing chain, lower timing chain, and idler sprocket.
2. Remove camshaft brackets and camshafts. Remove the bolts in the reverse order as shown.
   - Mark the part with their original position and direction for correct placement for installation.

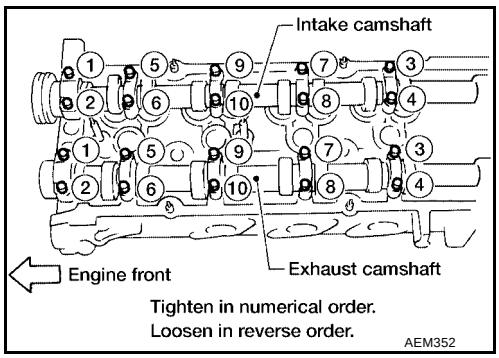

3. Remove the cylinder head bolts in numerical order as shown.
   - Loosen the cylinder head bolts in two or three steps.

   CAUTION:
   Remove the bolts in the correct numerical order to avoid warping or cracking the cylinder head.

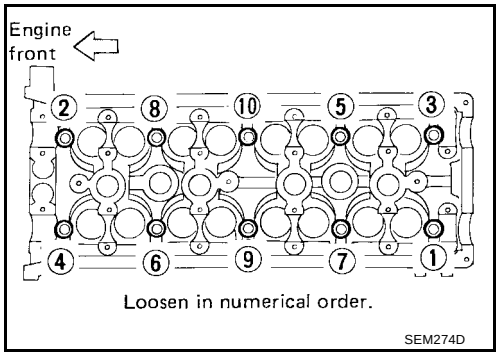

4. Remove the cylinder head and cylinder head gasket.

Disassembly

EBS0094C

1. Remove the intake manifold and exhaust manifold. Refer to EM-13, "Removal and Installation" .
2. Remove the valve components using Tool as shown.

   Valve spring compressor : KV101092S0 (J26336-B)

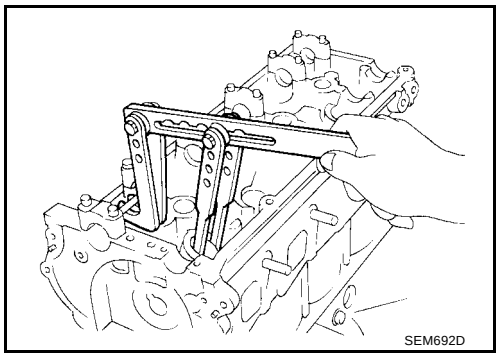

3. Remove the valve oil seals using a suitable tool.

Inspection

EBS0094D

CYLINDER HEAD DISTORTION

1. Clean the sealing surface of the cylinder head.

2. Use a reliable straightedge and feeler gauge to check the flatness of cylinder head surface. Check the cylinder head sealing surface flatness along the six positions as shown.

   Cylinder head surface flatness

   Limit : 0.1 mm (0.004 in)

   If it exceeds the limit, replace or resurface the cylinder head.

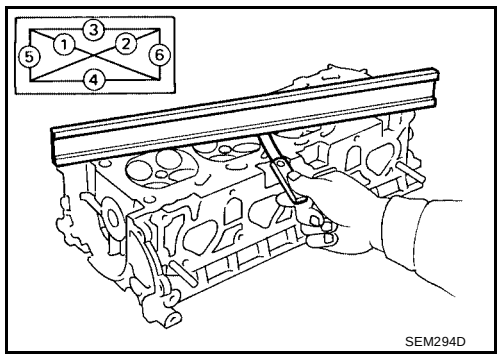

3. Resurface the cylinder head as necessary to specification.
   The limit of cylinder head resurfacing is determined by the cylinder block resurfacing:
   Amount of cylinder head resurfacing is "A".
   Amount of cylinder block resurfacing is "B".

   Maximum limit : A + B = 0.2 mm (0.008 in)

4. After resurfacing, the cylinder head,
   - Check that the camshaft rotates freely by hand. If resistance is felt, the cylinder head must be replaced.

   Nominal cylinder head height : 126.3 - 126.5 mm (4.972 - 4.980 in)

CAMSHAFT VISUAL CHECK

Check the camshaft for scratches, seizure, and wear.

CAMSHAFT RUNOUT

1. Measure the camshaft runout at the center of the journal.

   Runout (total indicator reading)

   Standard : less than 0.02 mm (0.0008 in)

   Limit : 0.04 mm (0.0016 in)

2. If the camshaft runout exceeds the limit, replace the camshaft.

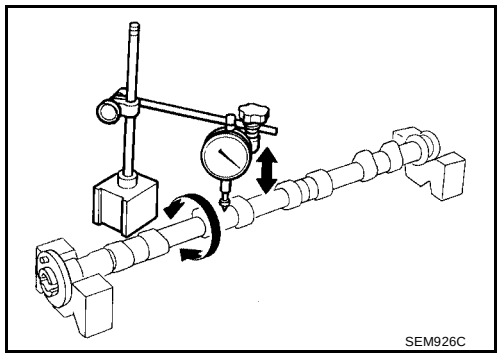

CAMSHAFT CAM HEIGHT

1. Measure camshaft cam height.

   Standard cam height

   Intake : 41.755 - 41.945 mm (1.644 - 1.651 in)

   Exhaust : 41.815 - 42.005 mm (1.646 - 1.654 in)

   Cam height wear limit

   Intake & Exhaust : 0.2 mm (0.008 in)

2. If wear is beyond the limit, replace camshaft.

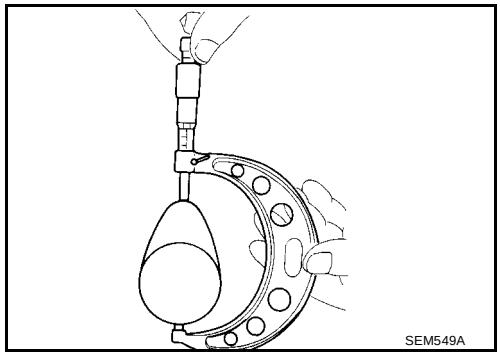

CAMSHAFT JOURNAL CLEARANCE

1. Install camshaft bracket and tighten bolts to the specified torque.
2. Measure inner diameter of camshaft bearing.

Standard inner diameter

No. 1 to No. 5 journals : 28.000 - 28.025 mm (1.1024 - 1.1033 in)

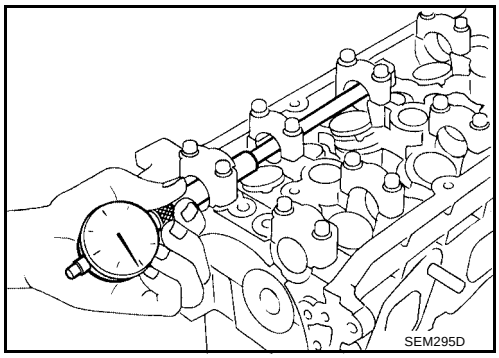

3. Measure outer diameter of camshaft journal.

Standard outer diameter

No. 1 to No. 5 journals : 27.935 - 27.955 mm (1.0998 - 1.1006 in)

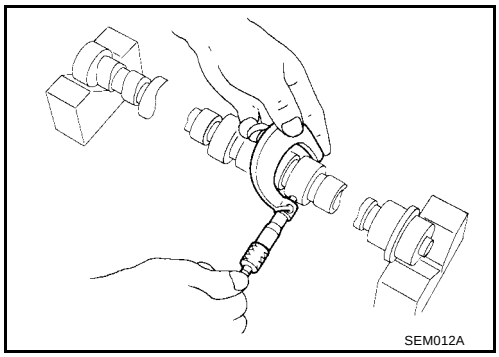

4. If clearance exceeds the limit, replace camshaft and/or cylinder head.

Camshaft journal clearance

Standard : 0.045 - 0.090 mm (0.0018 - 0.0035 in)

Limit : 0.12 mm (0.0047 in)

CAMSHAFT END PLAY

1. Install camshaft in cylinder head.
2. Measure camshaft end play.

Camshaft end play

Standard : 0.070 - 0.148 mm (0.0028 - 0.0058 in)

Limit : 0.2 mm (0.008 in)

3. If end play exceeds the limit, replace camshaft and remeasure camshaft end play.
4. If end play still exceeds the limit after replacing camshaft, replace the cylinder head.

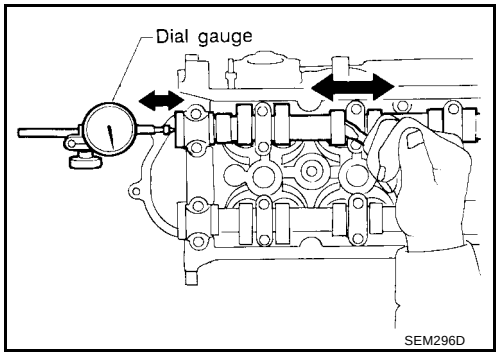

CAMSHAFT SPROCKET RUNOUT

1. Install sprocket on camshaft.
2. Measure camshaft sprocket runout.

Runout (total indicator reading)

Limit : 0.15 mm (0.0059 in)

3. If it exceeds the limit, replace camshaft sprocket.

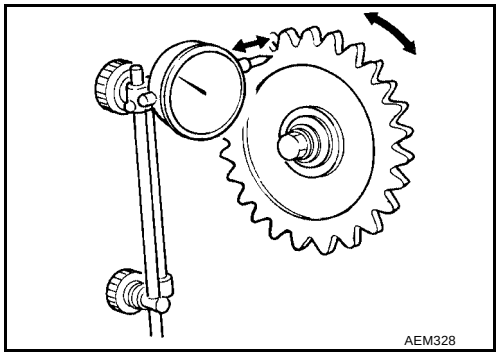

VALVE GUIDE CLEARANCE

1. Measure valve deflection as shown. Valve and valve guide mostly wear in this direction.

   Valve deflection limit (dial gauge reading)

   Intake & Exhaust : 0.2 mm (0.008 in)

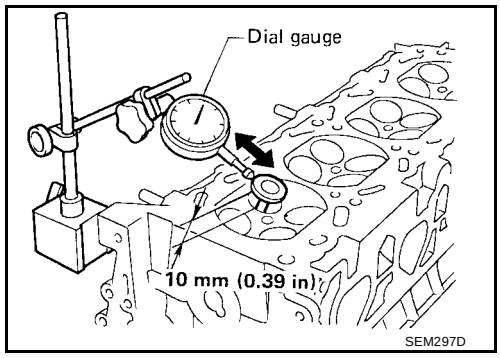

2. If the valve exceeds the deflection limit, check the valve to valve guide clearance:

a. Measure valve stem diameter and valve guide inner diameter.

b. Check that clearance is within specification.
   Valve to valve guide clearance = valve guide inner diameter - valve stem diameter.

Unit: mm (in)

Valve	Standard	Limit
Intake	0.020 - 0.053 (0.0008 - 0.0021)	0.08 (0.0031)
Exhaust	0.040 - 0.073 (0.0016 - 0.0029)	0.1 (0.004)

c. If the clearance exceeds the limit, replace the valve and remeasure the clearance.

d. If the clearance still exceeds the limit after replacing the valve, replace the valve guide.

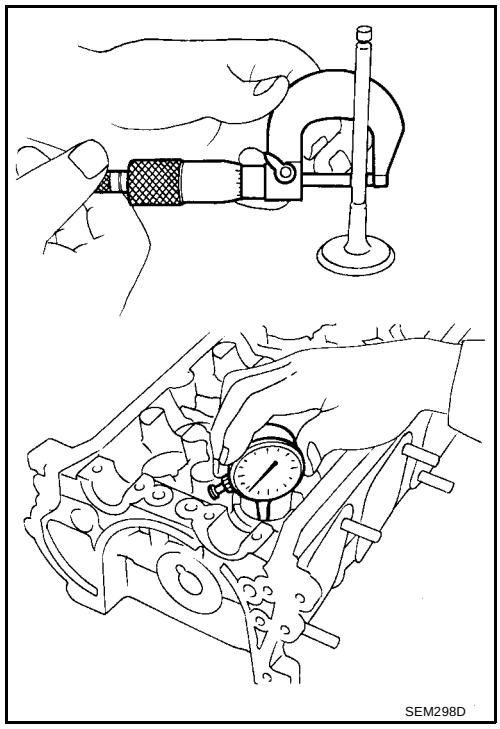

VALVE GUIDE REPLACEMENT

1. To remove the valve guide, heat the cylinder head to 120° - 140°C (248° - 284°F) by soaking in heated oil.

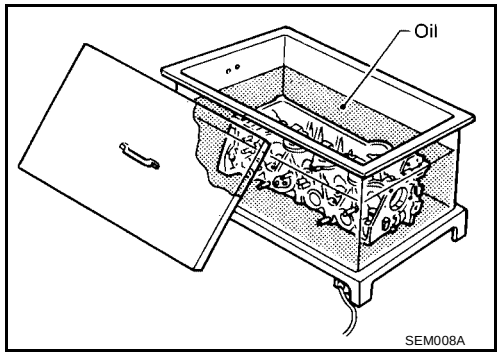

2. To remove the valve guide, use a press [less than 20 kN (2 metric ton, 2.2 US ton, 2.0 Imp. ton) pressure] or hammer and suitable tool, to slide the valve guide out of the cylinder head.

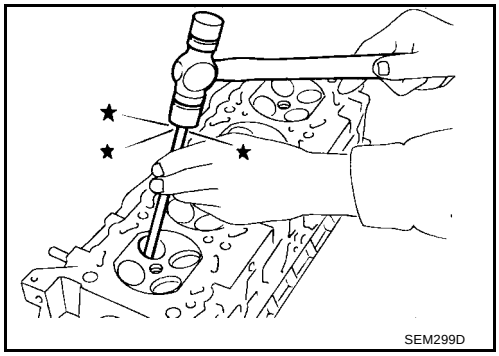

3. Ream the cylinder head valve guide hole.

Valve guide hole diameter (for service parts)

Intake & Exhaust : 11.175 - 11.196 mm (0.4400 - 0.4408 in)

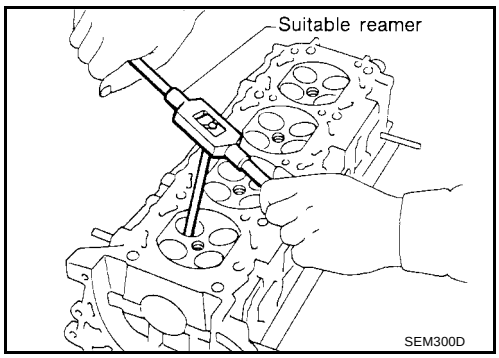

4. Heat cylinder head to 120° - 140°C (248° - 284°F) in heated oil and press the replacement valve guide into the valve guide hole in the cylinder head. Press the valve guide in to the specified height "L" as shown.

Projection "L" : 13.3 - 13.9 mm (0.524 - 0.547 in)

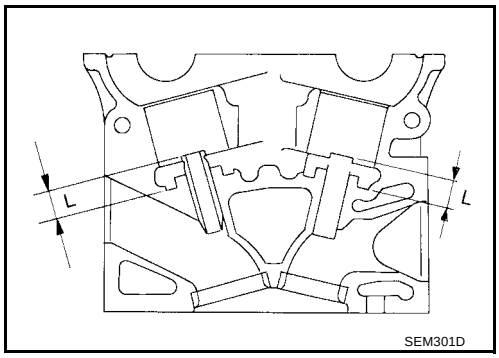

5. Ream the new replacement valve guide.

Finished size

Intake & Exhaust : 7.000 - 7.018 mm (0.2756 - 0.2763 in)

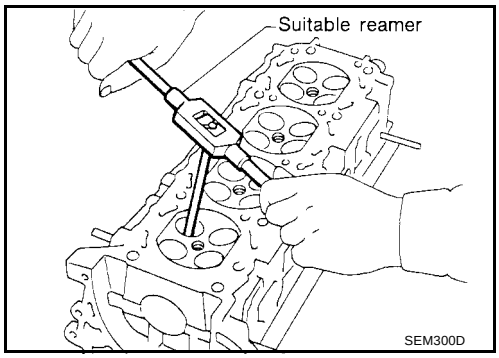

VALVE SEATS

Check valve seats for pitting at contact surface. Resurface or replace if excessively worn.

- Before repairing the valve seats, check the valves and valve guides for wear as shown. If they are worn, replace them. Then resurface the valve seat as necessary.

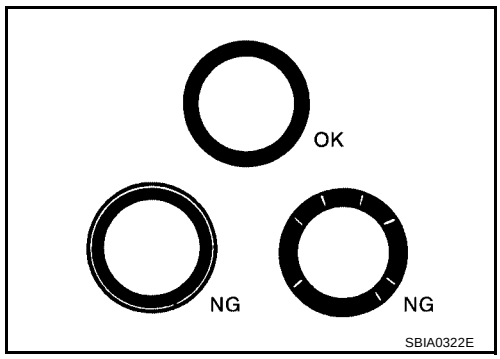

- Use both hands to resurface the valve seat uniformly using a suitable tool, as shown.

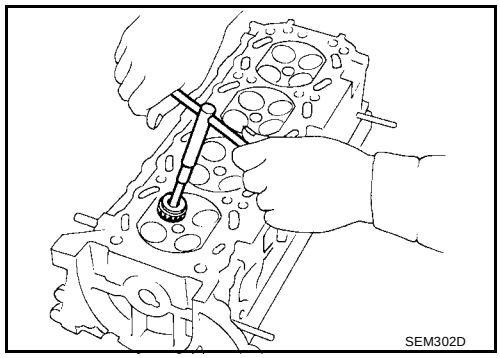

REPLACING VALVE SEAT

1. Bore out the old seat until it collapses. Boring should not continue beyond the bottom face of the seat recess in the cylinder head. Set the machine depth stop to prevent damage.

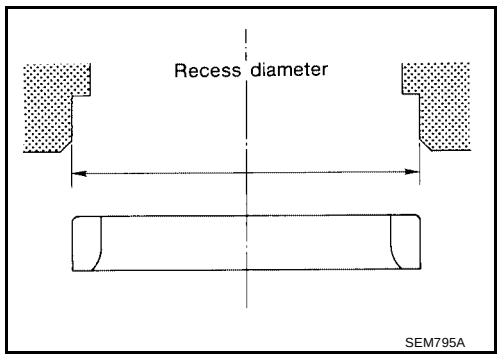

2. Ream the cylinder head valve seat recess.

   Reaming bore for service valve seat

   Oversize : 0.5 mm (0.020 in)

   Intake : 38.000 - 38.016 mm (1.4961 - 1.4967 in)

   Exhaust : 32.700 - 32.716 mm (1.2874 - 1.2880 in)

   CAUTION:
   Use the valve guide center for a reference point for reaming so the valve and valve seat will have the correct fit.

3. Heat the cylinder head to 120° - 140°C (248° - 284°F) in heated oil.

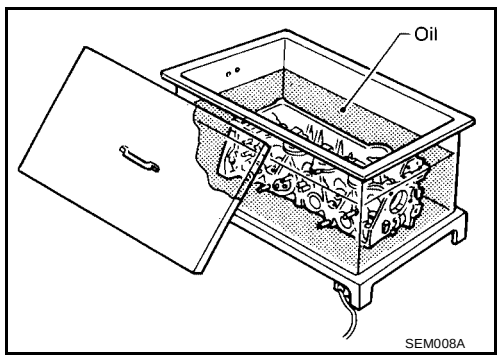

4. Press fit valve seat until it seats on the bottom of the recess.
5. Cut or grind valve seat using suitable tool to the specified dimensions.

Seat face "α" : 45° 15′ - 45° 45′ degrees

Contacting width "W"

Intake : 1.48 - 1.63 mm (0.0583 - 0.0642 in)

Exhaust : 1.8 - 2.0 mm (0.071 - 0.079 in)

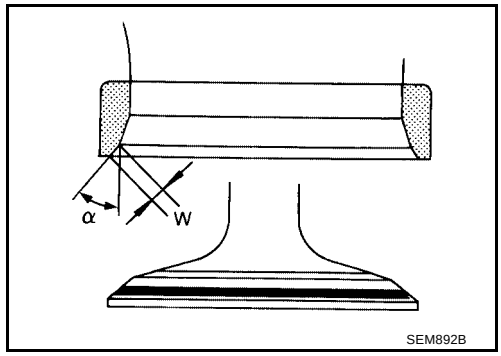

6. After cutting, lap valve seat with abrasive compound.
7. Check the valve seat dimensions. Refer to EM-66, "VALVE SEAT" .
8. Use a depth gauge to measure the distance between the mounting surface of the cylinder head spring seat and the valve stem end. If the distance is shorter than specified, repeat step 5 through 7 above, to adjust it. If it is longer, replace the valve seat with a new one.

Valve seat resurface limit - height "L"

Intake : 42.02 - 42.52 mm (1.6543 - 1.6740 in)

Exhaust : 42.03 - 42.53 mm (1.6547 - 1.6744 in)

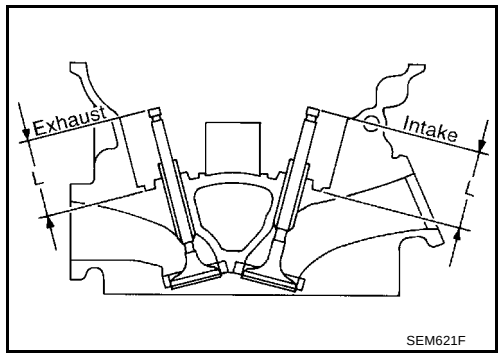

VALVE DIMENSIONS

Check dimensions of each valve. Refer to EM-63, "VALVE" . When valve head has been worn down to less than the margin thickness "T", replace the valve. Do not grind the valve stem more than the grinding limit specification.

Margin thickness "T" : 0.5 mm (0.020 in)

Valve stem tip grinding limit : 0.2 mm (0.008 in)

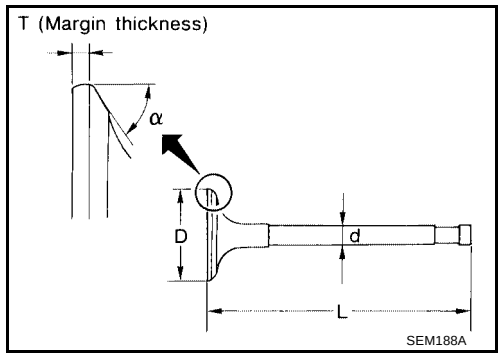

VALVE SPRING

Squareness

1. Measure the spring out-of-square dimension "S" as shown.

Out-of-square "S" : less than 2.2 mm (0.087 in)

2. If the out-of-square measurement exceeds the limit, replace the spring.

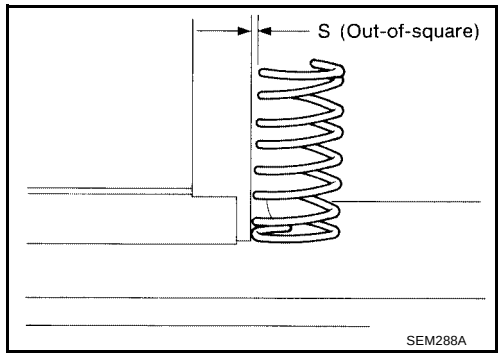

Pressure

1. Check the valve spring pressure at the specified spring height.

Pressure	**: N (kg, lb) at height mm (in)**
Standard	**: 418.0 (42.6, 93.9) at 29.17 (1.1484)**
Limit	**: 393.0 (40.1, 88.4) at 29.17 (1.1484)**

2. If not within specification, replace the spring.

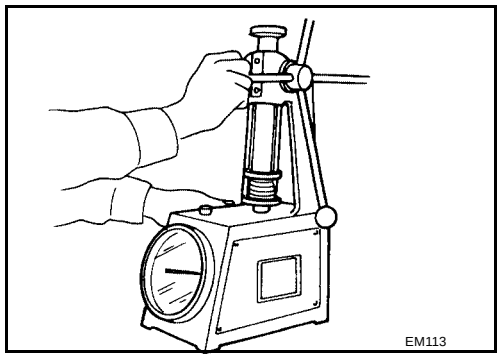

VALVE LIFTER AND ADJUSTING SHIM

1. Visually check the valve lifter and adjusting shim contact and sliding surfaces for wear and scratches.

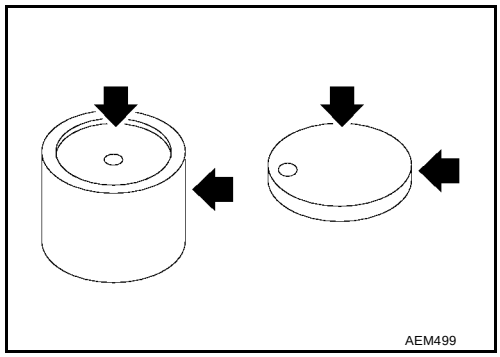

2. Check the diameter of the valve lifter as shown.

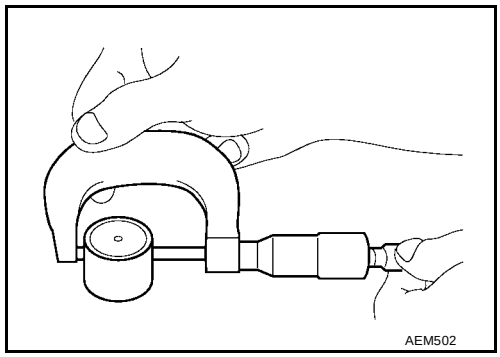

3. Check the diameter of the valve lifter guide bore as shown.

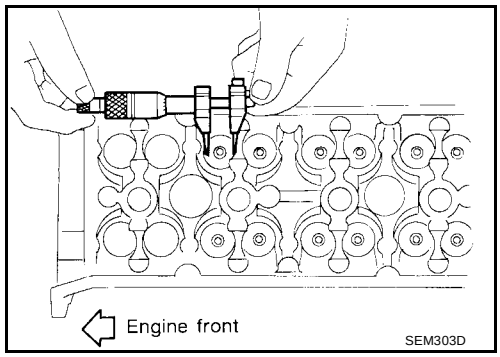

4. If the measurements exceed the standard diameter or clearance, replace valve lifter or cylinder head as necessary.

Valve lifter outer diameter	**: 33.960 - 33.975 mm (1.3370 - 1.3376 in)**
Lifter guide bore diameter	**: 34.000 - 34.021 mm (1.3386 - 1.3394 in)**
Valve lifter to valve lifter guide clearance	**: 0.025 - 0.061 mm (0.0010 - 0.0024 in)**

Assembly

EBS0094E

1. Install valve component parts.
   - Always use new valve oil seal. Refer to EM-28, "VALVE OIL SEAL" .
   - Before installing valve oil seal, install valve spring seat.
   - Install outer valve spring (uneven pitch type) with its narrow pitch side toward cylinder head side.
2. After installing the valve component parts, tap valve stem tip with a plastic hammer to assure a proper fit.

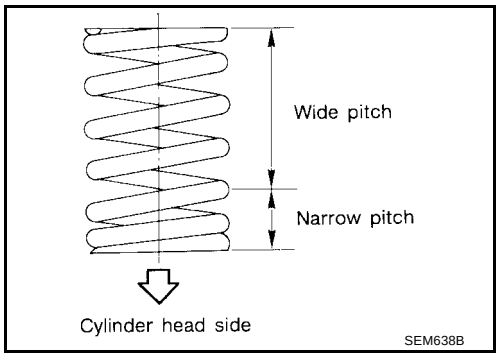

Installation

EBS0094B

1. Tighten the cylinder head bolts in the numerical order as shown, using the five step procedure:

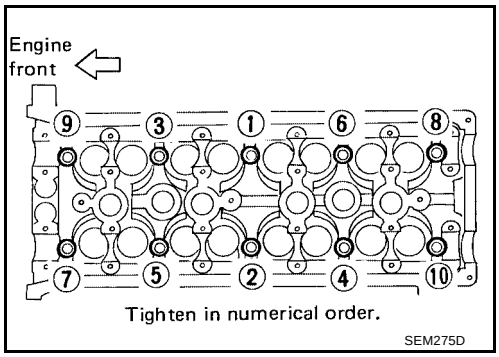

Cylinder head bolt tightening steps:

Step "a" : 29 N·m (3.0 kg-m, 22 ft-lb)

Step "b" : 79 N·m (8.1 kg-m, 59 ft-lb)

Step "c" : Loosen all bolts completely.

Step "d" : 25 - 34 N·m (2.5 - 3.5 kg-m, 18 - 25 ft-lb)

Step "e" : 86° - 91° degrees clockwise

NOTE:
If an angle wrench is not available, mark all of the cylinder head bolts on the side facing engine front. Then turn each cylinder head bolt to the specified angle.

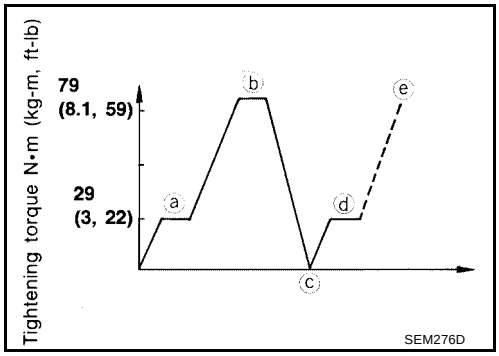

2. Set camshafts and camshaft brackets.
   - Set the dowel pins of both the intake and exhaust camshafts at 12 o'clock position when installing the camshafts.
3. Tighten the camshaft bracket bolts in the order shown using two steps:
   - Apply new engine oil to bolt threads and seat surfaces.

Camshaft bracket bolt tightening steps

Step 1 : 2 N·m (0.2 kg-m, 17 in-lb)

Step 2 : 9 - 11.8 N·m (0.92 - 1.2 kg-m, 79.9 - 104.2 in-lb)

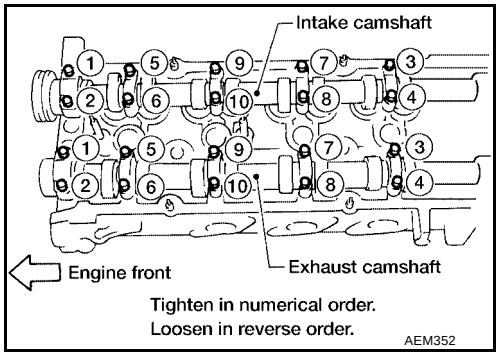

4. Install upper timing chain and idler sprocket. Refer to EM-26, "UPPER TIMING CHAIN" , EM-26, "IDLER SPROCKET" .

Valve Clearance

EBS0094F

CHECKING

Check valve clearance while engine is warm but not running.

1. Remove the following parts:
   - Rocker cover
   - All spark plugs
2. Set No. 1 cylinder at TDC on its compression stroke.
   - Align pointer with TDC mark on crankshaft pulley.
   - Check that valve lifters on No. 1 cylinder are loose and valve lifters on No. 4 are tight.
     If not, turn crankshaft one revolution (360°) and align as above.

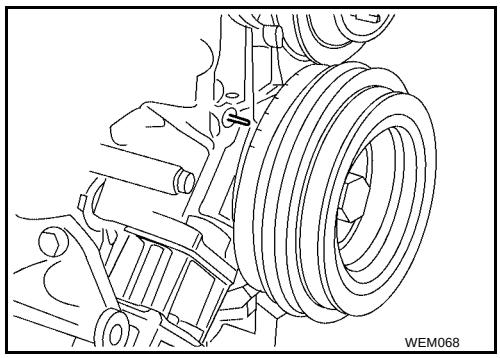

3. Check only those valves as shown.

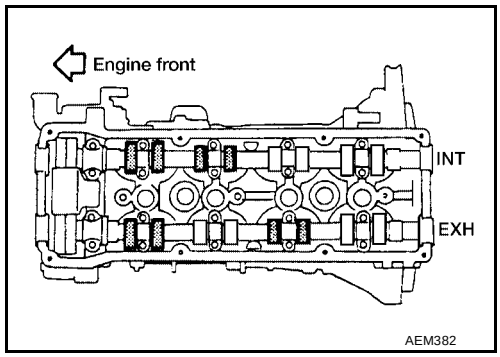

4. Using a feeler gauge, measure clearance between valve lifter and camshaft.
   - Record any valve clearance measurements which are out of specification. They will be used later to determine the required replacement adjusting shim.

   Valve clearance (hot)

   Intake : 0.31 - 0.39 mm (0.012 - 0.015 in)

   Exhaust : 0.39 - 0.47 mm (0.015 - 0.019 in)

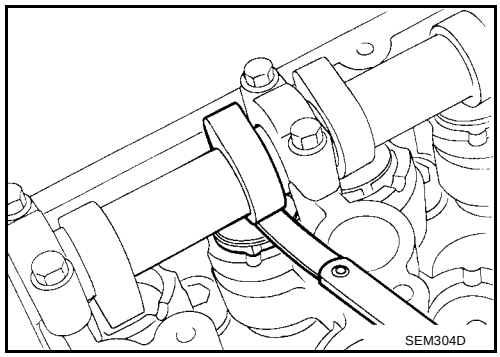

5. Turn crankshaft one revolution (360° degrees) and align mark on crankshaft pulley with pointer.
6. Check only those valves as shown.
   - Use the same procedure as described in step 4.

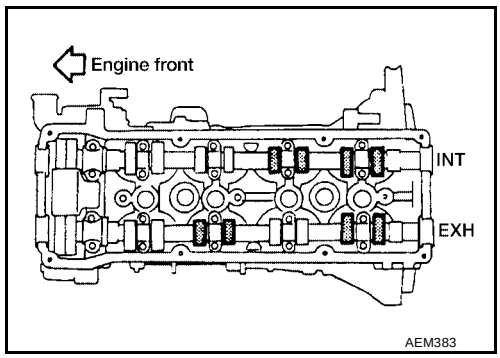

7. If all of the valve clearances are within specification, install the following parts:
   - Rocker cover
   - All spark plugs

ADJUSTING

CAUTION:
Adjust the valve clearance while engine is cold.

1. Turn the crankshaft to position the camshaft lobe on the valve that must be adjusted upward.
2. Place Tool (A) around camshaft as shown.

   CAUTION:
   Before placing Tool (A), rotate notch toward the center of the cylinder head as shown, to simplify the shim removal.
3. Rotate Tool (A) so that lifter is pushed down.

   CAUTION:
   Be careful not to damage the cam surface with Tool (A).

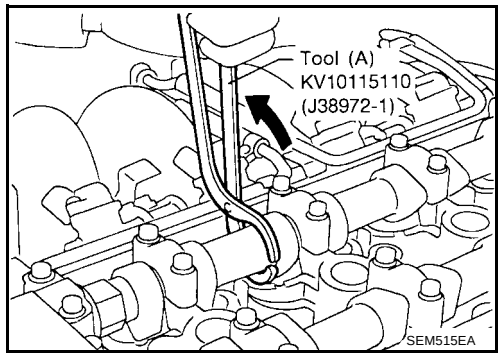

4. Place Tool (B) between camshaft and the edge of the valve lifter to retain valve lifter.

   CAUTION:
   - **Tool (B) must be placed as close to camshaft bracket as possible.**
   - **Be careful not to damage cam surface with Tool (B).**
5. Remove Tool (A).

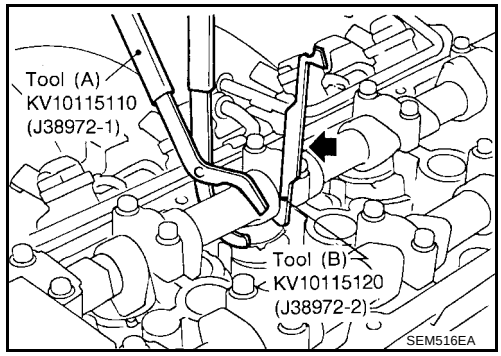

6. Rotate the adjusting shim until a hole is visible. Blow air into the hole to separate the adjusting shim from the valve lifter.

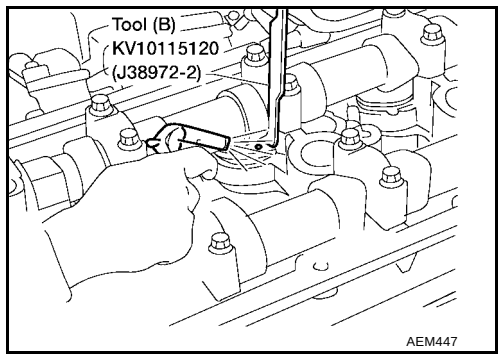

7. Remove the adjusting shim using a small screwdriver and a magnetic finger or suitable tool.

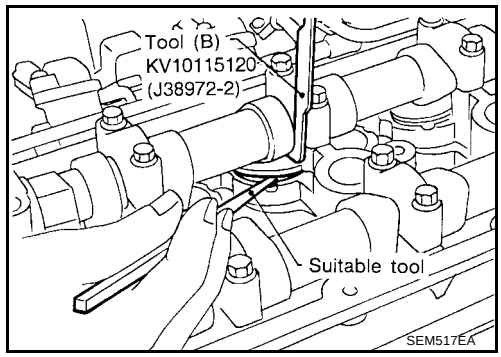

8. Calculate the replacement adjusting shim size.

a. Using a micrometer to determine the thickness of the removed adjusting shim.

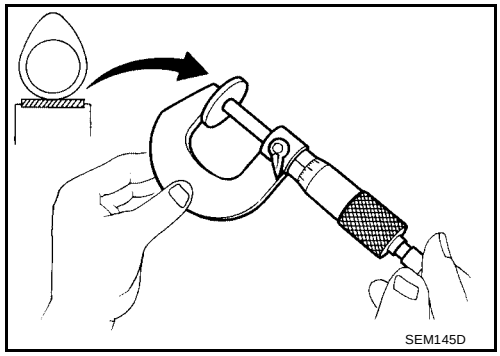

b. Calculate the thickness of the new adjusting shim so that the valve clearance comes within the specified values.
N = Thickness of new shim
R = Thickness of removed shim
M = Measured valve clearance

Intake and exhaust shim calculation : N = R + [M – 0.37 mm (0.0146 in)]

c. Select a new adjusting shim with the thickness as close as possible to the calculated value "N".
Refer to EM-65, "AVAILABLE SHIMS" .

NOTE:
Shims are available in thicknesses from 1.96 - 2.68 mm (0.0772 - 0.1055 in), in increments of 0.02 mm (0.0008 in). The adjusting shim thickness is stamped on the bottom of the adjusting shim as shown.

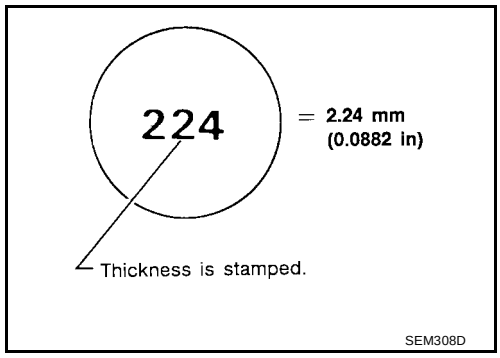

9. Install the new adjusting shim using a suitable tool.

CAUTION:
Install the adjusting shim with the surface on which the thickness is stamped facing down.

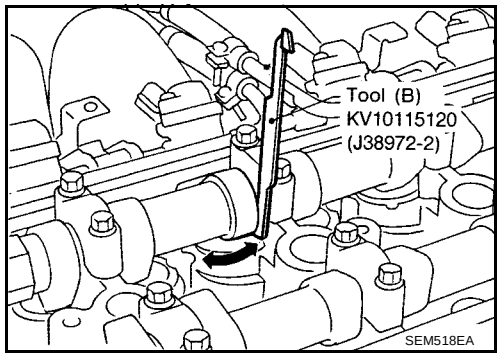

10. Place Tool (A) as described in steps 2 through 4.
11. Remove Tool (B).
12. Remove Tool (A).
13. Recheck the valve clearance. Refer to EM-43, "Valve Clearance" .

ENGINE ASSEMBLY

PFP:10001

Removal and Installation

EBS0094G

SEC. 112

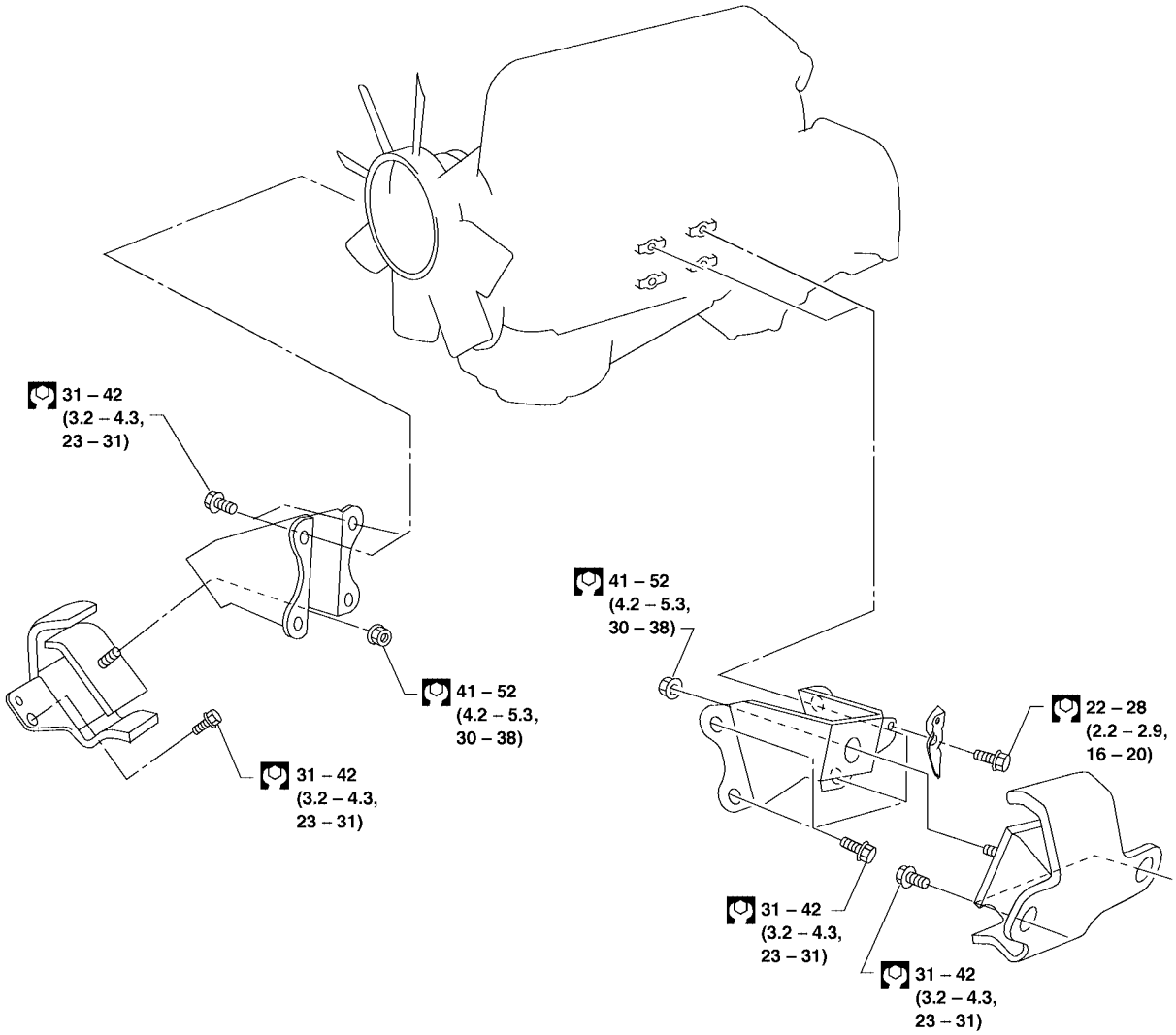

: N·m (kg-m, ft-lb)

WEM055

WARNING:

- **Position vehicle on a flat and solid surface.**
- **Place chocks at front and back of rear wheels.**
- **Do not remove engine until exhaust system has completely cooled off. Otherwise, you may burn yourself and/or fire may break out in fuel line.**
- **Before disconnecting fuel hose, release fuel pressure. Refer to EC-45, "FUEL PRESSURE RELEASE" .**
- **Be sure to hoist engine and transmission in a safe manner.**
- **For engines not equipped with engine slingers, attach proper slingers and bolts described in PARTS CATALOG.**

CAUTION:

- **When lifting engine, be sure to clear surrounding parts. Take special care near accelerator wire casing, brake lines and brake master cylinder.**
- **In hoisting the engine, always use engine slingers in a safe manner.**
- **Before separating engine and transmission, remove the crankshaft position sensor (OBD) from the assembly.**
- **Always take extra care not to damage edge of crankshaft position sensor (OBD) or ring gear teeth.**

REMOVAL

1. Drain the coolant from engine block and radiator. Refer to MA-16, "Changing Engine Coolant" .
2. Release the fuel pressure. Refer to EC-45, "FUEL PRESSURE RELEASE" . Disconnect the fuel hose.
3. Remove the negative battery cable.
4. Remove the hood. Refer to EI-12, "Removal and Installation" .
5. Remove the air cleaner.
6. Remove the power steering drive belt, generator drive belt and A/C compressor drive belt.
7. Remove the radiator. Refer to CO-14, "Removal and Installation" .
8. Remove the exhaust manifold heat shield.
9. Disconnect the exhaust system at rear of TWC (manifold).
10. Remove the A/C compressor from bracket. Refer to MTC-69, "Removal and Installation for Compressor" .
11. Disconnect the accelerator wire, vacuum hoses, electrical connectors, heater hoses and vacuum booster hose.
12. Remove the four power steering pump bolts.
13. Remove the transmission. Refer to MT-10, "Removal and Installation" (FS5W71C), MT-48, "Removal and Installation" (FS5R30A), AT-62, "REMOVAL AND INSTALLATION" (RL4R01A), AT-407, "REMOVAL AND INSTALLATION" (RE4R01A).
14. Install the engine slingers and attach engine lift hooks as shown.
15. Remove the LH and RH engine mounts.
16. Lift and remove the engine.

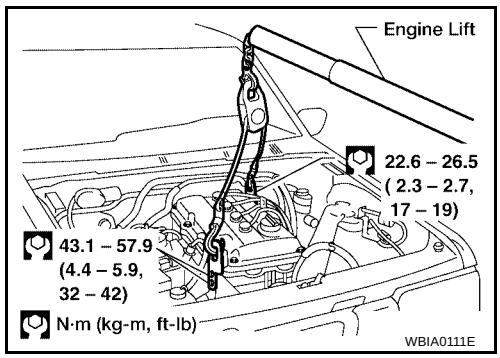

INSTALLATION

Installation is in the reverse order of removal.

CYLINDER BLOCK

PFP:11010

Components

EBS0094H

SEC. 110 • 120 • 135 • 150 • 210

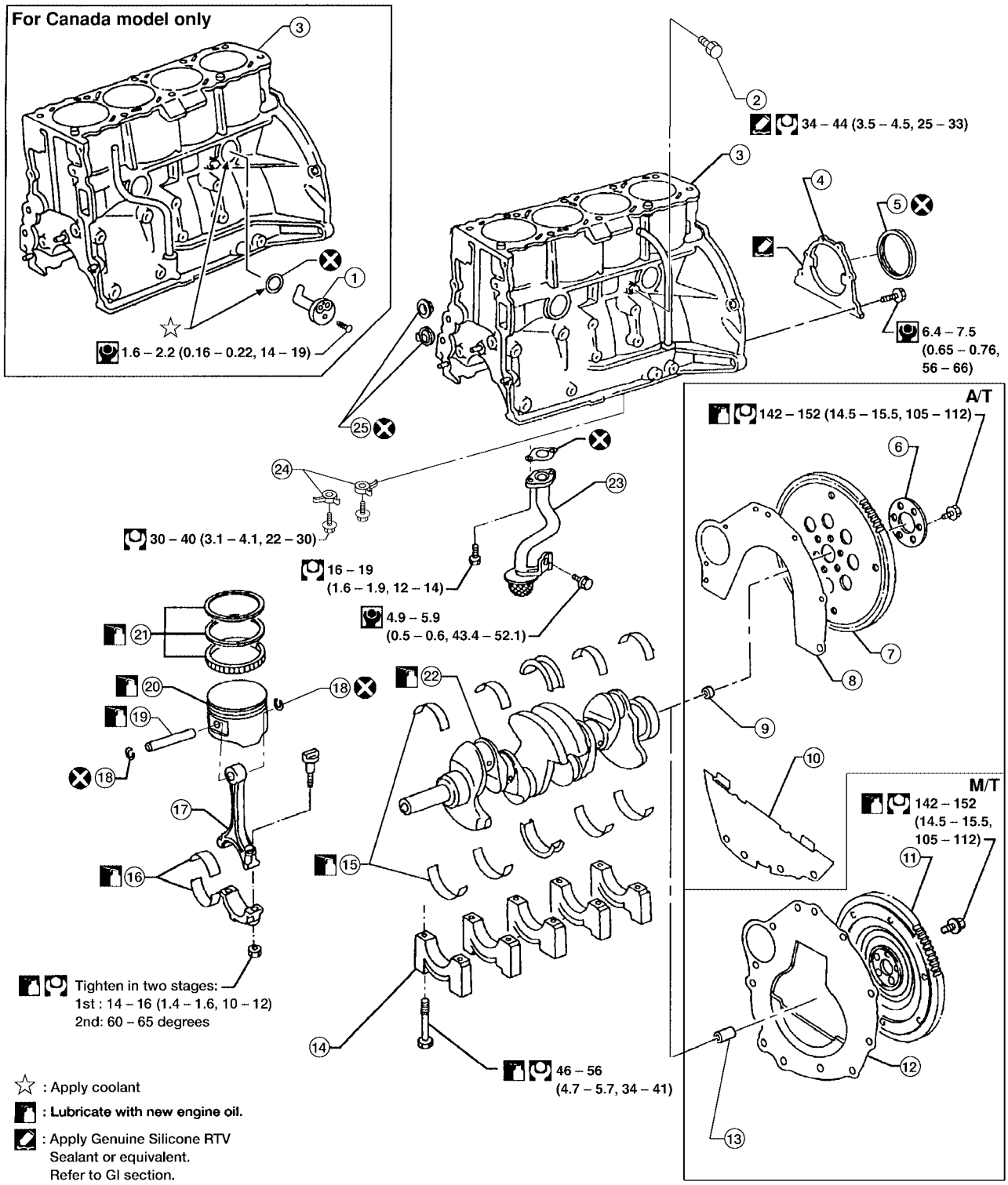

WBIA0181E

1. Block heater
2. Drain plug
3. Cylinder block
4. Rear oil seal retainer
5. Rear oil seal
6. Drive plate reinforcement (A/T)
7. Drive plate (A/T)
8. Rear plate (A/T)
9. Pilot converter (A/T)
10. Dust cover (A/T)
11. Flywheel (M/T)
12. Rear plate (M/T)
13. Pilot bushing (M/T)
14. Main bearing cap
15. Main bearing
16. Connecting rod bearing
17. Connecting rod
18. Snap ring
19. Piston pin
20. Piston
21. Piston rings
22. Crankshaft
23. Oil strainer
24. Oil jet
25. Oil seal

Removal and Installation

EBS0094I

1. To remove the cylinder block for disassembly, remove the engine. Refer to EM-46, "Removal and Installation" .

   CAUTION:
   - **When installing sliding parts, lubricate the contacting surfaces with new engine oil.**
   - **Place removed parts such as bearings and bearing caps in their proper order and direction.**
   - **When installing connecting rod nuts and main bearing cap bolts, apply new engine oil to the threads and seating surfaces.**
   - **Do not allow any magnetic materials to contact the ring gear teeth of the flywheel or drive plate.**
2. Installation is in the reverse order of removal.

Disassembly

EBS0094J

PISTON AND CRANKSHAFT

1. Place the engine on a work stand.
2. Remove the oil pan. Refer to EM-16, "Removal" .
3. Remove the timing chain. Refer to EM-20, "Removal" .
4. Remove the water pump. Refer to CO-10, "Removal" .
5. Remove the cylinder head. Refer to EM-33, "Removal" .
6. Remove the pistons with connecting rods.

   CAUTION:
   Use care not to scratch the engine block cylinder bore when removing the piston and connecting rod assemblies.

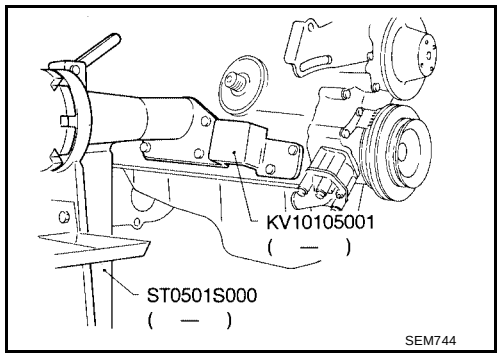

7. Remove bearing caps in the numerical order as shown, and remove the crankshaft.

a. Loosen the main bearing cap bolts in several steps in the numerical order as shown.
   - Before removing the main bearing caps, mark the location and direction on each cap and bolt for correct placement for installation.
   - Before removing the main bearing cap bolts, measure crankshaft end play. Refer to EM-53, "CRANKSHAFT" .

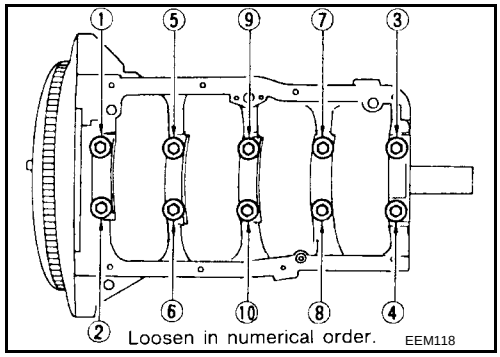

b. Using the main bearing cap bolts, remove the main bearing cap while shaking it right and left as shown.
   - Remove the No. 3 and No. 5 main bearing caps using Tool.

   Main Bearing Cap Remover : KV10114700 (J-38139)

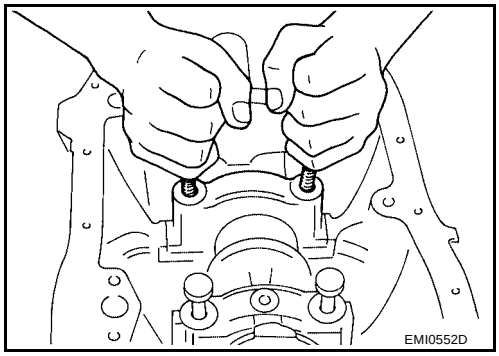

8. Remove the crankshaft.
9. Remove the main bearings from the cylinder block journals and the main bearing caps.

   CAUTION:
   Before removal, mark the main bearings with their location and direction for installation into their original position.
10. Remove the oil jets.

Inspection

EBS0094K

PISTON AND PISTON PIN CLEARANCE

1. Measure the inner diameter of piston pin hole “dp”.

   Standard diameter “dp” : 20.993 - 21.005 mm (0.8265 - 0.8270 in)

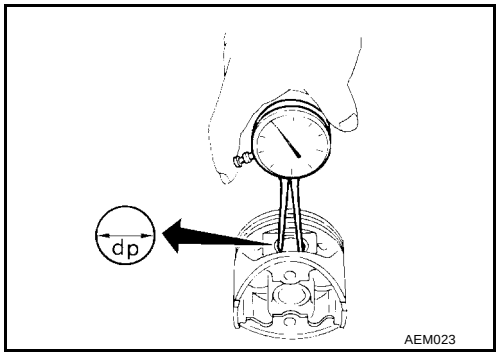

2. Measure the outer diameter of piston pin “Dp”.

   Standard diameter “Dp” : 20.989 - 21.001 mm (0.8263 - 0.8268 in)

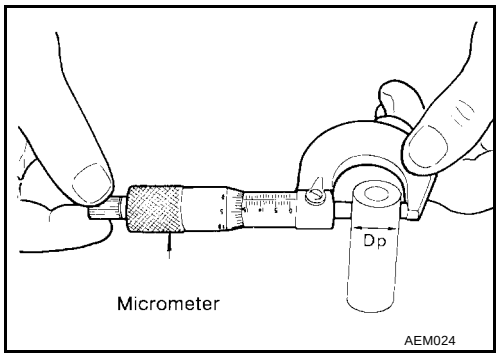

3. Calculate the piston pin clearance.

   Piston pin clearance : dp – Dp = (–0.002) - 0.01 mm [(–0.0001) - 0.0004 in]

   If it exceeds the above value, replace piston and pin assembly.

PISTON RING SIDE CLEARANCE

Measure the piston ring side clearance as shown. If the clearance exceeds the specification, replace piston ring.
If the clearance exceeds the maximum side clearance limit with the new piston ring, replace piston.

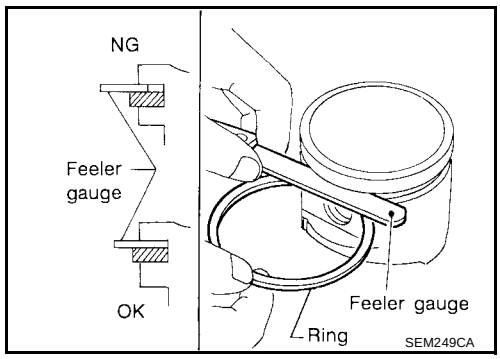

Side Clearance

Top ring	**: 0.04 - 0.08 mm (0.0016 - 0.0031 in)**
2nd ring	**: 0.03 - 0.07 mm (0.0012 - 0.0028 in)**
Oil ring	**: 0.065 - 0.135 mm (0.0026 - 0.0053 in)**
Limit (Top, 2nd)	**: 0.1 mm (0.004 in)**

PISTON RING END GAP

1. Measure the piston ring end gap as shown. If out of specification, replace piston ring. If gap exceeds maximum limit with a new ring, rebore cylinder and use oversized piston and piston rings. Refer to EM-69, "Piston, Piston Ring and Piston pin" .

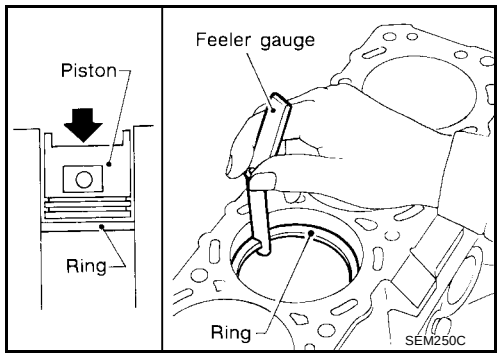

2. When replacing the piston, check cylinder block surface for scratches or seizure. If scratches or seizure are found, hone or replace the cylinder block.

Piston Ring End Gap

Top ring	**: 0.28 - 0.52 mm (0.0110 - 0.0205 in)**
2nd ring	**: 0.45 - 0.69 mm (0.0177 - 0.0272 in)**
Oil ring (rail ring)	**: 0.20 - 0.69 mm (0.0079 - 0.0272 in)**
Limit	**: 1.0 mm (0.039 in)**

CONNECTING ROD BEND AND TORSION

Measure the connecting rod bend and torsion as shown.
If either of the measurements exceed the limits, replace the connecting rod assembly.

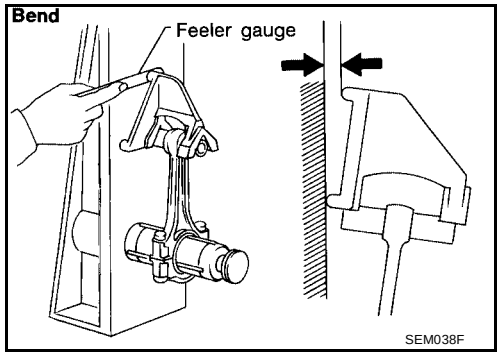

Bend limit : **0.15 mm (0.0059 in) per 100 mm (3.94 in) length**

Torsion limit : **0.30 mm (0.0118 in) per 100 mm (3.94 in) length**

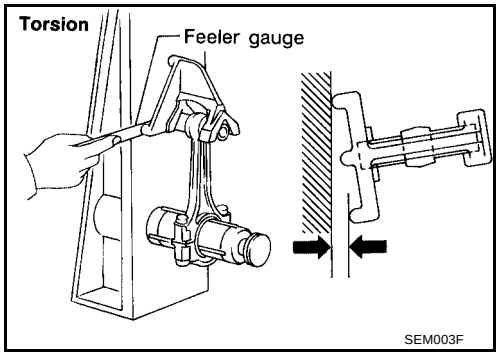

CYLINDER BLOCK DISTORTION AND WEAR

1. Clean upper face of cylinder block.
2. Use a reliable straightedge and feeler gauge to check the flatness of the cylinder block upper face surface. Check along the six positions as shown.

   Cylinder block distortion

   Standard : **—**

   Limit : **0.1 mm (0.004 in)**

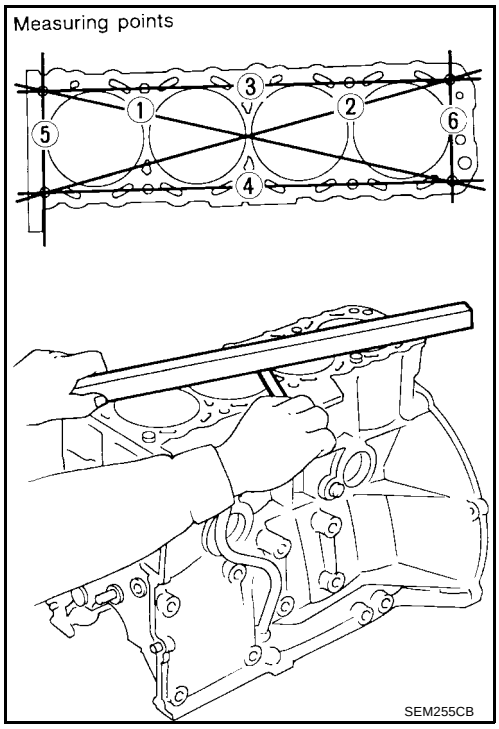

3. If the block distortion exceeds specification, resurface the block. Replace the block if necessary.
   The limit for cylinder block resurfacing is determined by cylinder head resurfacing.
   Amount of cylinder head resurfacing is "A"
   Amount of cylinder block resurfacing is "B"

   The maximum limit is as follows : **A + B = 0.2 mm (0.008 in)**

   Nominal block height at crankshaft center : **246.95 - 247.05 mm (9.7224 - 9.7264 in)**

   Max. block distortion limit = A + B : **0.2 mm (0.008 in)**

4. If necessary, replace cylinder block.

PISTON-TO-CYLINDER BORE CLEARANCE

1. Using a bore gauge, measure cylinder bore for wear, out-of-round and taper.
   If it exceeds the limit, rebore all cylinders. Replace cylinder block if necessary.

   Standard inner diameter : **Refer to EM-67, "Cylinder Block" .**

   Out-of-round (X – Y) standard : **0.015 mm (0.0006 in)**

   Taper (A – B) standard : **0.010 mm (0.0004 in)**

   Wear limit : **0.2 mm (0.008 in)**

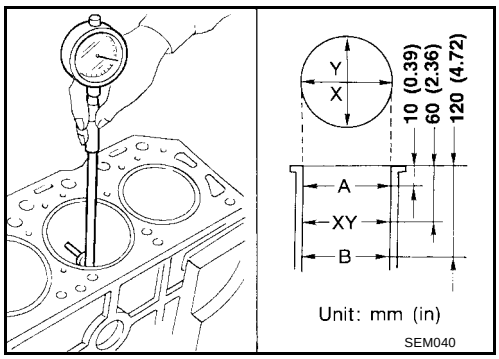

2. Check for scratches and seizure. If seizure is found, hone it.

   CAUTION:
   If the cylinder block and pistons are replaced, match the piston grade with the grade number on the cylinder block upper surface as shown. Refer to EM-69, "PISTON" .

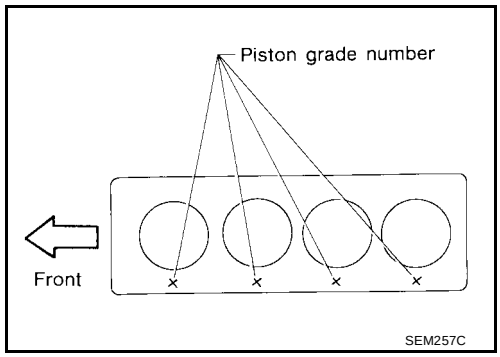

3. Measure piston skirt diameter.

   Piston diameter "A" : refer to EM-69, "PISTON" .

   Measuring point "A" at height "a" from the top : approximately 48 mm (1.89 in)

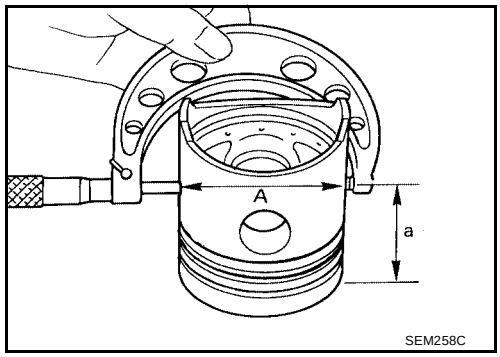

4. Check that piston-to-cylinder bore clearance is within specification.

   Piston-to-cylinder bore clearance "B" : 0.020 - 0.040 mm (0.0008 - 0.0016 in)

5. Determine the piston oversize according to the amount of cylinder bore wear for the specified piston-to-bore clearance.

   NOTE:
   Determine piston oversize according to amount of cylinder wear. Oversize pistons are available for service. Refer to EM-69, "PISTON" .

6. Cylinder rebore diameter "D" is determined by adding piston-to-cylinder bore clearance "B" to the piston diameter "A" and subtracting the honing allowance "C".

   Rebore size calculation: D = A + B - C

   Where,

   D : rebore diameter

   A : piston diameter as measured

   B : piston-to-cylinder bore clearance

   C : honing allowance of 0.02 mm (0.0008 in)

7. Install the main bearing caps and tighten the cap bolts to specification. This will prevent distortion of the cylinder bores during the honing process.

   Main bearing cap bolts : 46 - 56 N·m (4.7 - 5.7 kg-m, 34 - 41 ft-lb)

8. Hone the cylinder bores to obtain the specified piston-to-cylinder bore clearance.

   CAUTION:
   - **When any cylinder needs boring, all other cylinders must also be bored.**
   - **Do not cut too much out of the cylinder bore at a time. Cut only 0.05 mm (0.0020 in) or so at a time.**

9. Measure finished cylinder bore for out-of-round and taper.

   CAUTION:
   - **Measurement should be done after cylinder bore cools down.**

CRANKSHAFT

1. Check the crankshaft main and pin journals for scratches, wear, or cracks.

2. With a micrometer, measure the journals for taper and out-of-round.

   Out-of-round (X – Y)

   Main journal : less than 0.01 mm (0.0004 in)

   Crankshaft pin : less than 0.005 mm (0.0002 in)

   Taper (A – B)

   Main journal : less than 0.01 mm (0.0004 in)

   Crankshaft pin : less than 0.005 mm (0.0002 in)

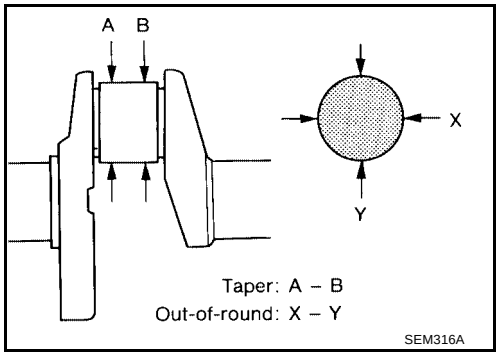

3. Measure the crankshaft runout.

   Runout (total indicator reading) : less than 0.10 mm (0.0039 in)

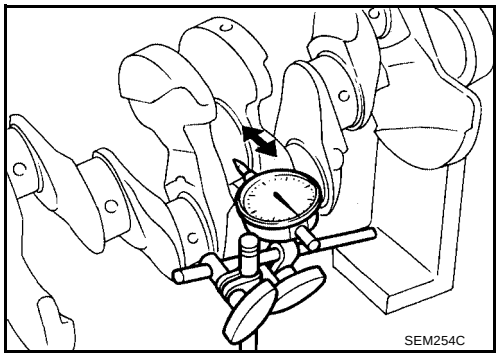

4. If the crankshaft is out of specification, replace the crankshaft.

BEARING CLEARANCE

Method A (using a bore gauge and micrometer)

Use Method A or Method B. Method A is preferred because it is more accurate.

NOTE:

Use the following procedures to inspect the bearing clearance using Method A (bore gauge and micrometer).

Main bearing

1. Set main bearings in their proper positions on the cylinder block and main bearing caps. Follow the position numbering as shown.

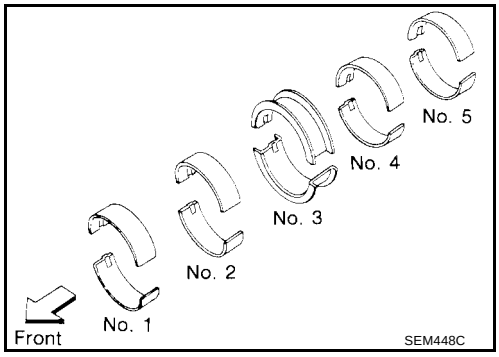

2. Install the main bearing caps on the cylinder block.
   - Tighten the main bearing cap bolts in two or three steps to specification.

   Main bearing cap bolts : 46 - 56 N·m (4.7 - 5.7 kg-m, 34 - 41 ft-lb)

3. Measure the inner diameter “A” of each main bearing as shown.

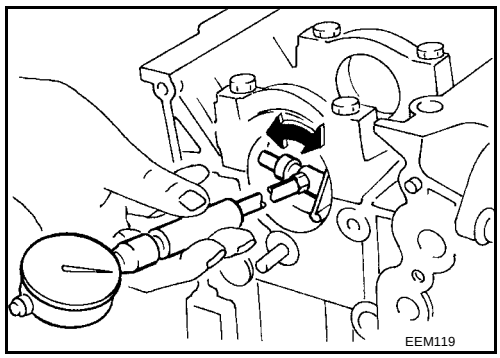

4. Measure the outer diameter “Dm” of each crankshaft main journal as shown.

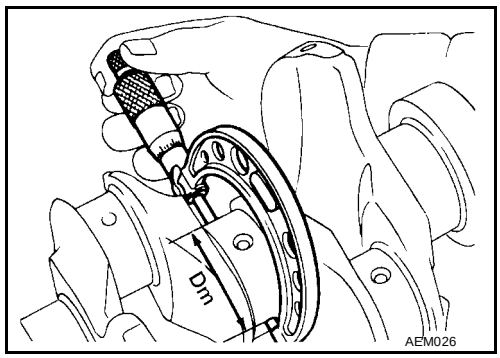

5. Calculate the main bearing clearance.

Main bearing clearance = A – Dm

Standard : 0.020 - 0.047 mm (0.0008 - 0.0019 in)

Limit : 0.1 mm (0.004 in)

If the main bearing clearance exceeds the limit, replace the bearing.

6. If the clearance cannot be adjusted within the standard of any bearing, grind the crankshaft journals and use an undersized replacement bearing as follows.

a. When grinding the crankshaft journals, confirm that the “L” dimension in fillet roll is more than the specified limit.

“L” : 0.1 mm (0.004 in)

b. Grind the crankshaft to use it with replacement parts. Refer to EM-70, "Crankshaft" , and EM-71, "Available Main Bearing" .

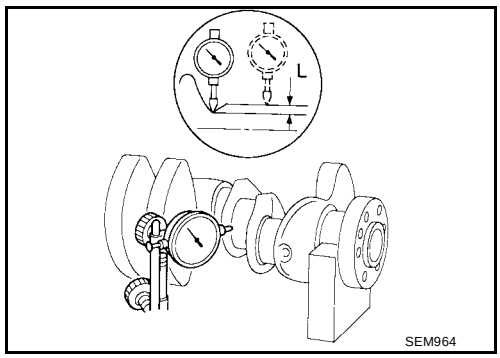

7. If the crankshaft is reused, measure the main bearing clearance and select the thickness of the main bearing.
If the crankshaft or cylinder block is replaced, select the thickness of the main bearings as follows.

a. The grade number of each cylinder block main journal is punched on the respective cylinder block. These numbers are punched in either Arabic or Roman numerals.

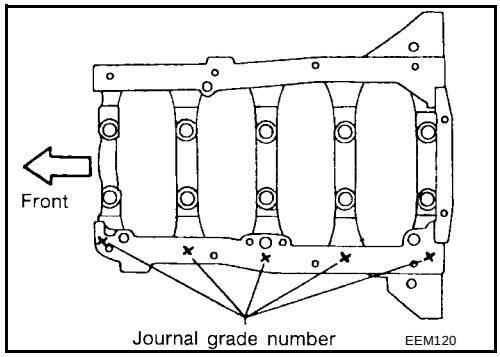

b. The grade number of each crankshaft main journal is punched on crankshaft. These numbers are punched in either Arabic or Roman numerals.

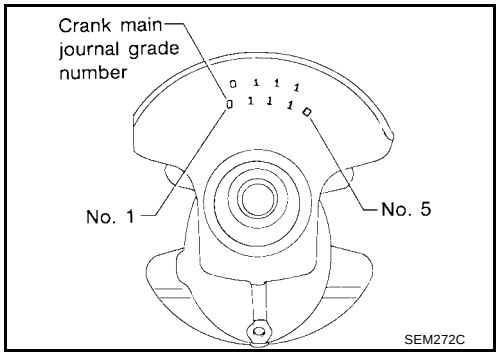

c. Select the main bearing with a suitable thickness according to the following example and table.
Example:
Main journal grade number is 1or I
Crankshaft journal grade number is 2 or II
Main bearing grade number = 1 + 2 = 3 (Yellow)

Main Bearing Grade Number and Identification Color

		Main journal grade number		
		0	1 or I	2 or II
Crankshaft journal grade number	0	0 (Black)	1 (Brown)	2 (Green)
	1 or I	1 (Brown)	2 (Green)	3 (Yellow)
	2 or II	2 (Green)	3 (Yellow)	4 (Blue)

Connecting Rod Bearing (Big End)

1. Install connecting rod bearing to connecting rod and cap.
2. Install connecting rod cap to connecting rod.
   - **Tighten the connecting rod cap bolts in two stages to specification.**

   Connecting rod cap bolts
   Stage 1 : 14 - 16 N·m (1.4 - 1.6 kg-m, 10 - 12 ft-lb)
   Stage 2 : 60° - 65° degrees

3. Measure inner diameter “C” of each bearing.

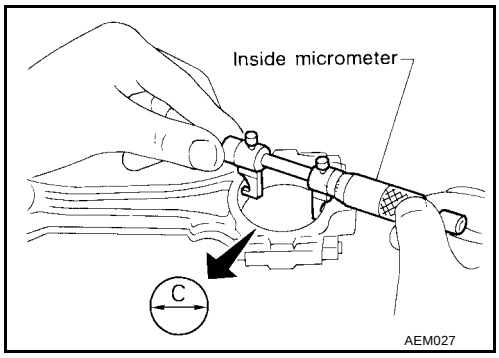

4. Measure outer diameter “Dp” of each crankshaft pin journal.

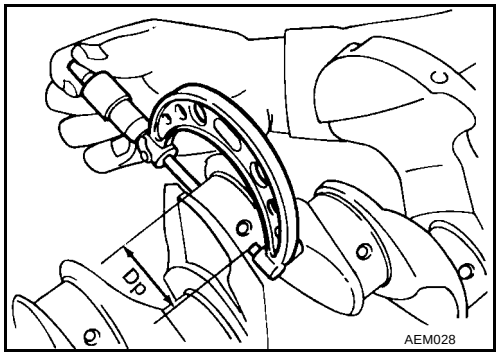

5. Calculate connecting rod bearing clearance.

   Connecting rod bearing clearance = C – Dp

   Standard : 0.010 - 0.035 mm (0.0004 - 0.0014 in)

   Limit : 0.09 mm (0.0035 in)

   If the clearance exceeds the limit, replace the bearing.

6. If the clearance cannot be adjusted within the standard of any bearing, grind crankshaft journal and use undersized bearing. Refer to EM-71, "UNDERSIZE (SERVICE)" .

7. If the crankshaft is replaced, select the connecting rod bearing according to the following table.

   NOTE:
   The grade number of each crankshaft pin are punched on the crankshaft as shown. These grade numbers are in either Arabic or Roman numerals.

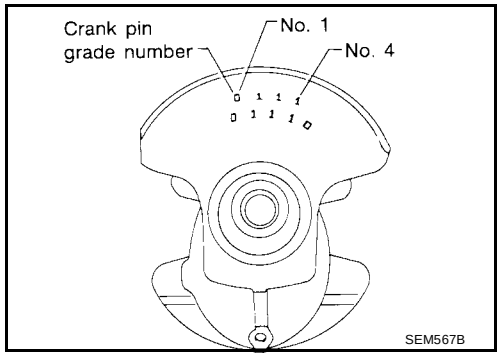

Crankshaft pin grade number	Connecting rod bearing grade number
0	0
1 or I	1
2 or II	2

Method B (using a plastigage)

Measure the bearing clearances using the plastigage.

CAUTION:

- **Do not turn crankshaft or connecting rod while plastigage is being inserted.**
- **When bearing clearance exceeds the specified limit, ensure that the proper bearing has been installed. Then if excessive bearing clearance exists, use a thicker main bearing or undersized bearing so that the specified bearing clearance is obtained.**

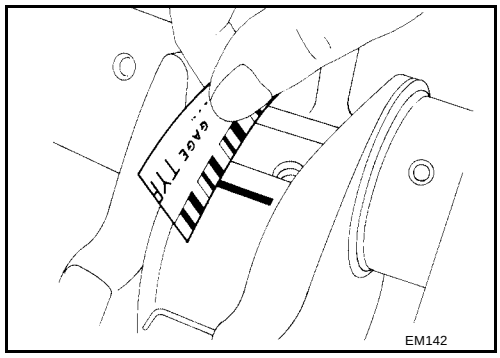

CONNECTING ROD BUSHING CLEARANCE (SMALL END)

1. Measure inner diameter “C” of bushing.
2. Measure outer diameter “Dp” of piston pin.

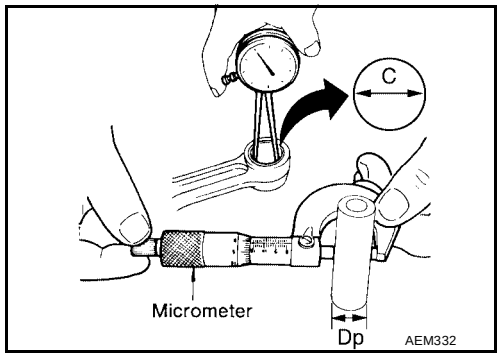

3. Calculate connecting rod bushing clearance.

   Connecting rod bushing clearance = C – Dp

   Standard : 0.005 - 0.017 mm (0.0002 - 0.0007 in)

   Limit : 0.023 mm (0.0009 in)

   If the calculated clearance is out of specification, replace the connecting rod assembly or the piston set with pin, or both as necessary.

REPLACEMENT OF CONNECTING ROD BUSHING (SMALL END)

1. Drive in the small end bushing until it is flush with the rod end surface.

   CAUTION:
   Align the oil holes before installing for lubrication.

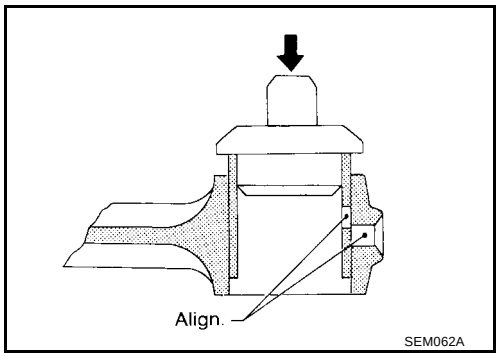

2. Ream the bushing until clearance with piston pin is within specification.

   Connecting rod bushing clearance : 0.005 - 0.017 mm (0.0002 - 0.0007 in)

FLYWHEEL/DRIVE PLATE RUNOUT

Using a dial gauge, rotate the flywheel/driveplate and measure the runout by the total dial gauge indicator reading as shown

Runout (total indicator reading) : less than 0.15 mm (0.006 in)

CAUTION:
- **Be careful not to damage the ring gear teeth.**
- **Do not allow any magnetic materials to contact the ring gear teeth.**
- **Do not resurface the flywheel (M/T). Replace as necessary.**

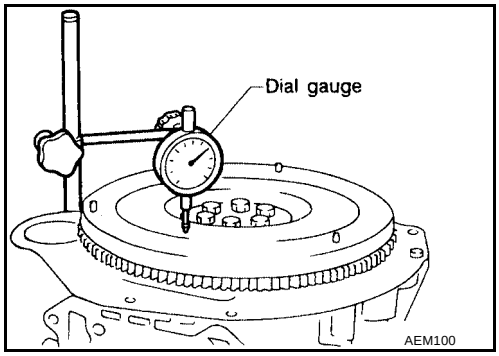

Assembly

EBS0094L

PISTON

1. Completely remove any foreign material from the cylinder block, inside the crankshaft case, and cylinder bores by blowing compressed air in the passages and oil passages.
2. Install the oil jets.
   - Oil jets for the No. 1 and No. 3 cylinders are a different shape from those for the No. 2 and No. 4 cylinders, as shown.

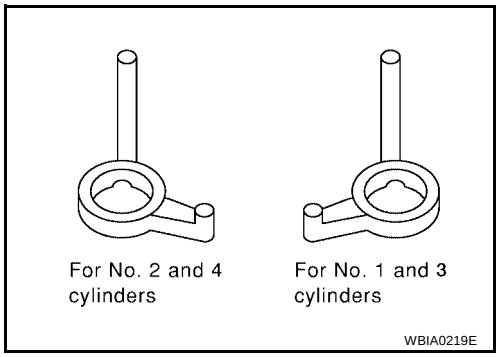

   - Insert the oil jet knock pin into the cylinder block knock pin hole, and tighten the knock pin bolt to specification.

     Oil jet bolt : 30 - 40 N·m (3.1 - 4.1 kg-m, 22 - 30 ft-lb)

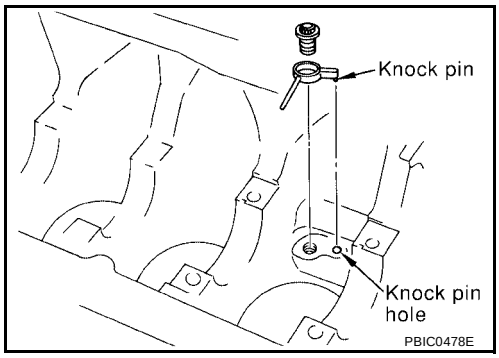

3. Heat piston to 60° to 70°C (140° to 158°F) and assemble piston, piston pin and connecting rod.
   - Align the direction of piston and connecting rod.

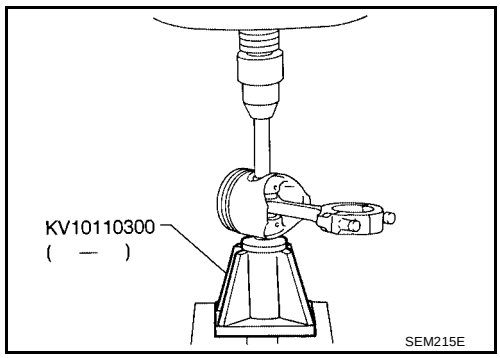

   - Numbers stamped on connecting rod and cap correspond to each cylinder.
   - After assembly, make sure connecting rod swings smoothly.

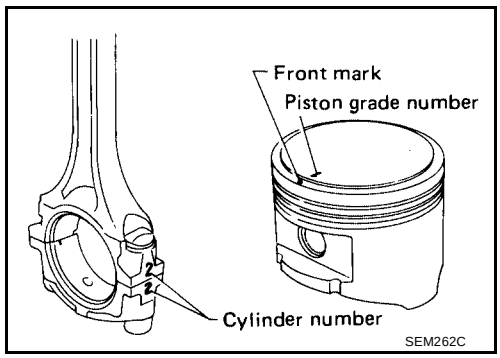

4. Set piston rings as shown.

   CAUTION:
   - **When piston rings are not replaced, make sure that piston rings are mounted in their original positions.**
   - **When piston rings are being replaced and no punchmark is present, piston rings can be mounted with either side up.**

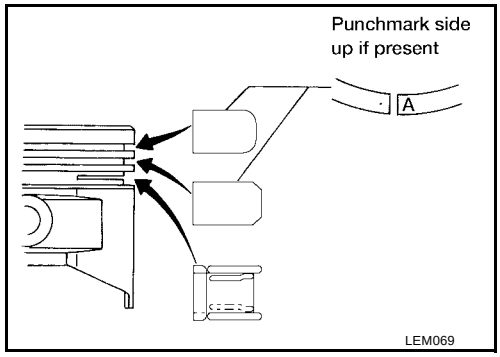

5. Align piston rings so that end gaps are positioned as shown.

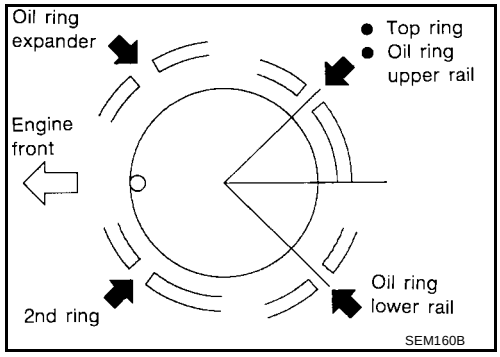

CRANKSHAFT

1. Set the main bearings in their proper positions on the cylinder block and main bearing caps as shown.
   - **Confirm that correct main bearings are used. Refer to EM-54, "BEARING CLEARANCE" .**
   - **Apply new engine oil to bearing surfaces.**

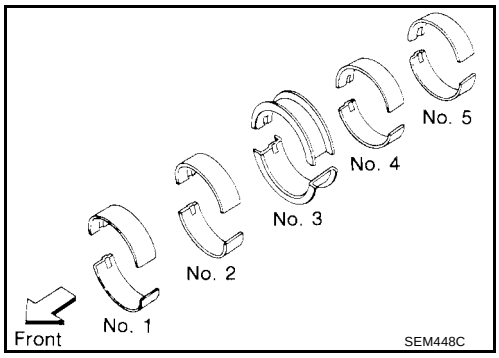

2. Install the crankshaft and main bearing caps and tighten the bolts in numerical order as shown, to specification.
   - Apply new engine oil to the bolt threads and seat surface.
   - Prior to tightening the bearing cap bolts, place bearing cap in its proper position by shifting crankshaft in the axial direction.
   - Tighten the bearing cap bolts gradually in two or three stages to specification. Tighten the bearing cap bolts in the numerical order as shown.

     Main bearing cap bolts : 46 - 56 N·m (4.7 - 5.7 kg-m, 34 - 41 ft-lb)

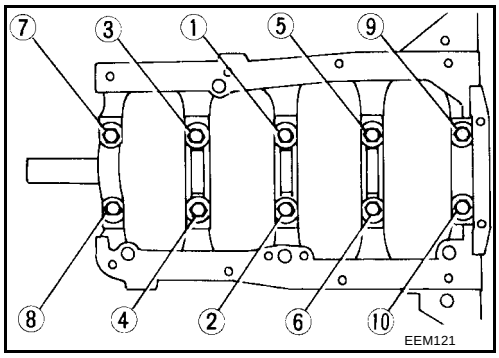

   - After securing bearing cap bolts, make sure crankshaft turns smoothly by hand.

3. Measure the crankshaft end play as shown.

   Crankshaft end play

   Standard : 0.05 - 0.18 mm (0.0020 - 0.0071 in)

   Limit : 0.3 mm (0.012 in)

   If beyond the limit, replace No. 3 bearing with a new one.

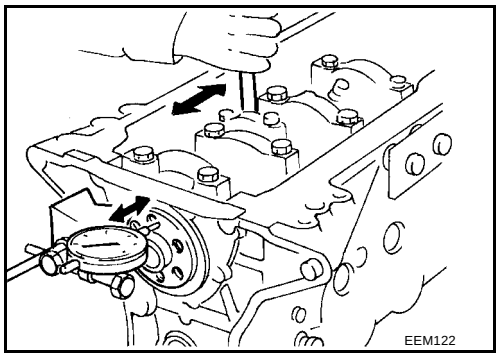

4. Install connecting rod bearings in connecting rods and connecting rod caps.
   - Confirm that correct bearings are used. Refer to EM-56, "Connecting Rod Bearing (Big End)" .
   - Install bearings so that oil hole in connecting rod aligns with oil hole of bearing.
   - Apply new engine oil to bearing surfaces, bolt threads and seating surfaces.

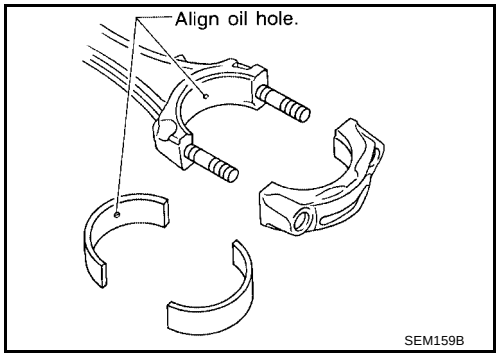

5. Install the piston assemblies into the corresponding cylinder bores using Tool as shown.
   - Position the piston assembly so that the front mark on the piston head faces toward the front of the engine.
   - Make sure the connecting rod does not scratch the cylinder wall.
   - Make sure the connecting rod bolts do not scratch the crankshaft journals.
   - Apply new engine oil to the piston rings and sliding surface of piston.

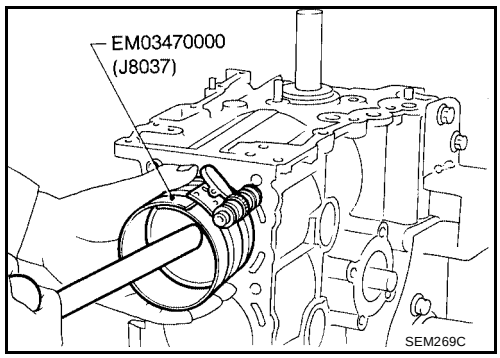

6. Install the connecting rod bearing caps. If reusing the connecting rod bearing caps, they must be installed in their original position and direction.
   Tighten the connecting rod bearing cap nuts in two steps to specification. For step 2 use a suitable angle wrench, or tighten to specification if an angle wrench is not available.

   Connecting rod bearing nuts, tighten in two steps:

   Step 1 : 14 - 16 N·m (1.4 - 1.6 kg-m, 10 - 12 ft-lb).

   Step 2 : 60° to 65° degrees clockwise
   [38 - 44 N·m (3.9 - 4.5 kg-m, 28 - 33 ft-lb)]

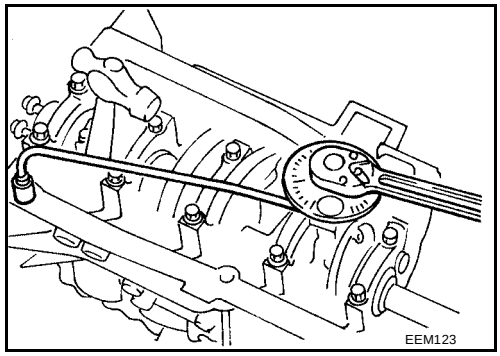

7. Measure the connecting rod side clearance.

   Connecting rod side clearance

   Standard : 0.2 - 0.4 mm (0.008 - 0.016 in)

   Limit : 0.6 mm (0.024 in)

   If the clearance is beyond the limit, replace either the connecting rod or crankshaft, or both, as necessary.

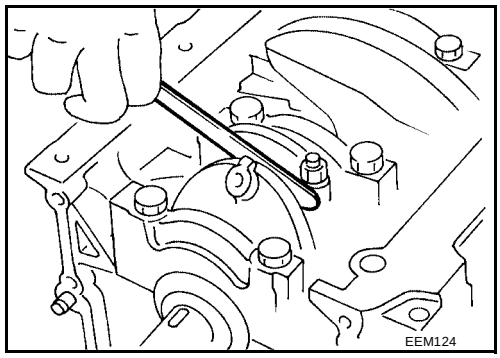

REPLACING PILOT BUSHING

1. Remove the pilot bushing using Tool as shown.

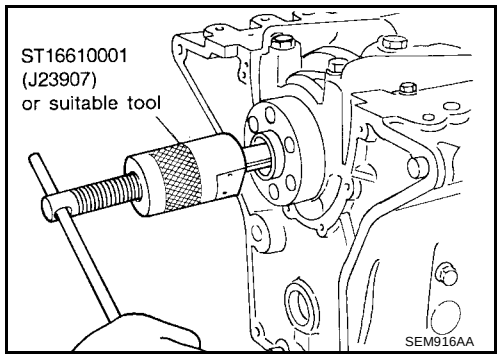

2. Install the pilot bushing as shown.

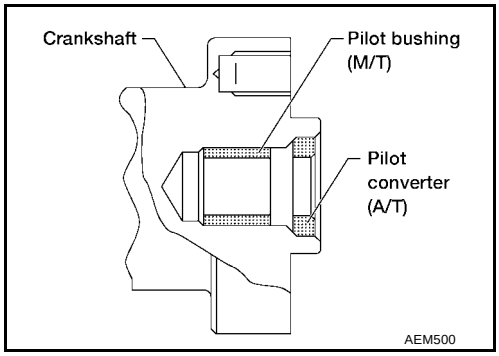

SERVICE DATA AND SPECIFICATIONS (SDS)

PFP:00030

General Specifications

EBS0094M

Cylinder arrangement		In-line 4
Displacement		2,389 cm^3 (145.78 cu in)
Bore and stroke		89 x 96 mm (3.50 x 3.78 in)
Valve arrangement		DOHC
Firing order		1-3-4-2
Number of piston rings	Compression	2
	Oil	1
Number of main bearings		5
Compression ratio		9.2

COMPRESSION PRESSURE

Unit: kPa (kg/cm^2 , psi)/300 rpm

Standard	1,226 (12.5, 178)
Minimum	1,030 (10.5, 149)
Differential limit between cylinders	98 (1.0, 14)

Cylinder Head

EBS0094N

Unit: mm (in)

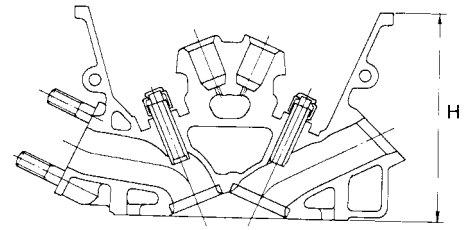

Nominal cylinder head height:
H = 126.3 - 126.5 (4.972 - 4.980)

SEM519E

	Limit
Cylinder head surface distortion	0.1 (0.004)

Valve

EBS0094O

VALVE

Unit: mm (in)

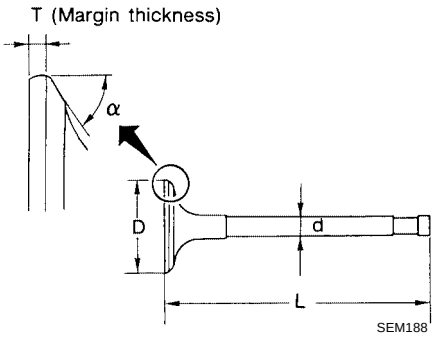

SEM188

Valve head diameter “D”	Intake	36.5 - 36.7 (1.437 - 1.445)
	Exhaust	31.2 - 31.4 (1.228 - 1.236)
Valve length “L”	Intake	101.17 - 101.47 (3.9831 - 3.9949)
	Exhaust	98.67 - 98.97 (3.8846 - 3.8964)

Valve stem diameter “d”	Intake	6.965 - 6.980 (0.2742 - 0.2748)
	Exhaust	6.945 - 6.960 (0.2734 - 0.2740)
Valve seat angle “α”	Intake & Exhaust	45°15′ - 45°45′
Valve margin “T”	Intake	0.95 - 1.25 (0.0374 - 0.0492)
	Exhaust	1.15 - 1.45 (0.0453 - 0.0571)
Valve margin “T” limit		More than 0.5 (0.020)
Valve stem end surface grinding limit		Less than 0.2 (0.008)

VALVE SPRING

Free height mm (in)		50.3 (1.9831)
Pressure N (kg, lb) at height mm (in)	Standard	418.0 (42.6, 93.9) at 29.17 (1.1484)
	Limit	393.0 (40.1, 88.4) at 29.17 (1.1484)
Out-of-square mm (in)		Less than 2.2 (0.087)

VALVE GUIDE

Unit: mm (in)

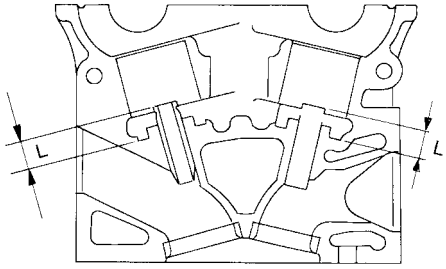

SEM301D

		Standard	Service
Valve guide Outer diameter	Intake	11.023 - 11.034 (0.4340 - 0.4344)	11.223 - 11.234 (0.4418 - 0.4423)
	Exhaust	11.023 - 11.034 (0.4340 - 0.4344)	11.223 - 11.234 (0.4418 - 0.4423)
Valve guide Inner diameter (Finished size)	Intake	7.000 - 7.018 (0.2756 - 0.2763)	
	Exhaust	7.000 - 7.018 (0.2756 - 0.2763)	
Cylinder head valve guide hole diameter	Intake	10.975 - 10.996 (0.4321 - 0.4329)	11.175 - 11.196 (0.4400 - 0.4408)
	Exhaust	10.975 - 10.996 (0.4321 - 0.4329)	11.175 - 11.196 (0.4400 - 0.4408)
Interference fit of valve guide		0.027 - 0.059 (0.0011 - 0.0023)	
		Standard	Limit
Stem to guide clearance	Intake	0.020 - 0.053 (0.0008 - 0.0021)	0.08 (0.0031)
	Exhaust	0.040 - 0.073 (0.0016 - 0.0029)	0.1 (0.004)
Valve deflection limit		0.2 (0.008)	
Projection length “L”		13.3 - 13.9 (0.524 - 0.547)	

VALVE LIFTER

Unit: mm (in)

Valve lifter outer diameter	33.960 - 33.975 (1.3370 - 1.3376)
Lifter guide inner diameter	34.000 - 34.021 (1.3386 - 1.3394)
Clearance between lifter and filter guide	0.025 - 0.061 (0.0010 - 0.0024)

VALVE CLEARANCE ADJUSTMENT

Unit: mm (in)

Valve clearance (Hot)	Intake	0.31 - 0.39 (0.012 - 0.015)
	Exhaust	0.39 - 0.47 (0.015 - 0.019)

AVAILABLE SHIMS

Thickness mm (in)	Identification mark	Thickness mm (in)	Identification mark
—	—	1.90 (0.0748)	190
1.92 (0.0756)	192	1.94 (0.0764)	194
1.96 (0.0772)	196	1.98 (0.0780)	198
2.00 (0.0787)	200	2.02 (0.0795)	202
2.04 (0.0803)	204	2.06 (0.0811)	206
2.08 (0.819)	208	2.10 (0.0827)	210
2.12 (0.0835)	212	2.14 (0.0843)	214
2.16 (0.0850)	216	2.18 (0.0858)	218
2.20 (0.0866)	220	2.22 (0.0874)	222
2.24 (0.0882)	224	2.26 (0.0890)	226
2.28 (0.0898)	228	2.30 (0.0906)	230
2.32 (0.0913)	232	2.34 (0.0921)	234
2.36 (0.0929)	236	2.38 (0.0937)	238
2.40 (0.0945)	240	2.42 (0.0953)	242
2.44 (0.0961)	244	2.46 (0.0969)	246
2.48 (0.0976)	248	2.50 (0.0984)	250
2.52 (0.0992)	252	2.54 (0.1000)	254
2.56 (0.1008)	256	2.58 (0.1016)	258
2.60 (0.1024)	260	2.62 (0.1031)	262
2.64 (0.1039)	264	2.66 (0.1047)	266
2.68 (0.1055	268	—	—

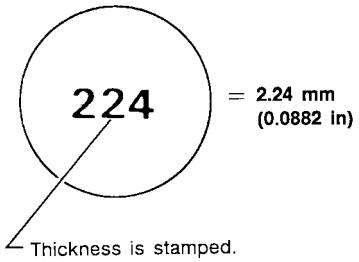

SEM308D

VALVE SEAT

Unit: mm (in)

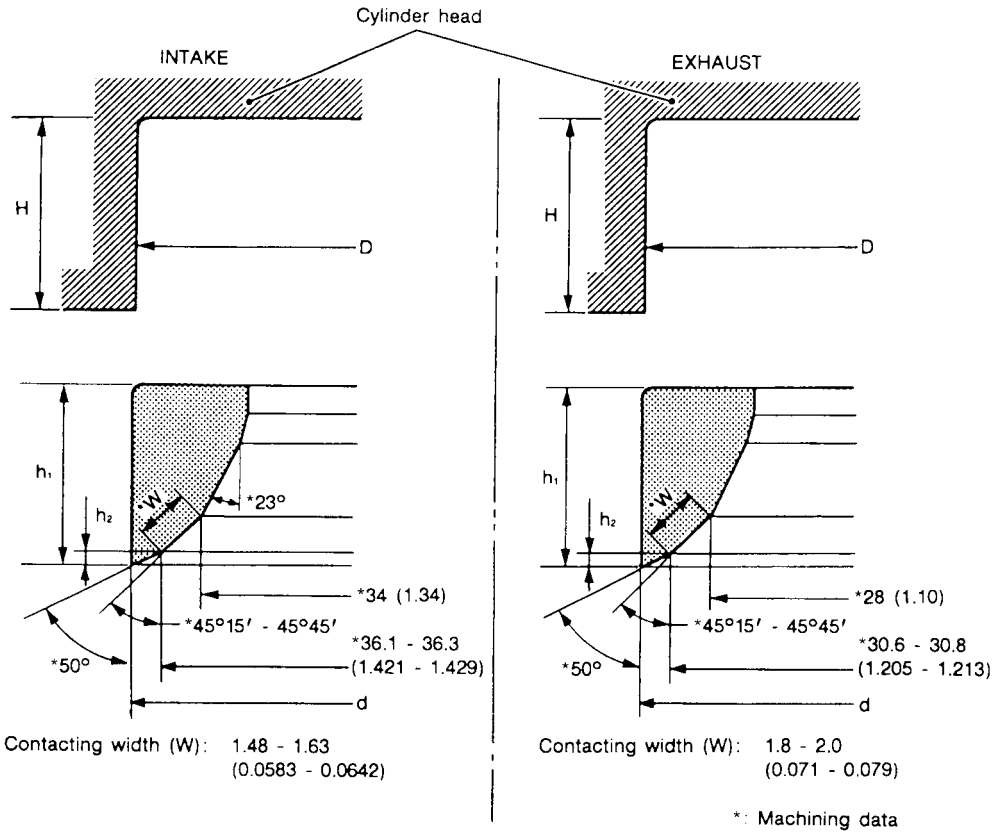

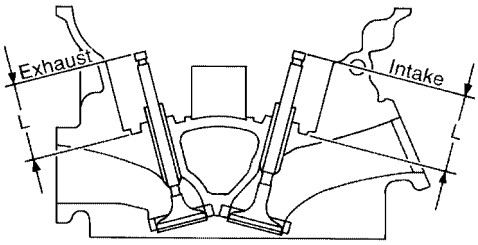

		Standard	Service
Cylinder head seat recess diameter (D)	Intake	37.500 - 37.516 (1.4764 - 1.4770)	38.000 - 38.016 (1.4961 - 1.4967)
	Exhaust	32.200 - 32.216 (1.2677 - 1.2683)	32.700 - 32.716 (1.2874 - 1.2880)
Valve seat interference fit	Intake	0.064 - 0.096 (0.0025 - 0.0038)	
	Exhaust	0.064 - 0.096 (0.0025 - 0.0038)	
Valve seat outer diameter (d)	Intake	37.580 - 37.596 (1.4795 - 1.4802)	38.080 - 38.096 (1.4992 - 1.4998)
	Exhaust	32.280 - 32.296 (1.2709 - 1.2715)	32.780 - 32.796 (1.2905 - 1.2912)
Depth (H)	Intake	6.1 - 6.3 (0.240 - 0.248)	
	Exhaust	6.1 - 6.3 (0.240 - 0.248)	
Height (h_1)	Intake	5.8 - 6.0 (0.228 - 0.236) 5.9 - 6.0 (0.232 - 0.236)	5.3 - 5.5 (0.209 - 0.217)
	Exhaust	5.9 - 6.0 (0.232 - 0.236)	5.32 - 5.42 (0.209 - 0.213)

Height (h_2)	Intake	0.24 - 0.64 (0.0094 - 0.0252) 0.34 - 0.64 (0.0134 - 0.0252)
	Exhaust	0.43 - 0.73 (0.0169 - 0.0287)
Valve seat resurface limit (L)	Intake	42.02 - 42.52 (1.6543 - 1.6740)
	Exhaust	42.03 - 42.53 (1.6547 - 1.6744)

Cylinder Block

EBS0094P

Unit: mm (in)

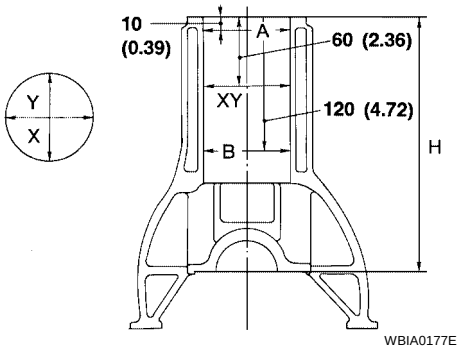

			Standard	Limit
Distortion			—	0.1 (0.004)
Cylinder bore	Inner diameter	Grade 1	89.000 - 89.010 (3.5039 - 3.5043)	0.2 (0.008)*
		Grade 2	89.010 - 89.020 (3.5043 - 3.5047)	
		Grade 3	89.020 - 89.030 (3.5047 - 3.5051)	
	Out-of-round (X – Y)		Less than 0.015 (0.0006)	—
	Taper (A – B)		Less than 0.010 (0.0004)	—
Difference in inner diameter between cylinders			Less than 0.03 (0.0012)	0.2 (0.008)
Piston-to-cylinder bore clearance			0.020 - 0.040 (0.0008 - 0.0016)	—
Cylinder block height (From crankshaft center)			246.95 - 247.05 (9.7224 - 9.7264)	0.2 (0.008)**

* Wear limit
** Total amount of cylinder head resurfacing and cylinder block resurfacing

Camshaft and Camshaft Bearing

EBS0094Q

Unit: mm (in)

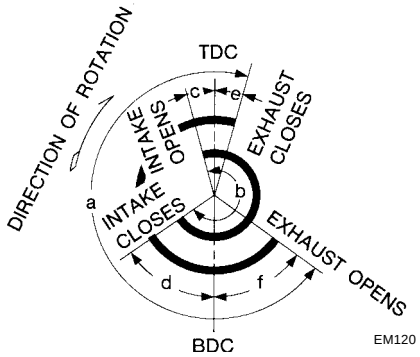

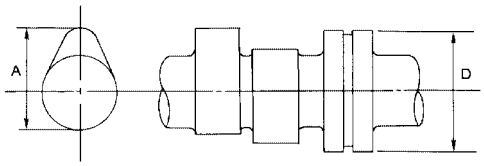

		Standard	Limit
Cam height (A)	Intake	41.755 - 41.945 (1.644 - 1.651)	—
	Exhaust	41.815 - 42.005 (1.646 - 1.654)	—
Wear limit of cam height		—	0.2 (0.008)
Camshaft journal to bearing clearance		0.045 - 0.090 (0.0018 - 0.0035)	0.12 (0.0047)
Inner diameter of camshaft bearing	#1 to #5 journals	28.000 - 28.025 (1.1024 - 1.1033)	—
Outer diameter of camshaft journal (D)	#1 to #5 journals	27.935 - 27.955 (1.0998 - 1.1006)	—
Camshaft runout*		Less than 0.02 (0.0008)	0.04 (0.0016)
Camshaft end play		0.070 - 0.148 (0.0028 - 0.0058)	0.2 (0.008)
Valve timing (Degree on crankshaft)	a	224	—
	b	224	—
	c	–1	—
	d	45	—
	e	7	—
	f	37	—

* Total indicator reading

Piston, Piston Ring and Piston pin

EBS0094R

PISTON

Unit: mm (in)

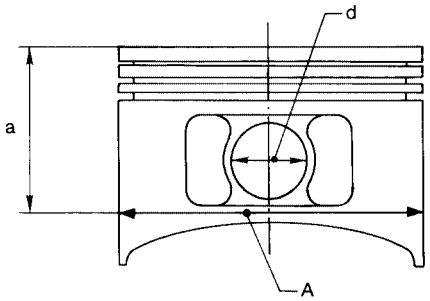

SEM804E

Piston skirt diameter "A"	Standard	Grade No. 1	88.970 - 88.980 (3.5027 - 3.5031)
		Grade No. 2	88.980 - 88.990 (3.5031 - 3.5035)
		Grade No. 3	88.990 - 89.000 (3.5035 - 3.5039)
	Service (Oversize)	0.5 (0.020)	89.470 - 89.500 (3.5224 - 3.5236)
		1.0 (0.039)	89.970 - 90.000 (3.5421 - 3.5433)
Height "a"		Approximately 48 (1.89)	
Piston pin hole diameter "d"		20.993 - 21.005 (0.8265 - 0.8270)	
Piston-to-cylinder bore clearance		0.020 - 0.040 (0.0008 - 0.0016)	

PISTON PIN

Unit: mm (in)

	Standard	Limit
Piston pin outer diameter	20.989 - 21.001 (0.8263 - 0.8268)	—
Interference fit of piston pin to piston pin hole	–0.002 to 0.01 (–0.0001 to 0.0004)	—
Connecting rod bushing clearance	0.005 - 0.017 (0.0002 - 0.0007)	0.023 (0.0009)

PISTON RING

Unit: mm (in)

		Standard	Limit
Side clearance	Top	0.040 - 0.080 (0.0016 - 0.0031)	0.1 (0.004)
	2nd	0.030 - 0.070 (0.0012 - 0.0028)	0.1 (0.004)
	Oil	0.065 - 0.135 (0.0026 - 0.0053)	—
Ring gap	Top	0.28 - 0.52 (0.0110 - 0.0205)	1.0 (0.039)
	2nd	0.45 - 0.69 (0.0177 - 0.0272)	1.0 (0.039)
	Oil (rail ring)	0.20 - 0.69 (0.0079 - 0.0272)	1.0 (0.039)

Connecting Rod

EBS0094S

Unit: mm (in)

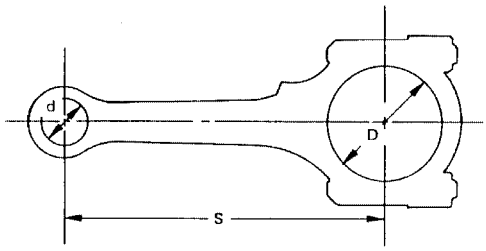

WBIA0178E

	Standard	Limit
Center distance (S)	164.95 - 165.05 (6.4941 - 6.4980)	—
Bend [per 100 mm (3.94 in)]	—	0.15 (0.0059)
Torsion [per 100 mm (3.94 in)]	—	0.30 (0.0118)
Connecting rod small end inner diameter (d)*	23.970 - 24.000 (0.9437 - 0.9449)	—
Piston pin bushing inner diameter	21.000 - 21.012 (0.8268 - 0.8272)	—
Connecting rod big end inner diameter (D)*	53.000 - 53.013 (2.0866 - 2.0871)	—
Side clearance	0.2 - 0.4 (0.008 - 0.016)	0.6 (0.024)

* Without bearing

Crankshaft

EBS0094T

Unit: mm (in)

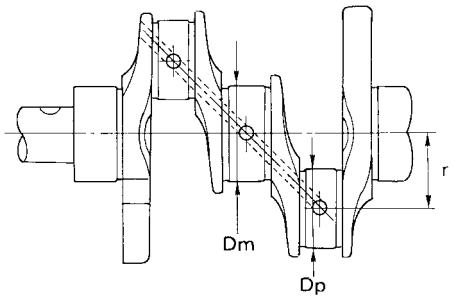

SEM394

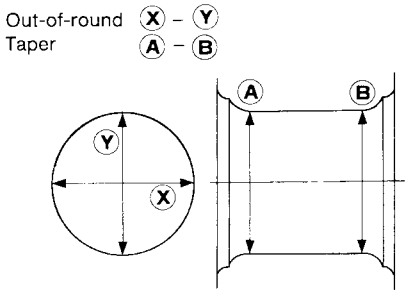

EM715

Main journal diameter (Dm)	Grade No. 0	59.967 - 59.975 (2.3609 - 2.3612)	
	Grade No. 1	59.959 - 59.967 (2.3606 - 2.3609)	
	Grade No. 2	59.951 - 59.959 (2.3603 - 2.3606)	
Pin journal diameter (Dp)	Grade No. 0	49.968 - 49.974 (1.9672 - 1.9675)	
	Grade No. 1	49.962 - 49.968 (1.9670 - 1.9672)	
	Grade No. 2	49.956 - 49.962 (1.9668 - 1.9670)	
Center distance (r)		47.95 - 48.05 (1.8878 - 1.8917)	
		Standard	Limit
Taper of journal and pin [A - B]	Journal	—	0.01 (0.0004)
	Pin	—	0.005 (0.0002)
Out-of-round of journal and pin [X - Y]	Journal	—	0.01 (0.0004)
	Pin	—	0.005 (0.0002)
Runout [TIR]*		—	0.10 (0.0039)

Free end play	0.05 - 0.18 (0.0020 - 0.0071)	0.3 (0.012)
Fillet roil	More than 0.1 (0.004)	

* Total indicator reading

Bearing Clearance

EBS0094U

Unit: mm (in)

	Standard	Limit
Main bearing clearance	0.020 - 0.047 (0.0008 - 0.0019)	0.1 (0.004)
Connecting rod bearing clearance	0.010 - 0.035 (0.0004 - 0.0014)	0.09 (0.0035)

Available Main Bearing

EBS0094V

STANDARD

Unit: mm (in)

Grade number	Thickness	Identification color
0	1.821 - 1.825 (0.0717 - 0.0719)	Black
1	1.825 - 1.829 (0.0719 - 0.0720)	Brown
2	1.829 - 1.833 (0.0720 - 0.0722)	Green
3	1.833 - 1.837 (0.0722 - 0.0723)	Yellow
4	1.837 - 1.841 (0.0723 - 0.0725)	Blue

UNDERSIZE (SERVICE)

Unit: mm (in)

	Thickness	Main journal diameter “Dm”
0.25 (0.0098)	1.952 - 1.960 (0.0769 - 0.0772)	Grind so that bearing clearance is the specified value.

Available Connecting Rod Bearing

EBS0094W

STANDARD

Unit: mm (in)

Grade number	Thickness	Identification color
0	1.505 - 1.508 (0.0593 - 0.0594)	—
1	1.508 - 1.511 (0.0594 - 0.0595)	Brown
2	1.511 - 1.514 (0.0595 - 0.0596)	Green

UNDERSIZE (SERVICE)

Unit: mm (in)

	Thickness	Crank pin journal diameter “Dp”
0.08 (0.0031)	1.540 - 1.548 (0.0606 - 0.0609)	Grind so that bearing clearance is the specified value.
0.12 (0.0047)	1.560 - 1.568 (0.0614 - 0.0617)	
0.25 (0.0098)	1.625 - 1.633 (0.0640 - 0.0643)	

Miscellaneous Components

EBS0094X

Unit: mm (in)

Camshaft sprocket runout [TIR]*	Less than 0.15 (0.0059)
Flywheel runout [TIR]*	Less than 0.15 (0.006)
Drive plate runout [TIR]*	Less than 0.15 (0.006)

* Total indicator reading

PRECAUTIONS

PFP:00001

Precautions for Supplemental Restraint System (SRS) “AIR BAG” and “SEAT BELT PRE-TENSIONER”

EBS00EY3

The Supplemental Restraint System such as “AIR BAG” and “SEAT BELT PRE-TENSIONER”, used along with a front seat belt, helps to reduce the risk or severity of injury to the driver and front passenger for certain types of collision. This system may include seat belt switch inputs and dual stage front air bag modules. If equipped with dual stage front air bag modules, the SRS system uses the seat belt switches to determine the front air bag deployment, and may only deploy one front air bag, depending on the severity of a collision and whether the front occupants are belted or unbelted. Information necessary to service the system safely is included in the SRS and SB section of this Service Manual.

The vehicle may be equipped with a passenger air bag deactivation switch. Because no rear seat exists where a rear-facing child restraint can be placed, the switch is designed to turn off the passenger air bag so that a rear-facing child restraint can be used in the front passenger seat. The switch is located in the center of the instrument panel, near the ashtray. When the switch is turned to the ON position, the passenger air bag is enabled and could inflate for certain types of collision. When the switch is turned to the OFF position, the passenger air bag is disabled and will not inflate. A passenger air bag OFF indicator on the instrument panel lights up when the passenger air bag is switched OFF. The driver air bag always remains enabled and is not affected by the passenger air bag deactivation switch.

WARNING:

- **To avoid rendering the SRS inoperative, which could increase the risk of personal injury or death in the event of a collision which would result in air bag inflation, all maintenance must be performed by an authorized NISSAN/INFINITI dealer.**
- **Improper maintenance, including incorrect removal and installation of the SRS, can lead to personal injury caused by unintentional activation of the system. For removal of Spiral Cable and Air Bag Module, see the SRS section.**
- **Do not use electrical test equipment on any circuit related to the SRS unless instructed to in this Service Manual. SRS wiring harnesses can be identified by yellow and/or orange harnesses or harness connectors.**
- **The vehicle may be equipped with a passenger air bag deactivation switch which can be operated by the customer. When the passenger air bag is switched OFF, the passenger air bag is disabled and will not inflate. When the passenger air bag is switched ON, the passenger air bag is enabled and could inflate for certain types of collision. After SRS maintenance or repair, make sure the passenger air bag deactivation switch is in the same position (ON or OFF) as when the vehicle arrived for service.**

Parts Requiring Angular Tightening

EBS0095D

- Use an angle wrench for the final tightening of the following engine parts:
  - Cylinder head bolts
  - Connecting rod cap nuts
- Do not use a torque value for final tightening.
- The torque value for these parts are for a preliminary step.
- Ensure thread and seat surfaces are clean and coated with engine oil.

Precautions for Liquid Gasket

EBS00EY2

REMOVAL OF LIQUID GASKET SEALING

- After removing the mounting bolts and nuts, separate the mating surface using a seal cutter and remove the liquid gasket sealing.

  CAUTION:
  Be careful not to damage the mating surfaces.

- Use a plastic hammer to lightly tap (1) the areas where the liquid gasket is applied. To advance the cutter, use a plastic hammer (2) to slide the cutter along the joint.

CAUTION:
If for some unavoidable reason a tool such as a flat-bladed screwdriver is used, be careful not to damage the mating surfaces.

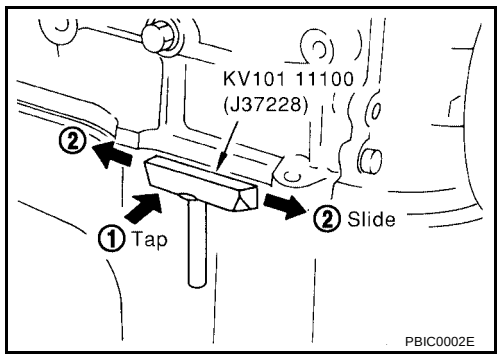

LIQUID GASKET APPLICATION PROCEDURE

1. Using a scraper, remove the old liquid gasket adhering to the gasket application surface and the mating surface.
   - Remove the sealant completely from the groove of the gasket application surface, mounting bolts, and bolt holes.

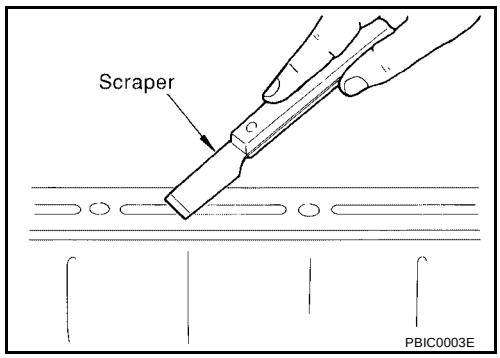

2. Thoroughly clean the gasket application surface and the mating surface and remove adhering moisture, grease and foreign materials.
3. Attach the sealant tube to the tube presser.

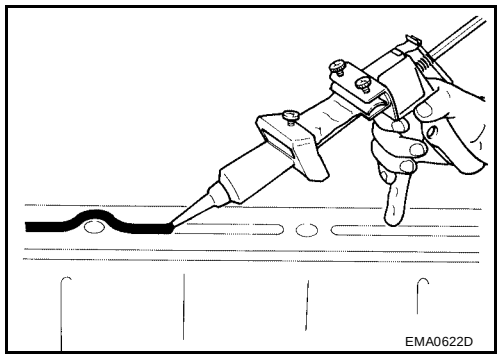

4. Apply the sealant without breaks to the specified location with the specified dimensions.
   - If there is a groove for the sealant application, apply the sealant to the groove.
   - As for the bolt holes, normally apply the sealant inside the holes. If specified, it should be applied outside the holes. Make sure to read the text of this manual.
   - Within five minutes of the sealant application, install the mating component.
   - If the sealant protrudes, wipe it off immediately.
   - Do not retighten after the installation.
   - After 30 minutes or more have passed from the installation, fill the engine with the specified oil and coolant. Refer to MA-30, "Changing Engine Oil" and MA-26, "REFILLING ENGINE COOLANT" .

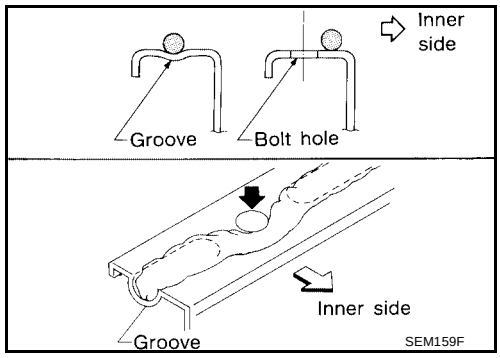

PREPARATION

PFP:00002

Special Service Tools

EBS0095F

The actual shapes of Kent-Moore tools may differ from those of special service tools illustrated here.

Tool number (Kent-Moore No.) Tool name		Description
ST0501S000 (—) Engine stand assembly **1** ST05011000 (—) Engine stand **2** ST05012000 (—) Base	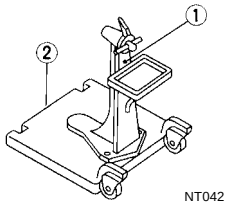	Disassembling and assembling
KV10106500 (—) Engine stand shaft	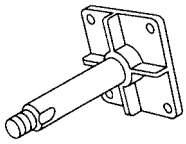	
KV10110001 (—) Engine sub-attachment	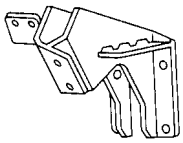	
ST10120000 (J24239-01) Cylinder head bolt wrench	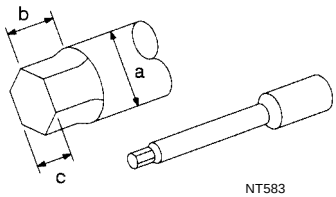	Loosening and tightening cylinder head bolt **a: 13 mm (0.51 in) dia.** **b: 12 mm (0.47 in)** **c: 10 mm (0.39 in)**
KV10112100 (BT8653-A) Angle wrench	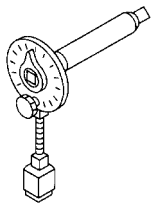	Tightening bearing cap, cylinder head bolts, etc.
KV10110600 (J33986) Valve spring compressor	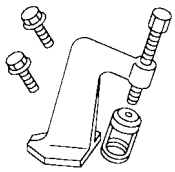	Disassembling and assembling valve components

Tool number (Kent-Moore No.) Tool name	Description
KV10107501 (—) Valve oil seal drift 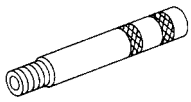 NT025	Installing valve oil seal
KV10110300 (—) Piston pin press stand assembly **1** KV10110310 (—) Cap **2** KV10110330 (—) Spacer **3** ST13030020 (—) Press stand **4** ST13030030 (—) Spring **5** KV10110340 (—) Drift **6** KV10110320 (—) Center shaft 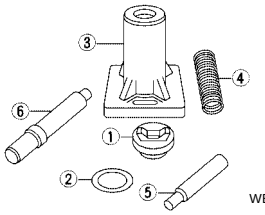 WEM150	Disassembling and assembling piston with connecting rod
EM03470000 (J8037) Piston ring compressor 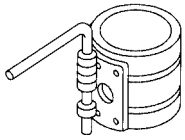 NT044	Installing piston assembly into cylinder bore
ST16610001 (J23907) Pilot bushing puller 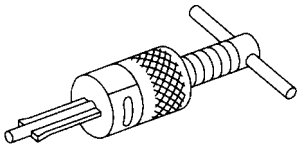 NT045	Removing crankshaft pilot bushing
KV10111100 (J37228) Seal cutter 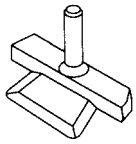 NT046	Removing oil pan
WS39930000 (—) Tube presser 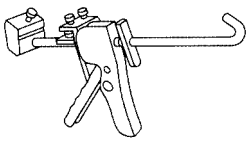 NT052	Pressing the tube of liquid gasket

Tool number (Kent-Moore No.) Tool name	Description
KV10117100 (J36471-A) Front heated oxygen sensor wrench 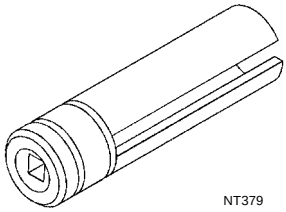 NT379	Loosening or tightening heated oxygen sensor **For 22 mm (0.87 in) hexagon nut**
KV10114400 (J38365) Heated oxygen sensor wrench 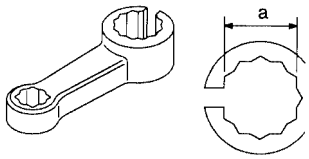 NT636	Loosening or tightening rear heated oxygen sensor (For right bank) **a: 22 mm (0.87 in)**

Commercial Service Tools

EBS0095G

(Kent Moore No.) Tool name	Description
Spark plug wrench 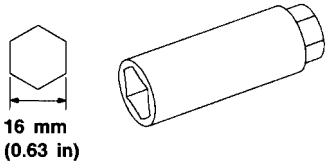 NT047	Removing and installing spark plug
Pulley holder 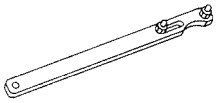 WEM153	Holding camshaft pulley while tightening or loosening camshaft bolt
Valve seat cutter set 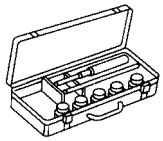 NT048	Finishing valve seat dimensions
Piston ring expander 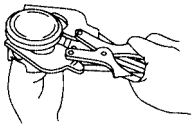 NT030	Removing and installing piston ring
Valve guide drift 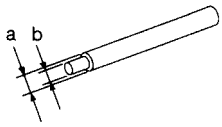 NT015	Removing and installing valve guide **Intake & Exhaust:** **a = 10.5 mm (0.413 in) dia.** **b = 6.6 mm (0.260 in) dia.**

(Kent Moore No.) Tool name		Description
Valve guide reamer	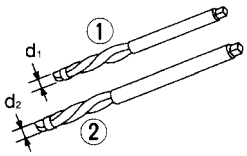 NT016	Reaming valve guide 1 or hole for oversize valve guide 2 **Intake:** **d_1 = 7.0 mm (0.276 in) dia.** **d_2 = 11.2 mm (0.441 in) dia.** **Exhaust:** **d_1 = 8.0 mm (0.315 in) dia.** **d_2 = 12.2 mm (0.480 in) dia.**
Camshaft oil seal drift	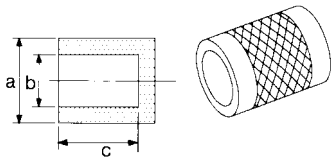 NT613	Installing camshaft oil seal **a: 60 mm (2.36 in) dia.** **b: 44.5 mm (1.752 in) dia.** **c: 75 mm (2.95 in)**
Front oil seal drift	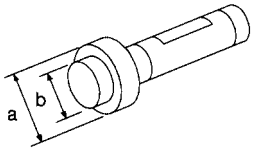 NT049	Installing front oil seal **a: 52 mm (2.05 in) dia.** **b: 44 mm (1.73 in) dia.**
Rear oil seal drift	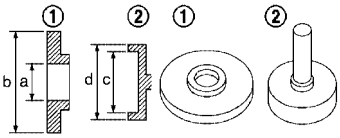 WEM152	Installing rear oil seal **a: 46 mm (1.81 in)** **b: 110 mm (4.33 in)** **c: 84 mm (3.31 in)** **d: 96 mm (3.78 in)**
a: (J-43897-18) b: (J-43897-12) Thread repair tool for oxygen sensor	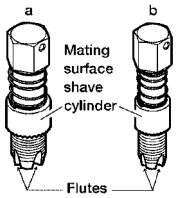 AEM488	**a: 18 mm (0.71 in)** **b: 12 mm (0.47 in)**
Anti-seize thread compound	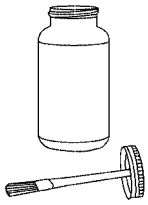 AEM489	For preventing corrosion, seizing, and galling on high temperature applications.

NOISE, VIBRATION, AND HARSHNESS (NVH) TROUBLESHOOTING

PFP:00003

Noise, Vibration and Harshness (NVH)

EBS0096K

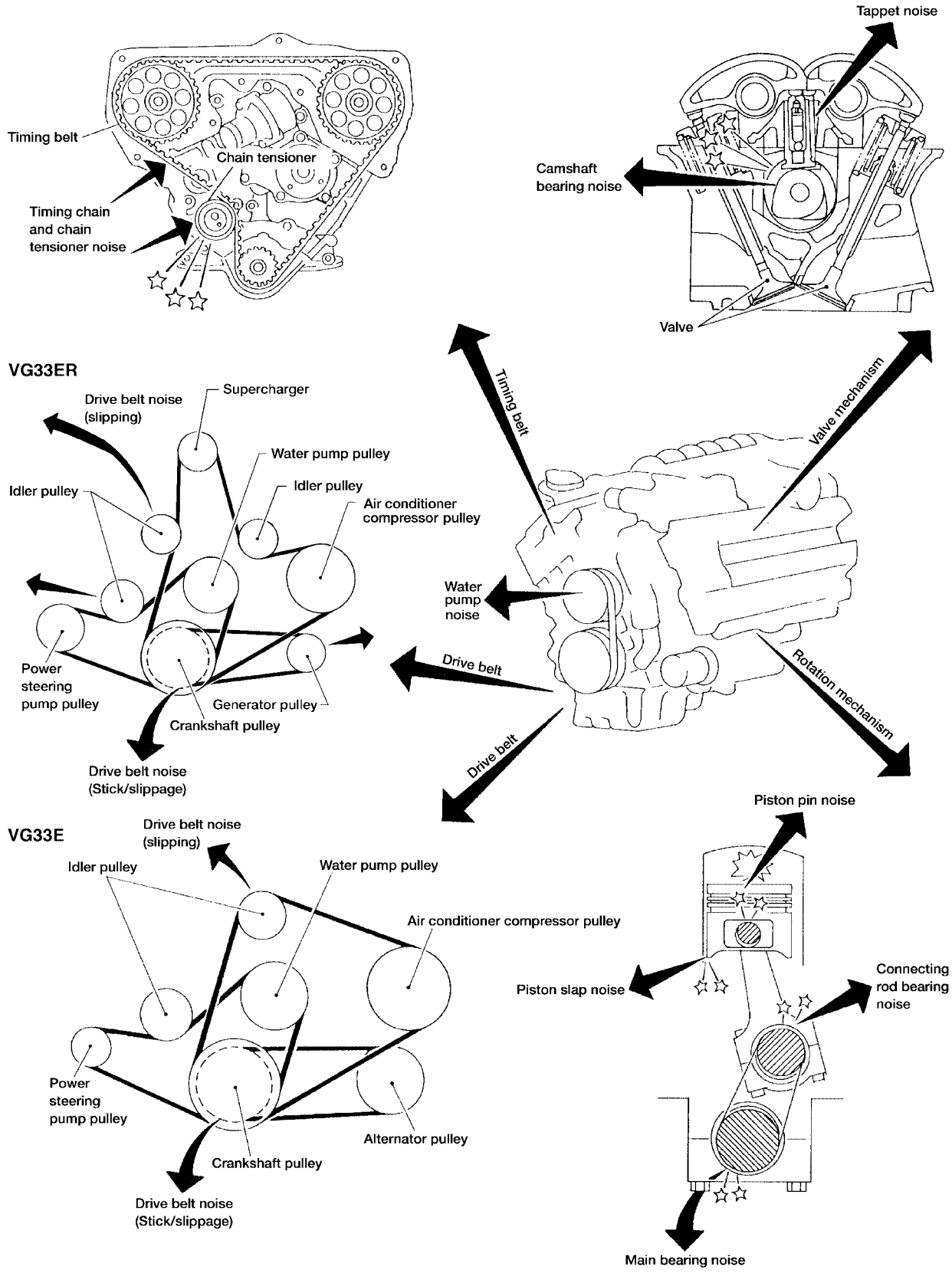

WBIA0100E

NVH TROUBLESHOOTING CHART — ENGINE NOISE

Use the chart below to help you find the cause of the symptom.

1. Locate the area where noise occurs.
2. Confirm the type of noise.
3. Specify the operating condition of engine.
4. Check specified noise source. If necessary, repair or replace these parts.

Location of noise	Type of noise	Operating condition of engine						Source of noise	Check item	Reference page
		Before warm-up	After warm-up	When starting	When idling	When racing	While driving			
Top of engine Rocker cover Cylinder head	Ticking or clicking	C	A	—	A	B	—	Tappet noise	Hydraulic valve lifter	EM-116
	Rattle	C	A	—	A	B	C	Camshaft bearing noise	Camshaft journal clearance Camshaft runout	EM-111, EM-110
Crank-shaft pul-ley Cylinder block (Side of engine) Oil pan	Slap or knock	—	A	—	B	B	—	Piston pin noise	Piston and piston pin clearance Connecting rod bushing clearance	EM-133, EM-140
	Slap or rap	A	—	—	B	B	A	Piston slap noise	Piston-to-bore clearance Piston ring side clearance Piston ring end gap Connecting rod bend and torsion	EM-135, EM-133 , EM-134 , EM-134
	Knock	A	B	C	B	B	B	Connect-ing rod bearing noise	Connecting rod bushing clearance (Small end) Connecting rod bearing clearance (Big end)	EM-140, EM-139
	Knock	A	B	—	A	B	C	Main bear-ing noise	Main bearing oil clearance Crankshaft runout	EM-137, EM-136
Timing belt cover	Whine or hissing	C	A	—	A	A	—	Timing belt noise (too tight)	Loose timing belt Belt contacting case	EM-93
	Clatter	A	B	—	C	A	—	Timing belt noise (too loose)		
Front of engine	Squeak-ing or fizz-ing	A	B	—	B	—	C	Other drive belts (Sticking or slipping)	Drive belts deflection	MA-24
	Creaking	A	B	A	B	A	B	Other drive belts (Slipping)	Idler pulley bearing operation	
	Squall Creak	A	B	—	B	A	B	Water pump noise	Water pump operation	CO-26

A: Closely related B: Related C: Sometimes related —: Not related

OUTER COMPONENT PARTS

PFP:00100

Removal and Installation

EBS00EYA

VG33E

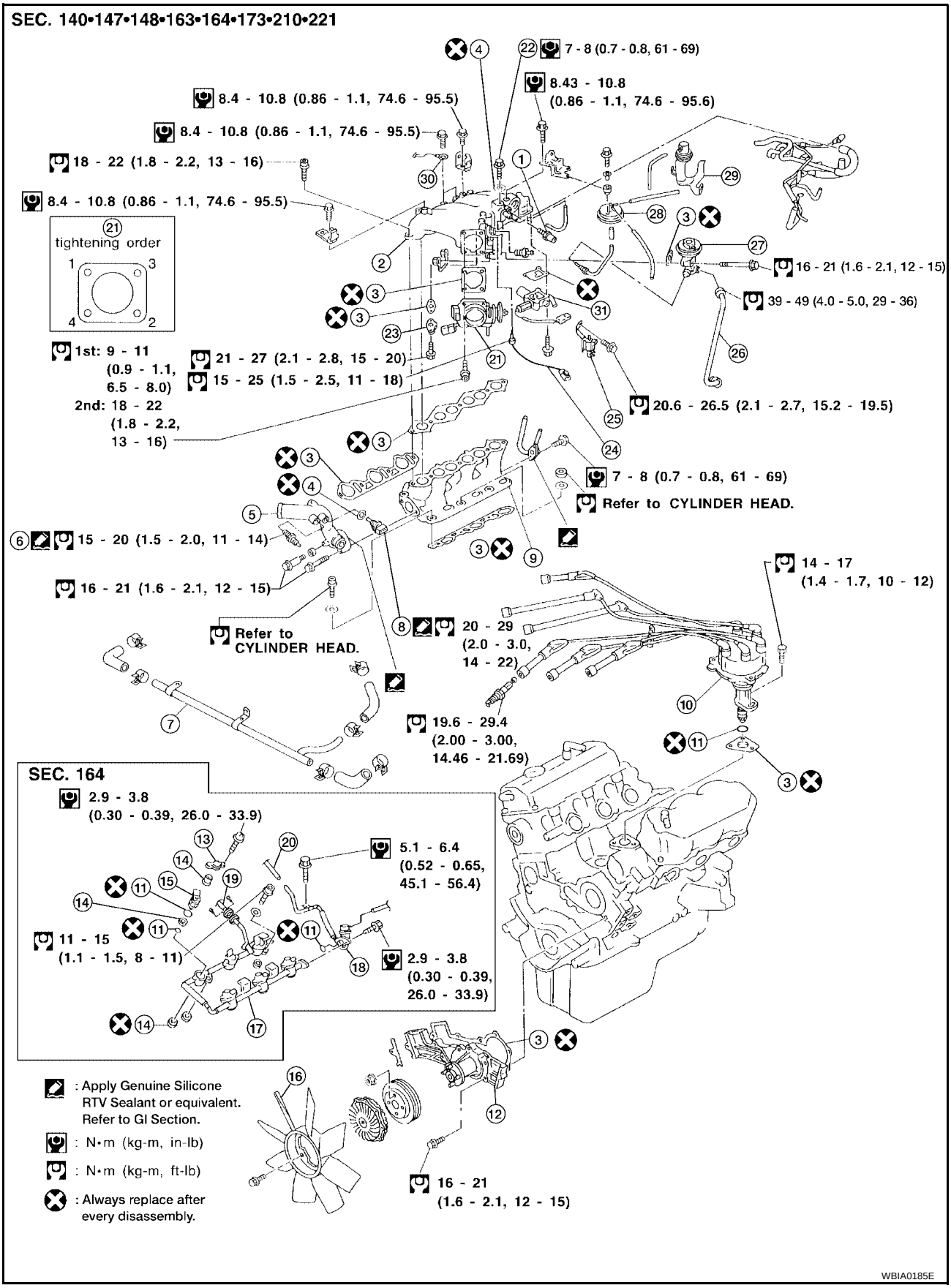

1. PCV valve
2. Intake manifold collector
3. Gasket
4. Copper washer
5. Water outlet
6. Thermal transmitter
7. Fresh air inlet
8. Engine coolant temperature sensor
9. Intake manifold
10. Distributor
11. O-ring
12. Water pump
13. Fuel injector cap
14. Insulator
15. Fuel injector
16. Engine cooling fan
17. Fuel tube
18. Fuel pressure regulator
19. Fuel feed hose
20. Fuel return hose
21. Throttle body
22. Air relief plug
23. EGR guide tube
24. EGR temperature sensor
25. EGRC solenoid valve
26. EGR tube
27. EGR control valve
28. EGRC-BPT valve
29. Throttle opener
30. Ground
31. IACV-AAC valve assembly

VG33ER

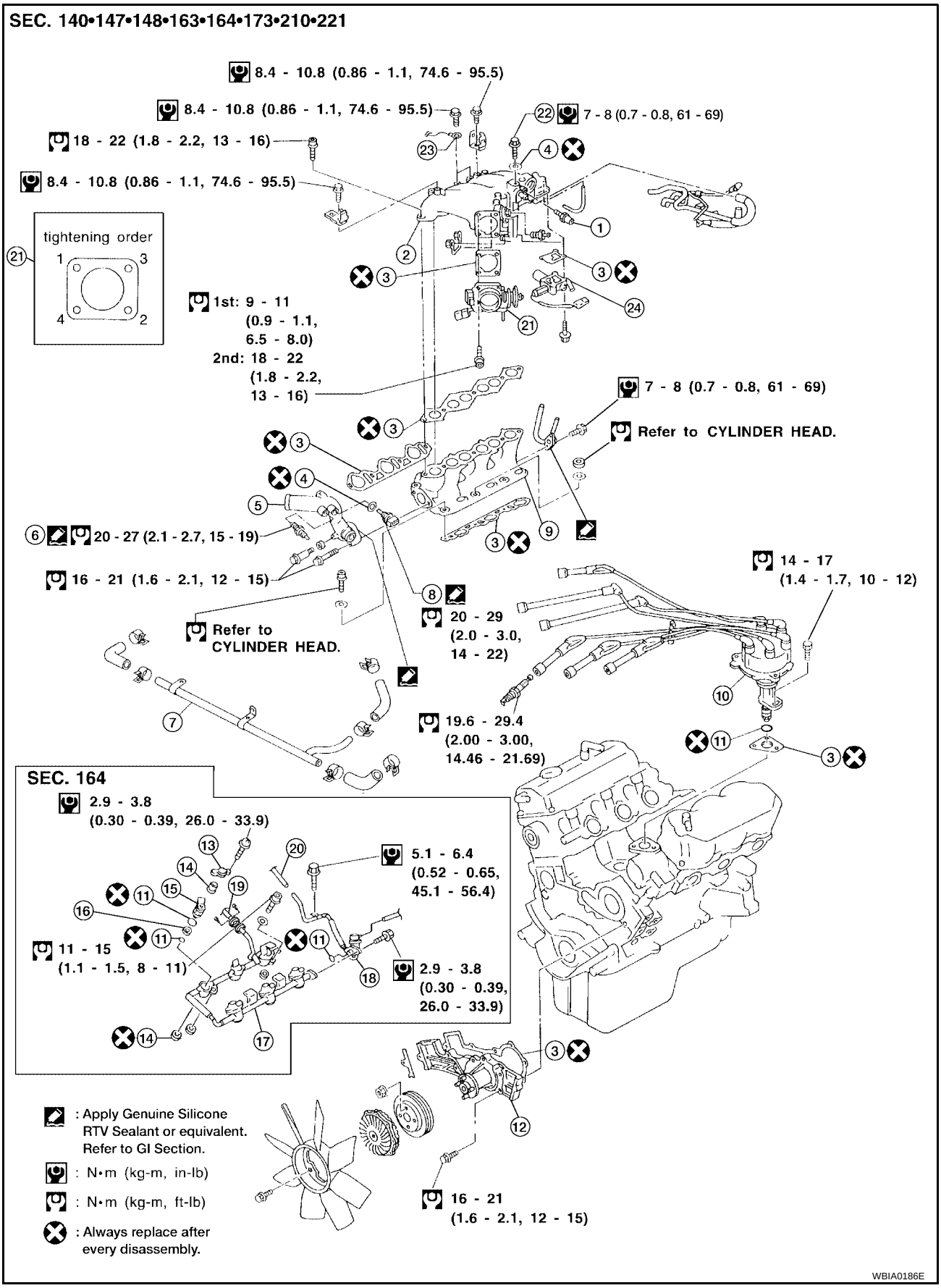

1.	PCV valve	2.	Intake manifold collector	3.	Gasket
4.	Copper washer	5.	Water outlet	6.	Thermal transmitter

7. Fresh air inlet	8. Engine coolant temperature sensor	9. Intake manifold
10. Distributor	11. O-ring	12. Water pump
13. Fuel injector cap	14. Insulator	15. Fuel injector
16. Engine cooling fan	17. Fuel tube	18. Fuel pressure regulator
19. Fuel feed hose	20. Fuel return hose	21. Throttle body
22. Air relief plug	23. Ground	24. IACV-AAC valve assembly

VG33ER

SEC. 140 • 147 • 148 • 163 • 164 • 173 • 210 • 221

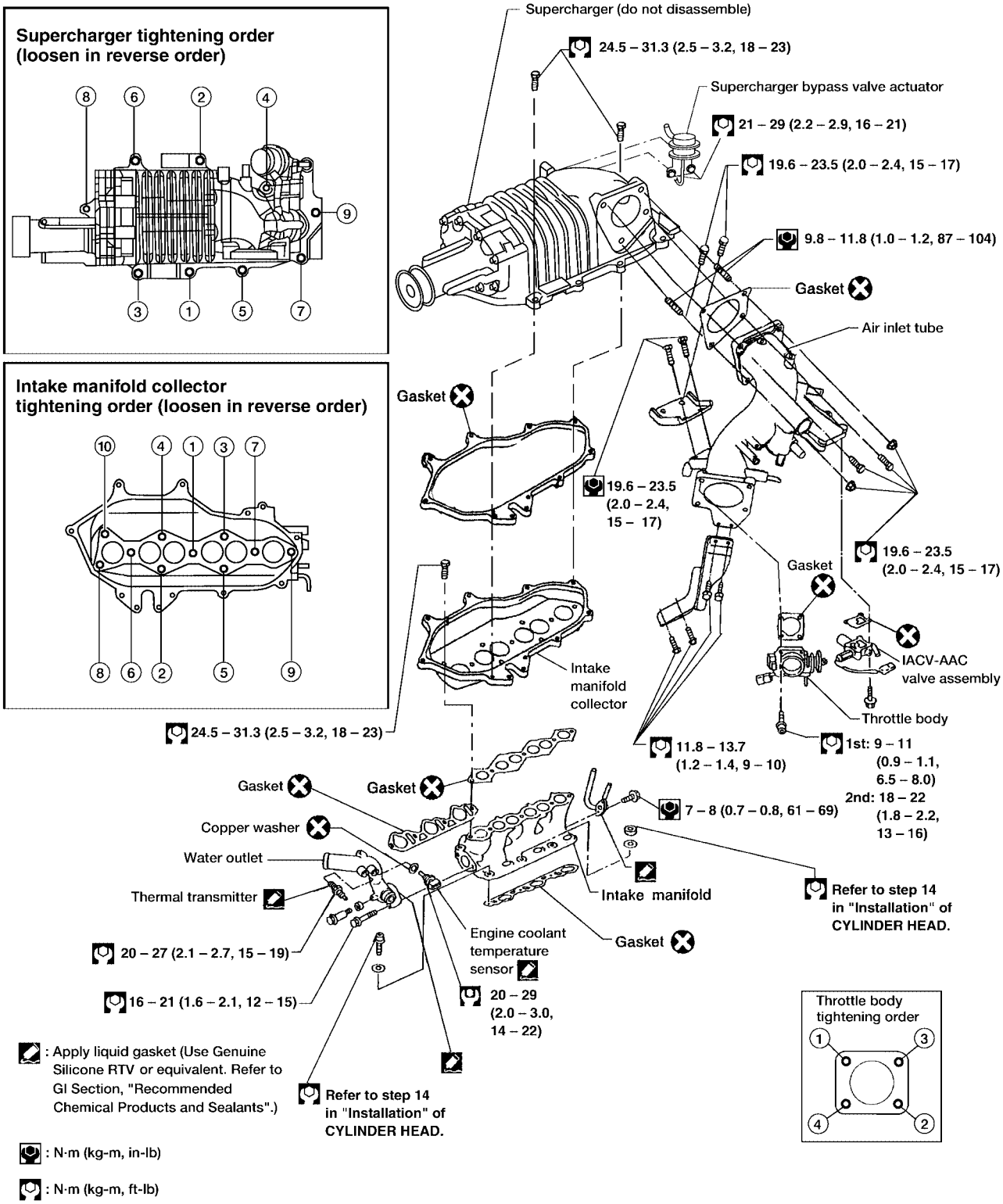

VG33E

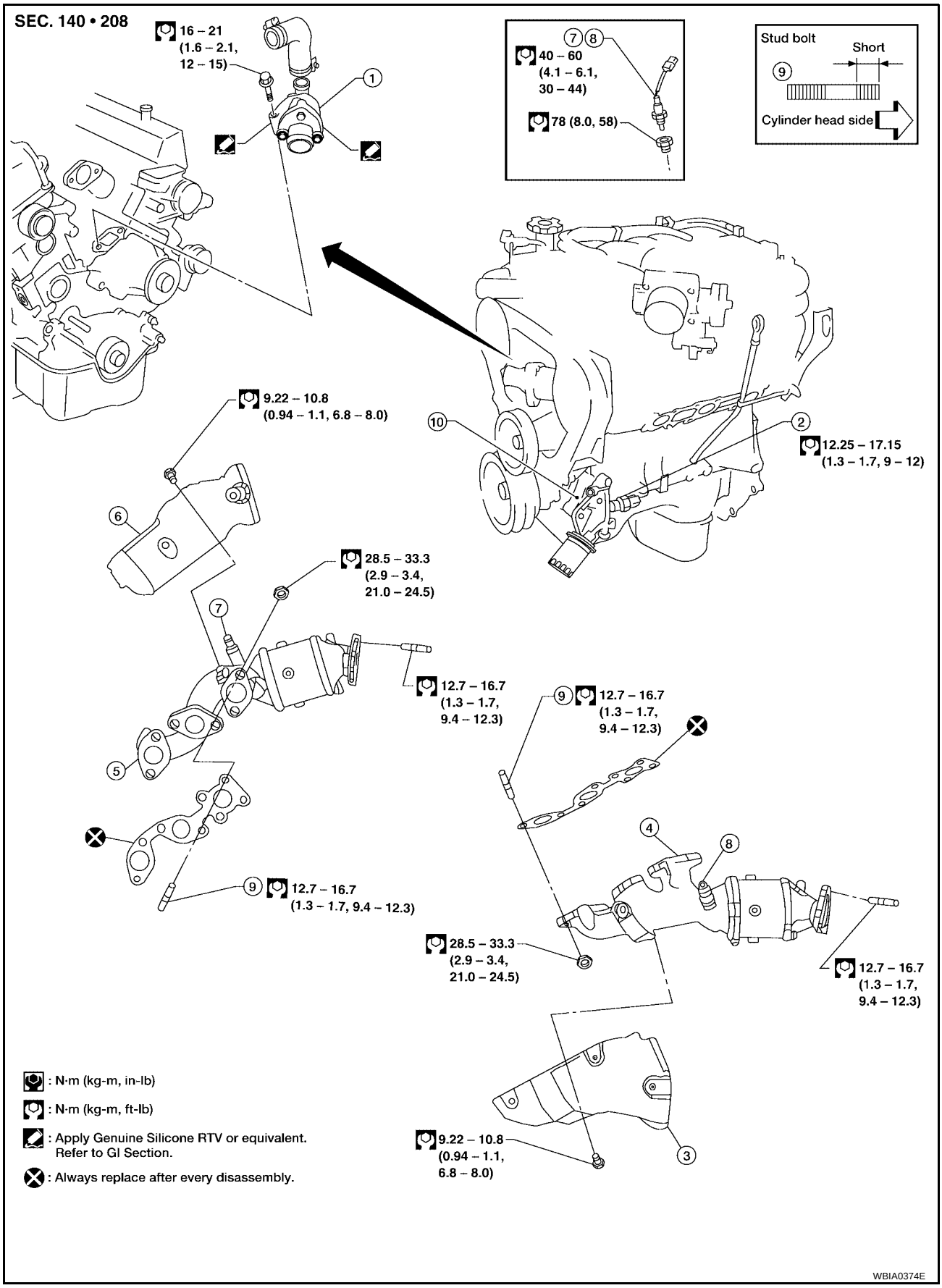

1.	Thermostat housing	2.	Oil pressure switch	3.	LH exhaust manifold cover
4.	LH exhaust manifold and catalyst	5.	RH exhaust manifold and catalyst	6.	RH exhaust manifold cover

7. Heated oxygen sensor 1 (bank 1)
8. Heated oxygen sensor 1 (bank 2)
9. Exhaust manifold stud bolt
10. Oil filter bracket

VG33ER

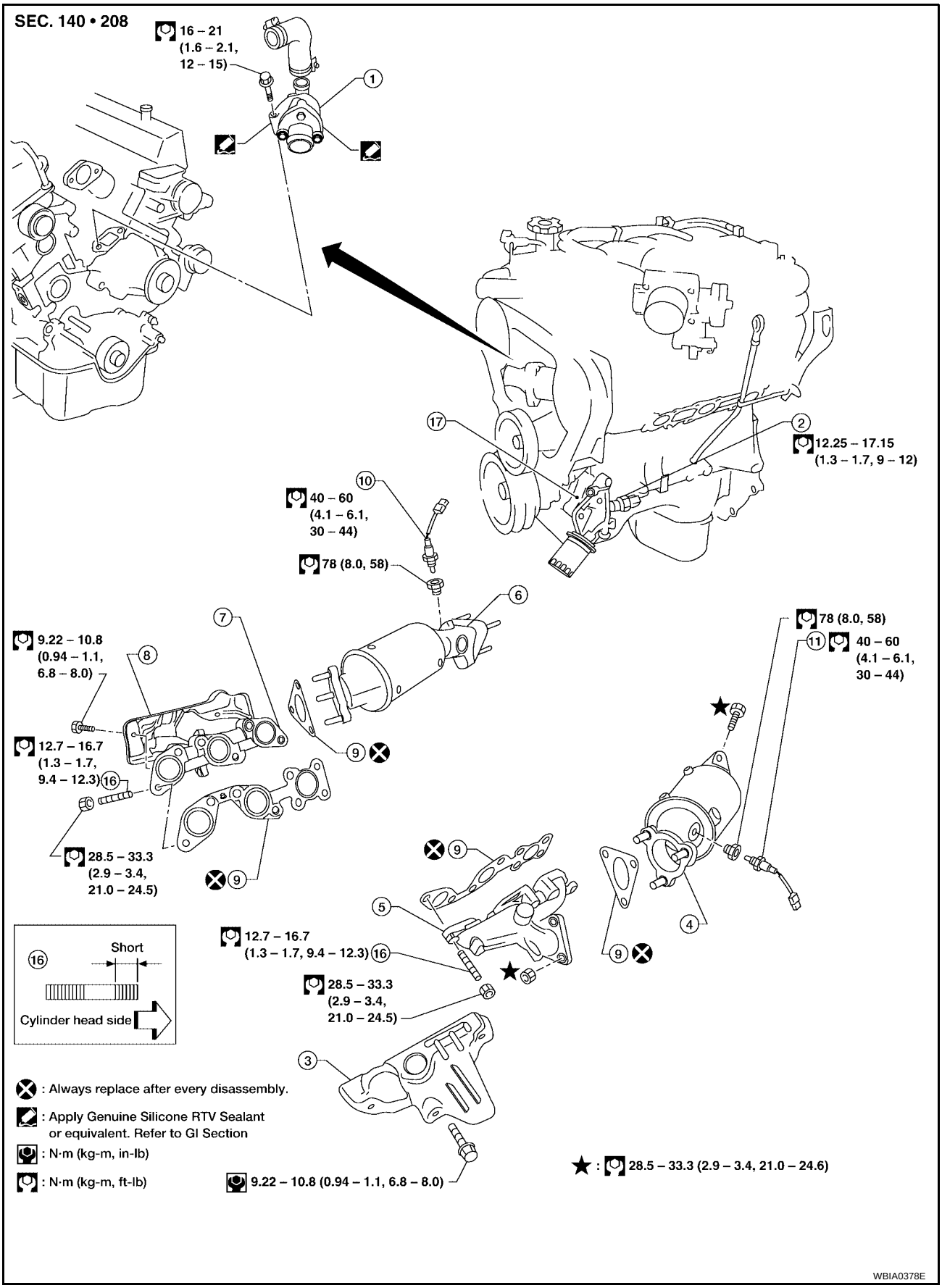

1. Thermostat housing
2. Oil pressure switch
3. LH exhaust manifold cover
4. LH catalyst
5. Exhaust manifold (left bank)
6. RH catalyst
7. Exhaust manifold (right bank)
8. RH exhaust manifold cover
9. Gasket
10. Heated oxygen sensor 1 (bank 1)
11. Heated oxygen sensor 1 (bank 2)
12. Exhaust manifold stud bolt
13. Oil filter bracket

OIL PAN

PFP:11110

Removal

EBS0095K

WARNING:

- **Place the vehicle on a flat and solid surface.**
- **Place chocks in front of and behind the rear wheels.**
- **You should not remove the oil pan until the exhaust system and cooling system have completely cooled off. Otherwise, you may burn yourself and a fire could break out in the fuel line.**
- **When removing the front and rear engine mounting bolts and nuts, lift the engine slightly to ensure safety.**

CAUTION:

- **In lifting the engine, be careful not to hit against any adjacent parts, especially the accelerator wire casing end, brake tube and brake master cylinder.**

1. Remove the undercover.
2. Drain the engine oil. Refer to MA-30, "Changing Engine Oil" .
3. Remove the stabilizer bracket bolts (RH & LH). Refer to FSU-20, "Removal" .
4. Remove the front propeller shaft from front differential carrier. Refer to PR-8, "Removal and Installation" .
5. Remove the front drive shaft fixing bolts. Refer to FAX-20, "Removal and Installation" .
6. Remove the front differential carrier bleeder hoseFFD-11, "Components" .
7. Remove the front suspension cross member. Refer to FSU-5, "Components" .
8. Remove the differential front mounting bolts and rear mounting bolts. Refer to FFD-11, "Components" .
9. Remove the front differential carrier. Refer to FFD-9, "Removal and Installation" .
10. Remove the front differential carrier mounting bracket. Refer to FFD-11, "Components" .
11. Remove the starter motor. Refer to SC-25, "VG33E AND VG33ER MODELS" .
12. Remove the transmission to rear engine mounting bracket nuts. Refer to MT-10, "Removal and Installation" (FS5W71C), MT-48, "Removal and Installation" (FS5R30A), AT-62, "REMOVAL AND INSTALLATION" (RL4R01A), AT-407, "REMOVAL AND INSTALLATION" (RE4R01A).
13. Remove the engine mounting bolts or nuts. Refer to EM-128, "Removal and Installation" .
14. Remove the power steering gear mounting brackets. Refer to PS-15, "Removal and Installation" .
15. Lift up the engine. If necessary, disconnect exhaust tube.
16. Remove the relay rod. Refer to PS-20, "Components" . It is not necessary to disconnect pitman arm.
17. Remove the oil pan bolts in numerical order as shown.

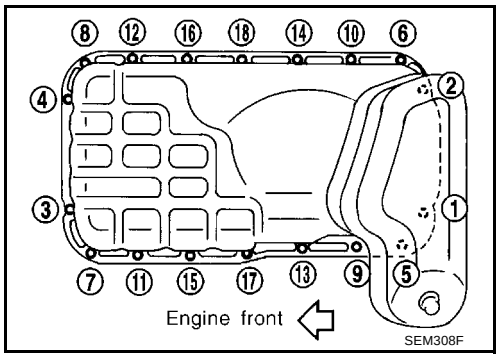

18. Remove the oil pan.

a. Insert Tool between the cylinder block and the oil pan and tap (1) using a plastic hammer to separate the pan from the engine block, as shown.

CAUTION:

- **Do not drive seal cutter into oil pump or rear oil seal retainer portion, or aluminum mating face will be damaged.**
- **Do not insert screwdriver, or oil pan flange will be deformed.**

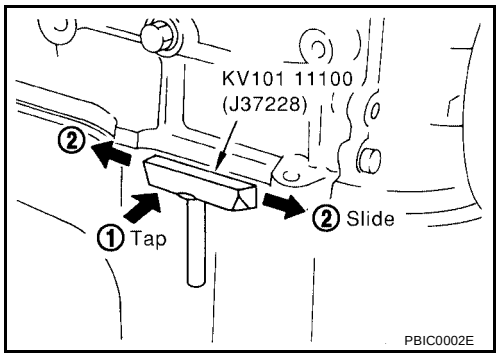

b. Slide Tool by tapping on the side (2) with a hammer to remove the oil pan from the engine block.

Installation

EBS0095L

1. Before installing the oil pan, remove all traces of the liquid gasket from the mating surface using a scraper as shown.
   - Also remove all traces of liquid gasket from the mating surface of the cylinder block.

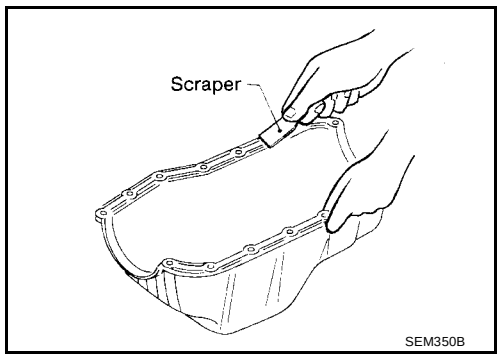

2. Apply the liquid gasket to the oil pump gasket and rear oil seal retainer gasket.

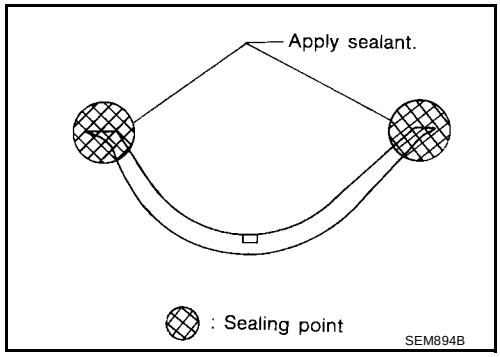

3. Apply a continuous bead of liquid gasket to mating surface of oil pan.
   - Use Genuine Silicone RTV Sealant or equivalent. Refer to GI-42, "RECOMMENDED CHEMICAL PRODUCTS AND SEALANTS" .

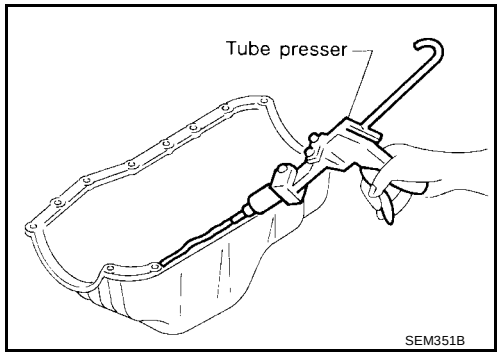

   - Be sure the liquid gasket bead is 3.5 - 4.5 mm (0.138 - 0.177 in) wide. Apply the liquid gasket to the oil pan, going around the bolt holes as shown.

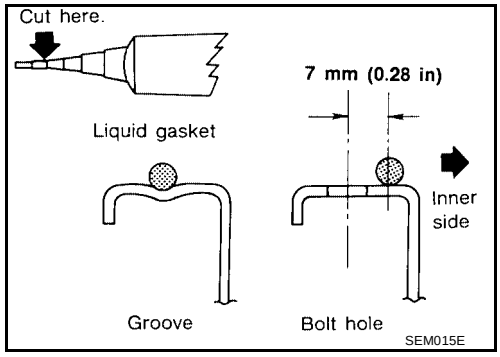

4. Install the oil pan, and tighten the oil pan bolts to specification, and in the numerical order as shown.
   - Installation of the oil pan must be done within 5 minutes of the liquid gasket application.
   - Wait at least 30 minutes before filling the engine with oil.

   Oil pan bolts : 6.3 - 8.3 N·m (0.64 - 0.85 kg-m, 55.6 - 73.8 in-lb)

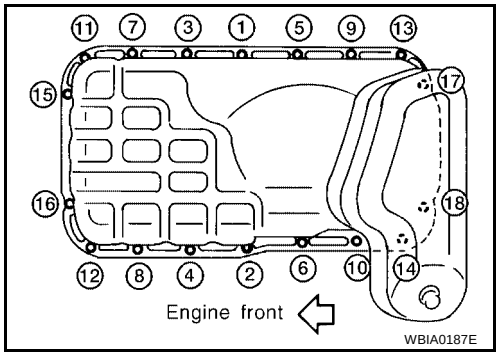

5. Install the remaining components in the reverse order of removal.

TIMING BELT

PFP:13028

Components

EBS0095M

SEC. 120•130•135

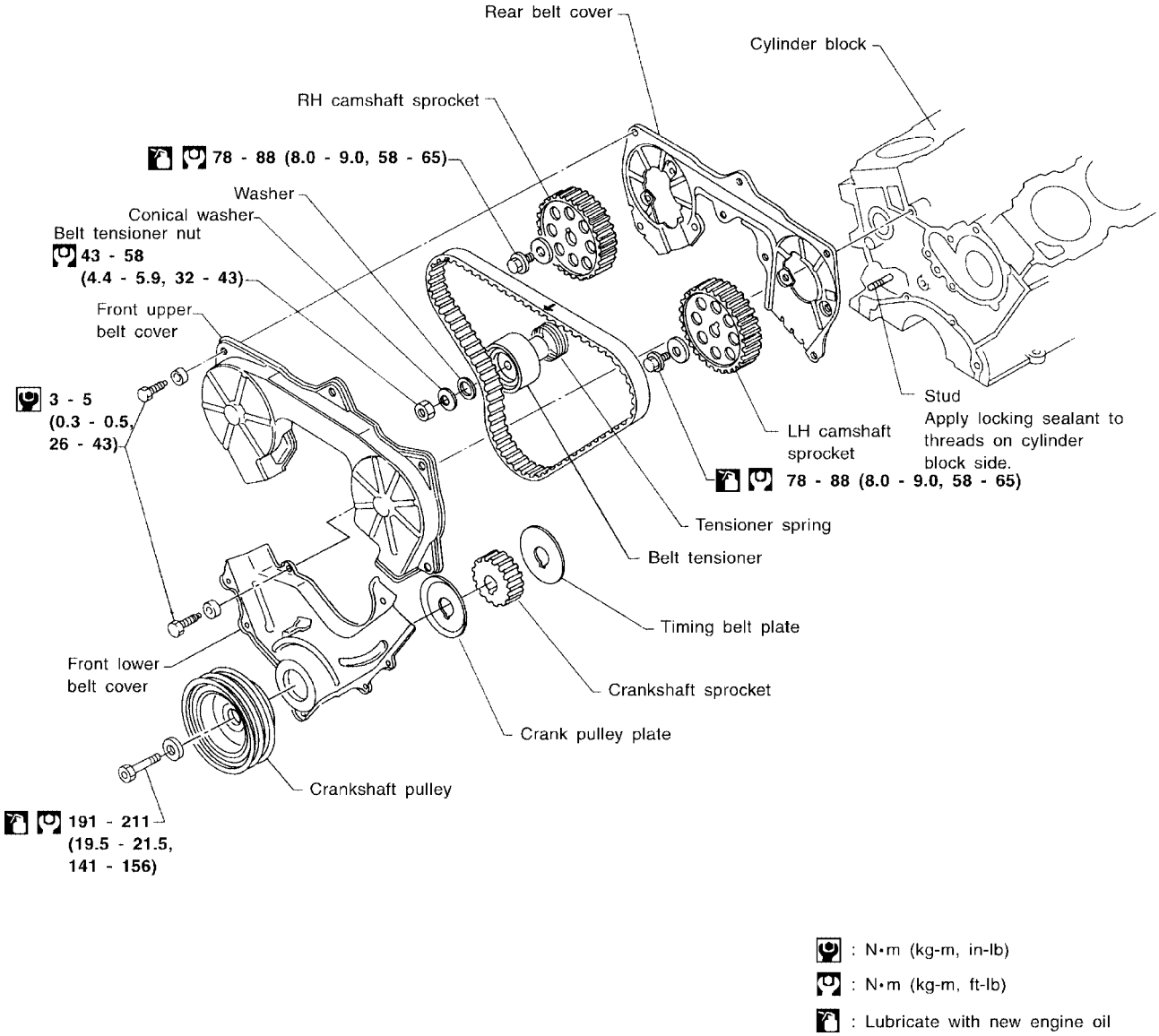

WBIA0101E

CAUTION:

- **Do not bend or twist timing belt.**
- **After removing timing belt, do not turn crankshaft and camshaft separately because valves will strike piston heads.**
- **Make sure that timing belt, camshaft sprocket, crankshaft sprocket and belt tensioner are clean and free from oil and water.**
- **Installation should be carried out when engine is cold.**

Removal

EBS0095N

1. Remove the engine under cover.
2. Drain the engine coolant from the radiator. Refer to MA-26, "DRAINING ENGINE COOLANT" .

CAUTION:
Do not spill coolant on the engine drive belts.

3. Remove the radiator. Refer to CO-30, "Removal and Installation" .
4. Remove the engine cooling fan and water pump pulley.
5. Remove the following drive belts:
   - Power steering pump drive belt
   - Compressor drive belt
   - Alternator drive belt
   - Supercharger drive belt (if equipped)
6. Remove all of the spark plugs.
7. Remove the distributor protector.
8. Remove the compressor drive belt idler bracket.
9. Disconnect the fresh-air intake tube from the rocker cover.
10. Disconnect the water hose from the thermostat housing.
11. Set the No. 1 piston at TDC on the compression stroke by rotating the crankshaft.
12. Remove the crankshaft pulley bolt.
13. Remove the crankshaft pulley using a suitable puller.

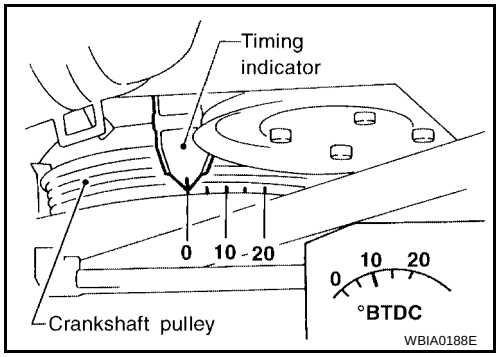

14. Remove the front upper and lower timing belt covers.

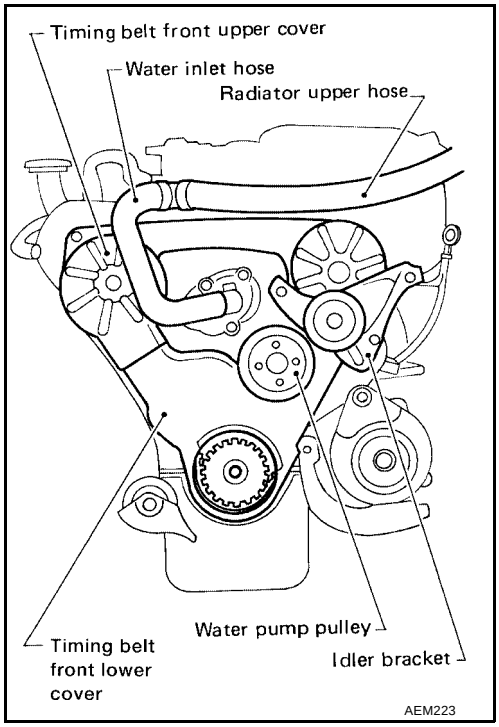

15. Align the timing belt sprockets to the timing marks on the engine.
    - Align the punchmark on the LH camshaft sprocket with the punchmark on the timing belt rear cover.
    - Align the punchmark on the crankshaft sprocket with the alignment mark on the oil pump housing.
    - Temporarily install the crankshaft pulley bolt on the crankshaft, to rotate the crankshaft.

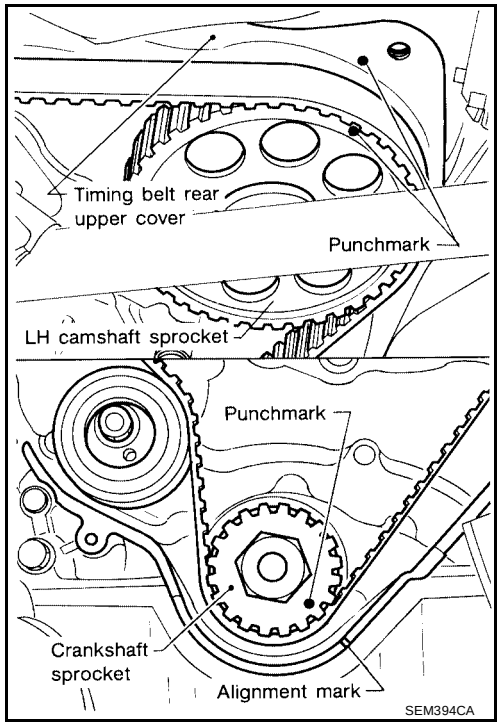

16. Loosen the timing belt tensioner nut, rotate the tensioner, then remove the timing belt.

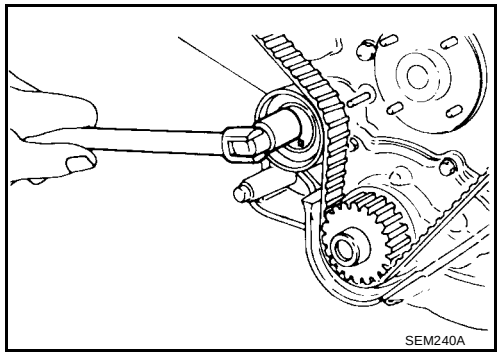

Inspection

EBS0095O

Visually check the condition of the timing belt. Replace the timing belt as necessary.

Item to check	Visual inspection	Cause
Tooth is broken/tooth root is cracked.	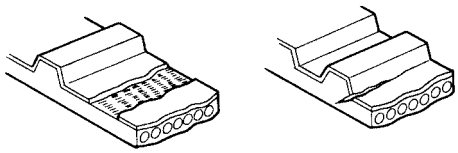 SEM394A	● Camshaft jamming ● Distributor jamming ● Damaged camshaft/crankshaft oil seal
Back surface is cracked/worn.	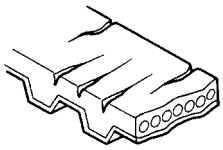 SEM395A	● Tensioner jamming ● Overheated engine ● Interference with belt cover

Item to check	Visual inspection	Cause
● Side surface is worn. ● Belt corners are worn and round. ● Wicks are frayed and coming out.	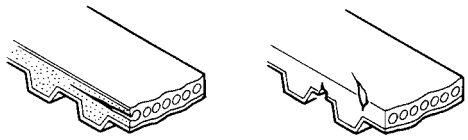 SEM396A	● Improper installation of belt ● Malfunctioning crankshaft pulley plate/timing belt plate
● Teeth are worn. ● Canvas on tooth face is worn down. ● Canvas on tooth is fluffy, rubber layer is worn down and faded white, or weft is worn down and invisible.	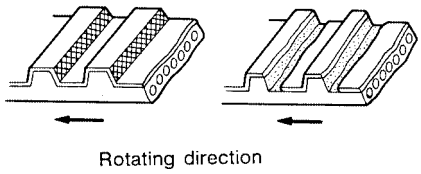 SEM397A	● Poor belt cover sealing ● Coolant leakage at water pump ● Camshaft not functioning properly ● Distributor not functioning properly ● Excessive belt tension
Oil, coolant, or water contaminated the belt.	—	● Poor oil sealing of each oil seal ● Coolant leakage at water pump ● Poor belt cover sealing

BELT TENSIONER AND TENSIONER SPRING

1. Check the belt tensioner for smooth turning.
2. Check the condition of the tensioner spring.
3. Replace the tensioner as necessary.

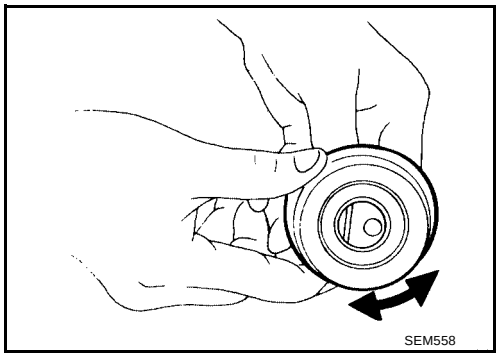
SEM558

Installation

EBS0095P

1. Confirm that the No. 1 piston is set at TDC on the compression stroke.

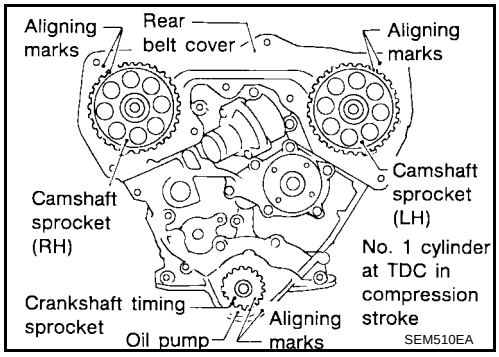

SEM510EA

2. Install the tensioner and tensioner spring.
   - Once the stud is removed, apply a locking sealant to the threads of the stud on the cylinder block side before installing.

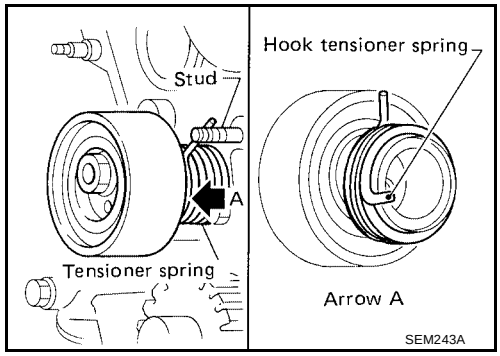

3. Turn the tensioner fully outward with a hexagon wrench, and temporarily tighten the lock nut.

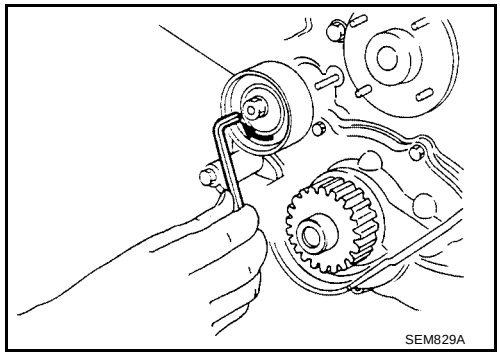

4. Set the timing belt when the engine is cold.
   1. Point the arrow on timing belt toward the front of the belt cover.
   2. Align the white lines on the timing belt with the punchmarks on the camshaft sprockets and crankshaft sprocket.

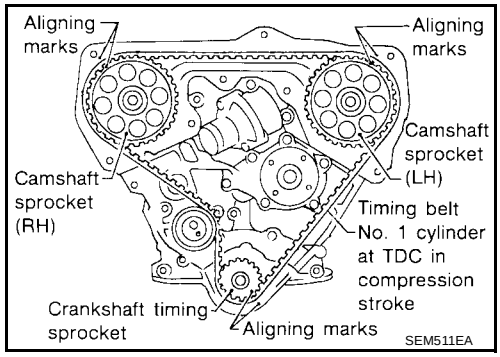

Number of timing belt teeth for installation (reference):

Total number of timing belt teeth		133
Number of teeth between timing marks	Between LH and RH camshaft sprockets	40
	Between LH camshaft sprocket and crankshaft timing sprocket	43

5. Install the remaining parts in the reverse order of removal.

Tension Adjustment

EBS0095Q

AFTER BELT REPLACEMENT

NOTE:

If the timing belt was replaced (or to adjust tension on a used belt), follow this procedure.

1. Loosen the tensioner lock nut, then turn the tensioner clockwise and counterclockwise with a hexagon wrench at least two times.
2. Tighten the tensioner lock nut.
3. Turn the crankshaft clockwise a full rotation at least two times, then slowly set the No. 1 piston at TDC on the compression stroke.

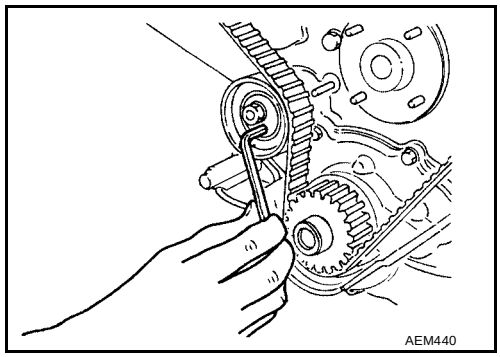

4. Measure the deflection of the timing belt midway between the camshaft sprockets while pushing with the specified force as shown.

Belt deflection when engine is cold (reference value)	**: 13 - 15 mm (0.51 - 0.59 in) at 98 N (10 kg, 22 lb) force**

5. If the belt deflection is not within specification, return to step 1 and repeat the procedure.

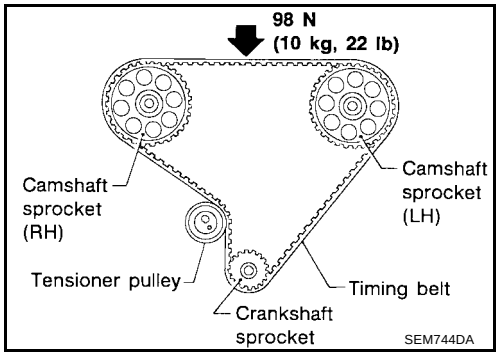

AFTER ENGINE OVERHAUL OR ENGINE REASSEMBLY (WITH ROCKER COVERS REMOVED)

NOTE:

If the engine was overhauled or previously disassembled (i.e. intake manifold or cylinder head were removed), follow this timing belt tension adjustment procedure.

1. Loosen the rocker shaft bolts to relieve the belt tension caused by the camshafts.
2. Loosen the tensioner lock nut, keeping the tensioner steady with a hexagon wrench.
3. Turn the tensioner 70° to 80° degrees clockwise with a hexagon wrench to release the belt tension, and temporarily tighten the lock nut.
4. Turn the crankshaft clockwise at least twice, then slowly set the No. 1 piston at TDC on the compression stroke.

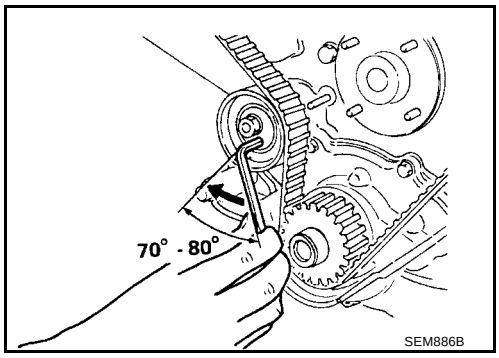

5. Push the middle of the timing belt between the RH camshaft sprocket and tensioner pulley with the specified force [98 N (10 kg, 22 lb)] to apply tension on part "A" and part "B" of the timing belt as shown.
6. Loosen the tensioner lock nut, keeping the tensioner steady with a hexagon wrench.

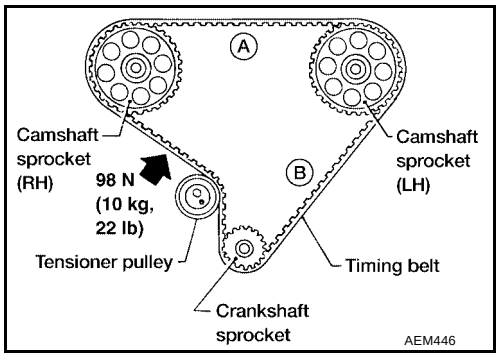

7. Position a feeler gauge size 0.5 mm (0.0206 in) thick and 12.7 mm (0.500 in) wide under the tensioner pulley as shown.

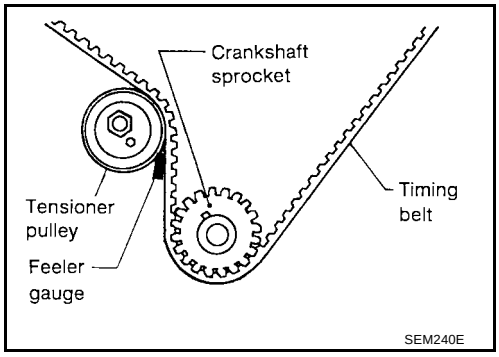

8. Turn the crankshaft clockwise until the feeler gauge is positioned between the tensioner pulley and the timing belt as shown.
   - The timing belt will move about 2.5 teeth.
9. Tighten the tensioner lock nut, keeping the tensioner steady with a hexagon wrench.
10. Turn the crankshaft clockwise or counterclockwise to remove the feeler gauge.
11. Turn the crankshaft clockwise at least two full rotations, then slowly set the No. 1 piston at TDC on the compression stroke.

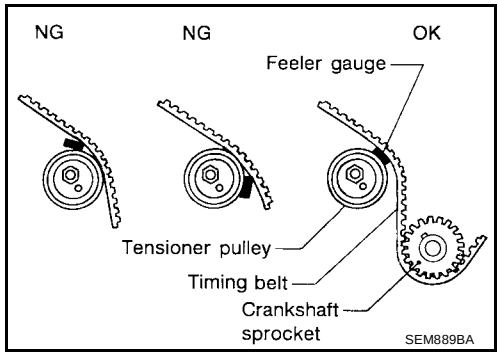

12. Measure the deflection of the timing belt midway between the camshaft sprockets while pushing with a force of 98 N (10 kg, 22 lb) as shown.

Belt deflection when engine is cold (reference value)	**13 - 15 mm (0.51 - 0.59 in) at 98 N (10 kg, 22 lb) force**

13. If the belt deflection is not within specification, return to step 1 and repeat procedure.

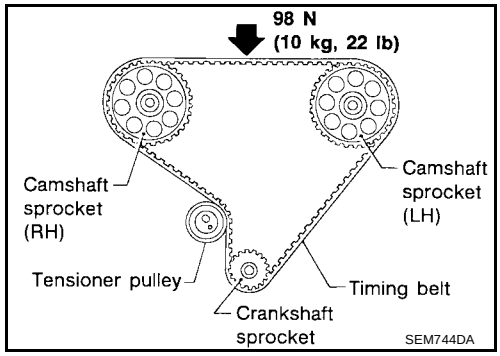

14. Install the lower and upper belt covers.

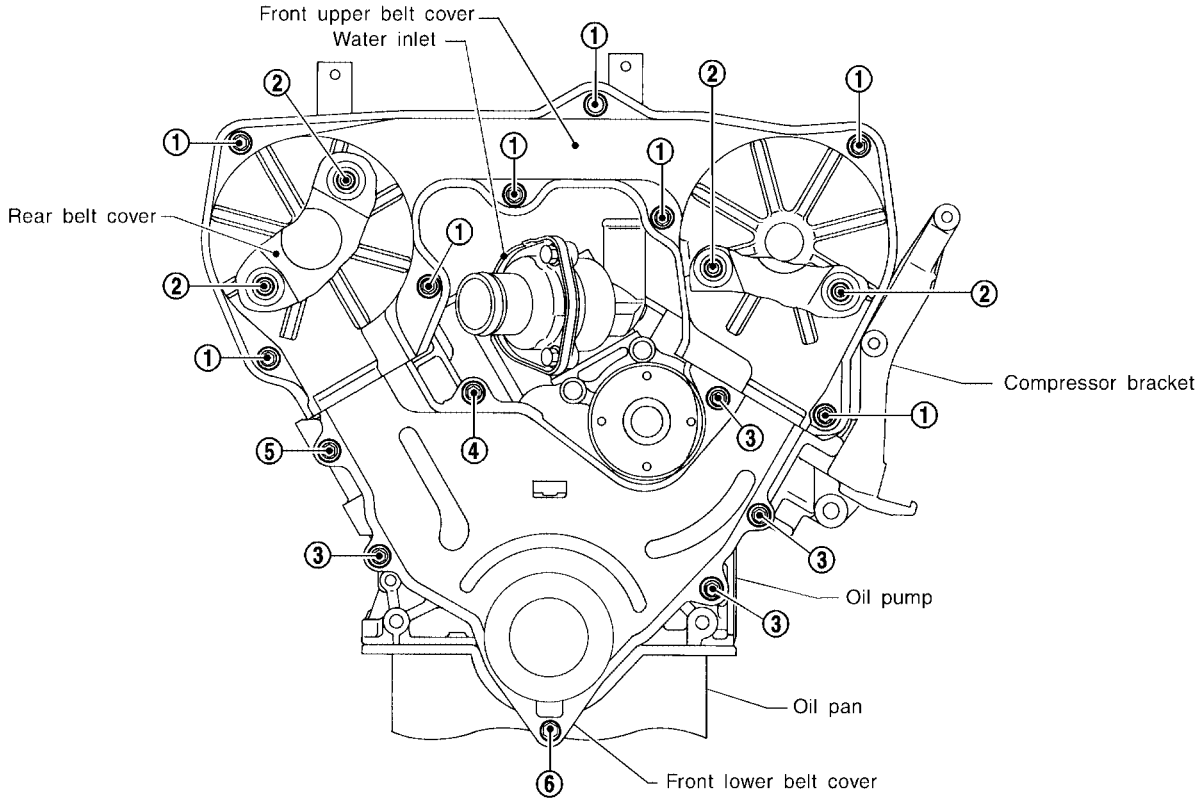

No.	Tightened parts		No.	Tightened parts	
①	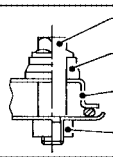 Bolt Rubber washer Front upper belt cover Welded nut	8 pcs.	④	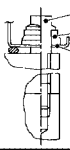 Bolt Rubber washer Front lower belt cover	1 pc.
②	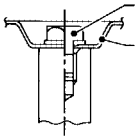 Hexagon bolt with washer Rear belt cover	4 pcs.	⑤	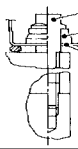 Bolt Rubber washer Front lower belt cover	1 pc.
③	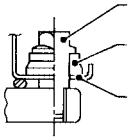 Bolt Rubber washer Front lower belt cover	4 pcs.	⑥	 Bolt Front lower belt cover Lock spring washer	1 pc.

SEM313F

15. Install the remaining components in the reverse order of removal.

OIL SEAL

PFP:00100

Replacement

EBS0095R

VALVE OIL SEAL

1. Remove the rocker cover.
2. Remove the rocker shaft assembly and valve lifters with the valve lifter guide.
3. Remove the valve spring using Tool as shown.
   - The piston concerned should be set at TDC to prevent the valve from falling into the cylinder bore.

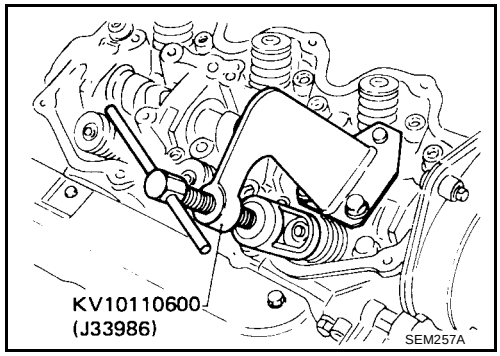

4. Remove the valve oil seals.
   - When removing the intake side valve oil seal, use Tool or a suitable tool.
   - When removing the exhaust side valve oil seal, pull it out with a suitable tool.

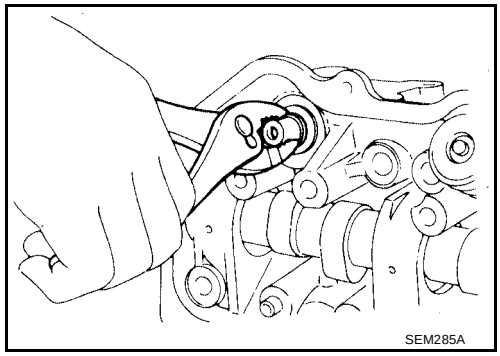

5. Apply new engine oil to the new valve oil seal and install it to specification as shown.
   - When installing intake side valve oil seal, use Tool as shown.
   - When installing exhaust side valve oil seal, set it by hand.

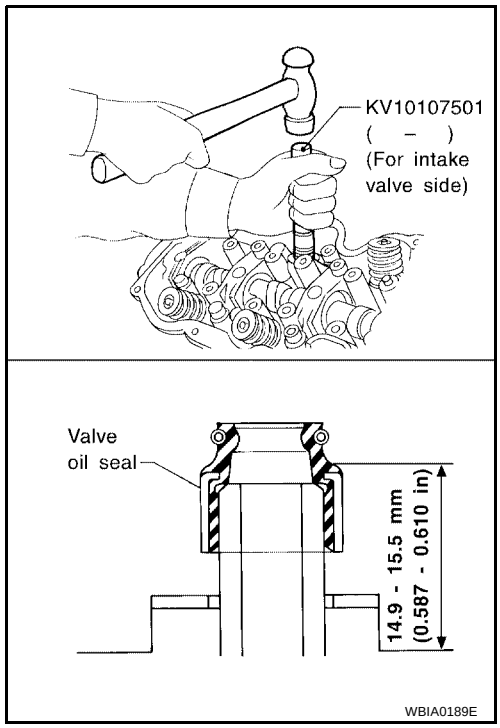

CAMSHAFT OIL SEAL

1. Remove the timing belt. Refer to EM-91, "Removal" .
2. Remove the camshaft sprocket. Refer to EM-104, "Components" .
3. Remove the camshaft. Refer to EM-108, "Disassembly" .
4. Remove the camshaft oil seal.

CAUTION:
Be careful not to scratch camshaft.

5. Apply new engine oil to the new camshaft oil seal.
6. Position the oil seal in the specified direction as shown.

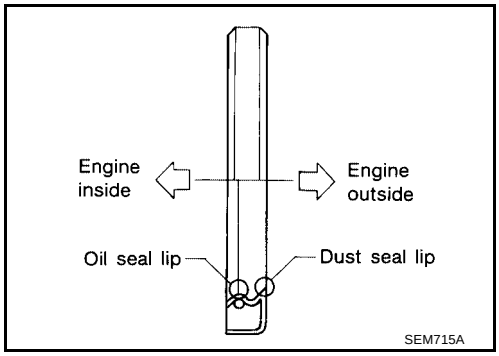

7. Install the oil seal using Tool as shown.

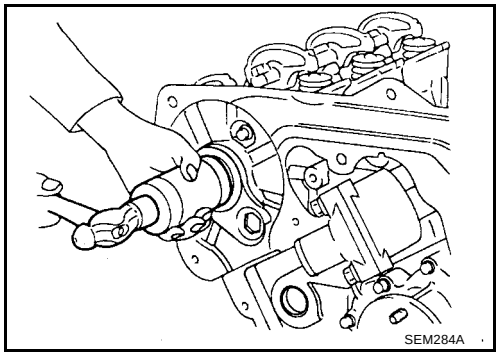

8. Install the remaining components in the reverse order of removal.

FRONT OIL SEAL

1. Remove the timing belt and crankshaft sprocket. Refer to EM-91, "Removal" .
2. Remove the oil pump assembly. Refer to LU-16, "Removal and Installation" .
3. Remove the front oil seal from the oil pump body.

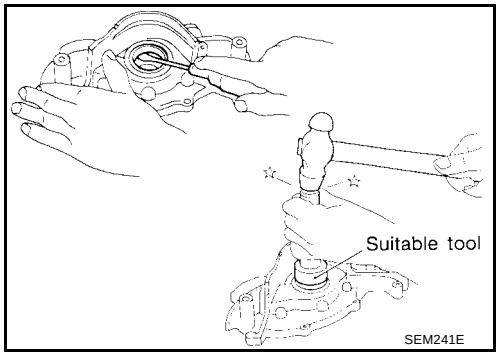

4. Apply new engine oil to the new oil seal.
5. Position the oil seal with the correct orientation as shown.

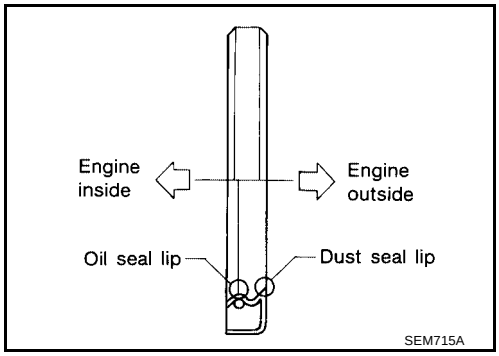

6. Install the new oil seal using a suitable tool as shown.

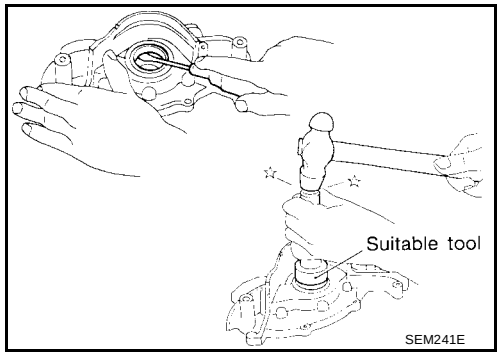

7. Install the remaining components in the reverse order of removal

REAR OIL SEAL

1. Remove the flywheel or drive plate. Refer to CL-12, "Components" .
2. Remove the rear oil seal retainer.
3. Remove the rear oil seal from the retainer.

   CAUTION:
   Be careful not to scratch the rear oil seal retainer.
4. Apply new engine oil to the new oil seal.
5. Position the new oil seal as shown.

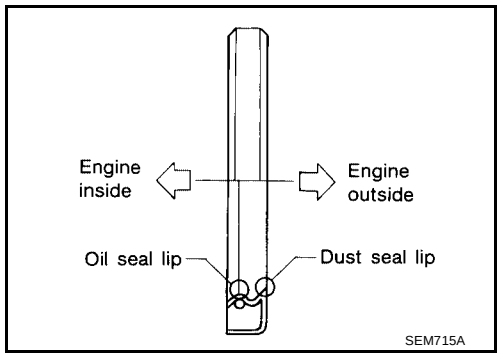

6. Install the new oil seal using a suitable tool.

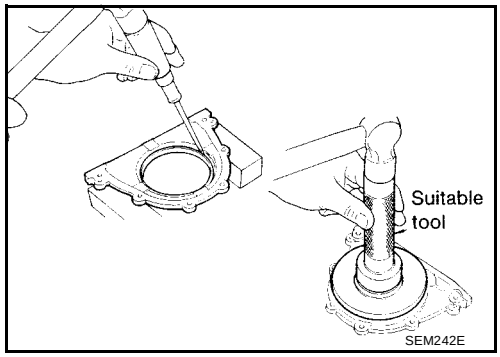

7. Install the rear oil seal retainer with a new gasket on the cylinder block.

   CAUTION:
   Always use a new oil seal retainer gasket.
8. Install the remaining components in the reverse order of removal.

CYLINDER HEAD

PFP:11041

Measurement of Compression

EBS00EY7

1. Warm up the engine.
2. Turn the ignition switch OFF.
3. Release the fuel pressure. Refer to EC-619, "FUEL PRESSURE RELEASE" (VG33E), EC-1222, "FUEL PRESSURE RELEASE" (VG33ER).
4. Remove all of the spark plugs.
   - Clean the area around the spark plug with compressed air before removing the spark plugs.
5. Disconnect the camshaft position sensor harness connector at the distributor.
6. Remove the fuel injector fuse **3** on FUSE BLOCK (J/B) behind the instrument panel lower panel. Refer to PG-63, "FUSE BLOCK — JUNCTION BOX (J/B)" .
7. Attach the compression tester to the spark plug hole for the No. 1 cylinder.

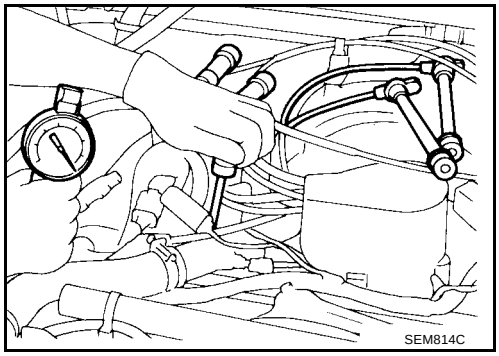

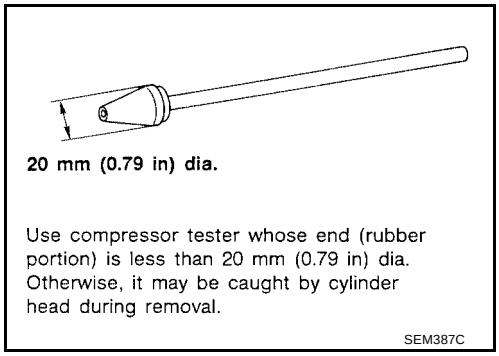

8. Depress the accelerator pedal fully to keep the throttle valve wide open.
9. Crank the engine and record the highest compression tester gauge reading.
10. Repeat the measurement on each cylinder.

    NOTE:
    Always use a fully-charged battery to obtain the specified engine speed.

Compression	**: kPa (kg/cm^2 , psi)/300 rpm**
Standard	**: 1,196 (12.2, 173)**
Minimum	**: 883 (9.0, 128)**
Difference limit between cylinders	**: 98 (1.0, 14)**

11. If the cylinder compression in one or more cylinders is low, pour a small amount of engine oil into the cylinders through the spark plug holes and retest the compression.
    - If adding oil improves the cylinder compression, the piston rings may be worn or damaged. If so, replace the piston rings after checking the piston.
    - If the pressure stays low, a valve may be sticking or seating improperly. Inspect and repair the valve and valve seat. If the valve or valve seat is damaged, replace them as necessary. Refer to EM-110, "Inspection" .
    - If the compression in any two adjacent cylinders is low and if adding oil does not improve the compression, there is possible leakage past the head gasket. If so, replace the cylinder head gasket.

12. Reinstall all the spark plugs, fuel injector fuse, fuel pump fuse, and reconnect the camshaft position sensor harness connector at the distributor.
13. Erase the DTC stored in the ECM.

    CAUTION:
    Always erase the DTC after checking compression.
    Refer to EC-634, "HOW TO ERASE EMISSION-RELATED DIAGNOSTIC INFORMATION" (VG33E), EC-1237, "HOW TO ERASE EMISSION-RELATED DIAGNOSTIC INFORMATION" (VG33ER).

Components

EBS00EY8

SEC. 102•111•130

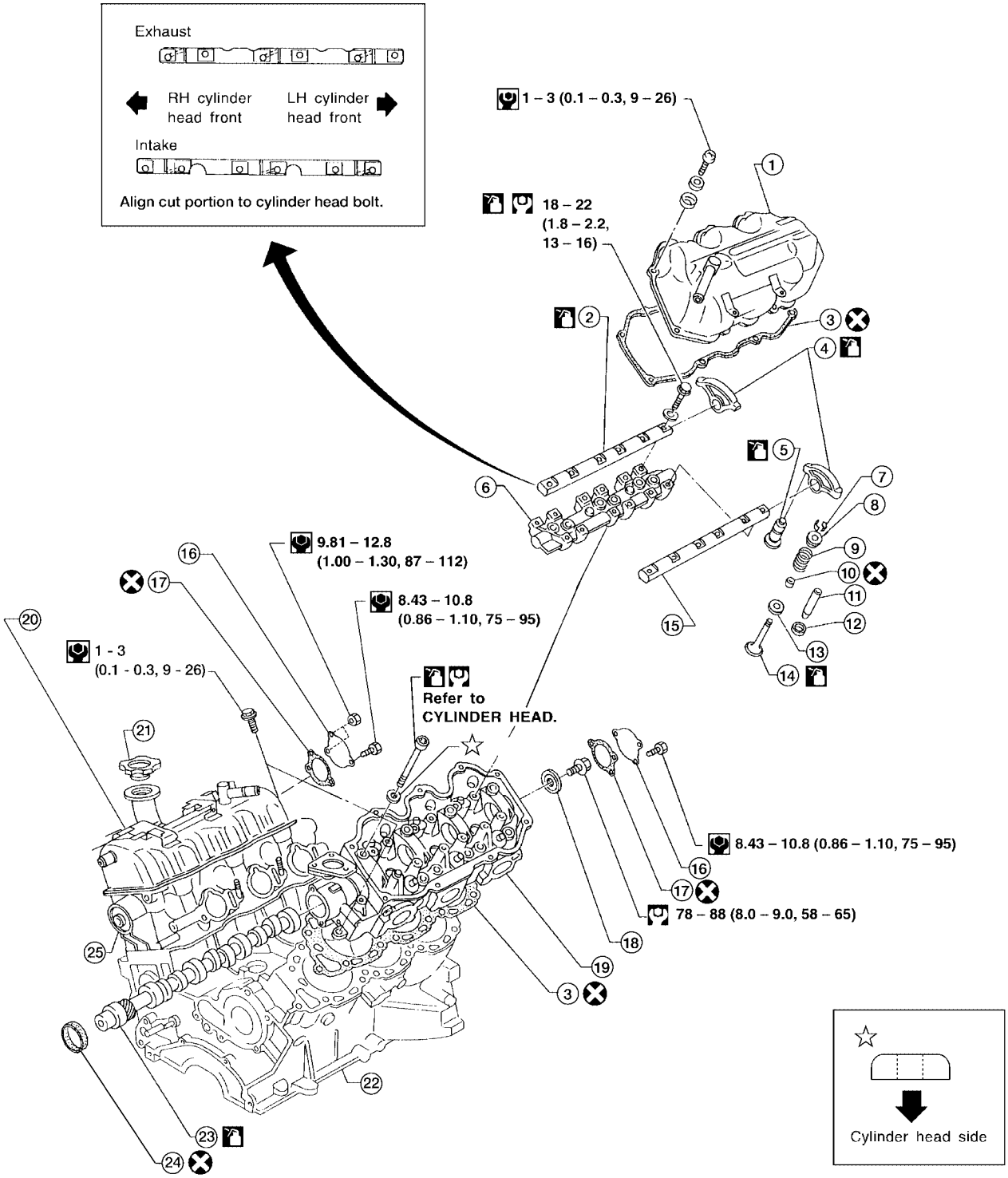

: N•m (kg-m, in-lb)

: N•m (kg-m, ft-lb)

: Lubricate with new engine oil

: Always replace after every disassembly.

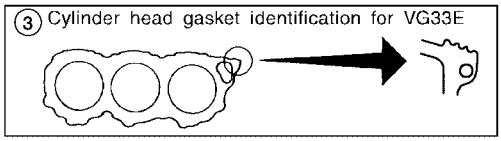

WBIA0190E

1. LH rocker cover
2. Intake rocker shaft
3. Gasket
4. Rocker arm
5. Hydraulic valve lifter
6. Valve lifter guide
7. Valve collet
8. Valve spring
9. Valve spring
10. Valve oil seal
11. Valve guide
12. Valve seat
13. Valve spring seat
14. Exhaust valve
15. Exhaust rocker shaft
16. Cylinder head rear cover
17. Rear cover gasket
18. Camshaft locate plate
19. LH cylinder head
20. RH rocker cover
21. Oil filler cap
22. Cylinder block
23. LH camshaft
24. Camshaft front oil seal
25. RH cylinder head

Removal

EBS0095T

1. Release the fuel pressure. Refer to EC-619, "FUEL PRESSURE RELEASE" (VG33E), EC-1222, "FUEL PRESSURE RELEASE" (VG33ER).
2. Remove the timing belt. Refer to EM-91, "Removal" .
3. Drain the engine coolant by removing the drain plugs from both sides of the cylinder block.

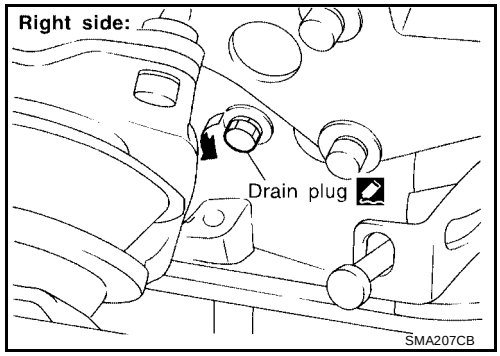

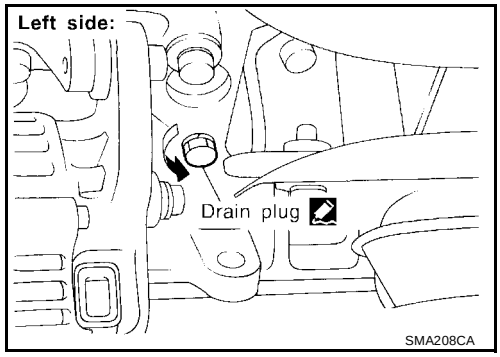

4. Separate the ASCD and accelerator control wires from the intake manifold collector (VG33E only).
5. Remove the intake manifold collector (VG33E only).

6. The following parts must be disconnected.
a. Harness connectors for:
   - IACV-AAC valve
   - Throttle position sensor
   - Throttle position switch
   - Distributor (ignition coil)
   - Distributor
   - EGRC solenoid valve (VG33E only)
   - EGR temperature sensor (VG33E only)
b. Water hoses from collector
c. Heater hoses
d. PCV hose from RH/LH rocker cover
e. Vacuum hoses for:
   - Brake master cylinder
   - Pressure regulator
f. Purge hose from purge control valve
g. Spark plug wires
h. Distributor assembly
i. Three left/right bank injector connectors
j. Ground harness

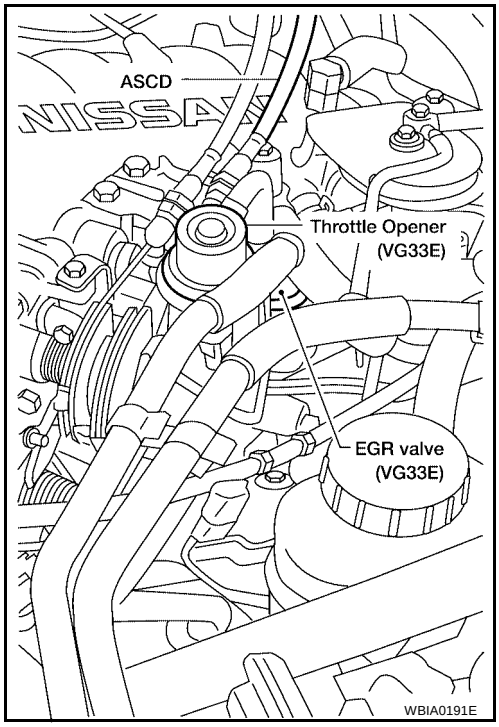

7. Remove the fuel feed and fuel return hoses from the injector fuel tube assembly.
8. Disconnect the right injector harness connectors.

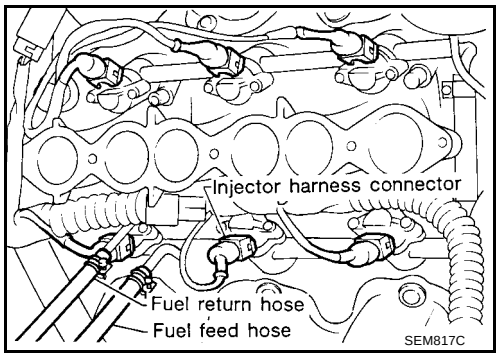

9. Remove the injector fuel tube assembly.
10. Remove the intake manifold from the engine, loosen the bolts in numerical order as shown. The following parts should be disconnected to remove intake manifold:
   - Engine coolant temperature switch harness connector
   - Thermal transmitter harness connector
   - Water hose from the thermostat housing

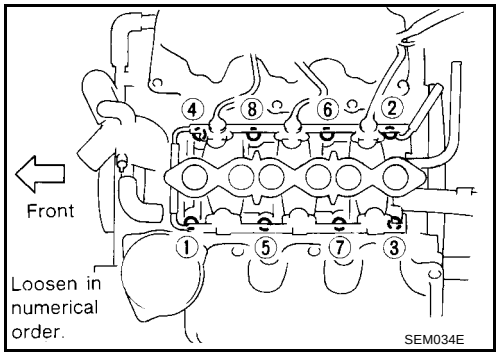

11. Remove both of the camshaft sprockets.

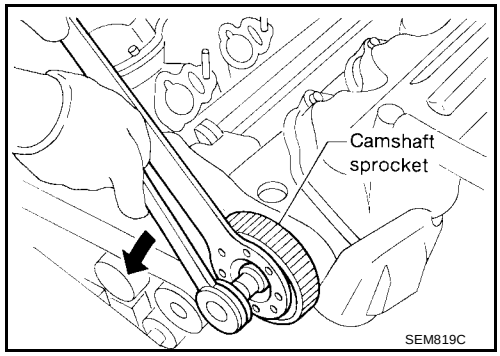

12. Remove the rear timing belt cover.
13. Remove the distributor and ignition wires.

CAUTION:
After removing the distributor from the cylinder head, do not rotate the distributor rotor.

14. Remove the harness clamp from RH rocker cover.
15. Remove the front exhaust tube from the exhaust manifold. Refer to EX-3, "Removal and Installation" .
16. Remove the A/C compressor and generator. Refer to MTC-69, "Removal and Installation for Compressor" (A/C compressor), SC-37, "Removal" (generator).
17. Remove the power steering pump. Refer to PS-17, "Components" .
18. Remove the A/C compressor, generator, and power steering pump brackets.

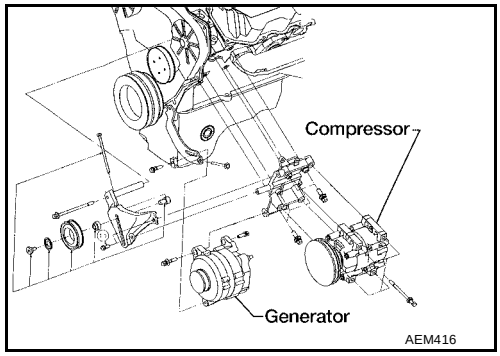

19. Loosen and remove the bolts from both rocker covers in the order shown. Remove both rocker covers.

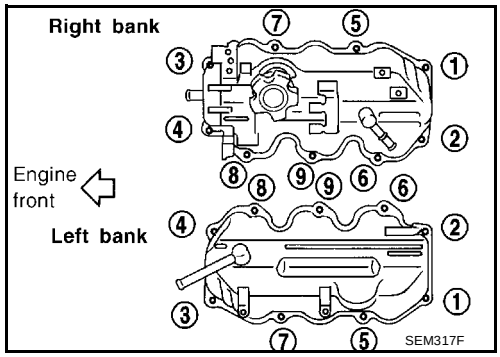

20. Remove the cylinder head with exhaust manifold, loosen the bolts in the numerical order as shown.
    - A warped or cracked cylinder head could result from not removing the cylinder head bolts in the specified numerical order.
    - Loosen the cylinder head bolts in two or three steps.

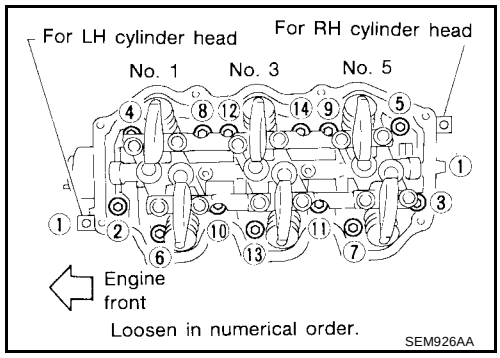

Disassembly

EBS0095U

CAUTION:

- **When installing sliding parts such as rocker arms, camshafts and oil seals, be sure to apply new engine oil on the sliding surfaces.**
- **When tightening cylinder head bolts and rocker shaft bolts, apply new engine oil to thread portions and seat surfaces of bolts.**
- **Do not disassemble hydraulic valve lifter.**
- **Attach tags to the valve lifters so they are installed in their original positions.**
- **If hydraulic valve lifter is kept on its side, there is a risk of air entering it. After removal, always set hydraulic valve lifter straight up, or when laying it on its side, have it soak in new engine oil.**

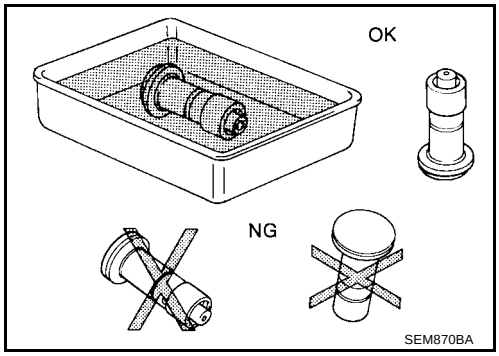

1. Remove exhaust manifolds from cylinder head, loosen the bolts in the numerical order as shown.

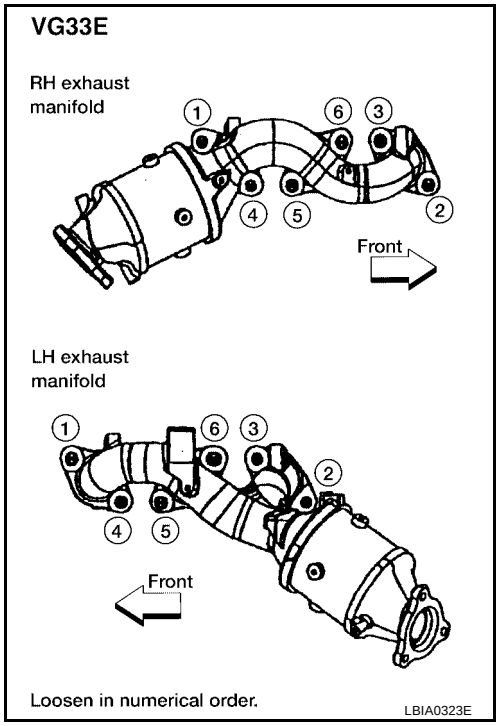

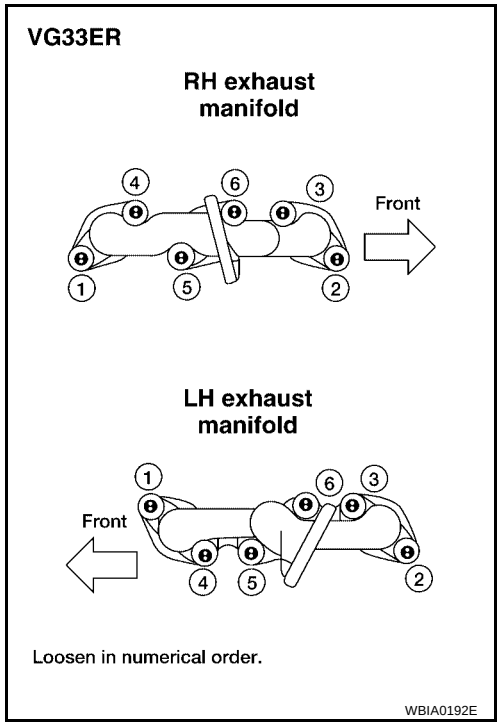

2. Remove the rocker shafts with the rocker arms.
   - Loosen the bolts in two or three steps.
3. Remove the hydraulic valve lifters and lifter guide.
   - Hold the hydraulic valve lifters with wire so that they will not drop out of the lifter guide.

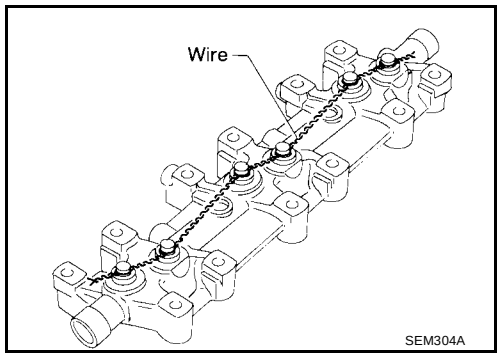

4. Remove the oil seal and camshaft.
   - Before removing the camshaft, measure the camshaft end play. Refer to EM-111, "CAMSHAFT END PLAY" .
5. Remove the valve components using Tool as shown.

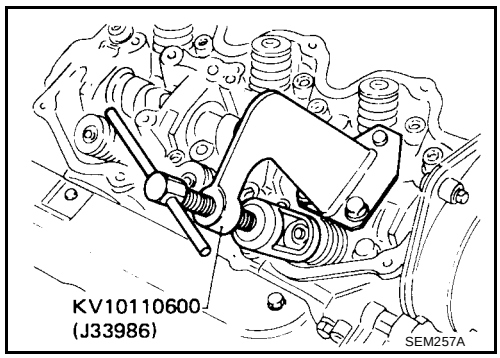

6. Remove the valve oil seals using Tool or suitable tool.

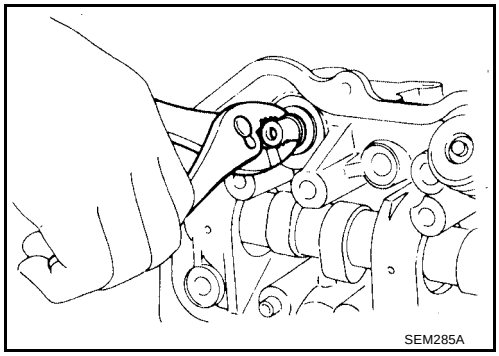

Inspection

EBS0095V

CYLINDER HEAD DISTORTION

1. Measure the cylinder head sealing surface using a straight edge and a feeler gauge as shown. If the surface flatness is beyond the specified limit, resurface it or replace it as necessary.

   NOTE:
   The resurfacing limit of the cylinder head is determined by the amount of cylinder block resurfacing necessary.

   Head surface flatness : less than 0.1 mm (0.004 in)

   Resurfacing limit:
   Amount of cylinder head resurfacing is "A".
   Amount of cylinder block resurfacing is "B".

   Maximum resurfacing limit (A + B) : 0.2 mm (0.008 in)

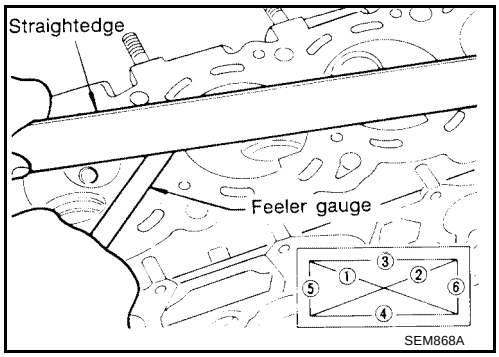

2. After resurfacing cylinder head, check the nominal cylinder head height is within specification. Check that the camshaft rotates freely by hand. If resistance is felt, the cylinder head must be replaced.

   Nominal cylinder head height : 106.8 - 107.2 mm (4.205 - 4.220 in)

CAMSHAFT VISUAL CHECK

Check camshaft for scratches, seizure and wear. Replace as necessary.

CAMSHAFT RUNOUT

1. Support the camshaft at the No. 2 and No. 4 camshaft journals.
2. Measure camshaft runout at the No. 3 journal as shown.
3. If the measured runout exceeds the limit, replace the camshaft.

   Runout limit (total indicator reading) : 0.1 mm (0.004 in)

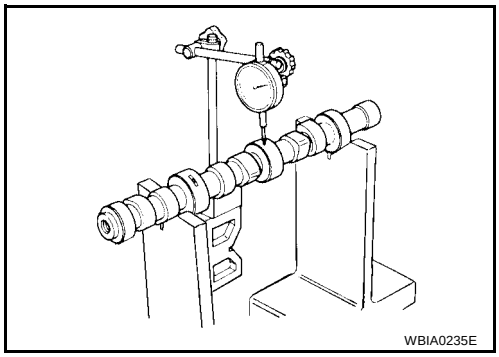

CAMSHAFT CAM HEIGHT

1. Measure the camshaft cam height as shown.

   Standard cam height for intake and exhaust : 38.943 - 39.133 mm (1.5332 - 1.5407 in)

   Cam wear limit : 0.15 mm (0.0059 in)

2. If the measured wear is beyond the limit, replace the camshaft.

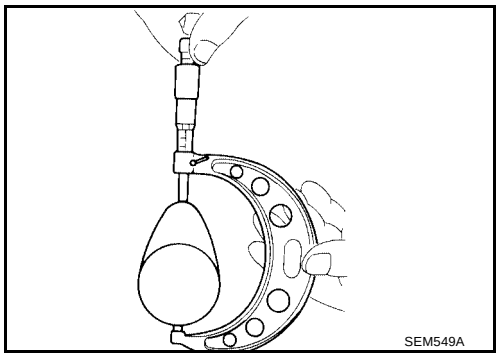

CAMSHAFT JOURNAL CLEARANCE

1. Measure the outer diameter of the camshaft journal.

   Standard outer camshaft journal diameter

   A : 46.920 - 46.940 mm (1.8472 - 1.8480 in)

   B : 42.420 - 42.440 mm (1.6701 - 1.6709 in)

   C : 47.920 - 47.940 mm (1.8866 - 1.8874 in)

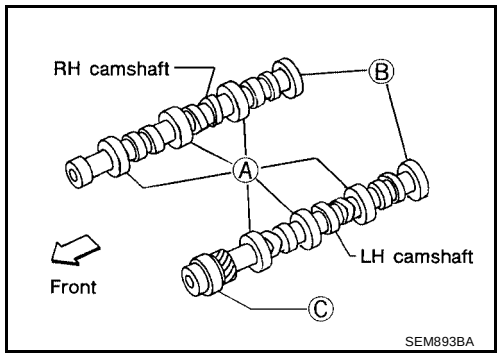

2. Measure the inner diameter of the camshaft bearing for the corresponding camshaft journal positions measured in step 1.

   Standard inner camshaft bearing diameter

   A : 47.000 - 47.025 mm (1.8504 - 1.8514 in)

   B : 42.500 - 42.525 mm (1.6732 - 1.6742 in)

   C : 48.000 - 48.025 mm (1.8898 - 1.8907 in)

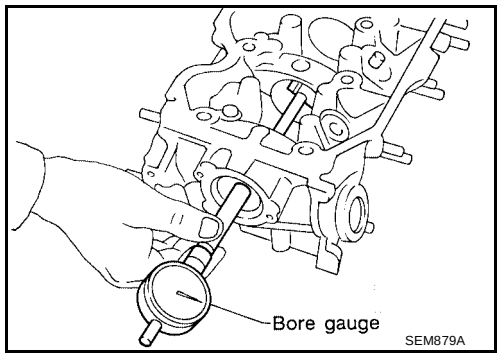

3. The camshaft journal is the difference between the outer diameter of the camshaft journal and the inner diameter of the camshaft bearing. If the clearance exceeds the limit, replace camshaft and/or cylinder head.

   Camshaft journal clearance limit : 0.15 mm (0.0059 in)

CAMSHAFT END PLAY

1. Install the camshaft and the locate plate in the cylinder head.
2. Measure the camshaft end play.

   Standard camshaft end play : 0.03 - 0.06 mm (0.0012 - 0.0024 in)

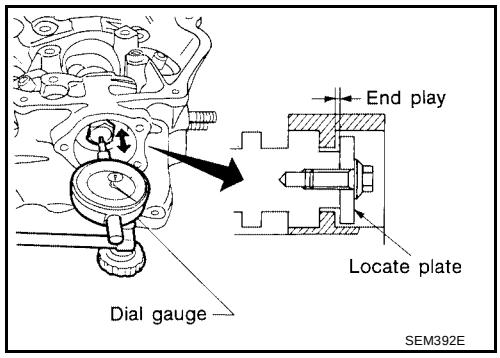

3. If it is out of the specified range, select thickness of camshaft locate plate to obtain standard specified end play.
   Example:
   When camshaft end play is 0.08 mm (0.0031 in) with camshaft locate plate 1 replace camshaft locate plate 1 with camshaft locate plate 4 to set the end play at 0.04 mm (0.0016 in).

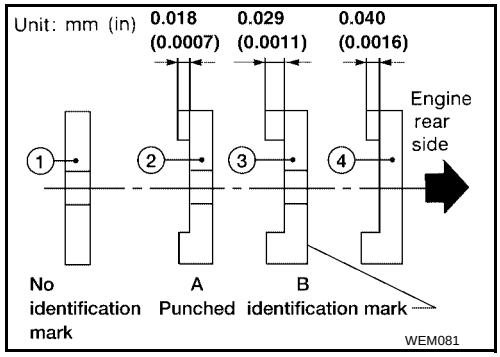

CAMSHAFT SPROCKET RUNOUT

1. Support the camshaft at the No. 2 and No. 4 camshaft journals.
2. Install the sprocket on the camshaft.

3. Measure the camshaft sprocket runout.

Runout limit (total indicator reading) **: 0.1 mm (0.004 in)**

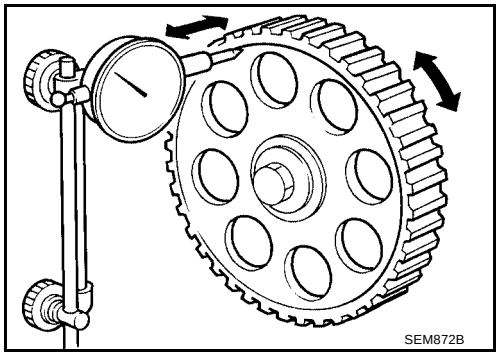

4. If the runout exceeds the limit, replace the camshaft sprocket.

VALVE GUIDE CLEARANCE

1. Measure the valve deflection at a right-angled direction to the camshaft. The valve and valve guide mostly wear in that direction.

Valve deflection limit (dial gauge reading) **: 0.20 mm (0.0079 in)**

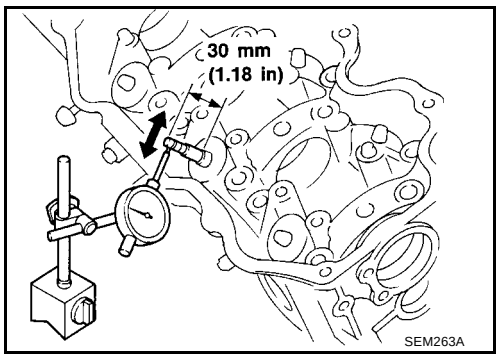

2. If the valve guide deflection exceeds the limit, check the valve to valve guide clearance.

a. Measure valve stem diameter and valve guide inner diameter as shown.

b. Check that the valve to valve guide clearance is within specification.

Valve to valve guide clearance

Intake **: 0.020 - 0.053 mm (0.0008 - 0.0021 in)**

Exhaust **: 0.030 - 0.049 mm (0.0012 - 0.0019 in)**

Limit **: 0.10 mm (0.0039 in)**

c. If the valve to valve guide clearance exceeds the limit, replace the valve or valve guide as necessary.

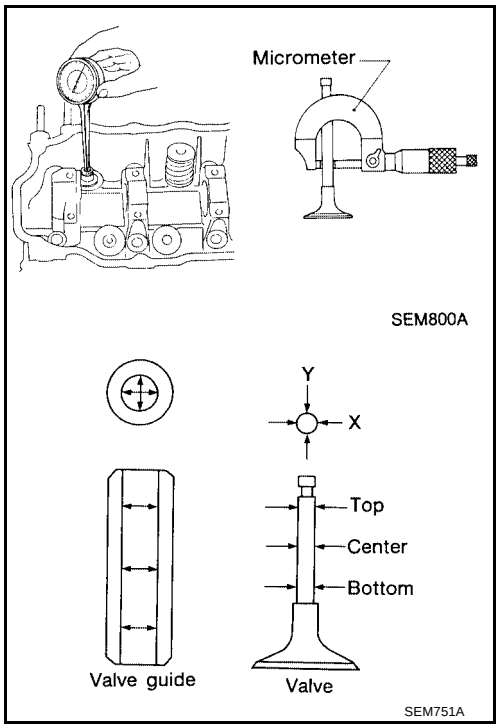

VALVE GUIDE REPLACEMENT

1. To remove the valve guide, heat cylinder head to 150° - 160°C (302° - 320°F) by soaking it in heated oil.

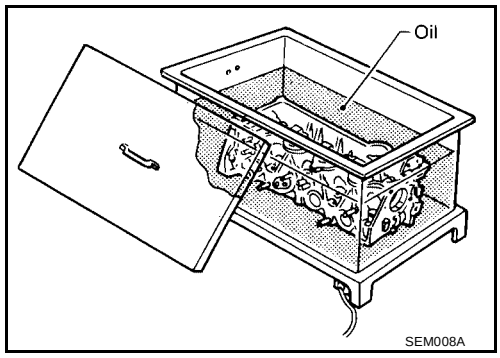

2. Drive out the valve guide using a press with a pressure limited to under 20 kN (2 ton, 2.2 US ton, 2.0 Imp ton) of pressure, or a hammer and suitable tool.

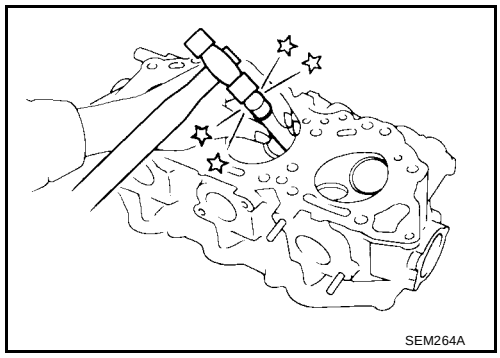

3. Ream out the cylinder head valve guide hole to specification for the service valve guide part as shown.

Valve guide hole diameter (for service parts)

Intake : 11.175 - 11.196 mm (0.4400 - 0.4408 in)

Exhaust : 12.175 - 12.196 mm (0.4793 - 0.4802 in)

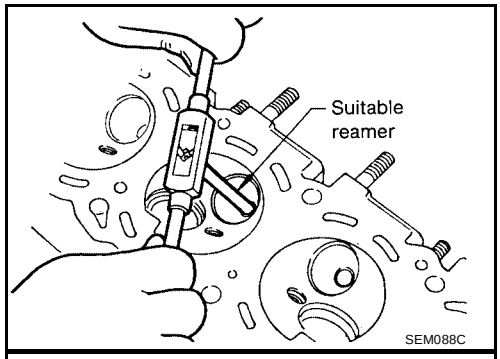

4. Heat the cylinder head to 150° - 160°C (302° - 320°F) in heated oil and press the service valve guide into the cylinder head to the specified height as shown.

Height "L" : 13.2 - 13.4 mm (0.520 - 0.528 in)

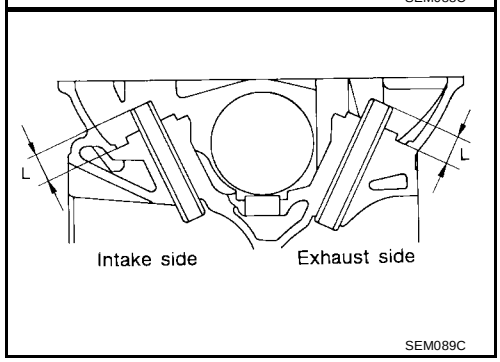

5. Ream out the new service valve guide in the cylinder head to the specified diameter.

Valve guide finished inner diameter

Intake : 7.000 - 7.018 mm (0.2756 - 0.2763 in)

Exhaust : 8.000 - 8.011 mm (0.3150 - 0.3154 in)

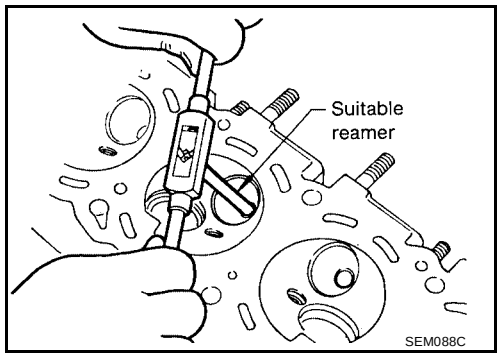

VALVE SEATS

Check the valve seats for any pitting at the valve contact surface, and re-surface or replace the valve seat if it has worn out.

- Before repairing the valve seats, check the valve and valve guide for wear. Refer to EM-145, "Valve" .
- Use both hands to cut the valve seat uniformly.

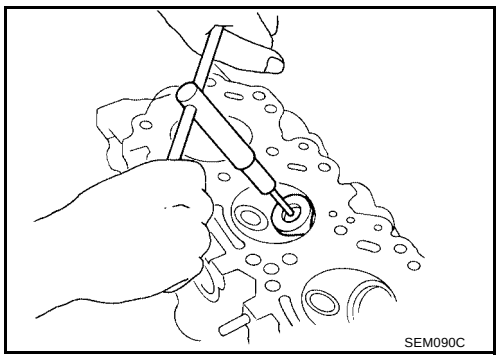

REPLACING VALVE SEAT FOR SERVICE PARTS

1. Bore out the old seat until it collapses. The machine depth stop should be set so that the boring cannot continue beyond the bottom of the face of the valve seat recess in the cylinder head.
2. Ream out the cylinder head recess.

   CAUTION:
   Reaming should be done in circles concentric to the valve guide center so that valve seat will have the correct fit.

   Reaming bore for service valve seat

   Oversize : 0.5 mm (0.020 in)

   Intake : 44.500 - 44.516 mm (1.7520 - 1.7526 in)

   Exhaust : 37.500 - 37.516 mm (1.4764 - 1.4770 in)

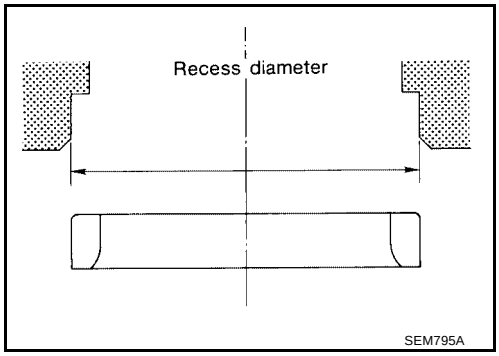

3. Heat the cylinder head to 150° - 160°C (302° - 320°F) by soaking it in heated oil.

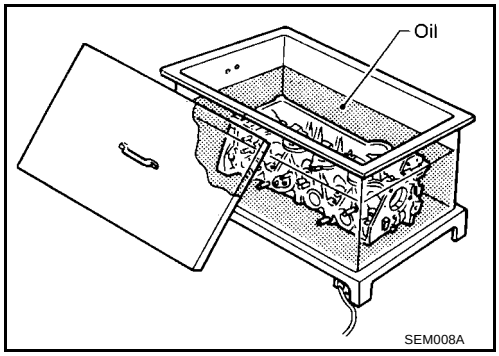

4. Press fit the valve seat into the cylinder head until it seats on the bottom of the valve seat bore.
5. Cut or grind the valve seat using a suitable tool to specification.

Valve	Intake	Exhaust
Seat face angle “α” degrees	45°	45°
Contacting width “W” mm (in)	1.75 (0.0689)	1.7 (0.067)

6. After cutting, lap the valve seat with an abrasive compound.
7. Check the valve seating dimensions.

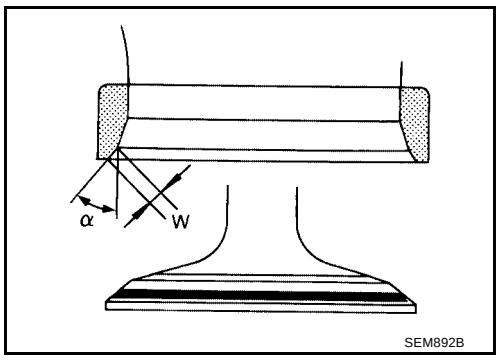

8. Use a depth gauge to measure the distance "L" between the mounting surface of the cylinder head spring seat and the valve stem end as shown.

   Intake : 44.7 - 44.9 mm (1.760 - 1.768 in)
   Exhaust : 45.4 - 45.6 mm (1.787 - 1.795 in)

   - If the distance "L" as shown is shorter than specified, repeat step 5 above to adjust it.
   - If the distance "L" as shown, is longer and the valve stem tip cannot be ground within the specified limit to obtain the specified distance "L", then replace the valve seat with a new one.

   Valve stem tip grinding allowance : 0.2 mm (0.008 in) or less

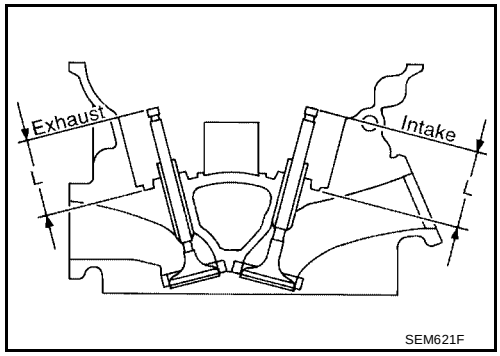

VALVE DIMENSIONS

1. Check the dimensions of each valve. Refer to EM-145, "Valve" .
2. When the valve head has been worn to less then 0.5 mm (0.020 in) in margin thickness "T", replace the valve.

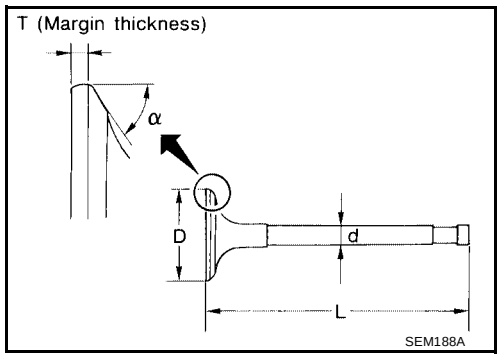

VALVE SPRING

Squareness

1. Measure the “S” dimension of the valve spring against a right angle tool for out-of-square as shown.

   Out-of-square : less than 2.0 mm (0.079 in)

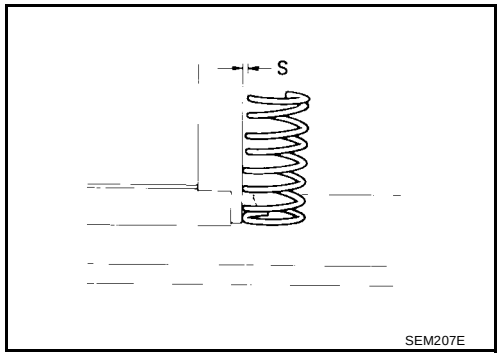

2. If the valve spring out-of-square exceeds the limit, replace the valve spring.

Pressure

1. Check the valve spring pressure at the specified valve open height as shown.

   Standard pressure with valve open : 523.7 N (53.4 kg, 117.7 lb) at 30.0 mm (1.181 in)
   Limit pressure with valve open : 733 N (74.8 kg, 164.8 lb) at 30 mm (1.181 in)

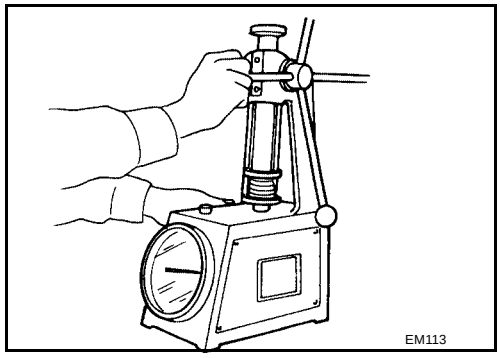

2. If not within specification, replace the valve spring.

ROCKER SHAFT AND ROCKER ARM

1. Check the rocker shafts for scratches, damage, and wear.
2. Check the outer diameter of the rocker shaft.

Rocker shaft outer diameter : 17.979 - 18.000 mm (0.7078 - 0.7087 in)

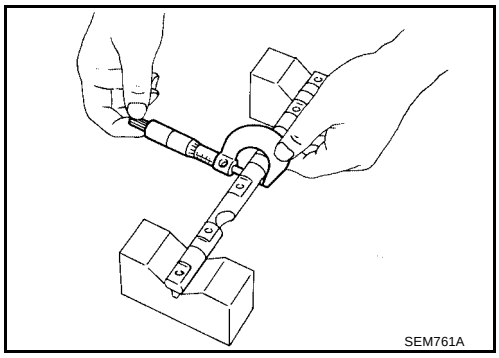

3. Check the inner diameter of the rocker arm.

Rocker arm inner diameter : 18.007 - 18.028 mm (0.7089 - 0.7098 in)

Rocker arm to shaft clearance : 0.007 - 0.049 mm (0.0003 - 0.0019 in)

CAUTION:
Keep the rocker arm with the hydraulic valve lifter standing upright to prevent air from entering the hydraulic valve lifter when checking.

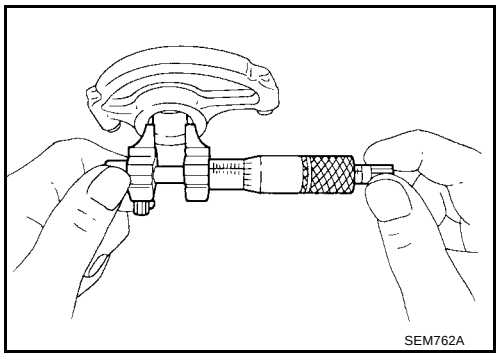

HYDRAULIC VALVE LIFTER

1. Check the contact and sliding surfaces for wear or scratches.
2. Check the outer diameter of the valve lifter.

Valve lifter outer diameter : 15.947 - 15.957 mm (0.6278 - 0.6282 in)

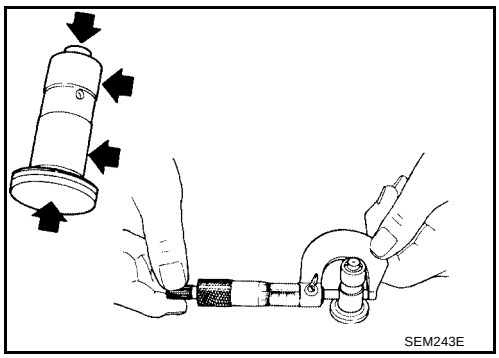

3. Check the valve lifter guide inner diameter.

Valve lifter guide inner diameter : 16.000 - 16.013 mm (0.6299 - 0.6304 in)

Standard clearance between valve lifter and lifter guide : 0.043 - 0.066 mm (0.0017 - 0.0026 in)

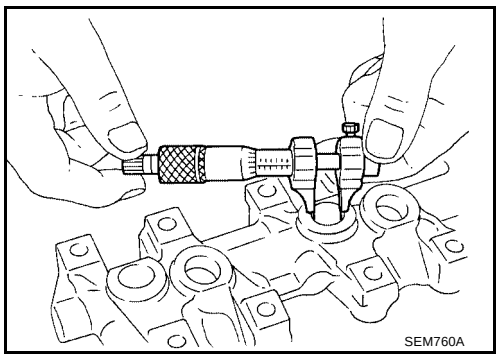

Assembly

EBS0095W

1. Install the valve component parts.
   - Always use a new valve oil seal. Refer to EM-99, "VALVE OIL SEAL" .
   - Install the valve spring (uneven pitch type) with the narrow pitch side toward cylinder head side.
   - After installing valve component parts, use plastic hammer to lightly tap valve stem tip to assure a proper fit.

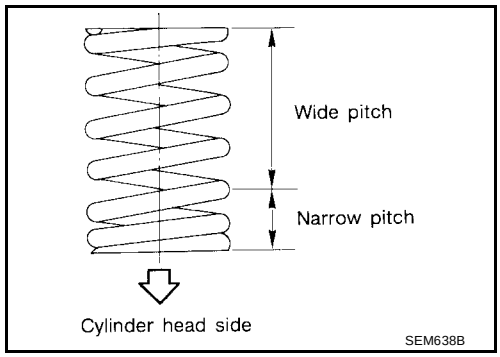

2. Install the camshafts, locate plates, and cylinder head rear covers.
   - Position the knock pin of the camshaft at the top as shown.

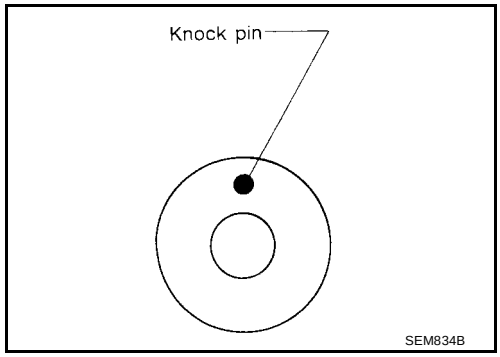

3. Install the valve lifters and the valve guide.
   - Assemble the valve lifters in their original position and hold all of the valve lifters with wire to prevent the lifters from falling out of the guide.
   - Remove the wire after installing the lifters and guide.

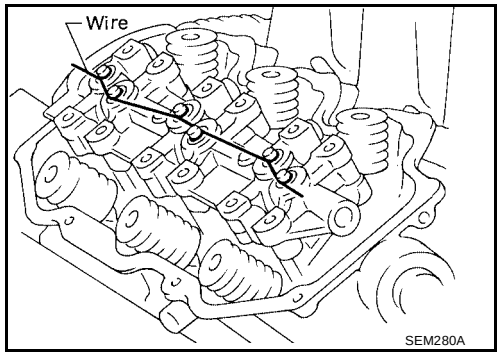

4. Install the rocker shafts with the rocker arms.
   - Tighten the bolts gradually in two or three stages to specification in the following camshaft positions:
   - Before tightening the bolts, the camshaft must be positioned where the lobe is not contacting the lifter.

a. Set No. 1 piston at TDC on the compression stroke and tighten the rocker shaft bolts for No. 2, No. 4 and No. 6 cylinders.

b. Set No. 4 piston at TDC on the compression stroke and tighten the rocker shaft bolts for No. 1, No. 3 and No. 5 cylinders.

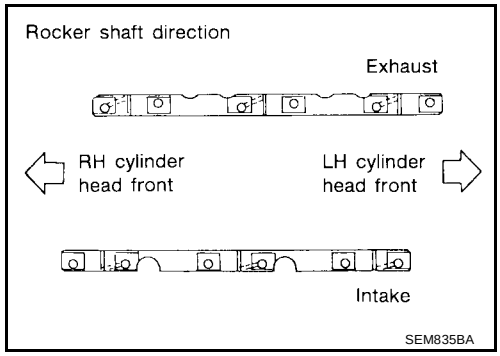

Installation

EBS0095X

1. Set the No. 1 piston at TDC on the compression stroke as follows:

a. Align the crankshaft sprocket aligning mark with the mark on the oil pump body.

b. Make sure that the knock pin on camshaft is still positioned at the top.

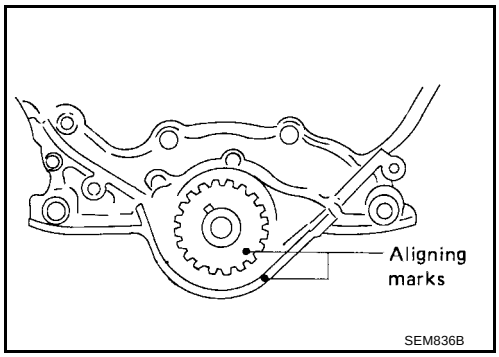

2. Install both cylinder block drain plugs and tighten to specification.
   - Use Genuine High Performance Thread Sealant or equivalent. Refer to GI-42, "RECOMMENDED CHEMICAL PRODUCTS AND SEALANTS" .

   Drain plug : 34 - 44 N·m (3.5 - 4.5 kg-m, 25 - 33 ft-lb)

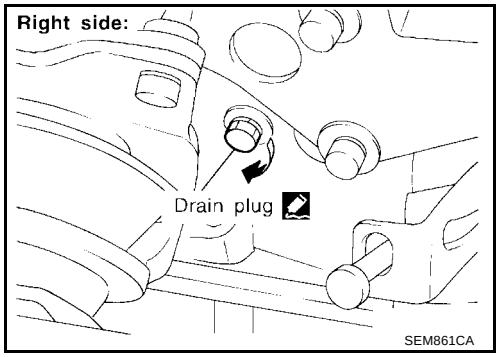

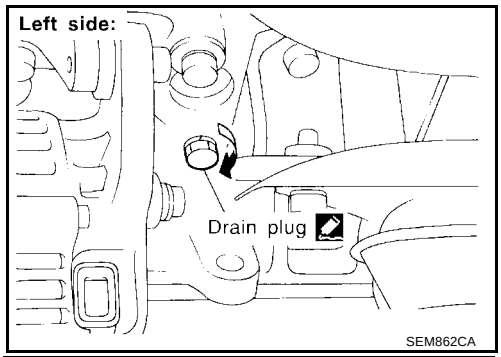

3. Install the exhaust manifolds on to the cylinder head, tighten the bolts in the numerical order as shown.

   CAUTION:
   Tighten the exhaust manifold bolts to specification in the numerical order as shown. Refer to EM-80, "OUTER COMPONENT PARTS" .

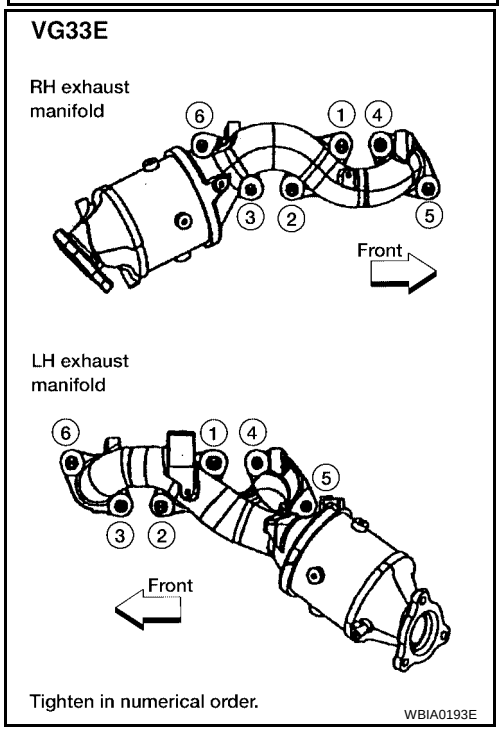

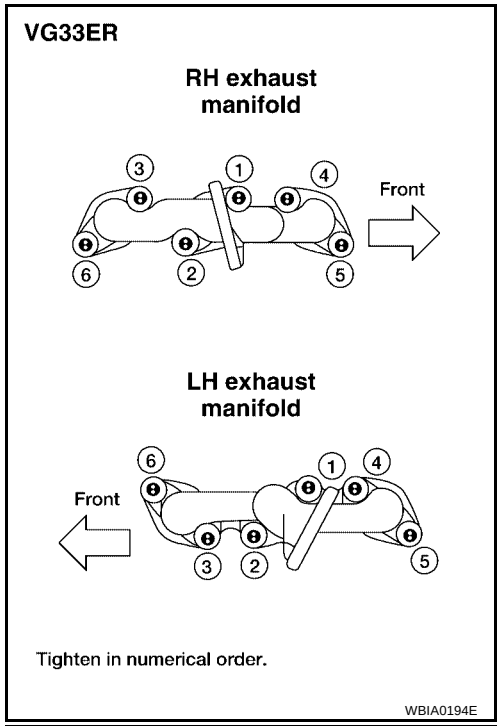

4. Install the cylinder head with a new head gasket.
   - Install the washers between the bolts and cylinder head with the beveled side up, as shown.
   - Do not rotate the crankshaft and camshaft separately, or the valves will hit the pistons.

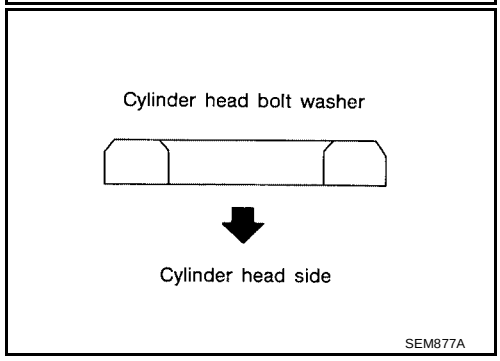

5. Tighten the cylinder head bolts in the numerical order as shown. Use the specified angle wrench as necessary.

   Angle wrench : ST10120000 (J24239-01)

   - Apply new engine oil to the threads and seating surfaces of the cylinder head bolts before installation.
   - Cylinder head bolts No. 4, 7, 9, and 12 (L1) are longer than the other bolts (L2).

   Cylinder head bolts "L1" : 127 mm (5.00 in)
   Cylinder head bolts "L2 " : 106 mm (4.17 in)

   - Install the intake manifold and cylinder head at the same time, using the 14 steps.

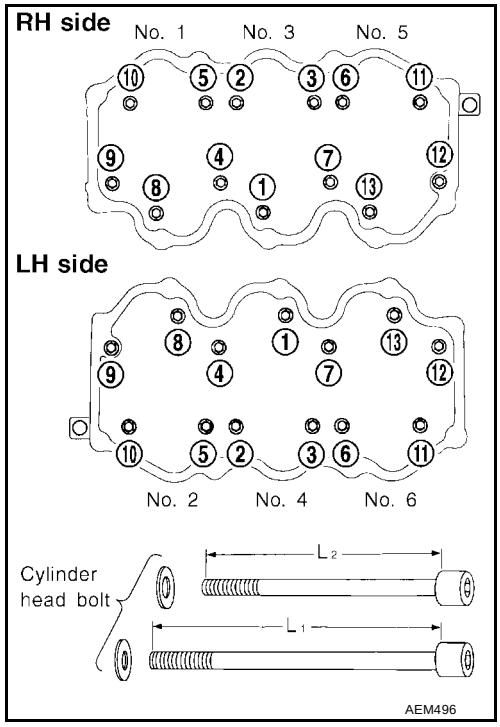

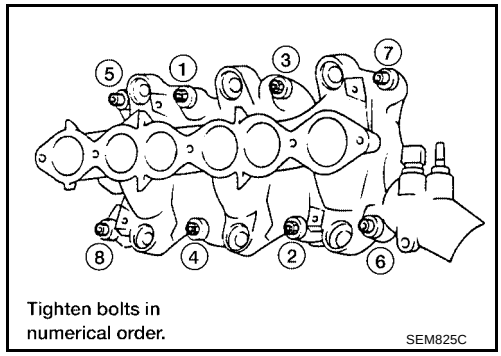

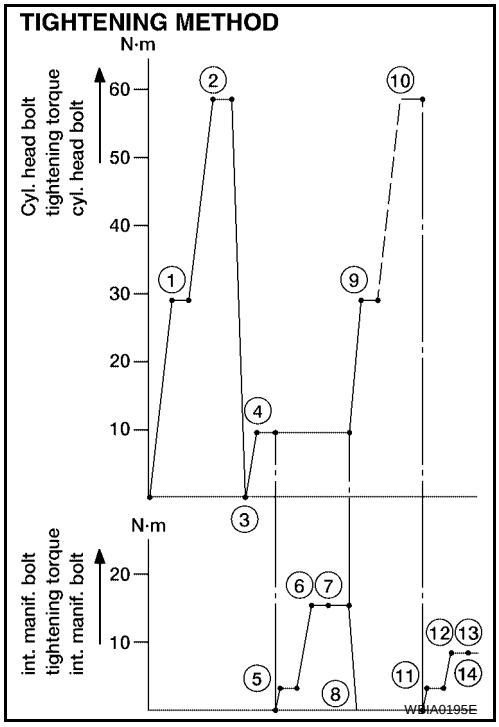

Cylinder head and intake manifold nuts and bolts tightening:

Step 1 : tighten cylinder head bolts 29 N·m (3.0 kg-m, 22 ft-lb)

Step 2 : tighten cylinder head bolts 59 N·m (6.0 kg-m, 43 ft-lb)

Step 3 : loosen cylinder head bolts completely

Step 4 : tighten cylinder head bolts 10 N·m (1.0 kg-m, 7 ft-lb)

Step 5 : tighten intake manifold bolts and nuts 4 N·m (0.4 kg-m, 2.9 ft-lb)

Step 6 : tighten intake manifold bolts and nuts 18 N·m (1.8 kg-m, 13 ft-lb)

Step 7 : tighten intake manifold bolts and nuts 16 - 20 N·m (1.6 - 2.0 kg-m, 12 - 14 ft-lb)

Step 8 : loosen intake manifold bolts and nuts completely

Step 9 : tighten cylinder head bolts 29 N·m (3.0 kg-m, 22 ft-lb)

Step 10 : turn cylinder head bolts 60° to 65° degrees (clockwise), if an angle wrench is not available, tighten cylinder head bolts 54 - 64 N·m (5.5 - 6.5 kg-m, 40 - 47 ft-lb)]

Step 11 : tighten cylinder head sub-bolts 9.0 - 11.8 N·m (0.92 - 1.20 kg-m, 6.7 - 8.7 ft-lb).

Step 12 : tighten intake manifold bolts and nuts 4 N·m (0.4 kg-m, 2.9 ft-lb).

Step 13 : tighten intake manifold bolts and nuts 9 N·m (0.9 kg-m, 6.5 ft-lb).

Step 14 : tighten intake manifold bolts and nuts 8 - 10 N·m (0.8 - 1.0 kg-m, 5.8 - 7 ft-lb).

- If only the intake manifold is removed and is to be used again, install it in a three step procedure. Tighten the nuts and bolts in the numerical order as shown.

  Intake manifold nuts and bolts tightening steps:

  Step 1 : 4 N·m (0.4 kg-m, 2.9 ft-lb)

  Step 2 : 9 N·m (0.9 kg-m, 6.5 ft-lb)

  Step 3 : 8 to 10 N·m (0.8 - 1.0 kg-m, 5.8 - 7 ft-lb)

  CAUTION:
  If replacing the intake manifold with a new one, the cylinder head gasket must also be replaced.

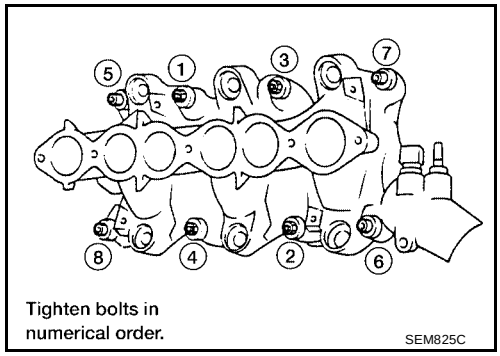

6. Install both rocker covers.

   Rocker cover bolts : 1 - 3 N·m (0.1 - 0.3 kg-m, 9 - 26 in-lb)

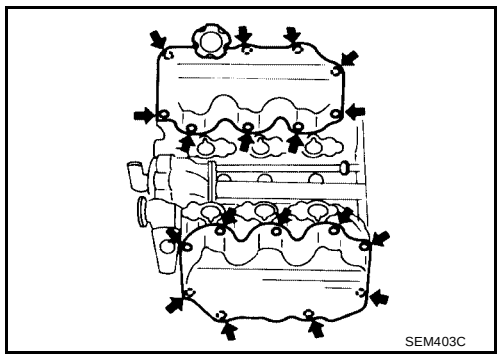

7. Install the A/C compressor, generator, and power steering pump brackets.
8. Install the power steering pump. Refer to PS-17, "Components" .
9. Install the A/C compressor. Refer to MTC-69, "Removal and Installation for Compressor" .
10. Install the generator. Refer to SC-37, "Installation" .
11. Install the exhaust front tube to the exhaust manifold. Refer to EX-3, "Removal and Installation" .

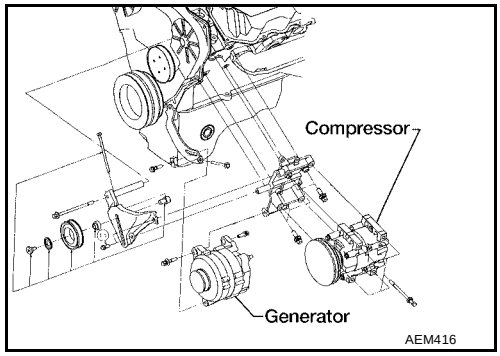

12. Install the rear belt cover and camshaft sprocket. Refer to EM-80, "Removal and Installation" .

    CAUTION:
    RH camshaft sprocket and LH camshaft sprocket are different parts. Be sure to install them in the correct location.

Description	Identification mark	θ
RH camshaft sprocket	R3	0°53′
LH camshaft sprocket	L3	–3°27′

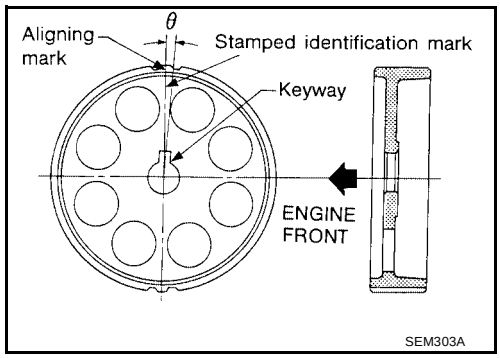

13. Install the timing belt and adjust the timing belt tension. Refer to EM-94, "Installation" .

14. Install the distributor.

a. Align the mark on the distributor shaft with the protruding mark on the distributor housing.

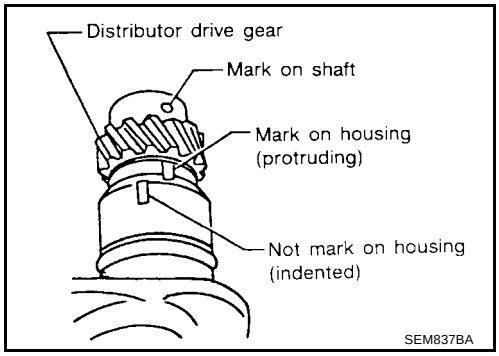

b. After installation of the distributor, confirm that the distributor rotor head is aligned as shown.

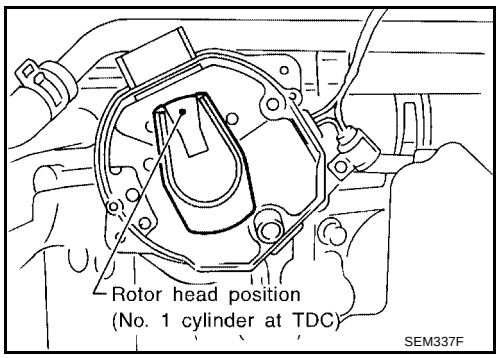

15. Install the fuel injector tube assembly. Refer to EM-80, "Removal and Installation" .
16. Connect all of the fuel injector harness connectors.

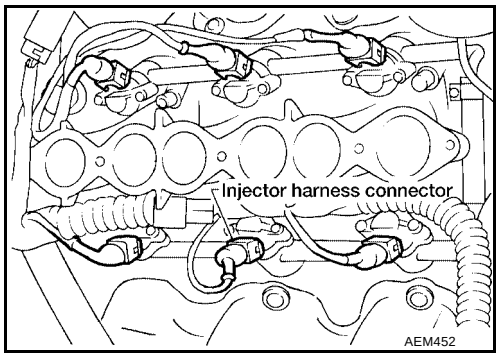

17. Install the fuel feed and fuel return hoses to the fuel injector tube assembly.
18. Install the intake manifold collector (VG33E only). Refer to EM-80, "OUTER COMPONENT PARTS" .

19. Connect the following parts:
a. Harness connectors for:
   - IACV-AAC valve
   - Throttle position sensor
   - Throttle position switch
   - Distributor (ignition coil)
   - Distributor
   - EGRC solenoid valve (VG33E only)
   - EGR temperature sensor (VG33E only)
b. Water hoses from collector (VG33ER only)
c. Heater hoses
d. PCV hose from RH/LH rocker cover
e. Vacuum hoses for:
   - Brake master cylinder
   - Pressure regulator
f. Purge hose from purge control valve
g. Spark plug wires
h. Three left/right bank injector connectors
i. Ground harness
j. EGR tube (VG33E only)

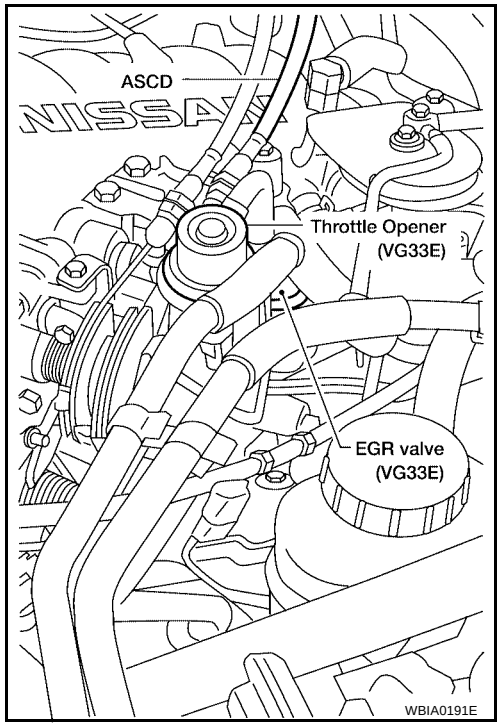

20. Install the ASCD and accelerator control wires on to the intake manifold collector (VG33E only).
21. Check the hydraulic valve lifter.
a. Push the plunger forcefully with your finger.
   - Be sure to check the hydraulic lifter with the rocker arm is in the free position (not on the lobe).
b. If the valve lifter moves more than 1 mm (0.04 in), air may be inside it.
c. Bleed the air out by running the engine at 1,000 rpm under no load for about 10 minutes.
d. If the hydraulic valve lifters are still noisy, replace them.
e. Bleed off the air by running the engine at 1,000 rpm under no load for about 10 minutes. Repeat as necessary to bleed the air out of the new lifters.

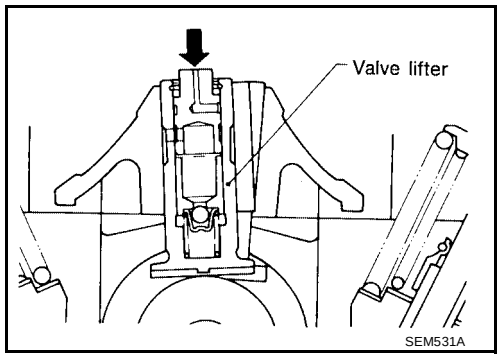

22. Install the remaining components in the reverse order of removal.

SUPERCHARGER

PFP:14110

Components

EBS0095Y

SEC. 140 • 147 • 148 • 163 • 164 • 173 • 210 • 221

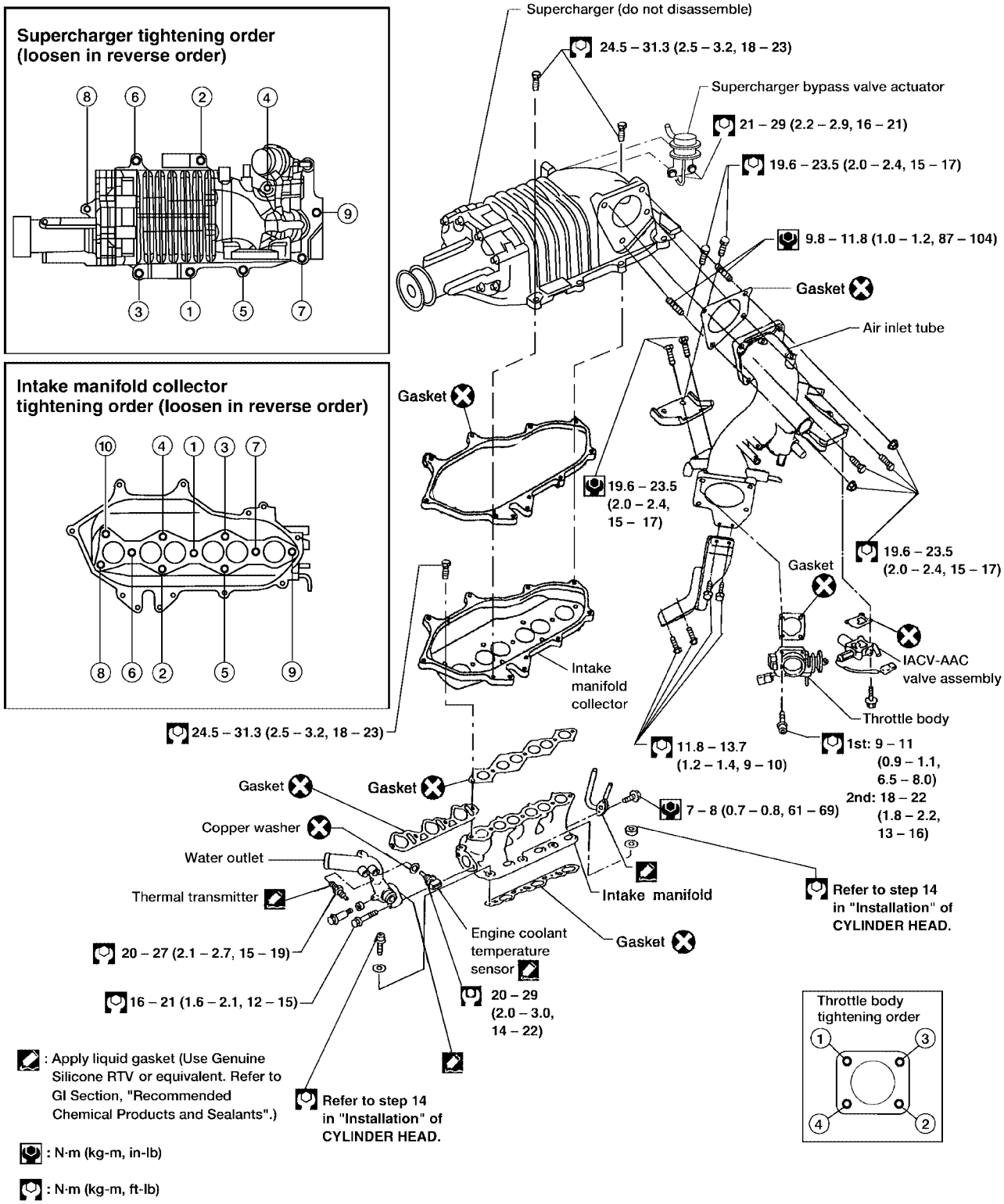

Removal

EBS0095Z

CAUTION:
Do not disassemble or adjust the supercharger.

1. Disconnect the negative battery cable.
2. Disconnect the accelerator cable from the throttle body and the air inlet tube bracket.

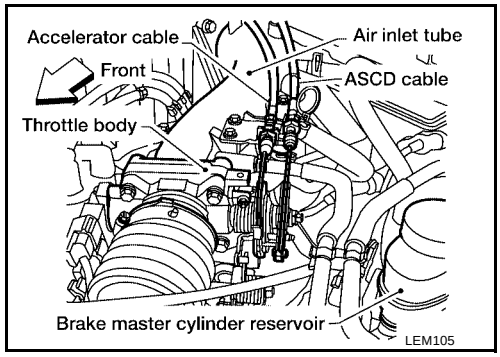

3. Disconnect the ASCD cable from the throttle body and the air inlet tube bracket, if equipped.
4. Remove the air inlet duct
   - Disconnect the PCV hoses.
   - Disconnect the resonator hose.

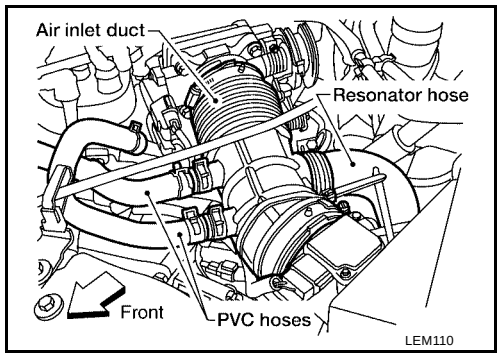

5. Partially drain the cooling system. Refer to MA-26, "DRAINING ENGINE COOLANT" .
6. Remove the supercharger pulley cover and supercharger-A/C compressor drive belt. Refer to MA-24, "Checking Drive Belts" .

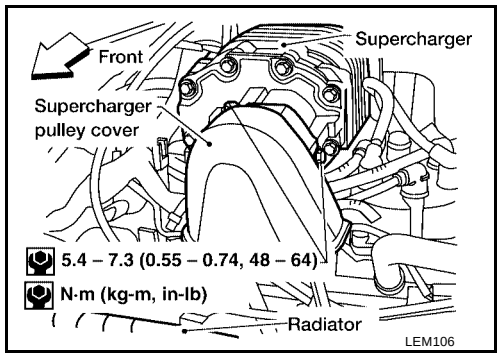

7. Remove the air inlet tube upper and lower supports.

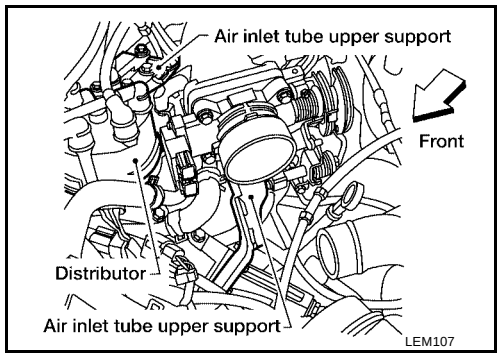

8. Remove the air inlet tube bolts, nuts, and studs. Position the air inlet tube aside.
   - Disconnect the evaporative emission vacuum hose.
   - Disconnect the brake booster vacuum hose.
   - Disconnect the TPS sensor electrical connector.
   - Disconnect the TPS switch electrical connector.

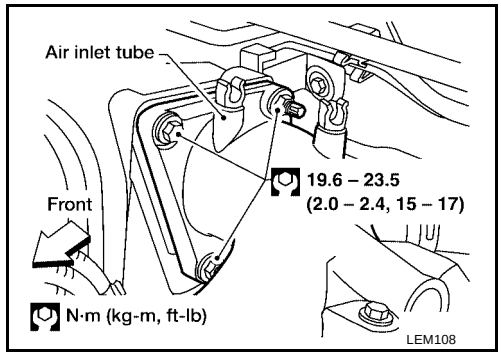

9. Remove the supercharger bolts and the supercharger assembly.
   - Disconnect the boost control valve vacuum hose.
   - Disconnect the PCV hose.

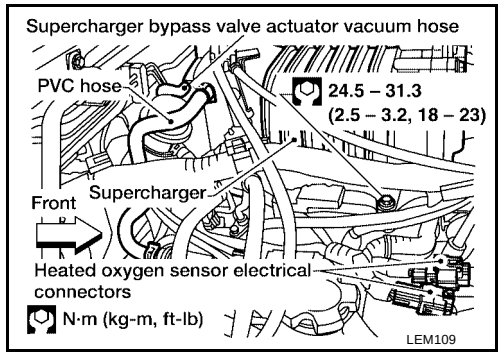

Inspection

EBS00960

SUPERCHARGER FLANGE

1. Clean the mating surface of the supercharger flange.
2. Check the flange surface for any deformation and flatness. Use a reliable straightedge and feeler gauge, or attach the supercharger flange to the intake collector mating flange, and check that the flatness is within specification.

   Flange flatness limit : 0.12 mm (0.005 in)

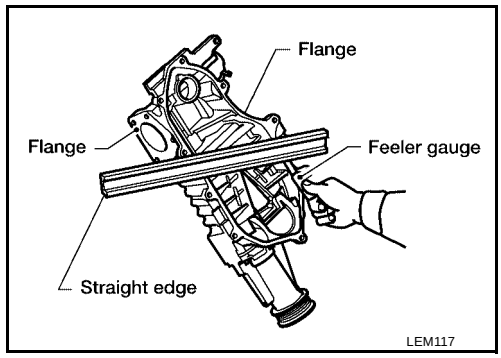

ROTOR SYSTEM

1. Check that the supercharger pulley rotates smoothly when turning it by hand in a clockwise direction. Rotating torque must not exceed specification.

   Rotating torque : 0.5 N.m (0.05 kg-m, 4 in-lb)

2. Check that both the left and right rotors are free from any cracks or contamination.

SUPERCHARGER BYPASS VALVE ACTUATOR

1. Apply air pressure of less than 12 kPa (90 mmHg, 3.54 inHg) to the supercharger bypass valve actuator's lower side hose port and check for any leakage.

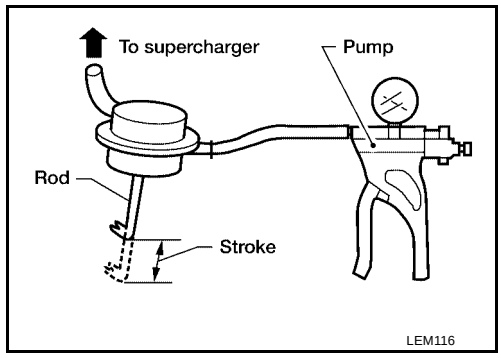

2. Check the supercharger bypass valve actuator rod for smooth movement while maintaining the pressure at the specified levels below:

Rod starts to extend at approximately	**: 12 kPa (90 mmHg, 3.54 inHg)**
Rod is fully extended at approximately	**: 33.3 kPa (250 mmHg, 9.84 inHg)**
Rod full extended length	**: 20.83 - 22.71 mm (0.82 - 0.89 in)**

Installation

EBS00961

Installation is in the reverse order of removal.

- Replace all gaskets; make sure that all gasket surfaces are clean and undamaged.
- Follow all torque sequences for tightening nuts and bolts.
- Refill the cooling system. Refer to MA-26, "REFILLING ENGINE COOLANT" .

ENGINE ASSEMBLY

PFP:10001

Removal and Installation

EBS00962

Engine Mounting

SEC. 112

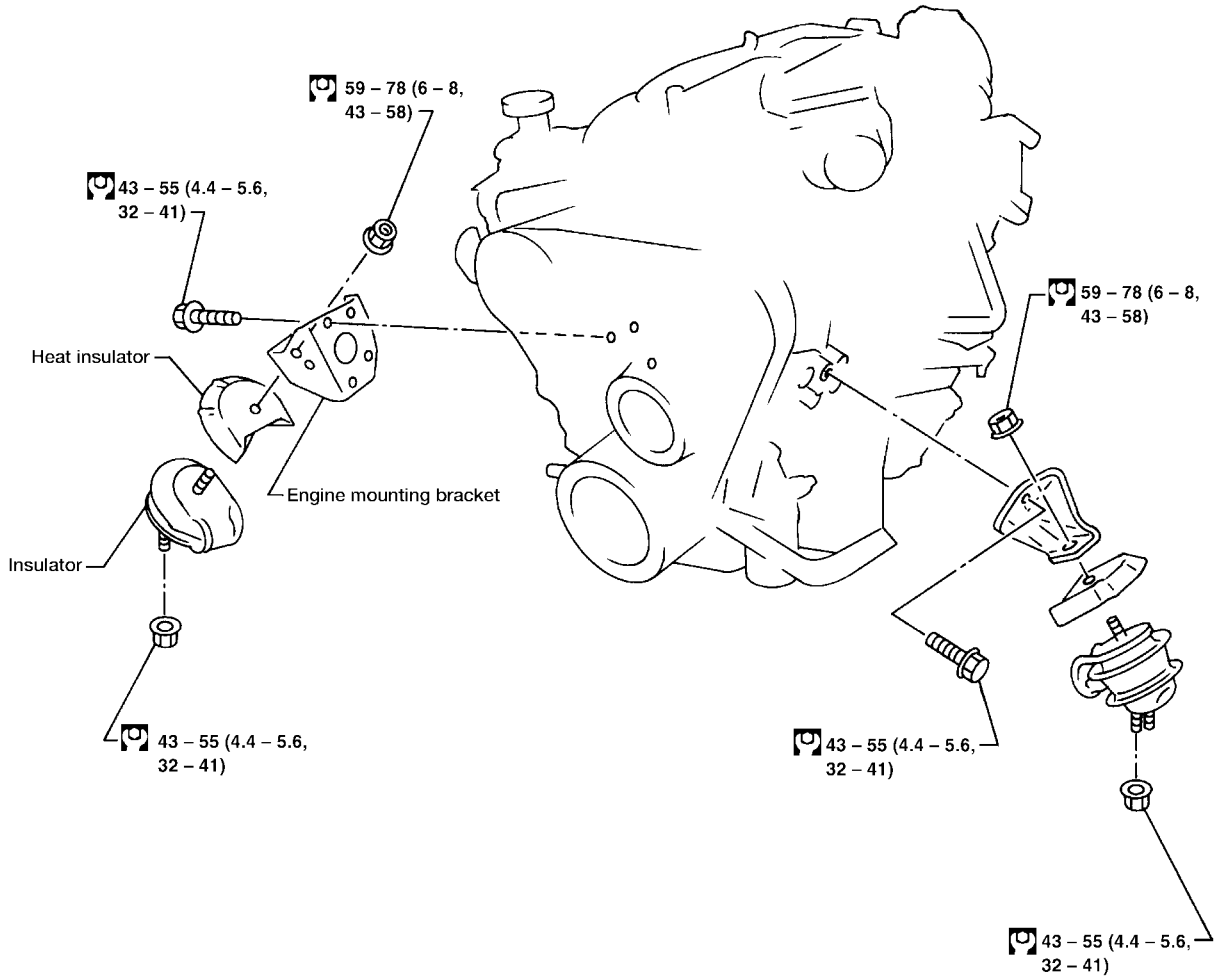

: N•m (kg-m, ft-lb)

AEM471

WARNING:

- **Place the vehicle on a flat and solid surface.**
- **Place wheel chocks at the front and back of the rear wheels.**
- **Do not remove the engine until the exhaust system has completely cooled off. Otherwise, you may burn yourself and/or fire may break out in the fuel line.**
- **For safety, the tension of wires should be loosened against the engine.**
- **Before disconnecting a fuel hose, release the fuel pressure from the fuel line. Refer to EC-619, "FUEL PRESSURE RELEASE" (VG33E), EC-1222, "FUEL PRESSURE RELEASE" (VG33ER).**
- **Before removing the front axle from the transmission, place safety stands under the designated front supporting points. Refer to GI-37, "Lifting Points" .**
- **Raise the engine and transmission in a safe manner.**
- **For engines not equipped with engine slingers, attach the appropriate slingers and bolts as described in the PARTS CATALOG.**

CAUTION:

- **When lifting engine, be careful not to strike adjacent parts, especially accelerator wire casing, brake lines, and brake master cylinder.**
- **In hoisting the engine, always use engine slingers in a safe manner.**
- **Before separating engine and transmission, remove crankshaft position sensor (OBD) from the assembly.**
- **Always take extra care not to damage edge of crankshaft position sensor (OBD), or ring gear teeth.**
- **Do not loosen front engine mounting insulator cover mounting nuts. When cover is removed, damper oil flows out and mounting insulator will not function.**
- **Tighten all bolts and nuts to specification.**

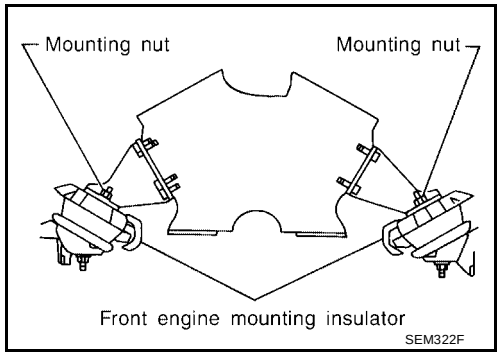

REMOVAL

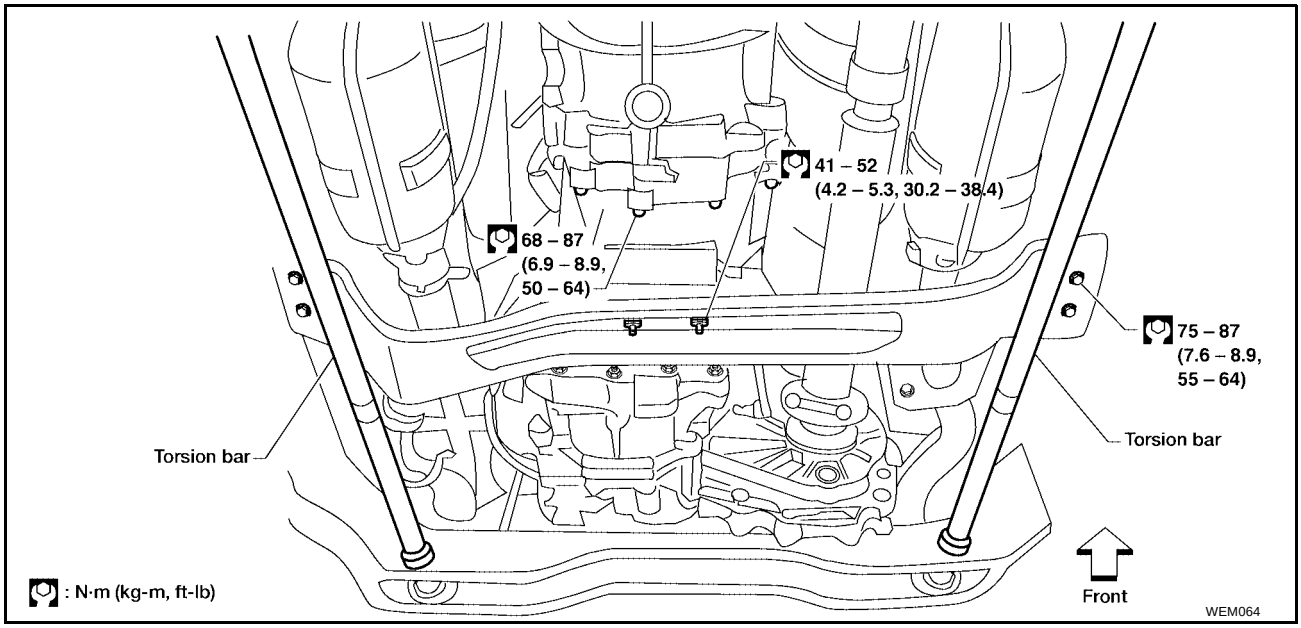

1. Remove the engine undercover and hood. Refer to EI-12, "Removal and Installation" .
2. Drain the coolant from the cylinder block and radiator. Refer to MA-26, "DRAINING ENGINE COOLANT" .

3. Before disconnecting fuel hose, release the fuel pressure from the fuel line. Refer to EC-619, "FUEL PRESSURE RELEASE" (VG33E), EC-1222, "FUEL PRESSURE RELEASE" (VG33ER).
4. Disconnect the vacuum hoses, fuel tubes, wires, harnesses and connectors.
5. Remove the radiator with shroud and cooling fan. Refer to CO-30, "Removal and Installation" .
6. Remove the drive belts. Refer to MA-24, "Checking Drive Belts" .
7. Discharge the A/C system refrigerant. Refer to MTC-66, "HFC-134a (R-134a) Service Procedure" .
8. Remove the A/C compressor manifold. Refer to MTC-68, "Components" .
9. Remove the power steering oil pump from the engine. Refer to PS-17, "Components" .
10. Remove the front exhaust tubes. Refer to EX-3, "Removal and Installation" .
11. Remove the transmission from the vehicle. Refer to AT-62, "REMOVAL AND INSTALLATION" (RL4R01A), AT-407, "REMOVAL AND INSTALLATION" (RE4R01A), MT-10, "Removal and Installation" (FS5W71C), MT-48, "Removal and Installation" (FS5R30A).
12. Install the engine slingers.

    Slinger bolts : 20 – 26 N·m (2.1 – 2.7 kg–m, 15 – 20 ft–lb)

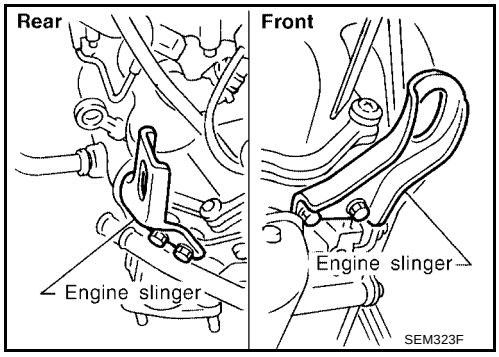

13. Raise the engine slightly with the engine slingers and then remove the engine mounting nuts from both sides.
14. Lift and remove the engine from the vehicle.

INSTALLATION

Installation is in the reverse order of removal.

CYLINDER BLOCK

PFP:11010

Components

EBS00963

SEC. 110•120•150•313

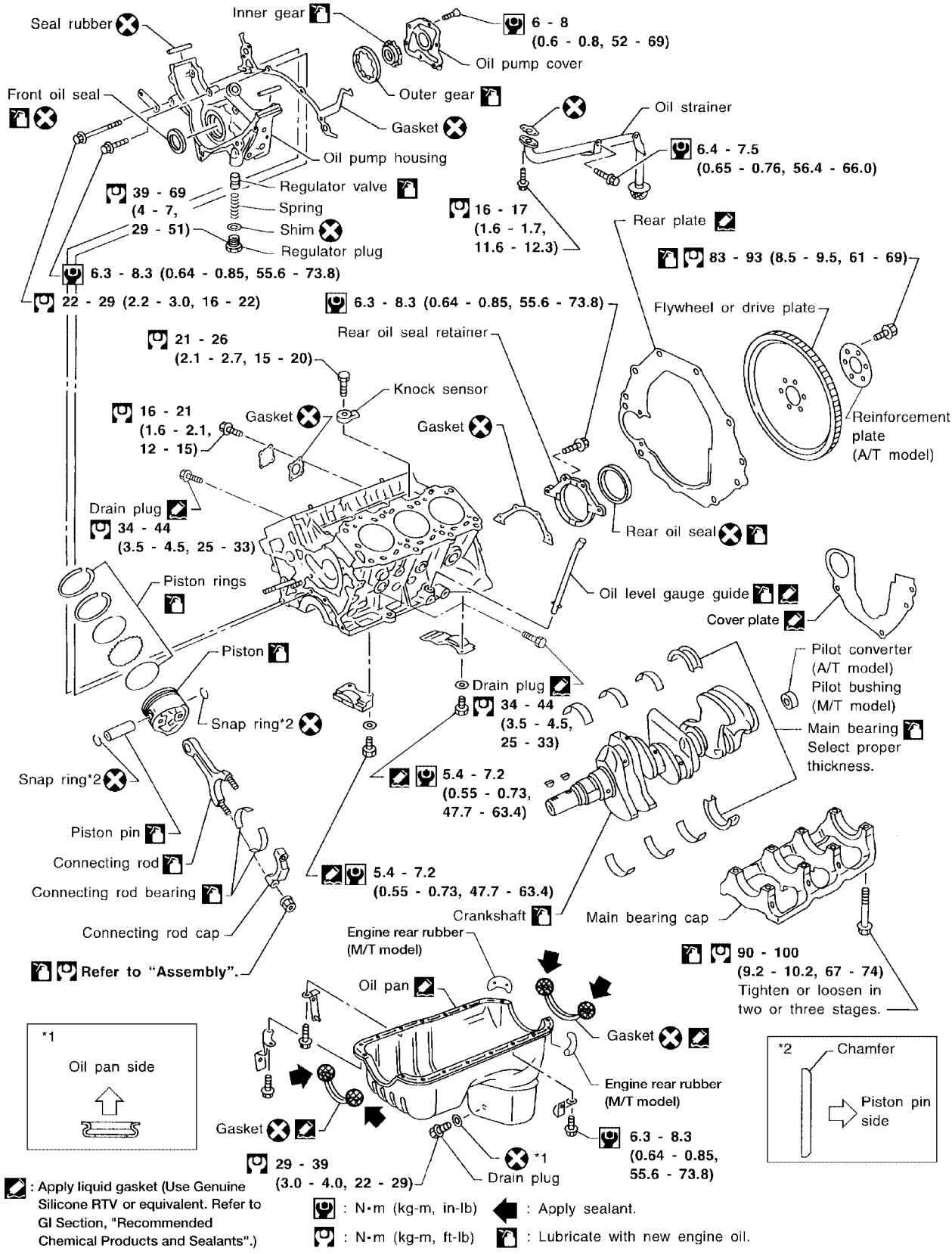

Canada Models — Block Heater

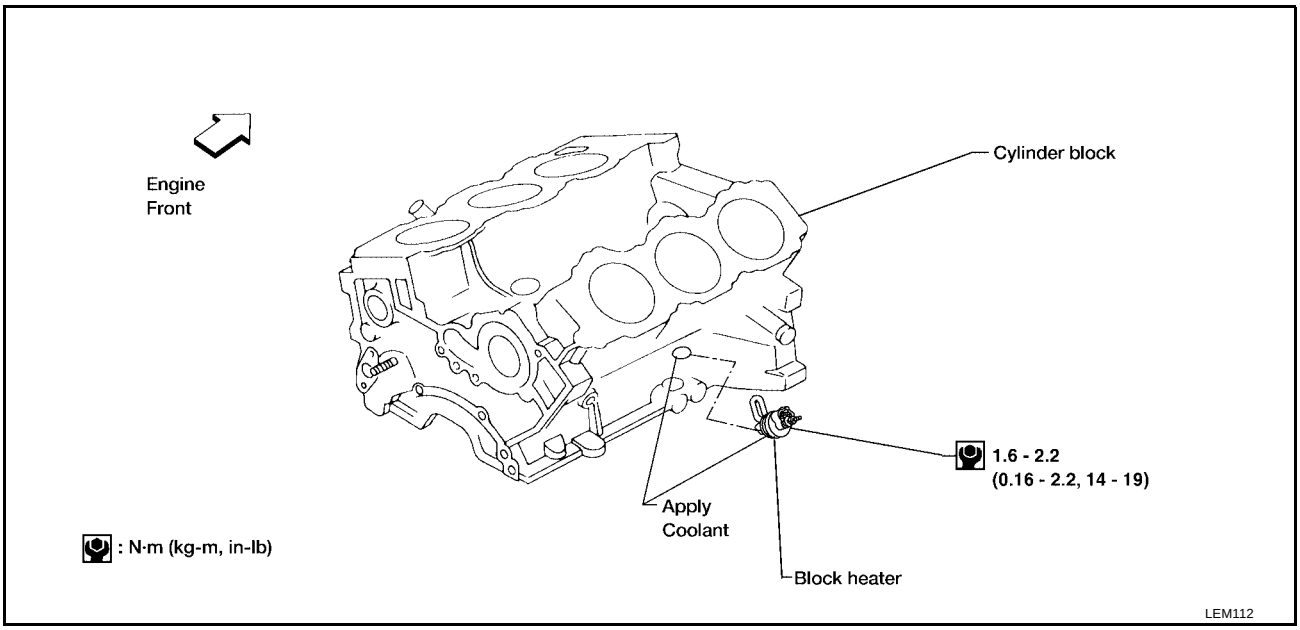

Removal and Installation

EBS00964

CAUTION:

- **When installing sliding parts such as bearings and pistons, be sure to apply engine oil on the sliding surfaces.**
- **Place removed parts such as bearings and bearing caps in their proper order and direction.**
- **When installing connecting rod bolts and main bearing cap bolts, apply new engine oil to threads and seating surfaces.**
- **Do not allow any magnetic materials to contact the ring gear teeth on drive plate and rear plate.**

Disassembly

EBS00965

PISTON AND CRANKSHAFT

1. Place the engine on a work stand.
2. Drain the engine of coolant. Refer to MA-26, "DRAINING ENGINE COOLANT" .
3. Drain the engine oil. Refer to MA-30, "Changing Engine Oil" .
4. Remove the timing belt. Refer to EM-91, "Removal" .
5. Remove the engine oil pan and oil pump. Refer to LU-16, "Removal and Installation" .
6. Remove the water pump. Refer to CO-25, "Removal" .
7. Remove the cylinder head. Refer to EM-105, "Removal" .

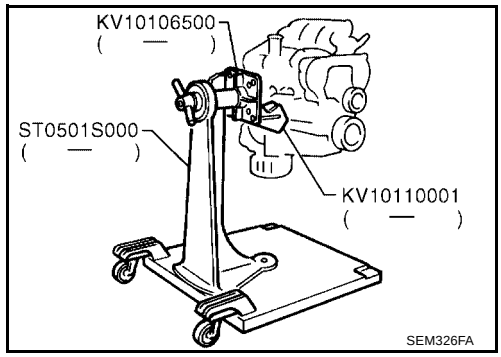

8. Remove the pistons with connecting rod assemblies.
   - When disassembling the pistons and connecting rods, remove the snap ring first, then heat the piston to 60° - 70°C (140° - 158°F) or use a piston pin press stand at room temperature.

     CAUTION:
     - **When the piston rings are not replaced, make sure that piston rings are installed in their original position and direction.**
     - **When replacing the piston rings install them with the punchmark facing up. If there is no punchmark, install with either side up.**

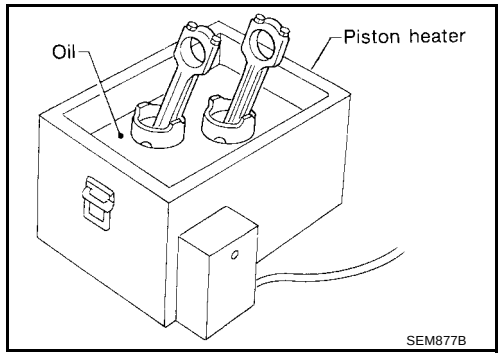

9. Remove the bearing caps and crankshaft.
   - Before removing the bearing caps, measure the crankshaft end play.

   CAUTION:
   The bearing cap bolts must be loosened in two or three steps in the numerical order as shown.

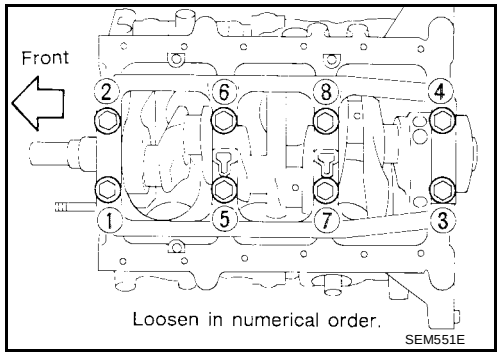

EBS00966

Inspection

PISTON AND PISTON PIN CLEARANCE

1. Measure the inner diameter of piston pin hole “dp” as shown.

   Standard diameter “dp” : 20.969 - 20.981 mm (0.8255 - 0.8260 in)

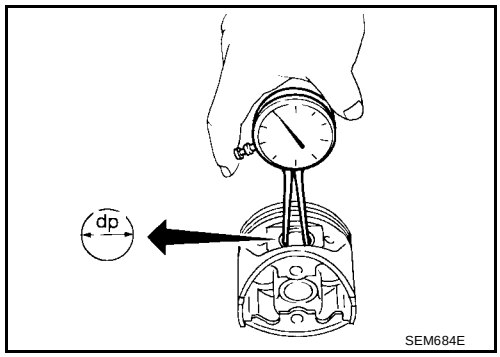

2. Measure the outer diameter of piston pin “Dp” as shown.

   Standard diameter “Dp” : 20.971 - 20.983 mm (0.8256 - 0.8261 in)

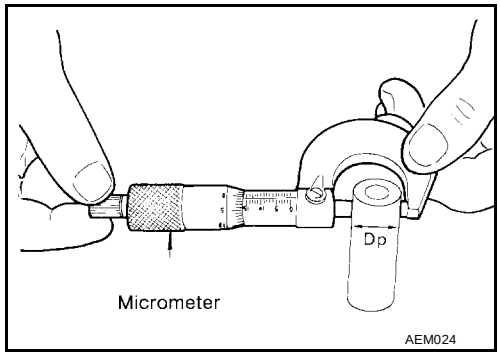

3. Calculate piston pin clearance. If the clearance is out of specification, replace the piston and pin.

   Piston pin clearance ("dp" – "Dp") : 0 – (– 0.004) mm [0 – (– 0.0002) in]

PISTON RING SIDE CLEARANCE

Measure the piston ring to piston side clearance as shown.

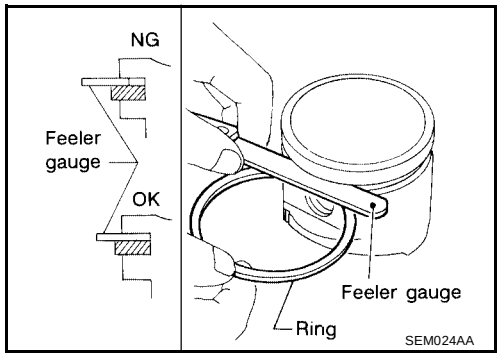

Side clearance:

Top ring : 0.040 - 0.080 mm (0.0016 - 0.0031 in)

2nd ring : 0.030 - 0.070 mm (0.0012 - 0.0028 in)

Oil ring : 0.015 - 0.185 mm (0.0006 - 0.0073 in)

Side clearance maximum limit:

Top ring : 0.11 mm (0.0043 in)

2nd ring : 0.1 mm (0.004 in)

Oil ring : —

If out of specification, replace piston and/or piston ring assembly.

PISTON RING END GAP

With the piston ring on top of the piston, insert the piston and ring into the cylinder bore as shown. Measure the piston ring gap.

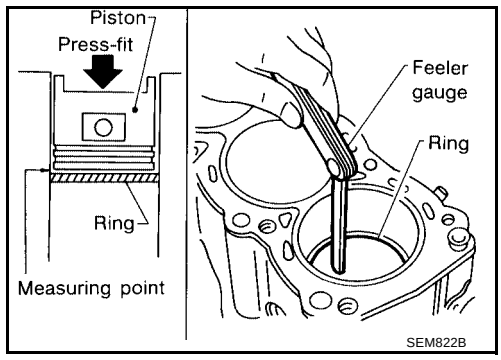

End gap

Top ring : 0.21 - 0.31 mm (0.0083 - 0.0122 in)

2nd ring : 0.50 - 0.60 mm (0.0197 - 0.0236 in)

Oil ring : 0.20 - 0.60 mm (0.0079 - 0.0236 in)

Ring gap maximum limit

Top ring : 0.43 mm (0.0169 in)

2nd ring : 0.69 mm (0.0272 in)

Oil ring : 0.84 mm (0.0331 in)

If out of specification, replace the piston ring. If the gap still exceeds the limit even with a new ring, rebore the cylinder and use an oversized piston and piston rings. Refer to EM-150, "Piston, Piston Ring and Piston Pin" .

CAUTION:

When replacing the piston, check the cylinder block surface for scratches or seizure. If scratches or seizure are found, hone or replace the cylinder block.

CONNECTING ROD BEND AND TORSION

Using a suitable tool and a feeler gauge, measure the connecting rod bend and torsion as shown.

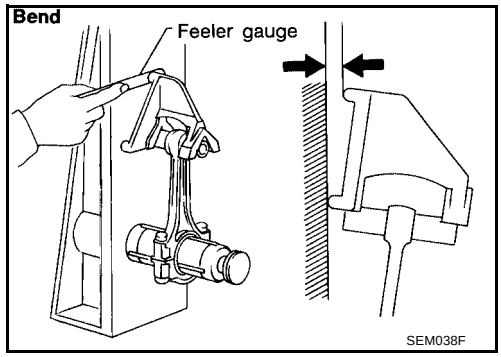

Bend limit : 0.15 mm (0.0059 in) per 100 mm (3.94 in) length

Torsion limit : 0.30 mm (0.0118 in) per 100 mm (3.94 in) length

If it exceeds the limit, replace connecting rod assembly.

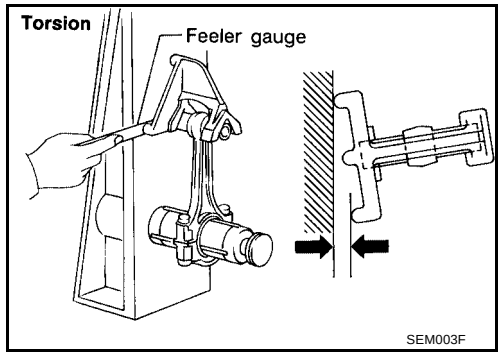

CYLINDER BLOCK DISTORTION AND WEAR

1. Clean the upper face of the cylinder block and measure the distortion using a straight edge and feeler gauge as shown.

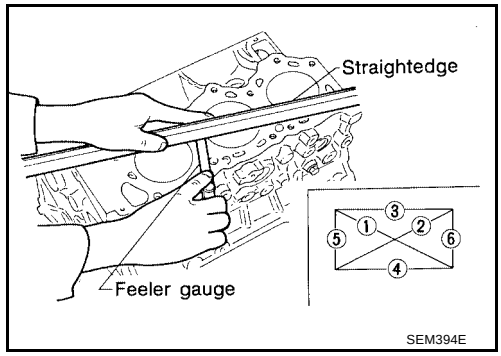

Cylinder block distortion

Standard : less than 0.03 mm (0.0012 in)

Limit : 0.10 mm (0.004 in)

2. If the distortion exceeds the specified limit, resurface the cylinder block sealing surface.
   The resurfacing limit is determined by the amount of cylinder head resurfacing required.

Amount of cylinder head resurfacing is "A".
Amount of cylinder block resurfacing is "B".

Maximum resurfacing limit	**: A + B = 0.2 mm (0.008 in)**
Nominal cylinder block height from crankshaft center	**: 227.60 - 227.70 mm (8.9606 - 8.9645 in)**

If necessary, replace the cylinder block.

PISTON-TO-BORE CLEARANCE

1. Using a bore gauge, measure the cylinder bore for out-of-round, taper, standard inner diameter, and wear.

Out-of-round (difference between X and Y) standard	**: 0.015 mm (0.0006 in)**
Taper (difference between A and C) standard	**: 0.015 mm (0.0006 in)**

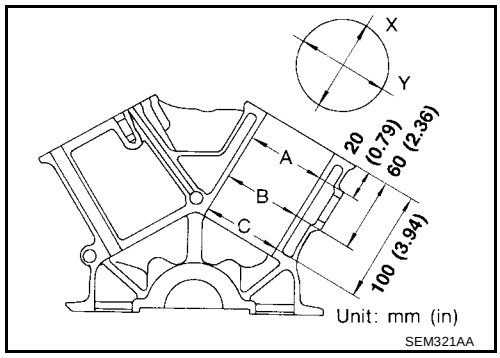

If the measurements exceed specifications hone all of the cylinder bores. Replace the cylinder block if necessary. Refer to EM-149, "Cylinder Block" .

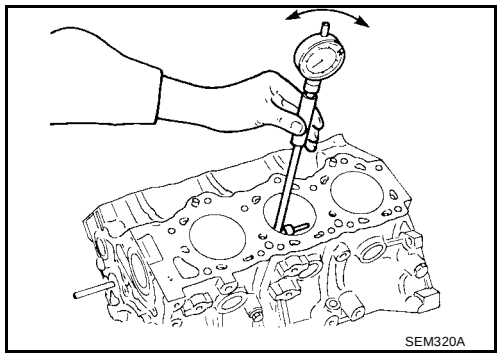

2. Check for scratches and seizure. If scratches and seizure is found, hone the cylinder bores and replace the pistons.
   - If both the cylinder block and pistons are replaced with new ones, select the piston of the same grade number according to the following table. These numbers are punched on cylinder block and piston in either Arabic or Roman numerals. Refer to EM-150, "AVAILABLE PISTON" .

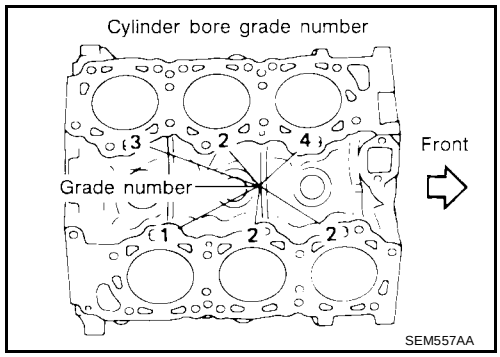

Combination Grade Number For Cylinder Bore and Piston

	For No. 3, 4 and 5 cylinders						Except for No. 1, 2 and 6 cylinders		
Cylinder bore grade No.	1	2	3	4	5	6	1	2	3
Piston grade No.	2-1	3-2	3-3	4-4	4-5	5-6	1	2	3

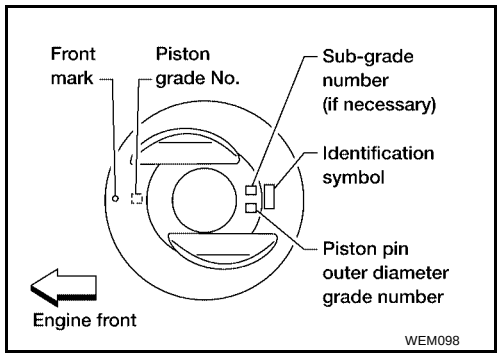

3. Measure the piston skirt diameter.

Piston diameter "A"	**: refer to EM-150, "AVAILABLE PISTON"**
Measuring point "a" (distance from the top)	**: 49.0 mm (1.929 in)**

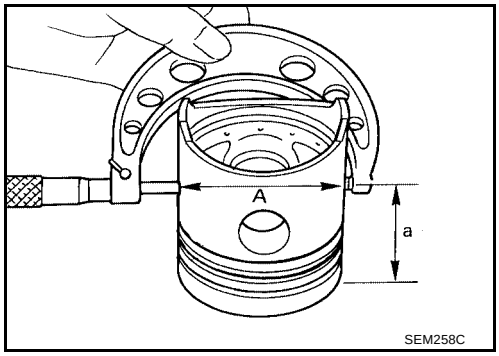

4. Check that the piston-to-bore clearance "B" is within specification. Calculate the clearance from the difference between the cylinder bore inner diameter (step 1and 2) and the piston skirt diameter (step 3).

Piston-to-cylinder bore clearance "B"

No. 1, 2, and 6 cylinders	**: 0.025 - 0.045 mm (0.0010 - 0.0018 in)**
No. 3 and 4 cylinders	**: 0.015 - 0.025 mm (0.0006 - 0.0010 in)**
No. 5 cylinder (VG33E only)	**: 0.030 - 0.040 mm (0.0012 - 0.0016 in)**
No. 5 cylinder (VG33ER only)	**: 0.025 - 0.045 mm (0.0010 - 0.0018 in)**

5. Determine the required oversized piston according to the amount of cylinder bore wear. Oversize pistons are available for service. Refer to EM-150, "AVAILABLE PISTON" .
6. The cylinder bore honing size is determined by adding the piston skirt diameter to the piston-to-bore clearance then subtracting the specified honing allowance.

Honing diameter size calculation (D = A + B - C)

where,

"D" (see step 1 and 2)	**: cylinder bore diameter after honing**
"A" (see step 3)	**: piston skirt diameter**
"B" (see step 4)	**: piston-to-bore clearance**
"C"	**: honing allowance of 0.02 mm (0.0008 in)**

7. Install the main bearing caps, and tighten them to the specified torque to prevent distortion of the cylinder bores when honing.
8. Hone the cylinder bores.
   - When any cylinder needs honing, all other cylinders must also be honed.
   - Do not hone too much out of the cylinder bore at a time. Hone only 0.05 mm (0.0020 in) in diameter at each pass.
9. Hone the cylinders to obtain specified piston-to-bore clearance and a smooth bore surface.
10. Measure the finished cylinder bore for out-of-round and taper, refer to step 1.
    - All measurements must be done after the cylinder bore cools down.

CRANKSHAFT

1. Check the crankshaft main and pin journals for any scoring, wear, or cracks.
2. With a micrometer, measure the journals for taper and out-of-round.

Out-of-round (X – Y)	**: less than 0.005 mm (0.0002 in)**
Taper (A – B)	**: less than 0.005 mm (0.0002 in)**

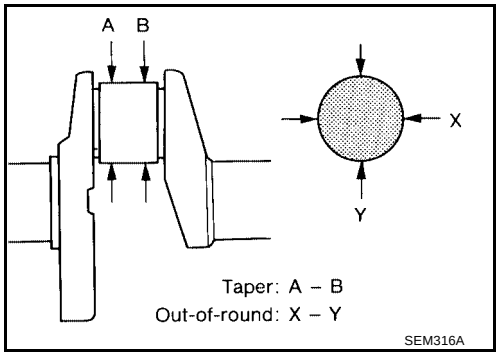

3. Measure the crankshaft runout as shown.

Runout (total indicator reading) : less than 0.10 mm (0.0039 in)

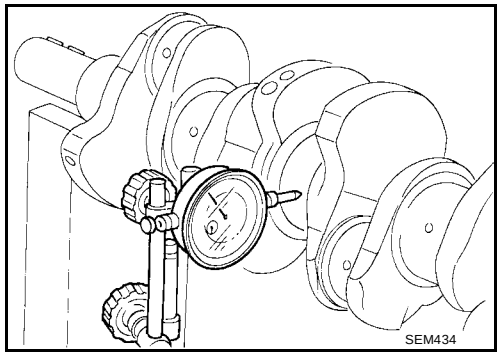

BEARING CLEARANCE

Method A (Using Bore Gauge and Micrometer)

NOTE:
Either of the following two methods may be used to check bearing clearance. However, method A gives a more reliable result and is the preferable method.

Main Bearing

1. Set the main bearings in their proper positions on the cylinder block and main bearing caps as shown.
2. Install the main bearing caps on the cylinder block. Tighten the main bearing cap bolts to the specified torque in two or three steps. Refer to EM-131, "Components" .

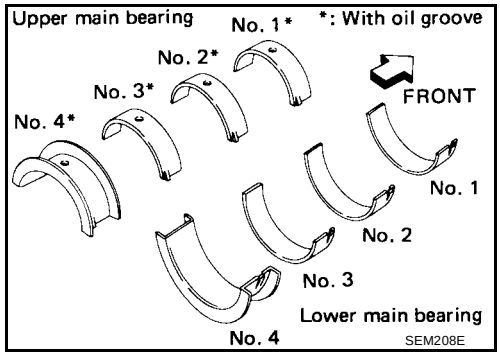

3. Measure the inner diameter “A” of each main bearing as shown.

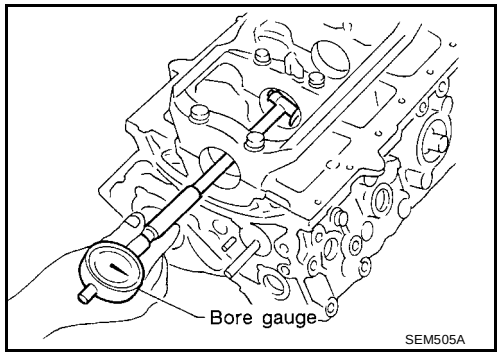

4. Measure the outer diameter “Dm” of each crankshaft main journal as shown.

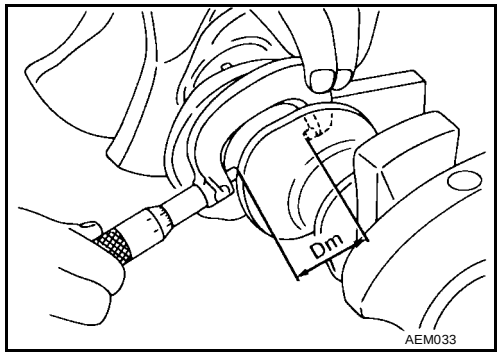

5. Calculate the main bearing clearance as ("A" – "Dm") for each crankshaft journal.

No.1 main bearing clearance (A – Dm)

Standard : 0.030 - 0.048 mm (0.0012 - 0.0019in)

Limit : 0.060 mm (0.0024 in)

No. 2, 3 and No. 4 main bearing clearance (A – Dm)

Standard : 0.038 - 0.065 mm (0.0015 - 0.0026 in)

Limit : 0.080 mm (0.0031 in)

6. If the clearance exceeds the specified limits, replace the bearing.
7. If clearance cannot be adjusted within the standard of any bearing, grind crankshaft journal and use undersized bearing.

a. When grinding crankshaft journal, confirm that “L” dimension in fillet roll is more than the specified limit.

“L” : 0.1 mm (0.004 in)

b. As necessary, grind the crankshaft journals to specification, or replace with an available service part. Refer to EM-152, "Crankshaft" .

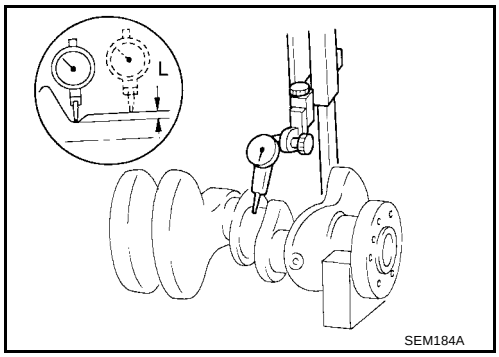

8. If the crankshaft is reused, measure the main bearing clearances and select the required thickness of the main bearings.
If the crankshaft is replaced with a new one, it is necessary to select the required thickness of the main bearings as follows:

a. The grade number of each cylinder block main journal is punched on the respective cylinder bore. The grade numbers are punched in either Arabic or Roman numerals.

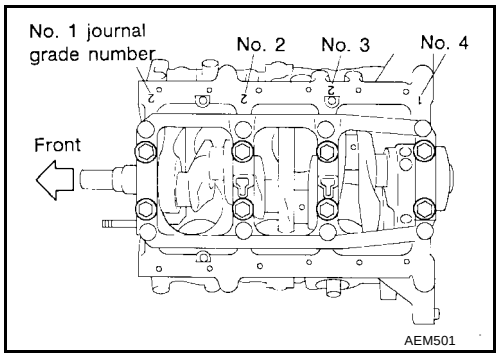

b. The grade number of each crankshaft main journal is punched on the respective crankshaft as shown. These numbers are punched in either Arabic or Roman numerals.

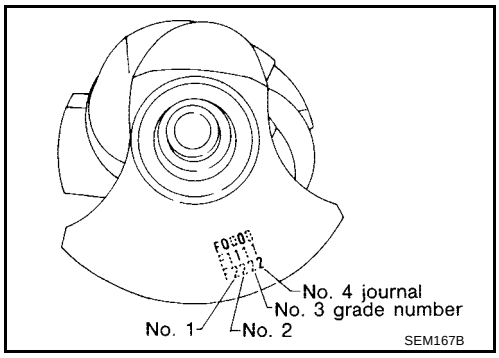

c. Select the main bearing with a suitable thickness according to the following tables.

No. 1 Main Bearing Grade Number (Identification Color)

Crankshaft journal grade number	Main journal grade number			
	3 or III	4 or IV	5 or V	6 or VI
3 or III	0 (Black)	1 (Brown)	2 (Green)	3 (Yellow)
4 or IV	1 (Brown)	2 (Green)	3 (Yellow)	4 (Blue)
5 or V	2 (Green)	3 (Yellow)	4 (Blue)	5 (Pink)
6 or VI	3 (Yellow)	4 (Blue)	5 (Pink)	6 (Purple)

All Except No. 1 Main Bearing Grade Number (Identification Color)

Crankshaft journal grade number	Main journal grade number		
	0	1 or I	2 or II
0	0 (Black)	1 (Brown)	2 (Green)
1 or I	1 (Brown)	2 (Green)	3 (Yellow)
2 or II	2 (Green)	3 (Yellow)	4 (Blue)

Connecting Rod Bearing (Big End)

1. Install the connecting rod bearing on the connecting rod big end and cap.
2. Install the connecting rod cap to the connecting rod. Tighten the connecting rod cap bolts to specification. Refer to EM-131, "Components" .
3. Measure the inner diameter “C” of each connecting rod bearing installed in the connecting rod big end.

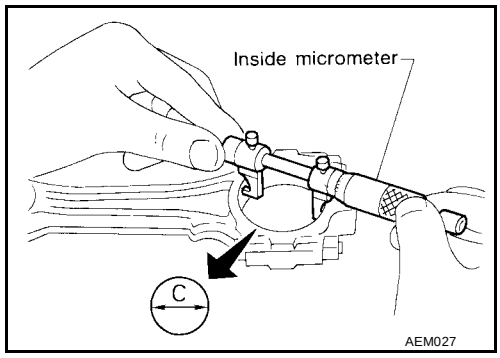

4. Measure the outer diameter “Dp” of each crankshaft connecting rod journal.

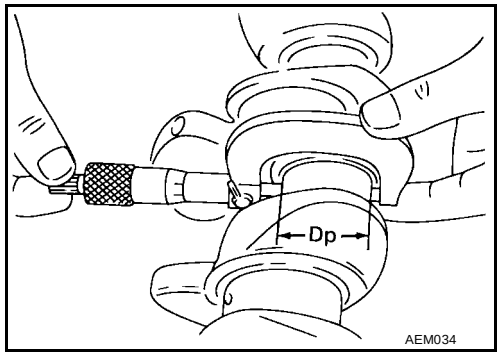

5. Calculate the connecting rod bearing clearance.

Connecting rod bearing clearance ("C" – "Dp")
Standard : 0.024 - 0.064 mm (0.0009 - 0.0025 in)
Limit : 0.090 mm (0.0035 in)

6. If the connecting rod bearing clearance exceeds the limit, replace the connecting rod bearing.
7. If the clearance cannot be adjusted within the standard of any bearing, grind the crankshaft journals and use undersized bearings. Refer to EM-154, "Available Connecting Rod Bearing" .

Method B (Using Plastigage)

CAUTION:

- **Do not turn the crankshaft or the connecting rod while the plastigage is being inserted.**
- **When the bearing clearance exceeds the specified limit, ensure that the proper bearing has been installed. Then if an excessive bearing clearance exists, use a thicker main bearing or undersized bearing so that the specified bearing clearance is obtained.**

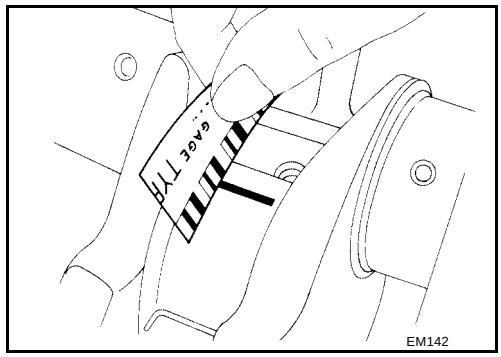

CONNECTING ROD BUSHING CLEARANCE (SMALL END)

1. Measure the inner diameter “C” of the connecting rod small end.
2. Measure the outer diameter “Dp” of the piston pin bushing.
3. Calculate the connecting rod bushing clearance.

   Connecting rod bushing clearance ("C" – "Dp")

   Standard : 0.005 - 0.017 mm (0.0002 - 0.0007 in)

   Limit : 0.023 mm (0.0009 in)

   If the clearance exceeds the limit, replace the connecting rod or connecting rod bushing or the piston and rod set with pin.

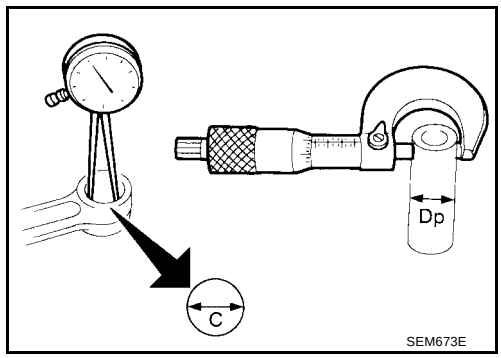

REPLACEMENT OF CONNECTING ROD BUSHING (SMALL END)

1. Drive the small end bushing into the rod until it is flush with end surface of the rod.

   CAUTION:
   The oil hole in the bushing and the connecting rod must be aligned when installed for proper lubrication.

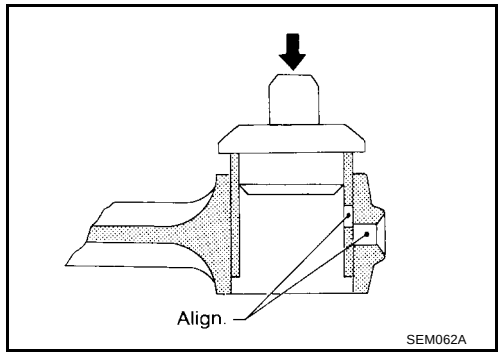

2. After driving in the small end bushing, ream the bushing so the clearance between the connecting rod bushing and the piston pin is at specification.

   Clearance between connecting rod bushing and piston pin : 0.005 - 0.017 mm (0.0002 - 0.0007 in)

FLYWHEEL/DRIVE PLATE RUNOUT

Measure the runout using a dial gauge as shown. The runout is measured with a dial gauge reading from a full rotation of the flywheel (M/T only) or driveplate (A/T only).

Runout (total indicator reading)

Flywheel (M/T only) : less than 0.15 mm (0.0059 in)

Drive plate (A/T only) : less than 0.15 mm (0.0059 in)

CAUTION:

- **Do not damage the ring gear teeth.**
- **Check the drive plate for deformation or cracks.**
- **Do not allow any magnetic materials to contact the ring gear teeth.**

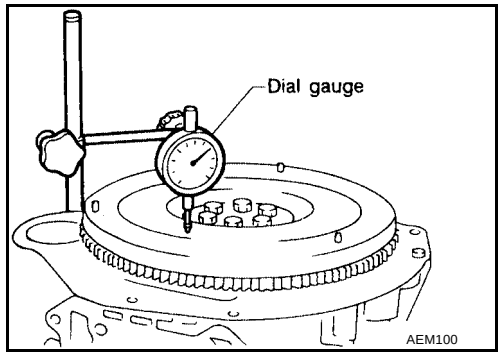

- **Do not resurface the flywheel (M/T). Replace as necessary.**

Assembly

EBS00967

PISTON

1. Install a new snap ring on one side of piston pin hole.
2. Heat the piston to 60° - 70°C (140° - 158°F) and assemble the piston, piston pin, connecting rod and the new snap ring on the other side.
   - Align the direction of the piston and connecting rod with the marks as shown.
   - Numbers stamped on the connecting rod and cap correspond to each cylinder, and should be aligned when assembled as shown.
   - After assembly, check that the connecting rod swings smoothly on the piston.

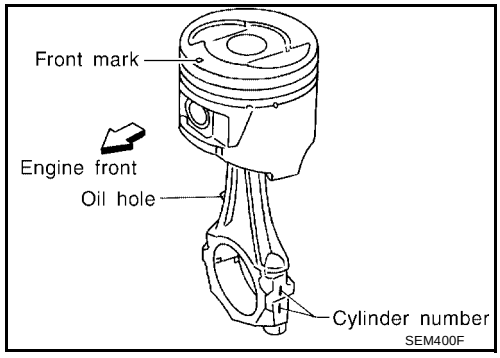

3. Install and align the piston rings at 90° degree angles as shown.

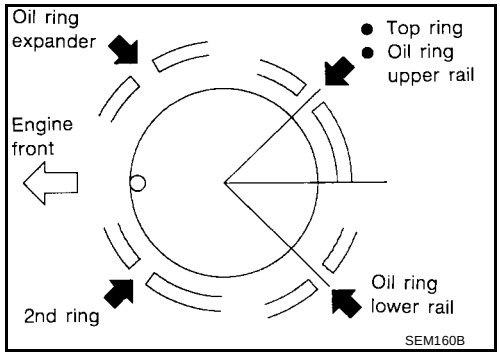

CRANKSHAFT

1. Set the main bearings in their proper positions on the cylinder block and main bearing caps.
   - Confirm that the correct main bearings are used. Refer to EM-137, "BEARING CLEARANCE" .
   - Apply new engine oil to the bearing friction surfaces

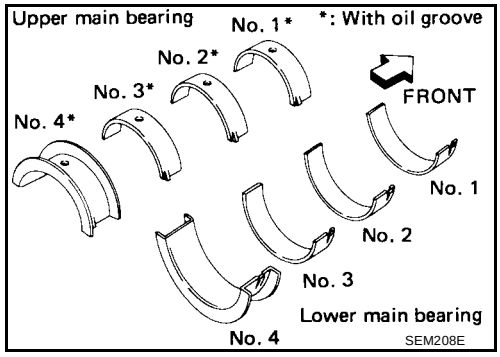

2. Install the crankshaft and main bearing caps and tighten the bolts to the specified torque in numerical order as shown.
   - Prior to tightening the bearing cap bolts, place the bearing cap in the proper position by shifting the crankshaft in the axial direction.
   - Tighten the bearing cap bolts gradually in two or three steps. Tighten the bearing cap bolts in numerical order as shown.
   - After securing the bearing cap bolts, check that the crankshaft turns smoothly by hand.
   - Lubricate the threads and seat surfaces of the bolts with new engine oil.

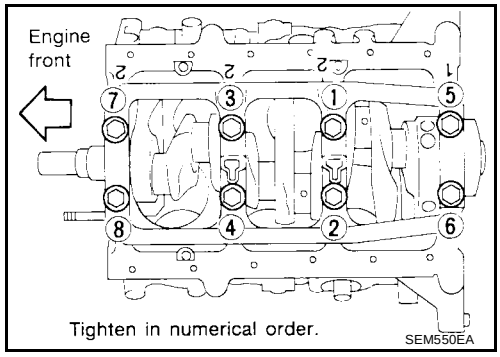

3. Measure the crankshaft end play as shown.

Crankshaft end play

Standard : 0.050 - 0.170 mm (0.0020 - 0.0067 in)

Limit : 0.30 mm (0.0118 in)

If beyond the limit, replace the bearing with a new one.

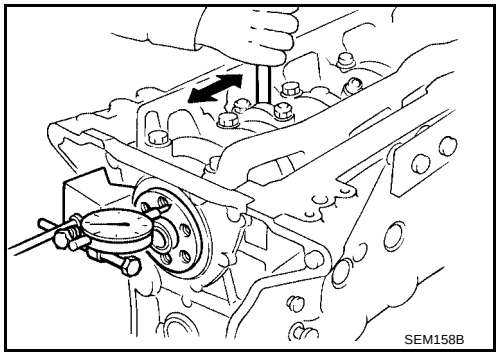

4. Install the connecting rod bearings in the connecting rods and connecting rod caps.
   - Confirm that the correct sized bearings are installed. Refer to EM-139, "Connecting Rod Bearing (Big End)" .
   - Install the bearings so that the oil hole in the connecting rod aligns with the oil hole in the bearing as shown.

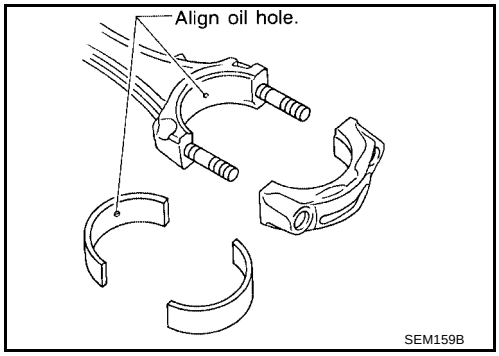

5. Install the pistons with connecting rods using Tool as shown.

a. Install the piston assemblies into their corresponding cylinder bores using Tool as shown.
   - Do not scratch the cylinder wall with the connecting rod.
   - Position the piston so the front mark on the piston head faces toward the front of the engine.

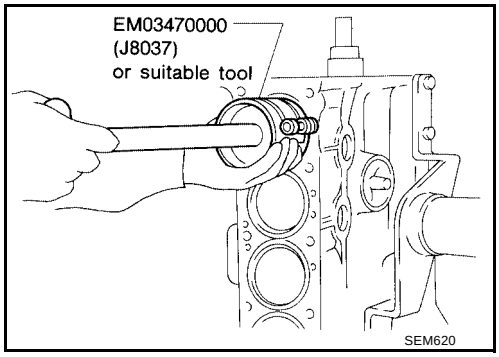

b. Install the connecting rod bearing caps and nuts.
   - Lubricate the connecting rod bearing cap stud threads and nut seats with new engine oil.
   - Tighten the connecting rod bearing cap nuts to specification in two steps. Only if an angle wrench is not available, tighten the connecting rod bearing cap nuts to the torque specification in step 2.

Connecting rod bearing cap nut

Step 1 : 14 - 16 N·m (1.4 - 1.6 kg-m, 10 - 12 ft-lb).

Step 2 : 60° - 65° degrees clockwise, or 38 - 44 N·m (3.9 - 4.5 kg-m, 28 - 33 ft-lb).

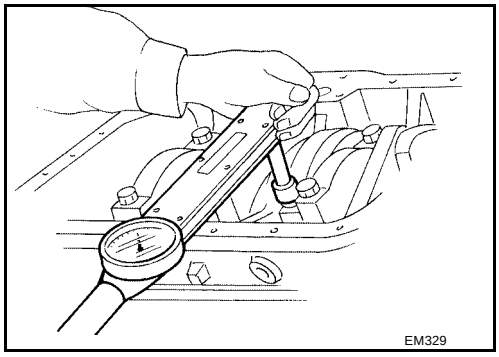

6. Measure the connecting rod side clearance.

   Connecting rod side clearance

   Standard : 0.20 - 0.35 mm (0.0079 - 0.0138 in)

   Limit : 0.40 mm (0.0157 in)

   If beyond the limit, replace the connecting rod and/or crankshaft.

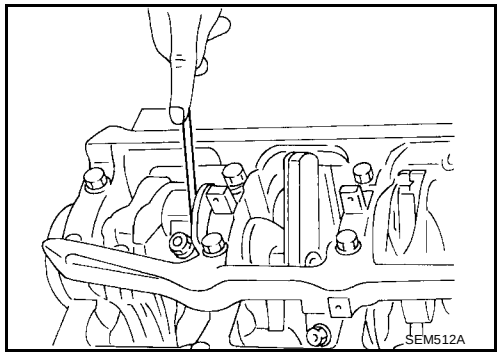

7. Install the rear oil seal and retainer.

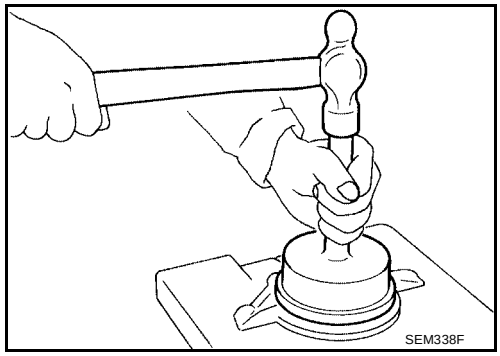

REPLACING PILOT BUSHING (M/T) OR PILOT CONVERTER (A/T)

1. Remove the pilot bushing (M/T) or pilot converter (A/T) using Tool as shown.

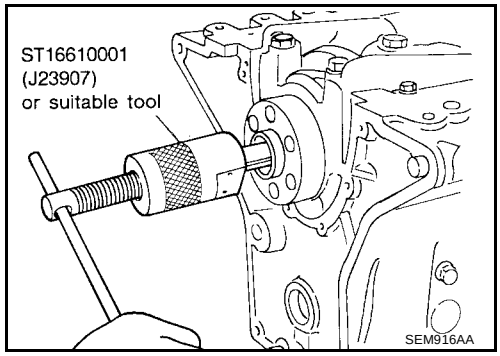

2. Install the pilot bushing (M/T) or pilot converter (A/T) as shown.

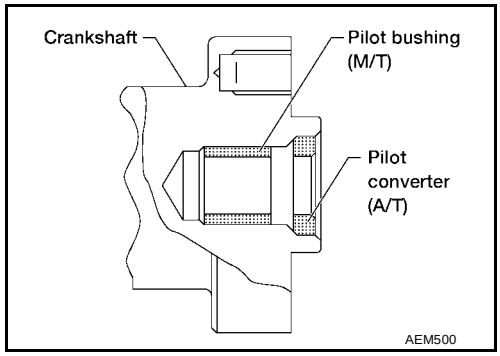

SERVICE DATA AND SPECIFICATIONS (SDS)

PFP:00030

General Specifications

EBS00EXQ

Cylinder arrangement		V-6
Displacement		3,275 cm^3 (199.84 cu in)
Bore and stroke		91.5 x 83 mm (3.602 x 3.27 in)
Valve arrangement		OHC
Firing order		1-2-3-4-5-6
Number of piston rings	Compression	2
	Oil	1
Number of main bearings		4
Compression ratio	VG33E	8.9:1
	VG33ER	8.3:1

Cylinder numbers

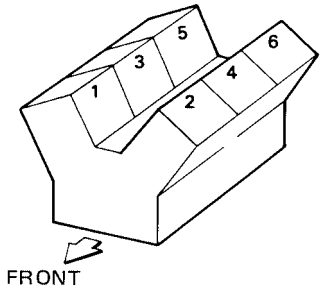

SEM713A

Unit: kPa (kg/cm^2 , psi)/300 rpm

Compression pressure	Standard	1,196 (12.2, 173)
	Minimum	883 (9.0, 128)
	Differential limit between cylinders	98 (1.0, 14)

Unit: degree

Valve timing

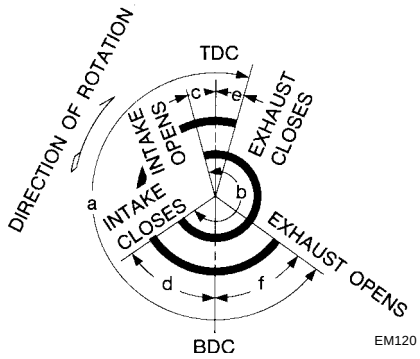

EM120

a	b	c	d	e	f
240	244	4	60	9	51

Cylinder Head

EBS00EXR

Unit: mm (in)

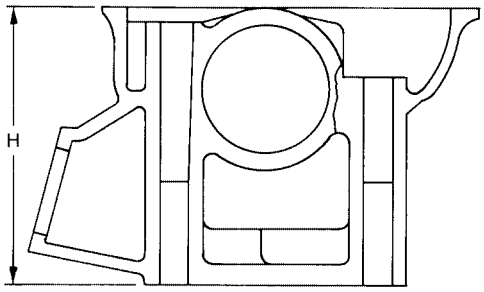

WBIA0236E

	Standard	Limit
Nominal cylinder head height "H"	106.8 - 107.2 (4.205 - 4.220)	—
Head surface distortion	Less than 0.03 (0.0012)	0.1 (0.004)

Valve

EBS00EXS

VALVE

Unit: mm (in)

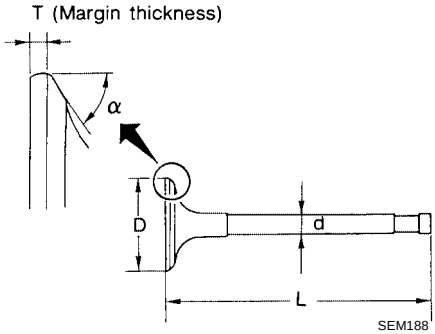

SEM188

Valve head diameter “D”	Intake	42.0 - 42.2 (1.654 - 1.661)
	Exhaust	34.95 - 35.25 (1.376 - 1.388)
Valve length “L”	Intake	125.3 - 125.9 (4.933 - 4.957)
	Exhaust	124.2 - 124.8 (4.890 - 4.913)
Valve stem diameter “d”	Intake	6.965 - 6.980 (0.2742 - 0.2748)
	Exhaust	7.962 - 7.970 (0.3135 - 0.3138)
Valve seat angle “α”	Intake	45°15′ - 45°45′ degrees
	Exhaust	
Valve margin “T”	Intake	1.15 - 1.45 (0.0453 - 0.0571)
	Exhaust	1.35 - 1.65 (0.0531 - 0.0650)
Valve margin “T” limit		More than 0.5 (0.020)
Valve stem end surface grinding limit		Less than 0.2 (0.008)
Valve clearance	Intake	0 (0)
	Exhaust	0 (0)

VALVE SPRING

Free height	50.47 mm (1.987 in)
Valve closed (installation) height	40.0 mm (1.575 in)
Valve open height	30.0 mm (1.181 in)

Pressure at valve open height	Standard	770 - 837 N (78.5 - 85.4 kg, 173.1 - 188.2 lb) at 30.0 mm (1.181 in)
	Limit	733 N (74.8 kg, 164.8 lb) at 30.0 mm (1.181 in)
Out-of-square		2.0 mm (0.079 in)

HYDRAULIC VALVE LIFTER

Unit: mm (in)

Lifter outside diameter	15.947 - 15.957 (0.6278 - 0.6282)
Lifter guide inside diameter	16.000 - 16.013 (0.6299 - 0.6304)
Clearance between lifter and lifter guide	0.043 - 0.066 (0.0017 - 0.0026)

VALVE GUIDE

Unit: mm (in)

			Standard	Service
Valve guide	Outer diameter	Intake	11.023 - 11.034 (0.4340 - 0.4344)	11.223 - 11.234 (0.4418 - 0.4423)
		Exhaust	12.023 - 12.034 (0.4733 - 0.4738)	12.223 - 12.234 (0.4812 - 0.4817)
	Inner diameter (Finished size)	Intake	7.000 - 7.018 (0.2756 - 0.2763)	
		Exhaust	8.000 - 8.011 (0.3150 - 0.3154)	
Cylinder head valve guide hole diameter		Intake	10.975 - 10.996 (0.4321 - 0.4329)	11.175 - 11.196 (0.4400 - 0.4408)
		Exhaust	11.975 - 11.996 (0.4715 - 0.4723)	12.175 - 12.196 (0.4793 - 0.4802)
Interference fit of valve guide		Intake	0.027 - 0.059 (0.0011 - 0.0023)	
		Exhaust		
			Standard	Max. tolerance
Valve to valve guide clearance		Intake	0.020 - 0.053 (0.0008 - 0.0021)	0.10 (0.0039)
		Exhaust	0.030 - 0.049 (0.0012 - 0.0019)	
Valve deflection limit			—	0.20 (0.0079)

ROCKER SHAFT AND ROCKER ARM

Unit: mm (in)

Rocker shaft	Outer diameter	17.979 - 18.000 (0.7078 - 0.7087)
Rocker arm	Inner diameter	18.007 - 18.028 (0.7089 - 0.7098)
Clearance between rocker arm and rocker shaft		0.007 - 0.049 (0.0003 - 0.0019)

Valve Seat

EBS00EXT

INTAKE VALVE SEAT

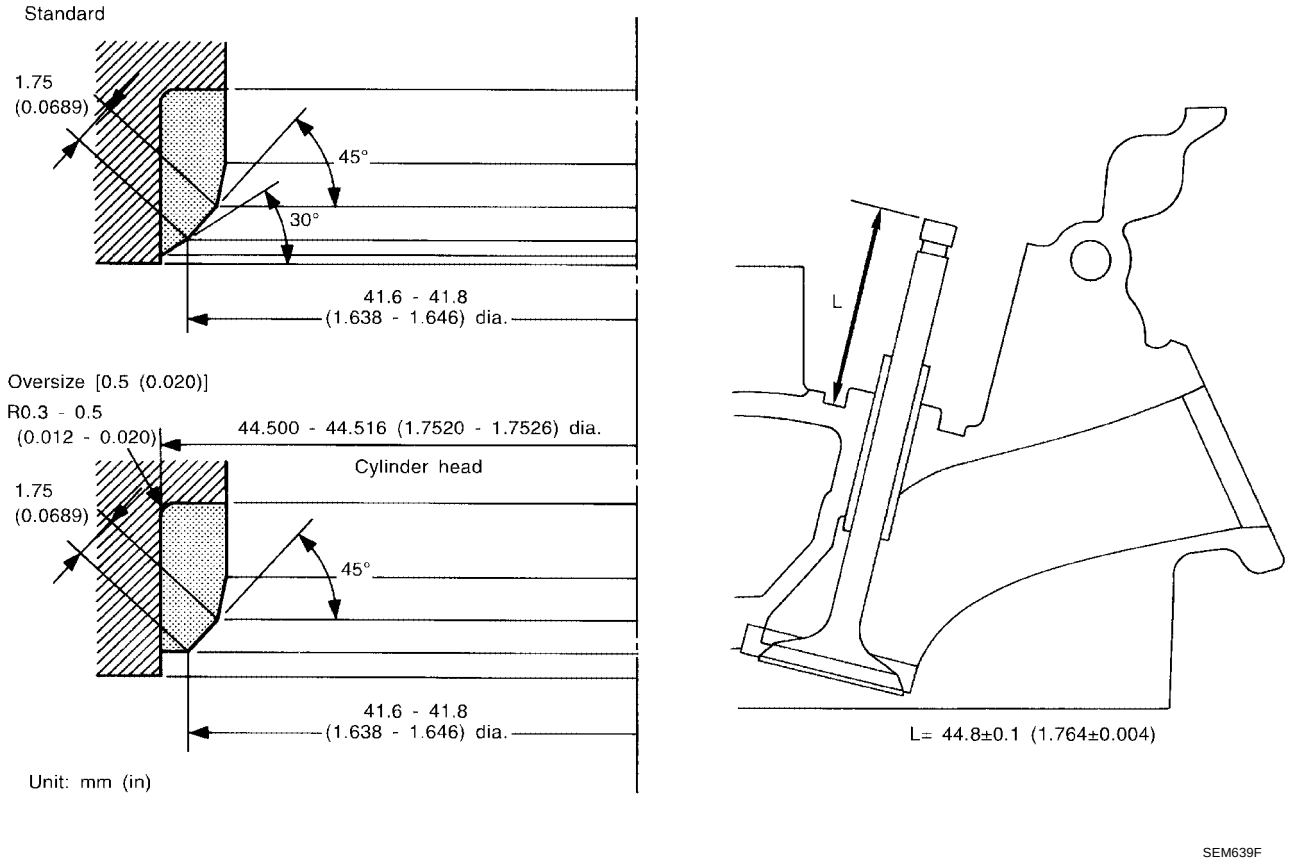

Intake "L": 44.7 - 44.9 mm (1.760 - 1.768 in)

EXHAUST VALVE SEAT

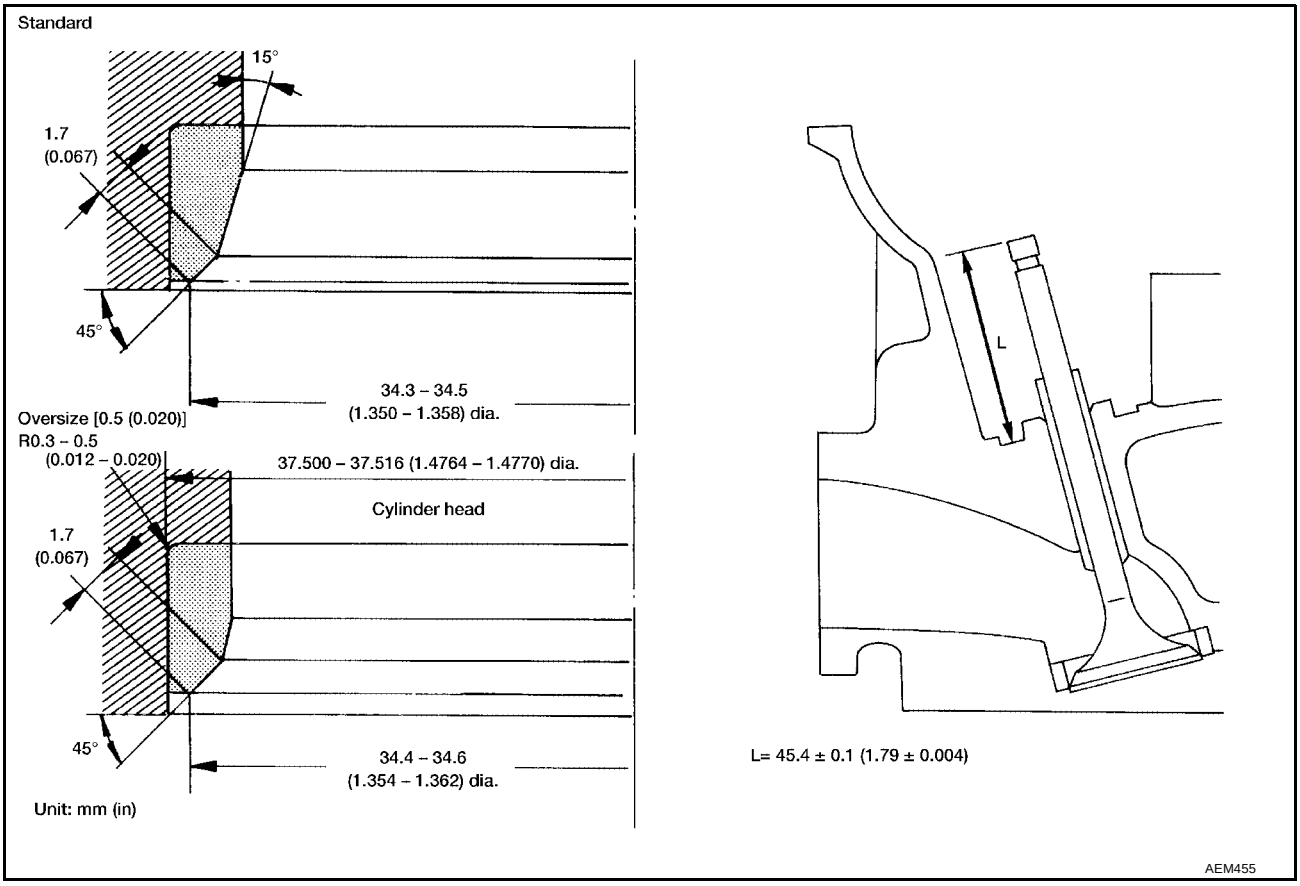

Exhaust "L": 45.4 - 45.6 mm (1.787 - 1.795 in)

Camshaft and Camshaft Bearing

EBS00EXU

Unit: mm (in)

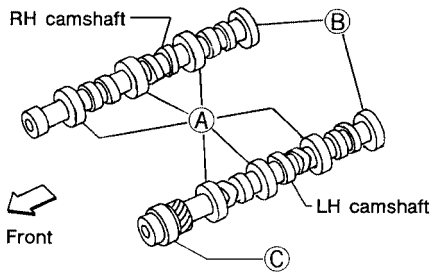

SEM893BA

	Standard	Max. tolerance
Camshaft journal to bearing clearance	0.060 - 0.105 (0.0024 - 0.0041)	0.15 (0.0059)
Inner diameter of camshaft bearing	A: 47.000 - 47.025 (1.8504 - 1.8514)	—
	B: 42.500 - 42.525 (1.6732 - 1.6742)	—
	C: 48.000 - 48.025 (1.8898 - 1.8907)	—
Outer diameter of camshaft journal	A: 46.920 - 46.940 (1.8472 - 1.8480)	—
	B: 42.420 - 42.440 (1.6701 - 1.6709)	—
	C: 47.920 - 47.940 (1.8866 - 1.8874)	—
Camshaft runout [TIR*]	Less than 0.04 (0.0016)	0.1 (0.004)
Camshaft end play	0.03 - 0.06 (0.0012 - 0.0024)	—

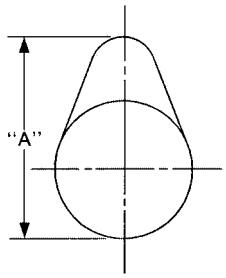

EM671

Cam height "A"	Intake	38.943 - 39.133 (1.5332 - 1.5407)
	Exhaust	38.943 - 39.133 (1.5332 - 1.5407)
Wear limit of cam height		0.15 (0.0059)

*Total indicator reading

Cylinder Block

EBS00EXV

Unit: mm (in)

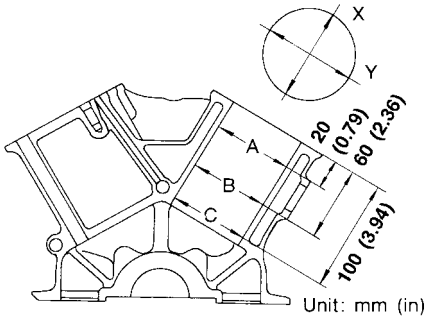

SEM321AA

Distortion		Standard		Less than 0.03 (0.0012)
		Limit		0.10 (0.004)
Cylinder bore	Inner diameter	Standard (for No. 3 and 4 cylinders)	Grade No. 1	91.500 - 91.505 (3.6024 - 3.6026)
			Grade No. 2	91.505 - 91.510 (3.6026 - 3.6027)
			Grade No. 3	91.510 - 91.515 (3.6027 - 3.6029)
			Grade No. 4	91.515 - 91.520 (3.6029 - 3.6031)
			Grade No. 5	91.520 - 91.525 (3.6031 - 3.6033)
			Grade No. 6	91.525 - 91.530 (3.6033 - 3.6035)
		Standard (for No. 1, 2, and 6 cylinders)	Grade No. 1	91.500 - 91.510 (3.6024 - 3.6027)
			Grade No. 2	91.510 - 91.520 (3.6027 - 3.6031)
			Grade No. 3	91.520 - 91.530 (3.6031 - 3.6035)
		Standard (for No. 5 cylinder)	Grade No. 1	91.515 - 91.520 (3.6029 - 3.6031)
			Grade No. 2	91.520 - 91.525 (3.6031 - 3.6033)
			Grade No. 3	91.525 - 91.530 (3.6033 - 3.6035)
			Grade No. 4	91.530 - 91.535 (3.6035 - 3.6037)
			Grade No. 5	91.535 - 91.540 (3.6037 - 3.6039)
			Grade No. 6	91.540 - 91.545 (3.6039 - 3.6041)
		Wear limit		0.20 (0.0079)
Out-of-round (difference between X and Y)				Less than 0.015 (0.0006)
Taper (difference between A and C)				Less than 0.015 (0.0006)

Main journal inner diameter	No. 1 main journal	Grade No.3	66.645 - 66.651 (2.6238 - 2.6240)
		Grade No. 4	66.651 - 66.657 (2.6240 - 2.6243)
		Grade No. 5	66.657 - 62.663 (2.6243 - 2.6245)
		Grade No. 6	66.663 - 66.669 (2.6245 - 2.6248)
	Except No. 1 main journal	Grade No. 0	66.645 - 66.654 (2.6238 - 2.6242)
		Grade No. 1	66.654 - 66.663 (2.6242 - 2.6245)
		Grade No. 2	66.663 - 66.672 (2.6245 - 2.6249)
Difference in inner diameter between cylinders	Standard		Less than 0.05 (0.0020)

Piston, Piston Ring and Piston Pin

EBS00EXW

AVAILABLE PISTON

Unit: mm (in)

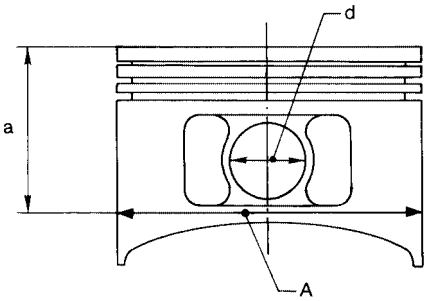

SEM804E

Piston skirt diameter “A”	Standard (for No. 3, 4 and 5 cylinders)	Grade No. 2-1	91.480 - 91.485 (3.6016 - 3.6018)
		Grade No. 3-2	91.485 - 91.490 (3.6018 - 3.6020)
		Grade No. 3-3	91.490 - 91.495 (3.6020 - 3.6022)
		Grade No. 4-4	91.495 - 91.500 (3.6022 - 3.6024)
		Grade No. 4-5	91.500 - 91.505 (3.6024 - 3.6026)
		Grade No. 5-6	91.505 - 91.510 (3.6026 - 3.6027)
	Standard (for No. 1, 2 and 6 cylinders)	Grade No. 1	91.465 - 91.475 (3.6010 - 3.6014)
		Grade No. 2	91.475 - 91.485 (3.6014 - 3.6018)
		Grade No. 3	91.485 - 91.495 (3.6018 - 3.6022)
	0.25 (0.0098) oversize (Service)		91.715 - 91.745 (3.6108 - 3.6120)
	0.50 (0.0197) oversize (Service)		91.965 - 91.995 (3.6207 - 3.6218)
Height “a”			49.0 (1.929)
Piston pin hole diameter "d"		Grade No. 0	20.969 - 20.975 (0.8255 - 0.8258)
		Grade No. 1	20.975 - 20.981 (0.8258 - 0.8260)
Piston clearance to cylinder block	Standard	For No. 3 and 4 cylinders	0.015 - 0.025 (0.0006 - 0.0010)
		For No. 1, 2 and 6 cylinders (No. 5 cylinder VG33ER only)	0.025 - 0.045 (0.0010 - 0.0018)
		For No. 5 cylinder (VG33E only)	0.030 - 0.040 (0.0012 - 0.0016)

PISTON RING

Unit: mm (in)

		Standard	Limit
Side clearance	Top	0.040 - 0.080 (0.0016 - 0.0031)	0.11 (0.0043)
	2nd	0.030 - 0.070 (0.0012 - 0.0028)	0.10 (0.0039)
	Oil	0.015 - 0.185 (0.0006 - 0.0073)	—

		Standard	Limit
Ring gap	Top	0.21 - 0.31 (0.0083 - 0.0122)	0.43 (0.0169)
	2nd	0.50 - 0.60 (0.0197 - 0.0236)	0.69 (0.0272)
	Oil (rail ring)	0.20 - 0.60 (0.0079 - 0.0236)	0.84 (0.0331)

PISTON PIN

Unit: mm (in)

Piston pin outer diameter	20.971 - 20.983 (0.8256 - 0.8261)
Interference fit of piston pin to piston	0 to –0.004 (0 to –0.0002)
Piston pin to connecting rod bushing clearance	0.005 - 0.017 (0.0002 - 0.0007)

Values measured at ambient temperature of 20°C (68°F)

Connecting Rod

EBS00EXX

Unit: mm (in)

Center distance		154.1 - 154.2 (6.067 - 6.071)
Bend, torsion [per 100 (3.94)]	Limit	Bend: 0.15 (0.0059) Torsion: 0.30 (0.0118)
Piston pin bushing inner diameter*		20.982 - 20.994 (0.8261 - 0.8265)
Connecting rod big end inner diameter		53.000 - 53.013 (2.0866 - 2.0871)
Side clearance	Standard	0.20 - 0.35 (0.0079 - 0.0138)
	Limit	0.40 (0.0157)

*After installing in connecting rod

Crankshaft

EBS00EXY

Unit: mm (in)

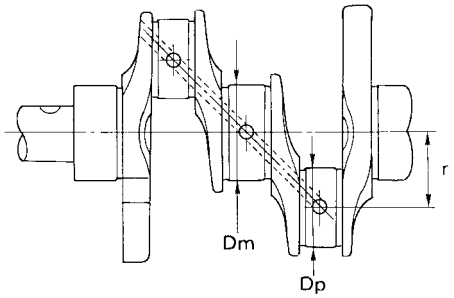

SEM394

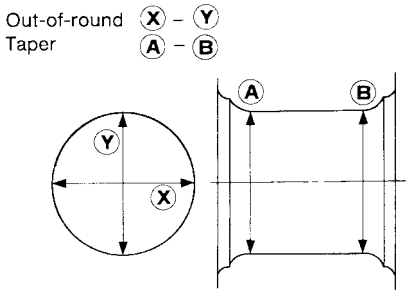

EM715

Main journal dia. “Dm”	No. 1 main journal	Grade No. 3	62.696 - 62.975 (2.4683 - 2.4793
		Grade No. 4	62.963 - 62.969 (2.4789 - 2.4791)
		Grade No. 5	62.957 - 62.963 (2.4786 - 2.4789)
		Grade No. 6	62.951 - 62.957 (2.4784 - 2.4786)
	Except No. 1 main journal	Grade No. 0	62.967 - 62.975 (2.4790 - 2.4793)
		Grade No. 1	62.959 - 62.967 (2.4787 - 2.4790)
		Grade No. 2	62.951 - 62.959 (2.4784 - 2.4787)
Pin journal dia. “Dp”			49.955 - 49.974 (1.9667 - 1.9675)
Center distance “r”			41.5 (1.634)
Out-of-round (X – Y)		Standard	Less than 0.005 (0.0002)
Taper (A – B)		Standard	Less than 0.005 (0.0002)
Runout (total indicator reading)		Standard	Less than 0.025 (0.0010)
		Limit	Less than 0.10 (0.0039)
End free play		Standard	0.050 - 0.170 (0.0020 - 0.0067)
		Limit	0.30 (0.0118)

Available Main Bearing

EBS00EXZ

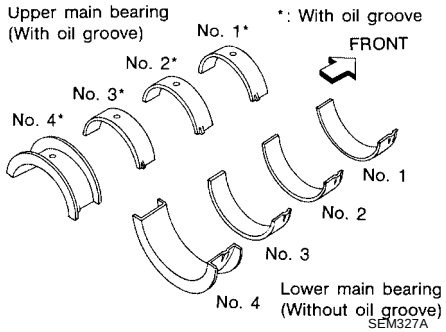

NO. 1 MAIN BEARING

Grade number	Thickness “T” mm (in)	Width “W” mm (in)	Identification color (mark)
0	1.822 - 1.825 (0.0717 - 0.0719)	22.4 - 22.6 (0.882 - 0.890)	Black (A)
1	1.825 - 1.828 (0.0719 - 0.0720)		Brown (B)
2	1.828 - 1.831 (0.0720 - 0.0721)		Green (C)
3	1.831 - 1.834 (0.0721 - 0.0722)		Yellow (D)
4	1.834 - 1.837 (0.0722 - 0.0723)		Blue (E)
5	1.837 - 1.840 (0.0723 - 0.0724)		Pink (F)
6	1.840 - 1.843 (0.0724 - 0.0726)		Purple (G)

NO. 2 AND 3 MAIN BEARING

Grade number	Thickness “T” mm (in)	Width “W” mm (in)	Identification color
0	1.817 - 1.821 (0.0715 - 0.0717)	18.9 - 19.1 (0.744 - 0.752)	Black
1	1.821 - 1.825 (0.0717 - 0.0719)		Brown
2	1.825 - 1.829 (0.0719 - 0.0720)		Green
3	1.829 - 1.833 (0.0720 - 0.0722)		Yellow
4	1.833 - 1.837 (0.0722 - 0.0723)		Blue

NO. 4 MAIN BEARING

Grade number	Thickness “T” mm (in)	Identification color
0	1.817 - 1.821 (0.0715 - 0.0717)	Black
1	1.821 - 1.825 (0.0717 - 0.0719)	Brown
2	1.825 - 1.829 (0.0719 - 0.0720)	Green
3	1.829 - 1.833 (0.0720 - 0.0722)	Yellow
4	1.833 - 1.837 (0.0722 - 0.0723)	Blue

UNDER SIZE

Unit: mm (in)

		Thickness “T” mm (in)	Main journal diameter “Dm”
0.25 (0.0098)	No.1 main bearing	1.956 - 1.962 (0.0770 - 0.0772)	Grind so that bearing clearance is the specified value.
	No.2,3 and No.4 main bearing	1.948 - 1956 (0.0767 - 0.0770)	

Available Connecting Rod Bearing

EBS00EY0

CONNECTING ROD BEARING UNDERSIZE

Unit: mm (in)

		Thickness	Crank pin journal diameter “Dp”
Standard		1.502 - 1.506 (0.0591 - 0.0593)	49.955 - 49.974 (1.9667 - 1.9675)
Undersize	0.08 (0.0031)	1.542 - 1.546 (0.0607 - 0.0609)	Grind so that bearing clearance is the specified value.
	0.12 (0.0047)	1.562 - 1.566 (0.0615 - 0.0617)	
	0.25 (0.0098)	1.627 - 1.631 (0.0641 - 0.0642)	

Miscellaneous Components

EBS00EY1

Unit: mm (in)

Flywheel / drive plate runout (total indicator reading)	Less than 0.15 (0.0059)

BEARING CLEARANCE

Unit: mm (in)

No. 1 Main bearing clearance	Standard	0.030 - 0.048 (0.0012 - 0.0019)
	Limit	0.060 (0.0024)
No. 2, 3, 4 Main bearing clearance	Standard	0.038 - 0.065 (0.0015 - 0.0026)
	Limit	0.080 (0.0031)
Connecting rod bearing clearance	Standard	0.024 - 0.064 (0.0009 - 0.0025)
	Limit	0.090 (0.0035)