SECTION EXL
EXTERIOR LIGHTING SYSTEM

CONTENTS

BASIC INSPECTION

DIAGNOSIS AND REPAIR WORKFLOW

Work Flow

INFOID:0000000005561485

OVERALL SEQUENCE

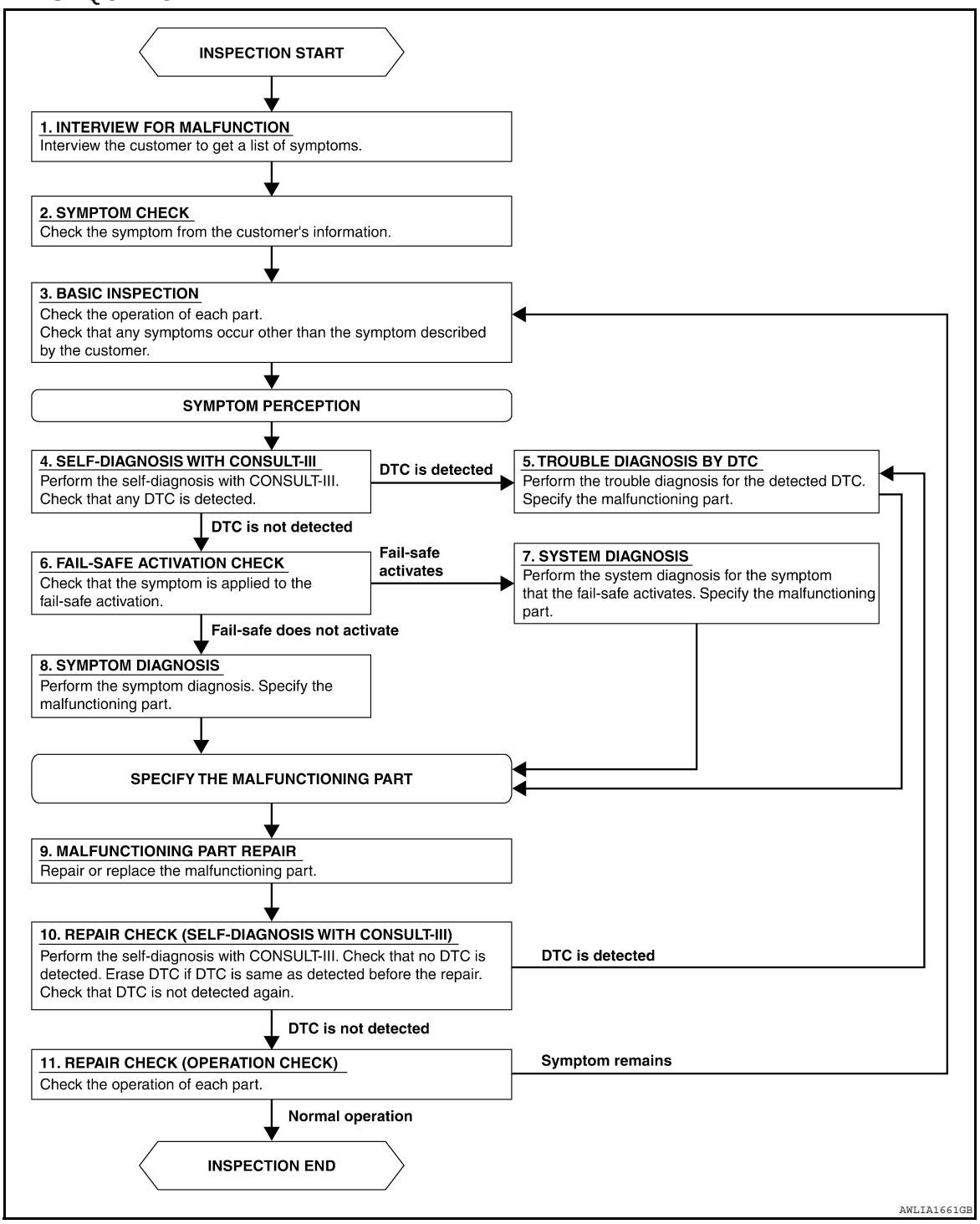

DETAILED FLOW

1. INTERVIEW FOR MALFUNCTION

Find out what the customer's concerns are.

>> GO TO 2.

2. SYMPTOM CHECK

Verify the symptom from the customer's information.

>> GO TO 3.

3. BASIC INSPECTION

Check the operation of each part. Check that any concerns occur other than those mentioned in the customer interview.

>> GO TO 4.

4. SELF-DIAGNOSIS WITH CONSULT-III

Perform the self diagnosis with CONSULT-III. Check that any DTC is detected.

Is any DTC detected?

YES >> GO TO 5.
NO >> GO TO 6.

5. TROUBLE DIAGNOSIS BY DTC

Perform the trouble diagnosis for the detected DTC. Specify the malfunctioning part.

>> GO TO 9.

6. FAIL-SAFE ACTIVATION CHECK

Determine if the customer's concern is related to fail-safe activation.

Does the fail-safe activate?

YES >> GO TO 7.
NO >> GO TO 8.

7. SYSTEM DIAGNOSIS

Perform the system diagnosis for the system in which the fail-safe activates. Specify the malfunctioning part.

>> GO TO 9.

8. SYMPTOM DIAGNOSIS

Perform the symptom diagnosis. Specify the malfunctioning part.

>> GO TO 9.

9. MALFUNCTION PART REPAIR

Repair or replace the malfunctioning part.

>> GO TO 10.

10. REPAIR CHECK (SELF-DIAGNOSIS WITH CONSULT-III)

Perform the self diagnosis with CONSULT-III. Verfied that no DTCs are detected. Erase all DTCs detected prior to the repair. Verify that DTC is not detected again.

Is any DTC detected?

YES >> GO TO 5.
NO >> GO TO 11.

11. REPAIR CHECK (OPERATION CHECK)

Check the operation of each part.

Does it operate normally?

YES >> Inspection End.
NO >> GO TO 3.

FUNCTION DIAGNOSIS

HEADLAMP

System Diagram

INFOID:0000000005561486

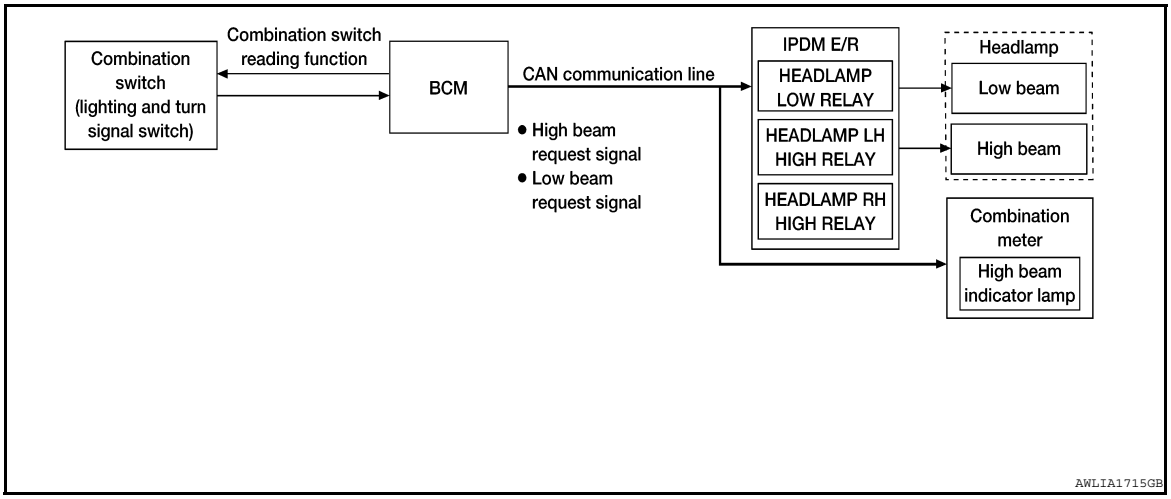

System Description

INFOID:0000000005561487

Control of the headlamp system operation is dependent upon the position of the combination switch (lighting and turn signal switch). When the combination switch (lighting and turn signal switch) is placed in the 2nd position, the BCM (body control module) receives input requesting the headlamps and park lamps to illuminate. This input is communicated to the IPDM E/R (intelligent power distribution module engine room) via the CAN communication lines. The CPU (central processing unit) of the IPDM E/R controls the headlamp LH high, headlamp RH high and headlamp low relay coils. When energized, these relays direct power to the respective headlamps, which then illuminate.

HIGH BEAM OPERATION/FLASH-TO-PASS OPERATION

With the combination switch (lighting and turn signal switch) in the 2ND position and placed in HIGH position, the BCM receives input requesting the headlamp high beams to illuminate. The flash to pass feature can be used any time and also sends a signal to the BCM. This input is communicated to the IPDM E/R via the CAN communication lines. The CPU of the combination meter controls the ON/OFF status off the HIGH BEAM indicator. The CPU of the IPDM E/R controls the headlamp high relay coil which supplies power to the high beam headlamps.

The combination meter receives a high beam request signal (ON) via the CAN communication lines and turns the high beam indicator lamp ON.

Component Parts Location

INFOID:0000000005274702

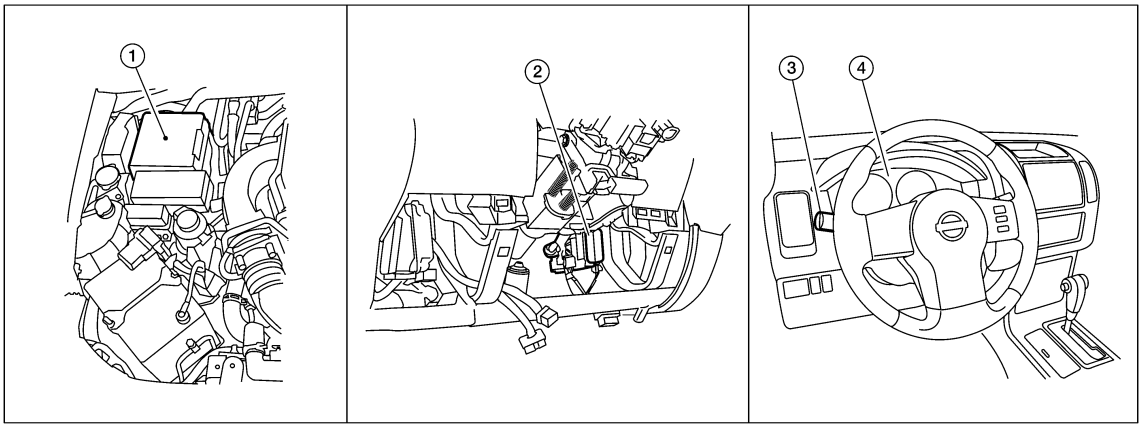

WKIA4957E

1. IPDM E/R E122, E123, E124
2. BCM M18, M20 (view with lower instrument panel LH removed)
3. Combination switch (lighting and turn signal switch) M28
4. Combination meter M24

Component Description

INFOID:0000000005274703

Part name	Description
BCM	• Receives combination switch (lighting and turn signal switch) request via BCM combination switch reading function. • Sends headlamp high/low request signal to the IPDM E/R.
IPDM E/R	Activates the headlamp high and headlamp low relays upon request from the BCM.
Combination switch (lighting and turn signal switch)	Outputs lighting requests to the BCM.

DAYTIME RUNNING LIGHT SYSTEM

System Diagram

INFOID:0000000005561488

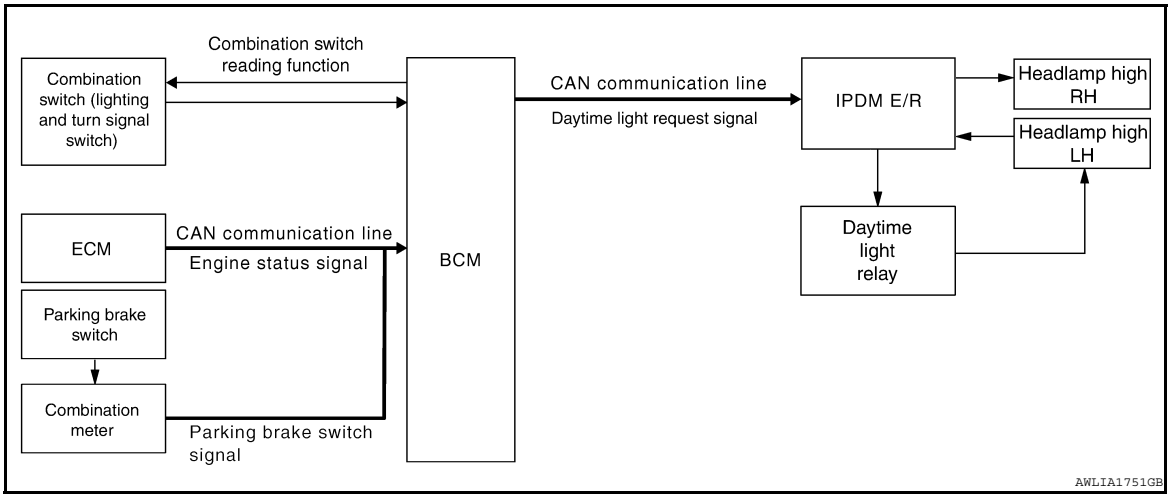

System Description

INFOID:0000000005274705

The headlamp system for Canada vehicles is equipped with a daytime light control that activates the high beam headlamps at approximately half illumination whenever the engine is operating. If the parking brake is applied before the engine is started the daytime lights will not be illuminated. The daytime lights will illuminate once the parking brake is released. Thereafter, the daytime lights will continue to operate when the parking brake is applied.

OPERATION

The BCM monitors inputs from the parking brake switch and the combination switch (lighting and turn signal switch) to determine when to activate the daytime light system. The BCM sends a daytime light request to the IPDM E/R via the CAN communication lines. The IPDM E/R grounds the daytime light relay which in turn, provides power to the ground side of the LH high beam lamp. Power flows backward through the LH high beam lamp to the IPDM E/R, through the high beam fuses, through the RH high beam lamp circuit to the RH high beam lamp and on to ground. The high beam lamps are wired in series which causes them to illuminate at a reduced intensity.

Component Parts Location

INFOID:0000000005274706

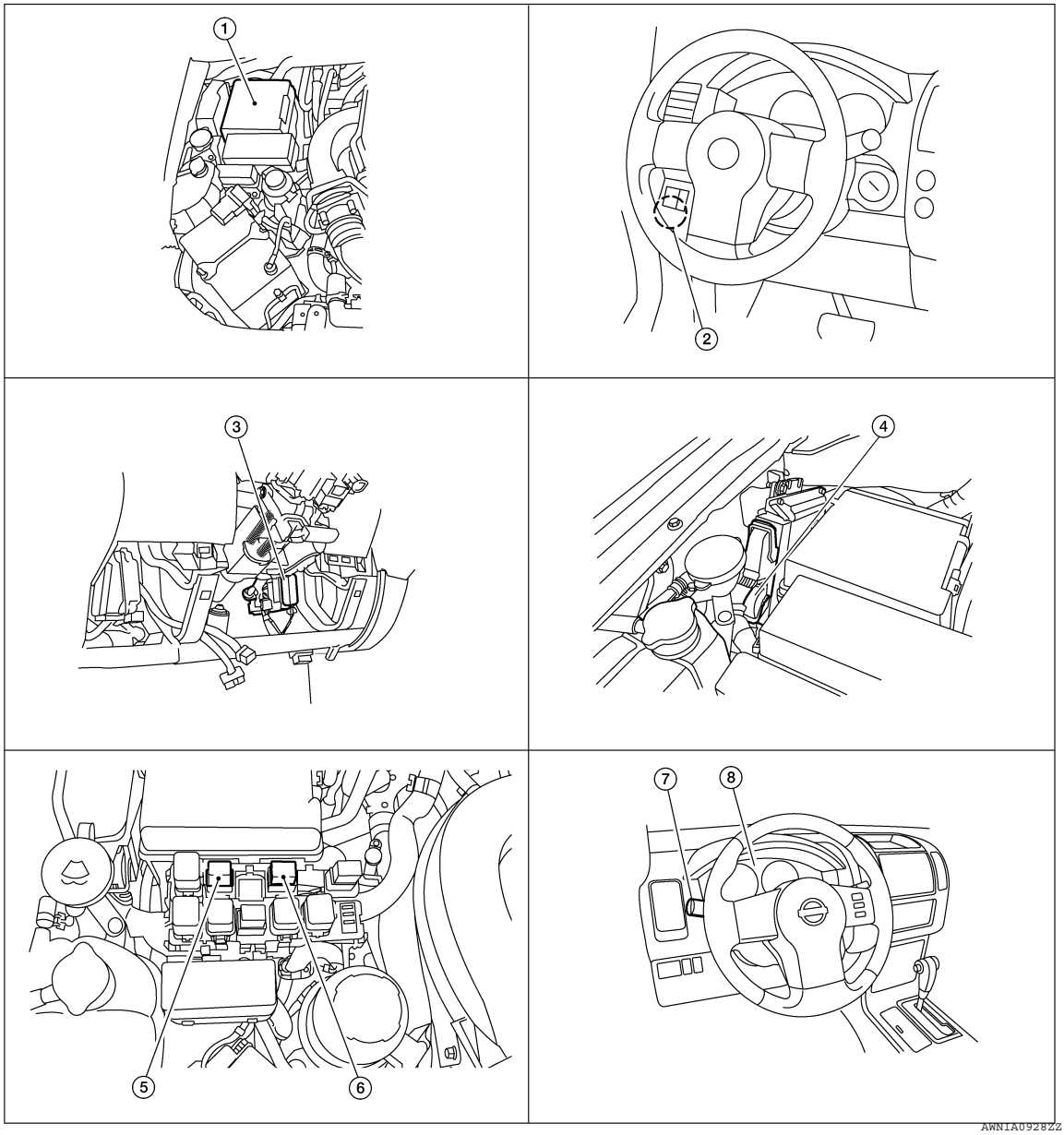

1. IPDM E/R E119, E122, E123, E124
2. Parking brake switch B84
3. BCM M18, M20 (view with lower instrument panel LH removed)
4. ECM E16 (view with ECM cover removed)
5. Daytime light relay 1 E103
6. Daytime light relay 2 E104
7. Combination switch (lighting and turn signal switch) M28
8. Combination meter M24

Component Description

INFOID:0000000005274707

Part name	Description
BCM	• Receives combination switch (lighting and turn signal switch) inputs via BCM combination switch reading function. • Receives park brake applied input from the park brake switch. • Receives engine running status from the ECM via CAN communication.

IPDM E/R	Receives daytime light request from the BCM and activates the daytime light relay.
Combination switch (lighting and turn signal switch)	Outputs lighting requests to the BCM.
Parking brake switch	Outputs parking brake status to the combination meter which forwards that information to the BCM via CAN communication.
ECM	Outputs engine running status to the BCM.

AUTO LIGHT SYSTEM

System Diagram

INFOID:0000000005561489

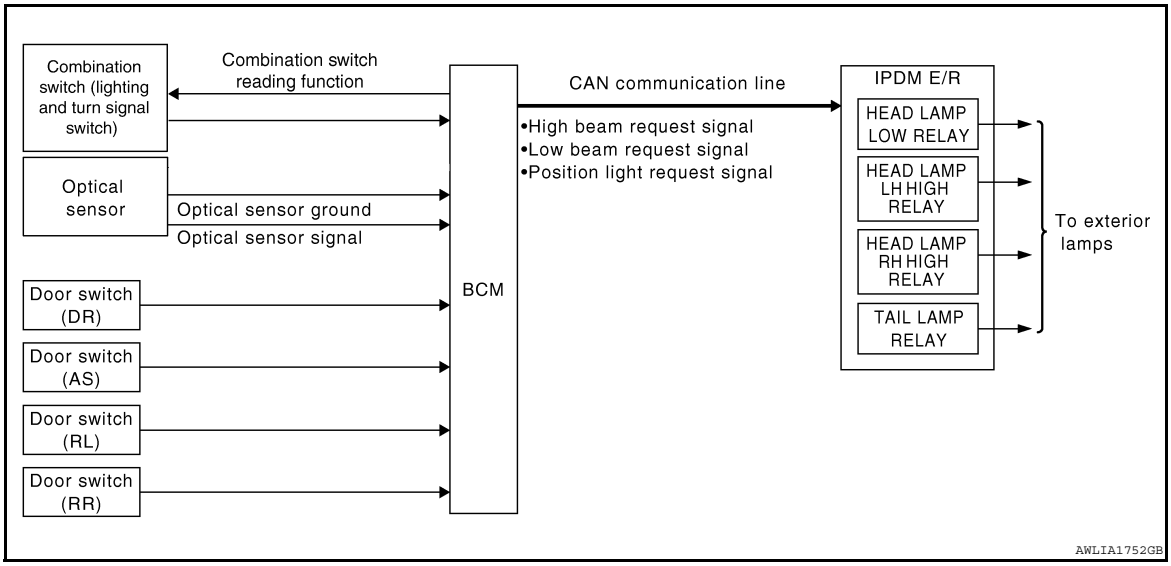

System Description

INFOID:0000000005561490

The auto light control system has an optical sensor that detects outside brightness.
When the combination switch (lighting and turn signal switch) is in AUTO position, it automatically turns ON/OFF the parking, license plate, tail and headlamps in accordance with the ambient light. Sensitivity can be adjusted in four steps. For the details, refer to EXL-27, "HEADLAMP : CONSULT-III Function (BCM - HEAD LAMP)".

AUTO LIGHT OPERATION

The auto light system operates the low beam and high beam headlamps, parking lamps, tail lamps and license plate lamps. The BCM monitors the combination switch (lighting and turn signal switch) position as a part of the BCM combination switch reading function. When the combination switch (lighting and turn signal switch) is in the AUTO position, the BCM automatically turns the lamps ON/OFF according to ambient light brightness. When the key is turned OFF and all doors are closed, the auto light system keeps the headlamps ON for 45 seconds.

NOTE:

Timing for when lamps turn ON/OFF can be changed by the function setting of CONSULT-III. Refer to EXL-27, "HEADLAMP : CONSULT-III Function (BCM - HEAD LAMP)".

Component Parts Location

INFOID:0000000005274710

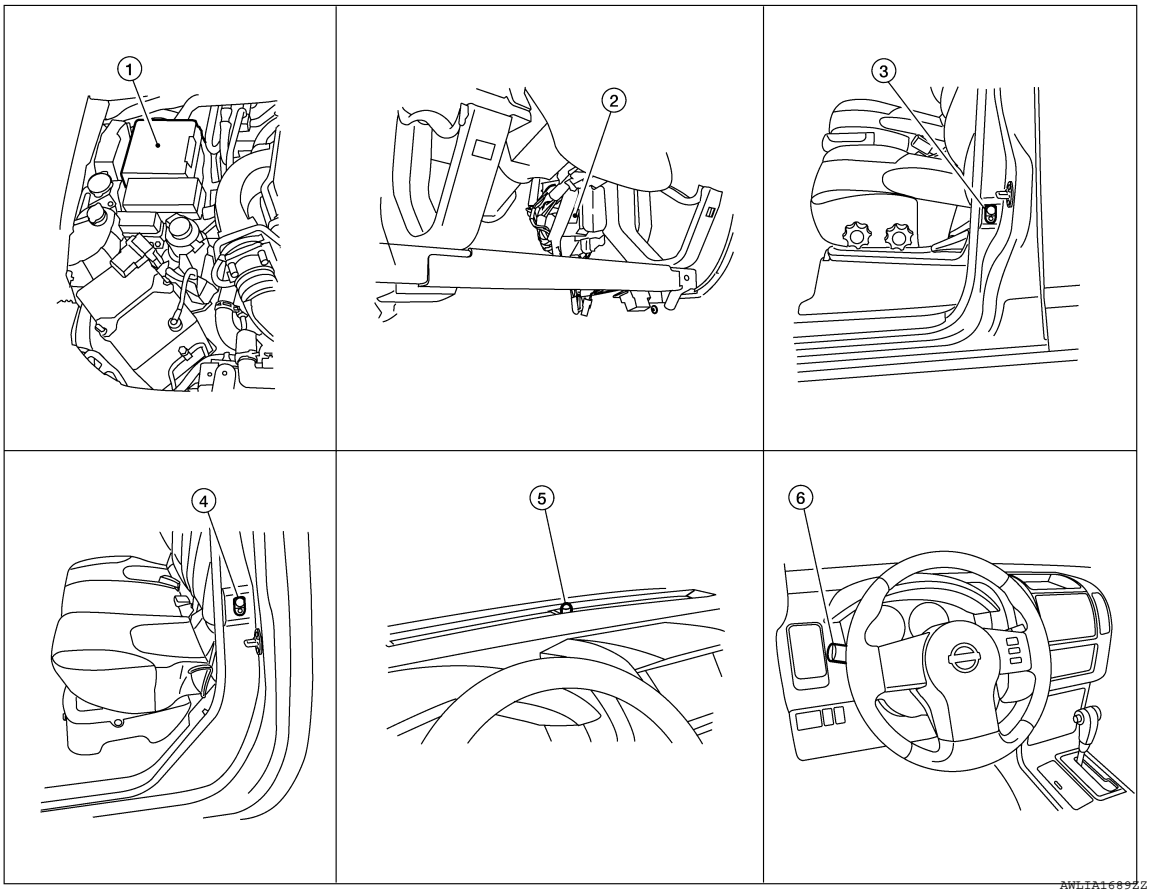

1. IPDM E/R E122, E123, E124
2. BCM M18, M19, M20 (view with lower instrument panel LH removed)
3. Front door switch
   LH B8
   RH B108
4. Rear door switch
   LH B18
   RH B116
5. Optical sensor M14
6. Combination switch (lighting and turn signal switch) M28

Component Description

INFOID:0000000005274711

Part name	Description
BCM	BCM (Body Control Module) controls auto light operation according to signals from optical sensor, lighting switch and ignition switch.
IPDM E/R	IPDM E/R (Intelligent Power Distribution Module Engine Room) operates parking, license plate, tail and headlamps according to CAN communication signals from BCM.
Combination switch (lighting and turn signal switch)	The lighting switch outputs lighting requests to the BCM.
Optical sensor	Optical sensor detects ambient brightness and converts light (lux) to voltage, then sends the optical sensor signal to BCM.
Door switches	Detects door open/closed status and forwards that status to the BCM.

FRONT FOG LAMP

System Diagram

INFOID:0000000005561491

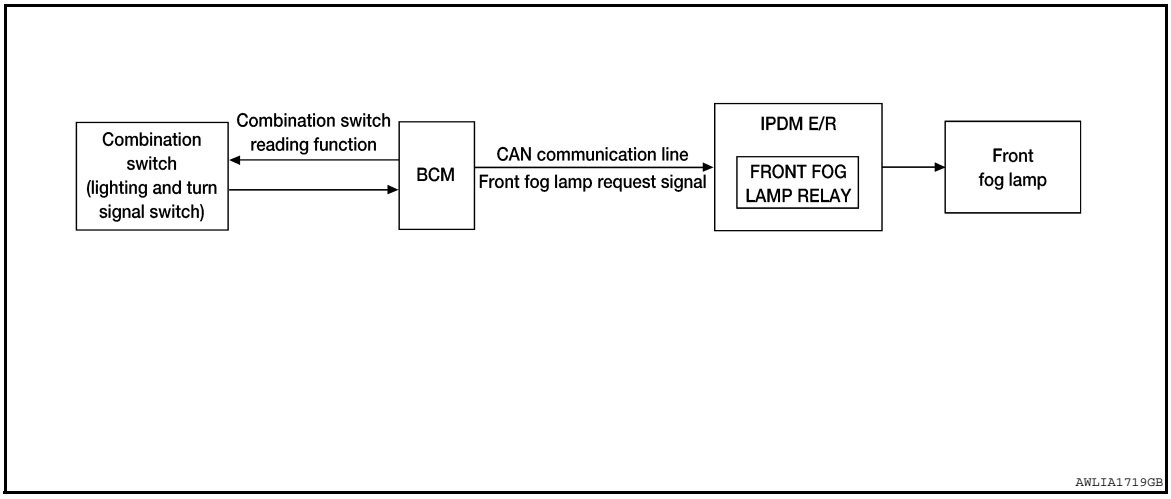

System Description

INFOID:0000000005561492

The front fog lamps are activated with the combination switch (lighting and turn signal switch). The combination switch (lighting and turn signal switch) signal to the BCM is monitored with the BCM combination switch reading function. When the fog lamps are turned ON with the combination switch (lighting and turn signal switch), the BCM sends a front fog lamp request signal via CAN communication lines to the IPDM E/R. The IPDM E/R grounds the front fog lamp relay coil to activate the front fog lamps.

FRONT FOG LAMP OPERATION

When the combination switch (lighting and turn signal switch) is in front fog lamp ON position and also in 1ST or 2ND position or AUTO (if equipped) position (headlamp is ON), the BCM detects FR FOG ON and the HEAD LAMP1 or 2 ON. The BCM sends a front fog lamp request ON signal via the CAN communication lines to the IPDM E/R. The IPDM E/R then turns ON the front fog lamp relay sending power to the front fog lamps.

Component Parts Location

INFOID:0000000005274714

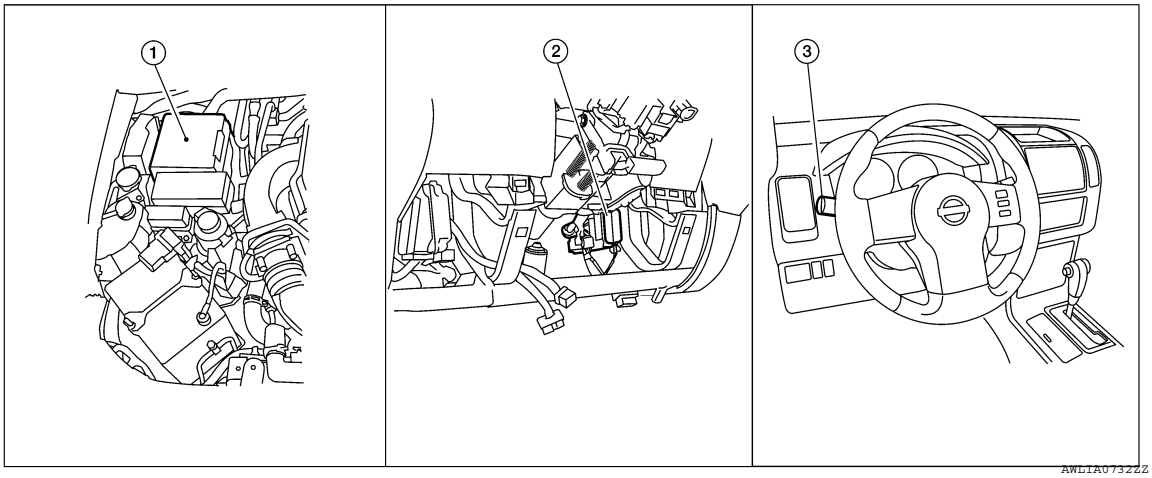

1. IPDM E/R E122, E123, E124
2. BCM M18, M20 (view with lower instrument panel LH removed)
3. Combination switch (lighting and turn signal switch) M28

Component Description

INFOID:0000000005274715

Part name	Description
BCM	• Receives lighting switch requests via BCM combination switch reading function. • Sends headlamp high/low request signal to the IPDM E/R.
IPDM E/R	Activates the front fog lamp relay upon request from the BCM.
Combination switch (lighting and turn signal switch)	Outputs lighting requests to the BCM.

TURN SIGNAL AND HAZARD WARNING LAMPS

System Diagram

INFOID:0000000005561493

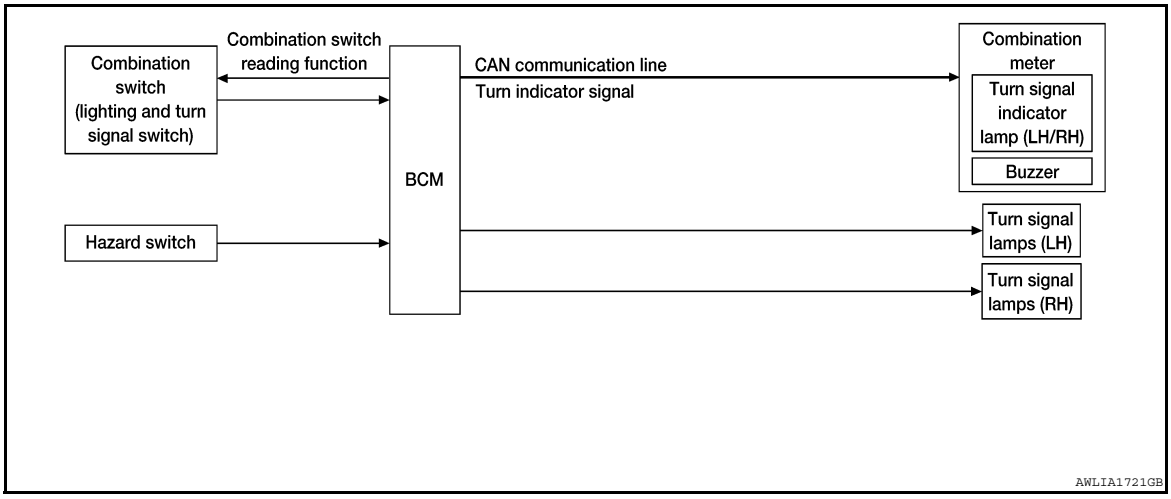

System Description

INFOID:0000000005561494

TURN SIGNAL OPERATION

When the combination switch (lighting and turn signal switch) is in LH or RH position with the ignition switch in ON position, the BCM detects the TURN RH or TURN LH ON request. The BCM outputs the flasher signal to the respective turn signal lamp. The BCM also sends a turn indicator signal ON request via the CAN communication lines to the combination meter. The combination meter then activates the appropriate turn signal indicator and audible buzzer.

HAZARD LAMP OPERATION

When the hazard switch is in ON position, the BCM detects the hazard switch signal ON. The BCM outputs the flasher signal (right and left). The BCM sends a hazard indicator signal ON request via the CAN communication lines to the combination meter. The combination meter then activates the hazard indicator and audible buzzer.

Component Parts Location

INFOID:0000000005274718

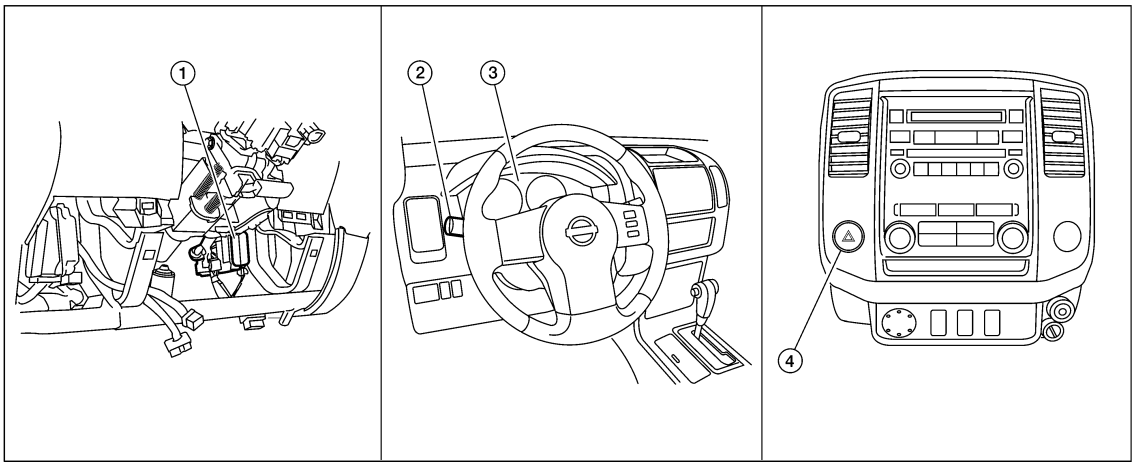

1. BCM M18, M20 (view with lower instrument panel LH removed)
2. Combination switch (lighting and turn signal switch) M28
3. Combination meter M24
4. Hazard switch M55

Component Description

INFOID:0000000005274719

Part name	Description
BCM	Controls turn signal and hazard flasher operation.
Combination switch (lighting and turn signal switch)	Lighting and turn signal switch requests are output to the BCM.
Hazard switch	Hazard flasher request signal is output to the BCM.
Combination meter	Outputs turn and hazard indicator as requested by the BCM.

PARKING, LICENSE PLATE AND TAIL LAMPS

System Diagram

INFOID:0000000005274720

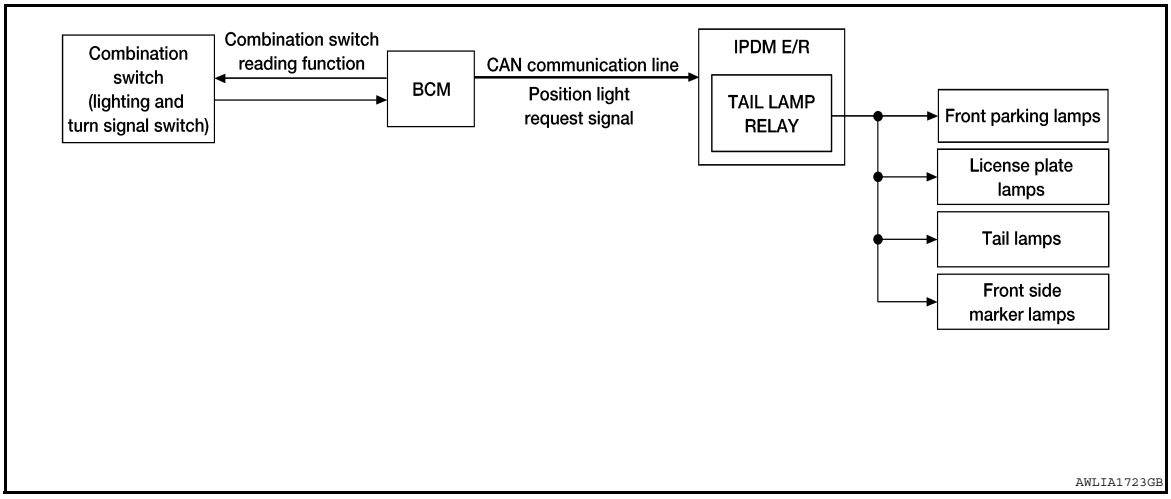

System Description

INFOID:0000000005561495

PARKING, LICENCE PLATE AND TAIL LAMPS OPERATION

When the combination switch (lighting and turn signal switch) is in 1ST position, BCM detects the LIGHTING SWITCH 1ST POSITION ON. The BCM sends a parking light ON request via the CAN communication lines to the IPDM E/R. The IPDM E/R then activates the tail lamp relay which sends power to the parking and instrument illumination circuits.

EXTERIOR LAMP BATTERY SAVER CONTROL

With the combination switch (lighting and turn signal switch) in the 2nd position and the ignition switch is turned from ON or ACC to OFF, the battery saver feature is activated.
Under this condition, the headlamps remain illuminated for 5 minutes unless the combination switch (lighting and turn signal switch) position is changed. If the combination switch (lighting and turn signal switch) position is changed, then the headlamps are turned off.
This setting can be changed by CONSULT-III. Refer to BCS-22, "BATTERY SAVER : CONSULT-III Function (BCM - BATTERY SAVER)".

Component Parts Location

INFOID:0000000005274722

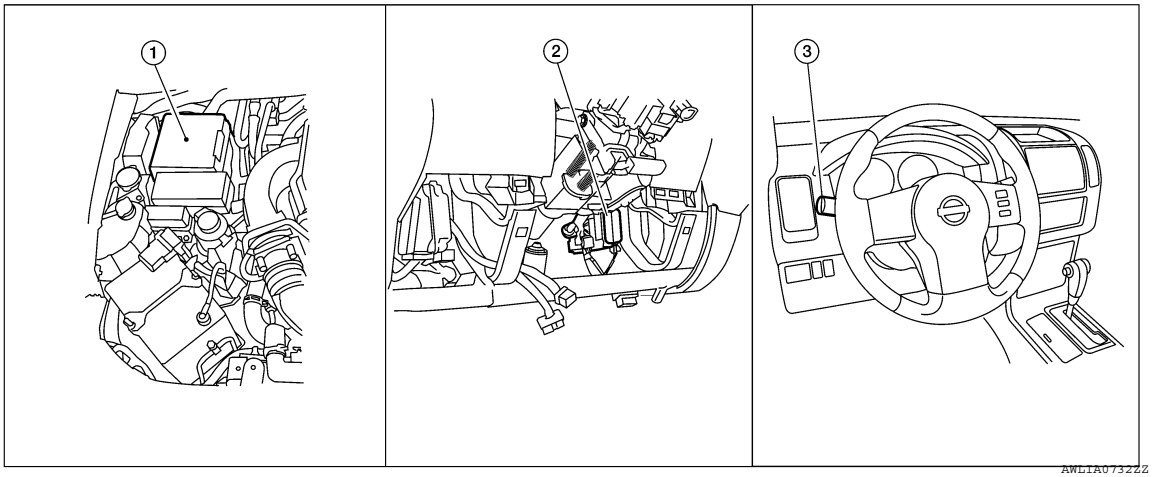

1. IPDM E/R E121, E122, E123, E124
2. BCM M18, M20 (view with lower instrument panel LH removed)
3. Combination switch (lighting and turn signal switch) M28

Component Description

INFOID:0000000005274723

Part name	Description
BCM	• Receives combination switch (lighting and turn signal switch) requests via BCM combination switch reading function. • Sends parking light request signal to the IPDM E/R.
IPDM E/R	Activates the tail lamp relay upon request of the BCM.
Combination switch (lighting and turn signal switch)	Outputs lighting requests to the BCM.

TRAILER TOW

System Diagram

INFOID:0000000005561507

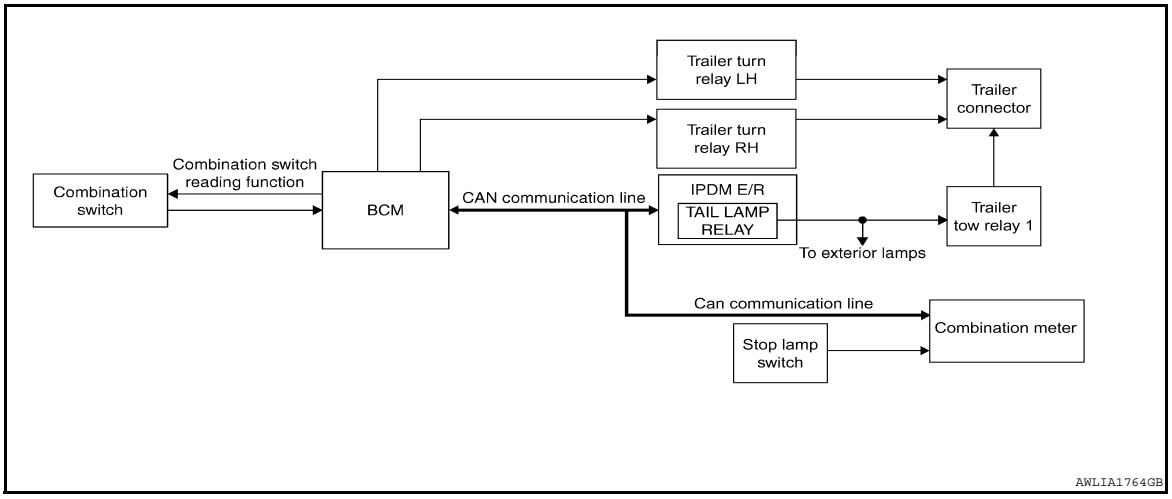

System Description

INFOID:0000000005561508

TRAILER TAIL LAMP OPERATION

The trailer tail lamps are controlled by the trailer tow relay 1 located in the IPDM E/R. With the combination switch (lighting and turn signal switch) in the 1st position, the BCM detects the LIGHTING SWITCH 1ST POSITION ON. The BCM sends a parking light ON request via the CAN communication lines to the IPDM E/R. The IPDM E/R then activates the tail lamp relay which activates the trailer tow relay 1 and sends power to the trailer connector.

TRAILER TURN SIGNAL LAMP OPERATION

The trailer turn signal lamps are controlled by the BCM. When the combination switch (lighting and turn signal switch) is in the LH or RH position with the ignition switch ON, the combination switch (lighting and turn signal switch) sends a signal to the BCM. The BCM detects the TURN RH or TURN LH ON request. The BCM sends a control signal to the respective trailer turn relay which sends power to the trailer connector.

TRAILER HAZARD LAMP OPERATION

The trailer hazard lamps are controlled by the BCM. When the hazard switch is pressed, the BCM detects the the hazard ON request. The BCM then sends a control signal to both trailer turn relays which sends power to the trailer connector.

TRAILER BRAKE LAMP OPERATION

The trailer brake lamps are controlled by the BCM. When the brake pedal is depressed, the combination meter receives a stop lamp switch signal from the stop lamp switch. The combination meter then sends the brake signal to the BCM via the CAN communication lines. The BCM then sends a control signal to both trailer turn relays which sends power to the trailer connector.

Component Parts Location

INFOID:0000000005561509

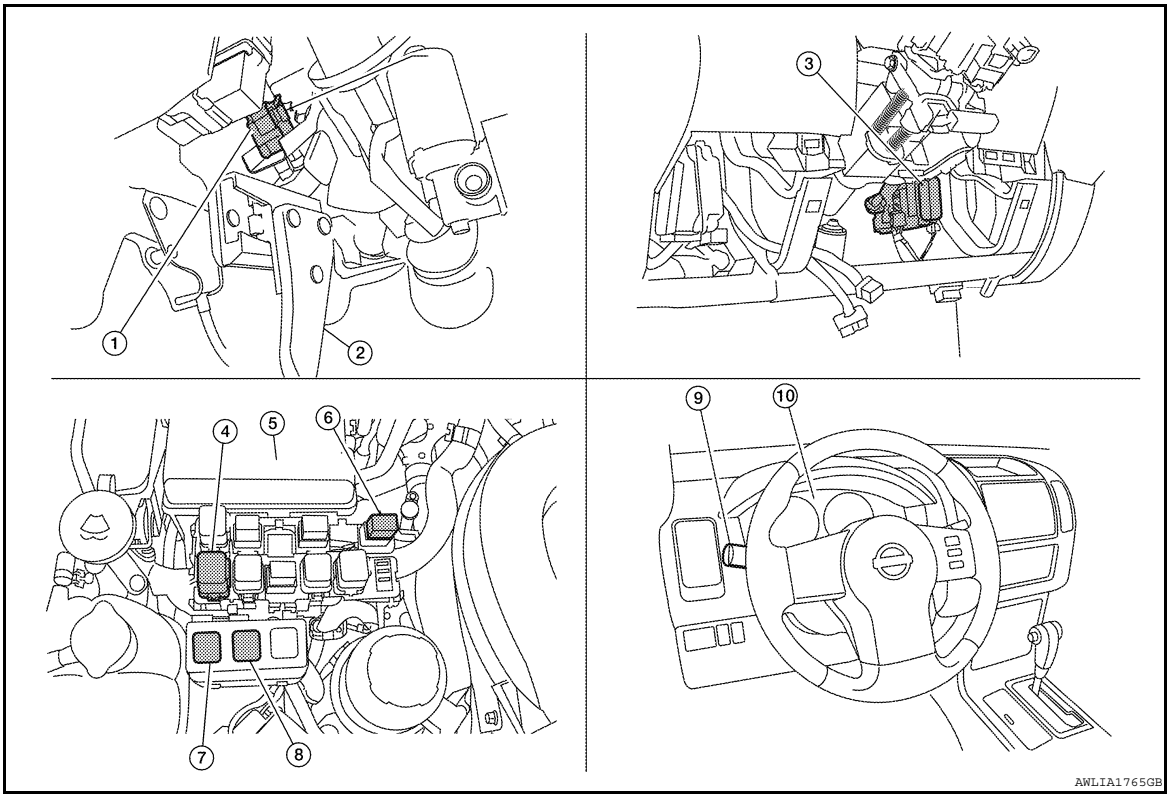

1. Stop lamp switch E38 (manual transmission) or E39 (automatic transmission) (view with lower instrument panel LH removed)
2. Brake pedal
3. BCM, M18, M19, M20 (view with lower instrument panel LH removed)
4. Trailer turn relay LH E164
5. IPDM E/R E121, E122, E124
6. Trailer turn relay RH E165
7. Trailer tow relay 2 E228
8. Trailer tow relay 1 E227
9. Combination switch (lighting and turn signal switch) M28
10. Combination meter M24

Component Description

INFOID:0000000005561510

Part name	Description
BCM	• Receives lighting and turn signal requests from combination switch (lighting and turn signal switch). • Receives stop lamp signal requests from combination meter via CAN communication. • Sends lighting signal request to the IPDM E/R to control the tail lamp relay via CAN communication. • Sends turn/hazard/brake control signal to the trailer turn relays.
IPDM E/R	Activates the tail lamp relay upon request from the BCM via CAN communication.
Combination meter	• Receives stop lamp switch signal from stop lamp switch. • Sends stop lamp signal request to the BCM via CAN communication.
Combination switch (lighting and turn signal switch)	Outputs lighting and turn signal requests to the BCM.

COMBINATION SWITCH READING SYSTEM

System Diagram

INFOID:0000000005561511

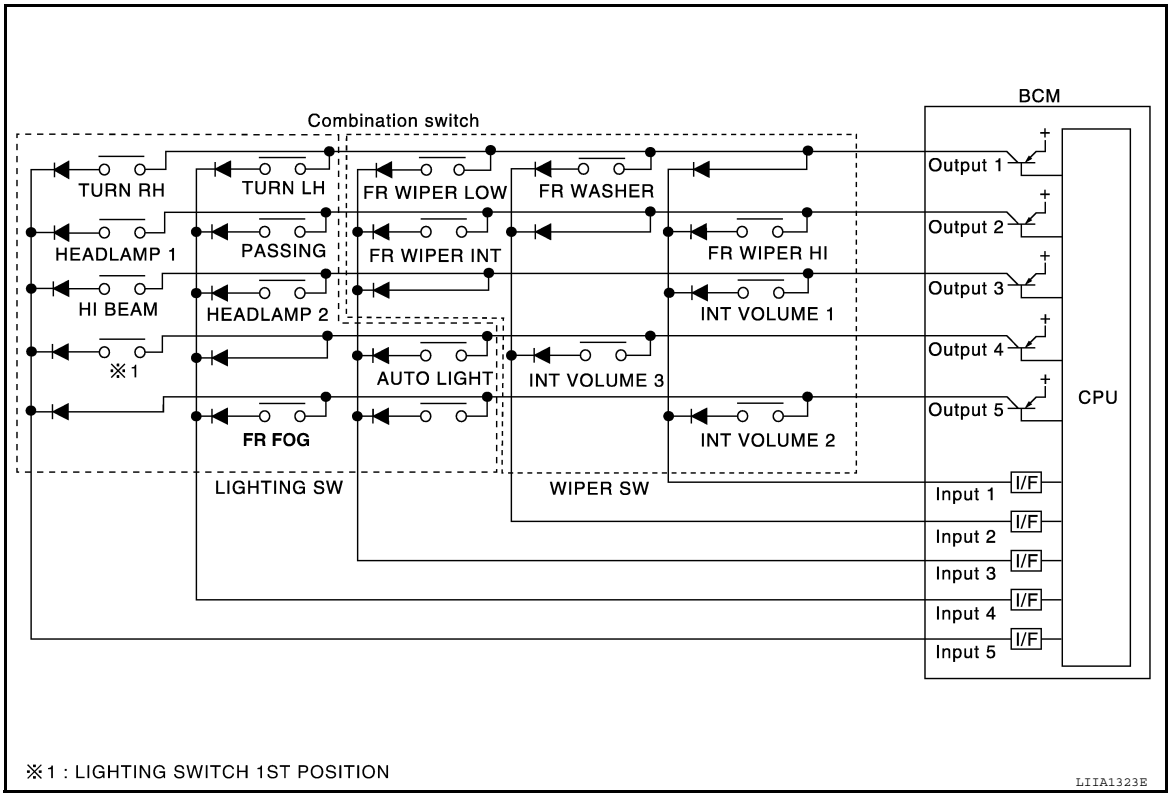

System Description

INFOID:0000000005561512

OUTLINE

- BCM reads the status of the combination switch (light, turn signal, wiper and washer) and recognizes the status of each switch.
- BCM is a combination of 5 output terminals (OUTPUT 1 - 5) and 5 input terminals (INPUT 1 - 5). It reads a maximum of 20 switch status.

COMBINATION SWITCH MATRIX

Combination switch circuit

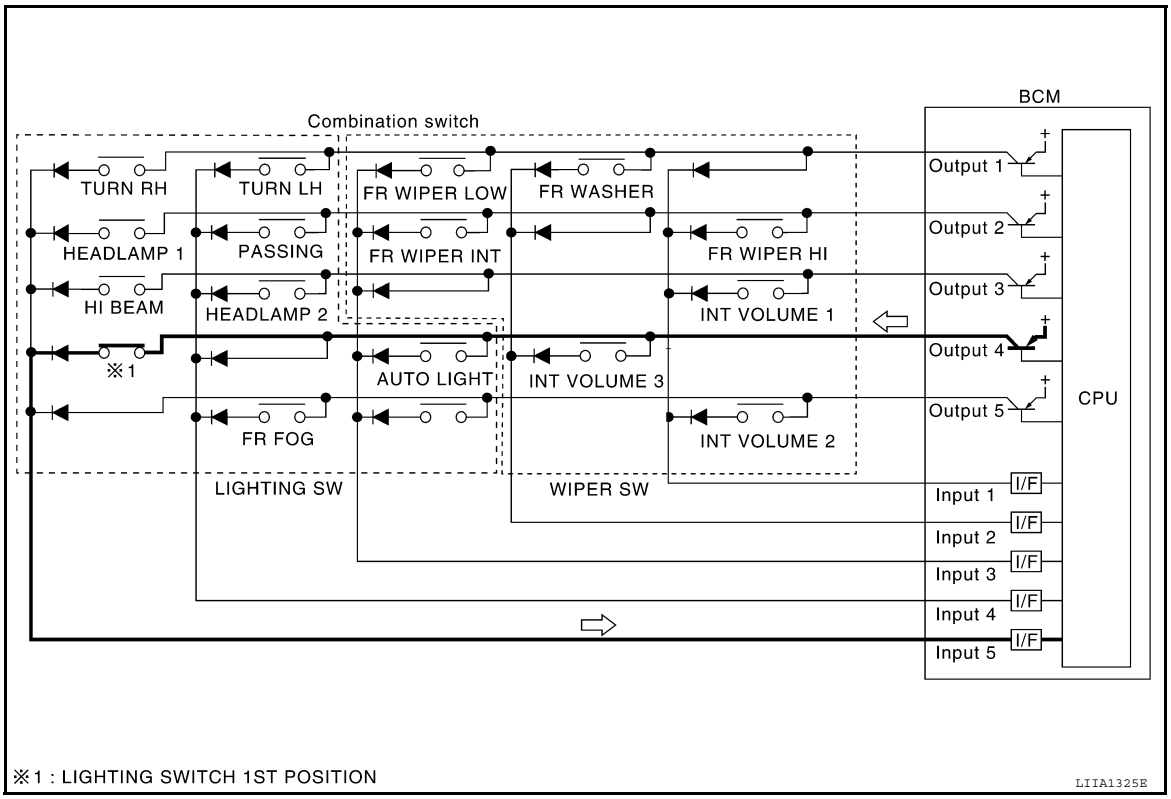

Combination switch INPUT-OUTPUT system list

System	OUTPUT 1	OUTPUT 2	OUTPUT 3	OUTPUT 4	OUTPUT 5
INPUT 1	—	FR WASHER	FR WIPER LOW	TURN LH	TURN RH
INPUT 2	FR WIPER HI	—	FR WIPER INT	PASSING	HEADLAMP 1
INPUT 3	INT VOLUME 1	—	—	HEADLAMP 2	HI BEAM
INPUT 4	—	INT VOLUME 3	AUTO LIGHT	—	TAIL LAMP
INPUT 5	INT VOLUME 2	—	—	FR FOG	—

NOTE:

Headlamp has a dual system switch.

COMBINATION SWITCH READING FUNCTION

Description

- BCM reads the status of the combination switch at 10ms interval normally.

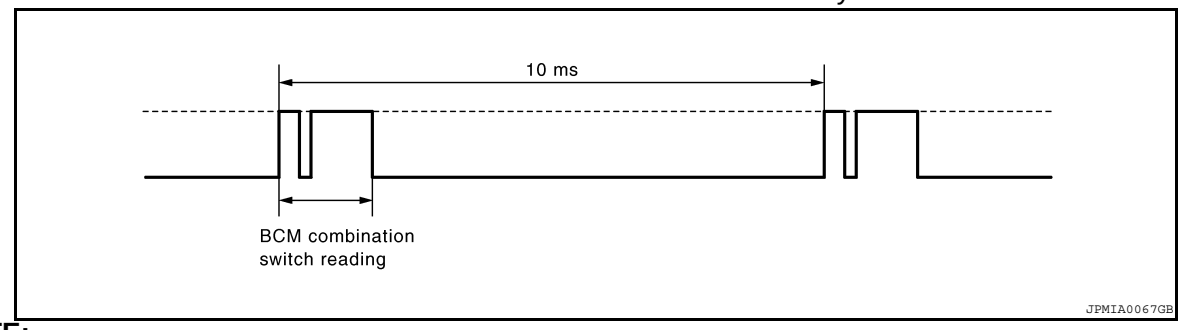

NOTE:

BCM reads the status of the combination switch at 20ms interval when BCM is controlled at low power consumption control mode.

- BCM operates as follows and judges the status of the combination switch.
- INPUT 1 - 5 outputs the voltage waveforms of 5 systems simultaneously.
- It operates the transistor on OUTPUT side in the following order: OUTPUT 5 → 4 → 3 → 2 → 1.

- The voltage waveform of INPUT corresponding to the formed circuit changes according to the operation of the transistor on OUTPUT side if any (1 or more) switches are ON.
- It reads this change of the voltage as the status signal of the combination switch.

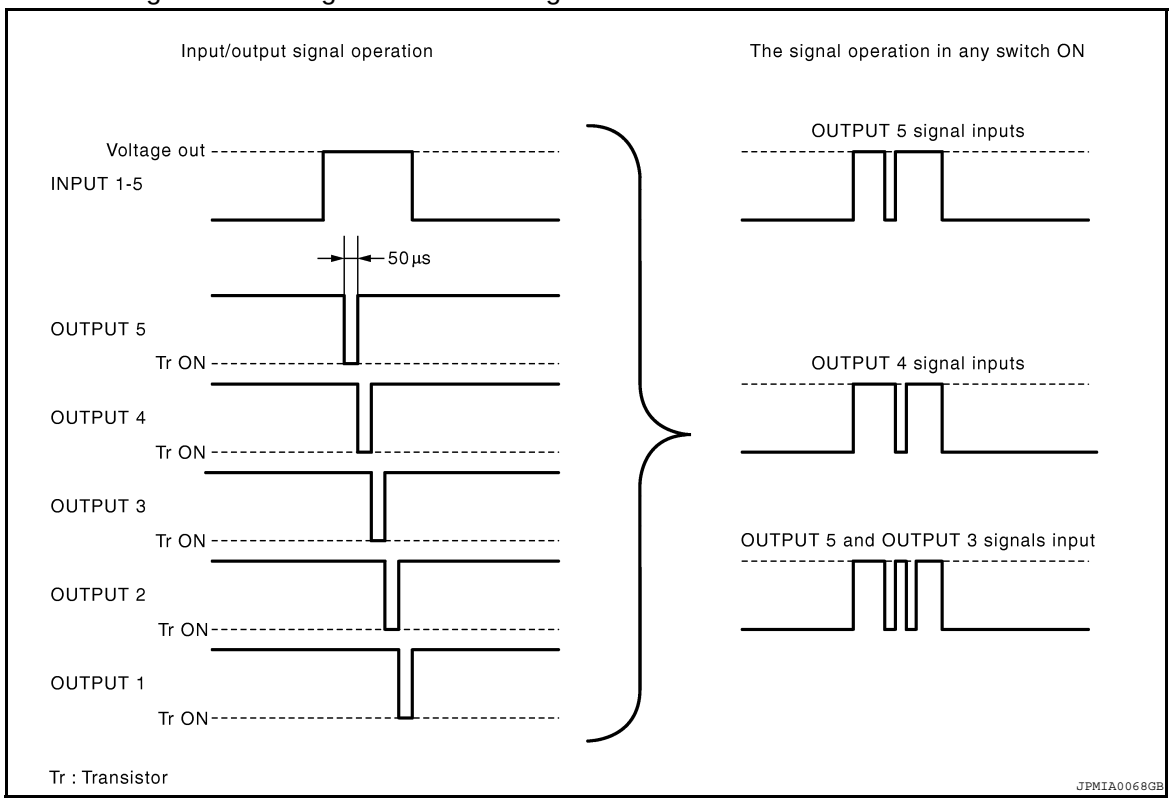

Operation Example

In the following operation example, the combination of the status signals of the combination switch is replaced as follows: INPUT 1 - 5 to “1 - 5” and OUTPUT 1 - 5 to “A - E”.

Example 1: When a switch (TURN RH switch) is turned ON

- The circuit between INPUT 1 and OUTPUT 5 is formed when the TURN RH switch is turned ON.

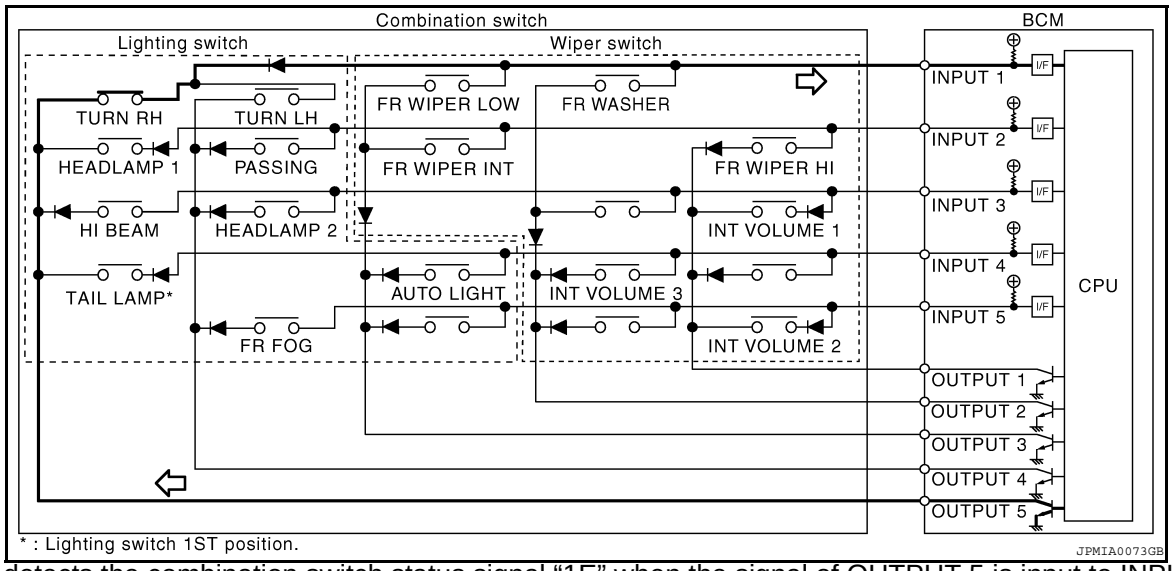

- BCM detects the combination switch status signal “1E” when the signal of OUTPUT 5 is input to INPUT 1.
- BCM judges that the TURN RH switch is ON when the signal “1E” is detected.

Example 2: When some switches (turn RH switch, front wiper LO switch) are turned ON

- The circuits between INPUT 1 and OUTPUT 5 and between INPUT 1 and OUTPUT 3 are formed when the TURN RH switch and FR WIPER LOW switch are turned ON.

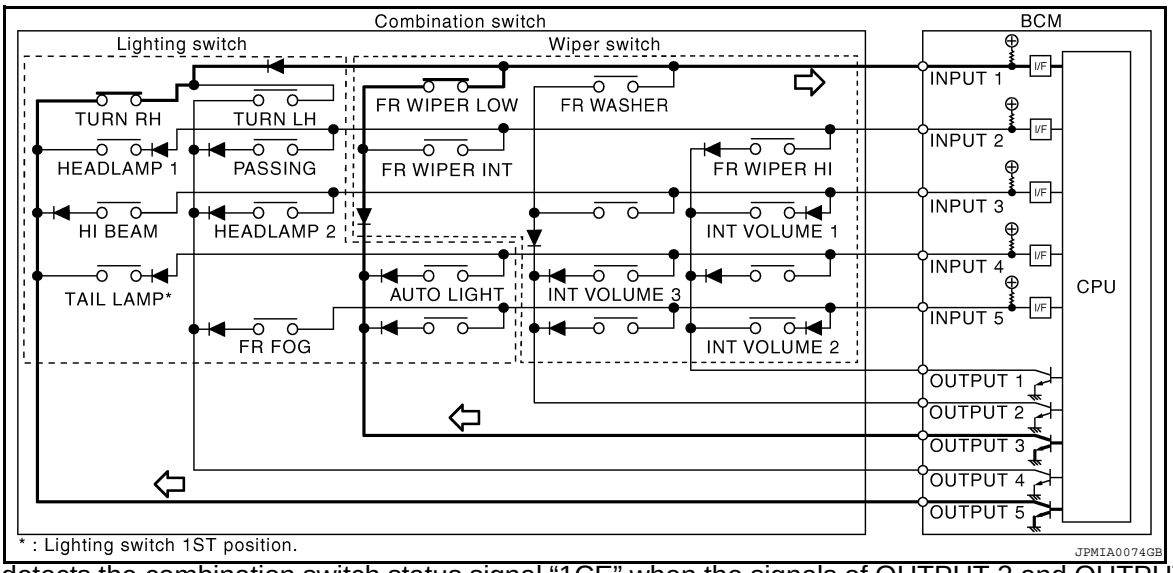

- BCM detects the combination switch status signal “1CE” when the signals of OUTPUT 3 and OUTPUT 5 are input to INPUT 1.
- BCM judges that the TURN RH switch and FR WIPER LOW switch are ON when the signal “1CE” is detected.

WIPER INTERMITTENT DIAL POSITION SETTING (FRONT WIPER INTERMITTENT OPERATION)

BCM judges the wiper intermittent dial 1 - 7 by the status of INT VOLUME 1, 2 and 3 switches.

Wiper intermittent dial position	Intermittent operation delay interval	INT VOLUME switch ON/OFF status		
		INT VOLUME 1 switch	INT VOLUME 2 switch	INT VOLUME 3 switch
1	Short ↑	ON	ON	ON
2		ON	ON	OFF
3		ON	OFF	OFF
4		OFF	OFF	OFF
5		OFF	OFF	ON
6	↓ Long	OFF	ON	ON
7		OFF	ON	OFF

Component Parts Location

INFOID:0000000005561513

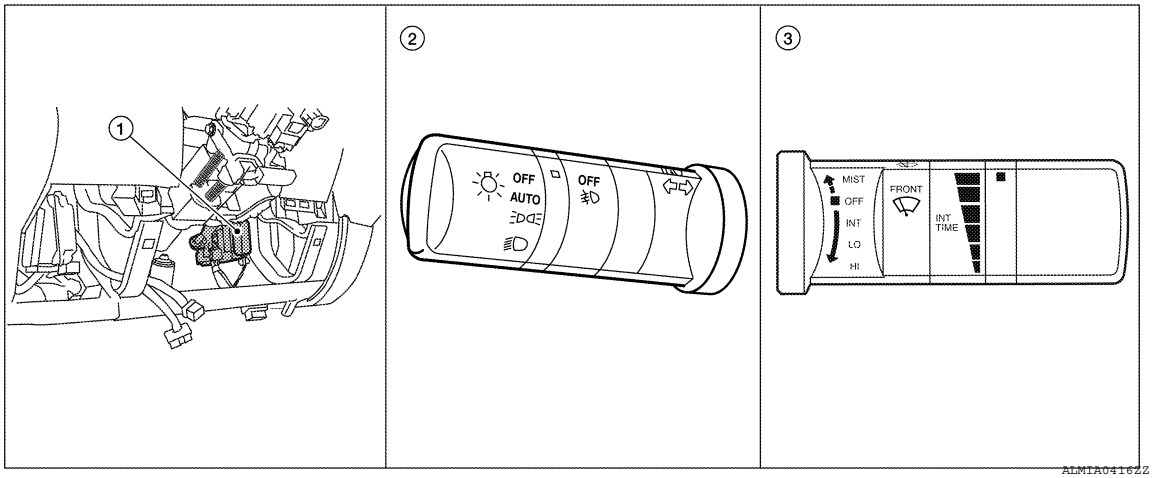

1. BCM M18, M19, M20 (view with lower instrument panel LH removed)
2. Combination switch (lighting and turn signal switch) M28
3. Combination switch (wiper and washer switch) M28

DIAGNOSIS SYSTEM (BCM)

HEADLAMP

HEADLAMP : CONSULT-III Function (BCM - HEAD LAMP)

INFOID:0000000005561514

WORK SUPPORT

Work Item	Setting item	Setting
BATTERY SAVER SET	ON*	With the exterior lamp battery saver function
	OFF	Without the exterior lamp battery saver function

*: Initial setting

DATA MONITOR

Monitor Item [Unit]	Description
IGN ON SW [ON/OFF]	Ignition switch (ON) status judged from IGN signal (ignition power supply)
ACC ON SW [ON/OFF]	Ignition switch (ACC) status judged from ACC signal (accessory power supply)
HI BEAM SW [ON/OFF]	Each switch status that BCM judges from the combination switch reading function
HEAD LAMP SW 1 [ON/OFF]	
HEAD LAMP SW 2 [ON/OFF]	
LIGHT SW 1ST [ON/OFF]	
AUTO LIGHT SW [ON/OFF]	
PASSING SW [ON/OFF]	
FR FOG SW [ON/OFF]	
TURN SIGNAL R [ON/OFF]	
TURN SIGNAL L [ON/OFF]	
DOOR SW-DR [ON/OFF]	The switch status input from front door switch LH
DOOR SW-AS [ON/OFF]	The switch status input from front door switch RH
DOOR SW-RR [ON/OFF]	The switch status input from rear door switch RH
DOOR SW-RL [ON/OFF]	The switch status input from rear door switch LH
CARGO LAMP SW [ON/OFF]	Cargo lamp status that BCM judges from the vehicle condition
OPTICAL SENSOR [ON/OFF]	The value of exterior brightness voltage input from the optical sensor

ACTIVE TEST

Test Item	Operation	Description
TAIL LAMP	ON	Transmits the position light request signal to IPDM E/R with CAN communication to turn the tail lamp ON.
	OFF	Stops the tail lamp request signal transmission.
HEAD LAMP	HI	Transmits the high beam request signal with CAN communication to turn the headlamp (HI).
	LO	Transmits the low beam request signal with CAN communication to turn the headlamp (LO).
	OFF	Stops the high & low beam request signal transmission.
FR FOG LAMP	ON	Transmits the front fog lights request signal to IPDM E/R with CAN communication to turn the front fog lamp ON.
	OFF	Stops the front fog lights request signal transmission.

Test Item	Operation	Description
CARGO LAMP	ON	Transmits the cargo lamp request signal to IPDM E/R with CAN communication to turn the each lamp ON.
	OFF	Stops the cargo lamp request signal transmission.

FLASHER

FLASHER : CONSULT-III Function (BCM - FLASHER)

INFOID:0000000005561515

DATA MONITOR

Monitor Item [Unit]	Description
IGN ON SW [ON/OFF]	Ignition switch (ON) status judged from IGN signal (ignition power supply)
HAZARD SW [ON/OFF]	The switch status input from the hazard switch
TURN SIGNAL R [ON/OFF]	Each switch condition that BCM judges from the combination switch reading function
TURN SIGNAL L [ON/OFF]	
BRAKE SW [ON/OFF]	The switch status input from the brake switch

ACTIVE TEST

Test Item	Operation	Description
FLASHER	RH	Outputs the voltage to turn the right side turn signal lamps ON.
	LH	Outputs the voltage to turn the left side turn signal lamps ON.
	OFF	Stops the voltage to turn the turn signal lamps OFF.

COMB SW

COMB SW : CONSULT-III Function (BCM - COMB SW)

INFOID:0000000005561516

DATA MONITOR

Monitor Item [Unit]	Description
TURN SIGNAL R [OFF/ON]	Displays the status of the TURN RH switch in combination switch judged by BCM with the combination switch reading function
TURN SIGNAL L [OFF/ON]	Displays the status of the TURN LH switch in combination switch judged by BCM with the combination switch reading function
HI BEAM SW [OFF/ON]	Displays the status of the HI BEAM switch in combination switch judged by BCM with the combination switch reading function
HEAD LAMP SW 1 [OFF/ON]	Displays the status of the HEADLAMP switch in combination switch judged by BCM with the combination switch reading function
HEAD LAMP SW 2 [OFF/ON]	Displays the status of the HEADLAMP switch in combination switch judged by BCM with the combination switch reading function
LIGHT SW 1ST [OFF/ON]	Displays the status of the HEADLAMP switch in combination switch judged by BCM with the combination switch reading function
PASSING SW [OFF/ON]	Displays the status of the PASSING switch in combination switch judged by BCM with the combination switch reading function
AUTO LIGHT SW [OFF/ON]	Displays the status of the AUTO LIGHT switch in combination switch judged by BCM with the combination switch reading function
FR FOG SW [OFF/ON]	Displays the status of the FR FOG switch in combination switch judged by BCM with the combination switch reading function
FR WIPER HI [OFF/ON]	Displays the status of the FR WIPER HI switch in combination switch judged by BCM with the combination switch reading function

Monitor Item [Unit]	Description
FR WIPER LOW [OFF/ON]	Displays the status of the FR WIPER LOW switch in combination switch judged by BCM with the combination switch reading function
FR WIPER INT [OFF/ON]	Displays the status of the FR WIPER INT switch in combination switch judged by BCM with the combination switch reading function
FR WASHER SW [OFF/ON]	Displays the status of the FR WASHER switch in combination switch judged by BCM with the combination switch reading function
INT VOLUME [1 - 7]	Displays the status of wiper intermittent dial position judged by BCM with the combination switch reading function

DIAGNOSIS SYSTEM (IPDM E/R)

Diagnosis Description

INFOID:0000000005561517

AUTO ACTIVE TEST

Description

In auto active test mode, the IPDM E/R sends a drive signal to the following systems to check their operation.

- Oil pressure low warning indicator
- Oil pressure gauge (if equipped)
- Rear window defogger
- Front wipers
- Tail, license and parking lamps
- Front fog lamps (if equipped)
- Headlamps (Hi, Lo)
- A/C compressor (magnetic clutch) (if equipped)
- Cooling fan

Operation Procedure

1. Close the hood and front door RH, and lift the wiper arms from the windshield (to prevent windshield damage due to wiper operation).
   NOTE:
   When auto active test is performed with hood opened, sprinkle water on windshield before hand.
2. Turn ignition switch OFF.
3. Turn the ignition switch ON and, within 20 seconds, press the front door switch LH 10 times. Then turn the ignition switch OFF.
4. Turn the ignition switch ON within 10 seconds. After that the horn sounds once and the auto active test starts.
5. After a series of the following operations is repeated 3 times, auto active test is completed.

NOTE:
When auto active test mode has to be cancelled halfway through test, turn ignition switch OFF.

CAUTION:

- **If auto active test mode cannot be actuated, check door switch system. Refer to DLK-27, "KING CAB : Description" or DLK-29, "CREW CAB : Description".**
- **Do not start the engine.**

Inspection in Auto Active Test Mode

When auto active test mode is actuated, the following 7 steps are repeated 3 times.

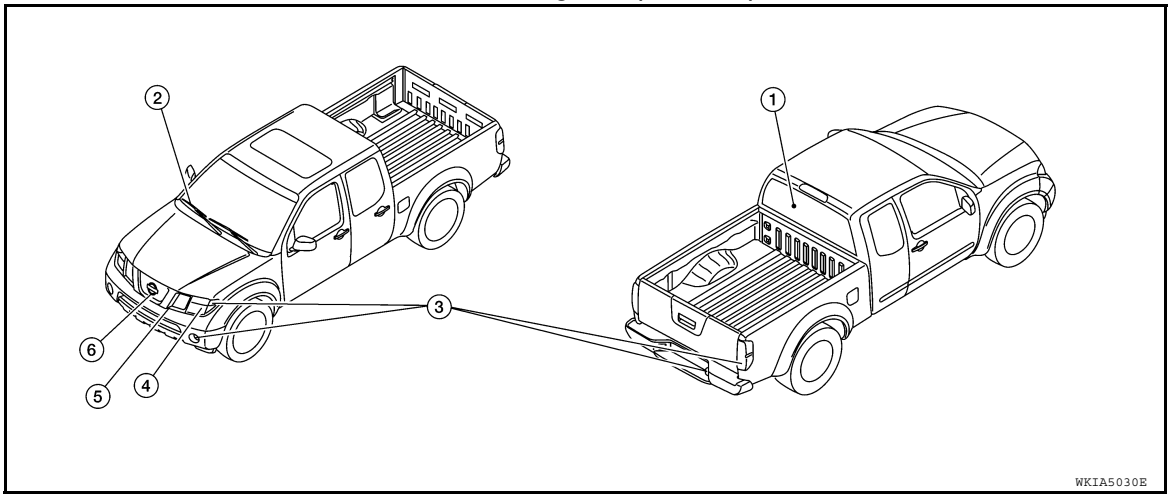

Item Number	Test Item	Operation Time/Frequency
1	Rear window defogger (Crew cab only)	10 seconds
2	Front wipers	LOW 5 seconds then HIGH 5 seconds
3	Tail, license plate, front fog and parking lamps	10 seconds

Item Number	Test Item	Operation Time/Frequency
4	Headlamps	Low ON for 10 seconds, then High ON-OFF five times.
5	A/C compressor (magnet clutch) (if equipped)	ON-OFF 5 times
6	Cooling fan	LOW 5 seconds then HIGH 5 seconds

Concept of auto active test

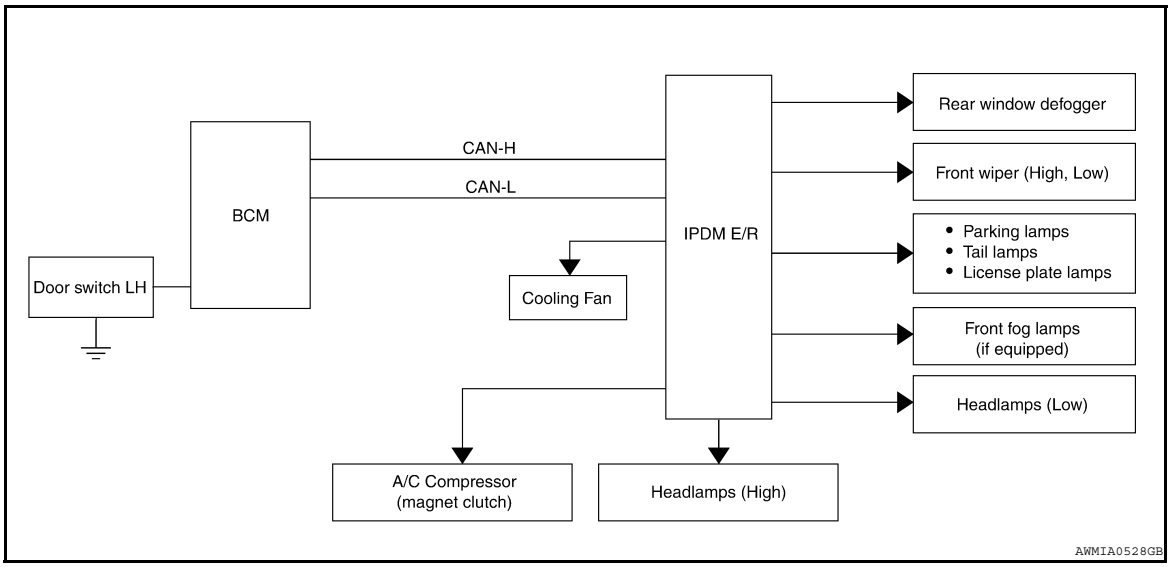

- IPDM E/R starts the auto active test with the door switch signals transmitted by BCM via CAN communication. Therefore, the CAN communication line between IPDM E/R and BCM is considered normal if the auto active test starts successfully.
- The auto active test facilitates troubleshooting if any systems controlled by IPDM E/R cannot be operated.

Diagnosis chart in auto active test mode

Symptom	Inspection contents		Possible cause
Oil pressure low warning indicator does not operate	Perform auto active test. Does the oil pressure low warning indicator operate?	YES	• IPDM E/R signal input circuit • ECM signal input circuit • CAN communication signal between ECM and combination meter
		NO	• CAN communication signal between IPDM E/R, BCM and combination meter
Oil pressure gauge does not operate	Perform auto active test. Does the oil pressure gauge operate?	YES	IPDM E/R signal input circuit
		NO	• CAN communication signal between IPDM E/R, BCM and combination meter
Rear window defogger does not operate	Perform auto active test. Does the rear window defogger operate?	YES	BCM signal input circuit
		NO	• Harness or connector between A/C and AV switch assembly and AV control unit • CAN communication signal between BCM and IPDM E/R

Symptom	Inspection contents		Possible cause
Any of the following components do not operate • Front wipers • Tail lamps • License plate lamps • Parking lamps • Front fog lamps (if equipped) • Headlamps (Hi, Lo)	Perform auto active test. Does the applicable system operate?	YES	BCM signal input system
		NO	• Lamp or front wiper motor malfunction • Lamp or front wiper motor ground circuit • Harness or connector between IPDM E/R and applicable system • IPDM E/R (integrated relay malfunction)
A/C compressor does not operate	Perform auto active test. Does the A/C compressor operate?	YES	• BCM signal input circuit • CAN communication signal between BCM and ECM • CAN communication signal between ECM and IPDM E/R
		NO	• Magnetic clutch malfunction • Harness or connector between IPDM E/R and magnetic clutch • IPDM E/R (integrated relay malfunction)
Cooling fan does not operate	Perform auto active test. Does the cooling fan operate?	YES	• ECM signal input circuit • CAN communication signal between ECM and IPDM E/R
		NO	• Cooling fan motor malfunction • Harness or connector between IPDM E/R and cooling fan • IPDM E/R (integrated relay malfunction)

CONSULT - III Function (IPDM E/R)

INFOID:0000000005561518

APPLICATION ITEM

CONSULT-III performs the following functions via CAN communication with IPDM E/R.

Diagnosis mode	Description
Self Diagnostic Result	Displays the diagnosis results judged by IPDM E/R.
Data Monitor	Displays the real-time input/output data from IPDM E/R input/output data.
Active Test	IPDM E/R can provide a drive signal to electronic components to check their operations.
CAN Diag Support Monitor	The results of transmit/receive diagnosis of CAN communication can be read.

SELF DIAGNOSTIC

Refer to PCS-31, "DTC Index".

DATA MONITOR

Monitor item

Monitor Item [Unit]	MAIN SIGNALS	Description
MOTOR FAN REQ [1/2/3/4]	×	Displays the status of the cooling fan speed request signal received from ECM via CAN communication.
A/C COMP REQ [OFF/ON]	×	Displays the status of the A/C request signal received from BCM via CAN communication.

Monitor Item [Unit]	MAIN SIGNALS	Description
TAIL&CLR REQ [OFF/ON]	×	Displays the status of the position light request signal received from BCM via CAN communication.
HL LO REQ [OFF/ON]	×	Displays the status of the low beam request signal received from BCM via CAN communication.
HL HI REQ [OFF/ON]	×	Displays the status of the high beam request signal received from BCM via CAN communication.
FR FOG REQ [OFF/ON]	×	Displays the status of the front fog lamp request signal received from BCM via CAN communication.
FR WIP REQ [STOP/1LOW/LOW/HI]	×	Displays the status of the front wiper request signal received from BCM via CAN communication.
WIP AUTO STOP [STOP P/ACT P]	×	Displays the status of the front wiper auto stop signal judged by IPDM E/R.
WIP PROT [OFF/Block]	×	Displays the status of the front wiper fail-safe operation judged by IPDM E/R.
ST RLY REQ [OFF/ON]		Displays the status of the starter request signal received from ECM via CAN communication.
IGN RLY [OFF/ON]	×	Displays the status of the ignition relay judged by IPDM E/R.
RR DEF REQ [OFF/ON]	×	Displays the status of the rear defogger request signal received from AV control unit via CAN communication.
OIL P SW [OPEN/CLOSE]		Displays the status of the oil pressure switch judged by IPDM E/R.
DTRL REQ [OFF]		Displays the status of the daytime light request signal received from BCM via CAN communication.
THFT HRN REQ [OFF/ON]		Displays the status of the theft warning horn request signal received from BCM via CAN communication.
HORN CHIRP [OFF/ON]		Displays the status of the horn reminder signal received from BCM via CAN communication.

ACTIVE TEST

Test item

Test item	Operation	Description
REAR DEFOGGER	OFF	OFF
	ON	Operates rear window defogger relay.
FRONT WIPER	OFF	OFF
	LO	Operates the front wiper relay.
	HI	Operates the front wiper relay and front wiper high relay.
MOTOR FAN	1	OFF
	2	OFF
	3	Operates the cooling fan relay.
	4	Operates the cooling fan relay.
EXTERNAL LAMPS	OFF	OFF
	TAIL	Operates the tail lamp relay.
	LO	Operates the headlamp low relay.
	HI	Operates the headlamp low relay and the headlamp (LH/RH) high relays alternately at 1 second intervals.
	FOG	Operates the front fog lamp relay
HORN	ON	Operates horn relay for 20 ms.

COMPONENT DIAGNOSIS

POWER SUPPLY AND GROUND CIRCUIT

BCM (BODY CONTROL MODULE)

BCM (BODY CONTROL MODULE) : Diagnosis Procedure

INFOID:0000000005561519

Regarding Wiring Diagram information, refer to BCS-46, "Wiring Diagram".

1. CHECK FUSES AND FUSIBLE LINK

Check that the following fuses and fusible link are not blown.

Terminal No.	Signal name	Fuses and fusible link No.
57	Battery power supply	18 (10A)
70		G (50A)
11	Ignition ACC or ON	4 (10A)
38	Ignition ON or START	1 (10A)

Is the fuse blown?

YES >> Replace the blown fuse or fusible link after repairing the affected circuit.
NO >> GO TO 2

2. CHECK POWER SUPPLY CIRCUIT

1. Turn ignition switch OFF.
2. Disconnect BCM.
3. Check voltage between BCM harness connector and ground.

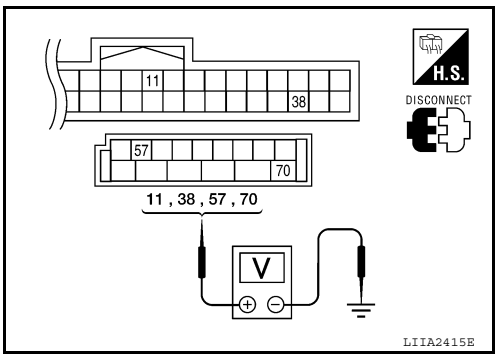

Connector	Terminals (+)	Terminals (-)	Power source	Condition	Voltage (V) (Approx.)
M18	11	Ground	ACC power supply	Ignition switch ACC or ON	Battery voltage
	38	Ground	Ignition power supply	Ignition switch ON or START	Battery voltage
M20	57	Ground	Battery power supply	Ignition switch OFF	Battery voltage
	70	Ground	Battery power supply	Ignition switch OFF	Battery voltage

Is the measurement value normal?

YES >> GO TO 3
NO >> Repair or replace harness.

3. CHECK GROUND CIRCUIT

Check continuity between BCM harness connector and ground.

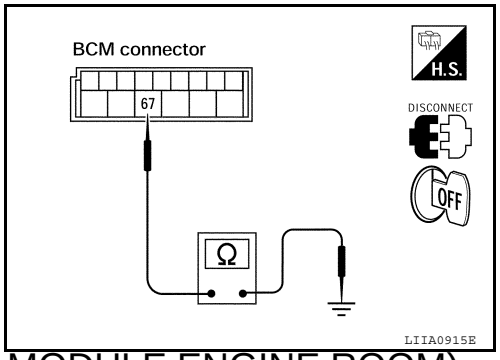

BCM		Ground	Continuity
Connector	Terminal		
M20	67		Yes

Does continuity exist?

YES >> Inspection End.
NO >> Repair or replace harness.

IPDM E/R (INTELLIGENT POWER DISTRIBUTION MODULE ENGINE ROOM)

IPDM E/R (INTELLIGENT POWER DISTRIBUTION MODULE ENGINE ROOM) : Diagnosis Procedure

INFOID:0000000005561520

Regarding Wiring Diagram information, refer to PCS-25, "Wiring Diagram".

1. CHECK FUSIBLE LINKS

Check that the following IPDM E/R fusible links are not blown.

Terminal No.	Signal name	Fusible link No.
1	Battery	A, D
2		C
22		I

Is the fusible link blown?

YES >> Replace the blown fusible link after repairing the affected circuit.
NO >> GO TO 2

2. CHECK BATTERY POWER SUPPLY CIRCUIT

1. Turn ignition switch OFF.
2. Disconnect IPDM E/R.
3. Check voltage between IPDM E/R harness connectors and ground.

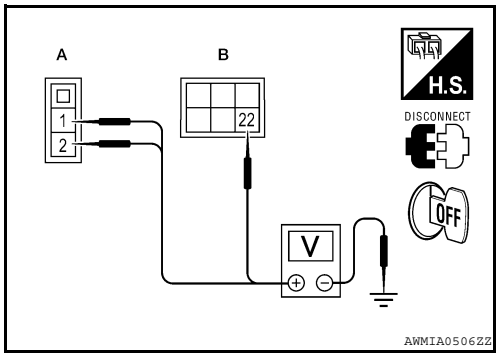

Terminals			Ignition switch position	Voltage (V) (Approx.)
(+)		(–)		
Connector	Terminal			
E118 (A)	1	Ground	OFF	Battery voltage
	2			
E120 (B)	22			

Is there voltage on all pins?

YES >> GO TO 3
NO >> Repair or replace harness.

3. CHECK GROUND CIRCUIT

1. Turn ignition switch OFF.

2. Check continuity between IPDM E/R harness connectors and ground.

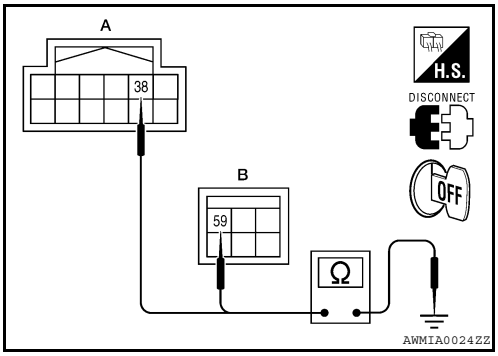

IPDM E/R		Ground	Continuity
Connector	Terminal		
E122 (A)	38		Yes
E124 (B)	59		

Does continuity exist?

YES >> Inspection End.
NO >> Repair or replace harness.

HEADLAMP (HI) CIRCUIT

Description

INFOID:0000000005561521

The IPDM E/R (intelligent power distribution module engine room) controls the headlamp LH high and headlamp RH high relays based on inputs from the BCM via the CAN communication lines. When the headlamp LH high and headlamp RH high relays are energized, power flows through fuses 34 and 35, located in the IPDM E/R. Power then flows to the front combination lamps to the headlamp high beam.

Component Function Check

INFOID:0000000005274736

1. CHECK HEADLAMP (HI) OPERATION

WITHOUT CONSULT-III

1. Start IPDM E/R auto active test. Refer to PCS-13, "Diagnosis Description".
2. Check that the headlamp switches to the high beam.

   NOTE:
   HI/LO is repeated 1 second each when using the IPDM E/R auto active test.

CONSULT-III

1. Select "EXTERNAL LAMPS" of IPDM E/R active test item.
2. With the test item operating, check that the headlamp switches to high beam.

HI : Headlamp switches to the high beam.
OFF : Headlamp OFF

Does the headlamp switch to high beam?

YES >> Headlamp (HI) circuit is normal.
NO >> Refer to EXL-37, "Diagnosis Procedure".

Diagnosis Procedure

INFOID:0000000005274737

Regarding Wiring Diagram information, refer to EXL-51, "Wiring Diagram" (without DTRL) or EXL-55, "Wiring Diagram" (with DTRL).

1. CHECK HEADLAMP (HI) FUSES

1. Turn the ignition switch OFF.
2. Check that the following fuses are not open.

Unit	Location	Fuse No.	Capacity
Headlamp HI (LH)	IPDM E/R	35	10A
Headlamp HI (RH)	IPDM E/R	34	10A

Is the fuse open?

YES >> Repair the harness and replace the fuse.
NO >> GO TO 2

2. CHECK HEADLAMP (HI) OUTPUT VOLTAGE

1. Turn the ignition switch OFF.
2. Disconnect the front combination lamp connector E7 (with DTRL), E11(without DTRL) or E107.
3. Turn the ignition switch ON.
4. Turn the high beam headlamps ON.
5. With the high beam headlamps ON, check the voltage between the combination lamp connector and ground.

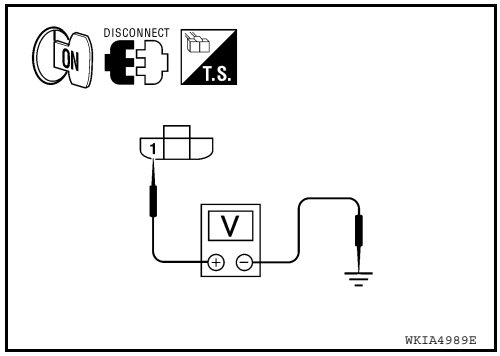

(+)			(–)	Voltage
Connector		Terminal		
LH	E7 (with DTRL)	1	Ground	Battery voltage
	E11 (without DTRL)			
RH	E107			

Is battery voltage present?

YES >> GO TO 4
NO >> GO TO 3

3. CHECK HEADLAMP (HI) CIRCUIT FOR OPEN

1. Turn the ignition switch OFF.
2. Disconnect IPDM E/R connector E123.
3. Check continuity between the IPDM E/R harness connector (A) and the front combination lamp harness connector (B).

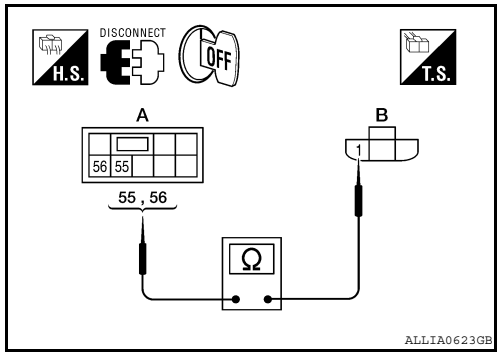

A			B		Continuity
Connector		Terminal	Connector	Terminal	
LH	E123	55	E7 (with DTRL)	1	Yes
			E11 (without DTRL)		
RH		56	E107		

Does continuity exist?

YES >> GO TO 4
NO >> Repair the harnesses or connectors.

4. CHECK FRONT COMBINATION LAMP (HI) GROUND CIRCUIT

Check continuity between the front combination lamp harness connector terminal and ground.

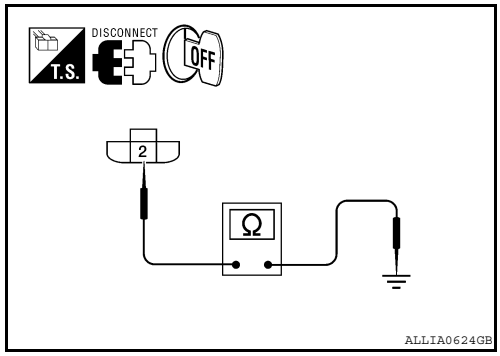

Connector		Terminal	—	Continuity
LH	E7 (with DTRL)	2	Ground	Yes
	E11 (without DTRL)			
RH	E107			

Does continuity exist?

YES >> Inspect the headlamp bulb.
NO >> Repair the harness.

HEADLAMP (LO) CIRCUIT

Description

INFOID:0000000005274738

The IPDM E/R (intelligent power distribution module engine room) controls the headlamp low relay based on inputs from the BCM via the CAN communication lines. When the headlamp low relay is energized, power flows through fuses 40 and 41, located in the IPDM E/R. Power then flows to the front combination lamps to the headlamp low beam.

Component Function Check

INFOID:0000000005274739

1. CHECK HEADLAMP (LO) OPERATION

WITHOUT CONSULT-III

1. Start IPDM E/R auto active test. Refer to PCS-13, "Diagnosis Description".
2. Check that the headlamp is turned ON.

   NOTE:
   HI/LO is repeated 1 second each when using the IPDM E/R auto active test.

CONSULT-III

1. Select "EXTERNAL LAMPS" of IPDM E/R active test item.
2. With the test items operating, check that the headlamp is turned ON.

LO : Headlamp ON
OFF : Headlamp OFF

Is the headlamp turned ON?

YES >> Headlamp (LO) is normal.
NO >> Refer to EXL-39, "Diagnosis Procedure".

Diagnosis Procedure

INFOID:0000000005274740

Regarding Wiring Diagram information, refer to EXL-51, "Wiring Diagram" (without DTRL) or EXL-55, "Wiring Diagram" (with DTRL).

1. CHECK HEADLAMP (LO) FUSES

1. Turn the ignition switch OFF.
2. Check that the following fuses are not open.

Unit	Location	Fuse No.	Capacity
Headlamp LO (LH)	IPDM E/R	40	15A
Headlamp LO (RH)	IPDM E/R	41	15A

Is the fuse open?

YES >> Repair the harness and replace the fuse.
NO >> GO TO 2

2. CHECK HEADLAMP (LO) OUTPUT VOLTAGE

1. Turn the ignition switch OFF.
2. Disconnect the front combination lamp connector.
3. Turn the ignition switch ON.
4. Turn the low beam headlamps ON.
5. With the low beam headlamps ON, check the voltage between the combination lamp connector and ground.

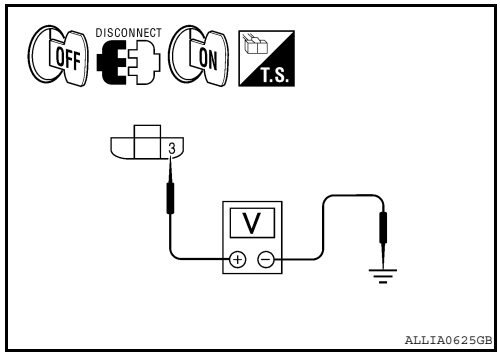

(+)			(–)	Voltage
Connector		Terminal		
LH	E7 (with DTRL)	3	Ground	Battery voltage
	E11 (without DTRL)			
RH	E107			

Is battery voltage present?

YES >> GO TO 4
NO >> GO TO 3

3. CHECK HEADLAMP (LO) CIRCUIT FOR OPEN

1. Turn the ignition switch OFF.
2. Disconnect IPDM E/R connector.
3. Check continuity between the IPDM E/R harness connector (A) and the front combination lamp harness connector (B).

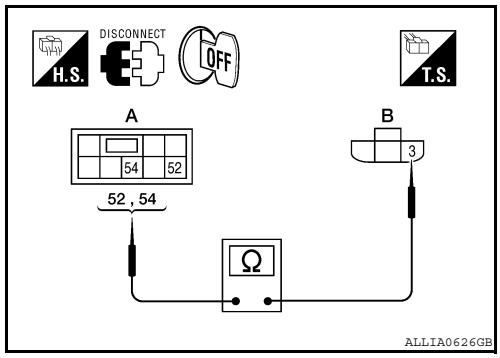

A			B		Continuity
Connector		Terminal	Connector	Terminal	
LH	E123	52	E7 (with DTRL)	3	Yes
			E11 (without DTRL)		
RH		54	E107		

Does continuity exist?

YES >> GO TO 4
NO >> Repair the harnesses or connectors.

4. CHECK FRONT COMBINATION LAMP (LO) GROUND CIRCUIT

Check continuity between the front combination lamp harness connector terminal and ground.

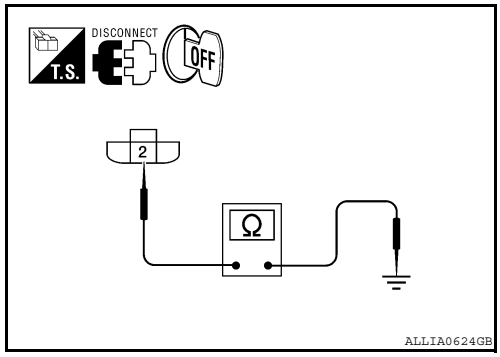

Connector		Terminal	—	Continuity
LH	E7 (with DTRL)	2	Ground	Yes
	E11 (without DTRL)			
RH	E107			

Does continuity exist?

YES >> Inspect the headlamp bulb.
NO >> Repair the harness.

FRONT FOG LAMP CIRCUIT

Description

INFOID:0000000005274741

The IPDM E/R (intelligent power distribution module engine room) controls the front fog lamp relay based on inputs from the BCM via the CAN communication lines. When the front fog lamp relay is energized, power flows from the front fog lamp relay in the IPDM E/R to the front fog lamps.

Component Function Check

INFOID:0000000005274742

1. CHECK FRONT FOG LAMP OPERATION

WITHOUT CONSULT-III
1. Activate IPDM E/R auto active test. Refer to PCS-13, "Diagnosis Description".
2. Check that the front fog lamp is turned ON.

CONSULT-III
1. Select "EXTERNAL LAMPS" of IPDM E/R active test item.
2. With operating the test items, Check that the front fog lamp is turned ON.

FOG : Front fog lamp ON
OFF : Front fog lamp OFF

Is the front fog lamp turned ON?

YES >> Front fog lamp circuit is normal.
NO >> Refer to EXL-41, "Diagnosis Procedure".

Diagnosis Procedure

INFOID:0000000005274743

Regarding Wiring Diagram information, refer to EXL-68, "Wiring Diagram".

1. CHECK FRONT FOG LAMP FUSE

1. Turn the ignition switch OFF.
2. Check that the following fuses are not open.

Unit	Location	Fuse No.	Capacity
Front fog lamp	IPDM E/R	56	20A

Is the fuse open?

YES >> Repair the harness and replace the fuse.
NO >> GO TO 2

2. CHECK FRONT FOG LAMP OUTPUT VOLTAGE

1. Turn the ignition switch OFF.
2. Disconnect the front fog lamp connector.
3. Turn the ignition switch ON.
4. Turn the front fog lamps ON.
5. Check the voltage between the fog lamp connector and ground.

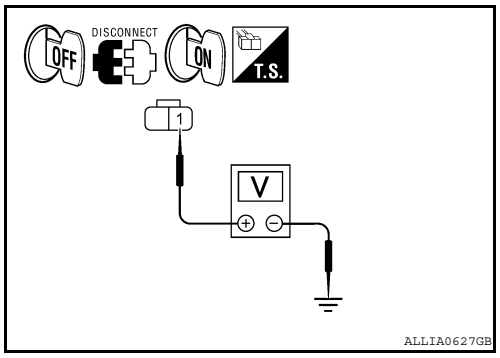

(+)			(–)	Voltage
Connector		Terminal		
LH	E101	1	Ground	Battery voltage
RH	E102	1		

Is battery voltage present?

YES >> GO TO 4
NO >> GO TO 3

3. CHECK FRONT FOG LAMP OPEN CIRCUIT

1. Turn the ignition switch OFF.
2. Disconnect IPDM E/R connector.
3. Check continuity between the IPDM E/R harness connector (A) and the front fog lamp harness connector (B).

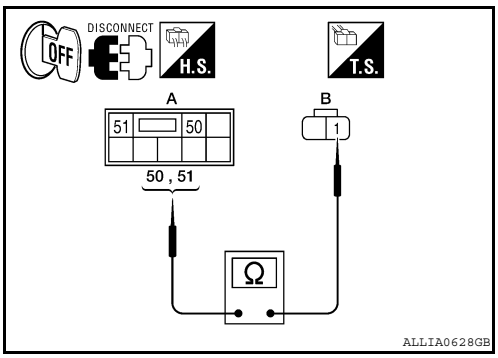

A			B		Continuity
Connector		Terminal	Connector	Terminal	
LH	E123	50	E101	1	Yes
RH		51	E102	1	

Does continuity exist?

YES >> GO TO 4
NO >> Repair the harnesses or connectors.

4. CHECK FRONT FOG LAMP GROUND CIRCUIT

1. Disconnect the front fog lamp connector.
2. Check continuity between the front fog lamp harness connector terminal and ground.

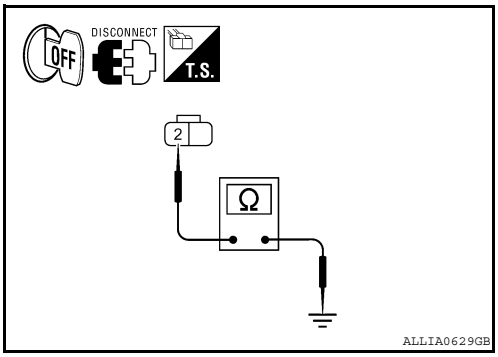

Connector		Terminal	—	Continuity
LH	E101	2	Ground	Yes
RH	E102	2		

Does continuity exist?

YES >> Inspect the fog lamp bulb.
NO >> Repair the harness.

PARKING LAMP CIRCUIT

Description

INFOID:0000000005274744

The IPDM E/R (intelligent power distribution module engine room) controls the tail lamp relay based on inputs from the BCM via the CAN communication lines. When the tail lamp relay is energized, power flows through fuse 37, located in the IPDM E/R. Power then flows to the front and rear combination lamps.

Component Function Check

INFOID:0000000005274745

1. CHECK PARKING LAMP OPERATION

WITHOUT CONSULT-III
1. Activate IPDM E/R auto active test. Refer to PCS-13, "Diagnosis Description".
2. Check that the parking lamp is turned ON.

CONSULT-III
1. Select "EXTERNAL LAMPS" of IPDM E/R active test item.
2. With operating the test items, check that the parking lamp is turned ON.

TAIL : Parking lamp ON
OFF : Parking lamp OFF

Is the parking lamp turned ON?

YES >> Parking lamp circuit is normal.
NO >> Refer to EXL-43, "Diagnosis Procedure".

Diagnosis Procedure

INFOID:0000000005274746

Regarding Wiring Diagram information, refer to EXL-77, "Wiring Diagram".

1. CHECK PARKING LAMP FUSES

1. Turn the ignition switch OFF.
2. Check that the following fuses are not open.

Unit	Location	Fuse No.	Capacity
Parking lamps	IPDM E/R	36	10A
		37	10A

Is the fuse open?

YES >> Repair the harness and replace the fuse.
NO >> GO TO 2

2. CHECK TAIL LAMP RELAY OUTPUT (VOLTAGE)

1. Turn the ignition switch OFF.
2. Disconnect the front combination lamp connectors, front side marker lamp connectors, rear combination lamp connectors and license plate lamp connectors.
3. Turn the ignition switch ON.
4. Turn the parking lamps ON.

5. With the parking lamps ON, check voltage between the front combination lamp connectors and ground.

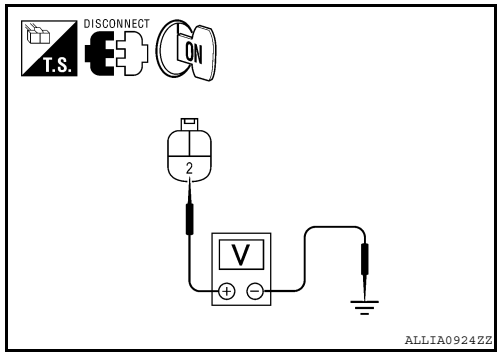

(+)			(–)	Voltage
Connector		Terminal		
LH	E27	2	Ground	Battery voltage
RH	E111			

6. With the parking lamps ON, check voltage between the front side marker lamp connectors and ground.

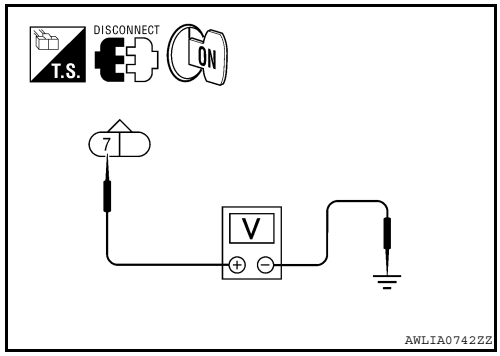

(+)			(–)	Voltage
Connector		Terminal		
LH	E17	7	Ground	Battery voltage
RH	E108			

7. With the parking lamps ON, check voltage between the rear combination lamp connectors and ground.

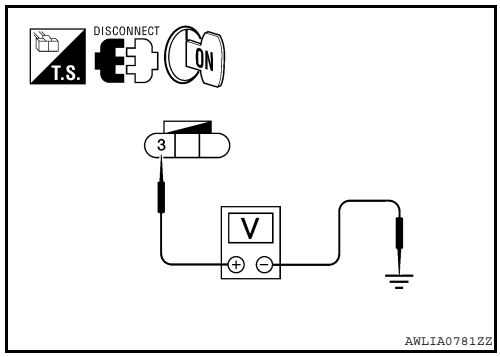

(+)			(–)	Voltage
Connector		Terminal		
LH	C201	3	Ground	Battery voltage
RH	C202			

8. With the parking lamps ON, check voltage between the license plate lamp connector and ground

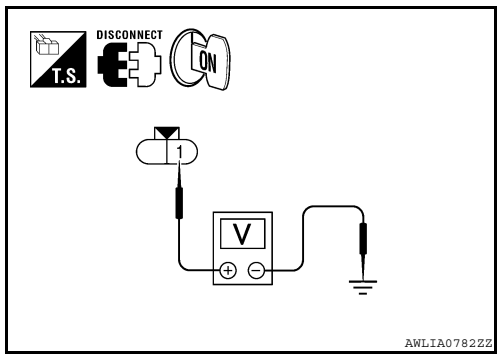

(+)			(–)	Voltage
Connector		Terminal		
LH	C203	1	Ground	Battery voltage
RH	C204			

Are voltage readings as specified?

YES >> GO TO 4
NO >> GO TO 3

3. CHECK PARKING, LICENSE PLATE AND TAIL LAMP CIRCUIT (OPEN)

1. Turn the ignition switch OFF.
2. Disconnect IPDM E/R connector.

3. Check continuity between the IPDM E/R harness connector (A)(B) and the front combination lamp harness connector (C).

Connector		Terminal	Connector	Terminal	Continuity
LH	A: E121	28	C: E27	2	Yes
RH	B: E123	49	C: E111		

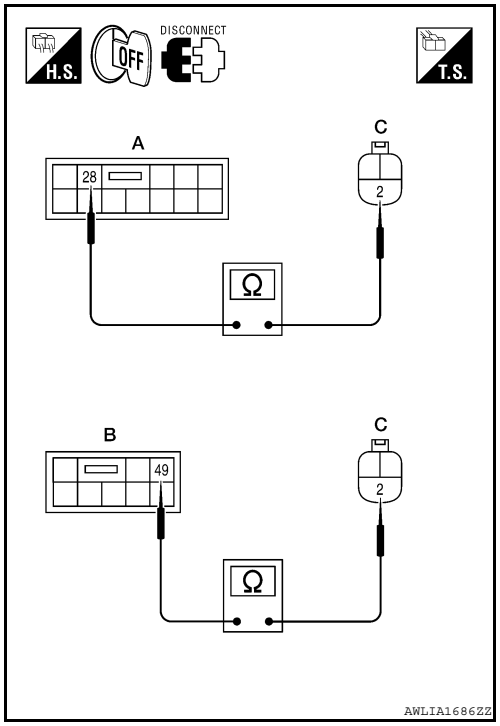

4. Check continuity between the IPDM E/R harness connector (A)(B) and the front side marker lamp harness connector (C).

Connector		Terminal	Connector	Terminal	Continuity
LH	A: E121	28	C: E17	7	Yes
RH	B: E123	49	C: E108		

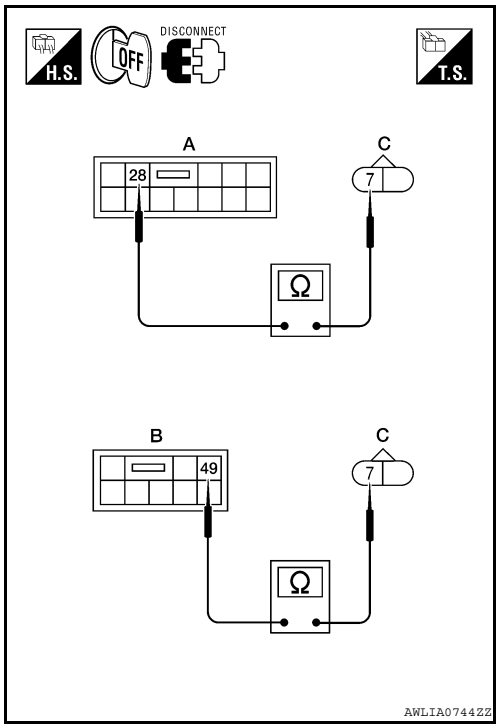

5. Check continuity between the IPDM E/R harness connector (A) and the rear combination lamp harness connector (B).

A			B		Continuity
Connector		Terminal	Connector	Terminal	
LH	E124	57	C201	3	Yes
RH			C202		

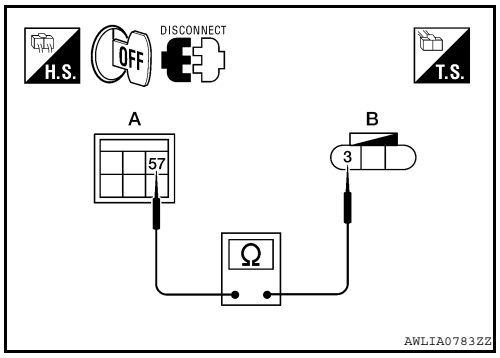

6. Check continuity between the IPDM E/R harness connector (A) and license plate lamp connector (B).

A			B		Continuity
Connector		Terminal	Connector	Terminal	
LH	E124	57	C203	1	Yes
RH			C204		

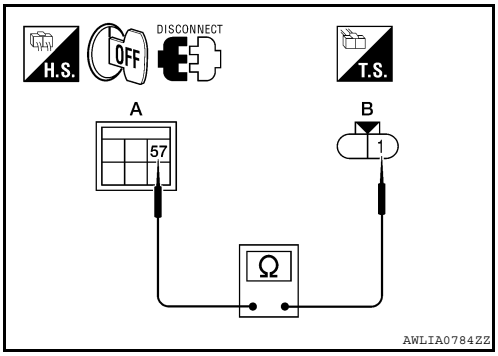

Are continuity results as specified?

YES >> GO TO 4
NO >> Repair the harnesses or connectors.

4. CHECK PARKING, LICENSE AND TAIL LAMP GROUND CIRCUITS

1. Check continuity between the front combination lamp harness connectors and ground.

Connector		Terminal	—	Continuity
LH	E27	1	Ground	Yes
RH	E111			

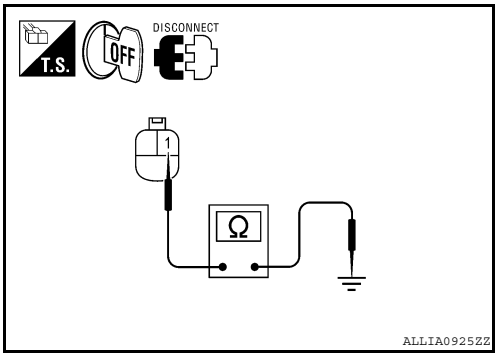

2. Check continuity between the front side marker lamp harness connectors and ground.

Connector		Terminal	—	Continuity
LH	E17	8	Ground	Yes
RH	E108			

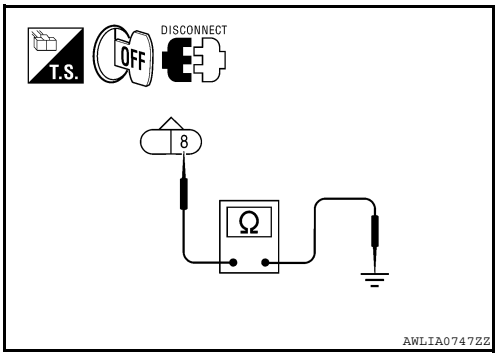

3. Check continuity between the rear combination lamp harness connectors and ground.

Connector		Terminal	—	Continuity
LH	C201	2	Ground	Yes
RH	C202			

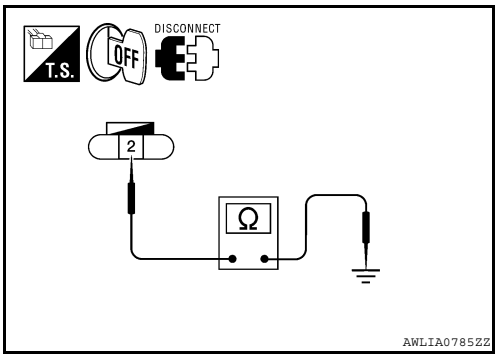

4. Check continuity between the license plate lamp harness connector and ground.

Connector		Terminal	—	Continuity
LH	C203	2	Ground	Yes
RH	C204			

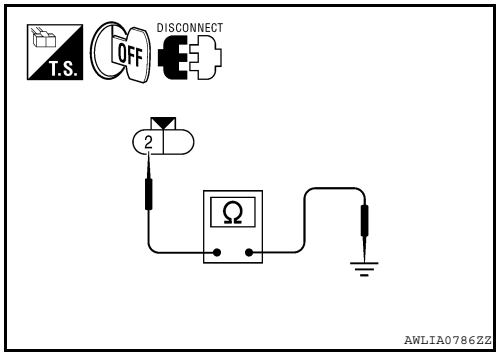

Are continuity results as specified?

YES >> Inspect the parking lamp bulb.
NO >> Repair the harness.

TURN SIGNAL LAMP CIRCUIT

Description

INFOID:0000000005274747

The BCM monitors inputs from the combination switch (lighting and turn signal switch) to determine when to activate the turn signals. The BCM outputs voltage direction to the left and right turn signals during turn signal operation or both during hazard warning operation. The BCM sends a turn signal indicator request to the combination meter via the CAN communication lines.
The BCM performs the fast flasher operation (fail-safe) if any bulb or harness of the turn signal lamp circuit is open.
NOTE:
Turn signal lamp blinks at normal speed when using the hazard warning lamp.

Component Function Check

INFOID:0000000005274748

1. CHECK TURN SIGNAL LAMP

CONSULT-III
1. Select "FLASHER" of BCM (FLASHER) active test item.
2. With operating the test items, check that the turn signal lamp blinks.

LH : Turn signal lamp LH blinking
RH : Turn signal lamp RH blinking
OFF : The turn signal lamp OFF

Does the turn signal lamp blink?

YES >> Turn signal lamp circuit is normal.
NO >> Refer to EXL-48, "Diagnosis Procedure".

Diagnosis Procedure

INFOID:0000000005274749

Regarding Wiring Diagram information, refer to EXL-72, "Wiring Diagram".

1. CHECK TURN SIGNAL LAMP BULB

Check the applicable lamp bulb to be sure the proper bulb standard is in use and the bulb is not open.

Is the bulb OK?

YES >> GO TO 2
NO >> Replace the bulb.

2. CHECK TURN SIGNAL LAMP OUTPUT VOLTAGE

1. Turn the ignition switch OFF.
2. Disconnect the front combination lamp connectors and the rear combination lamp connector.
3. Turn the ignition switch ON.
4. With turn signal switch operating, check the voltage between the BCM harness connector M20 and ground.

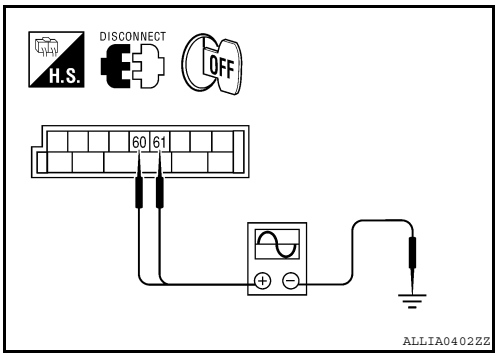

(+)		(–)	Voltage
Connector	Terminal		

M20	LH	60	Ground	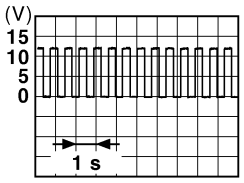
	RH	61		

Is voltage reading as specified?

YES >> GO TO 3
NO >> Replace BCM. Refer to BCS-54, "Removal and Installation".

3. CHECK TURN SIGNAL LAMP CIRCUIT FOR OPEN

1. Turn the ignition switch OFF.
2. Disconnect BCM connector M20.
3. Check continuity between the BCM harness connector M20 (A) and the front combination lamps (B).

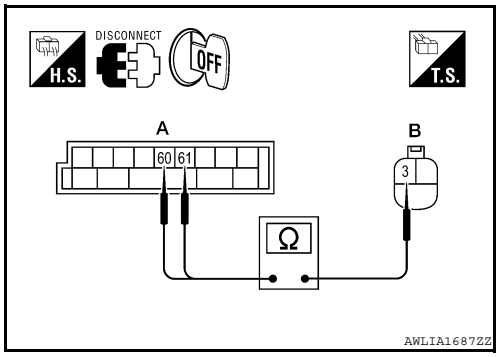

A			B		Continuity
Connector		Terminal	Connector	Terminal	
Front LH	M20	60	E27	3	Yes
Front RH		61	E111		

4. Check continuity between the BCM harness connector M20 (A) and the rear combination lamp connectors (B).

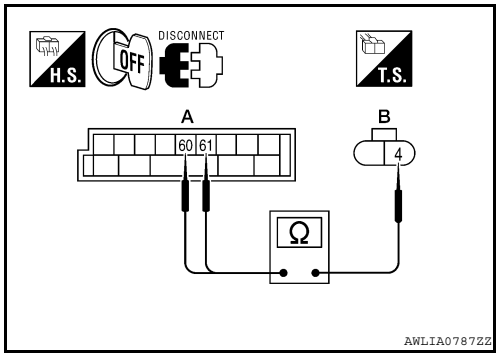

A			B		Continuity
Connector		Terminal	Connector	Terminal	
Rear LH	M20	60	C207	4	Yes
Rear RH		61	C208	4	

Are continuity results as specified?

YES >> GO TO 4
NO >> Repair the harnesses or connectors.

4. CHECK TURN SIGNAL LAMP SHORT CIRCUIT

Check continuity between the BCM harness connector M20 and ground.

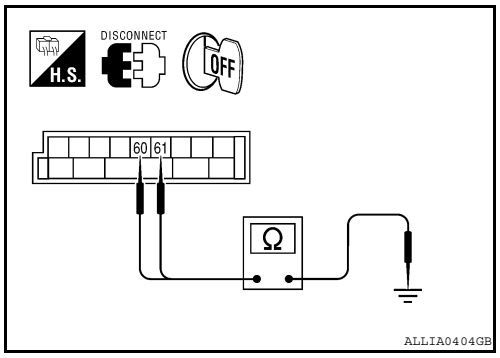

Connector		Terminal	—	Continuity
LH	M20	60	Ground	No
RH		61		

Does continuity exist?

YES >> Repair the harnesses or connectors.
NO >> GO TO 5

5. CHECK TURN SIGNAL LAMP GROUND CIRCUIT

1. Check continuity between the front combination lamp harness connectors and ground.

Connector		Terminal	—	Continuity
Front LH	E27	1	Ground	Yes
Front RH	E111			

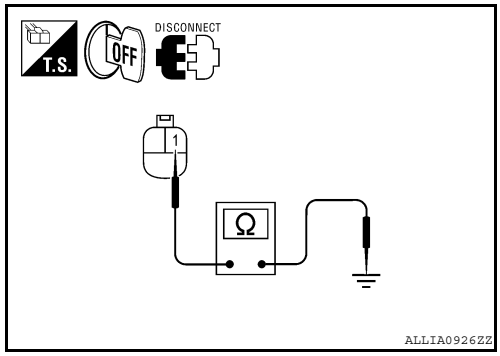

2. Check continuity between the rear combination lamp harnness connectors and ground.

Connector		Terminal	—	Continuity
Rear LH	C207	5	Ground	Yes
Rear RH	C208			

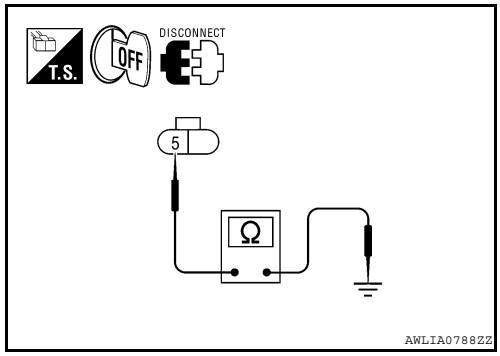

Are continuity results as specified?

YES >> Replace the malfunctioning lamp.
NO >> Repair the harnesses or connectors.

HEADLAMP

Wiring Diagram

INFOID:0000000005274750

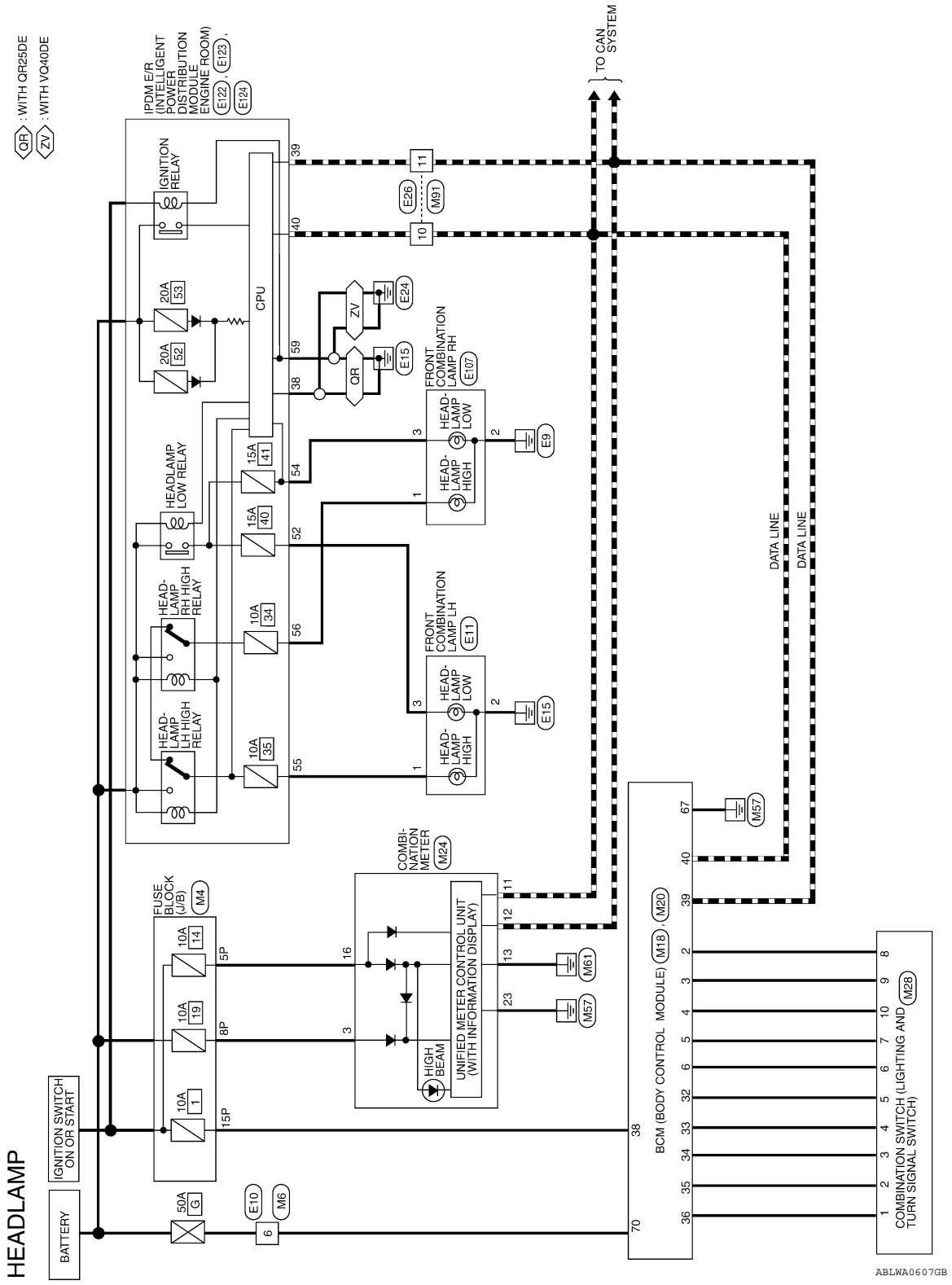

HEADLAMP CONNECTORS

Connector No.	M4
Connector Name	FUSE BLOCK (J/B)
Connector Color	WHITE

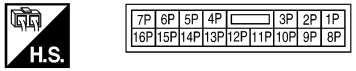

Terminal No.	Color of Wire	Signal Name
5P	W/G	–
8P	R/Y	–
15P	W/R	–

Connector No.	M6
Connector Name	WIRE TO WIRE
Connector Color	WHITE

Terminal No.	Color of Wire	Signal Name
6	W	–

Connector No.	M18
Connector Name	BCM (BODY CONTROL MODULE)
Connector Color	WHITE

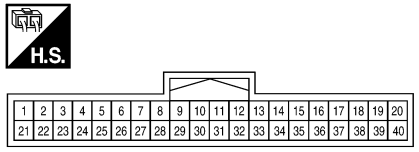

Terminal No.	Color of Wire	Signal Name
2	P	INPUT 5
3	SB	INPUT 4
4	V	INPUT 3

Terminal No.	Color of Wire	Signal Name
5	L	INPUT 2
6	R	INPUT 1
32	O	OUTPUT 5
33	GR	OUTPUT 4
34	G	OUTPUT 3
35	BR	OUTPUT 2
36	LG	OUTPUT 1
38	W/R	IGN SW
39	L	CAN-H
40	P	CAN-L

Connector No.	M20
Connector Name	BCM (BODY CONTROL MODULE)
Connector Color	BLACK

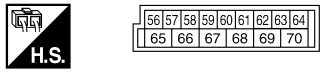

Terminal No.	Color of Wire	Signal Name
67	B	GND (POWER)
70	W	BAT (F/L)

ABLIA0591GB

Connector No.	M24
Connector Name	COMBINATION METER
Connector Color	WHITE

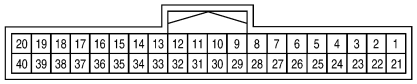

Terminal No.	Color of Wire	Signal Name
3	R/Y	BATTERY
11	P	CAN-L
12	L	CAN-H
13	GR	GROUND
16	W/G	RUN START
23	B	POWER GND

Connector No.	M28
Connector Name	COMBINATION SWITCH
Connector Color	WHITE

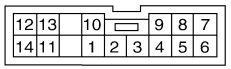

Terminal No.	Color of Wire	Signal Name
1	LG	INPUT 1
2	BR	INPUT 2
3	G	INPUT 3

Terminal No.	Color of Wire	Signal Name
4	GR	INPUT 4
5	O	INPUT 5
6	R	OUTPUT 1
7	L	OUTPUT 2
8	P	OUTPUT 5
9	SB	OUTPUT 4
10	V	OUTPUT 3

Connector No.	M91
Connector Name	WIRE TO WIRE
Connector Color	WHITE

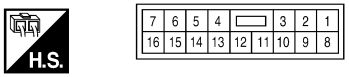

Terminal No.	Color of Wire	Signal Name
10	P	–
11	L	–

Connector No.	E10
Connector Name	WIRE TO WIRE
Connector Color	WHITE

Terminal No.	Color of Wire	Signal Name
6	W	–

Connector No.	E11
Connector Name	FRONT COMBINATION LAMP LH (WITHOUT DAYTIME LIGHT SYSTEM)
Connector Color	BLACK

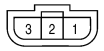

Terminal No.	Color of Wire	Signal Name
1	G	–
2	B	–
3	P	–

ABLIA0592GB

Connector No.	E26
Connector Name	WIRE TO WIRE
Connector Color	WHITE

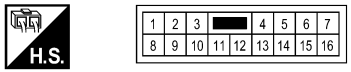

Terminal No.	Color of Wre	Signal Name
10	P	–
11	L	–

Connector No.	E107
Connector Name	FRONT COMBINATION LAMP RH
Connector Color	BLACK

Terminal No.	Color of Wire	Signal Name
1	L	–
2	B	–
3	R	–

Connector No.	E122
Connector Name	IPDM E/R (INTELLIGENT POWER DISTRIBUTION MODULE ENGINE ROOM)
Connector Color	WHITE

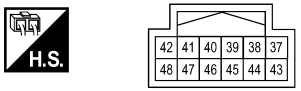

Terminal No.	Color of Wire	Signal Name
38	B	GND (SIGNAL)
39	L	CAN-H
40	P	CAN-L

Connector No.	E123
Connector Name	IPDM E/R (INTELLIGENT POWER DISTRIBUTION MODULE ENGINE ROOM)
Connector Color	BROWN

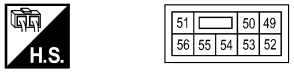

Terminal No.	Color of Wire	Signal Name
52	P	H/LAMP LO LH
54	R	H/LAMP LO RH
55	G	H/LAMP HI LH
56	L	H/LAMP HI RH

Connector No.	E124
Connector Name	IPDM E/R (INTELLIGENT POWER DISTRIBUTION MODULE ENGINE ROOM)
Connector Color	BLACK

Terminal No.	Color of Wire	Signal Name
59	B	GND (POWER)

AALIA0125GB

DAYTIME LIGHT SYSTEM

Wiring Diagram

INFOID:0000000005274751

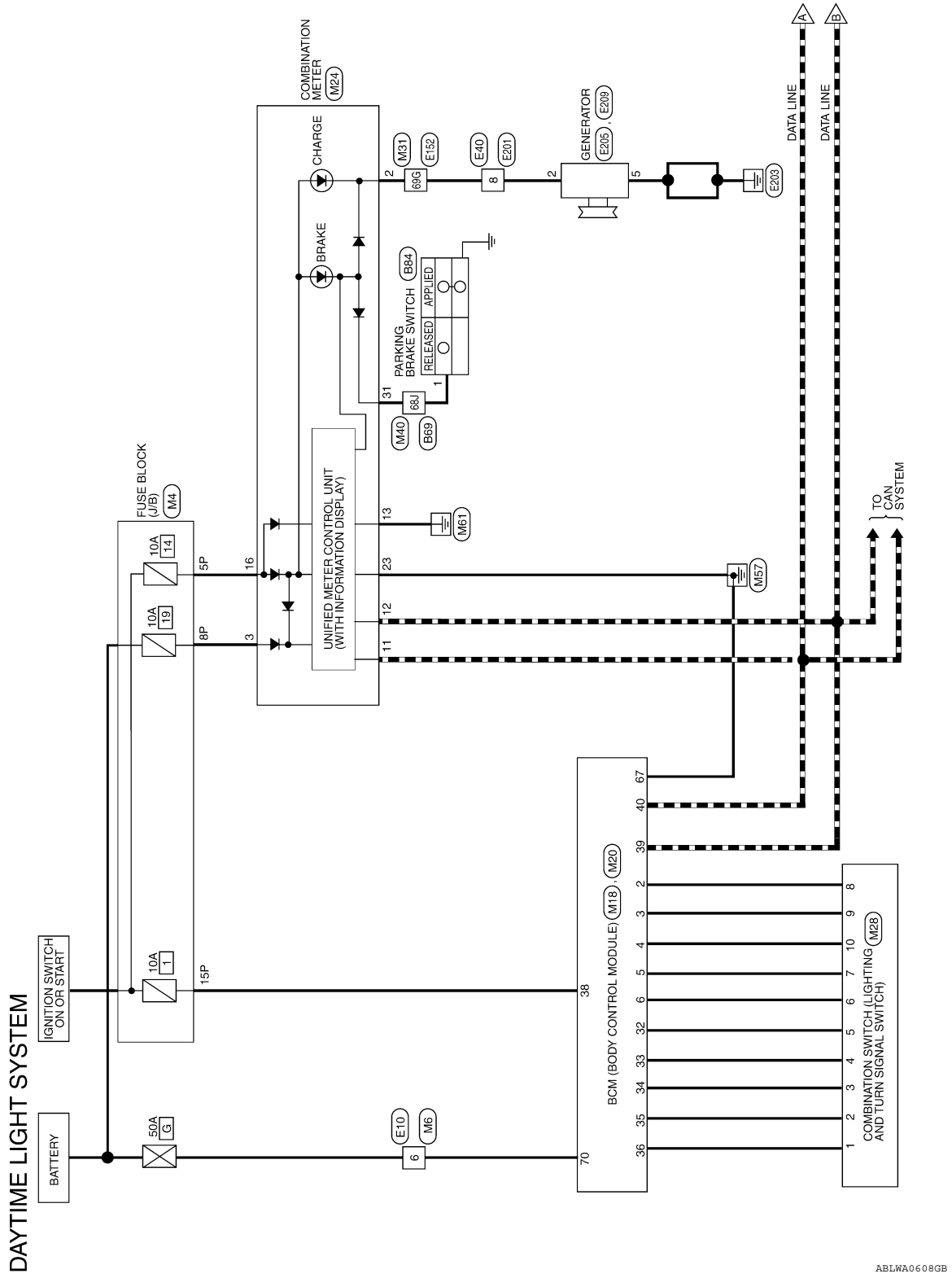

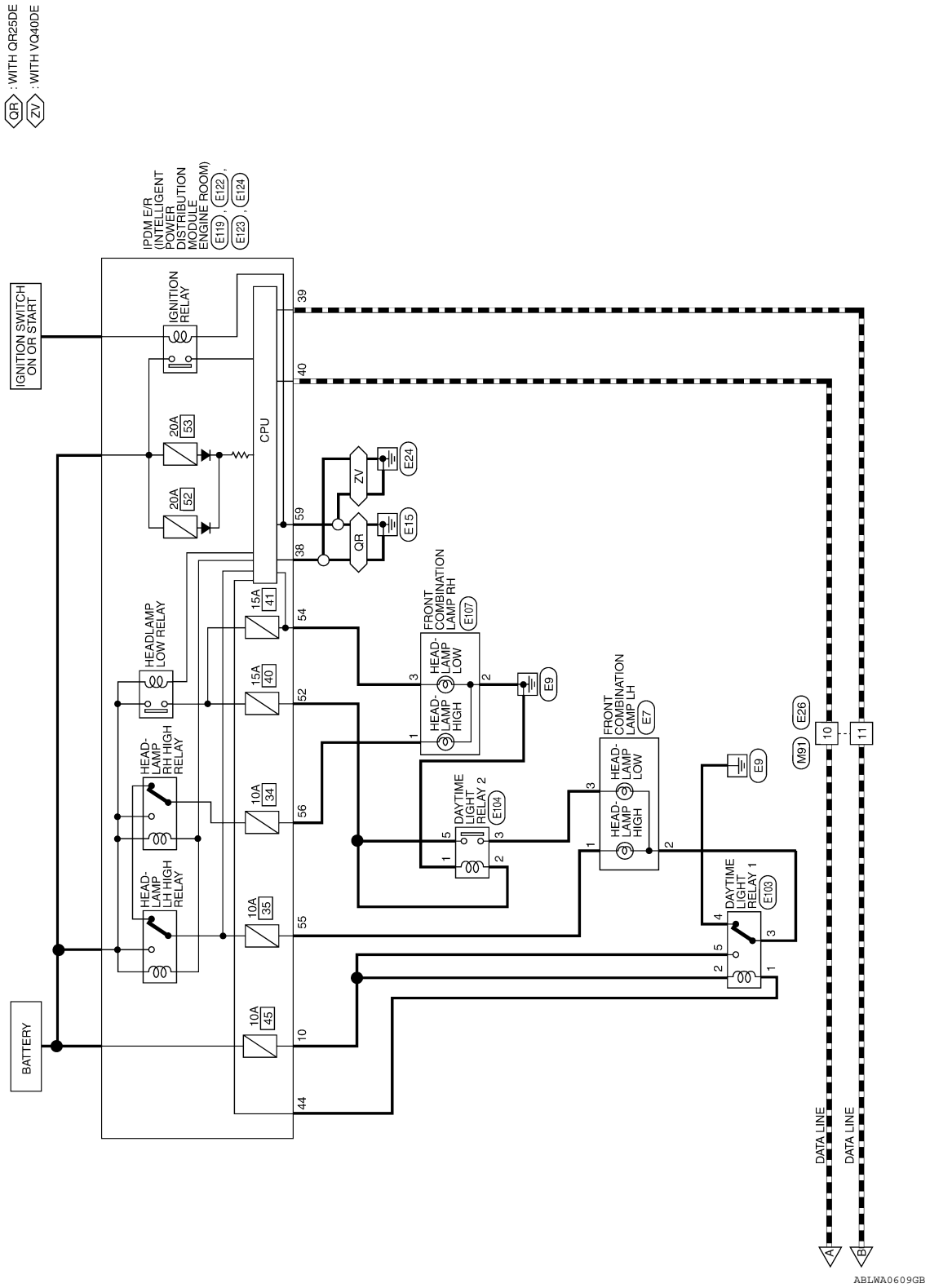
QR : WITH QR25DE
ZV : WITH VQ40DE
IPDM E/R (INTELLIGENT POWER DISTRIBUTION MODULE ENGINE ROOM)
E119, E122, E123, E124
IGNITION SWITCH ON OR START
IGNITION RELAY
CPU
20A 53
20A 52
15A 41
15A 40
10A 34
10A 35
10A 45
HEADLAMP LOW RELAY
HEAD-LAMP RH HIGH RELAY
HEAD-LAMP LH HIGH RELAY
BATTERY
ZV
QR
E24
E15
FRONT COMBINATION LAMP RH
E107
HEAD-LAMP LOW
HEAD-LAMP HIGH
E9
DAYTIME LIGHT RELAY 2
E104
FRONT COMBINATION LAMP LH
E7
DAYTIME LIGHT RELAY 1
E103
M91
E26
DATA LINE
DATA LINE
A
B
ABLWA0609GB

DAYTIME LIGHT SYSTEM CONNECTORS

Connector No.	M4
Connector Name	FUSE BLOCK (J/B)
Connector Color	WHITE

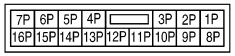

Terminal No.	Color of Wire	Signal Name
5P	W/G	–
8P	R/Y	–
15P	W/R	–

Connector No.	M6
Connector Name	WIRE TO WIRE
Connector Color	WHITE

Terminal No.	Color of Wire	Signal Name
6	W	–

Connector No.	M18
Connector Name	BCM (BODY CONTROL MODULE)
Connector Color	WHITE

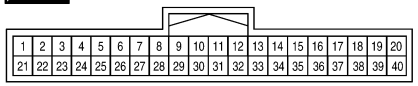

Terminal No.	Color of Wire	Signal Name
2	P	INPUT 5
3	SB	INPUT 4
4	V	INPUT 3
5	L	INPUT 2
6	R	INPUT 1
32	O	OUTPUT 5
33	GR	OUTPUT 4
34	G	OUTPUT 3
35	BR	OUTPUT 2
36	LG	OUTPUT 1
38	W/R	IGN SW
39	L	CAN-H
40	P	CAN-L

Connector No.	M20
Connector Name	BCM (BODY CONTROL MODULE)
Connector Color	BLACK

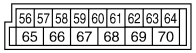

Terminal No.	Color of Wire	Signal Name
67	B	GND (POWER)
70	W	BAT (F/L)

ABLIA0593GB

Connector No.	M24
Connector Name	COMBINATION METER
Connector Color	WHITE

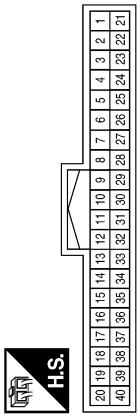

Terminal No.	Color of Wire	Signal Name
2	P	CHARGE (ALT) INPUT
3	R/Y	BATTERY
11	P	CAN-L
12	L	CAN-H
13	GR	GROUND
16	W/G	RUN START
23	B	POWER GND
31	G	PARK BRAKE SW

Connector No.	M28
Connector Name	COMBINATION SWITCH
Connector Color	WHITE

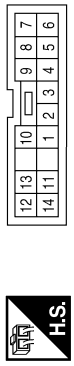

Terminal No.	Color of Wire	Signal Name
1	LG	INPUT 1
2	BR	INPUT 2
3	G	INPUT 3
4	GR	INPUT 4
5	O	INPUT 5
6	R	OUTPUT 1
7	L	OUTPUT 2
8	P	OUTPUT 5
9	SB	OUTPUT 4
10	V	OUTPUT 3

Connector No.	M31
Connector Name	WIRE TO WIRE
Connector Color	WHITE

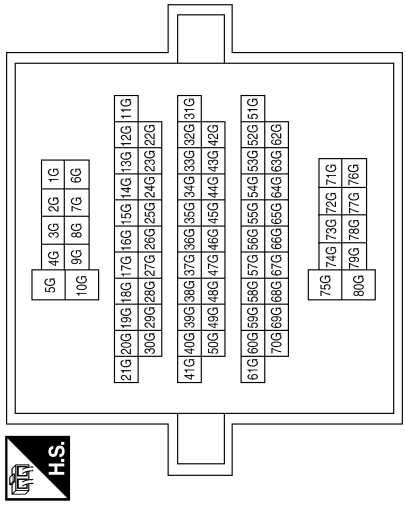

Terminal No.	Color of Wire	Signal Name
69G	P	–

ABLIA1784GB

Connector No.	E7
Connector Name	FRONT COMBINATION LAMP LH (WITH DAYTIME LIGHT SYSTEM)
Connector Color	BLACK

Terminal No.	Color of Wire	Signal Name
1	G	–
2	B	–
3	SB	–

Connector No.	M91
Connector Name	WIRE TO WIRE
Connector Color	WHITE

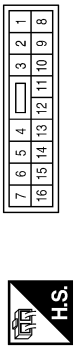

Terminal No.	Color of Wire	Signal Name
10	P	–
11	L	–

Connector No.	M40
Connector Name	WIRE TO WIRE
Connector Color	WHITE

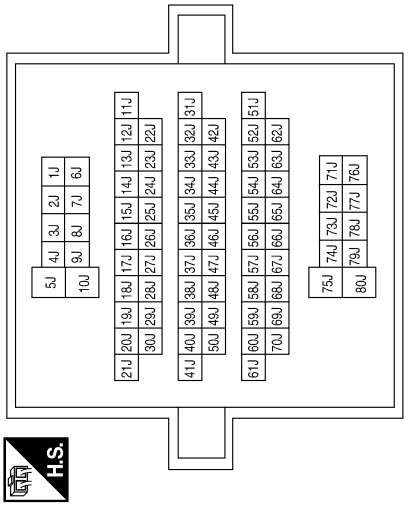

Terminal No.	Color of Wire	Signal Name
68J	G	–

Connector No.	E40
Connector Name	WIRE TO WIRE
Connector Color	GRAY

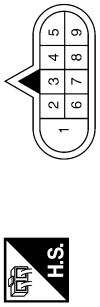

Terminal No.	Color of Wire	Signal Name
8	P	–

Connector No.	E26
Connector Name	WIRE TO WIRE
Connector Color	WHITE

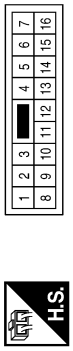

Terminal No.	Color of Wire	Signal Name
10	P	–
11	L	–

Connector No.	E10
Connector Name	WIRE TO WIRE
Connector Color	WHITE

Terminal No.	Color of Wire	Signal Name
6	W	–

ABLIA1785GB

Connector No.	E103
Connector Name	DAYTIME LIGHT RELAY 1
Connector Color	BLACK

Terminal No.	Color of Wire	Signal Name
1	R	–
2	R/B	–
3	B	–
4	GR	–
5	R/B	–

Connector No.	E104
Connector Name	DAYTIME LIGHT RELAY 2
Connector Color	BLUE

Terminal No.	Color of Wire	Signal Name
1	B	–
2	G	–
3	SB	–
5	P	–

Connector No.	E107
Connector Name	FRONT COMBINATION LAMP RH
Connector Color	BLACK

Terminal No.	Color of Wire	Signal Name
1	L	–
2	B	–
3	R	–

Connector No.	E119
Connector Name	IPDM E/R (INTELLIGENT POWER DISTRIBUTION MODULE ENGINE ROOM)
Connector Color	WHITE

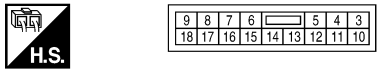

Terminal No.	Color of Wire	Signal Name
10	R/B	DTRL RLY SUPPLY

Connector No.	E122
Connector Name	IPDM E/R (INTELLIGENT POWER DISTRIBUTION MODULE ENGINE ROOM)
Connector Color	WHITE

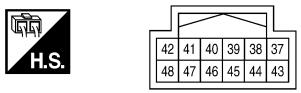

Terminal No.	Color of Wire	Signal Name
38	B	GND (SIGNAL)
39	L	CAN-H
40	P	CAN-L
44	R	DTRL RLY CONT

Connector No.	E123
Connector Name	IPDM E/R (INTELLIGENT POWER DISTRIBUTION MODULE ENGINE ROOM)
Connector Color	BROWN

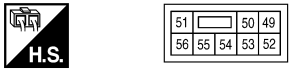

Terminal No.	Color of Wire	Signal Name
52	P	H/LAMP LO LH
54	R	H/LAMP LO RH
55	G	H/LAMP HI LH
56	L	H/LAMP HI RH

ABLIA1786GB

Connector No.	E124
Connector Name	IPDM E/R (INTELLIGENT POWER DISTRIBUTION MODULE ENGINE ROOM)
Connector Color	BLACK

H.S.

Terminal No.	Color of Wire	Signal Name
59	B	GND (POWER)

Connector No.	E152
Connector Name	WIRE TO WIRE
Connector Color	WHITE

H.S.

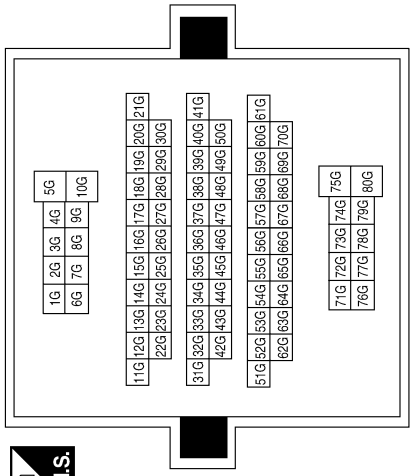

Terminal No.	Color of Wire	Signal Name
69G	P	–

Connector No.	E201
Connector Name	WIRE TO WIRE
Connector Color	GRAY

H.S.

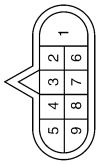

Terminal No.	Color of Wire	Signal Name
8	P	–

Connector No.	E205
Connector Name	GENERATOR
Connector Color	BLACK

H.S.

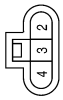

Terminal No.	Color of Wire	Signal Name
2	P	L

Connector No.	E209
Connector Name	GENERATOR
Connector Color	–

H.S.

Terminal No.	Color of Wire	Signal Name
5	B	E

ABLIA1787GB

Connector No.	B84
Connector Name	PARKING BRAKE SWITCH
Connector Color	BLACK

Terminal No.	Color of Wire	Signal Name
1	G	–

Connector No.	B69
Connector Name	WIRE TO WIRE
Connector Color	WHITE

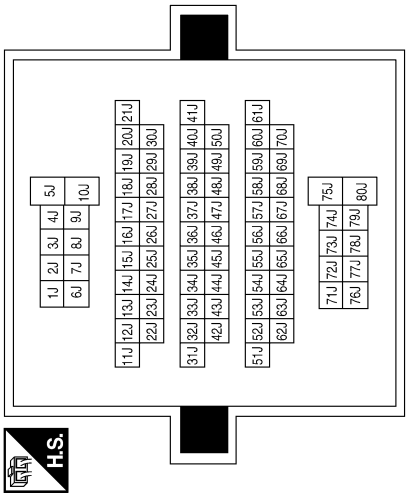

Terminal No.	Color of Wire	Signal Name
68J	G	–

ABLIA1788GB

AUTO LIGHT SYSTEM

Wiring Diagram

INFOID:0000000005274752

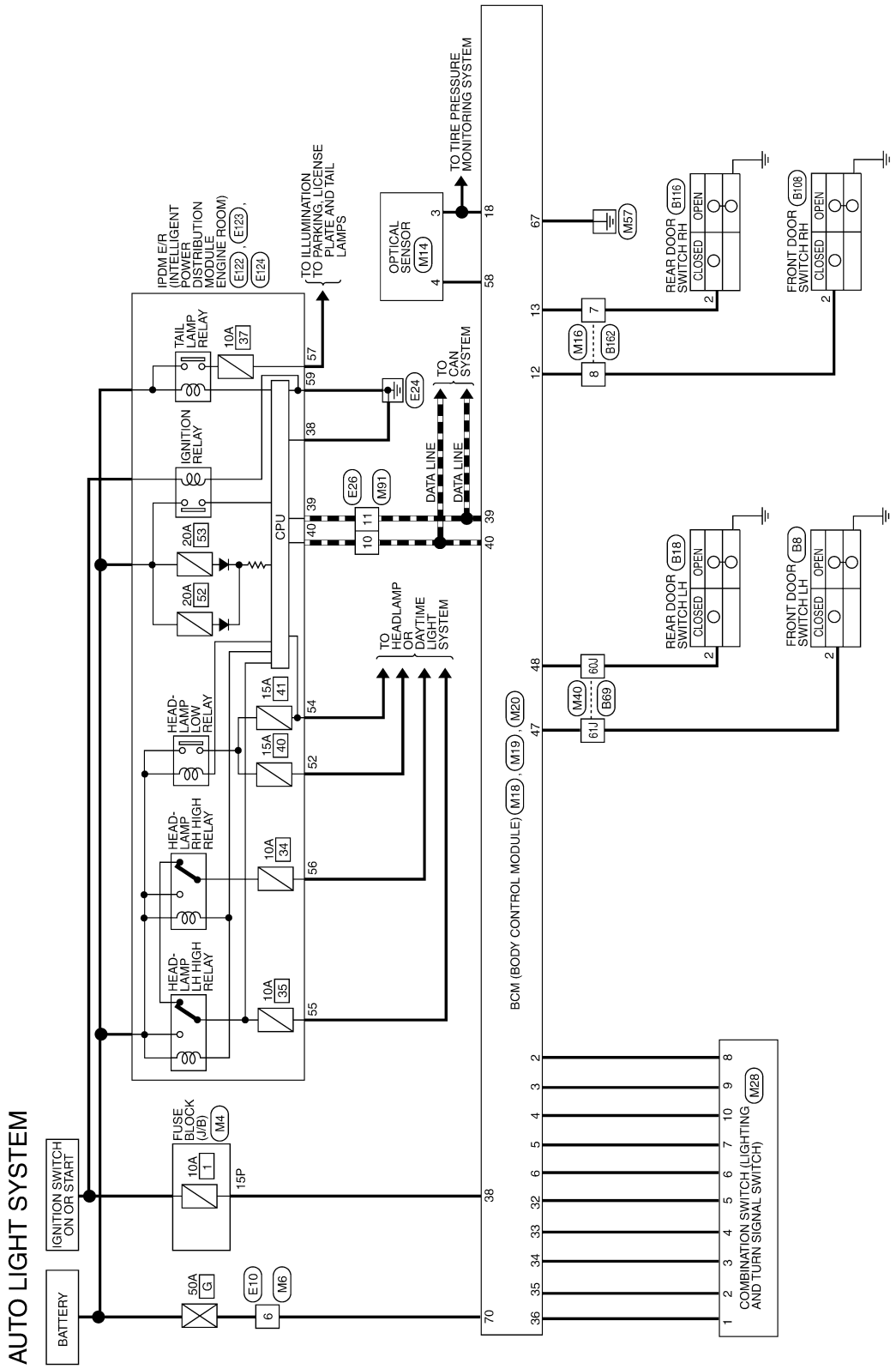

AUTO LIGHT SYSTEM CONNECTORS

Connector No.	M4
Connector Name	FUSE BLOCK (J/B)
Connector Color	WHITE

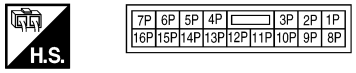

Terminal No.	Color of Wire	Signal Name
15P	W/R	–

Connector No.	M6
Connector Name	WIRE TO WIRE
Connector Color	WHITE

Terminal No.	Color of Wire	Signal Name
6	W	–

Connector No.	M14
Connector Name	OPTICAL SENSOR
Connector Color	BLACK

Terminal No.	Color of Wire	Signal Name
3	P	SIGNAL GND
4	W	SIGNAL

Connector No.	M16
Connector Name	WIRE TO WIRE
Connector Color	WHITE

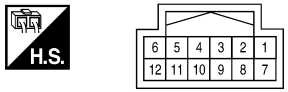

Terminal No.	Color of Wire	Signal Name
7	L	–
8	LG	–

Connector No.	M18
Connector Name	BCM (BODY CONTROL MODULE)
Connector Color	WHITE

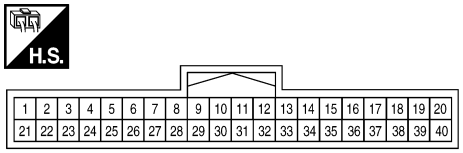

Terminal No.	Color of Wire	Signal Name
2	P	INPUT 5
3	SB	INPUT 4
4	V	INPUT 3

Terminal No.	Color of Wire	Signal Name
5	L	INPUT 2
6	R	INPUT 1
12	LG	DOOR SW (AS)
13	L	DOOR SW (RR)
18	BR	KEYLESS&AOTO LIGHT SENSOR GND
32	O	OUTPUT 5
33	GR	OUTPUT 4
34	G	OUTPUT 3
35	BR	OUTPUT 2
36	LG	OUTPUT 1
38	W/R	IGN SW
39	L	CAN-H
40	P	CAN-L

ABLIA1789GB

Connector No.	M19
Connector Name	BCM (BODY CONTROL MODULE)
Connector Color	WHITE

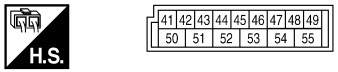

Terminal No.	Color of Wire	Signal Name
47	GR	DOOR SW (DR)
48	P	DOOR SW (RL)

Connector No.	M20
Connector Name	BCM (BODY CONTROL MODULE)
Connector Color	BLACK

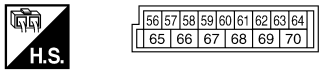

Terminal No.	Color of Wire	Signal Name
58	W	AUTO LIGHT SENSOR INPUT 2
67	B	GND (POWER)
70	W	BAT (F/L)

Connector No.	M28
Connector Name	COMBINATION SWITCH
Connector Color	WHITE

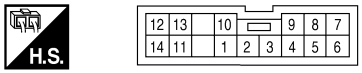

Terminal No.	Color of Wire	Signal Name
1	LG	INPUT 1
2	BR	INPUT 2
3	G	INPUT 3
4	GR	INPUT 4
5	O	INPUT 5
6	R	OUTPUT 1
7	L	OUTPUT 2
8	P	OUTPUT 5
9	SB	OUTPUT 4
10	V	OUTPUT 3

Connector No.	M40
Connector Name	WIRE TO WIRE
Connector Color	WHITE

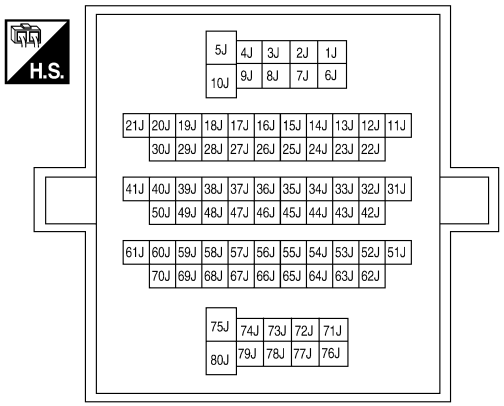

ABLIA0600GB

Terminal No.	Color of Wire	Signal Name
60J	P	–
61J	GR	–

Connector No.	M91
Connector Name	WIRE TO WIRE
Connector Color	WHITE

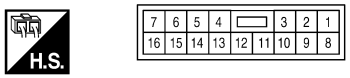

Terminal No.	Color of Wire	Signal Name
10	P	–
11	L	–

Connector No.	E10
Connector Name	WIRE TO WIRE
Connector Color	WHITE

Terminal No.	Color of Wire	Signal Name
6	W	–

Connector No.	E26
Connector Name	WIRE TO WIRE
Connector Color	WHITE

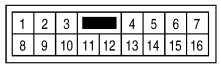

Terminal No.	Color of Wire	Signal Name
10	P	–
11	L	–

Connector No.	E122
Connector Name	IPDM E/R (INTELLIGENT POWER DISTRIBUTION MODULE ENGINE ROOM)
Connector Color	WHITE

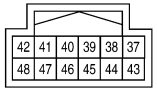

Terminal No.	Color of Wire	Signal Name
38	B	GND (SIGNAL)
39	L	CAN-H
40	P	CAN-L

Connector No.	E123
Connector Name	IPDM E/R (INTELLIGENT POWER DISTRIBUTION MODULE ENGINE ROOM)
Connector Color	BROWN

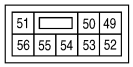

Terminal No.	Color of Wire	Signal Name
52	P	H/LAMP LO LH
54	R	H/LAMP LO RH
55	G	H/LAMP HI LH
56	L	H/LAMP HI RH

Connector No.	E124
Connector Name	IPDM E/R (INTELLIGENT POWER DISTRIBUTION MODULE ENGINE ROOM)
Connector Color	BLACK

Terminal No.	Color of Wire	Signal Name
57	GR	TAIL LAMP
59	B	GND (POWER)

Connector No.	B8
Connector Name	FRONT DOOR SWITCH LH (CREW CAB)
Connector Color	WHITE

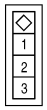

Terminal No.	Color of Wire	Signal Name
2	GR	–

ABLIA1790GB

Connector No.	B108
Connector Name	FRONT DOOR SWITCH RH (CREW CAB)
Connector Color	WHITE

Terminal No.	Color of Wire	Signal Name
2	LG	–

Connector No.	B69
Connector Name	WIRE TO WIRE
Connector Color	WHITE

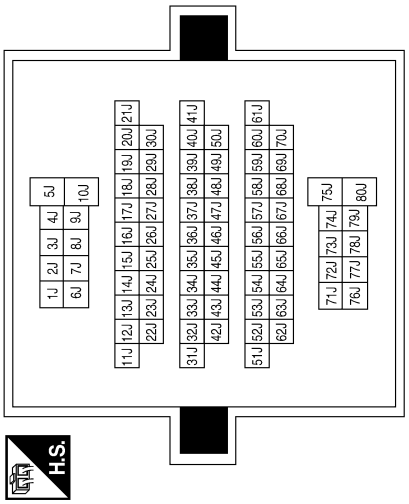

Terminal No.	Color of Wire	Signal Name
60J	P	–
61J	GR	–

Connector No.	B18
Connector Name	REAR DOOR SWITCH LH
Connector Color	WHITE

Terminal No.	Color of Wire	Signal Name
2	P	–

Connector No.	B162
Connector Name	WIRE TO WIRE
Connector Color	WHITE

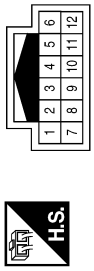

Terminal No.	Color of Wire	Signal Name
7	L	–
8	LG	–

Connector No.	B116
Connector Name	REAR DOOR SWITCH RH
Connector Color	WHITE

Terminal No.	Color of Wire	Signal Name
2	L	–

ABLIA0602GB

FRONT FOG LAMP SYSTEM

Wiring Diagram

INFOID:0000000005274753

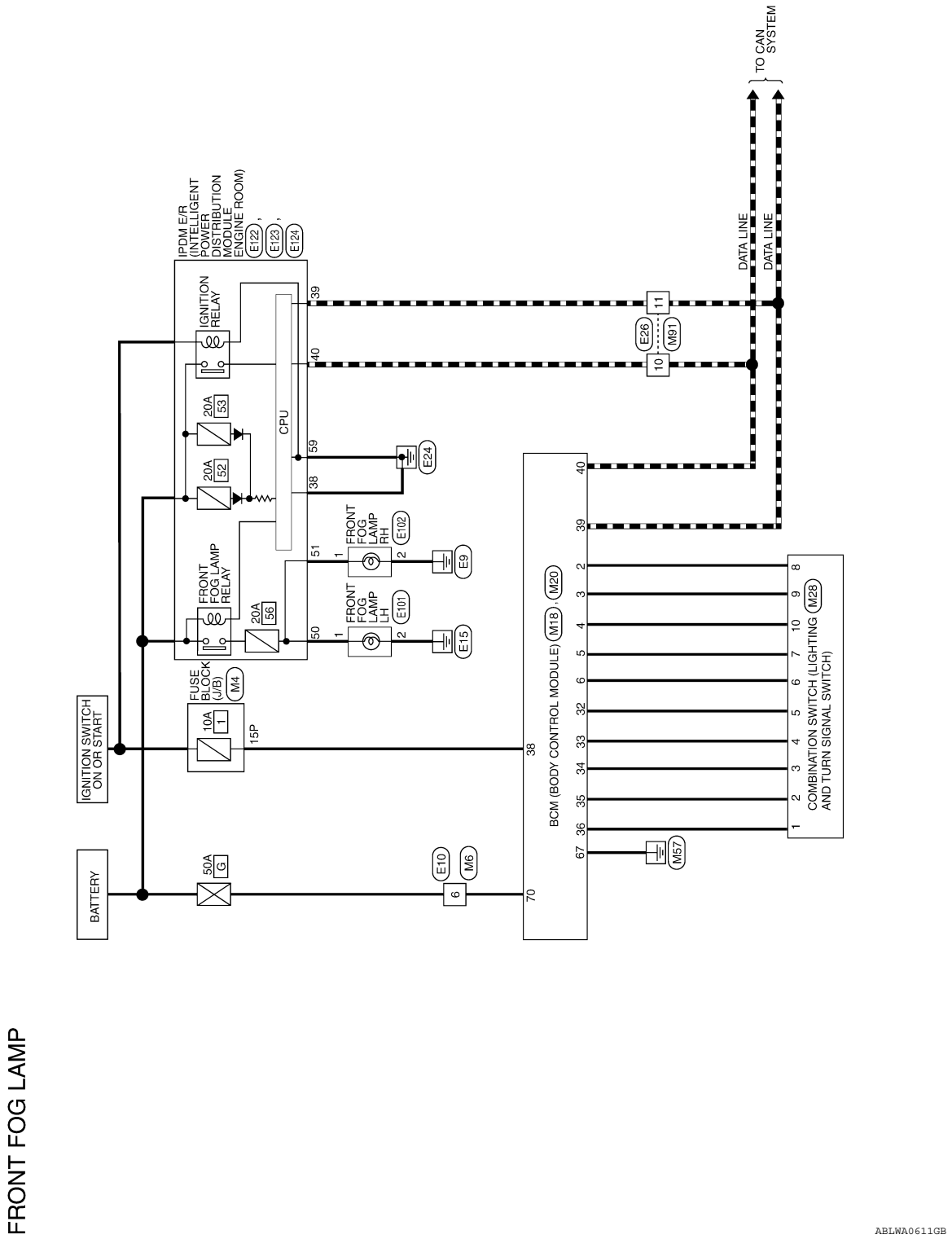

FRONT FOG LAMP CONNECTORS

Connector No.	M4
Connector Name	FUSE BLOCK (J/B)
Connector Color	WHITE

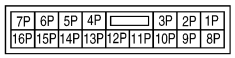

Terminal No.	Color of Wire	Signal Name
15P	W/R	–

Connector No.	M6
Connector Name	WIRE TO WIRE
Connector Color	WHITE

Terminal No.	Color of Wire	Signal Name
6	W	–

Connector No.	M18
Connector Name	BCM (BODY CONTROL MODULE)
Connector Color	WHITE

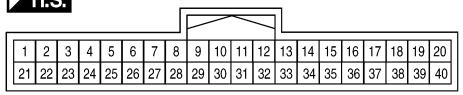

Terminal No.	Color of Wire	Signal Name
2	P	INPUT 5
3	SB	INPUT 4
4	V	INPUT 3
5	L	INPUT 2
6	R	INPUT 1

Terminal No.	Color of Wire	Signal Name
32	O	OUTPUT 5
33	GR	OUTPUT 4
34	G	OUTPUT 3
35	BR	OUTPUT 2
36	LG	OUTPUT 1
38	W/R	IGN SW
39	L	CAN-H
40	P	CAN-L

Connector No.	M20
Connector Name	BCM (BODY CONTROL MODULE)
Connector Color	BLACK

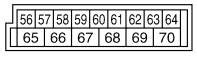

Terminal No.	Color of Wire	Signal Name
67	B	GND (POWER)
70	W	BAT (F/L)

ABLIA1791GB

Connector No.	M28
Connector Name	COMBINATION SWITCH
Connector Color	WHITE

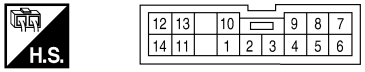

Terminal No.	Color of Wire	Signal Name
1	LG	INPUT 1
2	BR	INPUT 2
3	G	INPUT 3
4	GR	INPUT 4
5	O	INPUT 5
6	R	OUTPUT 1
7	L	OUTPUT 2
8	P	OUTPUT 5

Terminal No.	Color of Wire	Signal Name
9	SB	OUTPUT 4
10	V	OUTPUT 3

Connector No.	M91
Connector Name	WIRE TO WIRE
Connector Color	WHITE

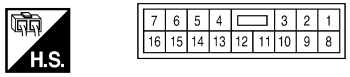

Terminal No.	Color of Wire	Signal Name
10	P	–
11	L	–

Connector No.	E10
Connector Name	WIRE TO WIRE
Connector Color	WHITE

Terminal No.	Color of Wire	Signal Name
6	W	–

Connector No.	E26
Connector Name	WIRE TO WIRE
Connector Color	WHITE

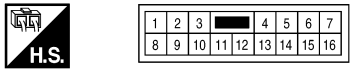

Terminal No.	Color of Wire	Signal Name
10	P	–
11	L	–

Connector No.	E101
Connector Name	FRONT FOG LAMP LH
Connector Color	BLACK

Terminal No.	Color of Wire	Signal Name
1	W	–
2	B	–

AWLIA0621GB

Connector No.	E102
Connector Name	FRONT FOG LAMP RH
Connector Color	BLACK

Terminal No.	Color of Wire	Signal Name
1	V	–
2	B	–

Connector No.	E122
Connector Name	IPDM E/R (INTELLIGENT POWER DISTRIBUTION MODULE ENGINE ROOM)
Connector Color	WHITE

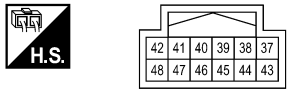

Terminal No.	Color of Wire	Signal Name
38	B	GND (SIGNAL)
39	L	CAN-H
40	P	CAN-L

Connector No.	E123
Connector Name	IPDM E/R (INTELLIGENT POWER DISTRIBUTION MODULE ENGINE ROOM)
Connector Color	BROWN

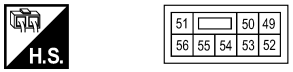

Terminal No.	Color of Wire	Signal Name
50	W	FR FOG LAMP LH
51	V	FR FOG LAMP RH

Connector No.	E124
Connector Name	IPDM E/R (INTELLIGENT POWER DISTRIBUTION MODULE ENGINE ROOM)
Connector Color	BLACK

Terminal No.	Color of Wire	Signal Name
59	B	GND (POWER)

AALIIA0126GB

TURN SIGNAL AND HAZARD WARNING LAMP SYSTEM

Wiring Diagram

INFOID:0000000005274754

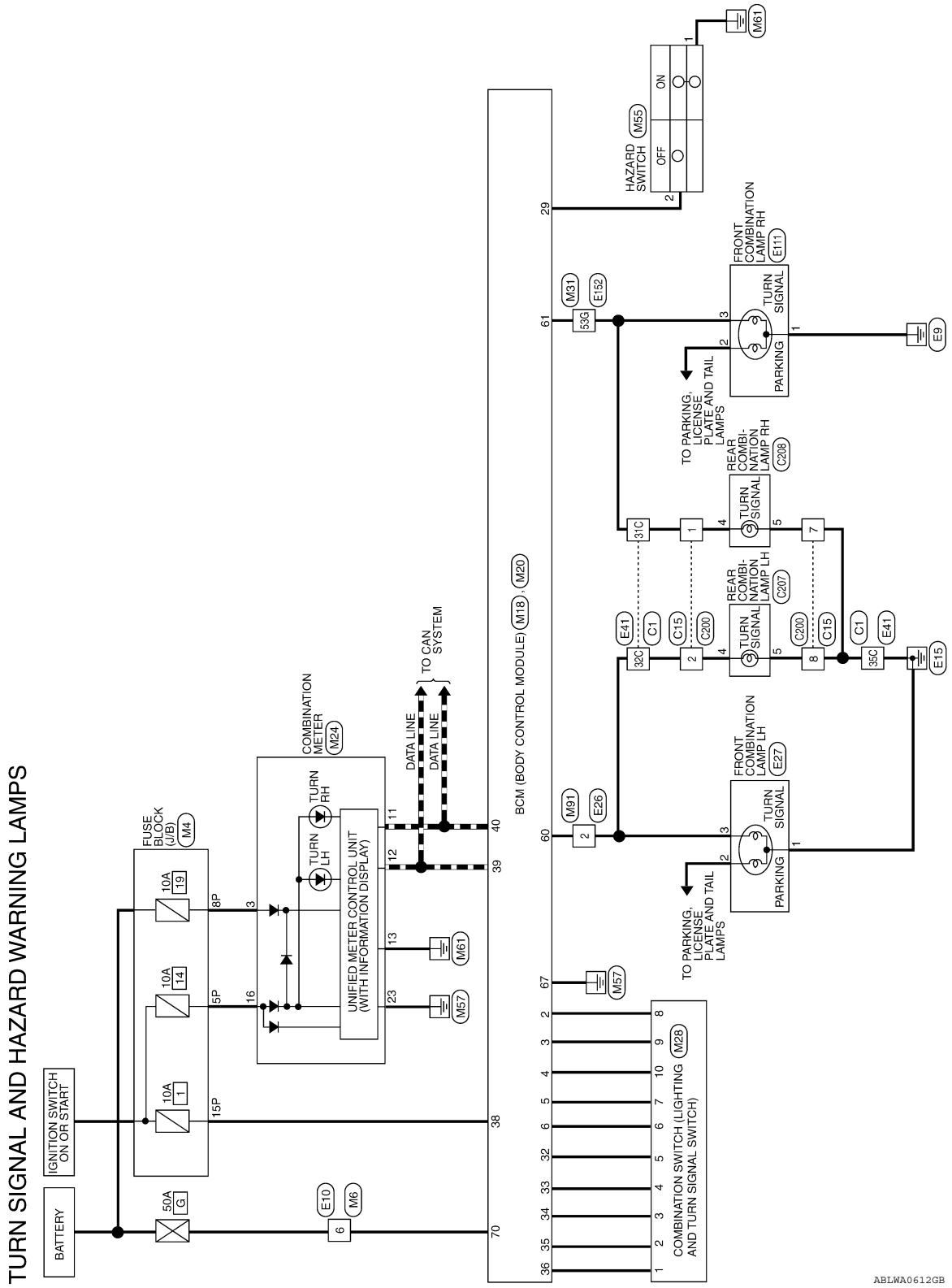

TURN SIGNAL AND HAZARD WARNING LAMPS CONNECTORS

Connector No.	M4
Connector Name	FUSE BLOCK (J/B)
Connector Color	WHITE

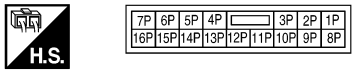

Terminal No.	Color of Wire	Signal Name
5P	W/G	–
8P	R/Y	–
15P	W/R	–

Connector No.	M6
Connector Name	WIRE TO WIRE
Connector Color	WHITE

Terminal No.	Color of Wire	Signal Name
6	W	–

Connector No.	M18
Connector Name	BCM (BODY CONTROL MODULE)
Connector Color	WHITE

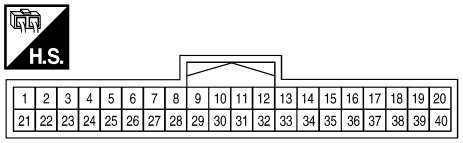

Terminal No.	Color of Wire	Signal Name
2	P	INPUT 5
3	SB	INPUT 4
4	V	INPUT 3
5	L	INPUT 2
6	R	INPUT 1
29	G	HAZARD SW

Terminal No.	Color of Wire	Signal Name
32	O	OUTPUT 5
33	GR	OUTPUT 4
34	G	OUTPUT 3
35	BR	OUTPUT 2
36	LG	OUTPUT 1
38	W/R	IGN SW
39	L	CAN-H
40	P	CAN-L

Connector No.	M20
Connector Name	BCM (BODY CONTROL MODULE)
Connector Color	BLACK

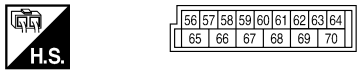

Terminal No.	Color of Wire	Signal Name
60	LG	FLASHER OUTPUT (LEFT)
61	G	FLASHER OUTPUT (RIGHT)
67	B	GND (POWER)
70	W	BAT (F/L)

ABLIA1792GB

Terminal No.	Color of Wire	Signal Name
9	SB	OUTPUT 4
10	V	OUTPUT 3

Connector No.	M28
Connector Name	COMBINATION SWITCH
Connector Color	WHITE

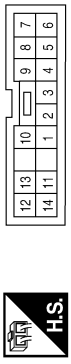

Terminal No.	Color of Wire	Signal Name
1	LG	INPUT 1
2	BR	INPUT 2
3	G	INPUT 3
4	GR	INPUT 4
5	O	INPUT 5
6	R	OUTPUT 1
7	L	OUTPUT 2
8	P	OUTPUT 5

Connector No.	M24
Connector Name	COMBINATION METER
Connector Color	WHITE

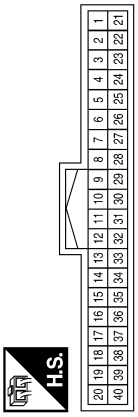

Terminal No.	Color of Wire	Signal Name
3	R/Y	BATTERY
11	P	CAN-L
12	L	CAN-H
13	GR	GROUND
16	W/G	RUN START
23	B	POWER GND

Connector No.	M55
Connector Name	HAZARD SWITCH
Connector Color	WHITE

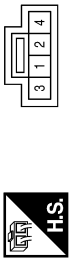

Terminal No.	Color of Wire	Signal Name
1	B	–
2	G	–

Terminal No.	Color of Wire	Signal Name
53G	G	–

Connector No.	M31
Connector Name	WIRE TO WIRE
Connector Color	WHITE

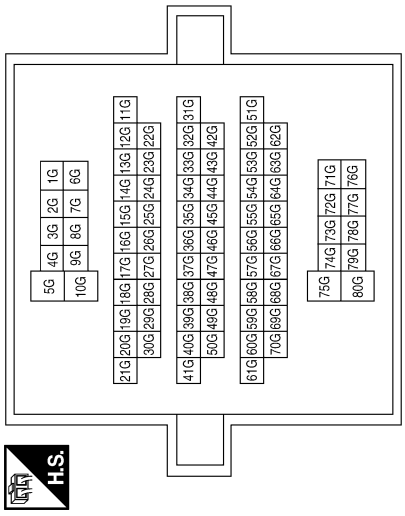

ABLIA1894GB

Connector No.	M91
Connector Name	WIRE TO WIRE
Connector Color	WHITE

H.S.

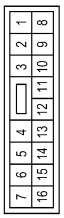

Terminal No.	Color of Wire	Signal Name
2	LG	–

Connector No.	E10
Connector Name	WIRE TO WIRE
Connector Color	WHITE

H.S.

Terminal No.	Color of Wire	Signal Name
6	W	–

Connector No.	E26
Connector Name	WIRE TO WIRE
Connector Color	WHITE

H.S.

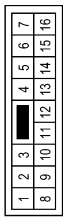

Terminal No.	Color of Wire	Signal Name
2	LG	–

Connector No.	E27
Connector Name	FRONT COMBINATION LAMP LH
Connector Color	GRAY

H.S.

Terminal No.	Color of Wire	Signal Name
1	B	–
2	R	–
3	LG	–

Connector No.	E41
Connector Name	WIRE TO WIRE
Connector Color	BLACK

H.S.

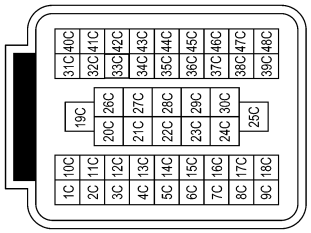

Terminal No.	Color of Wire	Signal Name
31C	L	–
32C	G	–
35C	B	–

Connector No.	E111
Connector Name	FRONT COMBINATION LAMP RH
Connector Color	GRAY

H.S.

Terminal No.	Color of Wire	Signal Name
1	B	–
2	GR	–
3	G	–

ABLIA0606GB

Connector No.	E152
Connector Name	WIRE TO WIRE
Connector Color	WHITE

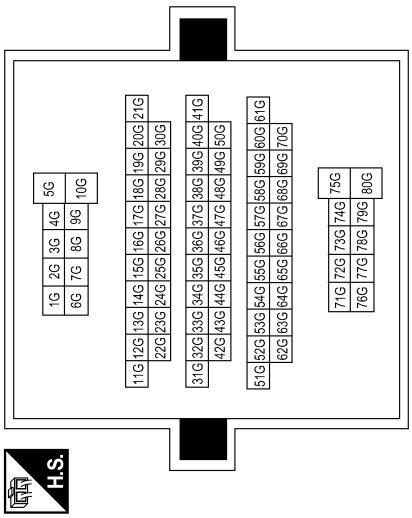

Terminal No.	Color of Wire	Signal Name
53G	G	–

Connector No.	C1
Connector Name	WIRE TO WIRE
Connector Color	BLACK

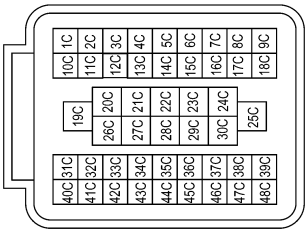

Terminal No.	Color of Wire	Signal Name
31C	L	–
32C	G	–
35C	B	–

Connector No.	C15
Connector Name	WIRE TO WIRE
Connector Color	GRAY

Terminal No.	Color of Wire	Signal Name
1	L	–
2	G	–
7	BR	–
8	B/Y	–

Connector No.	C200
Connector Name	WIRE TO WIRE
Connector Color	GRAY

Terminal No.	Color of Wire	Signal Name
1	L	–
2	G	–
7	BR	–
8	B/Y	–

Connector No.	C207
Connector Name	REAR COMBINATION LAMP LH
Connector Color	GRAY

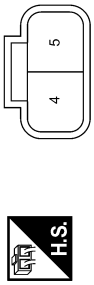

Terminal No.	Color of Wire	Signal Name
4	G	–
5	B/Y	–

Connector No.	C208
Connector Name	REAR COMBINATION LAMP RH
Connector Color	GRAY

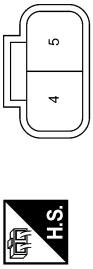

Terminal No.	Color of Wire	Signal Name
4	L	–
5	BR	–

ABLIA0607GB

PARKING, LICENSE PLATE AND TAIL LAMPS SYSTEM

Wiring Diagram

INFOID:0000000005274755

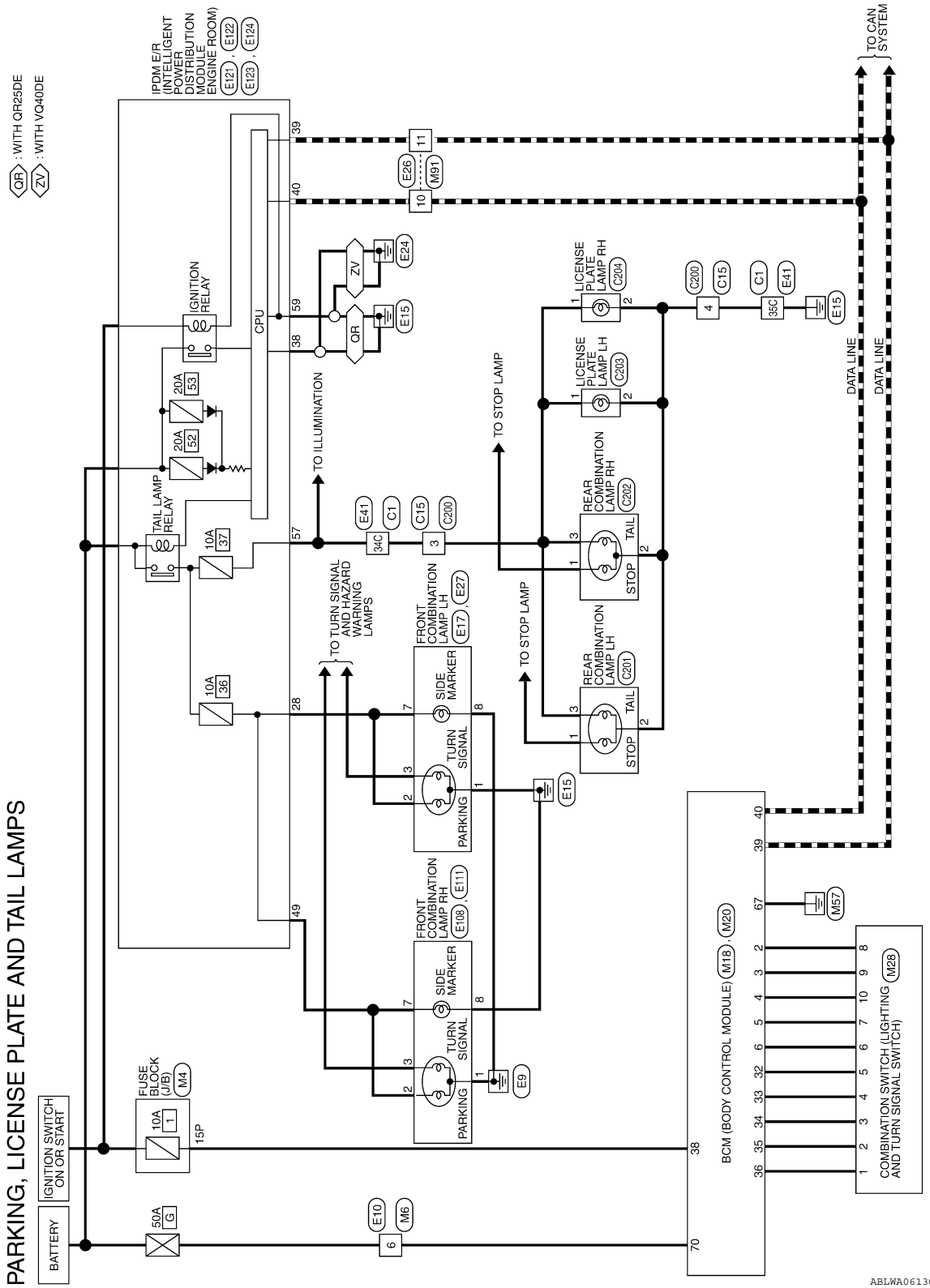

PARKING, LICENSE PLATE AND TAIL LAMPS CONNECTORS

Connector No.	M4
Connector Name	FUSE BLOCK (J/B)
Connector Color	WHITE

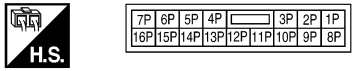

Terminal No.	Color of Wire	Signal Name
15P	W/R	–

Connector No.	M6
Connector Name	WIRE TO WIRE
Connector Color	WHITE

Terminal No.	Color of Wire	Signal Name
6	W	–

Connector No.	M18
Connector Name	BCM (BODY CONTROL MODULE)
Connector Color	WHITE

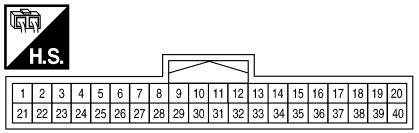

Terminal No.	Color of Wire	Signal Name
2	P	INPUT 5
3	SB	INPUT 4
4	V	INPUT 3
5	L	INPUT 2
6	R	INPUT 1

Terminal No.	Color of Wire	Signal Name
32	O	OUTPUT 5
33	GR	OUTPUT 4
34	G	OUTPUT 3
35	BR	OUTPUT 2
36	LG	OUTPUT 1
38	W/R	IGN SW
39	L	CAN-H
40	P	CAN-L

Connector No.	M20
Connector Name	BCM (BODY CONTROL MODULE)
Connector Color	BLACK

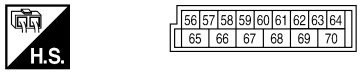

Terminal No.	Color of Wire	Signal Name
67	B	GND (POWER)
70	W	BAT (F/L)

ABLIA1895GB

Connector No.	M28
Connector Name	COMBINATION SWITCH
Connector Color	WHITE

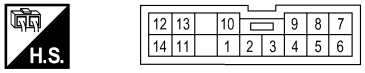

Terminal No.	Color of Wire	Signal Name
1	LG	INPUT 1
2	BR	INPUT 2
3	G	INPUT 3
4	GR	INPUT 4
5	O	INPUT 5
6	R	OUTPUT 1
7	L	OUTPUT 2
8	P	OUTPUT 5

Terminal No.	Color of Wire	Signal Name
9	SB	OUTPUT 4
10	V	OUTPUT 3

Connector No.	M91
Connector Name	WIRE TO WIRE
Connector Color	WHITE

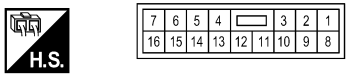

Terminal No.	Color of Wire	Signal Name
10	P	–
11	L	–

Connector No.	E10
Connector Name	WIRE TO WIRE
Connector Color	WHITE

Terminal No.	Color of Wire	Signal Name
6	W	–

Connector No.	E17
Connector Name	FRONT COMBINATION LAMP LH
Connector Color	GRAY

Terminal No.	Color of Wire	Signal Name
7	R	–
8	B	–

Connector No.	E26
Connector Name	WIRE TO WIRE
Connector Color	WHITE

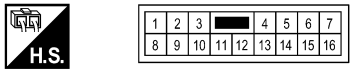

Terminal No.	Color of Wire	Signal Name
10	P	–
11	L	–

AALIIA0127GB

A B C D E F G H I J K EXL M N O P

Connector No.	E27
Connector Name	FRONT COMBINATION LAMP LH
Connector Color	GRAY

H.S.

Terminal No.	Color of Wire	Signal Name
1	B	–
2	R	–
3	LG	–

Connector No.	E41
Connector Name	WIRE TO WIRE
Connector Color	BLACK

H.S.

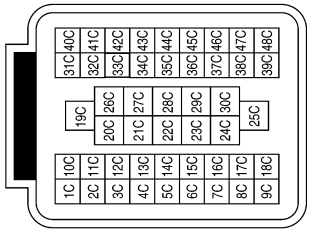

Terminal No.	Color of Wire	Signal Name
34C	GR	–
35C	B	–

Connector No.	E108
Connector Name	FRONT COMBINATION LAMP RH
Connector Color	GRAY

H.S.

Terminal No.	Color of Wire	Signal Name
7	R	–
8	B	–

Connector No.	E111
Connector Name	FRONT COMBINATION LAMP RH
Connector Color	GRAY

H.S.

Terminal No.	Color of Wire	Signal Name
1	B	–
2	GR	–
3	G	–

Connector No.	E121
Connector Name	IPDM E/R (INTELLIGENT POWER DISTRIBUTION MODULE ENGINE ROOM)
Connector Color	BROWN

H.S.

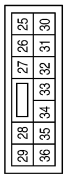

Terminal No.	Color of Wire	Signal Name
28	R	CLEARANCE FRONT LH

Connector No.	E122
Connector Name	IPDM E/R (INTELLIGENT POWER DISTRIBUTION MODULE ENGINE ROOM)
Connector Color	WHITE

H.S.

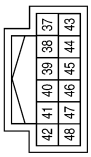

Terminal No.	Color of Wire	Signal Name
38	B	GND (SIGNAL)
39	L	CAN-H
40	P	CAN-L

ABLIA1793GB

Connector No.	E123
Connector Name	IPDM E/R (INTELLIGENT POWER DISTRIBUTION MODULE ENGINE ROOM)
Connector Color	BROWN

H.S.

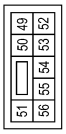

Terminal No.	Color of Wire	Signal Name
49	GR	ILLUMINATION

Connector No.	E124
Connector Name	IPDM E/R (INTELLIGENT POWER DISTRIBUTION MODULE ENGINE ROOM)
Connector Color	BLACK

H.S.

Terminal No.	Color of Wire	Signal Name
57	GR	TAIL LAMP
59	B	GND (POWER)

Connector No.	C1
Connector Name	WIRE TO WIRE
Connector Color	BLACK

H.S.

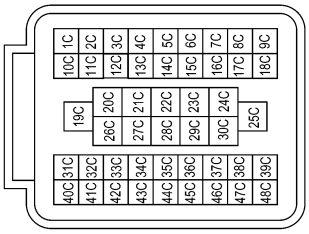

Terminal No.	Color of Wire	Signal Name
34C	GR	–
35C	B	–

Connector No.	C15
Connector Name	WIRE TO WIRE
Connector Color	GRAY

H.S.

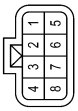

Terminal No.	Color of Wire	Signal Name
3	GR	–
4	B	

Connector No.	C200
Connector Name	WIRE TO WIRE
Connector Color	GRAY

H.S.

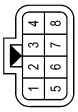

Terminal No.	Color of Wire	Signal Name
3	GR	–
4	B	

Connector No.	C201
Connector Name	REAR COMBINATION LAMP LH
Connector Color	BROWN

H.S.

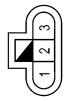

Terminal No.	Color of Wire	Signal Name
1	Y	–
2	B	–
3	GR	–

ABLIA0610GB

Connector No.	C202
Connector Name	REAR COMBINATION LAMP RH
Connector Color	BROWN

Terminal No.	Color of Wire	Signal Name
1	R	–
2	B	–
3	V	–

Connector No.	C203
Connector Name	LICENSE PLATE LAMP LH
Connector Color	GRAY

Terminal No.	Color of Wire	Signal Name
1	V	–
2	B	–

Connector No.	C204
Connector Name	LICENSE PLATE LAMP RH
Connector Color	GRAY

Terminal No.	Color of Wire	Signal Name
1	V	–
2	B	–

ABLIA1794GB

STOP LAMP

Wiring Diagram

INFOID:0000000005274756

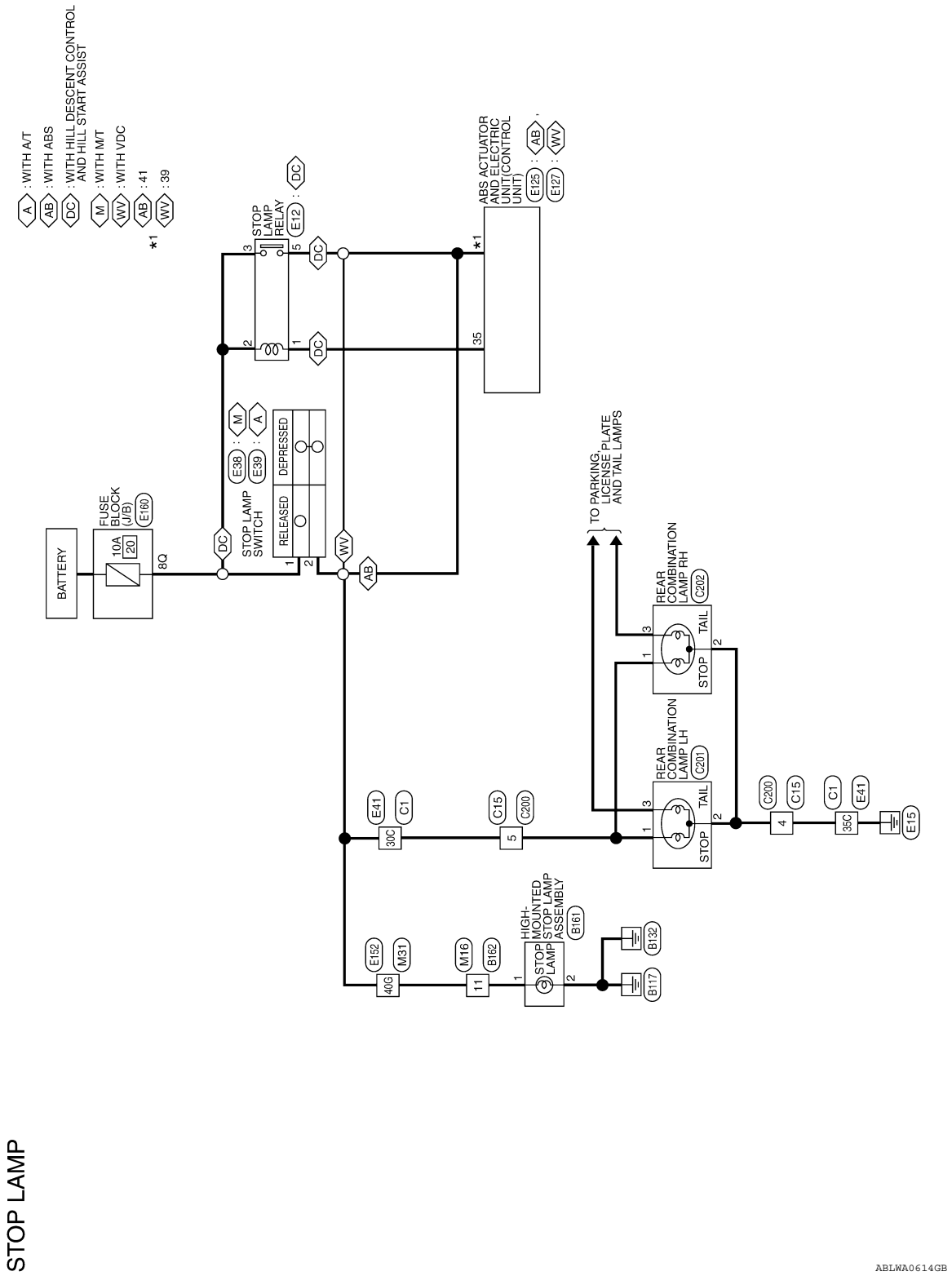

STOP LAMP

STOP LAMP CONNECTORS

Connector No.	M16
Connector Name	WIRE TO WIRE
Connector Color	WHITE

H.S.

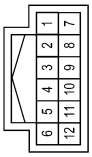

Terminal No.	Color of Wire	Signal Name
11	L	–

Connector No.	M31
Connector Name	WIRE TO WIRE
Connector Color	WHITE

H.S.

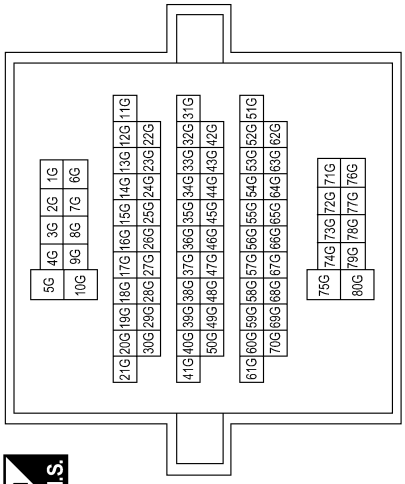

Terminal No.	Color of Wire	Signal Name
40G	L	–

Connector No.	E12
Connector Name	STOP LAMP RELAY
Connector Color	BLUE

H.S.

Terminal No.	Color of Wire	Signal Name
1	V	–
2	R/B	–
3	R/B	–
5	G	–

Connector No.	E38
Connector Name	STOP LAMP SWITCH (WITH M/T)
Connector Color	BLACK

H.S.

Terminal No.	Color of Wire	Signal Name
1	R/B	–
2	Y	–

Connector No.	E39
Connector Name	STOP LAMP SWITCH (WITH A/T)
Connector Color	WHITE

H.S.

Terminal No.	Color of Wire	Signal Name
1	R/B	–
2	Y	–

ABLIA0611GB

STOP LAMP

Connector No.	E41
Connector Name	WIRE TO WIRE
Connector Color	BLACK

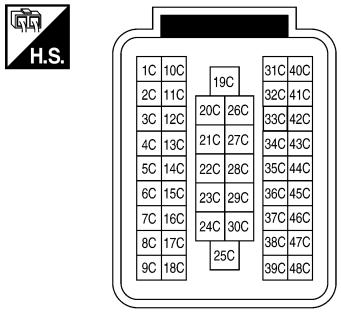

Terminal No.	Color of Wire	Signal Name
30C	Y	–
35C	B	–

Connector No.	E127
Connector Name	ABS ACTUATOR AND ELECTRIC UNIT (CONTROL UNIT) (WITH VDC)
Connector Color	BLACK

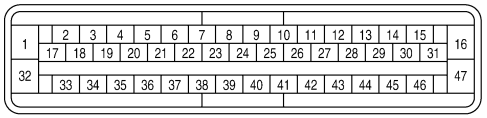

Terminal No.	Color of Wire	Signal Name
35	V	STOP LAMP SW ON
39	SB	STOP LAMP SW

Connector No.	E152
Connector Name	WIRE TO WIRE
Connector Color	WHITE

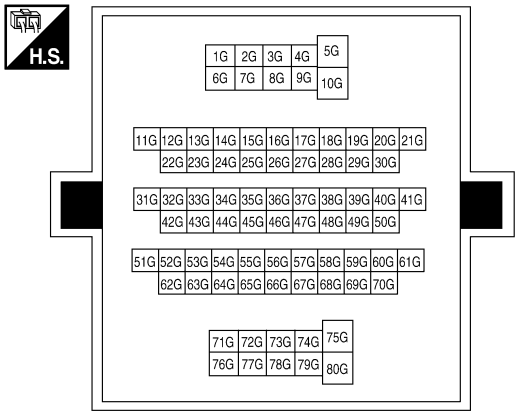

Terminal No.	Color of Wire	Signal Name
40G	L	–

Connector No.	E160
Connector Name	FUSE BLOCK (J/B)
Connector Color	WHITE

Terminal No.	Color of Wire	Signal Name
8Q	R/B	–

ABLIA1795GB

Connector No.	B161
Connector Name	HIGH MOUNTED STOP LAMP ASSEMBLY
Connector Color	WHITE

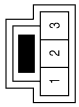

H.S.

Terminal No.	Color of Wire	Signal Name
1	L	–
2	B	–

Connector No.	B162
Connector Name	WIRE TO WIRE
Connector Color	WHITE

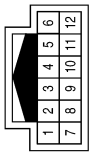

H.S.

Terminal No.	Color of Wire	Signal Name
11	L	–

Connector No.	C1
Connector Name	WIRE TO WIRE
Connector Color	BLACK

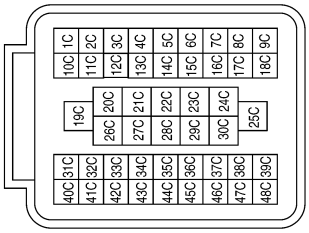

H.S.

Terminal No.	Color of Wire	Signal Name
30C	Y	–
35C	B	–

Connector No.	C15
Connector Name	WIRE TO WIRE
Connector Color	GRAY

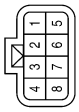

H.S.

Terminal No.	Color of Wire	Signal Name
4	B	–
5	Y	–

Connector No.	C200
Connector Name	WIRE TO WIRE
Connector Color	GRAY

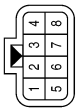

H.S.

Terminal No.	Color of Wire	Signal Name
4	B	–
5	Y	–

Connector No.	C201
Connector Name	REAR COMBINATION LAMP LH
Connector Color	BROWN

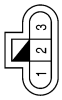

H.S.

Terminal No.	Color of Wire	Signal Name
1	Y	–
2	B	–
3	GR	–

ABLIA1796GB

Connector No.	C202
Connector Name	REAR COMBINATION LAMP RH
Connector Color	BROWN

Terminal No.	Color of Wire	Signal Name
1	R	–
2	B	–
3	V	–

ABLIA1797GB

BACK-UP LAMP

Wiring Diagram

INFOID:0000000005274757

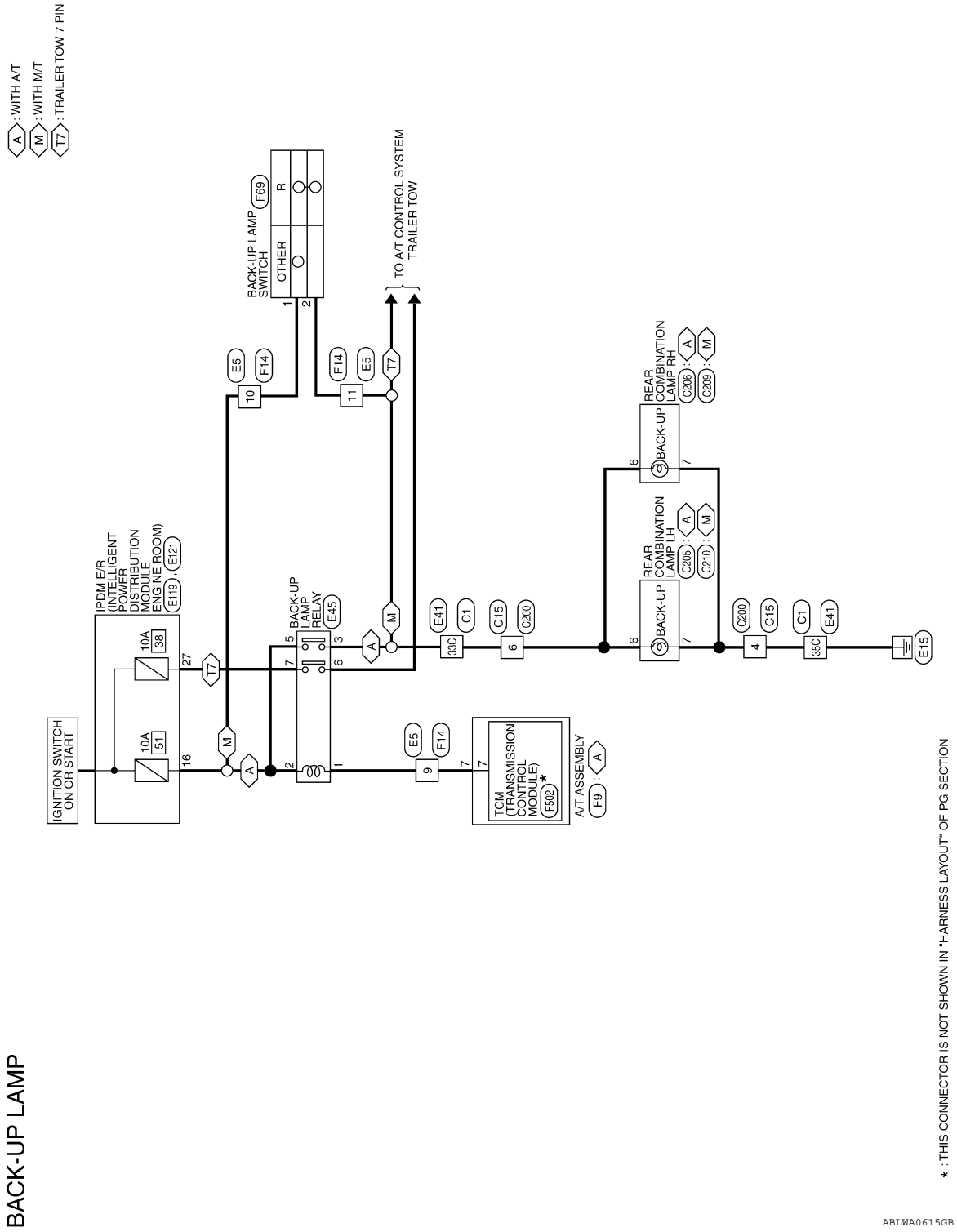

BACK-UP LAMP

BACK-UP LAMP CONNECTORS

Connector No.	E5
Connector Name	WIRE TO WIRE
Connector Color	WHITE

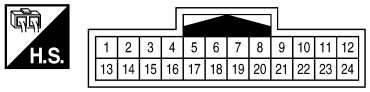

Terminal No.	Color of Wire	Signal Name
9	LG	–
10	W/G	–
11	SB	–

Connector No.	E41
Connector Name	WIRE TO WIRE
Connector Color	BLACK

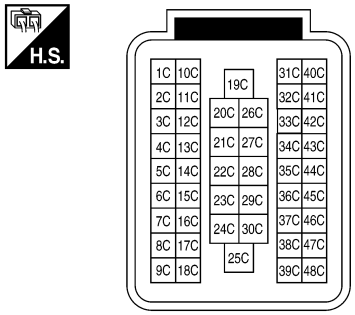

Terminal No.	Color of Wire	Signal Name
33C	SB	–
35C	B	–

Connector No.	E45
Connector Name	BACK-UP LAMP RELAY (WITH A/T)
Connector Color	BROWN

Terminal No.	Color of Wire	Signal Name
1	LG	–
2	W/G	–
3	SB	–
5	W/G	–
6	Y	–
7	W/G	–

Connector No.	E119
Connector Name	IPDM E/R (INTELLIGENT POWER DISTRIBUTION MODULE ENGINE ROOM)
Connector Color	WHITE

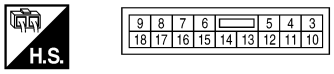

Terminal No.	Color of Wire	Signal Name
16	W/G	REVERSE LAMP

Connector No.	E121
Connector Name	IPDM E/R (INTELLIGENT POWER DISTRIBUTION MODULE ENGINE ROOM)
Connector Color	BROWN

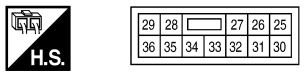

Terminal No.	Color of Wire	Signal Name
27	W/G	T TOW REV LAMP

Connector No.	F9
Connector Name	A/T ASSEMBLY
Connector Color	GREEN

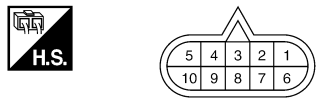

Terminal No.	Color of Wire	Signal Name
7	LG	–

ABLIA1798GB

Connector No.	F14
Connector Name	WIRE TO WIRE
Connector Color	WHITE

H.S.

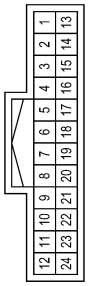

Terminal No.	Color of Wire	Signal Name
9	LG	–
10	W/G	–
11	SB	–

Connector No.	F69
Connector Name	BACK-UP LAMP SWITCH
Connector Color	WHITE

H.S.

Terminal No.	Color of Wire	Signal Name
1	W/G	–
2	SB	–

Connector No.	F502
Connector Name	TCM (TRANSMISSION CONTROL MODULE)
Connector Color	GRAY

H.S.

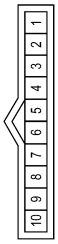

Terminal No.	Color of Wire	Signal Name
7	O	REV LAMP RLY

Connector No.	C1
Connector Name	WIRE TO WIRE
Connector Color	BLACK

H.S.

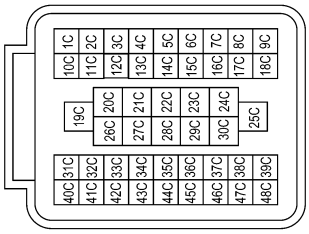

Terminal No.	Color of Wire	Signal Name
33C	SB	–
35C	B	–

Connector No.	C15
Connector Name	WIRE TO WIRE
Connector Color	GRAY

H.S.

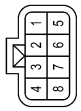

Terminal No.	Color of Wire	Signal Name
4	B	–
6	SB	–

Connector No.	C200
Connector Name	WIRE TO WIRE
Connector Color	GRAY

H.S.

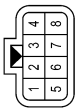

Terminal No.	Color of Wire	Signal Name
4	B	–
6	SB	–

ABLIA0615GB

Connector No.	C205
Connector Name	REAR COMBINATION LAMP LH (WITH A/T)
Connector Color	GRAY

Terminal No.	Color of Wire	Signal Name
6	SB	–
7	B	–

Connector No.	C206
Connector Name	REAR COMBINATION LAMP RH (WITH A/T)
Connector Color	GRAY

Terminal No.	Color of Wire	Signal Name
6	O	–
7	B	–

Connector No.	C209
Connector Name	REAR COMBINATION LAMP RH (WITH M/T)
Connector Color	GRAY

Terminal No.	Color of Wire	Signal Name
6	O	–
7	B	–

Connector No.	C210
Connector Name	REAR COMBINATION LAMP LH (WITH M/T)
Connector Color	GRAY

Terminal No.	Color of Wire	Signal Name
6	SB	–
7	B	–

ABLIA1896GB

TRAILER TOW

Wiring Diagram

INFOID:0000000005274758

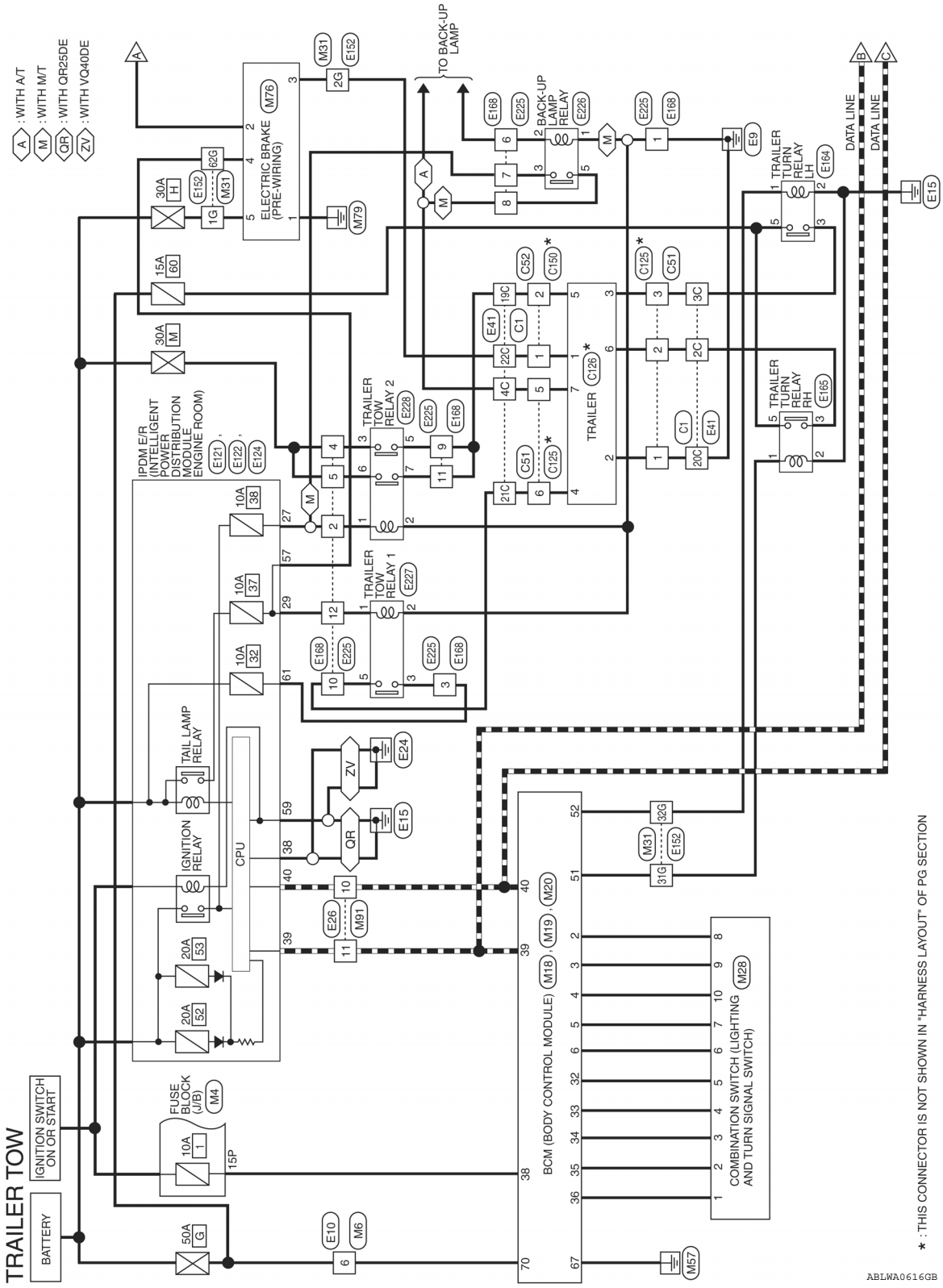

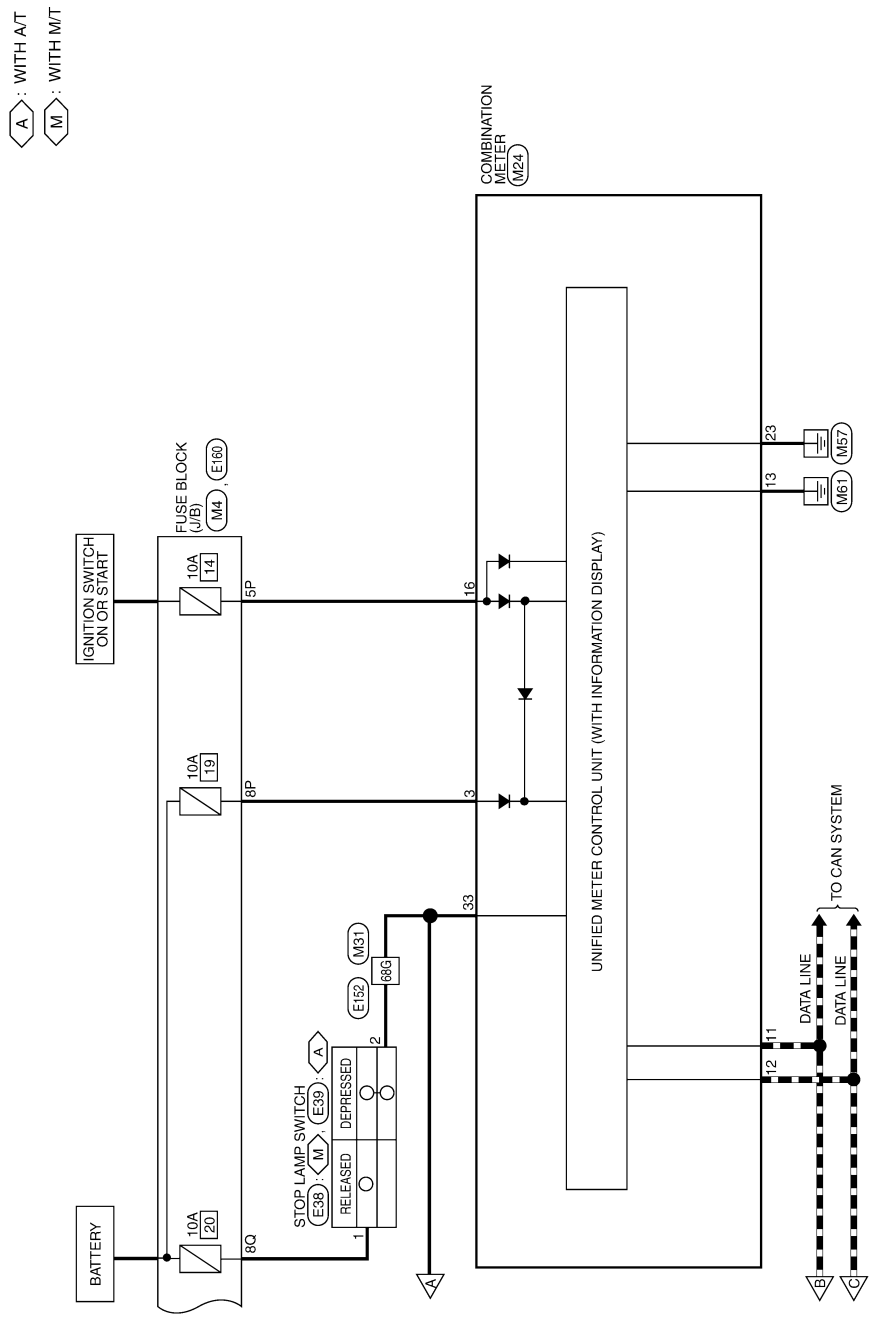

ABLWA0655GB

TRAILER TOW CONNECTORS

Connector No.	M4
Connector Name	FUSE BLOCK (J/B)
Connector Color	WHITE

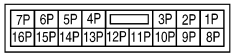

Terminal No.	Color of Wire	Signal Name
5P	W/G	–
8P	R/Y	–
15P	W/R	–

Connector No.	M6
Connector Name	WIRE TO WIRE
Connector Color	WHITE

Terminal No.	Color of Wire	Signal Name
6	W	–

Connector No.	M18
Connector Name	BCM (BODY CONTROL MODULE)
Connector Color	WHITE

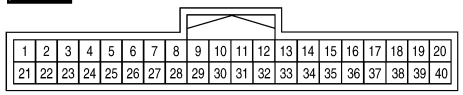

Terminal No.	Color of Wire	Signal Name
2	P	INPUT 5
3	SB	INPUT 4
4	V	INPUT 3
5	L	INPUT 2
6	R	INPUT 1

Terminal No.	Color of Wire	Signal Name
32	O	OUTPUT 5
33	GR	OUTPUT 4
34	G	OUTPUT 3
35	BR	OUTPUT 2
36	LG	OUTPUT 1
38	W/R	IGN SW
39	L	CAN-H
40	P	CAN-L

Connector No.	M19
Connector Name	BCM (BODY CONTROL MODULE)
Connector Color	WHITE

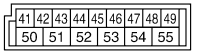

Terminal No.	Color of Wire	Signal Name
51	O	TRAILER FLASHER OUTPUT(RIGHT)
52	LG	TRAILER FLASHER OUTPUT(LEFT)

ABLIA1799GB

Connector No.	M20
Connector Name	BCM (BODY CONTROL MODULE)
Connector Color	BLACK

H.S.

56	57	58	59	60	61	62	63	64
65	66	67	68	69	70			

Terminal No.	Color of Wire	Signal Name
67	B	GND (POWER)
70	W	BAT (F/L)

Connector No.	M24
Connector Name	COMBINATION METER
Connector Color	WHITE

H.S.

20	19	18	17	16	15	14	13	12	11	10	9	8	7	6	5	4	3	2	1
40	39	38	37	36	35	34	33	32	31	30	29	28	27	26	25	24	23	22	21

Terminal No.	Color of Wire	Signal Name
3	R/Y	BATTERY
11	P	CAN-L
12	L	CAN-H
13	GR	GROUND
16	W/G	RUN START
23	B	POWER GND
33	LG	BRAKE PEDAL SW

Connector No.	M28
Connector Name	COMBINATION SWITCH
Connector Color	WHITE

H.S.

12	13		10		9	8	7
14	11		1	2	3	4	5	6

Terminal No.	Color of Wire	Signal Name
1	LG	INPUT 1
2	BR	INPUT 2
3	G	INPUT 3
4	GR	INPUT 4
5	O	INPUT 5
6	R	OUTPUT 1
7	L	OUTPUT 2
8	P	OUTPUT 5
9	SB	OUTPUT 4
10	V	OUTPUT 3

Connector No.	M31
Connector Name	WIRE TO WIRE
Connector Color	WHITE

H.S.

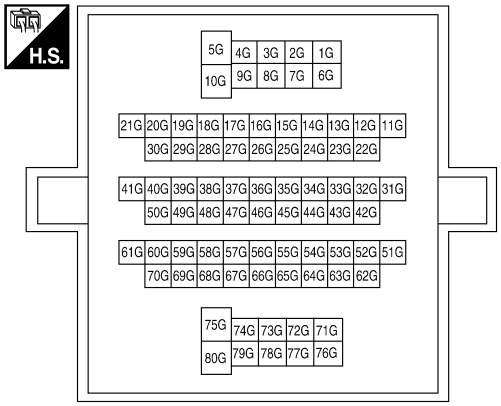

ABLIA1800GB

Terminal No.	Color of Wire	Signal Name
1G	O	–
2G	BR	–
31G	O	–
32G	LG	–
62G	R	–
68G	LG	–

Connector No.	M76
Connector Name	ELECTRIC BRAKE (PRE-WIRING)
Connector Color	WHITE

H.S.

2			6
1	3	4	5

Terminal No.	Color of Wire	Signal Name
1	B	GND
2	LG	STOP
3	BR	–
4	R	ILL (TAIL)
5	O	+B

Connector No.	M91
Connector Name	WIRE TO WIRE
Connector Color	WHITE

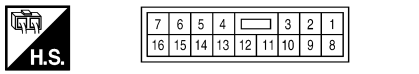

Terminal No.	Color of Wire	Signal Name
10	P	–
11	L	–

Connector No.	E10
Connector Name	WIRE TO WIRE
Connector Color	WHITE

Terminal No.	Color of Wire	Signal Name
6	W	–

Connector No.	E26
Connector Name	WIRE TO WIRE
Connector Color	WHITE

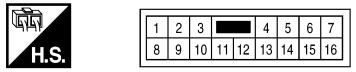

Terminal No.	Color of Wire	Signal Name
10	P	–
11	L	–

Connector No.	E38
Connector Name	STOP LAMP SWITCH (WITH M/T)
Connector Color	BLACK

Terminal No.	Color of Wire	Signal Name
1	R/B	–
2	Y	–

Connector No.	E39
Connector Name	STOP LAMP SWITCH (WITH A/T)
Connector Color	WHITE

Terminal No.	Color of Wire	Signal Name
1	R/B	–
2	Y	–

Connector No.	E41
Connector Name	WIRE TO WIRE
Connector Color	BLACK

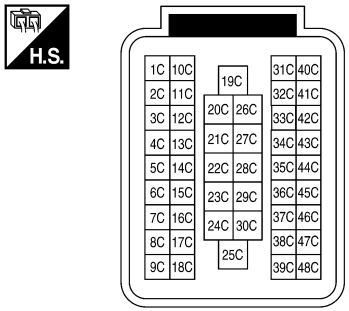

Terminal No.	Color of Wire	Signal Name
2C	G	–
3C	V	–
4C	Y	–
19C	V	–
20C	B	–
21C	R	–
22C	BR	–

ABLIA1801GB

TRAILER TOW

Connector No.	E121
Connector Name	IPDM E/R (INTELLIGENT POWER DISTRIBUTION MODULE ENGINE ROOM)
Connector Color	BROWN

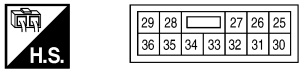

Terminal No.	Color of Wire	Signal Name
27	W/G	T TOW REV LAMP
29	G	TRAILER RLY CONT

Connector No.	E122
Connector Name	IPDM E/R (INTELLIGENT POWER DISTRIBUTION MODULE ENGINE ROOM)
Connector Color	WHITE

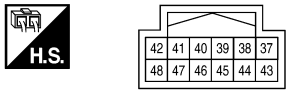

Terminal No.	Color of Wire	Signal Name
38	B	GND (SIGNAL)
39	L	CAN-H
40	P	CAN-L

Connector No.	E124
Connector Name	IPDM E/R (INTELLIGENT POWER DISTRIBUTION MODULE ENGINE ROOM)
Connector Color	BLACK

Terminal No.	Color of Wire	Signal Name
57	GR	TAIL LAMP
59	B	GND (POWER)
61	R/B	TRAILER RLY SUPPLY

Connector No.	E152
Connector Name	WIRE TO WIRE
Connector Color	WHITE

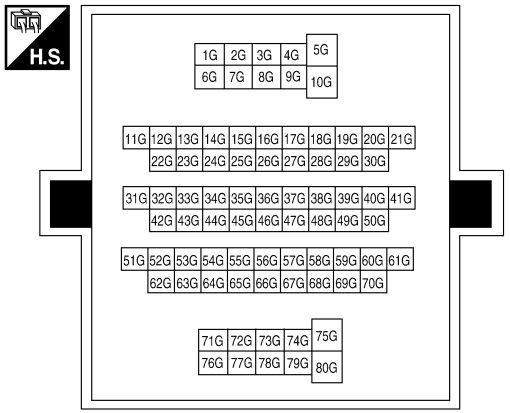

Terminal No.	Color of Wire	Signal Name
1G	O	–
2G	BR	–
31G	O	–
32G	LG	–
62G	R	–
68G	LG	–

Connector No.	E160
Connector Name	FUSE BLOCK (J/B)
Connector Color	WHITE

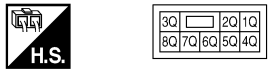

Terminal No.	Color of Wire	Signal Name
8Q	R/B	–

ABLIA1802GB

Connector No.	E164
Connector Name	TRAILER TURN RELAY LH
Connector Color	BLUE

Terminal No.	Color of Wire	Signal Name
1	LG	–
2	B	–
3	V	–
5	L	–

Connector No.	E165
Connector Name	TRAILER TURN RELAY RH
Connector Color	BLUE

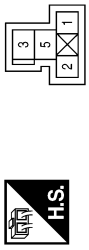

Terminal No.	Color of Wire	Signal Name
1	O	–
2	B	–
3	G	–
5	L	–

Connector No.	E168
Connector Name	WIRE TO WIRE
Connector Color	WHITE

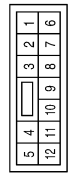

Terminal No.	Color of Wire	Signal Name
1	B	–
2	W/G	–
3	R/B	–

Terminal No.	Color of Wire	Signal Name
4	GR	–
5	Y	–
6	P	–
7	W/G	–
8	Y	–
9	V	–
10	R	–
11	V	–
12	G	–

ABLIA1803GB

Connector No.	E225
Connector Name	WIRE TO WIRE
Connector Color	WHITE

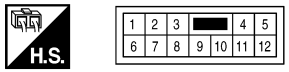

Terminal No.	Color of Wire	Signal Name
1	B	–
2	W/G	–
3	R/B	–
4	GR	–
5	W	–

Terminal No.	Color of Wire	Signal Name
6	BR	–
7	W/G	–
8	SB	–
9	L	–
10	R	–
11	O	–
12	G	–

Connector No.	E226
Connector Name	BACK-UP LAMP RELAY (WITH M/T)
Connector Color	BLUE

Terminal No.	Color of Wire	Signal Name
1	B	–
2	BR	–
3	W/G	–
5	SB	–

Connector No.	E227
Connector Name	TRAILER TOW RELAY 1
Connector Color	BLUE

Terminal No.	Color of Wire	Signal Name
1	G	–
2	B	–
3	R/B	–
5	R	–

Connector No.	E228
Connector Name	TRAILER TOW RELAY 2
Connector Color	BROWN

Terminal No.	Color of Wire	Signal Name
1	W/G	–
2	B	–
3	GR	–
5	L	–
6	W	–
7	O	–

ABLIA1804GB

Connector No.	C1
Connector Name	WIRE TO WIRE
Connector Color	BLACK

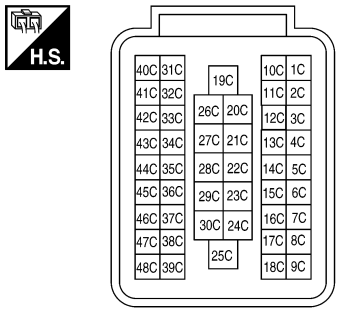

Terminal No.	Color of Wire	Signal Name
2C	G	–
3C	V	–
4C	Y	–
19C	V	–
20C	B	–
21C	R	–
22C	BR	–

Connector No.	C51
Connector Name	WIRE TO WIRE
Connector Color	GRAY

Terminal No.	Color of Wire	Signal Name
1	B	–
2	G	–
3	V	–
5	Y	–
6	R	–

Connector No.	C52
Connector Name	WIRE TO WIRE
Connector Color	BLACK

Terminal No.	Color of Wire	Signal Name
1	BR	–
2	V	–

Connector No.	C125
Connector Name	WIRE TO WIRE
Connector Color	GRAY

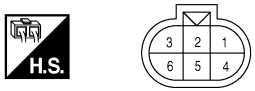

Terminal No.	Color of Wire	Signal Name
1	W	–
2	G	–
3	V	–
5	B	–
6	BR	

Connector No.	C126
Connector Name	TRAILER
Connector Color	BLACK

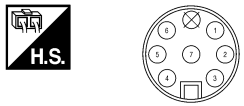

Terminal No.	Color of Wire	Signal Name
1	R	–
2	W	–
3	V	–
4	BR	–
5	L	–
6	G	–
7	B	–

ABLIA1805GB

Connector No.	C150
Connector Name	WIRE TO WIRE
Connector Color	BLACK

Terminal No.	Color of Wire	Signal Name
1	R	–
2	L	–

ABLIA1897GB

ECU DIAGNOSIS

BCM (BODY CONTROL MODULE)

Reference Value

INFOID:0000000005561472

VALUES ON THE DIAGNOSIS TOOL

Monitor Item	Condition	Value/Status
IGN ON SW	Ignition switch OFF or ACC	OFF
	Ignition switch ON	ON
KEY ON SW	Mechanical key is removed from key cylinder	OFF
	Mechanical key is inserted to key cylinder	ON
CDL LOCK SW	Door lock/unlock switch does not operate	OFF
	Press door lock/unlock switch to the lock side	ON
CDL UNLOCK SW	Door lock/unlock switch does not operate	OFF
	Press door lock/unlock switch to the unlock side	ON
DOOR SW-DR	Driver's door closed	OFF
	Driver's door opened	ON
DOOR SW-AS	Passenger door closed	OFF
	Passenger door opened	ON
DOOR SW-RR	Rear RH door closed	OFF
	Rear RH door opened	ON
DOOR SW-RL	Rear LH door closed	OFF
	Rear LH door opened	ON
KEY CYL LK-SW	Other than driver door key cylinder LOCK position	OFF
	Driver door key cylinder LOCK position	ON
KEY CYL UN-SW	Other than driver door key cylinder UNLOCK position	OFF
	Driver door key cylinder UNLOCK position	ON
KEYLESS LOCK	“LOCK” button of key fob is not pressed	OFF
	“LOCK” button of key fob is pressed	ON
KEYLESS UNLOCK	“UNLOCK” button of key fob is not pressed	OFF
	“UNLOCK” button of key fob is pressed	ON
ACC ON SW	Ignition switch OFF	OFF
	Ignition switch ACC or ON	ON
REAR DEF SW	Rear window defogger switch OFF	OFF
	Rear window defogger switch ON	ON
LIGHT SW 1ST	Lighting switch OFF	OFF
	Lighting switch 1ST	ON
BUCKLE SW	The seat belt (driver side) is unfastened. [Seat belt switch (driver side) OFF]	OFF
	The seat belt (driver side) is fastened. [Seat belt switch (driver side) ON]	ON
KEYLESS PANIC	PANIC button of key fob is not pressed	OFF
	PANIC button of key fob is pressed	ON

Monitor Item	Condition	Value/Status
RKE LCK-UNLCK	LOCK/UNLOCK button of key fob is not pressed and held simultaneously	OFF
	LOCK/UNLOCK button of key fob is pressed and held simultaneously	ON
RKE KEEP UNLK	UNLOCK button of key fob is not pressed	OFF
	UNLOCK button of key fob is pressed and held	ON
HI BEAM SW	Lighting switch OFF	OFF
	Lighting switch HI	ON
HEAD LAMP SW 1	Lighting switch OFF	OFF
	Lighting switch 2ND	ON
HEAD LAMP SW 2	Lighting switch OFF	OFF
	Lighting switch 2ND	ON
AUTO LIGHT SW	Lighting switch OFF	OFF
	Lighting switch AUTO	ON
PASSING SW	Other than lighting switch PASS	OFF
	Lighting switch PASS	ON
FR FOG SW	Front fog lamp switch OFF	OFF
	Front fog lamp switch ON	ON
TURN SIGNAL R	Turn signal switch OFF	OFF
	Turn signal switch RH	ON
TURN SIGNAL L	Turn signal switch OFF	OFF
	Turn signal switch LH	ON
CARGO LAMP SW	Cargo lamp switch OFF	OFF
	Cargo lamp switch ON	ON
OPTICAL SENSOR	Bright outside vehicle	5V
	Dark outside vehicle	0V
IGN SW CAN	Ignition switch OFF or ACC	OFF
	Ignition switch ON	ON
FR WIPER HI	Front wiper switch OFF	OFF
	Front wiper switch HI	ON
FR WIPER LOW	Front wiper switch OFF	OFF
	Front wiper switch LO	ON
FR WIPER INT	Front wiper switch OFF	OFF
	Front wiper switch INT	ON
FR WASHER SW	Front washer switch OFF	OFF
	Front washer switch ON	ON
INT VOLUME	Wiper intermittent dial is in a dial position 1 - 7	1 - 7
FR WIPER STOP	Any position other than front wiper stop position	OFF
	Front wiper stop position	ON
VEHICLE SPEED	While driving	Equivalent to speedometer reading
HAZARD SW	Hazard switch OFF	OFF
	Hazard switch ON	ON
BRAKE SW	Brake pedal is not depressed	OFF
	Brake pedal is depressed	ON

Monitor Item	Condition	Value/Status
FAN ON SIG	Blower fan motor switch OFF	OFF
	Blower fan motor switch ON (other than OFF)	ON
AIR COND SW	Compressor ON is not requested from auto amp. (A/C indicator OFF, blower fan motor switch OFF or etc.)	OFF
	Compressor ON is requested from auto amp. (A/C indicator ON and blower fan motor switch ON).	ON
OIL PRESS SW	• Ignition switch OFF or ACC • Engine running	OFF
	Ignition switch ON	ON
AIR PRESS FL	Ignition switch ON (Only when the signal from the transmitter is received)	Air pressure of front LH tire
AIR PRESS FR	Ignition switch ON (Only when the signal from the transmitter is received)	Air pressure of front RH tire
AIR PRESS RR	Ignition switch ON (Only when the signal from the transmitter is received)	Air pressure of rear RH tire
AIR PRESS RL	Ignition switch ON (Only when the signal from the transmitter is received)	Air pressure of rear LH tire
ID REGST FL1	ID of front LH tire transmitter is registered	DONE
	ID of front LH tire transmitter is not registered	YET
ID REGST FR1	ID of front RH tire transmitter is registered	DONE
	ID of front RH tire transmitter is not registered	YET
ID REGST RR1	ID of rear RH tire transmitter is registered	DONE
	ID of rear RH tire transmitter is not registered	YET
ID REGST RL1	ID of rear LH tire transmitter is registered	DONE
	ID of rear LH tire transmitter is not registered	YET
WARNING LAMP	Tire pressure indicator OFF	OFF
	Tire pressure indicator ON	ON
BUZZER	Tire pressure warning alarm is not sounding	OFF
	Tire pressure warning alarm is sounding	ON

Terminal Layout

INFOID:0000000005561473

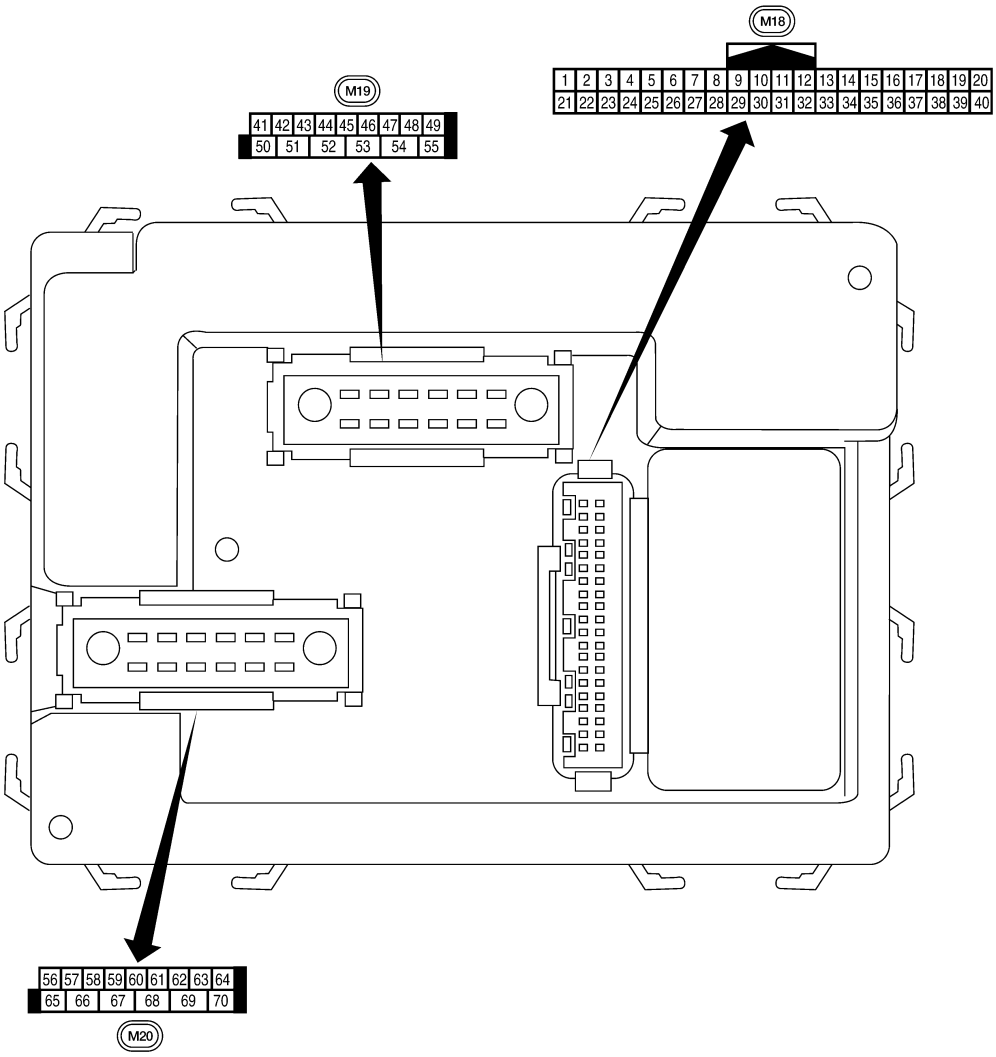

LIIA2443E

Physical Values

INFOID:0000000005561474

Terminal	Wire color	Item	Signal input/ output	Measuring condition		Reference value or waveform (Approx.)
				Ignition switch	Operation or condition	
1	BR	Ignition keyhole illumination	Output	OFF	Door is locked (SW OFF)	Battery voltage
					Door is unlocked (SW ON)	0V
2	P	Combination switch input 5	Input	ON	Lighting, turn, wiper OFF Wiper dial position 4	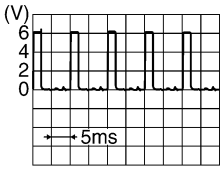 SKIA5291E
3	SB	Combination switch input 4	Input	ON	Lighting, turn, wiper OFF Wiper dial position 4	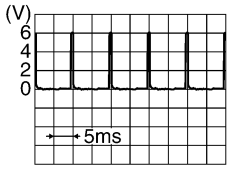 SKIA5292E
4	V	Combination switch input 3	Input	ON	Lighting, turn, wiper OFF Wiper dial position 4	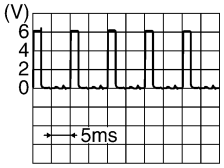 SKIA5291E
5	L	Combination switch input 2	Input	ON	Lighting, turn, wiper OFF Wiper dial position 4	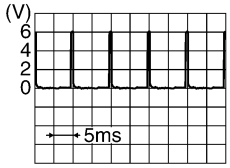 SKIA5292E
6	R	Combination switch input 1				
7	GR	Front door lock assembly LH (key cylinder switch) unlock	Input	OFF	ON (open, 2nd turn)	Momentary 1.5V
					OFF (closed)	0V
8	SB	Front door lock assembly LH (key cylinder switch) lock	Input		On (open)	Momentary 1.5V
					OFF (closed)	0V
9	Y	Rear window defogger switch	Input	ON	Rear window defogger switch ON	0V
					Rear window defogger switch OFF	5V
11	G/B	Ignition switch (ACC or ON)	Input	ACC or ON	Ignition switch ACC or ON	Battery voltage
12	LG	Front door switch RH (All)	Input	OFF	ON (open)	0V
		Rear door switch upper RH (King Cab)			OFF (closed)	Battery voltage
		Rear door switch lower RH (King Cab)				

Terminal	Wire color	Item	Signal input/ output	Measuring condition		Reference value or waveform (Approx.)
				Ignition switch	Operation or condition	
13	L	Rear door switch RH (Crew Cab)	Input	OFF	ON (open)	0V
					OFF (closed)	Battery voltage
15	W	Tire pressure warning check connector	Input	OFF	—	5V
18	BR	Remote keyless entry receiver (Ground)	Output	OFF	—	0V
19	V	Remote keyless entry receiver (power supply)	Output	OFF	Ignition switch OFF	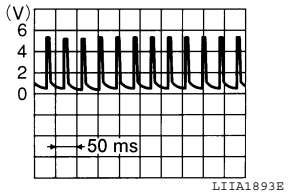
20	G	Remote keyless entry receiver signal (Signal)	Input	OFF	Stand-by (keyfob buttons released)	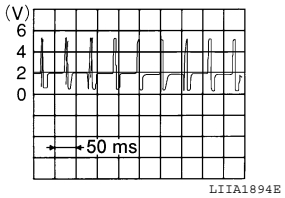
					When remote keyless entry receiver receives signal from keyfob (keyfob buttons pressed)	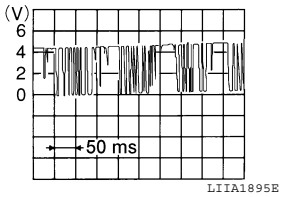
21	GR	NATS antenna amp.	Input	OFF → ON	Ignition switch (OFF → ON)	Just after turning ignition switch ON: Pointer of tester should move.
23	G	Security indicator lamp	Output	OFF	Goes OFF → illuminates (Every 2.4 seconds)	Battery voltage → 0V
25	BR	NATS antenna amp.	Input	OFF → ON	Ignition switch (OFF → ON)	Just after turning ignition switch ON: Pointer of tester should move.
27	W	Compressor ON signal	Input	ON	A/C switch OFF	5V
					A/C switch ON	0V
28	R	Front blower monitor	Input	ON	Front blower motor OFF	Battery voltage
					Front blower motor ON	0V
29	G	Hazard switch	Input	OFF	ON	0V
					OFF	5V
31	GR	Cargo lamp switch	Input	OFF	ON	0V
					OFF	Battery voltage

Terminal	Wire color	Item	Signal input/ output	Measuring condition		Reference value or waveform (Approx.)
				Ignition switch	Operation or condition	
32	O	Combination switch output 5	Output	ON	Lighting, turn, wiper OFF Wiper dial position 4	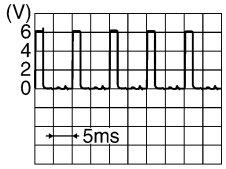 SKIA5291E
33	GR	Combination switch output 4	Output	ON	Lighting, turn, wiper OFF Wiper dial position 4	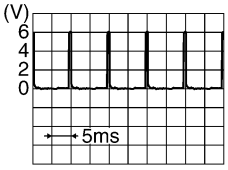 SKIA5292E
34	G	Combination switch output 3	Output	ON	Lighting, turn, wiper OFF Wiper dial position 4	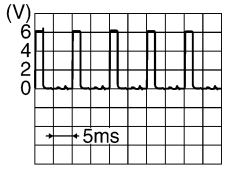 SKIA5291E
35	BR	Combination switch output 2	Output	ON	Lighting, turn, wiper OFF Wiper dial position 4	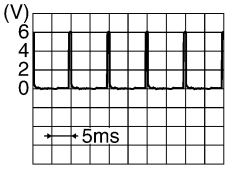 SKIA5292E
36	LG	Combination switch output 1				
37	B	Key switch	Input	OFF	Key inserted	Battery voltage
					Key removed	0V
38	W/R	Ignition switch (ON)	Input	ON	—	Battery voltage
39	L	CAN-H	—	—	—	—
40	P	CAN-L	—	—	—	—
45	V	Lock switch	Input	OFF	ON (lock)	0V
					OFF	Battery voltage
46	LG	Unlock switch	Input	OFF	ON (unlock)	0V
					OFF	Battery voltage
47	GR	Front door switch LH (All)	Input	OFF	ON (open)	0V
		Rear door switch upper LH (King Cab)			OFF (closed)	Battery voltage
		Rear door switch lower LH (King Cab)				
48	P	Rear door switch LH (Crew Cab)	Input	OFF	ON (open)	0V
					OFF (closed)	Battery voltage
50	P	Cargo lamp	Output	OFF	Any door open (ON)	0V
					All doors closed (OFF)	Battery voltage

Terminal	Wire color	Item	Signal input/ output	Measuring condition		Reference value or waveform (Approx.)
				Ignition switch	Operation or condition	
51	O	Trailer turn signal (right)	Output	ON	Turn right ON	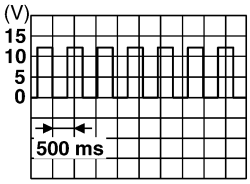 SKIA3009J
52	LG	Trailer turn signal (left)	Output	ON	Turn left ON	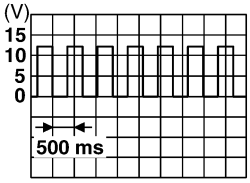 SKIA3009J
56	R/Y	Battery saver output	Output	OFF	30 minutes after ignition switch is turned OFF	0V
				ON	—	Battery voltage
57	R/Y	Battery power supply	Input	—	—	Battery voltage
58	W	Optical sensor	Input	ON	When optical sensor is illuminated	3.1V or more
					When optical sensor is not illuminated	0.6V or less
59	GR	Front door lock assembly LH (unlock)	Output	OFF	OFF (neutral)	0V
					ON (unlock)	Battery voltage
60	LG	Turn signal (left)	Output	ON	Turn left ON	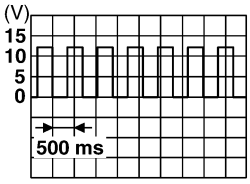 SKIA3009J
61	G	Turn signal (right)	Output	ON	Turn right ON	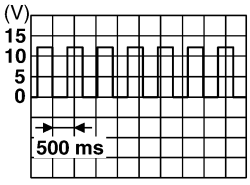 SKIA3009J
63	BR	Interior room/map lamp	Output	OFF	Any door switch: ON (open)	0V
					Any door switch: OFF (closed)	Battery voltage
65	V	All door lock actuators (lock)	Output	OFF	OFF (neutral)	0V
					ON (lock)	Battery voltage
66	L	Front door lock actuator RH, rear door lock actuators LH/RH (unlock)	Output	OFF	OFF (neutral)	0V
					ON (unlock)	Battery voltage
67	B	Ground	Input	ON	—	0V

Terminal	Wire color	Item	Signal input/ output	Measuring condition		Reference value or waveform (Approx.)
				Ignition switch	Operation or condition	
68[1]	O	Power window power supply (RAP)	Output	—	Ignition switch ON	Battery voltage
					Within 45 seconds after ignition switch OFF	Battery voltage
					More than 45 seconds after ignition switch OFF	0V
					When front door LH or RH is open or power window timer operates	0V
68[2]	SB	Power window power supply (RAP)	Output	—	Ignition switch ON	Battery voltage
					Within 45 seconds after ignition switch OFF	Battery voltage
					More than 45 seconds after ignition switch OFF	0V
					When front door LH or RH is open or power window timer operates	0V
69	P	Power window power supply (BAT)	Output	OFF	—	Battery voltage
70	W	Battery power supply	Input	OFF	—	Battery voltage

1: King cab (with power door lock system)

2: Crew cab (with power door lock system)

Wiring Diagram

INFOID:0000000005561475

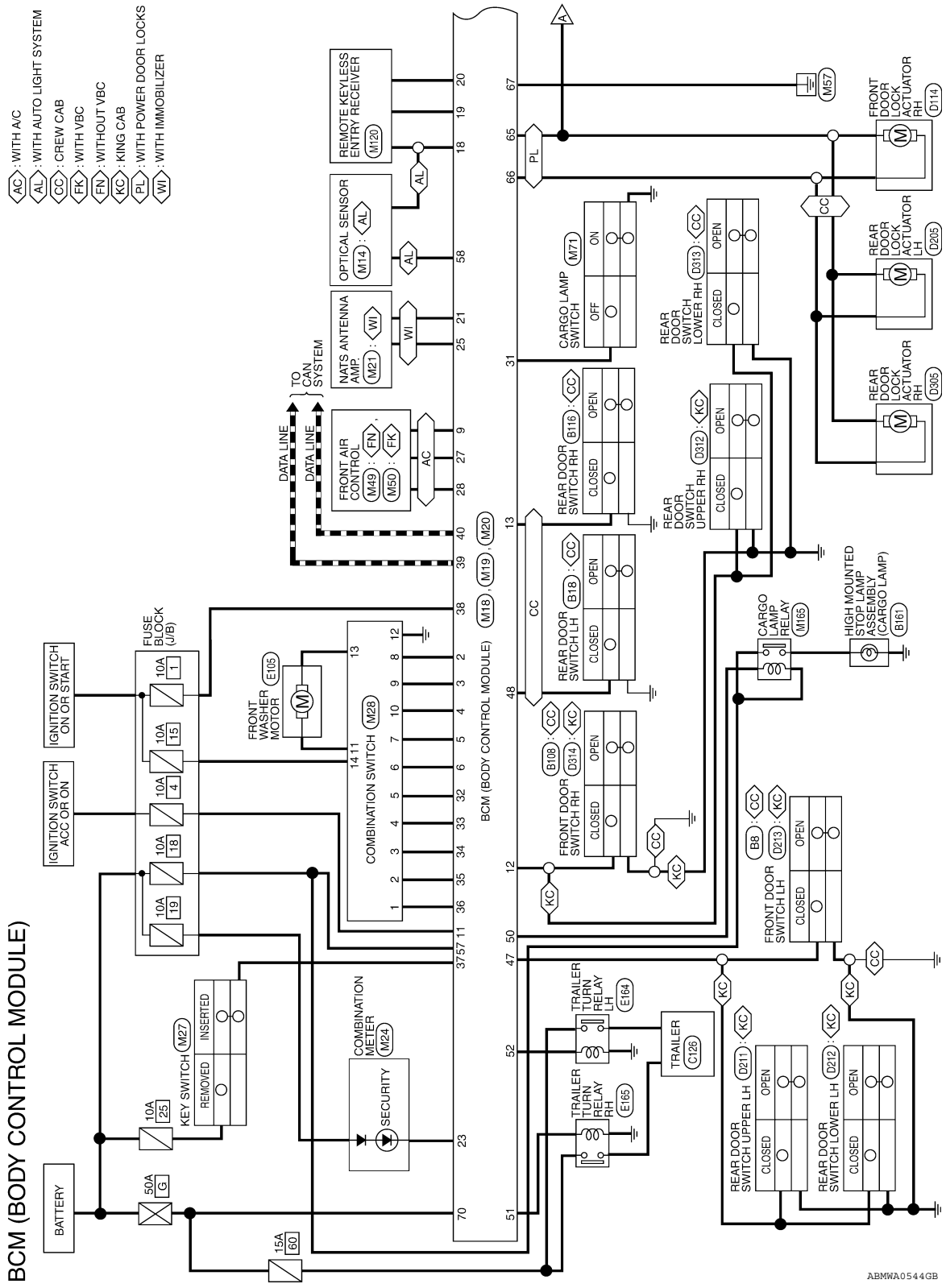

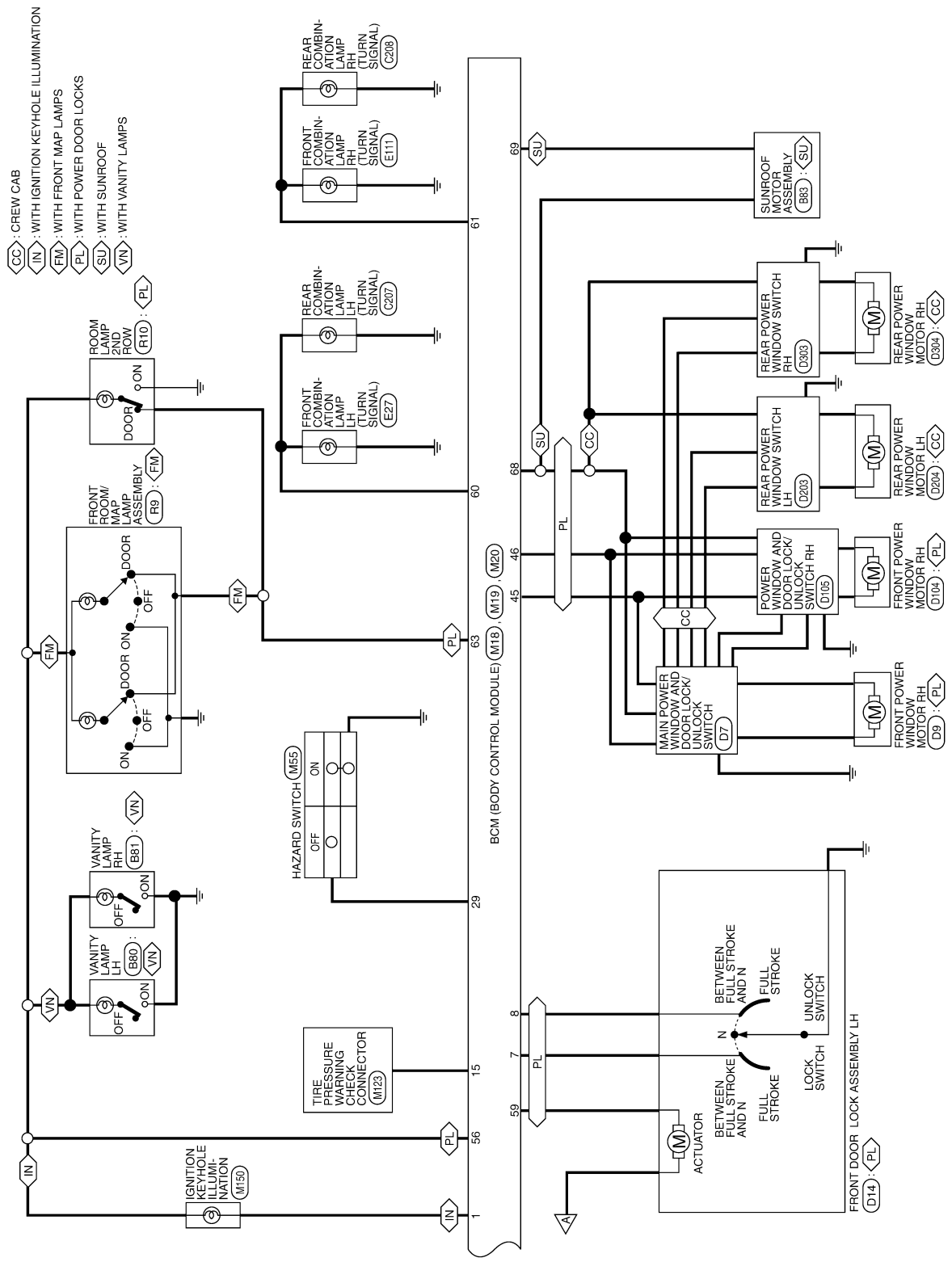
CC : CREW CAB
IN : WITH IGNITION KEYHOLE ILLUMINATION
FM : WITH FRONT MAP LAMPS
PL : WITH POWER DOOR LOCKS
SU : WITH SUNROOF
VN : WITH VANITY LAMPS
ROOM LAMP 2ND ROW (R10) : PL
FRONT ROOM/ MAP LAMP ASSEMBLY (R9) : FM
VANITY LAMP RH (B81) : VN
VANITY LAMP LH (B80) : VN
IGNITION KEYHOLE ILLUMI-NATION (M150)
TIRE PRESSURE WARNING CHECK CONNECTOR (M123)
HAZARD SWITCH (M55)
OFF
ON
DOOR
DOOR ON
BCM (BODY CONTROL MODULE) (M18), (M19), (M20)
FRONT COMBIN-ATION LAMP LH (TURN SIGNAL) (E27)
REAR COMBIN-ATION LAMP LH (TURN SIGNAL) (C207)
FRONT COMBIN-ATION LAMP RH (TURN SIGNAL) (E111)
REAR COMBIN-ATION LAMP RH (TURN SIGNAL) (C208)
SUNROOF MOTOR ASSEMBLY (B83)
REAR POWER WINDOW SWITCH RH (D303)
REAR POWER WINDOW SWITCH LH (D203)
POWER WINDOW AND DOOR LOCK/ UNLOCK SWITCH RH (D105)
MAIN POWER WINDOW AND DOOR LOCK/ UNLOCK SWITCH (D7)
REAR POWER WINDOW MOTOR RH (D304) : CC
REAR POWER WINDOW MOTOR LH (D204) : CC
FRONT POWER WINDOW MOTOR RH (D104) : PL
FRONT POWER WINDOW MOTOR RH (D9) : PL
ACTUATOR
BETWEEN FULL STROKE AND N
FULL STROKE
N
UNLOCK SWITCH
LOCK SWITCH
FRONT DOOR LOCK ASSEMBLY LH (D14) : PL
ABMWA0545GB

BCM (BODY CONTROL MODULE) CONNECTORS

Connector No.	M18
Connector Name	BCM (BODY CONTROL MODULE)
Connector Color	WHITE

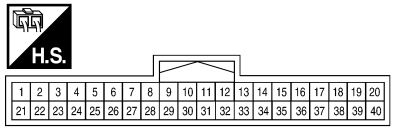

Terminal No.	Color of Wire	Signal Name
1	BR	KEY RING OUTPUT
2	P	INPUT 5
3	SB	INPUT 4
4	V	INPUT 3
5	L	INPUT 2
6	R	INPUT 1
7	GR	KEY CYLINDER UNLOCK SW
8	SB	KEY CYLINDER LOCK SW
9	Y	RR DEFOGGER SW
10	–	–
11	G/B	ACC SW
12	LG	DOOR SW (AS)
13	L	DOOR SW (RR)
14	–	–
15	W	TPMS MODE TRIGGER SW
16	–	–
17	–	–
18	BR	KEYLESS & AUTO LIGHT SENSOR GND
19	V	KEYLESS TUNER POWER SUPPLY OUTPUT
20	G	KEYLESS TUNER SIGNAL
21	GR	IMMOBILIZER ANTENNA SIGNAL (CLOCK)
22	–	–
23	G	SECURITY INDICATOR OUTPUT
24	–	–
25	BR	IMMOBILIZER ANTENNA SIGNAL (RX,TX)
26	–	–
27	W	AIRCON SW
28	R	BLOWER FAN SW
29	G	HAZARD SW
30	–	–
31	GR	CARGO LAMP SW
32	O	OUTPUT 5
33	GR	OUTPUT 4
34	G	OUTPUT 3
35	BR	OUTPUT 2
36	LG	OUTPUT 1
37	B	KEY SW
38	W/R	IGN SW
39	L	CAN-H
40	P	CAN-L

Connector No.	M19
Connector Name	BCM (BODY CONTROL MODULE)
Connector Color	WHITE

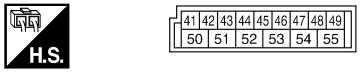

Terminal No.	Color of Wire	Signal Name
41	–	–
42	–	–
43	–	–
44	–	–
45	V	CDL LOCK SW
46	LG	CDL UNLOCK SW
47	GR	DOOR SW (DR)
48	P	DOOR SW (RL)
49	–	–
50	P	CARGO LAMP OUTPUT
51	O	TRAILER FLASHER OUTPUT (RIGHT)
52	LG	TRAILER FLASHER OUTPUT (LEFT)
53	–	–
54	–	–
55	–	–

ABMIA1431GB

Connector No.	M28
Connector Name	COMBINATION SWITCH
Connector Color	WHITE

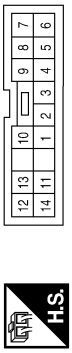

Terminal No.	Color of Wire	Signal Name
1	LG	INPUT 1
2	BR	INPUT 2
3	G	INPUT 3
4	GR	INPUT 4
5	O	INPUT 5
6	R	OUTPUT 1
7	L	OUTPUT 2
8	P	OUTPUT 5
9	SB	OUTPUT 4
10	V	OUTPUT 3
11	O	WASH FR (-) RR (+)
12	B	GND
13	L	WASH FR (+) RR (-)
14	W/G	IGN

Terminal No.	Color of Wire	Signal Name
65	V	DOOR LOCK OUTPUT (ALL)
66	L	DOOR UNLOCK OUTPUT (OTHER)
67	B	GND (POWER)
68	O	POWER WINDOW POWER SUPPLY OUTPUT (LINKED TO RAP) (WITH POWER DOOR LOCK SYSTEM)
68	SB	POWER WINDOW POWER SUPPLY OUTPUT (LINKED TO RAP) (CREW CAB WITHOUT POWER DOOR LOCK SYSTEM)
69	P	POWER WINDOW POWER SUPPLY OUTPUT (BAT)
70	W	BAT (F/L)

Connector No.	M20
Connector Name	BCM (BODY CONTROL MODULE)
Connector Color	BLACK

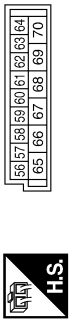

Terminal No.	Color of Wire	Signal Name
56	R/Y	BATTERY SAVER OUTPUT
57	R/Y	BAT (FUSE)
58	W	AUTO LIGHT SENSOR INPUT 2
59	GR	DOOR UNLOCK OUTPUT (DR)
60	LG	FLASHER OUTPUT (LEFT)
61	G	FLASHER OUTPUT (RIGHT)
62	–	–
63	BR	ROOM LAMP OUTPUT
64	–	–

ABMIA1432GB

Fail Safe

INFOID:0000000005561476

Fail-safe index

BCM performs fail-safe control when any DTC listed below is detected.

Display contents of CONSULT	Fail-safe	Cancellation
U1000: CAN COMM CIRCUIT	Inhibit engine cranking	When the BCM re-establishes communication with the other modules.

DTC Inspection Priority Chart

INFOID:0000000005561477

If some DTCs are displayed at the same time, perform inspections one by one based on the following priority chart.

Priority	DTC
1	• U1000: CAN COMM CIRCUIT
2	• B2190: NATS ANTENNA AMP • B2191: DIFFERENCE OF KEY • B2192: ID DISCORD BCM-ECM • B2193: CHAIN OF BCM-ECM
3	• C1729: VHCL SPEED SIG ERR • C1735: IGNITION SIGNAL
4	• C1704: LOW PRESSURE FL • C1705: LOW PRESSURE FR • C1706: LOW PRESSURE RR • C1707: LOW PRESSURE RL • C1708: [NO DATA] FL • C1709: [NO DATA] FR • C1710: [NO DATA] RR • C1711: [NO DATA] RL • C1712: [CHECKSUM ERR] FL • C1713: [CHECKSUM ERR] FR • C1714: [CHECKSUM ERR] RR • C1715: [CHECKSUM ERR] RL • C1716: [PRESSDATA ERR] FL • C1717: [PRESSDATA ERR] FR • C1718: [PRESSDATA ERR] RR • C1719: [PRESSDATA ERR] RL • C1720: [CODE ERR] FL • C1721: [CODE ERR] FR • C1722: [CODE ERR] RR • C1723: [CODE ERR] RL • C1724: [BATT VOLT LOW] FL • C1725: [BATT VOLT LOW] FR • C1726: [BATT VOLT LOW] RR • C1727: [BATT VOLT LOW] RL

DTC Index

INFOID:0000000005561478

NOTE:

Details of time display

- CRNT: Displays when there is a malfunction now or after returning to the normal condition until turning ignition switch OFF → ON again.
- 1 - 39: Displayed if any previous malfunction is present when current condition is normal. It increases like 1 → 2 → 3...38 → 39 after returning to the normal condition whenever ignition switch OFF → ON. The counter remains at 39 even if the number of cycles exceeds it. It is counted from 1 again when turning ignition switch OFF → ON after returning to the normal condition if the malfunction is detected again.

CONSULT display	Fail-safe	Tire pressure monitor warning lamp ON	Reference page
No DTC is detected. further testing may be required.	—	—	—
U1000: CAN COMM CIRCUIT	—	—	BCS-28

CONSULT display	Fail-safe	Tire pressure monitor warning lamp ON	Reference page
B2190: NATS ANTTENA AMP	—	—	SEC-18
B2191: DIFFERENCE OF KEY	—	—	SEC-21
B2192: ID DISCORD BCM-ECM	—	—	SEC-22
B2193: CHAIN OF BCM-ECM	—	—	SEC-24
C1708: [NO DATA] FL	—	—	WT-14
C1709: [NO DATA] FR	—	—	WT-14
C1710: [NO DATA] RR	—	—	WT-14
C1711: [NO DATA] RL	—	—	WT-14
C1712: [CHECKSUM ERR] FL	—	—	WT-16
C1713: [CHECKSUM ERR] FR	—	—	WT-16
C1714: [CHECKSUM ERR] RR	—	—	WT-16
C1715: [CHECKSUM ERR] RL	—	—	WT-16
C1716: [PRESSDATA ERR] FL	—	—	WT-18
C1717: [PRESSDATA ERR] FR	—	—	WT-18
C1718: [PRESSDATA ERR] RR	—	—	WT-18
C1719: [PRESSDATA ERR] RL	—	—	WT-18
C1720: [CODE ERR] FL	—	—	WT-16
C1721: [CODE ERR] FR	—	—	WT-16
C1722: [CODE ERR] RR	—	—	WT-16
C1723: [CODE ERR] RL	—	—	WT-16
C1724: [BATT VOLT LOW] FL	—	—	WT-16
C1725: [BATT VOLT LOW] FR	—	—	WT-16
C1726: [BATT VOLT LOW] RR	—	—	WT-16
C1727: [BATT VOLT LOW] RL	—	—	WT-16
C1729: VHCL SPEED SIG ERR	—	—	WT-19
C1735: IGNITION SIGNAL	—	—	—

IPDM E/R (INTELLIGENT POWER DISTRIBUTION MODULE ENGINE ROOM)

Reference Value

INFOID:0000000005561479

VALUES ON THE DIAGNOSIS TOOL

Monitor Item	Condition		Value/Status
MOTOR FAN REQ	Engine idle speed	Changes depending on engine coolant temperature, air conditioner operation status, vehicle speed, etc.	0 - 100 %
A/C COMP REQ	A/C switch OFF		OFF
	A/C switch ON		ON
TAIL&CLR REQ	Lighting switch OFF		OFF
	Lighting switch 1ST, 2ND, HI or AUTO (Light is illuminated)		ON
HL LO REQ	Lighting switch OFF		OFF
	Lighting switch 2ND HI or AUTO (Light is illuminated)		ON
HL HI REQ	Lighting switch OFF		OFF
	Lighting switch HI		ON
FR FOG REQ	Lighting switch 2ND	Front fog lamp switch OFF	OFF
		Front fog lamp switch ON	ON
FR WIP REQ	Ignition switch ON	Front wiper switch OFF	STOP
		Front wiper switch INT	1LOW
		Front wiper switch LO	LOW
		Front wiper switch HI	HI
WIP AUTO STOP	Ignition switch ON	Front wiper stop position	STOP P
		Any position other than front wiper stop position	ACT P
WIP PROT	Ignition switch ON	Front wiper operates normally	OFF
		Front wiper stops at fail-safe operation	BLOCK
ST RLY REQ	Ignition switch OFF or ACC		OFF
	Ignition switch START		ON
IGN RLY	Ignition switch OFF or ACC		OFF
	Ignition switch ON		ON
RR DEF REQ	Rear defogger switch OFF		OFF
	Rear defogger switch ON		ON
OIL P SW	Ignition switch OFF, ACC or engine running		OPEN
	Ignition switch ON		CLOSE
DTRL REQ	Daytime light system requested OFF with CONSULT-III.		OFF
	Daytime light system requested ON with CONSULT-III.		ON
THFT HRN REQ	Not operated		OFF
	• Panic alarm is activated • Horn is activated with VEHICLE SECURITY (THEFT WARNING) SYSTEM		ON
HORN CHIRP	Not operated		OFF
	Door locking with keyfob (horn chirp mode)		ON

Terminal Layout

INFOID:0000000005561480

TERMINAL LAYOUT —TYPE A

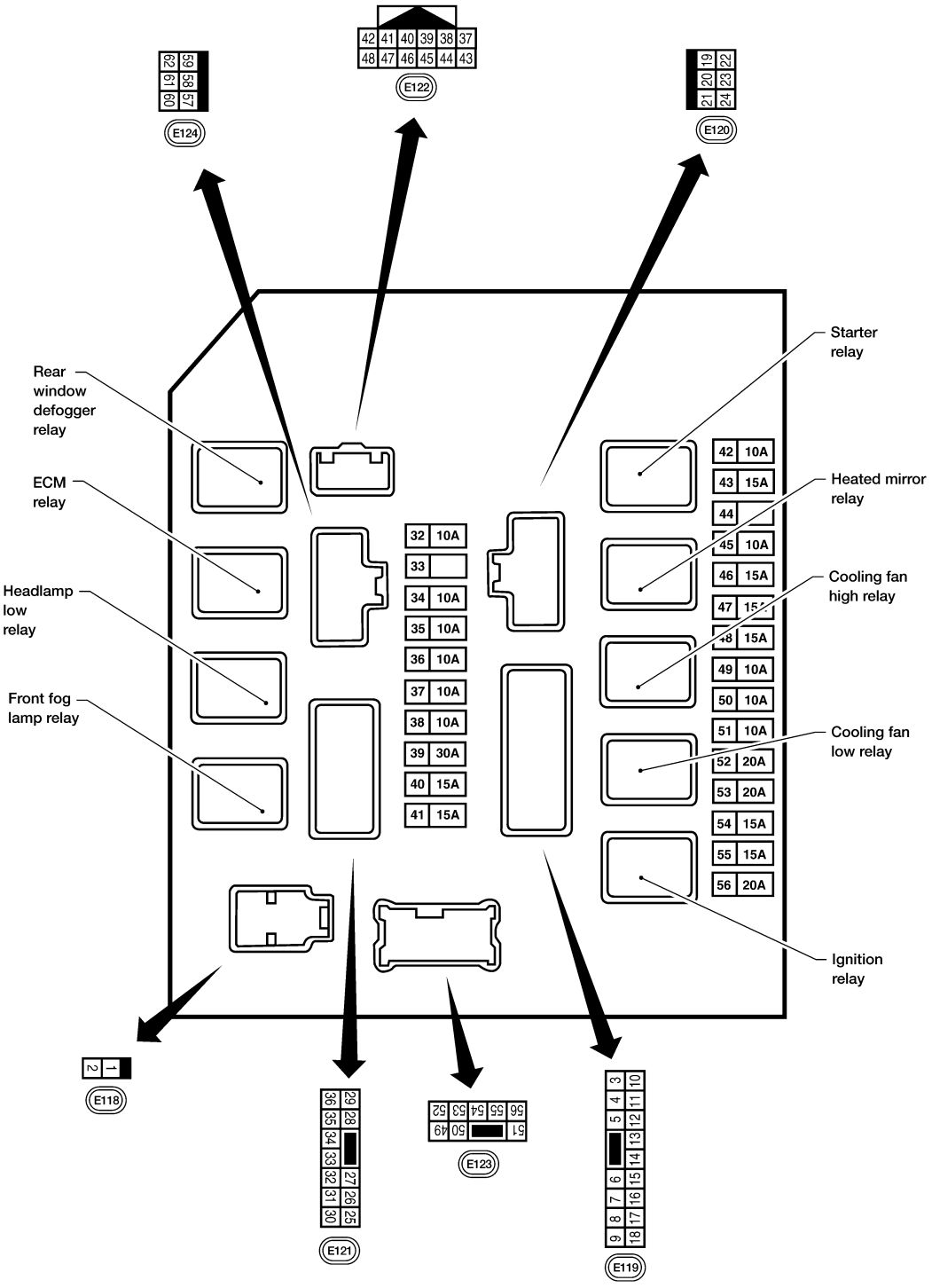

TERMINAL LAYOUT —TYPE B

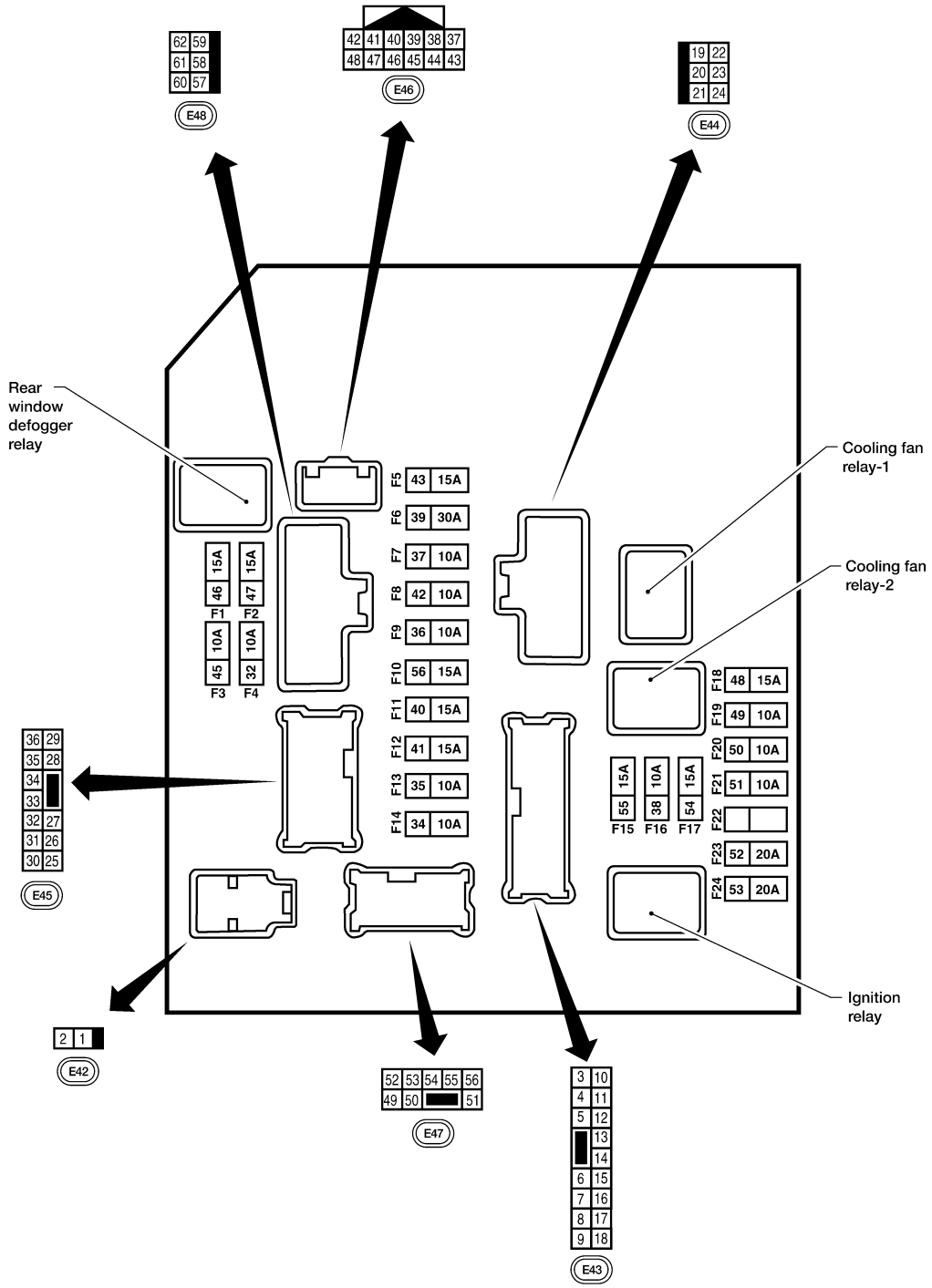

Physical Values

INFOID:0000000005561481

PHYSICAL VALUES

Terminal	Wire color	Signal name	Signal input/ output	Measuring condition		Reference value (Approx.)
				Igni-tion switch	Operation or condition	
1	W	Battery power supply	Input	OFF	—	Battery voltage
2	R	Battery power supply	Input	OFF	—	Battery voltage
3	G	ECM relay	Output	—	Ignition switch ON or START	Battery voltage
					Ignition switch OFF or ACC	0V
4	P	ECM relay	Output	—	Ignition switch ON or START	Battery voltage
					Ignition switch OFF or ACC	0V
6	V	Throttle control motor relay	Output	—	Ignition switch ON or START	Battery voltage
					Ignition switch OFF or ACC	0V
7	BR	ECM relay control	Input	—	Ignition switch ON or START	0V
					Ignition switch OFF or ACC	Battery voltage
8	W/R	Fuse 54	Output	—	Ignition switch ON or START	Battery voltage
					Ignition switch OFF or ACC	0V
10	R/B	Fuse 45	Output	ON	Daytime light system active	0V
					Daytime light system inactive	Battery voltage
11	Y	A/C compressor	Output	ON or START	A/C switch ON or defrost A/C switch	Battery voltage
					A/C switch OFF or defrost A/C switch	0V
12	W/G	Ignition switch sup-plied power	Input	—	OFF or ACC	0V
					ON or START	Battery voltage
13	R	Fuel pump relay	Output	—	Ignition switch ON or START	Battery voltage
					Ignition switch OFF or ACC	0V
14	W/G	Fuse 49	Output	—	Ignition switch ON or START	Battery voltage
					Ignition switch OFF or ACC	0V
15	W/R	Fuse 50 (ABS)	Output	—	Ignition switch ON or START	Battery voltage
					Ignition switch OFF or ACC	0V
16	W/G	Fuse 51	Output	—	Ignition switch ON or START	Battery voltage
					Ignition switch OFF or ACC	0V
17	W/G	Fuse 55	Output	—	Ignition switch ON or START	Battery voltage
					Ignition switch OFF or ACC	0V
19	W	Starter motor	Output	START	—	Battery voltage
20	BR	Cooling fan motor (low)	Output	ON or START	—	Battery voltage
21	GR	Ignition switch sup-plied power	Input	—	OFF or ACC	0V
					START	Battery voltage
22	G	Battery power supply	Output	OFF	—	Battery voltage
23	LG	Door mirror defogger output signal	Output	—	When rear defogger switch is ON	Battery voltage
					When raker defogger switch is OFF	0V

Terminal	Wire color	Signal name	Signal input/ output	Measuring condition			Reference value (Approx.)
				Igni-tion switch	Operation or condition		
24	P	Cooling fan motor (high)	Output	—	Conditions correct for cooling fan operation		Battery voltage
					Conditions not correct for cooling fan operation		0V
27	W	Fuse 38	Output	—	Ignition switch ON or START		Battery voltage
					Ignition switch OFF or ACC		0V
28	R	LH front parking and front side marker lamp	Output	OFF	Lighting switch 1st position	OFF	0V
						ON	Battery voltage
29	G	Trailer tow relay	Output	ON	Lighting switch 1st position	OFF	0V
						ON	Battery voltage
30	R/B	Fuse 53	Output	—	Ignition switch ON or START		Battery voltage
					Ignition switch OFF or ACC		0V
32	GR	Wiper low speed signal	Output	ON or START	Wiper switch	OFF	Battery voltage
						LO or INT	0V
35	L	Wiper high speed signal	Output	ON or START	Wiper switch	OFF, LO, INT	Battery voltage
						HI	0V
37	Y	Power generation command signal	Output	—	Ignition switch ON		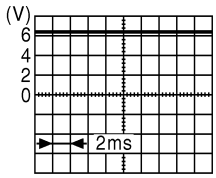 JPMIA0001GB 6.3 V
					40% is set on "Active test," "ALTERNATOR DUTY" of "ENGINE"		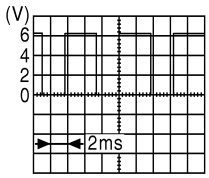 JPMIA0002GB 3.8 V
					40% is set on "Active test," "ALTERNATOR DUTY" of "ENGINE"		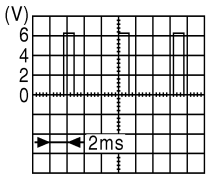 JPMIA0003GB 1.4 V
38	B	Ground	Input	—	—		0V
39	L	CAN-H	—	ON	—		—
40	P	CAN-L	—	ON	—		—
42	GR	Oil pressure switch	Input	—	Engine running		Battery voltage
					Engine stopped		0V

Terminal	Wire color	Signal name	Signal input/ output	Measuring condition			Reference value (Approx.)
				Igni-tion switch	Operation or condition		
43	G	Wiper auto stop signal	Input	ON or START	Wiper switch	OFF, LO, INT	Battery voltage
44	R	Daytime light relay control (Canada only)	Input	ON	Daytime light system active		0V
					Daytime light system inactive		Battery voltage
45	LG	Horn relay control	Input	ON	When door locks are operated using keyfob (OFF → ON)*		Battery voltage → 0V
46	V	Fuel pump relay control	Input	—	Ignition switch ON or START		0V
					Ignition switch OFF or ACC		Battery voltage
47	O	Throttle control motor relay control	Input	—	Ignition switch ON or START		0V
					Ignition switch OFF or ACC		Battery voltage
48	R	Starter relay (inhibit switch)	Input	ON or START	Selector lever in "P" or "N"		0V
					Selector lever any other position		Battery voltage
49	GR	Front RH parking and front side marker lamp	Output	OFF	Lighting switch 1st position	OFF	0V
						ON	Battery voltage
50	W	Front fog lamp (LH)	Output	ON or START	Lighting switch must be in the 2nd position (LOW beam is ON) and the front fog lamp switch	OFF	0V
						ON	Battery voltage
51	V	Front fog lamp (RH)	Output	ON or START	Lighting switch must be in the 2nd position (LOW beam is ON) and the front fog lamp switch	OFF	0V
						ON	Battery voltage
52	P	LH low beam headlamp	Output	—	Lighting switch in 2nd position		Battery voltage
54	R	RH low beam headlamp	Output	—	Lighting switch in 2nd position		Battery voltage
55	G	LH high beam headlamp	Output	—	Lighting switch in 2nd position and placed in HIGH or PASS position		Battery voltage
56	L	RH high beam headlamp	Output	—	Lighting switch in 2nd position and placed in HIGH or PASS position		Battery voltage
57	GR	Parking, license, and tail lamp	Output	ON	Lighting switch 1st position	OFF	0V
						ON	Battery voltage
59	B	Ground	Input	—	—		0V
60	GR	Rear window defogger relay	Output	ON or START	Rear defogger switch ON		Battery voltage
					Rear defogger switch OFF		0V
61	R/B	Fuse 32	Output	OFF	—		Battery voltage

*: When horn reminder is ON

Wiring Diagram

INFOID:0000000005561482

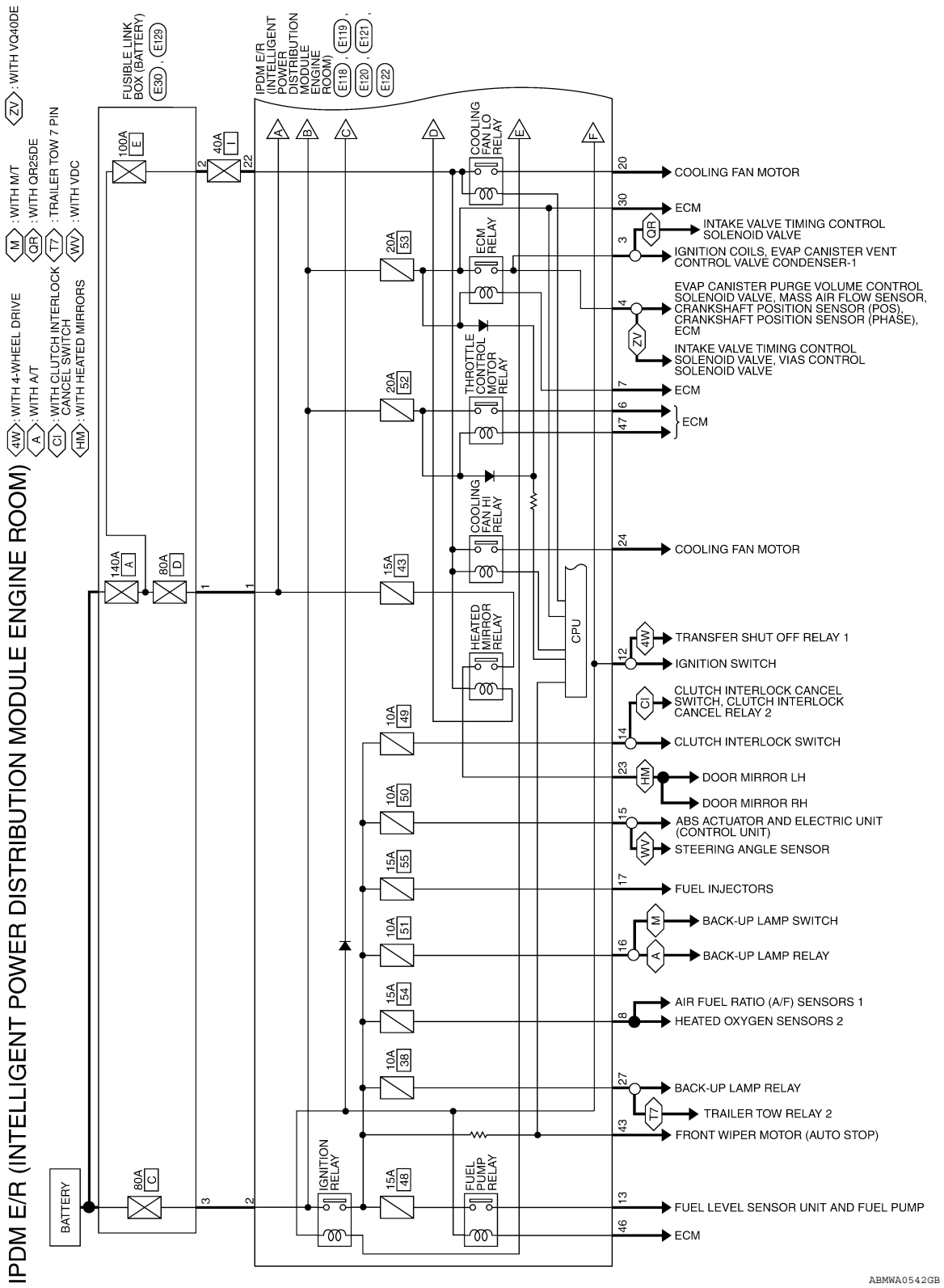

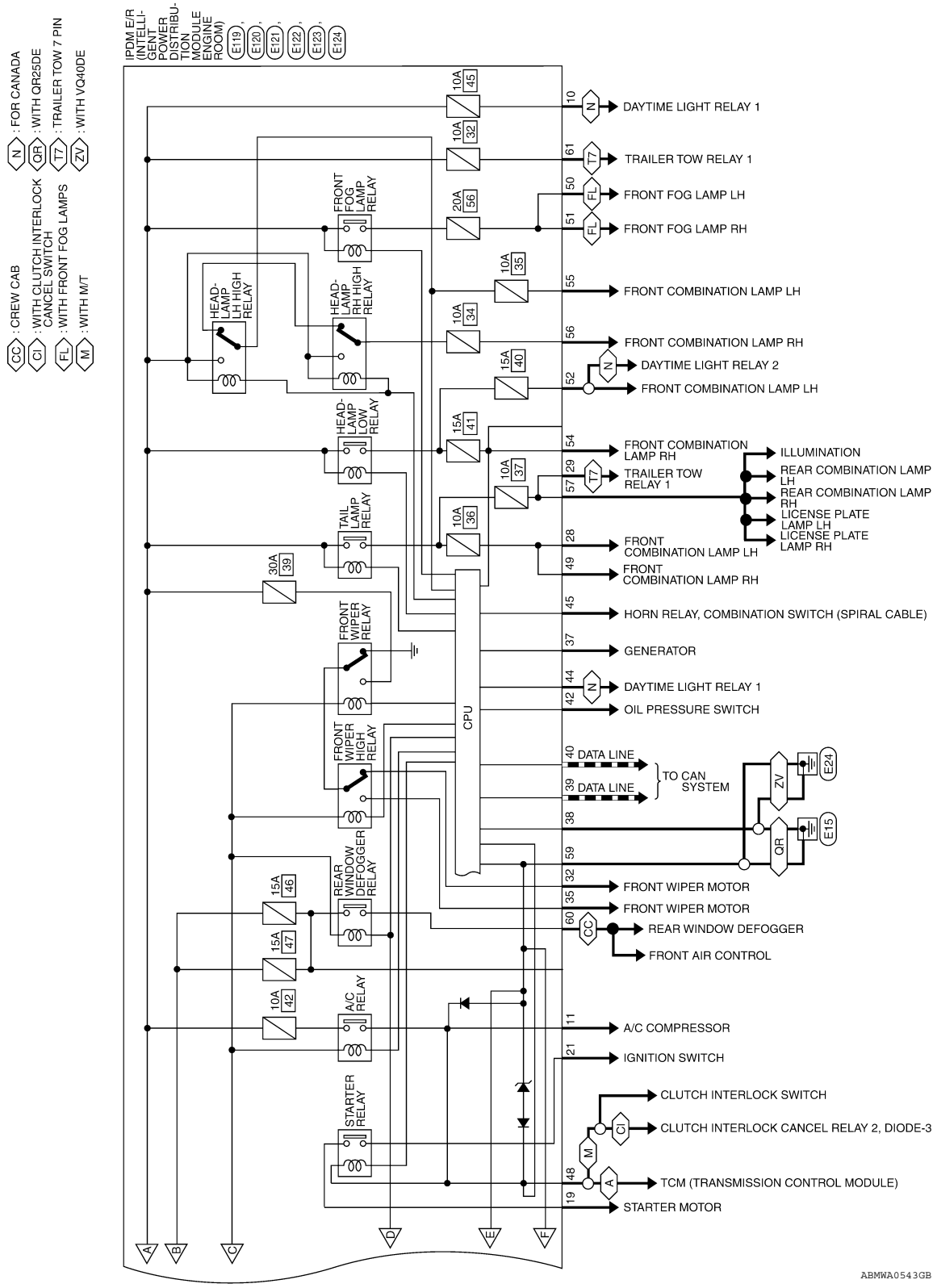
N : FOR CANADA
QR : WITH QR25DE
T7 : TRAILER TOW 7 PIN
ZV : WITH VQ40DE
CC : CREW CAB
CI : WITH CLUTCH INTERLOCK CANCEL SWITCH
FL : WITH FRONT FOG LAMPS
M : WITH M/T
IPDM E/R (INTELLIGENT POWER DISTRIBUTION MODULE ENGINE ROOM)
E119, E120, E121, E122, E123, E124
10A 45
10A 32
20A 56
10A 35
10A 34
15A 40
15A 41
10A 37
10A 36
30A 39
15A 46
15A 47
10A 42
FRONT FOG LAMP RELAY
HEAD-LAMP LH HIGH RELAY
HEAD-LAMP RH HIGH RELAY
HEAD-LAMP LOW RELAY
TAIL LAMP RELAY
FRONT WIPER RELAY
FRONT WIPER HIGH RELAY
REAR WINDOW DEFOGGER RELAY
A/C RELAY
STARTER RELAY
CPU
10 DAYTIME LIGHT RELAY 1
61 TRAILER TOW RELAY 1
50 FRONT FOG LAMP LH
51 FRONT FOG LAMP RH
55 FRONT COMBINATION LAMP LH
56 FRONT COMBINATION LAMP RH
52 DAYTIME LIGHT RELAY 2
FRONT COMBINATION LAMP LH
54 FRONT COMBINATION LAMP RH
29 TRAILER TOW RELAY 1
57
ILLUMINATION
REAR COMBINATION LAMP LH
REAR COMBINATION LAMP RH
LICENSE PLATE LAMP LH
LICENSE PLATE LAMP RH
28 FRONT COMBINATION LAMP LH
49 FRONT COMBINATION LAMP RH
45 HORN RELAY, COMBINATION SWITCH (SPIRAL CABLE)
37 GENERATOR
44 DAYTIME LIGHT RELAY 1
42 OIL PRESSURE SWITCH
40 DATA LINE
39 DATA LINE
TO CAN SYSTEM
38
59
E24
E15
32 FRONT WIPER MOTOR
35 FRONT WIPER MOTOR
60 REAR WINDOW DEFOGGER
FRONT AIR CONTROL
11 A/C COMPRESSOR
21 IGNITION SWITCH
CLUTCH INTERLOCK SWITCH
CLUTCH INTERLOCK CANCEL RELAY 2, DIODE-3
48 TCM (TRANSMISSION CONTROL MODULE)
19 STARTER MOTOR
A
B
C
D
E
F
ABMWA0543GB

IPDM E/R (INTELLIGENT POWER DISTRIBUTION MODULE ENGINE ROOM) CONNECTORS

Connector No.	E30
Connector Name	FUSIBLE LINK BOX (BATTERY)
Connector Color	–

Terminal No.	Color of Wire	Signal Name
3	R	–

Connector No.	E118
Connector Name	IPDM E/R (INTELLIGENT POWER DISTRIBUTION MODULE ENGINE ROOM)
Connector Color	BLACK

Terminal No.	Color of Wire	Signal Name
1	W	F/L USM
2	R	F/L MAIN

Connector No.	E119
Connector Name	IPDM E/R (INTELLIGENT POWER DISTRIBUTION MODULE ENGINE ROOM)
Connector Color	WHITE

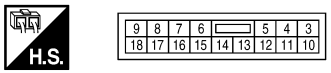

Terminal No.	Color of Wire	Signal Name
3	G	IGN COIL
4	P	ECM
5	–	–
6	V	ETC
7	BR	ECM RLY CONT
8	W/R	O2 SENSOR
9	–	–
10	R/B	DTRL RLY SUPPLY
11	Y	A/C COMPRESSOR
12	W/G	IGN SW (IG)
13	R	FUEL PUMP
14	W/G	A/T ECU IGN SUPPLY
15	W/R	ABS IGN SUPPLY
16	W/G	REVERSE LAMP
17	W/G	INJECTOR
18	–	–

Connector No.	E120
Connector Name	IPDM E/R (INTELLIGENT POWER DISTRIBUTION MODULE ENGINE ROOM)
Connector Color	WHITE

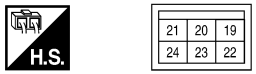

Terminal No.	Color of Wire	Signal Name
19	W	STARTER MTR
20	BR	MOTOR FAN 1
21	GR	IGN SW (ST)
22	G	F/L MOTOR FAN
23	LG	HEATED MIRROR
24	P	MOTOR FAN 2

ABMIA1428GB

Connector No.	E121
Connector Name	IPDM E/R (INTELLIGENT POWER DISTRIBUTION MODULE ENGINE ROOM)
Connector Color	BROWN

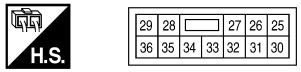

Terminal No.	Color of Wire	Signal Name
25	–	–
26	–	–
27	W	T TOW REV LAMP
28	R	CLEARANCE FRONT LH
29	G	TRAILER RLY CONT
30	R/B	ECM BAT
31	–	–
32	GR	FR WIPER LO
33	–	–
34	–	–
35	L	FR WIPER HI
36	–	–

Connector No.	E122
Connector Name	IPDM E/R (INTELLIGENT POWER DISTRIBUTION MODULE ENGINE ROOM)
Connector Color	WHITE

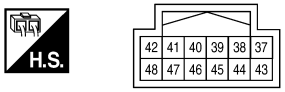

Terminal No.	Color of Wire	Signal Name
37	Y	ALT-C CONT
38	B	GND (SIGNAL)
39	L	CAN-H
40	P	CAN-L
41	–	–
42	GR	OIL PRESSURE SW
43	G	AUTO STOP SW
44	R	DTRL RLY CONT
45	LG	ANT THEFT HORN
46	V	FUEL PUMP RLY CONT
47	O	ETC RLY CONT
48	R	INHIBIT SW

Connector No.	E123
Connector Name	IPDM E/R (INTELLIGENT POWER DISTRIBUTION MODULE ENGINE ROOM)
Connector Color	BROWN

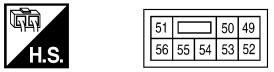

Terminal No.	Color of Wire	Signal Name
49	GR	CLEARANCE FRONT RH
50	W	FR FOG LAMP LH
51	V	FR FOG LAMP RH
52	P	H/LAMP LO LH
53	–	–
54	R	H/LAMP LO RH
55	G	H/LAMP HI LH
56	L	H/LAMP HI RH

ABMIA1429GB

Connector No.	E124
Connector Name	IPDM E/R (INTELLIGENT POWER DISTRIBUTION MODULE ENGINE ROOM)
Connector Color	BLACK

Terminal No.	Color of Wire	Signal Name
57	GR	TAIL LAMP
58	–	–
59	B	GND (POWER)
60	GR	RR DEF
61	R/B	TRAIL RLY SUPPLY
62	–	–

Connector No.	E129
Connector Name	FUSIBLE LINK BOX (BATTERY)
Connector Color	BLACK

Terminal No.	Color of Wire	Signal Name
1	W	–
2	R	–

ABMIA1430GB

Fail Safe

INFOID:0000000005561483

CAN COMMUNICATION CONTROL

When CAN communication with ECM and BCM is impossible, IPDM E/R performs fail-safe control. After CAN communication recovers normally, it also returns to normal control.

If No CAN Communication Is Available With ECM

Control part	Fail-safe in operation
Cooling fan	• Turns ON the cooling fan relay when the ignition switch is turned ON • Turns OFF the cooling fan relay when the ignition switch is turned OFF

If No CAN Communication Is Available With BCM

Control part	Fail-safe in operation
Headlamp	• Turns ON the headlamp low relay when the ignition switch is turned ON • Turns OFF the headlamp low relay when the ignition switch is turned OFF • Headlamp (LH/RH) high relays OFF
• Parking lamps • License plate lamps • Tail lamps	• Turns ON the tail lamp relay when the ignition switch is turned ON • Turns OFF the tail lamp relay when the ignition switch is turned OFF
Front wiper	• The status just before activation of fail-safe control is maintained until the ignition switch is turned OFF while the front wiper is operating at LO or HI speed. • The wiper is operated at LO speed until the ignition switch is turned OFF if the fail-safe control is activated while the front wiper is set in the INT mode and the front wiper motor is operating.
Rear window defogger	Rear window defogger relay OFF
A/C compressor (if equipped)	A/C relay OFF
Front fog lamps (if equipped)	Front fog lamp relay OFF

IGNITION RELAY MALFUNCTION DETECTION FUNCTION

- IPDM E/R monitors the voltage at the contact circuit and excitation coil circuit of the ignition relay inside it.
- IPDM E/R judges the ignition relay error if the voltage differs between the contact circuit and the excitation coil circuit.
- If the ignition relay cannot turn OFF due to contact seizure, it activates the tail lamp relay for 10 minutes to alert the user to the ignition relay malfunction when the ignition switch is turned OFF.

Ignition switch	Ignition relay	Tail lamp relay
ON	ON	—
OFF	OFF	—

NOTE:

The tail lamp turns OFF when the ignition switch is turned ON.

FRONT WIPER CONTROL

IPDM E/R detects front wiper stop position by a front wiper auto stop signal.
When a front wiper auto stop signal is in the conditions listed below, IPDM E/R stops power supply to wiper after repeating a front wiper 10 second activation and 20 second stop five times.

Ignition switch	Front wiper switch	Auto stop signal
ON	OFF	Front wiper stop position signal cannot be input 10 seconds.
	ON	The signal does not change for 10 seconds.

NOTE:

This operation status can be confirmed on the IPDM E/R “DATA MONITOR” that displays “Block” for the item “WIP PROT” while the wiper is stopped.

STARTER MOTOR PROTECTION FUNCTION

IPDM E/R turns OFF the starter control relay to protect the starter motor when the starter control relay remains active for 90 seconds.

DTC Index

INFOID:0000000005561484

CONSULT-III display	Fail-safe	TIME[NOTE]		Refer to
No DTC is detected. further testing may be required.	—	—	—	—
U1000: CAN COMM CIRCUIT	×	CRNT	1 – 39	PCS-17

NOTE:
The details of TIME display are as follows.
- CRNT: The malfunctions that are detected now
- 1 - 39: The number is indicated when it is normal at present and a malfunction was detected in the past. It increases like 0 → 1 → 2 ··· 38 → 39 after returning to the normal condition whenever IGN OFF → ON. It is fixed to 39 until the self-diagnosis results are erased if it is over 39. It returns to 0 when a malfunction is detected again in the process.

SYMPTOM DIAGNOSIS

EXTERIOR LIGHTING SYSTEM SYMPTOMS

Symptom Table

INFOID:0000000005274772

CAUTION:
Perform the self-diagnosis with CONSULT-III before the symptom diagnosis. Perform the trouble diagnosis if any DTC is detected.

Symptom		Possible cause	Inspection item
Headlamp does not switch to the high beam.	One side	• Fuse • Harness between IPDM E/R and the front combination lamp • Front combination lamp (High beam relay) • IPDM E/R	Headlamp (HI) circuit Refer to EXL-37, "Diagnosis Procedure".
	Both sides	**Symptom diagnosis** "BOTH SIDE HEADLAMPS DO NOT SWITCH TO HIGH BEAM" Refer to EXL-133, "Diagnosis Procedure".	
High beam indicator lamp is not turned ON. (Headlamp switches to the high beam.)		• Combination meter • BCM	• Combination meter. Data monitor "HI-BEAM IND" • BCM (HEAD LAMP) Active test "HEADLAMP"
Headlamp does not switch to the low beam.	One side	Front combination lamp (Low beam relay)	—
	Both sides	• Combination switch (lighting and turn signal switch) • Harness between the combination switch (lighting and turn signal switch) and BCM • BCM	Combination switch (lighting and turn signal switch) Refer to BCS-35.
		High beam request signal • BCM • IPDM E/R	IPDM E/R Data monitor "HL HI REQ"
		IPDM E/R	—
Headlamp does not turn ON.	One side	• Fuse • Bulb • Harness between IPDM E/R and the front combination lamp • Front combination lamp • IPDM E/R	Headlamp (LO) circuit Refer to EXL-39.
	Both sides	**Symptom diagnosis** "BOTH SIDE HEADLAMPS (LO) ARE NOT TURNED ON" Refer to EXL-134, "Diagnosis Procedure".	
Headlamp does not turn OFF.	When the ignition switch is turned ON	• BCM • Combination switch (lighting and turn signal switch)	Combination switch (lighting and turn signal switch) Refer to BCS-35.
Daytime light system does not activate.		• Either high beam bulb • Parking brake switch • Combination switch (lighting and turn signal switch) • BCM • IPDM E/R • Daytime light relay • Harness between IPDM E/R and daytime light relay.	Daytime light system description. Refer to EXL-9, "System Description".

Symptom		Possible cause	Inspection item
Front fog lamp is not turned ON.	One side	• Front fog lamp bulb • Harness between IPDM E/R and the front combination lamp • Front combination lamp • IPDM E/R	Front fog lamp circuit Refer to EXL-41.
	Both side	**Symptom diagnosis** "BOTH SIDE FRONT FOG LAMPS ARE NOT TURNED ON" Refer to EXL-136, "Diagnosis Procedure".	
Parking lamp is not turned ON.	One side	• Fuse • Parking lamp bulb • Harness between IPDM E/R and the front/rear combination lamp • Front/rear combination lamp • IPDM E/R	Parking lamp circuit Refer to EXL-43.
	Both sides	**Symptom diagnosis** "PARKING, LICENSE PLATE AND TAIL LAMPS ARE NOT TURNED ON" Refer to EXL-135, "Diagnosis Procedure".	
Turn signal lamp does not blink.	Indicator lamp is normal. (The applicable side performs the high flasher activation).	• Harness between BCM and each turn signal lamp • Turn signal lamp bulb • Door mirror (if equipped with turn signals in the door mirrors)	Turn signal lamp circuit Refer to EXL-48.
Turn signal indicator lamp does not blink.	One side	Combination meter	—
	Both sides (Always)	• Turn signal indicator lamp signal • Combination meter • BCM	• Combination meter. Data monitor "TURN IND" • BCM (FLASHER) Active test "FLASHER"
	Both sides (Does blink when activating the hazard warning lamp with the ignition switch OFF)	• The combination meter power supply and the ground circuit • Combination meter	Power supply and the ground circuit Refer to MWI-29.

NORMAL OPERATING CONDITION

Description

INFOID:0000000005274773

AUTO LIGHT SYSTEM

The auto light system may not turn the headlamp ON/OFF immediately after passing a dark area or a bright area (short tunnel, sky bridge, shadowed area etc.). This is normal.

BOTH SIDE HEADLAMPS DO NOT SWITCH TO HIGH BEAM

Description

INFOID:0000000005561496

The headlamps (both sides) do not switch to high beam when the combination switch (lighting and turn signal switch) is in the HI or PASS setting.

Diagnosis Procedure

INFOID:0000000005561497

1. COMBINATION SWITCH (LIGHTING AND TURN SIGNAL SWITCH) INSPECTION

Check the combination switch (lighting and turn signal switch). Refer to BCS-35, "Diagnosis Procedure".

Is the combination switch (lighting and turn signal switch) normal?

YES >> GO TO 2.
NO >> Repair or replace the malfunctioning part.

2. CHECK HEADLAMP (HI) REQUEST SIGNAL INPUT

CONSULT-III DATA MONITOR

1. Select "HL HI REQ" of IPDM E/R DATA MONITOR item.
2. With operating the combination switch (lighting and turn signal switch), check the monitor status.

Monitor item	Condition		Monitor status
HL HI REQ	Combination switch (lighting and turn signal switch) (2ND position)	HI or PASS	ON
		Except for HI or PASS	OFF

Is the item status normal?

YES >> GO TO 3.
NO >> Replace BCM. Refer to BCS-54, "Removal and Installation".

3. HEADLAMP (HI) CIRCUIT INSPECTION

Check the headlamp (HI) circuit. Refer to EXL-37, "Description".

Is the headlamp (HI) circuit normal?

YES >> Replace IPDM E/R. Refer to PCS-33, "Removal and Installation of IPDM E/R".
NO >> Repair or replace the malfunctioning part.

BOTH SIDE HEADLAMPS (LO) ARE NOT TURNED ON

Description

INFOID:0000000005561498

The headlamps (both sides) do not turn ON in any combination switch (lighting and turn signal switch) setting.

Diagnosis Procedure

INFOID:0000000005561499

1. COMBINATION SWITCH (LIGHTING AND TURN SIGNAL SWITCH) INSPECTION

Check the combination switch (lighting and turn signal switch). Refer to BCS-35, "Diagnosis Procedure".

Is the combination switch (lighting and turn signal switch) normal?

YES >> GO TO 2.
NO >> Repair or replace the malfunctioning part.

2. CHECK HEADLAMP (LO) REQUEST SIGNAL INPUT

CONSULT-III DATA MONITOR

1. Select "HL LO REQ" of IPDM E/R DATA MONITOR item.
2. With operating the combination switch (lighting and turn signal switch), check the monitor status.

Monitor item	Condition		Monitor status
HL LO REQ	Combination switch (lighting and turn signal switch)	2ND	ON
		OFF	OFF

Is the item status normal?

YES >> GO TO 3.
NO >> Replace BCM. Refer to BCS-54, "Removal and Installation".

3. HEADLAMP (LO) CIRCUIT INSPECTION

Check the headlamp (LO) circuit. Refer to EXL-39, "Description".

Is the headlamp (LO) circuit normal?

YES >> Replace IPDM E/R. Refer to PCS-33, "Removal and Installation of IPDM E/R".
NO >> Repair or replace the malfunctioning part.

PARKING, LICENSE PLATE AND TAIL LAMPS ARE NOT TURNED ON

Description

INFOID:0000000005561500

The parking, license plate and tail lamps do not turn ON in with any combination switch (lighting and turn signal switch) setting.

Diagnosis Procedure

INFOID:0000000005561501

1. COMBINATION SWITCH (LIGHTING AND TURN SIGNAL SWITCH) INSPECTION

Check the combination switch (lighting and turn signal switch). Refer to BCS-35, "Diagnosis Procedure".

Is the combination switch (lighting and turn signal switch) normal?

YES >> GO TO 2.
NO >> Repair or replace the malfunctioning part.

2. CHECK TAIL LAMP RELAY REQUEST SIGNAL INPUT

CONSULT-III DATA MONITOR

1. Select "TAIL & CLR REQ" of IPDM E/R DATA MONITOR item.
2. With operating the combination switch (lighting and turn signal switch), check the monitor status.

Monitor item	Condition		Monitor status
TAIL & CLR REQ	Combination switch (lighting and turn signal switch)	1ST	ON
		OFF	OFF

Is the item status normal?

YES >> GO TO 3.
NO >> Replace BCM. Refer to BCS-54, "Removal and Installation".

3. PARK LAMP CIRCUIT INSPECTION

Check the parking lamp circuit. Refer to EXL-43, "Description".

Is the tail lamp circuit normal?

YES >> Replace IPDM E/R. Refer to PCS-33, "Removal and Installation of IPDM E/R".
NO >> Repair or replace the malfunctioning part.

BOTH SIDE FRONT FOG LAMPS ARE NOT TURNED ON

Description

INFOID:0000000005561502

The front fog lamps do not turn ON in any combination switch (lighting and turn signal switch) setting.

Diagnosis Procedure

INFOID:0000000005561503

1. COMBINATION SWITCH (LIGHTING AND TURN SIGNAL SWITCH) INSPECTION

Check the combination switch (lighting and turn signal switch). Refer to BCS-35, "Diagnosis Procedure".

Is the combination switch (lighting and turn signal switch) normal?

YES >> GO TO 2.
NO >> Repair or replace the malfunctioning part.

2. CHECK FRONT FOG LAMP REQUEST SIGNAL INPUT

CONSULT-III DATA MONITOR

1. Select "FR FOG REQ" of IPDM E/R DATA MONITOR item.
2. With operating the combination switch (lighting and turn signal switch), check the monitor status.

Monitor item	Condition		Monitor status
FR FOG REQ	Combination switch (lighting and turn signal switch) (2ND)	ON	ON
		OFF	OFF

Is the item status normal?

YES >> GO TO 3.
NO >> Replace BCM. Refer to BCS-54, "Removal and Installation".

3. FRONT FOG LAMP CIRCUIT INSPECTION

Check the front fog lamp circuit. Refer to EXL-41, "Description".

Is the front fog lamp circuit normal?

YES >> Replace IPDM E/R. Refer to PCS-33, "Removal and Installation of IPDM E/R".
NO >> Repair or replace the malfunctioning part.

PRECAUTION

PRECAUTIONS

Precaution for Supplemental Restraint System (SRS) "AIR BAG" and "SEAT BELT PRE-TENSIONER"

INFOID:0000000005511891

The Supplemental Restraint System such as “AIR BAG” and “SEAT BELT PRE-TENSIONER”, used along with a front seat belt, helps to reduce the risk or severity of injury to the driver and front passenger for certain types of collision. This system includes seat belt switch inputs and dual stage front air bag modules. The SRS system uses the seat belt switches to determine the front air bag deployment, and may only deploy one front air bag, depending on the severity of a collision and whether the front occupants are belted or unbelted.
Information necessary to service the system safely is included in the SR and SB section of this Service Manual.

WARNING:

- **To avoid rendering the SRS inoperative, which could increase the risk of personal injury or death in the event of a collision which would result in air bag inflation, all maintenance must be performed by an authorized NISSAN/INFINITI dealer.**
- **Improper maintenance, including incorrect removal and installation of the SRS, can lead to personal injury caused by unintentional activation of the system. For removal of Spiral Cable and Air Bag Module, see the SR section.**
- **Do not use electrical test equipment on any circuit related to the SRS unless instructed to in this Service Manual. SRS wiring harnesses can be identified by yellow and/or orange harnesses or harness connectors.**

PRECAUTIONS WHEN USING POWER TOOLS (AIR OR ELECTRIC) AND HAMMERS

WARNING:

- **When working near the Airbag Diagnosis Sensor Unit or other Airbag System sensors with the Ignition ON or engine running, DO NOT use air or electric power tools or strike near the sensor(s) with a hammer. Heavy vibration could activate the sensor(s) and deploy the air bag(s), possibly causing serious injury.**
- **When using air or electric power tools or hammers, always switch the Ignition OFF, disconnect the battery, and wait at least 3 minutes before performing any service.**

General precautions for service operations

INFOID:0000000005274783

- Never work with wet hands.
- Turn the lighting switch OFF before disconnecting and connecting the connector.
- When checking the headlamp on/off operation, check it on vehicle and with the power connected to the vehicle-side connector.
- Do not touch the headlamp bulb glass surface with bare hands or allow oil or grease to get on it. Do not touch the headlamp bulb just after the headlamp is turned off, because it is very hot.
- When the bulb has burned out, wrap it in a thick vinyl bag and discard. Do not break the bulb.
- Leaving the bulb removed from the headlamp housing for a long period of time can deteriorate the performance of the lens and reflector (dirt, clouding). Always prepare a new bulb and have it on hand when replacing the bulb.
- Do not use organic solvent (paint thinner or gasoline) to clean lamps and to remove old sealant.

ON-VEHICLE MAINTENANCE

HEADLAMP

Aiming Adjustment

INFOID:0000000005274784

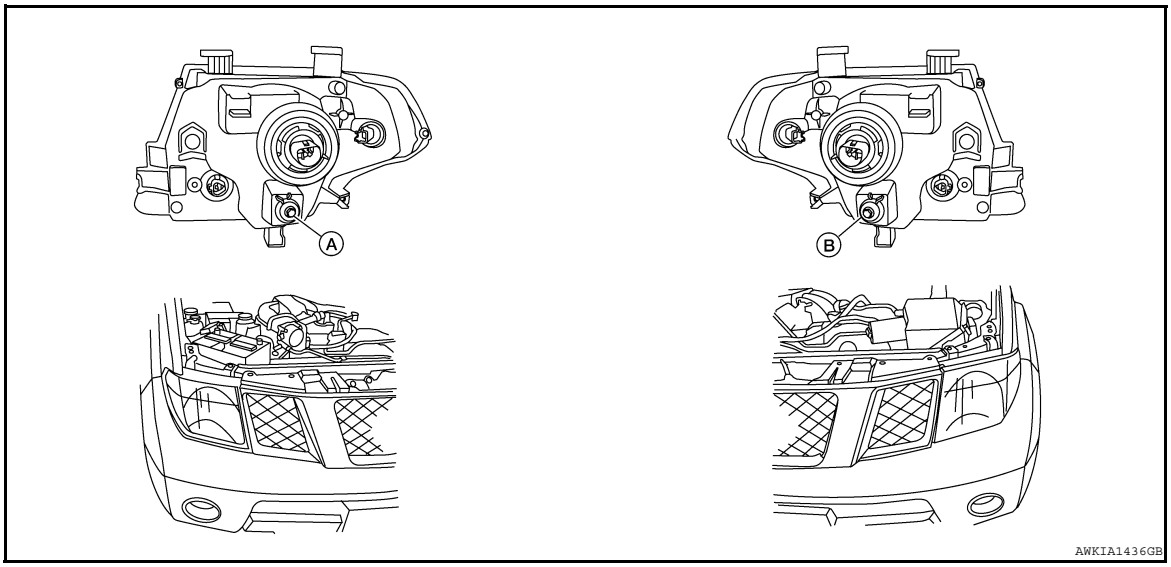

A. Headlamp RH adjustment screw
B. Headlamp LH adjustment screw

NOTE:
- For headlamp aiming details, refer to the regulations in your area.
- If vehicle front body has been repaired or the headlamp assembly has been replaced, check headlamp aiming.
- Before performing aiming adjustment, check the following:
- Confirm headlamp aiming switch is set to "0" (zero) position.
- Ensure all tires are inflated to correct pressure.
- Place vehicle and screen on level surface.
- Ensure there is no load in vehicle other than the driver (or equivalent weight placed in driver's position). Coolant and engine oil filled to correct level, and fuel tank full.
- Confirm spare tire, jack and tools are properly stowed.
- Aim each headlamp individually and ensure other headlamp beam pattern is blocked from screen.
- Use adjusting screw to perform aiming adjustment

LOW BEAM AND HIGH BEAM

CAUTION:
Do not tighten adjustment screw beyond a torque of 1.67 N·m (17 kg-cm, 14.8 in-lb) or damage may occur.
NOTE:
By regulation, no means for horizontal aim adjustment is provided from the factory; only vertical aim is adjustable.

1. Turn headlamp low beam on.
2. Use adjustment screw to perform aiming adjustment.
3. Adjust beam pattern until cut-off line (top edge of illumination area) is positioned at same height off ground as bulb center (on H-line). Measure cut-off line within distance A on H-line. See aiming chart below.
   - Basic illuminating area for adjustment should be within the range shown on the aiming chart. Adjust headlamps accordingly.

Headlamp Aiming

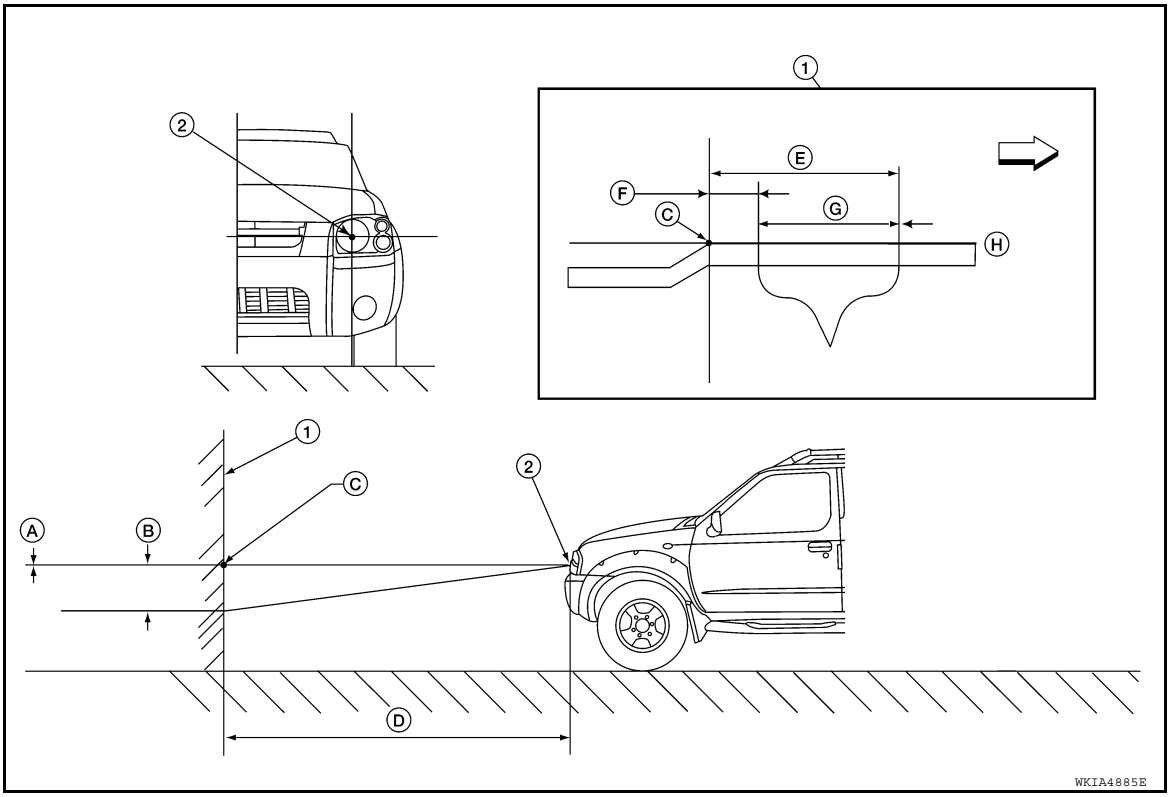

1	Adjustment screen	2	Headlamp bulb center (HV point)	A	Minimum acceptable vertical aim dimension (see aiming chart)
B	Maximum acceptable vertical aim dimension (see aiming chart)	C	H-V point	D	Distance of headlamp aiming screen from vehicle 7.62 m (25 ft.)
E	Maximum aim evaluation distance from vertical center on aiming screen 399mm (3° R).	F	Minimum aim evaluation distance from vertical center on aiming screen 133 mm (1°R)	G	Aim evaluation area
H	Horizontal aiming evaluation line.	⇐	Right		

Aiming Chart

A (Minimum acceptable vertical aim dimension)	-3.3 mm (0.13 in)	0.025° up
B (Maximum acceptable vertical aim dimension)	36.6 mm (1.44 in)	0.275° down

FRONT FOG LAMP

Aiming Adjustment

INFOID:0000000005274785

The fog lamp is a semi-sealed beam type which uses a replaceable halogen bulb. Before performing aiming adjustment, make sure of the following.

- Keep all tires inflated to correct pressure.
- Place vehicle on level ground.
- See that vehicle is unloaded (except for full levels of coolant, engine oil and fuel, and spare tire, jack, and tools). Have the driver or equivalent weight placed in driver seat.

Adjust aiming in the vertical direction by turning the adjustment screw.

NOTE:

Use a Phillips screwdriver to adjust. Turn screw clockwise to raise pattern and counterclockwise to lower pattern.

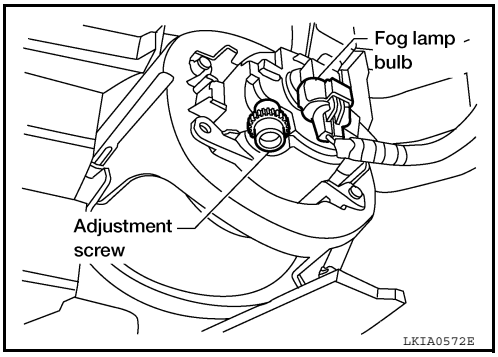

1. Set the distance between the screen and the center of the fog lamp lens as shown.

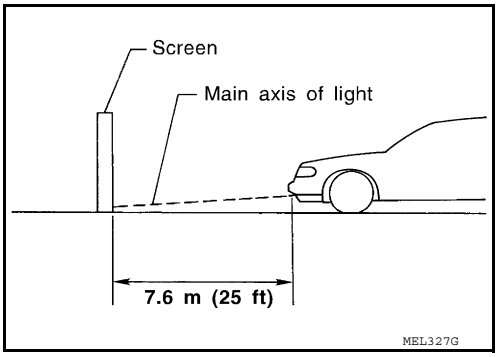

2. Turn front fog lamps ON.
3. Remove front portion of fender protector(s) for adjustment screw access. Refer to EXT-20, "Removal and Installation".

4. Adjust front fog lamps using adjustment screw so that the top edge of the high intensity zone is 100 mm (4 in) below the height of the fog lamp centers as shown.
   - When performing adjustment, if necessary, cover the headlamps and opposite fog lamp.

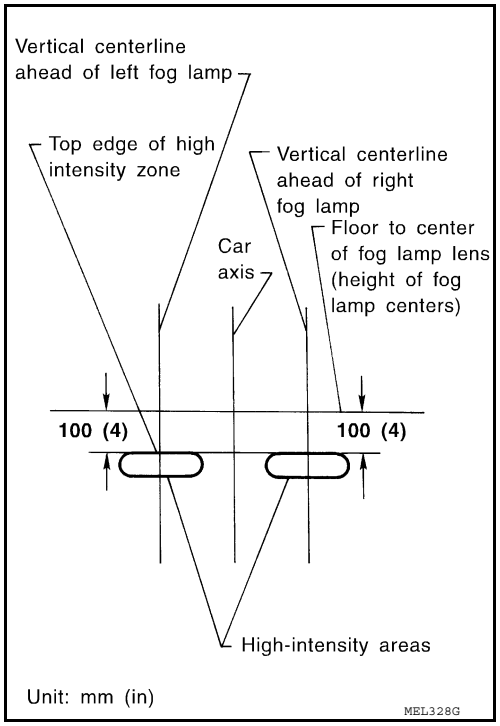

ON-VEHICLE REPAIR

HEADLAMP

Bulb Replacement

INFOID:0000000005274786

CAUTION:
Leaving bulb removed from the headlamp housing for a long period of time can deteriorate the performance of the lens and reflector (dirt, clouding). Always prepare a new bulb and have it on hand when replacing a bulb.

HEADLAMP

Removal

1. Turn front headlamp switch OFF.
2. Disconnect the electrical connector.
3. Rotate the headlamp bulb retaining ring counterclockwise and remove.
4. Pull the headlamp bulb straight out from the headlamp assembly.
   CAUTION:
   Grasp only the plastic base when handling headlamp bulb. Never touch the glass envelope.

Installation
Installation is in the reverse order of removal.
CAUTION:
After installing bulb, be sure to install the bulb socket and plastic cap securely to ensure watertightness.

FRONT TURN SIGNAL/PARKING LAMP

Removal

1. Turn the bulb socket counterclockwise to unlock it.
2. Pull the bulb to remove it from the socket.

Installation
Installation is in the reverse order of removal.
CAUTION:
After installing bulb, be sure to install the bulb socket and plastic cap securely to ensure watertightness.

FRONT SIDE MARKER LAMP

Removal

1. Turn the bulb socket counterclockwise to unlock it.
2. Pull the bulb to remove it from the socket.

Installation
Installation is in the reverse order of removal.
CAUTION:
After installing bulb, be sure to install the bulb socket securely for watertightness.

Removal and Installation

INFOID:0000000005274787

FRONT COMBINATION LAMP

Removal

1. Position front fender protector aside. Refer to EXT-22, "Removal and Installation of Front Fender Protector".
2. For steel bumper, remove the front bumper upper valance. Refer to EXT-13, "Removal and Installation".
3. For plastic bumper, remove the front bumper assembly. Refer to EXT-13, "Removal and Installation".
4. Remove the front combination lamp bolts.
5. Disconnect the front combination lamp connector and remove front combination lamp.

Installation

Installation is in the reverse order of removal.

: 6.0 N·m (0.61 kg-m, 53 in-lb)

Disassembly and Assembly

INFOID:0000000005274788

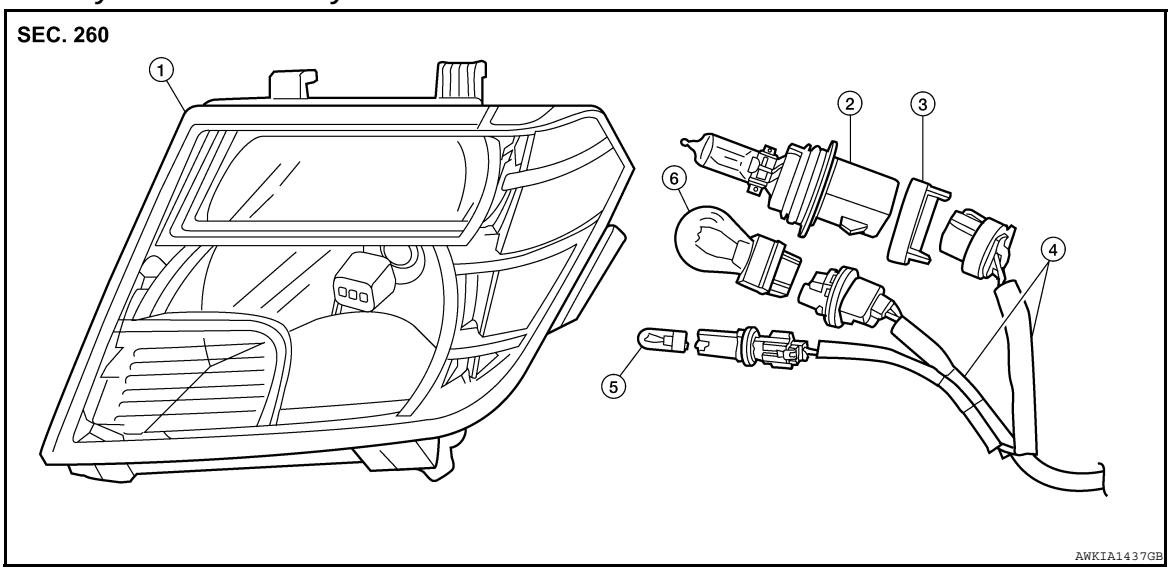

1. Headlamp assembly
2. Headlamp bulb
3. Headlamp bulb retaining ring
4. Wiring harness assembly
5. Front side marker lamp bulb
6. Front turn signal/parking lamp bulb

DISASSEMBLY

CAUTION:

Leaving bulb removed from the headlamp housing for a long period of time can deteriorate the performance of the lens and reflector (dirt, clouding). Always prepare a new bulb and have it on hand when replacing a bulb.

1. Rotate headlamp bulb retaining ring counterclockwise and remove.

   CAUTION:

   Grasp only the plastic base when handling headlamp bulb. Never touch the glass envelope.
2. Turn front turn signal/parking lamp bulb socket counterclockwise to unlock and remove socket.
3. Turn front side marker lamp bulb socket counterclockwise to unlock and remove socket.

ASSEMBLY

Installation is in the reverse order of removal.

CAUTION:

After installing bulb, be sure to install the bulb socket and plastic cap securely to ensure watertightness.

FRONT FOG LAMP

Bulb Replacement

INFOID:0000000005274789

REMOVAL

1. Position front fender protector aside. Refer to EXT-22, "Removal and Installation of Front Fender Protector".
2. Disconnect fog lamp connector.
3. Turn the bulb counterclockwise to remove it.
   CAUTION:
   - **Do not touch the glass of bulb directly by hand. Keep grease and other oily substances away from it. Do not touch bulb by hand while it is lit or right after being turned off. Burning may result.**
   - **Do not leave bulb out of fog lamp reflector for a long time because dust, moisture smoke, etc. may affect the performance of fog lamp. When replacing bulb, be sure to replace it with new one.**

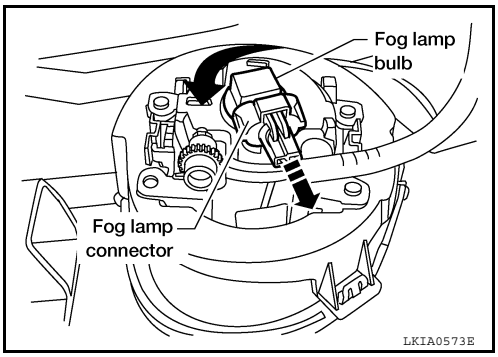

INSTALLATION

Installation is in the reverse order of removal.

Removal and Installation

INFOID:0000000005274790

FOG LAMP

Removal

Note:

The fog lamp is a semi-sealed beam type which uses a replaceable halogen bulb.

1. Position front fender protector aside. Refer to EXT-22, "Removal and Installation of Front Fender Protector"
2. Disconnect fog lamp connector.
3. Remove fog lamp screws and pull fog lamp rearward out of front bumper.
   CAUTION:
   - **Do not leave fog lamp assembly without bulb for a long period of time. Dust, moisture, smoke, etc. entering the fog lamp body may affect the performance. Remove the bulb from the headlamp assembly just before replacement bulb is installed.**
   - **Grasp only the plastic base when handling the bulb. Never touch the glass envelope. Touching the glass could significantly affect the bulb life and/or fog lamp performance.**

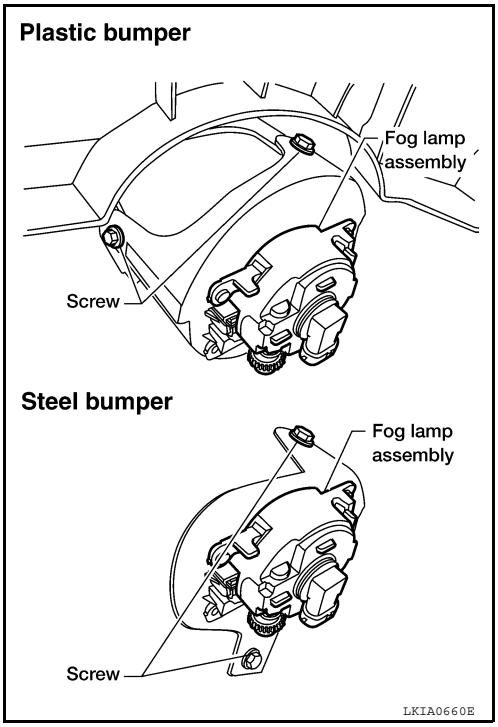

Installation

Installation is in the reverse order of removal.

STOP LAMP

Bulb Replacement

INFOID:0000000005274791

HIGH-MOUNTED STOP LAMP

Removal

1. Remove high-mounted stop lamp. Refer to EXL-145, "Removal and Installation".
2. Rotate the center bulb socket counterclockwise to release from high-mounted stop lamp assembly.
3. Pull bulb straight out from bulb socket.

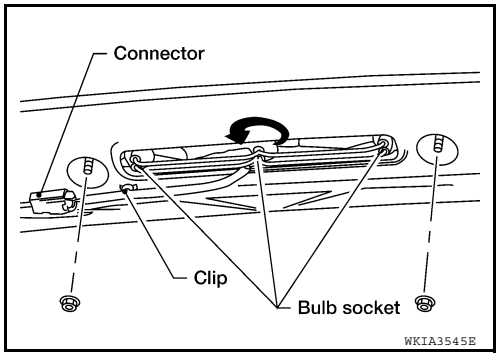

Installation

Installation is in the reverse order of removal.

Removal and Installation

INFOID:0000000005274792

HIGH-MOUNTED STOP LAMP

Removal

1. Remove plugs on headlining.
2. Remove the nuts and remove high-mounted stop lamp from outside of roof outer panel.
3. Rotate the bulb sockets counterclockwise and remove the high-mounted stop lamp assembly.

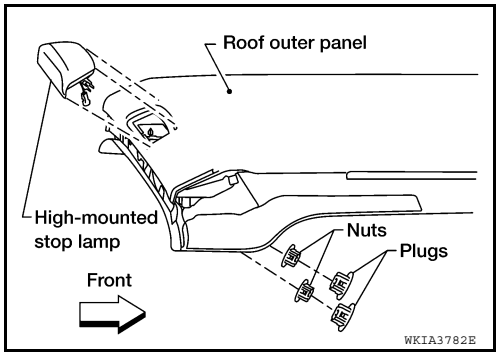

Installation

Installation is in the reverse order of removal.

High-mounted stop lamp nuts : 3.38 N·m (0.34 kg-m, 30 in-lb)

LICENSE PLATE LAMP

Bulb Replacement

INFOID:0000000005274793

REMOVAL

1. Turn bulb socket counterclockwise to unlock bulb socket.
2. Pull bulb to remove from bulb socket.

INSTALLATION

Installation is in the reverse order of removal.

Removal and Installation

INFOID:0000000005274794

REMOVAL

1. Disconnect license plate lamp harness.
2. Depress tab to remove license plate lamp from rear bumper.

INSTALLATION

Installation is in the reverse order of removal.

REAR COMBINATION LAMP

Bulb Replacement

INFOID:0000000005274795

REMOVAL

1. Remove rear combination lamp. Refer to EXL-147, "Removal and Installation".
2. Turn bulb counterclockwise to remove bulb socket.
3. Pull bulb straight out away from socket to release.

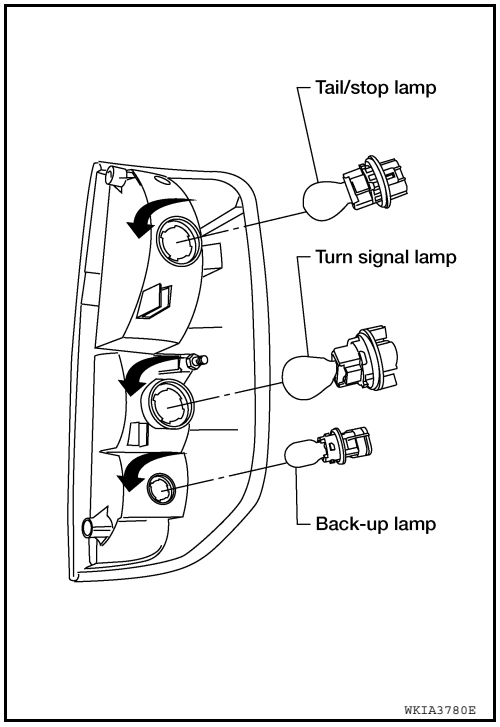

INSTALLATION

Installation is in the reverse order of removal.

Removal and Installation

INFOID:0000000005274796

REMOVAL

1. Open tailgate and remove rear combination lamp bolts.
2. Pull combination lamp housing rearward to release locating snap.
3. Rotate each bulb socket counterclockwise to unlock it from lamp housing and remove from vehicle.

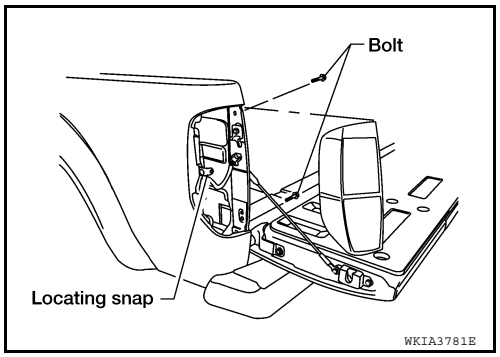

INSTALLATION

Installation is in the reverse order of removal.

NOTE:

During installation, align locating snap on body prior to installing bolts.

Rear combination lamp bolts : 2.4 Nm (0.24 kg-m, 21 in-lb)

LIGHTING & TURN SIGNAL SWITCH

Removal and Installation

INFOID:0000000005274797

REMOVAL

1. Remove lower instrument panel LH. Refer to IP-10, "Exploded View".
2. Remove knee protector brace.
3. Remove steering column cover.
4. Disconnect the lighting and turn signal switch connector.
5. While pressing tabs, pull lighting and turn signal switch toward driver door and release from the steering column.

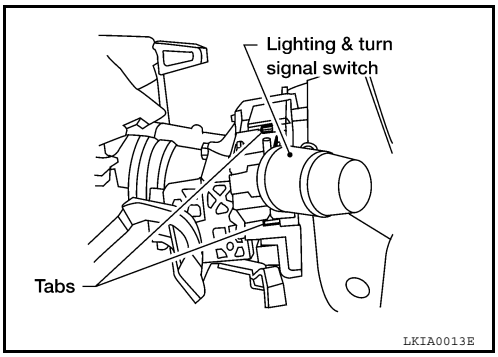

INSTALLATION

Installation is in the reverse order of removal.

HAZARD SWITCH

Removal and Installation

INFOID:0000000005274798

REMOVAL

1. Remove cluster lid C. Refer to IP-10, "Exploded View".
2. Disconnect the hazard switch connector.
3. Remove the screws and remove the hazard switch.

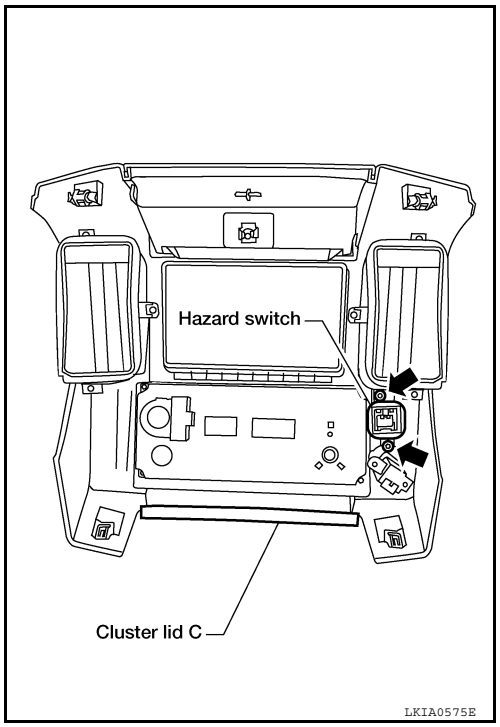

INSTALLATION

Installation is in the reverse order of removal.

SERVICE DATA AND SPECIFICATIONS (SDS)

SERVICE DATA AND SPECIFICATIONS (SDS)

Headlamp

INFOID:0000000005274799

Item	Wattage (W)*
Low/High	65/55

*: Always check with the Parts Department for the latest parts information.

Exterior Lamp

INFOID:0000000005274800

Item		Wattage (W)*
Front combination lamp	Turn signal lamp/parking lamp	28/8
	Side marker	3.8
Rear combination lamp	Stop/Tail lamp	27/8
	Turn signal lamp	27
	Back-up lamp	18
Fog lamp		55
License plate lamp		5
High-mounted stop lamp		16
Cargo lamp (in high-mounted stop lamp)		16

*: Always check with the Parts Department for the latest parts information.