AUTOMATIC TRANSAXLE

SECTION AT

CONTENTS

CONTENTS (Cont'd.)

When you read wiring diagrams:
- **Read GI section, "HOW TO READ WIRING DIAGRAMS".**
- **See EL section, "POWER SUPPLY ROUTING" for power distribution circuit.**

When you perform trouble diagnoses, read GI section, "HOW TO FOLLOW FLOW CHART IN TROUBLE DIAGNOSES" and "HOW TO PERFORM EFFICIENT DIAGNOSIS FOR AN ELECTRICAL INCIDENT".

Special Service Tools

The actual shapes of Kent-Moore tools may differ from those of special service tools illustrated here.

Tool number (Kent-Moore No.) Tool name	Description	
ST2505S001 (J34301-C) Oil pressure gauge set ① ST25051001 (—) Oil pressure gauge ② ST25052000 (—) Hose ③ ST25053000 (—) Joint pipe ④ ST25054000 (—) Adapter ⑤ ST25055000 (—) Adapter	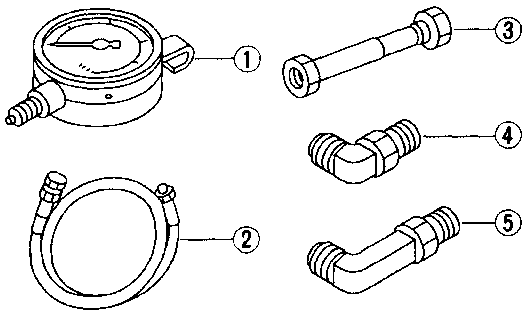 NT097	Measuring line pressure and governor pressure
KV31103000 (—) Drift	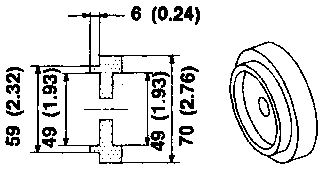 NT106	Installing differential oil seal (Use with ST35325000.) Unit: mm (in)
ST35325000 (—) Drift	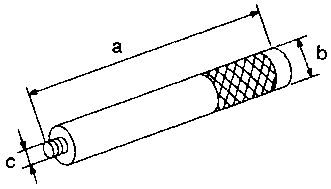 NT417	Installing differential oil seal (Use with KV31103000.) **a: 215 mm (8.46 in)** **b: 25 mm (0.98 in) dia.** **c: M12 x 1.5P**
KV38105710 (—) Preload adapter	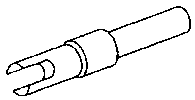 NT087	**—RE4F03A—** ● Measuring turning torque of final drive assembly ● Measuring clearance between side gear and differential case with washer ● Selecting differential side bearing adjusting shim
KV38107700 (J39027) Preload adapter	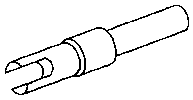 NT087	**— RE4F03V —** ● Measuring turning torque of final drive assembly ● Measuring clearance between side gear and differential case with washer ● Selecting differential side bearing adjusting shim

Special Service Tools (Cont'd)

Tool number (Kent-Moore No.) Tool name	Description	
KV31103200 (J34285-A and J34285-87) Clutch spring compressor	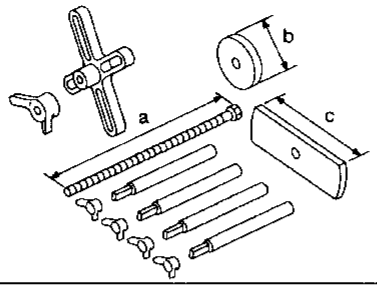 NT425	Removing and installing clutch return spring **a: 179 mm (7.05 in)** **b: 76 mm (2.99 in) dia.** **c: 174 mm (6.85 in)**
ST23540000 (J25689-A) Pin punch	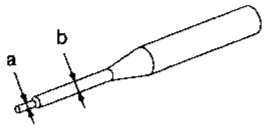 NT442	Removing and installing parking rod plate, manual plate and differential pinion mate shaft retaining pins **a: 2.3 mm (0.091 in) dia.** **b: 4 mm (0.16 in) dia.**
KV32101000 (J25689-A) Pin punch	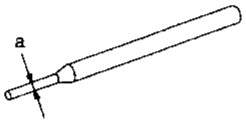 NT410	Installing throttle lever and manual shaft retaining pins Removing pinion mate shaft retaining pin **a: 4 mm (0.16 in) dia.**
ST25710000 (—) Pin punch	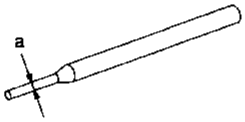 NT410	Aligning groove of manual shaft and hole of transmission case **a: 2 mm (0.08 in) dia.**
ST3306S001 (J22888-D) Differential side bearing puller set ① ST33051001 (—) Puller ② ST33061000 (J8107-2) Adapter	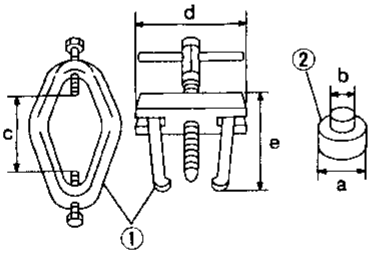 NT413	Removing differential side bearing inner race **a: 38 mm (1.50 in) dia.** **b: 28.5 mm (1.122 in) dia.** **c: 130 mm (5.12 in)** **d: 135 mm (5.31 in)** **e: 100 mm (3.94 in)**
KV381054S0 (J34286) Puller	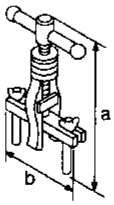 NT414	• Removing differential side oil seals • Removing idler gear bearing outer race • Removing differential side bearing outer race • Removing needle bearing from bearing retainer **a: 250 mm (9.84 in)** **b: 160 mm (6.30 in)**

Special Service Tools (Cont'd)

Tool number (Kent-Moore No.) Tool name	Description	
ST27180001 (J25726-A) Puller	NT424 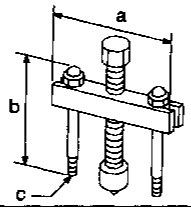	Removing idler gear **a: 100 mm (3.94 in)** **b: 110 mm (4.33 in)** **c: M8 x 1.25P**
ST30031000 (J22912-1) Puller	NT411 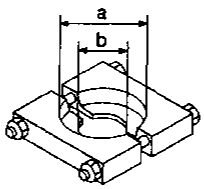	Removing reduction gear bearing inner race **a: 90 mm (3.54 in) dia.** **b: 50 mm (1.97 in) dia.**
ST35272000 (—) Drift	NT426 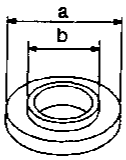	• Installing reduction gear bearing inner race • Installing idler gear bearing inner race **a: 72 mm (2.83 in) dia.** **b: 35.5 mm (1.398 in) dia.**
ST37830000 (—) Drift	NT427 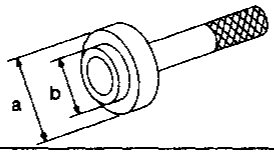	Installing idler gear bearing outer race **a: 62 mm (2.44 in) dia.** **b: 39 mm (1.54 in) dia.**
ST35321000 (—) Drift	NT073 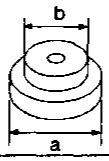	Installing output shaft bearing **a: 49 mm (1.93 in) dia.** **b: 41 mm (1.61 in) dia.**
ST30633000 (—) Drift	NT073 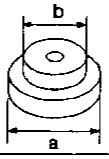	Installing differential side bearing outer race **a: 67 mm (2.64 in) dia.** **b: 49 mm (1.93 in) dia.**
ST35271000 (J26091) Drift	NT115 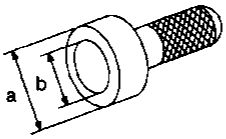	Installing idler gear **a: 76 mm (2.99 in) dia.** **b: 67 mm (2.64 in) dia.**
ST33400001 (J26082) Drift	NT086 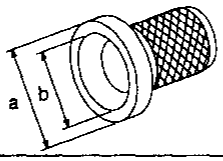	Installing oil pump housing oil seal **a: 60 mm (2.36 in) dia.** **b: 47 mm (1.85 in) dia.**
KV31101300 Height gauge	NT450 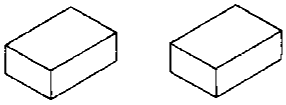	Selecting thrust washers, bearing races and differential side bearing adjusting shims

Commercial Service Tools

Tool name	Description	
Puller	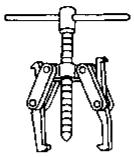 NT077	• Removing idler gear bearing inner race • Removing and installing band servo piston snap ring
Drift	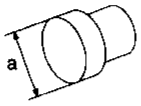 NT109	Removing idler gear bearing inner race **a: 34 mm (1.34 in) dia.**
Drift	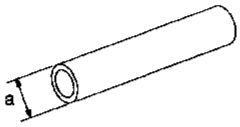 NT083	Installing needle bearing onto bearing retainer **a: 36 mm (1.42 in) dia.**

Service Notice

- Before proceeding with disassembly, thoroughly clean the outside of the transaxle. It is important to prevent the internal parts from becoming contaminated by dirt or other foreign matter.
- Disassembly should be done in a clean work area.
- Use lint-free cloth or towels for wiping parts clean. Common shop rags can leave fibers that could interfere with the operation of the transaxle.
- Place disassembled parts in order for easier and proper assembly.
- All parts should be carefully cleaned with a general purpose, non-flammable solvent before inspection or reassembly.
- Gaskets, seals and O-rings should be replaced any time the transaxle is disassembled.
- When connecting A/T control unit harness connector, tighten bolt until red projection is in line with connector.

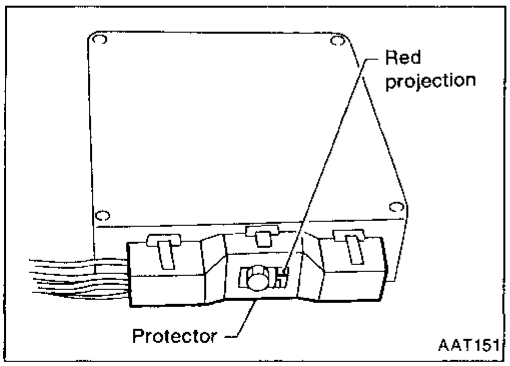

- It is very important to perform functional tests whenever they are indicated.
- The valve body contains precision parts and requires extreme care when parts are removed and serviced. Place removed parts in a parts rack in order to replace them in correct positions and sequences. Care will also prevent springs and small parts from becoming scattered or lost.
- Properly installed valves, sleeves, plugs, etc. will slide along bores in valve body under their own weight.
- Before assembly, apply a coat of recommended ATF to all parts. Apply petroleum jelly to protect O-rings and seals, and to hold bearings and washers in place during assembly. Do not use grease.
- Extreme care should be taken to avoid damage to O-rings, seals and gaskets when assembling.
- Flash or replace ATF cooler if excessive foreign material is found in oil pan or clogging strainer. Refer to TROUBLE DIAGNOSES Remarks, AT-19.
- After overhaul, refill the transaxle with new ATF.
- After removing drain plug, A/T fluid still remains in torque converter and A/T fluid cooling system.
  Always follow the procedures under "Changing A/T Fluid" in the MA section when changing A/T fluid.

Supplemental Restraint System (SRS) "AIR BAG" and "SEAT BELT PRE-TENSIONER"

The Supplemental Restraint System "Air Bag" and "Seat Belt Pre-tensioner" help to reduce the risk or severity of injury to the driver and front passenger in a frontal collision. The Supplemental Restraint System consists of air bags (located in the center of the steering wheel and on the instrument panel on the passenger side), seat belt pre-tensioners, sensors, a diagnosis unit, warning lamp, wiring harness and spiral cable. Information necessary to service the system safely is included in the **RS section** of this Service Manual.

WARNING:

- **To avoid rendering the SRS inoperative, which could lead to personal injury or death in the event of a severe frontal collision, all maintenance must be performed by an authorized INFINITI dealer.**
- **Improper maintenance, including incorrect removal and installation of the SRS, can lead to personal injury caused by unintentional activation of the system.**
- **Do not use electrical test equipment on any circuit related to the SRS unless instructed to in this Service Manual. SRS wiring harnesses are covered with yellow insulation either just before the harness connectors or for the complete harness, for easy identification.**

Cross-sectional View — RE4F03A

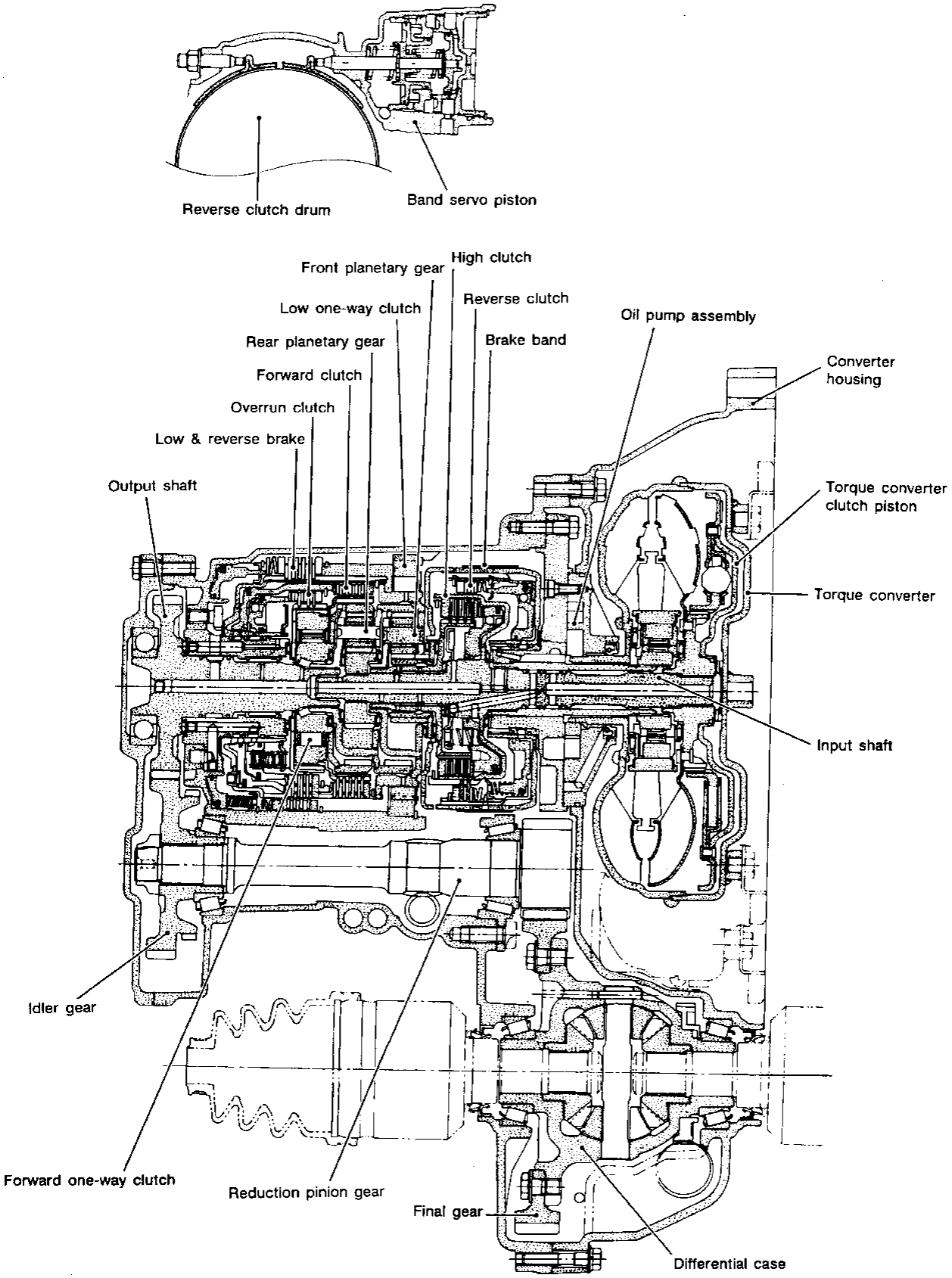

SAT589HA

Cross-sectional View — RE4F03V

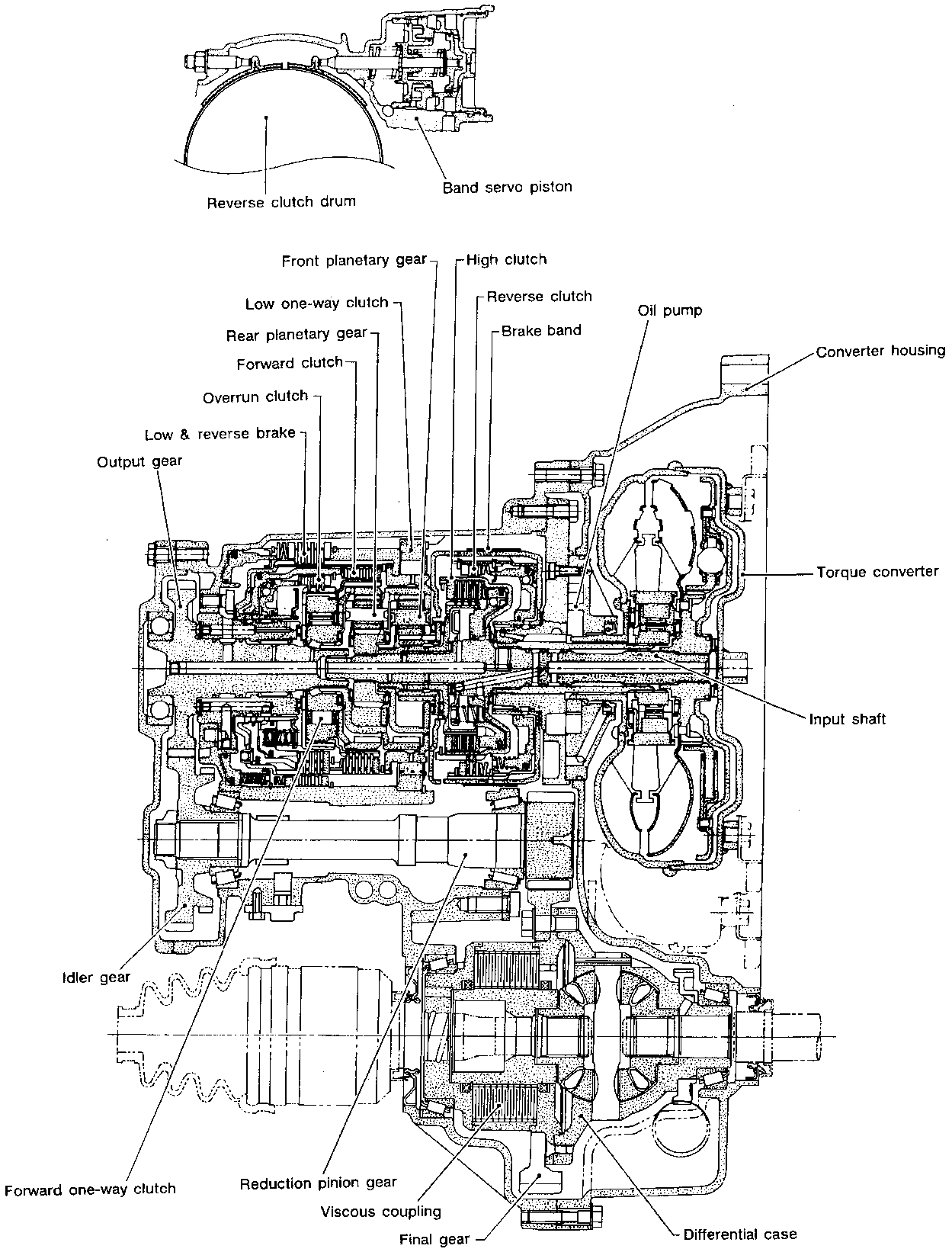

SAT324GA

Hydraulic Control Circuit

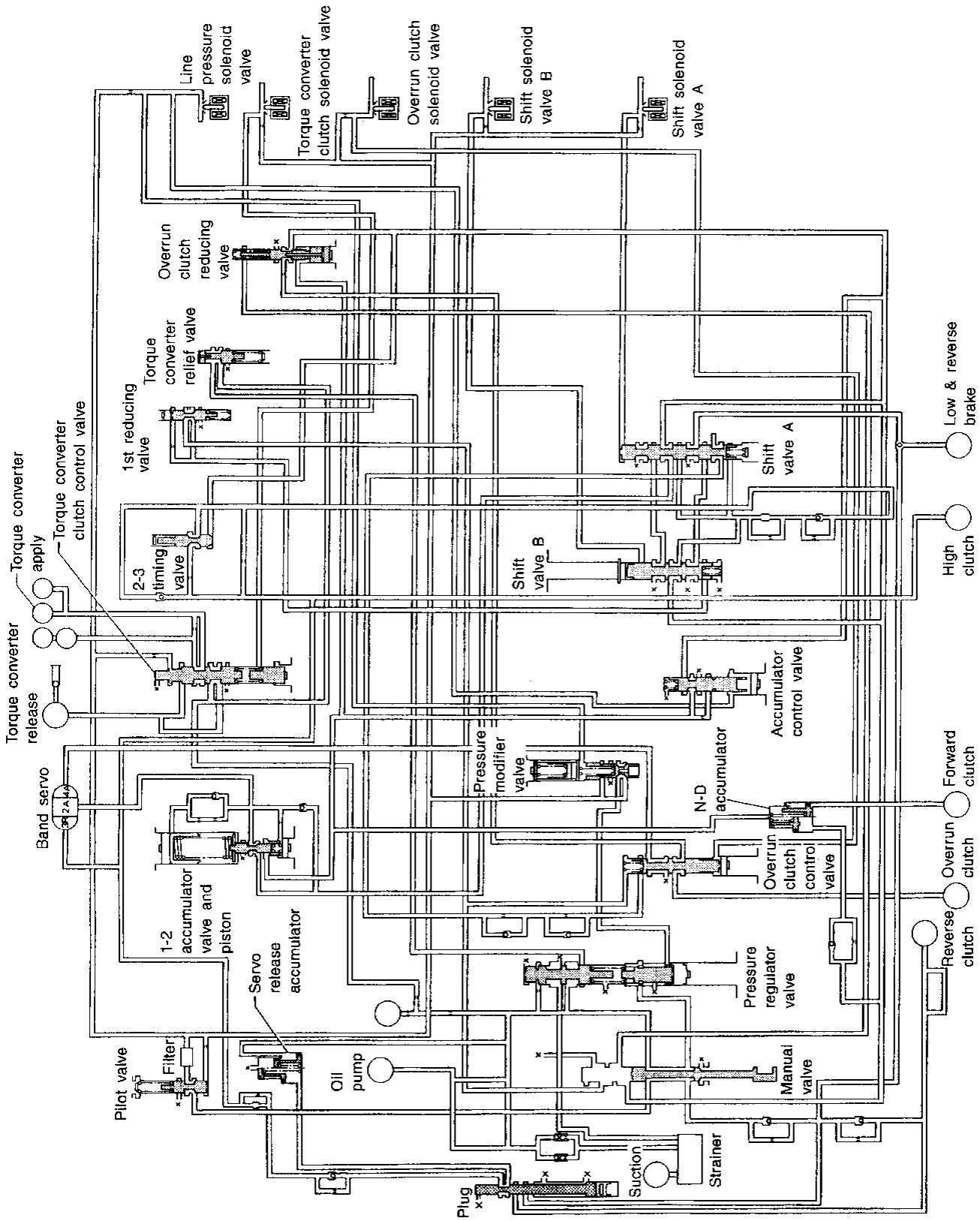

SAT223I

Shift Mechanism

CONSTRUCTION

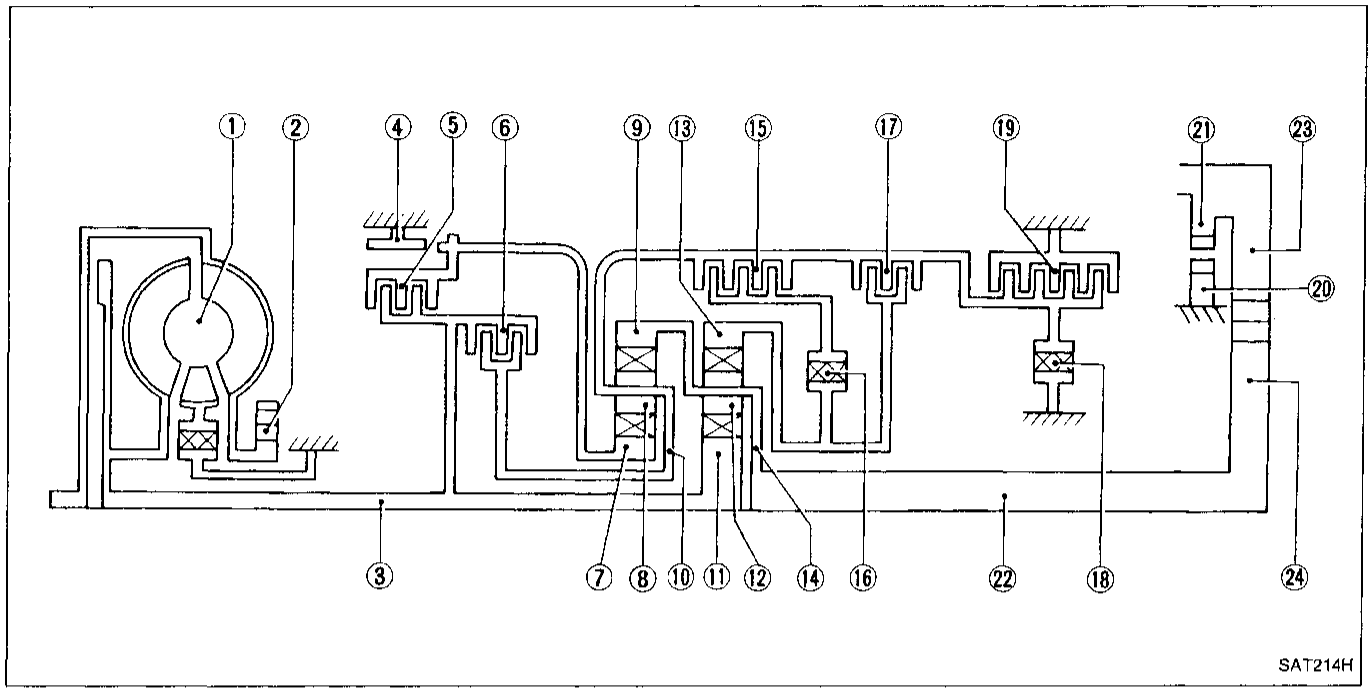

① Torque converter
② Oil pump
③ Input shaft
④ Brake band
⑤ Reverse clutch
⑥ High clutch
⑦ Front sun gear
⑧ Front pinion gear
⑨ Front internal gear
⑩ Front planetary carrier
⑪ Rear sun gear
⑫ Rear pinion gear
⑬ Rear internal gear
⑭ Rear planetary carrier
⑮ Forward clutch
⑯ Forward on-way clutch
⑰ Overrun clutch
⑱ Low one-way clutch
⑲ Low & reverse brake
⑳ Parking pawl
㉑ Parking gear
㉒ Output shaft
㉓ Idle gear
㉔ Output gear

FUNCTION OF CLUTCH AND BRAKE

Clutch and brake components	Abbr.	Function
⑤ Reverse clutch	R/C	To transmit input power to front sun gear ⑦.
⑥ High clutch	H/C	To transmit input power to front planetary carrier ⑩.
⑮ Forward clutch	F/C	To connect front planetary carrier ⑩ with forward one-way clutch ⑯.
⑰ Overrun clutch	O/C	To connect front planetary carrier ⑩ with rear internal gear ⑬.
④ Brake band	B/B	To lock front sun gear ⑦.
⑯ Forward one-way clutch	F/O.C	When forward clutch ⑮ is engaged, to stop rear internal gear ⑬ from rotating in opposite direction against engine revolution.
⑱ Low one-way clutch	L/O.C	To stop front planetary carrier ⑩ from rotating in opposite direction against engine revolution.
⑲ Low & reverse brake	L & R/B	To lock front planetary carrier ⑩.

Shift Mechanism (Cont'd)

OPERATION OF CLUTCH AND BRAKE

Shift position		Reverse clutch	High clutch	For-ward clutch	Overrun clutch	Band servo			For-ward one-way clutch	Low one-way clutch	Low & reverse brake	Lock-up	Remarks
						2nd apply	3rd release	4th apply					
P													PARK POSITION
R		○									○		REVERSE
N													NEUTRAL POSITION
D*4	1st			○	*1 ⊙				●	●			Automatic shift 1 ↔ 2 ↔ 3 ↔ 4
	2nd			○	*1 ◎	○			●				
	3rd		○	○	*1 ◎	*2 Ⓧ	Ⓧ		●			○	
	4th		○	Ⓧ		*3 Ⓧ	Ⓧ	○				○	
2	1st			○	○				●	●			Automatic shift 1 ↔ 2 ← 3
	2nd			○	○	○			●				
1	1st			○	○				●	●	○		Locks (held stationary) in 1st speed 1 ← 2 ← 3
	2nd			○	○	○			●				

*1: Operates when overdrive switch is being set in "OFF" position.
*2: Oil pressure is applied to both 2nd "apply" side and 3rd "release" side of band servo piston. However, brake band does not contract because oil pressure area on the "release" side is greater than that on the "apply" side.
*3: Oil pressure is applied to 4th "apply" side in condition *2 above, and brake band contracts.
*4: A/T will not shift to 4th when overdrive switch is set in "OFF" position.
○ : Operates.
◎ : Operates when throttle opening is less than 1/16, activating engine brake.
● : Operates during "progressive" acceleration.
Ⓧ : Operates but does not affect power transmission.
⊙ : Operates when throttle opening is less than 1/16, but does not affect engine brake.

Control System

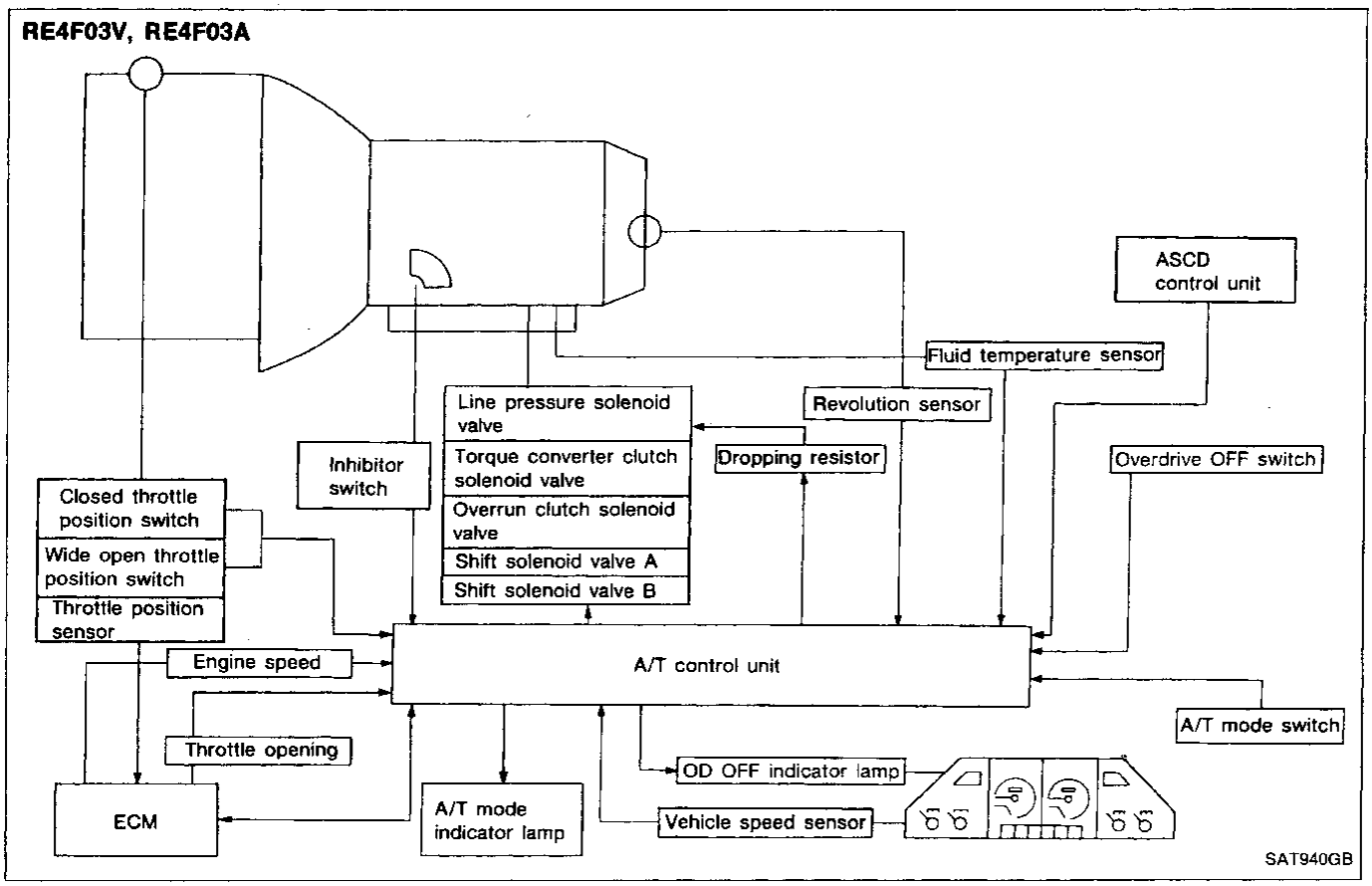

A/T CONTROL UNIT FUNCTION

The A/T control unit receives signals sent from various switches and sensors. The control unit then determines required line pressure, shifting point, lock-up operation, engine brake operation. The unit sends required signals to the respective solenoids.

INPUT/OUTPUT SIGNAL OF A/T CONTROL UNIT

	Sensors and solenoid valves	Function
Input	Inhibitor switch	Detects select lever position and sends a signal to A/T control unit.
	Throttle position sensor	Detects throttle valve position and sends a signal to A/T control unit.
	Closed throttle position switch	Detects throttle valve's fully-closed position and sends a signal to A/T control unit.
	Wide open throttle position switch	Detects a throttle valve position of greater than 1/2 of full throttle and sends a signal to A/T control unit.
	Engine speed signal	From ECM (ECCS control module).
	Fluid temperature sensor	Detects transmission fluid temperature and sends a signal to A/T control unit.
	Revolution sensor	Detects output shaft rpm and sends a signal to A/T control unit.
	Vehicle speed sensor	Used as an auxiliary vehicle speed sensor. Sends a signal when revolution sensor (installed on transmission) malfunctions.
	A/T mode switch	Detects POWER, AUTO or COMFORT position selected and sends a signal to A/T control unit.
	OD OFF switch	Sends a signal, which prohibits a shift to D_4 (OD) position, to the A/T control unit.
Output	Shift solenoid valve A/B	Selects shifting point suited to driving conditions in relation to a signal sent from A/T control unit.
	Line pressure solenoid valve	Regulates (or decreases) line pressure suited to driving conditions in relation to a signal sent from A/T control unit.
	Torque converter clutch solenoid valve	Regulates (or decreases) lock-up pressure suited to driving conditions in relation to a signal sent from A/T control unit.
	Overrun clutch solenoid valve	Controls an "engine brake" effect suited to driving conditions in relation to a signal sent from A/T control unit.

How to Perform Trouble Diagnoses for Quick and Accurate Repair

A good understanding of the malfunction conditions can make troubleshooting faster and more accurate. In general, each customer feels differently about a problem. It is important to fully understand the symptoms or conditions for a customer complaint.
Make good use of the two sheets provided, "INFORMATION FROM CUSTOMER" and "DIAGNOSTIC WORKSHEET", to perform the best troubleshooting possible.

WORK FLOW

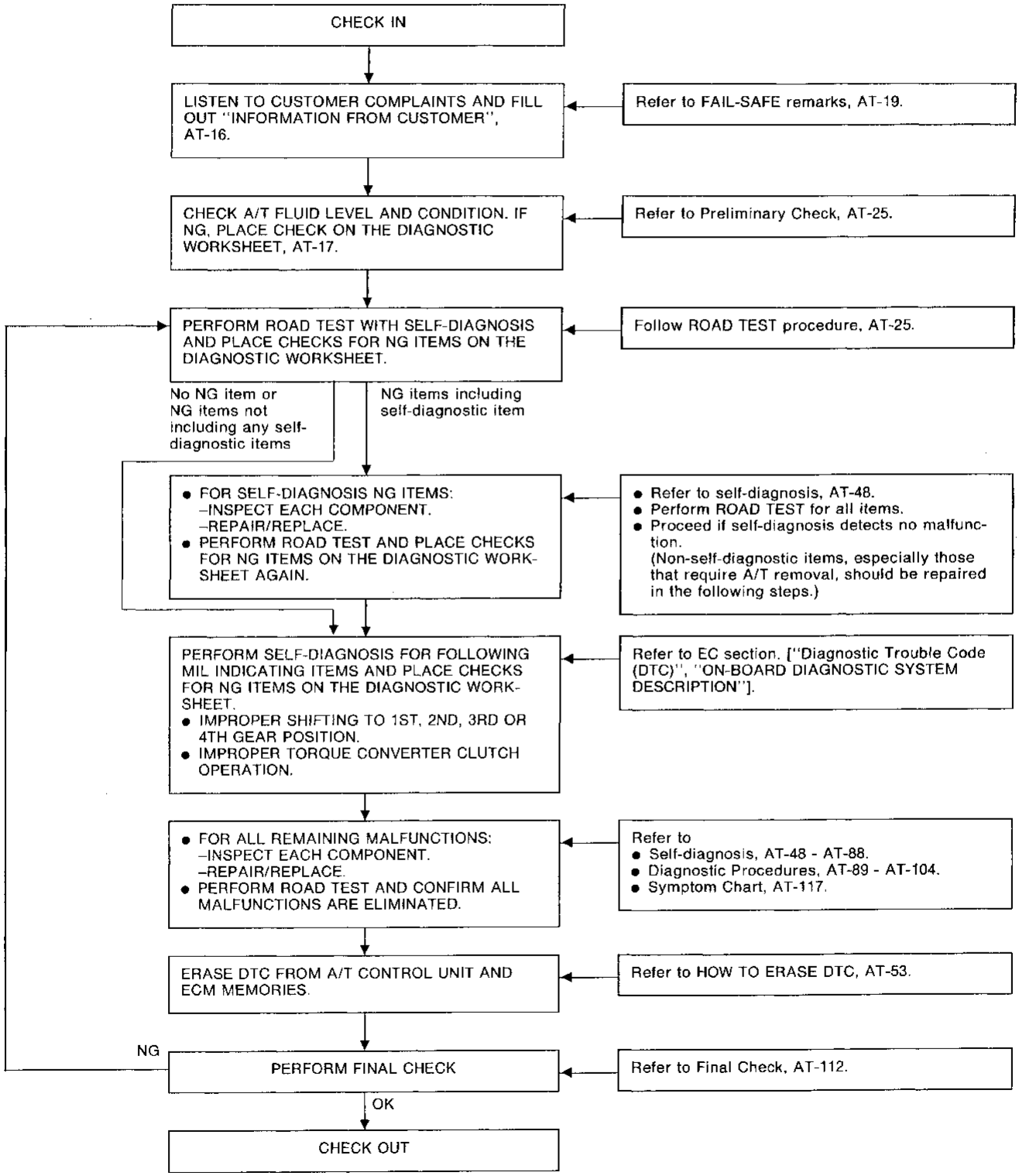

How to Perform Trouble Diagnoses for Quick and Accurate Repair (Cont'd)

INFORMATION FROM CUSTOMER

KEY POINTS

WHAT ..... Vehicle & A/T model
WHEN ..... Date, Frequencies
WHERE ..... Road conditions
HOW ..... Operating conditions, Symptoms

Customer name MR/MS	Model & Year	VIN
Trans. model	Engine	Mileage
Incident Date	Manuf. Date	In Service Date
Frequency	☐ Continuous ☐ Intermittent (times a day)	
Symptoms	☐ Vehicle does not move. (☐ Any position ☐ Particular position)	
	☐ No up-shift (☐ 1st → 2nd ☐ 2nd → 3rd ☐ 3rd → O/D)	
	☐ No down-shift (☐ O/D → 3rd ☐ 3rd → 2nd ☐ 2nd → 1st)	
	☐ Lockup malfunction	
	☐ Shift point too high or too low.	
	☐ Shift shock or slip (☐ N → D ☐ Lockup ☐ Any drive position)	
	☐ Noise or vibration	
	☐ No kickdown	
	☐ No pattern select	
	☐ Others ( )	
Power indicator lamp	Blinks for about 8 seconds.	
	☐ Continuously lit	☐ Not lit
Malfunction indicator lamp (MIL)	☐ Continuously lit	☐ Not lit

How to Perform Trouble Diagnoses for Quick and Accurate Repair (Cont'd)

DIAGNOSTIC WORKSHEET

1.	☐ Read the Fail-safe Remarks and listen to customer complaints.	AT-19
2.	☐ CHECK A/T FLUID ☐ Leakage (Follow specified procedure) ☐ Fluid condition ☐ Fluid level	AT-25
3.	☐ Perform all ROAD TEST and mark required procedures.	AT-25
	3-1. Check before engine is started. ☐ SELF-DIAGNOSTIC PROCEDURE — Mark detected items. ☐ Revolution sensor ☐ Vehicle speed sensor ☐ Throttle position sensor ☐ Shift solenoid valve A ☐ Shift solenoid valve B ☐ Overrun clutch solenoid valve ☐ Torque converter clutch solenoid valve ☐ Fluid temperature sensor and A/T control unit power source ☐ Engine speed signal ☐ Line pressure solenoid valve ☐ Battery ☐ Others	AT-26
	3-2. Check at idle ☐ Diagnostic Procedure 1 (Power indicator lamp comes on for 2 seconds.) ☐ Diagnostic Procedure 2 (Power or comfort indicator lamp comes on.) ☐ Diagnostic Procedure 3 (OD OFF indicator lamp comes on.) ☐ Diagnostic Procedure 4 (Power indicator lamp comes on when acc. pedal is depressed.) ☐ Diagnostic Procedure 5 (Engine starts only in P and N position) ☐ Diagnostic Procedure 6 (In P position, vehicle does not move when pushed) ☐ Diagnostic Procedure 7 (In N position, vehicle moves) ☐ Diagnostic Procedure 8 (Select shock. N → R position) ☐ Diagnostic Procedure 9 (Vehicle creeps backward in R position) ☐ Diagnostic Procedure 10 (Vehicle creeps forward in D, 2 or 1 position)	AT-28
	3-3. Cruise test Part-1 ☐ Diagnostic Procedure 11 (Vehicle starts from D_1) ☐ Diagnostic Procedure 12 ☐ Diagnostic Procedure 13 ☐ Diagnostic Procedure 14 } (A/T shift schedule: $D_1 \rightarrow D_2/D_2 \rightarrow D_3/D_3 \rightarrow D_4/D_4 \rightarrow D_2$) ☐ Diagnostic Procedure 15 (Shift schedule: Lock-up) ☐ Diagnostic Procedure 16 (Lock-up condition more than 30 seconds) ☐ Diagnostic Procedure 17 (Lock-up released) ☐ Diagnostic Procedure 18 (Engine speed returns to idle. Light braking $D_4 \rightarrow D_3$)	AT-30

How to Perform Trouble Diagnoses for Quick and Accurate Repair (Cont'd)

3.	Part-2 ☐ Diagnostic Procedure 11 (Vehicle starts from D_1) ☐ Diagnostic Procedure 12 (Kickdown: $D_4 \rightarrow D_2$) ☐ Diagnostic Procedure 13 (Shift schedule: $D_2 \rightarrow D_3$) ☐ Diagnostic Procedure 14 (Shift schedule: $D_3 \rightarrow D_4$ and engine brake)	AT-36
	Part-3 ☐ Diagnostic Procedure 20 ($D_4 \rightarrow D_3$ when OD OFF switch ON → OFF) ☐ Diagnostic Procedure 18 (Engine brake in D_3) ☐ Diagnostic Procedure 21 ($D_3 \rightarrow 2_2$ when selector lever D → 2 position) ☐ Diagnostic Procedure 19 (Engine brake in 2_2) ☐ Diagnostic Procedure 22 ($2_2 \rightarrow 1_1$, when selector lever 2 → 1 position) ☐ Diagnostic Procedure 23 (Engine brake in 1_1) ☐ SELF-DIAGNOSTIC PROCEDURE — Mark detected items. ☐ Revolution sensor ☐ Vehicle speed sensor ☐ Throttle position sensor ☐ Shift solenoid valve A ☐ Shift solenoid valve B ☐ Overrun clutch solenoid valve ☐ Torque converter clutch solenoid valve ☐ Fluid temperature sensor and A/T control unit power source ☐ Engine speed signal ☐ Line pressure solenoid valve ☐ Battery ☐ Others	AT-37
4.	☐ For self-diagnosis NG items, inspect each component. Repair or replace the damaged parts.	AT-48
5.	☐ Perform all ROAD TEST and re-mark required procedures.	AT-25
6.	☐ Perform SELF-DIAGNOSIS for following MIL indicating items and check out NG items. Refer to EC section ["Diagnostic Trouble Code (DTC)", "ON-BOARD DIAGNOSTIC SYSTEM DESCRIPTION]. ☐ DTC (P0731, 1103) Improper shifting to 1st gear position ☐ DTC (P0732, 1104) Improper shifting to 2nd gear position ☐ DTC (P0733, 1105) Improper shifting to 3rd gear position ☐ DTC (P0734, 1106) Improper shifting to 4th gear position or TCC	EC section
7.	☐ Perform the Diagnostic Procedures for all remaining items marked NG. Repair or replace the damaged parts. Refer to the Symptom Chart when you perform the procedures. (The chart also shows some other possible symptoms and the component inspection orders.)	AT-105 AT-117
8.	☐ Erase DTC from A/T control unit and ECM memories.	AT-53
9.	Perform FINAL CHECK. ☐ Stall test — Mark possible damaged components/others. ☐ Torque converter one-way clutch ☐ Reverse clutch ☐ Forward clutch ☐ Overrun clutch ☐ Forward one-way clutch ☐ Low & reverse brake ☐ Low one-way clutch ☐ Engine ☐ Line pressure is low ☐ Clutches and brakes except high clutch and brake band are OK ☐ Pressure test — Suspected parts:	AT-112

Remarks

FAIL-SAFE

The A/T control unit has an electronic Fail-Safe (limp home mode). This allows the vehicle to be driven even if a major electrical input/output device circuit is damaged.
Under Fail-Safe, the vehicle always runs in third gear with shift lever position of 1, 2 or D. Customer may say "Sluggish, poor acceleration".
When Fail-Safe operation occurs the next time the key is turned to the ON position, the POWER indicator lamp will blink for about 8 seconds. (For diagnosis, refer to AT-26.)
Fail-Safe may activate without electrical circuit damages if the vehicle is driven under extreme conditions (such as excessive wheel spins and emergency braking immediately afterwards). In this case, turn key OFF for 5 seconds and then ON to recover normal shift pattern.
The blinking of the POWER indicator lamp for about 8 seconds will appear only once and be cleared. The customer may resume normal driving conditions by chance.
Always follow the "WORK FLOW" (Refer to AT-15).
The SELF-DIAGNOSIS results will be as follows:

The first SELF-DIAGNOSIS will indicate the damage of the vehicle speed sensor or the revolution sensor.
During the next SELF-DIAGNOSIS performed after checking the sensor, no damages will be indicated.

ATF COOLER SERVICE

Flash or replace ATF cooler if excessive foreign material is found in oil pan or clogging strainer.
SR20DE engine (RE4F03A/RE4F03V) ... fin type cooler

Replace radiator lower tank (which includes ATF cooler) with a new one and flush cooler line using cleaning solvent and compressed air.

OBD-II SELF-DIAGNOSIS

- A/T self-diagnosis is performed by the A/T control unit in combination with the ECM. The results can be read through the blinking pattern of the POWER indicator or the malfunction indicator lamp (MIL). Refer to the table on AT-48 for the indicator used to display each self-diagnostic result.
- The self-diagnostic results indicated by the MIL are automatically stored in both the ECM and A/T control unit memories.

  Always perform the procedure "HOW TO ERASE DTC" on AT-53 to complete the repair and avoid unnecessary blinking of the MIL.
- The following self-diagnostic items can be detected using ECM self-diagnostic results mode* only when the POWER indicator lamp does not indicate any malfunctions.
  –Improper shifting to 1st, 2nd, 3rd, or 4th gear position
  –Improper torque converter clutch operation.

  *: Refer to EC section ["Malfunction Indicator Lamp (MIL)", "ON-BOARD DIAGNOSTIC SYSTEM DESCRIPTION"].

Diagnostic Trouble Code (DTC) Chart

A/T RELATED ITEMS

Diagnostic trouble code No. CONSULT GST	Diagnostic trouble code No. MIL	Detected items (Screen terms for CONSULT, "SELF-DIAG RESULTS" mode)	Malfunction is detected when ...
P0705	1101	Inhibitor switch circuit (INHIBITOR SWITCH)	• A/T control unit does not receive the correct voltage signal from the switch based on the gear position.
P0710	1208	Fluid temperature sensor (FLUID TEMP SENSOR)	• A/T control unit receives an excessively low or high voltage from the sensor.
P0720	1102	Revolution sensor (VHCL SPEED SEN·A/T)	• A/T control unit does not receive the proper voltage signal from the sensor.
P0725	1207	Engine speed signal (ENGINE SPEED SIG)	• A/T control unit does not receive the proper voltage signal from the ECM.
P0731	1103	Improper shifting to 1st gear position (A/T 1ST SIGNAL)	• A/T cannot be shifted to the 1st gear position even if electrical circuit is good.
P0732	1104	Improper shifting to 2nd gear position (A/T 2ND SIGNAL)	• A/T cannot be shifted to the 2nd gear position even if electrical circuit is good.
P0733	1105	Improper shifting to 3rd gear position (A/T 3RD SIGNAL)	• A/T cannot be shifted to the 3rd gear position even if electrical circuit is good.
P0734	1106	Improper shifting to 4th gear position or TCC (A/T 4TH SIGNAL OR TCC)	• A/T cannot be shifted to the 4th gear position or perform lock-up even electrical circuit is good.
P0740	1204	T/C clutch solenoid valve (TOR CONV CLUTCH SV)	• A/T control unit detects the improper voltage drop when it tries to operate the solenoid valve.
P0745	1205	Line pressure solenoid valve (LINE PRESSURE S/V)	• A/T control unit detects the improper voltage drop when it tries to operate the solenoid valve.
P0750	1108	Shift solenoid valve A (SHIFT SOLENOID/V A)	• A/T control unit detects the improper voltage drop when it tries to operate the solenoid valve.
P0755	1201	Shift solenoid valve B (SHIFT SOLENOID/V B)	• A/T control unit detects the improper voltage drop when it tries to operate the solenoid valve.
P1705	1206	Throttle position sensor Throttle position switch (THRTL POSI SEN·A/T)	• A/T control unit receives an excessively low or high voltage from the sensor.
P1760	1203	Overrun clutch solenoid valve (OVERRUN CLUTCH S/V)	• A/T control unit detects the improper voltage drop when it tries to operate the solenoid valve.

Diagnostic Trouble Code (DTC) Chart (Cont'd)

X: Applicable
—: Not applicable

Check Items (Possible Cause)	DTC *1 Confirmation Procedure Quick Ref.	Fail Safe System	MIL Illumination	Reference Page
• Harness or connectors (The switch circuit is open or shorted.) • Inhibitor switch	DRIVING (pattern 1)	—	2 trip	AT-75
• Harness or connectors (The sensor circuit is open or shorted.) • Fluid temperature sensor	DRIVING (pattern 6)	X	2 trip	AT-68
• Harness or connectors (The sensor circuit is open or shorted.) • Revolution sensor	DRIVING (pattern 2)	X	2 trip	AT-54
• Harness or connectors (The signal circuit is open or shorted.)	DRIVING (pattern 5)	X	2 trip	AT-71
• Shift solenoid valve A • Shift solenoid valve B • Overrun clutch solenoid valve • Line pressure solenoid valve • Each clutch • Hydraulic control circuit • T/C clutch solenoid valve	DRIVING (pattern 3)	—	2 trip	AT-79 AT-81 AT-83 AT-85
• Harness or connectors (The solenoid circuit is open or shorted.) • T/C clutch solenoid valve	IGN: ON	X	2 trip	AT-66
• Harness or connectors (The solenoid circuit is open or shorted.) • Line pressure solenoid valve	IGN: ON	X	2 trip	AT-73
• Harness or connectors (The solenoid circuit is open or shorted.) • Shift solenoid valve A	IGN: ON	X	2 trip	AT-60
• Harness or connectors (The solenoid circuit is open or shorted.) • Shift solenoid valve B	IGN: ON	X	2 trip	AT-62
• Harness or connectors (The sensor circuit is open or shorted.) • Throttle position sensor	DRIVING (pattern 4)	X	2 trip	AT-75
• Harness or connectors (The solenoid circuit is open or shorted.) • Overrun clutch solenoid valve	IGN: ON	X	2 trip	AT-64

*1: DRIVING pattern 1-6 means as follows:
Pattern 1 should meet b and c.
Pattern 2 should meet a and c.
Pattern 3 should meet a through e.
Pattern 4 should meet a and b.
Pattern 5 should meet a through c.
Pattern 6 should meet a through d.

a: Selector lever is in "D" position.
b: Vehicle speed is over 10 km/h (6 MPH).
c: Throttle opening is over 1/8.
d: Engine speed is over 450 rpm.
e: A/T fluid temperature is 20 - 120°C (68 - 248°F).

Diagnosis by CONSULT

NOTICE

1. The CONSULT electrically displays shift timing and lock-up timing (that is, operation timing of each solenoid).
   Check for time difference between actual shift timing and the CONSULT display. If the difference is noticeable, mechanical parts (except solenoids, sensors, etc.) may be malfunctioning. Check mechanical parts using applicable diagnostic procedures.
2. Shift schedule (which implies gear position) displayed on CONSULT and that indicated in Service Manual may differ slightly. This occurs because of the following reasons:
   - Actual shift schedule has more or less tolerance or allowance,
   - Shift schedule indicated in Service Manual refers to the point where shifts start, and
   - Gear position displayed on CONSULT indicates the point where shifts are completed.
3. Shift solenoid valve "A" or "B" is displayed on CONSULT at the start of shifting. Gear position is displayed upon completion of shifting (which is computed by A/T control unit).
4. Additional CONSULT information can be found in the Operation Manual supplied with the CONSULT unit.

SELF-DIAGNOSTIC RESULT TEST MODE

Refer to AT-48.

DATA MONITOR DIAGNOSTIC TEST MODE

Item	Display	Monitor item		Description	Remarks
		ECU input signals	Main signals		
Vehicle speed sensor 1 (A/T) (Revolution sensor)	VHCL/S SE·A/T [km/h] or [mph]	X	—	• Vehicle speed computed from signal of revolution sensor is displayed.	When racing engine in N or P position with vehicle stationary, CONSULT data may not indicate 0 km/h (0 mph).
Vehicle speed sensor 2 (Meter)	VHCL/S SE·MTR [km/h] or [mph]	X	—	• Vehicle speed computed from signal of vehicle speed sensor is displayed.	Vehicle speed display may not be accurate under approx. 10 km/h (6 mph). It may not indicate 0 km/h (0 mph) when vehicle is stationary.
Throttle position sensor	THRTL POS SEN [V]	X	—	• Throttle position sensor signal voltage is displayed.	
Fluid temperature sensor	FLUID TEMP SEN [V]	X	—	• Fluid temperature sensor signal voltage is displayed. • Signal voltage lowers as fluid temperature rises.	
Battery voltage	BATTERY VOLT [V]	X	—	• Source voltage of control unit is displayed.	
Engine speed	ENGINE SPEED [rpm]	X	X	• Engine speed, computed from engine speed signal, is displayed.	Engine speed display may not be accurate under approx. 800 rpm. It may not indicate 0 rpm even when engine is not running.
Overdrive switch	OVERDRIVE SW [ON/OFF]	X	—	• ON/OFF state computed from signal of overdrive SW is displayed.	
P/N position switch	P/N POSI SW [ON/OFF]	X	—	• ON/OFF state computed from signal of P/N position SW is displayed.	
R position switch	R POSITION SW [ON/OFF]	X	—	• ON/OFF state computed from signal of R position SW is displayed.	
D position switch	D POSITION SW [ON/OFF]	X	—	• ON/OFF state computed from signal of D position SW is displayed.	

Diagnosis by CONSULT (Cont'd)

Item	Display	Monitor item		Description	Remarks
		ECU input signals	Main signals		
2 position switch	2 POSITION SW [ON/OFF]	X	—	• ON/OFF status, computed from signal of 2 position SW, is displayed.	
1 position switch	1 POSITION SW [ON/OFF]	X	—	• ON/OFF status, computed from signal of 1 position SW, is displayed.	
ASCD-cruise signal	ASCD·CRUISE [ON/OFF]	X	—	• Status of ASCD cruise signal is displayed. ON ... Cruising state OFF ... Normal running state	• This is displayed even when no ASCD is mounted.
ASCD-OD cut signal	ASCD·OD CUT [ON/OFF]	X	—	• Status of ASCD·OD release signal is displayed. ON ... OD released OFF ... OD not released	• This is displayed even when no ASCD is mounted.
Kickdown switch	KICKDOWN SW [ON/OFF]	X	—	• ON/OFF status, computed from signal of kickdown SW, is displayed.	• This is displayed even when no kickdown switch is equipped.
Power shift switch	POWER SHIFT SW [ON/OFF]	X	—	• ON/OFF status, computed from signal of power shift SW, is displayed.	• This is displayed even when no power SW is equipped. On vehicles with power SW mounted on lever, this item is invalid although displayed.
Closed throttle position switch	CLOSED THL/SW [ON/OFF]	X	—	• ON/OFF status, computed from signal of closed throttle position SW, is displayed.	
Wide open throttle position switch	W/O THRL/P-SW [ON/OFF]	X	—	• ON/OFF status, computed from signal of wide open throttle position SW, is displayed.	
Hold switch	HOLD SW [ON/OFF]	X	—	• ON/OFF status, computed from signal of hold SW, is displayed.	
Gear position	GEAR	—	X	• Gear position data used for computation by control unit, is displayed.	
Selector lever position	SLCT LVR POSI	—	X	• Selector lever position data, used for computation by control unit, is displayed.	• A specific value used for control is displayed if fail-safe is activated due to error.
Vehicle speed	VEHICLE SPEED [km/h] or [mph]	—	X	• Vehicle speed data, used for computation by control unit, is displayed.	
Throttle position	THROTTLE POSI [/8]	—	X	• Throttle position data, used for computation by control unit, is displayed.	• A specific value used for control is displayed if fail-safe is activated due to error.
Line pressure duty	LINE PRES DTY [%]	—	X	• Control value of line pressure solenoid valve, computed by control unit from each input signal, is displayed.	
Torque converter clutch solenoid valve duty	TCC S/V DUTY [%]	—	X	• Control value of torque converter clutch solenoid valve, computed by control unit from each input signal, is displayed.	

Diagnosis by CONSULT (Cont'd)

Item	Display	Monitor item		Description	Remarks
		ECU input signals	Main signals		
Shift solenoid valve A	SHIFT S/V A [ON/OFF]	—	X	• Control value of shift solenoid valve A, computed by control unit from each input signal, is displayed.	Control value of solenoid is displayed even if solenoid circuit is disconnected. The "OFF" signal is displayed if solenoid circuit is shorted.
Shift solenoid valve B	SHIFT S/V B [ON/OFF]	—	X	• Control value of shift solenoid valve B, computed by control unit from each input signal, is displayed.	
Overrun clutch solenoid valve	OVERRUN/C S/V [ON/OFF]	—	X	• Control value of overrun clutch solenoid valve computed by control unit from each input signal is displayed.	
Self-diagnosis display lamp (Power shift lamp)	SELF-D DP LMP [ON/OFF]	—	X	• Control status of power shift lamp is displayed.	

X: Applicable
—: Not applicable

DATA ANALYSIS

Item	Display form	Meaning
Torque converter clutch solenoid valve duty	Approximately 4% ↓ Approximately 94%	Lock-up "OFF" ↓ Lock-up "ON"
Line pressure solenoid valve duty	Approximately 0% ↓ Approximately 95%	Low line-pressure (Small throttle opening) ↓ High line-pressure (Large throttle opening)
Throttle position sensor	Approximately 0.5V	Fully-closed throttle
	Approximately 4V	Fully-open throttle
Fluid temperature sensor	Approximately 1.5V ↓ Approximately 0.5V	Cold [20°C (68°F)] ↓ Hot [80°C (176°F)]

Gear position	1	2	3	4
Shift solenoid valve A	ON	OFF	OFF	ON
Shift solenoid valve B	ON	ON	OFF	OFF

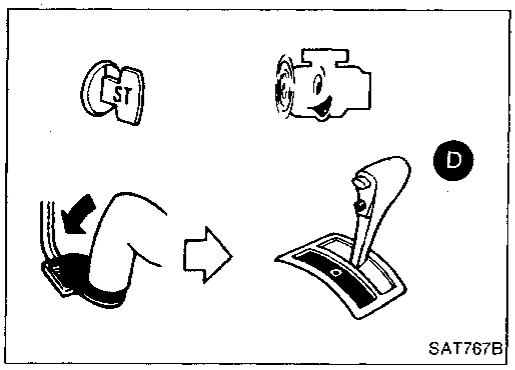

SAT767B

Preliminary Check

A/T FLUID CHECK

Fluid leakage check

1. Clean area suspected of leaking. — for example, mating surface of converter housing and transmission case.
2. Start engine, apply foot brake, place selector lever in "D" position and wait a few minutes.
3. Stop engine.

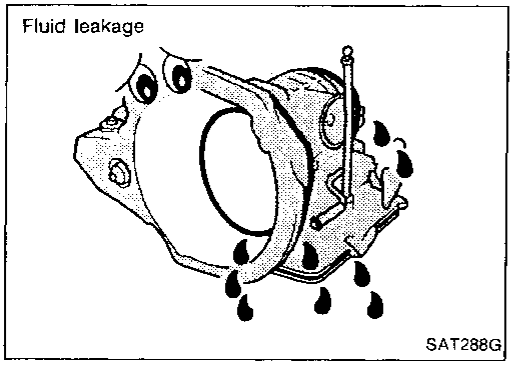

SAT288G

4. Check for fresh leakage.

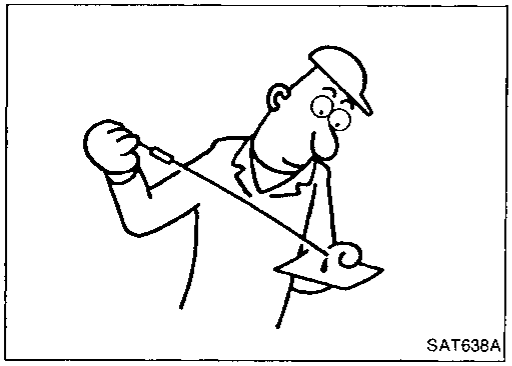
SAT638A

Fluid condition check

Fluid color	Suspected problem
Dark or black with burned odor	Wear of frictional material
Milky pink	Water contamination — Road water entering through filler tube or breather
Varnished fluid, light to dark brown and tacky	Oxidation — Over or under filling, — Overheating

Fluid level check — Refer to MA section (CHASSIS AND BODY MAINTENANCE).

ROAD TEST PROCEDURE

1. Check before engine is started.
2. Check at idle.
3. Cruise test.

SAT786A

ROAD TEST

Description

- The purpose of a road test is to analyze overall performance and determine causes of problems.
- The road test consists of the following three parts:

1. Check before engine is started
2. Check at idle
3. Cruise test

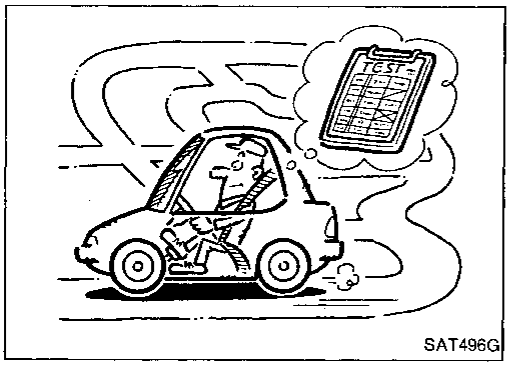

SAT496G

- Before road test, familiarize yourself with all test procedures and items to check.
- Conduct tests on all items until specified symptom is found. Troubleshoot items which check out No Good after road test. Refer to "Self-diagnosis" and "Diagnostic Procedure", AT-48, 89.

Preliminary Check (Cont'd)

1. Check before engine is started

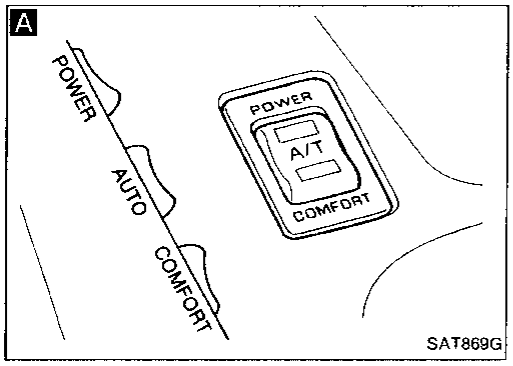

1. Park vehicle on flat surface.
2. Turn ignition switch to "OFF" position.

A

Set A/T mode switch to "AUTO" position.

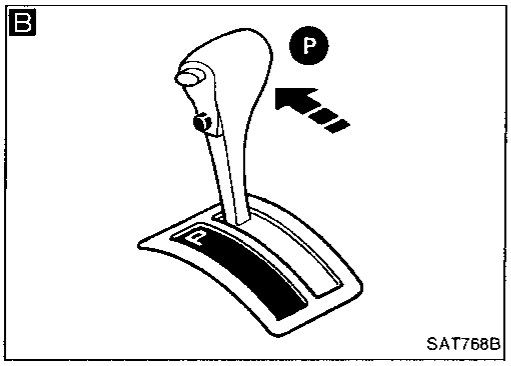

B

1. Move selector lever to "P" position.
2. Turn ignition switch to "ON" position. (Do not start engine.)

C

Does power indicator lamp come on for about 2 seconds?

- No → Go to Diagnostic Procedure 1, AT-89.
- Yes ↓

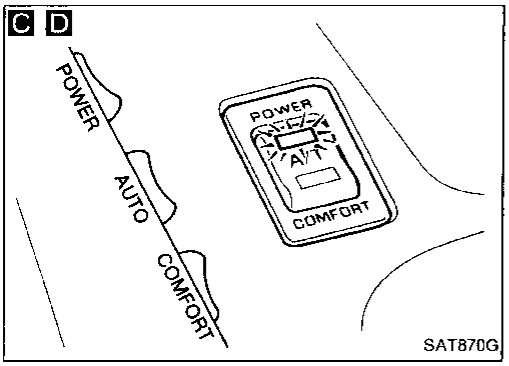

D

Does power indicator lamp flicker for about 8 seconds?

- Yes → Perform self-diagnosis. Refer to SELF-DIAGNOSIS PROCEDURE, AT-48.
- No ↓

E

1. Set A/T mode switch to "POWER" position.
2. Does power indicator lamp come on?

- No → Go to Diagnostic Procedure 2, AT-90.
- Yes ↓

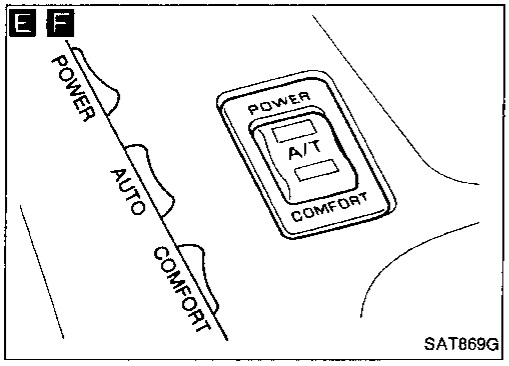

F

1. Set A/T mode switch to "COMFORT" position.
2. Does comfort indicator lamp come on?

- No → Go to Diagnostic Procedure 2, AT-90.
- Yes ↓

G

Set overdrive switch to "OFF" position.

Ⓐ

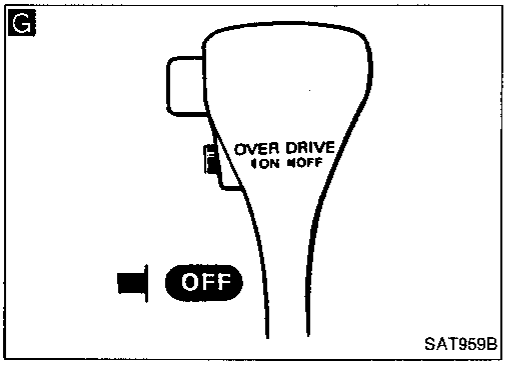

Preliminary Check (Cont'd)

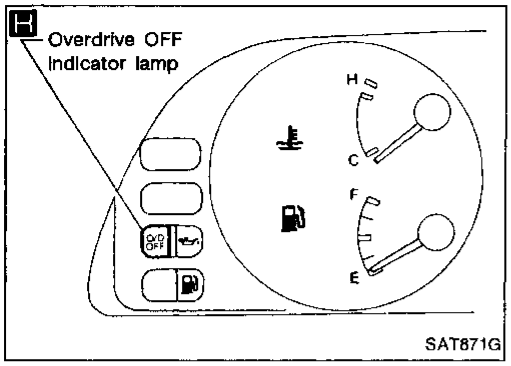

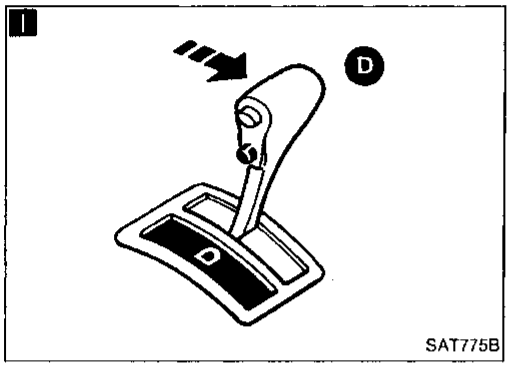

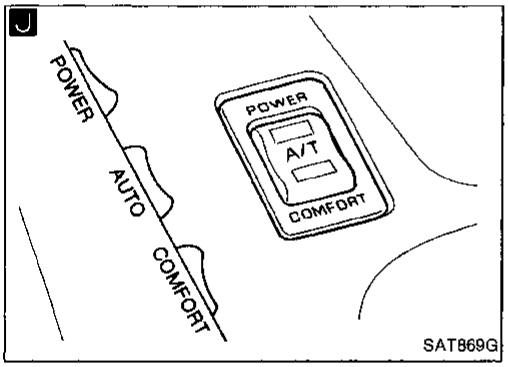

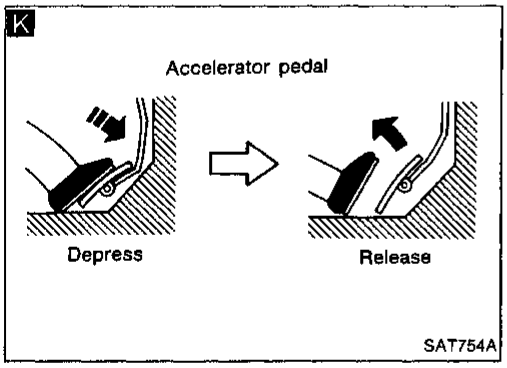

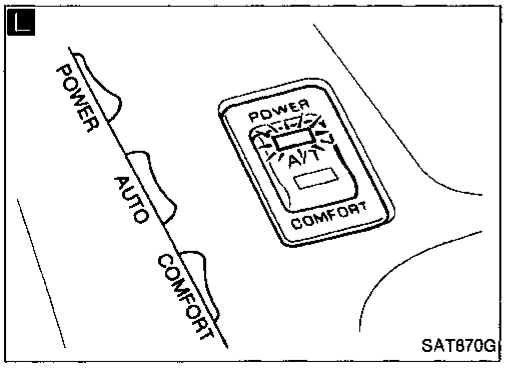

Ⓐ

H Does OD OFF indicator lamp come on?
- No → Go to Diagnostic Procedure 3, AT-90.
- Yes ↓

I Depress brake pedal and move selector lever to "D" position.

↓

J Set A/T mode switch to "AUTO" position.

↓

K Depress and release accelerator pedal quickly.

↓

L Does power indicator lamp come on for about 3 seconds after accelerator pedal is depressed?
- No → Go to Diagnostic Procedure 4, AT-90.
- Yes ↓

Turn ignition switch to "OFF" position.

↓

Perform self-diagnosis and note NG items:
Refer to SELF-DIAGNOSIS PROCEDURE, AT-48.

↓

Go to "ROAD TEST — Check at idle", AT-28.

Preliminary Check (Cont'd)

2. Check at idle

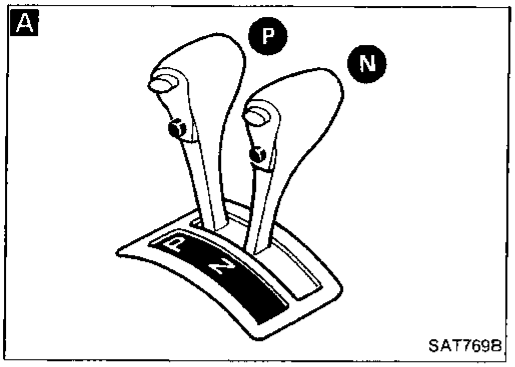

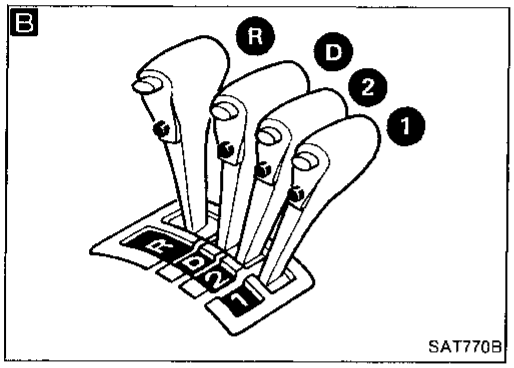

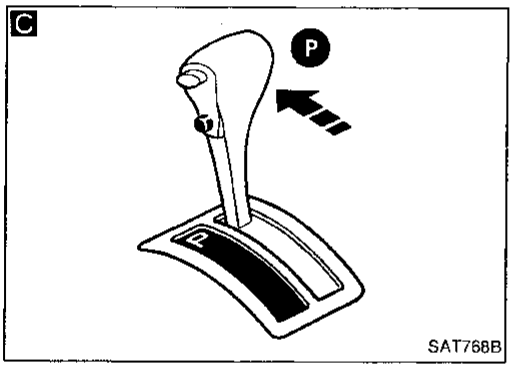

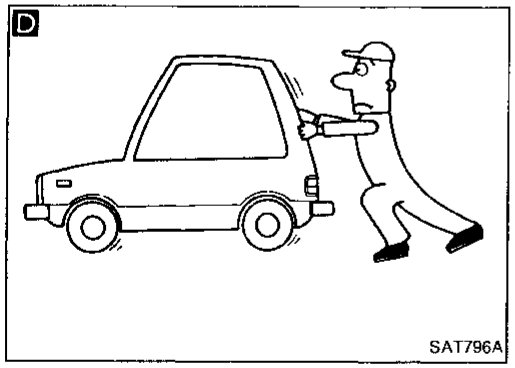

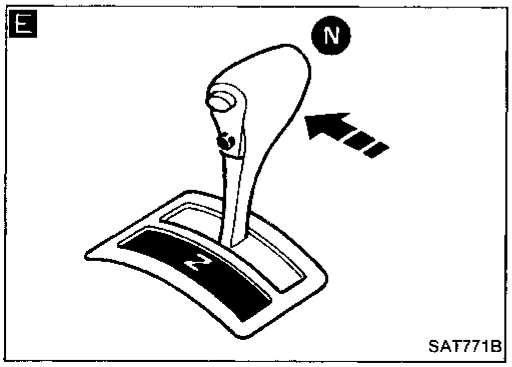

A

1. Park vehicle on flat surface.
2. Move selector lever to "P" position.
3. Turn ignition switch to "OFF" position.
4. Turn ignition switch to "START" position.

↓

Does engine start? — No → Go to Diagnostic Procedure 5, AT-91.

↓ Yes

Turn ignition switch to "ACC" position.

↓

B

1. Move selector lever to "D", "1", "2" or "R" position.
2. Turn ignition switch to "START" position.

↓

Does engine start? — Yes → Go to Diagnostic Procedure 5, AT-91.

↓ No

C

1. Move selector lever to "P" position.
2. Turn ignition switch to "OFF" position.
3. Release parking brake.

↓

D

1. Push vehicle forward or backward.
2. Does vehicle move when it is pushed forward or backward?
3. Apply parking brake.

Yes → Go to Diagnostic Procedure 6, AT-91.

↓ No

E

1. Start engine.
2. Move selector lever to "N" position.
3. Release parking brake.
4. Does vehicle move forward or backward?

Yes → Go to Diagnostic Procedure 7, AT-92.

↓ No

Ⓐ

Preliminary Check (Cont'd)

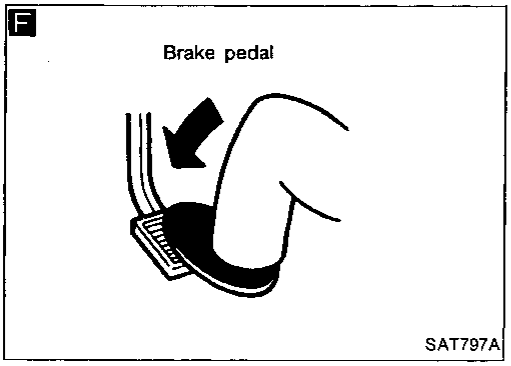

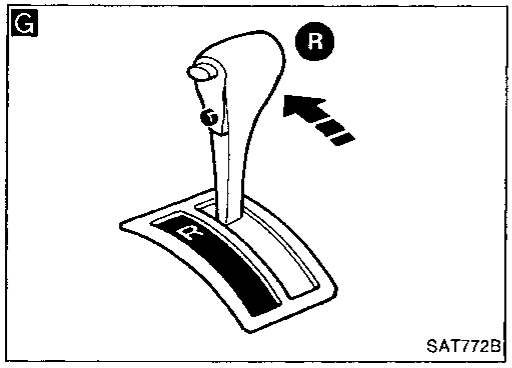

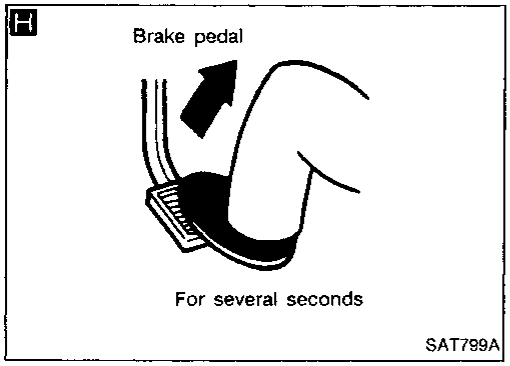

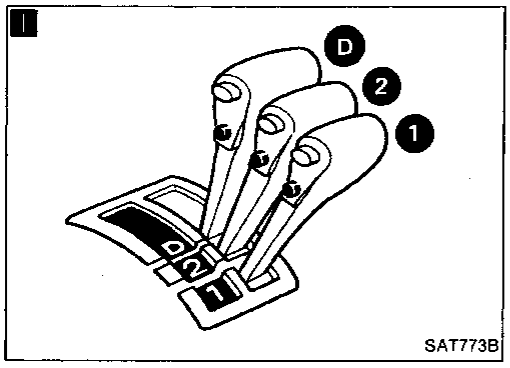

Ⓐ

F

Apply foot brake.

G

1. Move selector lever to "R" position.
2. Is there large shock when changing from "N" to "R" position?

Yes → Go to Diagnostic Procedure 8, AT-93.

No ↓

H

1. Release foot brake for several seconds.
2. Does vehicle creep backward when foot brake is released?

No → Go to Diagnostic Procedure 9, AT-94.

Yes ↓

I

1. Move selector lever to "D", "2" and "1" positions and check if vehicle creeps forward.
2. Does vehicle creep forward in all three positions?

No → Go to Diagnostic Procedure 10, AT-95.

Yes ↓

Go to Cruise test, AT-30.

Preliminary Check (Cont'd)

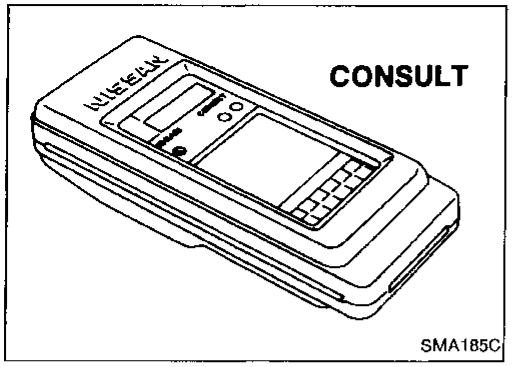

3. Cruise test

- Check all items listed in Parts 1 through 3.

With CONSULT

- Using CONSULT, conduct a cruise test and record the result.
- Print the result and ensure that shifts and lock-ups take place as per "Shift Schedule".

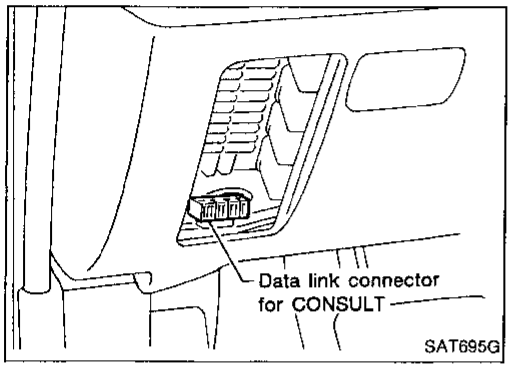

CONSULT setting procedure

1. Turn off ignition switch.
2. Connect "CONSULT" to Data link connector for CONSULT. Data link connector for CONSULT is located inside dash panel.

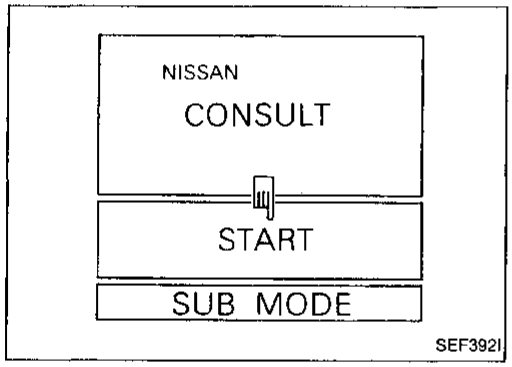

3. Turn on ignition switch.
4. Touch "START".

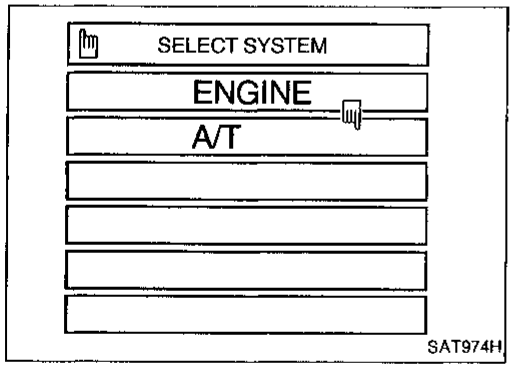

5. Touch "A/T".

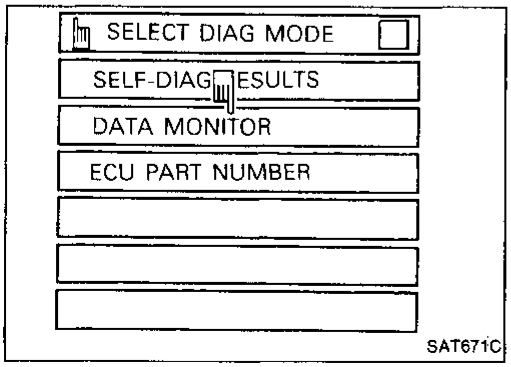

6. Touch "DATA MONITOR".

Preliminary Check (Cont'd)

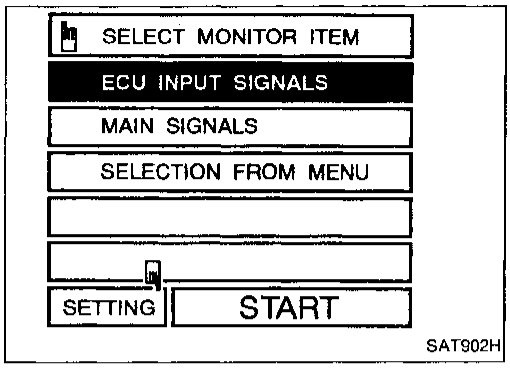

7. Touch "SETTING" to set recording condition.

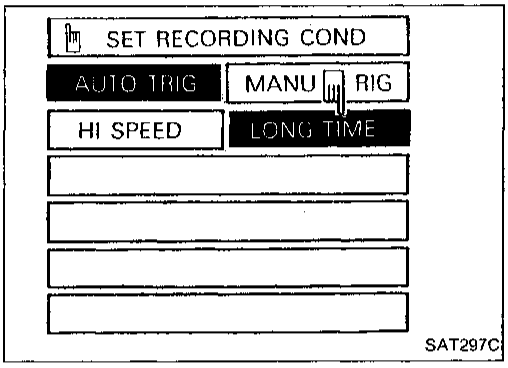

8. Touch "LONG TIME" and "ENTER" key.

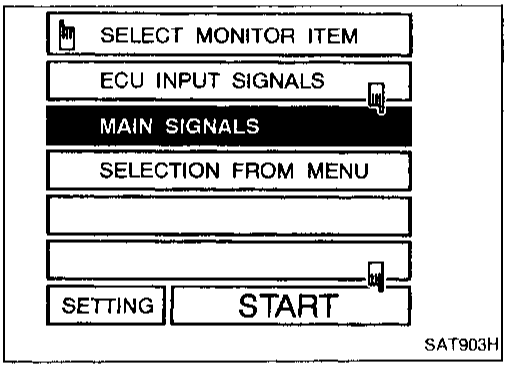

9. Go back to SELECT MONITOR ITEM and touch "MAIN SIGNALS".
10. Touch "START".

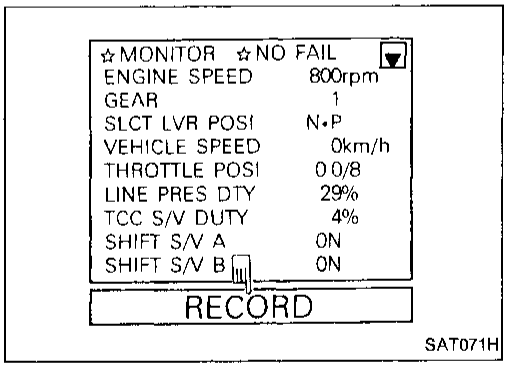

11. When performing cruise test, touch "RECORD".

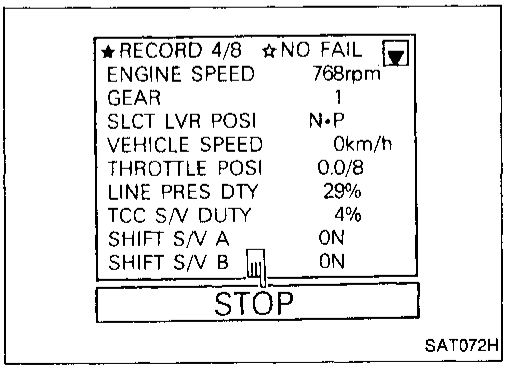

12. After finishing cruise test part 1, touch "STOP".

Preliminary Check (Cont'd)

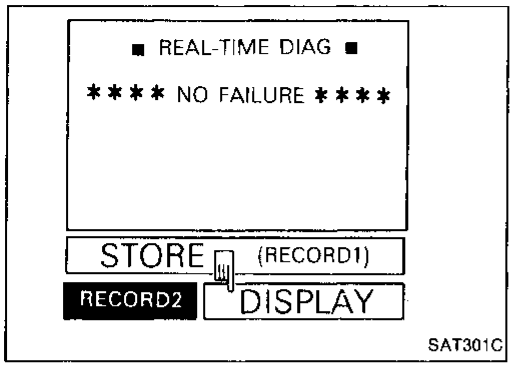

13. Touch "DISPLAY".

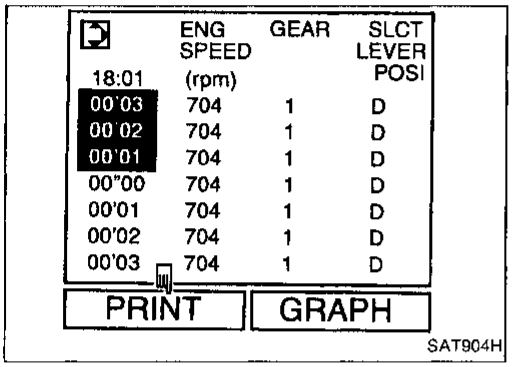

14. Touch "PRINT".

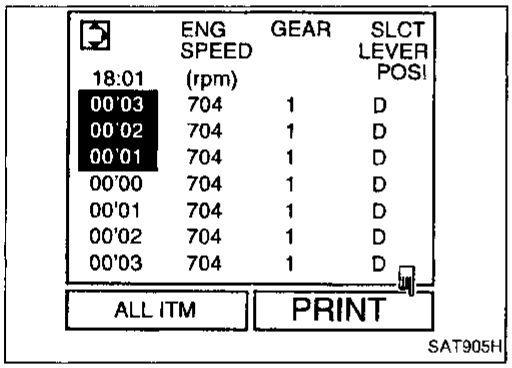

15. Touch "PRINT".

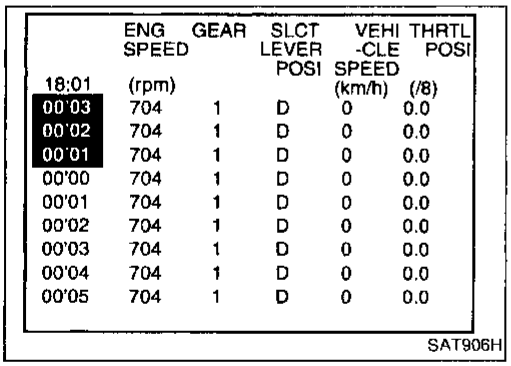

16. Check the monitor data printed out.
17. Continue cruise test part 2 and 3.

Preliminary Check (Cont'd)

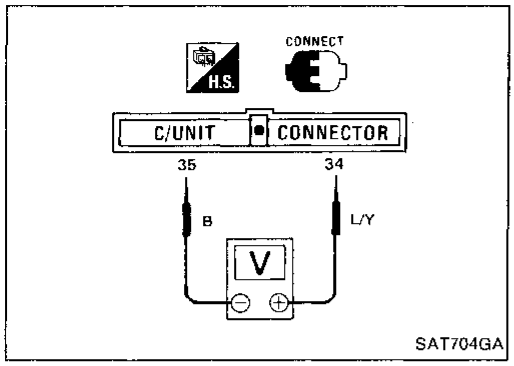

Without CONSULT

- Throttle position can be checked by voltage across terminals ㉞ and ㉟ of A/T control unit.

Cruise test — Part 1

1. Drive vehicle for about 10 minutes to warm engine oil and ATF up to operating temperature.
   ATF operating temperature:
   50 - 80°C (122 - 176°F)

↓

A

1. Park vehicle on flat surface.
2. Set A/T mode switch to "AUTO" position.

↓

B

Set overdrive switch to "ON" position.

↓

C

1. Move selector lever to "P" position.
2. Start engine.

↓

D

Move selector lever to "D" position.

↓

Ⓐ

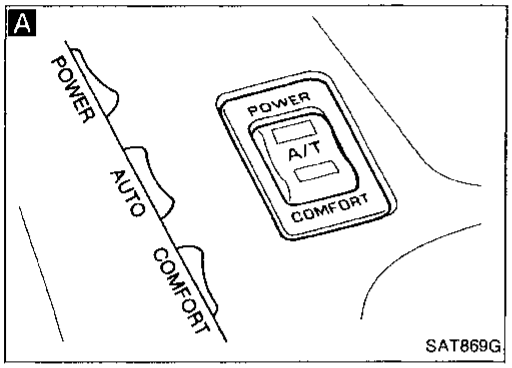

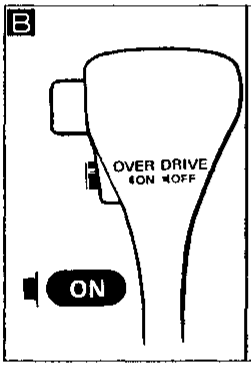

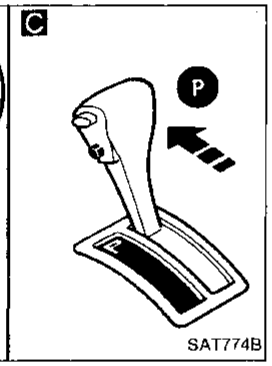

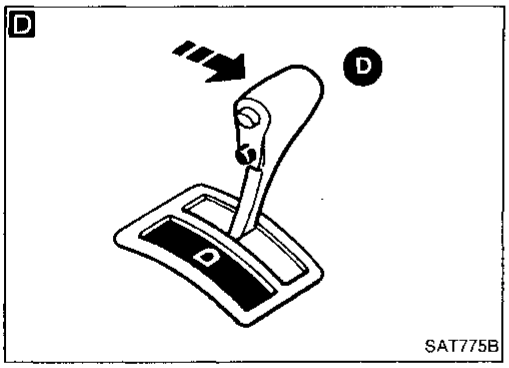

Preliminary Check (Cont'd)

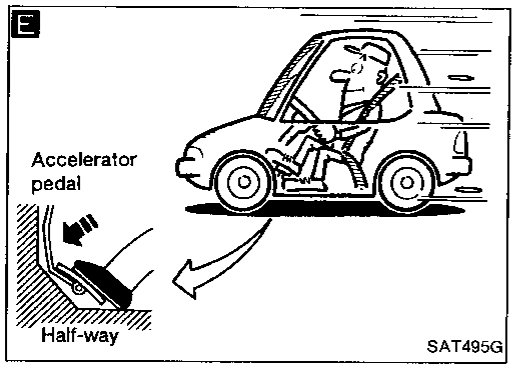

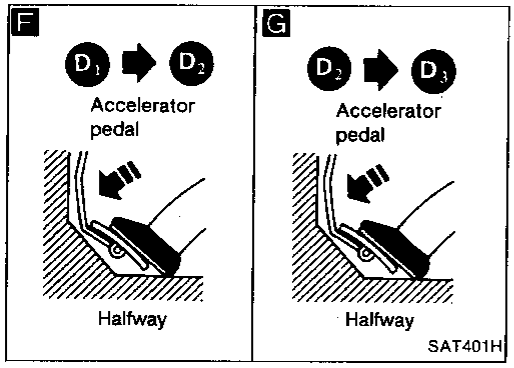

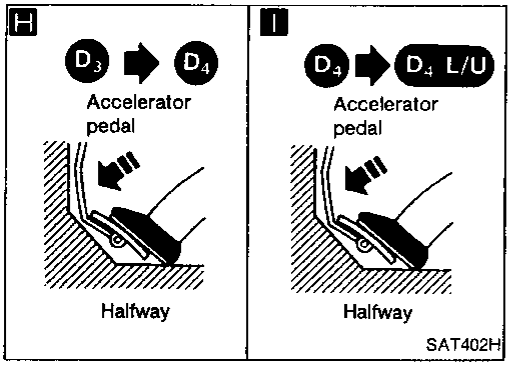

Ⓐ

E

Accelerate vehicle by constantly depressing accelerator pedal halfway.

Does vehicle start from D_1?
Read gear position.

No → Go to Diagnostic Procedure 11, AT-96.

Yes ↓

F

Does A/T shift from D_1 to D_2 at the specified speed?
Read gear position, throttle opening and vehicle speed.
Specified speed when shifting from D_1 to D_2:
Refer to Shift schedule, AT-38.

No → Go to Diagnostic Procedure 12, AT-97.

Yes ↓

G

Does A/T shift from D_2 to D_3 at the specified speed?
Read gear position, throttle position and vehicle speed.
Specified speed when shifting from D_2 to D_3:
Refer to Shift schedule, AT-38.

No → Go to Diagnostic Procedure 13, AT-98.

Yes ↓

H

Does A/T shift from D_3 to D_4 at the specified speed?
Read gear position, throttle position and vehicle speed.
Specified speed when shifting from D_3 to D_4:
Refer to Shift schedule, AT-38.

No → Go to Diagnostic Procedure 14, AT-99.

Yes ↓

I

Does A/T perform lock-up at the specified speed?
Read vehicle speed, throttle position when lock-up duty becomes 94%.
Specified speed when lock-up occurs:
Refer to Shift schedule, AT-38.

No → Go to Diagnostic Procedure 15, AT-100.

Yes ↓

Ⓑ

Preliminary Check (Cont'd)

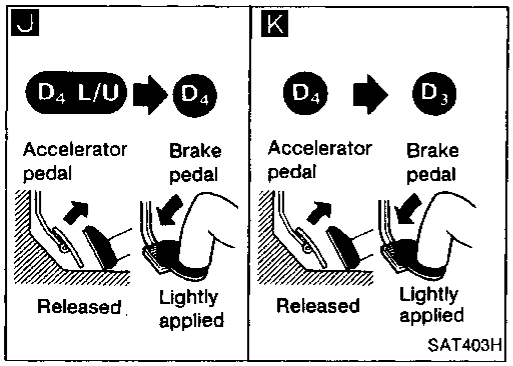

Ⓑ

Does A/T hold lock-up condition for more than 30 seconds?

No → Go to Diagnostic Procedure 16, AT-101.

Yes ↓

J

1. Release accelerator pedal.
2. Is lock-up released when accelerator pedal is released?

No → Go to Diagnostic Procedure 17, AT-101.

Yes ↓

K

1. Decelerate vehicle by applying foot brake lightly.
2. Does engine speed return to idle smoothly when A/T is shifted from D_4 to D_3?

Read gear position and engine speed.

No → Go to Diagnostic Procedure 18, AT-102.

Yes ↓

1. Stop vehicle.
2. Go to "Cruise test — Part 2", AT-36.

Preliminary Check (Cont'd)

Cruise test — Part 2

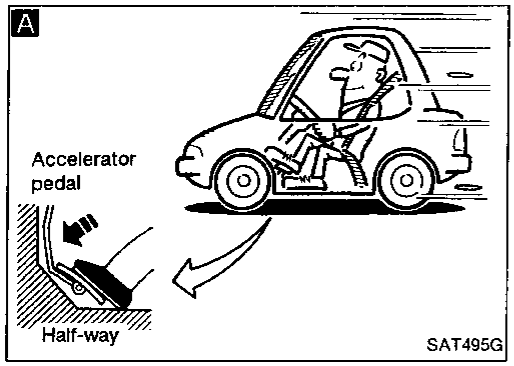

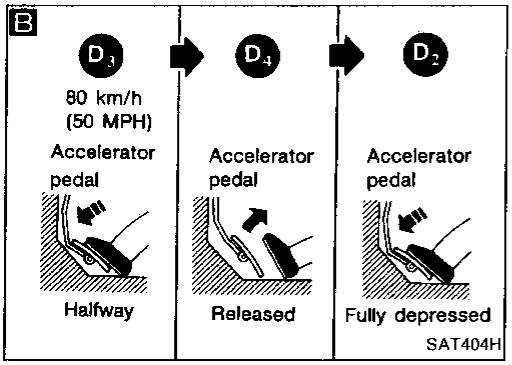

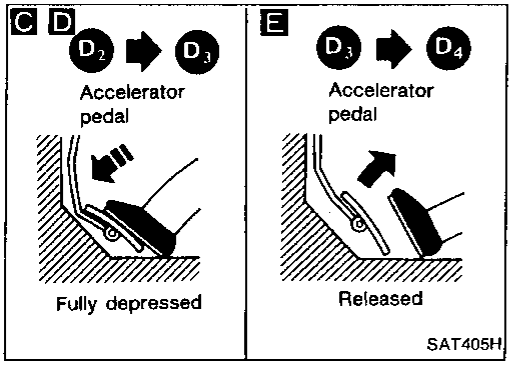

1. Confirm A/T mode switch is in "Auto" position and overdrive switch is in "ON" position.
2. Confirm selector lever is in "D" position.

A

1. Accelerate vehicle by half throttle again.
2. Does vehicle start from D_1?
   Read gear position.

No → Go to Diagnostic Procedure 19, AT-103.

Yes ↓

B

1. Accelerate vehicle to 80 km/h (50 MPH) as shown in illustration.
2. Release accelerator pedal and then quickly depress it fully.
3. Does A/T shift from D_4 to D_2 as soon as accelerator pedal is depressed fully?
   Read gear position and throttle position.

No → Go to Diagnostic Procedure 12, AT-97.

Yes ↓

C

Does A/T shift from D_2 to D_3 at the specified speed?
Read gear position, throttle position and vehicle speed.
Specified speed when shifting from D_2 to D_3:
Refer to Shift schedule, AT-38.

No → Go to Diagnostic Procedure 13, AT-98.

Yes ↓

D

Release accelerator pedal after shifting from D_2 to D_3.

E

Does A/T shift from D_3 to D_4 and does vehicle decelerate by engine brake?
Read gear position, throttle position and vehicle speed.

No → Go to Diagnostic Procedure 14, AT-99.

Yes ↓

1. Stop vehicle.
2. Go to "Cruise test — Part 3", AT-37.

Preliminary Check (Cont'd)

Cruise test — Part 3

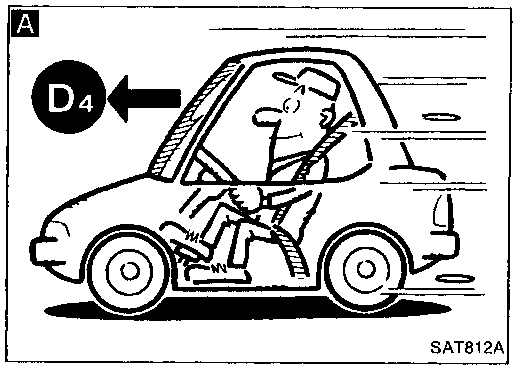

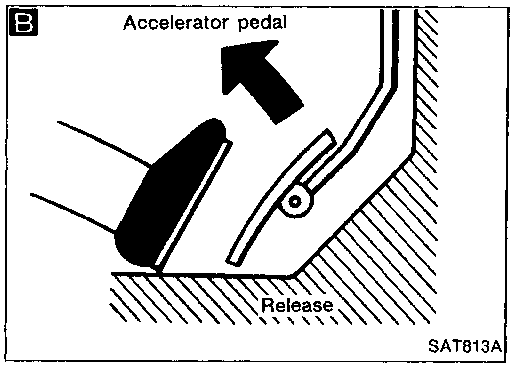

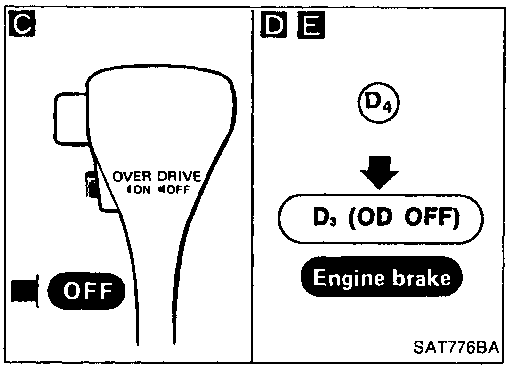

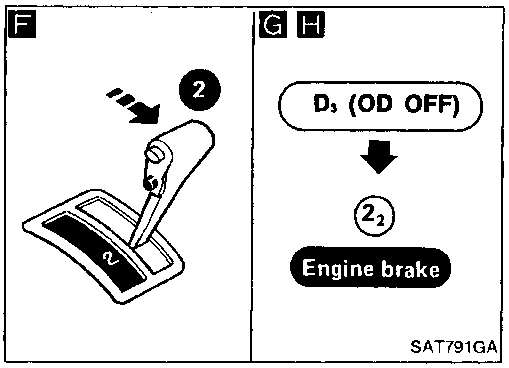

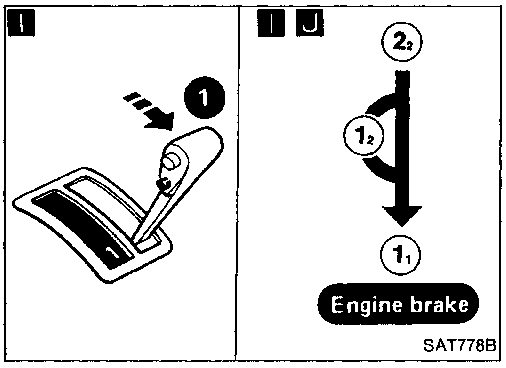

1. Confirm A/T mode switch is in "Auto" position and overdrive switch is in "ON" position.
2. Confirm selector lever is in "D" position.

↓

A Accelerate vehicle using half-throttle to D_4.

↓

B Release accelerator pedal.

↓

C Set overdrive switch to "OFF" position while driving in D_4.

↓

D Does A/T shift from D_4 to D_3? **Read gear position and vehicle speed.**
- No → Go to Diagnostic Procedure 20, AT-103.
- Yes ↓

E Does vehicle decelerate by engine brake?
- No → Go to Diagnostic Procedure 18, AT-102.
- Yes ↓

F Move selector lever from "D" to "2" position while driving in D_3.

↓

G Does A/T shift from D_3 to 2_2? **Read gear position.**
- No → Go to Diagnostic Procedure 21, AT-104.
- Yes ↓

H Does vehicle decelerate by engine brake?
- No → Go to Diagnostic Procedure 18, AT-102.
- Yes ↓

I
1. Move selector lever from "2" to "1" position while driving in 2_2.
2. Does A/T shift from 2_2 to 1_1 position? **Read gear position.**

- No → Go to Diagnostic Procedure 22, AT-104.
- Yes ↓

J Does vehicle decelerate by engine brake?
- No → Go to Diagnostic Procedure 23, AT-104.
- Yes ↓

1. Stop vehicle.
2. Perform self-diagnosis. Refer to SELF-DIAGNOSTIC PROCEDURE, AT-48.

SHIFT SCHEDULE

Vehicle speed when shifting gears

Throttle position	Shift pattern	Vehicle speed km/h (MPH)						
		$D_1 \rightarrow D_2$	$D_2 \rightarrow D_3$	$D_3 \rightarrow D_4$	$D_4 \rightarrow D_3$	$D_3 \rightarrow D_2$	$D_2 \rightarrow D_1$	$1_2 \rightarrow 1_1$
Full throttle	Comfort	56 - 60 (35 - 37)	102 - 110 (63 - 68)	162 - 170 (101 - 106)	158 - 166 (98 - 103)	92 - 100 (57 - 62)	50 - 54 (31 - 34)	54 - 62 (34 - 39)
Half throttle	Comfort	35 - 39 (22 - 24)	62 - 70 (39 - 43)	98 - 106 (61 - 66)	62 - 70 (39 - 43)	40 - 48 (25 - 30)	11 - 15 (7 - 9)	54 - 62 (34 - 39)

Vehicle speed when performing lock-up

Throttle position	OD switch (Shift range)	Shift pattern	Vehicle speed km/h (MPH)	
			Lock-up "ON"	Lock-up "OFF"
2/8	ON [D_4]	Comfort	81 - 89 (50 - 55)	61 - 69 (38 - 43)
	OFF [D_3]	Comfort	86 - 94 (53 - 58)	83 - 91 (52 - 57)

A/T Electrical Parts Location

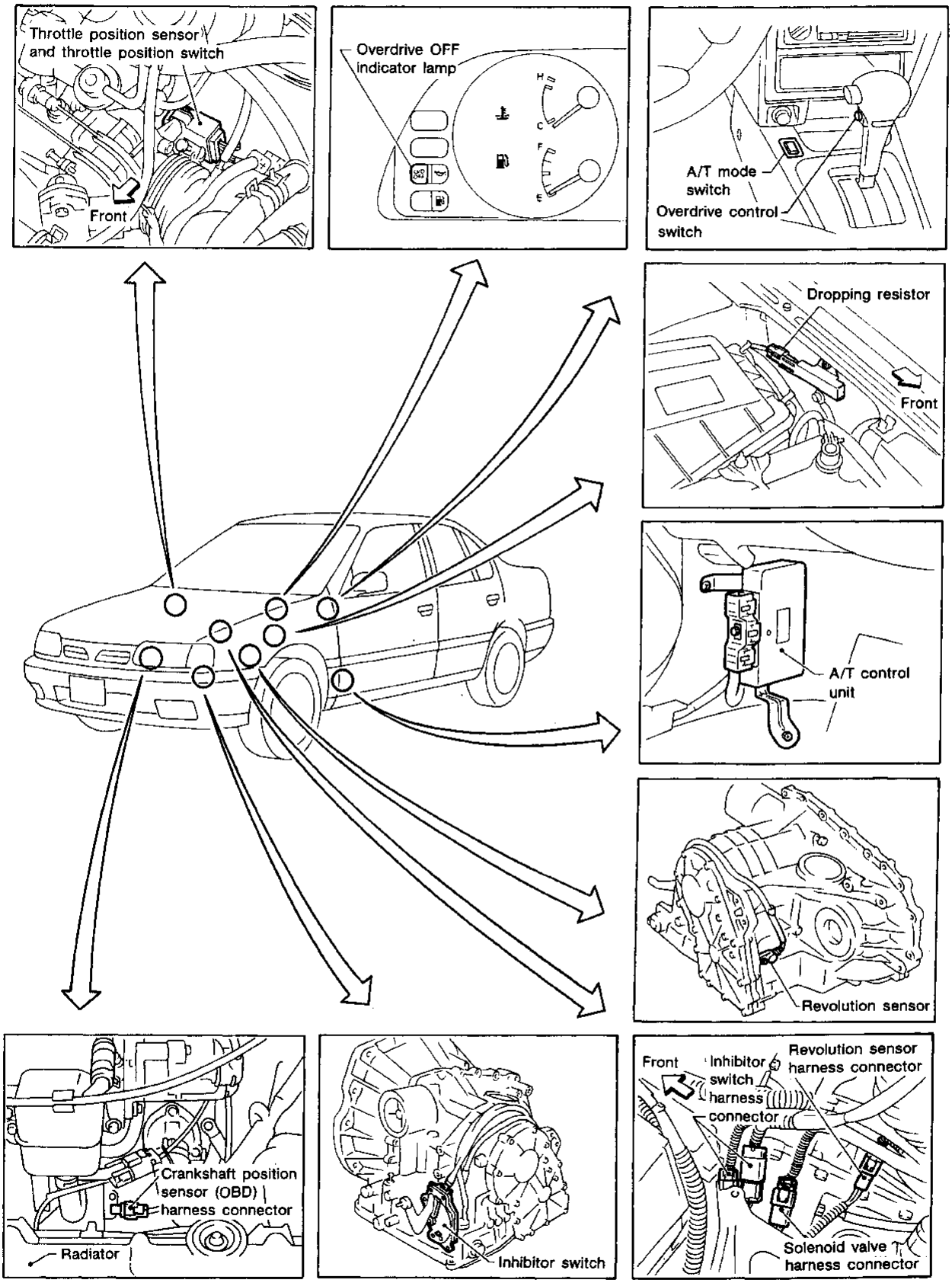

SAT313H

Circuit Diagram for Quick Pinpoint Check

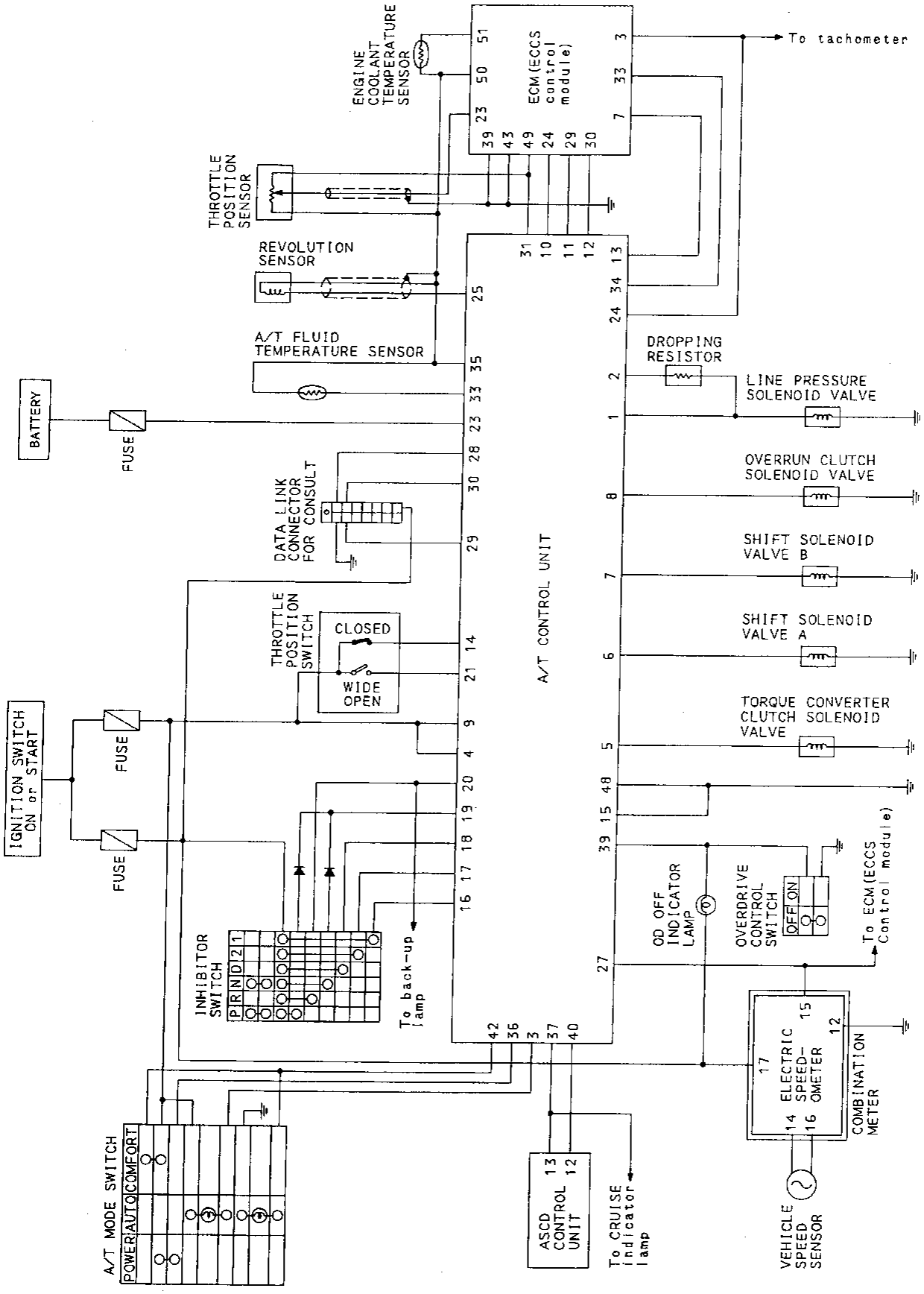

TAT021

Wiring Diagram — AT —

AT-A/T-01

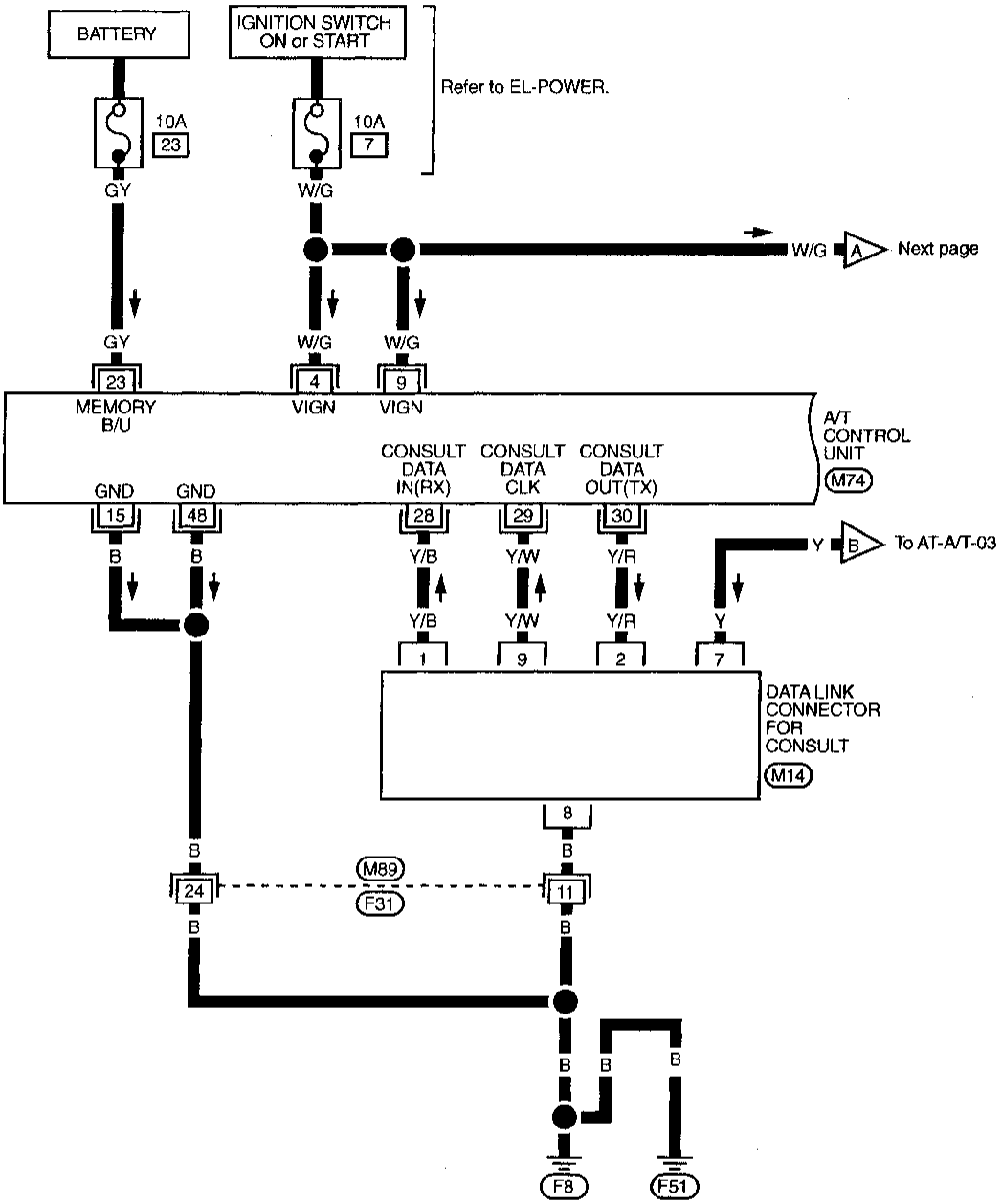

Refer to last page (Foldout page).
M74

TAT014

Wiring Diagram — AT — (Cont'd)

AT-A/T-02

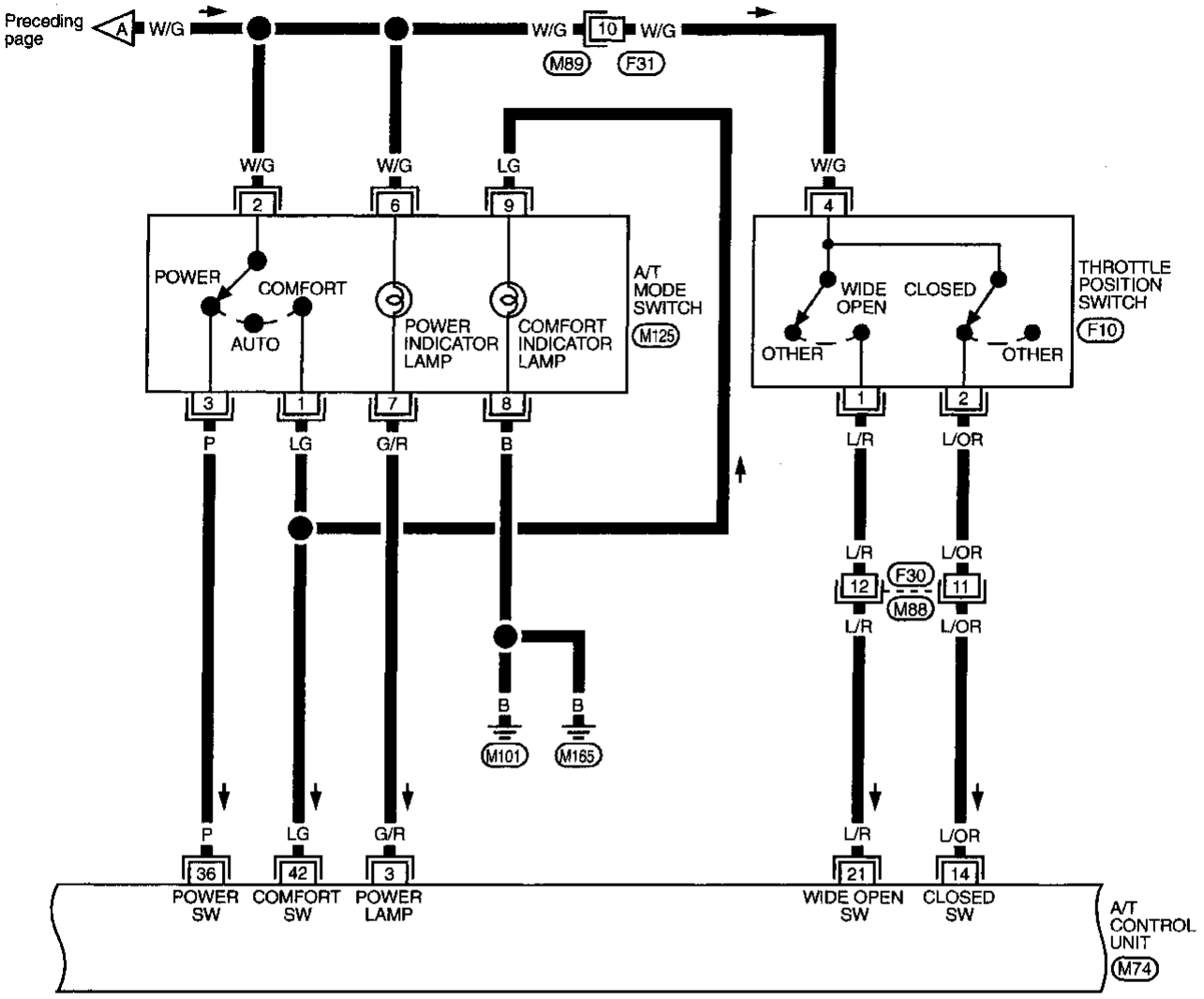

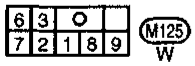

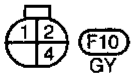

Refer to last page (Foldout page).
M74

TAT015

Wiring Diagram — AT — (Cont'd)

AT-A/T-03

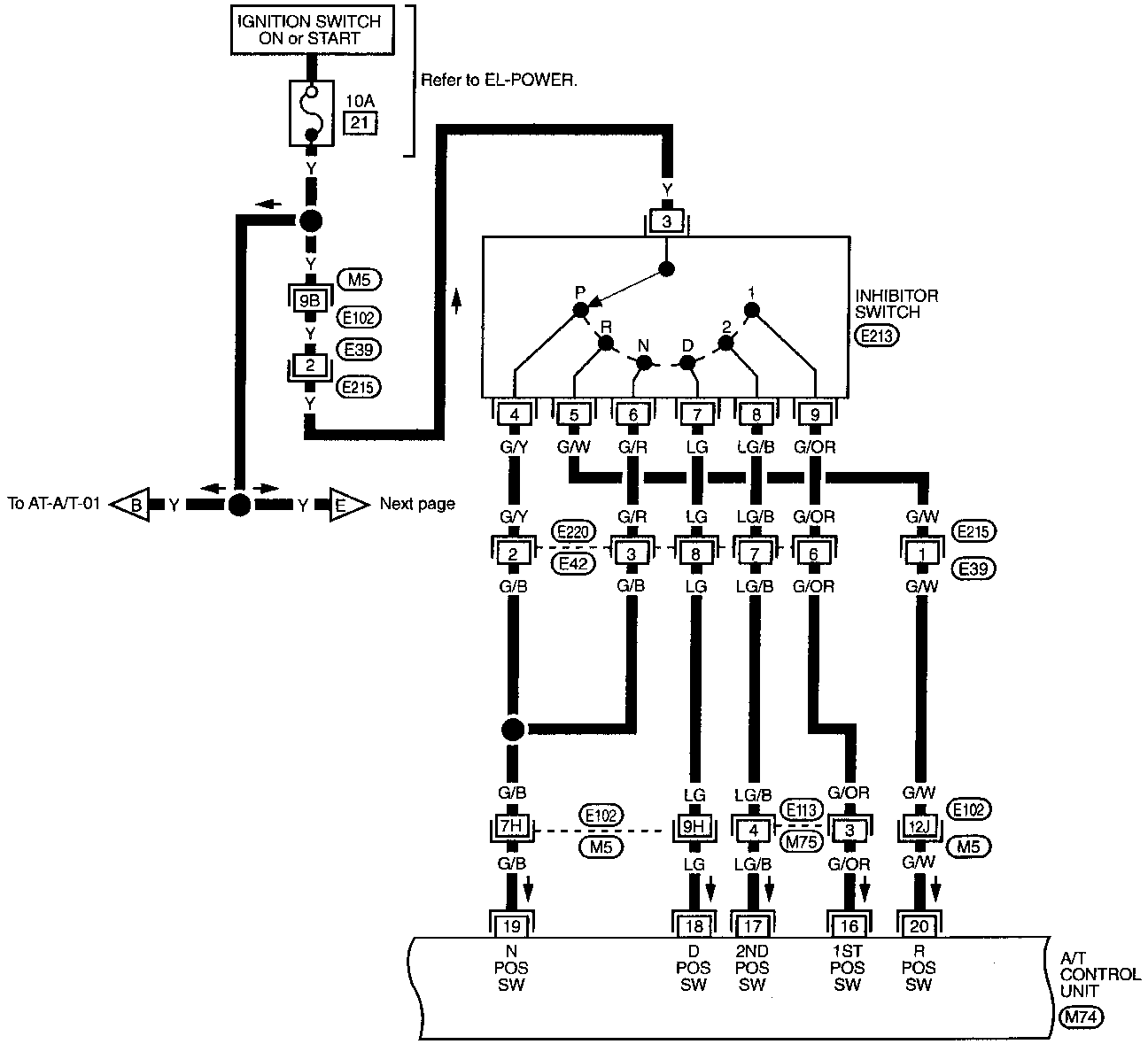

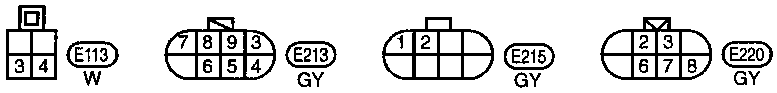

Refer to last page (Foldout page).
E102 , M5
M74

TAT016

Wiring Diagram — AT — (Cont'd)

AT-A/T-04

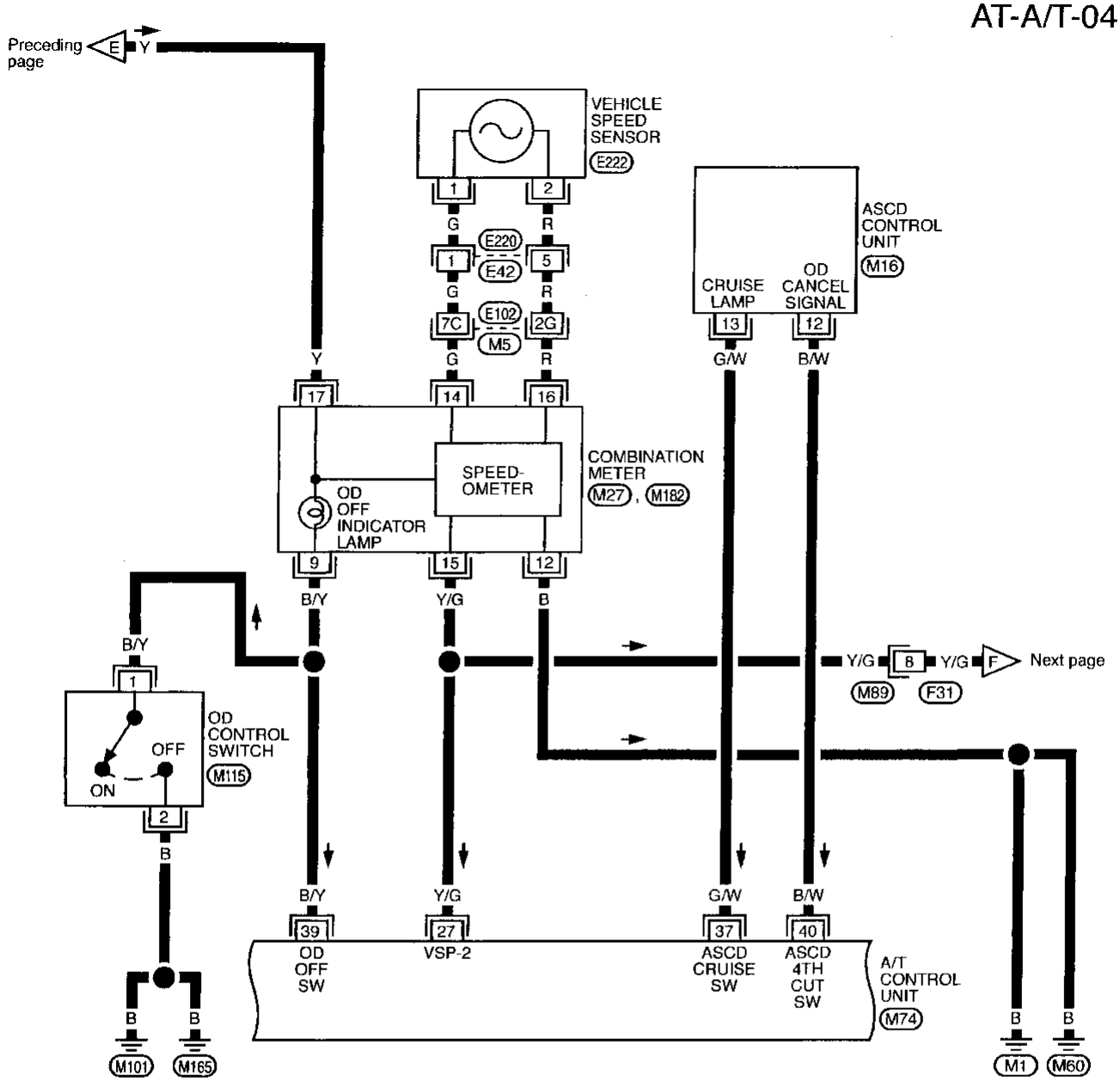

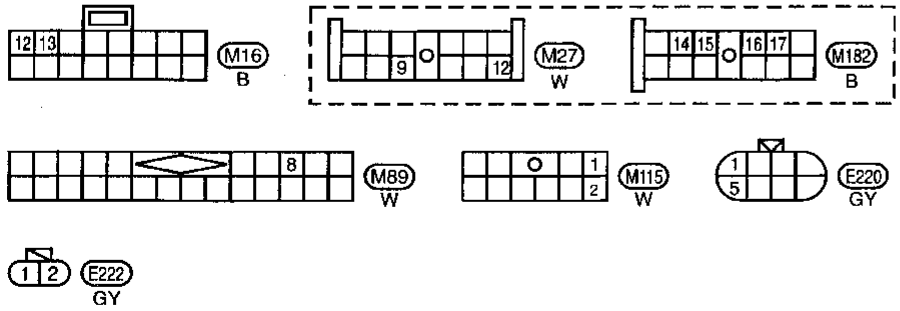

Refer to last page (Foldout page).
E102, M5
M74

TAT017

Wiring Diagram — AT — (Cont'd)

AT-A/T-05

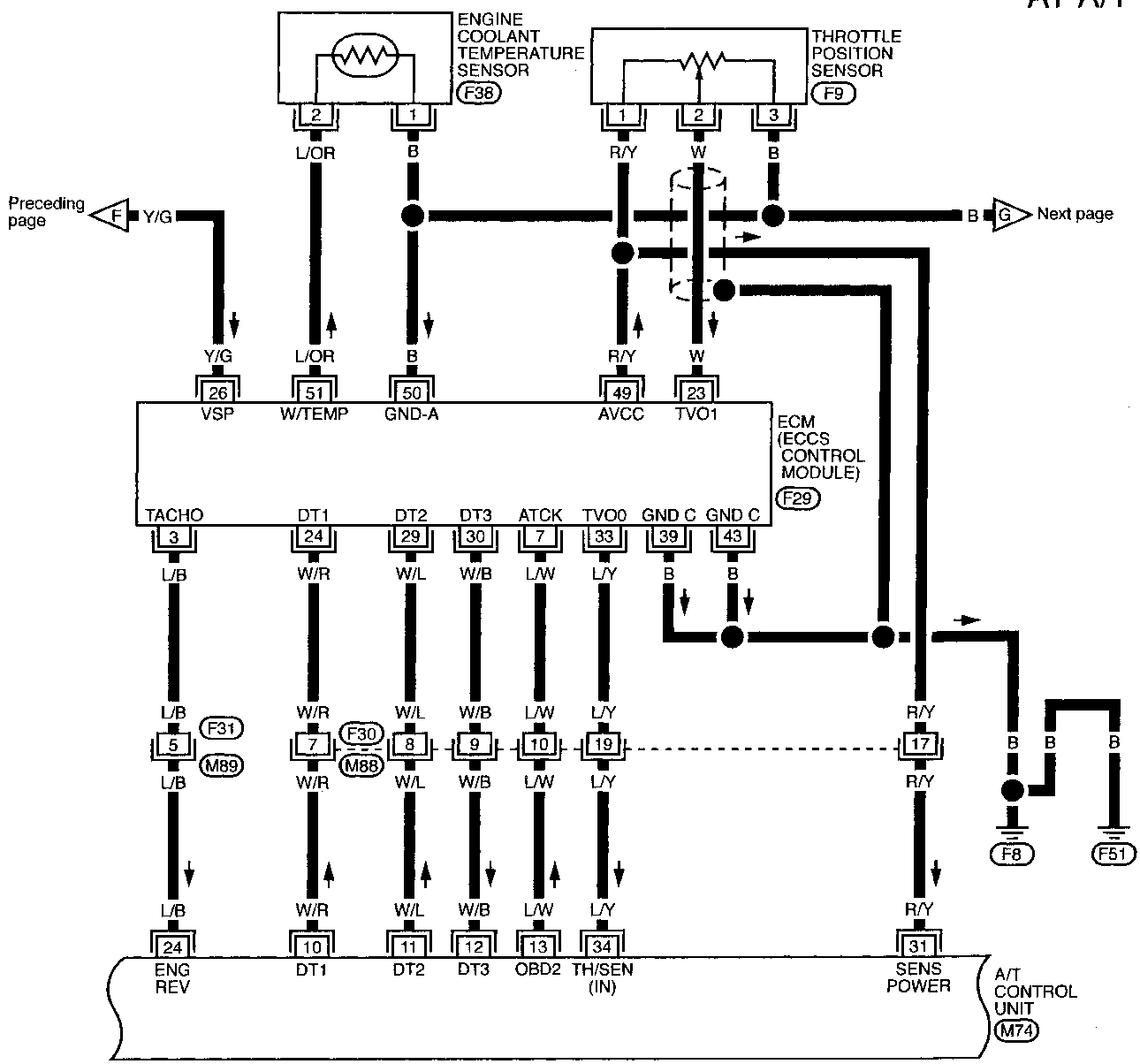

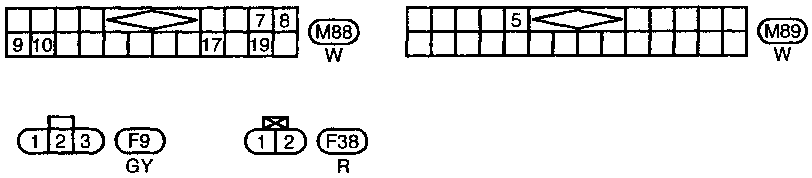

Refer to last page (Foldout page).
M74
F29

TAT018

Wiring Diagram — AT — (Cont'd)

AT-A/T-06

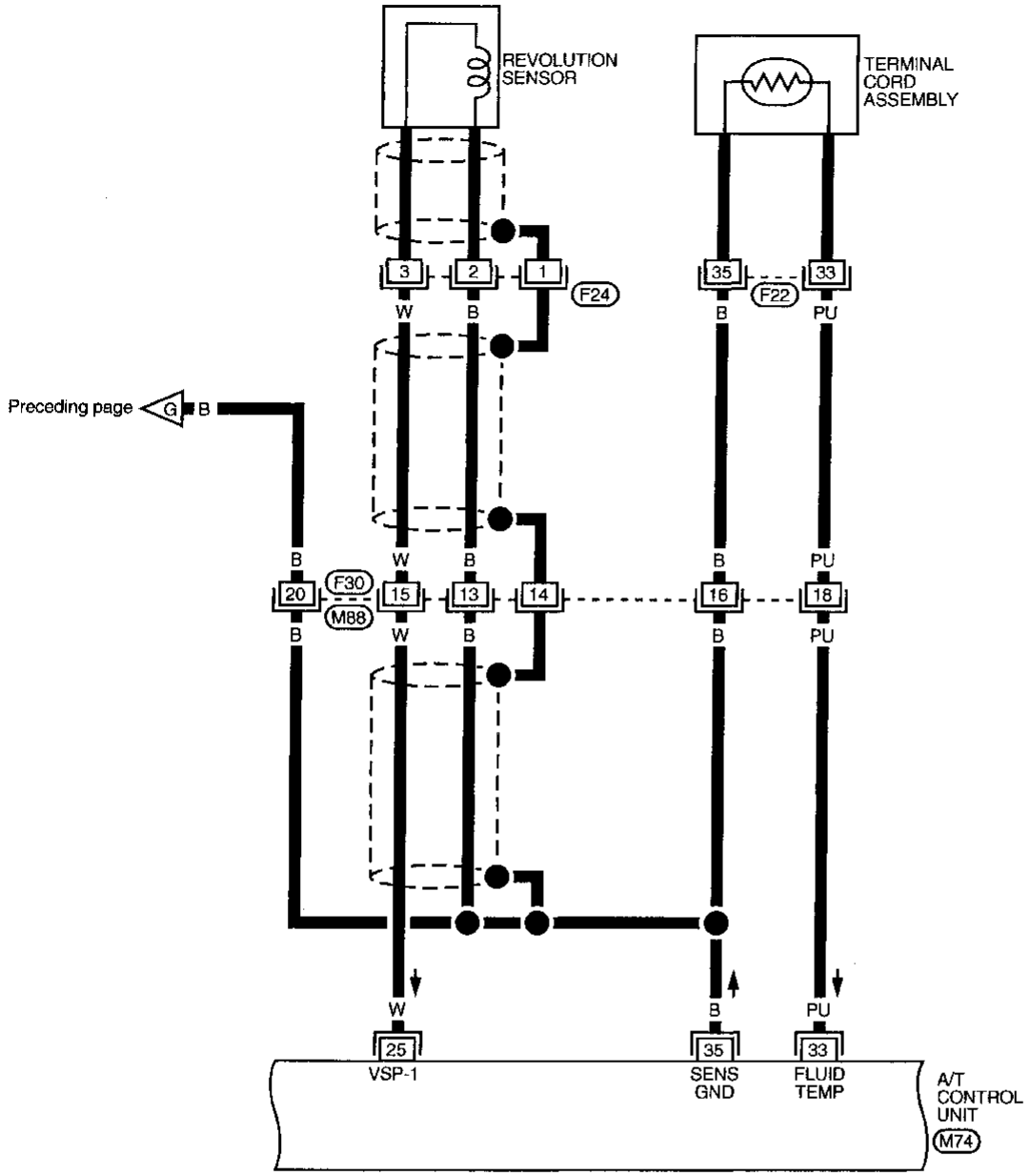

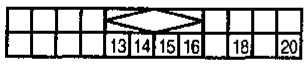

M88
W

F22
BR

F24
GY

Refer to last page (Foldout page).
M74

TAT019

Wiring Diagram — AT — (Cont'd)

AT-A/T-07

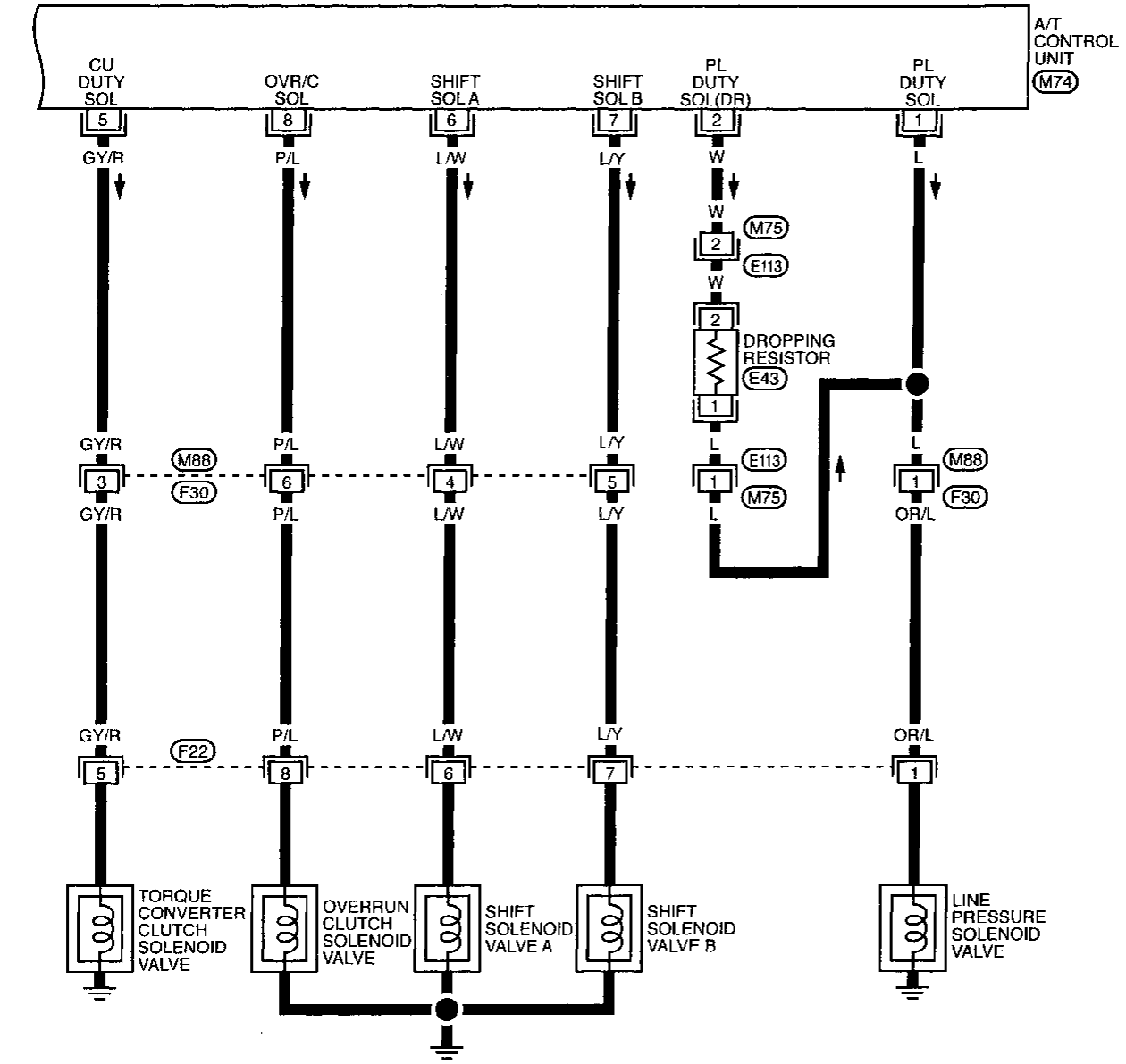

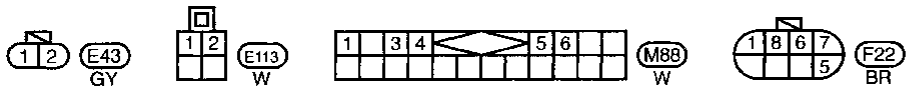

Refer to last page (Foldout page).
M74

TAT020

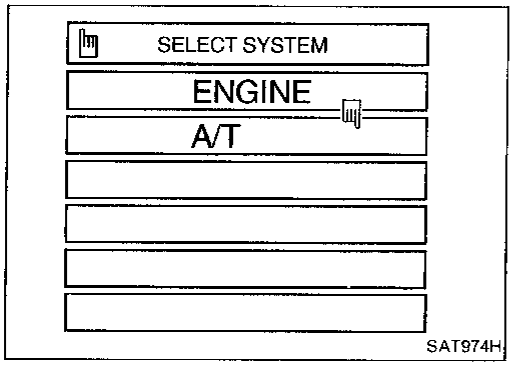

Self-diagnosis

After performing this procedure, place check marks for results on the "DIAGNOSTIC WORKSHEET", AT-17. Reference pages are provided following the items.

SELF-DIAGNOSTIC PROCEDURE (With CONSULT)

1. Turn on CONSULT and touch "A/T".
   If A/T is not displayed, check A/T control unit power supply and ground circuit. Refer to AT-105. If result is NG, refer to EL section ("POWER SUPPLY ROUTING").

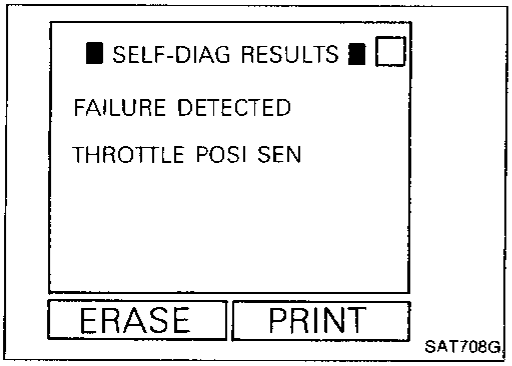

2. Touch "SELF-DIAG RESULTS".
   Display shows malfunction experienced since the last erasing operation.
   CONSULT performs REAL-TIME SELF-DIAGNOSIS.
   Also, any malfunction detected while in this mode will be displayed at real time.

Detected items (Screen terms for CONSULT, "SELF-DIAG RESULTS" mode)	Malfunction is detected when ...	Indicator for Diagnostic Results	
		POWER POWER indicator lamp (Available when "A/T" on CONSULT is touched.)	CHECK Malfunction indicator lamp*2 (Available when "ENGINE" on CONSULT is touched.)
Inhibitor switch circuit (INHIBITOR SWITCH)	• A/T control unit does not receive the correct voltage signal (based on the gear position) from the switch.	—	X
Revolution sensor (VHCL SPEED SENA/T)	• A/T control unit does not receive the proper voltage signal from the sensor.	X	X
Vehicle speed sensor (Meter) (VHCL SPEED SENMTR)	• A/T control unit does not receive the proper voltage signal from the sensor.	X	—
Improper shifting to 1st gear position (A/T 1ST SIGNAL)	• A/T cannot be shifted to the 1st gear position even when electrical circuit is good.	—	X*1
Improper shifting to 2nd gear position (A/T 2ND SIGNAL)	• A/T cannot be shifted to the 2nd gear position even when electrical circuit is good.	—	X*1
Improper shifting to 3rd gear position (A/T 3RD SIGNAL)	• A/T cannot be shifted to the 3rd gear position even when electrical circuit is good.	—	X*1
Improper shifting to 4th gear position or TCC (A/T 4TH SIG OR TCC)	• A/T cannot be shifted to the 4th gear position or can not perform lock-up, even when electrical circuit is good.	—	X*1
Shift solenoid valve A (SHIFT SOLENOID/V A)	• A/T control unit detects the improper voltage drop when it tries to operate the solenoid valve.	X	X
Shift solenoid valve B (SHIFT SOLENOID/V B)	• A/T control unit detects the improper voltage drop when it tries to operate the solenoid valve.	X	X
Overrun clutch solenoid valve (OVERRUN CLUTCH S/V)	• A/T control unit detects the improper voltage drop when it tries to operate the solenoid valve.	X	X
T/C clutch solenoid valve (TOR CONV CLUTCH SV)	• A/T control unit detects the improper voltage drop when it tries to operate the solenoid valve.	X	X
Line pressure solenoid valve (LINE PRESSURE S/V)	• A/T control unit detects the improper voltage drop when it tries to operate the solenoid valve.	X	X
Throttle position sensor Throttle position switch (THRTL POSI SENA/T)	• A/T control unit receives an excessively low or high voltage from the sensor.	X	X

Self-diagnosis (Cont'd)

Detected items (Screen terms for CONSULT, "SELF-DIAG RESULTS" mode)	Malfunction is detected when ...	Indicator for Diagnostic Results	
		POWER indicator lamp (Available when "A/T" on CONSULT is touched.)	CHECK Malfunction indicator lamp*2 (Available when "ENGINE" on CONSULT is touched.)
Engine speed signal (ENGINE SPEED SIG)	• A/T control unit does not receive the proper voltage signal from the ECM.	X	X
Fluid temperature sensor (FLUID TEMP SENSOR)	• A/T control unit receives an excessively low or high voltage from the sensor.	X	X
Initial start INITIAL START	• This is not a malfunction message (Whenever shutting off a power supply to the control unit, this message appears on the screen.)	X	—
No failure (NO SELF DIAGNOSTIC FAILURE INDICATED FURTHER TESTING MAY BE REQUIRED**)	• No failure has been detected.	X	X

X : Applicable
– : Not applicable
*1 : These malfunctions can not be displayed by MIL CHECK if another malfunction is assigned to the POWER indicator lamp POWER.
*2 : Refer to EC section ["Malfunction Indicator Lamp (MIL)", "ON-BOARD DIAGNOSTIC SYSTEM DESCRIPTION"].

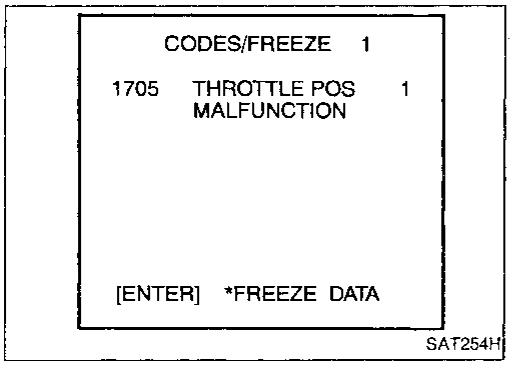

SELF-DIAGNOSTIC PROCEDURE [With Generic Scan Tool (GST)]

Refer to EC section ["Generic Scan Tool (GST)", "ON-BOARD DIAGNOSTIC SYSTEM DESCRIPTION"].

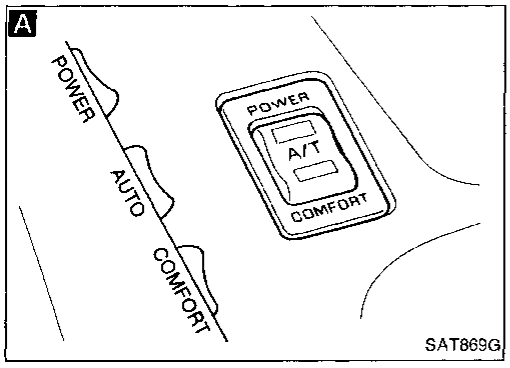

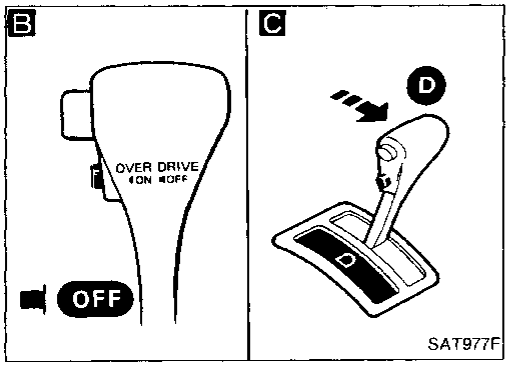

SELF-DIAGNOSTIC PROCEDURE (No Tools)

DIAGNOSIS START

↓

1. Start engine and warm it up to normal engine operating temperature.
2. Turn ignition switch to "OFF" position.
   Wait at least 5 seconds.
3. Turn ignition switch to "ACC" position.

↓

A

Set A/T mode switch to "AUTO" position.

↓

B

Set overdrive switch in "OFF" position.

↓

Ⓐ

Self-diagnosis (Cont'd)

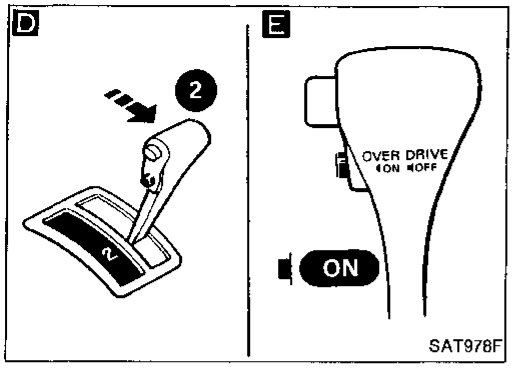

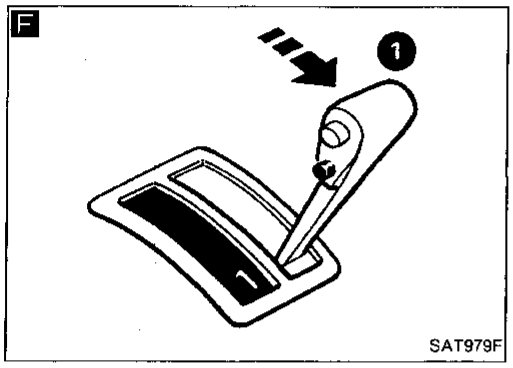

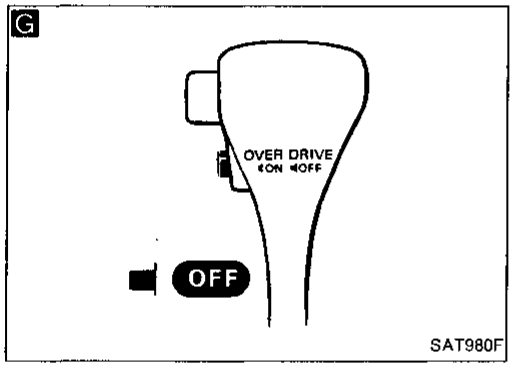

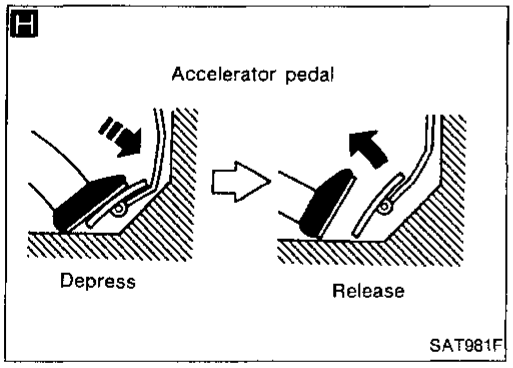

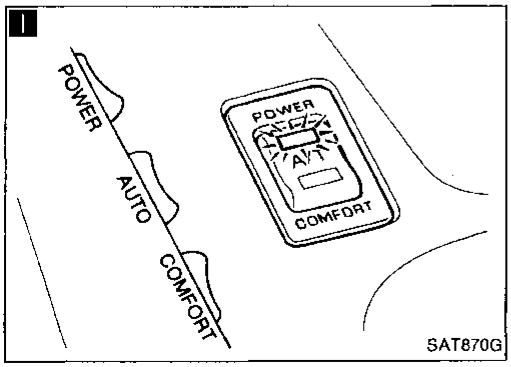

Ⓐ

C

1. Move selector lever to "D" position.
2. Turn ignition switch to "ON" position. (Do not start engine.)
3. Does power indicator lamp come on for about 2 seconds?

No → Go to Diagnostic Procedure 1, AT-89.

Yes ↓

D E

1. Move selector lever to "2" position.
2. Set overdrive switch in "ON" position.

↓

F

Move selector lever to "1" position.

↓

G

Set overdrive switch in "OFF" position.

↓

H

Depress accelerator pedal fully and release it.

↓

I

Check power indicator lamp.
Refer to JUDGEMENT OF SELF-DIAGNOSIS CODE on next page.

↓

DIAGNOSIS END

JUDGEMENT OF SELF-DIAGNOSIS CODE

Power indicator lamp:

All judgement flickers are same.

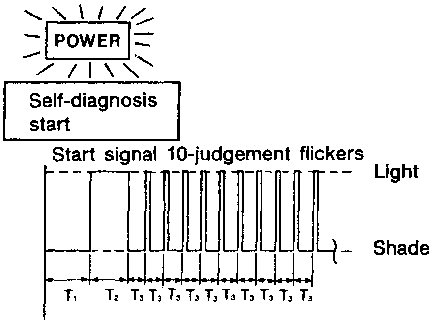

All circuits that can be confirmed by self-diagnosis are OK.

SAT755A

4th judgement flicker is longer than others.

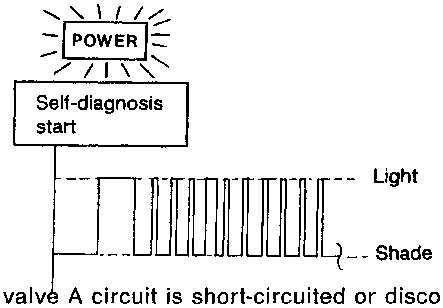

Shift solenoid valve A circuit is short-circuited or disconnected.

➡**Go to SHIFT SOLENOID VALVE A CIRCUIT CHECK, AT-60.**

SAT762A

1st judgement flicker is longer than others.

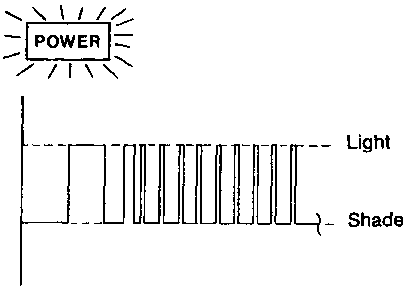

Revolution sensor circuit is short-circuited or disconnected.

➡**Go to REVOLUTION SENSOR CIRCUIT CHECK, AT-54.**

SAT756A

5th judgement flicker is longer than others.

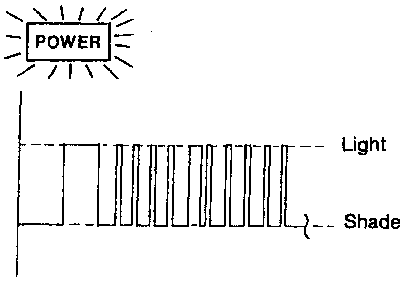

Shift solenoid valve B circuit is short-circuited or disconnected.

➡**Go to SHIFT SOLENOID VALVE B CIRCUIT CHECK, AT-62.**

SAT763A

2nd judgement flicker is longer than others.

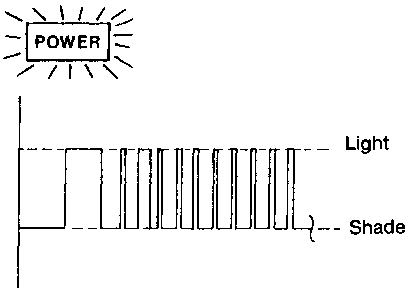

Vehicle speed sensor circuit is short-circuited or disconnected.

➡**Go to VEHICLE SPEED SENSOR CIRCUIT CHECK, AT-56.**

SAT757A

6th judgement flicker is longer than others.

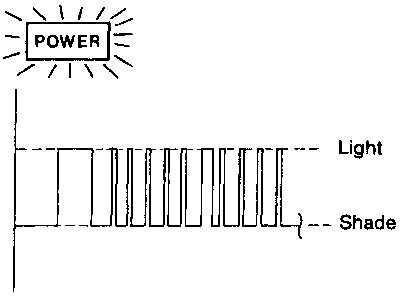

Overrun clutch solenoid valve circuit is short-circuited or disconnected.

➡**Go to OVERRUN CLUTCH SOLENOID VALVE CIRCUIT CHECK, AT-64.**

SAT764A

3rd judgement flicker is longer than others.

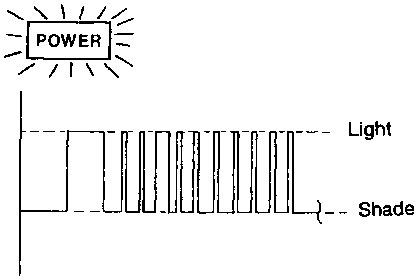

Throttle position sensor circuit is short-circuited or disconnected.

➡**Go to THROTTLE POSITION SENSOR CIRCUIT CHECK, AT-58.**

SAT758A

7th judgement flicker is longer than others.

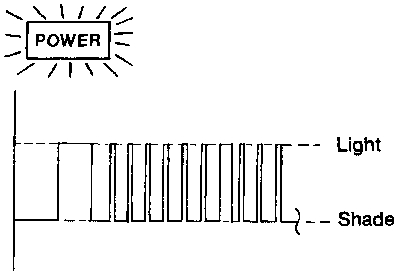

Torque converter clutch solenoid valve circuit is short-circuited or disconnected.

➡**Go to TORQUE CONVERTER CLUTCH SOLENOID VALVE CIRCUIT CHECK, AT-66.**

SAT765A

t_1 = 2.5 seconds t_2 = 2.0 seconds t_3 = 1.0 second

Self-diagnosis (Cont'd)

Power indicator lamp:	
8th judgement flicker is longer than others. 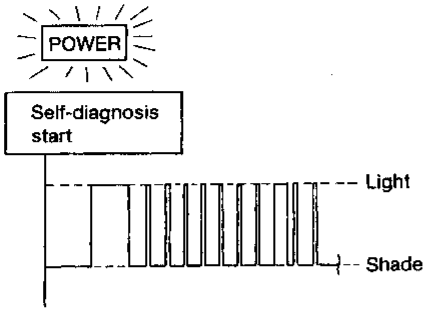 Fluid temperature sensor is disconnected or A/T control unit power source circuit is damaged. ➡**Go to FLUID TEMPERATURE SENSOR AND A/T CONTROL UNIT POWER SOURCE CIRCUIT CHECKS, AT-68.** SAT770A	Flickers as shown below. 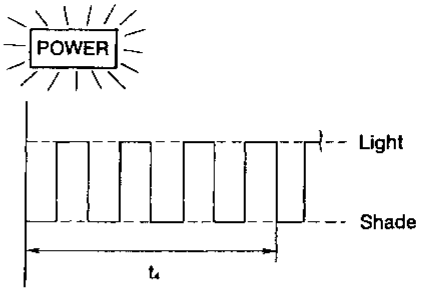 Battery power is low. Battery has been disconnected for a long time. Battery is connected conversely. (When reconnecting A/T control unit connectors. — This is not a problem.) SAT773A
9th judgement flicker is longer than others. 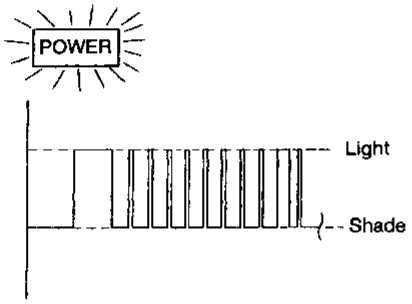 Engine speed signal circuit is short-circuited or disconnected. ➡**Go to ENGINE SPEED SIGNAL CIRCUIT CHECK, AT-71.** SAT771A	Does not come on. 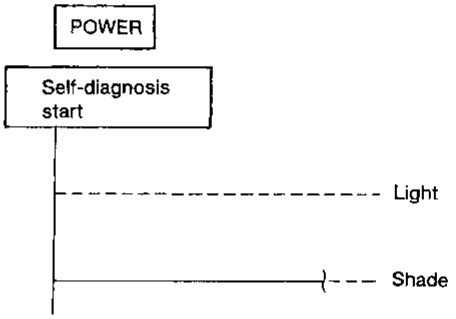 Inhibitor switch, overdrive switch or throttle position switch circuit is disconnected or A/T control unit is damaged. ➡**Go to INHIBITOR, OVERDRIVE AND THROTTLE POSITION SWITCH CIRCUIT CHECKS, AT-75.** SAT146B
10th judgement flicker is longer than others. 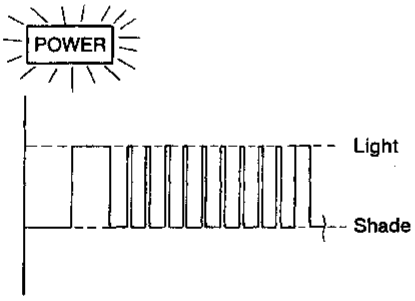 Line pressure solenoid valve circuit is short-circuited or disconnected. ➡**Go to LINE PRESSURE SOLENOID VALVE CIRCUIT CHECK, AT-73.** SAT772A	

t_4 = 1.0 second

Self-diagnosis (Cont'd)

HOW TO ERASE DTC (With CONSULT)

1. If the ignition switch stays "ON" after repair work, be sure to turn ignition switch "OFF" once. Wait for at least 5 seconds and then turn it "ON" (engine stopped) again.
2. Turn CONSULT "ON", and touch "A/T".
3. Touch "SELF-DIAG RESULTS".
4. Touch "ERASE". (The DTC in the A/T control unit will be erased.)
5. Touch "BACK" twice.
6. Touch "ENGINE".
7. Touch "SELF-DIAG RESULTS".
8. Touch "ERASE". (The DTC in the ECM will be erased.)

How to erase DTC (With CONSULT)

1. If the ignition switch stays "ON" after repair work, be sure to turn ignition switch "OFF" once. Wait at least 5 seconds and then turn it "ON" (engine stopped) again.

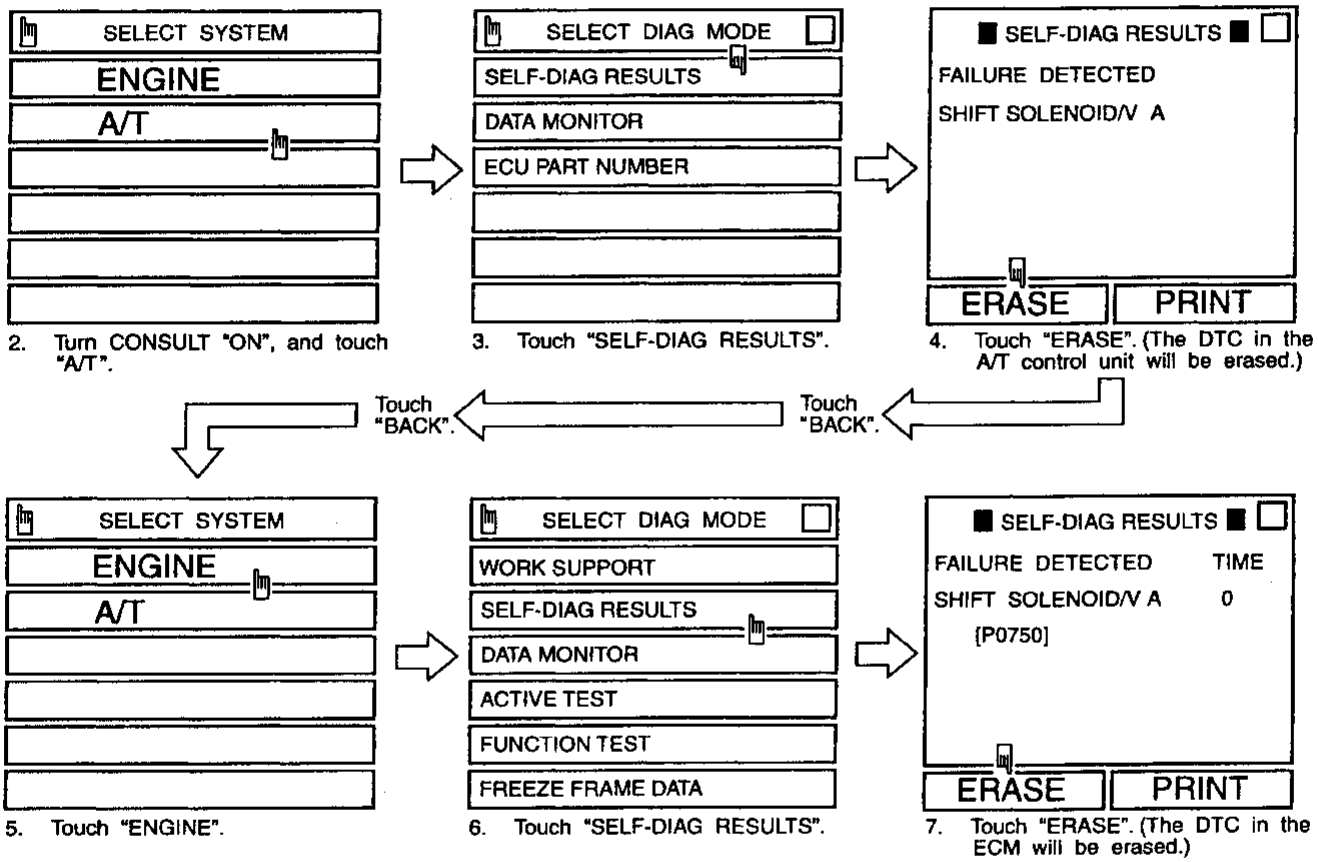

2. Turn CONSULT "ON", and touch "A/T".
3. Touch "SELF-DIAG RESULTS".
4. Touch "ERASE". (The DTC in the A/T control unit will be erased.)
5. Touch "ENGINE".
6. Touch "SELF-DIAG RESULTS".
7. Touch "ERASE". (The DTC in the ECM will be erased.)

SEF338QA

HOW TO ERASE DTC (With Generic Scan Tool)

Select Mode 4 with Generic Scan Tool. For details, refer to EC section, "Generic Scan Tool (GST)", "ON-BOARD DIAGNOSTIC SYSTEM DESCRIPTION".

HOW TO ERASE DTC (No Tools)

1. If the ignition switch stays "ON" after repair work, be sure to turn ignition switch "OFF" once. Wait for at least 5 seconds and then turn it "ON" (engine stopped) again.
2. Perform "SELF-DIAGNOSTIC PROCEDURE (No Tools)" on AT-49. (The engine warm-up step can be skipped when performing the diagnosis only to erase the DTC.)
3. Change the diagnostic test mode from Mode II to Mode I by turning the mode selector on the ECM. Refer to EC section ["HOW TO SWITCH DIAGNOSTIC TEST MODES", "Malfunction Indicator Lamp (MIL)", "ON-BOARD DIAGNOSTIC SYSTEM DESCRIPTION"].

Self-diagnosis (Cont'd)

VEHICLE SPEED SENSOR·A/T (REVOLUTION SENSOR) CIRCUIT CHECK

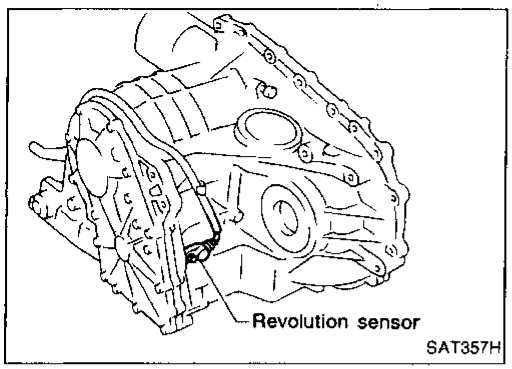

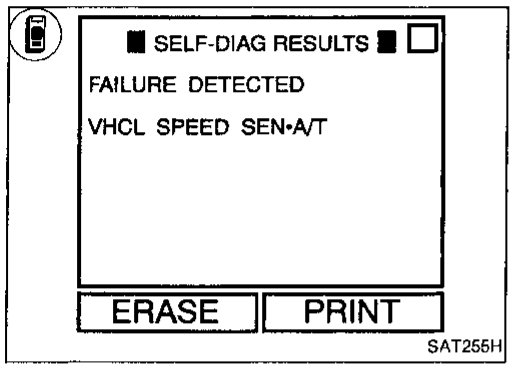

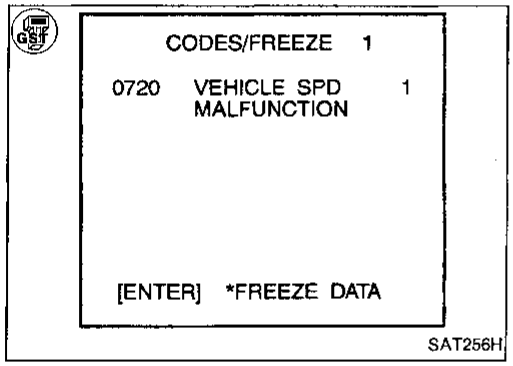

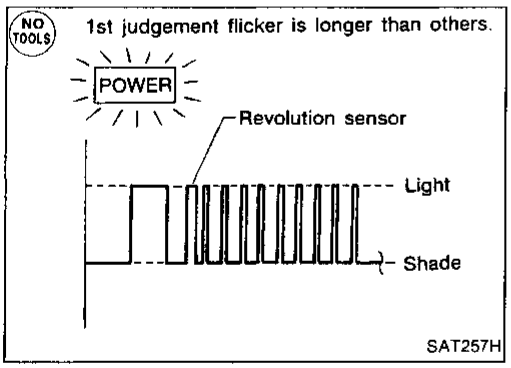

Parts description

The revolution sensor detects the revolution of the idler gear parking pawl lock gear and emits a pulse signal. The pulse signal is sent to the A/T control unit which converts it into vehicle speed.

Trouble judgement conditions

Diagnostic trouble code	Malfunction is detected when ...	Check Items (Possible Cause)
: VHCL SPEED SEN·A/T : P0720 : 1st judgement flicker	• A/T control unit does not receive the proper voltage signal from the sensor.	• Harness or connectors (The sensor circuit is open or short.) • Revolution sensor

Diagnostic trouble code (DTC) confirmation procedure

1) Start engine.
2) Select "SELF-DIAG RESULTS" mode with CONSULT.
3) Drive vehicle under the following conditions:
   Selector lever in D, vehicle speed higher than 30 km/h (19 MPH), throttle opening greater than 1/8 of the full throttle position and driving for more than 5 seconds.

OR

1) Start engine.
2) Drive vehicle under the following conditions:
   Selector lever in D, vehicle speed higher than 30 km/h (19 MPH), throttle opening greater than 1/8 of the full throttle position and driving for more than 5 seconds.
3) Select "MODE 3" with GST.

OR

1) Start engine.
2) Drive vehicle under the following conditions:
   Selector lever in D, vehicle speed higher than 30 km/h (19 MPH), throttle opening greater than 1/8 of the full throttle position and driving for more than 5 seconds.
3) Perform self-diagnosis.
   Refer to SELF-DIAGNOSIS PROCEDURE (No Tools), AT-49.

Self-diagnosis (Cont'd)

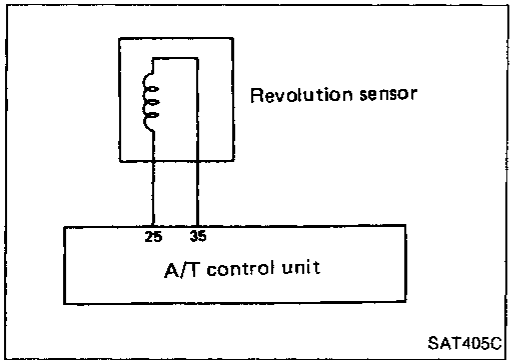

CHECK REVOLUTION SENSOR.
Refer to "Electrical Components Inspection", AT-111.

NG → Repair or replace revolution sensor.

OK ↓

A

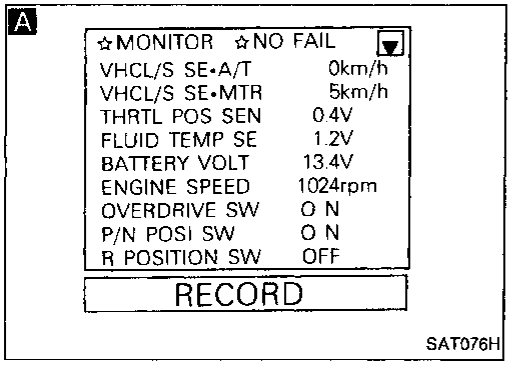

CHECK INPUT SIGNAL.

1. Start engine.
2. Select "ECU INPUT SIGNALS" in Data Monitor.
3. Read out the value of "VHCL/S SE·A/T" while driving.
   Check the value changes according to driving speed.

OR

1. Start engine.
2. Check voltage between A/T control unit terminal ㉕ and ground while driving.
   (Measure with AC range.)
   Voltage:
   At 0 km/h (0 MPH):
   0V
   At 30 km/h (19 MPH):
   1V or more
   (Voltage rises gradually in response to vehicle speed.)

NG → Check the following items:
- Harness for short or open between A/T control unit and revolution sensor (Main harness)
- Harness for short or open between revolution sensor and ECM (Main harness)
- Ground circuit for ECM Refer to EC section ("TROUBLE DIAGNOSIS FOR POWER SUPPLY").

OK ↓

A

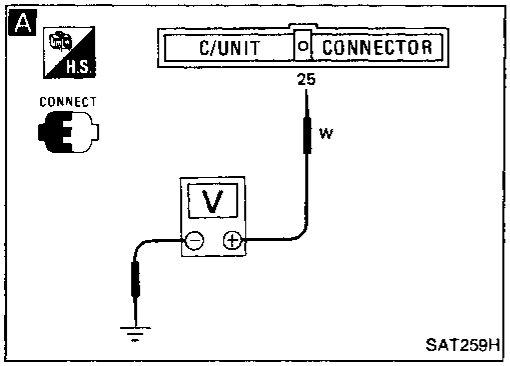

Perform self-diagnosis again after driving for a while.

NG → 1. Perform A/T control unit input/output signal inspection.
2. If NG, recheck A/T control unit pin terminals for damage or loose connection with harness connector.

OK ↓

INSPECTION END

Self-diagnosis (Cont'd)

VEHICLE SPEED SENSOR·MTR CIRCUIT CHECK

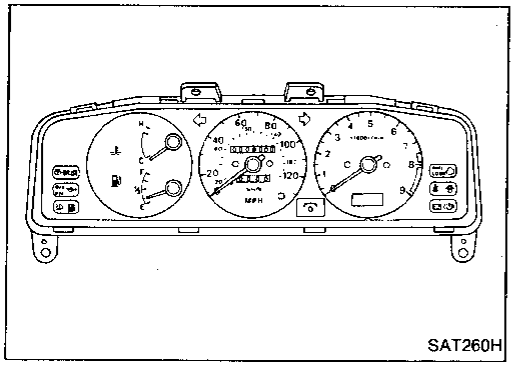
SAT260H

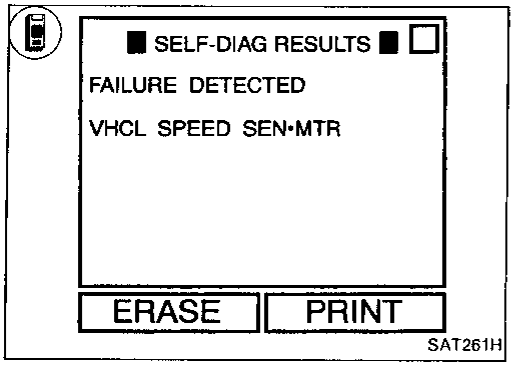

SAT261H

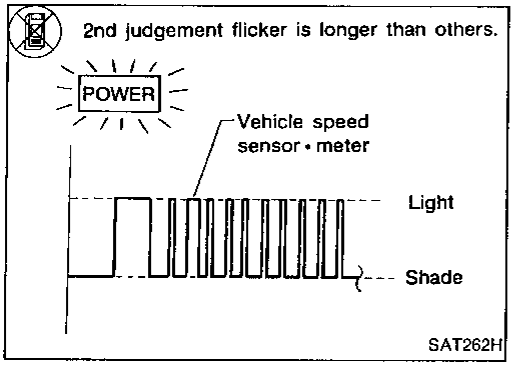

SAT262H

Parts description

The vehicle speed sensor·MTR is built into the speedometer assembly. The sensor functions as an auxiliary device to the revolution sensor when it is malfunctioning. The A/T control unit will then use a signal sent from the vehicle speed sensor·MTR.

Trouble judgement conditions

Diagnostic trouble code	Malfunction is detected when ...	Check Items (Possible Cause)
: VHCL SPEED SEN·MTR : 2nd judgement flicker	• A/T control unit does not receive the proper voltage signal from the sensor.	• Harness or connectors (The sensor circuit is open or short.) • Vehicle speed sensor

Diagnostic trouble code (DTC) confirmation procedure

1) Start engine.
2) Select "SELF-DIAG RESULTS" mode with CONSULT.
3) Drive vehicle under the following conditions:
   Selector lever in D and vehicle speed higher than 20 km/h (12 MPH).

OR

1) Start engine.
2) Drive vehicle under the following conditions:
   Selector lever in D and vehicle speed higher than 20 km/h (12 MPH).
3) Perform self-diagnosis.
   Refer to SELF-DIAGNOSIS PROCEDURE (No Tools), AT-49.

Self-diagnosis (Cont'd)

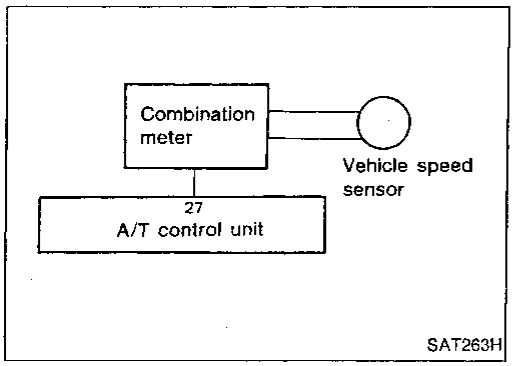

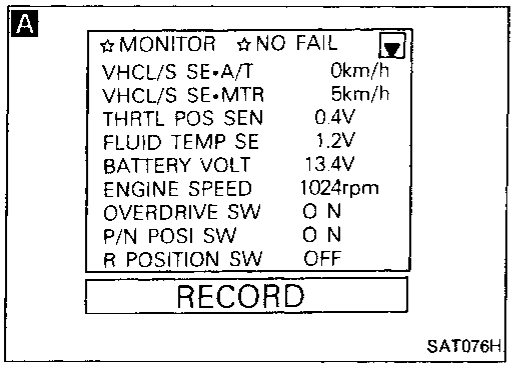

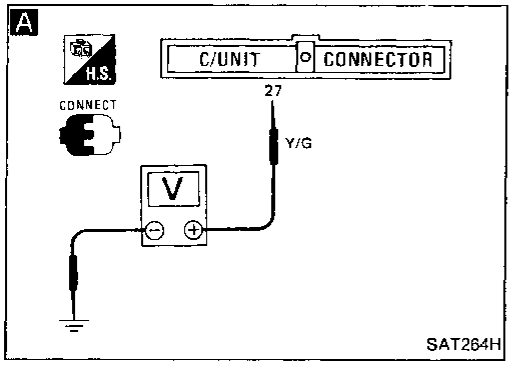

A

CHECK INPUT SIGNAL.

1. Start engine.
2. Select "ECU INPUT SIGNALS" in Data Monitor.
3. Read out the value of "VHCL/S SE·MTR" while driving.
   Check the value changes according to driving speed.

NG → Check the following items:
- Vehicle speed sensor and ground circuit for vehicle speed sensor Refer to EL section ("METERS AND GAUGES").
- Harness for short or open between A/T control unit and vehicle speed sensor (Main harness)

OR

1. Start engine.
2. Check voltage between A/T control unit terminal ㉗ and ground while driving at 2 to 3 km/h (1 to 2 MPH) for 1 m (3 ft) or more.
   Voltage:
   Varies from 0V to 5V

OK ↓

Perform self-diagnosis again after driving for a while.

NG → 1. Perform A/T control unit input/output signal inspection.
2. If NG, recheck A/T control unit pin terminals for damage or loose connection with harness connector.

OK ↓

INSPECTION END

Self-diagnosis (Cont'd)

THROTTLE POSITION SENSOR CIRCUIT CHECK

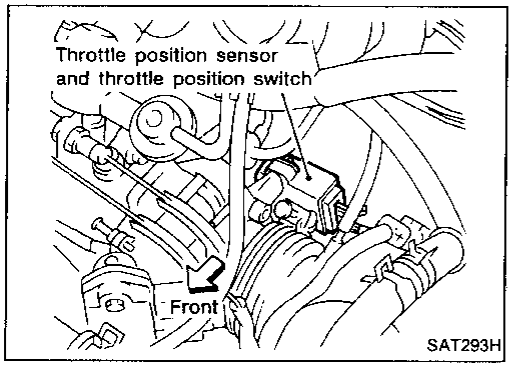

Parts description

The throttle position sensor detects the throttle valve position and sends a signal to the A/T control unit.

Trouble judgement conditions

Diagnostic trouble code	Malfunction is detected when ...	Check Items (Possible Cause)
: THROTTLE POSI SEN : P1705 : 3rd judgement flicker	• A/T control unit receives an excessively low or high voltage from the sensor.	• Harness or connectors (The sensor circuit is open or short.) • Throttle position sensor

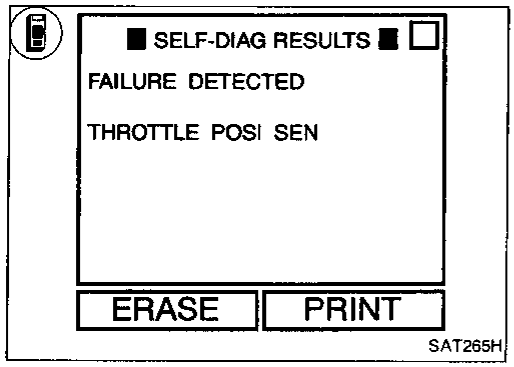

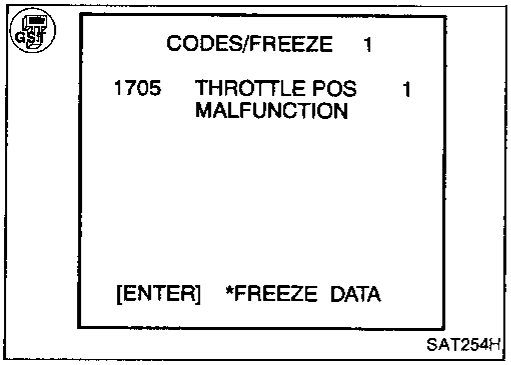

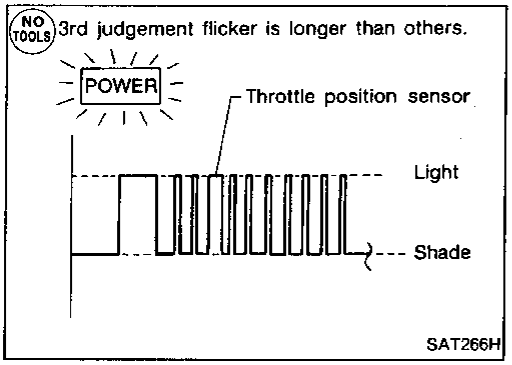

Diagnostic trouble code (DTC) confirmation procedure

1) Start engine.
2) Select "SELF-DIAG RESULTS" mode with CONSULT.
3) Drive vehicle under the following conditions:
   Selector lever in D, vehicle speed higher than 10 km/h (6 MPH), throttle opening greater than 1/2 of the full throttle position and driving for more than 3 seconds.

OR

1) Start engine.
2) Drive vehicle under the following conditions:
   Selector lever in D, vehicle speed higher than 10 km/h (6 MPH), throttle opening greater than 1/2 of the full throttle position and driving for more than 3 seconds.
3) Select "MODE 3" with GST.

OR

1) Start engine.
2) Drive vehicle under the following conditions:
   Selector lever in D, vehicle speed higher than 10 km/h (6 MPH), throttle opening greater than 1/2 of the full throttle position and driving for more than 3 seconds.
3) Perform self-diagnosis.
   Refer to SELF-DIAGNOSIS PROCEDURE (No Tools), AT-49.

Self-diagnosis (Cont'd)

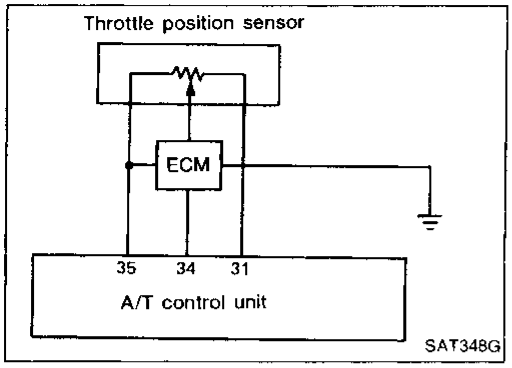

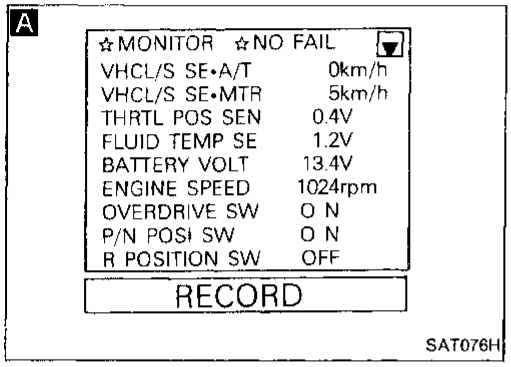

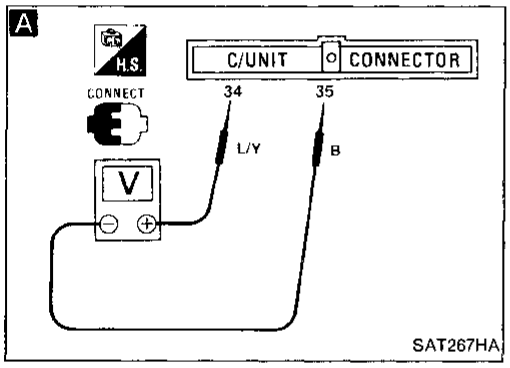

Perform diagnostic test mode II (self-diagnostic results) for engine control. Refer to EC section ["Malfunction Indicator Lamp (MIL)", "ON-BOARD DIAGNOSTIC SYSTEM DESCRIPTION"].

NG → Check throttle position sensor circuit for engine control. Refer to EC section ["Throttle Position Sensor (DTC: 0403)", "TROUBLE DIAGNOSIS FOR DTC P0120"].

OK ↓

A

CHECK INPUT SIGNAL.

1. Turn ignition switch to "ON" position. (Do not start engine.)
2. Select "ECU INPUT SIGNALS" in Data Monitor.
3. Read out the value of "THRTL POS SEN".

Voltage:
Fully-closed throttle:
Approximately 0.5V
Fully-open throttle:
Approximately 4V

NG → Check harness for short or open between ECM and A/T control unit regarding throttle position sensor circuit. (Main harness)

— OR —

1. Turn ignition switch to "ON" position. (Do not start engine.)
2. Check voltage between A/T control unit terminals ㉞ and ㉟ while accelerator pedal is depressed slowly.

Voltage:
Fully-closed throttle valve:
Approximately 0.5V
Fully-open throttle valve:
Approximately 4V
(Voltage rises gradually in response to throttle position)

OK ↓

CHECK THROTTLE POSITION SWITCH. Refer to Self-diagnosis CHECK THROTTEL POSITION SWITCH CIRCUIT, AT-75.

NG → Repair or replace damaged parts.

OK ↓

Perform self-diagnosis again after driving for a while.

NG → 1. Perform A/T control unit input/output signal inspection.
2. If NG, recheck A/T control unit pin terminals for damage or loose connection with harness connector.

OK ↓

INSPECTION END

Self-diagnosis (Cont'd)

SHIFT SOLENOID VALVE A CIRCUIT CHECK

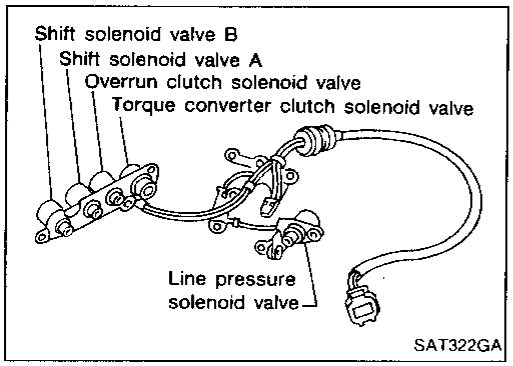

Parts description

Shift solenoid valves A and B are turned ON or OFF by the A/T control unit in response to signals sent from the inhibitor switch, vehicle speed and throttle position sensors. Gears will then be shifted to the optimum position.

Gear position	1	2	3	4
Shift solenoid valve A	ON	OFF	OFF	ON
Shift solenoid valve B	ON	ON	OFF	OFF

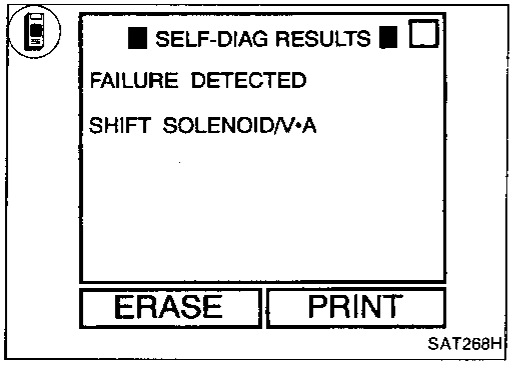

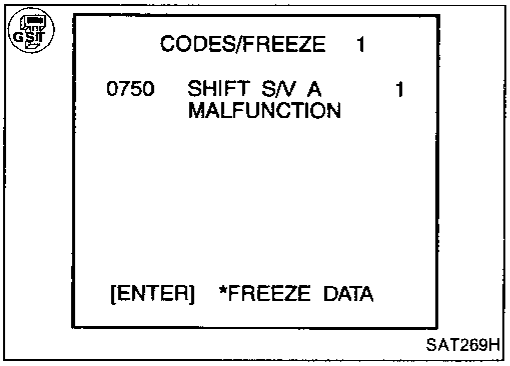

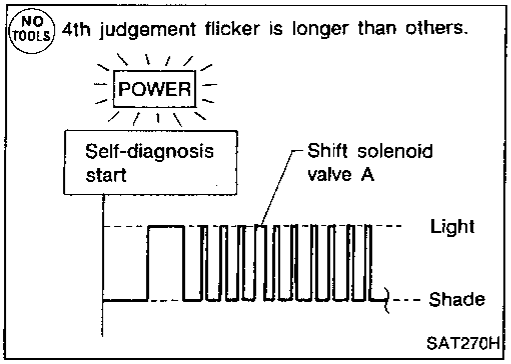

Trouble judgement conditions

Diagnostic trouble code	Malfunction is detected when ...	Check Items (Possible Cause)
: SHIFT SOLENOID/V·A : (P0750) : 4th judgement flicker	• A/T control unit detects the improper voltage drop when it tries to operate the solenoid valve.	• Harness or connectors (The solenoid circuit is open or short.) • Shift solenoid valve A

Diagnostic trouble code (DTC) confirmation procedure

1) Start engine.
2) Select "SELF-DIAG RESULTS" mode with CONSULT.
3) Drive vehicle in $D_1 \rightarrow D_2$ position.

OR

1) Start engine.
2) Drive vehicle in $D_1 \rightarrow D_2$ position.
3) Select "MODE 3" with GST.

OR

1) Start engine.
2) Drive vehicle in $D_1 \rightarrow D_2$ position.
3) Perform self-diagnosis.
   Refer to SELF-DIAGNOSIS PROCEDURE (No Tools), AT-49.

Self-diagnosis (Cont'd)

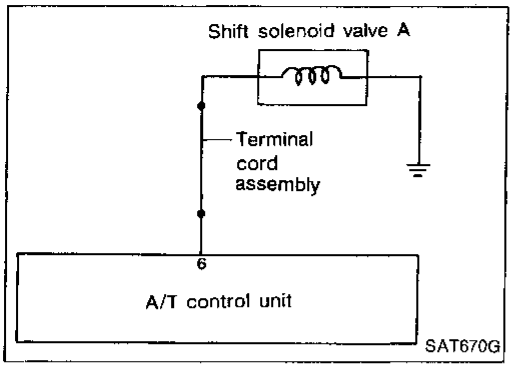

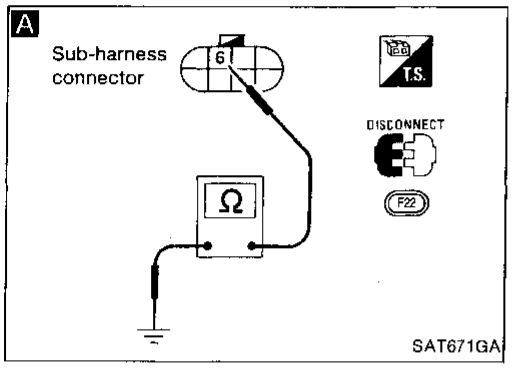

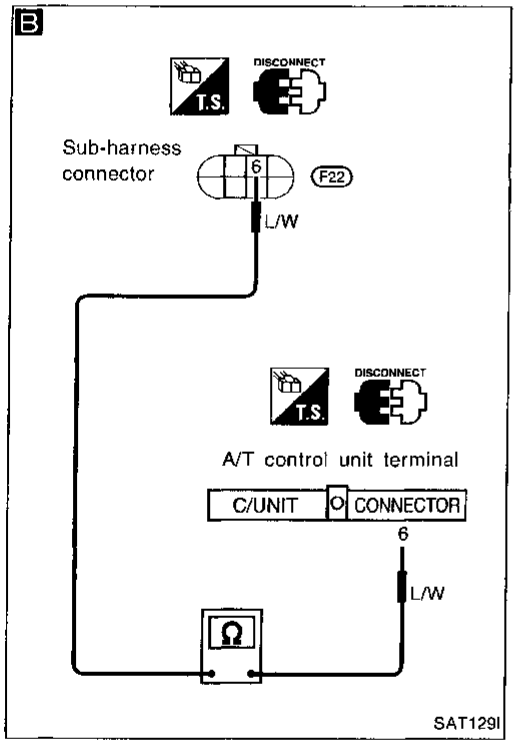

A

CHECK GROUND CIRCUIT.
1. Turn ignition switch to "OFF" position.
2. Disconnect terminal cord assembly connector in engine compartment.
3. Check resistance between terminal ⑥ and ground.
   Resistance: 20 - 30Ω

NG →
1. Remove control valve assembly. Refer to "ON-VEHICLE SERVICE", AT-131.
2. Check the following items:
   - Shift solenoid valve A Refer to "Electrical Components Inspection", AT-109.
   - Harness for short or open of terminal cord assembly

OK ↓

B

CHECK POWER SOURCE CIRCUIT.
1. Turn ignition switch to "OFF" position.
2. Disconnect A/T control unit harness connector.
3. Check resistance between terminal ⑥ and A/T control unit terminal ⑥.
   Resistance:
   Approximately 0Ω
4. Reinstall any part removed.

NG → Repair or replace harness between A/T control unit and terminal cord assembly. (Main harness)

OK ↓

Perform self-diagnosis after driving for a while.

NG →
1. Perform A/T control unit input/output signal inspection.
2. If NG, recheck A/T control unit pin terminals for damage or loose connection with harness connector.

OK ↓

INSPECTION END

Self-diagnosis (Cont'd)

SHIFT SOLENOID VALVE B CIRCUIT CHECK

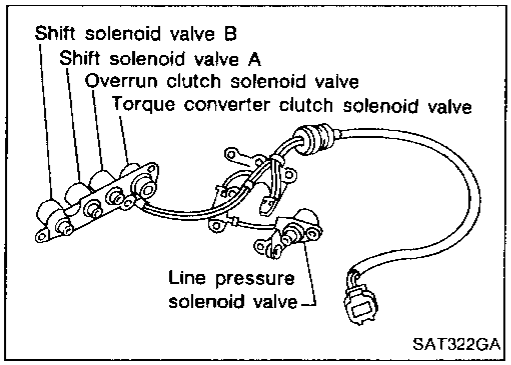

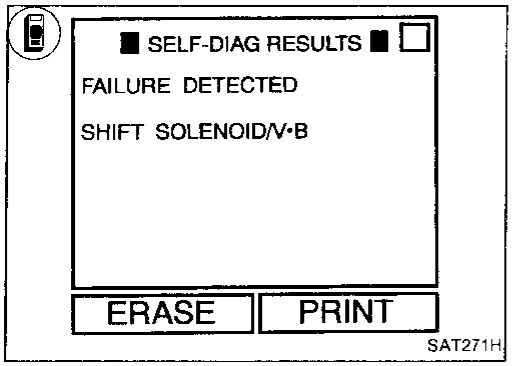

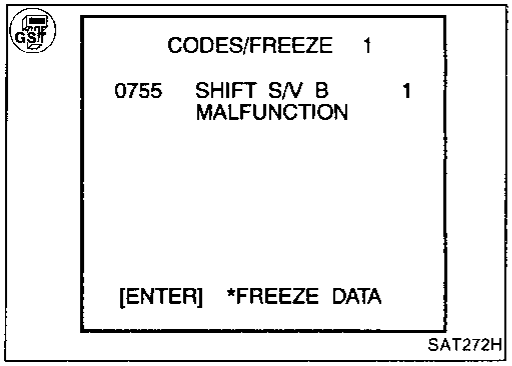

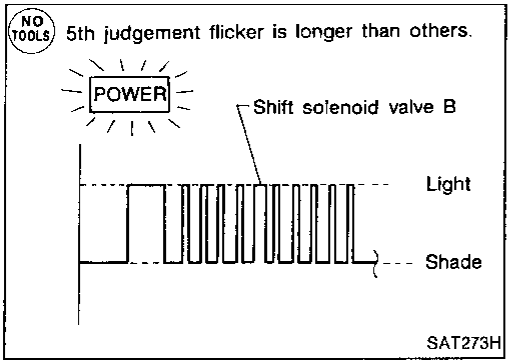

Parts description

Shift solenoid valves A and B are turned ON or OFF by the A/T control unit in response to signals sent from the inhibitor switch, vehicle speed and throttle position sensors. Gears will then be shifted to the optimum position.

Gear position	1	2	3	4
Shift solenoid valve A	ON	OFF	OFF	ON
Shift solenoid valve B	ON	ON	OFF	OFF

Trouble judgement conditions

Diagnostic trouble code	Malfunction is detected when ...	Check Items (Possible Cause)
: SHIFT SOLENOID/V·B : (P0755) : 5th judgement flicker	• A/T control unit detects the improper voltage drop when it tries to operate the solenoid valve.	• Harness or connectors (The solenoid circuit is open or short.) • Shift solenoid valve B

Diagnostic trouble code (DTC) confirmation procedure

1) Start engine.
2) Select "SELF-DIAG RESULTS" mode with CONSULT.
3) Drive vehicle in $D_1 \rightarrow D_2 \rightarrow D_3$ position.

OR

1) Start engine.
2) Drive vehicle in $D_1 \rightarrow D_2 \rightarrow D_3$ position.
3) Select "MODE 3" with GST.

OR

1) Start engine.
2) Drive vehicle in $D_1 \rightarrow D_2 \rightarrow D_3$ position.
3) Perform self-diagnosis.
   Refer to SELF-DIAGNOSIS PROCEDURE (No Tools), AT-49.

Self-diagnosis (Cont'd)

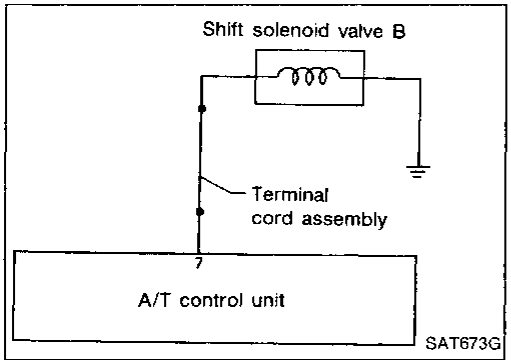

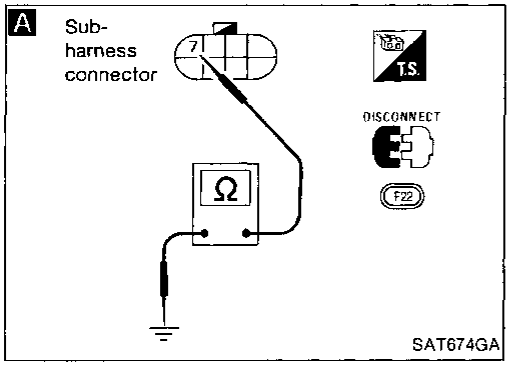

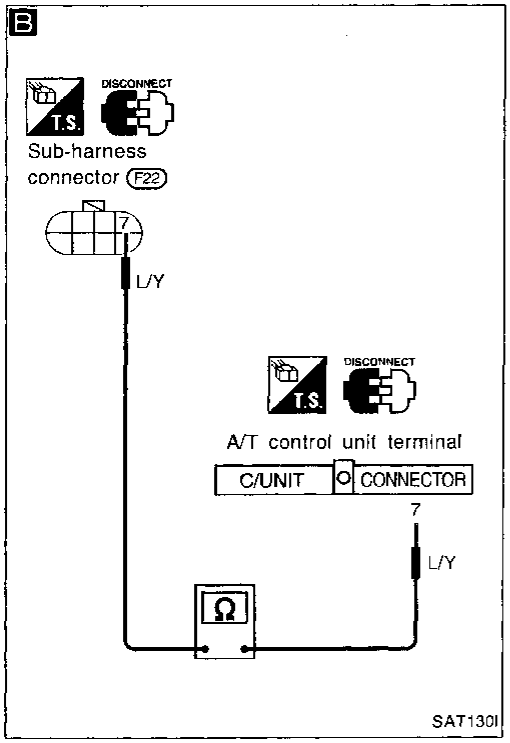

A

CHECK GROUND CIRCUIT.
1. Turn ignition switch to "OFF" position.
2. Disconnect terminal cord assembly connector in engine compartment.
3. Check resistance between terminal ⑦ and ground.
   Resistance: 20 - 30Ω

NG →
1. Remove control valve assembly. Refer to "ON-VEHICLE SERVICE", AT-131.
2. Check the following items:
   - Shift solenoid valve B Refer to "Electrical Components Inspection", AT-109.
   - Harness for short or open of terminal cord assembly

OK ↓

B

CHECK POWER SOURCE CIRCUIT.
1. Turn ignition switch to "OFF" position.
2. Disconnect A/T control unit harness connector.
3. Check resistance between terminal ⑦ and A/T control unit terminal ⑦.
   Resistance:
   Approximately 0Ω
4. Reinstall any part removed.

NG → Repair or replace harness between A/T control unit and terminal cord assembly. (Main harness).

OK ↓

Perform self-diagnosis after driving for a while.

NG →
1. Perform A/T control unit input/output signal inspection.
2. If NG, recheck A/T control unit pin terminals for damage or loose connection with harness connector.

OK ↓

INSPECTION END

Self-diagnosis (Cont'd)

OVERRUN CLUTCH SOLENOID VALVE CIRCUIT CHECK

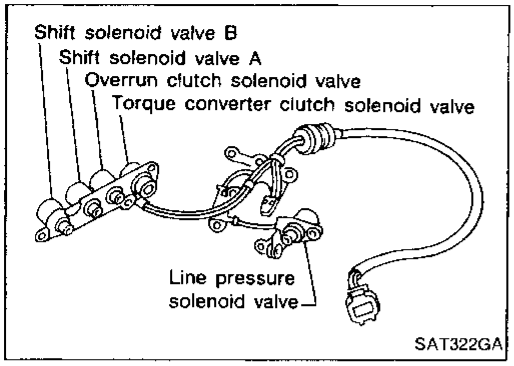

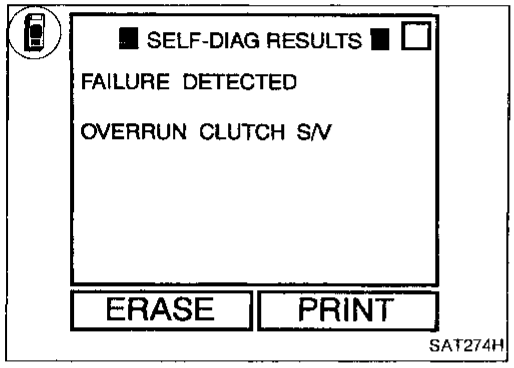

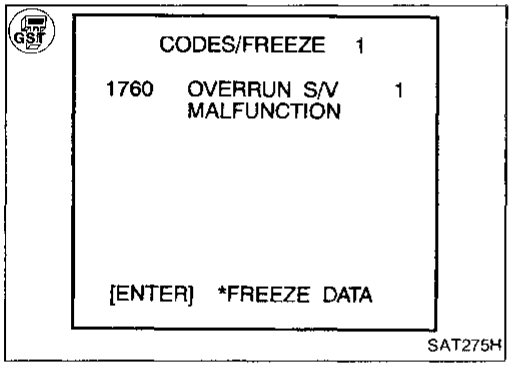

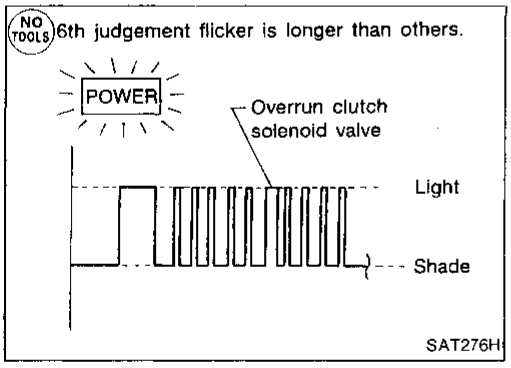

Parts description

The overrun clutch solenoid valve is activated by the A/T control unit in response to signals sent from the inhibitor switch, OD switch, vehicle speed and throttle position sensors. The overrun clutch operation will then be controlled.

Trouble judgement conditions

Diagnostic trouble code	Malfunction is detected when ...	Check Items (Possible Cause)
: OVERRUN CLUTCH S/V : P1760 : 6th judgement flicker	• A/T control unit detects the improper voltage drop when it tries to operate the solenoid valve.	• Harness or connectors (The solenoid circuit is open or short.) • Overrun clutch solenoid valve

Diagnostic trouble code (DTC) confirmation procedure

1) Start engine.
2) Select "SELF-DIAG RESULTS" mode with CONSULT.
3) Drive vehicle under the following conditions:
   Selector lever in D, OD control switch in "OFF" position and vehicle speed higher than 10 km/h (6 MPH).

— OR —

1) Start engine.
2) Drive vehicle under the following conditions:
   Selector lever in D, OD control switch in "OFF" position and vehicle speed higher than 10 km/h (6 MPH).
3) Select "MODE 3" with GST.

— OR —

1) Start engine.
2) Drive vehicle under the following conditions:
   Selector lever in D, OD control switch in "OFF" position and vehicle speed higher than 10 km/h (6 MPH).
3) Perform self-diagnosis.
   Refer to SELF-DIAGNOSIS PROCEDURE (No Tools), AT-49.

Self-diagnosis (Cont'd)

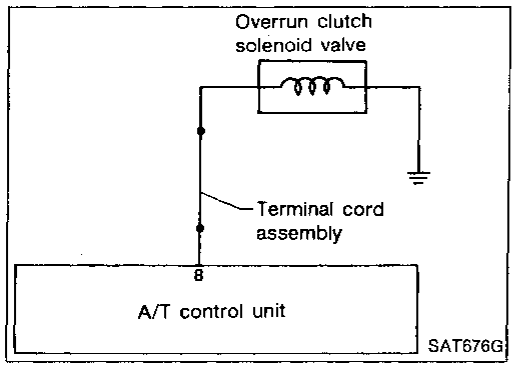

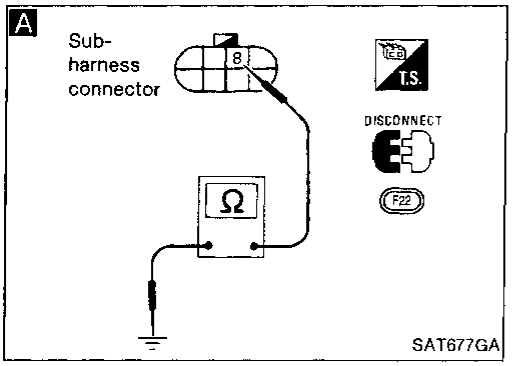

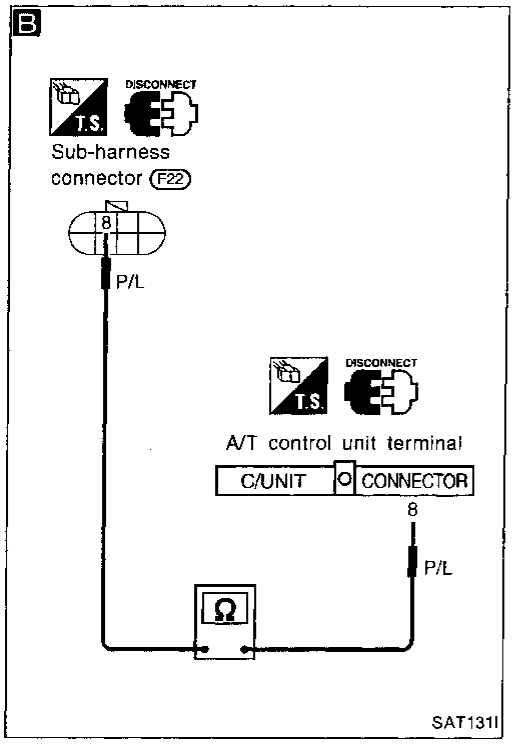

A

CHECK GROUND CIRCUIT.
1. Turn ignition switch to "OFF" position.
2. Disconnect terminal cord assembly connector in engine compartment.
3. Check resistance between terminal ⑧ and ground.
   Resistance: 20 - 30Ω

NG →
1. Remove control valve assembly. Refer to "ON-VEHICLE SERVICE", AT-131.
2. Check the following items:
   - Overrun clutch solenoid valve. Refer to "Electrical Components Inspection", AT-109.
   - Harness for short or open of terminal cord assembly

OK ↓

B

CHECK POWER SOURCE CIRCUIT.
1. Turn ignition switch to "OFF" position.
2. Disconnect A/T control unit harness connector.
3. Check resistance between terminal ⑧ and A/T control unit terminal ⑧.
   Resistance:
   Approximately 0Ω
4. Reinstall any part removed.

NG → Repair or replace harness between A/T control unit and terminal cord assembly. (Main harness)

OK ↓

Perform self-diagnosis after driving for a while.

NG →
1. Perform A/T control unit input/output signal inspection.
2. If NG, recheck A/T control unit pin terminals for damage or loose connection with harness connector.

OK ↓

INSPECTION END

Self-diagnosis (Cont'd)

TORQUE CONVERTER CLUTCH SOLENOID VALVE CIRCUIT CHECK

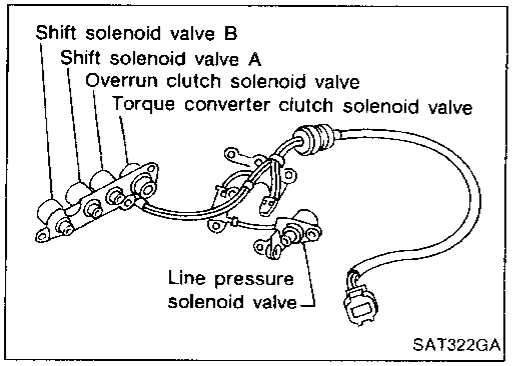

Parts description

The torque converter clutch solenoid valve is activated, with the gear in D_4, by the A/T control unit in response to signals sent from the vehicle speed and throttle position sensors. Lock-up piston operation will then be controlled.
Lock-up operation, however, is prohibited when ATF temperature is too low.

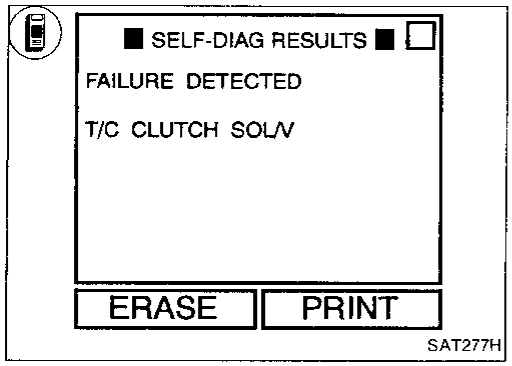

Trouble judgement conditions

Diagnostic trouble code	Malfunction is detected when ...	Check Items (Possible Cause)
: T/C CLUTCH SOL/V : P0740 : 7th judgement flicker	• A/T control unit detects the improper voltage drop when it tries to operate the solenoid valve.	• Harness or connectors (The solenoid circuit is open or short.) • T/C clutch solenoid valve

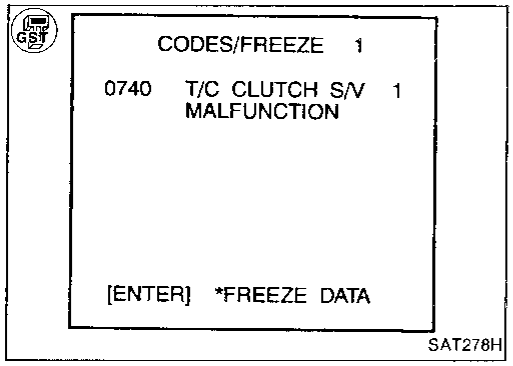

Diagnostic trouble code (DTC) confirmation procedure

1) Start engine.
2) Select "SELF-DIAG RESULTS" mode with CONSULT.
3) Drive vehicle in $D_1 \rightarrow D_2 \rightarrow D_3 \rightarrow D_4 \rightarrow D_4$ Lock-up position.

OR

1) Start engine.
2) Select "MODE 3" with GST.
3) Drive vehicle in $D_1 \rightarrow D_2 \rightarrow D_3 \rightarrow D_4 \rightarrow D_4$ Lock-up position.

OR

1) Start engine.
2) Perform self-diagnosis.
Refer to SELF-DIAGNOSIS PROCEDURE (No Tools), AT-49.
3) Drive vehicle in $D_1 \rightarrow D_2 \rightarrow D_3 \rightarrow D_4 \rightarrow D_4$ Lock-up position.

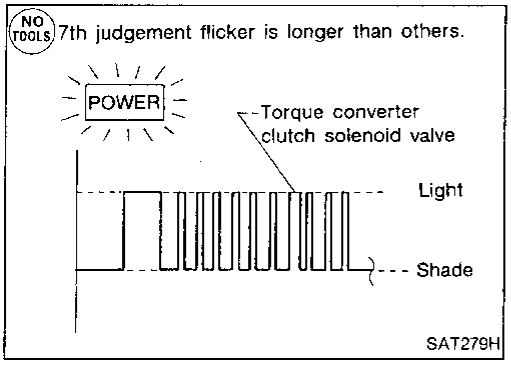

Self-diagnosis (Cont'd)

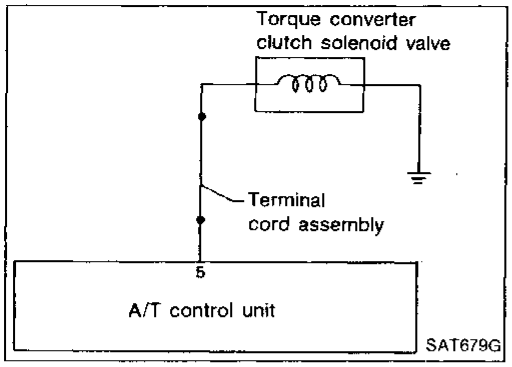

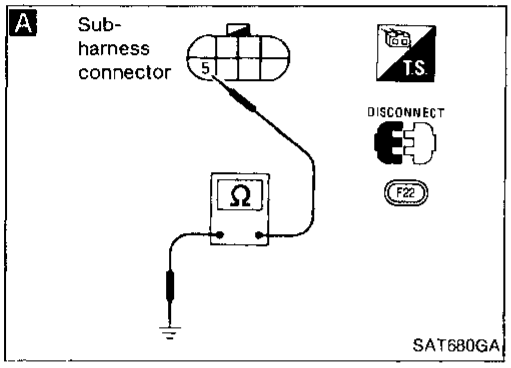

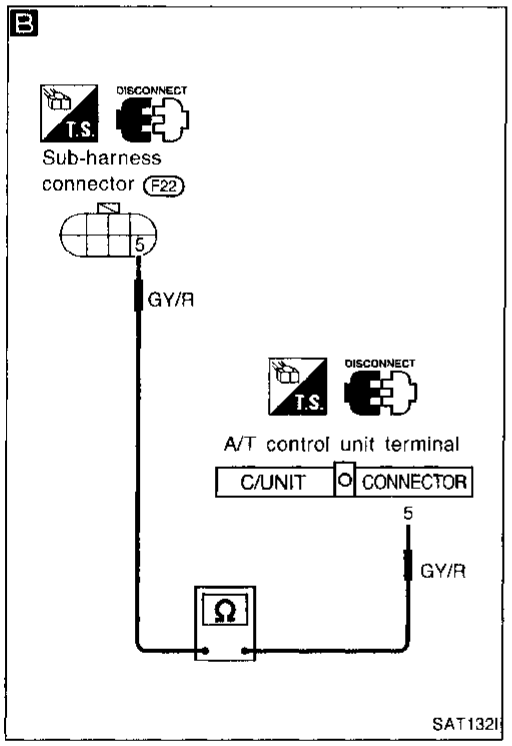

A

CHECK GROUND CIRCUIT.
1. Turn ignition switch to "OFF" position.
2. Disconnect terminal cord assembly connector in engine compartment.
3. Check resistance between terminal ⑤ and ground.
   Resistance: 10 - 16Ω

NG →
1. Remove oil pan. Refer to "ON-VEHICLE SERVICE", AT-131.
2. Check the following items:
   - Torque converter clutch solenoid valve
     Refer to "Electrical Components Inspection", AT-109.
   - Harness for short or open of terminal cord assembly

OK ↓

B

CHECK POWER SOURCE CIRCUIT.
1. Turn ignition switch to "OFF" position.
2. Disconnect A/T control unit harness connector.
3. Check resistance between terminal ⑤ and A/T control unit terminal ⑤.
   Resistance:
   Approximately 0Ω
4. Reinstall any part removed.

NG → Repair or replace harness between A/T control unit and terminal cord assembly. (Main harness)

OK ↓

Perform self-diagnosis after driving for a while.

NG →
1. Perform A/T control unit input/output signal inspection.
2. If NG, recheck A/T control unit pin terminals for damage or loose connection with harness connector.

OK ↓

INSPECTION END

Self-diagnosis (Cont'd)

FLUID TEMPERATURE SENSOR CIRCUIT AND A/T CONTROL UNIT POWER SOURCE CIRCUIT CHECKS

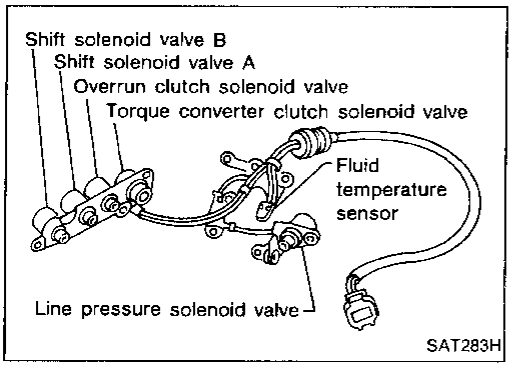

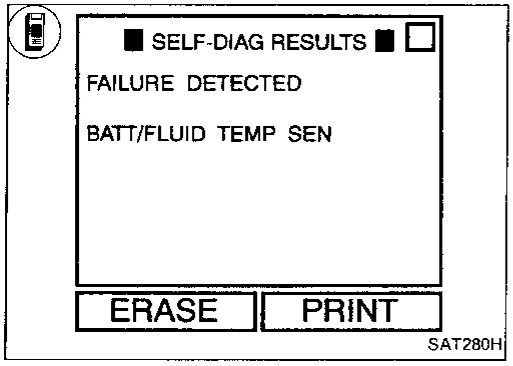

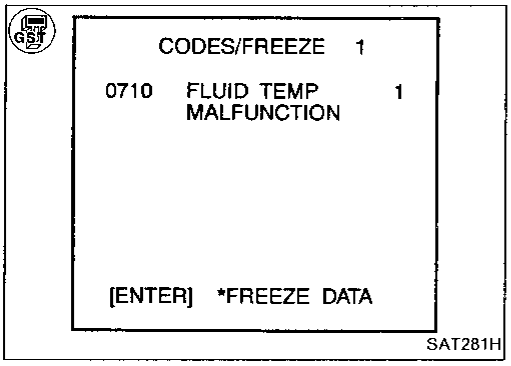

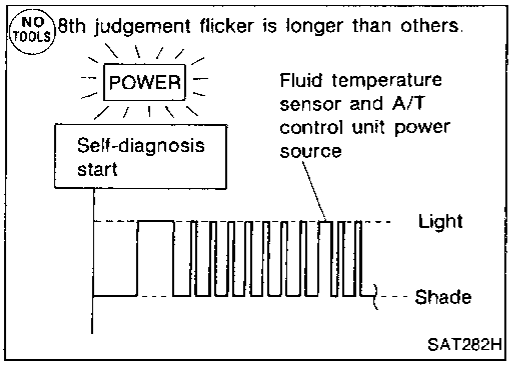

Parts description

The fluid temperature sensor detects the ATF temperature and sends a signal to the A/T control unit.

Trouble judgement conditions

Diagnostic trouble code	Malfunction is detected when ...	Check Items (Possible Cause)
: BATT/FLUID TEMP : P0710 : 8th judgement flicker	• A/T control unit receives an excessively low or high voltage from the sensor.	• Harness or connectors (The sensor circuit is open or short.) • Fluid temperature sensor

Diagnostic trouble code (DTC) confirmation procedure

1) Start engine.
2) Select "SELF-DIAG RESULTS" mode with CONSULT.
3) Drive vehicle under the following conditions:
   Selector lever in D, vehicle speed higher than 10 km/h (6 MPH), throttle opening greater than 1/8 of the full open position, engine speed higher than 450 rpm and driving for more than 10 minutes.

OR

1) Start engine.
2) Drive vehicle under the following conditions:
   Selector lever in D, vehicle speed higher than 10 km/h (6 MPH), throttle opening greater than 1/8 of the full open position, engine speed higher than 450 rpm and driving for more than 10 minutes.
3) Select "MODE 3" with GST.

OR

1) Start engine.
2) Drive vehicle under the following conditions:
   Selector lever in D, vehicle speed higher than 10 km/h (6 MPH), throttle opening greater than 1/8 of the full open position, engine speed higher than 450 rpm and driving for more than 10 minutes.
3) Perform self-diagnosis.
   Refer to SELF-DIAGNOSIS PROCEDURE (No Tools), AT-49.

Self-diagnosis (Cont'd)

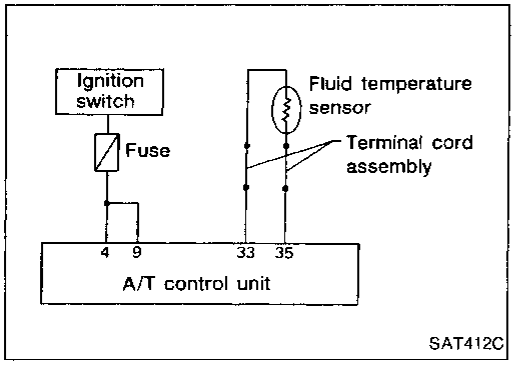

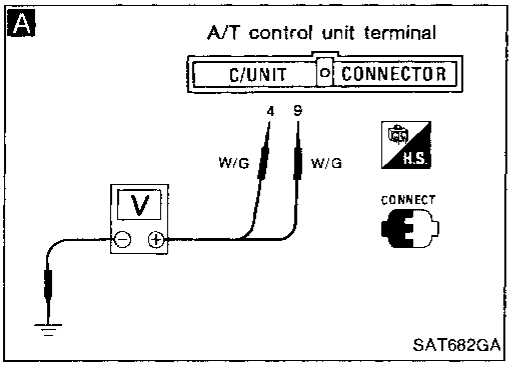

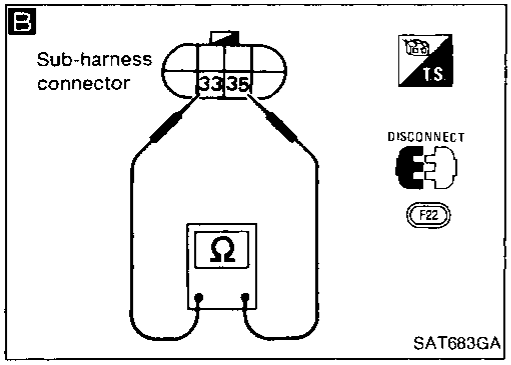

A

CHECK A/T CONTROL UNIT POWER SOURCE.

1. Turn ignition switch to "ON" position. (Do not start engine.)
2. Check voltage between A/T control unit terminals ④, ⑨ and ground.
   Battery voltage should exist.

NG → Check the following items:
- Harness for short or open between ignition switch and A/T control unit (Main harness)
- Ignition switch and fuse Refer to EL section ("POWER SUPPLY ROUTING").

OK ↓

B

CHECK FLUID TEMPERATURE SENSOR WITH TERMINAL CORD ASSEMBLY.

1. Turn ignition switch to "OFF" position.
2. Disconnect terminal cord assembly connector in engine compartment.
3. Check resistance between terminals ㉝ and ㉟ when A/T is cold.
   Resistance:
   Cold [20°C (68°F)]
   Approximately 2.5 kΩ
4. Reinstall any part removed.

NG → 1. Remove oil pan.
2. Check the following items:
- Fluid temperature sensor. Refer to "Electrical Components Inspection", AT-109.
- Harness for short or open of terminal cord assembly

OK ↓

Ⓐ

Self-diagnosis (Cont'd)

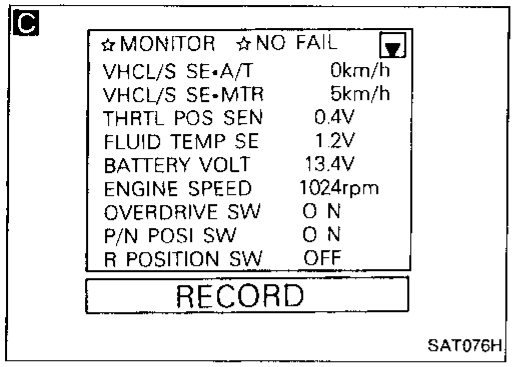

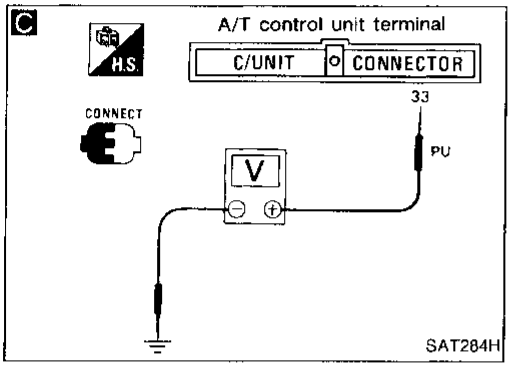

Ⓐ

C

CHECK INPUT SIGNAL OF FLUID TEMPERATURE SENSOR.

1. Start engine.
2. Select "ECU INPUT SIGNALS" in Data Monitor.
3. Read out the value of "FLUID TEMP SE".

Voltage:
Cold [20°C (68°F)] →
Hot [80°C (176°F)]:
Approximately
1.5V → 0.5V

NG → Check the following item:
- Harness for short or open between A/T control unit and terminal cord assembly (Main harness)

OR

1. Start engine.
2. Check voltage between A/T control unit terminal ㉝ and ground while warming up A/T.

Voltage:
Cold [20°C (68°F)] →
Hot [80°C (176°F)]:
Approximately
1.5V → 0.5V

OK ↓

Perform self-diagnosis after driving for a while.

NG → 1. Perform A/T control unit input/output signal inspection.
2. If NG, recheck A/T control unit pin terminals for damage or loose connection with harness connector.

OK ↓

INSPECTION END

Self-diagnosis (Cont'd)

ENGINE SPEED SIGNAL CIRCUIT CHECK

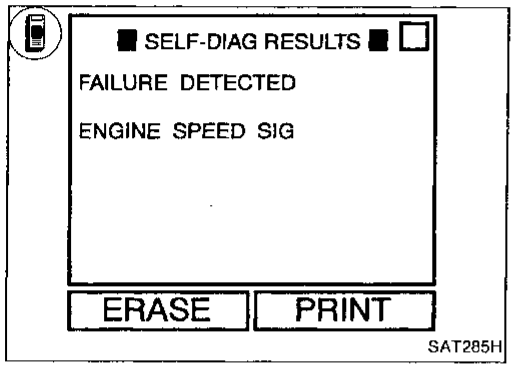

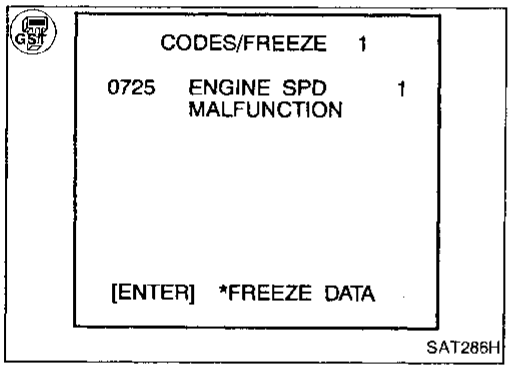

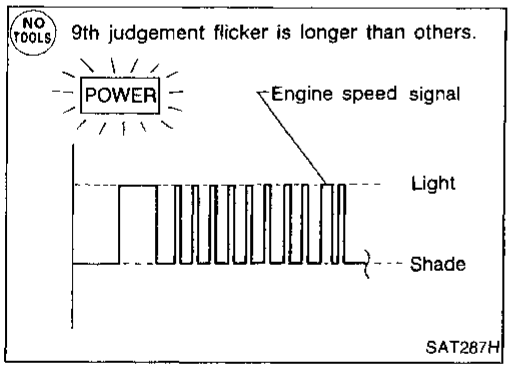

Parts description

The engine speed signal is sent from the ECM to the A/T control unit.

Trouble judgement conditions

Diagnostic trouble code	Malfunction is detected when ...	Check Items (Possible Cause)
: ENGINE SPEED SIG : P0725 : 9th judgement flicker	• A/T control unit does not receive the proper voltage signal from ECM.	• Harness or connectors (The sensor circuit is open or short.)

Diagnostic trouble code (DTC) confirmation procedure

1) Start engine.
2) Select "SELF-DIAG RESULTS" mode with CONSULT.
3) Drive vehicle under the following conditions:
   Selector lever in D, vehicle speed higher than 10 km/h (6 MPH), throttle opening greater than 1/8 of the full throttle position and driving for more than 10 seconds.

OR

1) Start engine.
2) Drive vehicle under the following conditions:
   Selector lever in D, vehicle speed higher than 10 km/h (6 MPH), throttle opening greater than 1/8 of the full throttle position and driving for more than 10 seconds.
3) Select "MODE 3" with GST.

OR

1) Start engine.
2) Drive vehicle under the following conditions:
   Selector lever in D, vehicle speed higher than 10 km/h (6 MPH), throttle opening greater than 1/8 of the full throttle position and driving for more than 10 seconds.
3) Perform self-diagnosis.
   Refer to SELF-DIAGNOSIS PROCEDURE (No Tools), AT-49.

Self-diagnosis (Cont'd)

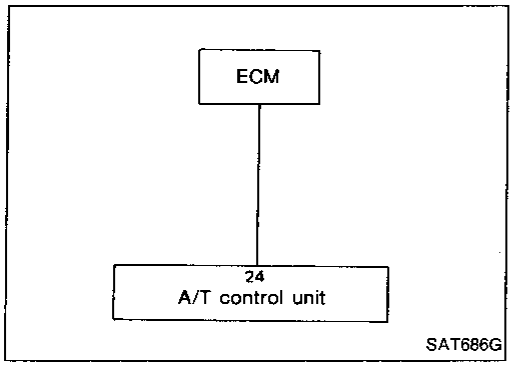

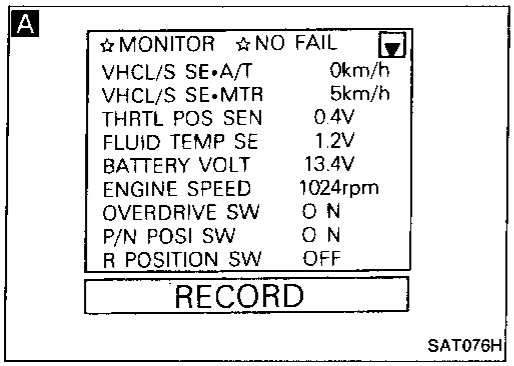

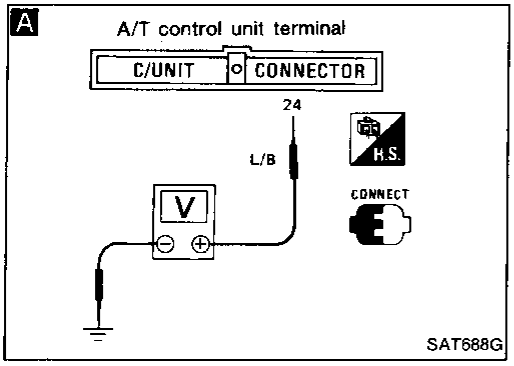

Perform diagnostic test mode II (self-diagnostic results) for engine control. Check ignition signal circuit condition.

NG → Check ignition signal circuit for engine control. Refer to section EC ["Ignition Signal (DTC: 0201)", "TROUBLE DIAGNOSIS FOR DTC P1320"].

OK ↓

A

CHECK INPUT SIGNAL.

1. Start engine.
2. Select "ECU INPUT SIGNALS" in Data Monitor.
3. Read out the value of "ENGINE SPEED". Check engine speed changes according to throttle position.

— OR —

1. Start engine.
2. Check voltage between A/T control unit terminal ㉔ and ground.

Voltage: 0.9 - 4.5V

NG → Check the following items:
- Harness for short or open between A/T control unit and ignition coil.
- Resistor
- Ignition coil

Refer to EC section ["Ignition Signal (DTC: 0201)", "TROUBLE DIAGNOSIS FOR DTC P1320"].

OK ↓

Perform self-diagnosis again after driving for a while.

NG → 1. Perform A/T control unit input/output signal inspection.
2. If NG, recheck A/T control unit pin terminals for damage or loose connection with harness connector.

OK ↓

INSPECTION END

Self-diagnosis (Cont'd)

LINE PRESSURE SOLENOID VALVE CIRCUIT CHECK

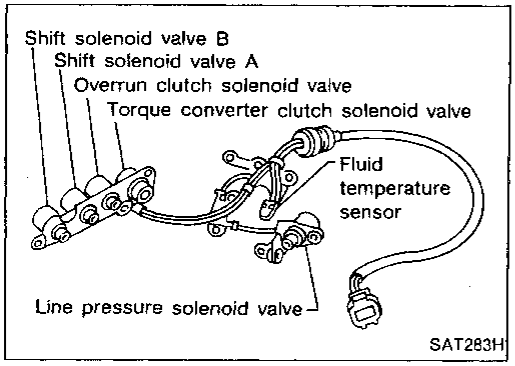

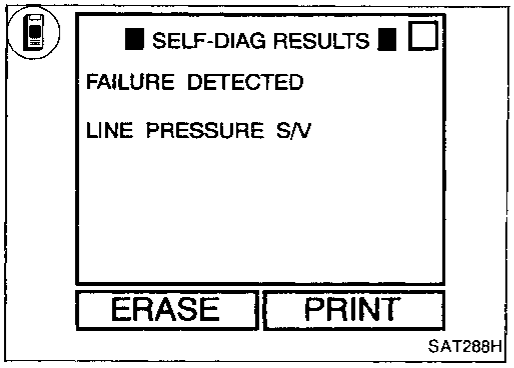

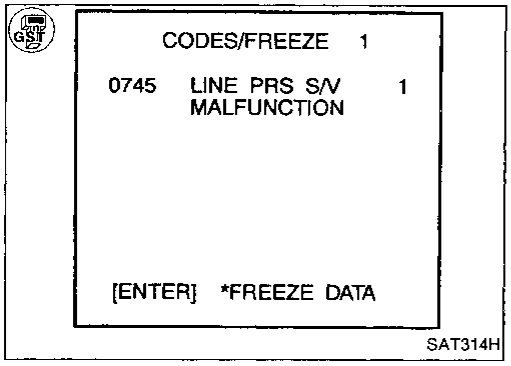

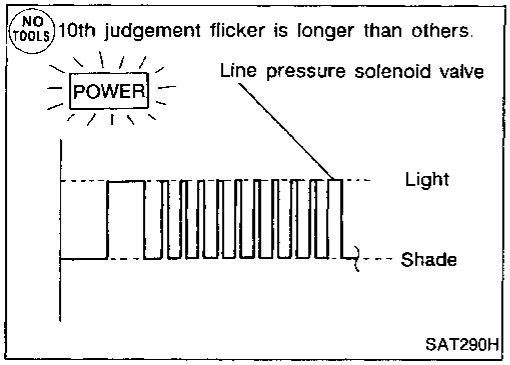

Parts description

The line pressure solenoid valve regulates the oil pump discharge pressure to suit the driving condition in response to a signal sent from the A/T control unit.

Trouble judgement conditions

Diagnostic trouble code	Malfunction is detected when ...	Check Items (Possible Cause)
: LINE PRESSURE S/V : P0745 : 10th judgement flicker	• A/T control unit detects the improper voltage drop when it tries to operate the solenoid valve.	• Harness or connectors (The solenoid circuit is open or short.) • Line pressure solenoid valve

Diagnostic trouble code (DTC) confirmation procedure

1) Start engine.
2) Select "SELF-DIAG RESULTS" mode with CONSULT.
3) With brake pedal depressed, move selector lever from P → N → D → N → P.

OR

1) Start engine.
2) With brake pedal depressed, move selector lever from P → N → D → N → P.
3) Select "MODE 3" with GST.

OR

1) Start engine.
2) With brake pedal depressed, move selector lever from P → N → D → N → P.
3) Perform self-diagnosis.
Refer to SELF-DIAGNOSIS PROCEDURE (No Tools), AT-49.

Self-diagnosis (Cont'd)

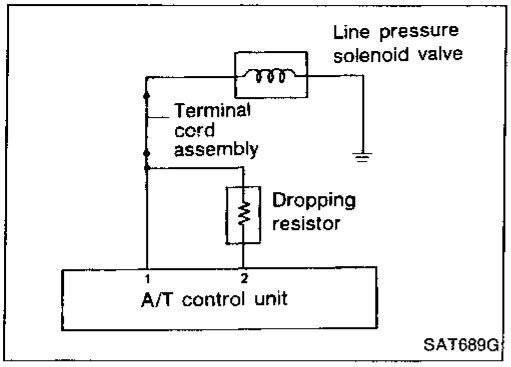

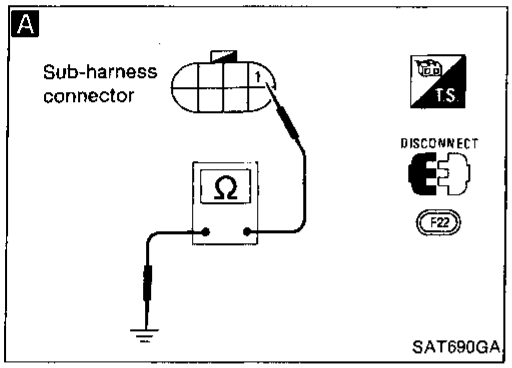

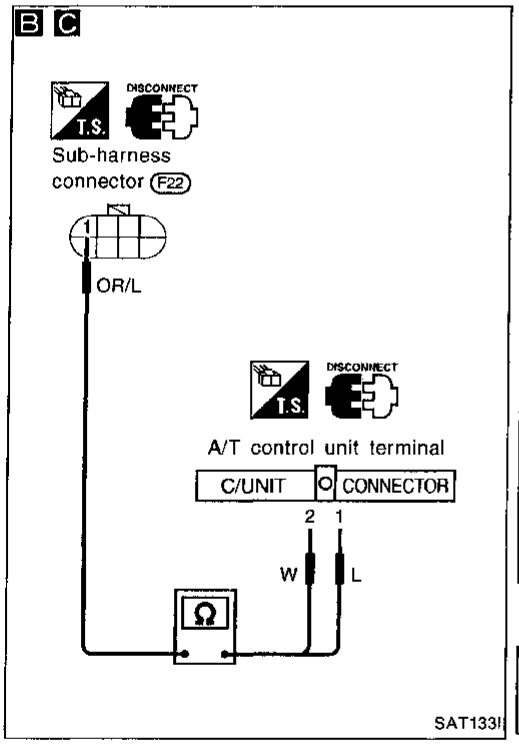

A

CHECK GROUND CIRCUIT.
1. Turn ignition switch to "OFF" position.
2. Disconnect terminal cord assembly connector in engine compartment.
3. Check resistance between terminal ① and ground.
   Resistance: 2.5 - 5Ω

NG →
1. Remove control valve assembly. Refer to "ON-VEHICLE SERVICE", AT-131.
2. Check the following items:
   - Line pressure solenoid valve. Refer to "Electrical Components Inspection", AT-109.
   - Harness for short or open of terminal cord assembly

OK ↓

B

CHECK POWER SOURCE CIRCUIT.
1. Turn ignition switch to "OFF" position.
2. Disconnect A/T control unit harness connector.
3. Check resistance between terminal ① and A/T control unit terminal ②.
   Resistance: 11.2 - 12.8Ω

NG →
Check the following items:
- Dropping resistor. Refer to "Electrical Components Inspection", AT-111.
- Harness for short or open between A/T control unit ② and terminal cord assembly (Main harness)

OK ↓

C

CHECK POWER SOURCE CIRCUIT.
1. Turn ignition switch to "OFF" position.
2. Check resistance between terminal ① and A/T control unit terminal ①.
   Resistance:
   Approximately 0Ω
3. Reinstall any part removed.

NG →
Repair or replace harness between A/T control unit ① and terminal cord assembly.

OK ↓

Perform self-diagnosis after driving for a while.

NG →
1. Perform A/T control unit input/output signal inspection.
2. If NG, recheck A/T control unit pin terminals for damage or loose connection with harness connector.

OK ↓

INSPECTION END

Self-diagnosis (Cont'd)

INHIBITOR, OVERDRIVE AND THROTTLE POSITION SWITCH CIRCUIT CHECKS

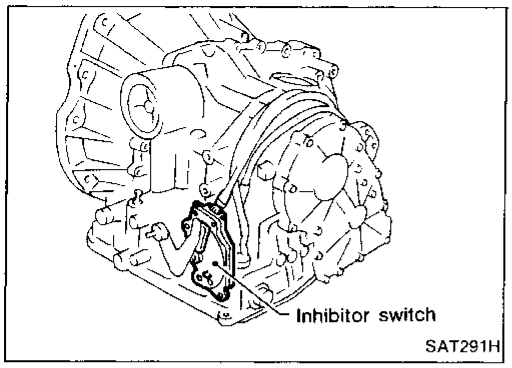

SAT291H

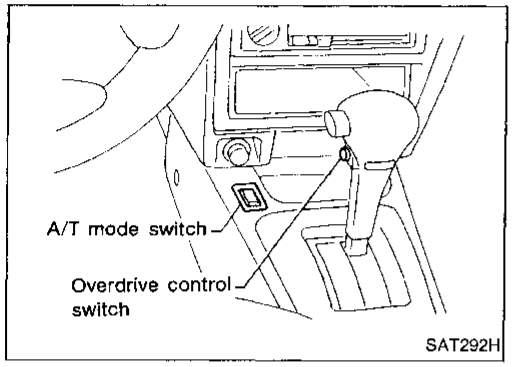

SAT292H

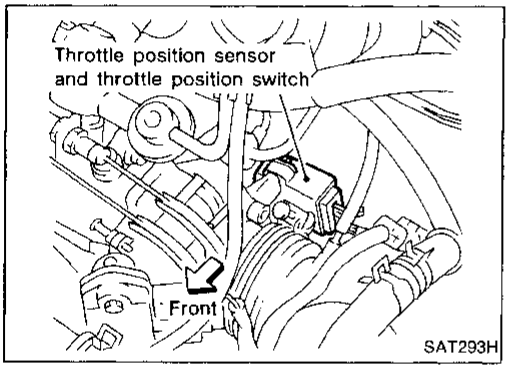

SAT293H

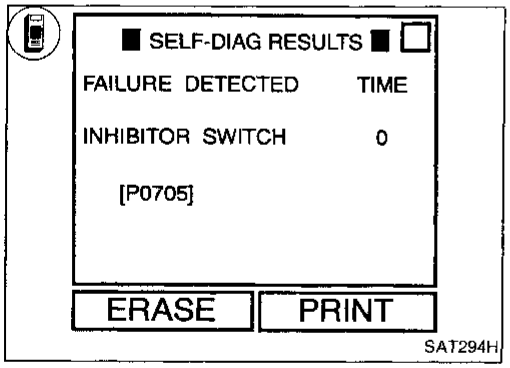

SAT294H

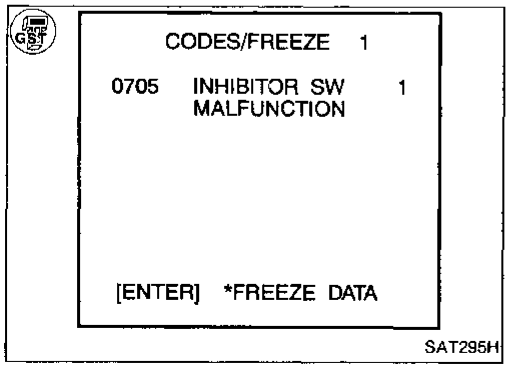

SAT295H

Parts description

Inhibitor switch
Detects the selector lever position and sends a signal to the A/T control unit.
Overdrive switch
Detects the overdrive switch position (ON or OFF) and sends a signal to the A/T control unit.
Throttle position switch
Consists of a wide-open throttle position switch and a closed throttle position switch.
The wide-open position switch sends a signal to the A/T control unit when the throttle valve is open at least 1/2 of the full throttle position. The closed throttle position switch sends a signal to the A/T control unit when the throttle valve is fully closed.

Overall function check

1) Start engine.
2) Select "SELF-DIAG RESULTS" mode for ECM with CONSULT.
3) Drive vehicle under the following conditions:
Selector lever in D, OD control switch in "OFF" position, vehicle speed higher than 10 km/h (6 MPH), throttle opening greater than 1/2 of the full throttle position and driving for more than 5 seconds.

OR

1) Start engine.
2) Drive vehicle under the following conditions:
Selector lever in D, OD control switch in "OFF" position, vehicle speed higher than 10 km/h (6 MPH), throttle opening greater than 1/2 of the full throttle position and driving for more than 5 seconds.
3) Select "MODE 3" with GST.

OR

1) Start engine.
2) Drive vehicle under the following conditions:
Selector lever in D, OD control switch in "OFF" position, vehicle speed higher than 10 km/h (6 MPH), throttle opening greater than 1/2 of the full throttle position and driving for more than 5 seconds.
3) Perform self-diagnosis for ECM.
Refer to EC section ["Malfunction Indicator Lamp (MIL)", "ON-BOARD DIAGNOSTIC SYSTEM DESCRIPTION"].

Self-diagnosis (Cont'd)

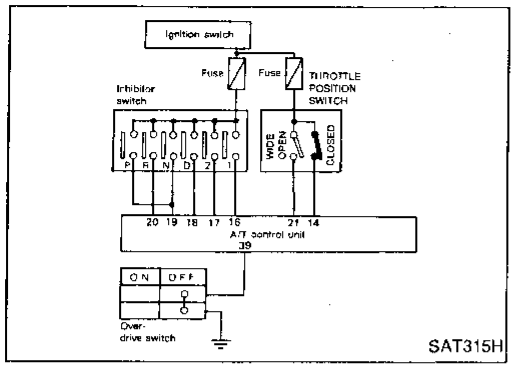

SAT315H

A

☆MONITOR	☆NO FAIL
VHCL/S SE•A/T	0km/h
VHCL/S SE•MTR	5km/h
THRTL POS SEN	0.4V
FLUID TEMP SE	1.2V
BATTERY VOLT	13.4V
ENGINE SPEED	1024rpm
OVERDRIVE SW	O N
P/N POSI SW	O N
R POSITION SW	OFF

RECORD

SAT076H

A

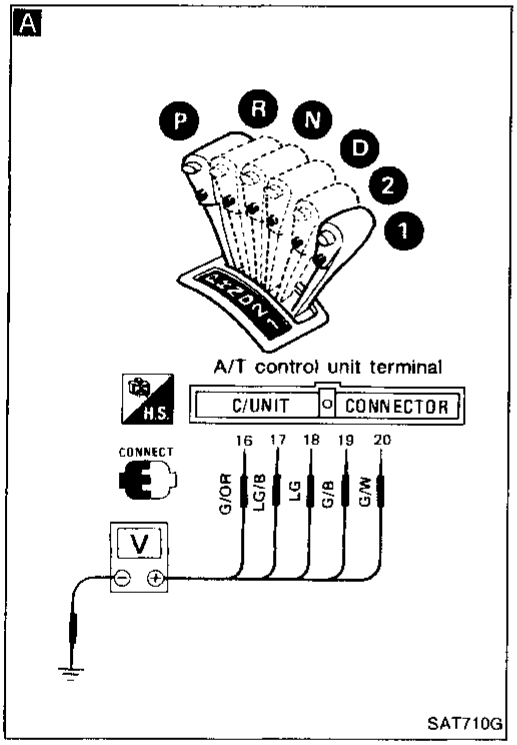

SAT710G

A

CHECK INHIBITOR SWITCH CIRCUIT.

1. Turn ignition switch to "ON" position.
   (Do not start engine.)
2. Select "ECU INPUT SIGNALS" in Data Monitor.
3. Read out "R, N, D, 1 and 2 position switches" moving selector lever to each position.
   Check the signal of the selector lever position is indicated properly.

NG → Check the following items:
- Inhibitor switch. Refer to "Electrical Components Inspection", AT-110.
- Harness for short or open between ignition switch and inhibitor switch (Main harness)
- Harness for short or open between inhibitor switch and A/T control unit (Main harness)

— OR —

1. Turn ignition switch to "ON" position. (Do not start engine.)
2. Check voltage between A/T control unit terminals ⑯, ⑰, ⑱, ⑲, ⑳ and ground while moving selector lever through each position.

Voltage:
B: Battery voltage
0: 0V

Lever position	Terminal No.				
	⑲	⑳	⑱	⑰	⑯
P, N	**B**	0	0	0	0
R	0	**B**	0	0	0
D	0	0	**B**	0	0
2	0	0	0	**B**	0
1	0	0	0	0	**B**

OK → Ⓐ

Self-diagnosis (Cont'd)

B

☆MONITOR ☆NO FAIL

VHCL/S SE•A/T	0km/h
VHCL/S SE•MTR	5km/h
THRTL POS SEN	0.4V
FLUID TEMP SE	1.2V
BATTERY VOLT	13.4V
ENGINE SPEED	1024rpm
OVERDRIVE SW	O N
P/N POSI SW	O N
R POSITION SW	OFF

RECORD

SAT076H

B

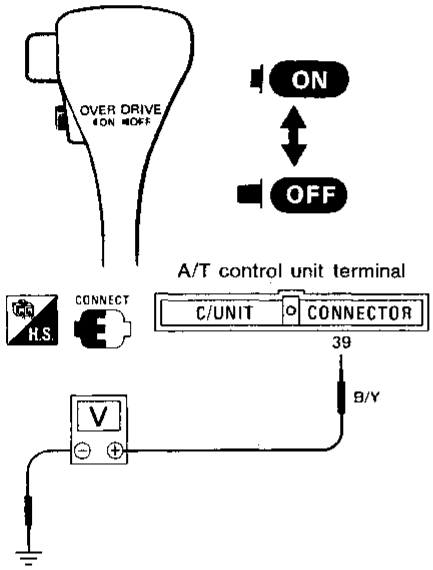

SAT340H

Ⓐ

B

CHECK OVERDRIVE SWITCH CIRCUIT.

1. Turn ignition switch to "ON" position.
   (Do not start engine.)
2. Select "ECU INPUT SIGNALS" in Data Monitor.
3. Read out "OVERDRIVE SWITCH".
   Check the signal of the overdrive switch is indicated properly.
   (Overdrive switch "ON" displayed on CONSULT means overdrive "OFF".)

OR

1. Turn ignition switch to "ON" position.
   (Do not start engine.)
2. Check voltage between A/T control unit terminal ㊴ and ground when overdrive switch is "ON" and "OFF".

Switch position	Voltage
ON	Battery voltage
OFF	1V or less

NG →

Check the following items:
- Overdrive switch. Refer to "Electrical Components Inspection", AT-110.
- Harness for short or open between A/T control unit and overdrive switch (Main harness)
- Harness for short or open of ground circuit for overdrive switch (Main harness)

OK ↓

Ⓑ

Self-diagnosis (Cont'd)

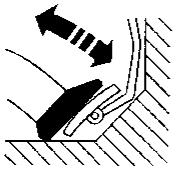

☆ MONITOR	☆ NO FAIL
D POSITION SW	OFF
2 POSITION SW	OFF
1 POSITION SW	OFF
ASCD • CRUISE	OFF
ASCD • OD CUT	OFF
KICKDOWN SW	OFF
POWERSHIFT SW	OFF
CLOSED THL/SW	ON
W/O THRL/P-SW	OFF

RECORD

SAT963H

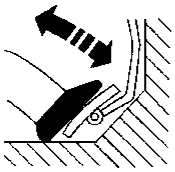

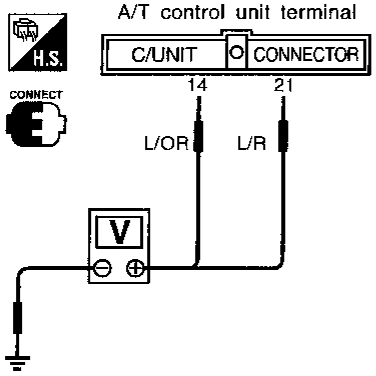

SAT964HC

Ⓑ

CHECK THROTTLE POSITION SWITCH CIRCUIT.

1. Turn ignition switch to "ON" position.
   (Do not start engine.)
2. Select "ECU INPUT SIGNALS" in Data Monitor.
3. Read out "CLOSED THL/SW" and "W/O THRL/P-SW" depressing and releasing accelerator pedal.
   Check the signal of throttle position switch is indicated properly.

Accelerator pedal condition	Data Monitor	
	CLOSED THL/SW	W/O THRL/P-SW
Released	ON	OFF
Fully depressed	OFF	ON

NG → Check the following items:
- Throttle position switch Refer to "Electrical Components Inspection", AT-111.
- Harness for short or open between ignition switch and throttle position switch (Main harness)
- Harness for short or open between throttle position switch and A/T control unit (Main harness)

OR

1. Turn ignition switch to "ON" position.
   (Do not start engine.)
2. Check voltage between A/T control unit terminals ⑭, ㉑ and ground while depressing and releasing accelerator pedal slowly. (after warming up engine)

Accelerator pedal condition	Voltage	
	Terminal No. ⑭	Terminal No. ㉑
Released	Battery voltage	1V or less
Fully depressed	1V or less	Battery voltage

OK ↓

Perform self-diagnosis again after driving for a while.

NG → 1. Perform A/T control unit input/output signal inspection.
2. If NG, recheck A/T control unit pin terminals for damage or loose connection with harness connector.

OK ↓

INSPECTION END

Self-diagnosis (Cont'd)

IMPROPER SHIFTING TO 1ST GEAR POSITION

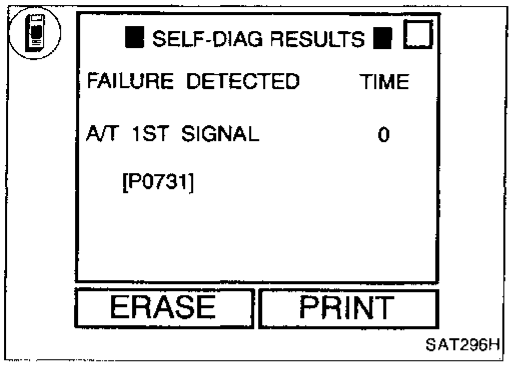

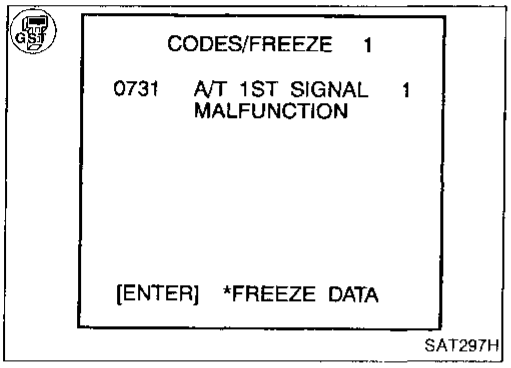

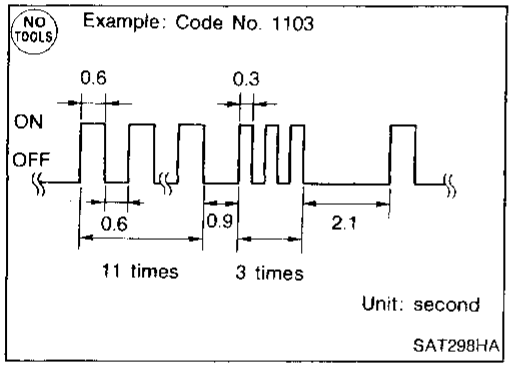

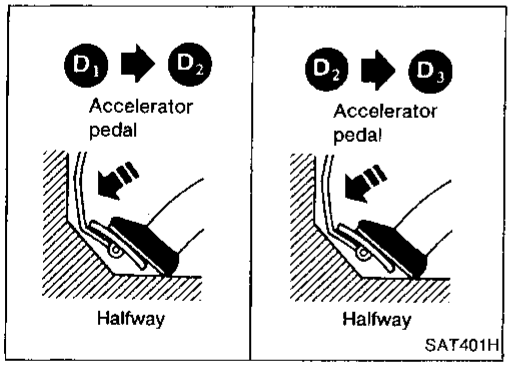

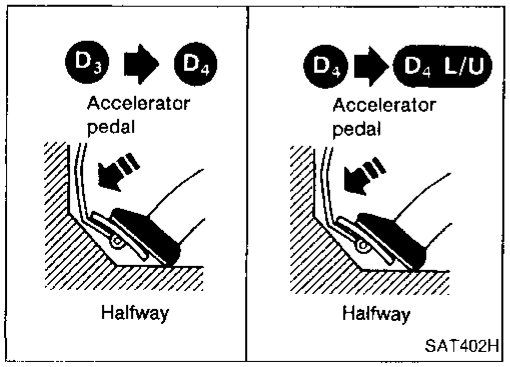

Description

- This is a "failure" item indicated by the MIL.
- This is indicated when the vehicle is being driven at any gear position other than 1st while the A/T control unit is instructing the A/T to shift the gear in the 1st position.
- The detected item, "A/T 1ST SIGNAL", is not determined as a fault unless the A/T control unit self-diagnosis system is in the "No Failure" condition. When "A/T 1ST SIGNAL" is displayed, it indicates that the gears are not properly shifted. The problem is not caused by electrical failure of the A/T (circuits open or shorted) but by mechanical failure (control valve sticking, improper solenoid valve operation, etc.).

Overall function check

1) Start engine and warm up ATF.
2) Select "SELF-DIAG RESULTS" mode for ECM with CONSULT.
3) Start vehicle with selector lever in D and throttle opening halfway. Check that vehicle runs through gear shift of $D_1 \rightarrow D_2 \rightarrow D_3 \rightarrow D_4$, in accordance with shift schedule. Refer to shift schedule, AT-38.

OR

1) Start engine and warm up ATF.
2) Start vehicle with selector lever in D and throttle opening halfway. Check that vehicle runs through gear shift of $D_1 \rightarrow D_2 \rightarrow D_3 \rightarrow D_4$, in accordance with shift schedule. Refer to shift schedule, AT-38.
3) Select "MODE 3" with GST.

OR

1) Start engine and warm up ATF.
2) Start vehicle with selector lever in D and throttle opening halfway. Check that vehicle runs through gear shift of $D_1 \rightarrow D_2 \rightarrow D_3 \rightarrow D_4$, in accordance with shift schedule. Refer to shift schedule, AT-38.
3) Perform self-diagnosis for ECM.
   Refer to EC section ["Malfunction Indicator Lamp (MIL)", "ON-BOARD DIAGNOSTIC SYSTEM DESCRIPTION"].

Self-diagnosis (Cont'd)

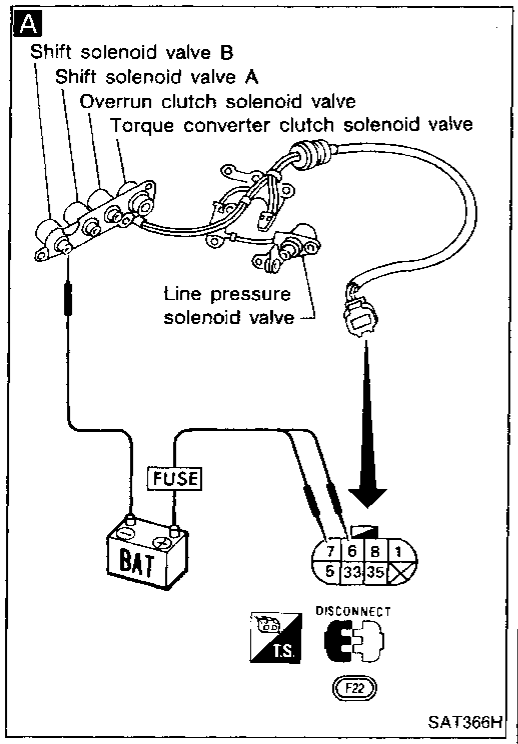

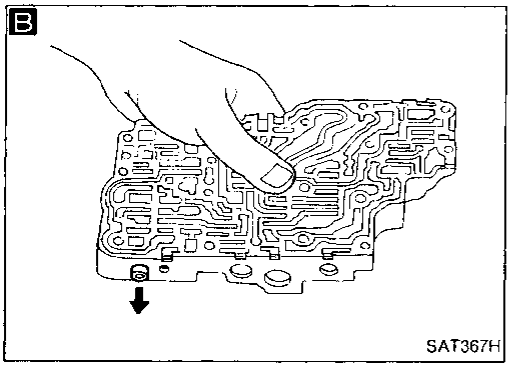

A

CHECK SHIFT SOLENOID VALVE.

1. Remove control valve assembly. Refer to "ON-VEHICLE SERVICE", AT-131.
2. Check shift solenoid valve operation.
   - Shift solenoid valve A
   - Shift solenoid valve B

   Refer to "Electrical Components Inspection", AT-109.

NG → Repair or replace shift solenoid valve assembly.

OK ↓

B

CHECK CONTROL VALVE.

1. Disassemble control valve assembly. Refer to "REPAIR FOR COMPONENT PARTS — Control Valve Assembly —", AT-162.
2. Check to ensure that:
   - Valve, sleeve and plug slide along valve bore under their own weight.
   - Valve, sleeve and plug are free from burrs, dents and scratches.
   - Control valve springs are free from damage, deformation and fatigue.
   - Hydraulic line is free from obstacles.

NG → Repair control valve assembly.

OK ↓

Check again.

OK ↓

INSPECTION END

Self-diagnosis (Cont'd)

IMPROPER SHIFTING TO 2ND GEAR POSITION

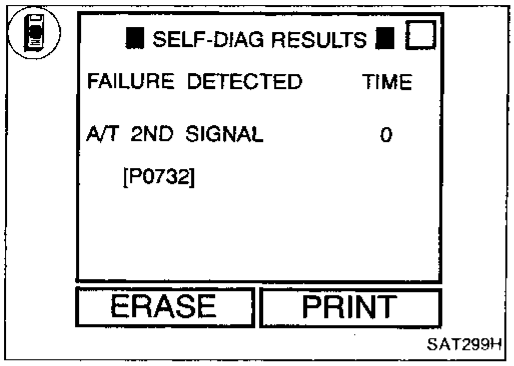

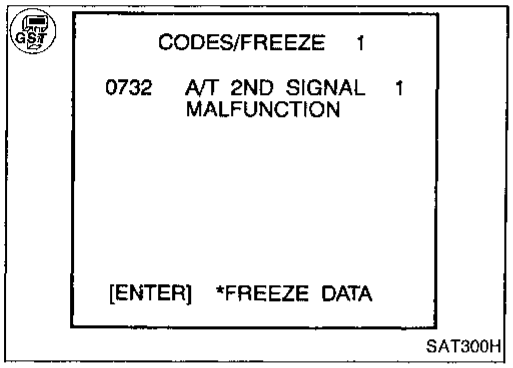

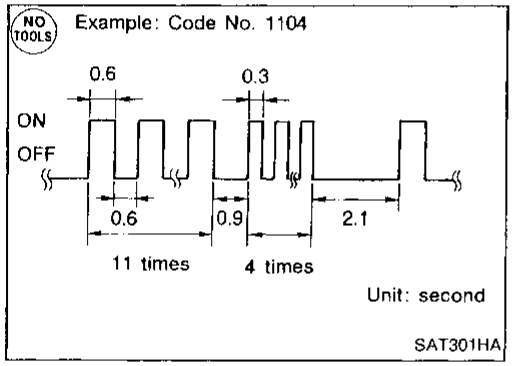

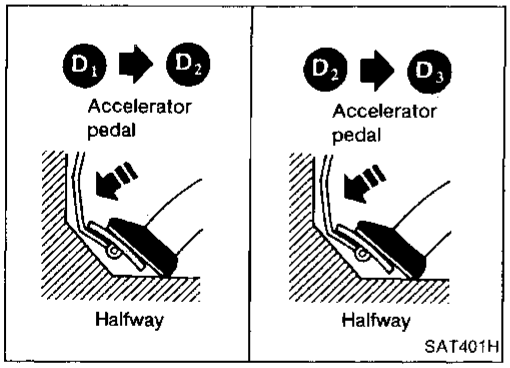

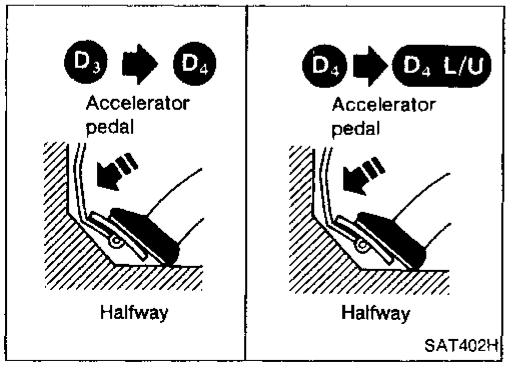

Description

- This is a "failure" item indicated by the MIL.
- This is indicated when the vehicle is being driven at any gear position other than 2nd while the A/T control unit is instructing the A/T to shift the gear in the 2nd position.
- The detected item, "A/T 2ND SIGNAL", is not determined as a fault unless the A/T control unit self-diagnosis is in the "No Failure" condition. When "A/T 2ND SIGNAL" is displayed, it indicates that the gears are not properly shifted. The problem is not caused by electrical failure of the A/T (circuits open or shorted) but by mechanical failure (control valve sticking, improper solenoid valve operation, etc.).

Overall function check

1) Start engine and warm up ATF.
2) Select "SELF-DIAG RESULTS" mode for ECM with CONSULT.
3) Start vehicle with selector lever in D and throttle opening halfway. Check that vehicle runs through gear shift of $D_1 \rightarrow D_2 \rightarrow D_3 \rightarrow D_4$, in accordance with shift schedule. Refer to shift schedule, AT-38.

OR

1) Start engine and warm up ATF.
2) Start vehicle with selector lever in D and throttle opening halfway. Check that vehicle runs through gear shift of $D_1 \rightarrow D_2 \rightarrow D_3 \rightarrow D_4$, in accordance with shift schedule. Refer to shift schedule, AT-38.
3) Select "MODE 3" with GST.

OR

1) Start engine and warm up ATF.
2) Start vehicle with selector lever in D and throttle opening halfway. Check that vehicle runs through gear shift of $D_1 \rightarrow D_2 \rightarrow D_3 \rightarrow D_4$, in accordance with shift schedule. Refer to shift schedule, AT-38.
3) Perform self-diagnosis for ECM.
   Refer to EC section ["Malfunction Indicator Lamp (MIL)", "ON-BOARD DIAGNOSTIC SYSTEM DESCRIPTION"].

Self-diagnosis (Cont'd)

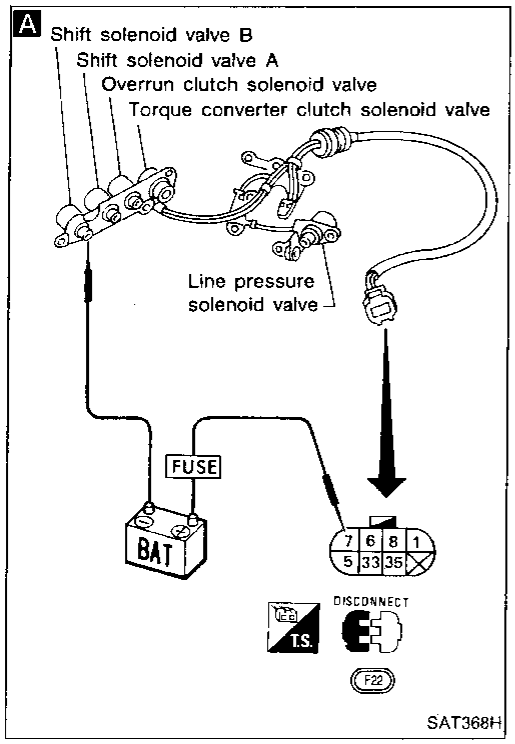

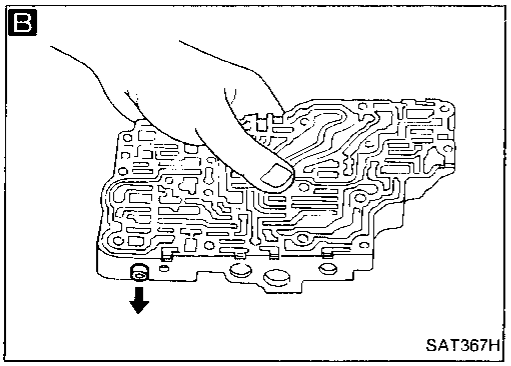

A

CHECK SHIFT SOLENOID VALVE.

1. Remove control valve assembly. Refer to "ON-VEHICLE SERVICE", AT-131.
2. Check shift solenoid valve operation.
   - Shift solenoid valve B

   Refer to "Electrical Components Inspection", AT-109.

NG → Repair or replace shift solenoid valve assembly.

OK ↓

B

CHECK CONTROL VALVE.

1. Disassemble control valve assembly. Refer to "REPAIR FOR COMPONENT PARTS — Control Valve Assembly —", AT-162.
2. Check to ensure that:
   - Valve, sleeve and plug slide along valve bore under their own weight.
   - Valve, sleeve and plug are free from burrs, dents and scratches.
   - Control valve springs are free from damage, deformation and fatigue.
   - Hydraulic line is free from obstacles.

NG → Repair control valve assembly.

OK ↓

Check again.

OK ↓

INSPECTION END

Self-diagnosis (Cont'd)

IMPROPER SHIFTING TO 3RD GEAR POSITION

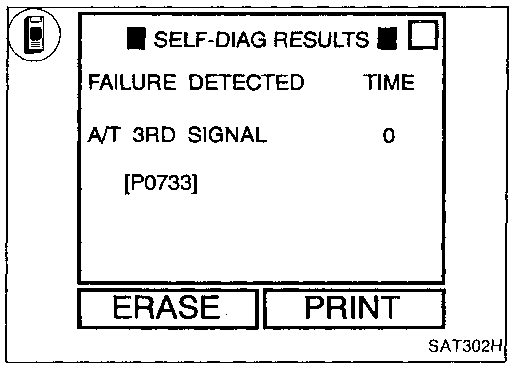

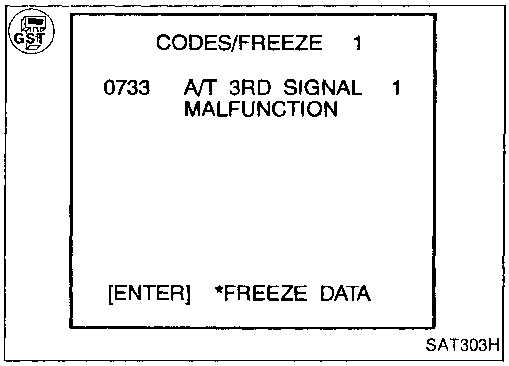

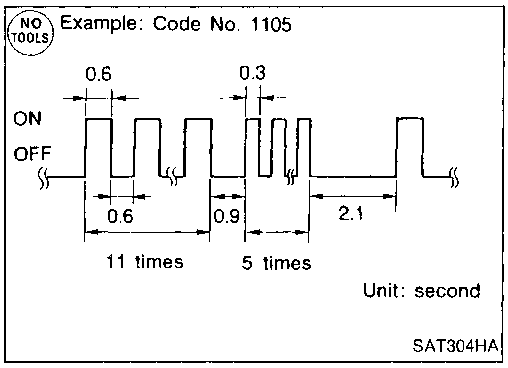

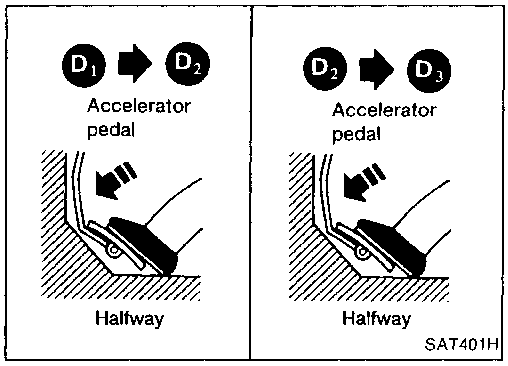

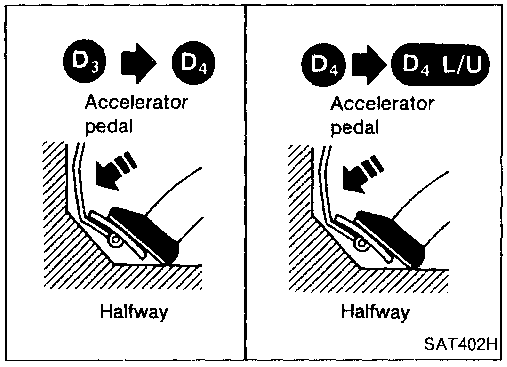

Description

- This is a "failure" item indicated by the MIL.
- This is indicated when the vehicle is being driven at any gear position other than 3rd while the A/T control unit is instructing the A/T to shift the gear in the 3rd position.
- The detected item, "A/T 3RD SIGNAL", is not determined as a fault unless the A/T control unit self-diagnosis system is in the "No Failure" condition. When "A/T 3RD SIGNAL" is displayed, it indicates that the gears are not properly shifted. The problem is not caused by electrical failure of the A/T (circuits open or shorted) but by mechanical failure (control valve sticking, improper solenoid valve operation, malfunctioning servo piston or brake band, etc.).

Overall function check

1) Start engine and warm up ATF.
2) Select "SELF-DIAG RESULTS" mode for ECM with CONSULT.
3) Start vehicle with selector lever in D and throttle opening halfway. Check that vehicle runs through gear shift of $D_1 \rightarrow D_2 \rightarrow D_3 \rightarrow D_4$, in accordance with shift schedule. Refer to shift schedule, AT-38.

OR

1) Start engine and warm up ATF.
2) Start vehicle with selector lever in D and throttle opening halfway. Check that vehicle runs through gear shift of $D_1 \rightarrow D_2 \rightarrow D_3 \rightarrow D_4$, in accordance with shift schedule. Refer to shift schedule, AT-38.
3) Select "MODE 3" with GST.

OR

1) Start engine and warm up ATF.
2) Start vehicle with selector lever in D and throttle opening halfway. Check that vehicle runs through gear shift of $D_1 \rightarrow D_2 \rightarrow D_3 \rightarrow D_4$, in accordance with shift schedule. Refer to shift schedule, AT-38.
3) Perform self-diagnosis for ECM.
   Refer to EC section ["Malfunction Indicator Lamp (MIL)", "ON-BOARD DIAGNOSTIC SYSTEM DESCRIPTION"].

Self-diagnosis (Cont'd)

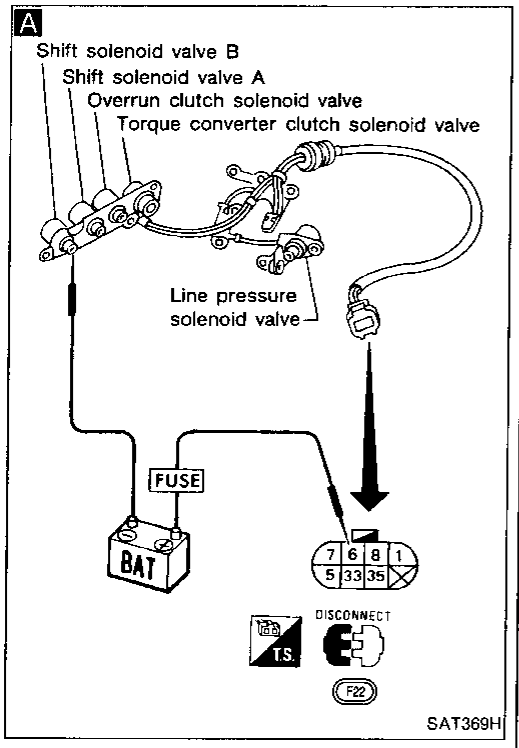

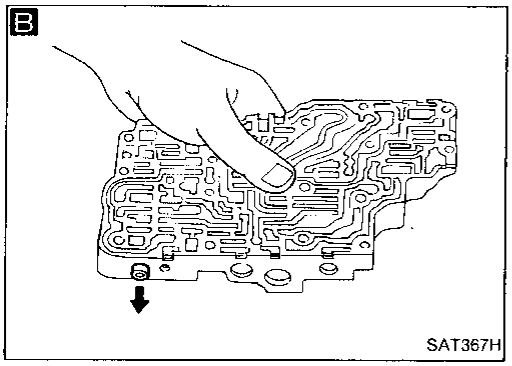

A

CHECK SHIFT SOLENOID VALVE.

1. Remove control valve assembly. Refer to "ON-VEHICLE SERVICE", AT-131.
2. Check shift solenoid valve operation.
   - Shift solenoid valve A

   Refer to "Electrical Components Inspection", AT-109.

NG → Repair or replace shift solenoid valve assembly.

OK ↓

B

CHECK CONTROL VALVE.

1. Disassemble control valve assembly. Refer to "REPAIR FOR COMPONENT PARTS — Control Valve Assembly —", AT-162.
2. Check to ensure that:
   - Valve, sleeve and plug slide along valve bore under their own weight.
   - Valve, sleeve and plug are free from burrs, dents and scratches.
   - Control valve springs are free from damage, deformation and fatigue.
   - Hydraulic line is free from obstacles.

NG → Repair control valve assembly.

OK ↓

Check again.

OK ↓

INSPECTION END

Self-diagnosis (Cont'd)

IMPROPER SHIFTING TO 4TH GEAR POSITION OR IMPROPER TORQUE CONVERTER CLUTCH OPERATION

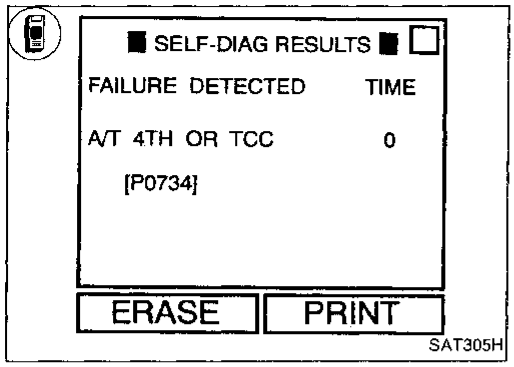

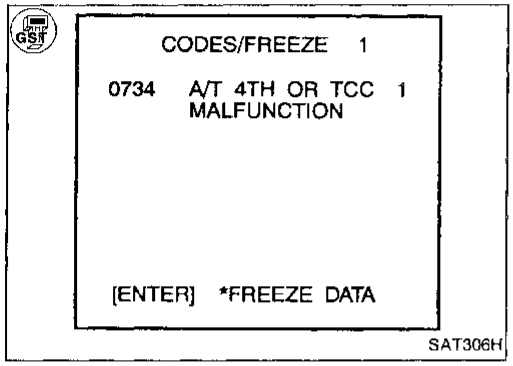

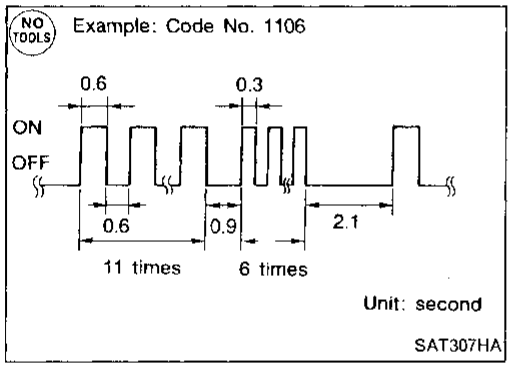

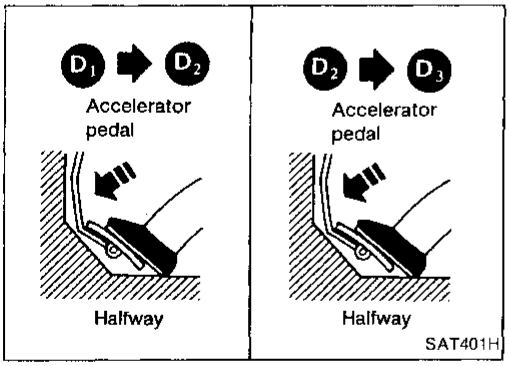

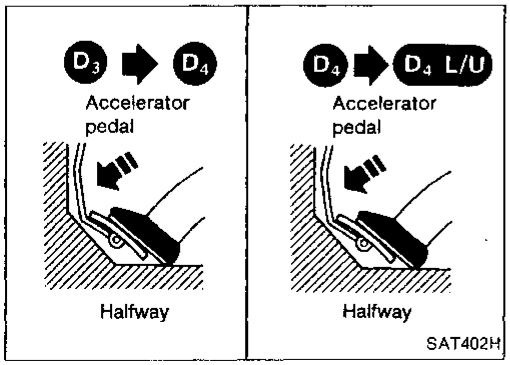

Description

- This is a "failure" item indicated by the MIL.
- This is indicated when the vehicle is being driven at any gear position other than 4th while the A/T control unit is instructing the A/T to shift the gear in the 4th position. Also, this is indicated when the vehicle is being driven without the torque converter clutch locked up while the A/T control unit is instructing the A/T to lock up the torque converter clutch.
- The detected item, "A/T 4TH OR TCC", is not determined as a fault unless the A/T control unit self-diagnosis system is in the "No Failure" condition. When "A/T 4TH OR TCC" is displayed, it indicates that the gears are not properly shifted. The problem is not caused by electrical failure of the A/T (circuits open or shorted) but by mechanical failure (control valve sticking, improper solenoid valve operation, malfunctioning oil pump or torque converter clutch, etc.).

Overall function check

1) Start engine and warm up ATF.
2) Select "SELF-DIAG RESULTS" mode for ECM with CONSULT.
3) Start vehicle with selector lever in D and throttle opening halfway. Check that vehicle runs through gear shift of $D_1 \rightarrow D_2 \rightarrow D_3 \rightarrow D_4 \rightarrow D_4$ lock-up, in accordance with shift schedule. Refer to shift schedule, AT-38.

OR

1) Start engine and warm up ATF.
2) Start vehicle with selector lever in D and throttle opening halfway. Check that vehicle runs through gear shift of $D_1 \rightarrow D_2 \rightarrow D_3 \rightarrow D_4 \rightarrow D_4$ lock-up, in accordance with shift schedule. Refer to shift schedule, AT-38.
3) Select "MODE 3" with GST.

OR

1) Start engine and warm up ATF.
2) Start vehicle with selector lever in D and throttle opening halfway. Check that vehicle runs through gear shift of $D_1 \rightarrow D_2 \rightarrow D_3 \rightarrow D_4 \rightarrow D_4$ lock-up, in accordance with shift schedule. Refer to shift schedule, AT-38.
3) Perform self-diagnosis for ECM.
   Refer to EC section ["Malfunction Indicator Lamp (MIL)", "ON-BOARD DIAGNOSTIC SYSTEM DESCRIPTION"].

Self-diagnosis (Cont'd)

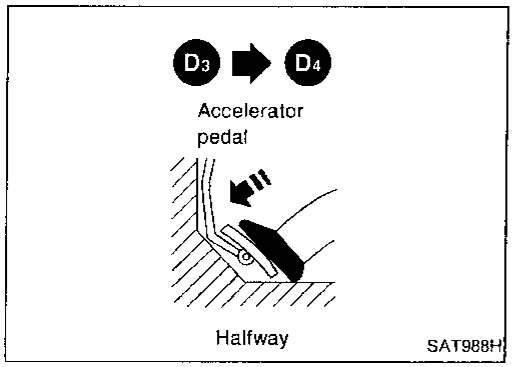

During "Cruise test – Part 1" (AT-33), does A/T shift from D_3 to D_4 at the specified speed?

- Yes → Go to Ⓑ (AT-88) and check for proper lock-up.
- No ↓

Perform pressure test. Refer to AT-115.

- NG → Go to Ⓐ (AT-87).
- OK ↓

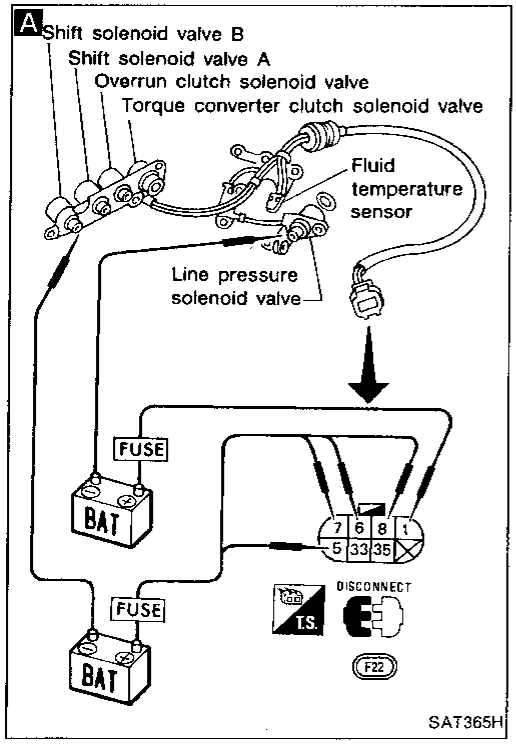

A

CHECK SOLENOID VALVES.

1. Remove control valve assembly. Refer to AT-131.
2. Check solenoid valve assembly operation. Refer to AT-109.

- NG → Replace solenoid valve assembly.
- OK ↓

B

CHECK CONTROL VALVE.

1. Disassemble control valve assembly. Refer to AT-162.
2. Check to ensure that:
   - Valve, sleeve and plug slide along valve bore under their own weight.
   - Valve, sleeve and plug are free from burrs, dents and scratches.
   - Control valve springs are free from damage, deformation and fatigue.
   - Hydraulic line is free from obstacles.

- NG → Repair control valve.
- OK ↓

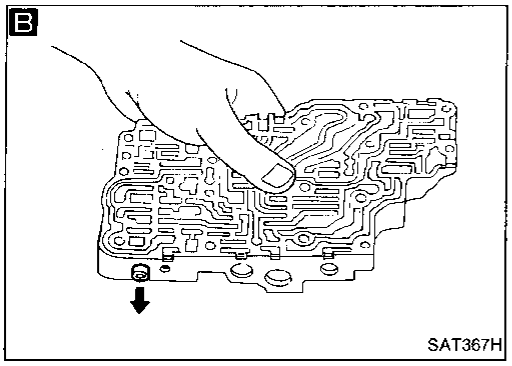

Does A/T shift from D_3 to D_4 at the specified speed?

- NG → Check control valve again. Repair or replace control valve assembly.
- OK ↓

Perform "Overall function check procedure", AT-85.

- NG → Go to Ⓑ (AT-88) and check for proper lock-up.
- OK ↓

INSPECTION END

Self-diagnosis (Cont'd)

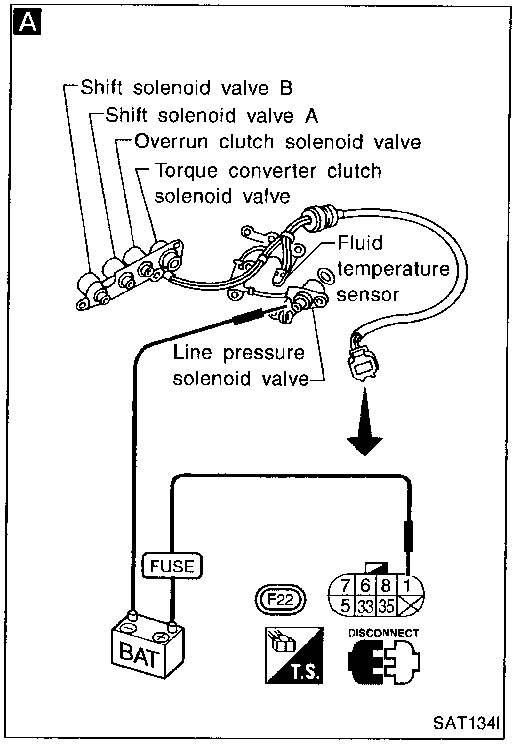

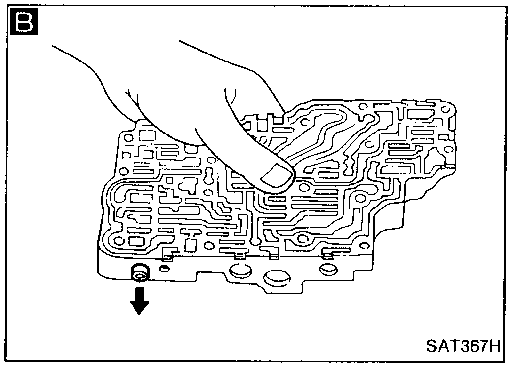

Ⓐ

A

CHECK LINE PRESSURE SOLENOID VALVE.
1. Remove control valve assembly. Refer to AT-131.
2. Check line pressure solenoid valve operation. Refer to AT-109.

NG → Replace solenoid valve assembly.

OK ↓

B

CHECK CONTROL VALVE.
1. Disassemble control valve assembly. Refer to AT-162.
2. Check line pressure circuit valves for sticking.
- Pressure regulator valve
- Pilot valve
- Pressure modifier valve

NG → Repair control valve.

OK ↓

Does A/T shift from D_3 to D_4 at the specified speed?

NG → Check control valve again. Repair or replace control valve assembly.

OK ↓

Perform "Overall function check procedure" AT-85.

NG → Go to Ⓑ (AT-88) and check for proper lock-up.

OK ↓

INSPECTION END

Self-diagnosis (Cont'd)

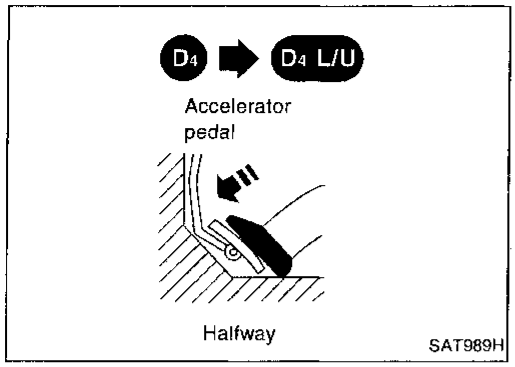

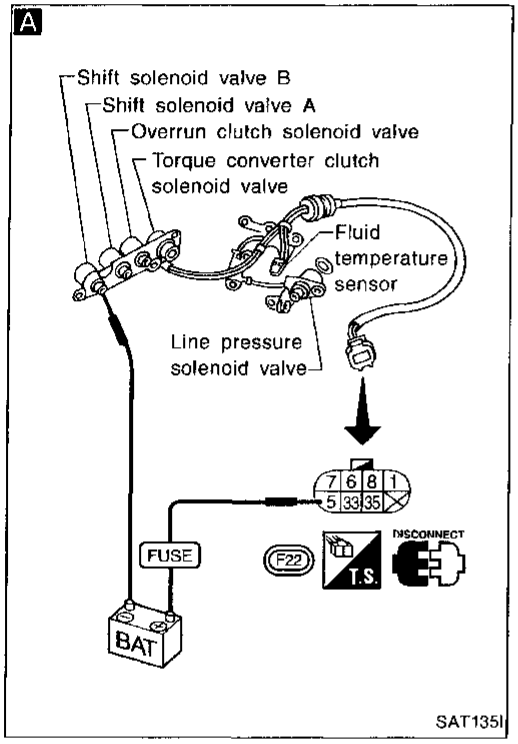

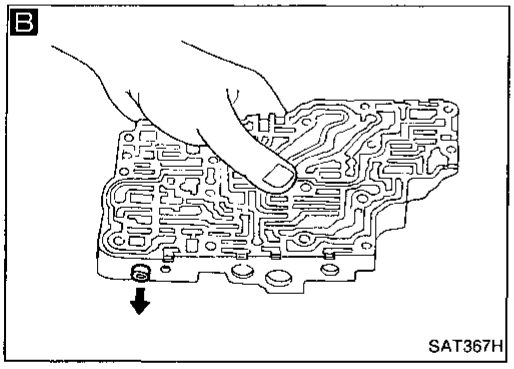

Ⓑ

During "Cruise test – Part 1" (AT-33), does A/T perform lock-up at the specified speed?
- Yes → Perform "Cruise test – Part 1" again and return to the start point of this flow chart.
- No ↓

A

CHECK TORQUE CONVERTER CLUTCH SOLENOID VALVE.
1. Remove control valve assembly. Refer to AT-131.
2. Check torque converter clutch solenoid valve operation. Refer to AT-109.

- NG → Replace solenoid valve assembly.
- OK ↓

B

CHECK CONTROL VALVE.
1. Disassemble control valve assembly. Refer to AT-162.
2. Check control valves for sticking.
- Torque converter clutch control valve
- Torque converter clutch relief valve

- NG → Repair control valve
- OK ↓

Does A/T perform lock-up at the specified speed?
- No → Check control valve again. Repair or replace control valve assembly.
- Yes ↓

Perform "Overall function check procedure", AT-85.
- NG → Perform "Cruise test – Part 1" again and return to the start point of this flow chart.
- OK ↓

INSPECTION END

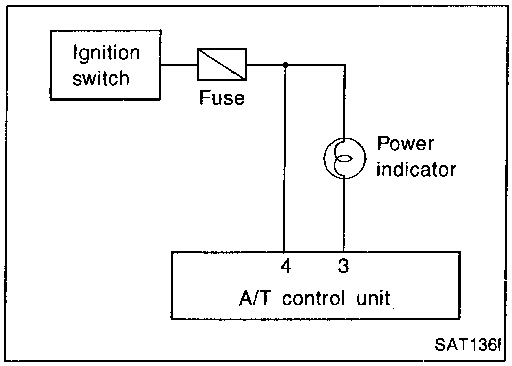

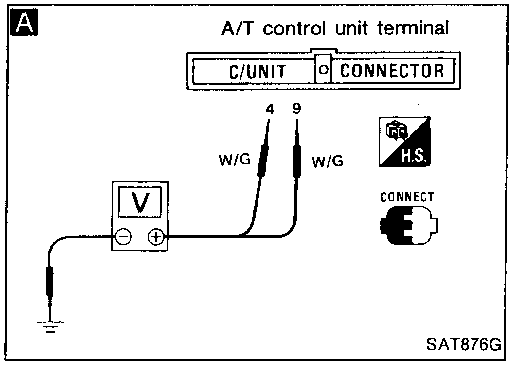

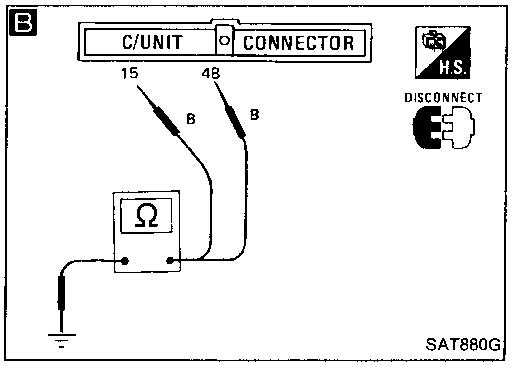

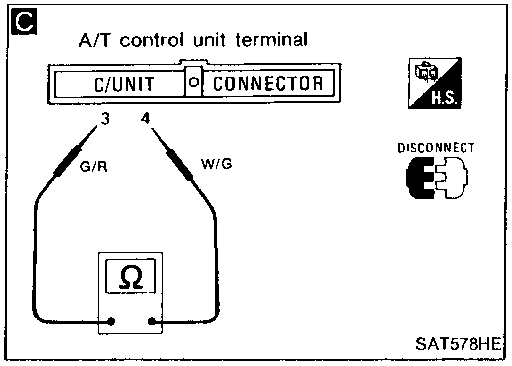

Diagnostic Procedure 1

SYMPTOM:

Power indicator lamp does not come on for about 2 seconds when turning ignition switch to "ON".

A

CHECK A/T CONTROL UNIT POWER SOURCE.

1. Turn ignition switch to "ON" position. (Do not start engine.)
2. Check voltage between A/T control unit terminals ④, ⑨ and ground.
   Battery voltage should exist.

NG → Check the following items:
- Harness for short or open between ignition switch and A/T control unit (Main harness)
- Ignition switch and fuse Refer to EL section ("POWER SUPPLY ROUTING").

OK ↓

B

CHECK A/T CONTROL UNIT GROUND CIRCUIT.

1. Turn ignition switch to "OFF" position.
2. Disconnect A/T control unit harness connector.
3. Check resistance between A/T control unit terminals ⑮, ㊽ and ground.
   Resistance:
   Approximately 0Ω

NG → Check harness for short or open between A/T control unit and ground.

OK ↓

C

CHECK LAMP CIRCUIT.

1. Turn ignition switch to "OFF" position.
2. Check resistance between A/T control unit terminals ③ and ④.
   Resistance: 50 - 100Ω
3. Reinstall any part removed.

NG → Check the following items:
- Power indicator lamp Refer to EL section.
- Harness for short or open between ignition switch and power indicator lamp (Main harness)
- Harness for short or open between power indicator lamp and A/T control unit

OK ↓

Check again.

NG → 1. Perform A/T control unit input/output signal inspection.
2. If NG, recheck A/T control unit pin terminals for damage or loose connection with harness connector.

OK ↓

INSPECTION END

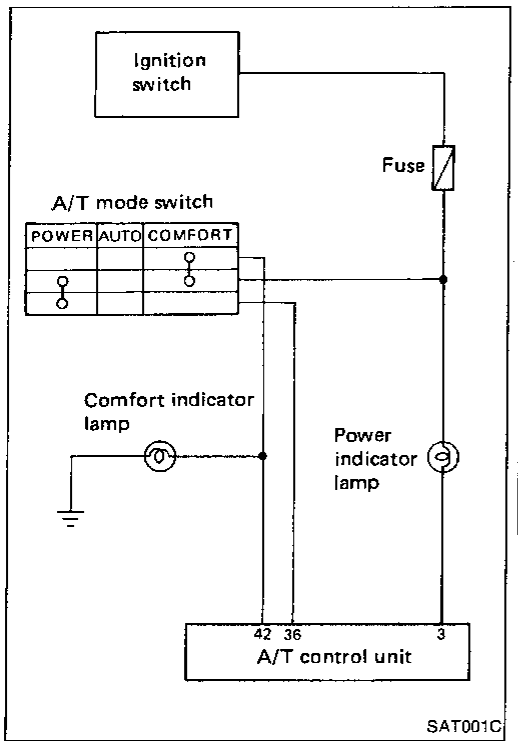

Diagnostic Procedure 2

SYMPTOM:

Power indicator lamp or comfort indicator lamp does not come on when turning A/T mode switch to the appropriate position.

Is Diagnostic Procedure 1 OK?
- No → Go to Diagnostic Procedure 1, AT-89.
- Yes ↓

Check the following items:
- A/T mode switch
- Comfort indicator lamp
- Harness for short or open between ignition switch and A/T mode switch
- Harness continuity between A/T mode switch and A/T control unit

- NG → Repair or replace damaged parts.

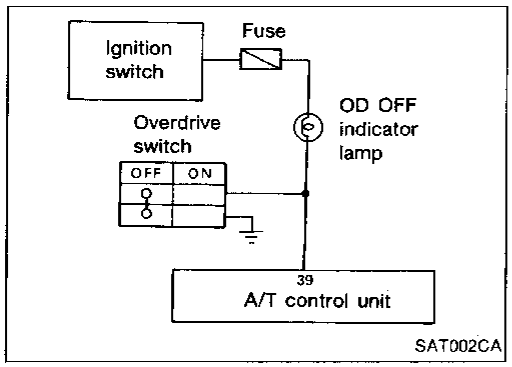

Diagnostic Procedure 3

SYMPTOM:

OD OFF indicator lamp does not come on when setting overdrive switch to "OFF" position.

Check the following items:
- Overdrive switch
- OD OFF indicator lamp
- Harness for short or open between ignition switch and OD OFF indicator lamp

- NG → Repair or replace damaged parts.

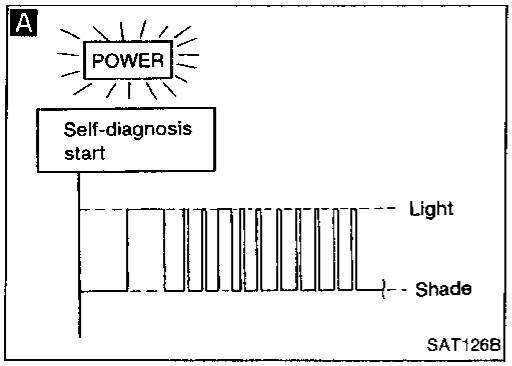

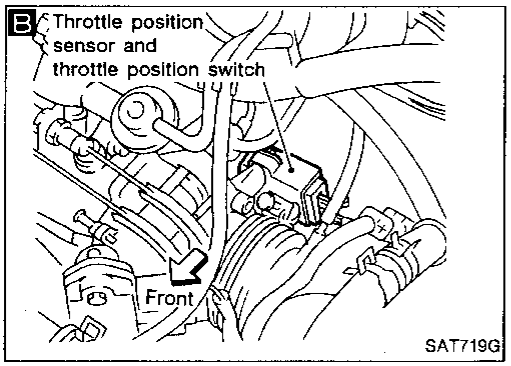

Diagnostic Procedure 4

SYMPTOM:

Power indicator lamp does not come on for about 3 seconds when depressing and releasing accelerator pedal fully.

A

Does self-diagnosis show damage to throttle position sensor circuit?
- No → Check throttle position sensor circuit. Refer to "Self-diagnosis", AT-58.
- Yes ↓

B

Check throttle position sensor. Refer to EC section ["Throttle Position Sensor (DTC: 0403)", "TROUBLE DIAGNOSIS FOR DTC P0120"].
- NG → Repair or replace throttle position sensor.
- OK ↓

1. Perform A/T control unit input/output signal inspection.
2. If NG, recheck A/T control unit pin terminals for damage or loose connection with harness connector.

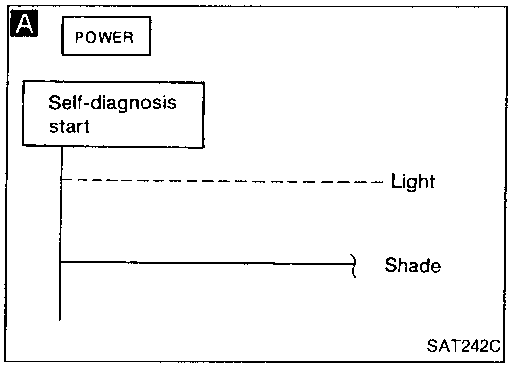

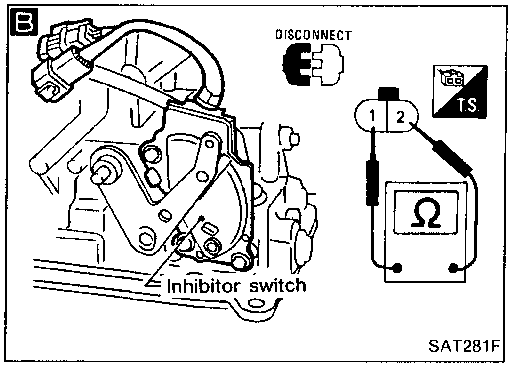

Diagnostic Procedure 5

SYMPTOM:

- **Engine cannot be started with selector lever in "P" or "N" position.**
- **Engine can be started with selector lever in "D", "2", "1" or "R" position.**

Does "ECU INPUT SIGNALS" in Data Monitor show damage to inhibitor switch circuit? — Yes → Check inhibitor switch circuit. Refer to "Self-diagnosis", AT-75.

OR

A

Does self-diagnosis show damage to inhibitor switch circuit?

No ↓

B

Check for short or open of inhibitor switch 2-pin connector. Refer to "Electrical Components Inspection", AT-110. — NG → Repair or replace inhibitor switch.

OK ↓

Check starting system. Refer to EL section ("System Description", "STARTING SYSTEM"). — NG → Repair or replace damaged parts.

OK ↓

INSPECTION END

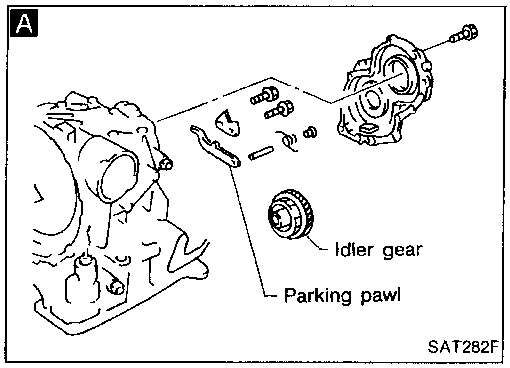

Diagnostic Procedure 6

SYMPTOM:

Vehicle moves when it is pushed forward or backward with selector lever in "P" position.

A

Check parking components. Refer to "DISASSEMBLY" and "ASSEMBLY", AT-142. — NG → Repair or replace damaged parts.

OK ↓

INSPECTION END

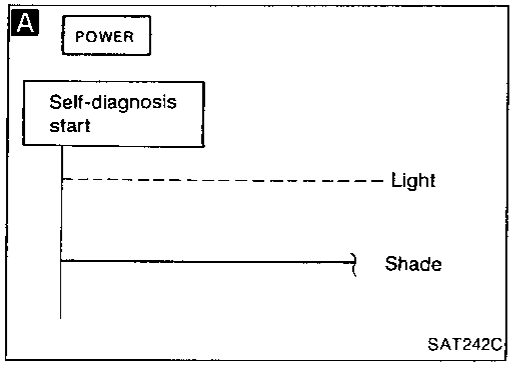

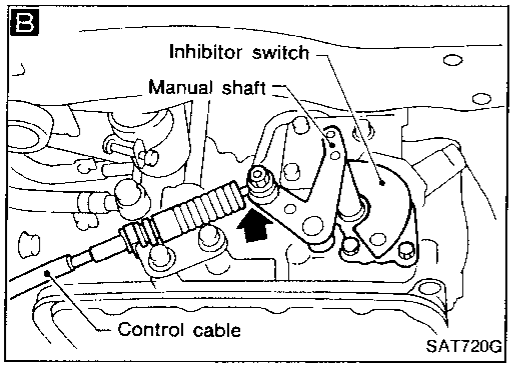

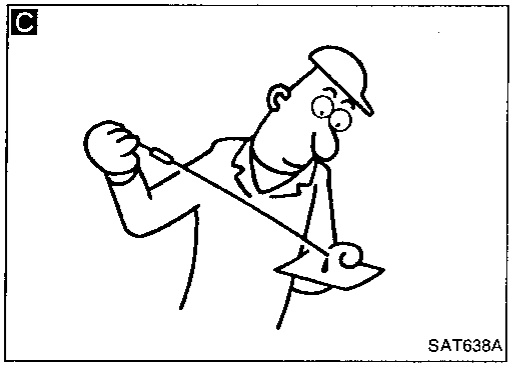

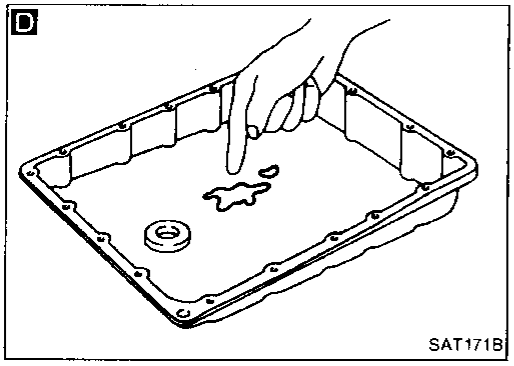

Diagnostic Procedure 7

SYMPTOM:
Vehicle moves forward or backward when selecting "N" position.

Does "ECU INPUT SIGNALS" in Data Monitor show damage to inhibitor switch circuit? — Yes → Check inhibitor switch circuit. Refer to "Self-diagnosis", AT-75.

OR

A

Does self-diagnosis show damage to inhibitor switch circuit?

No ↓

Check control cable. Refer to "ON-VEHICLE SERVICE", AT-132. — NG → B Adjust control cable. Refer to "ON-VEHICLE SERVICE", AT-132.

OK ↓

C

Check A/T fluid level again. — NG → Refill ATF.

OK ↓

D

1. Remove oil pan.
2. Check A/T fluid condition.

— NG →
1. Disassemble A/T.
2. Check the following items:
   - Forward clutch assembly
   - Overrun clutch assembly
   - Reverse clutch assembly

OK ↓

Check again. — NG →
1. Perform A/T control unit input/output signal inspection.
2. If NG, recheck A/T control unit pin terminals for damage or loose connection with harness connector.

OK ↓

INSPECTION END

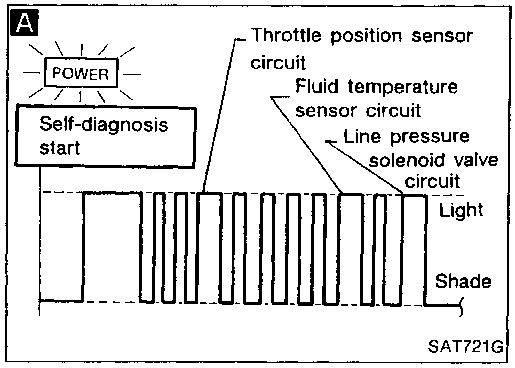

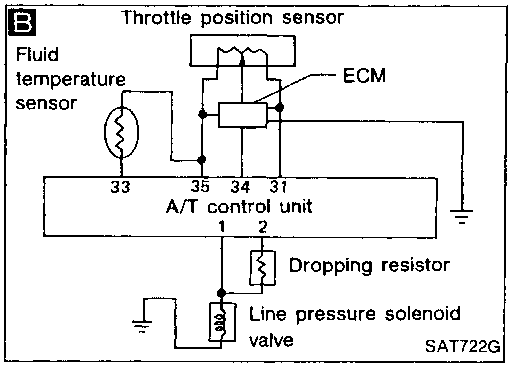

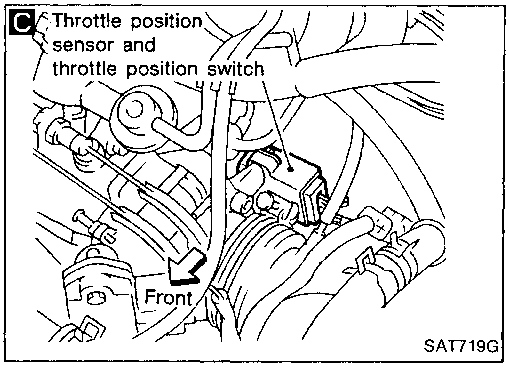

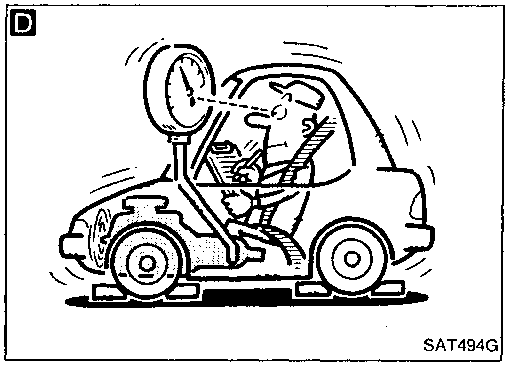

Diagnostic Procedure 8

SYMPTOM:

There is large shock when changing from "N" to "R" position.

A

Does self-diagnosis show damage to throttle position sensor, line pressure solenoid valve or fluid temperature sensor circuit?

Yes → **B** Check damaged circuit. Refer to "Self-diagnosis", AT-58.

No ↓

C

Check throttle position sensor. Refer to EC section ["Throttle Position Sensor (DTC: 0403)", "TROUBLE DIAGNOSIS FOR DTC P0120"].

NG → Repair or replace throttle position sensor.

OK ↓

D

Check line pressure at idle with selector lever in "D" position. Refer to "PRESSURE TESTING", AT-115.

NG →
1. Remove control valve assembly. Refer to "ON-VEHICLE SERVICE", AT-131.
2. Check the following items:
   - Valves to control line pressure (Pressure regulator valve, pressure modifier valve, pilot valve and pilot filter)
   - Line pressure solenoid valve

OK ↓

Check again.

NG →
1. Perform A/T control unit input/output signal inspection.
2. If NG, recheck A/T control unit pin terminals for damage or loose connection with harness connector.

OK ↓

INSPECTION END

A

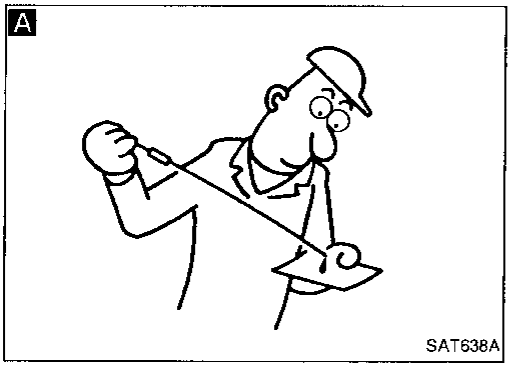

SAT638A

B

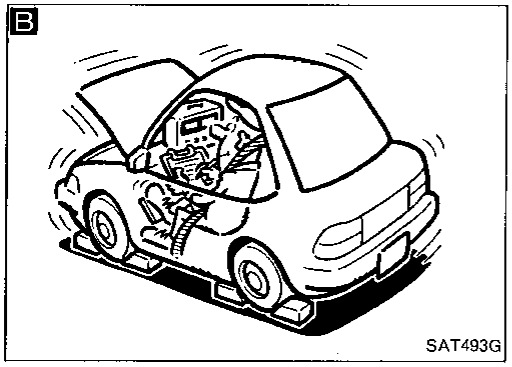

SAT493G

C

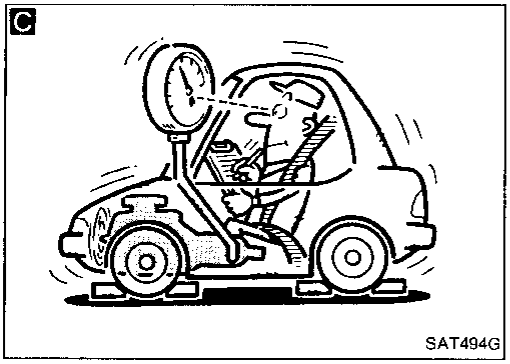

SAT494G

D

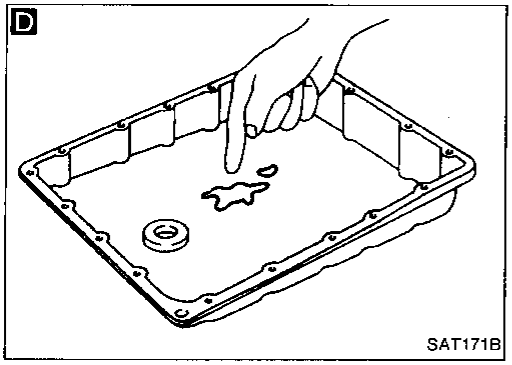

SAT171B

Diagnostic Procedure 9

SYMPTOM:

Vehicle does not creep backward when selecting "R" position.

A

Check A/T fluid level again.

NG → Refill ATF. → Ⓐ

OK ↓

B

Check stall revolution with selector lever in "1" and "R" positions.

NG in both "1" and "R" positions →

1. Remove control valve assembly. Refer to "ON-VEHICLE SERVICE", AT-131.
2. Check the following items:
   - Valves to control line pressure (Pressure regulator valve, pressure modifier valve, pilot valve and pilot filter)
   - Line pressure solenoid valve
3. Disassemble A/T.
4. Check the following items:
   - Oil pump assembly
   - Torque converter
   - Reverse clutch assembly
   - High clutch assembly
   - Low & reverse brake assembly
   - Low one-way clutch

OK ↓

OK in "1" position
NG in "R" position →

1. Remove control valve assembly. Refer to "ON-VEHICLE SERVICE", AT-131.
2. Check the following items:
   - Valves to control line pressure (Pressure regulator valve, pressure modifier valve, pilot valve and pilot filter)
   - Line pressure solenoid valve
3. Disassemble A/T.
4. Check the following items:
   - Oil pump assembly
   - Torque converter
   - Reverse clutch assembly
   - High clutch assembly

C

Check line pressure at idle with selector lever in "R" position. Refer to "PRESSURE TESTING", AT-115.

NG →

1. Remove control valve assembly. Refer to "ON-VEHICLE SERVICE", AT-131.
2. Check the following items:
   - Valves to control line pressure (Pressure regulator valve, pressure modifier valve, pilot valve and pilot filter)
   - Line pressure solenoid valve
3. Disassemble A/T.
4. Check the following item:
   - Oil pump assembly

OK ↓

D

1. Remove oil pan.
2. Check A/T fluid condition.

NG → Ⓐ

OK ↓

Check again.

NG →

1. Perform A/T control unit input/output signal inspection.
2. If NG, recheck A/T control unit pin terminals for damage or loose connection with harness connector.

OK ↓

INSPECTION END

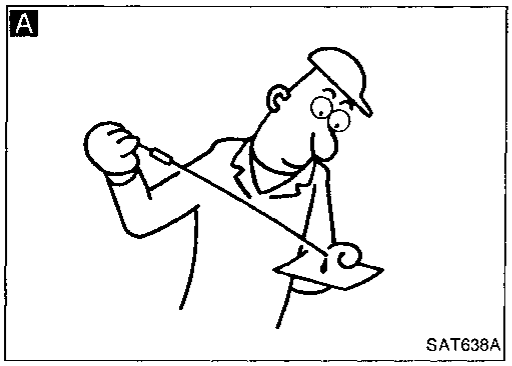

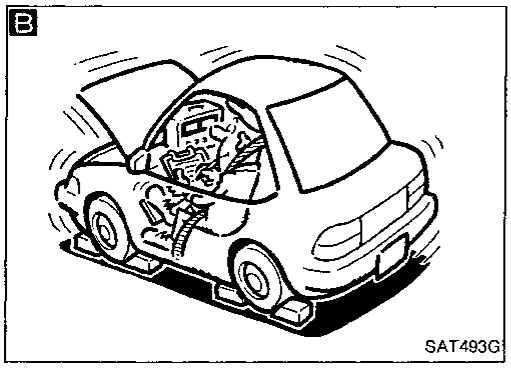

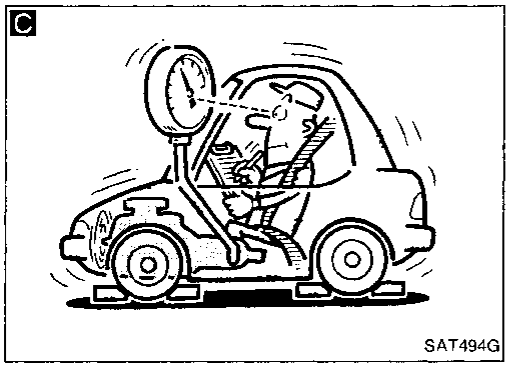

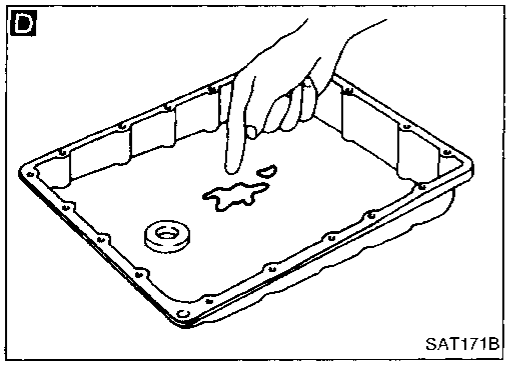

Diagnostic Procedure 10

SYMPTOM:
Vehicle does not creep forward when selecting "D", "2" or "1" position.

A

Check A/T fluid level again.

NG → Refill ATF.

OK ↓

B

Check stall revolution with selector lever in "D" position. Refer to "STALL TEST", AT-112.

NG →
1. Remove control valve assembly. Refer to "ON-VEHICLE SERVICE", AT-131.
2. Check the following items:
   - Valves to control line pressure (Pressure regulator valve, pressure modifier valve, pilot valve and pilot filter)
   - Line pressure solenoid valve
3. Disassemble A/T
4. Check the following items:
   - Oil pump assembly
   - Forward clutch assembly
   - Forward one-way clutch
   - Low one-way clutch
   - Low & reverse brake assembly
   - Torque converter

OK ↓

C

Check line pressure at idle with selector lever in "D" position. Refer to "PRESSURE TESTING", AT-115.

OK ↓

NG →
1. Remove control valve assembly. Refer to "ON-VEHICLE SERVICE", AT-131.
2. Check the following items:
   - Valves to control line pressure (Pressure regulator valve, pressure modifier valve, pilot valve and pilot filter)
   - Line pressure solenoid valve
3. Disassemble A/T
4. Check the following item:
   - Oil pump assembly

D

1. Remove oil pan.
2. Check A/T fluid condition.

NG → Ⓐ

OK ↓

Check again.

NG →
1. Perform A/T control unit input/output signal inspection.
2. If NG, recheck A/T control unit pin terminals for damage or loose connection with harness connector.

OK ↓

INSPECTION END

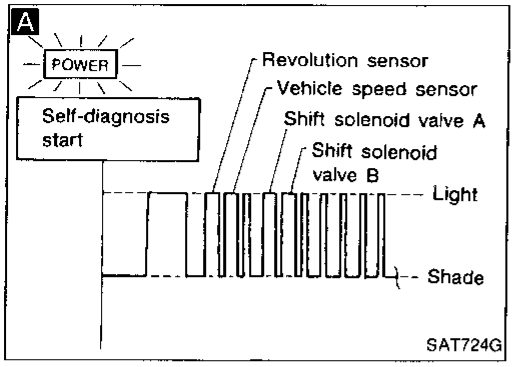

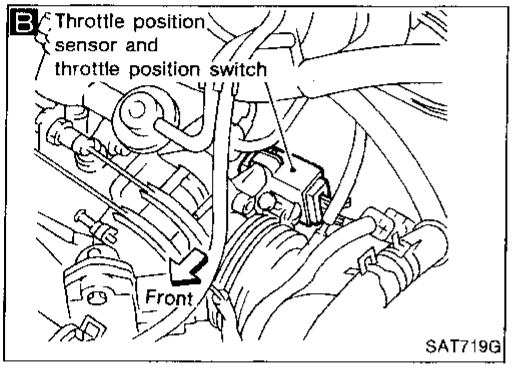

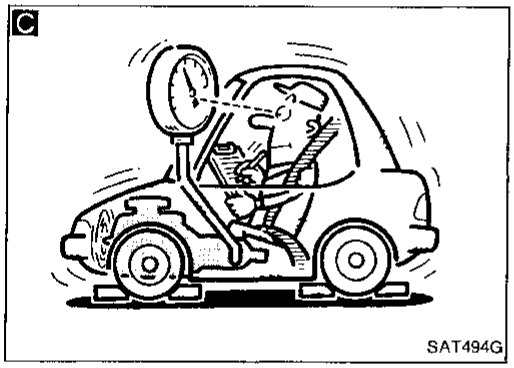

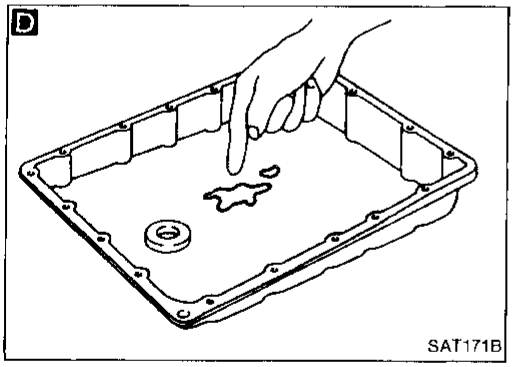

Diagnostic Procedure 11

SYMPTOM:

Vehicle cannot be started from D_1 on Cruise test — Part 1.

Is Diagnostic Procedure 9 OK?
- No → Go to Diagnostic Procedure 9, AT-94.
- Yes ↓

A

Does self-diagnosis show damage to revolution sensor, vehicle speed sensor, shift solenoid valve A or B after cruise test?
- Yes → Check damaged circuit. Refer to "Self-diagnosis", AT-54.
- No ↓

B

Check throttle position sensor. Refer to EC section ["Throttle Position Sensor (DTC: 0403)", "TROUBLE DIAGNOSIS FOR DTC P0120"].
- NG → Repair or replace throttle position sensor.
- OK ↓

C

Check line pressure at stall point with selector lever in "D" position. Refer to "PRESSURE TESTING", AT-115.
- NG →
- OK ↓

D

1. Remove oil pan.
2. Check A/T fluid condition.

- NG →
- OK ↓

1. Remove control valve assembly. Refer to "ON-VEHICLE SERVICE", AT-131.
2. Check the following items:
   - Shift valve A
   - Shift valve B
   - Shift solenoid valve A
   - Shift solenoid valve B
   - Pilot valve
   - Pilot filter

↓

1. Remove control valve assembly. Refer to "ON-VEHICLE SERVICE", AT-131.
2. Check the following items:
   - Shift valve A
   - Shift valve B
   - Shift solenoid valve A
   - Shift solenoid valve B
   - Pilot valve
   - Pilot filter
3. Disassemble A/T.
4. Check the following items:
   - Forward clutch assembly
   - Forward one-way clutch
   - Low one-way clutch
   - High clutch assembly
   - Torque converter
   - Oil pump assembly

→ OK ↓

Check again.
- NG →
- OK ↓

1. Perform A/T control unit input/output signal inspection.
2. If NG, recheck A/T control unit pin terminals for damage or loose connection with harness connector.

INSPECTION END

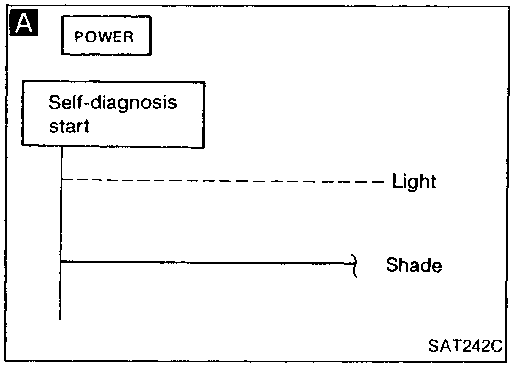

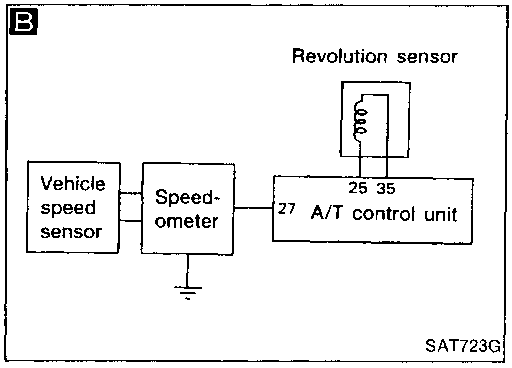

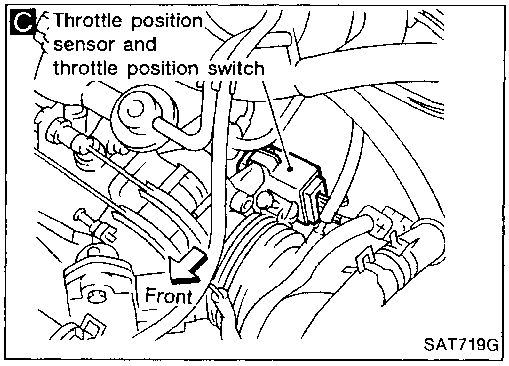

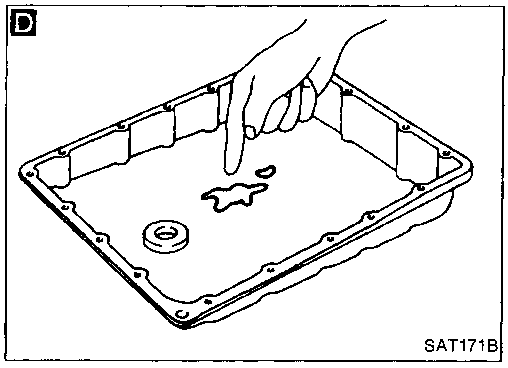

Diagnostic Procedure 12

SYMPTOM:

- **A/T does not shift from D_1 to D_2 at the specified speed.**
- **A/T does not shift from D_4 to D_2 when depressing accelerator pedal fully at the specified speed.**

Are Diagnostic Procedures 10 and 11 OK?
- No → Go to Diagnostic Procedure 10 or 11, AT-95, 96.
- Yes ↓

Does "ECU INPUT SIGNALS" in Data Monitor show damage to inhibitor switch circuit?
- Yes → Check inhibitor switch circuit. Refer to "Self-diagnosis", AT-75.

OR

A

Does self-diagnosis show damage to inhibitor switch circuit?
- No ↓

B

Check revolution sensor and vehicle speed sensor circuit. Refer to "Self-diagnosis", AT-54.
- NG → Repair or replace revolution sensor and vehicle speed sensor circuits.
- OK ↓

C

Check throttle position sensor. Refer to EC section ["Throttle Position Sensor (DTC: 0403)", "TROUBLE DIAGNOSIS FOR DTC P0120"].
- NG → Repair or replace throttle position sensor.
- OK ↓

D

1. Remove oil pan.
2. Check A/T fluid condition.

- NG →
  1. Remove control valve. Refer to "ON-VEHICLE SERVICE", AT-131.
  2. Check the following items:
     - Shift valve A
     - Shift solenoid valve A
     - Pilot valve
     - Pilot filter
  3. Disassemble A/T.
  4. Check the following items:
     - Servo piston assembly
     - Brake band
     - Oil pump assembly
  - OK ↓
- OK ↓

1. Remove control valve. Refer to "ON-VEHICLE SERVICE", AT-131.
2. Check the following items:
   - Shift valve A
   - Shift solenoid valve A
   - Pilot valve
   - Pilot filter

OK ↓

Check again.
- NG →
  1. Perform A/T control unit input/output signal inspection.
  2. If NG, recheck A/T control unit pin terminals for damage or loose connection with harness connector.
- OK ↓

INSPECTION END

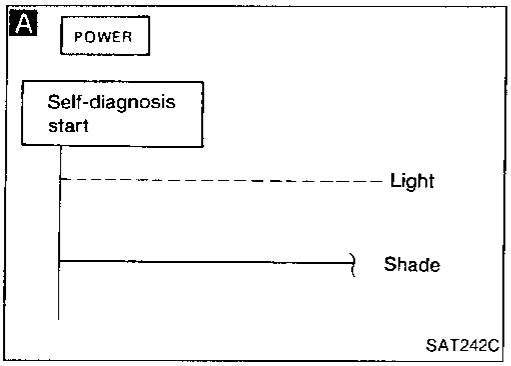

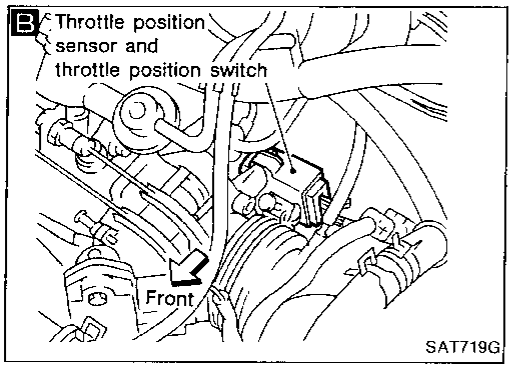

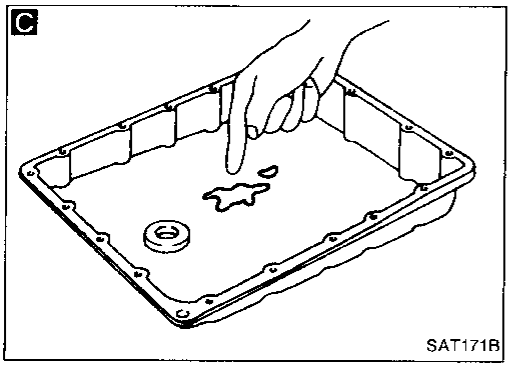

Diagnostic Procedure 13

SYMPTOM:

A/T does not shift from D_2 to D_3 at the specified speed.

Are Diagnostic Procedures 10 and 11 OK?
- No → Go to Diagnostic Procedure 10 or 11, AT-95, 96.
- Yes ↓

Does "ECU INPUT SIGNALS" in Data Monitor show damage to inhibitor switch circuit?
- Yes → Check inhibitor switch circuit. Refer to "Self-diagnosis", AT-75.

OR

A

Does self-diagnosis show damage to inhibitor switch circuit?
- No ↓

B

Check throttle position sensor. Refer to EC section ["Throttle Position Sensor (DTC: 0403)", "TROUBLE DIAGNOSIS FOR DTC P0120"].
- NG → Repair or replace throttle position sensor.
- OK ↓

C

1. Remove oil pan.
2. Check A/T fluid condition.

- NG →
  1. Remove control valve assembly. Refer to "ON-VEHICLE SERVICE", AT-131.
  2. Check the following items:
     - Shift valve B
     - Shift solenoid valve B
     - Pilot valve
     - Pilot filter
  3. Disassemble A/T.
  4. Check the following items:
     - Servo piston assembly
     - High clutch assembly
     - Oil pump assembly
  - OK ↓
- OK ↓

1. Remove control valve assembly. Refer to "ON-VEHICLE SERVICE", AT-131.
2. Check the following items:
   - Shift valve B
   - Shift solenoid valve B
   - Pilot valve
   - Pilot filter

OK ↓

Check again.
- NG →
  1. Perform A/T control unit input/output signal inspection.
  2. If NG, recheck A/T control unit pin terminals for damage or loose connection with harness connector.
- OK ↓

INSPECTION END

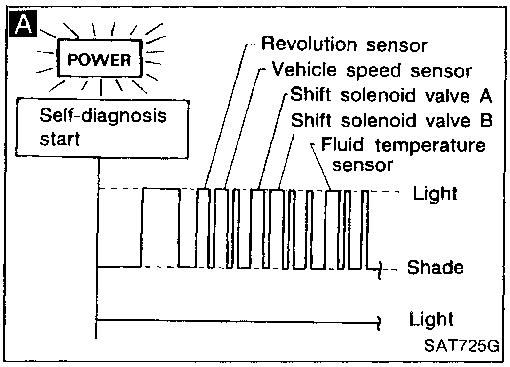

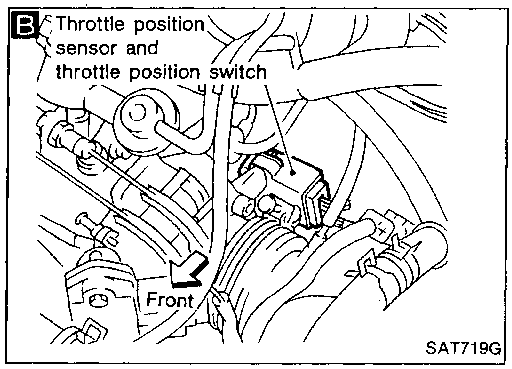

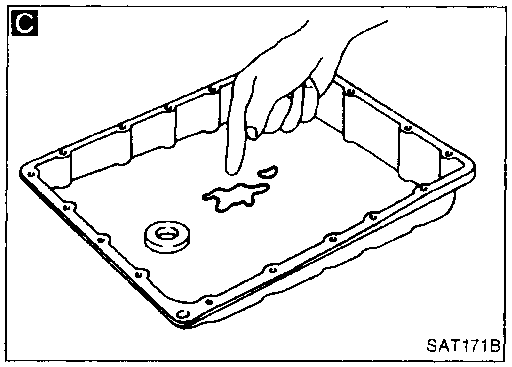

Diagnostic Procedure 14

SYMPTOM:

- **A/T does not shift from D_3 to D_4 at the specified speed.**
- **A/T must be warm before D_3 to D_4 shift will occur.**

Are Diagnostic Procedure 10 and 11 OK?
- No → Go to Diagnostic Procedure 10 or 11, AT-95, 96.
- Yes ↓

A

Does self-diagnosis, after cruise test, show damage to any of the following circuits?
- Inhibitor switch
- Overdrive switch
- Shift solenoid valve A or B
- Revolution sensor
- Vehicle speed sensor
- Fluid temperature sensor

- Yes → Check damaged circuit. Refer to "Self-diagnosis", AT-75.
- No ↓

B

Check throttle position sensor. Refer to EC section ["Throttle Position Sensor (DTC: 0403)", "TROUBLE DIAGNOSIS FOR DTC P0120"].
- NG → Repair or replace throttle position sensor.
- OK ↓

C

1. Remove oil pan.
2. Check A/T fluid condition.

- NG →
  1. Remove control valve assembly. Refer to "ON-VEHICLE SERVICE", AT-131.
  2. Check the following items:
     - Shift valve B
     - Overrun clutch control valve
     - Shift solenoid valve B
     - Pilot valve
     - Pilot filter
  3. Disassemble A/T.
  4. Check the following items:
     - Servo piston assembly
     - Brake band
     - Torque converter
     - Oil pump assembly
  → OK ↓
- OK ↓

1. Remove control valve assembly. Refer to "ON-VEHICLE SERVICE", AT-131.
2. Check the following items:
   - Shift valve B
   - Overrun clutch control valve
   - Shift solenoid valve B
   - Pilot valve
   - Pilot filter

OK ↓

Check again.
- NG →
  1. Perform A/T control unit input/output signal inspection.
  2. If NG, recheck A/T control unit pin terminals for damage or loose connection with harness connector.
- OK ↓

INSPECTION END

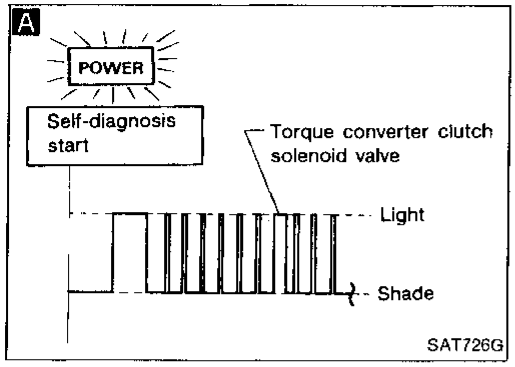

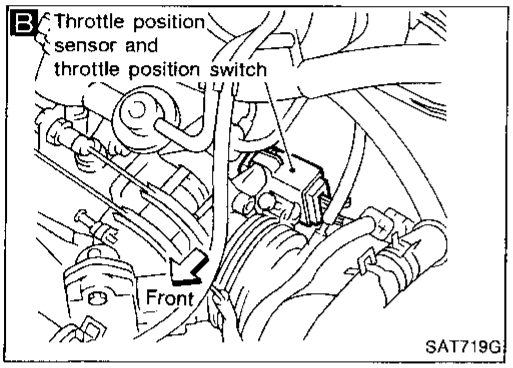

Diagnostic Procedure 15

SYMPTOM:
A/T does not perform lock-up at the specified speed.

A

Does self-diagnosis show damage to torque converter clutch solenoid valve circuit after cruise test?

- Yes → Check torque converter clutch solenoid valve circuit. Refer to "Self-diagnosis", AT-66.
- No ↓

B

Check throttle position sensor. Refer to EC section ["Throttle Position Sensor (DTC: 0403)", "TROUBLE DIAGNOSIS FOR DTC P0120"].

- NG → Repair or replace throttle position sensor.
- OK ↓

1. Remove control valve. Refer to "ON-VEHICLE SERVICE", AT-131.
2. Check following items:
   - Torque converter clutch control valve
   - Torque converter relief valve
   - Torque converter clutch solenoid valve
   - Pilot valve
   - Pilot filter

- NG → Repair or replace damaged parts.
- OK ↓

Check again.

- NG → 1. Perform A/T control unit input/output signal inspection. 2. If NG, recheck A/T control unit pin terminals for damage or loose connection with harness connector.
- OK ↓

INSPECTION END

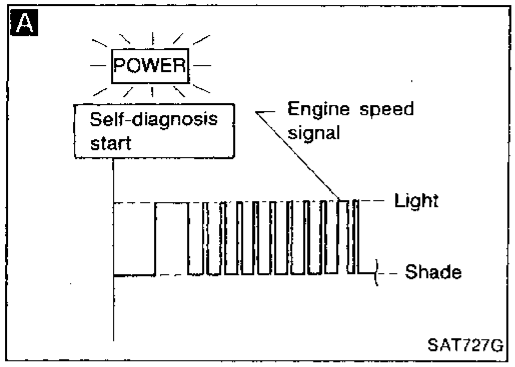

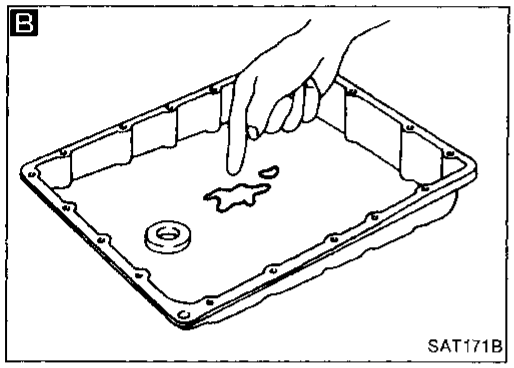

Diagnostic Procedure 16

SYMPTOM:

A/T does not hold lock-up condition for more than 30 seconds.

A

Does self-diagnosis show damage to engine speed signal circuit after cruise test?

- Yes → Check engine speed signal circuit. Refer to "Self-diagnosis", AT-71.
- No ↓

B

1. Remove oil pan.
2. Check A/T fluid condition.

- NG → 1. Remove control valve assembly. Refer to "ON-VEHICLE SERVICE", AT-131. 2. Check the following items: • Torque converter clutch control valve • Pilot valve • Pilot filter 3. Disassemble A/T. 4. Check torque converter and oil pump assembly. → OK
- OK ↓

1. Remove control valve assembly. Refer to "ON-VEHICLE SERVICE", AT-131.
2. Check the following items:
   - Torque converter clutch control valve
   - Pilot valve
   - Pilot filter

- OK ↓

Check again.

- NG → 1. Perform A/T control unit input/output signal inspection. 2. If NG, recheck A/T control unit pin terminals for damage or loose connection with harness connector.
- OK ↓

INSPECTION END

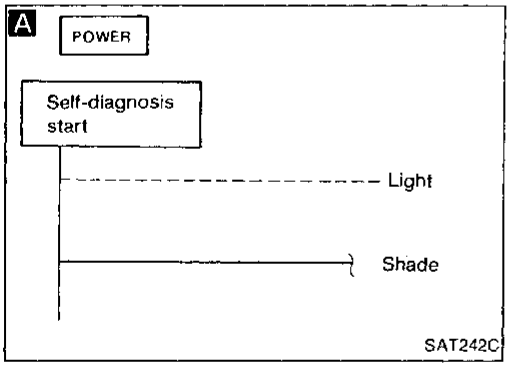

Diagnostic Procedure 17

SYMPTOM:

Lock-up is not released when accelerator pedal is released.

Does "ECU INPUT SIGNALS" in Data Monitor show damage to closed throttle position switch circuit?

- Yes → Check closed throttle position switch circuit. Refer to "Self-diagnosis", AT-75.

OR

A

Does self-diagnosis show damage to closed throttle position switch circuit?

- No ↓

Check again.

- NG → 1. Perform A/T control unit input/output signal inspection. 2. If NG, recheck A/T control unit pin terminals for damage or loose connection with harness connector.
- OK ↓

INSPECTION END

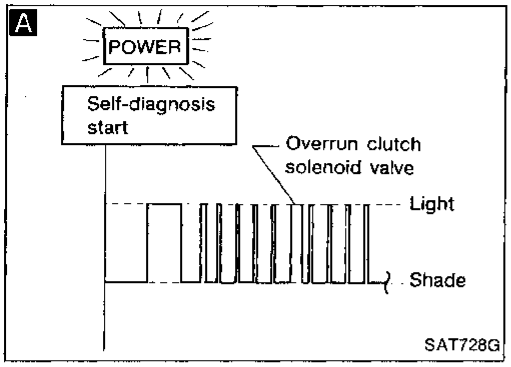

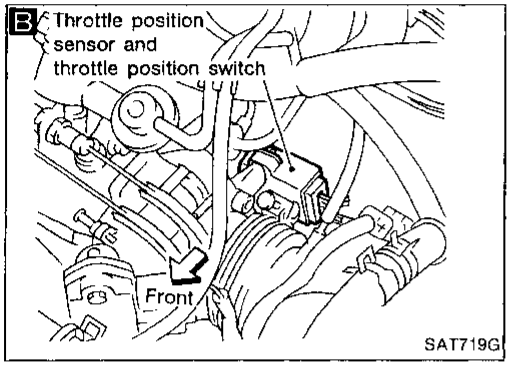

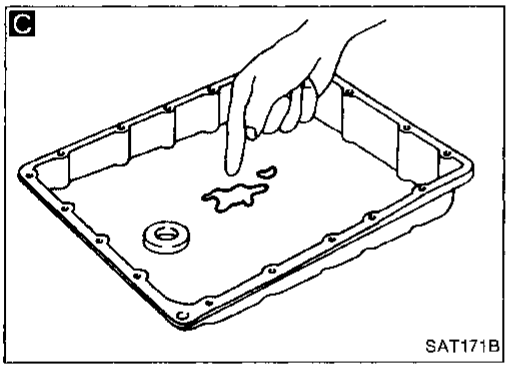

Diagnostic Procedure 18

SYMPTOM:

- **Engine speed does not return to idle smoothly when A/T shifts from D_4 to D_3.**
- **Vehicle does not decelerate by engine brake when turning overdrive switch OFF.**
- **Vehicle does not decelerate by engine brake when changing selector lever from "D" to "2" position.**

A

Does self-diagnosis show damage to overrun clutch solenoid valve circuit after cruise test?

- Yes → Check overrun clutch solenoid valve circuit. Refer to "Self-diagnosis", AT-64.
- No ↓

B

Check throttle position sensor. Refer to EC section ["Throttle Position Sensor (DTC: 0403)", "TROUBLE DIAGNOSIS FOR DTC P0120"].

- NG → Repair or replace throttle position sensor.
- OK ↓

C

1. Remove oil pan.
2. Check A/T fluid condition.

- NG → 1. Remove control valve assembly. Refer to "ON-VEHICLE SERVICE", AT-131. 2. Check the following items: • Overrun clutch control valve • Overrun clutch reducing valve • Overrun clutch solenoid valve 3. Disassemble A/T. 4. Check the following items: • Overrun clutch assembly • Oil pump assembly → OK ↓
- OK ↓

1. Remove control valve assembly. Refer to "ON-VEHICLE SERVICE", AT-131.
2. Check the following items:
   - Overrun clutch control valve
   - Overrun clutch reducing valve
   - Overrun clutch solenoid valve

OK ↓

Check again.

- NG → 1. Perform A/T control unit input/output signal inspection. 2. If NG, recheck A/T control unit pin terminals for damage or loose connection with harness connector.
- OK ↓

INSPECTION END

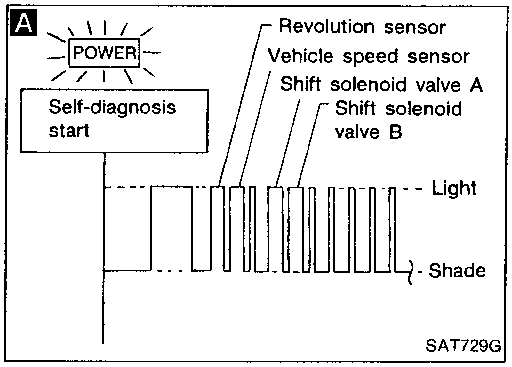

Diagnostic Procedure 19

SYMPTOM:

Vehicle does not start from D_1 on Cruise test — Part 2.

A

Does self-diagnosis show damage to revolution sensor, vehicle speed sensor, shift solenoid valve A or B after cruise test?

Yes → Check damaged circuit. Refer to "Self-diagnosis", AT-54.

No ↓

Check again.

NG → 1. Perform A/T control unit input/output signal inspection. 2. If NG, recheck A/T control unit pin terminals for damage or loose connection with harness connector.

OK ↓

Go to Diagnostic Procedure 11, AT-96.

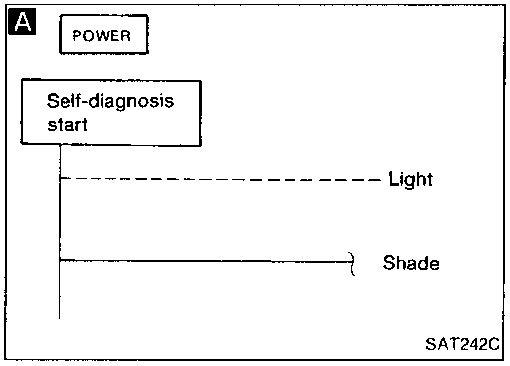

Diagnostic Procedure 20

SYMPTOM:

A/T does not shift from D_4 to D_3 when changing overdrive switch to "OFF" position.

Does "ECU INPUT SIGNALS" in Data Monitor show damage to overdrive switch circuit?

Yes → Check overdrive switch circuit. Refer to "Self-diagnosis", AT-75.

OR

A

Does self-diagnosis show damage to overdrive switch circuit?

No ↓

Go to Diagnostic Procedure 13, AT-98.

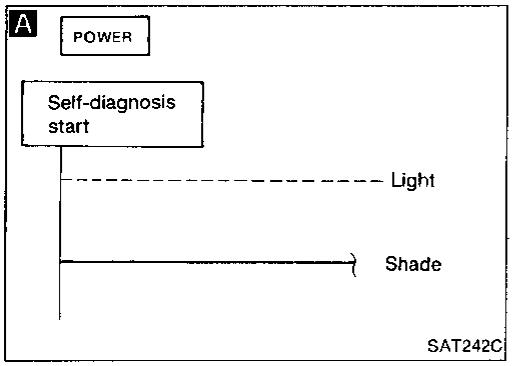

Diagnostic Procedure 21

SYMPTOM:

A/T does not shift from D_3 to 2_2 when changing selector lever from "D" to "2" position.

Does "ECU INPUT SIGNALS" in Data Monitor show damage to inhibitor switch circuit?

Yes → Check inhibitor switch circuit. Refer to "Self-diagnosis", AT-75.

OR

A

Does self-diagnosis show damage to inhibitor switch circuit?

No → Go to Diagnostic Procedure 12, AT-97.

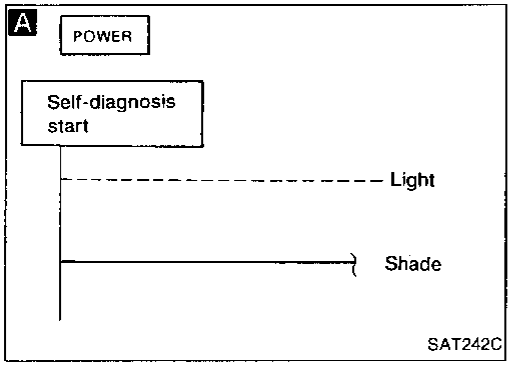

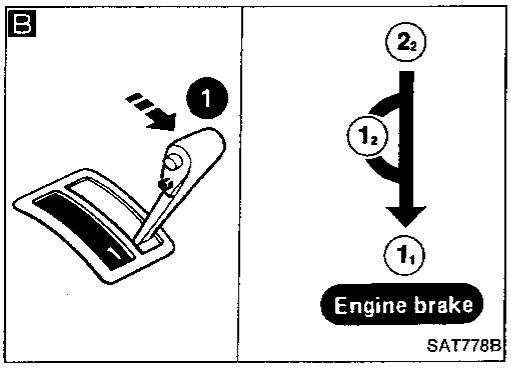

Diagnostic Procedure 22

SYMPTOM:

A/T does not shift from 2_2 to 1_1 when changing selector lever from "2" to "1" position.

Does "ECU INPUT SIGNALS" in Data Monitor show damage to inhibitor switch circuit?

Yes → Check inhibitor switch circuit. Refer to "Self-diagnosis", AT-75.

OR

A

Does self-diagnosis show damage to inhibitor switch circuit?

No → B

Check again.

NG →
1. Perform A/T control unit input/output signal inspection.
2. If NG, recheck A/T control unit pin terminals for damage or loose connection with harness connector.

OK → **INSPECTION END**

Diagnostic Procedure 23

SYMPTOM:

Vehicle does not decelerate by engine brake when shifting from 2_2 (1_2) to 1_1.

Is Diagnostic Procedure 9 OK?

No → Go to Diagnostic Procedure 9, AT-94.

Yes → Go to Diagnostic Procedure 18, AT-102.

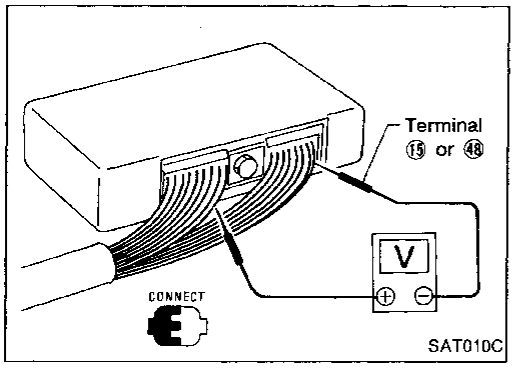

Electrical Components Inspection

INSPECTION OF A/T CONTROL UNIT

- Measure voltage between each terminal and terminal ⑮ or ㊽ by following "A/T CONTROL UNIT INSPECTION TABLE".

- Pin connector terminal layout

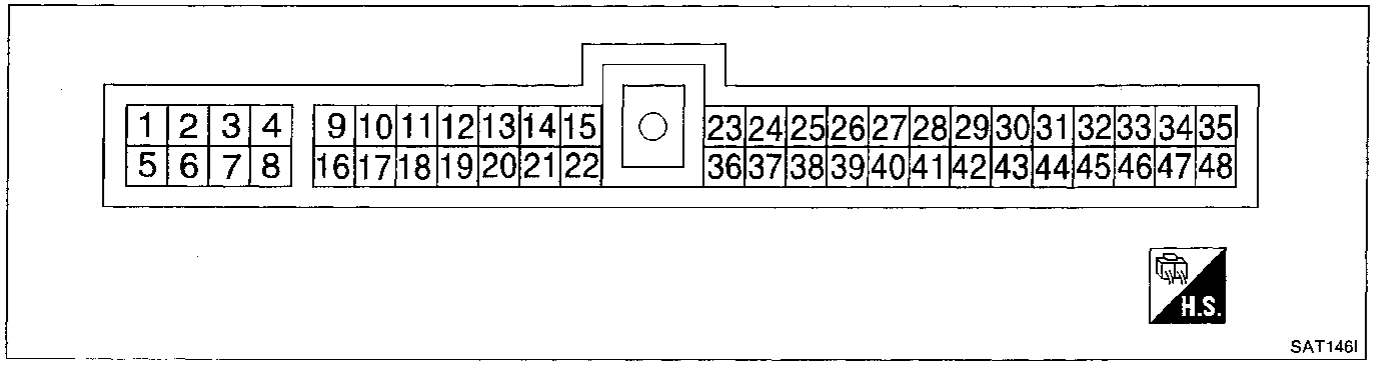

A/T CONTROL UNIT INSPECTION TABLE

(Data are reference values.)

Terminal No.	Item	Condition		Judgement standard
1	Line pressure solenoid valve		When releasing accelerator pedal after warming up engine.	1.5 - 2.5V
			When depressing accelerator pedal fully after warming up engine.	0.5V or less
2	Line pressure solenoid valve (with dropping resistor)	ON	When releasing accelerator pedal after warming up engine.	5 - 14V
			When depressing accelerator pedal fully after warming up engine.	0.5V or less
3	Power indicator lamp		When setting A/T mode switch in "POWER" position.	1V or less
			When setting A/T mode switch except in "POWER" position.	Battery voltage
4	Power source		When turning ignition switch to "ON".	Battery voltage
			When turning ignition switch to "OFF".	1V or less

Electrical Components Inspection (Cont'd)

Terminal No.	Item	Condition		Judgement standard
5	Torque converter clutch solenoid valve		When A/T performs lock-up.	8 - 15V
			When A/T does not perform lock-up.	1V or less
6	Shift solenoid valve A		When shift solenoid valve A operates. (When driving in "D_1" or "D_4".)	Battery voltage
			When shift solenoid valve A does not operate. (When driving in "D_2" or "D_3".)	1V or less
7	Shift solenoid valve B		When shift solenoid valve B operates. (When driving in "D_1" or "D_2".)	Battery voltage
			When shift solenoid valve B does not operate. (When driving in "D_3" or "D_4".)	1V or less
8	Overrun clutch solenoid valve		When overrun clutch solenoid valve operates.	Battery voltage
			When overrun clutch solenoid valve does not operate.	1V or less
9	Power source		Same as No. 4	
10*	DT1		—	—
11*	DT2		—	—
12*	DT3		—	—
13*	OBD-II output		—	—
14	Closed throttle position switch (in throttle position switch)		When releasing accelerator pedal after warming up engine.	Battery voltage
			When depressing accelerator pedal after warming up engine.	1V or less
15	Ground		—	—
16	Inhibitor "1" position switch		When setting selector lever to "1" position.	Battery voltage
			When setting selector lever to other positions.	1V or less
17	Inhibitor "2" position switch		When setting selector lever to "2" position.	Battery voltage
			When setting selector lever to other positions.	1V or less
18	Inhibitor "D" position switch		When setting selector lever to "D" position.	Battery voltage
			When setting selector lever to other positions.	1V or less

*: These terminals are connected to the ECM (ECCS control module).

Electrical Components Inspection (Cont'd)

Terminal No.	Item	Condition		Judgement standard
19	Inhibitor "N" or "P" position switch		When setting selector lever to "N" or "P" position.	Battery voltage
			When setting selector lever to other positions.	1V or less
20	Inhibitor "R" position switch		When setting selector lever to "R" position.	Battery voltage
			When setting selector lever to other positions.	1V or less
21	Wide open throttle position switch (in throttle position switch)		When depressing accelerator pedal more than half-way after warming up engine.	Battery voltage
			When releasing accelerator pedal after warming up engine.	1V or less
22	—		—	—
23	Power source (Back-up)	or	When turning ignition switch to "OFF".	Battery voltage
			When turning ignition switch to "ON".	Battery voltage
24	Engine speed signal		When engine runs at idle speed.	0.6V
			When engine runs at 4,000 rpm.	Approximately 2.2V
25	Revolution sensor (Measure in AC position)		When vehicle cruises at 30 km/h (19 MPH).	1V or more Voltage rises gradually in response to vehicle speed.
			When vehicle parks.	0V
26	—		—	—
27	Vehicle speed sensor		When moving vehicle at 2 to 3 km/h (1 to 2 MPH) for 1 m (3 ft) or more.	Vary from 0 to 5V
28*	—		—	—
29*	—		—	—
30*	—		—	—
31	Throttle position sensor (Power source)		—	4.5 - 5.5V
32	—		—	—

*: These terminals are connected to the Data link connector for CONSULT.

Electrical Components Inspection (Cont'd)

Terminal No.	Item	Condition		Judgement standard
33	Fluid temperature sensor		When ATF temperature is 20°C (68°F).	Approximately 1.5V
			When ATF temperature is 80°C (176°F).	Approximately 0.5V
34	Throttle position sensor		When depressing accelerator pedal slowly after warming up engine. (Voltage rises gradually in response to throttle position.)	Fully-closed throttle: Approximately 0.5V Fully-open throttle: Approximately 4V
35	Throttle position sensor (Ground)		—	—
36	A/T mode switch "POWER"		When setting A/T mode switch in "POWER" position.	Battery voltage
			When setting A/T mode switch except in "POWER" position.	1V or less
37	ASCD cruise signal	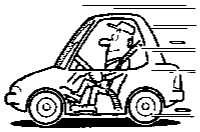	When ASCD cruise is being performed. ("CRUISE" light comes on.)	Battery voltage
			When ASCD cruise is not being performed. ("CRUISE" light does not comes on.)	1V or less
38	—		—	—
39	Overdrive OFF switch		When setting overdrive switch in "ON" position	Battery voltage
			When setting overdrive switch in "OFF" position	1V or less
40	ASCD OD cut signal	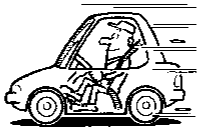	When "ACCEL" set switch on ASCD cruise is released.	5 - 8V
			When "ACCEL" set switch on ASCD cruise is applied.	1V or less
41	—		—	—
42	A/T mode switch "COMFORT"		When setting A/T mode switch in "COMFORT" position.	Battery voltage
			When setting A/T mode switch except in "COMFORT" position.	1V or less
43	—		—	—
44	—		—	—
45	—		—	—
46	—		—	—
47	—		—	—
48	Ground		—	—

Electrical Components Inspection (Cont'd)

SOLENOID VALVES AND FLUID TEMPERATURE SENSOR

- For removal and installation, refer to "ON-VEHICLE SERVICE", AT-131.

Solenoid valves

Resistance check

- Check resistance between two terminals.

Solenoid valve	Terminal No.		Resistance (Approx.)
Shift solenoid valve A	⑥	Ground (Bracket)	20 - 30Ω
Shift solenoid valve B	⑦		
Overrun clutch solenoid valve	⑧		
Line pressure solenoid valve	①		2.5 - 5Ω
Torque converter clutch solenoid valve	⑤		10 - 16Ω

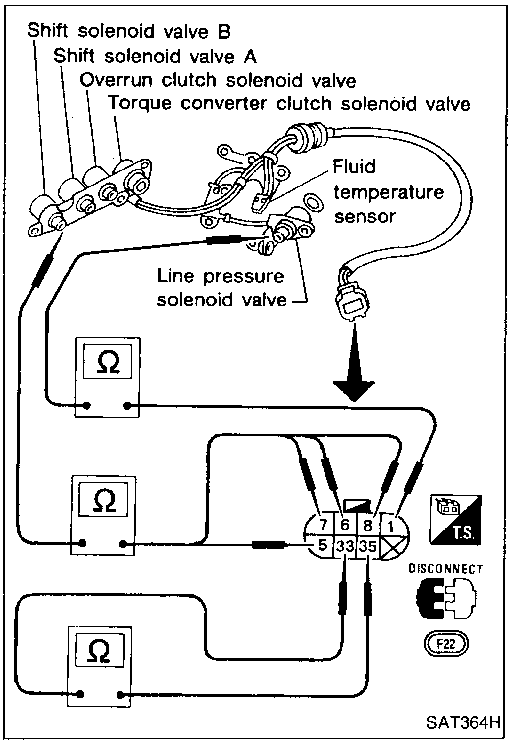

Operation check

- Check solenoid valve by listening for its operating sound while applying battery voltage to the terminal and ground (bracket).

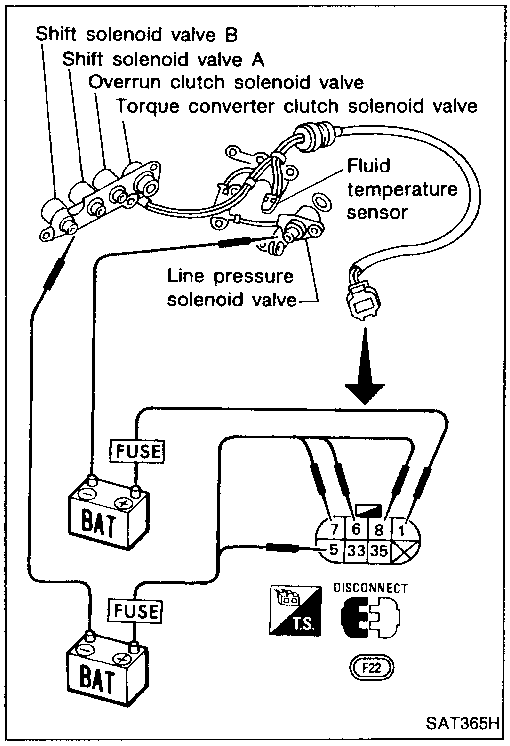

Fluid temperature sensor

Check resistance between terminals ㉝ and ㉟ while changing temperature as shown at left.

Temperature °C (°F)	Resistance (Approx.)
20 (68)	2.5 kΩ
80 (176)	0.3 kΩ

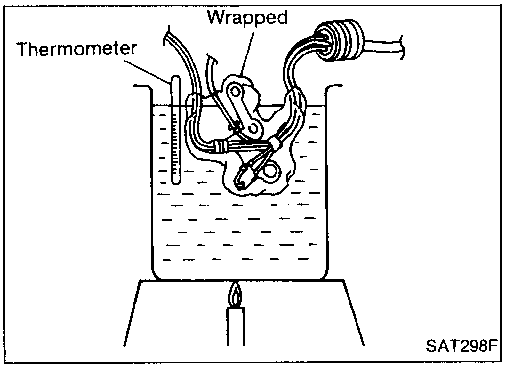

Electrical Components Inspection (Cont'd)

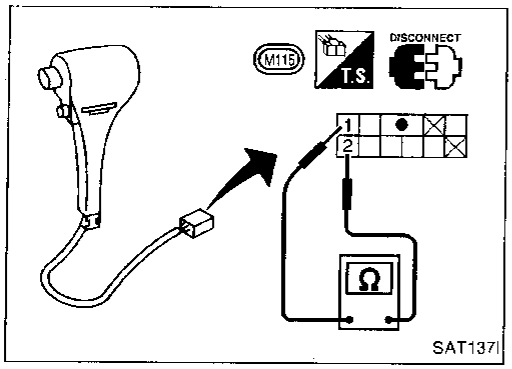

OVERDRIVE SWITCH

- Check continuity between two terminals.

OD switch position	Continuity
ON	No
OFF	Yes

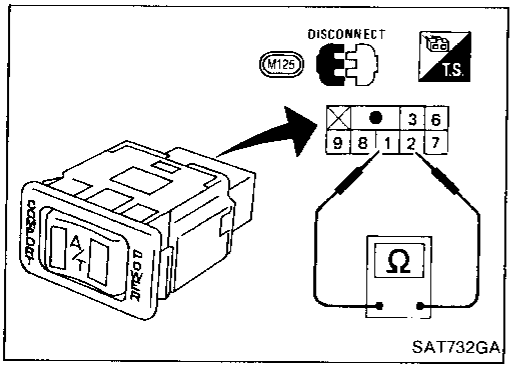

A/T MODE SWITCH

- Check continuity between A/T mode switch terminals.

A/T mode switch position	Continuity
POWER	② - ③
AUTO	No
COMFORT	① - ②

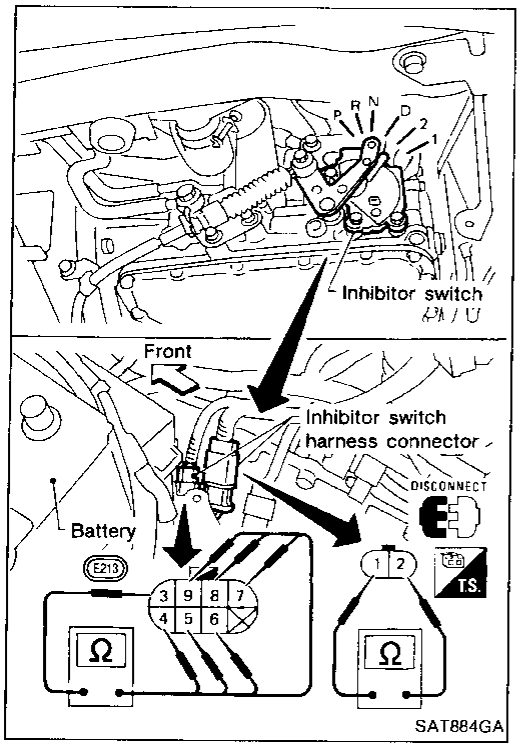

INHIBITOR SWITCH

1. Check continuity between terminals ① and ② and between terminals ③ and ④, ⑤, ⑥, ⑦, ⑧, ⑨ while moving selector lever through each position.

Lever position	Terminal No.	
P	① — ②	③ — ④
R	③ — ⑤	
N	① — ②	③ — ⑥
D	③ — ⑦	
2	③ — ⑧	
1	③ — ⑨	

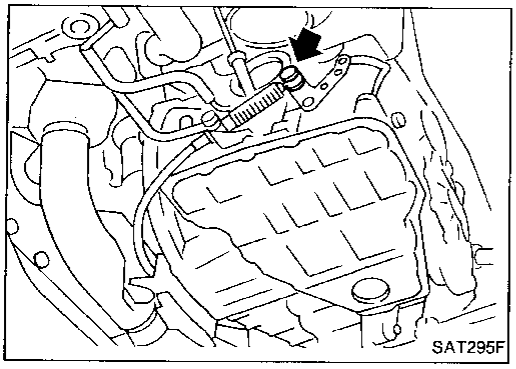

2. If NG, check again with control cable disconnected from manual shaft of A/T assembly. Refer to step 1.
3. If OK on step 2, adjust control cable. Refer to "ON-VEHICLE SERVICE", AT-132.

Electrical Components Inspection (Cont'd)

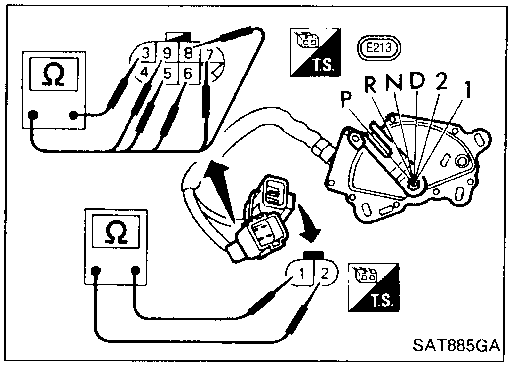

4. If NG on step 2, remove inhibitor switch from A/T and check continuity of inhibitor switch terminals. Refer to step 1.
5. If OK on step 4, adjust inhibitor switch. Refer to "ON- VEHICLE SERVICE", AT-132.
6. If NG on step 4, replace inhibitor switch.

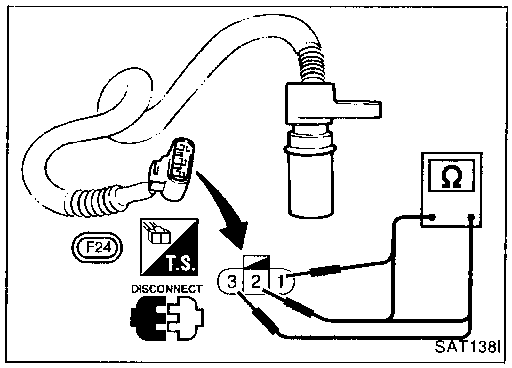

REVOLUTION SENSOR

- For removal and installation, refer to "ON-VEHICLE SERVICE", AT-133.
- Check resistance between terminals ①, ② and ③.

Terminal No.		Resistance
②	③	500 - 650Ω
①	②	No continuity
①	③	No continuity

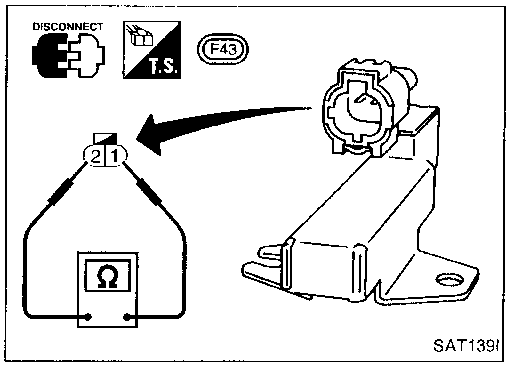

DROPPING RESISTOR

- Check resistance between two terminals.
  Resistance: 11.2 - 12.8Ω

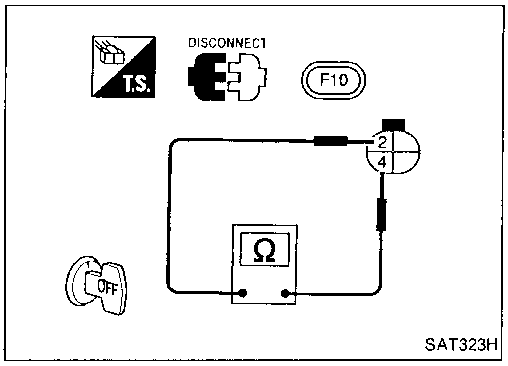

THROTTLE POSITION SWITCH

Closed throttle position switch (idle position)

- Check continuity between terminals ② and ④.

Accelerator pedal condition	Continuity
Released	Yes
Depressed	No

- To adjust closed throttle position switch, perform Basic Inspection of TROUBLE DIAGNOSIS — General Description in EC section.

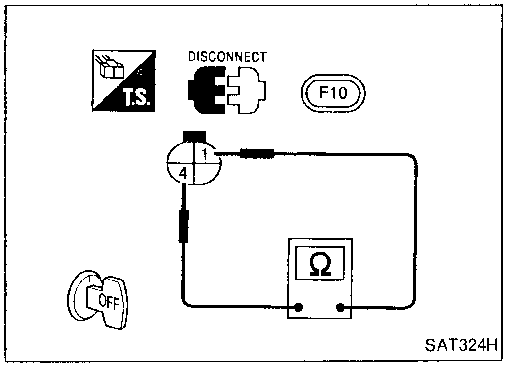

Wide open throttle position switch

- Check continuity between terminals ① and ④.

Accelerator pedal condition	Continuity
Released	No
Depressed	Yes

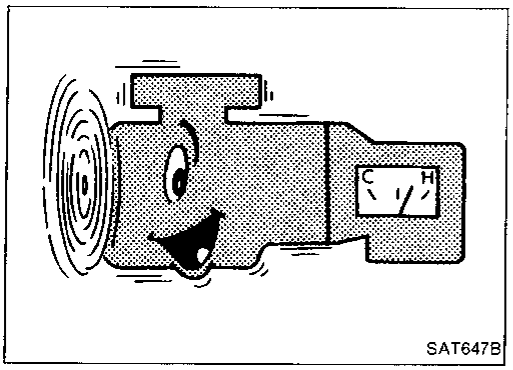

SAT647B

Final Check

STALL TESTING

Stall test procedure

1. Check A/T and engine fluid levels. If necessary, add.
2. Drive vehicle for approx. 10 minutes or until engine oil and ATF reach operating temperature.
   ATF operating temperature:
   50 - 80°C (122 - 176°F)

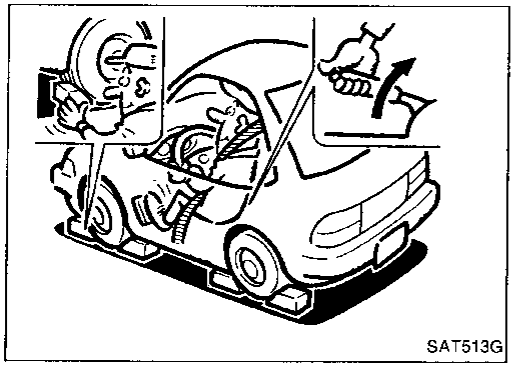
SAT513G

3. Set parking brake and block wheels.
4. Install a tachometer where it can be seen by driver during test.

- **It is good practice to put a mark on point of specified engine rpm on indicator.**

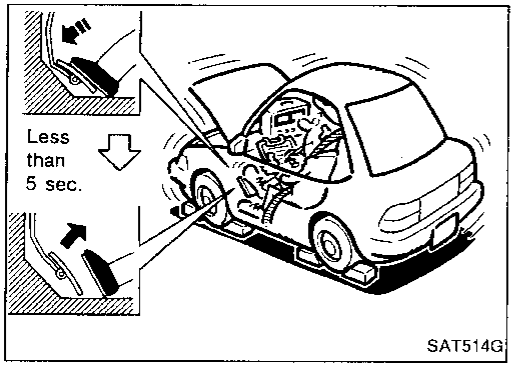

SAT514G

5. Start engine, apply foot brake, and place selector lever in "D" position.
6. Accelerate to wide-open throttle gradually while applying foot brake.
7. Quickly note the engine stall revolution and immediately release throttle.

- **During test, never hold throttle wide-open for more than 5 seconds.**
  Stall revolution:
  1,900 - 2,200 rpm

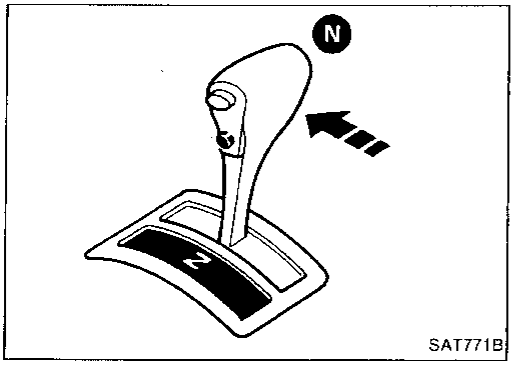

SAT771B

8. Shift selector lever to "N" position.
9. Cool off ATF.

- **Run engine at idle for at least one minute.**

10. Repeat steps 5 through 9 with selector lever in "2", "1" and "R" positions.

Final Check (Cont'd)

JUDGEMENT OF STALL TEST

The test result and possible damaged components relating to each result are shown in the illustration. In order to pinpoint the possible damaged components, follow the WORK FLOW shown in AT-15.

Note

Stall revolution is too high in "D", "2" or "1" position:

- Slippage occurs in 1st gear but not in 2nd and 3rd gears. ..... Low one-way clutch slippage
- Slippage occurs in the following gears:
  1st through 3rd gears in "D" position and engine brake functions with power shift switch set to "POWER".
  1st and 2nd gears in "2" position and engine brake functions with accelerator pedal released (fully closed throttle). ..... Forward clutch or forward one-way clutch slippage

Stall revolution is too high in "R" position:

- Engine brake does not function in "1" position. ..... Low & reverse brake slippage
- Engine brake functions in "1" position. ..... Reverse clutch slippage

Stall revolution within specifications:

- Vehicle does not achieve speed of more than 80 km/h (50 MPH). ..... One-way clutch seizure in torque converter housing

CAUTION:

Be careful since automatic fluid temperature increases abnormally.

- Slippage occurs in 3rd and 4th gears in "D" position. ..... High clutch slippage
- Slippage occurs in 2nd and 4th gear in "D" position. ..... Brake band slippage

Stall revolution less than specifications:

- Poor acceleration during starts. ..... One-way clutch seizure in torque converter
- Engine brake does not function in 2nd and 3rd gears in "D" position, 2nd gear in "2" position, and 1st gear in "1" position with power shift switch set to "POWER".

Final Check (Cont'd)

Judgement of stall test

Selector lever position	Judgement		
D	H	O	L
2	H	O	L
1	H	O	L
R	O	H	L

O : Stall revolution is normal.
H : Stall revolution is higher than specified.
L : Stall revolution is lower than specified.

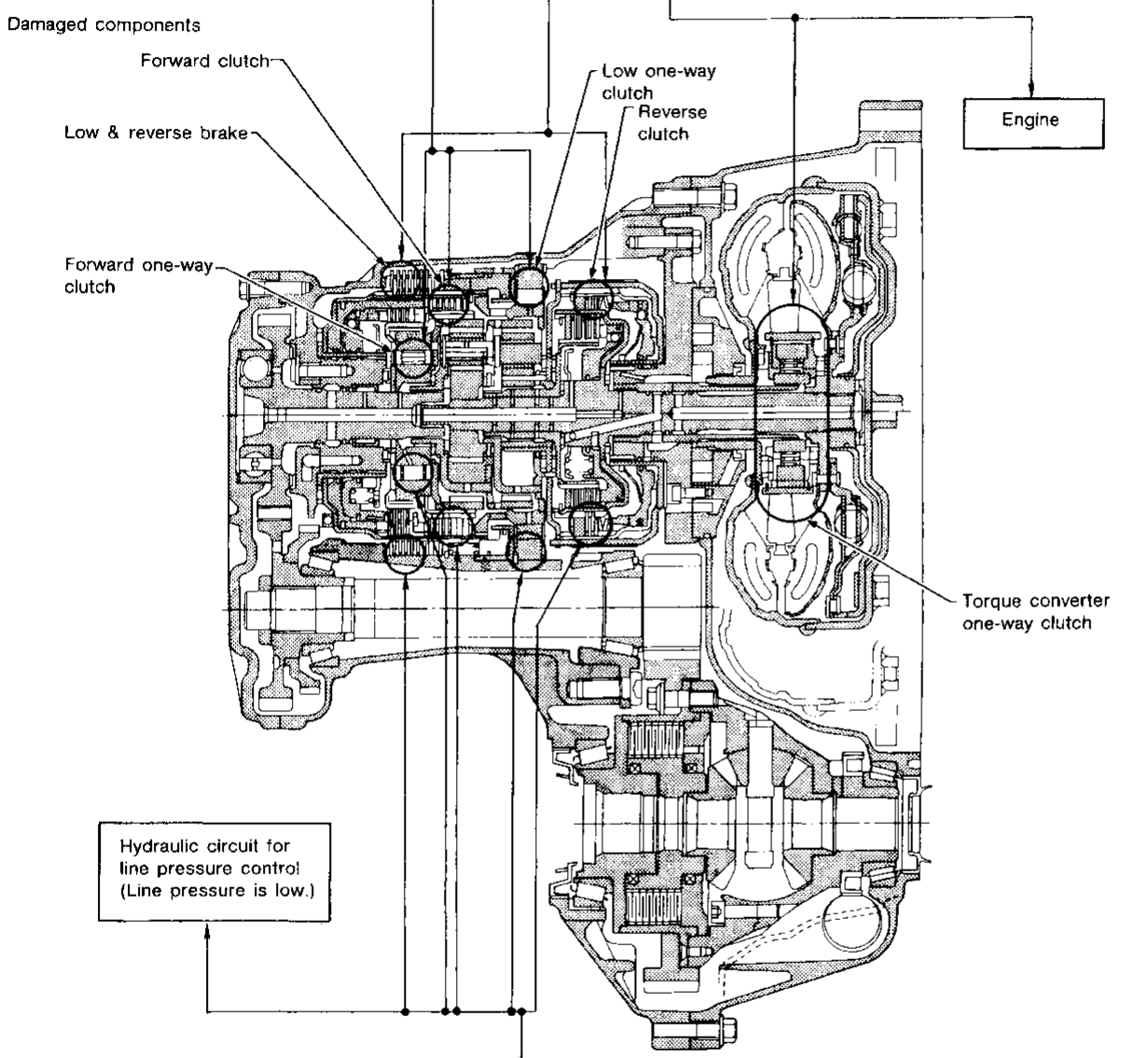

Clutches and brakes except high clutch, brake band and overrun clutch are OK. (Condition of high clutch, brake band and overrun clutch cannot be confirmed by stall test.)

Selector lever position	Judgement	
D	H	O
2	H	O
1	H	O
R	H	O

SAT895H

Final Check (Cont'd)

PRESSURE TESTING

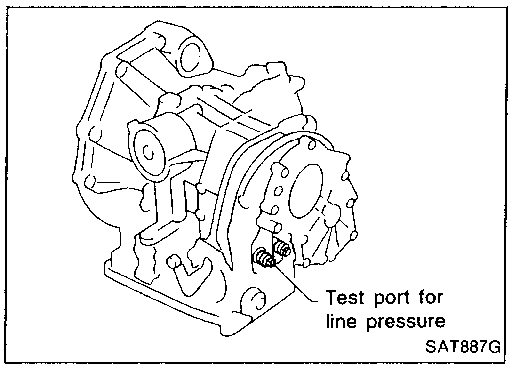

- Location of pressure test ports.
- **Always replace pressure plugs as they are self-sealing bolts.**

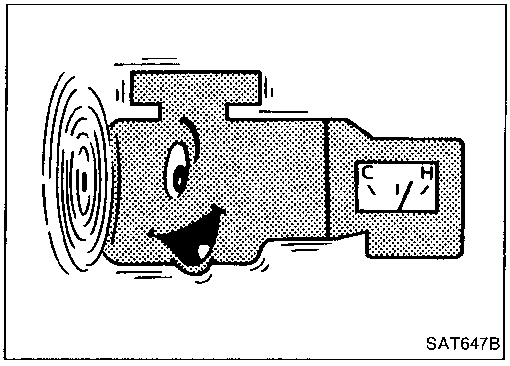

Line pressure test procedure

1. Check A/T and engine fluid levels. If necessary, add fluid.
2. Drive vehicle for approx. 10 minutes or until engine oil and ATF reach operating temperature.
   ATF operating temperature:
   50 - 80°C (122 - 176°F)

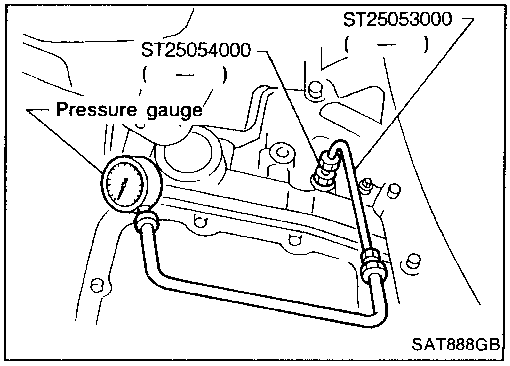

3. Install pressure gauge to corresponding line pressure port.

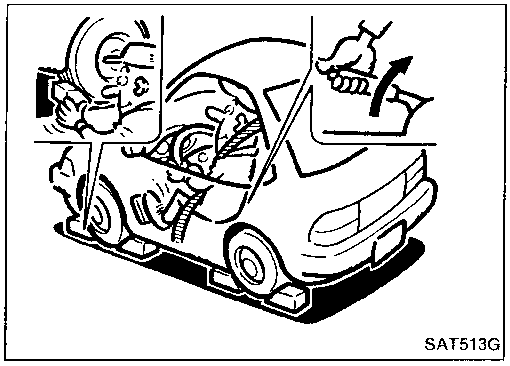

4. Set parking brake and block wheels.
- **Continue to depress brake pedal fully while line pressure test is being performed at stall speed.**

Final Check (Cont'd)

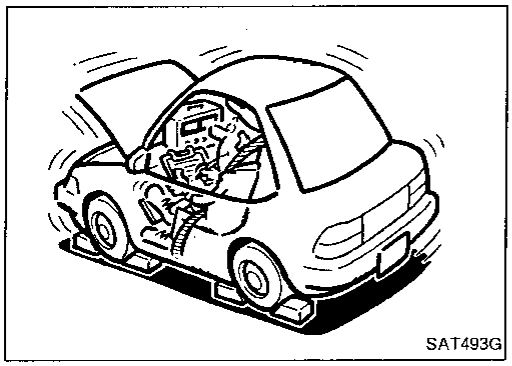

5. Start engine and measure line pressure at idle and stall speed.

- **When measuring line pressure at stall speed, follow the stall test procedure.**
  Line pressure:
  Refer to SDS, AT-237.

JUDGEMENT OF LINE PRESSURE TEST

Judgement		Suspected parts
At idle	Line pressure is low in all positions.	• Oil pump wear • Control piston damage • Pressure regulator valve or plug sticking • Spring for pressure regulator valve damaged • Fluid pressure leakage between oil strainer and pressure regulator valve • Clogged strainer
	Line pressure is low in particular position.	• Fluid pressure leakage between manual valve and particular clutch • For example, line pressure is: — Low in "R" and "1" positions, but — Normal in "D" and "2" positions. Therefore, fluid leakage exists at or around low and reverse brake circuit. Refer to "OPERATION OF CLUTCH AND BRAKE", AT-12.
	Line pressure is high.	• Mal-adjustment of throttle position sensor • Fluid temperature sensor damaged • Line pressure solenoid valve sticking • Short circuit of line pressure solenoid valve circuit • Pressure modifier valve sticking • Pressure regulator valve or plug sticking • Open in dropping resistor circuit
At stall speed	Line pressure is low.	• Mal-adjustment of throttle position sensor • Line pressure solenoid valve sticking • Short circuit of line pressure solenoid valve circuit • Pressure regulator valve or plug sticking • Pressure modifier valve sticking • Pilot valve sticking

Symptom Chart

Reference page (AT-)	Numbers are arranged in order of probability. Perform inspections starting with number one and work up. Circled numbers indicate that the transaxle must be removed from the vehicle.	ON vehicle																OFF vehicle										
	Reference page (AT-)	25, 132		132		54, 56, 71		73		60, 131		62, 73		64, 66		68, 131		131		142, 158		177, 181		186, 196		186		192, 205		—
		Fluid level	Control cable	Inhibitor switch	Throttle position sensor (Adjustment)	Revolution sensor and vehicle speed sensor	Engine speed signal	Engine idling rpm	Line pressure	Control valve assembly	Shift solenoid valve A	Shift solenoid valve B	Line pressure solenoid valve	Torque converter clutch solenoid valve	Overrun clutch solenoid valve	Fluid temperature sensor	Accumulator N-D	Accumulator servo release	Ignition switch and starter	Torque converter	Oil pump	Reverse clutch	High clutch	Forward clutch	Forward one-way clutch	Overrun clutch	Low one-way clutch	Low & reverse brake	Brake band	Parking components
91	Engine does not start in "N", "P" positions.		2	3															1											
91	Engine starts in positions other than "N" and "P".		1	2																										
—	Transaxle noise in "P" and "N" positions.	1			3	4	5		2											⑦	⑥									
91	Vehicle moves when changing into "P" position or parking gear does not disengage when shifted out of "P" position.		1																											②
92	Vehicle runs in "N" position.		1																			③		②		④				
94	Vehicle will not run in "R" position (but runs in "D", "2" and "1" positions). Clutch slips. Very poor acceleration.		1						2	4			3									⑤	⑥	⑦		⑧		⑨		
—	Vehicle braked when shifting into "R" position.	1	2						3	5			4										⑥	⑧		⑨			⑦	
—	Sharp shock in shifting from "N" to "D" position.				2		5	1	3	7			6			4	8							⑨						
—	Vehicle will not run in "D" and "2" positions (but runs in "1" and "R" positions).		1																								②			
95	Vehicle will not run in "D", "1", "2" positions (but runs in "R" position). Clutch slips. Very poor acceleration.	1							2	4			3				5					⑥	⑦	⑧	⑨		⑩			
—	Clutches or brakes slip somewhat in starting.	1	2		3				4	6			5				7			⑫	⑪	⑨		⑧				⑩		
—	Excessive creep.							1																						
94, 95	No creep at all.	1							2	3										⑥	⑤			④						
—	Failure to change gear from "D_1" to "D_2".		2	1		5				4	3																		⑥	
—	Failure to change gear from "D_2" to "D_3".		2	1		5				4		3											⑥						⑦	
—	Failure to change gear from "D_3" to "D_4".		2	1		4					3					5													⑥	
97, 98, 99	Too high a gear change point from "D_1" to "D_2", from "D_2" to "D_3", from "D_3" to "D_4".				1	2					3	4																		
—	Gear change directly from "D_1" to "D_3" occurs.	1																2											③	
—	Engine stops when shifting lever into "R", "D", "2" and "1".							1		3				2						④										
—	Too sharp a shock in change from "D_1" to "D_2".				1				2	4						5		3											⑥	
—	Too sharp a shock in change from "D_2" to "D_3".				1				2	3													④						⑤	

Symptom Chart (Cont'd)

		ON vehicle														OFF vehicle									
	Reference page (AT-)	25, 132		132		54, 56, 71		73		60, 131		62, 73		64, 66		68, 131		131		142, 158		177, 181		186, 196		186		192, 205		—
Reference page (AT-)	Numbers are arranged in order of probability. Perform inspections starting with number one and work up. Circled numbers indicate that the transaxle must be removed from the vehicle.	Fluid level	Control cable	Inhibitor switch	Throttle position sensor (Adjustment)	Revolution sensor and vehicle speed sensor	Engine speed signal	Engine idling rpm	Line pressure	Control valve assembly	Shift solenoid valve A	Shift solenoid valve B	Line pressure solenoid valve	Torque converter clutch solenoid valve	Overrun clutch solenoid valve	Fluid temperature sensor	Accumulator N-D	Accumulator servo release	Ignition switch and starter	Torque converter	Oil pump	Reverse clutch	High clutch	Forward clutch	Forward one-way clutch	Overrun clutch	Low one-way clutch	Low & reverse brake	Brake band	Parking components
—	Too sharp a shock in change from "D_3" to "D_4".	.	.	.	1	.	.	.	2	3	.	.	.	.	.	.	.	.	.	.	.	.	.	.	.	⑤	.	.	④	.
—	Almost no shock or clutches slipping in change from "D_1" to "D_2".	1	.	.	2	.	.	.	3	5	.	.	.	.	.	.	.	4	.	.	.	.	.	.	.	.	.	.	⑥	.
—	Almost no shock or slipping in change from "D_2" to "D_3".	1	.	.	2	.	.	.	3	4	.	.	.	.	.	.	.	.	.	.	.	.	⑤	.	.	.	.	.	⑥	.
—	Almost no shock or slipping in change from "D_3" to "D_4".	1	.	.	2	.	.	.	3	4	.	.	.	.	.	.	.	.	.	.	.	.	⑤	.	.	.	.	.	⑥	.
—	Vehicle braked by gear change from "D_1" to "D_2".	1	.	.	.	.	.	.	.	.	.	.	.	.	.	.	.	.	.	.	.	②	④	.	.	.	⑤	③	.	.
—	Vehicle braked by gear change from "D_2" to "D_3".	1	.	.	.	.	.	.	.	.	.	.	.	.	.	.	.	.	.	.	.	.	.	.	.	.	.	.	②	.
—	Vehicle braked by gear change from "D_3" to "D_4".	1	.	.	.	.	.	.	.	.	.	.	.	.	.	.	.	.	.	.	.	④	.	.	③	②	.	.	.	.
—	Maximum speed not attained. Acceleration poor.	1	.	2	.	.	.	.	.	5	3	4	.	.	.	.	.	.	.	⑪	⑩	⑥	⑦	.	.	.	.	⑨	⑧	.
—	Failure to change gear from "D_4" to "D_3".	1	.	.	2	.	.	.	.	6	4	.	5	.	3	.	.	.	.	.	.	.	.	.	.	⑧	.	⑦	.	.
—	Failure to change gear from "D_3" to "D_2" or from "D_4" to "D_2".	1	.	.	2	.	.	.	.	5	3	4	.	.	.	.	.	.	.	.	.	.	⑥	.	.	.	.	.	⑦	.
—	Failure to change gear from "D_2" to "D_1" or from "D_3" to "D_1".	1	.	.	2	.	.	.	.	5	3	4	.	.	.	.	.	.	.	.	.	.	⑦	.	.	.	⑥	.	⑧	.
—	Gear change shock felt during deceleration by releasing accelerator pedal.	.	.	.	1	.	.	.	2	4	.	.	.	.	3	.	.	.	.	.	.	.	.	.	.	.	.	.	.	.
—	Too high a change point from "D_4" to "D_3", from "D_3" to "D_2", from "D_2" to "D_1".	.	.	.	1	2	.	.	.	.	.	.	.	.	.	.	.	.	.	.	.	.	.	.	.	.	.	.	.	.
—	Kickdown does not operate when depressing pedal in "D_4" within kickdown vehicle speed.	.	.	.	1	2	.	.	.	.	3	4	.	.	.	.	.	.	.	.	.	.	.	.	.	.	.	.	.	.
—	Kickdown operates or engine overruns when depressing pedal in "D_4" beyond kickdown vehicle speed limit.	.	.	.	2	1	.	.	.	.	3	4	.	.	.	.	.	.	.	.	.	.	.	.	.	.	.	.	.	.
—	Races extremely fast or slips in changing from "D_4" to "D_3" when depressing pedal.	1	.	.	2	.	.	.	3	5	.	.	4	.	.	.	.	.	.	.	.	.	⑥	⑦	.	.	.	.	.	.
—	Races extremely fast or slips in changing from "D_4" to "D_2" when depressing pedal.	1	.	.	2	.	.	.	3	6	5	.	4	.	.	.	.	.	.	.	.	.	.	⑧	.	.	.	.	⑦	.
—	Races extremely fast or slips in changing from "D_3" to "D_2" when depressing pedal.	1	.	.	2	.	.	.	3	5	.	.	4	.	.	6	.	.	.	.	.	.	⑨	⑧	.	.	.	.	⑦	.
—	Races extremely fast or slips in changing from "D_4" or "D_3" to "D_1" when depressing pedal.	1	.	.	2	.	.	.	3	5	.	.	4	.	.	.	.	.	.	.	.	.	.	⑥	⑦	.	⑧	.	.	.
—	Vehicle will not run in any position.	1	2	.	.	.	.	.	3	.	.	.	4	.	.	.	.	.	.	⑨	⑤	.	⑥	.	.	.	.	⑧	⑦	⑩
—	Transaxle noise in "D", "2", "1" and "R" positions.	1	.	.	.	.	.	.	.	.	.	.	.	.	.	.	.	.	.	②	.	.	.	.	.	.	.	.	.	.

Symptom Chart (Cont'd)

		ON vehicle																		OFF vehicle											
	Reference page (AT-)	25, 132		132		54, 56, 71		73		60, 131		62, 73		64, 66		68, 131		131		142, 158		177, 181		186, 196		186		192, 205		—
Reference page (AT-)	Numbers are arranged in order of probability. Perform inspections starting with number one and work up. Circled numbers indicate that the transaxle must be removed from the vehicle.	Fluid level	Control cable	Inhibitor switch	Throttle position sensor (Adjustment)	Revolution sensor and vehicle speed sensor	Engine speed signal	Engine idling rpm	Line pressure	Control valve assembly	Shift solenoid valve A	Shift solenoid valve B	Line pressure solenoid valve	Torque converter clutch solenoid valve	Overrun clutch solenoid valve	Fluid temperature sensor	Accumulator N-D	Accumulator servo release	Ignition switch and starter	Torque converter	Oil pump	Reverse clutch	High clutch	Forward clutch	Forward one-way clutch	Overrun clutch	Low one-way clutch	Low & reverse brake	Brake band	Parking components
104	Failure to change from "D_3" to "2_2" when changing lever into "2" position.	.	7	1	2	.	.	.	.	6	5	4	.	.	3	.	.	.	.	.	.	.	.	.	.	⑨	.	.	⑧	.
—	Gear change from "2_2" to "2_3" in "2" position.	.	.	1	.	.	.	.	.	.	.	.	.	.	.	.	.	.	.	.	.	.	.	.	.	.	.	.	.	.
104	Engine brake does not operate in "1" position.	.	2	1	3	4	.	.	.	5	5	.	.	.	7	.	.	.	.	.	.	.	.	.	.	⑧	.	⑨	.	.
—	Gear change from "1_1" to "1_2" in "1" position.	.	2	1	.	.	.	.	.	.	.	.	.	.	.	.	.	.	.	.	.	.	.	.	.	.	.	.	.	.
—	Does not change from "1_2" to "1_1" in "1" position.	.	.	1	.	2	.	.	.	4	3	.	.	.	5	.	.	.	.	.	.	.	.	.	.	⑥	.	⑦	.	.
—	Large shock changing from "1_2" to "1_1" in "1" position.	.	.	.	.	.	.	.	.	1	.	.	.	.	.	.	.	.	.	.	.	.	.	.	.	.	.	②	.	.
—	Transaxle overheats.	1	.	.	3	.	.	2	4	6	.	.	5	.	.	.	.	.	.	⑭	⑦	⑧	⑨	⑪	.	⑫	.	⑬	⑩	.
—	ATF shoots out during operation. White smoke emitted from exhaust pipe during operation.	1	.	.	.	.	.	.	.	.	.	.	.	.	.	.	.	.	.	.	.	②	③	⑤	.	⑥	.	⑦	④	.
—	Offensive smell at fluid charging pipe.	1	.	.	.	.	.	.	.	.	.	.	.	.	.	.	.	.	.	②	③	④	⑤	⑦	.	⑧	.	⑨	⑥	.
—	Torque converter is not locked up.	.	.	3	1	2	4	.	6	8	.	.	.	7	.	5	.	.	.	⑨	.	.	.	.	.	.	.	.	.	.
—	Lock-up piston slip.	1	.	.	2	.	.	.	3	6	.	.	5	4	.	.	.	.	.	⑦	.	.	.	.	.	.	.	.	.	.
100	Lock-up point is extremely high or low.	.	.	.	1	2	.	.	.	4	.	.	.	3	.	.	.	.	.	.	.	.	.	.	.	.	.	.	.	.
—	A/T does not shift to "D_4" when driving with overdrive switch "ON".	.	.	2	1	3	.	.	8	6	4	.	.	.	5	7	.	.	.	.	.	.	.	.	.	⑩	.	.	⑨	.
—	Engine is stopped at "R", "D", "2" and "1" positions.	1	.	.	.	.	.	.	.	5	4	3	.	2	.	.	.	.	.	.	.	.	.	.	.	.	.	.	.	.

Description

- The mechanical key interlock mechanism also operates as a shift lock:
  With the key switch turned to "ON", the selector lever cannot be shifted from "P" (parking) to any other position unless the brake pedal is depressed.
  With the key removed, the selector lever cannot be shifted from "P" to any other position.
  The key cannot be removed unless the selector lever is placed in "P".
- The shift lock and key interlock mechanisms are controlled by the ON-OFF operation of the shift lock solenoid and by the operation of the rotator and slider located inside the key cylinder, respectively.

Shift Lock System Electrical Parts Location

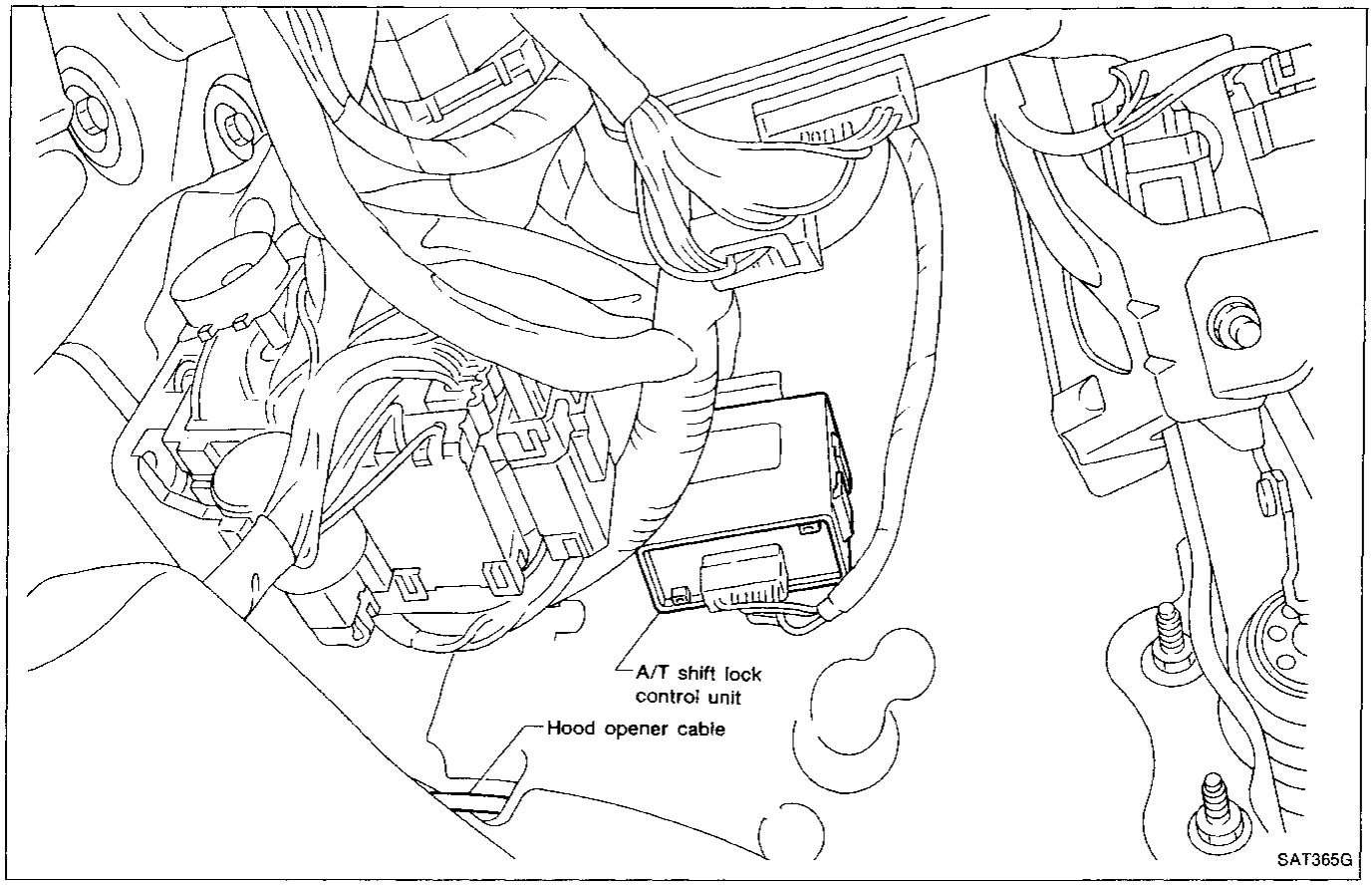

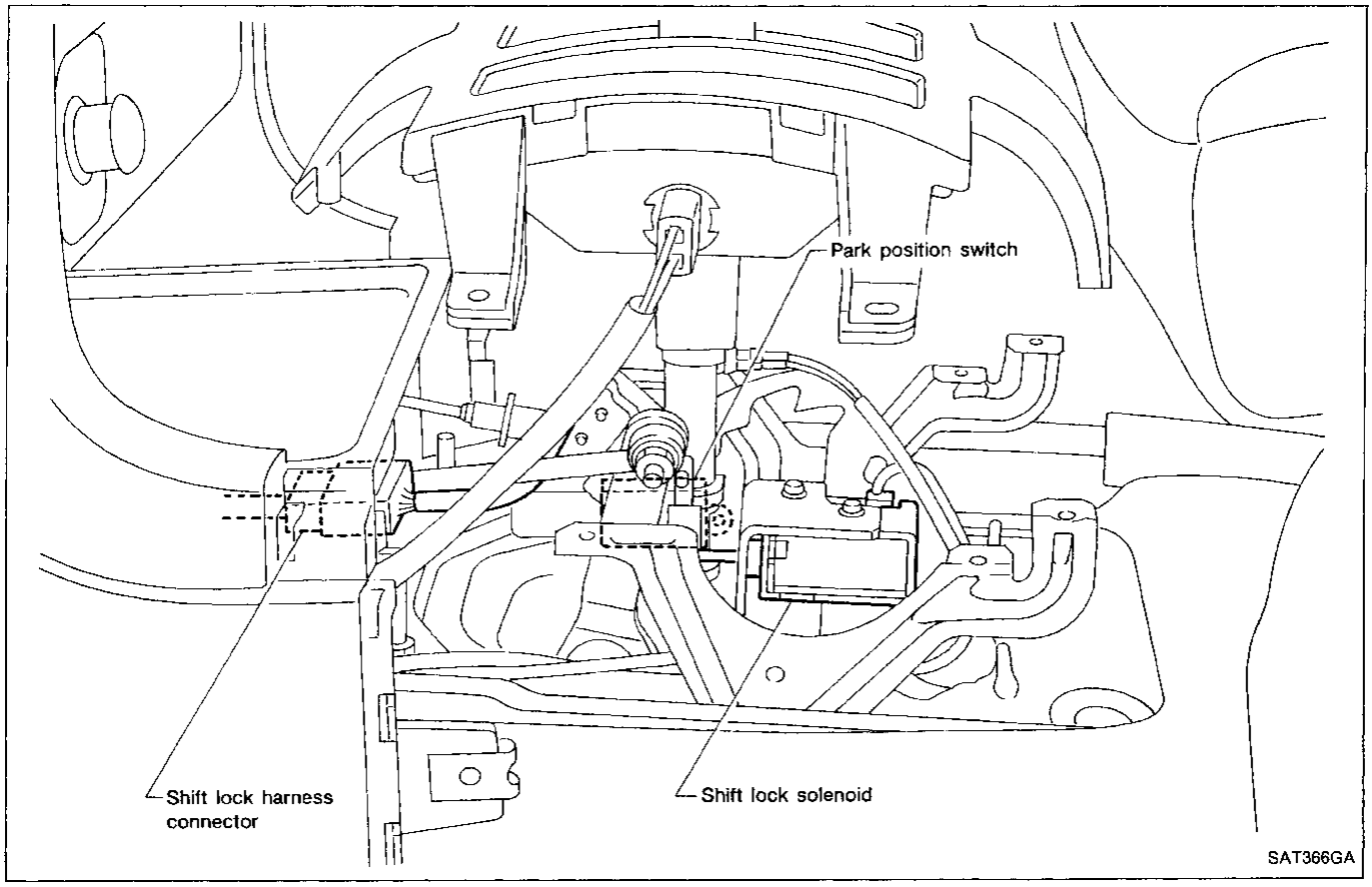

Wiring Diagram — SHIFT —

AT-SHIFT-01

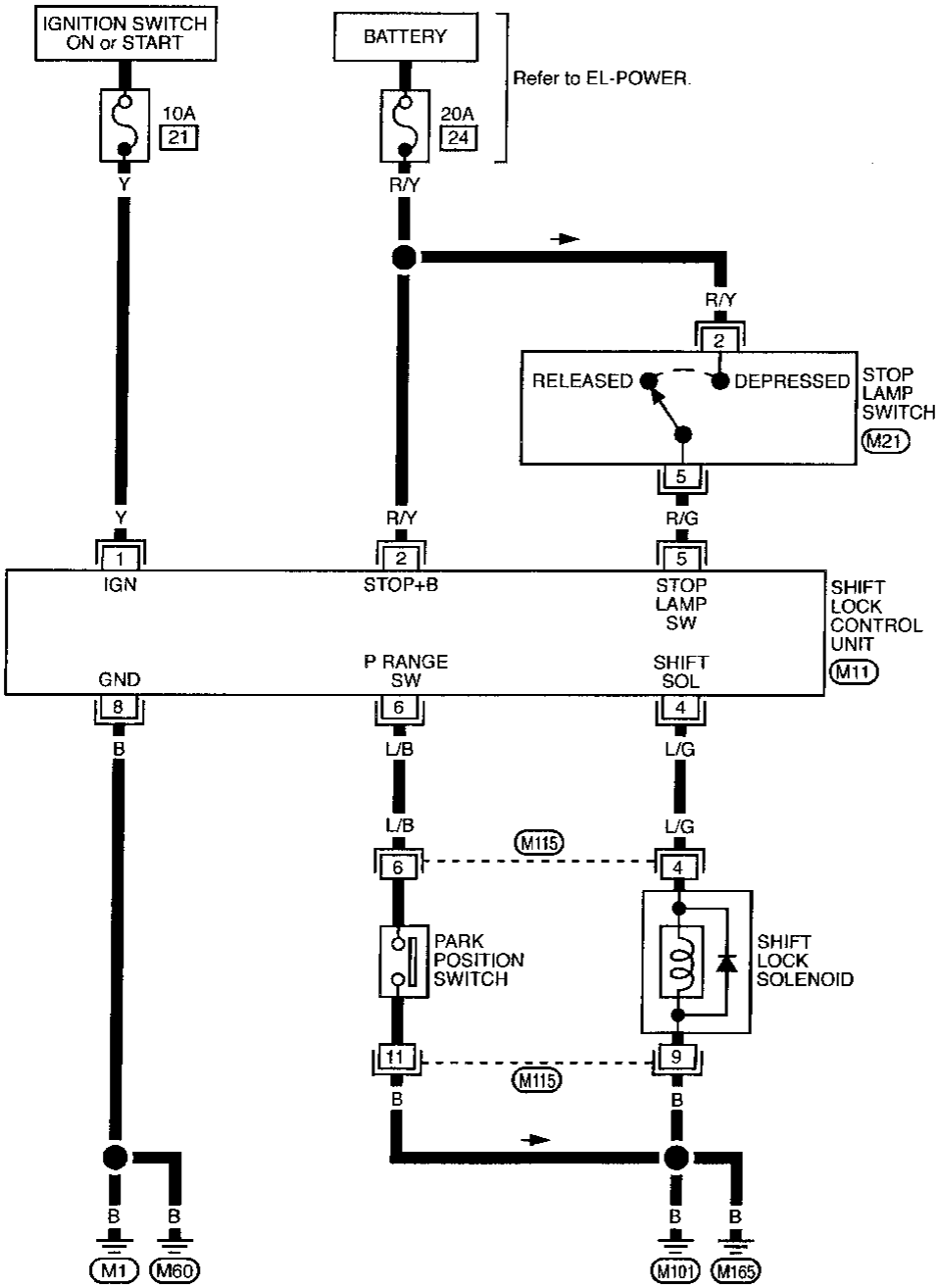

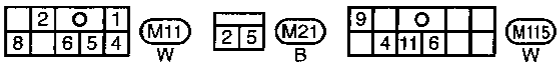

TAT023

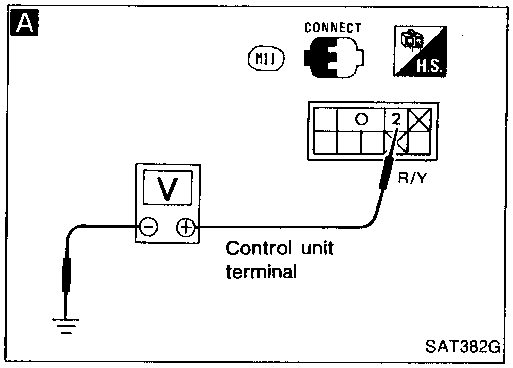

Diagnostic Procedure

SYMPTOM 1:

- **Selector lever cannot be moved from "P" position with key in "ON" position and brake pedal applied.**
- **Selector lever can be moved from "P" position with key in "ON" position and brake pedal released.**
- **Selector lever can be moved from "P" position when key is removed from key cylinder.**

SYMPTOM 2:

Ignition key cannot be removed when selector lever is set to "P" position. It can be removed when selector lever is set to any position except "P".

Check key interlock cable for damage.
- NG → Repair key interlock cable. Refer to "Key Interlock Cable", AT-127.
- OK ↓

Check selector lever position for damage.
- NG → Check selector lever. Refer to "ON-VEHICLE SERVICE — Inhibitor Switch and Control Cable Adjustment", AT-132.
- OK ↓

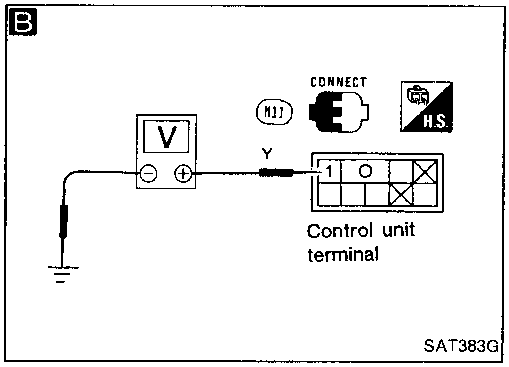

A

CHECK POWER SOURCE.
1. Turn ignition switch to "OFF" position.
2. Check voltage between control unit harness terminal ② and ground.
   Battery voltage should exist.

- NG → Check the following items:
  - Harness for short or open between battery and control unit harness terminal ②
  - Fuse
- OK ↓

B

CHECK IGNITION SIGNAL.
1. Turn ignition switch to "OFF" position.
2. Check voltage between control unit harness terminal ① and ground.
   0V
3. Turn ignition switch from "OFF" to "ON" position. (Do not start engine.)
4. Check voltage between control unit harness terminal ① and ground.
   Battery voltage should exist.

- NG → Check the following items:
  - Harness for short or open between battery and control unit harness terminal ①
  - Fuse
  - Ignition switch
- OK ↓

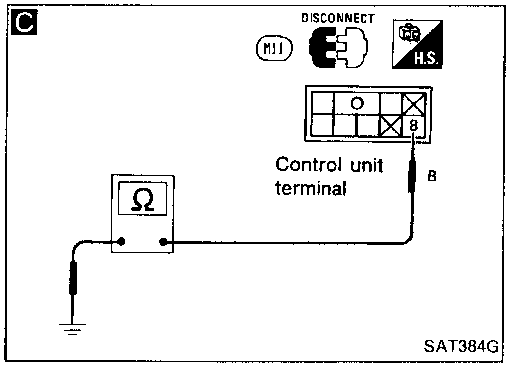

C

CHECK GROUND CIRCUIT FOR CONTROL UNIT.
1. Turn ignition switch from "ON" to "OFF" position.
2. Disconnect control unit harness connector.
3. Check continuity between control unit harness terminal ⑧ and ground.
   Continuity should exist.

- NG → Repair harness or connector.
- OK ↓ Ⓐ

Diagnostic Procedure (Cont'd)

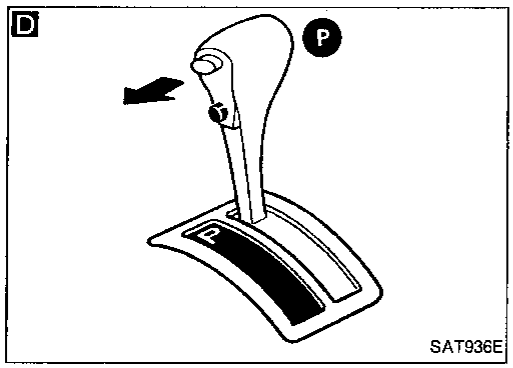

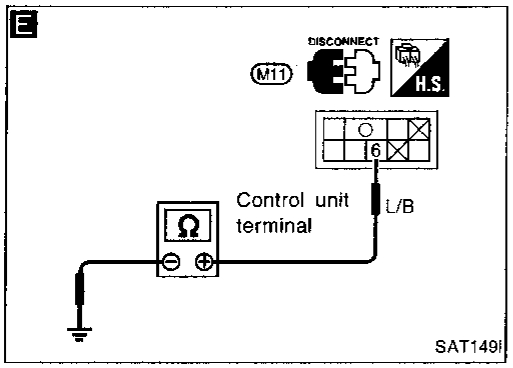

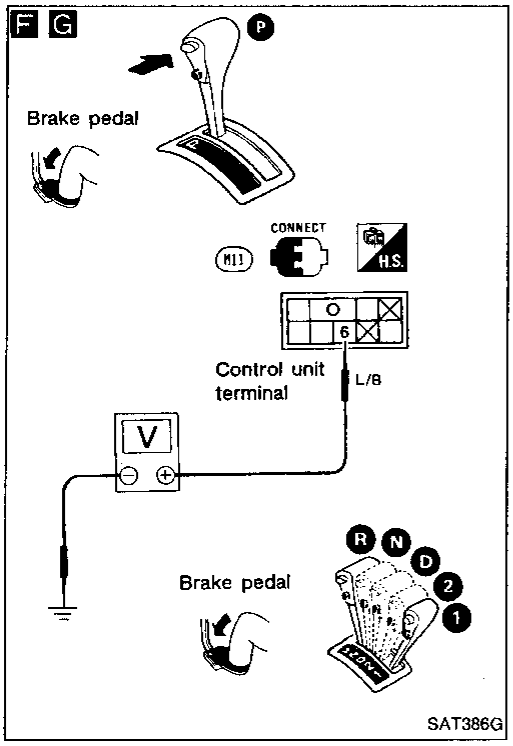

Ⓐ

CHECK INPUT SIGNAL (PARK POSITION SWITCH).

1. Reconnect control unit harness connector.
2. Turn ignition switch from "OFF" to "ON" position. (Do not start engine.)

D 3. Set selector lever in "P" position and release selector lever button.

E 4. Disconnect control unit harness connector.

5. Check continuity between control unit harness terminal ⑥ and ground.

Continuity should not exist.

NG → Check park position switch. (Refer to "COMPONENT CHECK", AT-130.)

OK ↓

CHECK INPUT SIGNAL (PARK POSITION SWITCH).

1. Turn ignition switch to "ON" position. (Do not start engine.)

F 2. Check voltage between control unit harness terminal ⑥ and ground. Check while depressing brake pedal with selector lever button pushed.

Voltage: 0V

G 3. Check continuity between control unit harness terminal ⑥ and ground. Check while selector lever is set in any position except "P".

When Selector lever cannot be moved from "P" position with brake pedal depressed, set ignition key to "ACC" position and move lever. Then set ignition key to "ON" position.

Battery voltage should exist.

NG → Check the following items:

- Harness for short or open between control unit harness terminal ⑥ and park position switch harness terminal ⑥
- Harness for short or open between park position switch harness terminal ⑥ and ground
- Park position switch (Refer to "COMPONENT CHECK", AT-130.)

OK ↓

Ⓑ

Diagnostic Procedure (Cont'd)

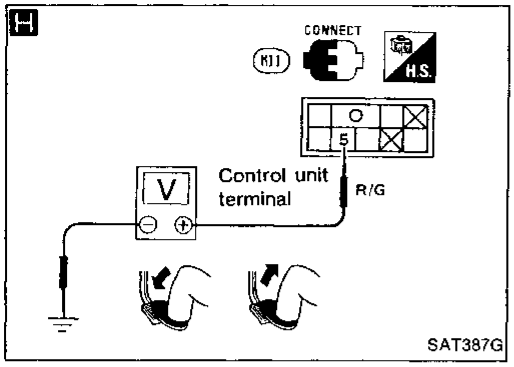

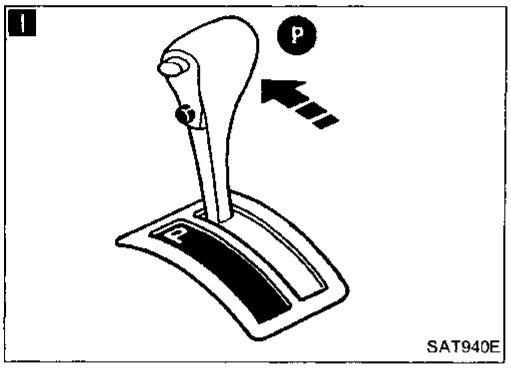

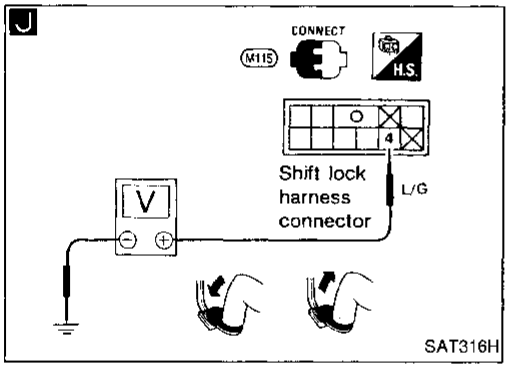

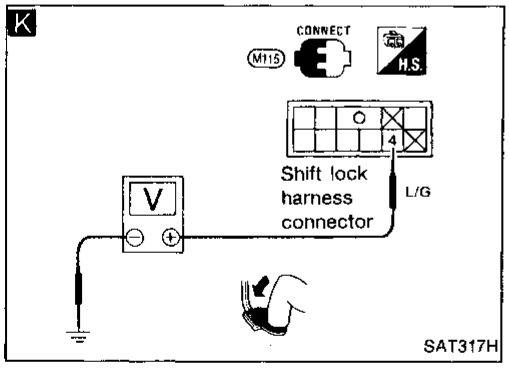

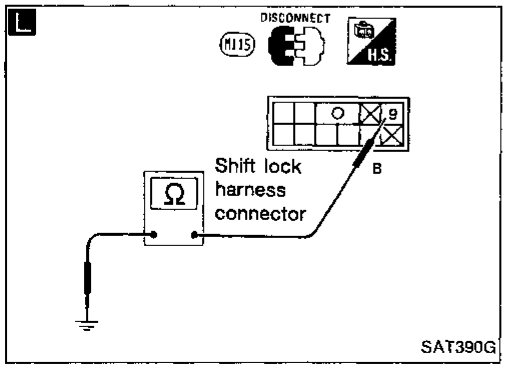

Ⓑ

H

CHECK INPUT SIGNAL (STOP LAMP SWITCH).

Turn ignition switch to "ON" position. (Do not start engine.)

- Check voltage between control unit harness terminal ⑤ and ground.

Brake pedal	Voltage
Depressed	Battery voltage
Released	0V

NG → Check the following items:
1. Harness for short or open between control unit harness terminal ⑤ and stop lamp switch harness terminal ②
2. Harness for short or open between stop lamp switch harness terminal ① and fuse
3. Stop lamp switch (Refer to "COMPONENT CHECK", AT-130.)

OK ↓

I

Set selector lever in "P" position.

↓

CHECK OUTPUT SIGNAL (SHIFT LOCK SOLENOID).

1. Turn ignition switch to "ON" position. (Do not start engine.)
2. **J** Check voltage between shift lock harness connector terminal ④ and body ground.

Brake pedal	Voltage
Depressed	Battery voltage
Released	0V

3. Turn ignition switch from "ON" to "OFF" position.
4. **K** Check voltage between shift lock harness connector terminal ④ and ground with brake pedal depressed.
   0V

NG → Check harness for short or open between control unit harness terminal ④ and shift lock solenoid harness terminal ④.

OK ↓

L

CHECK GROUND CIRCUIT FOR SHIFT LOCK SOLENOID.

1. Disconnect shift lock harness connector.
2. Check continuity between shift lock harness terminal ⑨ and ground.
   Continuity should exist.

NG → Repair harness or connector.

OK ↓

Ⓒ

Diagnostic Procedure (Cont'd)

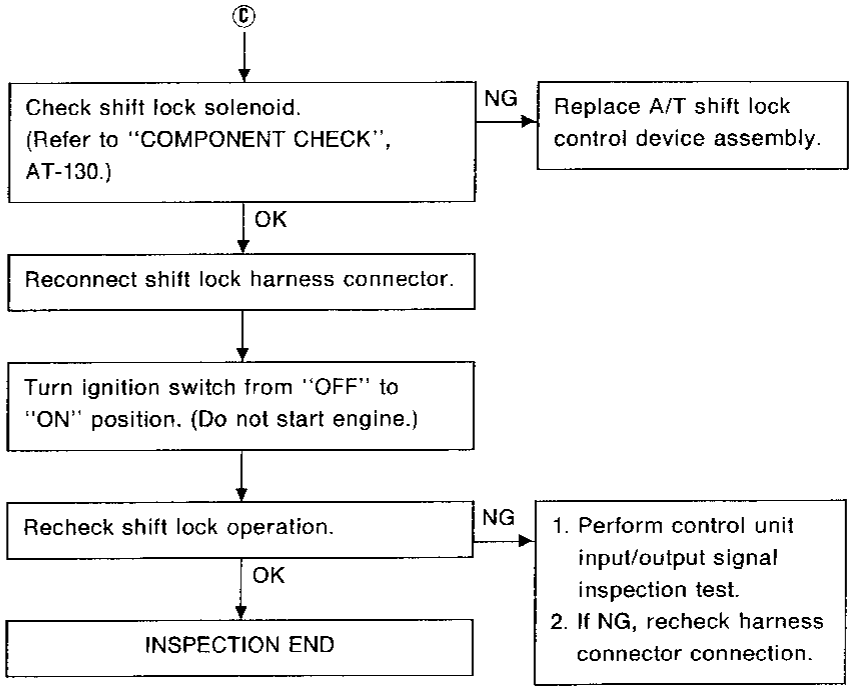

Key Interlock Cable

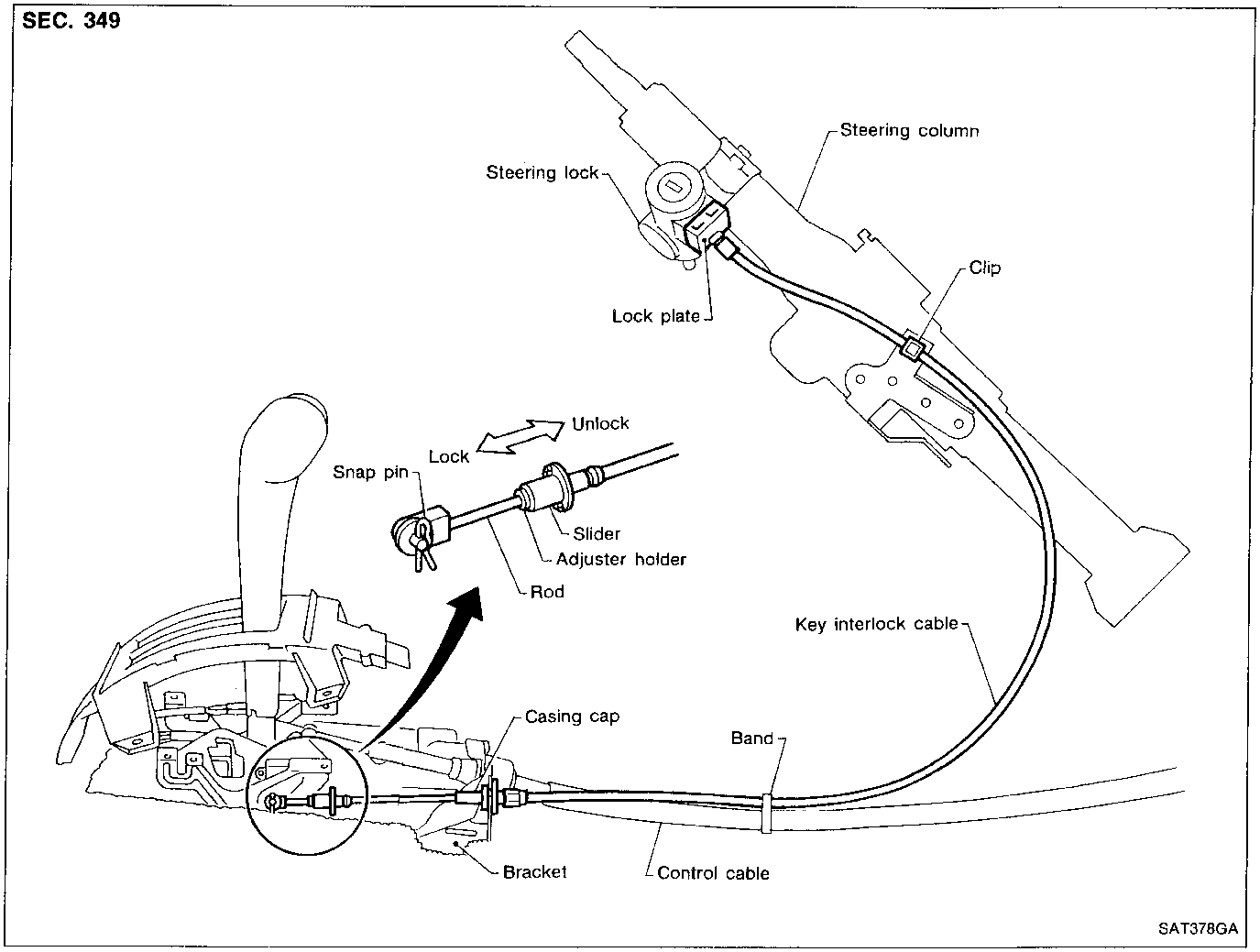

CAUTION:

- **Install key interlock cable in such a way that it will not be damaged by sharp bends, twists or interference with adjacent parts.**
- **After installing key interlock cable to control device, make sure that casing cap and bracket are firmly secured in their positions. If casing cap can be removed with an external load of less than 39.2 N (4.0 kg, 8.8 lb), replace key interlock cable with new one.**

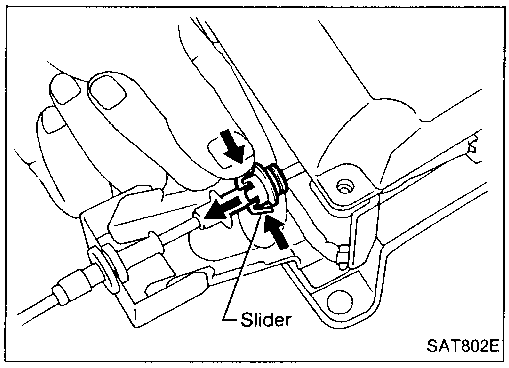

REMOVAL

Unlock slider from adjuster holder and remove rod from cable.

Key Interlock Cable (Cont'd)

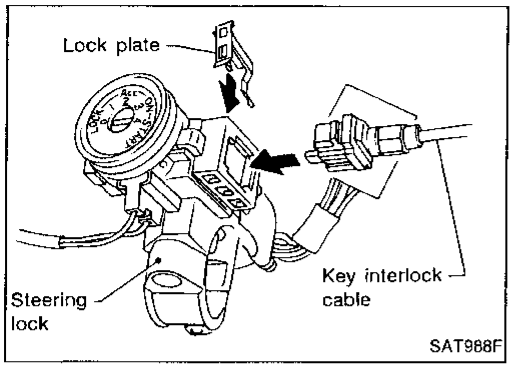

INSTALLATION

1. Set key interlock cable to steering lock assembly and install lock plate.
2. Clamp cable to steering column and fix to control cable with band.
3. Set control lever to P position.

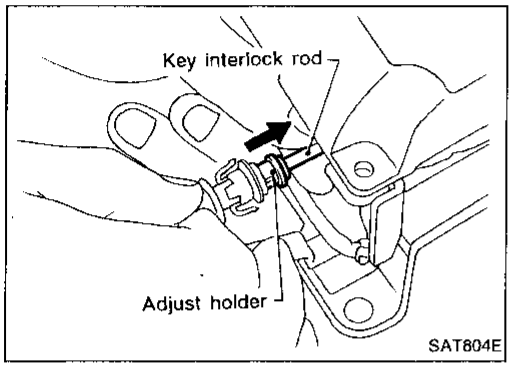

4. Insert interlock rod into adjuster holder.

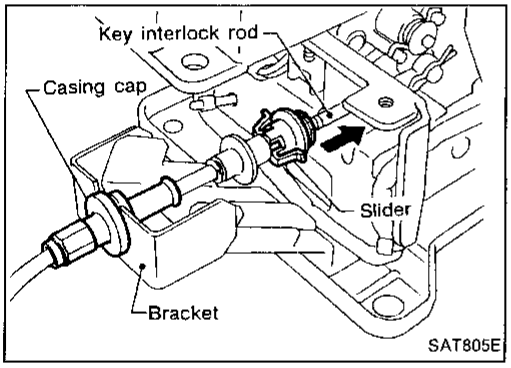

5. Install casing cap to bracket.
6. Move slider in order to fix adjuster holder to interlock rod.

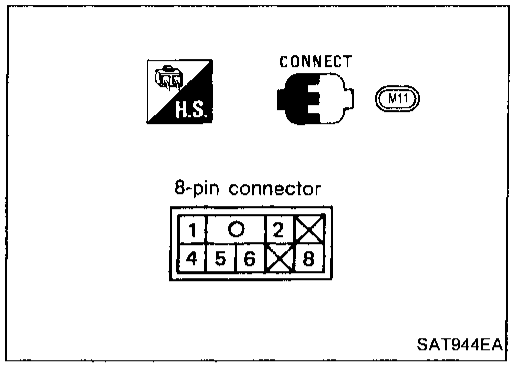

Shift Lock Control Unit Inspection

- Measure voltage between each terminal and terminal ⑧ by following "Shift Lock Control Unit Inspection Table".
- Pin connector terminal layout.

Shift Lock Control Unit Inspection Table

(Data are reference values.)

Terminal No. ⊕	Terminal No. ⊖	Item	Condition	Judgement standard
①	⑧	Ignition signal	Turn ignition switch to "ON" position.	Battery voltage
			Except above	0V
②		Power source	Any condition	Battery voltage
④		Shift lock signal	• Turn ignition switch to "ON" position • When selector lever is set in "P" position and brake pedal is depressed.	Battery voltage
			Except above	0V
⑤		Stop lamp switch	When brake pedal is depressed.	Battery voltage
			When brake pedal is released.	0V
⑥		Park position switch	• When key is inserted into key cylinder. Selector lever is set in "P" position. Selector lever button is pushed. • When selector lever is set in any position except "P".	Battery voltage
			Except above	0V

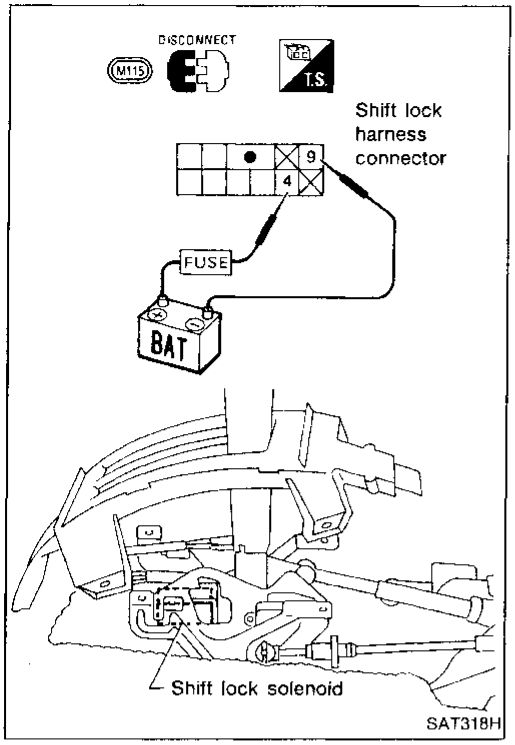

Component Check

SHIFT LOCK SOLENOID

- Check operation by applying battery voltage to shift lock harness connector.

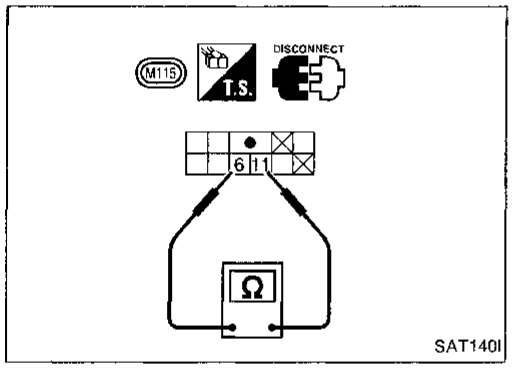

PARK POSITION SWITCH

- Check continuity between terminals ⑥ and ⑪ of shift lock harness connector.

Condition	Continuity
When selector lever is set in "P" position and selector lever button is released	No
Except above	Yes

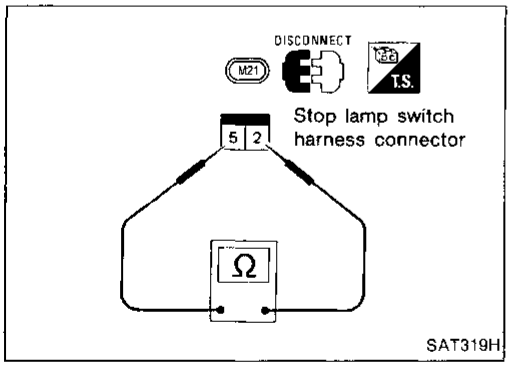

STOP LAMP SWITCH

- Check continuity between terminals ② and ⑤ of stop lamp switch harness connector.

Condition	Continuity
When brake pedal is depressed	Yes
When brake pedal is released	No

Check stop lamp switch after adjusting brake pedal — refer to BR section.

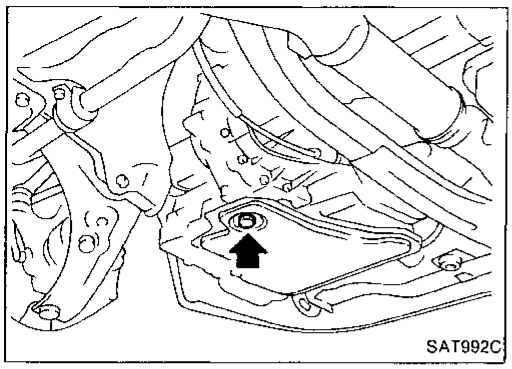

Control Valve Assembly and Accumulator

REMOVAL

1. Drain ATF from transaxle.
2. Remove oil pan and gasket.

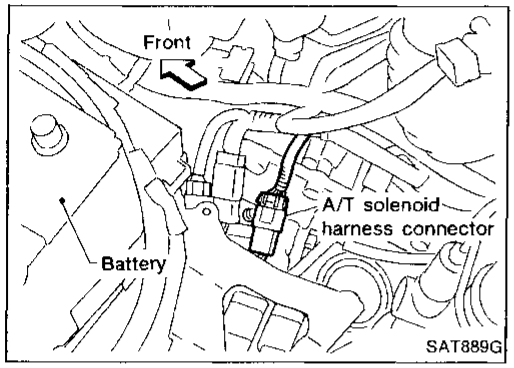

3. Disconnect A/T solenoid harness connector.

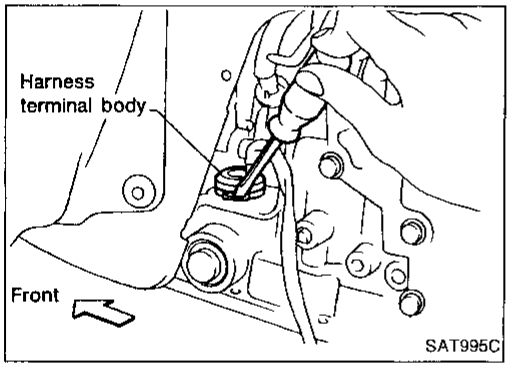

4. Remove stopper ring from A/T solenoid harness terminal body.
5. Remove A/T solenoid harness by pushing terminal body into transmission case.

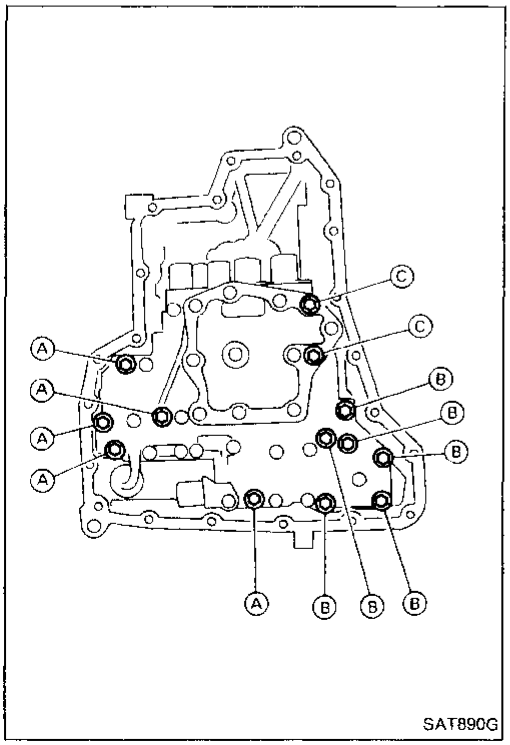

6. Remove control valve assembly by removing fixing bolts.

Bolt length, number and location:

Bolt symbol	Ⓐ	Ⓑ	Ⓒ
Bolt length "ℓ" mm (in)	40.0 (1.575)	33.0 (1.299)	43.5 (1.713)
Number of bolts	5	6	2

- **Be careful not to drop manual valve and servo release accumulator return springs.**

7. Disassemble and inspect control valve assembly if necessary. Refer to AT-162.

Control Valve Assembly and Accumulator (Cont'd)

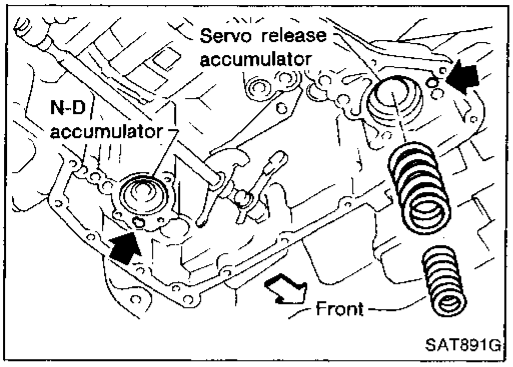

8. Remove servo release and N-D accumulators by applying compressed air if necessary.
- **Hold each piston with a rag.**

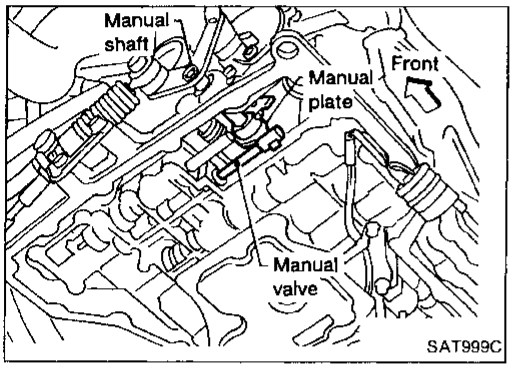

INSTALLATION

- **Set manual shaft in Neutral position, then align manual plate with groove in manual valve.**
- **After installing control valve assembly, make sure that selector lever can be moved to all positions.**

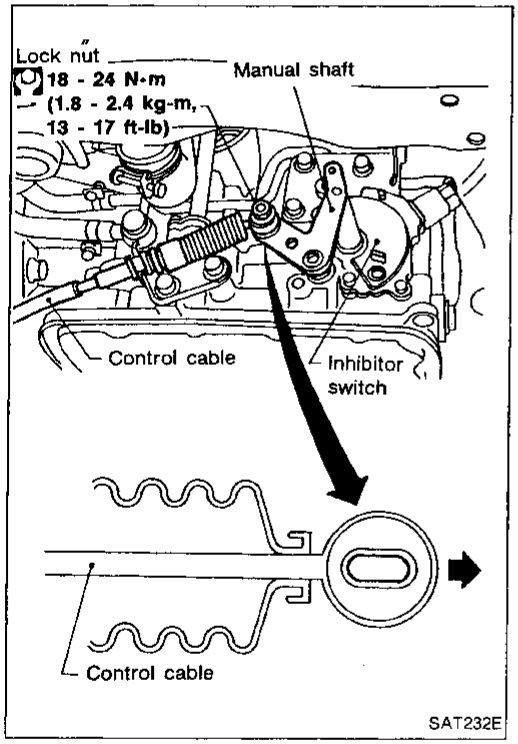

Control Cable Adjustment

Move selector lever from the "P" position to the "1" position. You should be able to feel the detents in each position. If the detents cannot be felt or the pointer indicating the position is improperly aligned, the control cable needs adjustment.

1. Place selector lever in "P" position.
2. Loosen control cable lock nut and place manual shaft in "P" position.
3. Pull control cable in the direction of the arrow shown in the illustration by specified force.
   Specified force: 6.9 N (0.7 kg, 1.5 lb)
4. Return control cable in the opposite direction of the arrow for 1.0 mm (0.039 in).
5. Tighten control cable lock nut.
6. Move selector lever from "P" position to "1" position. Make sure that selector lever can be moved smoothly without any sliding noise.
7. Apply grease to contacting areas of selector lever and control cable. Install any part removed.

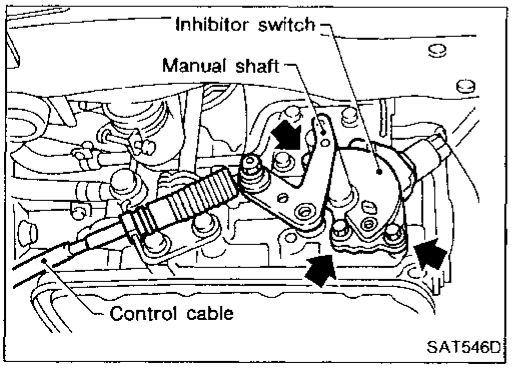

Inhibitor Switch Adjustment

1. Remove control cable end from manual shaft.
2. Set manual shaft in "N" position.
3. Loosen inhibitor switch fixing bolts.

Inhibitor Switch Adjustment (Cont'd)

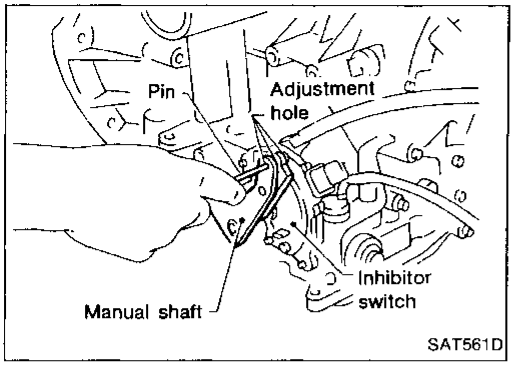

4. Insert 4.0 mm (0.157 in) dia. pin into adjustment holes in inhibitor switch and manual shaft. Insert the pin so that adjustment holes are correctly aligned with each other.
5. Tighten inhibitor switch fixing bolts.
6. Remove pin from adjustment holes after adjusting inhibitor switch.
7. Reinstall any part removed.
8. Adjust control cable. Refer to "Control Cable Adjustment", AT-132.
9. Check continuity of inhibitor switch. Refer to "TROUBLE DIAGNOSES", AT-110.

Differential Side Oil Seal Replacement

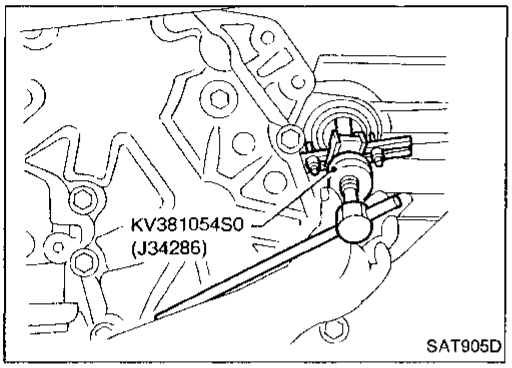

1. Remove drive shaft assemblies. Refer to FA section ("REMOVAL", "Drive Shaft", "FRONT AXLE").
2. Remove oil seals.

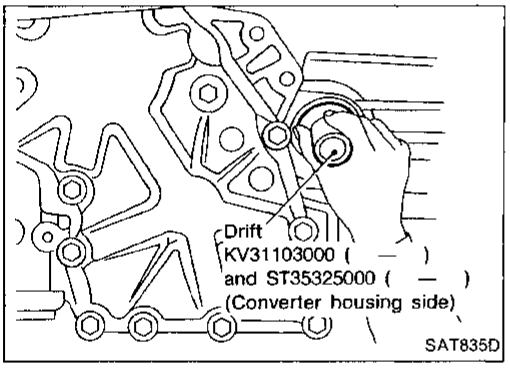

3. Install oil seals.

- **Apply ATF to oil seal surface before installing.**

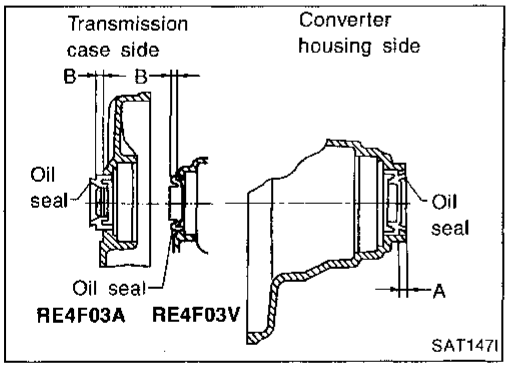

- **Install oil seals so that dimensions "A" and "B" are within specifications.**

Unit: mm (in)

A	B
5.5 - 6.5 (0.217 - 0.256)	0.5 (0.020) or less

4. Reinstall any part removed.

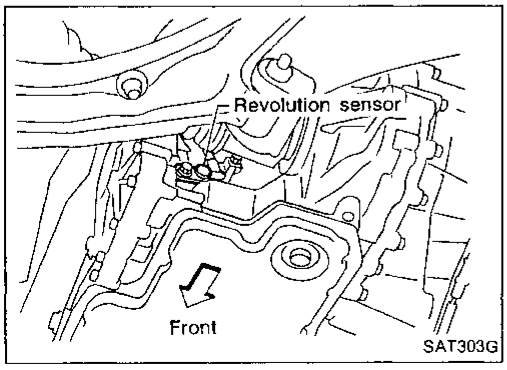

Revolution Sensor Replacement

1. Disconnect revolution sensor harness connector.
2. Remove revolution sensor from A/T.
3. Reinstall any part removed.

- **Always use new sealing parts.**

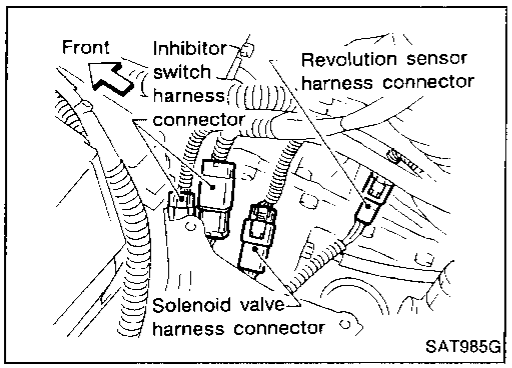

Removal

CAUTION:
When removing the transaxle assembly from engine, first remove the crankshaft position sensor (OBD) from the assembly.
Be careful not to damage sensor edge and ring gear teeth.

- Remove battery and bracket.
- Remove air duct.
- Disconnect solenoid valve harness connector, inhibitor switch harness connector and revolution sensor harness connector.
- Remove crankshaft position sensor (OBD) from transaxle.

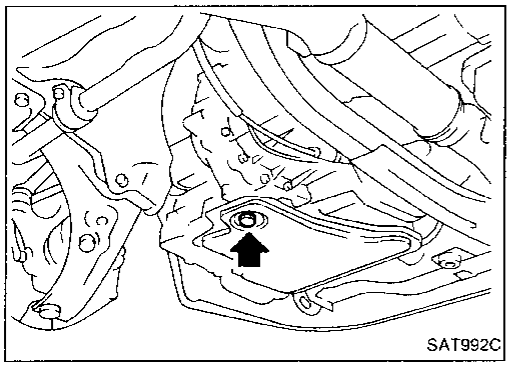

- Drain ATF from transaxle.

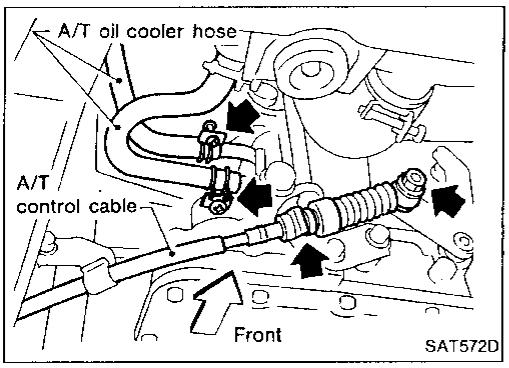

- Disconnect control cable from transaxle.
- Disconnect oil cooler hoses.

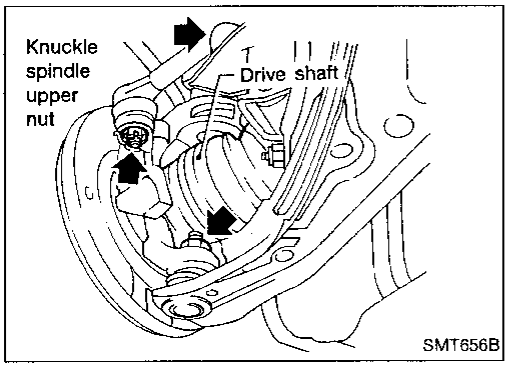

- Remove drive shafts. Refer to FA section ("REMOVAL", "Drive Shaft, FRONT AXLE").
- Remove front exhaust tube.
- Remove starter motor from transaxle.

Removal (Cont'd)

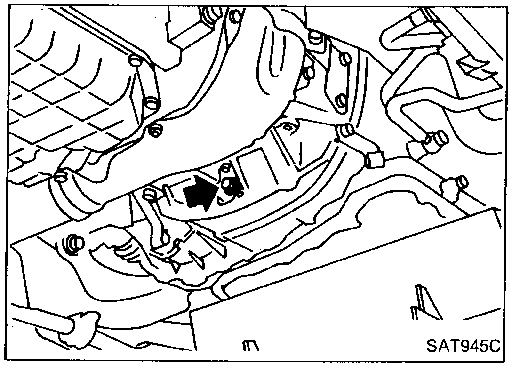

- Remove rear plate cover.
- Remove bolts securing torque converter to drive plate.
- **Rotate crankshaft for access to securing bolts.**
- Support engine by placing a jack under oil pan.
- **Do not place jack under oil pan drain plug.**

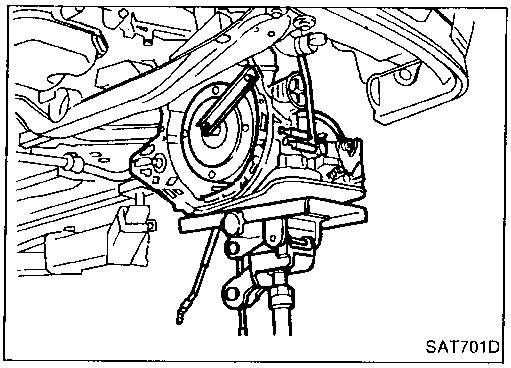

- Support transaxle with a jack.
- Remove mountings from transaxle.
- Remove bolts fixing A/T to engine.
- Lower transaxle while supporting it with a jack.

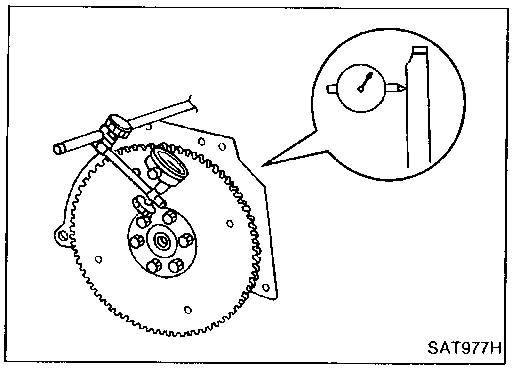

Installation

- Check drive plate runout

CAUTION:
Do not allow any magnetic materials to contact the ring gear teeth.

Maximum allowable runout:
Refer to EM section ("Inspection", "CYLINDER BLOCK").

If this runout is out of specification, replace drive plate with ring gear.

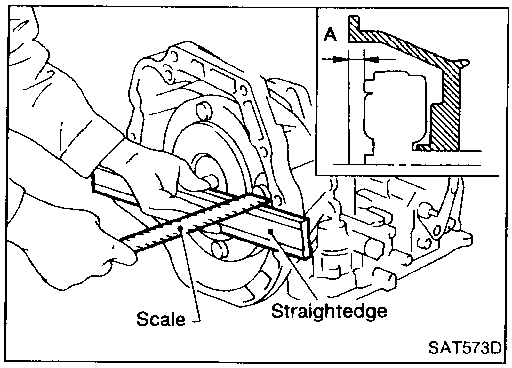

- When connecting torque converter to transaxle, measure distance "A" to be certain that they are correctly assembled.

Distance "A":
15.9 mm (0.626 in) or more

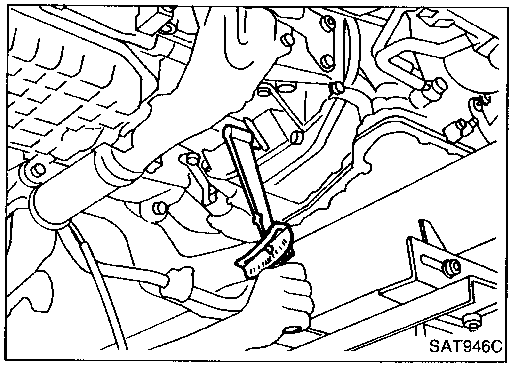

- Install torque converter to drive plate.
- **With converter installed, rotate crankshaft several turns to check that transaxle rotates freely without binding.**

Installation (Cont'd)

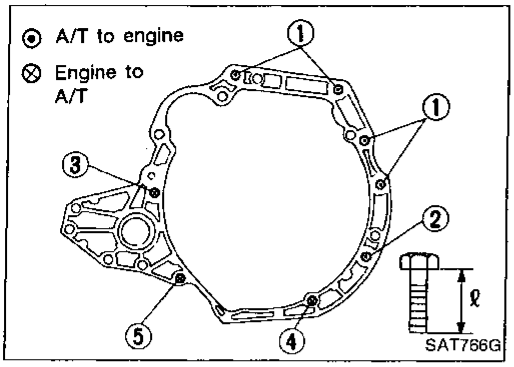

- Tighten bolts fixing transaxle.

Bolt No.	Tightening torque N·m (kg-m, ft-lb)	Bolt length "ℓ" mm (in)
①	70 - 79 (7.1 - 8.1, 51 - 59)	55 (2.17)
②	70 - 79 (7.1 - 8.1, 51 - 59)	50 (1.97)
③	70 - 79 (7.1 - 8.1, 51 - 59)	65 (2.56)
④	16 - 21 (1.6 - 2.1, 12 - 15)	35 (1.38)
⑤	16 - 21 (1.6 - 2.1, 12 - 15)	45 (1.77)

- Reinstall any part removed.
- Adjust control cable. Refer to ON-VEHICLE SERVICE, AT-132.
- Check continuity of inhibitor switch. Refer to TROUBLE DIAGNOSES, AT-110.

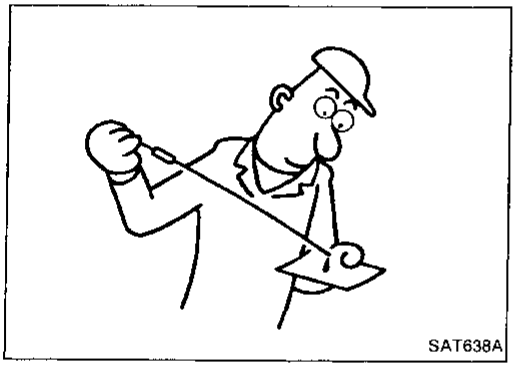

- Refill transaxle with ATF and check fluid level.
- Move selector lever through all positions to be sure that transaxle operates correctly. With parking brake applied, idle engine. Move selector lever through "N" to "D", to "2", to "1" and "R" positions. A slight shock should be felt through the hand gripping the selector each time the transaxle is shifted.
- Perform road test. Refer to "ROAD TEST", AT-25.

RE4F03A and RE4F03V

SEC. 311•313•327•381

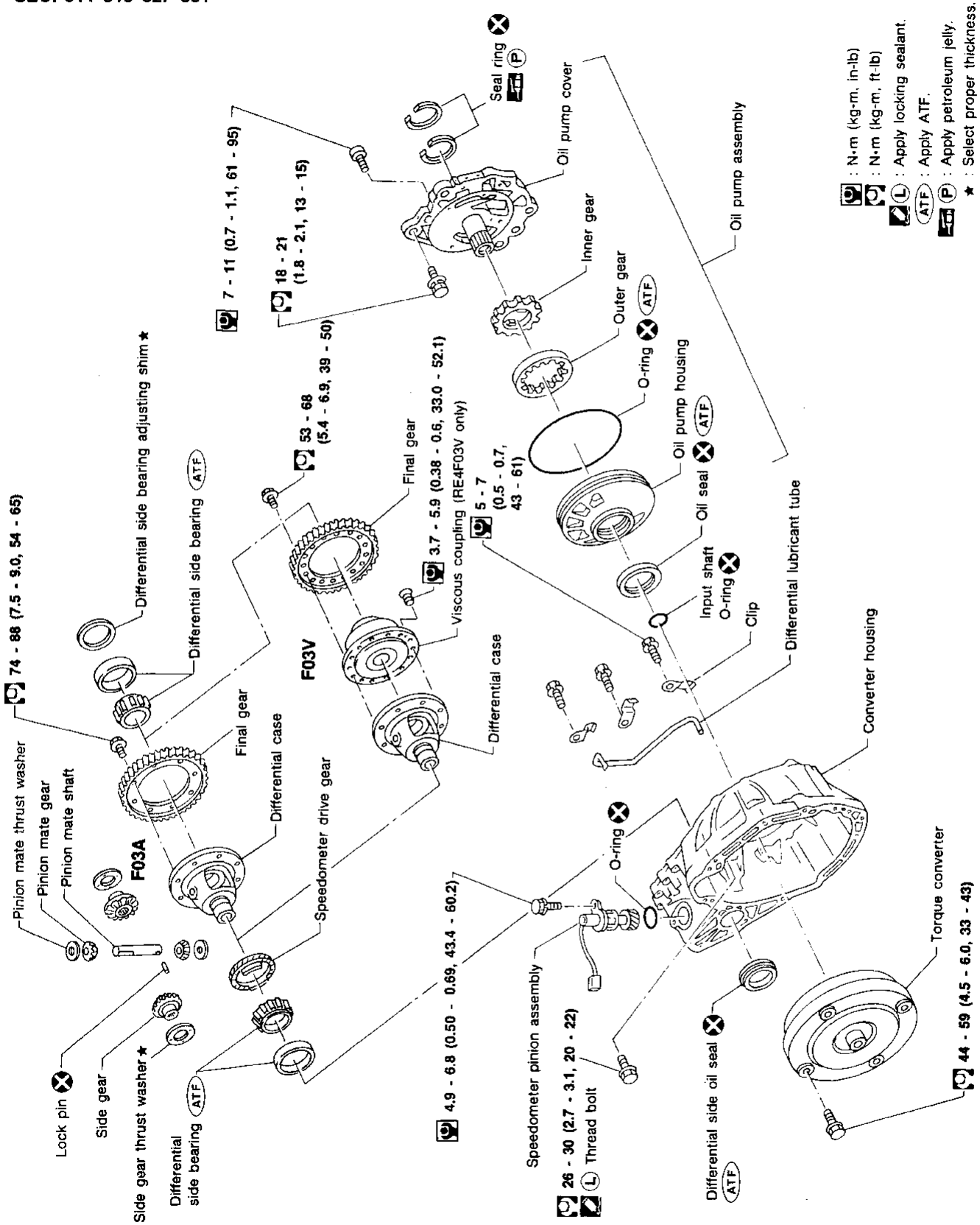

SAT947GB

RE4F03A and RE4F03V (Cont'd)

SEC. 315

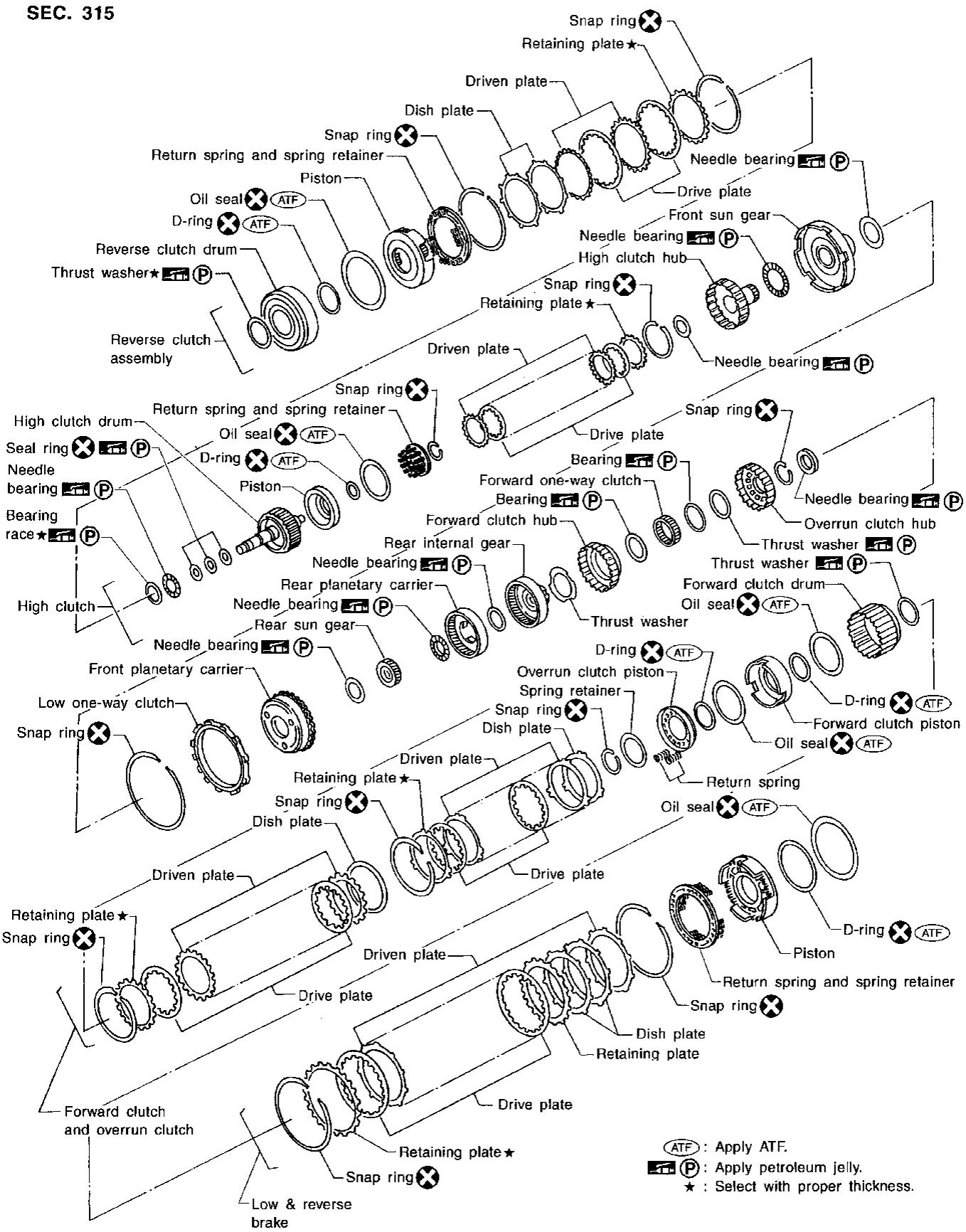

SAT148I

SEC. 310•315•317•319

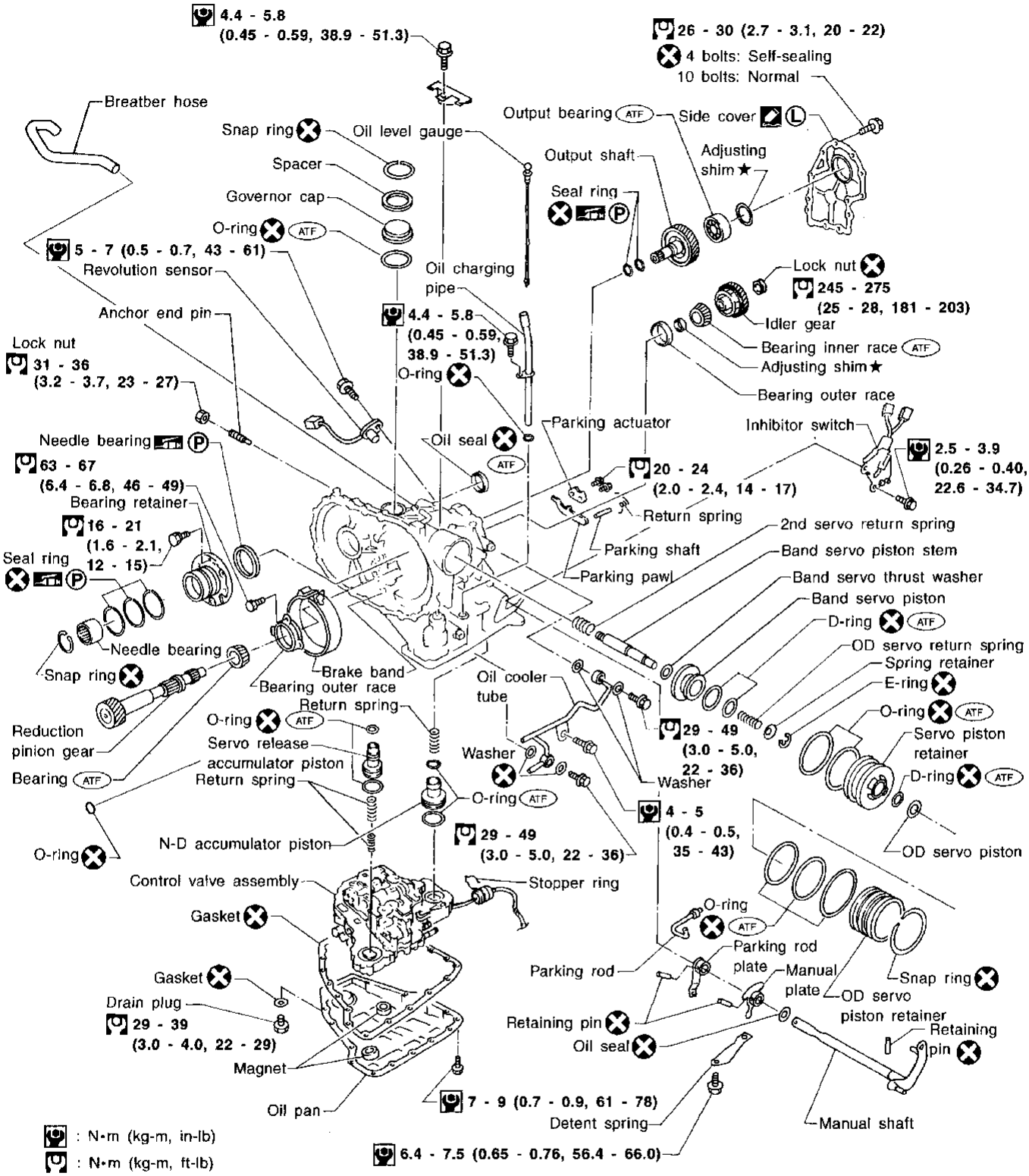

: N•m (kg-m, in-lb)
: N•m (kg-m, ft-lb)
: Apply locking sealant.
ATF: Apply ATF.
: Apply petroleum jelly.
★: Select with proper thickness.

SAT141J

Oil Channel

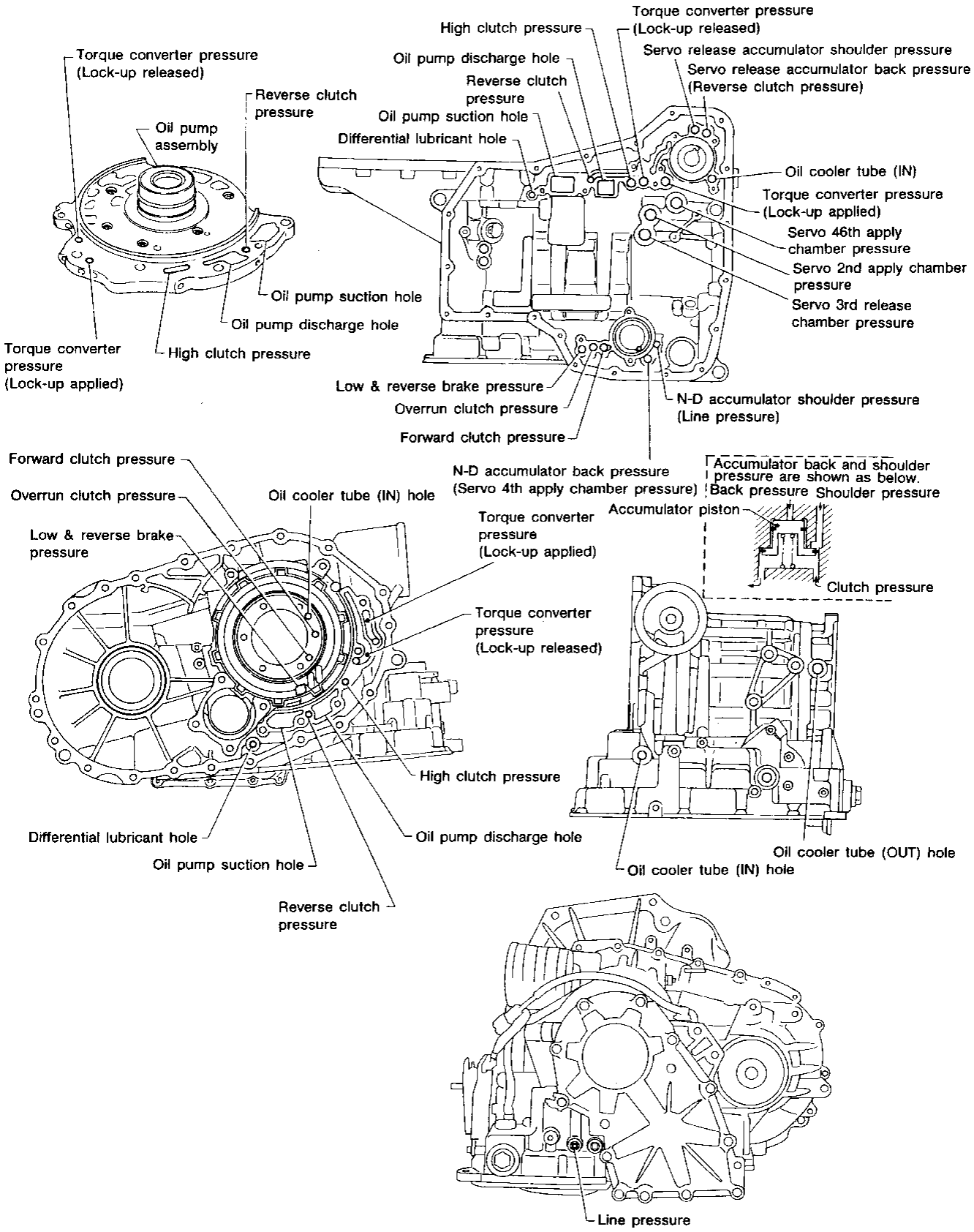

SAT894G

Locations of Adjusting Shims, Needle Bearings, Thrust Washers and Snap Rings

Outer diameter and color of thrust washers

Item number	Outer diameter mm (in)	Color
⑰	72.0 (2.835)	Black
⑱	78.5 (3.091)	

Outer & inner diameter of needle bearings

Item number	Outer diameter mm (in)	Inner diameter mm (in)
⑧	47.0 (1.850)	32.0 (1.260)
⑨	35.0 (1.378)	20.1 (0.791)
⑩	60.0 (2.362)	42.0 (1.654)
⑪	60.0 (2.362)	45.0 (1.772)
⑫	47.0 (1.850)	30.0 (1.181)
⑬	42.6 (1.677)	26.0 (1.024)
⑭	48.0 (1.890)	33.5 (1.319)
⑮	55.0 (2.165)	40.5 (1.594)
⑯	60.0 (2.362)	40.1 (1.579)

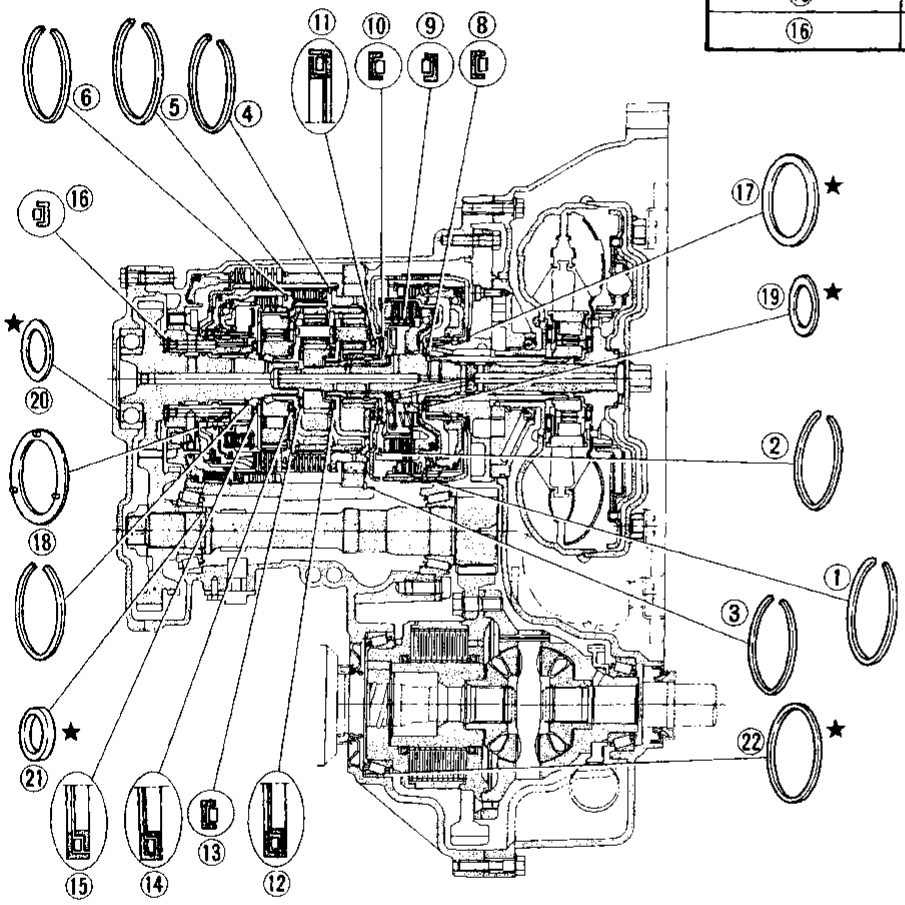

★: Select proper thickness.

Outer & inner diameter of bearing race and adjusting shims

Item number	Outer diameter mm (in)	Inner diameter mm (in)
⑲	48.0 (1.890)	33.0 (1.299)
⑳	72.0 (2.835)	61.0 (2.402)
㉑	34.5 (1.358)	26.1 (1.028)
㉒	105.0 (4.13)	96.0 (3.78)

Outer diameter of snap rings

Item number	Outer diameter mm (in)
①	142.0 (5.59)
②	113.0 (4.45)
③	162.4 (6.39)
④	135.4 (5.33)
⑤	159.0 (6.26)
⑥	126.0 (4.96)
⑦	40.5 (1.594)

SAT325GA

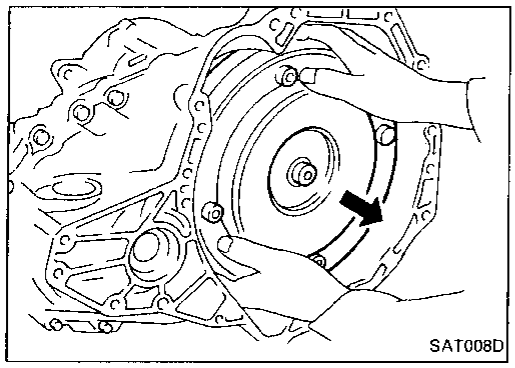

1. Drain ATF through drain plug.
2. Remove torque converter.

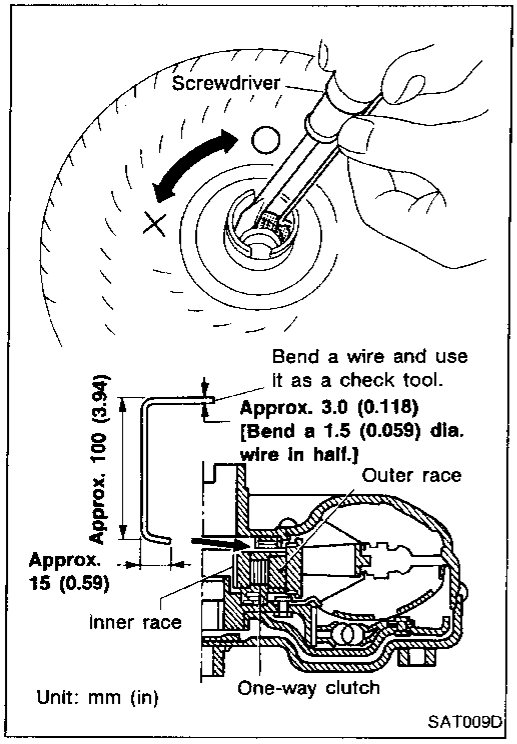

3. Check torque converter one-way clutch using check tool as shown at left.
   a. Insert check tool into the groove of bearing support built into one-way clutch outer race.
   b. While fixing bearing support with check tool, rotate one-way clutch spline using flat-bladed screwdriver.
   c. Check inner race rotates clockwise only. If not, replace torque converter assembly.

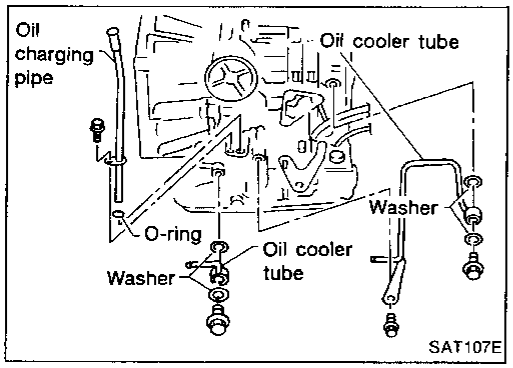

4. Remove oil charging pipe and oil cooler tube.

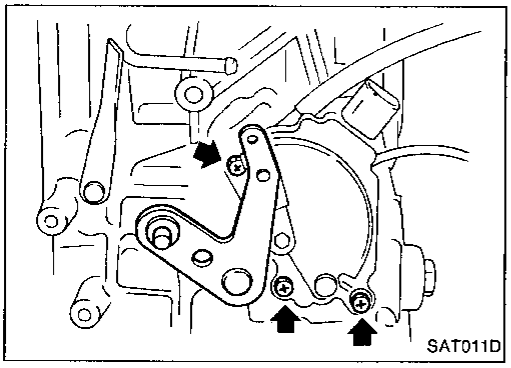

5. Set manual shaft to "P" position.
6. Remove inhibitor switch.

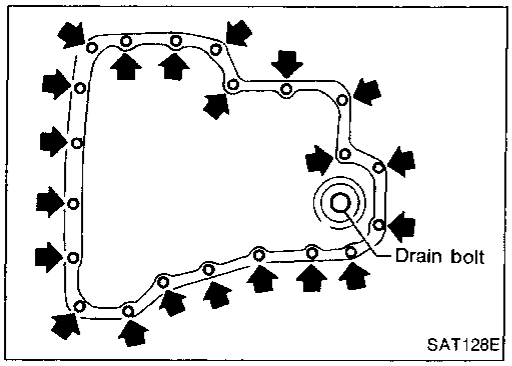

7. Remove oil pan and oil pan gasket.

- **Do not reuse oil pan bolts.**

8. Check foreign materials in oil pan to help determine cause of malfunction. If the fluid is very dark, smells burned, or contains foreign particles, the frictional material (clutches, band) may need replacement. A tacky film that will not wipe clean indicates varnish build up. Varnish can cause valves, servo, and clutches to stick and may inhibit pump pressure.

- **If frictional material is detected, replace radiator after repair of A/T. Refer to LC section ("Radiator", "ENGINE COOLING SYSTEM").**

9. Remove control valve assembly according to the following procedures.

a. Remove control valve assembly mounting bolts Ⓐ, Ⓑ and Ⓒ.

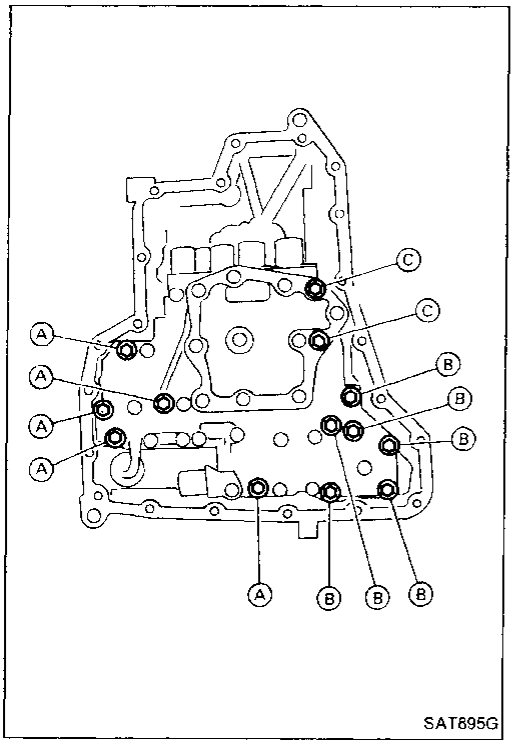

b. Remove stopper ring from terminal body.

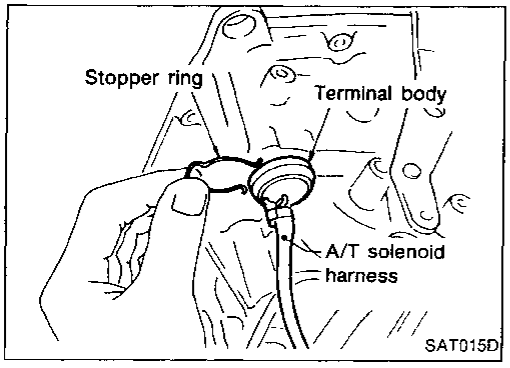

c. Push terminal body into transmission case and draw out solenoid harness.

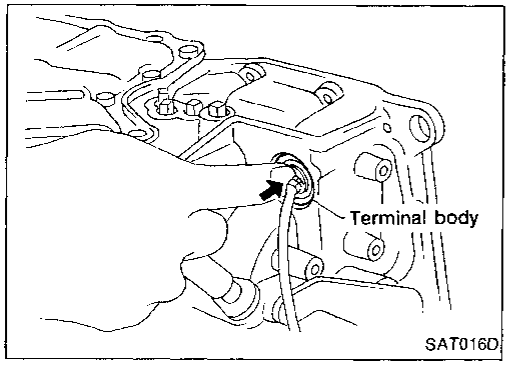

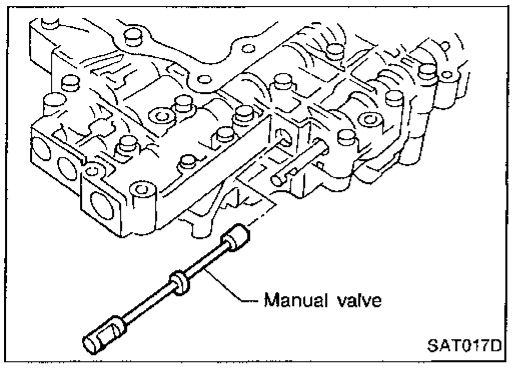

10. Remove manual valve from control valve assembly as a precaution.

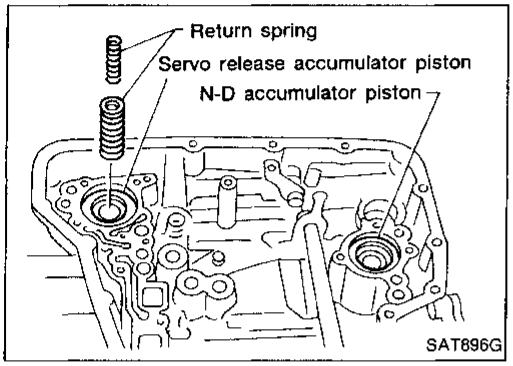

11. Remove return spring from servo release accumulator piston.

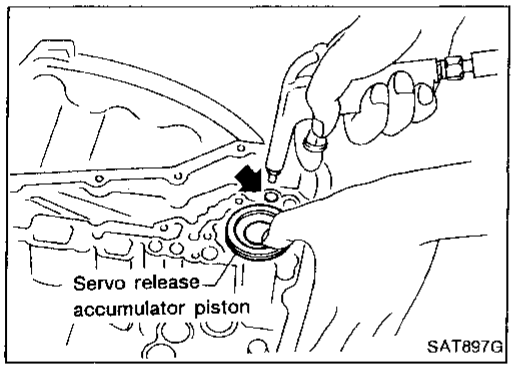

12. Remove servo release accumulator piston with compressed air.
13. Remove O-rings from servo release accumulator piston.

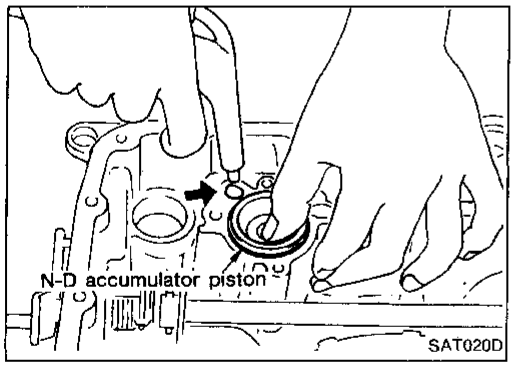

14. Remove N-D accumulator piston and return spring with compressed air.
15. Remove O-rings from N-D accumulator piston.

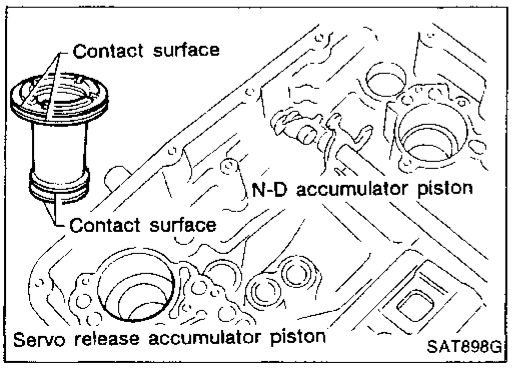

16. Check accumulator pistons and contact surface of transmission case for damage.
17. Check accumulator return springs for damage and free length.

    Return springs:

    Refer to SDS, AT-243.

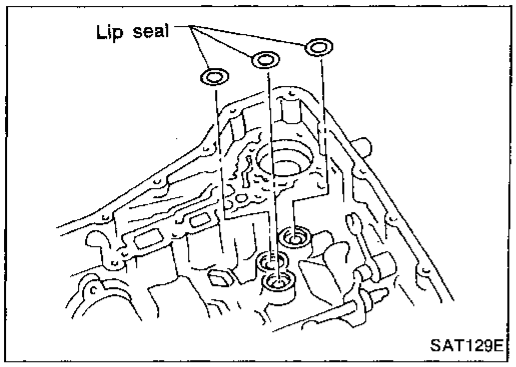

18. Remove lip seals from band servo oil port.

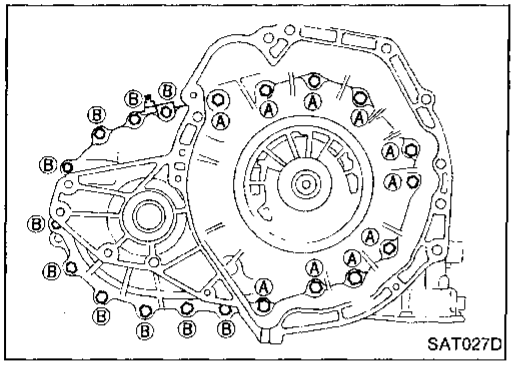

19. Remove converter housing according to the following procedures.
a. Remove converter housing mounting bolts Ⓐ and Ⓑ.

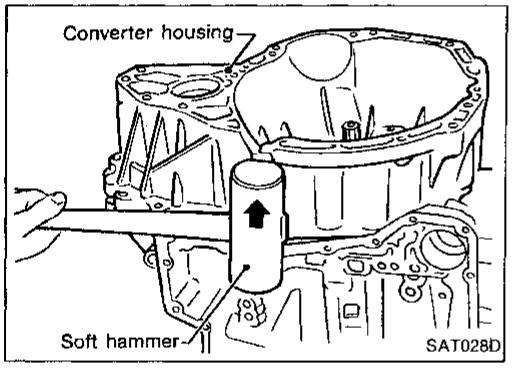

b. Remove converter housing.

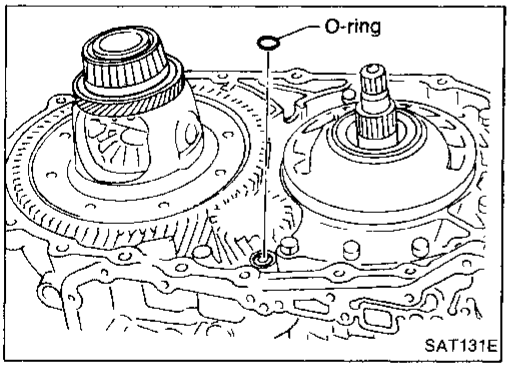

c. Remove O-ring from differential oil port.

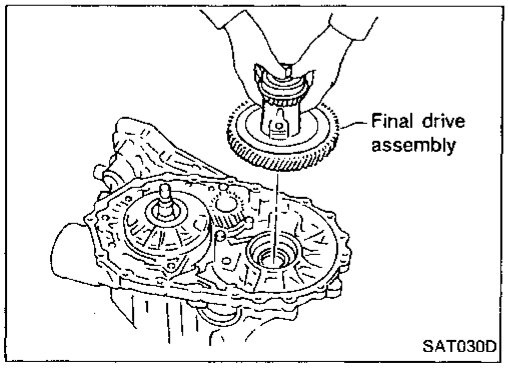

20. Remove final drive assembly from transmission case.

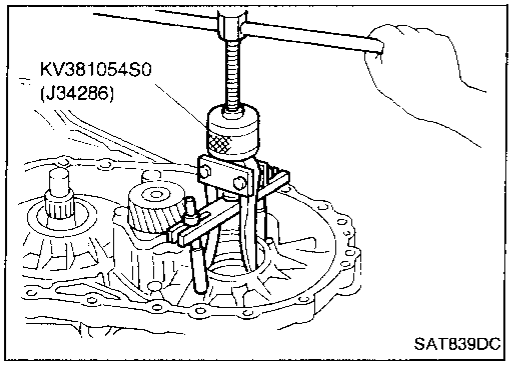

21. Remove differential side bearing outer race from transmission case.

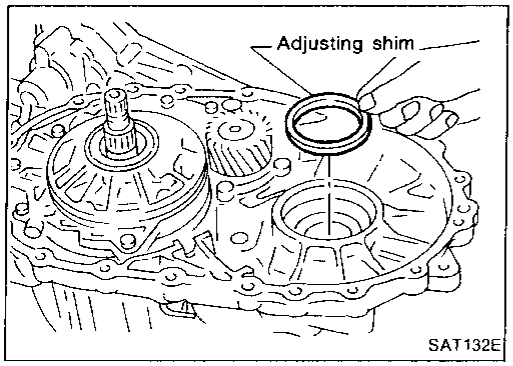

22. Remove differential side bearing adjusting shim from transmission case.

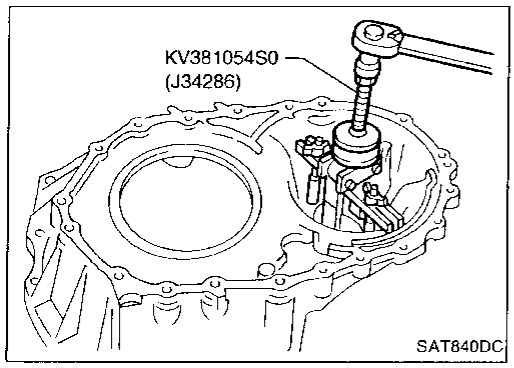

23. Remove differential side bearing outer race from converter housing.

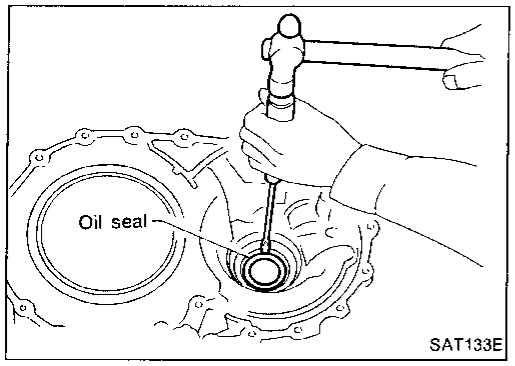

24. Remove oil seal from converter housing using a screwdriver.
- **Be careful not to damage case.**

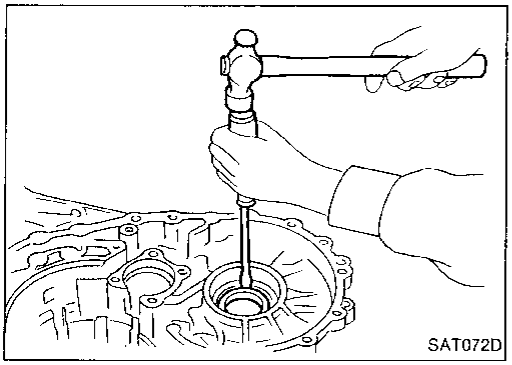

25. Remove side oil seal from transmission case using a screwdriver.

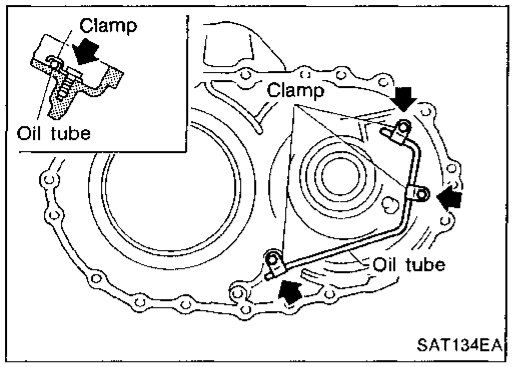

26. Remove oil tube from converter housing.

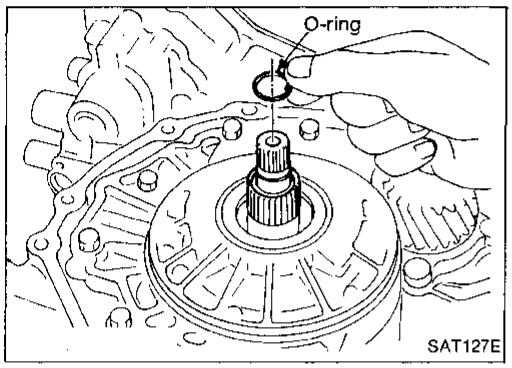

27. Remove oil pump according to the following procedures.
a. Remove O-ring from input shaft.

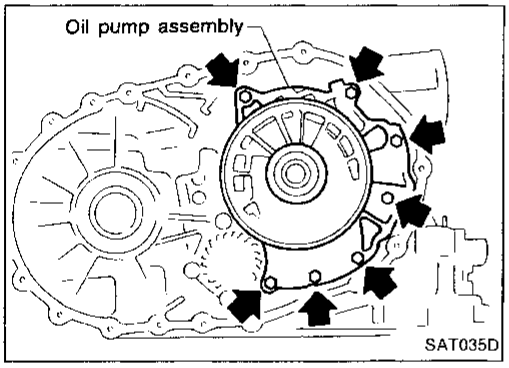

b. Remove oil pump assembly from transmission case.

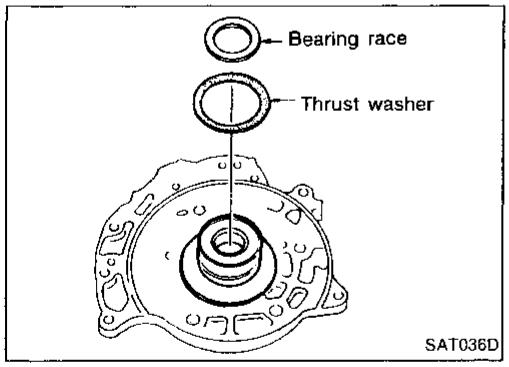

c. Remove thrust washer and bearing race from oil pump assembly.

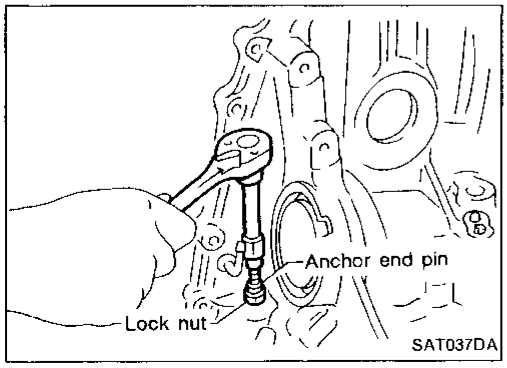

28. Remove brake band according to the following procedures.
a. Loosen lock nut, then back off anchor end pin.
- **Do not reuse anchor end pin.**

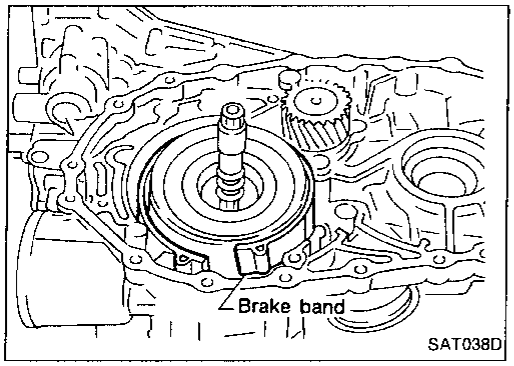

b. Remove brake band from transmission case.

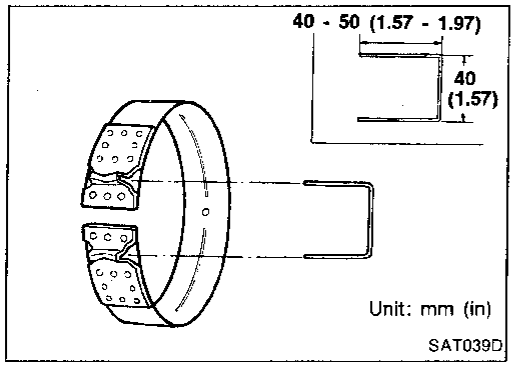

- **To prevent brake linings from cracking or peeling, do not stretch the flexible band unnecessarily. When removing the brake band, always secure it with a clip as shown in the figure at left.**
  Leave the clip in position after removing the brake band.

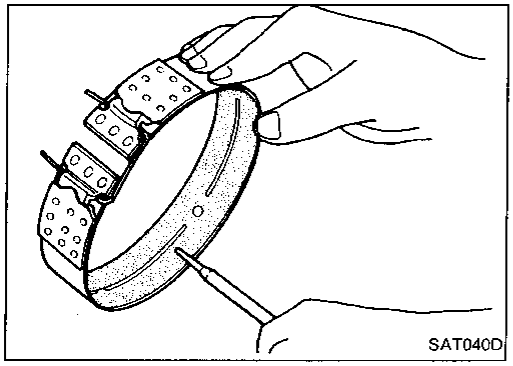

c. Check brake band facing for damage, cracks, wear or burns.

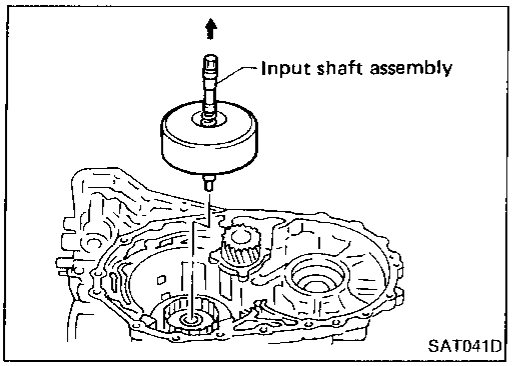

29. Remove input shaft assembly (high clutch) and reverse clutch according to the following procedures.

a. Remove input shaft assembly (high clutch) with reverse clutch.

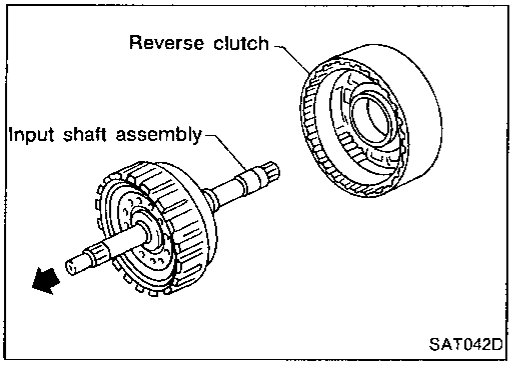

b. Remove input shaft assembly (high clutch) from reverse clutch.

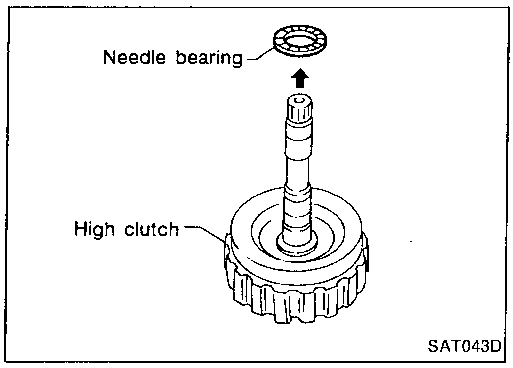

c. Remove needle bearing from high clutch drum.
d. Check input shaft assembly and needle bearing for damage or wear.

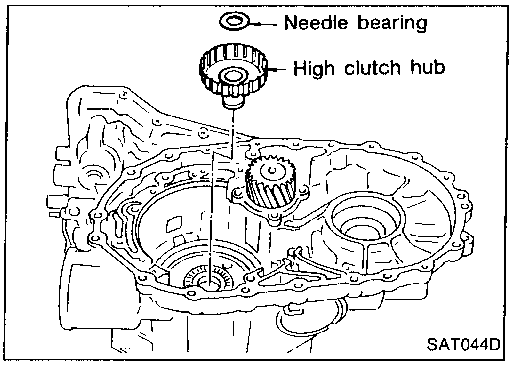

30. Remove high clutch hub and needle bearing from transmission case.
31. Check high clutch hub and needle bearing for damage or wear.

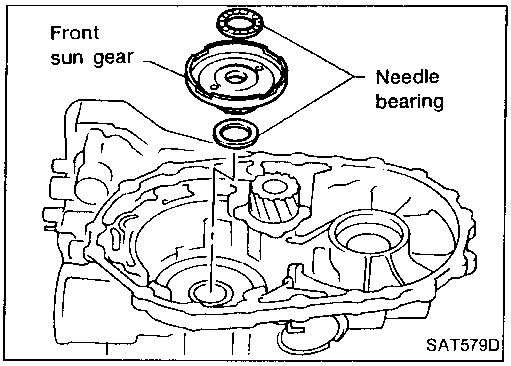

32. Remove front sun gear and needle bearings from transmission case.
33. Check front sun gear and needle bearings for damage or wear.

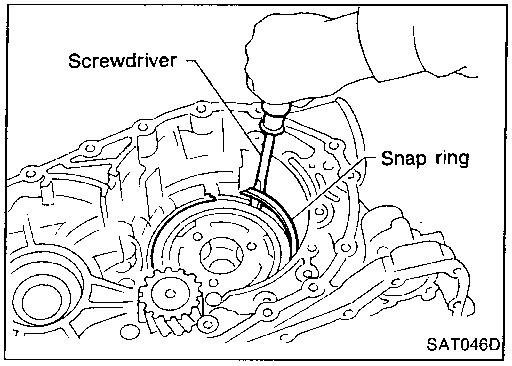

34. Remove front planetary carrier assembly and low one-way clutch according to the following procedures.
a. Remove snap ring using a screwdriver.

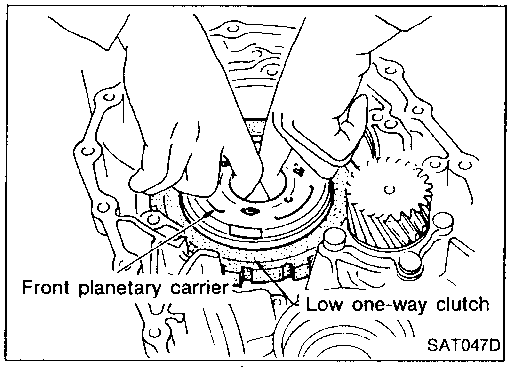

b. Remove front planetary carrier with low one-way clutch.

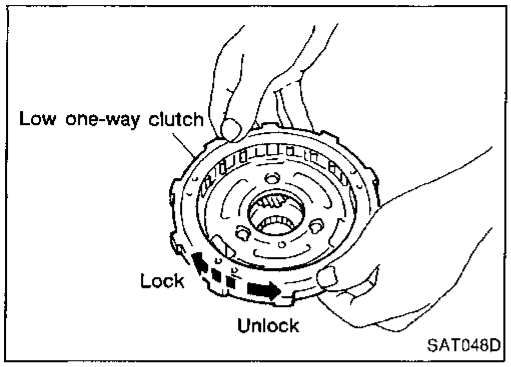

c. Check that low one-way clutch rotates in the direction of the arrow and locks in the opposite direction.
d. Remove low one-way clutch from front planetary carrier by rotating it in the direction of unlock.

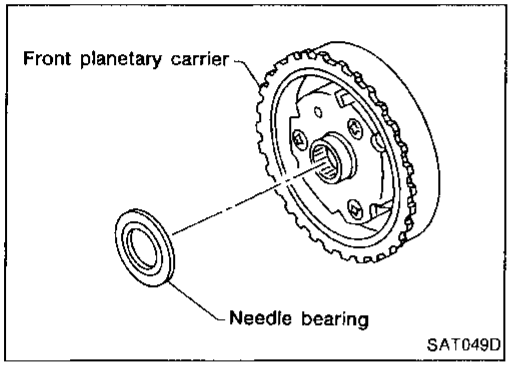

e. Remove needle bearing from front planetary carrier.

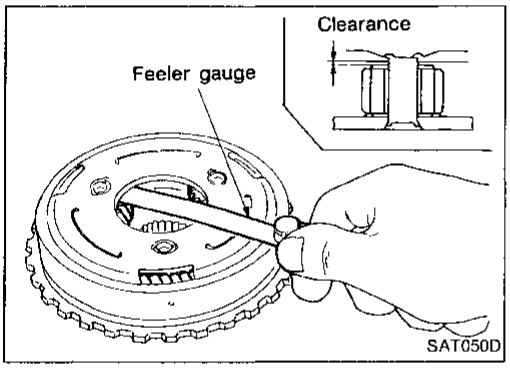

f. Check front planetary carrier, low one-way clutch and needle bearing for damage or wear.
g. Check clearance between pinion washer and planetary carrier using feeler gauge.
   Standard clearance:
   0.15 - 0.70 mm (0.0059 - 0.0276 in)
   Allowable limit:
   0.80 mm (0.0315 in)
   Replace front planetary carrier if the clearance exceeds allowable limit.

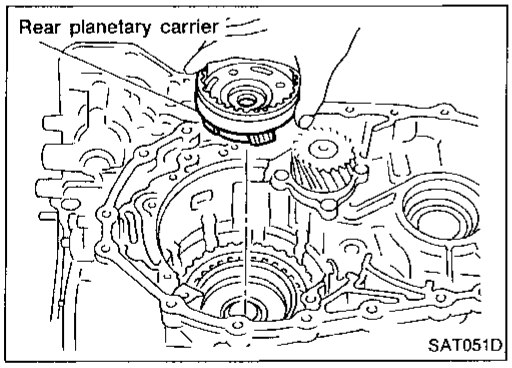

35. Remove rear planetary carrier assembly and rear sun gear according to the following procedures.
a. Remove rear planetary carrier assembly from transmission case.

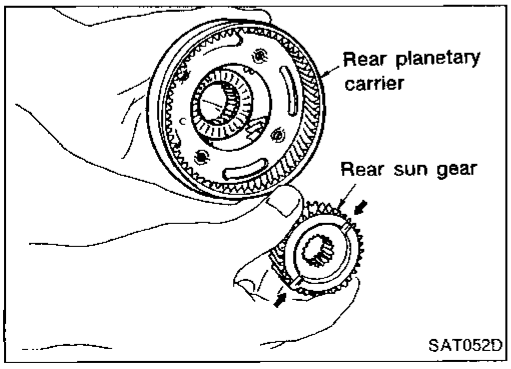

b. Remove rear sun gear from rear planetary carrier.

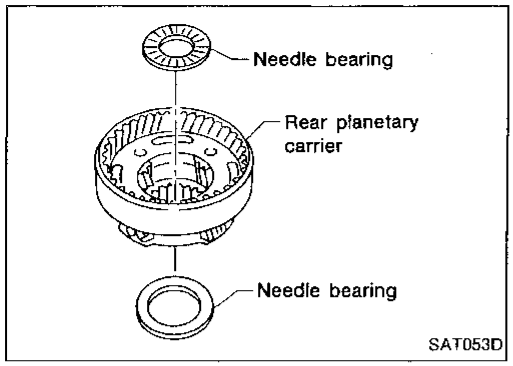

c. Remove needle bearings from rear planetary carrier assembly.

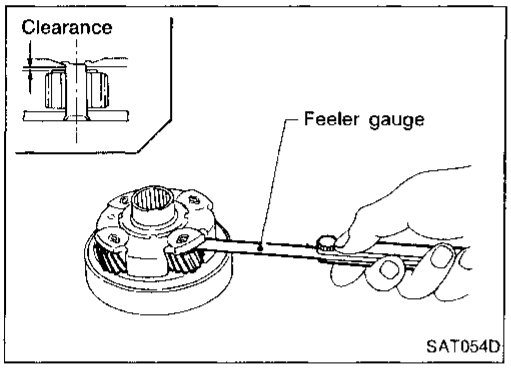

d. Check rear planetary carrier, rear sun gear and needle bearings for damage or wear.
e. Check clearance between pinion washer and rear planetary carrier using feeler gauge.
   Standard clearance:
   0.15 - 0.70 mm (0.0059 - 0.0276 in)
   Allowable limit:
   0.80 mm (0.0315 in)
   Replace rear planetary carrier if the clearance exceeds allowable limit.

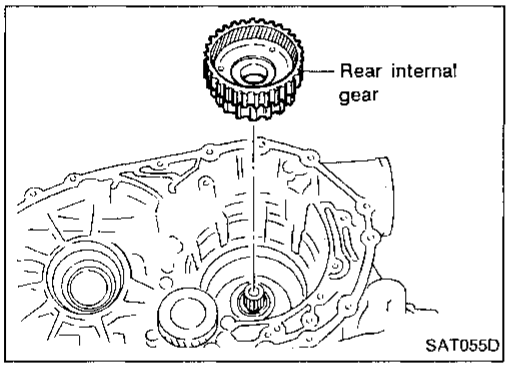

36. Remove rear internal gear from transmission case.

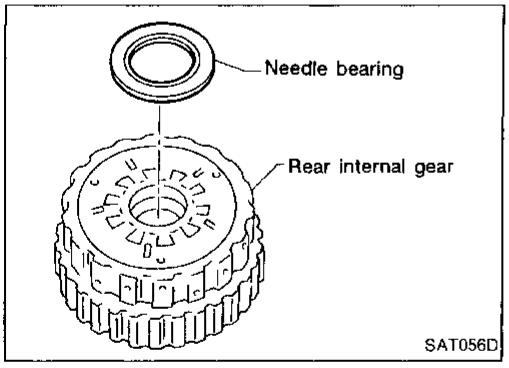

37. Remove needle bearing from rear internal gear.
38. Check needle bearing for damage or wear.

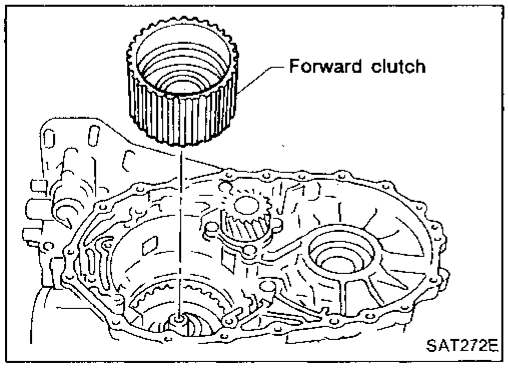

39. Remove forward clutch assembly from transmission case.

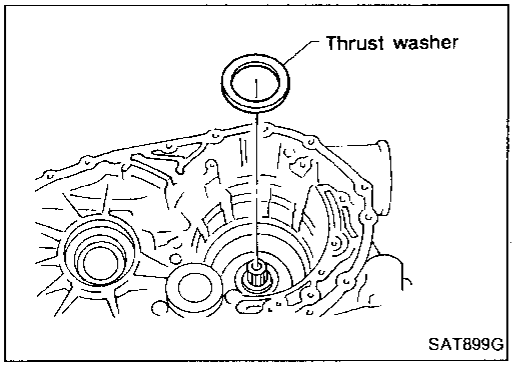

40. Remove thrust washer from transmission case.

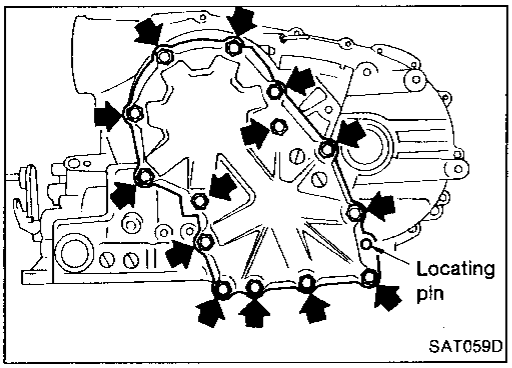

41. Remove output shaft assembly according to the following procedures.

a. Remove side cover bolts.

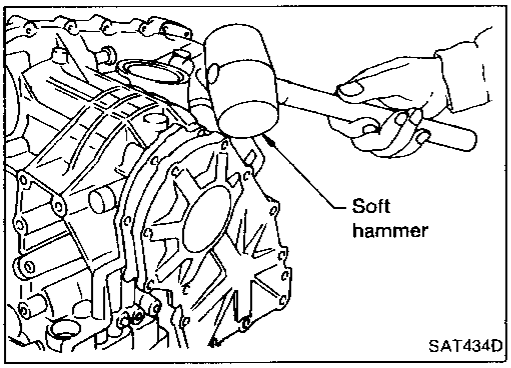

b. Remove side cover by lightly tapping it with a soft hammer.

- **Be careful output shaft assembly does not drop out as it might come out with side cover when removing.**

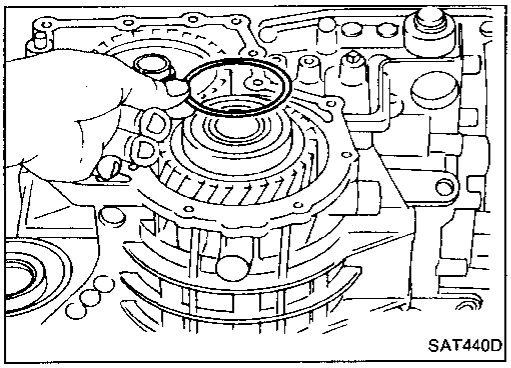

c. Remove adjusting shim.

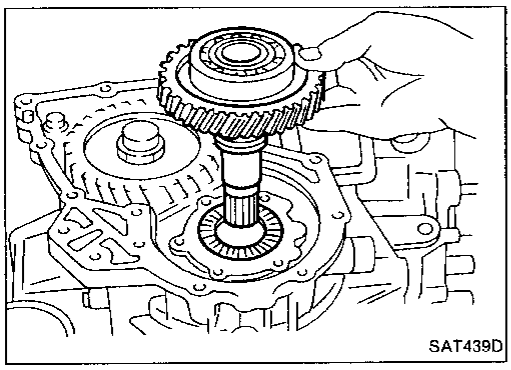

d. Remove output shaft assembly.

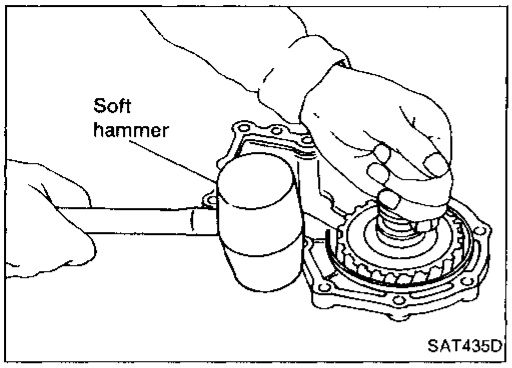

- If output shaft assembly comes off together with side cover, tap cover with a soft hammer to separate.

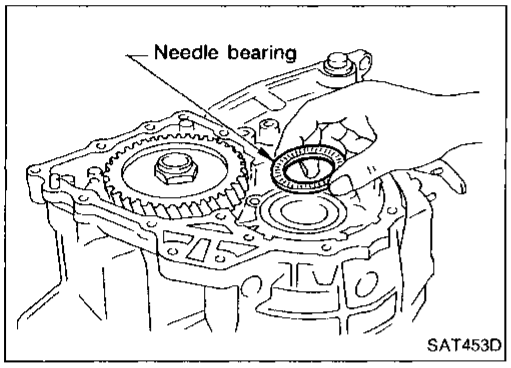

e. Remove needle bearing.

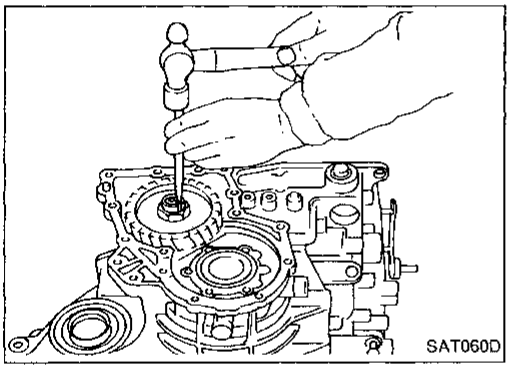

42. Disassemble reduction pinion gear according to the following procedures.
a. Set manual shaft to position "P" to fix idler gear.
b. Unlock idler gear lock nut using a pin punch.

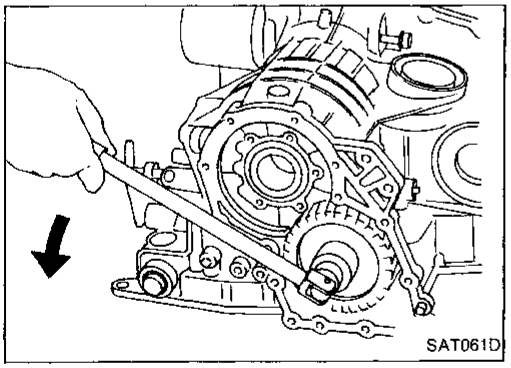

c. Remove idler gear lock nut.
- **Do not reuse idler gear lock nut.**

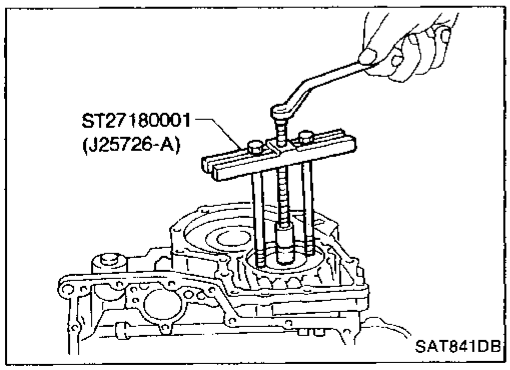

d. Remove idler gear with puller.

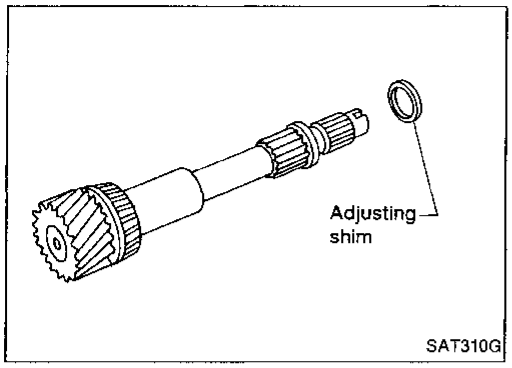

e. Remove reduction pinion gear.
f. Remove adjusting shim from reduction pinion gear.

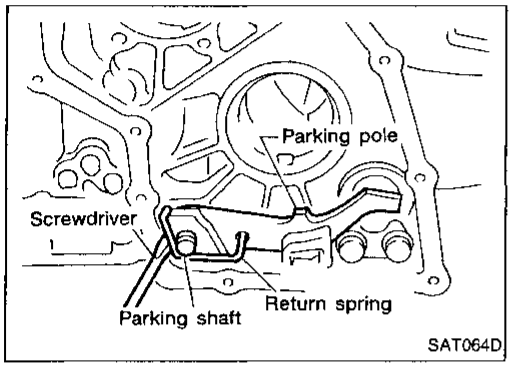

43. Remove return spring from parking shaft using a screwdriver.

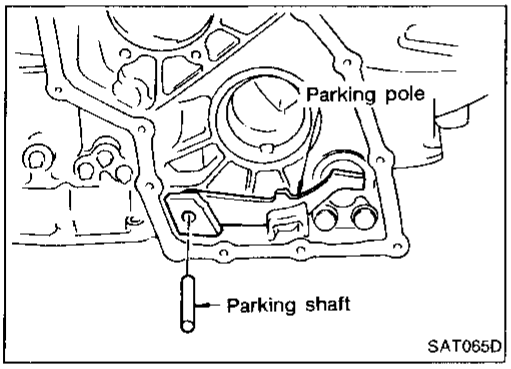

44. Draw out parking shaft and remove parking pole from transmission case.
45. Check parking pole and shaft for damage or wear.

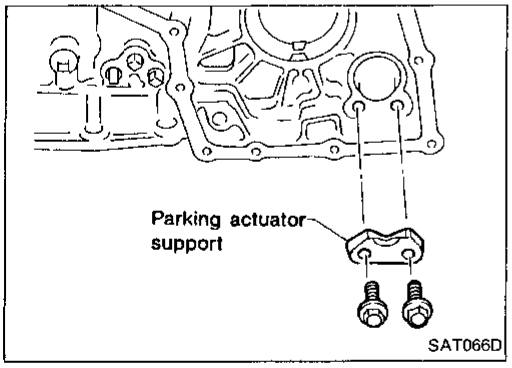

46. Remove parking actuator support from transmission case.
47. Check parking actuator support for damage or wear.

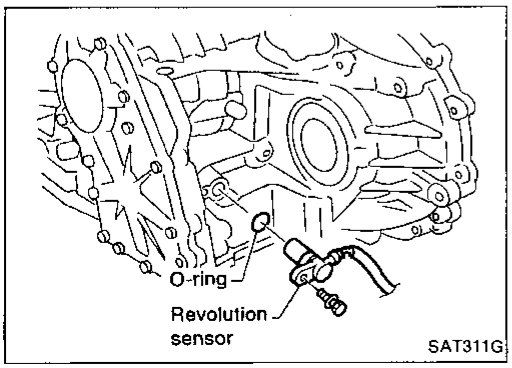

48. Remove revolution sensor from transmission case.

Manual Shaft

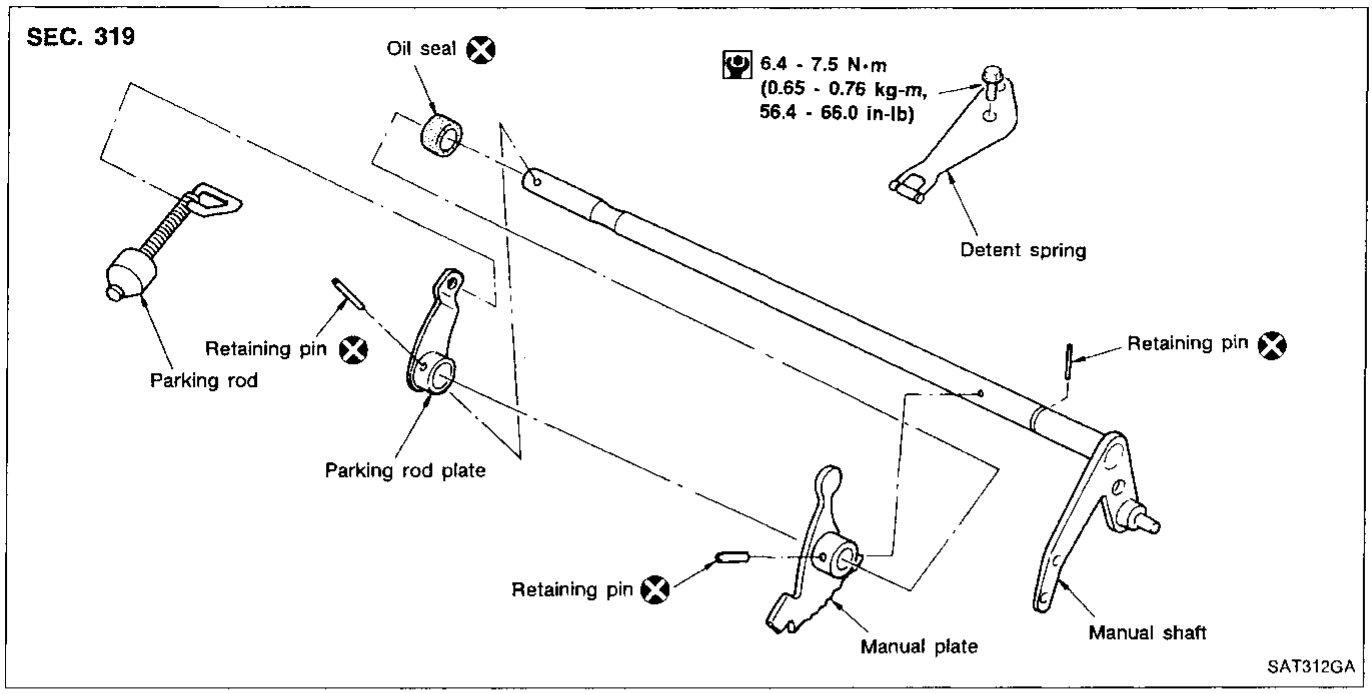

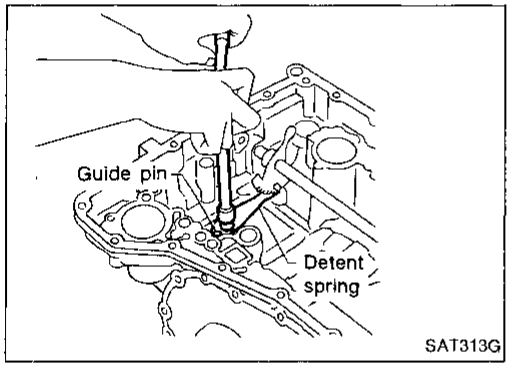

REMOVAL

1. Remove detent spring from transmission case.

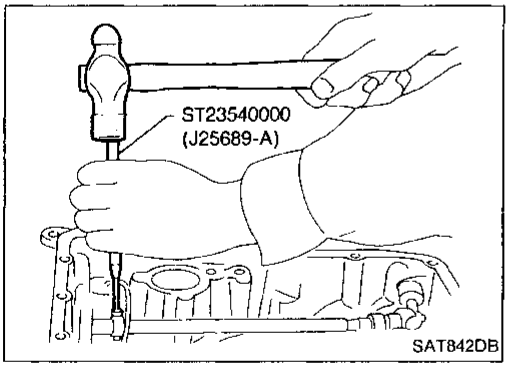

2. Drive out manual plate retaining pin.

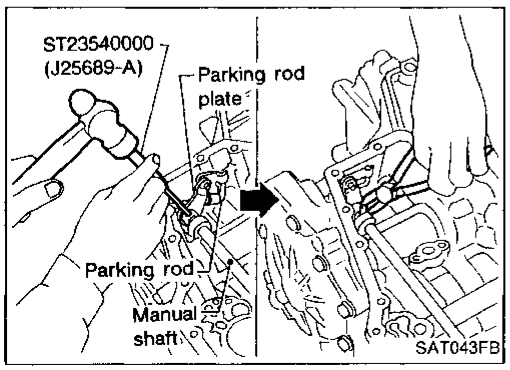

3. Drive and pull out parking rod plate retaining pin.
4. Remove parking rod plate from manual shaft.
5. Draw out parking rod from transmission case.

Manual Shaft (Cont'd)

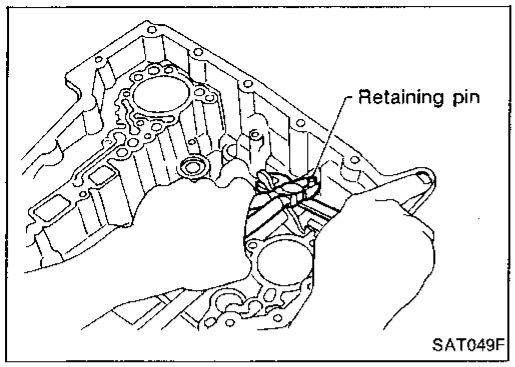

6. Pull out manual shaft retaining pin.
7. Remove manual shaft and manual plate from transmission case.

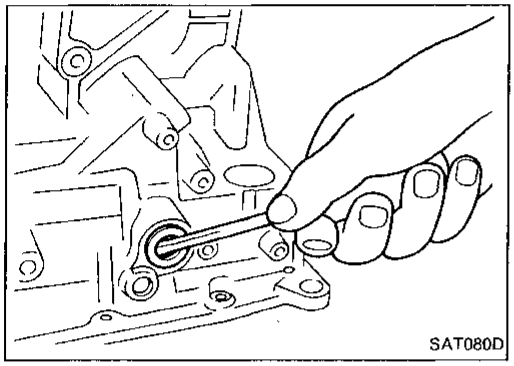

8. Remove manual shaft oil seal.

INSPECTION

- Check component parts for wear or damage. Replace if necessary.

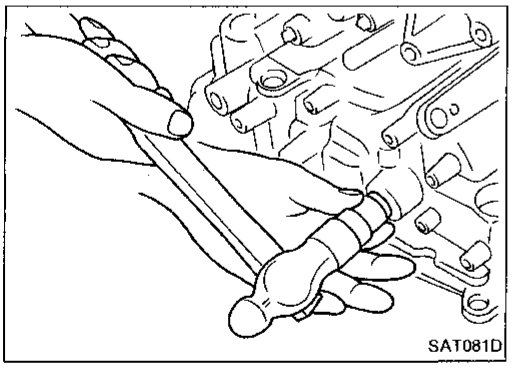

INSTALLATION

1. Install manual shaft oil seal.
- **Apply ATF to outer surface of oil seal.**

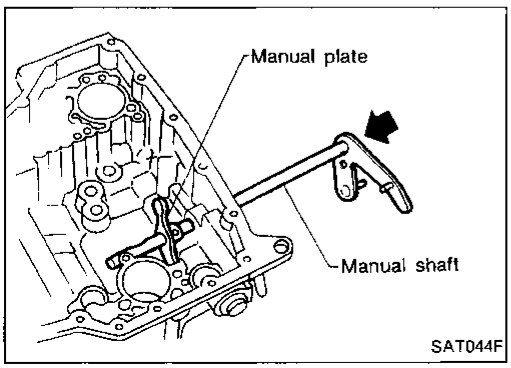

2. Install manual shaft and manual plate.

Manual Shaft (Cont'd)

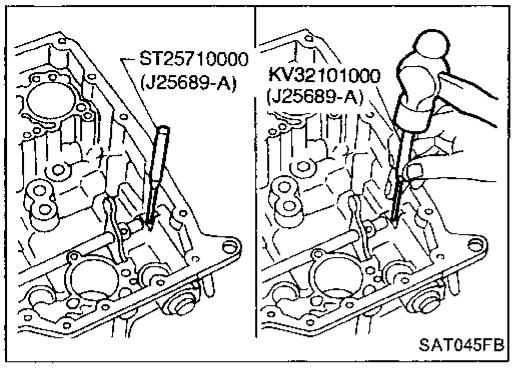

3. Align groove of manual shaft and hole of transmission case.
4. Install manual shaft retaining pin.

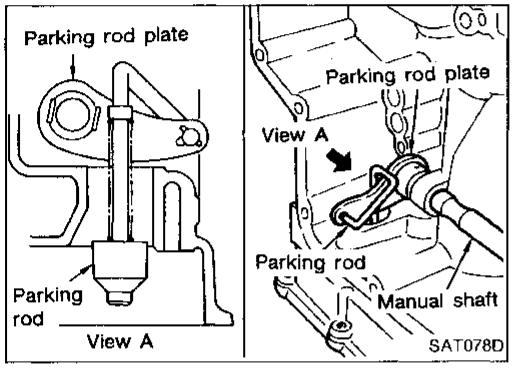

5. Install parking rod to parking rod plate.
6. Set parking rod assembly onto manual shaft.

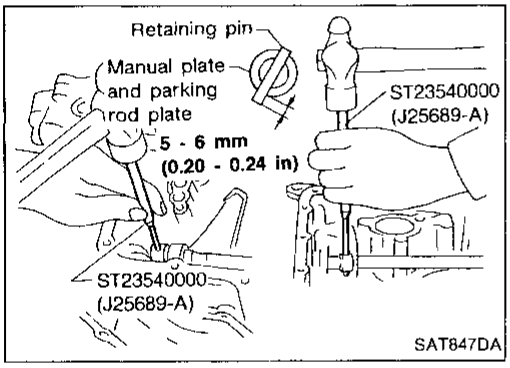

7. Drive in manual plate retaining pin and parking rod plate retaining pin.

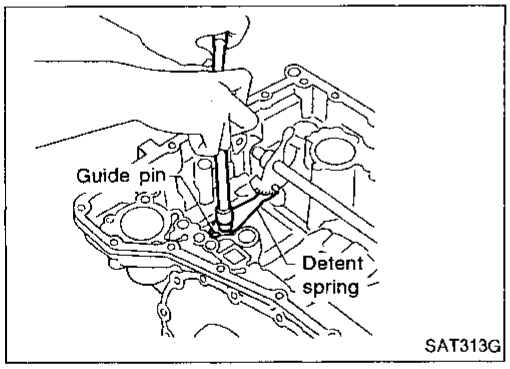

8. Install detent spring.

Oil Pump

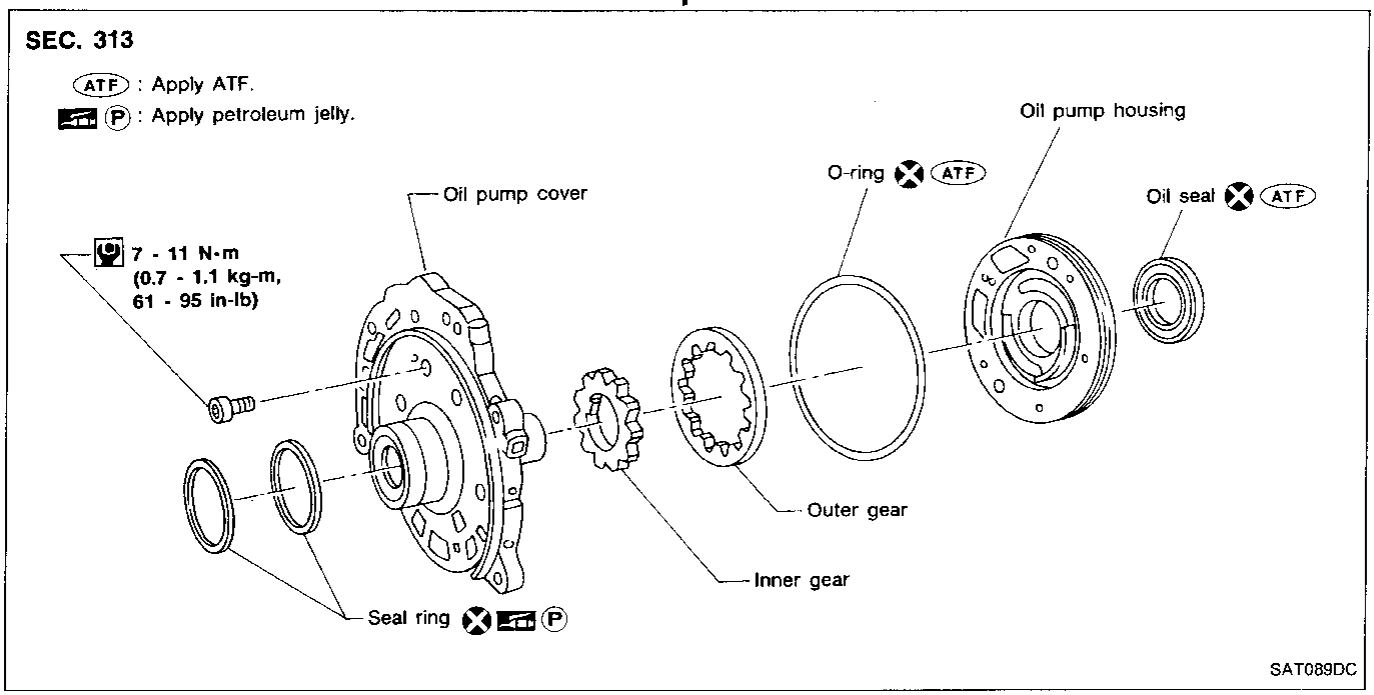

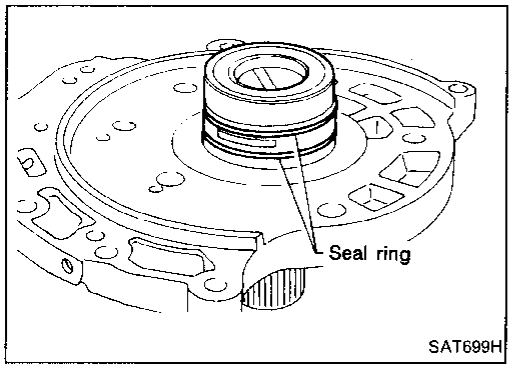

DISASSEMBLY

1. Remove seal rings.

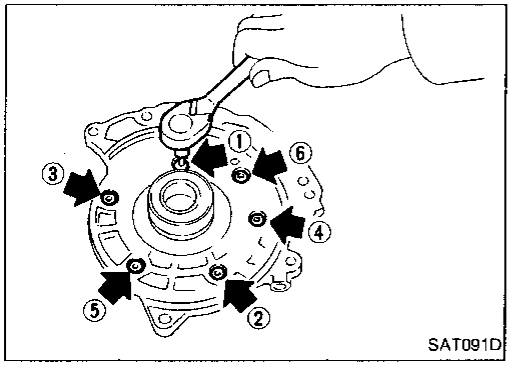

2. Loosen bolts in numerical order and remove oil pump cover.

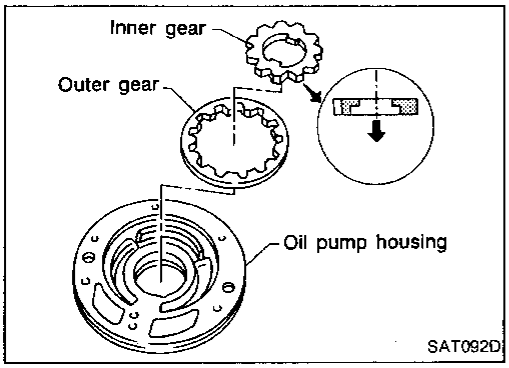

3. Remove inner and outer gear from oil pump housing.

Oil Pump (Cont'd)

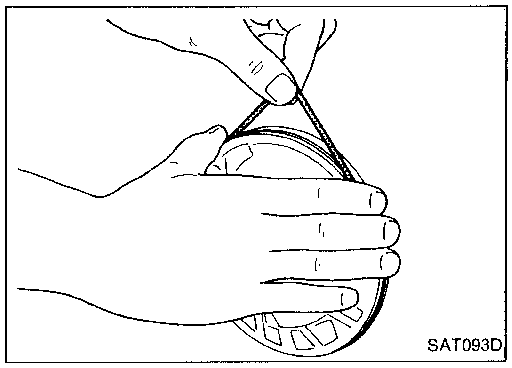

4. Remove O-ring from oil pump housing.

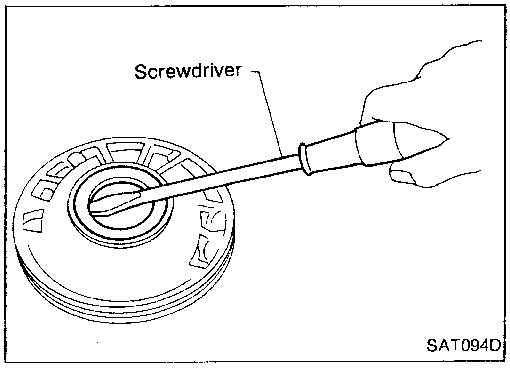

5. Remove oil pump housing oil seal.

INSPECTION

Oil pump housing, oil pump cover, inner gear and outer gear

- Check for wear or damage.

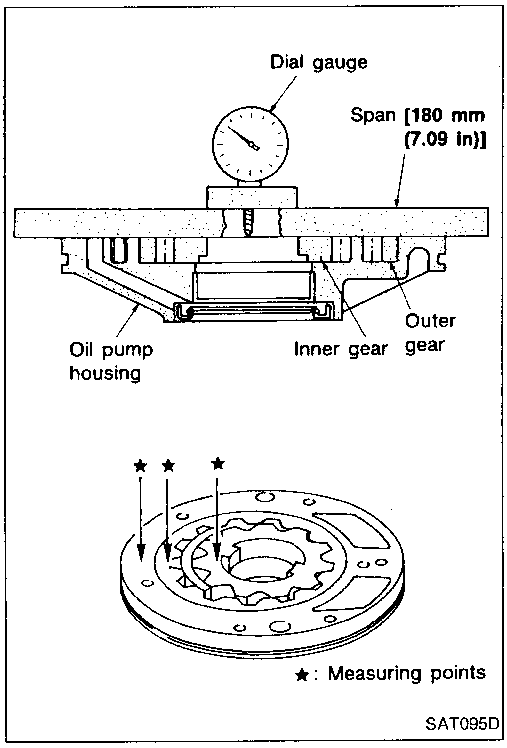

Side clearance

- Measure side clearance of inner and outer gears in at least four places around each outside edge. Perform measurement in at least four places along their circumferences. Maximum measured values should be within specified range.

  Standard clearance:

  0.02 - 0.04 mm (0.0008 - 0.0016 in)
- If clearance is below standard, select inner and outer gears as a set to assure clearance within specifications.

  Inner and outer gears:

  Refer to SDS, AT-240.
- If clearance is more than standard, replace whole oil pump assembly except oil pump cover.

Oil Pump (Cont'd)

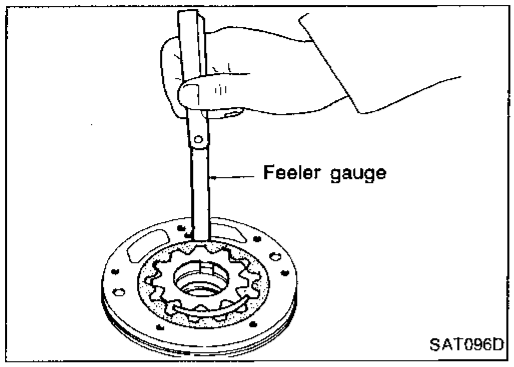

- Measure clearance between outer gear and oil pump housing.
  Standard clearance:
  0.08 - 0.15 mm (0.0031 - 0.0059 in)
  Allowable limit:
  0.15 mm (0.0059 in)
- If not within allowable limit, replace whole oil pump assembly except oil pump cover.

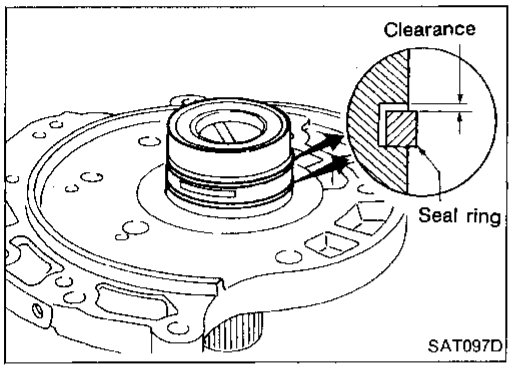

Seal ring clearance

- Install new seal rings onto oil pump cover.
- Measure clearance between seal ring and ring groove.
  Standard clearance:
  0.1 - 0.25 mm (0.0039 - 0.0098 in)
  Allowable limit:
  0.25 mm (0.0098 in)
- If not within allowable limit, replace oil pump cover assembly.

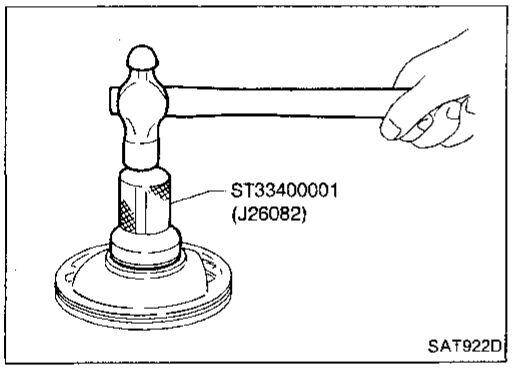

ASSEMBLY

1. Install oil seal on oil pump housing.

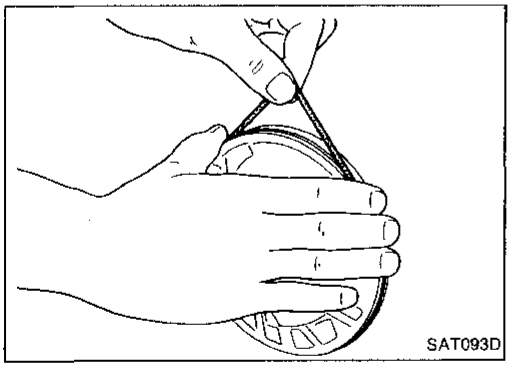

2. Install O-ring on oil pump housing.
- **Apply ATF to O-ring.**

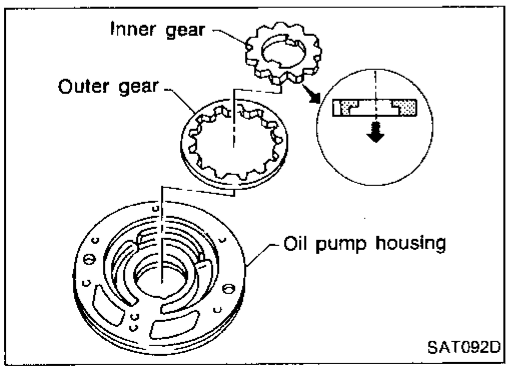

3. Install inner and outer gears on oil pump housing.
- **Take care with the direction of the inner gear.**

Oil Pump (Cont'd)

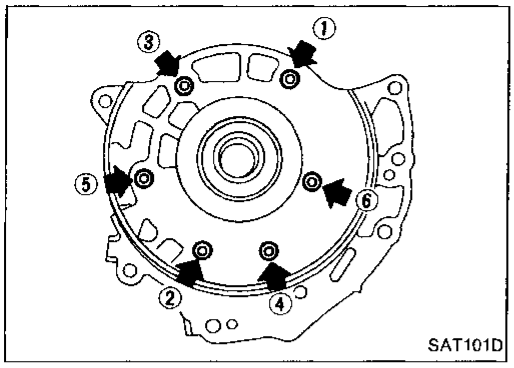

4. Install oil pump cover on oil pump housing.
a. Wrap masking tape around splines of oil pump cover assembly to protect seal. Position oil pump cover assembly on oil pump housing assembly, then remove masking tape.
b. Tighten bolts in numerical order.

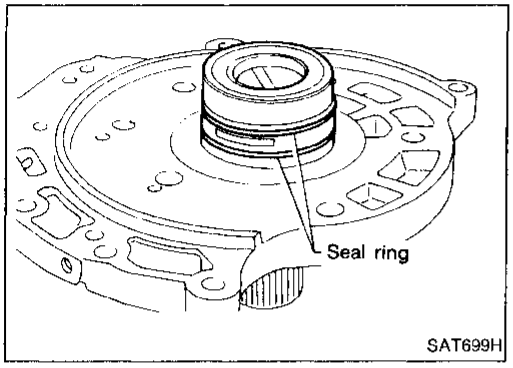

5. Install new seal rings carefully after packing ring groove with petroleum jelly.

- **Do not spread gap of seal ring excessively while installing. The ring may be deformed.**

Control Valve Assembly

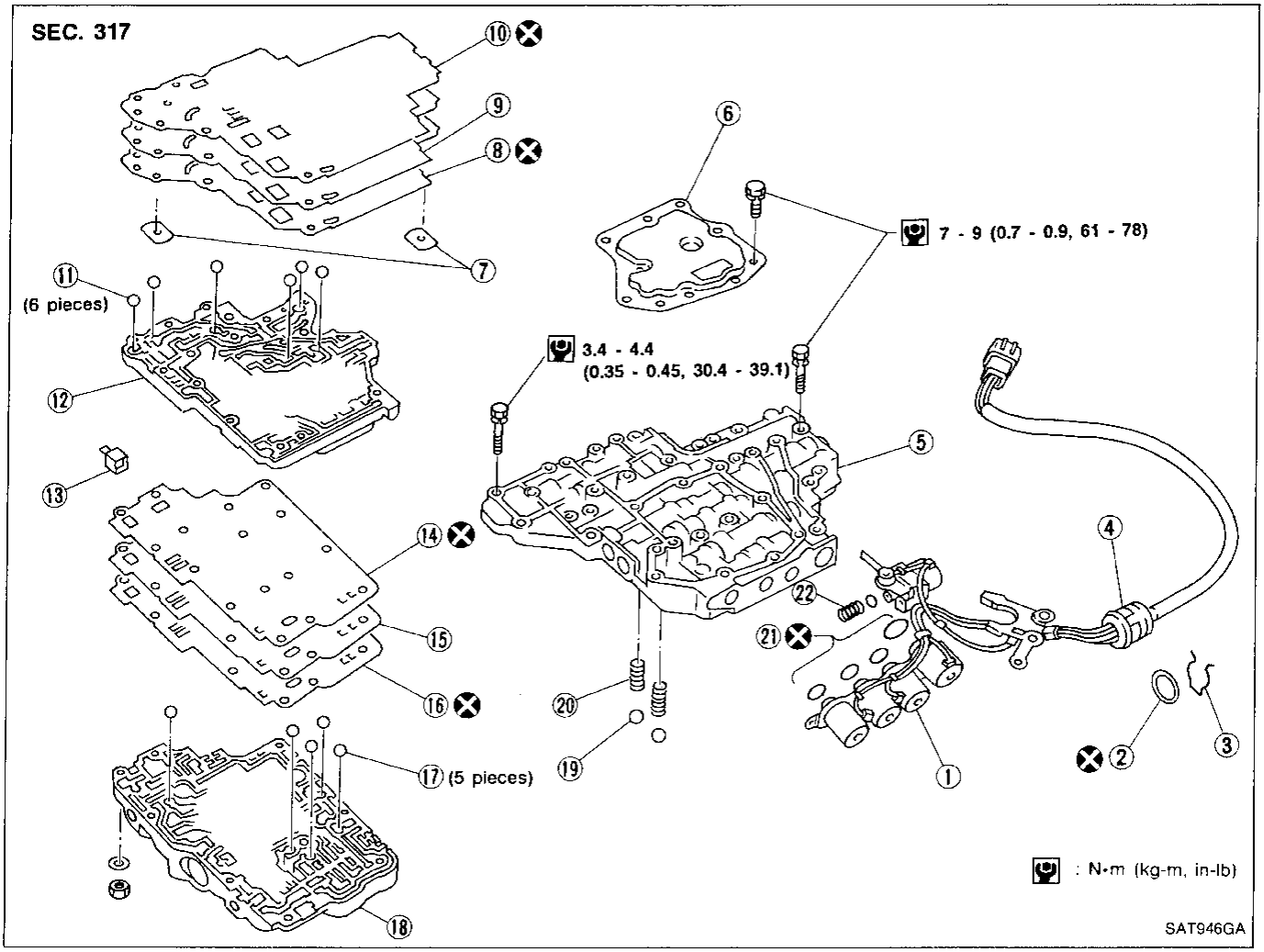

① Solenoid valve assembly
② O-ring
③ Clip
④ Terminal body
⑤ Control valve lower body
⑥ Oil strainer
⑦ Support plate
⑧ Lower inter separating gasket
⑨ Separating plate
⑩ Lower separating gasket
⑪ Steel ball
⑫ Control valve inter body
⑬ Pilot filter
⑭ Upper inter separating gasket
⑮ Separating plate
⑯ Upper separating gasket
⑰ Steel ball
⑱ Control valve upper body
⑲ Check ball
⑳ Oil cooler relief valve spring
㉑ O-ring
㉒ Line pressure solenoid valve spring

DISASSEMBLY

- Disassemble upper, inter and lower bodies.

Bolt length, number and location:

Bolt symbol	Ⓐ	Ⓑ	Ⓒ	Ⓓ	Ⓔ	Ⓕ
Bolt length "ℓ" mm (in)	13.5 (0.531)	58.0 (2.283)	40.0 (1.575)	66.0 (2.598)	33.0 (1.299)	78.0 (3.071)
Number of bolts	6	3	6	11	2	2

F: Reamer bolt with nut

Control Valve Assembly (Cont'd)

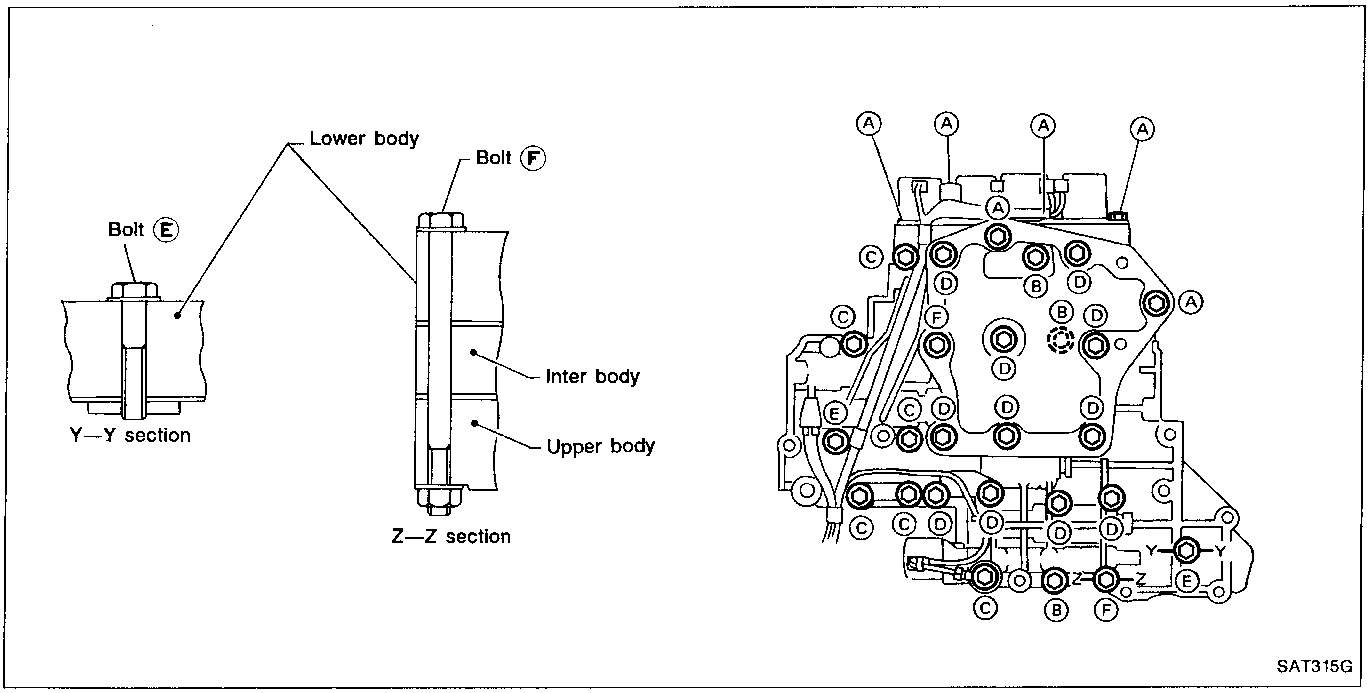

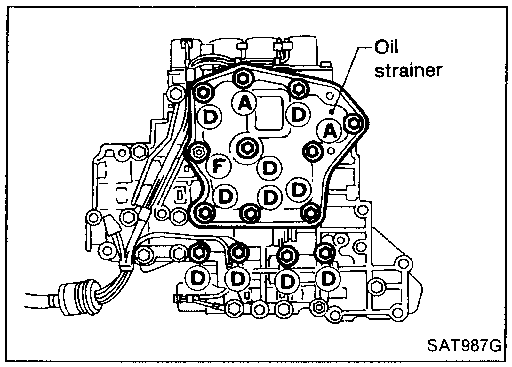

a. Remove bolts Ⓐ, Ⓓ and Ⓕ, and remove oil strainer from control valve assembly.

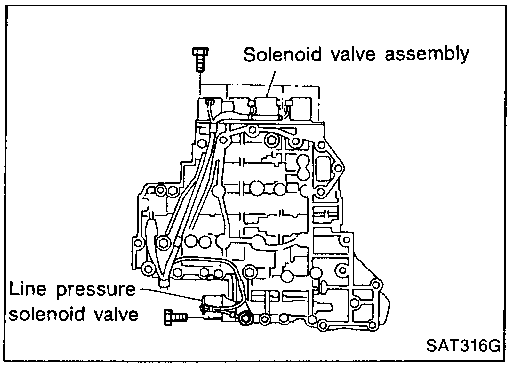

b. Remove solenoid valve assembly and line pressure solenoid valve from control valve assembly.

- **Be careful not to lose the line pressure solenoid valve spring.**

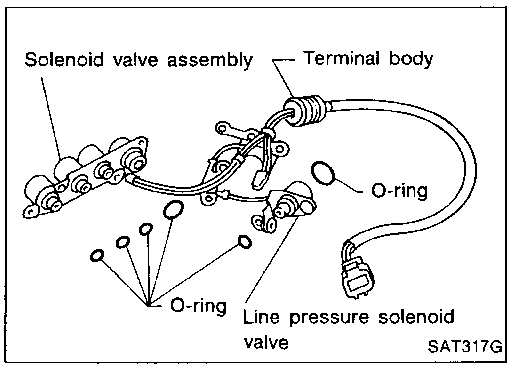

c. Remove O-rings from solenoid valves and terminal body.

Control Valve Assembly (Cont'd)

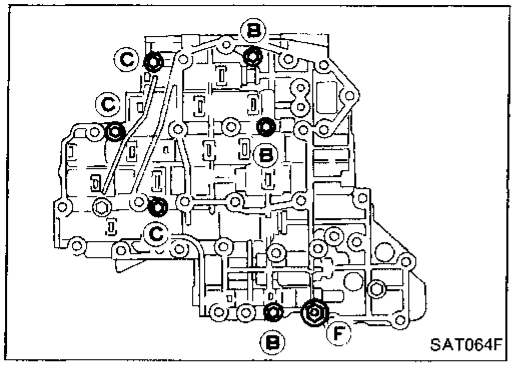

d. Place upper body facedown, and remove bolts Ⓑ, Ⓒ and Ⓕ.

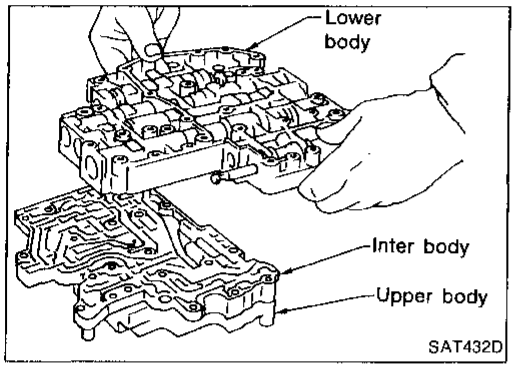

e. Remove lower body from inter body.

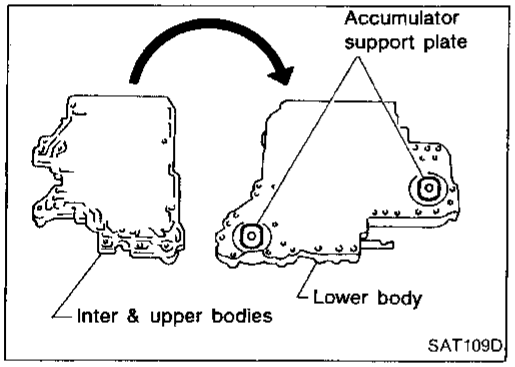

f. Turn over lower body, and accumulator support plates.

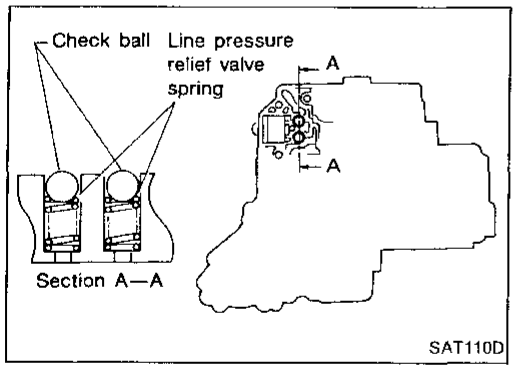

g. Remove bolts Ⓔ, separating plate and separating gaskets from lower body.
h. Remove steel balls and relief valve springs from lower body.

- **Be careful not to lose steel balls and relief valve springs.**

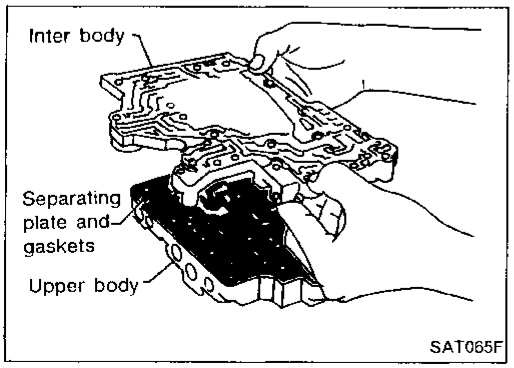

i. Remove inter body from upper body.
j. Remove pilot filter, separating plate and gaskets from upper body.

Control Valve Assembly (Cont'd)

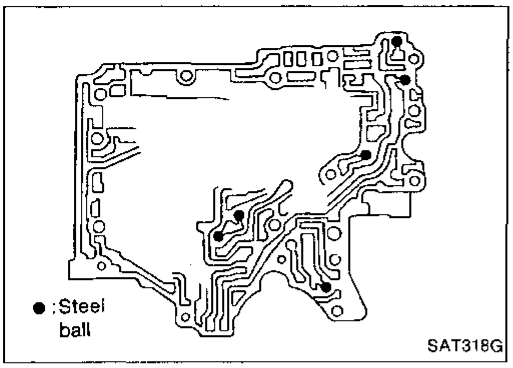

k. Check to see that steel balls are properly positioned in inter body. Then remove them.

- **Be careful not to lose steel balls.**

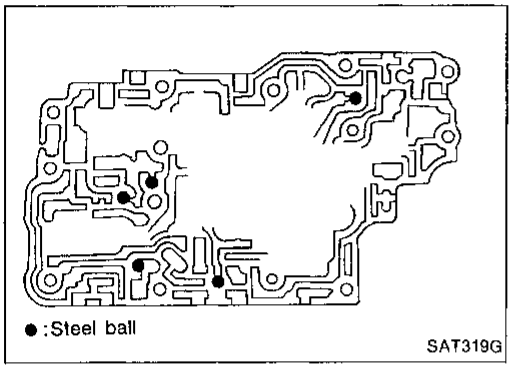

l. Check to see that steel balls are properly positioned in upper body. Then remove them.

- **Be careful not to lose steel balls.**

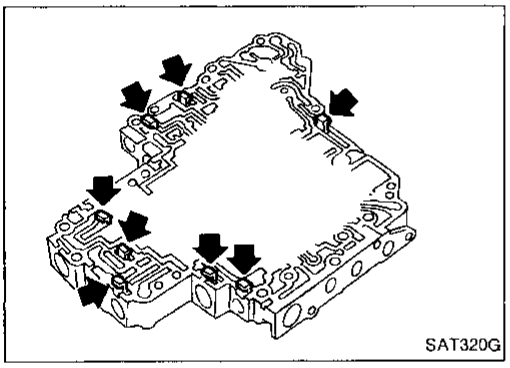

INSPECTION

Lower and upper bodies

- Check to see that retainer plates are properly positioned in lower body.

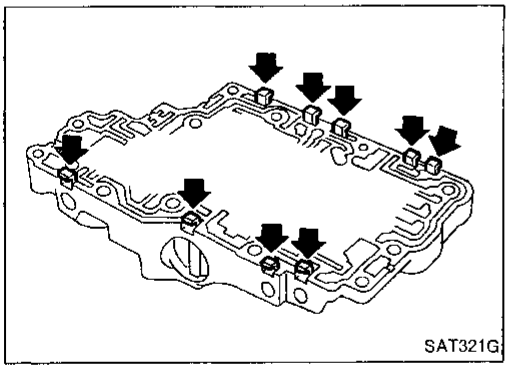

- Check to see that retainer plates are properly positioned in upper body.

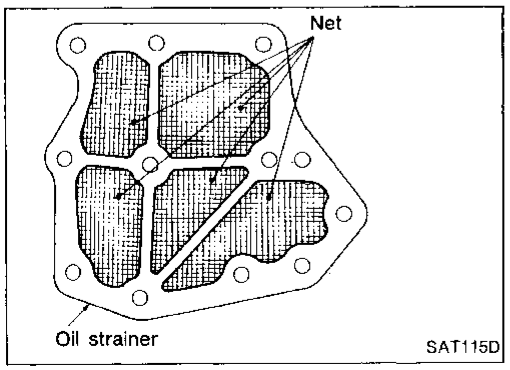

Oil strainer

- Check wire netting of oil strainer for damage.

Control Valve Assembly (Cont'd)

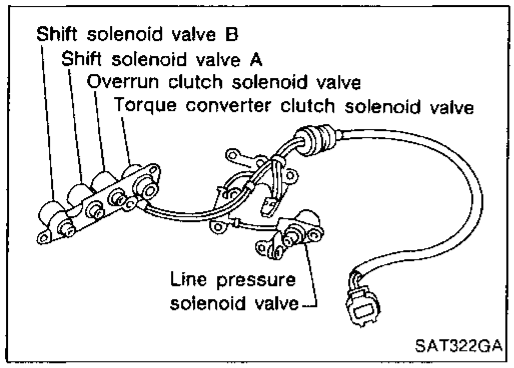

Shift solenoid valves A and B, line pressure solenoid valve, torque converter clutch solenoid valve and overrun clutch solenoid valve

- Measure resistance. Refer to "Electrical Components Inspection", AT-109.

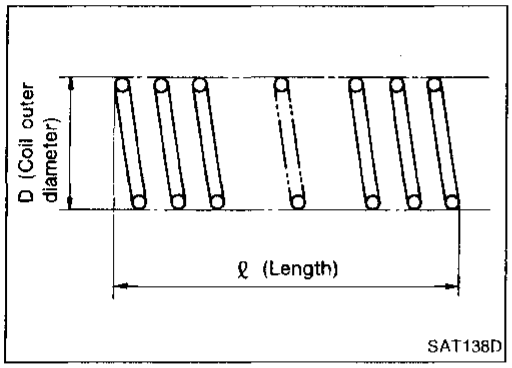

Oil cooler relief valve spring

- Check springs for damage or deformation.
- Measure free length and outer diameter.

  Inspection standard:

  Refer to SDS, AT-238.

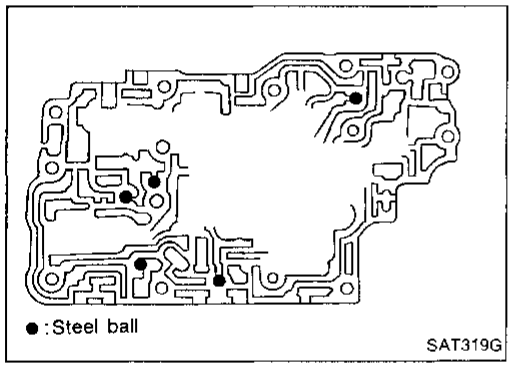

ASSEMBLY

1. Install upper, inter and lower body.

a. Place oil circuit of upper body face up. Install steel balls in their proper positions.

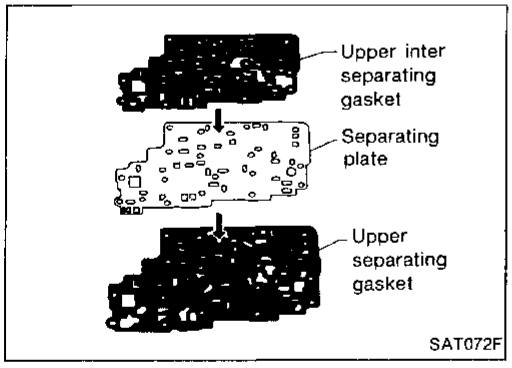

b. Install upper separating gasket, upper inter separating gasket and upper separating plate in order shown in illustration.

- **Always use new gaskets.**

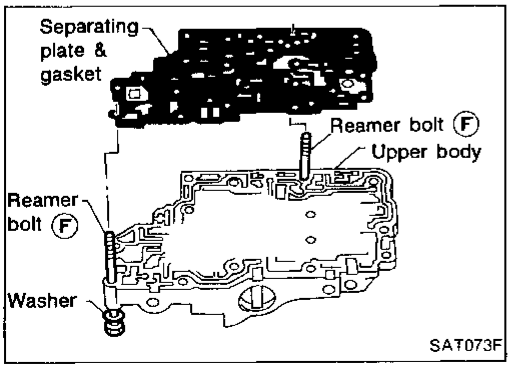

c. Install reamer bolts Ⓕ from bottom of upper body. Using reamer bolts as guides, install separating plate and gaskets as a set.

Control Valve Assembly (Cont'd)

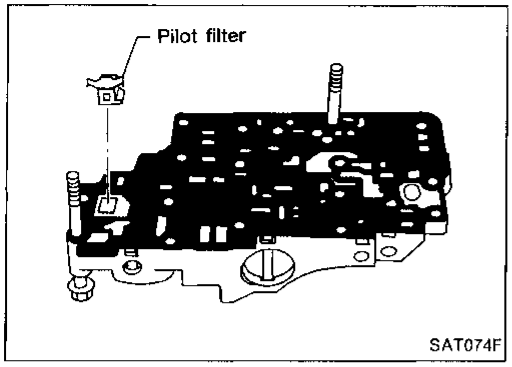

d. Install pilot filter.

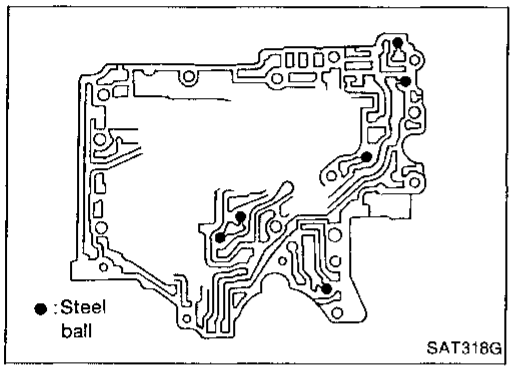

e. Place inter body as shown in the illustration. Install steel balls in their proper positions.

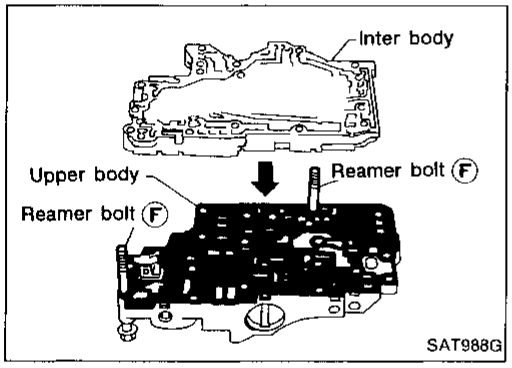

f. Install inter body on upper body using reamer bolts Ⓕ as guides.

- **Be careful not to dislocate or drop steel balls.**

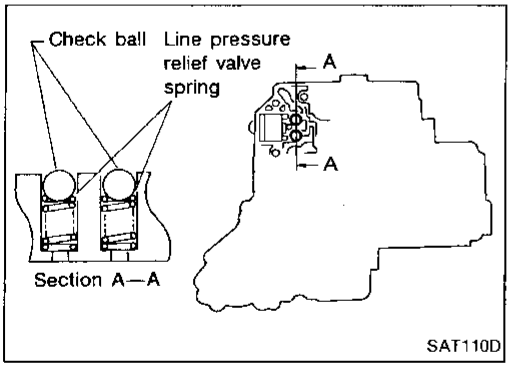

g. Install steel balls and relief valve springs in their proper positions in lower body.

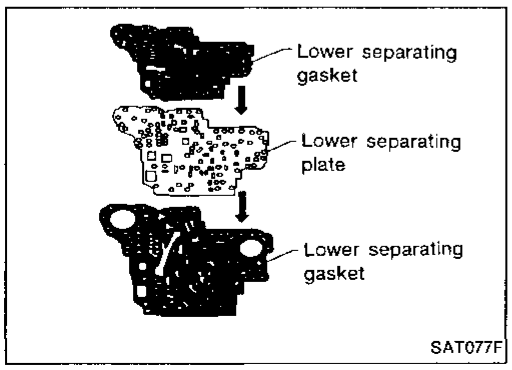

h. Install lower separating gasket, inner separating gasket and lower separating plate in order shown in the illustration.

Control Valve Assembly (Cont'd)

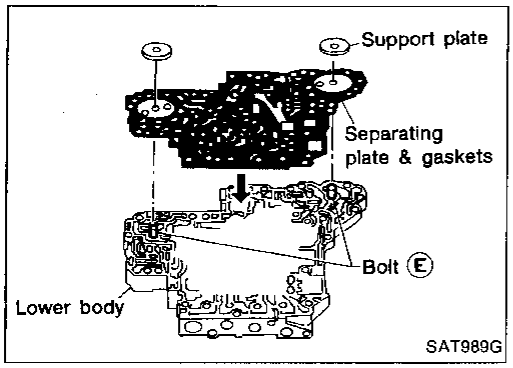

i. Install bolts Ⓔ from bottom of lower body. Using bolts Ⓔ as guides, install separating plate and gaskets as a set.

j. Install support plates on lower body.

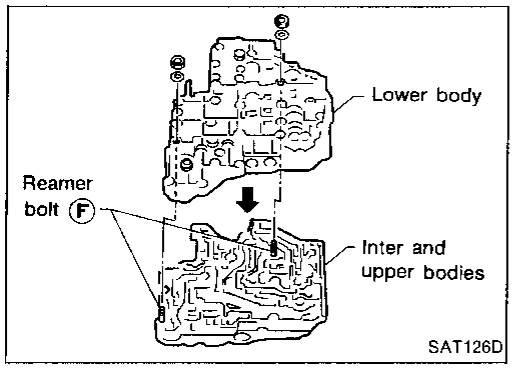

k. Install lower body on inter body using reamer bolts Ⓕ as guides and tighten reamer bolts Ⓕ slightly.

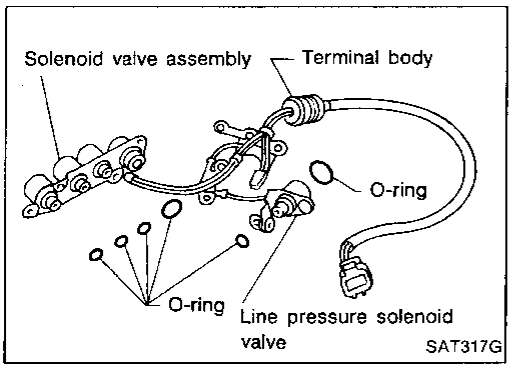

2. Install O-rings to solenoid valves and terminal body.

- **Apply ATF to O-rings.**

3. Install and tighten bolts.

Bolt length, number and location:

Bolt symbol	Ⓐ	Ⓑ	Ⓒ	Ⓓ	Ⓔ	Ⓕ
Bolt length "ℓ" mm (in) ℓ	13.5 (0.531)	58.0 (2.283)	44.0 (1.732)	66.0 (2.598)	33.0 (1.299)	78.0 (3.071)
Number of bolts	6	3	6	11	2	2

Control Valve Assembly (Cont'd)

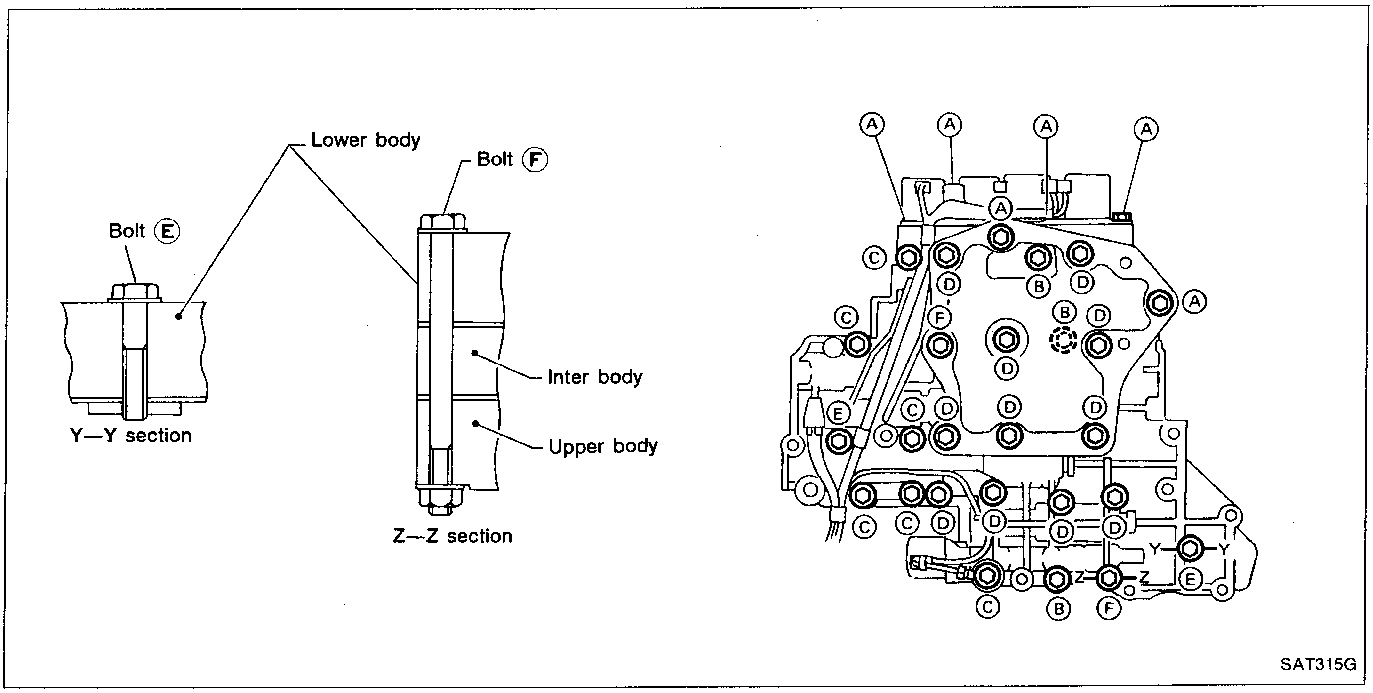

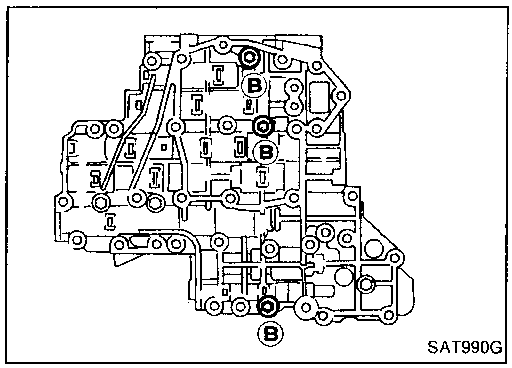

a. Install and tighten bolts Ⓑ to specified torque.
: 7 - 9 N·m (0.7 - 0.9 kg-m, 61 - 78 in-lb)

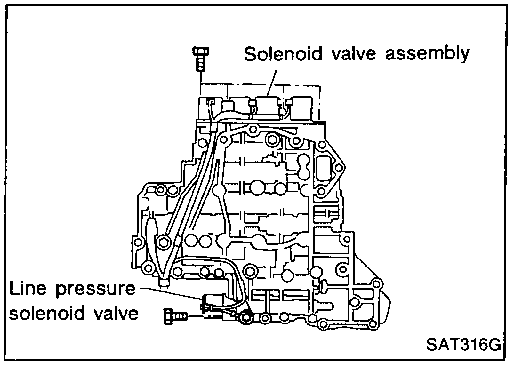

b. Install solenoid valve assembly and line pressure solenoid valve to lower body.

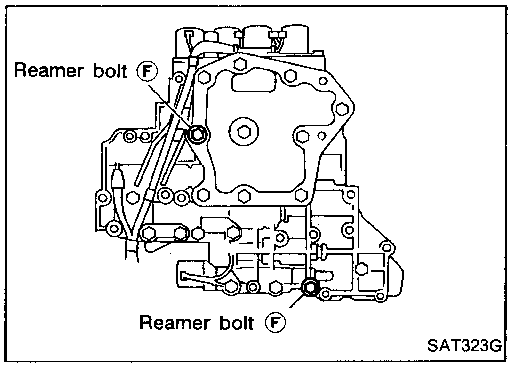

c. Remove reamer bolts Ⓕ and set oil strainer on control valve assembly.
d. Reinstall reamer bolts Ⓕ from lower body side.

Control Valve Assembly (Cont'd)

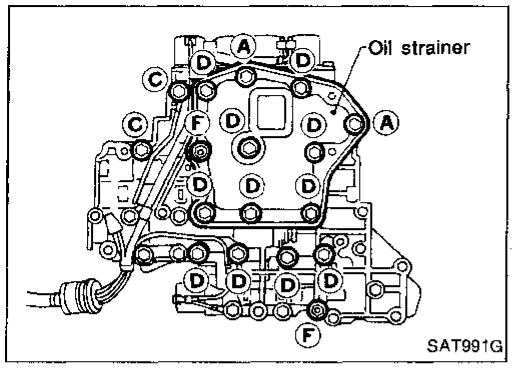

e. Tighten bolts Ⓐ, Ⓒ, Ⓓ and Ⓕ to specified torque.
: 7 - 9 N·m (0.7 - 0.9 kg-m, 61 - 78 in-lb)

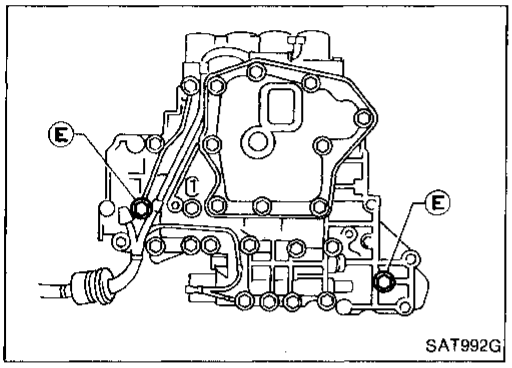

f. Tighten bolts Ⓔ to specified torque.
: 3.4 - 4.4 N·m (0.35 - 0.45 kg-m, 30.4 - 39.1 in-lb)

Control Valve Upper Body

SEC. 317

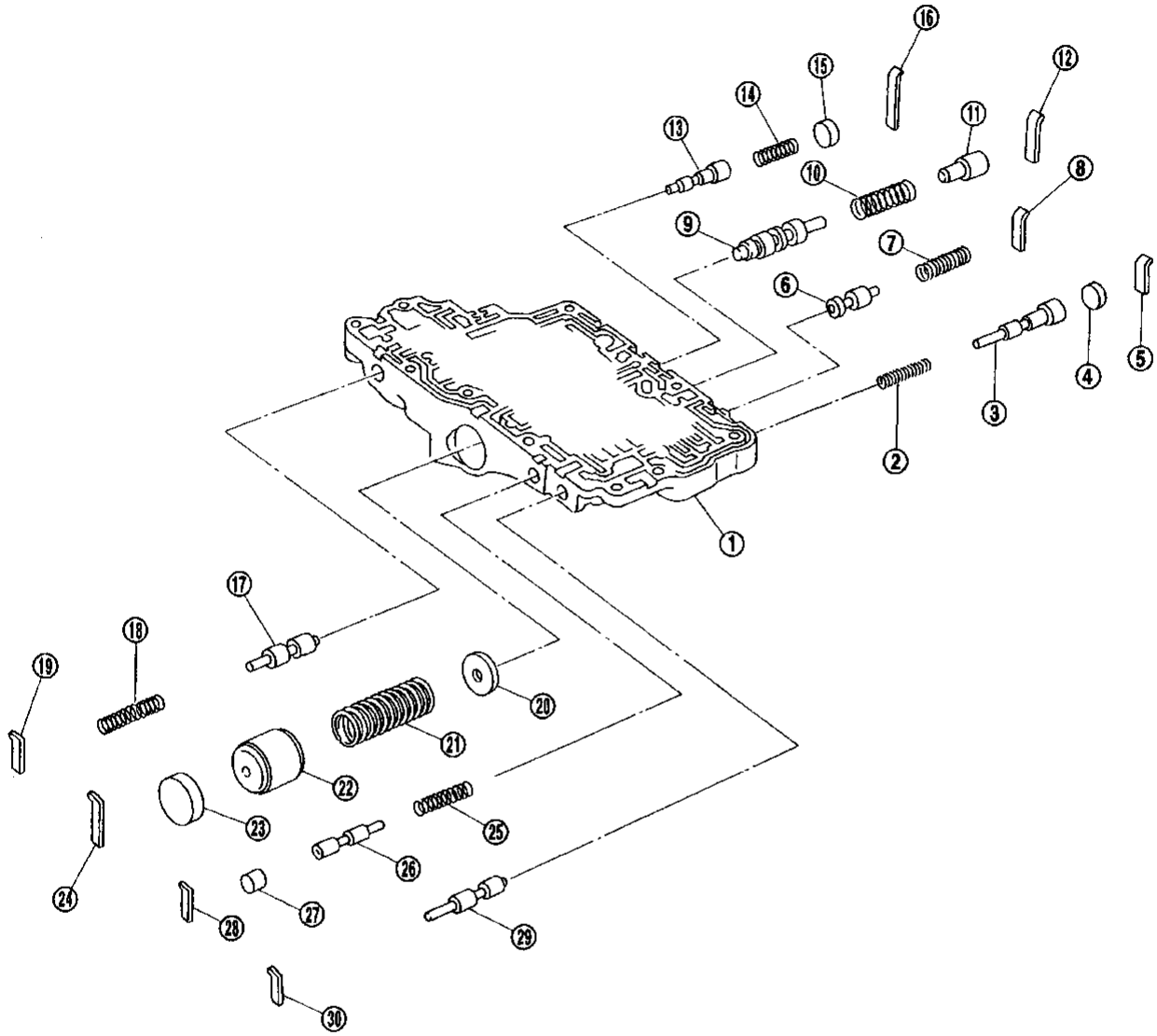

Apply ATF to all components before installation.

Numbers preceding valve springs correspond with those shown in SDS table on page AT-238.

SAT224I

① Control valve upper body
② Return spring
③ Overrun clutch reducing valve
④ Plug
⑤ Retainer plate
⑥ Torque converter relief valve
⑦ Return spring
⑧ Retainer plate
⑨ Torque converter clutch control valve
⑩ Return spring
⑪ Plug
⑫ Retainer plate
⑬ 1-2 accumulator valve
⑭ Return spring
⑮ Plug
⑯ Retainer plate
⑰ Pilot valve
⑱ Return spring
⑲ Retainer plate
⑳ 1-2 accumulator retainer plate
㉑ Return spring
㉒ 1-2 accumulator piston
㉓ Plug
㉔ Retainer plate
㉕ Return spring
㉖ 1st reducing valve
㉗ Plug
㉘ Retainer plate
㉙ 2-3 timing valve
㉚ Retainer plate

Control Valve Upper Body (Cont'd)

DISASSEMBLY

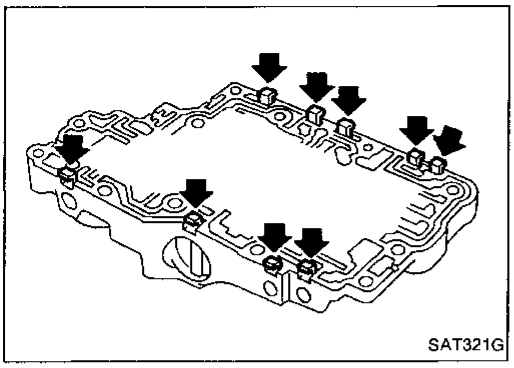

1. Remove valves at retainer plates.
- **Do not use a magnetic "hand".**

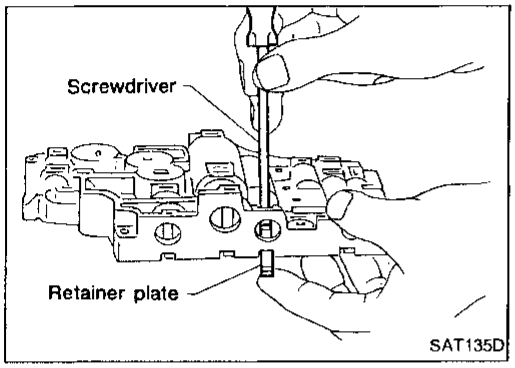

a. Use a screwdriver to remove retainer plates.

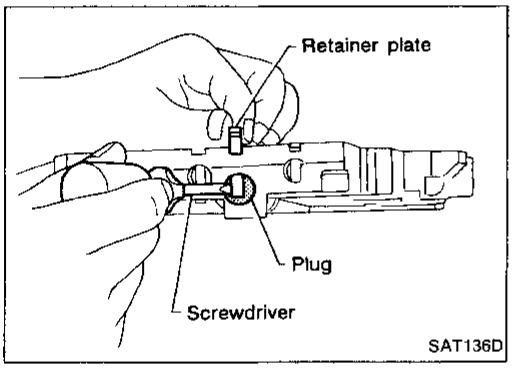

b. Remove retainer plates while holding spring, plugs or sleeves.
- **Remove plugs slowly to prevent internal parts from jumping out.**

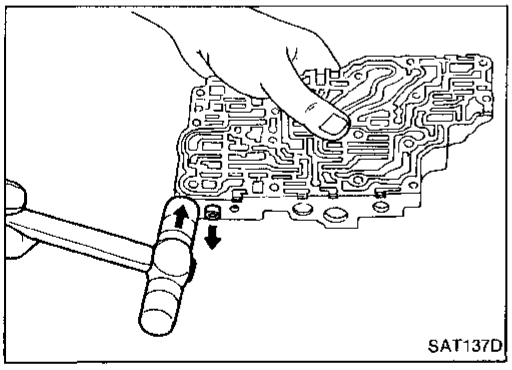

c. Place mating surface of valve body face down, and remove internal parts.
- **If a valve is hard to remove, place valve body face down and lightly tap it with a soft hammer.**
- **Be careful not to drop or damage valves and sleeves.**

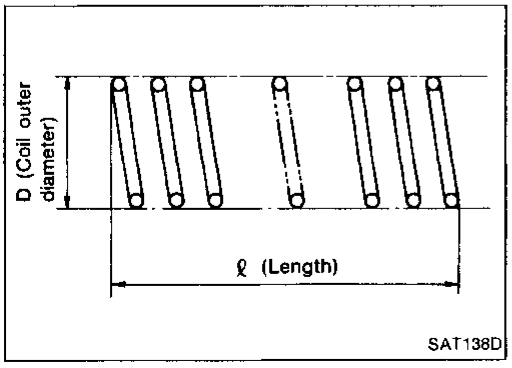

INSPECTION

Valve spring

- Measure free length and outer diameter of each valve spring. Also check for damage or deformation.
  Inspection standard:
  Refer to SDS, AT-238.
- Replace valve springs if deformed or fatigued.

Control valves

- Check sliding surfaces of valves, sleeves and plugs.

Control Valve Upper Body (Cont'd)

ASSEMBLY

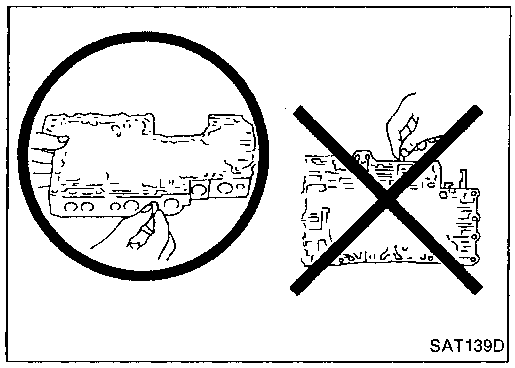

- **Lay control valve body down when installing valves. Do not stand the control valve body upright.**

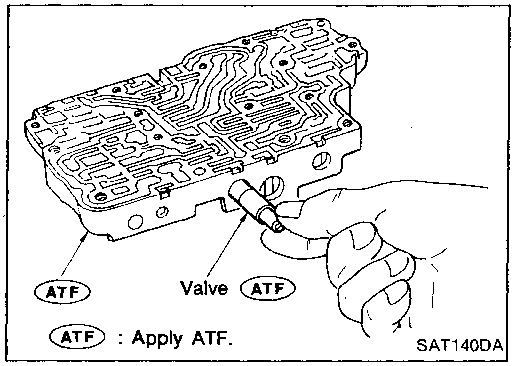

1. Lubricate the control valve body and all valves with ATF. Install control valves by sliding them carefully into their bores.
- **Be careful not to scratch or damage valve body.**

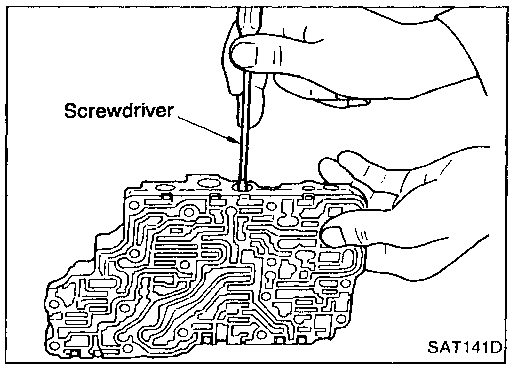

- Wrap a small screwdriver with vinyl tape and use it to insert the valves into their proper positions.

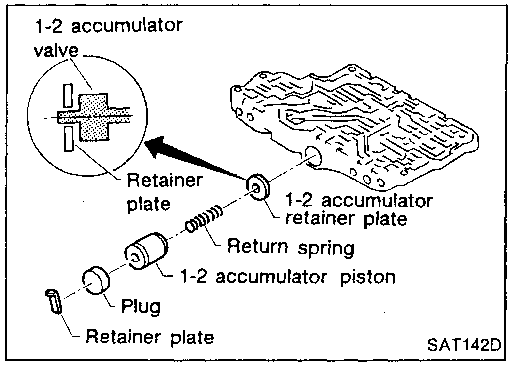

1-2 accumulator valve

- Install 1-2 accumulator valve. Align 1-2 accumulator retainer plate from opposite side of control valve body.
- Install return spring, 1-2 accumulator piston and plug.

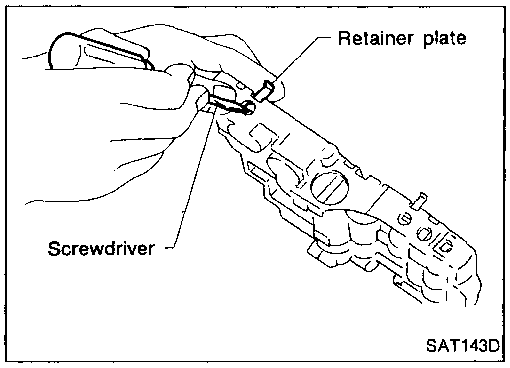

2. Install retainer plates.
- While pushing plug or return spring, install retainer plate.

Control Valve Upper Body (Cont'd)

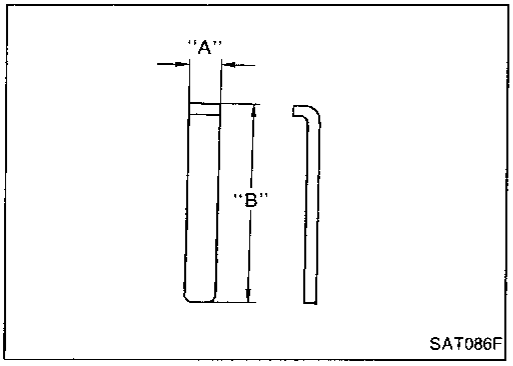

Retainer plate

Unit: mm (in)

Name of control valve	Length A	Length B
Pilot valve	6.0 (0.236)	21.5 (0.846)
1st reducing valve		
Torque converter relief valve		
2-3 timing valve		
Overrun clutch reducing valve		24.0 (0.945)
Torque converter clutch control valve		28.0 (1.102)
1-2 accumulator valve		38.5 (1.516)
1-2 accumulator piston valve		

- Install proper retainer plates.

Control Valve Lower Body

SEC. 317

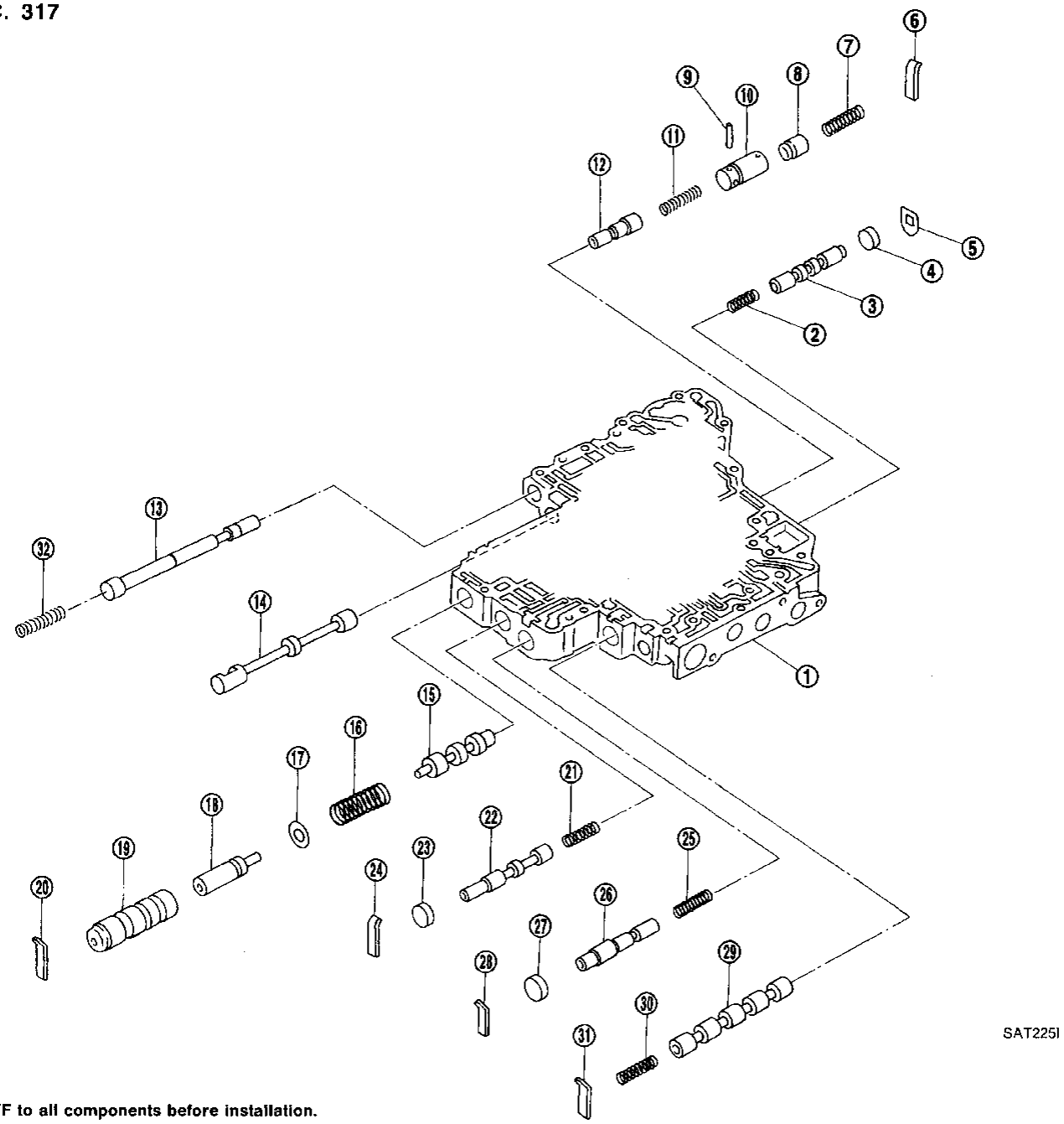

Apply ATF to all components before installation.

Numbers preceding valve springs correspond with those shown in SDS table on page AT-238.

① Control valve lower body
② Return spring
③ Shift valve B
④ Plug
⑤ Retainer plate
⑥ Retainer plate
⑦ Return spring
⑧ Piston
⑨ Parallel pin
⑩ Sleeve
⑪ Return spring
⑫ Pressure modifier valve
⑬ Plug
⑭ Manual valve
⑮ Pressure regulator valve
⑯ Return spring
⑰ Spring seat
⑱ Plug
⑲ Sleeve
⑳ Retaining plate
㉑ Return spring
㉒ Overrun clutch control valve
㉓ Plug
㉔ Retaining plate
㉕ Return spring
㉖ Accumulator control valve
㉗ Plug
㉘ Retainer plate
㉙ Shift valve A
㉚ Return spring
㉛ Retainer plate
㉜ Return spring

Control Valve Lower Body (Cont'd)

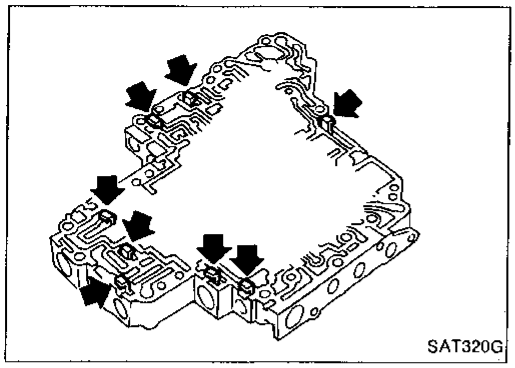

DISASSEMBLY

Remove valves at retainer plate.

For removal procedures, refer to "DISASSEMBLY" of Control Valve Upper Body, AT-172.

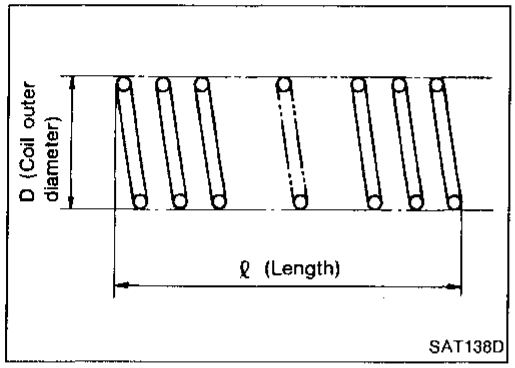

INSPECTION

Valve springs

- Check each valve spring for damage or deformation. Also measure free length and outer diameter.
  Inspection standard:
  Refer to SDS, AT-238.
- Replace valve springs if deformed or fatigued.

Control valves

- Check sliding surfaces of control valves, sleeves and plugs for damage.

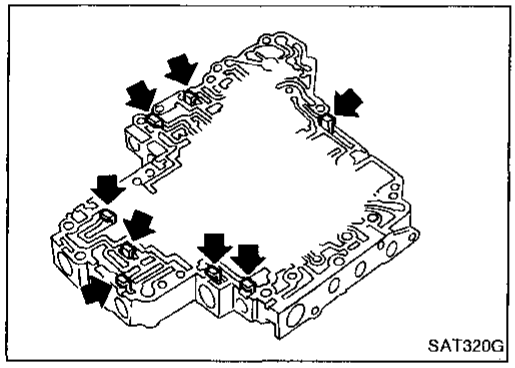

ASSEMBLY

- Install control valves.
  For installation procedures, refer to "ASSEMBLY" of Control Valve Upper Body, AT-173.

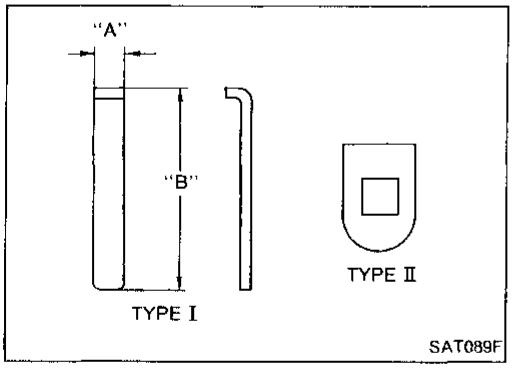

Retainer plate

Unit: mm (in)

Name of control valve	Length A	Length B	Type
Pressure regulator valve	6.0 (0.236)	28.0 (1.102)	I
Accumulator control valve			
Shift valve A			
Overrun clutch control valve			
Pressure modifier valve			
Shift valve B	—	—	II

- Install proper retainer plates.

Reverse Clutch

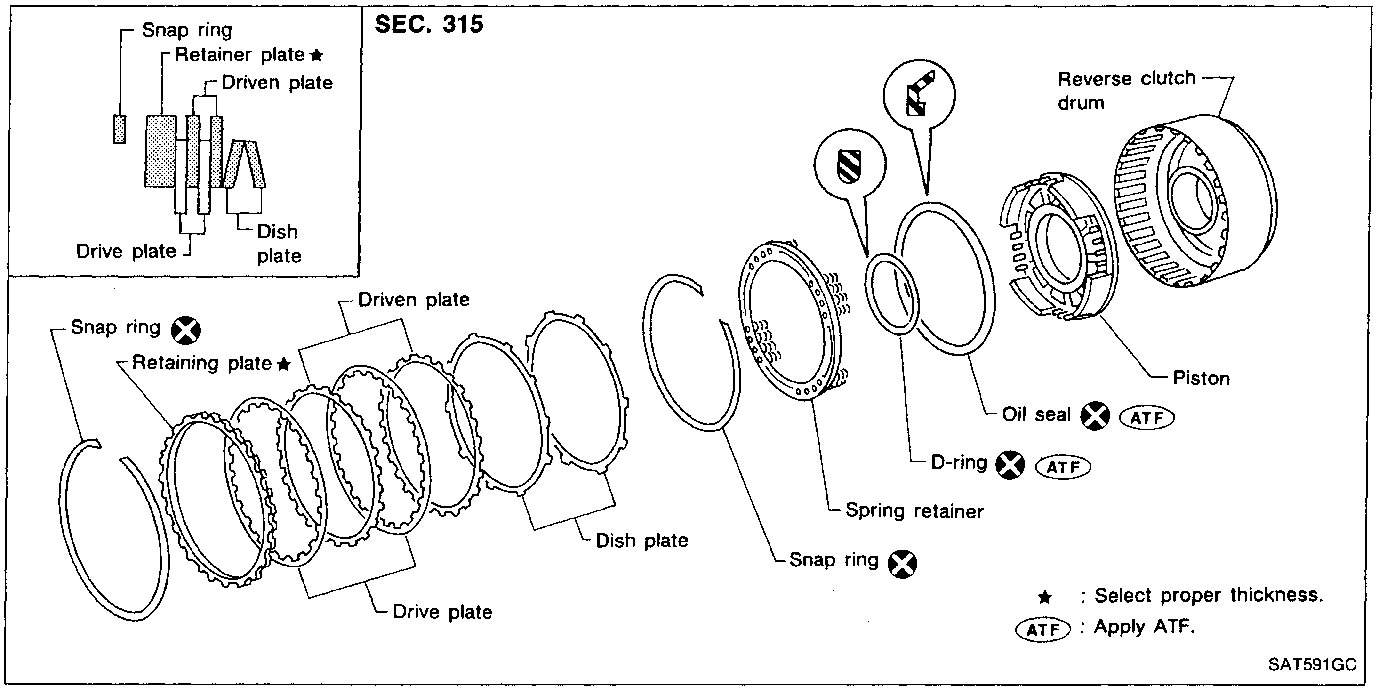

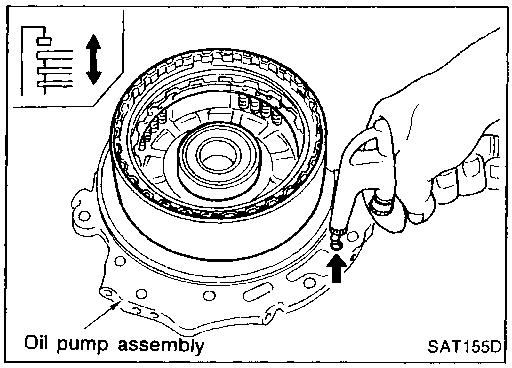

DISASSEMBLY

1. Check operation of reverse clutch

a. Install seal ring onto drum support of oil pump cover and install reverse clutch assembly. Apply compressed air to oil hole.

b. Check to see that retaining plate moves to snap ring.

c. If retaining plate does not contact snap ring:

- D-ring might be damaged.
- Oil seal might be damaged.
- Fluid might be leaking past piston check ball.

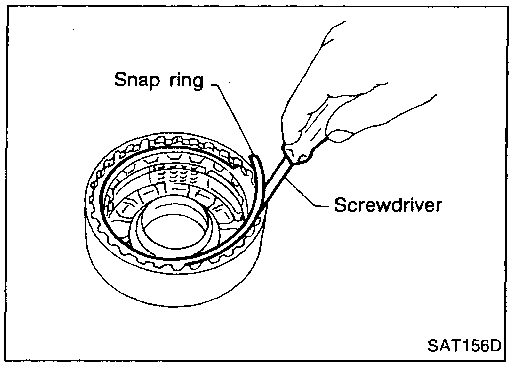

2. Remove snap ring.
3. Remove drive plates, driven plates, retaining plate, and dish plates.

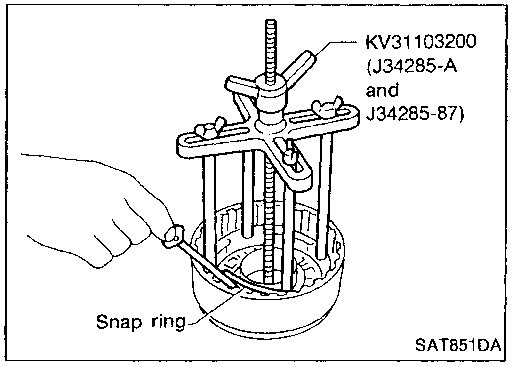

4. Set Tool on spring retainer and remove snap ring from reverse clutch drum while compressing return springs.

- **Set Tool directly above springs.**
- **Do not expand snap ring excessively.**

5. Remove spring retainer and return springs.

- **Do not remove return springs from spring retainer.**

Reverse Clutch (Cont'd)

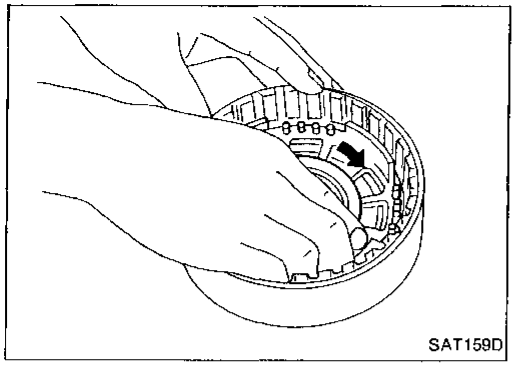

6. Remove piston from reverse clutch drum by turning it.

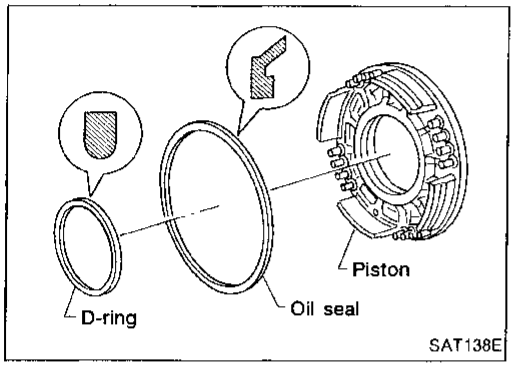

7. Remove D-ring and oil seal from piston.

INSPECTION

Reverse clutch snap ring, spring retainer and return springs

- Check for deformation, fatigue or damage.
- Replace if necessary.
- **When replacing spring retainer and return springs, replace them as a set.**

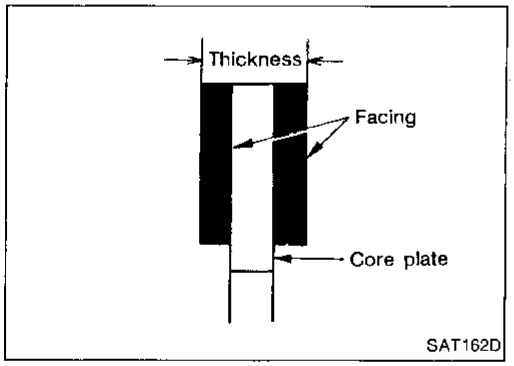

Reverse clutch drive plates

- Check facing for burns, cracks or damage.
- Measure thickness of facing.
  Thickness of drive plate:
  Standard value: 2.0 mm (0.079 in)
  Wear limit: 1.8 mm (0.071 in)
- If not within wear limit, replace.

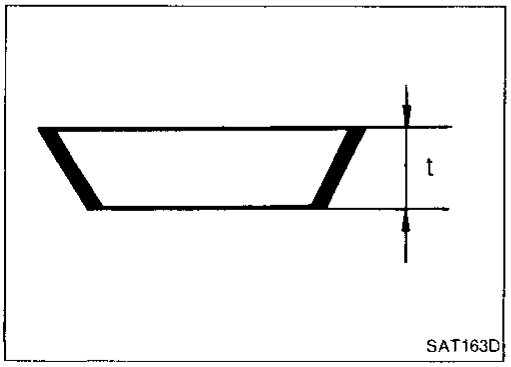

Reverse clutch dish plates

- Check for deformation or damage.
- Measure thickness of dish plate.
  Thickness of dish plate "t":
  2.8 mm (0.110 in)
- If deformed or fatigued, replace.

Reverse Clutch (Cont'd)

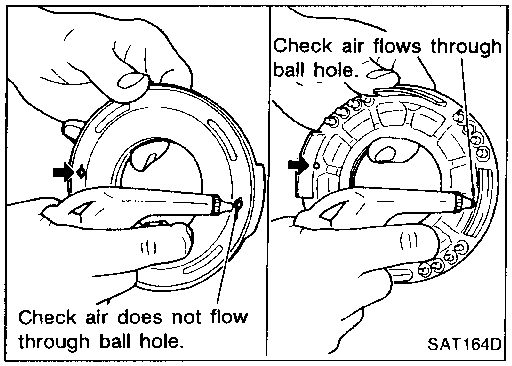

Reverse clutch piston

- Make sure check balls are not fixed.
- Apply compressed air to check ball oil hole opposite the return spring. Make sure there is no air leakage.
- Apply compressed air to oil hole on return spring side to make sure air leaks past ball.

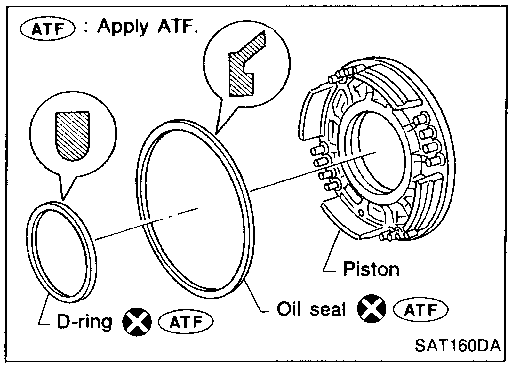

ASSEMBLY

1. Install D-ring and oil seal on piston.
- **Take care with the direction of the oil seal.**
- **Apply ATF to both parts.**

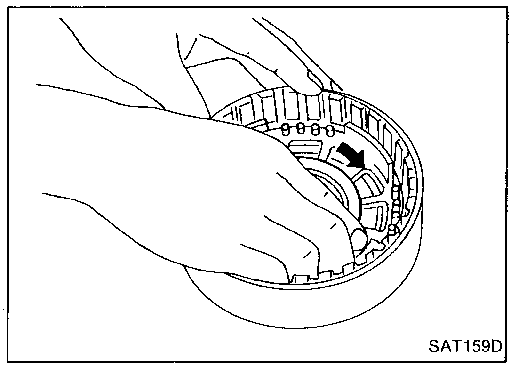

2. Install piston assembly by turning it slowly.
- **Apply ATF to inner surface of drum.**

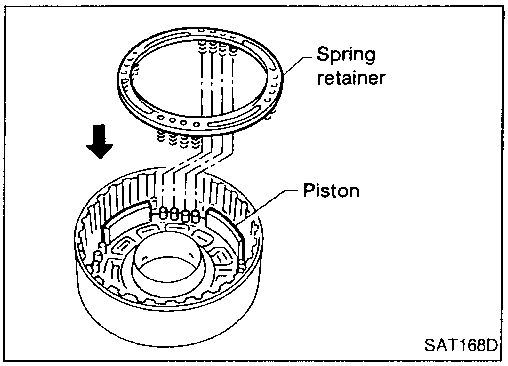

3. Install return springs and spring retainer on piston.

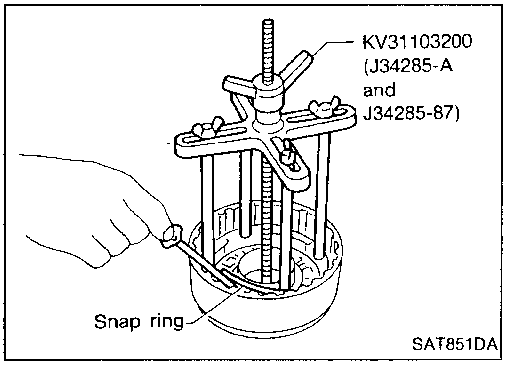

4. Set Tool on spring retainer and install snap ring while compressing return springs.
- **Set Tool directly above return springs.**

Reverse Clutch (Cont'd)

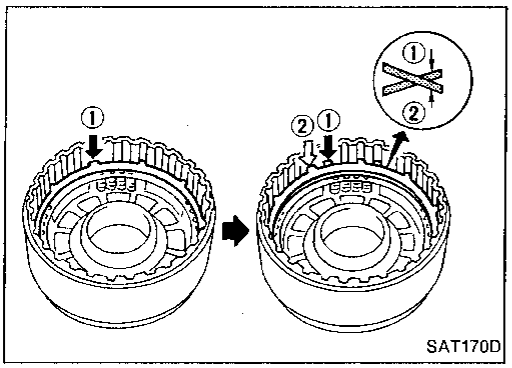

5. Install drive plates, driven plates, retaining plate and dish plates.

- **Do not align the projections of any two dish plates.**
- **Take care with the order and direction of plates.**

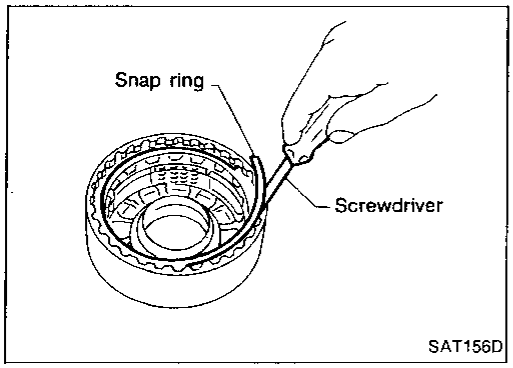

6. Install snap ring.

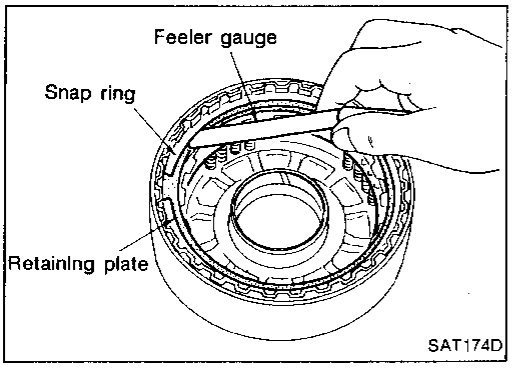

7. Measure clearance between retaining plate and snap ring. If not within allowable limit, select proper retaining plate.
   Specified clearance:
   Standard: 0.5 - 0.8 mm (0.020 - 0.031 in)
   Allowable limit: 1.2 mm (0.047 in)
   Retaining plate:
   Refer to SDS, AT-238.

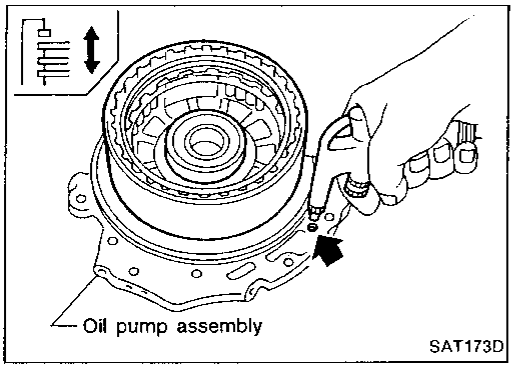

8. Check operation of reverse clutch.
   Refer to "DISASSEMBLY" in "Reverse Clutch", AT-177.

High Clutch

SEC. 315

For the number of clutch sheets (drive plates and driven plates), refer to the below cross-section.

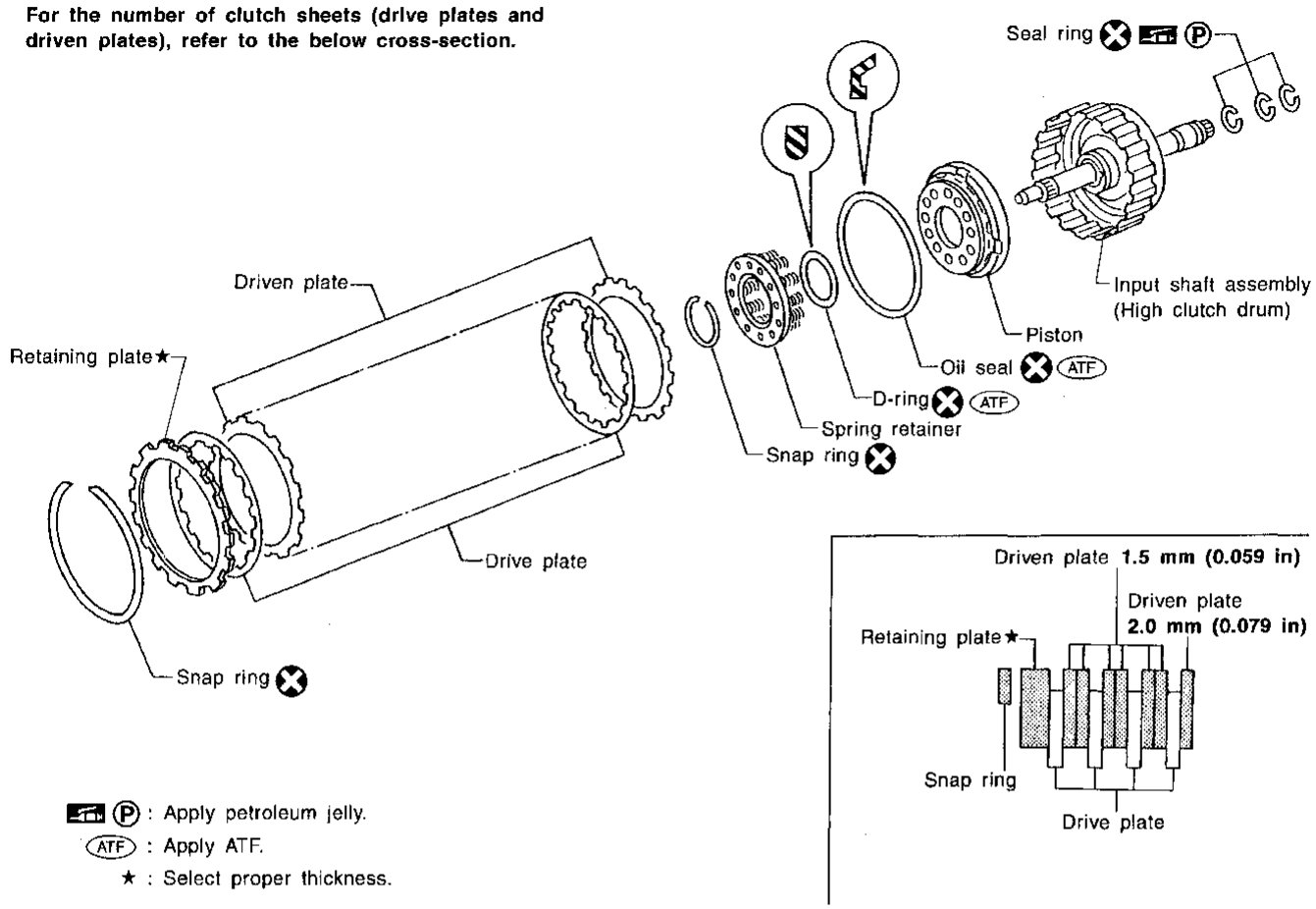

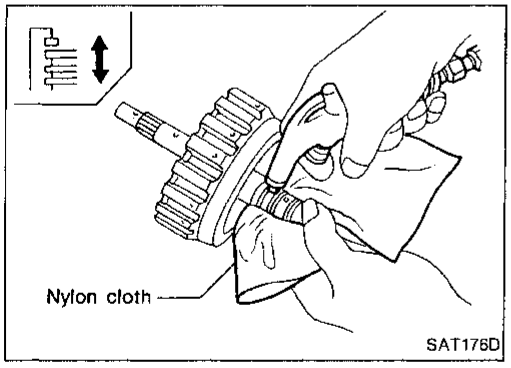

DISASSEMBLY

1. Check operation of high clutch.

a. Apply compressed air to oil hole of input shaft.

- **Stop up a hole on opposite side of input shaft.**

b. Check to see that retaining plate moves to snap ring.

c. If retaining plate does not contact snap ring:

- D-ring might be damaged.
- Oil seal might be damaged.
- Fluid might be leaking past piston check ball.

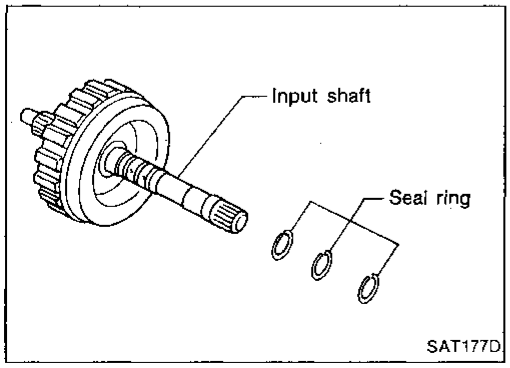

2. Remove seal rings from input shaft.

High Clutch (Cont'd)

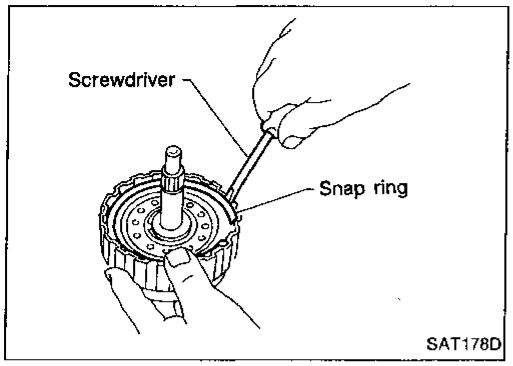

3. Remove snap ring.
4. Remove drive plates, driven plates, retaining plate and dish plate.

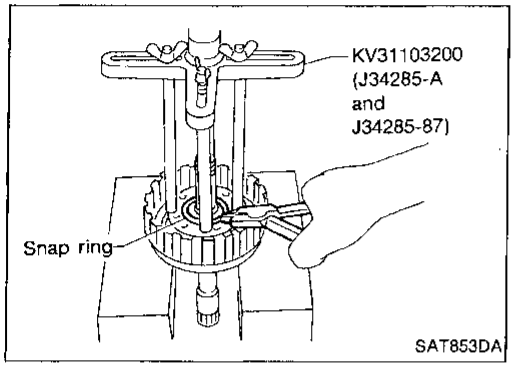

5. Set Tool on spring retainer and remove snap ring from high clutch drum while compressing return springs.
- **Set Tool directly above springs.**
- **Do not expand snap ring excessively.**
6. Remove spring retainer and return springs.
- **Do not remove return spring from spring retainer.**

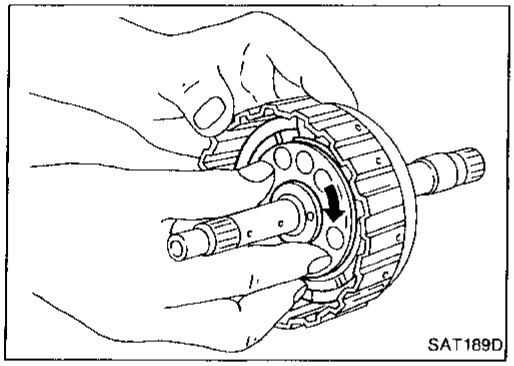

7. Remove piston from high clutch drum by turning it.

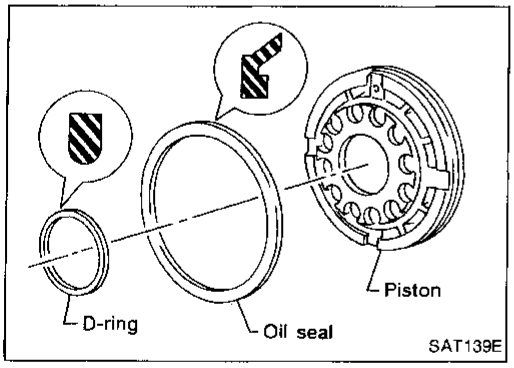

8. Remove D-ring and oil seal from piston.

INSPECTION

Reverse clutch snap ring, spring retainer and return springs

- Check for deformation, fatigue or damage.
- Replace if necessary.
- **When replacing spring retainer and return springs, replace them as a set.**

High Clutch (Cont'd)

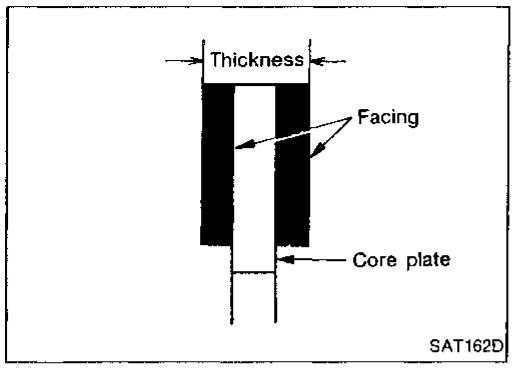

High clutch drive plates

- Check facing for burns, cracks or damage.
- Measure thickness of facing.
  Thickness of drive plate:
  Standard value: 1.6 mm (0.063 in)
  Wear limit: 1.4 mm (0.055 in)
- If not within wear limit, replace.

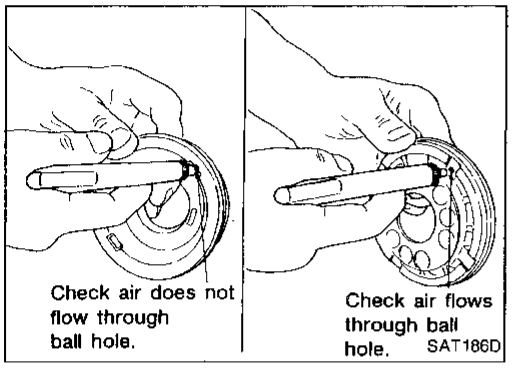

High clutch piston

- Make sure check balls are not fixed.
- Apply compressed air to check ball oil hole opposite the return spring. Make sure there is no air leakage.
- Apply compressed air to oil hole on return spring side to make sure air leaks past ball.

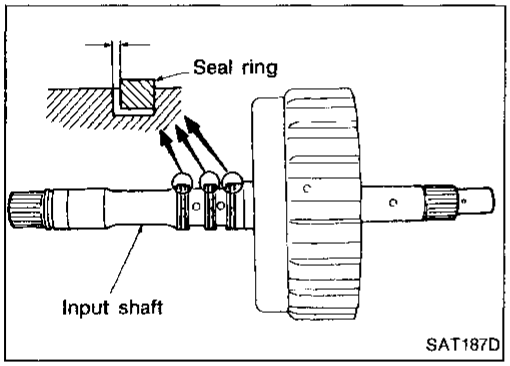

Seal ring clearance

- Install new seal rings onto input shaft.
- Measure clearance between seal ring and ring groove.
  Standard clearance:
  0.08 - 0.23 mm (0.0031 - 0.0091 in)
  Allowable limit:
  0.23 mm (0.0091 in)
- If not within wear limit, replace input shaft assembly.

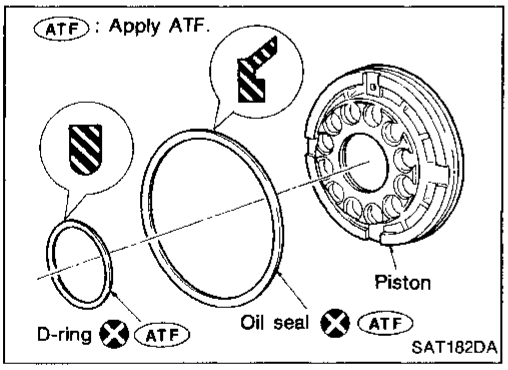

ASSEMBLY

1. Install D-ring and oil seal on piston.
- **Take care with the direction of the oil seal.**
- **Apply ATF to both parts.**

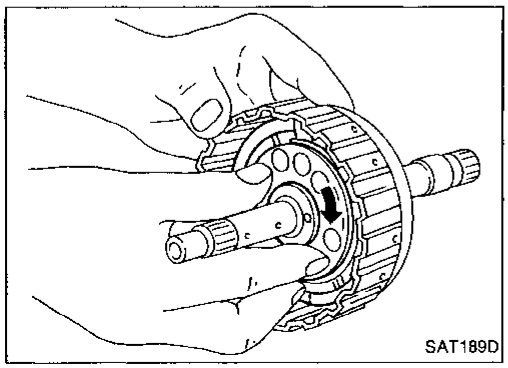

2. Install piston assembly by turning it slowly.
- **Apply ATF to inner surface of drum.**

High Clutch (Cont'd)

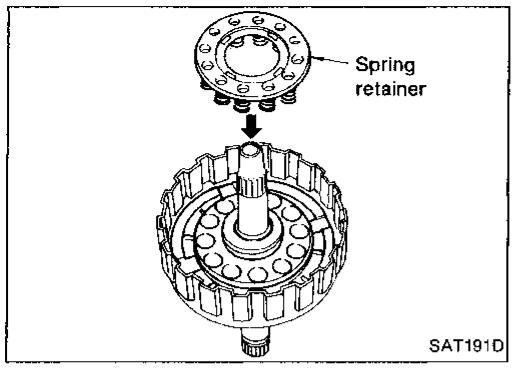

3. Install return springs and spring retainer on piston.

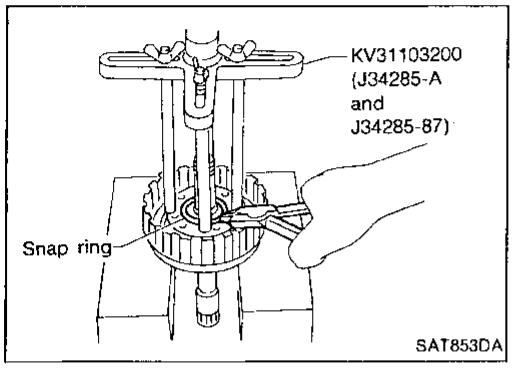

4. Set Tool on spring retainer and install snap ring while compressing return springs.
- **Set Tool directly above return springs.**

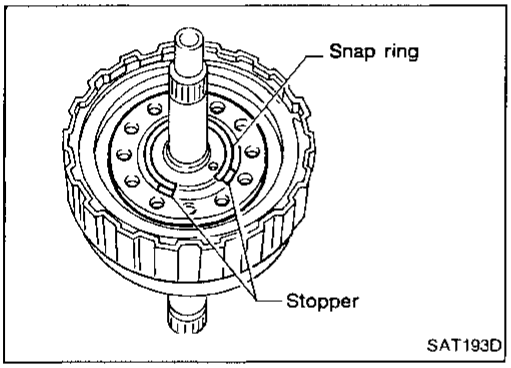

- **Do not align snap ring gap with spring retainer stopper.**

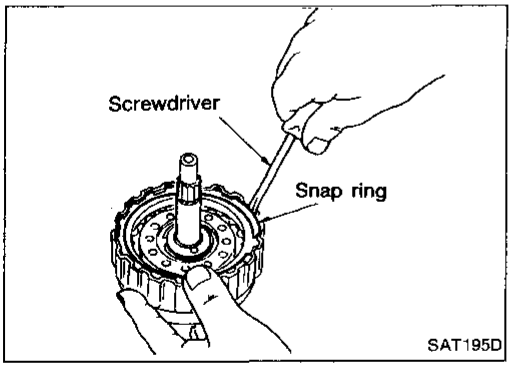

5. Install drive plates, driven plates and retaining plate.
- **Take care with the order and direction of plates.**
6. Install snap ring.

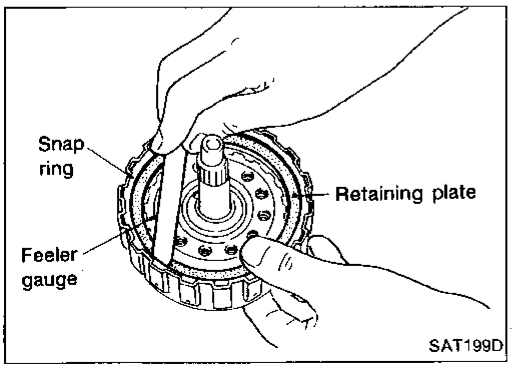

7. Measure clearance between retaining plate and snap ring. If not within allowable limit, select proper retaining plate.
   Specified clearance:
   Standard: 1.4 - 1.8 mm (0.055 - 0.071 in)
   Allowable limit: 2.6 mm (0.102 in)
   Retaining plate:
   Refer to SDS, AT-238.

High Clutch (Cont'd)

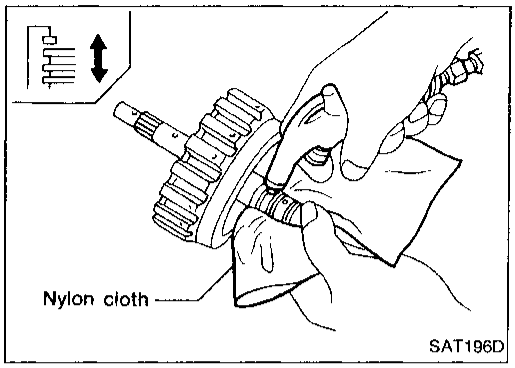

8. Check operation of high clutch.
   Refer to "DISASSEMBLY" in "High Clutch", AT-181.

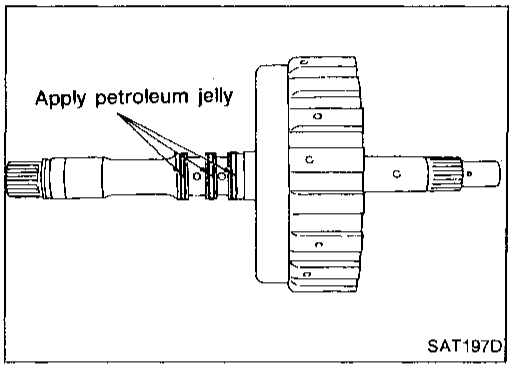

9. Install seal rings to input shaft.
- **Apply petroleum jelly to seal rings.**

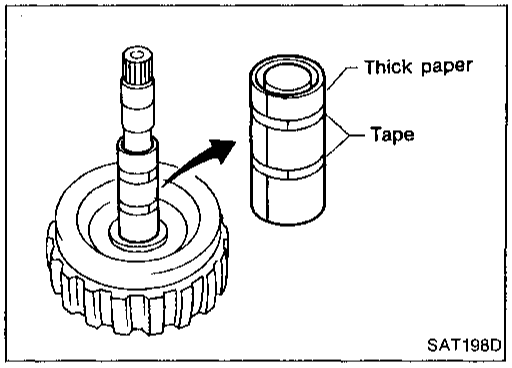

- **Roll paper around seal rings to prevent seal rings from spreading.**

Forward Clutch and Overrun Clutch

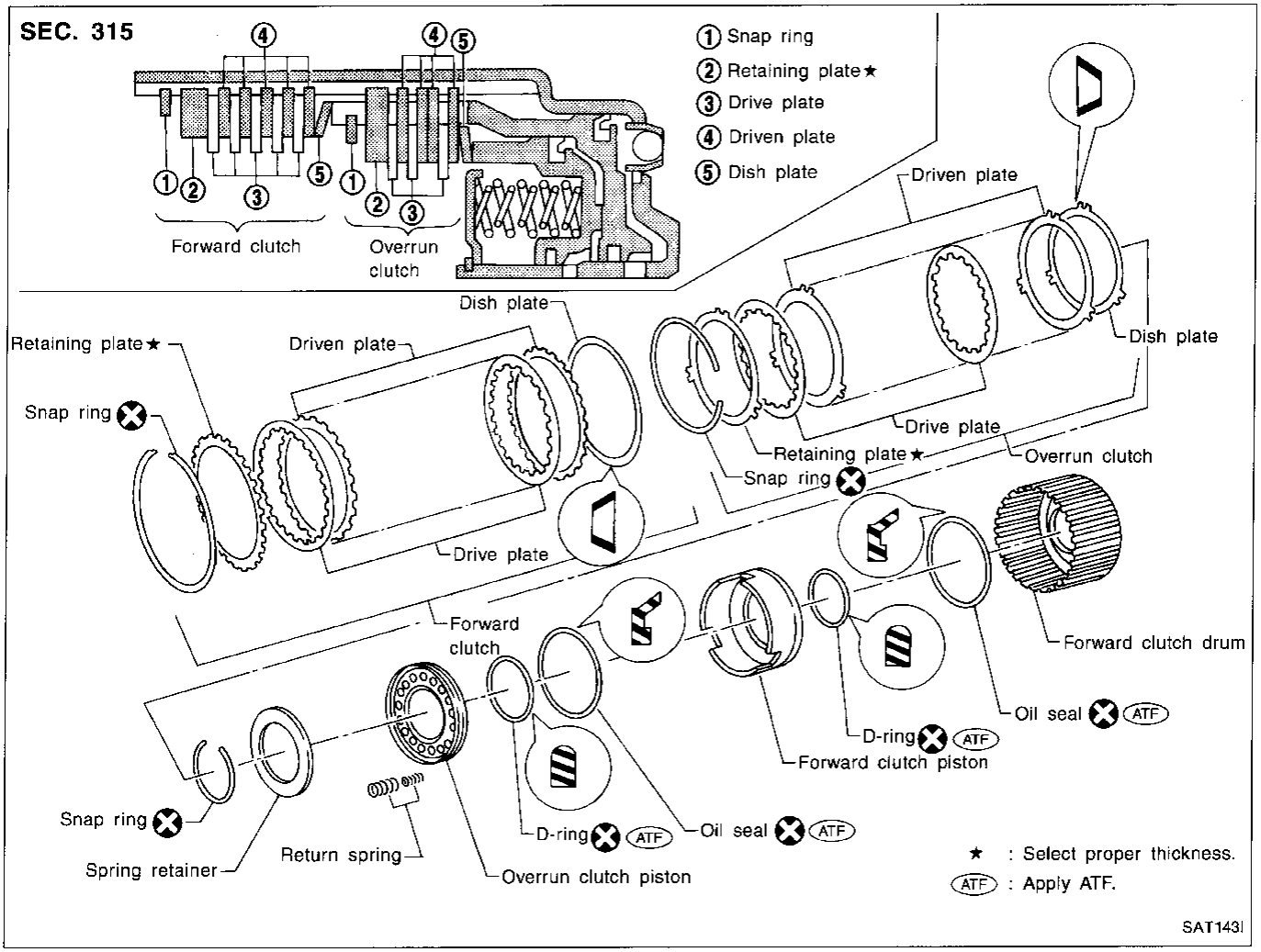

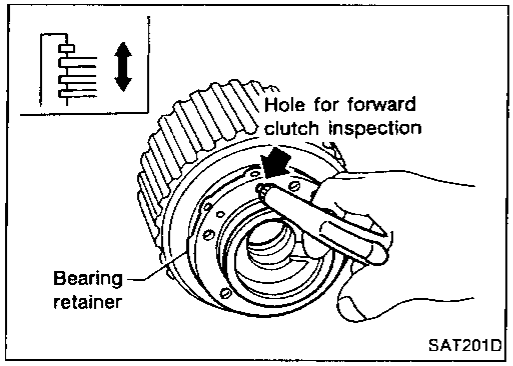

DISASSEMBLY

1. Check operation of forward clutch and overrun clutch.

a. Install bearing retainer on forward clutch drum.
b. Apply compressed air to oil hole of forward clutch drum.
c. Check to see that retaining plate moves to snap ring.

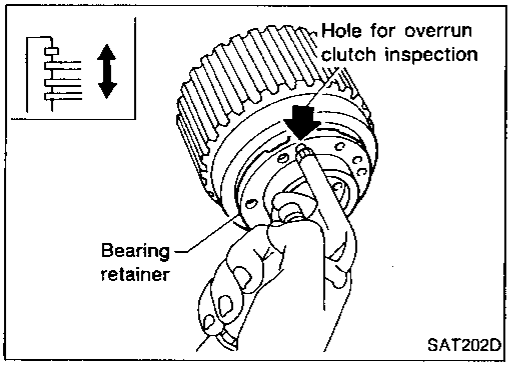

d. If retaining plate does not contact snap ring:
- D-ring might be damaged.
- Oil seal might be damaged.
- Fluid might be leaking past piston check ball.

Forward Clutch and Overrun Clutch (Cont'd)

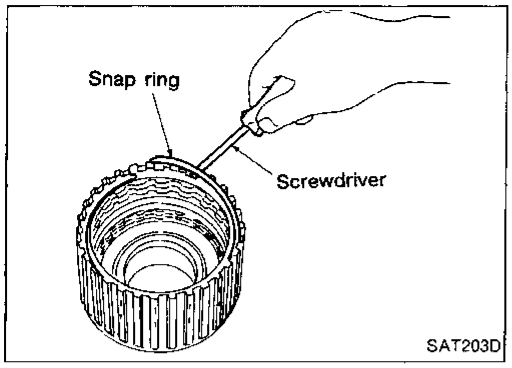

2. Remove snap ring for forward clutch.
3. Remove drive plates, driven plates, retaining plate and dish plate for forward clutch.

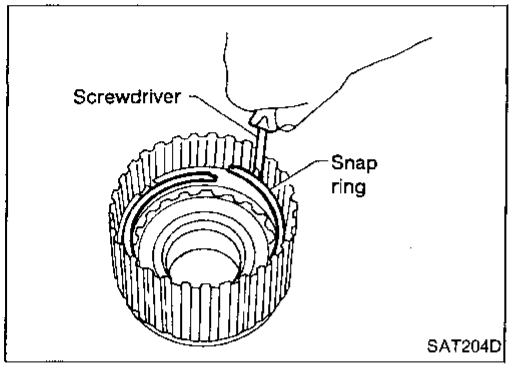

4. Remove snap ring for overrun clutch.
5. Remove drive plates, driven plates, retaining plate and dish plate for overrun clutch.

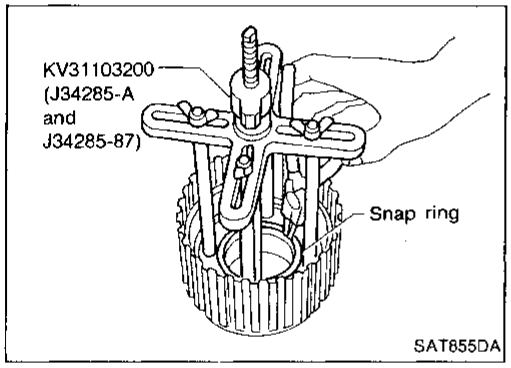

6. Set Tool on spring retainer and remove snap ring from forward clutch drum while compressing return springs.
- **Set Tool directly above return springs.**
- **Do not expand snap ring excessively.**
7. Remove spring retainer and return springs.

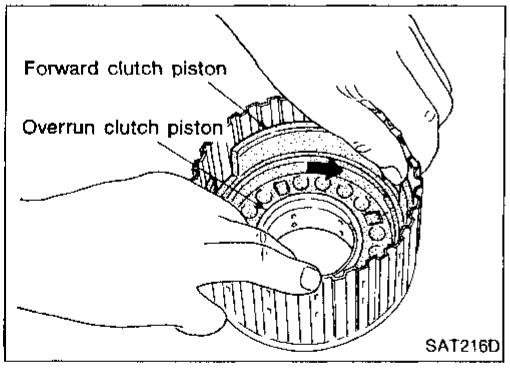

8. Remove forward clutch piston with overrun clutch piston from forward clutch drum by turning it.

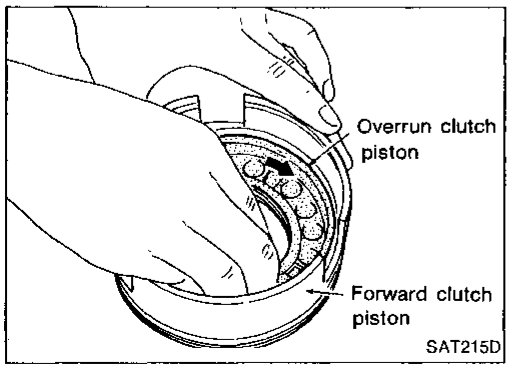

9. Remove overrun clutch piston from forward clutch piston by turning it.

Forward Clutch and Overrun Clutch (Cont'd)

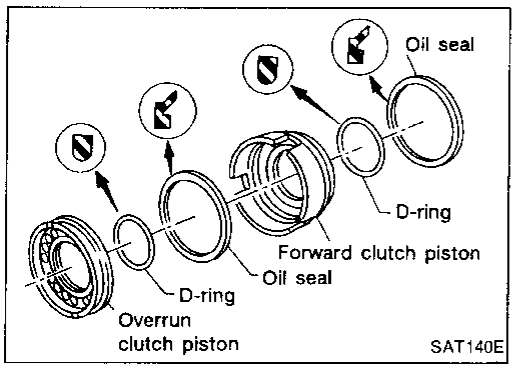

10. Remove D-rings and oil seals from forward clutch piston and overrun clutch piston.

INSPECTION

Snap rings and spring retainer

- Check for deformation, fatigue or damage.

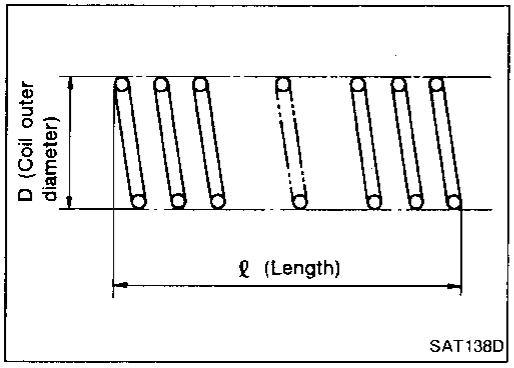

Forward clutch and overrun clutch return springs

- Check for deformation or damage.
- Measure free length and outer diameter.
  Inspection standard:
  Refer to SDS, AT-239.
- Replace if deformed or fatigued.

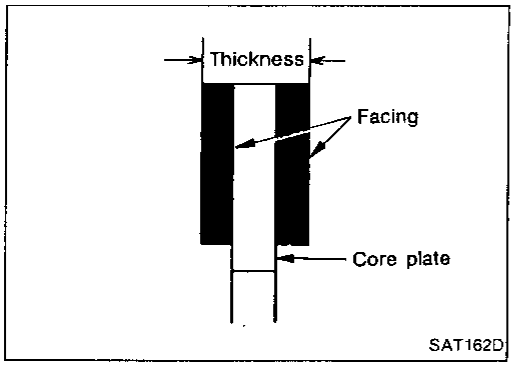

Forward clutch and overrun clutch drive plates

- Check facing for burns, cracks or damage.
- Measure thickness of facing.
  Thickness of drive plate:
  Forward clutch
  Standard value: 1.8 mm (0.071 in)
  Wear limit: 1.6 mm (0.063 in)
  Overrun clutch
  Standard value: 1.6 mm (0.063 in)
  Wear limit: 1.4 mm (0.055 in)
- If not within wear limit, replace.

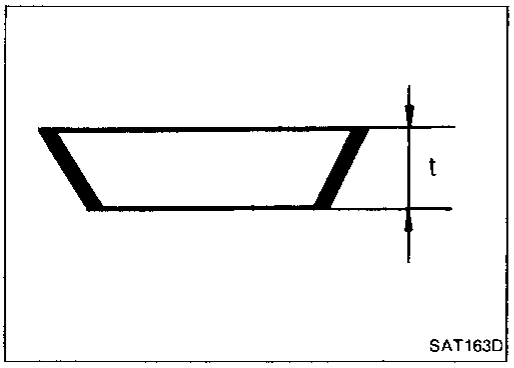

Forward clutch and overrun clutch dish plates

- Check for deformation or damage.
- Measure thickness of dish plate.
  Thickness of dish plate "t":
  Forward clutch: 2.5 mm (0.098 in)
  Overrun clutch: 2.15 mm (0.0846 in)
- If deformed or fatigued, replace.

Forward Clutch and Overrun Clutch (Cont'd)

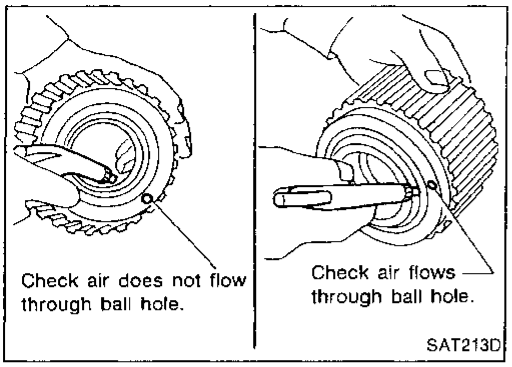

Forward clutch drum

- Make sure check balls are not fixed.
- Apply compressed air to check ball oil hole from outside of forward clutch drum. Make sure air leaks past ball.
- Apply compressed air to oil hole from inside of forward clutch drum. Make sure there is no air leakage.

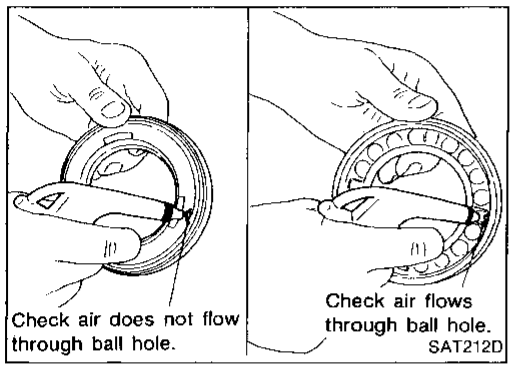

Overrun clutch piston

- Make sure check balls are not fixed.
- Apply compressed air to check ball oil hole opposite the return spring. Make sure there is no air leakage.
- Apply compressed air to oil hole on return spring side. Make sure air leaks past ball.

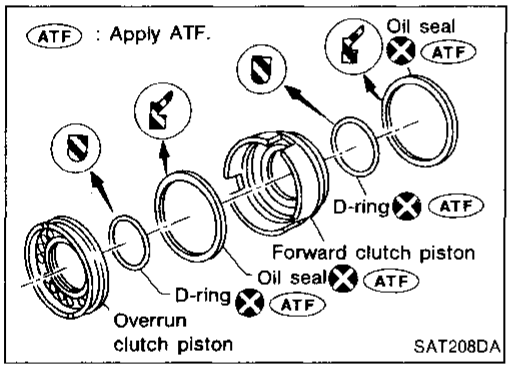

ASSEMBLY

1. Install D-rings and oil seals on forward clutch piston and overrun clutch piston.
- **Take care with direction of oil seal.**
- **Apply ATF to both parts.**

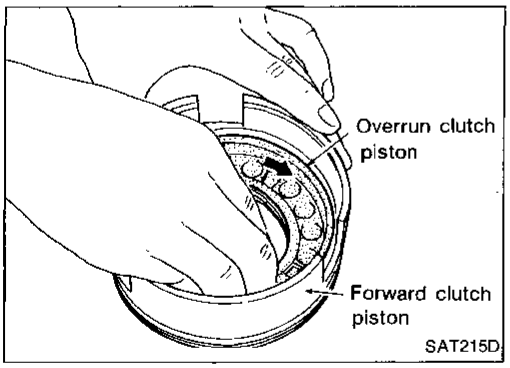

2. Install overrun clutch piston assembly on forward clutch piston while turning it slowly.
- **Apply ATF to inner surface of forward clutch piston.**

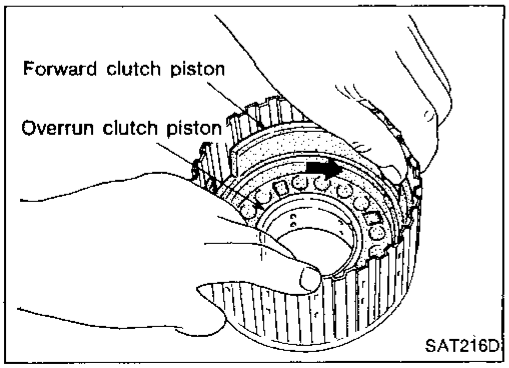

3. Install forward clutch piston assembly on forward clutch drum while turning it slowly.
- **Apply ATF to inner surface of drum.**

Forward Clutch and Overrun Clutch (Cont'd)

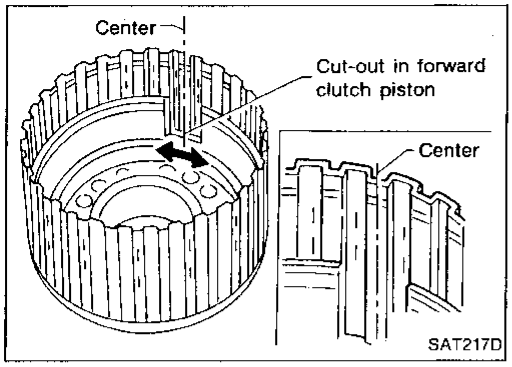

4. Align notch in forward clutch piston with groove in forward clutch drum.

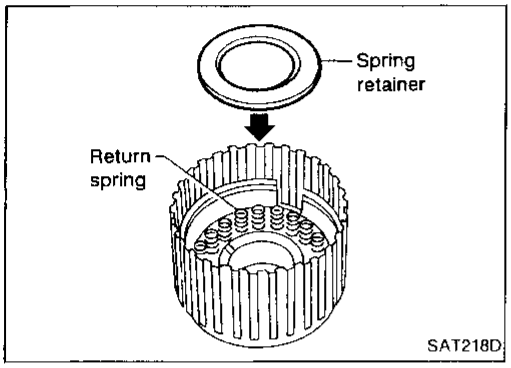

5. Install return spring on piston.
6. Install spring retainer on return springs.

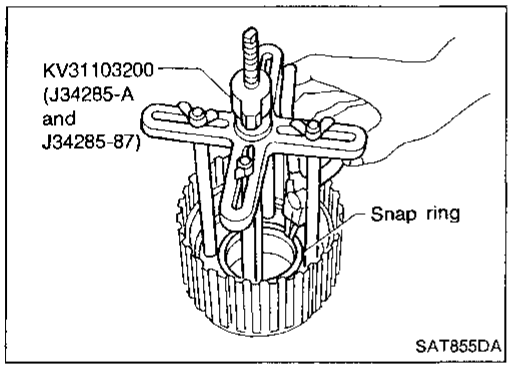

7. Set Tool on spring retainer and install snap ring while compressing return springs.

- **Set Tool directly above return springs.**

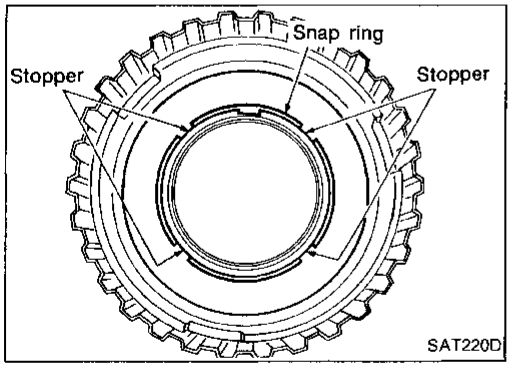

- **Do not align snap ring gap with spring retainer stopper.**

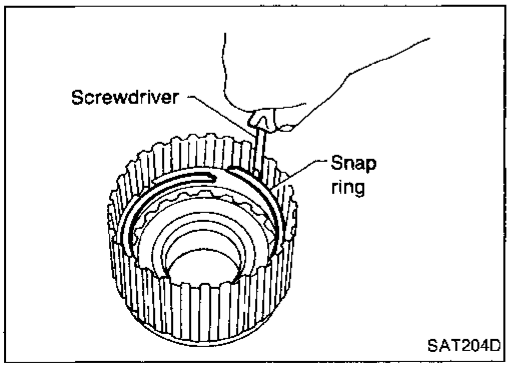

8. Install drive plates, driven plates, retaining plate and dish plate for overrun clutch.
9. Install snap ring for overrun clutch.

Forward Clutch and Overrun Clutch (Cont'd)

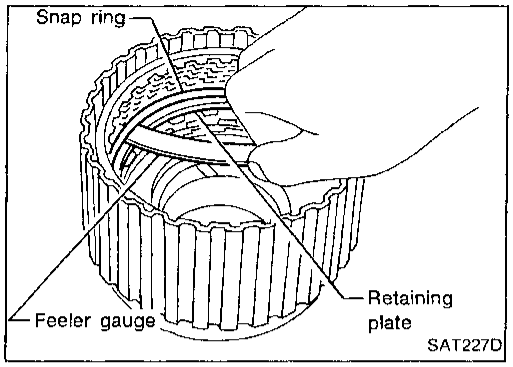

10. Measure clearance between overrun clutch retaining plate and snap ring.
    If not within allowable limit, select proper retaining plate.
    Specified clearance:
    Standard: 1.0 - 1.4 mm (0.039 - 0.055 in)
    Allowable limit: 2.0 mm (0.079 in)
    Overrun clutch retaining plate:
    Refer to SDS, AT-239.

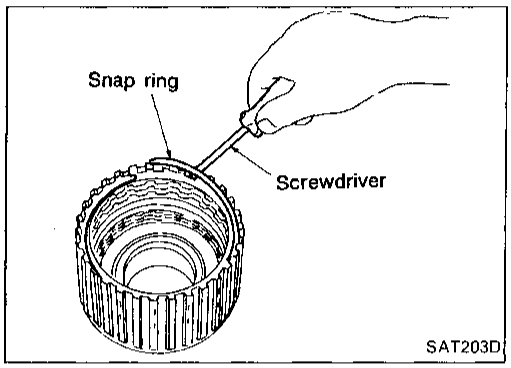

11. Install drive plates, driven plates, retaining plate and dish plate for forward clutch.
- **Take care with the order and direction of plates.**

12. Install snap ring for forward clutch.

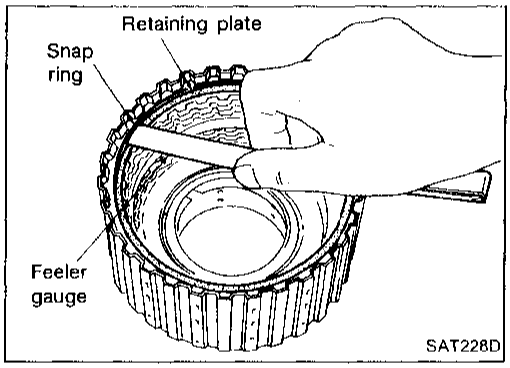

13. Measure clearance between forward clutch retaining plate and snap ring.
    If not within allowable limit, select proper retaining plate.
    Specified clearance:
    Standard: 0.45 - 0.85 mm (0.0177 - 0.0335 in)
    Allowable limit: 1.85 mm (0.0728 in)
    Forward clutch retaining plate:
    Refer to SDS, AT-239.

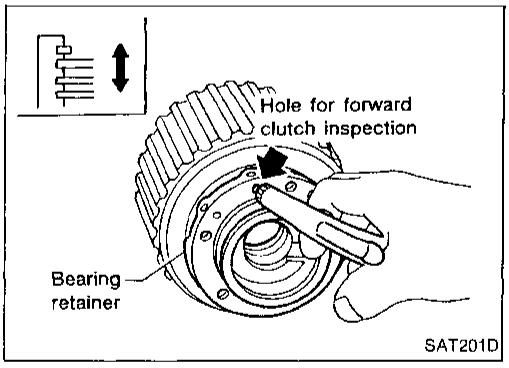

14. Check operation of forward clutch.
    Refer to "DISASSEMBLY" in "Forward Clutch and Overrun Clutch", AT-186.

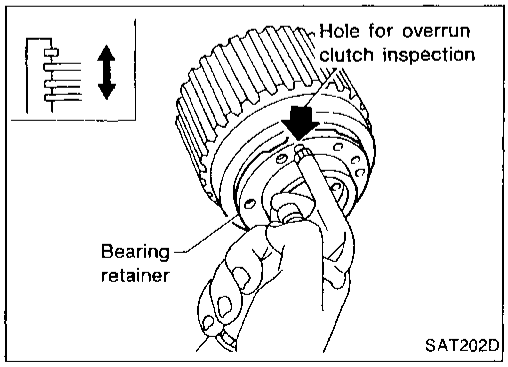

15. Check operation of overrun clutch.
    Refer to "DISASSEMBLY" in "Forward Clutch and Overrun Clutch", AT-186.

Low & Reverse Brake

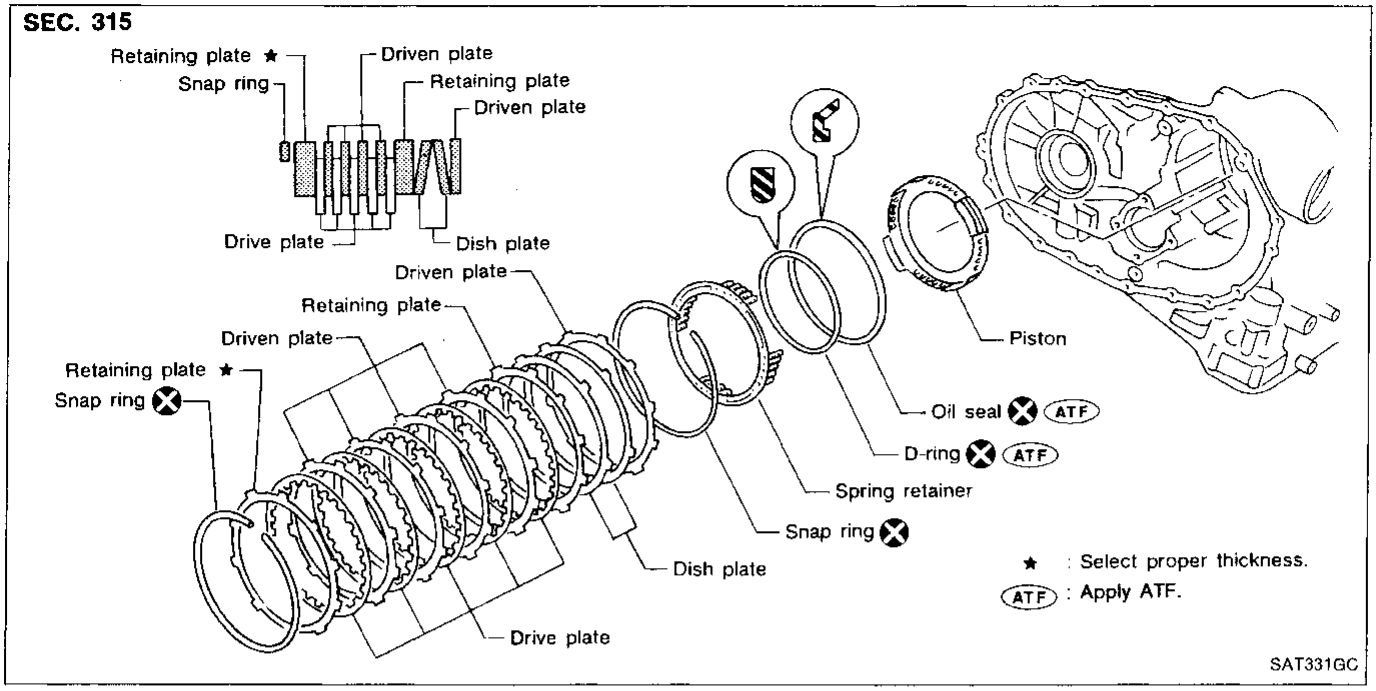

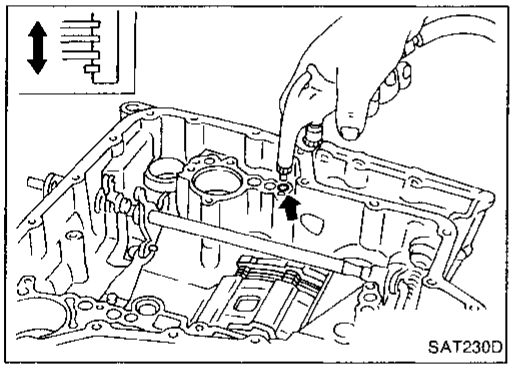

DISASSEMBLY

1. Check operation of low & reverse brake.

a. Apply compressed air to oil hole of transmission case.
b. Check to see that retaining plate moves to snap ring.
c. If retaining plate does not contact snap ring:

- D-ring might be damaged.
- Oil seal might be damaged.
- Fluid might be leaking past piston check ball.

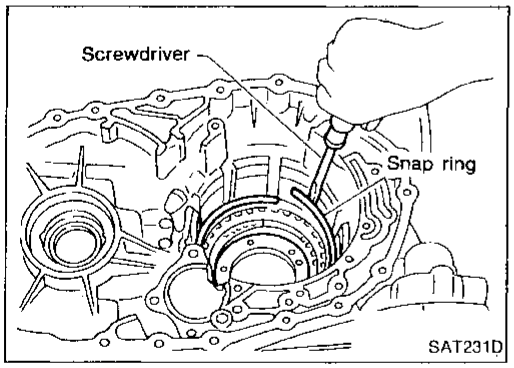

2. Stand transmission case.
3. Remove snap ring.
4. Remove drive plates, driven plates, retaining plate from transmission case.

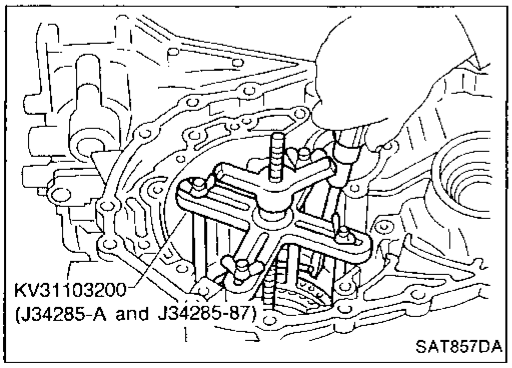

5. Set Tool on spring retainer and remove snap ring while compressing return springs.

- **Set Tool directly above return springs.**
- **Do not expand snap ring excessively.**

6. Remove spring retainer and return springs.

- **Do not remove return springs from spring retainer.**

Low & Reverse Brake (Cont'd)

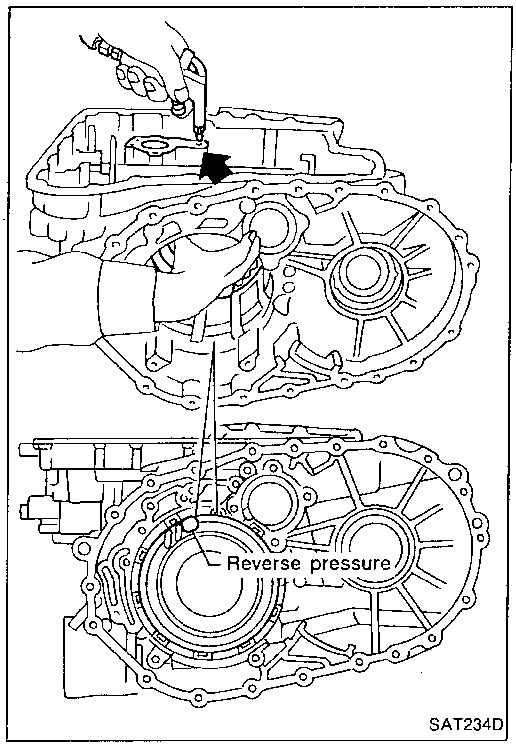

7. Apply compressed air to oil hole of transmission case while holding piston.
8. Remove piston from transmission case by turning it.

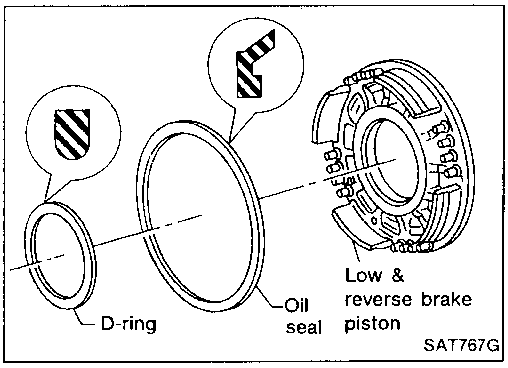

9. Remove D-ring and oil seal from piston.

INSPECTION

Low & reverse clutch snap ring, spring retainer and return springs

- Check for deformation, fatigue or damage.
- Replace if necessary.
- **When replacing spring retainer and return springs, replace them as a set.**

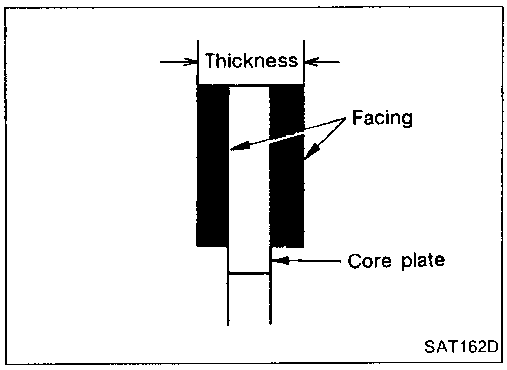

Low & reverse brake drive plate

- Check facing for burns, cracks or damage.
- Measure thickness of facing.
  Thickness of drive plate:
  Standard value: 2.0 mm (0.079 in)
  Wear limit: 1.8 mm (0.071 in)
- If not within wear limit, replace.

Low & Reverse Brake (Cont'd)

ASSEMBLY

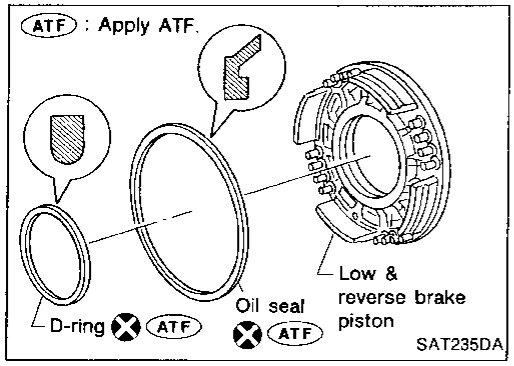

1. Install D-ring and oil seal on piston.
- **Take care with the direction of the oil seal.**
- **Apply ATF to both parts.**

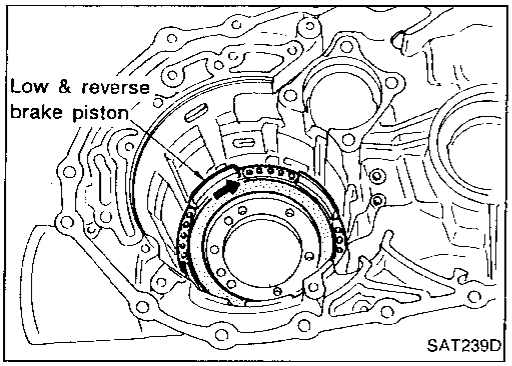

2. Stand transmission case.
3. Install piston assembly on transmission case while turning it slowly.
- **Apply ATF to inner surface of transmission case.**

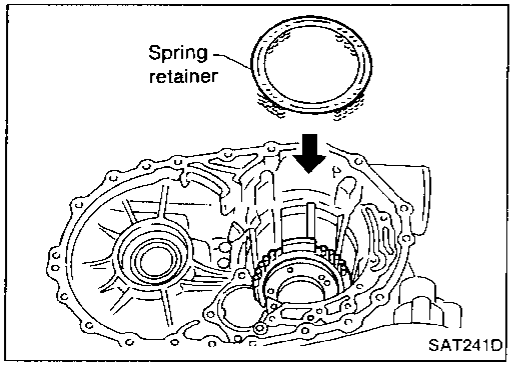

4. Install return springs and spring retainer on piston.

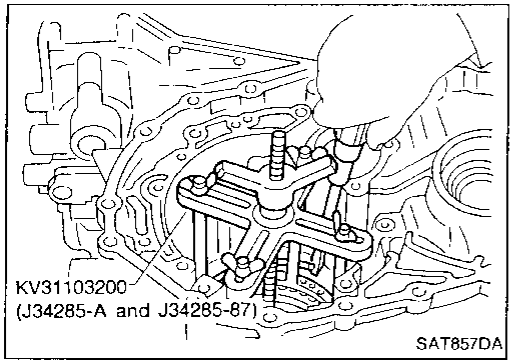

5. Install snap ring while compressing return springs.
- **Set Tool directly above return springs.**

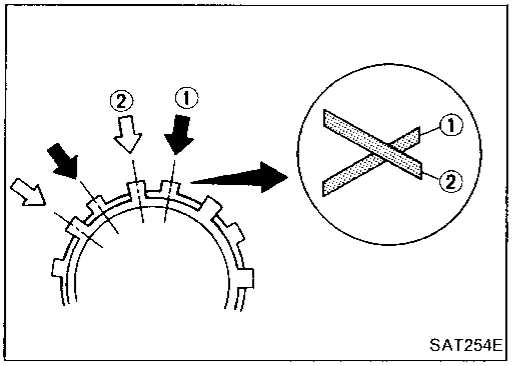

6. Install drive plates, driven plates, retaining plates and dished plates.
- **Do not align the projections on the two dished plates.**
- **Make sure to put the plates in the correct order and direction.**

Low & Reverse Brake (Cont'd)

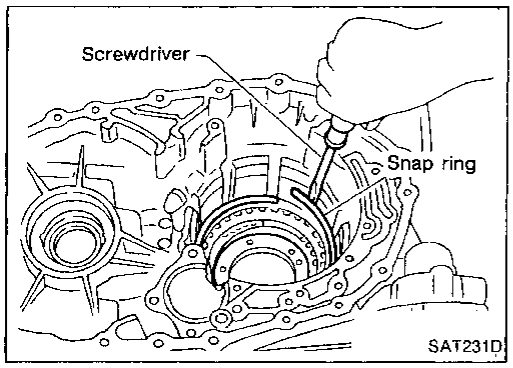

7. Install snap ring.

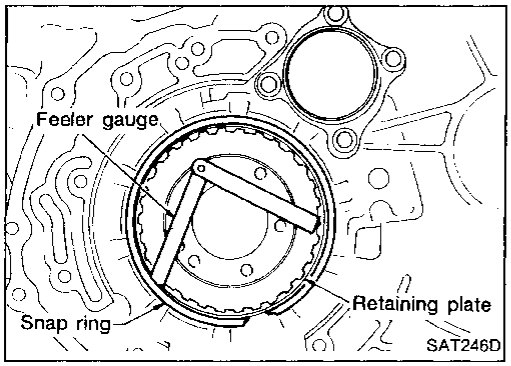

8. Measure clearance between retaining plate and snap ring. If not within allowable limit, select proper retaining plate (front side).
   Specified clearance:
   Standard: 1.4 - 1.8 mm (0.055 - 0.071 in)
   Allowable limit:
   2.8 mm (0.110 in)
   Retaining plate:
   Refer to SDS, AT-239.

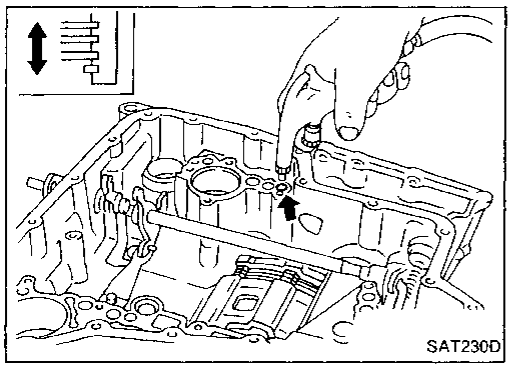

9. Check operation of low & reverse brake.
   Refer to "DISASSEMBLY" in "Low & Reverse Brake", AT-192.

Rear Internal Gear, Forward Clutch Hub and Overrun Clutch Hub

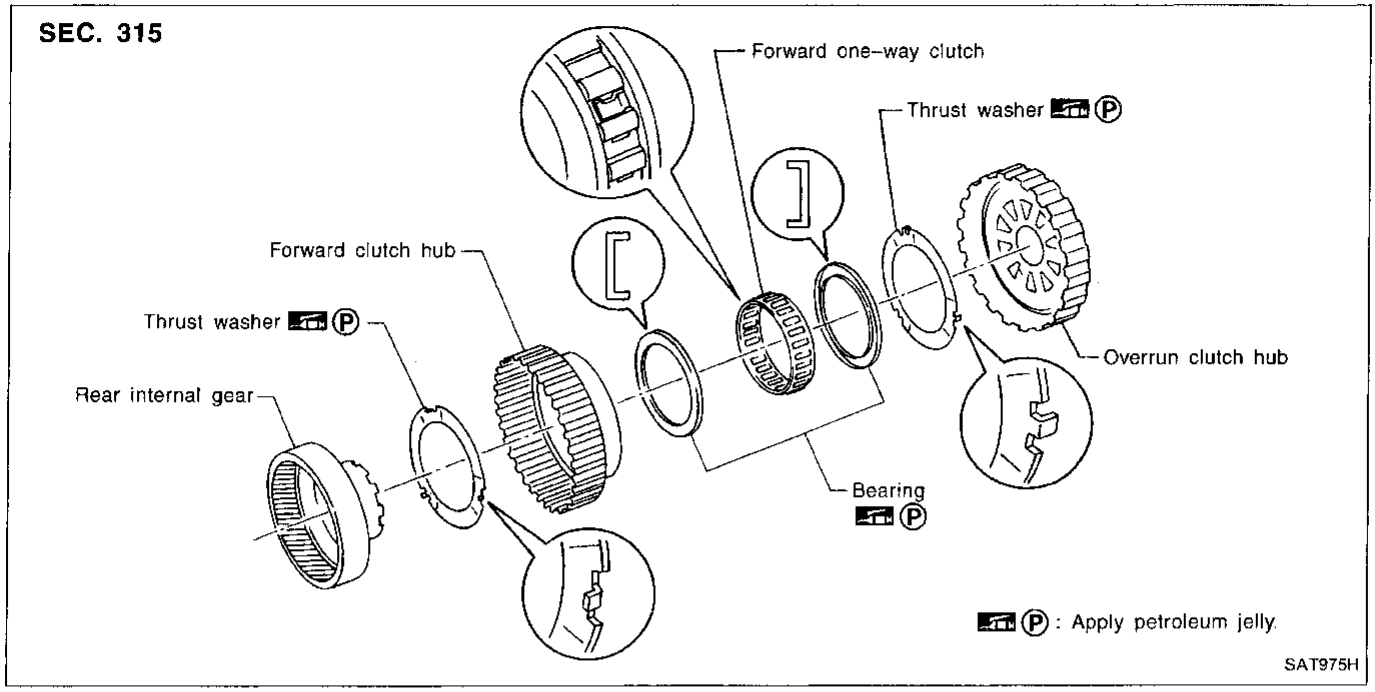

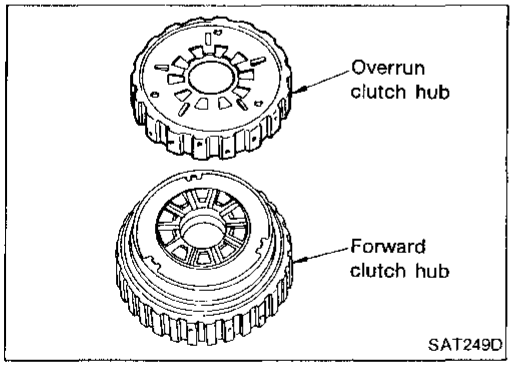

DISASSEMBLY

1. Remove snap ring from overrun clutch hub.
2. Remove overrun clutch hub from forward clutch hub.

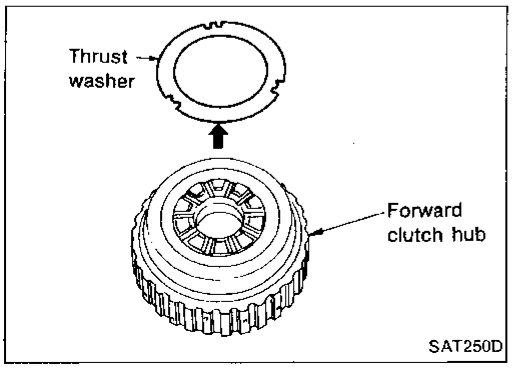

3. Remove thrust washer from forward clutch hub.

Rear Internal Gear, Forward Clutch Hub and Overrun Clutch Hub (Cont'd)

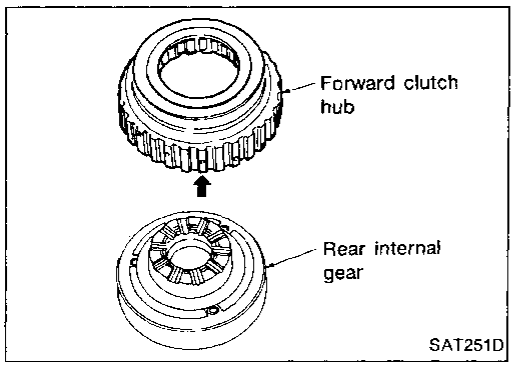

4. Remove forward clutch hub from rear internal gear.

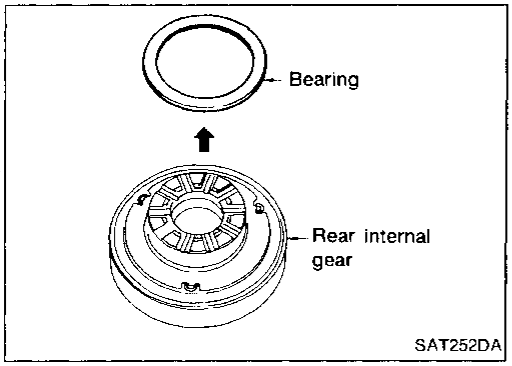

5. Remove bearing from rear internal gear.

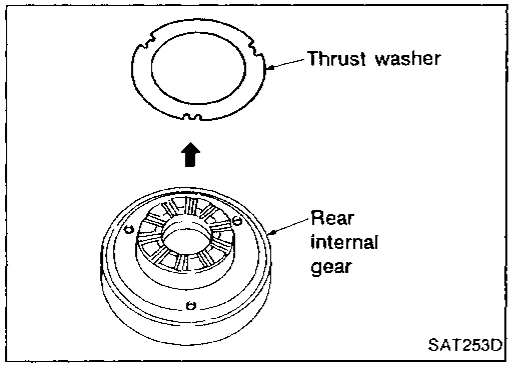

6. Remove thrust washer from rear internal gear.

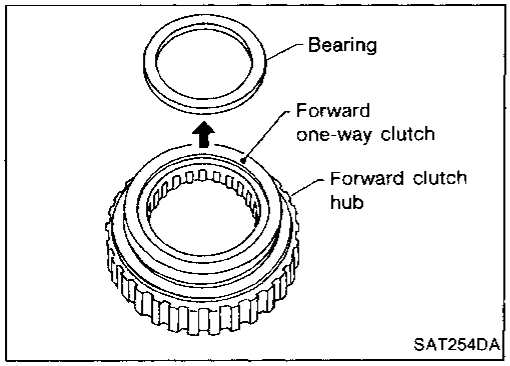

7. Remove bearing from forward one-way clutch.

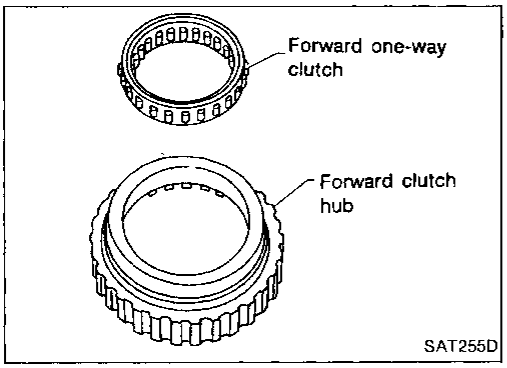

8. Remove one-way clutch from forward clutch hub.

Rear Internal Gear, Forward Clutch Hub and Overrun Clutch Hub (Cont'd)

INSPECTION

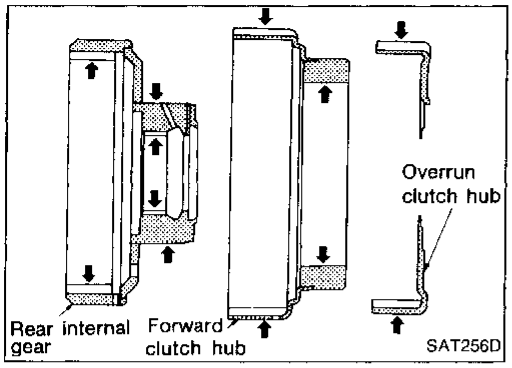

Rear internal gear, forward clutch hub and overrun clutch hub

- Check rubbing surface for wear or damage.

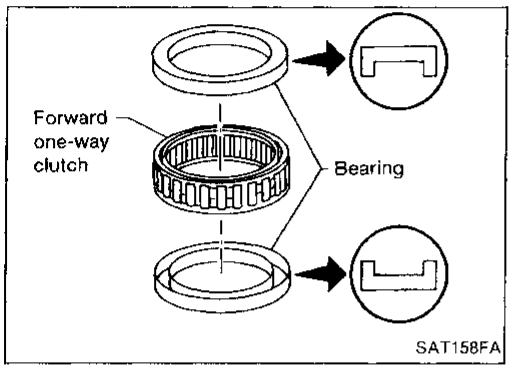

Snap ring, bearings and forward one-way clutch

- Check snap ring and end bearings for deformation and damage.
- Check forward one-way clutch for wear and damage.

ASSEMBLY

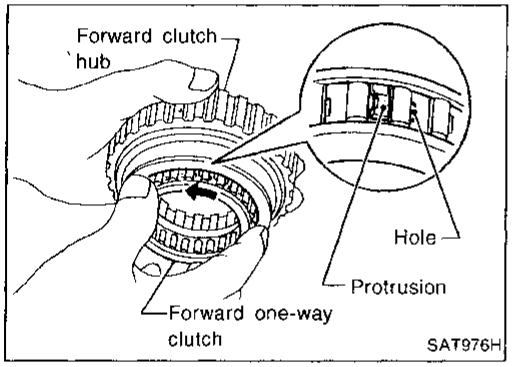

1. Install forward one-way clutch on forward clutch.

- **Take care with the direction of the forward one-way clutch.**

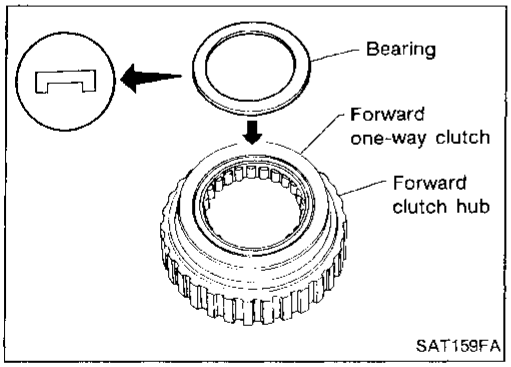

2. Install bearing on forward one-way clutch.

- **Apply petroleum jelly to end bearing.**

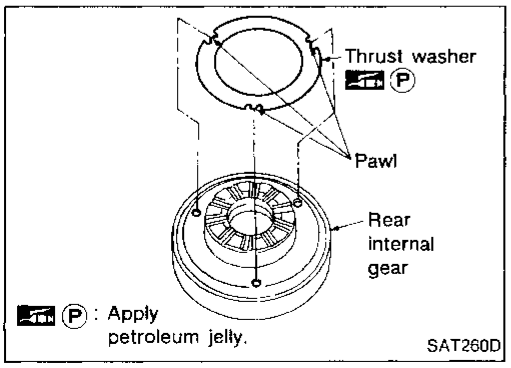

3. Install thrust washer on rear internal gear.

- **Apply petroleum jelly to thrust washer.**
- **Align pawls of thrust washer with holes of rear internal gear.**

Rear Internal Gear, Forward Clutch Hub and Overrun Clutch Hub (Cont'd)

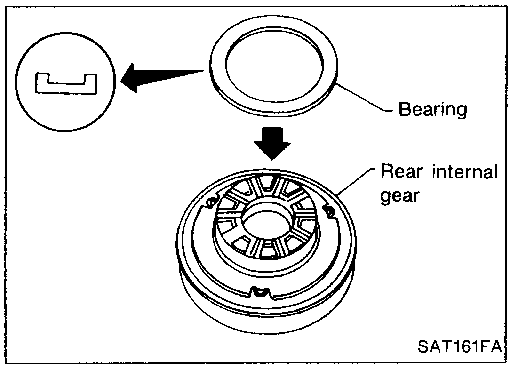

4. Install bearing on rear internal gear.
- **Apply petroleum jelly to end bearing.**

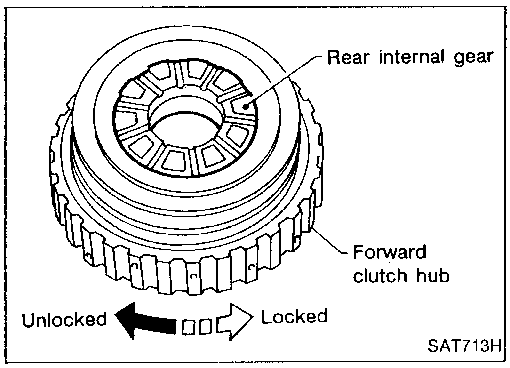

5. Install forward clutch hub on rear internal gear.
- **Check operation of forward one-way clutch.**
  Hold rear internal gear and turn forward clutch hub.
  Check forward clutch hub for correct locking and unlocking directions.
- **If not as shown in illustration, check installation direction of forward one-way clutch.**

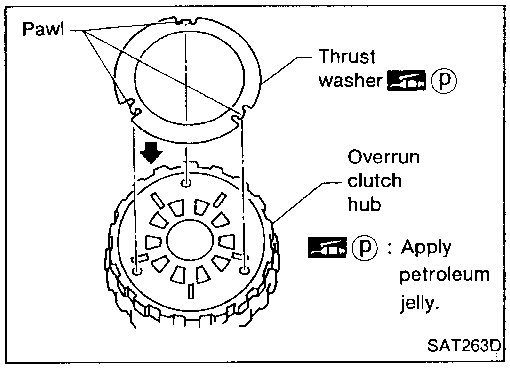

6. Install thrust washer on overrun clutch hub.
- **Apply petroleum jelly to thrust washer.**
- **Align pawls of thrust washer with holes of overrun clutch hub.**

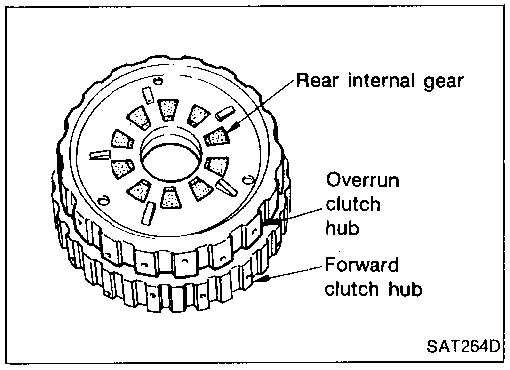

7. Install overrun clutch hub on rear internal gear.
- **Align projections of rear internal gear with holes of overrun clutch hub.**

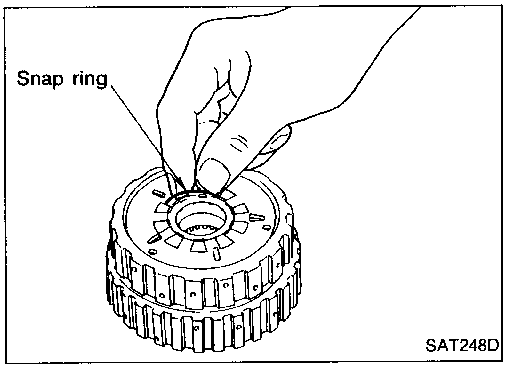

8. Install snap ring to groove of rear internal gear.

Output Shaft, Idler Gear, Reduction Pinion Gear and Bearing Retainer

SEC. 314

Idler gear
Lock nut ⊗
245 - 275 (25.0 - 28.0, 181 - 203)
Adjusting shim ★
Idler gear bearing (ATF)
Output shaft bearing adjusting shim ★
Output shaft bearing
Output shaft
Seal ring ⊗ (P)
Thrust needle bearing (P)
63 - 67 (6.4 - 6.8, 46 - 49)
Reduction pinion gear bearing outer race
Reduction pinion gear bearing (ATF)
Reduction pinion gear
Bearing retainer
18 - 20 (1.8 - 2.0, 13 - 14)
Radial needle bearing
Snap ring ⊗
Seal ring ⊗ (P)
Thrust needle bearing

: N•m (kg-m, ft-lb)
★ : Select proper thickness.
(P) : Apply petroleum jelly.
(ATF) : Apply ATF.

SAT332GA

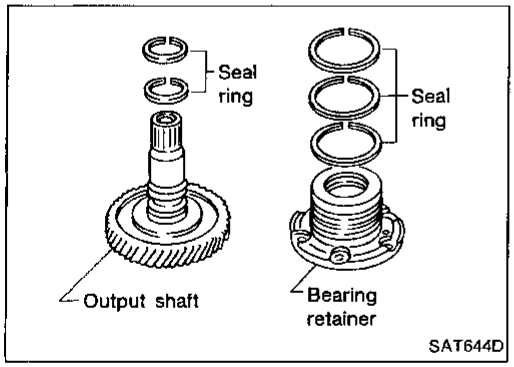

DISASSEMBLY

1. Remove seal rings from output shaft and bearing retainer.

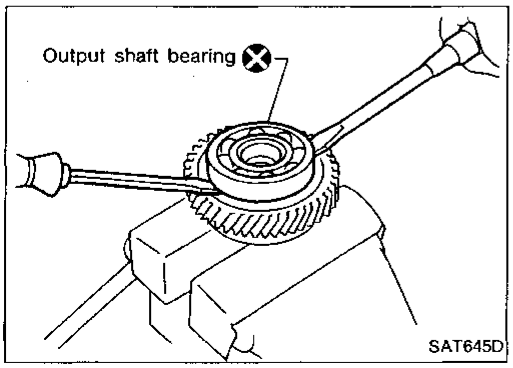

2. Remove output shaft bearing with screwdrivers.

- **Always replace bearing with a new one when removed.**
- **Do not damage output shaft.**

Output Shaft, Idler Gear, Reduction Pinion Gear and Bearing Retainer (Cont'd)

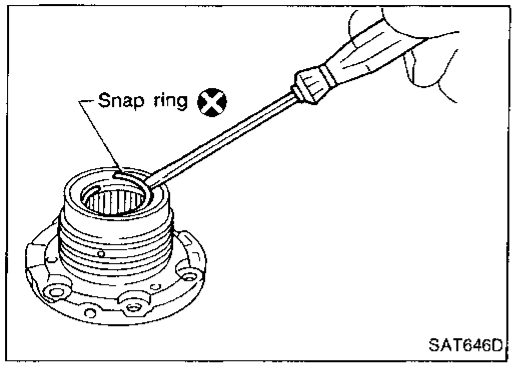

3. Remove snap ring from bearing retainer.

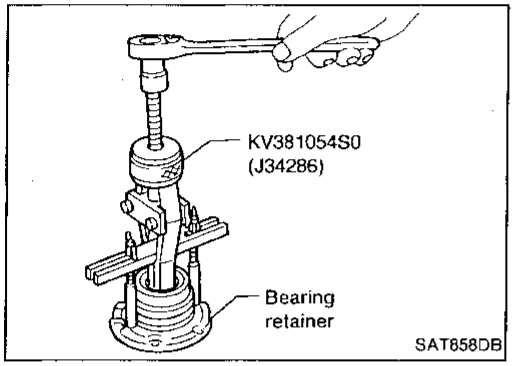

4. Remove needle bearing from bearing retainer.

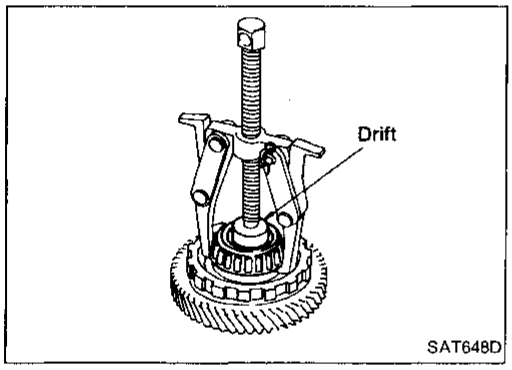

5. Remove idler gear bearing inner race from idler gear.

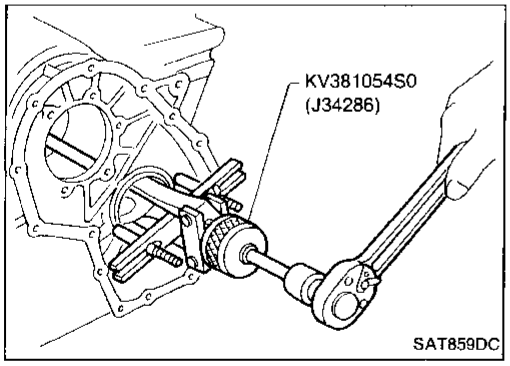

6. Remove idler gear bearing outer race from transmission case.

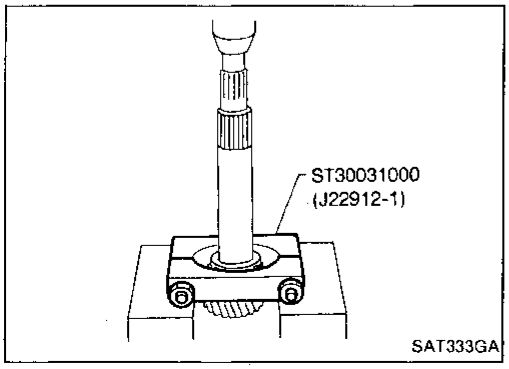

7. Press out reduction pinion gear bearing inner race from reduction pinion gear.

Output Shaft, Idler Gear, Reduction Pinion Gear and Bearing Retainer (Cont'd)

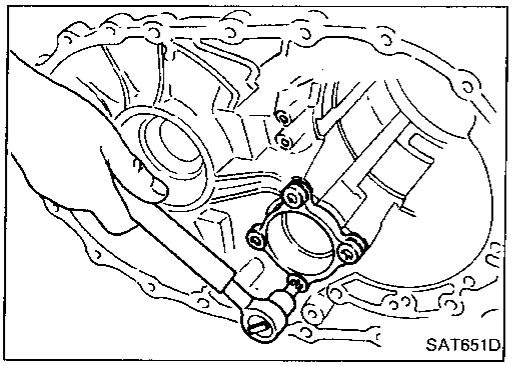

8. Remove reduction pinion gear bearing outer race from transmission case.

INSPECTION

Output shaft, idler gear and reduction pinion gear

- Check shafts for cracks, wear or bending.
- Check gears for wear, chips and cracks.

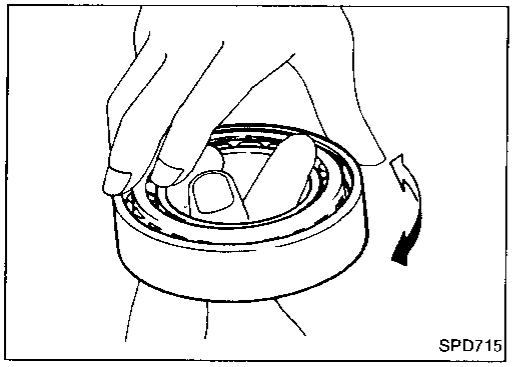

Bearing

- Make sure bearings roll freely and are free from noise, cracks, pitting or wear.
- **When replacing taper roller bearing, replace outer and inner race as a set.**

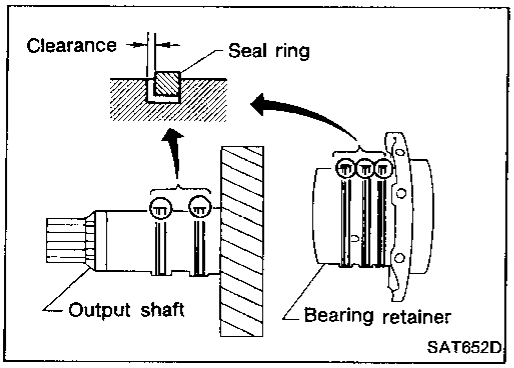

Seal ring clearance

- Install new seal rings to output shaft.
- Measure clearance between seal ring and ring groove of output shaft.
  Standard clearance:
  0.10 - 0.25 mm (0.0039 - 0.0098 in)
  Allowable limit:
  0.25 mm (0.0098 in)
- If not within allowable limit, replace output shaft.
- Install new seal rings to bearing retainer.
- Measure clearance between seal ring and ring groove of bearing retainer.
  Standard clearance:
  0.10 - 0.25 mm (0.0039 - 0.0098 in)
  Allowable limit:
  0.25 mm (0.0098 in)
- If not within allowable limit, replace bearing retainer.

Output Shaft, Idler Gear, Reduction Pinion Gear and Bearing Retainer (Cont'd)

ASSEMBLY

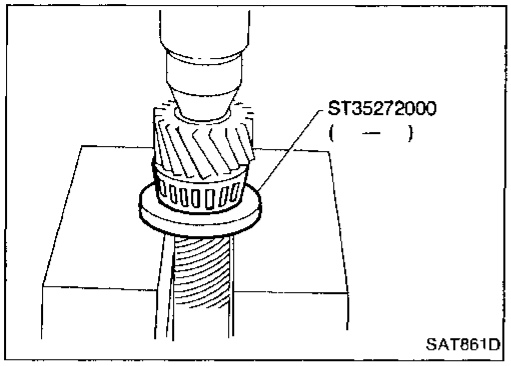

1. Press reduction pinion gear bearing inner race on reduction pinion gear.

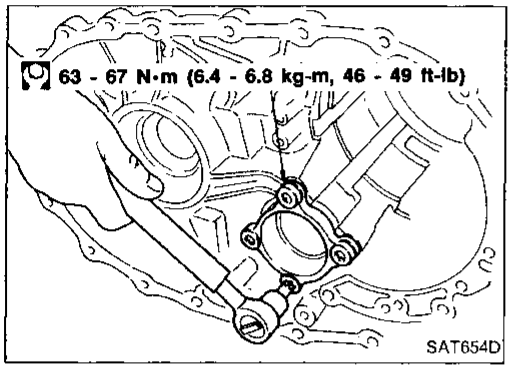

2. Install reduction pinion gear bearing outer race on transmission case.

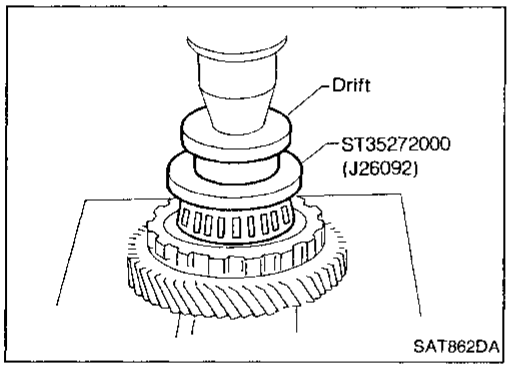

3. Press idler gear bearing inner race on idler gear.

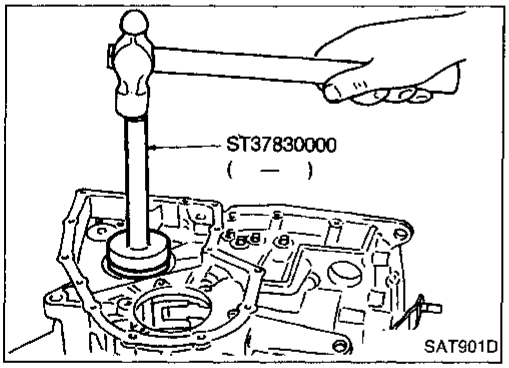

4. Install idler gear bearing outer race on transmission case.

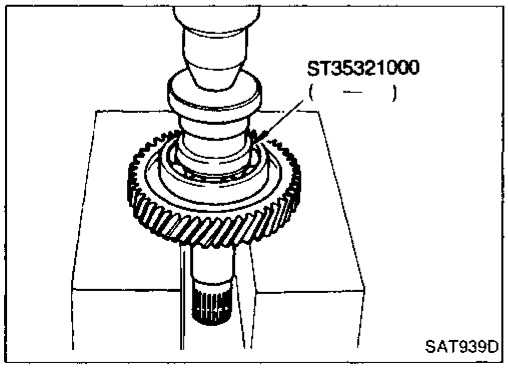

5. Press output shaft bearing on output shaft.

Output Shaft, Idler Gear, Reduction Pinion Gear and Bearing Retainer (Cont'd)

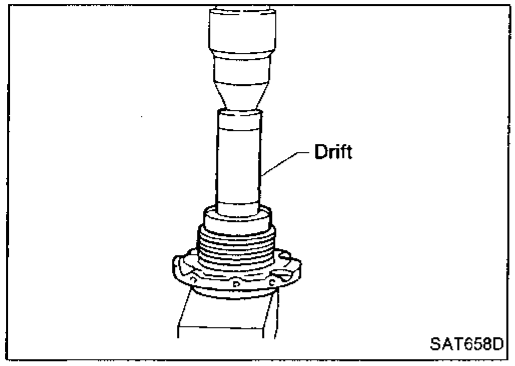

6. Press needle bearing on bearing retainer.

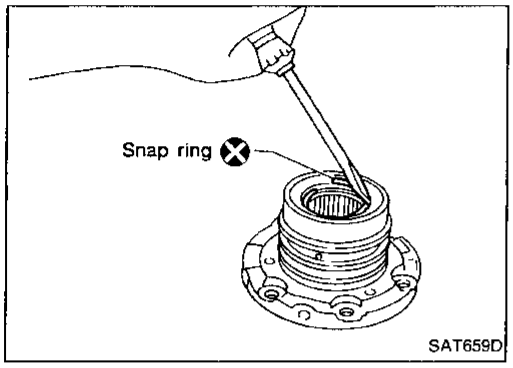

7. Install snap ring to bearing retainer.

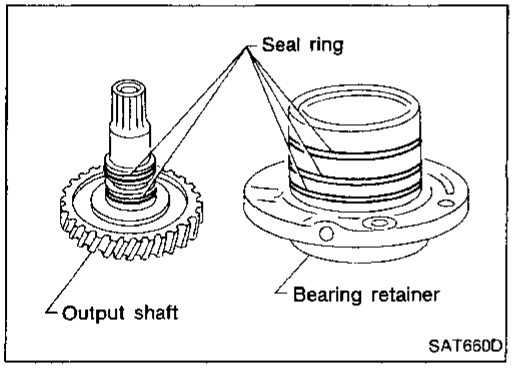

8. After packing ring grooves with petroleum jelly, carefully install new seal rings on output shaft and bearing retainer.

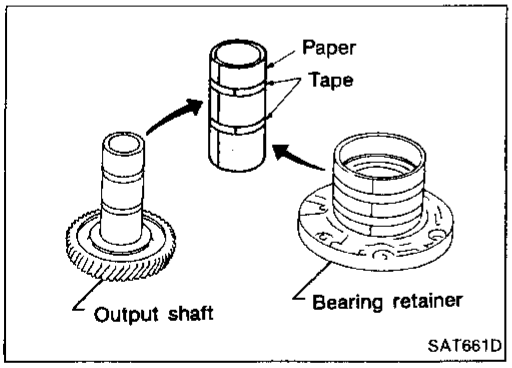

- **Roll paper around seal rings to prevent seal rings from spreading.**

Band Servo Piston Assembly

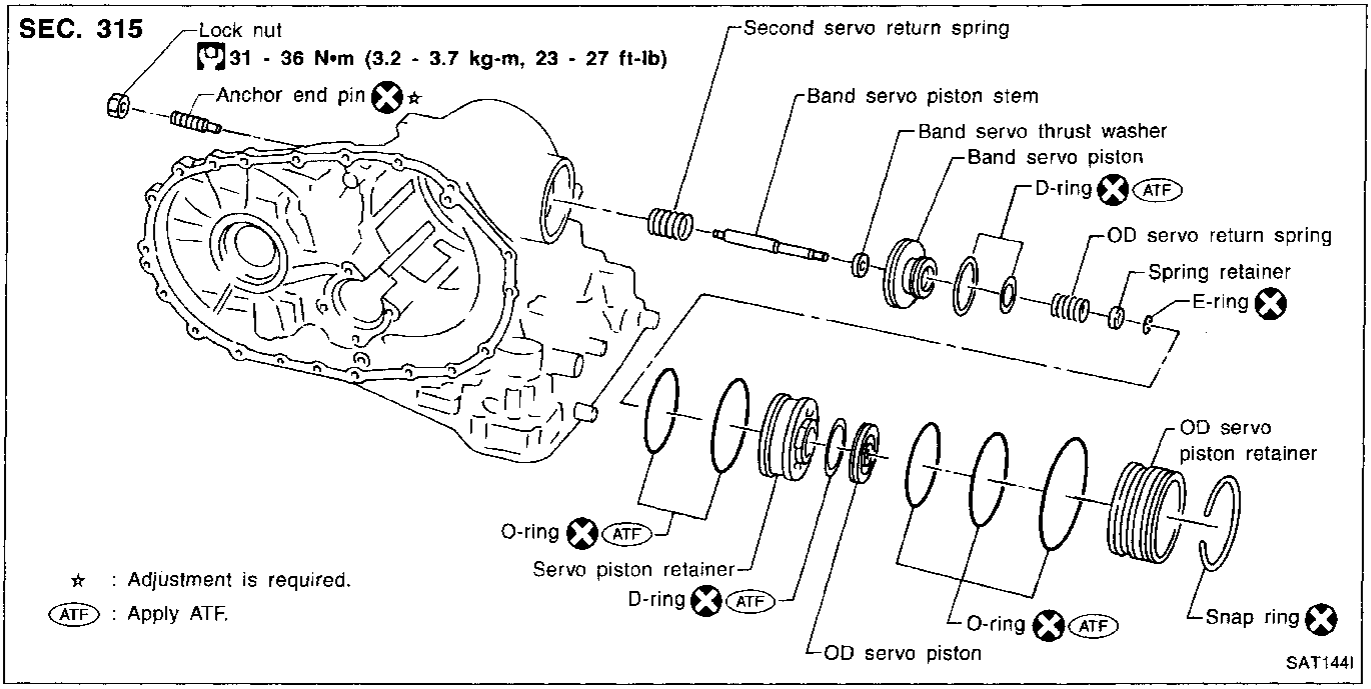

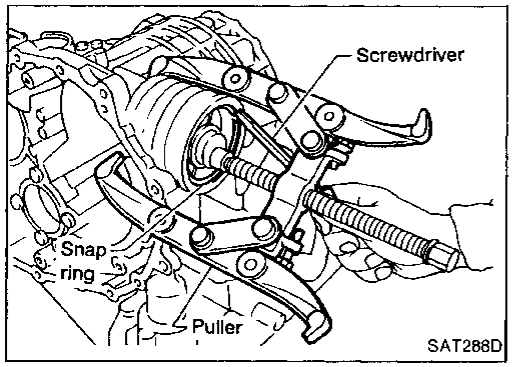

DISASSEMBLY

1. Remove band servo piston snap ring.

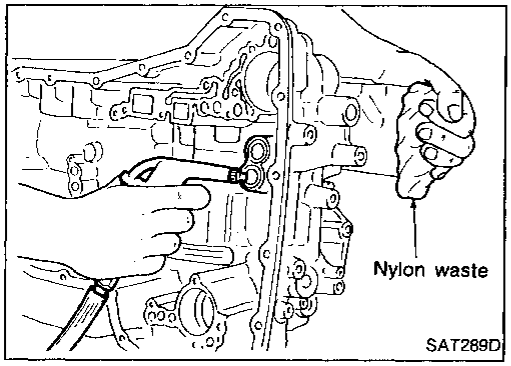

2. Apply compressed air to oil hole in transmission case to remove OD servo piston retainer and band servo piston assembly.
- **Hold band servo piston assembly with a rag.**

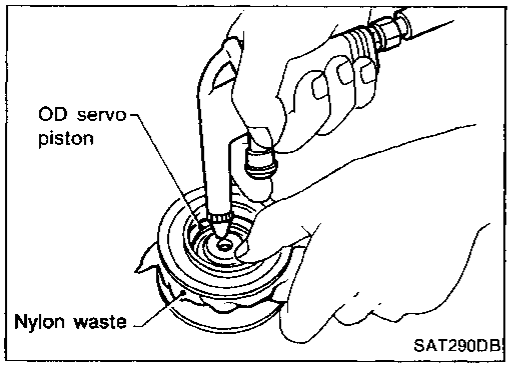

3. Apply compressed air to oil hole in OD servo piston retainer to remove OD servo piston from retainer.
- **Hold OD servo piston while applying compressed air.**

Band Servo Piston Assembly (Cont'd)

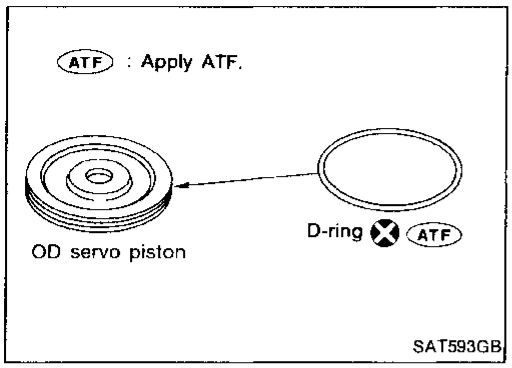

4. Remove D-ring from OD servo piston.

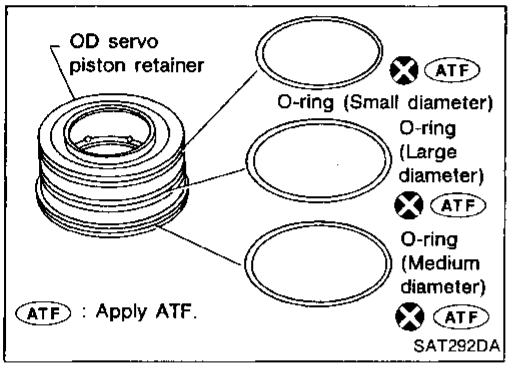

5. Remove O-rings from OD servo piston retainer.

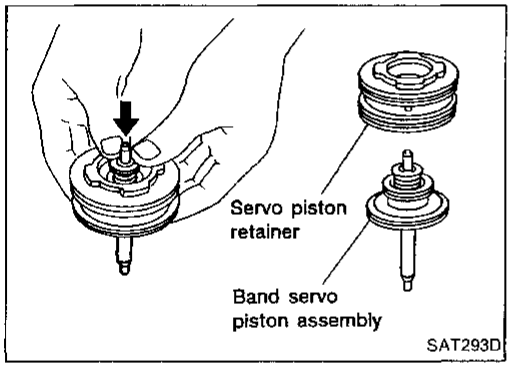

6. Remove band servo piston assembly from servo piston retainer by pushing it forward.

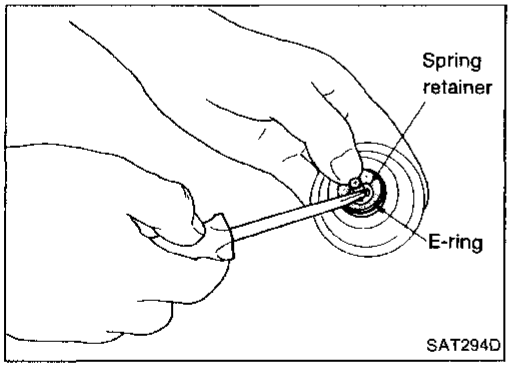

7. Place piston stem end on a wooden block. While pushing servo piston spring retainer down, remove E-ring.

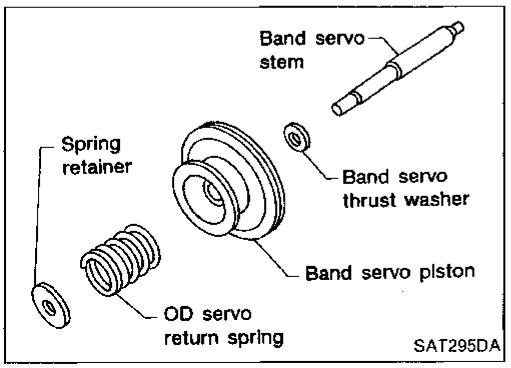

8. Remove OD servo return spring, band servo thrust washer and band servo piston stem from band servo piston.

Band Servo Piston Assembly (Cont'd)

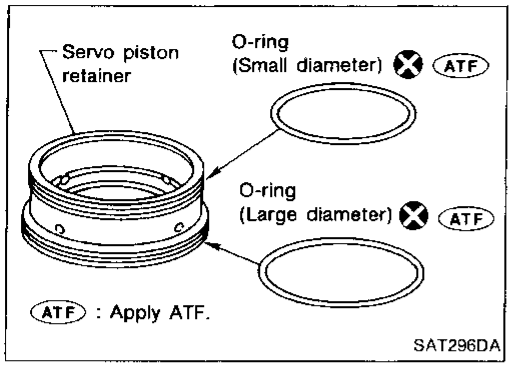

9. Remove O-rings from servo piston retainer.

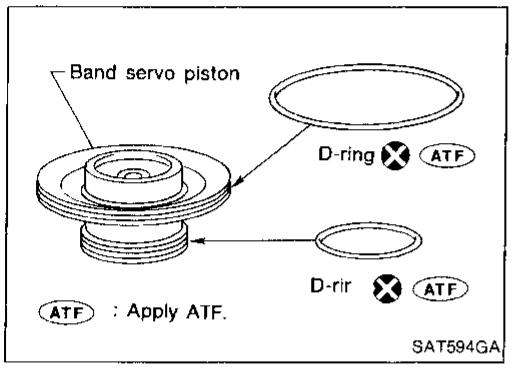

10. Remove D-rings from band servo piston.

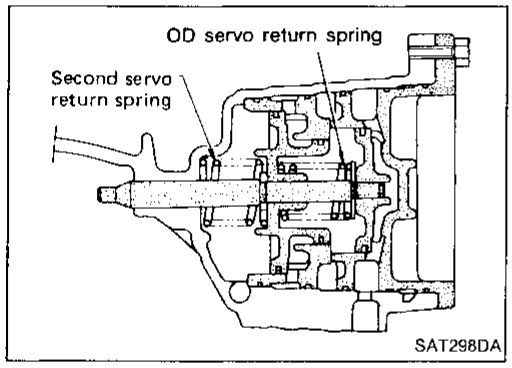

INSPECTION

Pistons, retainers and piston stem

- Check frictional surfaces for abnormal wear or damage.

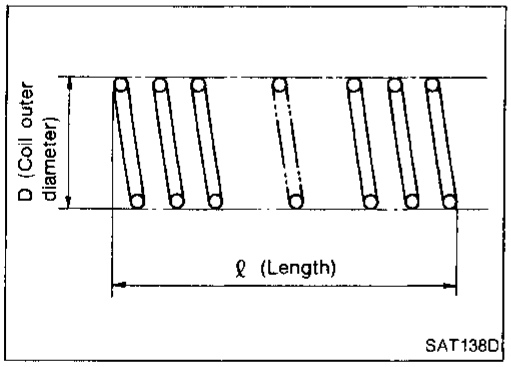

Return springs

- Check for deformation or damage.
- Measure free length and outer diameter.
  Inspection standard:
  Refer to SDS, AT-244.

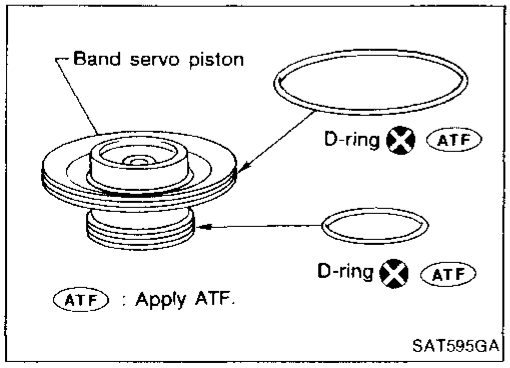

ASSEMBLY

1. Install D-rings to servo piston retainer.

- **Apply ATF to O-rings.**
- **Pay attention to position of each O-ring.**

Band Servo Piston Assembly (Cont'd)

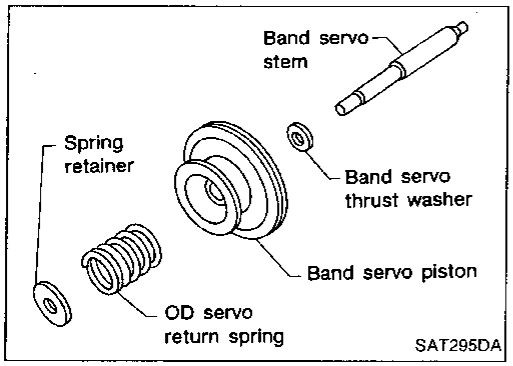

2. Install band servo piston stem, band servo thrust washer, OD servo return spring and spring retainer to band servo piston.

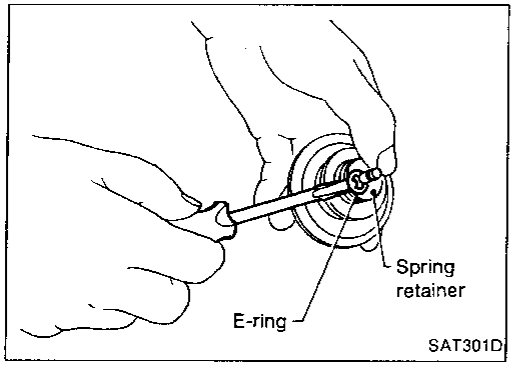

3. Place piston stem end on a wooden block. While pushing servo piston spring retainer down, install E-ring.

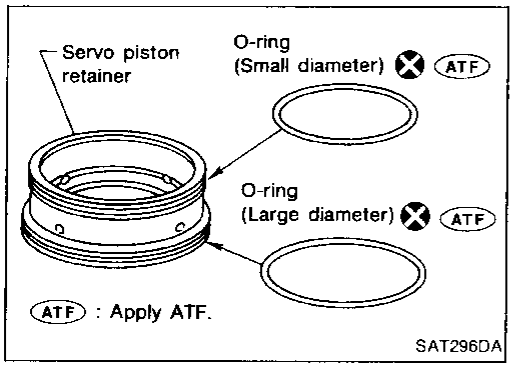

4. Install O-rings to servo piston retainer.
- **Apply ATF to O-rings.**
- **Pay attention to the positions of the O-rings.**

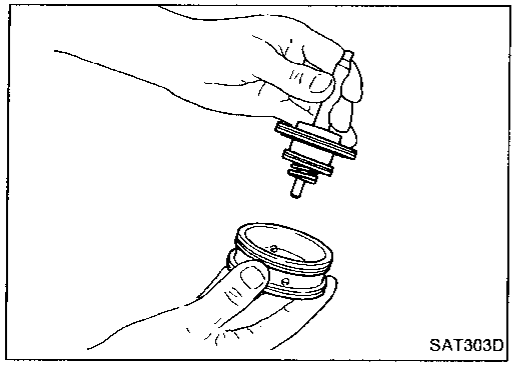

5. Install band servo piston assembly to servo piston retainer by pushing it inward.

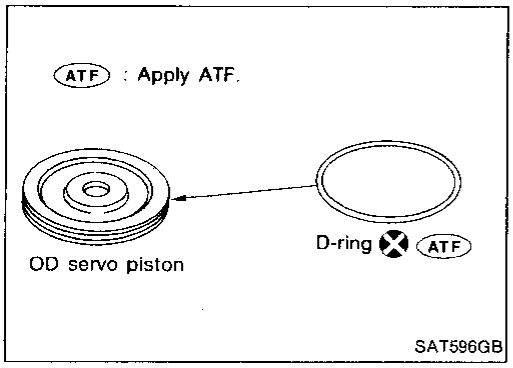

6. Install D-ring to OD servo piston.
- **Apply ATF to D-ring.**

Band Servo Piston Assembly (Cont'd)

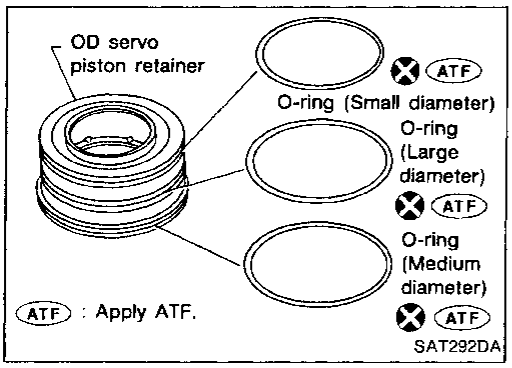

7. Install O-rings to OD servo piston retainer.
- **Apply ATF to O-rings.**
- **Pay attention to the positions of the O-rings.**

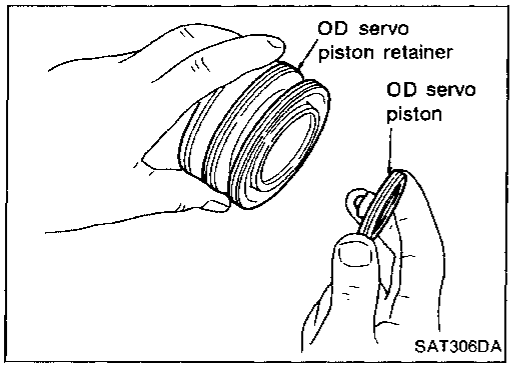

8. Install OD servo piston to OD servo piston retainer.

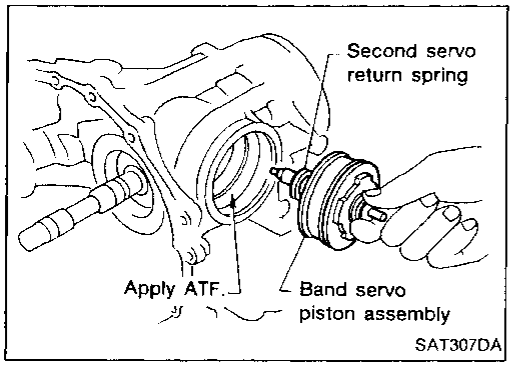

9. Install band servo piston assembly and 2nd servo return spring to transmission case.
- **Apply ATF to O-ring of band servo piston and transmission case.**

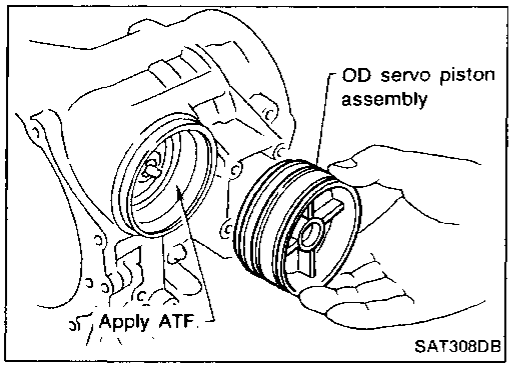

10. Install OD servo piston assembly to transmission case.
- **Apply ATF to O-ring of band servo piston and transmission case.**

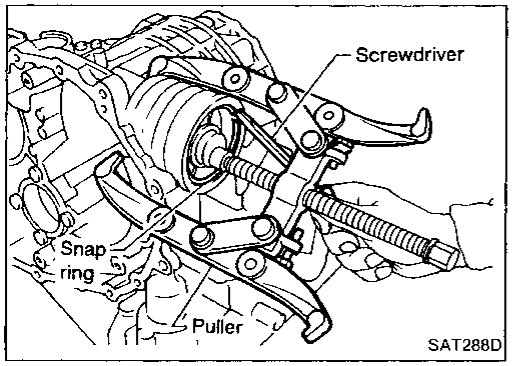

11. Install band servo piston snap ring to transmission case.

Final Drive

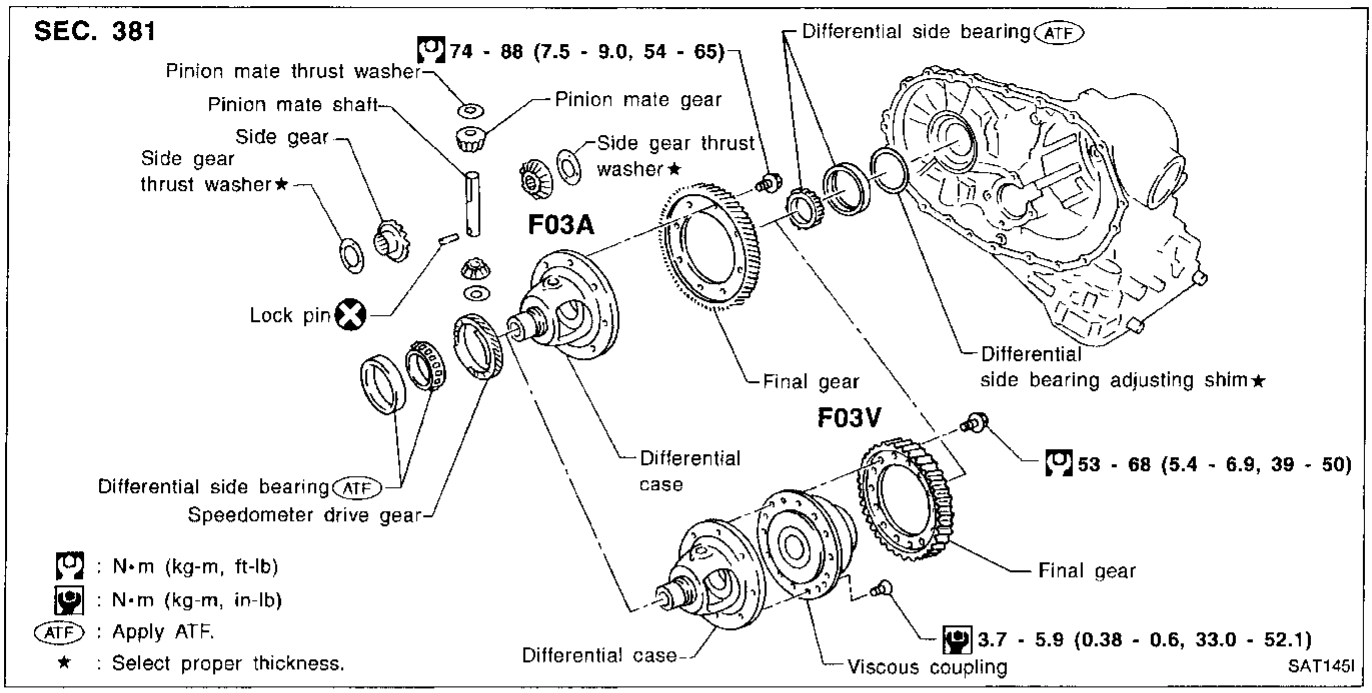

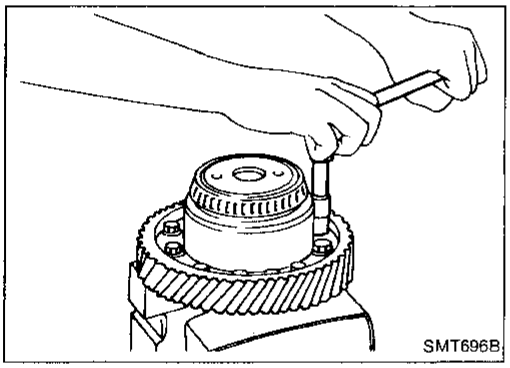

DISASSEMBLY

1. Remove final gear.

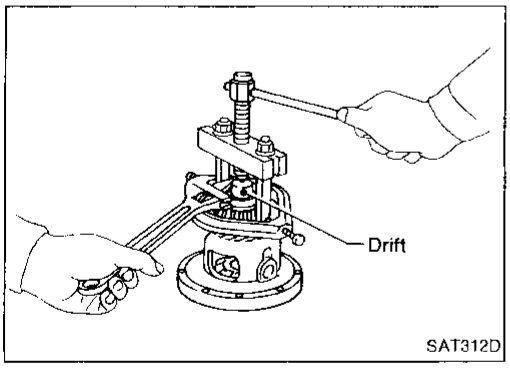

2. Press out differential side bearings.

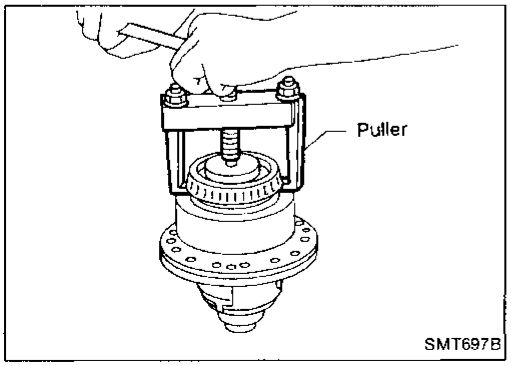

Final Drive (Cont'd)

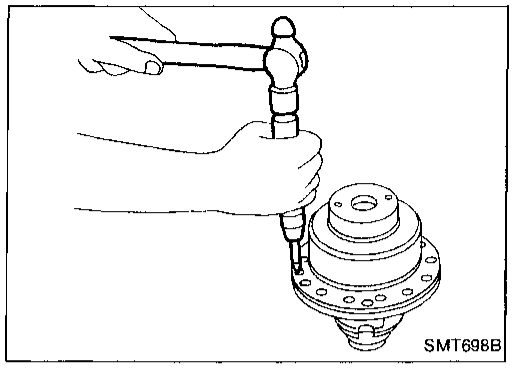

3. Remove viscous coupling — RE4F03V.

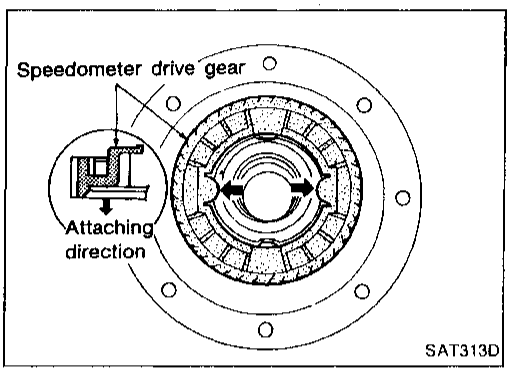

4. Remove speedometer drive gear.

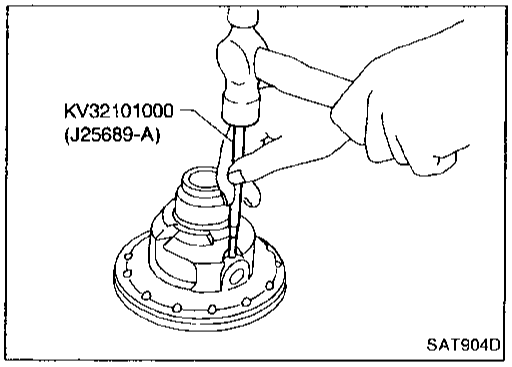

5. Drive out pinion mate shaft lock pin.

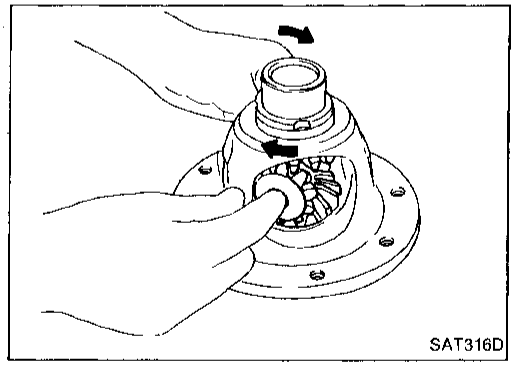

6. Draw out pinion mate shaft from differential case.
7. Remove pinion mate gears and side gears.

Final Drive (Cont'd)

INSPECTION

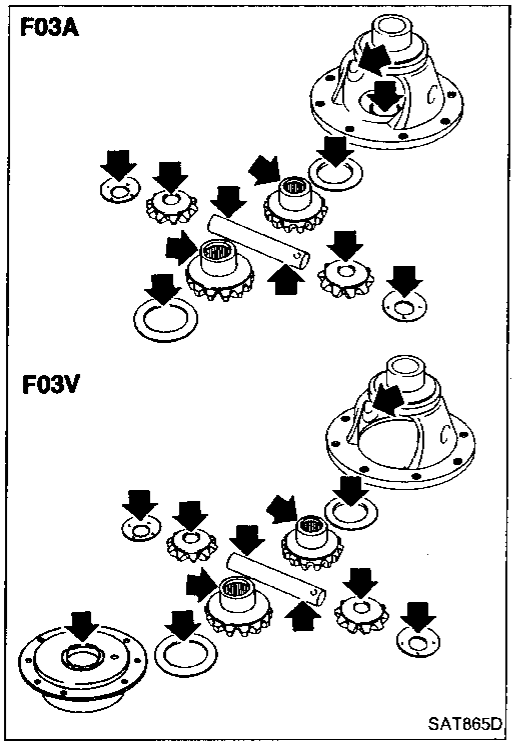

Gear, washer, shaft and case

- Check mating surfaces of differential case, side gears, pinion mate gears and viscous coupling.
- Check washers for wear.

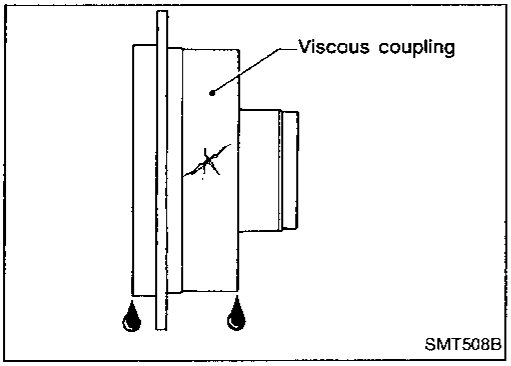

Viscous coupling — RE4F03V

- Check case for cracks.
- Check silicone oil for leakage.

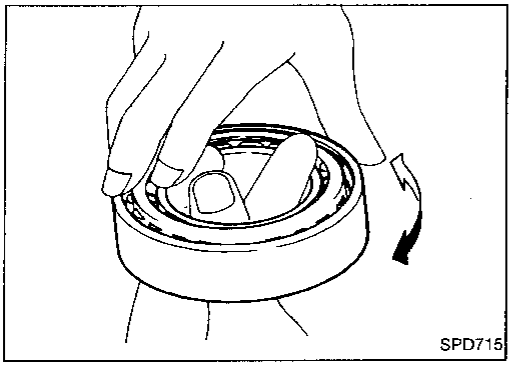

Bearings

- Make sure bearings roll freely and are free from noise, cracks, pitting or wear.
- **When replacing taper roller bearing, replace outer and inner race as a set.**

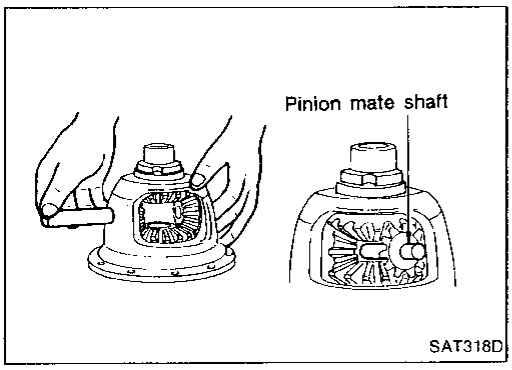

ASSEMBLY

1. Install side gear and thrust washers in differential case.
2. Install pinion mate gears and thrust washers in differential case while rotating them.

- **When inserting, be careful not to damage pinion mate gear washers.**
- **Apply ATF to any parts.**

Final Drive (Cont'd)

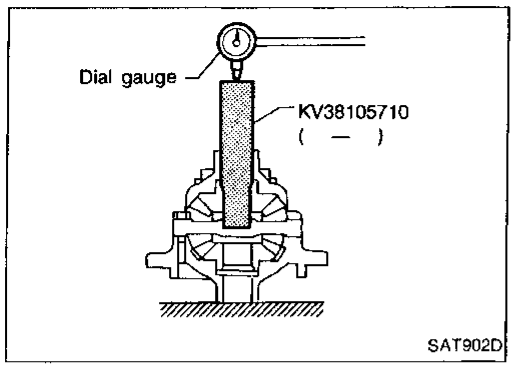

— RE4F03A —

3. Measure clearance between side gear and differential case with washers using the following procedure.
a. Set Tool and dial indicator on side gear.
b. Move side gear up and down to measure dial indicator deflection. Always measure indicator deflection on both side gears.

   Clearance between side gear and differential case with washers:

   0.1 - 0.2 mm (0.004 - 0.008 in)

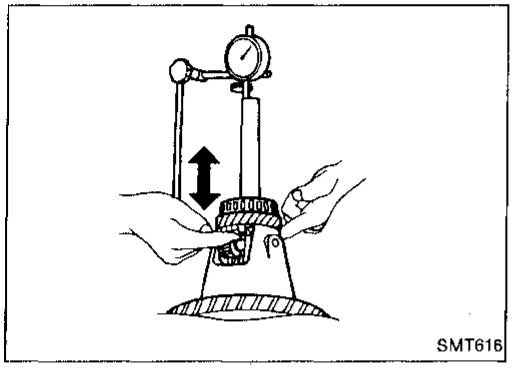

c. If not within specifications, adjust clearance by changing thickness of side gear thrust washers.

   Side gear thrust washer:

   Refer to SDS, AT-240.

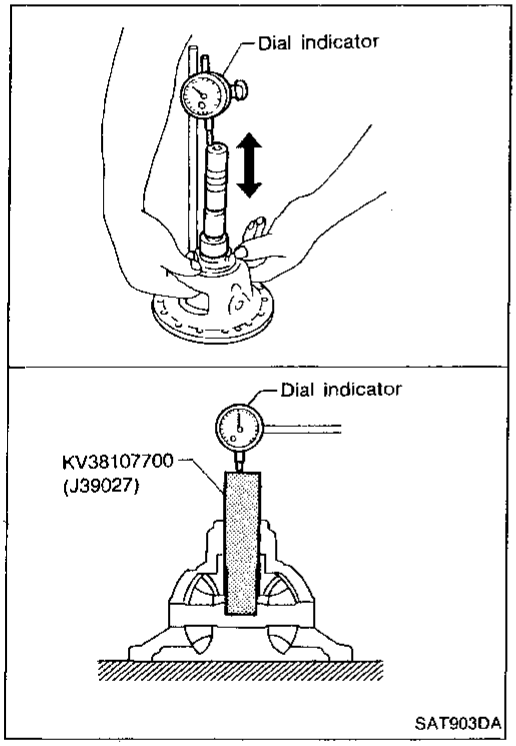

— RE4F03V —

3. Measure clearance between side gear and differential case & viscous coupling with washers using the following procedure:

Differential case side

a. Set Tool and dial indicator on side gear.
b. Move side gear up and down to measure dial indicator deflection.

   Clearance between side gear and differential case with washers:

   0.1 - 0.2 mm (0.004 - 0.008 in)

c. If not within specification adjust clearance by changing thickness of side gear thrust washer.

   Side gear thrust washers for differential case side:

   Refer to SDS, AT-240.

Final Drive (Cont'd)

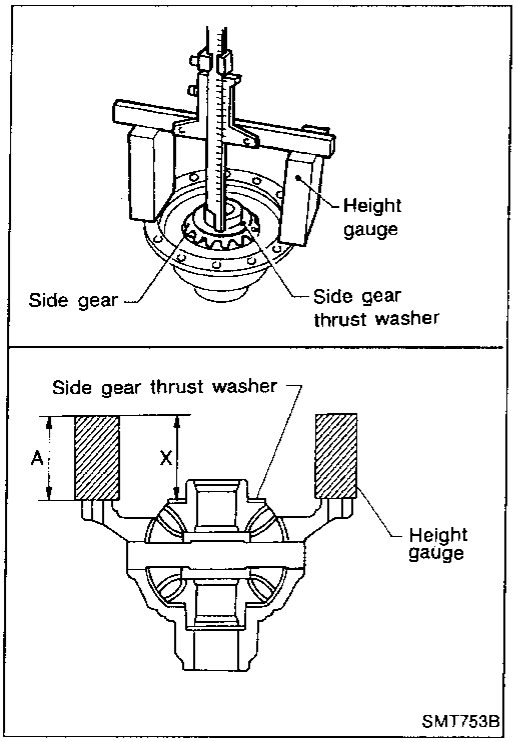

Viscous coupling side

a. Place side gear and thrust washer on pinion mate gears installed on differential case.

b. Measure dimension X.

- **Measure dimension X in at least two places.**

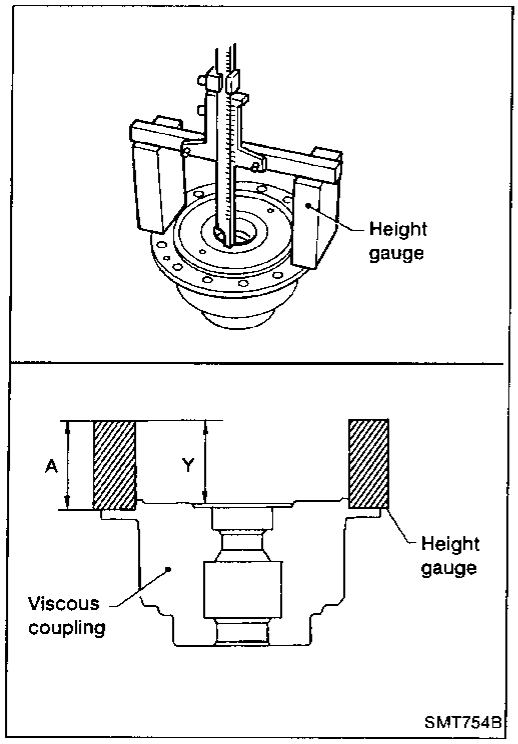

c. Measure dimension Y.

- **Measure dimension Y in at least two places.**
  Clearance between side gear and viscous coupling
  = X + Y – 2A: 0.1 - 0.2 mm (0.004 - 0.008 in)
  A: Height of gauge

d. If not within specification, adjust clearance by changing thickness of side gear thrust washer.
   Side gear thrust washers for viscous coupling side:
   Refer to SDS, AT-240.

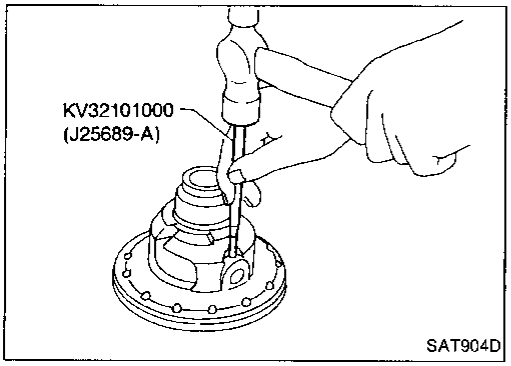

4. Install lock pin.

- **Make sure that lock pin is flush with case.**

Final Drive (Cont'd)

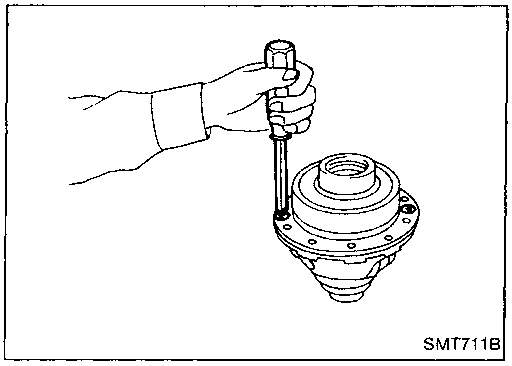

5. Install side gear (viscous coupling side) on differential case and then install viscous coupling — RE4F03V.

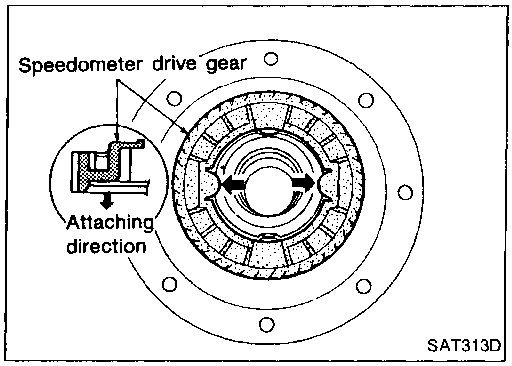

6. Install speedometer drive gear on differential case.
- **Align the projection of speedometer drive gear with the groove of differential case.**

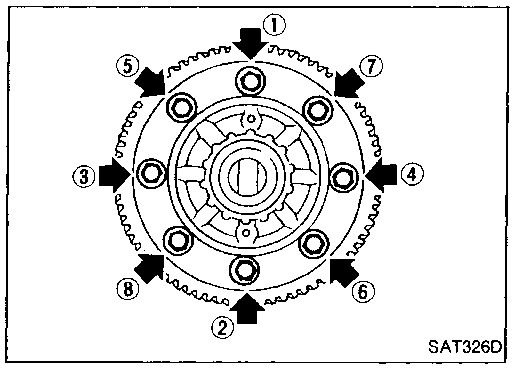

7. Install final gear and tighten fixing bolts in numerical order.

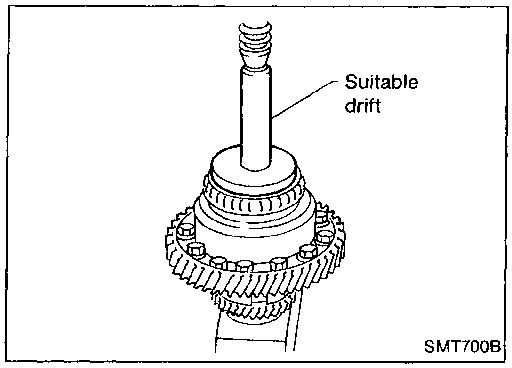

8. Press on differential side bearings.

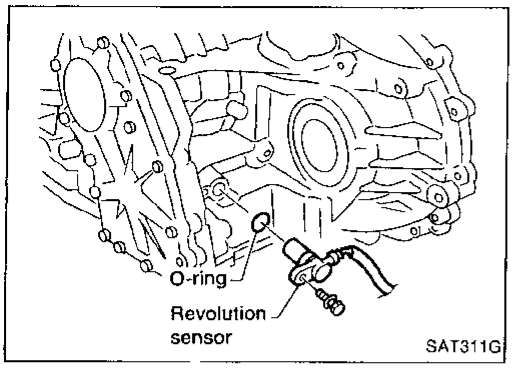

Assembly 1

1. Install revolution sensor onto transmission case.
- **Always use new sealing parts.**

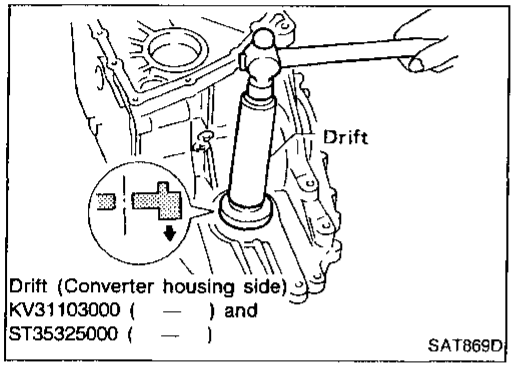

2. Install differential side oil seals on transmission case and converter housing, so that "A" and "B" are within specifications.

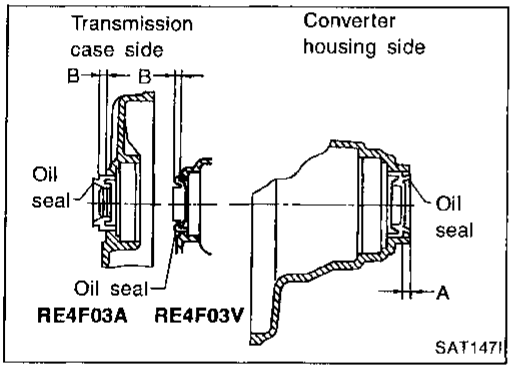

Unit: mm (in)

A	B
5.5 - 6.5 (0.217 - 0.256)	0.5 (0.020) or less

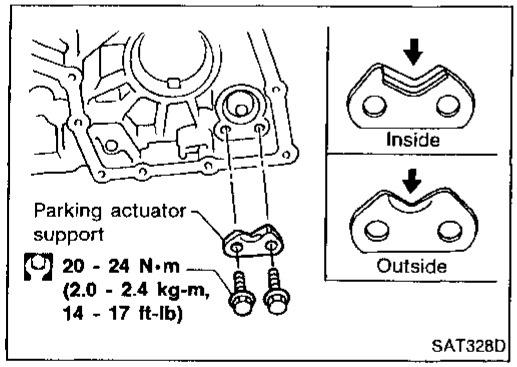

3. Install parking actuator support to transmission case.
- **Pay attention to direction of parking actuator support.**

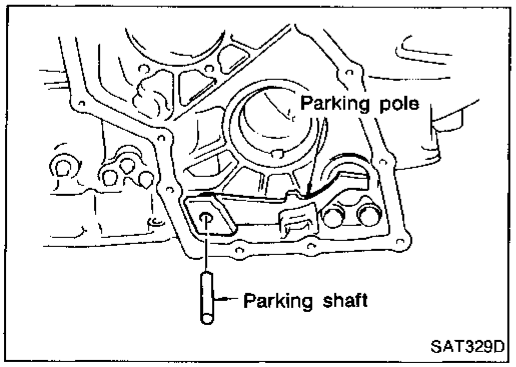

4. Install parking pawl on transmission case and fix it with parking shaft.

Assembly 1 (Cont'd)

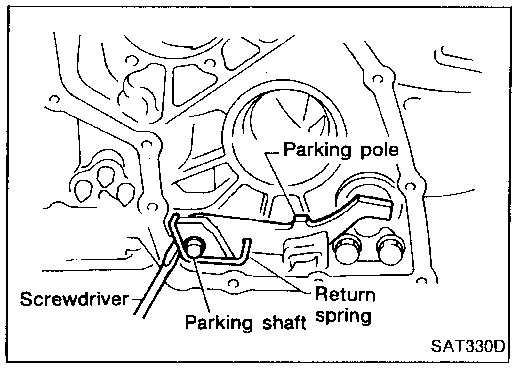

5. Install return spring.

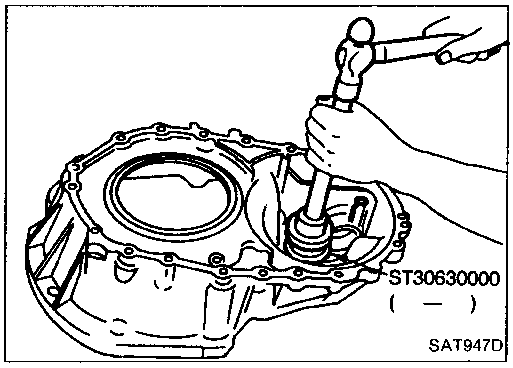

Adjustment 1

DIFFERENTIAL SIDE BEARING PRELOAD

1. Install differential side bearing outer race without adjusting shim on transmission case.
2. Install differential side bearing outer race on converter housing.

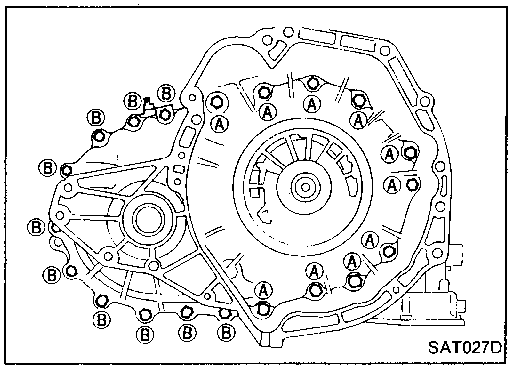

3. Place final drive assembly on transmission case.
4. Install transmission case on converter housing. Tighten transmission case fixing bolts Ⓐ and Ⓑ to the specified torque.

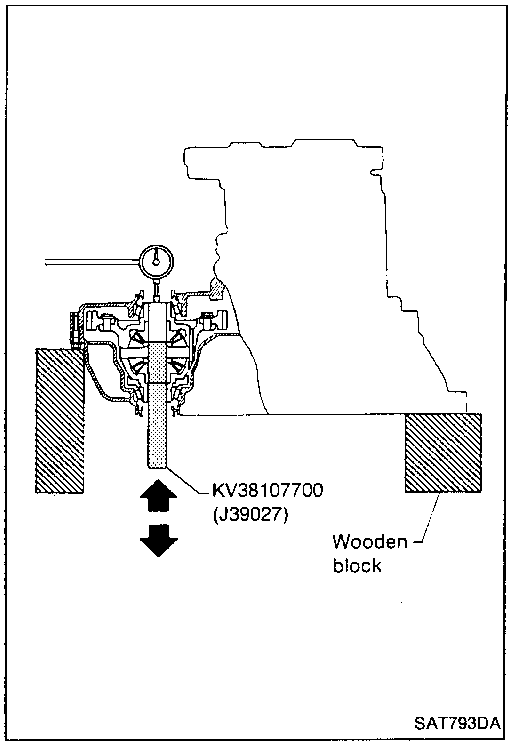

5. Attach dial indicator on differential case at transmission case side.
6. Insert Tool into differential side gear from converter housing.
7. Move Tool up and down and measure dial indicator deflection.
8. Select proper thickness of differential side bearing adjusting shim(s) using SDS table as a guide.

   Differential side bearing adjusting shim:
   Refer to SDS, AT-241.

Adjustment 1 (Cont'd)

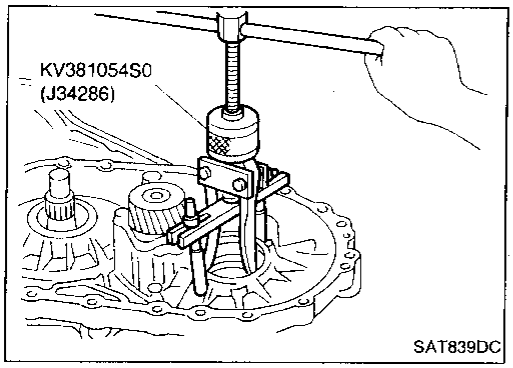

9. Remove converter housing from transmission case.
10. Remove final drive assembly from transmission case.
11. Remove differential side bearing outer race from transmission case.
12. Reinstall differential side bearing outer race and shim(s) selected from SDS table on transmission case.
13. Reinstall converter housing on transmission case and tighten transmission case fixing bolts to the specified torque.

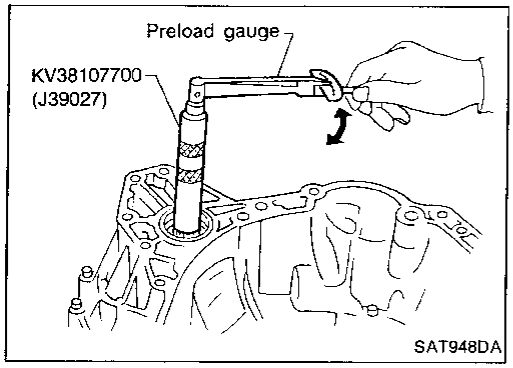

14. Insert Tool into differential case and measure turning torque of final drive assembly.

- **Turn final drive assembly in both directions several times to seat bearing rollers correctly.**
  Turning torque of final drive assembly (New bearing):
  0.49 - 1.08 N·m (5.0 - 11.0 kg-cm, 4.3 - 9.5 in-lb)
- **When old bearing is used again, turning torque will be slightly less than the above.**
- **Make sure torque is close to the specified range.**

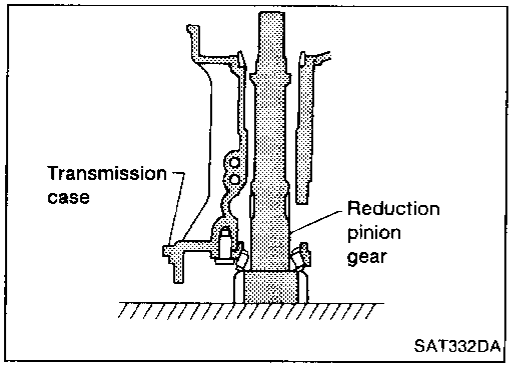

REDUCTION PINION GEAR BEARING PRELOAD

1. Remove transmission case and final drive assembly from converter housing.
2. Select proper thickness of reduction pinion gear bearing adjusting shim using the following procedures.

a. Place reduction pinion gear on transmission case as shown.

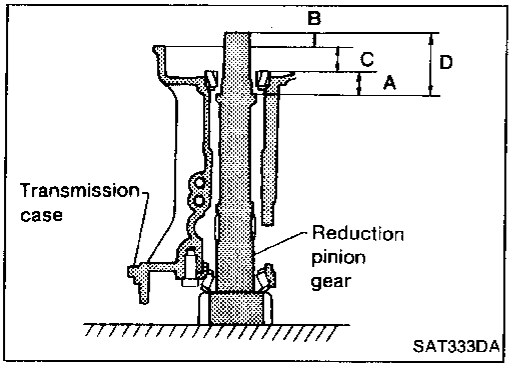

b. Place idler gear bearing on transmission case.
c. Measure dimensions "B" "C" and "D" and calculate dimension "A".

A = D – (B + C)

"A": Distance between the surface of idler gear bearing and the adjusting shim mating surface of reduction pinion gear.

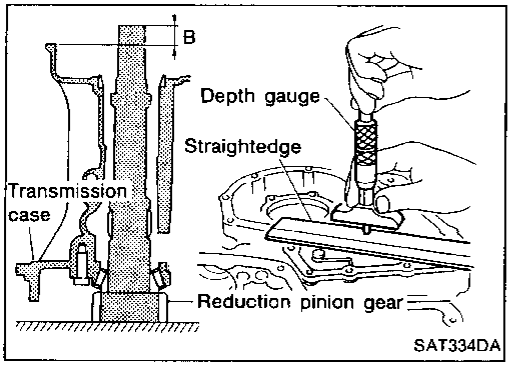

- Measure dimension "B" between the end of reduction pinion gear and the surface of transmission case.
- **Measure dimension "B" in at least two places.**

Adjustment 1 (Cont'd)

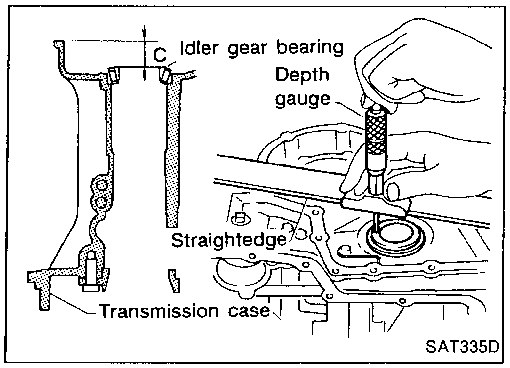

- Measure dimension "C" between the surface of idler gear bearing inner race and the surface of transmission case.
- **Measure dimension "C" in at least two places.**

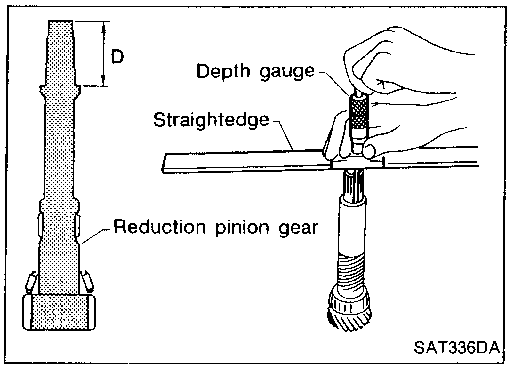

- Measure dimension "D" between the end of reduction pinion gear and the adjusting shim mating surface of reduction pinion gear.
- **Measure dimension "D" in at least two places.**
- Calculate dimension "A"
  A = D – (B + C)

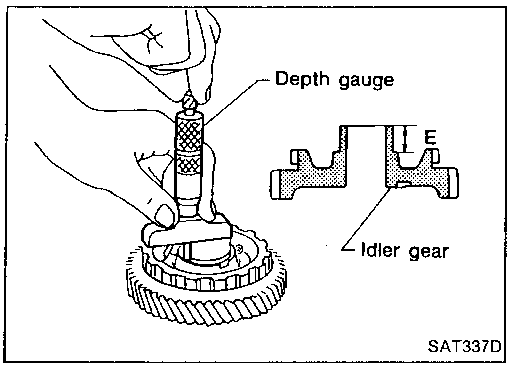

d. Measure dimension "E" between the end of idler gear and the idler gear bearing inner race mating surface of idler gear.
- **Measure dimension "E" in at least two places.**

e. Calculate "T" and select proper thickness of reduction pinion gear bearing adjusting shim using SDS table as a guide.
   T = A – E
   Reduction pinion gear bearing adjusting shim:
   Refer to SDS, AT-242.

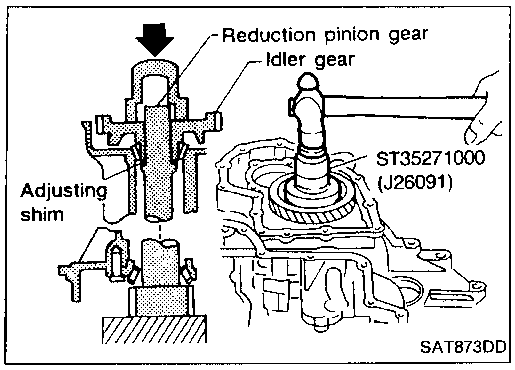

3. Install reduction pinion gear and reduction pinion gear bearing adjusting shim selected in step 2-e on transmission case.
4. Press idler gear bearing inner race on idler gear.
5. Press idler gear on reduction pinion gear.
- **Press idler gear until idler gear fully contacts adjusting shim.**

Adjustment 1 (Cont'd)

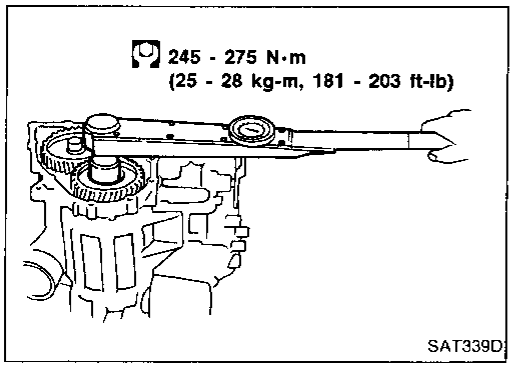

6. Tighten idler gear lock nut to the specified torque.
- **Lock idler gear with parking pawl when tightening lock nut.**

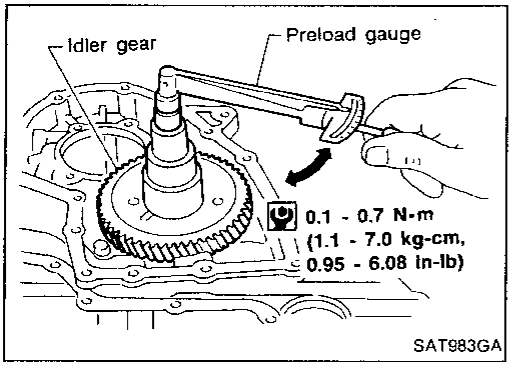

7. Measure turning torque of reduction pinion gear.
- **When measuring turning torque, turn reduction pinion gear in both directions several times to seat bearing rollers correctly.**

  Turning torque of reduction pinion gear:
  0.1 - 0.7 N·m (1.1 - 7.0 kg-cm, 0.95 - 6.08 in-lb)

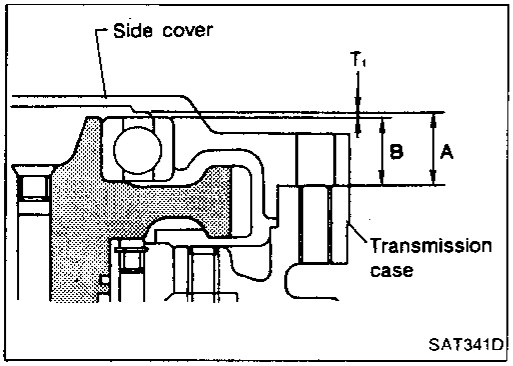

OUTPUT SHAFT END PLAY

- Measure clearance between side cover and the end of the output shaft bearing.
- Select proper thickness of adjusting shim so that clearance is within specifications.

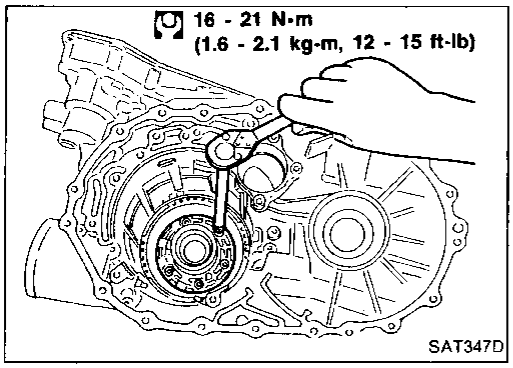

1. Install bearing retainer for output shaft.

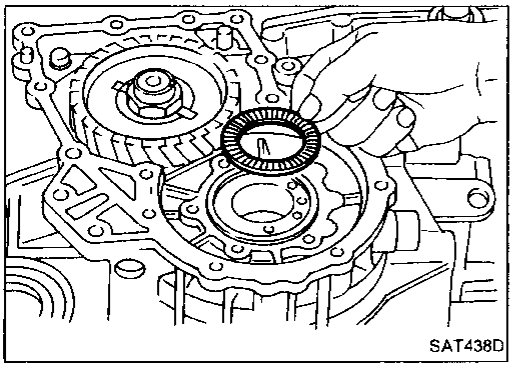

2. Install output shaft thrust needle bearing on bearing retainer.

Adjustment 1 (Cont'd)

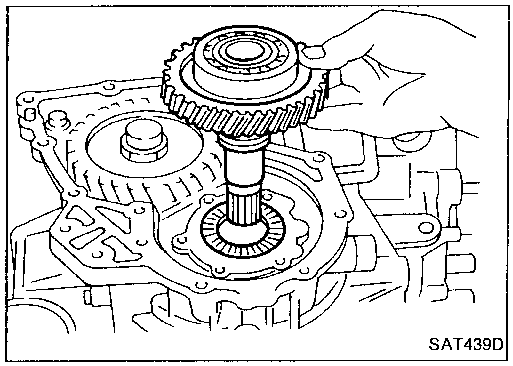

3. Install output shaft on transmission case.

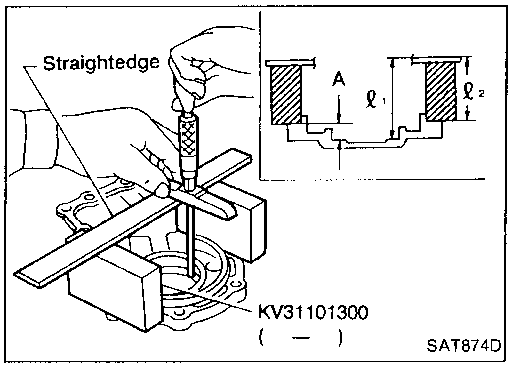

4. Measure dimensions "ℓ_1" and "ℓ_2" at side cover and then calculate dimension "A".
- **Measure dimension "ℓ_1" and "ℓ_2" in at least two places.**
- **"A": Distance between transmission case fitting surface and adjusting shim mating surface.**
  $A = \ell_1 - \ell_2$ ℓ_2: Height of gauge

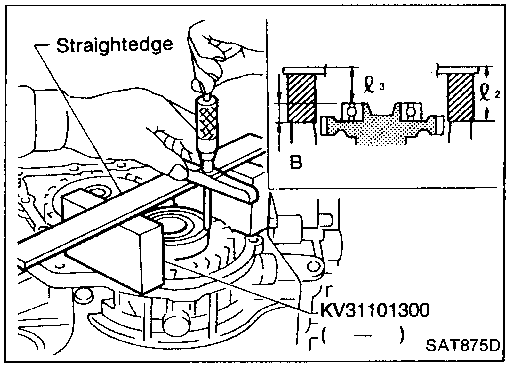

5. Measure dimensions "ℓ_2" and "ℓ_3" and then calculate dimension "B".
- **Measure "ℓ_2" and "ℓ_3" in at least two places.**
- **"B": Distance between the end of output shaft bearing outer race and the side cover fitting surface of transmission case.**
  $B = \ell_2 - \ell_3$ ℓ_2: Height of gauge

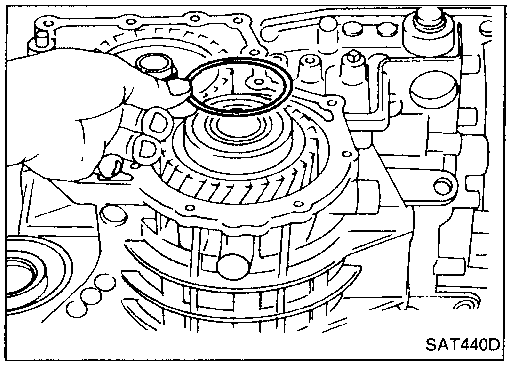

6. Select proper thickness of adjusting shim so that output shaft end play (clearance between side cover and output shaft bearing) is within specifications.
   Output shaft end play (A – B):
   0 - 0.5 mm (0 - 0.020 in)
   Output shaft end play adjusting shim:
   Refer to SDS, AT-243.
7. Install adjusting shim on output shaft bearing.

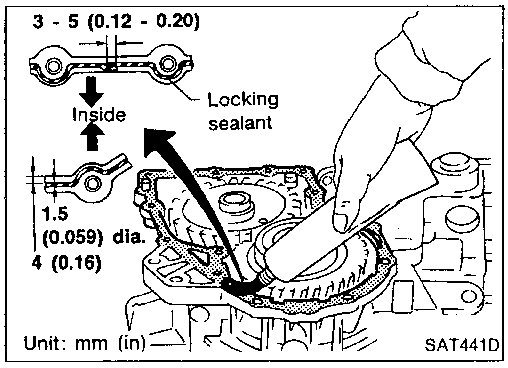

8. Apply locking sealant to transmission case as shown in illustration.

Adjustment 1 (Cont'd)

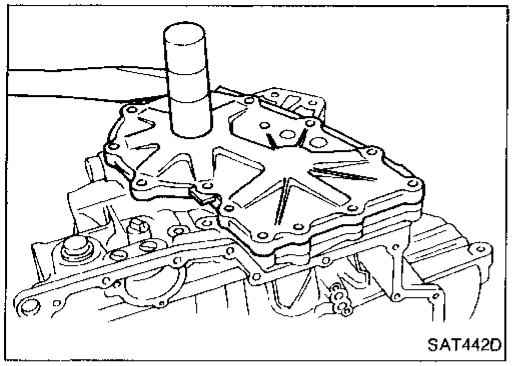

9. Install side cover on transmission case.
- **Apply locking sealant to the mating surface of transmission case.**

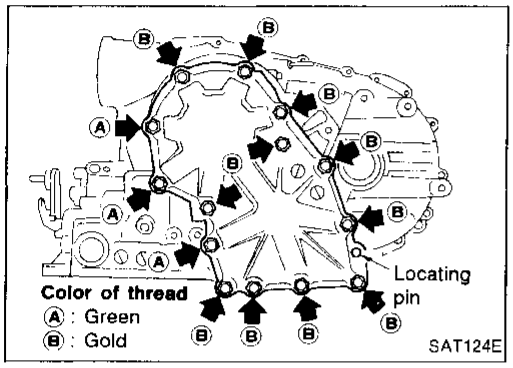

10. Tighten side cover fixing bolts to specified torque.
- **Do not mix bolts Ⓐ and Ⓑ.**
- **Always replace bolts Ⓐ as they are self-sealing bolts.**

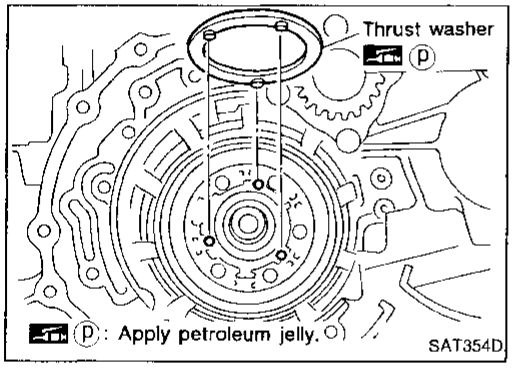

Assembly 2

1. Remove paper rolled around bearing retainer.
2. Install thrust washer on bearing retainer.
- **Apply petroleum jelly to thrust washer.**

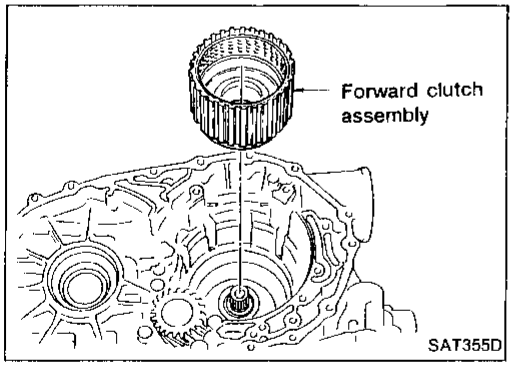

3. Install forward clutch assembly.
- **Align teeth of low & reverse brake drive plates before installing.**
- **Make sure that bearing retainer seal rings are not spread.**

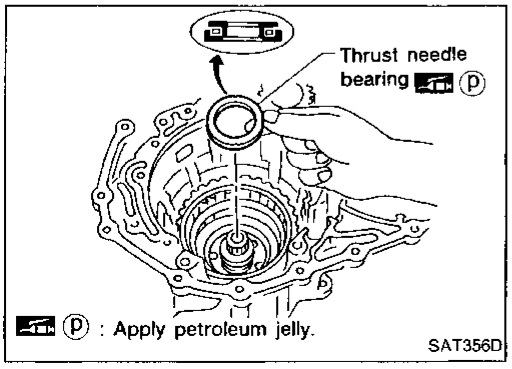

4. Install thrust needle bearing on bearing retainer.
- **Apply petroleum jelly to thrust bearing.**
- **Pay attention to direction of thrust needle bearing.**

Assembly 2 (Cont'd)

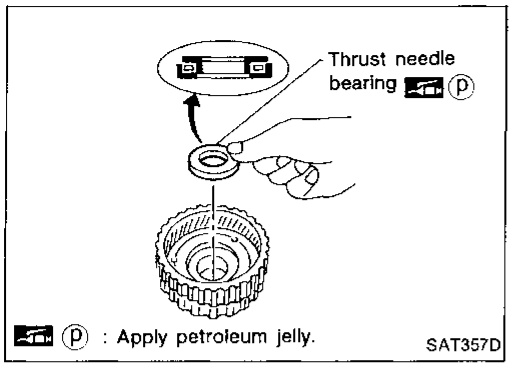

5. Install thrust needle bearing on rear internal gear.
- **Apply petroleum jelly to thrust needle bearing.**
- **Pay attention to direction of thrust needle bearing.**

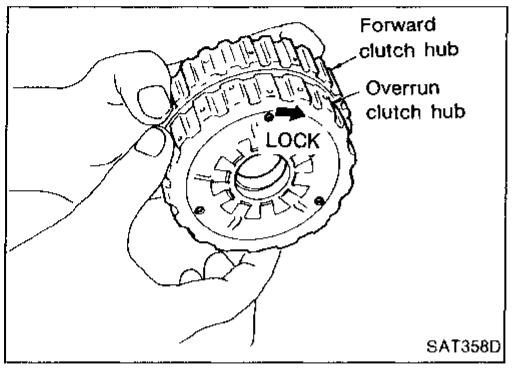

6. Hold forward clutch hub and turn overrun clutch hub. Check overrun clutch hub for directions of lock and unlock.
- If not as shown in illustration, check installed direction of forward one-way clutch.

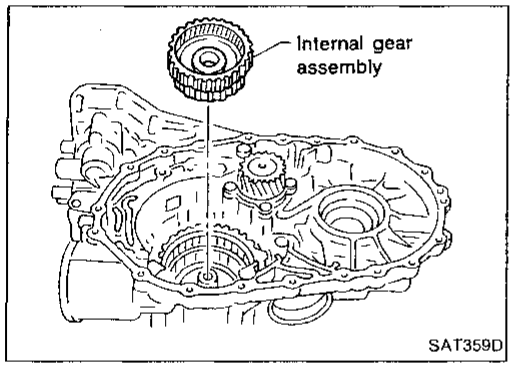

7. Install rear internal gear assembly.
- **Align teeth of forward clutch and overrun clutch drive plate.**

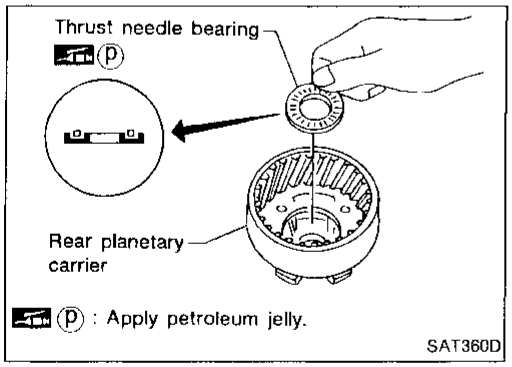

8. Install needle bearing on rear planetary carrier.
- **Apply petroleum jelly to needle bearing.**
- **Pay attention to direction of needle bearing.**

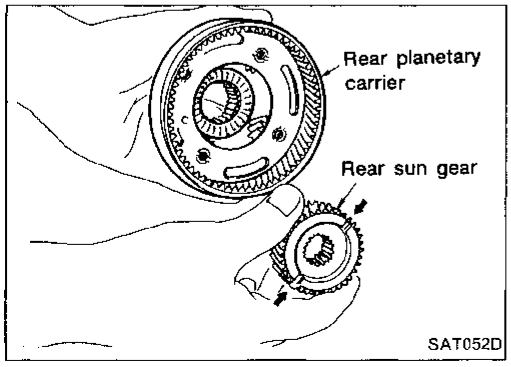

9. Install rear sun gear on rear planetary carrier.
- **Pay attention to direction of rear sun gear.**

Assembly 2 (Cont'd)

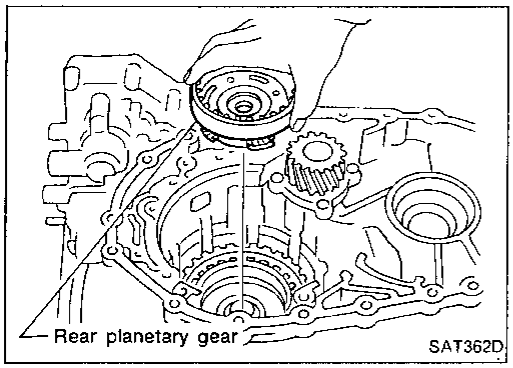

10. Install rear planetary carrier on transmission case.

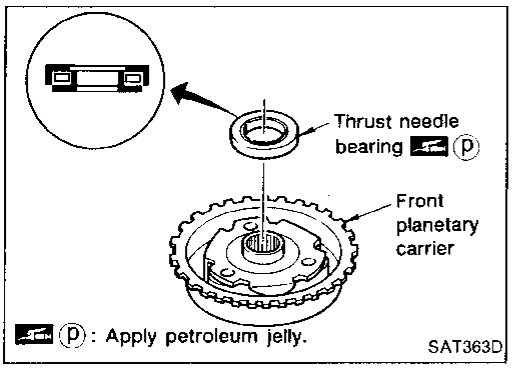

11. Install thrust needle bearing on front planetary carrier.
- **Apply petroleum jelly to thrust needle bearing.**
- **Pay attention to direction of thrust needle bearing.**

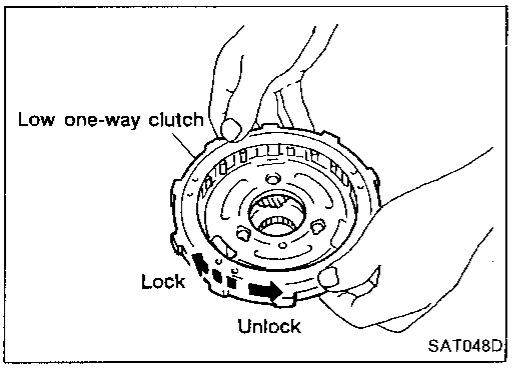

12. Install low one-way clutch to front planetary carrier by turning it in the direction of the arrow as shown.
13. While holding front planetary carrier, turn low one-way clutch.
    Check low one-way clutch for correct directions of lock and unlock.

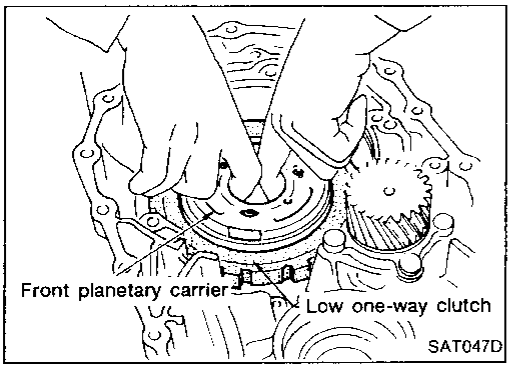

14. Install front planetary carrier assembly on transmission case.

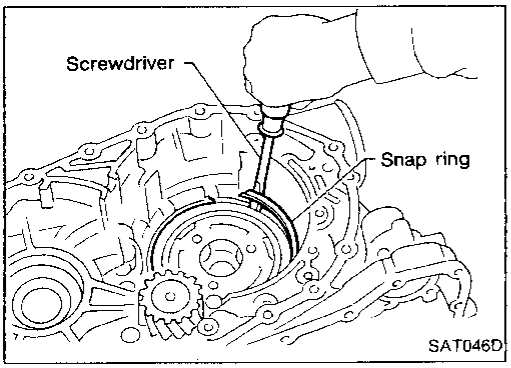

15. Install snap ring with screwdriver.
- **Forward clutch and bearings must be correctly installed for snap ring to fit groove of transmission case.**

Assembly 2 (Cont'd)

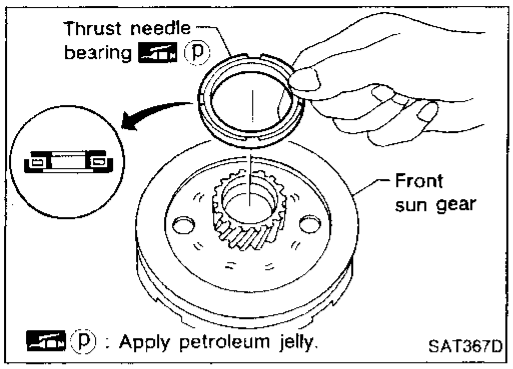

16. Install needle bearing on front sun gear.
- **Apply petroleum jelly to needle bearing.**
- **Pay attention to direction of needle bearing.**

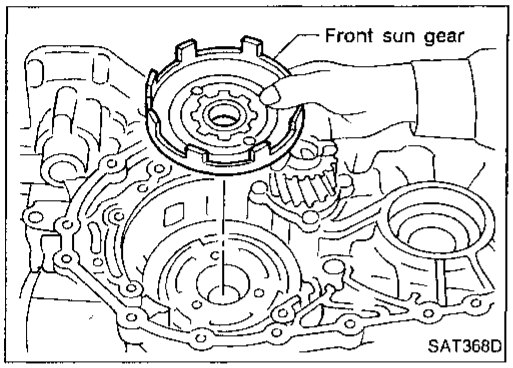

17. Install front sun gear on front planetary carrier.

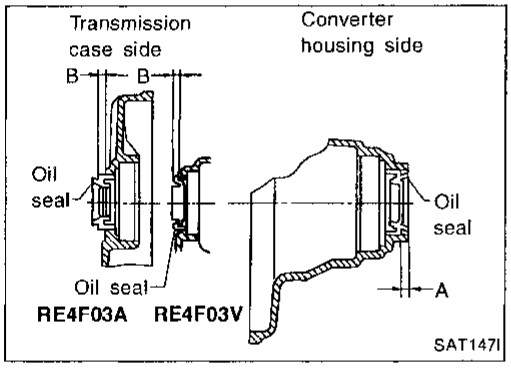

18. Install needle bearing on front sun gear.
- **Apply petroleum jelly to needle bearing.**
- **Pay attention to direction of needle bearing.**

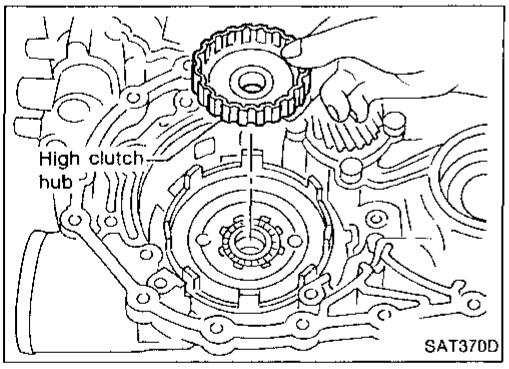

19. Install high clutch hub on front sun gear.

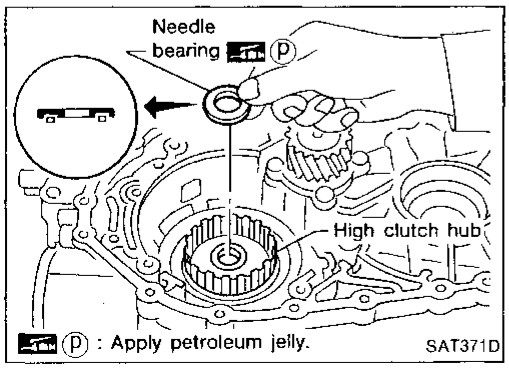

20. Install needle bearing on high clutch hub.
- **Apply petroleum jelly to needle bearing.**
- **Pay attention to direction of needle bearing.**

Assembly 2 (Cont'd)

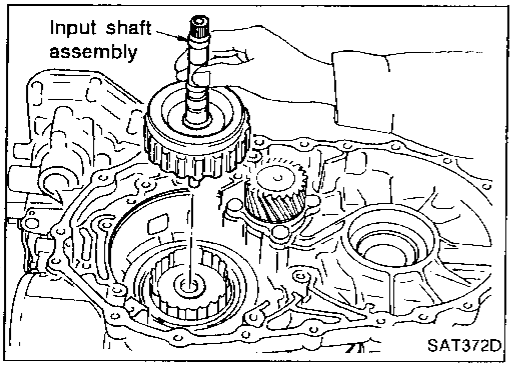

21. Remove paper rolled around input shaft.
22. Install input shaft assembly.
- **Align teeth of high clutch drive plates before installing.**

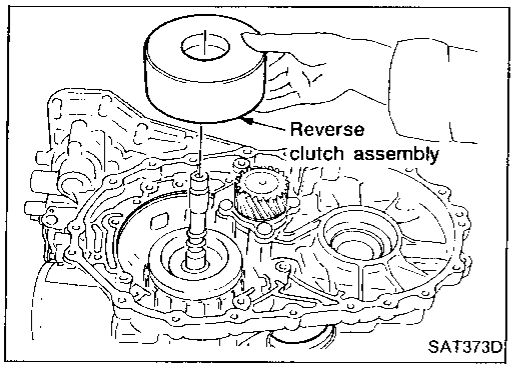

23. Install reverse clutch assembly.
- **Align teeth of reverse clutch drive plates before installing.**

Adjustment 2

When any parts listed below are replaced, adjust total end play and reverse clutch end play.

Part name	Total end play	Reverse clutch end play
Transmission case	●	●
Overrun clutch hub	●	●
Rear internal gear	●	●
Rear planetary carrier	●	●
Rear sun gear	●	●
Front planetary carrier	●	●
Front sun gear	●	●
High clutch hub	●	●
High clutch drum	●	●
Oil pump cover	●	●
Reverse clutch drum	—	●

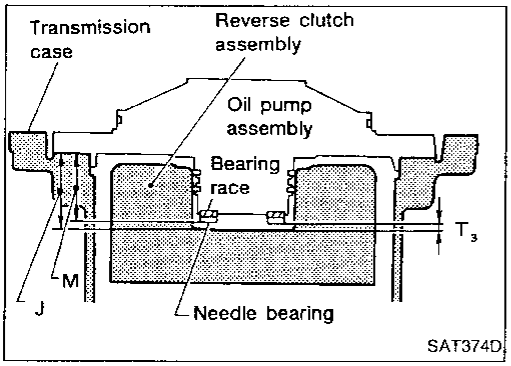

TOTAL END PLAY

- Measure clearance between reverse clutch drum and needle bearing for oil pump cover.
- Select proper thickness of bearing race so that end play is within specifications.

Adjustment 2 (Cont'd)

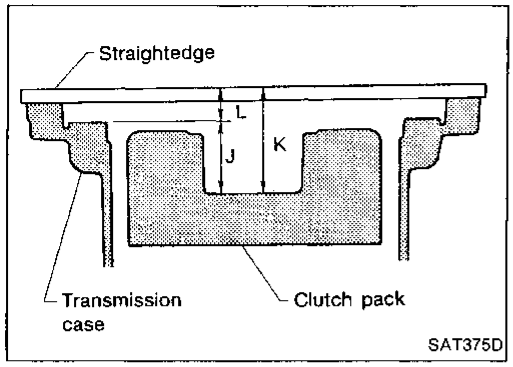

1. Measure dimensions "K" and "L" and then calculate dimension "J".

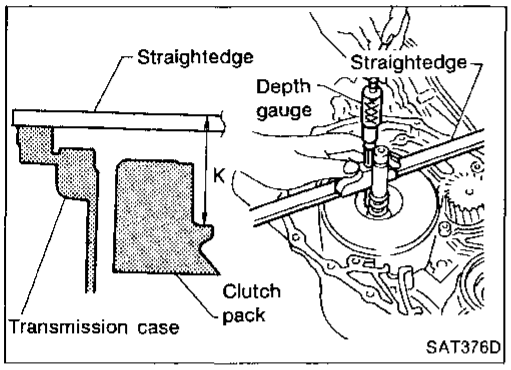

a. Measure dimension "K".

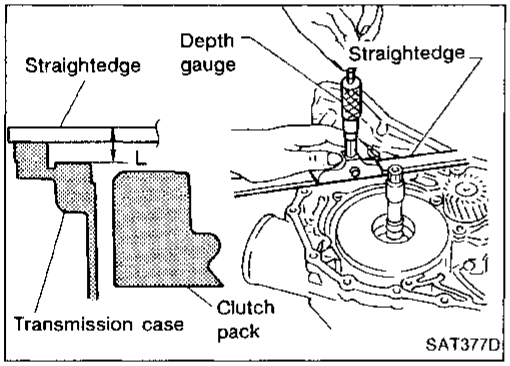

b. Measure dimension "L".
c. Calculate dimension "J".

- **"J": Distance between oil pump fitting surface of transmission case and needle bearing mating surface of high clutch drum.**
  J = K – L

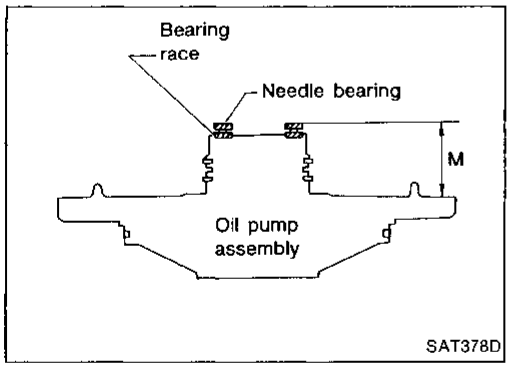

2. Measure dimension "M".
a. Place bearing race and needle bearing on oil pump assembly.

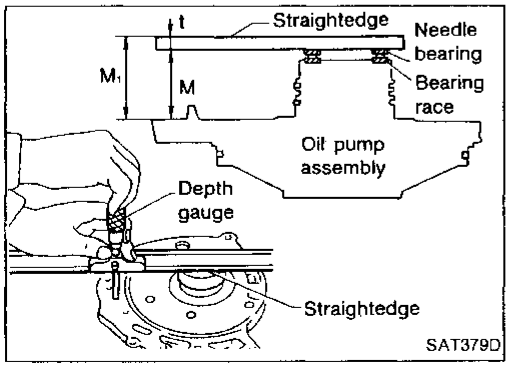

b. Measure dimension "M".

- **"M": Distance between transmission case fitting surface and needle bearing on oil pump cover.**
- **"M_1": Indication of gauge.**

Adjustment 2 (Cont'd)

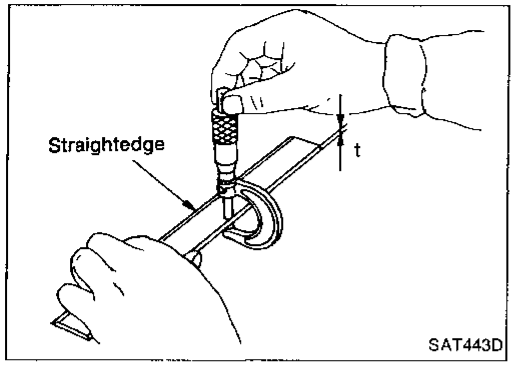

c. Measure thickness of straightedge "t".
   $M = M_1 - t$

3. Adjust total end play "T_3".
   $T_3 = J - M$
   Total end play "T_3":
   0.25 - 0.55 mm (0.0098 - 0.0217 in)

- Select proper thickness of bearing race so that total end play is within specifications.
  Bearing races:
  Refer to SDS, AT-243.

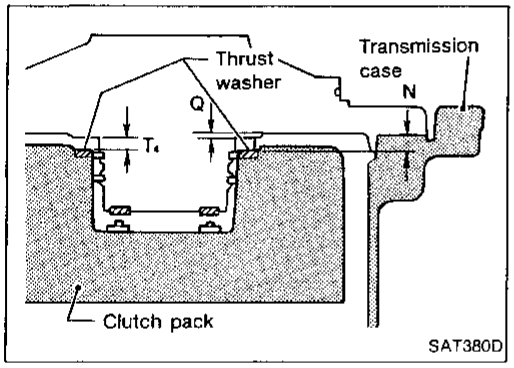

REVERSE CLUTCH END PLAY

- Measure clearance between oil pump cover and thrust washer for reverse clutch drum.
- Select proper thickness of thrust washer so that end play is within specifications.

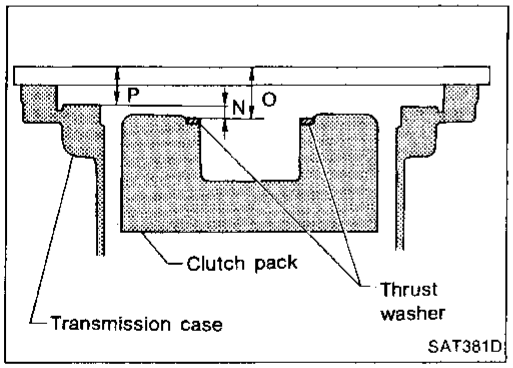

1. Measure dimensions "O" and "P" and then calculate dimension "N".

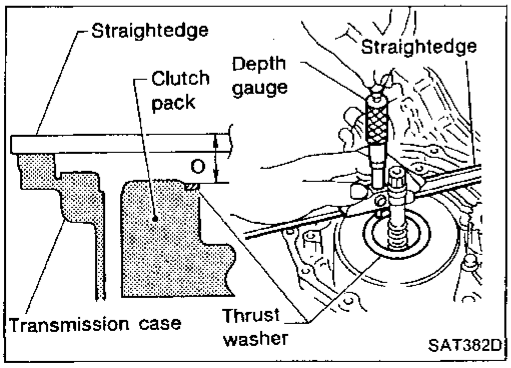

a. Place thrust washer on reverse clutch drum.
b. Measure dimension "O".

Adjustment 2 (Cont'd)

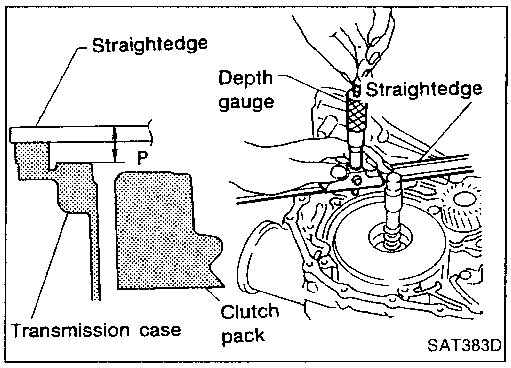

c. Measure dimension "P".
d. Calculate dimension "N".

- **"N": Distance between oil pump fitting surface of transmission case and thrust washer on reverse clutch drum.**
  N = O – P

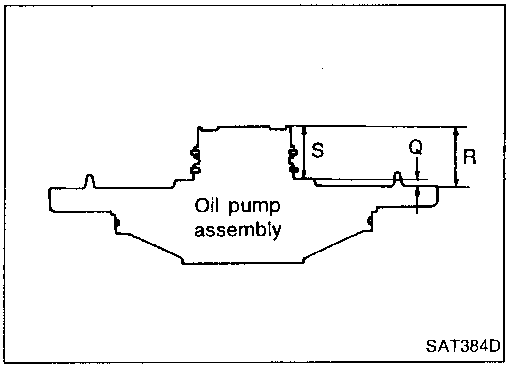

2. Measure dimensions "R" and "S" and then calculate dimension "Q".

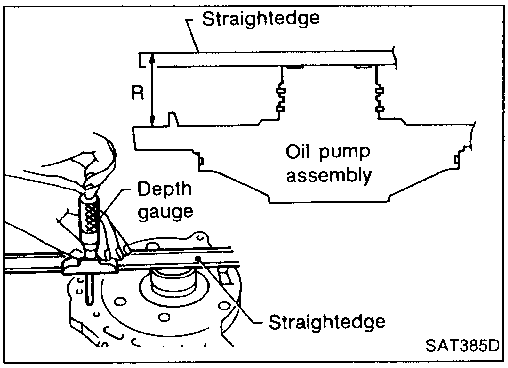

a. Measure dimension "R".

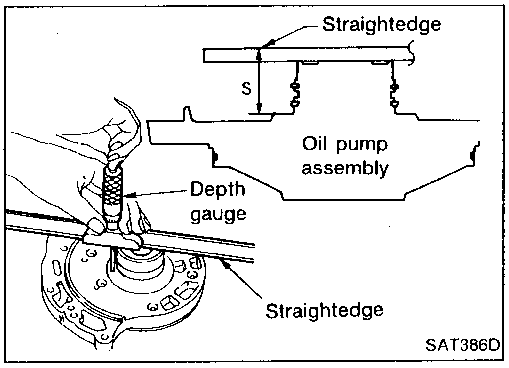

b. Measure dimension "S".
c. Calculate dimension "Q".

- **"Q": Distance between transmission case fitting surface and thrust washer mating surface.**
  Q = R – S

3. Adjust reverse clutch end play "T_4".
   T_4 = N – Q
   Reverse clutch end play:
   0.65 - 1.00 mm (0.0256 - 0.0394 in)

- Select proper thickness of thrust washer so that reverse clutch end play is within specifications.
  Thrust washer:
  Refer to SDS, AT-243.

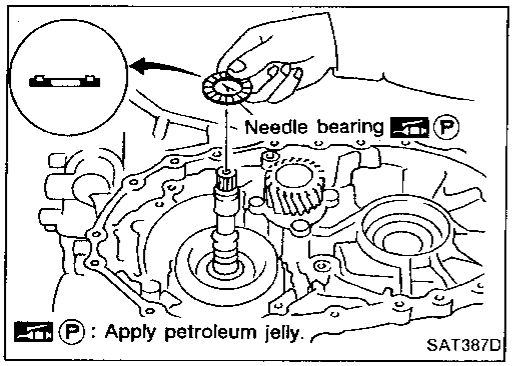

Assembly 3

1. Remove reverse clutch assembly and install needle bearing on high clutch assembly.
- **Pay attention to direction of needle bearing.**
2. Install reverse clutch assembly.

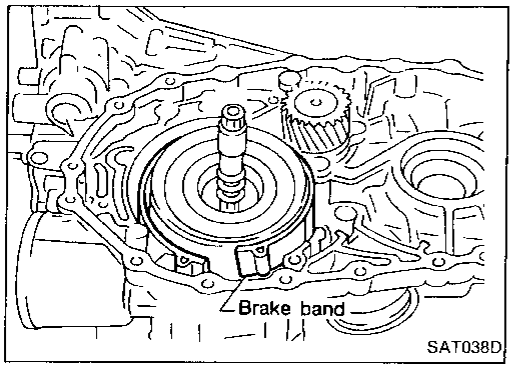

3. Install anchor end pin and lock nut on transmission case.
4. Place brake band on outside of reverse clutch drum. Tighten anchor end pin just enough so that brake band is evenly fitted on reverse clutch drum.

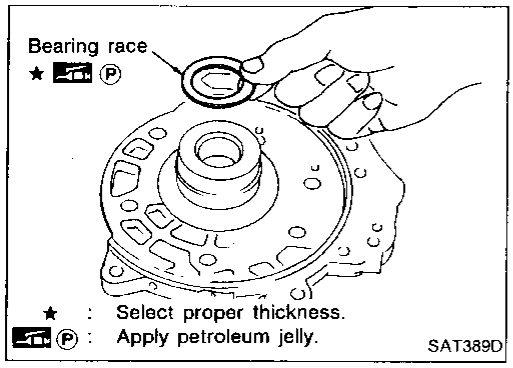

5. Place bearing race selected in total end play adjustment step on oil pump cover.
- **Apply petroleum jelly to bearing race.**

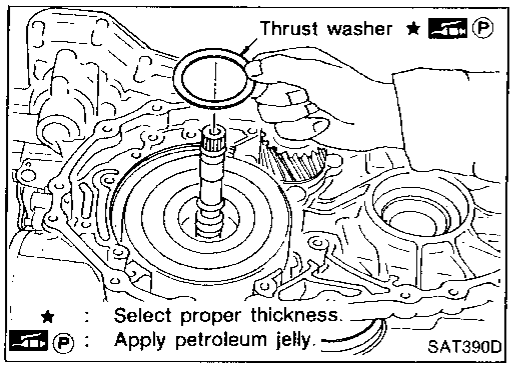

6. Place thrust washer selected in reverse clutch end play step on reverse clutch drum.
- **Apply petroleum jelly to thrust washer.**

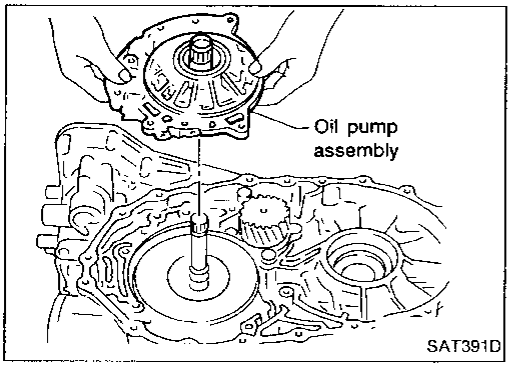

7. Install oil pump assembly on transmission case.

Assembly 3 (Cont'd)

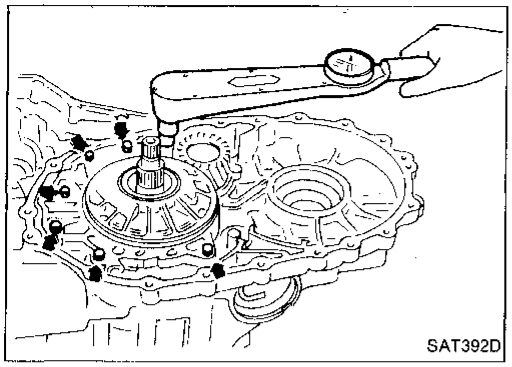

8. Tighten oil pump fixing bolts to specified torque.

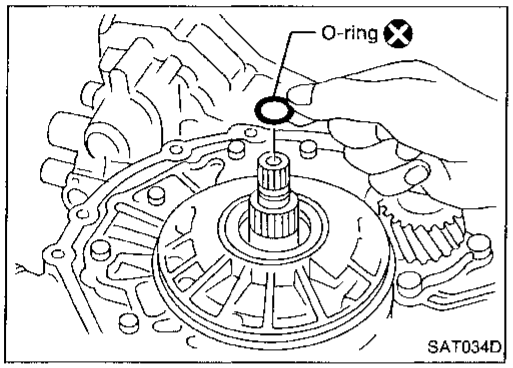

9. Install O-ring to input shaft.
- **Apply ATF to O-ring.**

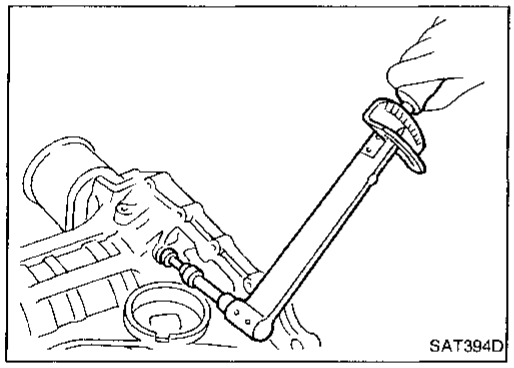

10. Adjust brake band.
a. Tighten anchor end pin to specified torque.
   Anchor end pin:
   : 3.9 - 5.9 N·m (0.4 - 0.6 kg-m, 35 - 52 in-lb)

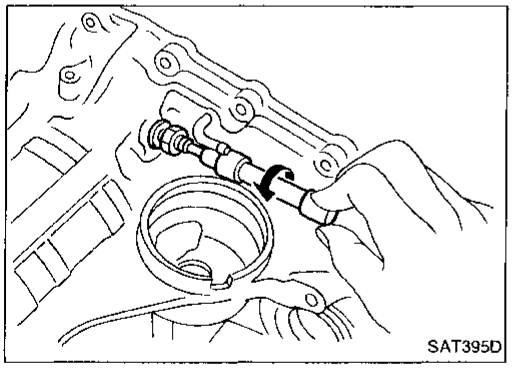

b. Back off anchor end pin two and a half turns.

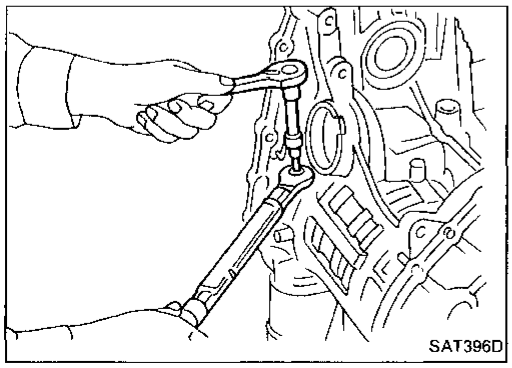

c. While holding anchor end pin, tighten lock nut.

Assembly 3 (Cont'd)

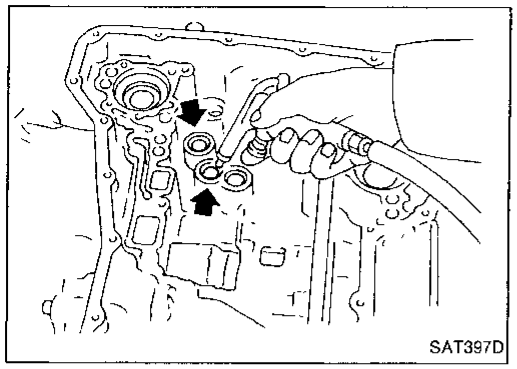

11. Apply compressed air to oil holes of transmission case and check operation of brake band.

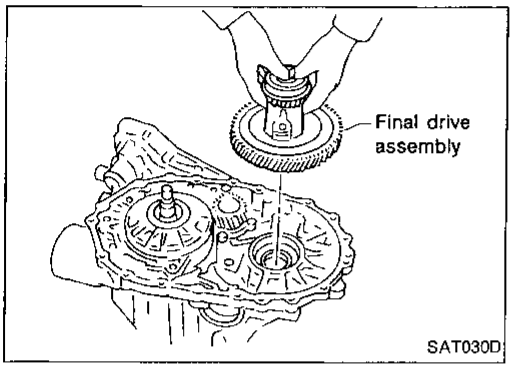

12. Install final drive assembly on transmission case.

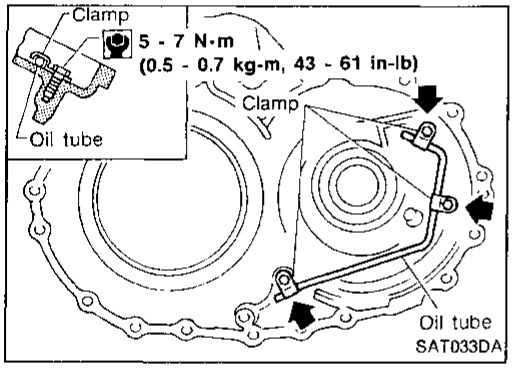

13. Install oil tube on converter housing.

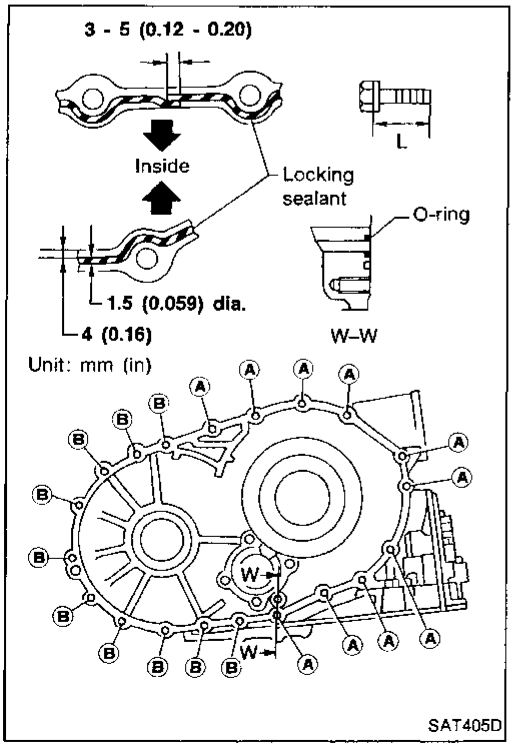

14. Install O-ring on differential oil port of transmission case.
15. Install converter housing on transmission case.

- **Apply locking sealant to mating surface of converter housing.**

Bolt	Length mm (in)
Ⓐ	30 (1.18)
Ⓑ	40 (1.57)

Assembly 3 (Cont'd)

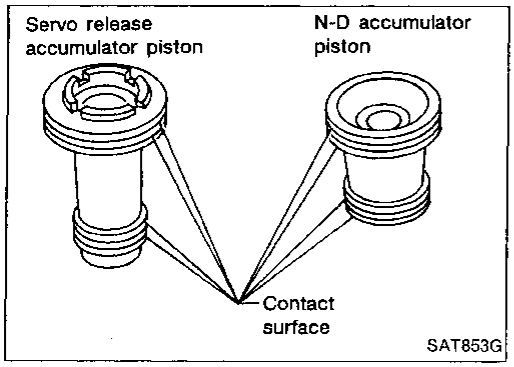

16. Install accumulator piston.
a. Check contact surface of accumulator piston for damage.

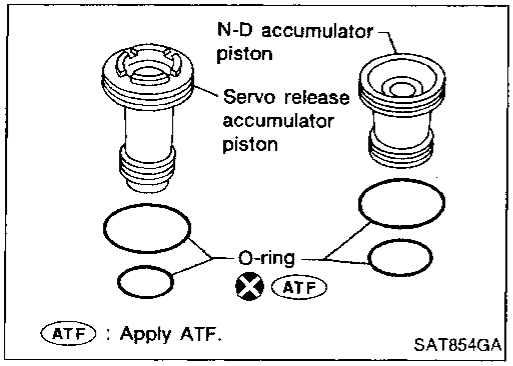

b. Install O-rings on accumulator piston.
- **Apply ATF to O-rings.**
  Accumulator piston O-rings:
  Refer to SDS, AT-243.

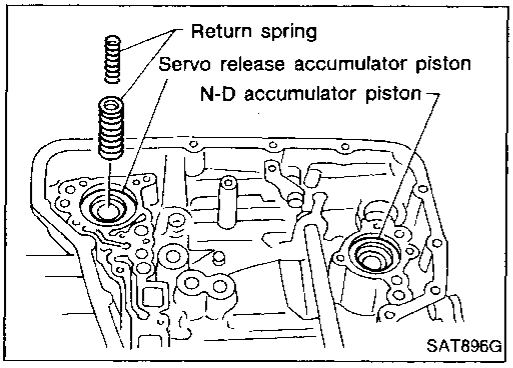

c. Install accumulator pistons and return springs on transmission case.
- **Apply ATF to inner surface of transmission case.**
  Return springs:
  Refer to SDS, AT-243.

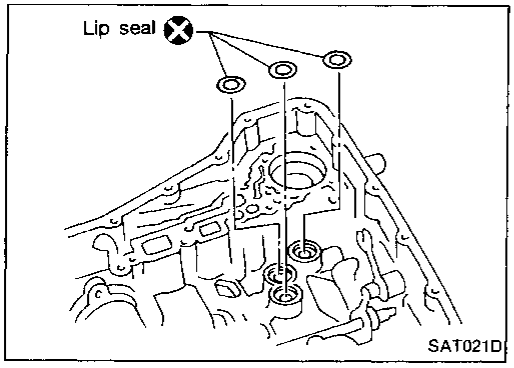

17. Install lip seals for band servo oil holes on transmission case.
- **Apply petroleum jelly to lip seals.**

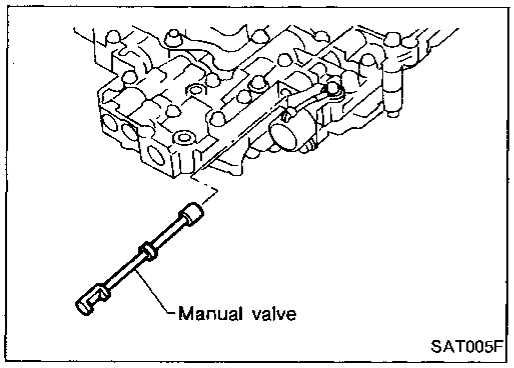

18. Install control valve assembly.
a. Insert manual valve into control valve assembly.
- **Apply ATF to manual valve.**

Assembly 3 (Cont'd)

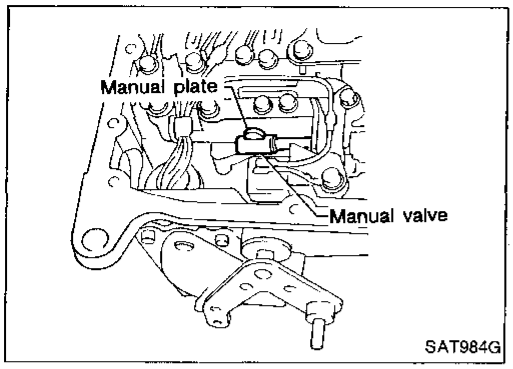

b. Set manual shaft in Neutral position.
c. Install control valve assembly on transmission case while aligning manual valve with manual plate.

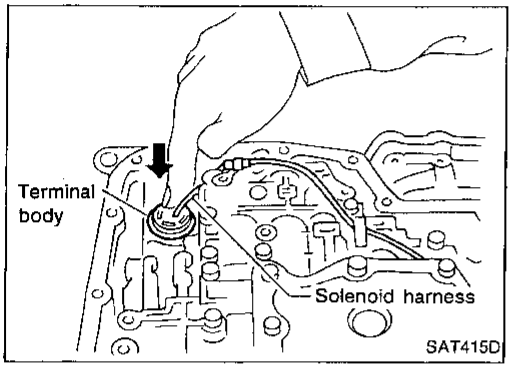

d. Pass solenoid harness through transmission case and install terminal body on transmission case by pushing it.

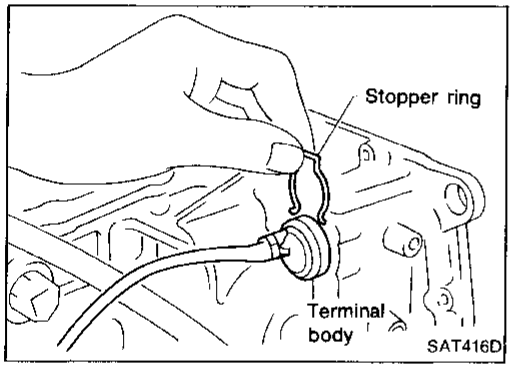

e. Install stopper ring to terminal body.

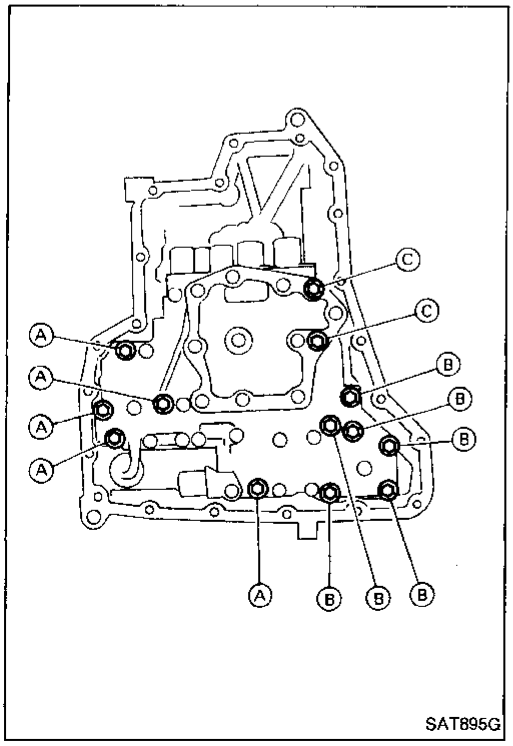

f. Tighten bolts Ⓐ, Ⓑ and Ⓒ.
: 7 - 9 N·m (0.7 - 0.9 kg-m, 61 - 78 in-lb)

Bolt length, number and location

Bolt symbol	Ⓐ	Ⓑ	Ⓒ
Bolt length "ℓ" mm (in)	40.0 (1.575)	33.0 (1.299)	43.5 (1.713)
Number of bolts	5	6	2

Assembly 3 (Cont'd)

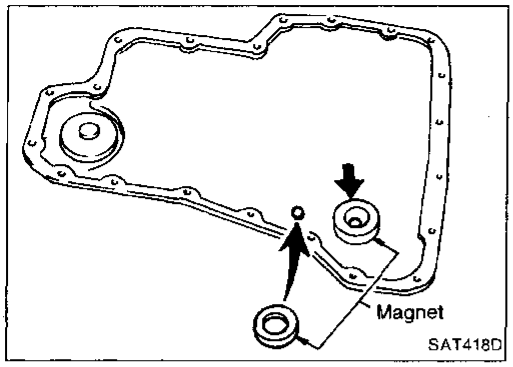

19. Install oil pan.
a. Attach magnet to oil pan.

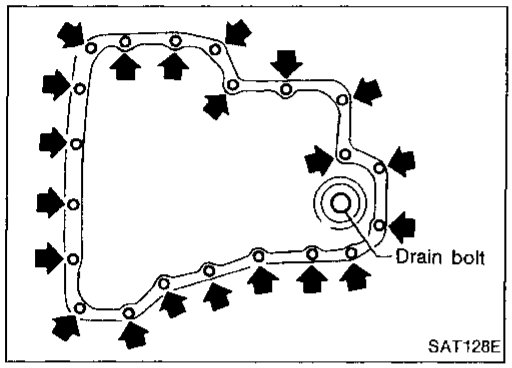

b. Install new oil pan gasket on transmission case.
c. Install oil pan on transmission case.
- **Always replace oil pan bolts as they are self-sealing bolts.**
- **Tighten the four bolts in a criss-cross pattern to prevent dislocation of gasket.**

d. Tighten drain plug to specified torque.

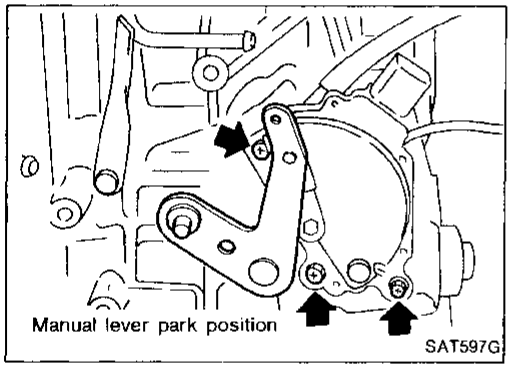

20. Install inhibitor switch.
a. Set manual shaft in "P" position.
b. Temporarily install inhibitor switch on manual shaft.
c. Move selector lever to "N" position.

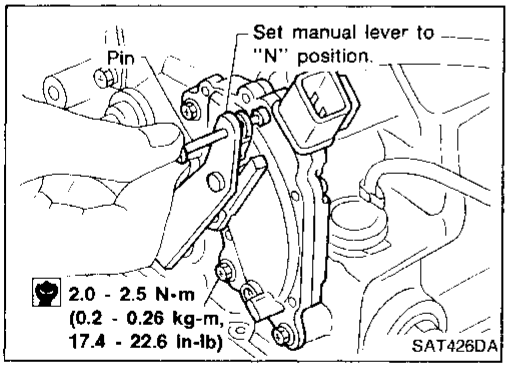

d. Insert 4.0 mm (0.157 in) dia. pin into adjustment holes in inhibitor switch and manual shaft. Insert the pin so that adjustment holes are correctly aligned with each other.
e. Tighten inhibitor switch fixing bolts.
f. Remove pin from adjustment hole after adjusting inhibitor switch.

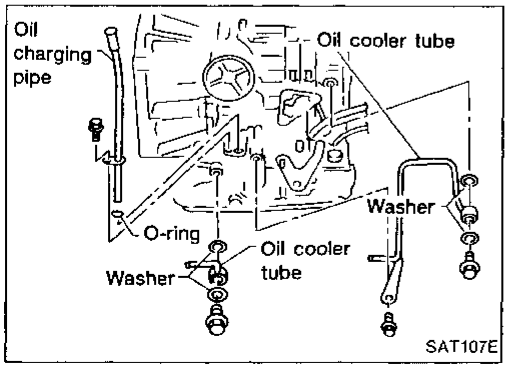

21. Install oil charging pipe and oil cooler tube to transmission case.

Assembly 3 (Cont'd)

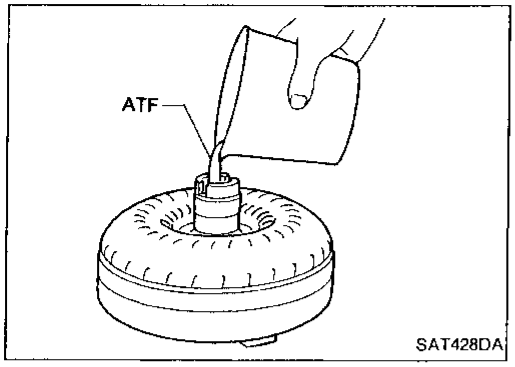

22. Install torque converter.

a. Pour ATF into torque converter.

- **Approximately 1 liter (1 - 1/8 US qt, 7/8 Imp qt) of fluid is required for a new torque converter.**
- **When reusing old torque converter, add the same amount of fluid as was drained.**

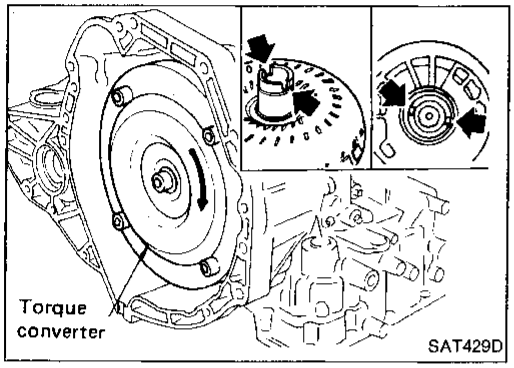

b. Install torque converter while aligning notches of torque converter with notches of oil pump.

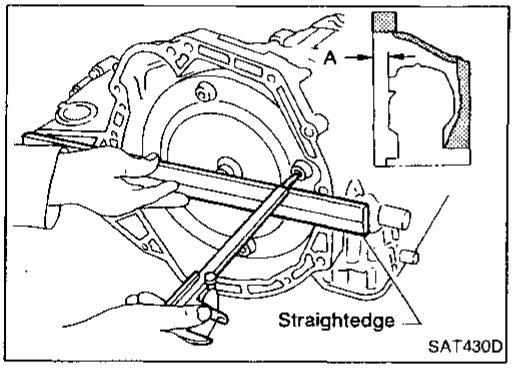

c. Measure distance "A" to check that torque converter is in proper position.

Distance "A":

15.9 mm (0.626 in) or more

General Specifications

Engine	SR20DE	
Automatic transaxle model	RE4F03A	RE4F03V
Automatic transaxle assembly Model code number	34X09	34X10
Transaxle gear ratio		
1st	2.861	
2nd	1.562	
3rd	1.000	
4th	0.697	
Reverse	2.310	
Final drive	4.072	
Recommended oil	Nissan Matic "D" (Continental U.S. and Alaska) or Genuine Nissan Automatic Transmission Fluid (Canada)*1	
Oil capacity ℓ (US qt, Imp qt)	7.0 (7-3/8, 6-1/8)	

*1: Refer to MA section ("Fluids and Lubricants", "RECOMMENDED FLUIDS AND LUBRICANTS").

Specifications and Adjustments

VEHICLE SPEED WHEN SHIFTING GEARS

Throttle position	Shift pattern	Vehicle speed km/h (MPH)						
		$D_1 \rightarrow D_2$	$D_2 \rightarrow D_3$	$D_3 \rightarrow D_4$	$D_4 \rightarrow D_3$	$D_3 \rightarrow D_2$	$D_2 \rightarrow D_1$	$1_2 \rightarrow 1_1$
Full throttle	Comfort	56 - 60 (35 - 37)	102 - 110 (63 - 68)	162 - 170 (101 - 106)	158 - 166 (98 - 103)	92 - 100 (57 - 62)	50 - 54 (31 - 34)	54 - 62 (34 - 39)
Half throttle	Comfort	35 - 39 (22 - 24)	62 - 70 (39 - 43)	98 - 106 (61 - 66)	62 - 70 (39 - 43)	40 - 48 (25 - 30)	11 - 15 (7 - 9)	54 - 62 (34 - 39)

VEHICLE SPEED WHEN PERFORMING LOCK-UP

Throttle position	OD switch (Shift range)	Shift pattern	Vehicle speed km/h (MPH)	
			Lock-up "ON"	Lock-up "OFF"
2/8	ON [D_4]	Comfort	81 - 89 (50 - 55)	61 - 69 (38 - 43)
	OFF [D_3]	Comfort	86 - 94 (53 - 58)	83 - 91 (52 - 57)

STALL REVOLUTION

Engine	Stall revolution rpm
SR20DE	1,900 - 2,200

LINE PRESSURE

Engine speed rpm	Line pressure kPa (kg/cm^2, psi)			
	R position	D position	2 position	1 position
Idle	853 (8.7, 124)	500 (5.1, 73)	500 (5.1, 73)	500 (5.1, 73)
Stall	1,863 (19.0, 270)	1,098 (11.2, 159)	1,098 (11.2, 159)	1,098 (11.2, 159)

Specifications and Adjustments (Cont'd)

CONTROL VALVES

Control valve and plug return springs

Unit: mm (in)

Parts			Part No.	Free length	Outer diameter
Upper body	⑱	Pilot valve spring	31742-80X14	36.0 (1.417)	8.1 (0.319)
	⑭	1-2 accumulator valve spring	31742-80X10	20.5 (0.807)	7.0 (0.276)
	㉑	1-2 accumulator piston spring	31742-33X02	48.8 (1.921)	19.6 (0.772)
	㉕	1st reducing valve spring	31742-80X05	27.0 (1.063)	7.0 (0.276)
	②	Overrun clutch reducing valve spring	31742-80X06	37.5 (1.476)	7.0 (0.276)
	⑦	Torque converter relief valve spring	31742-33X00	31.0 (1.220)	8.9 (0.350)
	⑩	Torque converter clutch control valve spring	31742-80X17	39.5 (1.555)	11.0 (0.433)
	—	Oil cooler relief valve spring	31872-31X00	17.0 (0.669)	8.0 (0.315)
Lower body	㉜	Plug	31742-80X11	17.0 (0.669)	10.7 (0.421)
	⑯	Pressure regulator valve spring	31742-80X13	45.0 (1.772)	15.0 (0.591)
	㉑	Overrun clutch control valve spring	31762-80X00	21.7 (0.854)	7.0 (0.276)
	㉕	Accumulator control valve spring	31742-80X02	22.0 (0.866)	6.5 (0.256)
	㉚	Shift valve A spring	31762-80X00	21.7 (0.854)	7.0 (0.276)
	②	Shift valve B spring	31762-80X00	21.7 (0.854)	7.0 (0.276)
	⑦	Pressure modifier valve spring	31742-41X15	30.5 (1.201)	9.8 (0.386)
	⑪		31742-80X16	32.0 (1.260)	6.9 (0.272)

CLUTCHES AND BRAKES

Model	RE4F03A, RE4F03V	
Reverse clutch		
Number of drive plates	2	
Number of driven plates	2	
Drive plate thickness mm (in)		
Standard	2.0 (0.079)	
Allowable limit	1.8 (0.071)	
Clearance mm (in)		
Standard	0.5 - 0.8 (0.020 - 0.031)	
Allowable limit	1.2 (0.047)	
Thickness of retaining plates	Thickness mm (in)	Part number
	4.4 (0.173)	31537-31X00
	4.6 (0.181)	31537-31X01
	4.8 (0.189)	31537-31X02
	5.0 (0.197)	31537-31X03
	5.2 (0.205)	31537-31X04

Model	RE4F03A, RE4F03V	
High clutch		
Number of drive plates	4	
Number of driven plates	6 + 1	
Drive plate thickness mm (in)		
Standard	1.6 (0.063)	
Allowable limit	1.4 (0.055)	
Clearance mm (in)		
Standard	1.4 - 1.8 (0.055 - 0.071)	
Allowable limit	2.6 (0.102)	
Thickness of retaining plates	Thickness mm (in)	Part number
	3.8 (0.150)	31537-31X11
	4.0 (0.157)	31537-31X12
	4.2 (0.165)	31537-31X13
	4.4 (0.173)	31537-31X14
	4.6 (0.181)	31537-31X15
	4.8 (0.189)	31537-31X16
	5.0 (0.197)	31537-31X17

Specifications and Adjustments (Cont'd)

Model	RE4F03A, RE4F03V	
Forward clutch		
Number of drive plates	5	
Number of driven plates	5	
Drive plate thickness mm (in)		
Standard	1.8 (0.071)	
Allowable limit	1.6 (0.063)	
Clearance mm (in)		
Standard	0.45 - 0.85 (0.0177 - 0.0335)	
Allowable limit	1.85 (0.0728)	
Thickness of retaining plate	Thickness mm (in)	Part number
	3.6 (0.142)	31537-31X60
	3.8 (0.150)	31537-31X61
	4.0 (0.157)	31537-31X62
	4.2 (0.165)	31537-31X63
	4.4 (0.173)	31537-31X64
	4.6 (0.181)	31537-31X65
Overrun clutch		
Number of drive plates	3	
Number of driven plates	4	
Drive plate thickness mm (in)		
Standard	1.6 (0.063)	
Allowable limit	1.4 (0.055)	
Clearance mm (in)		
Standard	1.0 - 1.4 (0.039 - 0.055)	
Allowable limit	2.0 (0.079)	
Thickness of retaining plate	Thickness mm (in)	Part number
	3.6 (0.142)	31567-31X72
	3.8 (0.150)	31567-31X73
	4.0 (0.157)	31567-31X74
	4.2 (0.165)	31567-31X75
	4.4 (0.173)	31567-31X76

Model	RE4F03A, RE4F03V	
Low & reverse brake		
Number of drive plates	5	
Number of driven plates	5	
Drive plate thickness mm (in)		
Standard	2.0 (0.079)	
Allowable limit	1.8 (0.071)	
Clearance mm (in)		
Standard	1.4 - 1.8 (0.055 - 0.071)	
Allowable limit	2.8 (0.110)	
Thickness of retaining plate	Thickness mm (in)	Part number
	3.6 (0.142)	31667-31X16
	3.8 (0.150)	31667-31X17
	4.0 (0.157)	31667-31X18
	4.2 (0.165)	31667-31X19
	4.4 (0.173)	31667-31X20
	4.6 (0.181)	31667-31X21
Brake band		
Anchor end pin tightening torque N·m (kg-m, in-lb)	3.9 - 5.9 (0.4 - 0.6, 35 - 52)	
Number of returning revolutions for anchor end pin	2.5 ± 0.125	
Lock nut tightening torque N·m (kg-m, ft-lb)	31 - 36 (3.2 - 3.7, 23 - 27)	

Clutch and brake return springs

Unit: mm (in)

Parts		Free length	Outer diameter
Forward clutch (Overrun clutch) (16 pcs)	Outer	26.6 (1.047)	10.6 (0.417)
	Inner	26.3 (1.035)	7.7 (0.303)

Specifications and Adjustments (Cont'd)

OIL PUMP

Oil pump side clearance mm (in)	0.02 - 0.04 (0.0008 - 0.0016)	
Thickness of inner gears and outer gears	Inner gear	
	Thickness mm (in)	Part number
	9.99 - 10.00 (0.3933 - 0.3937)	31346-31X00
	9.98 - 9.99 (0.3929 - 0.3933)	31346-31X01
	9.97 - 9.98 (0.3925 - 0.3929)	31346-31X02
	Outer gear	
	Thickness mm (in)	Part number
	9.99 - 10.00 (0.3933 - 0.3937)	31347-31X00
	9.98 - 9.99 (0.3929 - 0.3933)	31347-31X01
	9.97 - 9.98 (0.3925 - 0.3929)	31347-31X02
Clearance between oil pump housing and outer gear mm (in)		
Standard	0.08 - 0.15 (0.0031 - 0.0059)	
Allowable limit	0.15 (0.0059)	
Oil pump cover seal ring clearance mm (in)		
Standard	0.1 - 0.25 (0.0039 - 0.0098)	
Allowable limit	0.25 (0.0098)	

INPUT SHAFT

Input shaft seal ring clearance mm (in)	
Standard	0.08 - 0.23 (0.0031 - 0.0091)
Allowable limit	0.23 (0.0091)

PLANETARY CARRIER

Clearance between planetary carrier and pinion washer mm (in)	
Standard	0.15 - 0.70 (0.0059 - 0.0276)
Allowable limit	0.80 (0.0315)

FINAL DRIVE

Differential side gear clearance

Clearance between side gear and differential case with washer mm (in)	0.1 - 0.2 (0.004 - 0.008)

Differential side gear thrust washers for F03A

Thickness mm (in)	Part number
0.75 - 0.80 (0.0295 - 0.0315)	38424-D2111
0.80 - 0.85 (0.0315 - 0.0335)	38424-D2112
0.85 - 0.90 (0.0335 - 0.0354)	38424-D2113
0.90 - 0.95 (0.0354 - 0.0374)	38424-D2114
0.95 - 1.00 (0.0374 - 0.0394)	38424-D2115

Differential side gear thrust washers for F03V

	Thickness mm (in)	Part number
Viscous coupling side	0.70 - 0.75 (0.0276 - 0.0295)	38424-D2110
	0.75 - 0.80 (0.0295 - 0.0315)	38424-D2111
	0.80 - 0.85 (0.0315 - 0.0335)	38424-D2112
	0.85 - 0.90 (0.0335 - 0.0354)	38424-D2113
	0.90 - 0.95 (0.0354 - 0.0374)	38424-D2114
	0.95 - 1.00 (0.0374 - 0.0394)	38424-D2115
	1.00 - 1.05 (0.0394 - 0.0413)	38424-D2116
	1.05 - 1.10 (0.0413 - 0.0433)	38424-D2117
	1.10 - 1.15 (0.0433 - 0.0453)	38424-D2118
	1.15 - 1.20 (0.0453 - 0.0472)	38424-D2119
	1.20 - 1.25 (0.0472 - 0.0492)	38424-D2120
	1.25 - 1.30 (0.0492 - 0.0512)	38424-D2121
	1.30 - 1.35 (0.0512 - 0.0531)	38424-D2122
Differential case side	0.75 - 0.80 (0.0295 - 0.0315)	38424-D2111
	0.80 - 0.85 (0.0315 - 0.0335)	38424-D2112
	0.85 - 0.90 (0.0335 - 0.0354)	38424-D2113
	0.90 - 0.95 (0.0354 - 0.0374)	38424-D2114
	0.95 - 1.00 (0.0374 - 0.0394)	38424-D2115

Specifications and Adjustments (Cont'd)

Bearing preload

Differential side bearing preload "T" mm (in)	0.04 - 0.09 (0.0016 - 0.0035)

Turning torque

Turning torque of final drive assembly N·m (kg-cm, in-lb)	0.49 - 1.08 (5.0 - 11.0, 4.3 - 9.5)

Differential side bearing adjusting shims for F03A

Thickness mm (in)	Part number
0.40 (0.0157)	31499-21X07
0.44 (0.0173)	31499-21X08
0.48 (0.0189)	31499-21X09
0.52 (0.0205)	31499-21X10
0.56 (0.0220)	31499-21X11
0.60 (0.0236)	31499-21X12
0.64 (0.0252)	31499-21X13
0.68 (0.0268)	31499-21X14
0.72 (0.0283)	31499-21X15
0.76 (0.0299)	31499-21X16
0.80 (0.0315)	31499-21X17
0.84 (0.0331)	31499-21X18
0.88 (0.0346)	31499-21X19
0.92 (0.0362)	31499-21X20
1.44 (0.0567)	31499-21X21

Differential side bearing adjusting shims for F03V

Thickness mm (in)	Part number
0.28 (0.0110)	31439-31X00
0.32 (0.0126)	31439-31X01
0.36 (0.0142)	31439-31X02
0.40 (0.0157)	31439-31X03
0.44 (0.0173)	31439-31X04
0.48 (0.0189)	31439-31X05
0.52 (0.0205)	31439-31X06
0.56 (0.0220)	31439-31X07
0.60 (0.0236)	31439-31X08
0.64 (0.0252)	31439-31X09
0.68 (0.0268)	31439-31X10
0.72 (0.0283)	31439-31X11
0.76 (0.0299)	31439-31X12
0.80 (0.0315)	31439-31X13
0.84 (0.0331)	31439-31X14
0.88 (0.0346)	31439-31X15
0.92 (0.0362)	31439-31X16
0.96 (0.0378)	31439-31X17
1.44 (0.0567)	31439-31X18

Table for selecting differential side bearing adjusting shim(s) for F03A

Unit: mm (in)

Dial indicator deflection	Suitable shim(s)
0.31 - 0.35 (0.0122 - 0.0138)	0.40 (0.0157)
0.35 - 0.39 (0.0138 - 0.0154)	0.44 (0.0173)
0.39 - 0.43 (0.0154 - 0.0169)	0.48 (0.0189)
0.43 - 0.47 (0.0169 - 0.0185)	0.52 (0.0205)
0.47 - 0.51 (0.0185 - 0.0201)	0.56 (0.0220)
0.51 - 0.55 (0.0201 - 0.0217)	0.60 (0.0236)
0.55 - 0.59 (0.0217 - 0.0232)	0.64 (0.0252)
0.59 - 0.63 (0.0232 - 0.0248)	0.68 (0.0268)
0.63 - 0.67 (0.0248 - 0.0264)	0.72 (0.0283)
0.67 - 0.71 (0.0264 - 0.0280)	0.76 (0.0299)
0.71 - 0.75 (0.0280 - 0.0295)	0.80 (0.0315)
0.75 - 0.79 (0.0295 - 0.0311)	0.84 (0.0331)
0.79 - 0.83 (0.0311 - 0.0327)	0.88 (0.0346)
0.83 - 0.87 (0.0327 - 0.0343)	0.92 (0.0362)
0.87 - 0.91 (0.0343 - 0.0358)	0.48 (0.0189) + 0.48 (0.0189)
0.91 - 0.95 (0.0358 - 0.0374)	0.48 (0.0189) + 0.52 (0.0205)
0.95 - 0.99 (0.0374 - 0.0390)	0.52 (0.0205) + 0.52 (0.0205)
0.99 - 1.03 (0.0390 - 0.0406)	0.52 (0.0205) + 0.56 (0.0220)
1.03 - 1.07 (0.0406 - 0.0421)	0.56 (0.0220) + 0.56 (0.0220)
1.07 - 1.11 (0.0421 - 0.0437)	0.56 (0.0220) + 0.60 (0.0236)
1.11 - 1.15 (0.0437 - 0.0453)	0.60 (0.0236) + 0.60 (0.0236)
1.15 - 1.19 (0.0453 - 0.0469)	0.60 (0.0236) + 0.64 (0.0252)
1.19 - 1.23 (0.0469 - 0.0484)	0.64 (0.0252) + 0.64 (0.0252)
1.23 - 1.27 (0.0484 - 0.0500)	0.64 (0.0252) + 0.68 (0.0268)
1.27 - 1.31 (0.0500 - 0.0516)	0.68 (0.0268) + 0.68 (0.0268)
1.31 - 1.35 (0.0516 - 0.0531)	0.68 (0.0268) + 0.72 (0.0283)
1.35 - 1.39 (0.0531 - 0.0547)	1.44 (0.0567)
1.39 - 1.43 (0.0547 - 0.0563)	0.72 (0.0283) + 0.76 (0.0299)
1.43 - 1.47 (0.0563 - 0.0579)	0.76 (0.0299) + 0.76 (0.0299)
1.47 - 1.51 (0.0579 - 0.0594)	0.76 (0.0299) + 0.80 (0.0315)
1.51 - 1.55 (0.0594 - 0.0610)	0.80 (0.0315) + 0.80 (0.0315)
1.55 - 1.59 (0.0610 - 0.0626)	0.80 (0.0315) + 0.84 (0.0331)
1.59 - 1.63 (0.0626 - 0.0642)	0.84 (0.0331) + 0.84 (0.0331)
1.63 - 1.67 (0.0642 - 0.0657)	0.84 (0.0331) + 0.88 (0.0346)
1.67 - 1.71 (0.0657 - 0.0673)	0.88 (0.0346) + 0.88 (0.0346)
1.71 - 1.75 (0.0673 - 0.0689)	0.88 (0.0346) + 0.92 (0.0362)
1.75 - 1.79 (0.0689 - 0.0705)	0.92 (0.0362) + 0.92 (0.0362)
1.79 - 1.83 (0.0705 - 0.0720)	0.44 (0.0173) + 1.44 (0.0567)
1.83 - 1.87 (0.0720 - 0.0736)	0.48 (0.0189) + 1.44 (0.0567)
1.87 - 1.91 (0.0736 - 0.0752)	0.52 (0.0205) + 1.44 (0.0567)
1.91 - 1.95 (0.0752 - 0.0768)	0.56 (0.0220) + 1.44 (0.0567)

Specifications and Adjustments (Cont'd)

Table for selecting differential side bearing adjusting shim(s) for F03V

Unit: mm (in)

Dial indicator deflection	Suitable shim(s)
0.19 - 0.23 (0.0075 - 0.0091)	0.28 (0.0110)
0.23 - 0.27 (0.0091 - 0.0106)	0.32 (0.0126)
0.27 - 0.31 (0.0106 - 0.0122)	0.36 (0.0142)
0.31 - 0.35 (0.0122 - 0.0138)	0.40 (0.0157)
0.35 - 0.39 (0.0138 - 0.0154)	0.44 (0.0173)
0.39 - 0.43 (0.0154 - 0.0169)	0.48 (0.0189)
0.43 - 0.47 (0.0169 - 0.0185)	0.52 (0.0205)
0.47 - 0.51 (0.0185 - 0.0201)	0.56 (0.0220)
0.51 - 0.55 (0.0201 - 0.0217)	0.60 (0.0236)
0.55 - 0.59 (0.0217 - 0.0232)	0.64 (0.0252)
0.59 - 0.63 (0.0232 - 0.0248)	0.68 (0.0268)
0.63 - 0.67 (0.0248 - 0.0264)	0.72 (0.0283)
0.67 - 0.71 (0.0264 - 0.0280)	0.76 (0.0299)
0.71 - 0.75 (0.0280 - 0.0295)	0.80 (0.0315)
0.75 - 0.79 (0.0295 - 0.0311)	0.84 (0.0331)
0.79 - 0.83 (0.0311 - 0.0327)	0.88 (0.0346)
0.83 - 0.87 (0.0327 - 0.0343)	0.92 (0.0362)
0.87 - 0.91 (0.0343 - 0.0358)	0.48 (0.0189) + 0.48 (0.0189)
0.91 - 0.95 (0.0358 - 0.0374)	0.48 (0.0189) + 0.52 (0.0205)
0.95 - 0.99 (0.0374 - 0.0390)	0.52 (0.0205) + 0.52 (0.0205)
0.99 - 1.03 (0.0390 - 0.0406)	0.52 (0.0205) + 0.56 (0.0220)
1.03 - 1.07 (0.0406 - 0.0421)	0.56 (0.0220) + 0.56 (0.0220)
1.07 - 1.11 (0.0421 - 0.0437)	0.56 (0.0220) + 0.60 (0.0236)
1.11 - 1.15 (0.0437 - 0.0453)	0.60 (0.0236) + 0.60 (0.0236)
1.15 - 1.19 (0.0453 - 0.0469)	0.60 (0.0236) + 0.64 (0.0252)
1.19 - 1.23 (0.0469 - 0.0484)	0.64 (0.0252) + 0.64 (0.0252)
1.23 - 1.27 (0.0484 - 0.0500)	0.64 (0.0252) + 0.68 (0.0268)
1.27 - 1.31 (0.0500 - 0.0516)	0.68 (0.0268) + 0.68 (0.0268)
1.31 - 1.35 (0.0516 - 0.0531)	0.68 (0.0268) + 0.72 (0.0283)
1.35 - 1.39 (0.0531 - 0.0547)	1.44 (0.0567)
1.39 - 1.43 (0.0547 - 0.0563)	0.72 (0.0283) + 0.76 (0.0299)
1.43 - 1.47 (0.0563 - 0.0579)	0.76 (0.0299) + 0.76 (0.0299)
1.47 - 1.51 (0.0579 - 0.0594)	0.76 (0.0299) + 0.80 (0.0315)
1.51 - 1.55 (0.0594 - 0.0610)	0.80 (0.0315) + 0.80 (0.0315)
1.55 - 1.59 (0.0610 - 0.0626)	0.80 (0.0315) + 0.84 (0.0331)
1.59 - 1.63 (0.0626 - 0.0642)	0.84 (0.0331) + 0.84 (0.0331)
1.63 - 1.67 (0.0642 - 0.0657)	0.84 (0.0331) + 0.88 (0.0346)
1.67 - 1.71 (0.0657 - 0.0673)	0.88 (0.0346) + 0.88 (0.0346)
1.71 - 1.75 (0.0673 - 0.0689)	0.88 (0.0346) + 0.92 (0.0362)
1.75 - 1.79 (0.0689 - 0.0705)	0.92 (0.0362) + 0.92 (0.0362)
1.79 - 1.83 (0.0705 - 0.0720)	0.92 (0.0362) + 0.96 (0.0378)
1.83 - 1.87 (0.0720 - 0.0736)	0.96 (0.0378) + 0.96 (0.0378)
1.87 - 1.91 (0.0736 - 0.0752)	0.52 (0.0205) + 1.44 (0.0567)
1.91 - 1.95 (0.0752 - 0.0768)	0.56 (0.0220) + 1.44 (0.0567)

REDUCTION PINION GEAR

Bearing preload

Reduction pinion gear bearing preload mm (in)	0.05 (0.0020)

Turning torque

Turning torque of reduction pinion gear N·m (kg-cm, in-lb)	0.1 - 0.7 (1.1 - 7.0, 0.95 - 6.08)

Reduction pinion gear bearing adjusting shims

Thickness mm (in)	Part number
1.74 (0.0685)	31438-31X16
1.78 (0.0701)	31438-31X17
1.82 (0.0717)	31438-31X18
1.86 (0.0732)	31438-31X19
1.90 (0.0748)	31438-31X20
1.92 (0.0756)	31439-31X60
1.94 (0.0764)	31438-31X21
1.96 (0.0772)	31439-31X61
1.98 (0.0780)	31438-31X22
2.00 (0.0787)	31439-31X62
2.02 (0.0795)	31438-31X23
2.04 (0.0803)	31439-31X63
2.06 (0.0811)	31438-31X24
2.08 (0.0819)	31439-31X64
2.10 (0.0827)	31438-31X60
2.12 (0.0835)	31439-31X65
2.14 (0.0843)	31438-31X61
2.16 (0.0850)	31439-31X66
2.18 (0.0858)	31438-31X62
2.20 (0.0866)	31439-31X67
2.22 (0.0874)	31438-31X63
2.24 (0.0882)	31439-31X68
2.26 (0.0890)	31438-31X64
2.28 (0.0898)	31439-31X69
2.30 (0.0906)	31438-31X65
2.34 (0.0921)	31438-31X66
2.38 (0.0937)	31438-31X67
2.42 (0.0953)	31438-31X68
2.46 (0.0969)	31438-31X69
2.50 (0.0984)	31438-31X70
2.54 (0.1000)	31438-31X71
2.58 (0.1016)	31438-31X72
2.62 (0.1031)	31438-31X73
2.66 (0.1047)	31438-31X74

Specifications and Adjustments (Cont'd)

Table for selecting reduction pinion gear bearing adjusting shim

Unit: mm (in)

Dimension "T"	Suitable shim(s)
1.77 - 1.81 (0.0697 - 0.0713)	1.74 (0.0685)
1.81 - 1.85 (0.0713 - 0.0728)	1.78 (0.0701)
1.85 - 1.89 (0.0728 - 0.0744)	1.82 (0.0717)
1.89 - 1.93 (0.0744 - 0.0760)	1.86 (0.0732)
1.93 - 1.96 (0.0760 - 0.0772)	1.90 (0.0748)
1.96 - 1.98 (0.0772 - 0.0780)	1.92 (0.0756)
1.98 - 2.00 (0.0780 - 0.0787)	1.94 (0.0764)
2.00 - 2.02 (0.0787 - 0.0795)	1.96 (0.0772)
2.02 - 2.04 (0.0795 - 0.0803)	1.98 (0.0780)
2.04 - 2.06 (0.0803 - 0.0811)	2.00 (0.0787)
2.06 - 2.08 (0.0811 - 0.0819)	2.02 (0.0795)
2.08 - 2.10 (0.0819 - 0.0827)	2.04 (0.0803)
2.10 - 2.12 (0.0827 - 0.0835)	2.06 (0.0811)
2.12 - 2.14 (0.0835 - 0.0843)	2.08 (0.0819)
2.14 - 2.16 (0.0843 - 0.0850)	2.10 (0.0827)
2.16 - 2.18 (0.0850 - 0.0858)	2.12 (0.0835)
2.18 - 2.20 (0.0858 - 0.0866)	2.14 (0.0843)
2.20 - 2.22 (0.0866 - 0.0874)	2.16 (0.0850)
2.22 - 2.24 (0.0874 - 0.0882)	2.18 (0.0858)
2.24 - 2.26 (0.0882 - 0.0890)	2.20 (0.0866)
2.26 - 2.28 (0.0890 - 0.0898)	2.22 (0.0874)
2.28 - 2.30 (0.0898 - 0.0906)	2.24 (0.0882)
2.30 - 2.32 (0.0906 - 0.0913)	2.26 (0.0890)
2.32 - 2.34 (0.0913 - 0.0921)	2.28 (0.0898)
2.34 - 2.37 (0.0921 - 0.0933)	2.30 (0.0906)
2.37 - 2.41 (0.0933 - 0.0949)	2.34 (0.0921)
2.41 - 2.45 (0.0949 - 0.0965)	2.38 (0.0937)
2.45 - 2.49 (0.0965 - 0.0980)	2.42 (0.0953)
2.49 - 2.53 (0.0980 - 0.0996)	2.46 (0.0969)
2.53 - 2.57 (0.0996 - 0.1012)	2.50 (0.0984)
2.57 - 2.61 (0.1012 - 0.1028)	2.54 (0.1000)
2.61 - 2.65 (0.1028 - 0.1043)	2.58 (0.1016)
2.65 - 2.69 (0.1043 - 0.1059)	2.62 (0.1031)
2.69 - 2.73 (0.1059 - 0.1075)	2.66 (0.1047)

OUTPUT SHAFT

Seal ring clearance

Output shaft seal ring clearance mm (in)	
Standard	0.10 - 0.25 (0.0039 - 0.0098)
Allowable limit	0.25 (0.0098)

End play

Output shaft end play mm (in)	0 - 0.5 (0 - 0.020)

Output shaft adjusting shims

Thickness mm (in)	Part number
0.56 (0.0220)	31438-31X46
0.96 (0.0378)	31438-31X47
1.36 (0.0535)	31438-31X48

BEARING RETAINER

Seal ring clearance

Bearing retainer seal ring clearance mm (in)	
Standard	0.10 - 0.25 (0.0039 - 0.0098)
Allowable limit	0.25 (0.0098)

TOTAL END PLAY

Total end play mm (in)	0.25 - 0.55 (0.0098 - 0.0217)

Bearing race for adjusting total end play

Thickness mm (in)	Part number
0.6 (0.024)	31435-31X01
0.8 (0.031)	31435-31X02
1.0 (0.039)	31435-31X03
1.2 (0.047)	31435-31X04
1.4 (0.055)	31435-31X05
1.6 (0.063)	31435-31X06
1.8 (0.071)	31435-31X07
2.0 (0.079)	31435-31X08

REVERSE CLUTCH END PLAY

Reverse clutch end play mm (in)	0.65 - 1.00 (0.0256 - 0.0394)

Thrust washers for adjusting reverse clutch end play

Thickness mm (in)	Part number
0.65 (0.0256)	31508-31X00
0.80 (0.0315)	31508-31X01
0.95 (0.0374)	31508-31X02
1.10 (0.0433)	31508-31X03
1.25 (0.0492)	31508-31X04
1.40 (0.0551)	31508-31X05

ACCUMULATOR

O-ring

Unit: mm (in)

Accumulator	Diameter (Small)	Diameter (Large)
Servo release accumulator	26.9 (1.059)	44.2 (1.740)
N-D accumulator	34.6 (1.362)	39.4 (1.551)

Return spring

Unit: mm (in)

Accumulator		Free length	Outer diameter
Servo release accumulator spring	Outer	52.5 (2.067)	21.1 (0.831)
	Inner	52.0 (2.047)	13.1 (0.516)
N-D accumulator spring		45.0 (1.772)	27.6 (1.087)

BAND SERVO

Return spring

Unit: mm (in)

Return spring	Free length	Outer diameter
2nd servo return spring	32.5 (1.280)	25.9 (1.020)
OD servo return spring	31.0 (1.220)	21.7 (0.854)

REMOVAL AND INSTALLATION

Unit: mm (in)

Distance between end of converter housing and torque converter	15.9 (0.626) or more