SECTION STC
STEERING CONTROL SYSTEM

CONTENTS

BASIC INSPECTION

DIAGNOSIS AND REPAIR WORK FLOW

Work Flow

INFOID:0000000005650269

DETAILED FLOW

1.COLLECT THE INFORMATION FROM THE CUSTOMER

It is also important to clarify customer complaints before inspection. First of all, reproduce symptoms, and understand them fully. Ask customer about his/her complaints carefully. In some cases, it is necessary to check symptoms by driving vehicle with customer.

CAUTION:

Customers are not professional. It is dangerous to make an easy guess like “maybe the customer means that...,” or “maybe the customer mentions this symptom”.

>> GO TO 2.

2.CHECK THE STATUS

1. Power steering fluid leakage and check the power steering fluid level. Refer to ST-12, "Inspection".
2. Check the drive belt tension. Refer to EM-13, "Checking".
3. Check the power steering gear for damages, cracks and fluid leakage. Refer to ST-12, "Inspection".
4. Check the relief oil pressure. Refer to ST-52, "FOR MODELS WITHOUT 4WAS AND MODELS EXCEPT SPORT MODELS : Inspection".

>> GO TO 3.

3.DIAGNOSIS CHART BY SYMPTOM

Perform the diagnosis by symptom. Refer to STC-23, "Diagnosis Procedure".

>> GO TO 4.

4.FINAL CHECK

Check the input/output standard values for the power steering control unit.

Are the power steering control unit input/output values within standard ranges respectively?

YES >> INSPECTION END
NO >> GO TO 2.

SYSTEM DESCRIPTION

EPS SYSTEM

System Diagram

INFOID:0000000005650270

CONTROL DIAGRAM

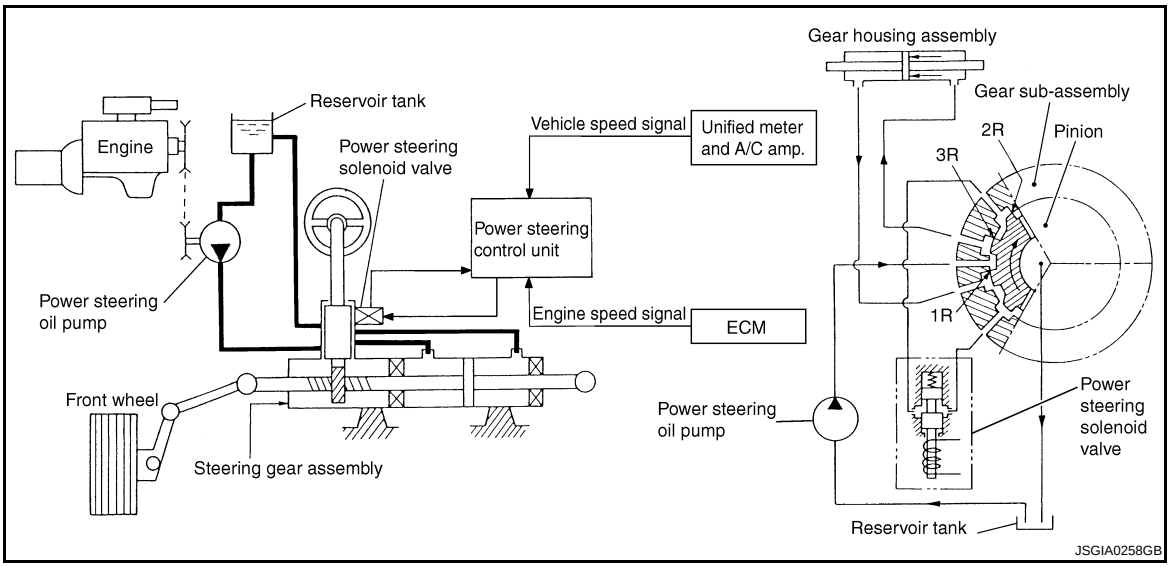

CROSS-SECTIONAL VIEW

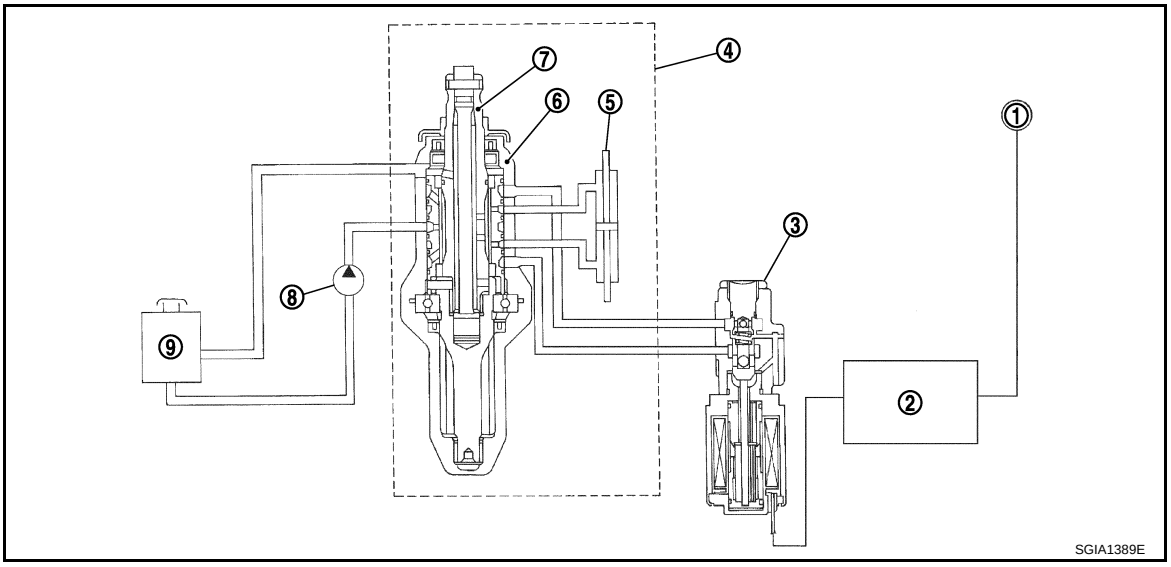

1.	Unified meter and A/C amp.	2.	Power steering control unit	3.	Power steering solenoid valve
4.	Steering gear assembly	5.	Gear housing assembly	6.	Gear sub-assembly
7.	Pinion	8.	Power steering oil pump	9.	Reservoir tank

System Description

INFOID:0000000005650271

- The EPS system controls the power steering solenoid valve through the power steering control unit.

- The valve driving voltage to control the power steering solenoid valve varies according to the vehicle speed.

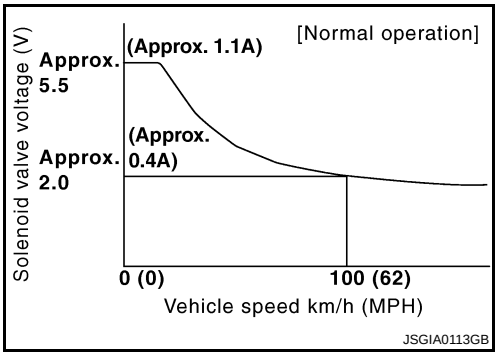

OPERATION PRINCIPLE

During Parking (When Turning The Steering Wheel To The Right.)

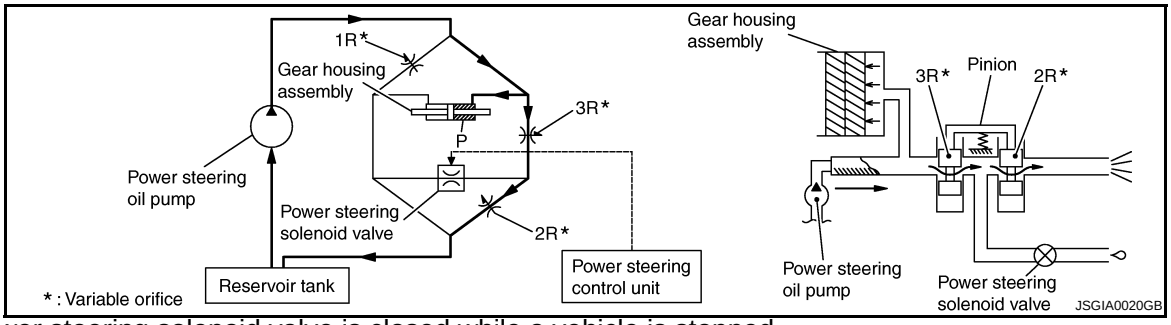

1. Power steering solenoid valve is closed while a vehicle is stopped.
2. Pinion “1R”, “2R” and “3R” are closed depending on steering torque of steering wheel.
3. Oil pressure “P” in the gear housing assembly is the sum of oil pressures occurred in “2R” and “3R”. This results in a light steering force because of high pressure.

During High-speed Operation

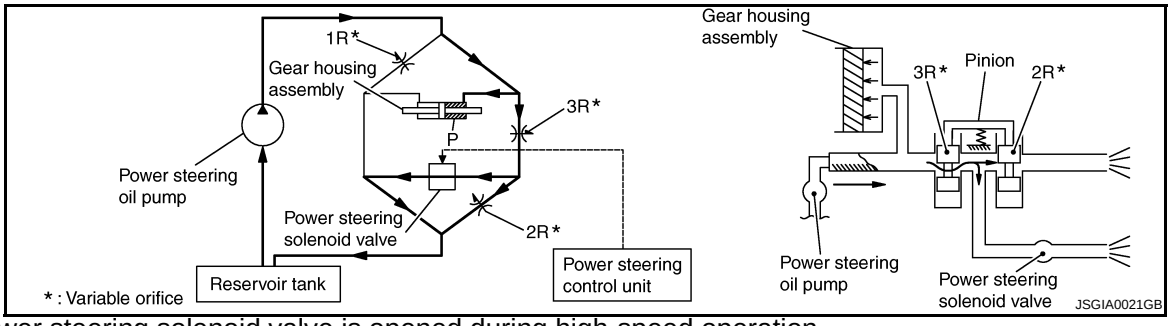

1. Power steering solenoid valve is opened during high-speed operation.
2. Pinion “1R”, “2R” and “3R” are closed depending on steering torque of steering wheel.
3. Oil pressure “2R” does not occur because the power steering solenoid valve is on full throttle.
4. Oil pressure “P” in the gear housing assembly includes only oil pressure occurred in “3R” and results in a heavy steering force.

Component Parts Location

INFOID:0000000005650272

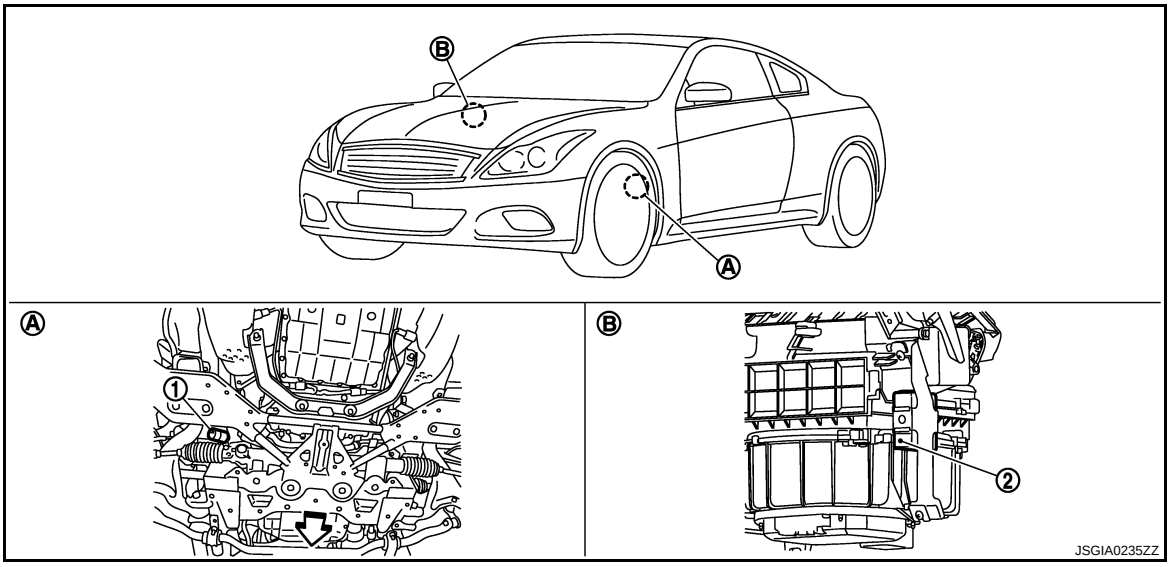

1. Power steering solenoid valve
2. Power steering control unit

A. Steering gear assembly
B. Glove box assembly removed

⇦: Vehicle front

Component Description

INFOID:0000000005650273

Component parts	Reference/Function
Power steering control unit	• Signals from various sensors control the driving voltage to the power steering solenoid valve. • The power steering control unit controls the driving voltage to the power steering solenoid valve for maintaining the power steering assist force when the fail-safe function is activated. (The engine speed signals control EPS system if any vehicle speed signal error is detected.)
Unified meter and A/C amp.	STC-15, "Description"
ECM	STC-13, "Description"
Power steering solenoid valve	STC-11, "Description"

DTC/CIRCUIT DIAGNOSIS

POWER SUPPLY AND GROUND CIRCUIT

Description

INFOID:0000000005650274

Power supply to EPS system

Diagnosis Procedure

INFOID:0000000005650275

1.CHECK POWER SUPPLY

1. Turn the ignition switch OFF.
2. Disconnect power steering control unit harness connector.
3. Check the voltage between power steering control unit harness connector and ground.

Power steering control unit		Voltage (Approx.)
Connector	Terminal	
M108	3 – Ground	0 V

4. Turn the ignition switch ON.
   CAUTION:
   Never start the engine.
5. Check the voltage between power steering control unit harness connector and ground.

Power steering control unit		Voltage (Approx.)
Connector	Terminal	
M108	3 – Ground	Battery voltage

Is the inspection result normal?

YES >> GO TO 2.
NO >> Check the following. If any items are damaged, repair or replace damaged parts.
- 10A fuses (#45) open
- Harness for short or open between ignition switch and power steering control unit harness connector No. 3 terminal.
- Ignition switch. Refer to PCS-63, "Component Inspection".

2.CHECK GROUND CIRCUIT

1. Turn the ignition switch OFF.
2. Check the continuity between power steering control unit harness connector and ground.

Power steering control unit		Continuity
Connector	Terminal	
M108	6 – Ground	Existed

Also check harness for short to ground and short to power.

Is the inspection result normal?

YES >> GO TO 3.
NO >> Repair open circuit or short to power in harness or connectors.

3.CHECK TERMINALS AND HARNESS CONNECTORS

Check the power steering control unit pin terminals for damage or loose connection with harness connector.

Is the inspection result normal?

YES >> INSPECTION END
NO >> Repair or replace damaged parts.

POWER STEERING SOLENOID VALVE

Description

INFOID:0000000005650276

Power steering solenoid valve controls the power steering oil pressure in the gear housing assembly.

Diagnosis Procedure

INFOID:0000000005650277

1. CHECK POWER STEERING SOLENOID VALVE SIGNAL

1. Turn the ignition switch OFF.
2. Check the voltage between power steering control unit harness connector and ground.

Power steering control unit			Voltage (Approx.)
Connector	Terminal	Condition	
M108	1 – Ground	Vehicle speed: 0 km/h (0 MPH) (Engine is running)	4.4 – 6.6 V
		Vehicle speed: 100 km/h (62 MPH)	2.4 – 3.6 V

Is the inspection result normal?

YES >> GO TO 2.
NO >> GO TO 4.

2. CHECK HARNESS BETWEEN POWER STEERING SOLENOID VALVE AND POWER STEERING CONTROL UNIT

1. Turn the ignition switch OFF.
2. Disconnect power steering solenoid valve harness connector.
3. Disconnect power steering control unit harness connector.
4. Check the continuity between power steering solenoid valve harness connector and the power steering control unit harness connector.

Power steering solenoid valve		Power steering control unit		Continuity
Connector	Terminal	Connector	Terminal	
F45	1	M108	1	Existed
F45	2	M108	5	Existed

Also check harness for short to ground and short to power.

Is the inspection result normal?

YES >> GO TO 3.
NO >> Repair or replace damaged parts.

3. CHECK POWER STEERING SOLENOID VALVE

1. Check the resistance between power steering solenoid valve connector terminals.

Power steering solenoid valve		Resistance (Approx.)
Connector	Terminal	
F45	1 – 2	4 – 6 Ω

2. Check the power steering solenoid valve connector by listening for its operation sound while applying battery voltage to power steering solenoid valve connector F45 terminals 1 (positive) and 2 (negative).

Is the inspection result normal?

YES >> GO TO 4.
NO >> Replace gear-sub assembly. Refer to ST-30, "2WD : Exploded View" (2WD), ST-37, "AWD : Exploded View" (AWD).

4. CHECK TERMINALS AND HARNESS CONNECTORS

- Check the power steering control unit pin terminals for damage or loose connection with harness connector.

- Check the power steering solenoid valve pin terminals for damage or loose connection with harness connector.

Is the inspection result normal?

YES >> INSPECTION END
NO >> Repair or replace damaged parts.

Component Inspection

INFOID:0000000005650278

1. CHECK POWER STEERING SOLENOID VALVE

1. Turn the ignition switch OFF.
2. Disconnect power steering solenoid valve harness connector.
3. Check the resistance between power steering solenoid valve connector terminals.

Power steering solenoid valve		Resistance (Approx.)
Connector	Terminal	
F45	1 – 2	4 – 6 Ω

4. Check the power steering solenoid valve connector by listening for its operation sound while applying battery voltage to power steering solenoid valve connector F45 terminals 1 (positive) and 2 (negative).

Is the inspection result normal?

YES >> INSPECTION END
NO >> Replace gear-sub assembly. Refer to ST-30, "2WD : Exploded View" (2WD), ST-37, "AWD : Exploded View" (AWD).

ENGINE SPEED SIGNAL CIRCUIT

Description

INFOID:0000000005650279

ECM sends engine speed signal to power steering control unit.

Diagnosis Procedure

INFOID:0000000005650280

1. PERFORM ECM SELF-DIAGNOSIS

With CONSULT-III

Perform ECM self-diagnosis.

Is any error system detected?

YES >> Check the error system.
NO >> GO TO 2.

2. CHECK HARNESS BETWEEN ECM AND POWER STEERING CONTROL UNIT

1. Turn the ignition switch OFF.
2. Disconnect ECM harness connectors.
3. Disconnect power steering control unit harness connector.
4. Check the continuity between ECM harness connector and power steering control unit harness connector.

ECM		Power steering control unit		Continuity
Connector	Terminal	Connector	Terminal	
M107	110	M108	10	Existed

Also check harness for short to ground and short to power.

Is the inspection result normal?

YES >> GO TO 3.
NO >> Repair or replace damaged parts.

3. CHECK ENGINE SPEED SIGNAL (1)

1. Turn the ignition switch OFF.
2. Connect ECM harness connectors.
3. Check the signal between ECM harness connector and ground with oscilloscope.

ECM			Value (Approx.)
Connector	Terminal	Condition	
M107	110 – Ground	Engine speed: At idle (Warm-up condition)	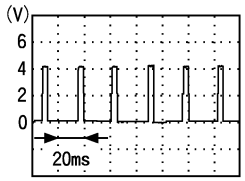 PBIA3654J
		Engine speed: Approx. 2,000 rpm (Warm-up condition)	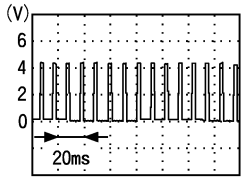 PBIA3655J

Also check harness for short to ground and short to power.

Is the inspection result normal?

YES >> GO TO 4.

NO >> Replace ECM. Refer to EC-17, "ADDITIONAL SERVICE WHEN REPLACING CONTROL UNIT (ECM) : Description".

4. CHECK ENGINE SPEED SIGNAL (2)

1. Turn the ignition switch OFF.
2. Connect power steering control unit harness connector.
3. Check the signal between power steering control unit harness connector and ground with oscilloscope.

Power steering control unit			Value (Approx.)
Connector	Terminal	Condition	
M108	10 – Ground	Engine speed: At idle (Warm-up condition)	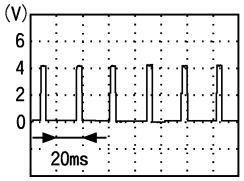 PBIA3654J
		Engine speed: Approx. 2,000 rpm (Warm-up condition)	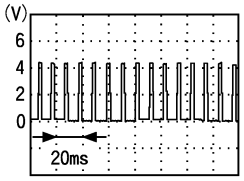 PBIA3655J

Also check harness for short to ground and short to power.

Is the inspection result normal?

YES >> GO TO 5.
NO >> Replace power steering control unit. Refer to STC-26, "Exploded View".

5. CHECK TERMINALS AND HARNESS CONNECTORS

- Check the power steering control unit pin terminals for damage or loose connection with harness connector.
- Check ECM pin terminals for damage or loose connection with harness connector.

Is the inspection result normal?

YES >> INSPECTION END
NO >> Repair or replace damaged parts.

VEHICLE SPEED SIGNAL CIRCUIT

Description

INFOID:0000000005650281

Unified meter and A/C amp. sends vehicle speed signal to power steering control unit.

Diagnosis Procedure

INFOID:0000000005650282

1. PERFORM UNIFIED METER AND A/C AMP. SELF-DIAGNOSIS

With CONSULT-III

Perform unified meter and A/C amp. self-diagnosis.

Is any error system detected?

YES >> Check the error system.
NO >> GO TO 2.

2. CHECK HARNESS BETWEEN UNIFIED METER AND A/C AMP. AND POWER STEERING CONTROL UNIT

1. Turn the ignition switch OFF.
2. Disconnect unified meter and A/C amp. harness connector.
3. Disconnect power steering control unit harness connector.
4. Check the continuity between unified meter and A/C amp. harness connector and power steering control unit harness connector.

Unified meter and A/C amp.		Power steering control unit		Continuity
Connector	Terminal	Connector	Terminal	
M66	8	M108	8	Existed

Also check harness for short to ground and short to power.

Is the inspection result normal?

YES >> GO TO 3.
NO >> Repair or replace damaged parts.

3. CHECK VEHICLE SPEED SIGNAL (1)

1. Turn the ignition switch OFF.
2. Connect unified meter and A/C amp. harness connector.
3. Check the unified meter and A/C amp. input/output standard values. Refer to MWI-83, "Reference Value".

Is the inspection result normal?

YES >> GO TO 4.
NO >> Replace unified meter and A/C amp. Refer to MWI-128, "Exploded View".

4. CHECK VEHICLE SPEED SIGNAL (2)

1. Turn the ignition switch OFF.
2. Connect power steering control unit harness connector.
3. Check the signal between power steering control unit harness connector and ground with oscilloscope.

Power steering control unit			Value (Approx.)
Connector	Terminal	Condition	
M108	8 – Ground	Vehicle speed: 40 km/h (25 MPH) **CAUTION:** **Check the air pressure of tire under standard condition.**	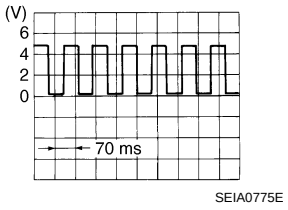

Also check harness for short to ground and short to power.

Is the inspection result normal?

YES >> GO TO 5.
NO >> Replace power steering control unit. Refer to STC-26, "Exploded View".

5. CHECK TERMINALS AND HARNESS CONNECTORS

- Check the power steering control unit pin terminals for damage or loose connection with harness connector.
- Check the unified meter and A/C amp. pin terminals for damage or loose connection with harness connector.

Is the inspection result normal?

YES >> INSPECTION END
NO >> Repair or replace damaged parts.

ECU DIAGNOSIS INFORMATION

POWER STEERING CONTROL UNIT

Reference Value

INFOID:0000000005650283

TERMINAL LAYOUT

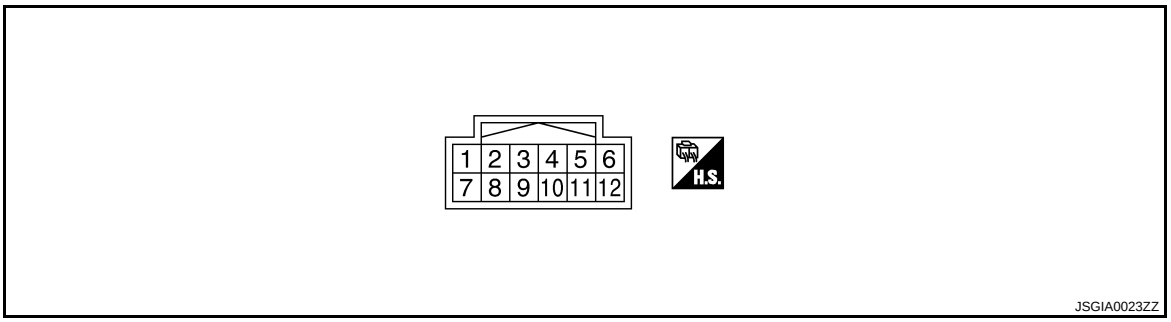

PHYSICAL VALUES

Terminal No. +	Terminal No. -	Wire color	Description: Signal name	Description: Input/Output	Condition	Value (Approx.)
1	Ground	LG	Power steering solenoid valve voltage	Output	Vehicle speed: 0 km/h (0 MPH) (Engine is running)	4.4 – 6.6 V
					Vehicle speed: 100 km/h (62 MPH)	2.4 – 3.6 V
3	Ground	G	Ignition switch power supply	Input	Ignition switch: ON	Battery voltage
					Ignition switch: OFF	0 V
5	Ground	B	Power steering solenoid valve ground	—	Always	0 V
6	Ground	B	Ground	—	Always	0 V
8	Ground	L	Vehicle speed signal	Input	Vehicle speed: 40 km/h (25 MPH) **CAUTION:** **Check air pressure of tire under standard condition.**	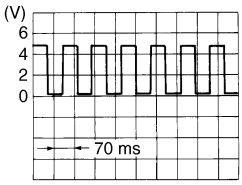 SEIA0775E
10	Ground	R	Engine speed signal	Input	Engine speed: At idle (Warm-up condition)	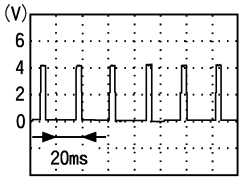 PBIA3654J
					Engine speed: Approx. 2,000 rpm (Warm-up condition)	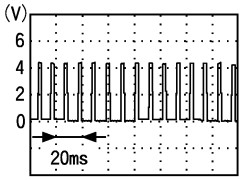 PBIA3655J

CAUTION:

When using circuit tester or oscilloscope to measure voltage for inspection, be sure not to forcibly extend any connector terminals.

Wiring Diagram - ELECTRONICALLY CONTROLLED POWER STEERING SYSTEM -

INFOID:0000000005650284

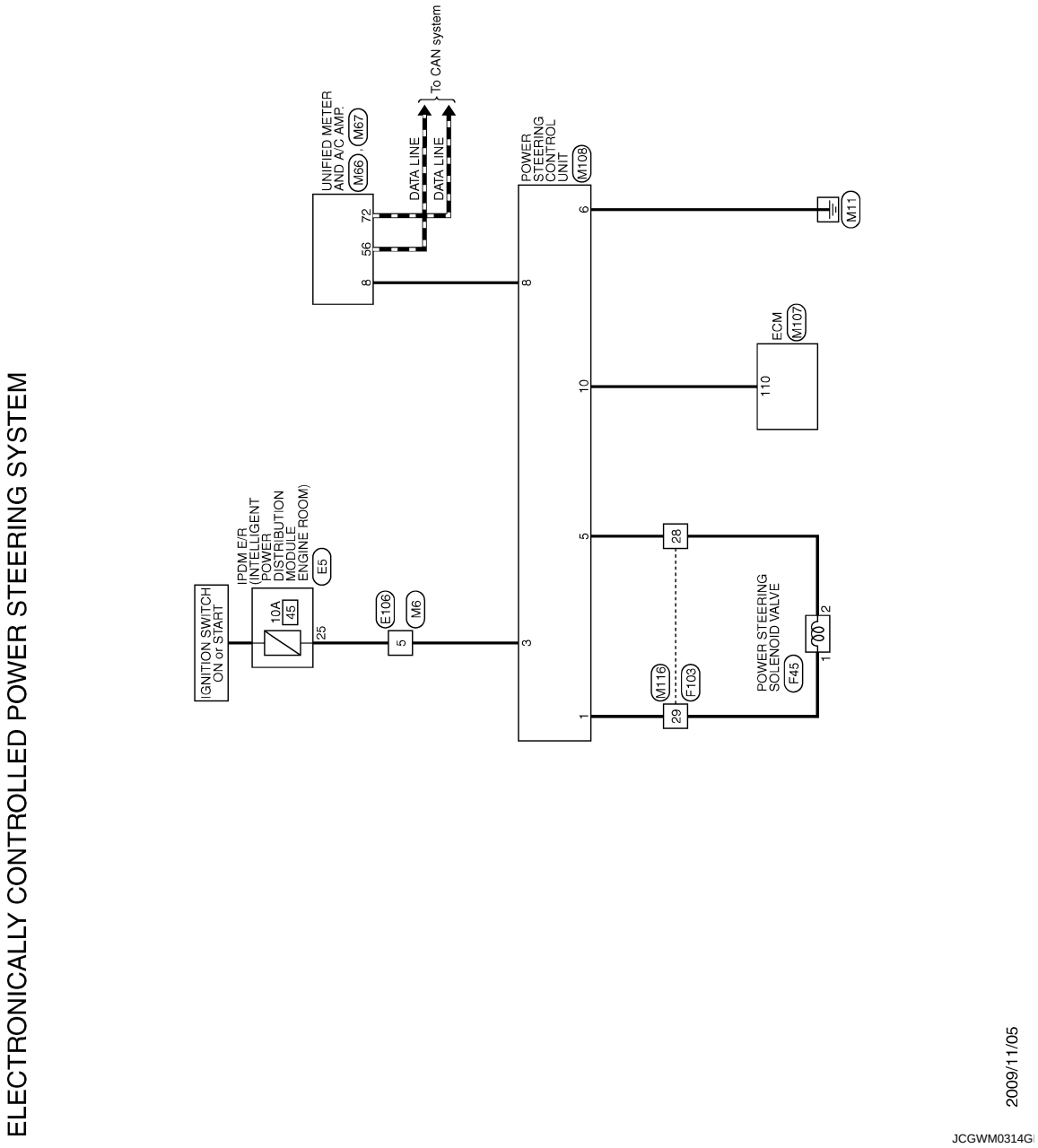

ELECTRONICALLY CONTROLLED POWER STEERING SYSTEM

Connector No.	E5
Connector Name	IPDM E/R (INTELLIGENT POWER DISTRIBUTION MODULE ENGINE ROOM)
Connector Type	TH20FW-CS12-M4-1V

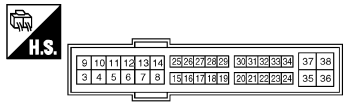

Terminal No.	Color of Wire	Signal Name [Specification]
4	V	–
5	L	–
7	R	–
11	BR	–
12	B/W	–
13	Y	–
16	LG	–
19	W	–
25	G	–
26	R	–
27	BG	–
28	L	–
30	GR	–
32	V	–
33	P	–
36	G	–

Connector No.	E106
Connector Name	WIRE TO WIRE
Connector Type	TH80FW-CS16-TM4

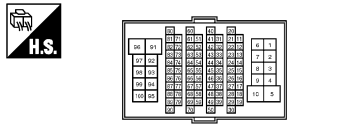

Terminal No.	Color of Wire	Signal Name [Specification]
1	GR	–
3	BG	–
5	G	–
6	BG	–
7	LG	–
10	W	–
11	V	–
12	R	–
13	L	–
14	GR	–
15	P	–
16	W	–
17	V	–
18	BG	–
19	GR	–
20	LG	–
30	R	–
31	L	–
32	BG	–
33	P	–
34	V	–
35	BR	–
36	W	–
37	Y	–
38	R	–
39	B	–
40	G	–
41	W	–
42	LG	–
43	SB	–
44	GR	–
45	BG	–
46	LG	–
47	V	–
48	P	–
49	L	–
59	B	–
66	LG	–
67	SB	–
68	R	–
69	W	–
70	G	–
80	W	–
81	P	–
82	G	–
83	V	–
84	L	–
85	BG	–
86	LG	–
87	Y	–
88	GR	–
89	W	–
91	G	–
93	GR	–
95	Y	–
96	Y	–
97	BR	–
98	SHIELD	–
99	L	–
100	P	–

Connector No.	F45
Connector Name	POWER STEERING SOLENOID VALVE
Connector Type	RS02FBR-DGY

Terminal No.	Color of Wire	Signal Name [Specification]
1	LG	–
2	B	–

Connector No.	F103
Connector Name	WIRE TO WIRE
Connector Type	TK36FW-NS10

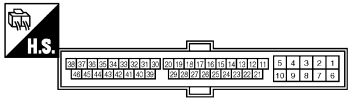

Terminal No.	Color of Wire	Signal Name [Specification]
2	G	–
3	W	–
4	R	–
5	B	–
9	Y	–
10	GR	–
19	O	–
20	Y	–
28	B	–
29	LG	–
30	R	–
31	R	–
33	B	–
34	B	–
35	L	–
36	P	–
37	Y	–
38	G	–
41	O	–
42	BR	–
43	P	–
44	L	–
45	G	–
46	V	–

JCGWM0315GI

ELECTRONICALLY CONTROLLED POWER STEERING SYSTEM

Connector No.	M6
Connector Name	WIRE TO WIRE
Connector Type	TH80MW-CS16-TM4

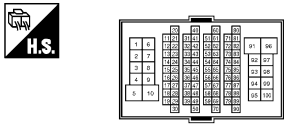

Terminal No.	Color of Wire	Signal Name [Specification]
1	BG	–
3	R	–
5	G	–
6	L	–
7	W	–
10	W	–
11	V	–
12	R	–
13	L	–
14	GR	–
15	P	–
16	W	–
17	BR	–
18	BG	–
19	L	–
20	L	–
30	R	–
31	SB	–
32	Y	–
33	BG	–
34	R	–
35	BR	–
36	SB	–
37	Y	–
38	LG	–
39	SB	–
40	P	–
41	W	–
42	LG	–
43	R	–
44	Y	– [With A/T]
44	P	– [With M/T]
45	BG	–
46	G	–
47	V	–
48	P	–
49	L	–
59	B	–
66	GR	–
67	P	–
68	L	–
69	W	–
70	BR	–
80	L	–
81	R	–
82	V	–
83	W	–
84	L	–
85	BG	–
86	W	–
87	G	–
88	B	–
89	SB	–
91	L	–
93	Y	–
95	Y	–
96	R	–
97	P	–
98	SHIELD	–
99	V	–
100	SB	–

Connector No.	M66
Connector Name	UNIFIED METER AND A/C AMP.
Connector Type	TH40FW-NH

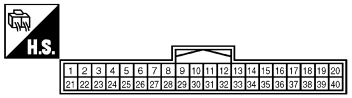

Terminal No.	Color of Wire	Signal Name [Specification]
4	SB	STOP LAMP SWITCH
5	L	SHIFT UP
6	BG	PADDLE UP
7	GR	COMMUNICATION SIGNAL (AMP.->METER)
8	L	VEHICLE SPEED (2-PULSE)
9	SB	SEAT BELT BUCKLE SWITCH (DRIVER SIDE)
10	W	MANUAL MODE
11	G	NON-MANUAL MODE
14	BR	COMMUNICATION SIGNAL (LCD->AMP.)
20	G	ION ON / OFF SIGNAL
23	L	AT SNOW SW
25	V	SHIFT DOWN
26	G	PADDLE DOWN
27	LG	COMMUNICATION SIGNAL (METER->AMP.)
28	G	VEHICLE SPEED (8-PULSE)
30	BG	PARKING BRAKE SWITCH
34	Y	COMMUNICATION SIGNAL (AMP.->LCD)
38	P	BLOWER MOTOR CONTROL SIGNAL

Connector No.	M67
Connector Name	UNIFIED METER AND A/C AMP.
Connector Type	TH32FW-NH

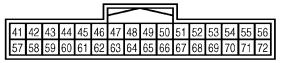

Terminal No.	Color of Wire	Signal Name [Specification]
41	L	ACC POWER SUPPLY
42	BR	FUEL LEVEL SENSOR SIGNAL
43	V	INTAKE SENSOR SIGNAL
44	LG	IN-VEHICLE SENSOR SIGNAL
45	V	AMBIENT SENSOR SIGNAL
46	GR	SUNLOAD SENSOR SIGNAL
47	W	GAS SENSOR SIGNAL
53	G	IGNITION POWER SUPPLY
54	Y	BATTERY POWER SUPPLY
55	B	GROUND
56	L	CAN-H
57	LG	BRAKE FLUID LEVEL SWITCH
58	P	FUEL LEVEL SENSOR GROUND
59	Y	INTAKE SENSOR GROUND
60	W	IN-VEHICLE SENSOR GROUND
61	R	AMBIENT SENSOR GROUND
62	SB	SUNLOAD SENSOR GROUND
63	L	ION CONTROL MODE OUTPUT SIGNAL
65	BG	ECV SIGNAL
69	P	A/C LAN SIGNAL
70	R	EACH DOOR MOTOR POWER SUPPLY
71	GR	GROUND
72	P	CAN-L

Connector No.	M107
Connector Name	ECM
Connector Type	RH24FGY-RZ8-R-LH-Z

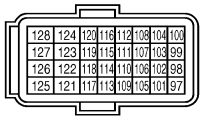

Terminal No.	Color of Wire	Signal Name [Specification]
97	R	APS 1
98	P	APS 2
99	L	AVCC 1-APS 1
100	W	GNDA-APS 1
101	SB	ASCDSW
102	W	FTPRS
103	GR	AVCC 2-APS 2
104	V	GND-APS 2
105	L	PDPRESS
106	W	TF
107	BG	AVCC-PDPRES
108	Y	GND ASCDSW
109	G	NEUT-H
110	R	TACHO
112	L	GNDA-PDPRES
113	P	VEHCAN-L1
114	L	VEHCAN-H1
117	V	KLINE
121	LG	CDCV
122	P	BRAKE
123	B	GND
124	B	GND
125	R	VBR
126	BR	BNCSW
127	B	GND
128	B	GND

JCGWM0316GI

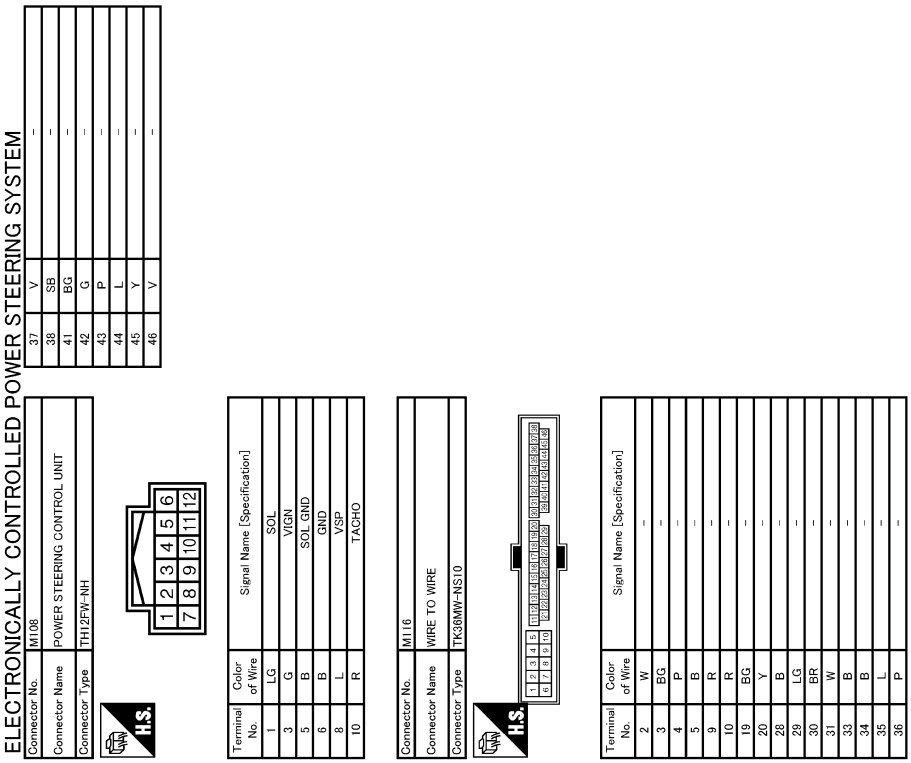

JCGWM0317GI

Fail Safe

INFOID:0000000005650285

EPS system

- EPS system enters the fail-safe mode (that allows the steering force to be controlled without impairing the drive ability) if any of the input/output values to/from EPS system (power steering control unit) deviate from the standard range.
  NOTE:
  The system enters the fail-safe mode if the engine speed remains at 1,500 rpm or more for over 10 seconds while the vehicle is stopped. This is normal.
- The fail-safe function is canceled when a vehicle speed signal of 2 km/h (1.2 MPH) or more is inputted or the key switch is turned OFF→ON. EPS system restores the normal operation at that time.

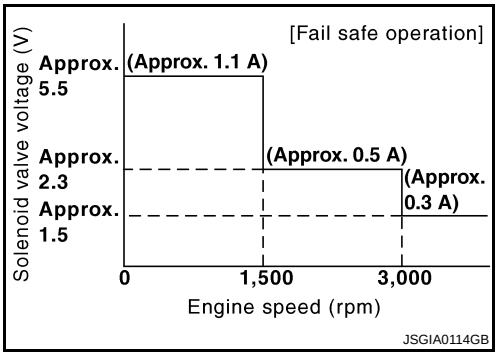

Mode	Warning lamp	DTC	Detection point (malfunction part)	Error area and root cause
Fail-safe function	—	—	Vehicle speed signal input	• Engine speed is 1,500 rpm or more and there is no vehicle speed signal input for over 10 seconds during vehicle travel. • Vehicle speed signal has abruptly dropped from 30 km/h (19 MPH) or more to 2 km/h (1.2 MPH) or less within 1.4 seconds.

SYMPTOM DIAGNOSIS

UNBALANCE STEERING WHEEL TURNING FORCE (TORQUE VARIATION)

Description

INFOID:0000000005650286

- Hard steering when fully turning the steering wheel.
- Light steering when driving at a high speed.

Diagnosis Procedure

INFOID:0000000005650287

1. CHECK SYSTEM FOR POWER SUPPLY AND GROUND

Perform trouble diagnosis for power supply and ground. Refer to STC-10, "Diagnosis Procedure".

Is the inspection result normal?

YES >> GO TO 2.
NO >> Repair or replace damaged parts.

2. CHECK SYSTEM FOR VEHICLE SPEED SIGNAL

Perform trouble diagnosis for vehicle speed signal. Refer to STC-15, "Diagnosis Procedure".

Is the inspection result normal?

YES >> GO TO 3.
NO >> Repair or replace damaged parts.

3. CHECK SYSTEM FOR ENGINE SPEED SIGNAL

Perform trouble diagnosis for engine speed signal. Refer to STC-13, "Diagnosis Procedure".

Is the inspection result normal?

YES >> GO TO 4.
NO >> Repair or replace damaged parts.

4. CHECK SYSTEM FOR POWER STEERING SOLENOID VALVE

Perform trouble diagnosis for power steering solenoid valve. Refer to STC-11, "Diagnosis Procedure".

Is the inspection result normal?

YES >> Perform the symptom diagnosis for the steering system. Refer to ST-3, "NVH Troubleshooting Chart".
NO >> Repair or replace damaged parts.

PRECAUTION

PRECAUTIONS

Precaution for Supplemental Restraint System (SRS) "AIR BAG" and "SEAT BELT PRE-TENSIONER"

INFOID:0000000005843146

The Supplemental Restraint System such as “AIR BAG” and “SEAT BELT PRE-TENSIONER”, used along with a front seat belt, helps to reduce the risk or severity of injury to the driver and front passenger for certain types of collision. This system includes seat belt switch inputs and dual stage front air bag modules. The SRS system uses the seat belt switches to determine the front air bag deployment, and may only deploy one front air bag, depending on the severity of a collision and whether the front occupants are belted or unbelted.
Information necessary to service the system safely is included in the “SRS AIR BAG” and “SEAT BELT” of this Service Manual.

WARNING:

- **To avoid rendering the SRS inoperative, which could increase the risk of personal injury or death in the event of a collision which would result in air bag inflation, all maintenance must be performed by an authorized NISSAN/INFINITI dealer.**
- **Improper maintenance, including incorrect removal and installation of the SRS, can lead to personal injury caused by unintentional activation of the system. For removal of Spiral Cable and Air Bag Module, see the “SRS AIR BAG”.**
- **Do not use electrical test equipment on any circuit related to the SRS unless instructed to in this Service Manual. SRS wiring harnesses can be identified by yellow and/or orange harnesses or harness connectors.**

PRECAUTIONS WHEN USING POWER TOOLS (AIR OR ELECTRIC) AND HAMMERS

WARNING:

- **When working near the Air Bag Diagnosis Sensor Unit or other Air Bag System sensors with the ignition ON or engine running, DO NOT use air or electric power tools or strike near the sensor(s) with a hammer. Heavy vibration could activate the sensor(s) and deploy the air bag(s), possibly causing serious injury.**
- **When using air or electric power tools or hammers, always switch the ignition OFF, disconnect the battery, and wait at least 3 minutes before performing any service.**

Precaution Necessary for Steering Wheel Rotation after Battery Disconnect

INFOID:0000000005843152

NOTE:

- Before removing and installing any control units, first turn the push-button ignition switch to the LOCK position, then disconnect both battery cables.
- After finishing work, confirm that all control unit connectors are connected properly, then re-connect both battery cables.
- Always use CONSULT-III to perform self-diagnosis as a part of each function inspection after finishing work. If a DTC is detected, perform trouble diagnosis according to self-diagnosis results.

For vehicle with steering lock unit, if the battery is disconnected or discharged, the steering wheel will lock and cannot be turned.
If turning the steering wheel is required with the battery disconnected or discharged, follow the operation procedure below before starting the repair operation.

OPERATION PROCEDURE

1. Connect both battery cables.
   NOTE:
   Supply power using jumper cables if battery is discharged.
2. Turn the push-button ignition switch to ACC position.
   (At this time, the steering lock will be released.)
3. Disconnect both battery cables. The steering lock will remain released with both battery cables disconnected and the steering wheel can be turned.
4. Perform the necessary repair operation.

5. When the repair work is completed, re-connect both battery cables. With the brake pedal released, turn the push-button ignition switch from ACC position to ON position, then to LOCK position. (The steering wheel will lock when the push-button ignition switch is turned to LOCK position.)
6. Perform self-diagnosis check of all control units using CONSULT-III.

REMOVAL AND INSTALLATION

POWER STEERING CONTROL UNIT

Exploded View

INFOID:0000000005650290

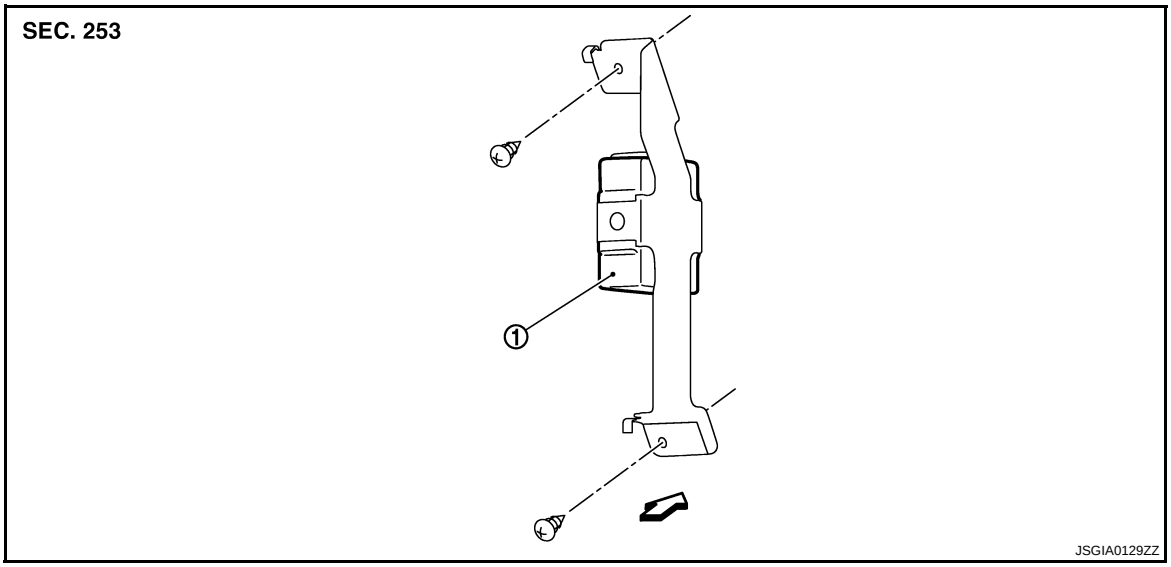

1. Power steering control unit

⇦: Vehicle front

Removal and Installation

INFOID:0000000005650291

REMOVAL

1. Remove glove box assembly. Refer to IP-12, "A/T MODELS : Exploded View"(A/T models), IP-22, "M/T MODELS : Exploded View"(M/T models).
2. Remove power steering control unit screws.
3. Remove power steering control unit (1).
4. Disconnect power steering control unit connector.

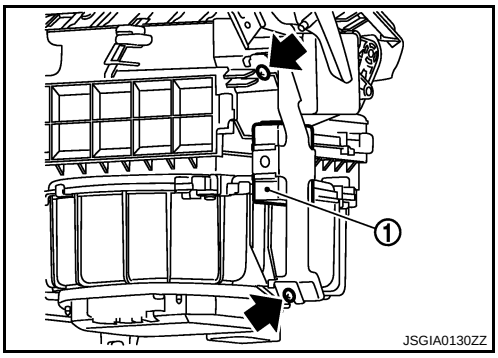

INSTALLATION

Install in the reverse order of removal.

BASIC INSPECTION

DIAGNOSIS AND REPAIR WORKFLOW

Work Flow

INFOID:0000000005650292

DETAILED FLOW

1. INTERVIEW FROM THE CUSTOMER

It is also important to clarify customer complaints before inspection. First of all, reproduce symptoms, and understand them fully. Ask customer about his/her complaints carefully. In some cases, it is necessary to check symptoms by driving vehicle with customer.

CAUTION:

Customers are not professional. It is dangerous to make an easy guess like “maybe the customer means that...,” or “maybe the customer mentions this symptom”.

>> GO TO 2.

2. CHECK SYMPTOM

Start the engine.

CAUTION:

Stop the vehicle.

Does 4WAS warning lamp turn ON?

YES >> GO TO 3.
NO >> GO TO 6.

3. PERFORM SELF-DIAGNOSIS (4WAS MAIN CONTROL UNIT)

With CONSULT-III

Perform 4WAS main control unit self-diagnosis.

Is any DTC detected other than “C1930” or “C1931”?

YES >> GO TO 4.
NO >> GO TO 5.

4. PERFORM TROUBLE DIAGNOSIS (4WAS MAIN CONTROL UNIT)

With CONSULT-III

1. Check the error system detected from the self-diagnosis.
   CAUTION:
   Check the “DATA MONITOR” value of each DTC detected with the self-diagnosis function.
2. Erase 4WAS main control unit self-diagnosis memory.
   CAUTION:
   - **Never erase the self-diagnosis result (record) history when replacing 4WAS main control unit.**
   - **Erase the memory of the self-diagnosis results (record) after printing out or recording all the values of “DATA MONITOR”.**

>> GO TO 5.

5. PERFORM SELF-DIAGNOSIS (4WAS FRONT CONTROL UNIT AND 4WAS MAIN CONTROL UNIT)

With CONSULT-III

1. Perform 4WAS front control unit self-diagnosis.
2. Check the error system detected from the self-diagnosis.
   CAUTION:
   Check the “DATA MONITOR” value of each DTC detected with the self-diagnosis function.
3. Erase 4WAS front control unit self-diagnosis memory.
   CAUTION:
   - **Never erase the self-diagnosis result (record) history when replacing 4WAS front control unit.**
   - **Erase the memory of the self-diagnosis results (record) after printing out or recording all the values of “DATA MONITOR”.**
4. Perform 4WAS main control unit self-diagnosis.

5. Check the error system detected from the self-diagnosis.
   CAUTION:
   Check the "DATA MONITOR" value of each DTC detected with the self-diagnosis function.
6. Erase 4WAS main control unit self-diagnosis memory.
   CAUTION:
   - **Never erase the self-diagnosis result (record) history when replacing 4WAS main control unit.**
   - **Erase the memory of the self-diagnosis results (record) after printing out or recording all the values of "DATA MONITOR".**

>> GO TO 6.

6. CHECK TERMINAL

Check each harness connector pin terminal for disconnection.

>> GO TO 7.

7. CHECK SYMPTOM REPRODUCTION

With CONSULT-III
Perform DTC reproduction procedure for the error system.

Is any error system detected?

YES >> GO TO 2.
NO >> GO TO 8.

8. PERFORM SYMPTOM DIAGNOSIS

With CONSULT-III
Perform the symptom diagnosis for each system.

Is any error detected?

YES >> GO TO 2.
NO >> GO TO 9.

9. FINAL CHECK

With CONSULT-III
Check input/output signal standard of 4WAS front control unit and 4WAS main control unit.

Is the input/output the standard value?

YES >> INSPECTION END
NO >> GO TO 2.

INSPECTION AND ADJUSTMENT

ADDITIONAL SERVICE WHEN REPLACING CONTROL UNIT

ADDITIONAL SERVICE WHEN REPLACING CONTROL UNIT : Description

INFOID:0000000005650293

- Perform 4WAS front actuator adjustment after replacing 4WAS front control unit.
- Perform 4WAS front actuator adjustment when performing any service below.
  - 4WAS front actuator and the steering components (including wheel alignment) removal. Refer to STC-29, "4WAS FRONT ACTUATOR NEUTRAL POSITION ADJUSTMENT : Special Repair Requirement (Pattern 1)".

    CAUTION:
    - **Check the following items before the removal:**
    - **4WAS warning lamp is turned OFF after the engine starts.**
    - **Self-diagnosis of each control unit of 4WAS system (4WAS front control unit/4WAS main control unit) is performed. Check that 4WAS system is controlled properly.**
  - 4WAS front actuator and the steering components (including wheel alignment) installation. Refer to STC-30, "4WAS FRONT ACTUATOR NEUTRAL POSITION ADJUSTMENT : Special Repair Requirement (Pattern 2)".
  - 4WAS front control unit and the steering angle sensor replacement. Refer to STC-30, "4WAS FRONT ACTUATOR NEUTRAL POSITION ADJUSTMENT : Special Repair Requirement (Pattern 3)".
  - When driving while misaligning the steering wheel position (center) after installing 4WAS front actuator. Refer to STC-32, "4WAS FRONT ACTUATOR NEUTRAL POSITION ADJUSTMENT : Special Repair Requirement (Pattern 4)".

4WAS FRONT ACTUATOR NEUTRAL POSITION ADJUSTMENT

4WAS FRONT ACTUATOR NEUTRAL POSITION ADJUSTMENT : Description

INFOID:0000000005650294

- Perform 4WAS front actuator adjustment when performing any service below.
  - 4WAS front actuator and the steering components (including wheel alignment) removal. Refer to STC-29, "4WAS FRONT ACTUATOR NEUTRAL POSITION ADJUSTMENT : Special Repair Requirement (Pattern 1)".

    CAUTION:
    - **Check the following items before the removal:**
    - **4WAS warning lamp OFF after the engine starts.**
    - **Self-diagnosis of each control unit of 4WAS system (4WAS front control unit/4WAS main control unit) is performed. Check that 4WAS system controlled properly.**
  - 4WAS front actuator and the steering components (including wheel alignment) installation. Refer to STC-30, "4WAS FRONT ACTUATOR NEUTRAL POSITION ADJUSTMENT : Special Repair Requirement (Pattern 2)".
  - 4WAS front control unit and the steering angle sensor replacement. Refer to STC-30, "4WAS FRONT ACTUATOR NEUTRAL POSITION ADJUSTMENT : Special Repair Requirement (Pattern 3)".
  - When driving while misaligning the steering wheel position (center) after installing 4WAS front actuator. Refer to STC-32, "4WAS FRONT ACTUATOR NEUTRAL POSITION ADJUSTMENT : Special Repair Requirement (Pattern 4)".

4WAS FRONT ACTUATOR NEUTRAL POSITION ADJUSTMENT : Special Repair Requirement (Pattern 1)

INFOID:0000000005650295

1. 4WAS FRONT ACTUATOR ADJUSTMENT

With CONSULT-III

1. Start the engine.

   CAUTION:

   Stop the vehicle.
2. Turn the steering wheel to adjust “ACTR ROTA ANG” of the 4WAS front control unit “DATA MONITOR” so that it falls within the range shown below:

   ACTR ROTA ANG : –3.5 – 3.5 deg
3. Turn the ignition switch OFF.

CAUTION:
Never touch the steering wheel after turning ignition switch OFF.

>> END

4WAS FRONT ACTUATOR NEUTRAL POSITION ADJUSTMENT : Special Repair Requirement (Pattern 2)

INFOID:0000000005650296

1. 4WAS FRONT ACTUATOR ADJUSTMENT

With CONSULT-III

1. Turn the ignition switch ON.
   CAUTION:
   Never start the engine.
2. Steer 30° leftward slowly. Steer 30° rightward and return the steering wheel to the straight-ahead position.
3. Perform the steering angle sensor neutral position adjustment. Refer to BRC-8, "ADJUSTMENT OF STEERING ANGLE SENSOR NEUTRAL POSITION : Special Repair Requirement".
4. Turn the ignition switch OFF.

>> GO TO 2.

2. PERFORM ACTIVE TEST (SLOW MODE)

With CONSULT-III

1. Start the engine.
   CAUTION:
   Stop the vehicle.
2. Select “SLOW MODE” item on “ACTIVE TEST” of 4WAS front control unit.
3. Perform “MODE START” of “ACTIVE TEST”.
4. Steer the steering wheel leftward slowly until the turning stops.
5. Steer the steering wheel rightward slowly until the turning stops.

Is “OK” indicated on both right and left on “SLOW MODE”?

YES >> GO TO 3.
NO >> Refer to STC-32, "4WAS FRONT ACTUATOR NEUTRAL POSITION ADJUSTMENT : Special Repair Requirement (Pattern 4)".

3. PERFORM SELF-DIAGNOSIS (4WAS FRONT CONTROL UNIT)

With CONSULT-III

Perform 4WAS front control unit self-diagnosis.

NOTE:
Detect DTC “C1671” when replacing 4WAS front control unit or performing 4WAS front actuator adjustment. DTC “C1671” becomes past record if 4WAS front actuator adjustment is completed normally.

Is any error system detected?

YES >> Check the error system.
NO >> GO TO 4.

4. ERASE ERROR HISTORY

With CONSULT-III

Erase the memory of 4WAS main control unit and 4WAS main control unit self-diagnosis result.

>> END

4WAS FRONT ACTUATOR NEUTRAL POSITION ADJUSTMENT : Special Repair Requirement (Pattern 3)

INFOID:0000000005650297

1. PERFORM ACTIVE TEST (LOCK OPERATION)

With CONSULT-III

1. Stop the vehicle to the straight-ahead position.

2. Turn the ignition switch ON.
   CAUTION:
   Never start the engine.
3. Select “LOCK OPERATION” item on “ACTIVE TEST” of 4WAS front control unit.
4. Perform “RELEASE” of “ACTIVE TEST”.
   CAUTION:
   - **Turn the steering wheel 90°. Check that the front wheels do not move.**
   - **Never turn the steering wheel during “RELEASE”.**
5. Turn the steering wheel to adjust “4WAS STR ANG” of the 4WAS front control unit “DATA MONITOR” so that it falls within the range shown below:

   4WAS STR ANG : –3.5 – 3.5 deg

6. Perform “LOCK” item on “ACTIVE TEST” of 4WAS front control unit.
7. Steer 30° leftward slowly. Steer 30° rightward and return the steering wheel to the straight-ahead position.
8. Finish 4WAS front control unit active test.

>> GO TO 2.

2. STEERING ANGLE SENSOR NEUTRAL POSITION ADJUSTMENT

1. Perform the steering angle sensor neutral position adjustment. Refer to BRC-8, "ADJUSTMENT OF STEERING ANGLE SENSOR NEUTRAL POSITION : Special Repair Requirement".
2. Turn the ignition switch OFF.

>> GO TO 3.

3. RETURN TO 4WAS FRONT ACTUATOR INITIAL POSITION

1. Start the engine.
   CAUTION:
   Stop the vehicle.
2. Steer 90° leftward slowly. Then steer 90° rightward.
3. Steer 90° leftward slowly again. Then steer 90° rightward. Return the steering wheel to the straight-ahead position.
4. Stop the vehicle in the straight-ahead position after driving for a period of time. (When engine is running)

>> GO TO 4.

4. CHECK 4WAS FRONT ACTUATOR INSPECTION

With CONSULT-III

1. Check “4WAS STR ANG” item on “DATA MONITOR” of 4WAS front control unit.
   CAUTION:
   Never touch the steering wheel during the service.

   4WAS STR ANG : –3.5 – 3.5 deg

2. Turn the ignition switch OFF.

Is the inspection result normal?

YES >> GO TO 5.
NO >> GO TO 1.

5. PERFORM ACTIVE TEST (SLOW MODE)

With CONSULT-III

1. Start the engine.
   CAUTION:
   Stop the vehicle.
2. Select “SLOW MODE” item on “ACTIVE TEST” of 4WAS front control unit.
3. Perform “MODE START” of “ACTIVE TEST”.
4. Steer the steering wheel leftward slowly until the turning stops.
5. Steer the steering wheel rightward slowly until the turning stops.

Is “OK” indicated on both right and left on “SLOW MODE”?

YES >> GO TO 6.
NO >> Refer to STC-32, "4WAS FRONT ACTUATOR NEUTRAL POSITION ADJUSTMENT : Special Repair Requirement (Pattern 4)".

6. PERFORM SELF-DIAGNOSIS (4WAS FRONT CONTROL UNIT)

With CONSULT-III
Perform 4WAS front control unit self-diagnosis.

Is any error system detected?

YES >> Check the error system.
NO >> GO TO 7.

7. ERASE ERROR HISTORY

With CONSULT-III
Erase the memory of 4WAS main control unit and 4WAS main control unit self-diagnosis result.

>> END

4WAS FRONT ACTUATOR NEUTRAL POSITION ADJUSTMENT : Special Repair Requirement (Pattern 4)

INFOID:0000000005650298

1. CHECK 4WAS FRONT ACTUATOR

1. Stop the vehicle to the straight-ahead position.
2. Remove and install 4WAS front actuator again. Check the installation condition.
3. Check that the steering wheel is neutral.

>> GO TO 2.

2. PERFORM ACTIVE TEST (LOCK OPERATION)

With CONSULT-III
1. Stop the vehicle to the straight-ahead position.
2. Turn the ignition switch ON.
   CAUTION:
   Never start the engine.
3. Select “LOCK OPERATION” item on “ACTIVE TEST” of 4WAS front control unit.
4. Perform “RELEASE” of “ACTIVE TEST”.
   CAUTION:
   - **Turn the steering wheel 90°. Check that the front wheels do not move.**
   - **Never turn the steering wheel during “RELEASE”.**
5. Turn the steering wheel to adjust “4WAS STR ANG” of the 4WAS front control unit “DATA MONITOR” so that it falls within the range shown below:

   4WAS STR ANG : –3.5 – 3.5 deg

6. Perform “LOCK” item on “ACTIVE TEST” of 4WAS front control unit.
7. Finish 4WAS front control unit active test.

>> GO TO 3.

3. STEERING ANGLE SENSOR NEUTRAL POSITION ADJUSTMENT

1. Perform the steering angle sensor neutral position adjustment. Refer to BRC-8, "ADJUSTMENT OF STEERING ANGLE SENSOR NEUTRAL POSITION : Special Repair Requirement".
2. Turn the ignition switch OFF.

>> GO TO 4.

4. RETURN TO 4WAS FRONT ACTUATOR INITIAL POSITION

1. Start the engine.

CAUTION:
Stop the vehicle.

2. Steer 90° leftward slowly. Then steer 90° rightward.
3. Steer 90° leftward slowly again. Then steer 90° rightward. Return the steering wheel to the straight-ahead position.
4. Stop the vehicle in the straight-ahead position after driving for a period of time. (Engine running)

>> GO TO 5.

5. CHECK 4WAS FRONT ACTUATOR

With CONSULT-III

1. Check “4WAS STR ANG” item on “DATA MONITOR” of 4WAS front control unit.
   CAUTION:
   Never touch the steering wheel during the service.

   4WAS STR ANG : –3.5 – 3.5 deg

2. Turn the ignition switch OFF.

Is the inspection result normal?

YES >> GO TO 6.
NO >> GO TO 1.

6. PERFORM ACTIVE TEST (SLOW MODE)

With CONSULT-III

1. Start the engine.
   CAUTION:
   Stop the vehicle.
2. Select “SLOW MODE” item on “ACTIVE TEST” of 4WAS front control unit.
3. Perform “MODE START” of “ACTIVE TEST”.
4. Steer the steering wheel leftward slowly until the turning stops.
5. Steer the steering wheel rightward slowly until the turning stops.

Is “OK” indicated on both right and left on “SLOW MODE”?

YES >> GO TO 7.
NO >> GO TO 1.

7. PERFORM SELF-DIAGNOSIS (4WAS FRONT CONTROL UNIT)

With CONSULT-III

Perform 4WAS front control unit self-diagnosis.

Is any error system detected?

YES >> Check the error system.
NO >> GO TO 8.

8. ERASE ERROR HISTORY

With CONSULT-III

Erase the memory of 4WAS front control unit and 4WAS main control unit self-diagnosis result.

>> END

SYSTEM DESCRIPTION

4WAS SYSTEM

System Diagram

INFOID:0000000005650299

CONTROL DIAGRAM

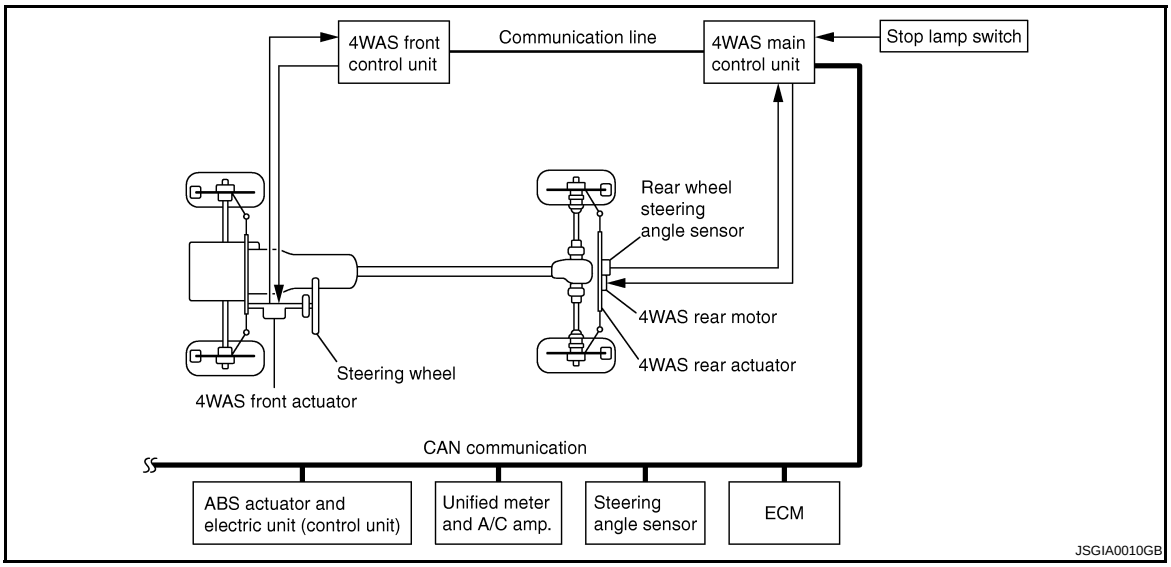

CROSS-SECTIONAL VIEW

4WAS Front Actuator

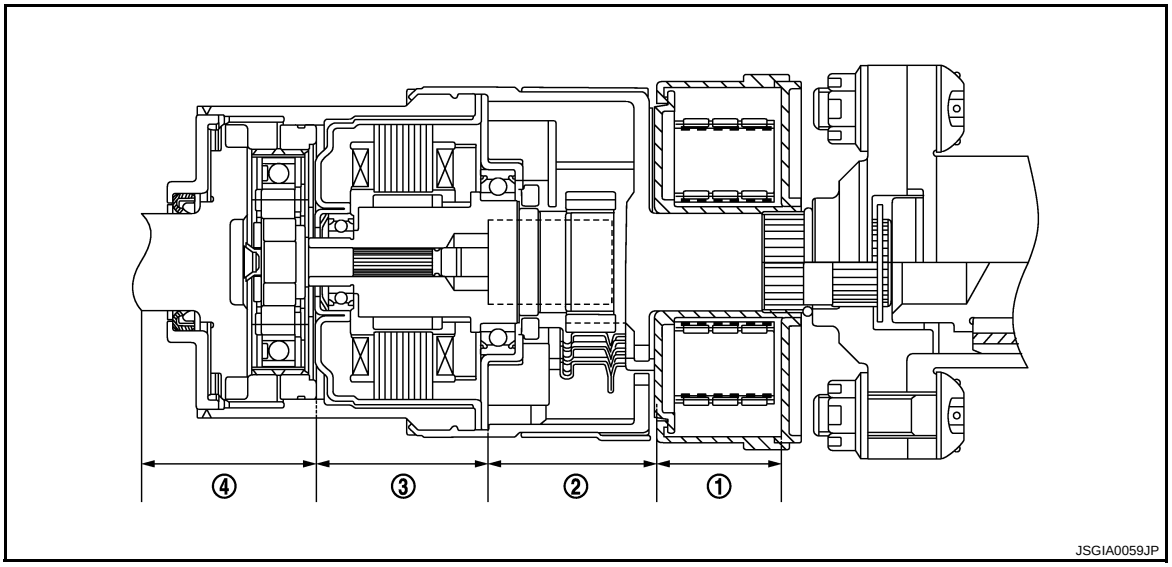

1. Front wheel steering angle sensor
2. 4WAS front lock solenoid valve (lock structure)
3. 4WAS front motor
4. Gear shaft

4WAS Rear Actuator

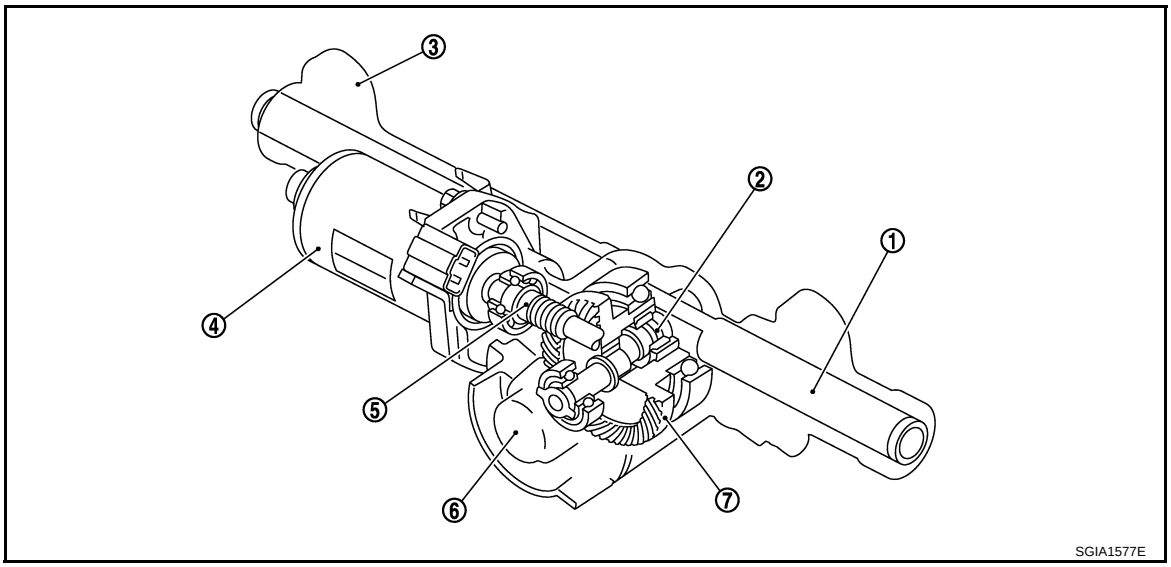

1. Rod
2. Offset shaft
3. Gear housing assembly
4. 4WAS rear motor
5. Motor shaft
6. Rear wheel steering angle sensor
7. HRH gear

System Description

INFOID:0000000005650300

DESCRIPTION

- 4WAS system consists of two control units (4WAS front control unit and 4WAS main control unit) and 4WAS rear actuator components.
- 4WAS main control unit calculates front wheel and rear wheel angles via CAN communication based on the information of the steering angle sensor signal and vehicle speed signal.
- 4WAS main control unit controls 4WAS rear actuator according to the value calculated in 4WAS main control unit.
- It transmits the value that is calculated by 4WAS main control unit to 4WAS front control unit via 4WAS communication line (exclusive line of 4WAS system). 4WAS front control unit controls 4WAS front actuator based on the received demand.
- Self-diagnosis can be performed with CONSULT-III at each control unit to another (4WAS front control unit and 4WAS main control unit).
- It transmits/receives each signal from the following control unit via CAN communication line.

Component parts	Function
Steering angle sensor	It mainly transmits the following signals to 4WAS main control unit with CAN communication. • Steering angle sensor signal
ABS actuator and electronic unit (control unit)	It mainly transmits the following signals to 4WAS main control unit with CAN communication. • Vehicle speed signal
ECM	It mainly transmits the following signals to 4WAS main control unit with CAN communication. • Engine speed signal
Combination meter	It mainly transmits the following signals from 4WAS main control unit with CAN communication. • 4WAS warning lamp signal

*: Communication line between 4WAS front control unit and 4WAS main control unit

Operation Description

- The following performance is gained by controlling the best front wheel steering angle and the rear wheel steering angle.
- The desirable vehicle movement is gained toward the driver's steering angle operation (steering angle).

- The steering gear ratio changes according to the vehicle speed. The steering wheel operation (steering angle) load decreases.

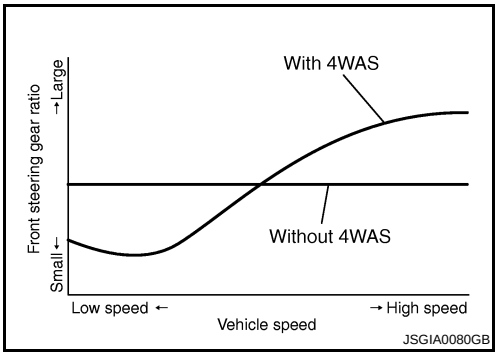

When Driving at Low Speed

- Increased front wheel angle gains the optimum front wheel angle by minimum steering wheel operation (steering angle).

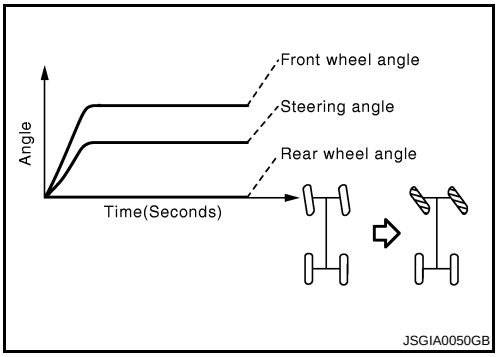

When Driving at Middle Speed

- Increase the front steering angle while controlling to turn the rear wheel steering angle to the same steering angle side of steering wheel operation (steering angle). these operations make response better for vehicle yaw rate/lateral acceleration and also decrease the angle of sideslip.

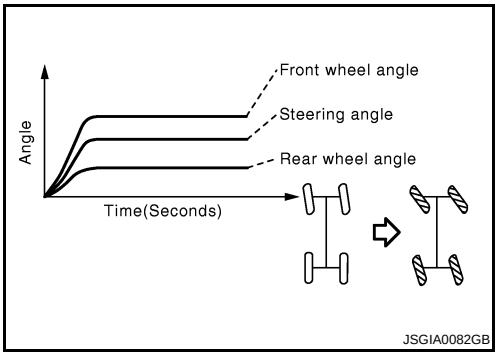

When Driving at High Speed

- Decrease the front wheel steering angle while controlling to turn the rear wheel steering angle to the same steering angle side of steering wheel operation (steering angle). these operations make car response better and vehicle stability higher.

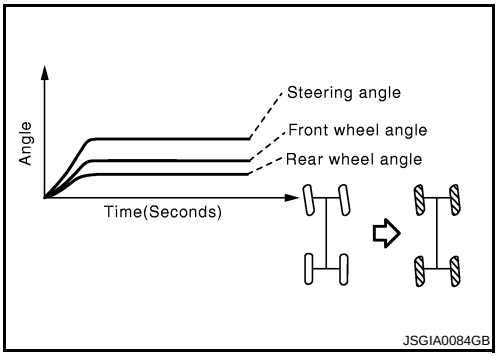

Operation Feature

4WAS FRONT ACTUATOR

- It is driven by 4WAS front motor.
- The front steering gear ratio (4WAS front actuator) changes with 4WAS front motor and the gear shaft when releasing the lock structure (4WAS front lock solenoid valve).
  NOTE:
  The lock structure is released when turning 4WAS lock solenoid valve ON.

- The lock structure (holder) absorbs force and applies the lock when applying strong force to 4WAS front actuator.

CAUTION:

Replace 4WAS front actuator when the system breaks down due to the excessive external force (rotating direction) applied to 4WAS front actuator.

4WAS REAR ACTUATOR

- It is driven by 4WAS rear motor.
- The irreversible efficiency performance hypoid gear secure the toe-stiffness of rear wheels against the road external force and keep the steering angle when system is malfunction.
- The power from the pinion gear (motor side) is transmitted, but the pinion gear does not rotate as caused by the gear mechanical characteristics (teeth angle) even though the ring gear (tire side) starts to rotate.

Component Parts Location

INFOID:0000000005650301

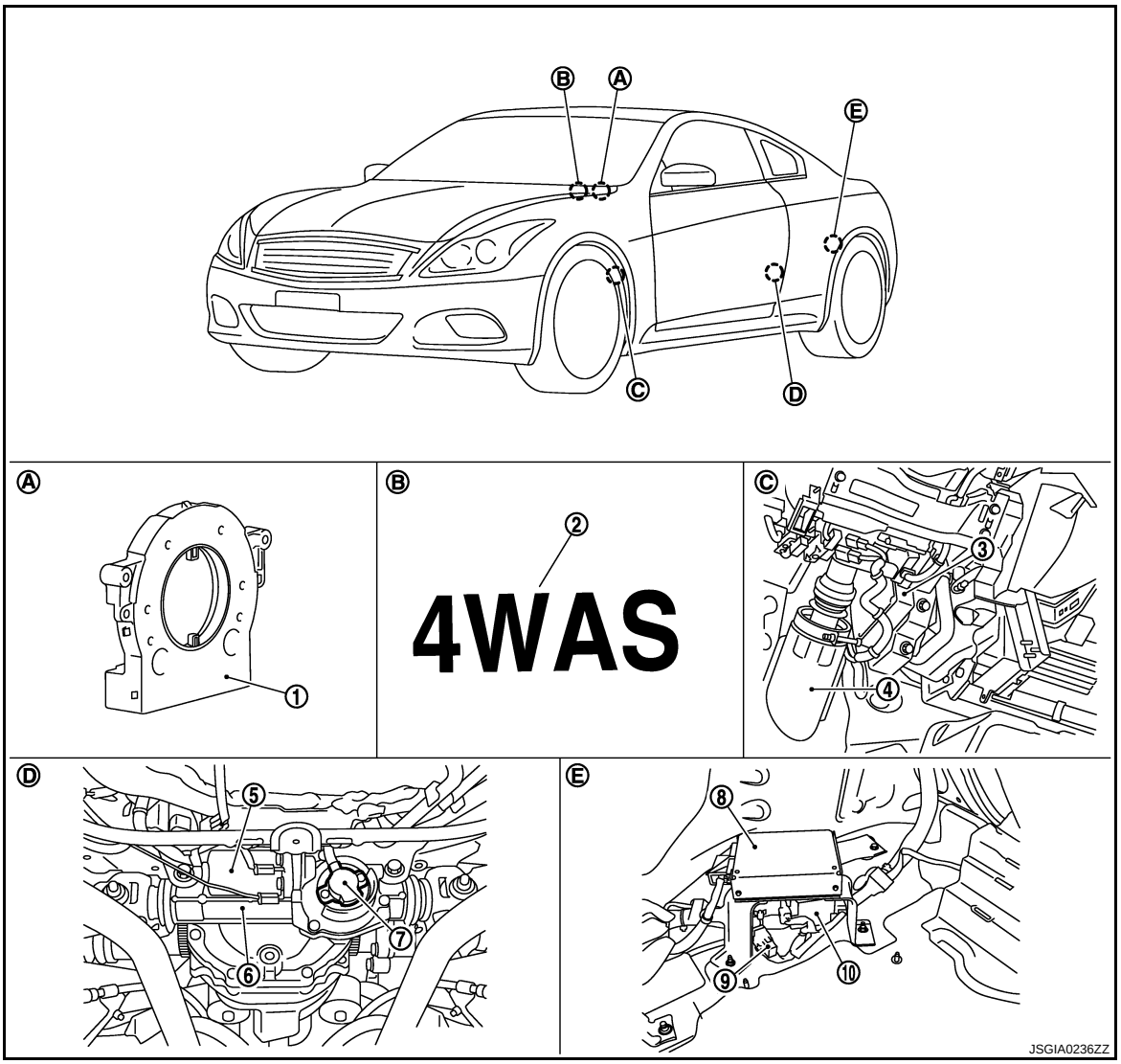

1. Steering angle sensor
2. 4WAS warning lamp
3. 4WAS front control unit
4. 4WAS front actuator
5. 4WAS rear motor
6. 4WAS rear actuator
7. Rear wheel steering angle sensor
8. 4WAS main control unit
9. 4WAS rear motor relay
10 Noise suppressor

.

A. Combination switch
B. Inside combination meter
C. Inside the instrument driver lower panel
D. 4WAS rear actuator assembly
E. Inside the rear wheel house finisher (left)

Component Description

INFOID:0000000005650302

Component parts	Reference/Function
4WAS front control unit	STC-57, "Description"
4WAS front actuator	The front wheel steering angle is activated.
Front wheel steering angle sensor	The front wheel steering angle increased/decreased degree is detected. It is output to 4WAS front control unit.
4WAS front motor	The front wheel steering angle increased/decreased degree is activated.
4WAS front lock solenoid valve	Secure the inside of 4WAS front actuator temporarily. (It operates when performing active test with fail-safe function and CONSULT-III.)
Steering angle sensor	STC-114, "Description"
4WAS main control unit	STC-89, "Description"
4WAS rear actuator	The rear wheel steering angle is activated.
Rear wheel steering angle sensor	The rear wheel steering angle increased/decreased degree is detected. It is output to 4WAS main control unit.
4WAS rear motor	4WAS rear actuator is activated.
ABS actuator and electronic unit (control unit)	STC-112, "Description"
ECM	STC-117, "Description"
Combination meter	It mainly transmits the following signals from 4WAS main control unit with CAN communication. • 4WAS warning lamp signal
Power steering solenoid valve	The power steering oil pressure in the gear housing assembly is controlled.
Stop lamp switch	The stop lamp switch condition is detected.

*: Communication line between 4WAS front control unit and 4WAS main control unit

EPS SYSTEM

System Diagram

INFOID:0000000005650303

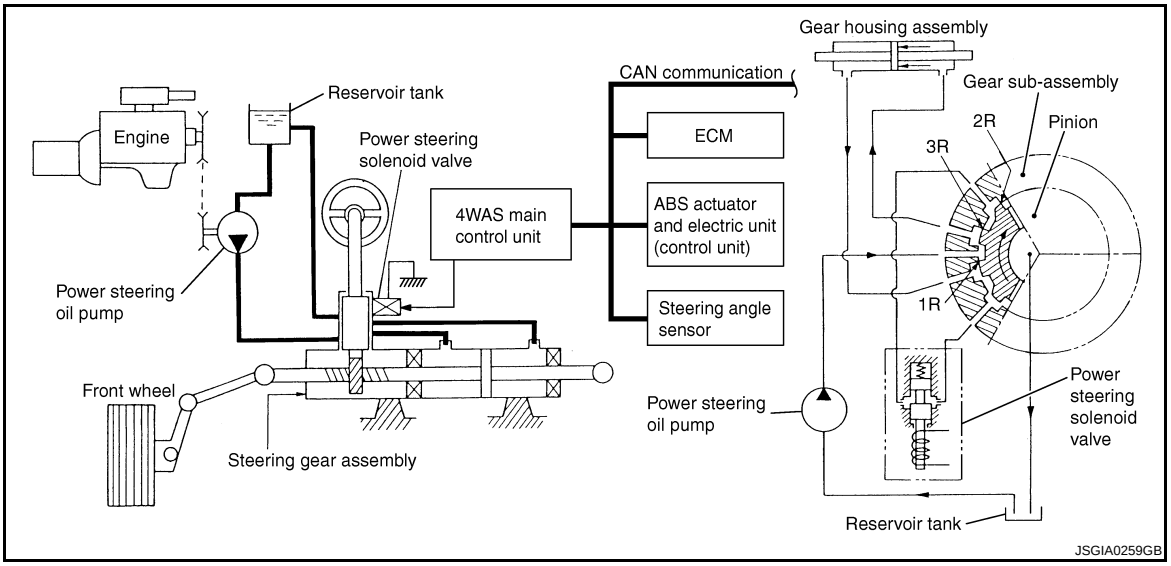

System Description

INFOID:0000000005650304

DESCRIPTION

- The EPS system controls the power steering solenoid valve with 4WAS main control unit.
- The power steering solenoid valve control changes the power steering solenoid valve activation voltage according to the vehicle speed.

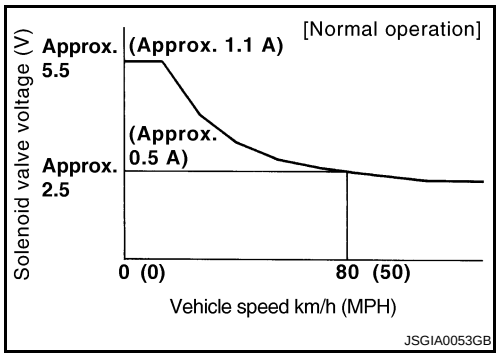

OPERATION PRINCIPLE

During Parking (When Turning The Steering Wheel To The Right.)

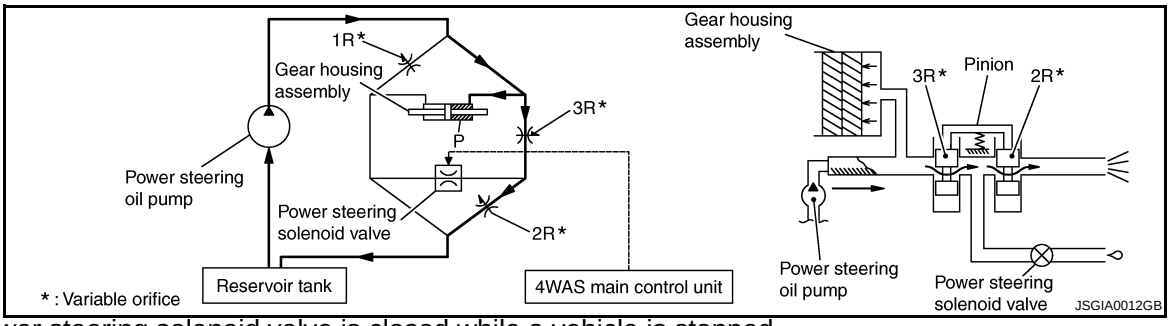

1. Power steering solenoid valve is closed while a vehicle is stopped.
2. Pinion “1R”, “2R” and “3R” are closed depending on steering torque of steering wheel.
3. Oil pressure “P” in the gear housing assembly is the sum of oil pressures occurring in “2R” and “3R”. This results in a light steering force because of high pressure.

During High-speed Operation

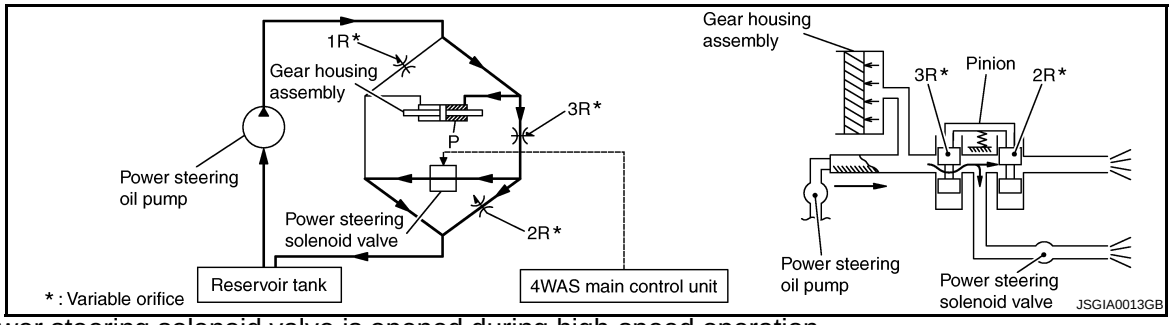

1. Power steering solenoid valve is opened during high-speed operation.
2. Pinion “1R”, “2R” and “3R” are closed depending on steering torque of steering wheel.
3. “2R” is bypassed to the return port by the EPS solenoid valve.
4. Oil pressure “P” in the gear housing assembly includes only oil pressure occurring in “3R” and results in a heavy steering force.

Component Parts Location

INFOID:0000000005650305

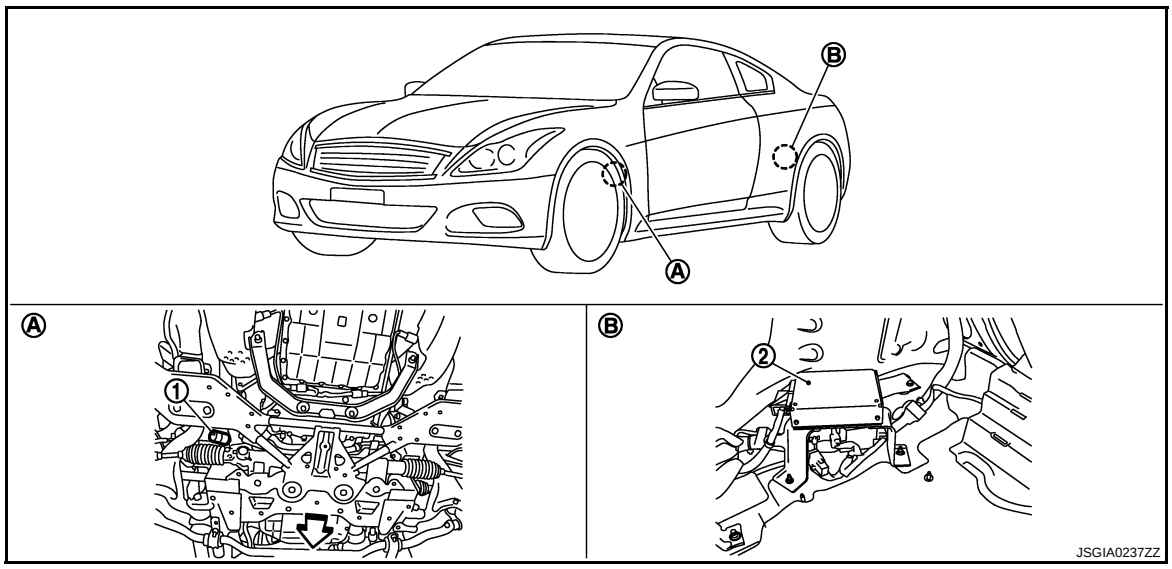

1. Power steering solenoid valve
2. 4WAS main control unit

A. Steering gear assembly
B. Inside the rear wheel hose finisher (left)

⇦:Vehicle front

Component Description

INFOID:0000000005650306

Component parts	Function
4WAS main control unit	• The power steering solenoid valve activation voltage is controlled by each sensor signal. • The power steering solenoid valve activation voltage is controlled by 4WAS main control unit for maintaining the power steering force in the fail-safe mode. (EPS system is controlled by the engine speed signal if the vehicle speed signal error is detected.)
ABS actuator and electric unit (control unit)	It mainly transmits the following signals to 4WAS main control unit with CAN communication. • Vehicle speed signal
ECM	It mainly transmits the following signals to 4WAS main control unit with CAN communication. • Engine speed signal
Power steering solenoid valve	The power steering oil pressure in the gear housing assembly is controlled.

DIAGNOSIS SYSTEM (4WAS FRONT CONTROL UNIT)

CONSULT-III Function [4WAS(FRONT)]

INFOID:0000000005650307

FUNCTION

CONSULT-III can display each diagnostic item using the diagnostic test modes shown as follows:

Diagnostic test mode	Function
Self-diagnostic results	• Self-diagnostic results can be read and erased quickly.
Data monitor	• Input/Output data in the 4WAS front control unit can be read.
CAN diagnostic support monitor	• The results of transmit/receive diagnosis of CAN communication can be read.
Active test	• Diagnostic Test Mode in which CONSULT-III drives some actuators apart from the 4WAS front control unit and also shifts some parameters in a specified range.
ECU part number	• 4WAS front control unit part number can be read.

SELF-DIAG RESULT MODE

Display Item List

Items (CONSULT-III screen terms)	Diagnostic item is detected when...	Possible cause
ACTUATOR [C1621]	4WAS front motor current error is detected. (4WAS front motor current is excessively large.)	4WAS front control unit or 4WAS front motor error is detected.
ACTUATOR [C1622]	4WAS front motor voltage or current error is detected. (4WAS front motor voltage error is detected.) (Voltage or current error is detected when starting the system.)	4WAS front control unit or 4WAS front motor error is detected.
ACTUATOR [C1627]	The indication value from 4WAS front actuator (front wheel angle) differs from the value from 4WAS front control unit.	4WAS front actuator error
ACTUATOR [C1628]	The front wheel steering angle sensor error is detected.	Front wheel steering angle sensor error
CONTROL UNIT [C1631]	An error is detected inside 4WAS front control unit.	4WAS front control unit or 4WAS front control unit power supply error is detected.
CONTROL UNIT [C1632]	An error is detected inside 4WAS front control unit.	4WAS front control unit or 4WAS front control unit power supply error is detected.
CONTROL UNIT [C1633]	An error is detected inside 4WAS front control unit.	4WAS front control unit error
IGN POWER SUPPLY [C1651]	The ignition voltage signal error is detected.	4WAS front control unit or the ignition power supply error is detected.
MOTOR POWER SUPPLY [C1652]	4WAS front motor main power supply error is detected.	4WAS front control unit or 4WAS front motor power supply error is detected.
ACTUATOR RELAY [C1654]	An error is detected on the main relay power supply inside 4WAS front control unit.	The main relay power supply inside 4WAS front control unit error is detected.
PRE-DRIVER [C1655]	4WAS rear motor 3-phase current error is detected. (Current is not applied to 4WAS front motor.)	4WAS front control unit or 4WAS front motor power supply error is detected.
LOCK SOLENOID [C1661]	4WAS front lock solenoid valve error is detected. (An electric activation error is detected.)	4WAS front control unit or 4WAS front lock solenoid valve error is detected.
LOCK INSERTION [C1667]	4WAS front lock solenoid valve (lock) error is detected. (An error is detected in lock condition.)	The inside 4WAS front actuator error is detected.

Items (CONSULT-III screen terms)	Diagnostic item is detected when...	Possible cause
LOCK HLD GAP DETCT [C1668]	4WAS front lock solenoid valve (lock) error is detected. (Excessive force is applied to the lock.)	The inside 4WAS front actuator error is detected.
INCOMP LOCK RELEAS [C1669]	4WAS front actuator error is detected. (An error is detected in unlock condition.)	The power steering oil pressure or the inside 4WAS front actuator error is detected.
ACT ADJ NOT PRFRM [C1671]	4WAS front actuator adjustment is not performed.	4WAS front actuator adjustment is not performed.
INCOMP ACTUATR ADJ [C1672]	4WAS front actuator adjustment is incomplete.	4WAS front actuator adjustment is incomplete.
4WAS MAIN ECU COMM [C1684]	4WAS communication line* data communication error is detected. (An error signal is detected from 4WAS main control unit.)	4WAS communication line*/ 4WAS main control unit/ 4WAS front control unit error
4WAS MAIN ECU COMM [C1685]	4WAS communication line* data communication error is detected. (An error signal is detected from 4WAS main control unit.)	4WAS communication line*/ 4WAS main control unit/ 4WAS front control unit error
4WAS MAIN ECU [C1686]	An error is detected on 4WAS main control unit side. (4WAS main control unit fail-safe mode.)	4WAS main control unit fail-safe mode
CAN COMM CIRCUIT [U1000]	When 4WAS front control unit is not transmitting or receiving 4WAS communication signal for 2 seconds or more.	4WAS communication line*/ 4WAS main control unit/ 4WAS front control unit error
SYSTEM COMM(CAN) [U1002]	When 4WAS front control unit is not transmitting or receiving 4WAS communication signal for 2 seconds or less.	4WAS communication line*/ 4WAS main control unit/ 4WAS front control unit error
CONTROL UNIT (CAN) [U1010]	When detecting error during the initial diagnosis of 4WAS controller of 4WAS front control unit.	4WAS communication line*/ 4WAS main control unit/ 4WAS front control unit error

*: Communication line between 4WAS front control unit and 4WAS main control unit.

DATA MONITOR MODE

Display Item List

Monitor item (Unit)	Remarks
4WAS STR ANG [deg]	The steering angle sensor signal received from 4WAS main control unit via 4WAS communication line * is indicated.
VEHICLE SPEED [km/h] or [mph]	The vehicle speed signal received from 4WAS main control unit via 4WAS communication line * is indicated.
MOTOR CURRENT [A]	4WAS front motor power supply current is indicated. (4WAS front control unit main power supply)
MTR CRNT ESTM [A]	The value, which 4WAS front control unit presumes 4WAS front motor power supply current, is indicated. (4WAS front control unit main power supply)
ACTR ROTA ANG [deg]	4WAS front actuator increased/decreased angle is indicated.
LG VOLT [V]	4WAS front lock solenoid valve voltage is indicated.
THERM TEMP [°C]	4WAS front control unit internal temperature is indicated.
MOTOR VOLT [V]	4WAS front motor power supply voltage is indicated. (4WAS front control unit main power supply)
IGN VOLT [V]	4WAS front control unit power supply voltage is indicated. (Ignition switch power supply voltage)
ACTR ANG COMM [deg]	The command value of 4WAS front actuator increased/decreased angle received from 4WAS main control unit via 4WAS communication line* is indicated.
ACTR ROTA SPD [deg/s]	4WAS front actuator increased/decreased rotation speed is indicated.
DUTY COMMAND [%]	4WAS front actuator command voltage ratio is indicated.

Monitor item (Unit)	Remarks
LOCK DTY COMM [%]	4WAS front lock solenoid valve command voltage ratio is indicated.
MTR U VOLT [V]	4WAS front motor U terminal voltage is indicated.
MTR V VOLT [V]	4WAS front motor V terminal voltage is indicated.
MTR W VOLT [V]	4WAS front motor W terminal voltage is indicated.
ACT TEMP ESTM [°C]	The value, which 4WAS front control unit presumes 4WAS front actuator temperature, is indicated.
MTR PHZ CRNT [A]	4WAS front motor U, V, and W terminal current is indicated.
ACTR DEVI ANG [deg]	4WAS front actuator command value and the activation angle difference are indicated.
ACTR ANGL SUB [deg]	The final command value, which 4WAS front control unit calculates 4WAS front actuator command value transmitted from 4WAS front control unit through 4WAS communication line*, is indicated.
STR ANGL SPD [deg/s]	It displays an engine speed value obtained from an angle calculated with the 4WAS front control unit, based on steering angle sensor speed signals transmitted from the 4WAS main control unit through the 4WAS communication line*.
OVRLD JDG TMG	It displays record of 4WAS system (entire 4WAS system) high load. (It displays time of occurrence before turning ignition switch ON.)
ACT PRTCT TMG	It displays record of 4WAS system (4WAS front actuator) overheating. (It displays time of occurrence before turning ignition switch ON.)
ECU PRTCT TMG	It displays record of 4WAS system (4WAS front control unit) overheating. (It displays time of occurrence before turning ignition switch ON.)
DRV TMPO TMG	It displays record of 4WAS system (terminal power supply converter of 4WAS front motor) intermittent abnormal. (It displays time of occurrence before turning ignition switch ON.)
MTR PW TMP TM	It displays record of 4WAS system (terminal voltage of 4WAS front motor) intermittent abnormal. (It displays time of occurrence before turning ignition switch ON.)
LOW VOLT TMG	It displays record of 4WAS system (terminal voltage of 4WAS front control unit and 4WAS front actuator) low voltage. (It displays time of occurrence before turning ignition switch ON.)
HIGH VOLT TMG	It displays record of 4WAS system (terminal voltage of 4WAS front control unit and 4WAS front actuator) extreme voltage. (It displays time of occurrence before turning ignition switch ON.)
OVRLD JDG FLG [On/Off]	• 4WAS system (the entire system) heavy load condition is indicated. • 4WAS system protection function mode
ACT PRTCT FLG [On/Off]	• 4WAS system (4WAS front actuator) over-heated condition is indicated. • 4WAS system protection function mode
ECU PRTCT FLG [On/Off]	• 4WAS system (4WAS front control unit) over-heated condition is indicated. • 4WAS system protection function mode
DRV TMPO FLG [On/Off]	• 4WAS system (4WAS front motor terminal power supply converter) intermittent error is indicated. • 4WAS system protection function mode
MTR PW TMP FL [On/Off]	• 4WAS system (4WAS front motor terminal power supply front driver) intermittent error is indicated. • 4WAS system protection function mode
LOW VOLT FLG [On/Off]	• 4WAS system (4WAS front control unit and 4WAS front actuator terminal voltage) voltage-dropped condition • 4WAS system protection function mode
HIGH VOLT FLG [On/Off]	• 4WAS system (4WAS front control unit and 4WAS front actuator terminal voltage) voltage-jumped condition • 4WAS system protection function mode
MTR SEN U OUT [Hi/Low]	4WAS front motor U terminal output voltage is indicated.
MTR SEN V OUT [Hi/Low]	4WAS front motor V terminal output voltage is indicated.
MTR SEN W OUT [Hi/Low]	4WAS front motor W terminal output voltage is indicated.

Monitor item (Unit)	Remarks
MAIN ECU FAIL [On/Off]	4WAS main control unit fail-safe function condition transmitted from 4WAS main control unit through 4WAS communication line * is indicated.
M-ECU TMPO FL [On/Off]	The protection function mode status of 4WAS main control unit transmitted from 4WAS main control unit through 4WAS communication line* is indicated.
LOCK MODE [0/1/2/3/4/5]	4WAS front lock solenoid valve (lock structure) condition is indicated. • 0: Lock released condition • 1 – 5: Lock condition
NEUTRAL OUT [On/Off]	4WAS front actuator misaligned angle adjustment control condition is indicated.
EX OPERAT [On/Off]	4WAS system enters in the protection function due to the heavy load condition and temporarily abnormal voltage is indicated.
SLOW MODE [Ok/–]	ACTIVE TEST “SLOW MODE” judgment condition is indicated.

*: Communication line between 4WAS front control unit and 4WAS main control unit

CAN DIAGNOSTIC SUPPORT MONITOR

Description

- The communication condition from 4WAS front control unit to 4WAS main control unit and malfunction counter are displayed.
- Error counter displays OK if any malfunction is not detected in the past. If the malfunction is detected, it displays 0. The upper limit of the counters is 39.

Item	PRSNT	PAST
TRANSMIT DIAG	OK / UNKWN	OK / 0 – 39
4WAS(MAIN)	OK / UNKWN	OK / 0 – 39

ACTIVE TEST MODE

Description

- 4WAS front actuator assembly activation is checked according to the control signal from CONSULT-III.
- 4WAS front lock solenoid valve (lock structure) is activated forcibly (ON/OFF) using each control signal of “LOCK OPERATION”. Perform this mode when performing 4WAS front actuator adjustment.
  CAUTION:
  Never steer the steering wheel during “RELEASE”.
- The steering angle sensor neutral point judgment (OK/NG) is performed using each control signal of “SLOW MODE”.

Select test item	Control signal	Remarks
LOCK OPERATION	RELEASE	4WAS front lock solenoid valve lock is released.
	LOCK	4WAS front lock solenoid valve lock is applied.
SLOW MODE	MODE START	Steering angle sensor neutral point check starts. (Turn the steering wheel rightward and leftward slowly. Steer until the turning stops.)
	MODE END	Steering angle sensor neutral point check ends.

DIAGNOSIS SYSTEM (4WAS MAIN CONTROL UNIT)

CONSULT-III Function [4WAS(MAIN)/RAS/HICAS]

INFOID:0000000005650308

FUNCTION

CONSULT-III can display each diagnostic item using the diagnostic test modes shown below.

Diagnostic test mode	Function
Self-diagnostic results	• Self-diagnostic results can be read and erased quickly.
Data monitor	• Input/Output data in the 4WAS main control unit can be read.
CAN diagnostic support monitor	• The results of transmit/receive diagnosis of CAN communication can be read.
Active test	• Diagnostic Test Mode in which CONSULT-III drives some actuators apart from the 4WAS main control unit and also shifts some parameters in a specified range.
ECU part number	• 4WAS main control unit part number can be read.

SELF-DIAG RESULT MODE

Display Item List

Items (CONSULT-III screen terms)	Diagnostic item is detected when...	Possible cause
CONTROL UNIT [ABNORMAL1] [C1900]	An error is detected inside 4WAS main control unit.	4WAS main control unit error
CONTROL UNIT [ABNORMAL2] [C1901]	An error is detected inside 4WAS main control unit.	4WAS main control unit error
MOTOR OUTPUT [REV CURRENT] [C1902]	4WAS rear motor current error is detected. (4WAS rear motor current output direction differs.)	4WAS rear motor error
MOTOR OUTPUT [NO CURRENT] [C1903]	4WAS rear motor current error is detected. (Current is input to 4WAS main control unit if 4WAS main control unit output is “OFF”.)	4WAS rear motor error
MOTOR OUTPUT [OVERCURRENT] [C1904]	4WAS rear motor current error is detected. (4WAS rear motor output current is large.)	4WAS rear motor error
CONTROL UNIT [ABNORMAL3] [C1905]	An error is detected inside 4WAS main control unit.	4WAS main control unit error
CONTROL UNIT [ABNORMAL5] [C1906]	An error is detected inside 4WAS main control unit.	4WAS main control unit error
CONTROL UNIT [ABNORMAL4] [C1907]	An error is detected inside 4WAS main control unit.	4WAS main control unit error
CONTROL UNIT [ABNORMAL7] [C1908]	An error is detected inside 4WAS main control unit.	4WAS main control unit error
CONTROL UNIT [ABNORMAL6] [C1909]	An error is detected inside 4WAS main control unit.	4WAS main control unit
MOTOR OUTPUT [MOTOR LOCK] [C1910]	Inside 4WAS rear motor error is detected. (4WAS main motor does not move or the rear wheel angle sensor value does not change if 4WAS main control unit output is 14 A or more.)	4WAS rear motor error

Items (CONSULT-III screen terms)	Diagnostic item is detected when...	Possible cause
MOTOR VOLTAGE [LOW VOLTAGE] [C1911]	4WAS rear motor voltage error is detected. (4WAS rear motor voltage is low.)	4WAS rear motor power supply error
MOTOR VOLTAGE [BAD OBSTRCT] [C1912]	4WAS rear motor voltage error is detected. (Voltage is applied to 4WAS main motor if 4WAS main control unit output is “OFF”.)	4WAS rear motor power supply error
MOTOR OUTPUT [ABNORML SIG] [C1913]	4WAS rear motor current error is detected. (4WAS main motor does not move or the rear wheel angle sensor output does not change when 4WAS main control unit output is 18A or more and 4WAS main motor output is low.)	4WAS rear motor error
RR ST ANGLE SENSOR [ABNORML VOL] [C1914]	The rear wheel angle sensor power supply error is detected.	Rear wheel steering sensor power supply error
RR ST ANGLE SENSOR [MAIN SIGNAL] [C1915]	The rear wheel angle sensor signal (main) output voltage value error is detected.	Rear wheel steering sensor output voltage error
RR ST ANGLE SENSOR [SUB SIGNAL] [C1916]	The rear wheel angle sensor signal (sub) output voltage value error is detected.	Rear wheel steering sensor output voltage error
RR ST ANGLE SENSOR [OFFSET SIG1] [C1917]	The rear wheel angle sensor signal (main and sub) error is detected. (The output signal value differs temporarily between main and sub.)	Rear wheel steering sensor (main and sub) output signal value error signal
RR ST ANGLE SENSOR [OFFSET SIG2] [C1918]	The rear wheel angle sensor signal (main and sub) error is detected. (The output signal value differs between main and sub.)	Rear wheel steering sensor (main and sub) output signal error
VEHICLE SPEED SEN [NO SIGNAL] [C1919]	Malfunction is detected in vehicle speed signal that is output from ABS actuator and electric unit (control unit) via CAN communication. (Improper signal is input while driving.)	Vehicle speed signal error
STEERING ANGLE SEN [NO SIGNAL] [C1920]	Malfunction is detected in steering angle sensor signal that is output from steering angle sensor via CAN communication. (No transmission from the steering angle sensor)	Steering angle sensor input signal error
ENG REV SIGNAL [C1921]	Malfunction is detected in engine speed signal that is output from ECM via CAN communication. (Improper signal is input to the engine speed.)	Engine speed signal error
CONTROL UNIT [ABNORMAL8] [C1922]	An error is detected inside 4WAS main control unit.	4WAS main control unit error
STEERING ANGLE SEN [NO CHANGE] [C1923]	Malfunction is detected in steering angle sensor signal that is output from steering angle sensor via CAN communication. [Steering angle sensor input signal error is detected when driving at 60 km/h (37 MPH) or more.]	Steering angle sensor input signal error
STEERING ANGLE SEN [NO NEUT STATE] [C1924]	Driving continuously at 10 km (6 mile) while the steering angle sensor value is other than L10° – R10°. (Not detected in 4WAS front control unit fail-safe mode)	Steering angle sensor input signal error
AD CONVERTER [C1925]	An error is detected inside 4WAS main control unit.	4WAS main control unit error
STEERING ANGLE SEN [C1926]	Malfunction is detected in steering angle sensor signal that is output from steering angle sensor via CAN communication. (When improper signal inputs to steering angle sensor and steering angle sensor itself detects the malfunction)	Steering angle sensor error
CONTROL UNIT [ABNORMAL5] [C1927]	An error is detected inside 4WAS main control unit.	4WAS main control unit error
CONTROL UNIT [ABNORMAL9] [C1928]	An error is detected inside 4WAS main control unit.	4WAS main control unit error

Items (CONSULT-III screen terms)	Diagnostic item is detected when...	Possible cause
4WAS FRONT ECU [C1930]	An error is detected on 4WAS front control unit side. (4WAS front control unit fail safe mode)	4WAS front control unit fail-safe mode
4WAS FRONT ECU COMM [C1931]	4WAS communication line* data communication error is detected. (An error signal is detected from 4WAS front control unit.)	4WAS communication line/ 4WAS front control unit/4WAS main control unit error
STEERING ANGLE SEN [C1932]	If the steering angle sensor error is detected. (Steering angle sensor output value is abnormal.)	Steering angle sensor input signal error
CONTROL UNIT [C1933]	An error is detected inside 4WAS main control unit.	4WAS main control unit error
CAN COMM [U1000]	When 4WAS main control unit is not transmitting or receiving CAN communication signal for 2 seconds or more.	CAN communication error
CONTROL UNIT (CAN) [U1010]	When detecting error during the initial diagnosis of CAN controller of 4WAS main control unit.	CAN communication line and 4WAS main control unit/ECM/ ABS actuator and electric unit (control unit) error

*: Communication line between 4WAS front control unit and 4WAS main control unit

DATA MONITOR MODE

Display Item List

Monitor item (Unit)	Remarks
VHCL SPEED SE [km/h] or [mph]	The vehicle speed signal from ABS actuator and electric unit (control unit) is indicated with CAN communication line.
STEERING ANG [°]	The steering angle sensor signal from the steering angle sensor is indicated with CAN communication line.
ENGINE SPEED [rpm]	The engine speed signal from ECM is indicated with CAN communication line.
STR ANGL SPD [deg/s]	The steering angle speed signal from the steering angle sensor is indicated with CAN communication line.
POWER STR SOL [A]	The current value of the power steering solenoid valve is indicated.
RR ST ANG-MAI [V]	The voltage of the rear wheel steering angle sensor (main) is indicated.
RR ST ANG-SUB [V]	The voltage of the rear wheel steering angle sensor (sub) is indicated.
RR ST ANG-VOL [V]	The power supply voltage of the rear wheel steering angle sensor is indicated.
C/U VOLTAGE [V]	The power supply voltage value of 4WAS main control unit is indicated.
MOTOR VOLTAGE [V]	The voltage value of 4WAS rear motor is indicated.
MOTOR CURRENT [A]	The current value of 4WAS rear motor is indicated.
MTR CRNT OPE [A]	The current value input to 4WAS rear motor is indicated.
RR ANGLE OPE [°]	The angle command value is indicated for activating 4WAS rear motor.
FR ANGLE OPE [°]	The front wheel angle value transmitted from 4WAS main control unit to 4WAS front control unit is indicated.
STOP LAMP SW [On/Off]	The stop lamp switch status is indicated.
HICAS RELAY [On/Off]	4WAS rear motor relay condition is indicated.
FAIL SAFE [On/Off]	The fail-safe mode status of 4WAS main control unit is indicated.
WARNING LAMP [On/Off]	4WAS warning lamp ON/OFF condition is indicated.
FRNT ECU FAIL [On/Off]	The fail-safe mode status of 4WAS main control unit transmitted from 4WAS front control unit via 4WAS communication line* is indicated.
FRNT ECU EX [On/Off]	The protection function mode status of 4WAS front control unit transmitted from 4WAS front control unit via 4WAS communication line* is indicated.

*: Communication line between 4WAS front control unit and 4WAS main control unit

CAN DIAGNOSTIC SUPPORT MONITOR

Description

- The communication status and the number of errors of 4WAS main control unit, ECM, ABS actuator and electric unit (control unit), 4WAS front control unit and the steering angle sensor are indicated.
- Error counter displays OK if any malfunction is not detected in the past. If the malfunction is detected, it displays 0. The upper limit of the counters is 39.

Item	PRSNT	PAST
TRANSMIT DIAG	OK / UNKWN	OK / 0 – 39
ECM	OK / UNKWN	OK / 0 – 39
VDC/TCS/ABS	OK / UNKWN	OK / 0 – 39
STRG	OK / UNKWN	OK / 0 – 39
4WAS	OK / UNKWN	OK / 0 – 39

ACTIVE TEST MODE

Description

- 4WAS rear actuator assembly activation is checked according to the control signal from CONSULT-III.
- The control signal forcibly activates (ON/OFF) 4WAS rear assembly, performs the self-diagnosis and checks each sensor in “SELF DIAGNOSTIC MODE”.
  CAUTION:
  Perform the active test while the vehicle is stopped.

Select test item	Control signal	Remarks
SELF DIAGNOSTIC MODE	ON **CAUTION:** **Perform the active test while the vehicle is stopped.**	4WAS rear actuator assembly activates. It activates in the same direction as the steering angle by inputting the steering angle.
	OFF	4WAS rear actuator assembly stops the activation.

Standard value

Monitor item	Active test “ON”		
STEERING ANG	0° (Neutral)	R 90°	L 90°
RR ST ANG-MAI	2.4 V	Approx. 4.4 V	Approx. 0.4 V
RR ST ANG-SUB	2.4 V	Approx. 4.4 V	Approx. 0.4 V
MOTOR CURRENT	No output (Approx. 0 A)	Output (change)	

DTC/CIRCUIT DIAGNOSIS

C1621, C1622 4WAS FRONT ACTUATOR

Description

INFOID:0000000005650309

- Wiring connected to 4WAS front actuator is integrated with 4WAS front actuator.
- 4WAS front actuator rotates together with steering wheel.
- 4WAS front actuator mainly consists of five components. [4WAS front lock solenoid valve (lock structure), front wheel steering angle sensor, 4WAS front motor, gear shaft, and spiral cable]

- 4WAS front lock solenoid valve (lock structure) is controlled by the 4WAS front control unit, and locks/unlocks 4WAS front actuator.
- If a strong force (rotation direction) is applied to 4WAS front actuator, the locking mechanism (holder) absorbs the force and locks 4WAS front actuator.
- Front wheel steering angle sensor detects a turning angle of 4WAS front motor.
- 4WAS front motor controls number of revolutions by a command value from the 4WAS front control unit.
- Gear shaft is an output axis of 4WAS front motor. (Gear shaft = 4WAS front motor revolution + steering angle)
- Spiral cables mean the power line and signal lines of 4WAS front motor.

DTC Logic

INFOID:0000000005650310

DTC DETECTION LOGIC

DTC	Items (CONSULT-III screen terms)	Diagnostic item is detected when...	Possible cause
C1621	ACTUATOR	4WAS front motor current valve error is detected. (4WAS front motor current valve is excessively large.)	4WAS front control unit or 4WAS front motor error is detected.
C1622	ACTUATOR	4WAS front motor voltage valve or current error valve is detected. (4WAS front motor voltage valve error is detected.) (Voltage valve or current valve error is detected when starting the system.)	4WAS front control unit or 4WAS front motor error is detected.

DTC CONFIRMATION PROCEDURE

1. RECHECK DTC

With CONSULT-III

1. Start the engine.
   CAUTION:
   Stop the vehicle.
2. Steer 360° leftward slowly. Then steer 360° rightward to return the steering wheel to the straight-ahead position. Repeat the same service for 1 minute or more.
   NOTE:
   The protection function mode (overheat protection) activates and the system stops if steering repeats for a long time.
3. Perform 4WAS front control unit self-diagnosis.

Is DTC “C1621” or “C1622” detected?

YES >> Proceed to diagnosis procedure. Refer to STC-49, "Diagnosis Procedure".
NO >> INSPECTION END

Diagnosis Procedure

INFOID:0000000005650311

1. CHECK 4WAS FRONT MOTOR CIRCUIT

Check 4WAS front motor circus. STC-50, "Component Inspection (4WAS Front Motor)".

Is the inspection result normal?

YES >> GO TO 2.
NO >> Replace 4WAS front actuator. Refer to STC-182, "Removal and Installation".

2. PERFORM SELF-DIAGNOSIS (4WAS FRONT CONTROL UNIT)

With CONSULT-III

1. Connect 4WAS front control unit harness connector.
2. Perform 4WAS front control unit self-diagnosis.

Is DTC "C1621" or "C1622" detected?

YES >> Replace 4WAS front control unit. Refer to STC-180, "Exploded View".
NO >> GO TO 3.

3. CHECK INFORMATION

With CONSULT-III

Check the "DATA MONITOR" value of each DTC detected with the self-diagnosis function. Refer to STC-144, "Reference Value".

Is each data the standard value?

YES >> Check each harness connector pin terminal for disconnection.
NO >> Replace 4WAS front control unit. Refer to STC-180, "Exploded View".

Component Inspection (4WAS Front Motor)

INFOID:0000000005650312

1. CHECK 4WAS FRONT MOTOR

1. Turn the ignition switch OFF.
2. Disconnect 4WAS front actuator harness connector.
3. Check the resistance between 4WAS front actuator harness connectors.

4WAS front actuator				Resistance (Approx.)
Connector	Terminal	Connector	Terminal	
M351	1	M351	5	0.1 – 1 Ω
	1		6	
	5		6	

4. Check the continuity between 4WAS front actuator harness connector and the ground.

4WAS front actuator		Continuity
Connector	Terminal	
M351	1 – Ground	Not existed
	5 – Ground	
	6 – Ground	

Is the inspection result normal?

YES >> INSPECTION END
NO >> Replace 4WAS front actuator. Refer to STC-182, "Removal and Installation".

Special Repair Requirement

INFOID:0000000005650313

AFTER REPLACING 4WAS FRONT ACTUATOR

- Perform 4WAS front actuator adjustment after replacing 4WAS front actuator. Refer to STC-30, "4WAS FRONT ACTUATOR NEUTRAL POSITION ADJUSTMENT : Special Repair Requirement (Pattern 2)".

BEFORE REPLACING 4WAS FRONT CONTROL UNIT

- Record the self-diagnosis results (history).

  CAUTION:
  - **Never erase the memory (history) of self-diagnosis results when replacing 4WAS front control unit after diagnosis.**
  - **Erase the memory of the self-diagnosis results (record) after printing out or recording all the values of "DATA MONITOR".**

AFTER REPLACING 4WAS FRONT CONTROL UNIT

- Perform 4WAS front actuator adjustment after replacing 4WAS front control unit. Refer to STC-30, "4WAS FRONT ACTUATOR NEUTRAL POSITION ADJUSTMENT : Special Repair Requirement (Pattern 3)".

C1627 4WAS FRONT ACTUATOR

Description

INFOID:0000000005650314

- Wiring connected to 4WAS front actuator is integrated with 4WAS front actuator.
- 4WAS front actuator rotates together with steering wheel.
- 4WAS front actuator mainly consists of five components. [4WAS front lock solenoid valve (lock structure), front wheel steering angle sensor, 4WAS front motor, gear shaft, and spiral cable]

- 4WAS front lock solenoid valve (lock structure) is controlled by the 4WAS front control unit, and locks/unlocks 4WAS front actuator.
- If a strong force (rotation direction) is applied to 4WAS front actuator, the locking mechanism (holder) absorbs the force and locks 4WAS front actuator.
- Front wheel steering angle sensor detects a turning angle of 4WAS front motor.
- 4WAS front motor controls number of revolutions by a command value from the 4WAS front control unit.
- Gear shaft is an output axis of 4WAS front motor. (Gear shaft = 4WAS front motor revolution + steering angle)
- Spiral cables mean the power line and signal lines of 4WAS front motor.

DTC Logic

INFOID:0000000005650315

DTC DETECTION LOGIC

DTC	Items (CONSULT-III screen terms)	Diagnostic item is detected when...	Possible cause
C1627	ACTUATOR	The indication value from 4WAS front actuator (front wheel angle) differs from the value from 4WAS front control unit.	4WAS front actuator error

DTC CONFIRMATION PROCEDURE

1. RECHECK DTC

With CONSULT-III

1. Start the engine.
   CAUTION:
   Stop the vehicle.
2. Steer 360° leftward slowly. Then steer 360° rightward to return the steering wheel to the straight-ahead position. Repeat the same service for 1 minute or more.
   NOTE:
   The protection function mode (overheat protection) activates and the system stops if steering repeats for a long time.
3. Perform 4WAS front control unit self-diagnosis.

Is DTC “C1627” detected?

YES >> Proceed to diagnosis procedure. Refer to STC-52, "Diagnosis Procedure".
NO >> INSPECTION END

Diagnosis Procedure

INFOID:0000000005650316

1. PERFORM SELF-DIAGNOSIS (4WAS FRONT CONTROL UNIT)

With CONSULT-III

Perform 4WAS front control unit self-diagnosis

Is any DTC detected other than “C1627”?

YES >> Check the error system.
NO >> GO TO 2.

2. PERFORM SELF-DIAGNOSIS (4WAS FRONT CONTROL UNIT)

With CONSULT-III

Perform 4WAS front control unit self-diagnosis.

Is DTC “C1627” detected?

YES >> Replace 4WAS front actuator. Refer to STC-182, "Removal and Installation".
NO >> GO TO 3.

3. CHECK INFORMATION

With CONSULT-III

Check the “DATA MONITOR” value of each DTC detected with the self-diagnosis function. Refer to STC-144, "Reference Value".

Is each data the standard value?

YES >> Check each harness connector pin terminal for disconnection.
NO >> Replace 4WAS front actuator. Refer to STC-182, "Removal and Installation".

Special Repair Requirement

INFOID:0000000005650317

AFTER REPLACING 4WAS FRONT ACTUATOR

- Perform 4WAS front actuator adjustment after replacing 4WAS front actuator. Refer to STC-30, "4WAS FRONT ACTUATOR NEUTRAL POSITION ADJUSTMENT : Special Repair Requirement (Pattern 2)".

AFTER REPLACING 4WAS FRONT CONTROL UNIT

- Perform 4WAS front actuator adjustment after replacing 4WAS front control unit. Refer to STC-30, "4WAS FRONT ACTUATOR NEUTRAL POSITION ADJUSTMENT : Special Repair Requirement (Pattern 3)".

C1628 4WAS FRONT ACTUATOR

Description

INFOID:0000000005650318

- Wiring connected to 4WAS front actuator is integrated with 4WAS front actuator.
- 4WAS front actuator rotates together with steering wheel.
- 4WAS front actuator mainly consists of five components. [4WAS front lock solenoid valve (lock structure), front wheel steering angle sensor, 4WAS front motor, gear shaft, and spiral cable]
- 4WAS front lock solenoid valve (lock structure) is controlled by the 4WAS front control unit, and locks/unlocks 4WAS front actuator.
- If a strong force (rotation direction) is applied to 4WAS front actuator, the locking mechanism (holder) absorbs the force and locks 4WAS front actuator.
- Front wheel steering angle sensor detects a turning angle of 4WAS front motor.
- 4WAS front motor controls number of revolutions by a command value from the 4WAS front control unit.
- Gear shaft is an output axis of 4WAS front motor. (Gear shaft = 4WAS front motor revolution + steering angle)
- Spiral cables mean the power line and signal lines of 4WAS front motor.

DTC Logic

INFOID:0000000005650319

DTC DETECTION LOGIC

DTC	Items (CONSULT-III screen terms)	Diagnostic item is detected when...	Possible cause
C1628	ACTUATOR	The front wheel steering angle sensor error is detected.	Front wheel steering angle sensor error

DTC CONFIRMATION PROCEDURE

1. RECHECK DTC

With CONSULT-III

1. Start the engine.
   CAUTION:
   Stop the vehicle.
2. Steer 360° leftward slowly. Then steer 360° rightward to return the steering wheel to the straight-ahead position. Repeat the same service for 1 minute or more.
   NOTE:
   The protection function mode (overheat protection) activates and the system stops if steering repeats for a long time.
3. Perform 4WAS front control unit self-diagnosis.

Is DTC “C1628” detected?

YES >> Proceed to diagnosis procedure. Refer to STC-54, "Diagnosis Procedure".
NO >> INSPECTION END

Diagnosis Procedure

INFOID:0000000005650320

1. CHECK FRONT WHEEL STEERING ANGLE SENSOR CIRCUIT (1)

1. Turn the ignition switch OFF.
2. Disconnect 4WAS front control unit harness connector.
3. Check the continuity between 4WAS front control unit harness connector and the ground.

4WAS front control unit		Continuity
Connector	Terminal	
M42	18 – Ground	Existed

Is the inspection result normal?

YES >> GO TO 2.
NO >> Repair or replace the harnesses and connectors.

2. CHECK FRONT WHEEL STEERING ANGLE SENSOR CIRCUIT (2)

1. Connect 4WAS front control unit harness connector.
2. Turn the ignition switch ON.
   CAUTION:
   Never start the engine.
3. Check the continuity between 4WAS front actuator harness connector and 4WAS front control unit harness connector.

4WAS front actuator		4WAS front control unit		Continuity
Connector	Terminal	Connector	Terminal	
M351	7	M42	18	Existed

Is the inspection result normal?

YES >> GO TO 3.
NO >> Replace 4WAS front control unit. Refer to STC-180, "Exploded View".

3. CHECK FRONT WHEEL STEERING ANGLE SENSOR CIRCUIT (3)

Check the resistance between 4WAS front actuator harness connectors. Refer to STC-55, "Component Inspection (Front Wheel Steering Angle Sensor)".

Is the inspection result normal?

YES >> GO TO 4.
NO >> Replace 4WAS front actuator. Refer to STC-182, "Removal and Installation".

4. CHECK FRONT WHEEL STEERING ANGLE SENSOR SIGNAL

With CONSULT-III

1. Connect 4WAS front actuator harness connector.
2. Start the engine.
   CAUTION:
   Stop the vehicle.
3. Rotate the steering wheel slowly. Check “MTR SEN U OUT”, “MTR SEN V OUT” and “MTR SEN W OUT” item on “DATA MONITOR”of 4WAS front control unit.

Do all data monitor values indicate “Hi” or “Low” simultaneously?

YES >> Replace 4WAS front control unit. Refer to STC-180, "Exploded View".
NO >> Check 4WAS front actuator harness connector pin terminal for disconnection.

Component Inspection (Front Wheel Steering Angle Sensor)

INFOID:0000000005650321

1. CHECK FRONT WHEEL STEERING ANGLE SENSOR

1. Start the engine.
   CAUTION:
   Stop the vehicle.
2. Steer to the straight-ahead position. Then turn the ignition switch OFF.
3. Disconnect 4WAS front actuator harness connector.
4. Apply 12 V current between 4WAS front actuator harness connector No. 10 terminal (positive) and NO. 3 terminal (negative). (Release the lock structure.)
   CAUTION:
   - **Never make the terminals short.**
   - **Connect the fuse between the terminals when applying the voltage.**
5. Slowly steer rightward and leftward alternately. Check the resistance between 4WAS front actuator harness connectors.
   CAUTION:
   The steering angle must be within 10° rightward and leftward.

4WAS front actuator				Resistance (Approx.)
Connector	Terminal	Connector	Terminal	
M351	2	M351	7	1 k – 100 kΩ
	4		7	
	8		7	

6. Connect 4WAS front actuator harness connector.

Is the inspection result normal?

YES >> INSPECTION END
NO >> Replace 4WAS front actuator. Refer to STC-182, "Removal and Installation".

Special Repair Requirement

INFOID:0000000005650322

AFTER REPLACING 4WAS FRONT ACTUATOR

- Perform 4WAS front actuator adjustment after replacing 4WAS front actuator. Refer to STC-30, "4WAS FRONT ACTUATOR NEUTRAL POSITION ADJUSTMENT : Special Repair Requirement (Pattern 2)".

BEFORE REPLACING 4WAS FRONT CONTROL UNIT

- Record the self-diagnosis results (history).

CAUTION:

- **Never erase the memory (history) of self-diagnosis results when replacing 4WAS front control unit after diagnosis.**
- **Erase the memory of the self-diagnosis results (record) after printing out or recording all the values of “DATA MONITOR”.**

AFTER REPLACING 4WAS FRONT CONTROL UNIT

- Perform 4WAS front actuator adjustment after replacing 4WAS front control unit. Refer to STC-30, "4WAS FRONT ACTUATOR NEUTRAL POSITION ADJUSTMENT : Special Repair Requirement (Pattern 3)".

C1631, C1632 4WAS FRONT CONTROL UNIT

Description

INFOID:0000000005650323

- Each sensor signal controls 4WAS front actuator.
- The fail-safe functions stops the rear wheel angle function (the front wheel is the steering wheel cutting angle) when the electric components and the mechanical components are malfunctioning.
- The protection function mode stops 4WAS system intermittently when 4WAS system continues high loaded condition and overheat condition or the input signal does not transmit to 4WAS front control unit.
- 4WAS front control unit and 4WAS main control unit control the 4WAS system by 4WAS communication line to optimize control.

DTC Logic

INFOID:0000000005650324

DTC DETECTION LOGIC

DTC	Items (CONSULT-III screen terms)	Diagnostic item is detected when...	Possible cause
C1631	CONTROL UNIT	An error is detected inside 4WAS front control unit.	4WAS front control unit or 4WAS front control unit power supply error is detected.
C1632	CONTROL UNIT	An error is detected inside 4WAS front control unit.	4WAS front control unit or 4WAS front control unit power supply error is detected.

DTC CONFIRMATION PROCEDURE

1. RECHECK DTC

With CONSULT-III

1. Turn the ignition switch from OFF to ON.
2. Perform 4WAS front control unit self-diagnosis.

Is DTC “C1631” or “C1632” detected?

YES >> Proceed to diagnosis procedure. Refer to STC-57, "Diagnosis Procedure".
NO >> INSPECTION END

Diagnosis Procedure

INFOID:0000000005650325

1. CHECK 4WAS FRONT CONTROL UNIT POWER SUPPLY

1. Turn the ignition switch OFF.
2. Disconnect 4WAS front control unit harness connector.
3. Check the voltage between 4WAS front control unit harness connector terminal and ground.

4WAS front control unit		Voltage (Approx.)
Connector	Terminal	
M41	11 – Ground	Battery voltage
M42	15 – Ground	0 V

4. Turn the ignition switch ON.
   CAUTION:
   Never start the engine.
5. Check the voltage between 4WAS front control unit harness connector terminal and ground.

4WAS front control unit		Voltage (Approx.)
Connector	Terminal	
M41	11 – Ground	Battery voltage
M42	15 – Ground	

Is the inspection result normal?

YES >> GO TO 2.
NO >> Check the following items. Repair or replace the malfunctioning parts.
- 40A fusible link (#I) open
  - Short among 40A fusible link (#I) connector, 4WAS front control unit harness connector No. 11 terminal and the ground
- Open between the battery and 4WAS front control unit harness connector No. 11 terminal
- 10A fuse (#3) open
  - Short among 10A fuse (#3) connector, 4WAS front control unit harness connector No. 15 terminal and the ground
  - Short among 10A fuse (#3) connector, unified meter and A/C amp harness connector No. 53 terminal and the ground
- Open between the ignition switch and 4WAS front control unit harness connector No. 15 terminal
- Battery or ignition switch

2. CHECK 4WAS FRONT CONTROL UNIT GROUND

Check the continuity between 4WAS front control unit harness connector terminal and the ground.

4WAS front control unit		Continuity
Connector	Terminal	
M41	12 – Ground	Existed
M42	18 – Ground	
	34 – Ground	

Is the inspection result normal?

YES >> GO TO 3.
NO >> Repair or replace the harnesses and connectors.

3. CHECK TERMINAL

Check 4WAS front control unit harness connector pin terminal and connection for disconnection.

Is the inspection result normal?

YES >> GO TO 4.
NO >> Repair or replace the specific malfunctioning part.

4. CHECK INFORMATION

- Check that any item below is applicable when the malfunctions occur.
- The engine stall occurs while driving or stopping the vehicle.
- When detecting the charging system error

Is the item applicable?

YES >> Check the error system.
- Perform ECM symptom diagnosis. Refer to EC-606, "Symptom Table".
- Perform the symptom diagnosis for the charging system. Refer to CHG-19, "Symptom Table".

NO >> Replace 4WAS front control unit. Refer to STC-180, "Exploded View".

Special Repair Requirement

INFOID:0000000005650326

BEFORE REPLACING 4WAS FRONT CONTROL UNIT

- Record the self-diagnosis results (history).

CAUTION:
- **Never erase the memory (history) of self-diagnosis results when replacing 4WAS front control unit after diagnosis.**

- **Erase the memory of the self-diagnosis results (record) after printing out or recording all the values of “DATA MONITOR”.**

AFTER REPLACING 4WAS FRONT CONTROL UNIT

- Perform 4WAS front actuator adjustment after replacing 4WAS front control unit. Refer to STC-30, "4WAS FRONT ACTUATOR NEUTRAL POSITION ADJUSTMENT : Special Repair Requirement (Pattern 3)".

C1633 4WAS FRONT CONTROL UNIT

Description

INFOID:0000000005650327

- Each sensor signal controls 4WAS front actuator.
- The fail-safe functions stops the rear wheel angle function (the front wheel is the steering wheel cutting angle) when the electric components and the mechanical components are malfunctioning.
- The protection function stops 4WAS system temporarily when:
- 4WAS system continues being high load/overheat condition.
- The input signal is not transmitted to 4WAS front control unit.
- 4WAS front control unit and 4WAS main control unit control the 4WAS system by 4WAS communication line to optimize control.

DTC Logic

INFOID:0000000005650328

DTC DETECTION LOGIC

DTC	Items (CONSULT-III screen terms)	Diagnostic item is detected when...	Possible cause
C1633	CONTROL UNIT	An error is detected inside 4WAS front control unit.	4WAS front control unit error

DTC CONFIRMATION PROCEDURE

1. RECHECK DTC

With CONSULT-III

1. Turn the ignition switch from OFF to ON.
2. Perform 4WAS front control unit self-diagnosis.

Is DTC “C1633” detected?

YES >> Proceed to diagnosis procedure. Refer to STC-60, "Diagnosis Procedure".
NO >> INSPECTION END

Diagnosis Procedure

INFOID:0000000005650329

1. CHECK 4WAS FRONT CONTROL UNIT (1)

With CONSULT-III

1. Start the engine.
   CAUTION:
   Stop the vehicle.
2. Check “THERM TEMP” on “DATA MONITOR” of 4WAS front control unit.
3. Steer the steering wheel 360° leftward slowly and then steer 360° rightward. Return the steering wheel to the straight-ahead position. Repeat the same service for 3 minutes.
4. Check “THERM TEMP” on “DATA MONITOR” of 4WAS front control unit.

Is DATA MONITOR value difference between before and after the service 3° or less?

YES >> Replace 4WAS front control unit. Refer to STC-180, "Exploded View".
NO >> GO TO 2.

2. CHECK 4WAS FRONT CONTROL UNIT (2)

With CONSULT-III

1. Start the engine.
   CAUTION:
   Stop the vehicle.
2. Check “THERM TEMP” item on “DATA MONITOR” of 4WAS front control unit.
3. Steer the steering wheel 360° leftward slowly and then steer 360° rightward. Return the steering wheel to the straight-ahead position. Repeat the same service for 3 minutes.
4. Check “THERM TEMP” item on “DATA MONITOR” of 4WAS front control unit.

Monitor item	Condition	Display value
THERM TEMP	Engine running (idling)	–40 – 100°C

Is the inspection result normal?

YES >> GO TO 3.
NO >> Replace 4WAS front control unit. Refer to STC-180, "Exploded View".

3. CHECK INFORMATION

- Check that any item below is applicable when malfunction occurs.
- Entering and exiting the garage (Frequent steering)
- When steering the steering wheel for a long time

Is the item applicable?

YES >> 4WAS system protection function mode (overheat protection)(4WAS system temporary stop)
NO >> Replace 4WAS front control unit. Refer to STC-180, "Exploded View".

Special Repair Requirement

INFOID:0000000005650330

BEFORE REPLACING 4WAS FRONT CONTROL UNIT

- Record the self-diagnosis results (history).

CAUTION:

- **Never erase the memory (history) of self-diagnosis results when replacing 4WAS front control unit after diagnosis.**
- **Erase the memory of the self-diagnosis results (record) after printing out or recording all the values of “DATA MONITOR”.**

AFTER REPLACING 4WAS FRONT CONTROL UNIT

- Perform 4WAS front actuator adjustment after replacing 4WAS front control unit. Refer to STC-30, "4WAS FRONT ACTUATOR NEUTRAL POSITION ADJUSTMENT : Special Repair Requirement (Pattern 3)".

C1651 IGNITION POWER SUPPLY

Description

INFOID:0000000005650331

4WAS system function is controlled by transmitting the ignition switch signal to 4WAS front control unit.

DTC Logic

INFOID:0000000005650332

DTC DETECTION LOGIC

DTC	Items (CONSULT-III screen terms)	Diagnostic item is detected when...	Possible cause
C1651	IGN POWER SUPPLY	The ignition voltage signal error is detected.	4WAS front control unit or the ignition power supply error is detected.

DTC CONFIRMATION PROCEDURE

1. RECHECK DTC

With CONSULT-III

1. Turn the ignition switch from OFF to ON.
2. Perform 4WAS front control unit self-diagnosis.

Is DTC “C1651” detected?

YES >> Proceed to diagnosis procedure. Refer to STC-62, "Diagnosis Procedure".
NO >> INSPECTION END

Diagnosis Procedure

INFOID:0000000005650333

1. CHECK 4WAS FRONT CONTROL UNIT GROUND

1. Turn the ignition switch OFF.
2. Check the continuity between 4WAS front control unit harness connector and the ground.

4WAS front control unit		Continuity
Connector	Terminal	
M42	18 – Ground	Existed

Is the inspection result normal?

YES >> GO TO 2.
NO >> Repair or replace the harnesses and connectors.

2. CHECK 4WAS FRONT CONTROL UNIT POWER SUPPLY

1. Start the engine.
   CAUTION:
   Stop the vehicle.
2. Check the voltage between 4WAS front control unit harness connectors.

4WAS front control unit		Voltage (Approx.)
Connector	Terminal	
M42	15 – 18	Battery voltage

Is the measurement value “9 V” or less?

YES >> Check the following items. Repair or replace the malfunctioning parts.
- 4WAS front control unit harness connector pin terminal and connection
- 10A fuse (#3) open
- Short among 10A fuse (#3) connector, 4WAS front control unit harness connector No. 15 terminal and the ground
- Short among 10A fuse (#3) connector, unified meter and A/C amp No. 53 terminal and the ground

- Open between the ignition switch and 4WAS front control unit harness connector No. 15 terminal
- Ignition switch

NO >> GO TO 3.

3. CHECK 4WAS FRONT CONTROL UNIT SIGNAL

With CONSULT-III

1. Start the engine.
   CAUTION:
   Stop the vehicle.
2. Check “IGN VOLT” item on “DATA MONITOR” of 4WAS front control unit.

Does the item on “DATA MONITOR” indicate “16 V” or more?

YES >> Perform the symptom diagnosis for the charging system. Refer to CHG-19, "Symptom Table".
NO >> Replace 4WAS front control unit. Refer to STC-180, "Exploded View".

Special Repair Requirement

INFOID:0000000005650334

BEFORE REPLACING 4WAS FRONT CONTROL UNIT

- Record the self-diagnosis results (history).
  CAUTION:
  - **Never erase the memory (history) of self-diagnosis results when replacing 4WAS front control unit after diagnosis.**
  - **Erase the memory of the self-diagnosis results (record) after printing out or recording all the values of “DATA MONITOR”.**

AFTER REPLACING 4WAS FRONT CONTROL UNIT

- Perform 4WAS front actuator adjustment after replacing 4WAS front control unit. Refer to STC-30, "4WAS FRONT ACTUATOR NEUTRAL POSITION ADJUSTMENT : Special Repair Requirement (Pattern 3)".

C1652 4WAS FRONT MOTOR POWER SUPPLY

Description

INFOID:0000000005650335

The power supply for 4WAS front motor and 4WAS front control unit.

DTC Logic

INFOID:0000000005650336

DTC DETECTION LOGIC

DTC	Items (CONSULT-III screen terms)	Diagnostic item is detected when...	Possible cause
C1652	MOTOR POWER SUPPLY	4WAS front motor main power supply error is detected	4WAS front control unit or 4WAS front motor power supply error is detected.

DTC CONFIRMATION PROCEDURE

1. RECHECK DTC

With CONSULT-III

1. Turn the ignition switch from OFF to ON.
2. Perform 4WAS front control unit self-diagnosis.

Is DTC “C1652” detected?

YES >> Proceed to diagnosis procedure. Refer to STC-64, "Diagnosis Procedure".
NO >> INSPECTION END

Diagnosis Procedure

INFOID:0000000005650337

1. 4WAS FRONT MOTOR GROUND INSPECTION

1. Turn the ignition switch OFF.
2. Check the continuity between 4WAS front control unit harness connector and the ground.

4WAS front control unit		Continuity
Connector	Terminal	
M41	12 – Ground	Existed

Is the inspection result normal?

YES >> GO TO 2.
NO >> Repair or replace the harnesses and connectors.

2. 4WAS FRONT MOTOR POWER SUPPLY INSPECTION

1. Start the engine.
   CAUTION:
   Stop the vehicle.
2. Check the voltage between 4WAS front control unit harness connectors.

4WAS front control unit		Voltage (Approx.)
Connector	Terminal	
M41	11 – 12	Battery voltage

Is the measurement value “9 V” or less?

YES >> Check the following items. Repair or replace the malfunctioning parts.
- 4WAS front control unit harness connector pin terminal and connection
- 40A fusible link (#I) open
- Short among 40A fusible link (#I) connector, 4WAS front control unit harness connector No. 11 terminal and the ground
- Open between the battery and 4WAS front control unit harness connector No. 11 terminal
- Battery

NO >> GO TO 3.

3. 4WAS FRONT CONTROL UNIT SIGNAL INSPECTION

With CONSULT-III

1. Start the engine.
   CAUTION:
   Stop the vehicle.
2. Check “MOTOR VOLT” item on “DATA MONITOR” of 4WAS front control unit.

Does the item on “DATA MONITOR” indicate “16 V” or more?

YES >> Perform the symptom diagnosis for the charging system. Refer to CHG-19, "Symptom Table".
NO >> Replace 4WAS front control unit. Refer to STC-180, "Exploded View".

Special Repair Requirement

INFOID:0000000005650338

BEFORE REPLACING 4WAS FRONT CONTROL UNIT

- Record the self-diagnosis results (history).
  CAUTION:
  - **Never erase the memory (history) of self-diagnosis results when replacing 4WAS front control unit after diagnosis.**
  - **Erase the memory of the self-diagnosis results (record) after printing out or recording all the values of “DATA MONITOR”.**

AFTER REPLACING 4WAS FRONT CONTROL UNIT

- Perform 4WAS front actuator adjustment after replacing 4WAS front control unit. Refer to STC-30, "4WAS FRONT ACTUATOR NEUTRAL POSITION ADJUSTMENT : Special Repair Requirement (Pattern 3)".

C1654 4WAS FRONT ACTUATOR RELAY

Description

INFOID:0000000005650339

- It performs control inside 4WAS front control unit.
- The actuator relay turns ON when turning the ignition switch ON.
- When turning the ignition switch from ON to OFF, the actuator relay remains ON and is turned OFF after a few minutes due to the 4WAS front control unit control.

DTC Logic

INFOID:0000000005650340

DTC DETECTION LOGIC

DTC	Items (CONSULT-III screen terms)	Diagnostic item is detected when...	Possible cause
C1654	ACTUATOR RELAY	An error is detected on the main relay power supply inside 4WAS front control unit.	The main relay power supply inside 4WAS front control unit error is detected.

DTC CONFIRMATION PROCEDURE

1. RECHECK DTC

With CONSULT-III

1. Turn the ignition switch from OFF to ON.
2. Perform 4WAS front control unit self-diagnosis.

Is DTC “C1654” detected?

YES >> Proceed to diagnosis procedure. Refer to STC-66, "Diagnosis Procedure".
NO >> INSPECTION END

Diagnosis Procedure

INFOID:0000000005650341

1. 4WAS FRONT MOTOR GROUND INSPECTION

1. Turn the ignition switch OFF.
2. Check the continuity between 4WAS front control unit harness connector and the ground.

4WAS front control unit		Continuity
Connector	Terminal	
M41	12 – Ground	Existed

Is the inspection result normal?

YES >> GO TO 2.
NO >> Repair or replace the harnesses and connectors.

2. 4WAS FRONT MOTOR POWER SUPPLY INSPECTION

1. Start the engine.
   CAUTION:
   Stop the vehicle.
2. Check the voltage between 4WAS front control unit harness connectors.

4WAS front control unit		Voltage (Approx.)
Connector	Terminal	
M41	11 – 12	Battery voltage

Is the measurement value “9 V” or less?

YES >> Check the following items. Repair or replace the malfunctioning parts.
- 4WAS front control unit harness connector pin terminal and connection
- 40A fusible link (#I) open

- Short among 40A fusible link (#I) connector, 4WAS front control unit harness connector No. 11 terminal and the ground
- Open between the battery and 4WAS front control unit harness connector No. 11 terminal
- Battery

NO >> GO TO 3.

3. 4WAS FRONT CONTROL UNIT SIGNAL INSPECTION

With CONSULT-III

1. Start the engine.
   CAUTION:
   Stop the vehicle.
2. Check “MOTOR VOLT” item on “DATA MONITOR” of 4WAS front control unit.

Does the item on “DATA MONITOR” indicate “16 V” or more?

YES >> Perform the symptom diagnosis for the charging system. Refer to CHG-19, "Symptom Table".
NO >> Replace 4WAS front control unit. Refer to STC-180, "Exploded View".

Special Repair Requirement

INFOID:0000000005650342

BEFORE REPLACING 4WAS FRONT CONTROL UNIT

- Record the self-diagnosis results (history).
  CAUTION:
  - **Never erase the memory (history) of self-diagnosis results when replacing 4WAS front control unit after diagnosis.**
  - **Erase the memory of the self-diagnosis results (record) after printing out or recording all the values of “DATA MONITOR”.**

AFTER REPLACING 4WAS FRONT CONTROL UNIT

- Perform 4WAS front actuator adjustment after replacing 4WAS front control unit. Refer to STC-30, "4WAS FRONT ACTUATOR NEUTRAL POSITION ADJUSTMENT : Special Repair Requirement (Pattern 3)".

C1655 4WAS FRONT DRIVER

Description

INFOID:0000000005650343

- It perform control inside 4WAS front control unit.
- The power supply for 4WAS front motor (3-phase motor).

DTC Logic

INFOID:0000000005650344

DTC DETECTION LOGIC

DTC	Items (CONSULT-III screen terms)	Diagnostic item is detected when...	Possible cause
C1655	PRE-DRIVER	4WAS front motor 3-phase current error is detected. (Current is not applied to 4WAS front motor)	4WAS front control unit or 4WAS front motor power supply error is detected.

DTC CONFIRMATION PROCEDURE

1. RECHECK DTC

With CONSULT-III

1. Turn the ignition switch from OFF to ON.
2. Perform 4WAS front control unit self-diagnosis.

Is DTC “C1655” detected?

YES >> Proceed to diagnosis procedure. Refer to STC-68, "Diagnosis Procedure".
NO >> INSPECTION END

Diagnosis Procedure

INFOID:0000000005650345

1. CHECK 4WAS FRONT MOTOR GROUND

1. Turn the ignition switch OFF.
2. Disconnect 4WAS front control unit harness connector.
3. Check the continuity between 4WAS front control unit harness connector and the ground.

4WAS front control unit		Continuity
Connector	Terminal	
M41	12 – Ground	Existed

Is the inspection result normal?

YES >> GO TO 2.
NO >> Repair or replace the harnesses and connectors.

2. PERFORM SELF-DIAGNOSIS (4WAS FRONT CONTROL UNIT)

With CONSULT-III

1. Connect 4WAS front control unit harness connector.
2. Perform 4WAS front control unit self-diagnosis.

Is DTC “C1622” detected?

YES >> Check the error system.
NO >> Replace 4WAS front control unit. Refer to STC-180, "Exploded View".

Special Repair Requirement

INFOID:0000000005650346

BEFORE REPLACING 4WAS FRONT CONTROL UNIT

- Record the self-diagnosis results (history).

CAUTION:

- **Never erase the memory (history) of self-diagnosis results when replacing 4WAS front control unit after diagnosis.**

- **Erase the memory of the self-diagnosis results (record) after printing out or recording all the values of “DATA MONITOR”.**

AFTER REPLACING 4WAS FRONT CONTROL UNIT

- Perform 4WAS front actuator adjustment after replacing 4WAS front control unit. Refer to STC-30, "4WAS FRONT ACTUATOR NEUTRAL POSITION ADJUSTMENT : Special Repair Requirement (Pattern 3)".

C1661 4WAS FRONT LOCK SOLENOID VALVE

Description

INFOID:0000000005650347

- Secure the inside of 4WAS front actuator temporarily. (It operates when performing active test with fail-safe function and CONSULT-III.)
- 4WAS front lock solenoid valve is activated in the active test (lock release). The secured 4WAS front actuator is released.
- 4WAS front control unit controls 4WAS front actuator. 4WAS front actuator releases the lock when the engine speed signal is “ON”. 4WAS front actuator applies the lock when the engine speed signal is “OFF”.

DTC Logic

INFOID:0000000005650348

DTC DETECTION LOGIC

DTC	Items (CONSULT-III screen terms)	Diagnostic item is detected when...	Possible cause
C1661	LOCK SOLENOID	4WAS front lock solenoid valve error is detected. (An electric activation error is detected.)	4WAS front control unit or 4WAS front lock solenoid valve error is detected.

DTC CONFIRMATION PROCEDURE

1. RECHECK DTC

With CONSULT-III

1. Turn the ignition switch from OFF to ON.
2. Perform 4WAS front control unit self-diagnosis.

Is DTC “C1661” detected?

YES >> Proceed to diagnosis procedure. Refer to STC-70, "Diagnosis Procedure".
NO >> INSPECTION END

Diagnosis Procedure

INFOID:0000000005650349

1. CHECK 4WAS FRONT SOLENOID VALVE CIRCUIT

Check 4WAS front solenoid valve circuit. Refer to STC-70, "Component Inspection (4WAS Front Lock Solenoid Valve)".

Is the inspection result normal?

YES >> GO TO 2.
NO >> Replace 4WAS front actuator. Refer to STC-182, "Removal and Installation".

2. CHECK INFORMATION

With CONSULT-III

1. Connect 4WAS front actuator harness connector.
2. Check the “DATA MONITOR” value of each DTC detected with the self-diagnosis function. Refer to STC-144, "Reference Value".

Is each data the standard value?

YES >> Check each harness connector pin terminal for disconnection.
NO >> Replace 4WAS front control unit. Refer to STC-180, "Exploded View".

Component Inspection (4WAS Front Lock Solenoid Valve)

INFOID:0000000005650350

1. CHECK 4WAS FRONT SOLENOID VALVE CIRCUIT

1. Turn the ignition switch OFF.
2. Disconnect 4WAS front actuator harness connector.
3. Check the resistance between 4WAS front actuator harness connectors.

4WAS front actuator				Resistance (Approx.)
Connector	Terminal	Connector	Terminal	
M351	10	M351	3	1 – 100 Ω

4. Check the continuity between 4WAS front actuator harness connector and the ground.

4WAS front actuator		Continuity
Connector	Terminal	
M351	3 – Ground	Not existed
	10 – Ground	

Is the inspection result normal?

YES >> INSPECTION END.
NO >> Replace 4WAS front actuator. Refer to STC-182, "Removal and Installation".

Special Repair Requirement

INFOID:0000000005650351

AFTER REPLACING 4WAS FRONT ACTUATOR

- Perform 4WAS front actuator adjustment after replacing 4WAS front actuator. Refer to STC-30, "4WAS FRONT ACTUATOR NEUTRAL POSITION ADJUSTMENT : Special Repair Requirement (Pattern 2)".

BEFORE REPLACING 4WAS FRONT CONTROL UNIT

- Record the self-diagnosis results (history).

CAUTION:

- **Never erase the memory (history) of self-diagnosis results when replacing 4WAS front control unit after diagnosis.**
- **Erase the memory of the self-diagnosis results (record) after printing out or recording all the values of “DATA MONITOR”.**

AFTER REPLACING 4WAS FRONT CONTROL UNIT

- Perform 4WAS front actuator adjustment after replacing 4WAS front control unit. Refer to STC-30, "4WAS FRONT ACTUATOR NEUTRAL POSITION ADJUSTMENT : Special Repair Requirement (Pattern 3)".

C1667 LOCK INSERTION

Description

INFOID:0000000005650352

- Wiring connected to 4WAS front actuator is integrated with 4WAS front actuator.
- 4WAS front actuator rotates together with steering wheel.
- 4WAS front actuator mainly consists of five components. [4WAS front lock solenoid valve (lock structure), front wheel steering angle sensor, 4WAS front motor, gear shaft, and spiral cable]
- 4WAS front lock solenoid valve (lock structure) is controlled by the 4WAS front control unit, and locks/unlocks 4WAS front actuator.
- If a strong force (rotation direction) is applied to 4WAS front actuator, the locking mechanism (holder) absorbs the force and locks 4WAS front actuator.
- Front wheel steering angle sensor detects a turning angle of 4WAS front motor.
- 4WAS front motor controls number of revolutions by a command value from the 4WAS front control unit.
- Gear shaft is an output axis of 4WAS front motor. (Gear shaft = 4WAS front motor revolution + steering angle)
- Spiral cables mean the power line and signal lines of 4WAS front motor.

DTC Logic

INFOID:0000000005650353

DTC DETECTION LOGIC

DTC	Items (CONSULT-III screen terms)	Diagnostic item is detected when...	Possible cause
C1667	LOCK INSERTION	4WAS front lock solenoid valve (lock) error is detected. (An error is detected in lock condition.)	The inside 4WAS front actuator error is detected.

DTC CONFIRMATION PROCEDURE

1. RECHECK DTC

With CONSULT-III

1. Start the engine.
   CAUTION:
   Stop the vehicle.
2. Steer 30° leftward slowly. Steer 30° rightward. Return the steering wheel to the straight-ahead position.
3. Turn the ignition switch OFF.
4. Turn the ignition switch ON.
5. Perform 4WAS front control unit self-diagnosis.

Is DTC “C1667” detected?

YES >> Proceed to diagnosis procedure. Refer to STC-72, "Diagnosis Procedure".
NO >> INSPECTION END

Diagnosis Procedure

INFOID:0000000005650354

1. CHECK 4WAS FRONT LOCK SOLENOID VALVE (LOCK STRUCTURE)

With CONSULT-III

1. Start the engine.
   CAUTION:
   Stop the vehicle.
2. Steer 30° leftward slowly. Steer 30° rightward. Return the steering wheel to the straight-ahead position.
3. Turn the ignition switch OFF.
4. Turn the ignition switch ON.
5. Perform 4WAS front control unit self-diagnosis.

Is DTC “C1667” detected?

YES >> Replace 4WAS front actuator. Refer to STC-182, "Removal and Installation".
NO >> GO TO 2.

2. CHECK INFORMATION

With CONSULT-III

1. Check the “DATA MONITOR” value of each DTC detected with the self-diagnosis function. Refer to STC-144, "Reference Value".
2. Perform 4WAS front control unit self-diagnosis.

Is each data the standard value?

YES >> GO TO 1.
NO >> Replace 4WAS front control unit. Refer to STC-180, "Exploded View".

Special Repair Requirement

INFOID:0000000005650355

AFTER REPLACING 4WAS FRONT ACTUATOR

- Perform 4WAS front actuator adjustment after replacing 4WAS front actuator. Refer to STC-30, "4WAS FRONT ACTUATOR NEUTRAL POSITION ADJUSTMENT : Special Repair Requirement (Pattern 2)".

C1668 LOCK HOLDER GAP DETECT

Description

INFOID:0000000005650356

- Wiring connected to 4WAS front actuator is integrated with 4WAS front actuator.
- 4WAS front actuator rotates together with steering wheel.
- 4WAS front actuator mainly consists of five components. [4WAS front lock solenoid valve (lock structure), front wheel steering angle sensor, 4WAS front motor, gear shaft, and spiral cable]
- 4WAS front lock solenoid valve (lock structure) is controlled by the 4WAS front control unit, and locks/unlocks 4WAS front actuator.
- If a strong force (rotation direction) is applied to 4WAS front actuator, the locking mechanism (holder) absorbs the force and locks 4WAS front actuator.
- Front wheel steering angle sensor detects a turning angle of 4WAS front motor.
- 4WAS front motor controls number of revolutions by a command value from the 4WAS front control unit.
- Gear shaft is an output axis of 4WAS front motor. (Gear shaft = 4WAS front motor revolution + steering angle)
- Spiral cables mean the power line and signal lines of 4WAS front motor.

DTC Logic

INFOID:0000000005650357

DTC DETECTION LOGIC

DTC	Items (CONSULT-III screen terms)	Diagnostic item is detected when...	Possible cause
C1668	LOCK HLD GAP DETCT	4WAS front lock solenoid valve (lock) error is detected. (Excessive force is applied to the lock.)	The inside 4WAS front actuator error is detected.

DTC CONFIRMATION PROCEDURE

1. RECHECK DTC

With CONSULT-III

1. Turn the ignition switch from OFF to ON.
2. Perform 4WAS front control unit self-diagnosis.

Is DTC “C1668” detected?

YES >> Proceed to diagnosis procedure. Refer to STC-74, "Diagnosis Procedure".
NO >> INSPECTION END

Diagnosis Procedure

INFOID:0000000005650358

1. PERFORM SELF-DIAGNOSIS (4WAS FRONT CONTROL UNIT)

With CONSULT-III

1. Start the engine.
   CAUTION:
   Stop the vehicle.
2. Perform 4WAS front control unit self-diagnosis. Check that DTC “C1668” is detected.
   CAUTION:
   - **Replace 4WAS front actuator when the diagnosis history remains.**
   - **Never repair the malfunctioning part in 4WAS front actuator adjustment without replacing 4WAS front actuator.**

>> Replace 4WAS front actuator.

Special Repair Requirement

INFOID:0000000005650359

AFTER REPLACING 4WAS FRONT ACTUATOR

- Perform 4WAS front actuator adjustment after replacing 4WAS front actuator. Refer to STC-30, "4WAS FRONT ACTUATOR NEUTRAL POSITION ADJUSTMENT : Special Repair Requirement (Pattern 2)".

C1669 INCOMPLETE LOCK RELEASE

Description

INFOID:0000000005650360

- Wiring connected to 4WAS front actuator is integrated with 4WAS front actuator.
- 4WAS front actuator rotates together with steering wheel.
- 4WAS front actuator mainly consists of five components. [4WAS front lock solenoid valve (lock structure), front wheel steering angle sensor, 4WAS front motor, gear shaft, and spiral cable]
- 4WAS front lock solenoid valve (lock structure) is controlled by the 4WAS front control unit, and locks/unlocks 4WAS front actuator.
- If a strong force (rotation direction) is applied to 4WAS front actuator, the locking mechanism (holder) absorbs the force and locks 4WAS front actuator.
- Front wheel steering angle sensor detects a turning angle of 4WAS front motor.
- 4WAS front motor controls number of revolutions by a command value from the 4WAS front control unit.
- Gear shaft is an output axis of 4WAS front motor. (Gear shaft = 4WAS front motor revolution + steering angle)
- Spiral cables mean the power line and signal lines of 4WAS front motor.

DTC Logic

INFOID:0000000005650361

DTC DETECTION LOGIC

DTC	Items (CONSULT-III screen terms)	Diagnostic item is detected when...	Possible cause
C1669	INCOMP LOCK RELEAS	4WAS front actuator error is detected. (An error is detected in unlock condition.)	The power steering oil pressure or the inside 4WAS front actuator error is detected.

DTC CONFIRMATION PROCEDURE

1. RECHECK DTC

With CONSULT-III

1. Turn the ignition switch from OFF to ON.
2. Perform 4WAS front control unit self-diagnosis.

Is DTC “C1669” detected?

YES >> Proceed to diagnosis procedure. Refer to STC-75, "Diagnosis Procedure".
NO >> INSPECTION END

Diagnosis Procedure

INFOID:0000000005650362

1. CHECK INFORMATION

- Check that any item below is applicable.
- The steering force is heavy when 4WAS warning lamp is ON.
- The power steering system error is detected (oil leakage, belt tension, steering force etc.).

Is the item applicable?

YES >> Perform the symptom diagnosis for the steering system. Refer to ST-3, "NVH Troubleshooting Chart".
NO >> Replace 4WAS front actuator. Refer to STC-182, "Removal and Installation".

Special Repair Requirement

INFOID:0000000005650363

AFTER REPLACING 4WAS FRONT ACTUATOR

- Perform 4WAS front actuator adjustment after replacing 4WAS front actuator. Refer to STC-30, "4WAS FRONT ACTUATOR NEUTRAL POSITION ADJUSTMENT : Special Repair Requirement (Pattern 2)".

C1671 ACTUATOR ADJUSTMENT NOT PERFORMED

Description

INFOID:0000000005650364

- Memorize the neutral position of 4WAS front actuator in 4WAS front control unit.

DTC Logic

INFOID:0000000005650365

DTC DETECTION LOGIC

DTC	Items (CONSULT-III screen terms)	Diagnostic item is detected when...	Possible cause
C1671	ACT ADJ NOT PRFRM	4WAS front actuator adjustment is not performed.	4WAS front actuator adjustment is not performed.

DTC CONFIRMATION PROCEDURE

1. RECHECK DTC

With CONSULT-III

1. Turn the ignition switch from OFF to ON.
2. Perform 4WAS front control unit self-diagnosis.

Is DTC “C1671” detected?

YES >> Proceed to diagnosis procedure. Refer to STC-76, "Diagnosis Procedure".
NO >> INSPECTION END

Diagnosis Procedure

INFOID:0000000005650366

1. PERFORM SELF-DIAGNOSIS (4WAS FRONT CONTROL UNIT)

With CONSULT-III

Perform 4WAS front control unit self-diagnosis.

Is any DTC other than “C1671” detected?

YES >> Check the error system.
NO >> GO TO 2.

2. 4WAS FRONT ACTUATOR ADJUSTMENT

With CONSULT-III

1. Perform 4WAS front actuator adjustment. Refer to STC-30, "4WAS FRONT ACTUATOR NEUTRAL POSITION ADJUSTMENT : Special Repair Requirement (Pattern 2)".
2. Perform 4WAS front control unit self-diagnosis.

Is any DTC other than “C1671” detected?

YES >> Check the error system.
NO >> GO TO 3.

3. PERFORM SELF-DIAGNOSIS (4WAS FRONT CONTROL UNIT)

With CONSULT-III

Perform 4WAS front control unit self-diagnosis.

Is DTC “C1671” detected?

YES >> Replace 4WAS front control unit. Refer to STC-180, "Exploded View".
NO >> INSPECTION END

Special Repair Requirement

INFOID:0000000005650367

BEFORE REPLACING 4WAS FRONT CONTROL UNIT

- Record the self-diagnosis results (history).

CAUTION:

- **Never erase the memory (history) of self-diagnosis results when replacing 4WAS front control unit after diagnosis.**

- **Erase the memory of the self-diagnosis results (record) after printing out or recording all the values of “DATA MONITOR”.**

AFTER REPLACING 4WAS FRONT CONTROL UNIT

- Perform 4WAS front actuator adjustment after replacing 4WAS front control unit. Refer to STC-30, "4WAS FRONT ACTUATOR NEUTRAL POSITION ADJUSTMENT : Special Repair Requirement (Pattern 3)".

C1672 INCOMPLETE ACTUATOR ADJUSTMENT

Description

INFOID:0000000005650368

- Memorize the neutral position of 4WAS front actuator in 4WAS front control unit.

DTC Logic

INFOID:0000000005650369

DTC DETECTION LOGIC

DTC	Items (CONSULT-III screen terms)	Diagnostic item is detected when...	Possible cause
C1672	INCOMP ACTUATR ADJ	4WAS front actuator adjustment is incomplete.	4WAS front actuator adjustment is incomplete.

DTC CONFIRMATION PROCEDURE

1. RECHECK DTC

With CONSULT-III

1. Turn the ignition switch from OFF to ON.
2. Perform 4WAS front control unit self-diagnosis.

Is DTC “C1672” detected?

YES >> Proceed to diagnosis procedure. Refer to STC-78, "Diagnosis Procedure".
NO >> INSPECTION END

Diagnosis Procedure

INFOID:0000000005650370

1. PERFORM SELF-DIAGNOSIS (4WAS FRONT CONTROL UNIT)

With CONSULT-III

Perform 4WAS front control unit self-diagnosis.

Is any DTC other than “C1672” detected?

YES >> Check the error system.
NO >> GO TO 2.

2. ADJUST 4WAS FRONT ACTUATOR

With CONSULT-III

1. Perform 4WAS front actuator adjustment. Refer to STC-30, "4WAS FRONT ACTUATOR NEUTRAL POSITION ADJUSTMENT : Special Repair Requirement (Pattern 2)".
2. Perform 4WAS front control unit self-diagnosis.

Is any error system detected?

YES >> Replace 4WAS front control unit. Refer to STC-180, "Exploded View".
- Perform 4WAS actuator adjustment after replacing 4WAS front control unit. Perform the 4WAS front control unit self-diagnosis again. Replace 4WAS front actuator if DTC “C1672” is detected. Refer to STC-182, "Removal and Installation".

NO >> INSPECTION END

Special Repair Requirement

INFOID:0000000005650371

BEFORE REPLACING 4WAS FRONT CONTROL UNIT

- Record the self-diagnosis results (history).

CAUTION:

- **Never erase the memory (history) of self-diagnosis results when replacing 4WAS front control unit after diagnosis.**
- **Erase the memory of the self-diagnosis results (record) after printing out or recording all the values of “DATA MONITOR”.**

AFTER REPLACING 4WAS FRONT CONTROL UNIT

- Perform 4WAS front actuator adjustment after replacing 4WAS front control unit. Refer to STC-30, "4WAS FRONT ACTUATOR NEUTRAL POSITION ADJUSTMENT : Special Repair Requirement (Pattern 3)".

C1684, C1685 4WAS MAIN CONTROL UNIT COMMUNICATION

Description

INFOID:0000000005650372

- 4WAS front control unit and 4WAS main control unit transmit/receive information to/from each other for optimum control of the 4WAS system with the specified 4WAS system line (4WAS communication line) between 4WAS front control unit and 4WAS main control unit.
- Be careful to repair wirings because 4WAS system specified line adopts twisted-pair wires. Refer to STC-179, "Precautions for Harness Repair".

DTC Logic

INFOID:0000000005650373

DTC DETECTION LOGIC

DTC	Items (CONSULT-III screen terms)	Diagnostic item is detected when...	Possible cause
C1684	4WAS MAIN ECU COMM	4WAS communication line* data communication error is detected. (An error signal is detected from 4WAS main control unit.)	4WAS communication line*/4WAS main control unit/4WAS front control unit error
C1685	4WAS MAIN ECU COMM	4WAS communication line* data communication error is detected. (An error signal is detected from 4WAS main control unit.)	4WAS communication line*/4WAS main control unit/4WAS front control unit error

*: Communication line between 4WAS front control unit and 4WAS main control unit

DTC CONFIRMATION PROCEDURE

1. RECHECK DTC

With CONSULT-III

1. Turn the ignition switch from OFF to ON.
2. Perform 4WAS front control unit self-diagnosis.

Is DTC “C1684” or “C1685” detected?

YES >> Proceed to diagnosis procedure. Refer to STC-79, "Diagnosis Procedure".
NO >> INSPECTION END

Diagnosis Procedure

INFOID:0000000005650374

1. CHECK COMMUNICATION LINE (1)

1. Turn the ignition switch OFF.
2. Disconnect ABS actuator and electric unit (control unit) harness connector.
3. Disconnect yaw rate/side G sensor harness connector.
4. Disconnect 4WAS front control unit harness connector.
5. Disconnect 4WAS main control unit harness connector.
6. Check the continuity between ABS actuator and electric unit (control unit) harness connector and yaw rate/side G sensor harness connector.

ABS actuator and electric unit (control unit)		Yaw rate/side G sensor.		Continuity
Connector	Terminal	Connector	Terminal	
E41	25	M143	2	Existed
	45		3	

Is the inspection result normal?

YES >> GO TO 2.
NO >> Repair or replace the harnesses and connectors. Refer to STC-179, "Precautions for Harness Repair".

2. CHECK COMMUNICATION LINE (2)

Check the continuity between ABS actuator and electric unit (control unit) harness connector and the ground.

ABS actuator and electric unit (control unit)		Continuity
Connector	Terminal	
E41	25 – Ground	Not existed
	45 – Ground	

Is the inspection result normal?

YES >> GO TO 3.
NO >> Repair or replace the harnesses and connectors. Refer to STC-179, "Precautions for Harness Repair".

3. CHECK COMMUNICATION LINE (3)

Check the continuity between ABS actuator and electric unit (control unit) harness connector.

ABS actuator and electric unit (control unit)		Continuity
Connector	Terminal	
E41	25 – 45	Not existed

Is the inspection result normal?

YES >> GO TO 4.
NO >> Repair or replace the harnesses and connectors. Refer to STC-179, "Precautions for Harness Repair".

4. CHECK ABS ACTUATOR AND ELECTRIC UNIT (CONTROL UNIT)

Check the continuity between ABS actuator and electric unit (control unit) connector. Refer to STC-86, "Component Inspection [ABS Actuator and Electric Unit (Control Unit)]".

Is the inspection result normal?

YES >> GO TO 5.
NO >> Replace ABS actuator and electric unit (control unit). Refer to BRC-105, "Exploded View".

5. CHECK YAW RATE/SIDE G SENSOR

Check the continuity between yaw rate/side G sensor connector. Refer to STC-81, "Component Inspection (Yaw Rate/Side G Sensor)".

Is the inspection result normal?

YES >> GO TO 6.
NO >> Replace yaw rate/side G sensor. Refer to BRC-107, "Exploded View".

6. CHECK CAN DIAGNOSIS SUPPORT MONITOR (4WAS FRONT CONTROL UNIT)

With CONSULT-III

1. Connect ABS actuator and electric unit (control unit) harness connector.
2. Connect yaw rate/side G sensor harness connector.
3. Connect 4WAS front control unit harness connector.
4. Connect 4WAS main control unit harness connector.
5. Start the engine.
   CAUTION:
   Stop the vehicle.
6. Perform CAN diagnosis support monitor of 4WAS front control unit.
7. Replace 4WAS main control unit error history. Refer to STC-41, "CONSULT-III Function [4WAS(FRONT)]".

What is the indicated item?

All items are “OK”>>GO TO 7.
“TRANSMIT DIAG” is other than “OK”>>GO TO 7.
“4WAS(MAIN)” is other than “OK”>>GO TO 8.

7. CHECK 4WAS FRONT CONTROL UNIT CIRCUIT

1. Turn the ignition switch OFF.
2. Disconnect 4WAS front control unit harness connector.

3. Disconnect ABS actuator and electric unit (control unit) harness connector.
4. Check the continuity between 4WAS front control unit harness connector and ABS actuator and electric unit (control unit) harness connector.

4WAS front control unit		ABS actuator and electric unit (control unit)		Continuity
Connector	Terminal	Connector	Terminal	
M42	14	E41	25	Existed
	25		45	

5. Check that 4WAS front control unit connector No. 14 terminal and No. 25 are connected properly and not deformed.

Is the inspection result normal?

YES >> Replace 4WAS front control unit. Refer to STC-180, "Exploded View".
NO >> Repair or replace the harnesses and connectors. Refer to STC-179, "Precautions for Harness Repair".

8. CHECK 4WAS MAIN CONTROL UNIT CIRCUIT

1. Turn the ignition switch OFF.
2. Disconnect 4WAS main control unit harness connector.
3. Disconnect ABS actuator and electric unit (control unit) harness connector.
4. Check the continuity between 4WAS main control unit harness connector and ABS actuator and electric unit (control unit) harness connector.

4WAS main control unit		ABS actuator and electric unit (control unit)		Continuity
Connector	Terminal	Connector	Terminal	
B54	31	E41	45	Existed
	32		25	

5. Check that 4WAS main control unit connector No. 31 terminal and No. 32 are connected properly and not deformed.

Is the inspection result normal?

YES >> Replace 4WAS main control unit. Refer to STC-181, "Exploded View".
NO >> Repair or replace the harnesses and connectors. Refer to STC-179, "Precautions for Harness Repair".

Component Inspection [ABS Actuator and Electric Unit (Control Unit)]

INFOID:0000000005650375

1. CHECK ABS ACTUATOR AND ELECTRIC UNIT (CONTROL UNIT)

1. Turn the ignition switch OFF.
2. Remove ABS actuator and electric unit (control unit). Refer toBRC-105, "Exploded View".
3. Check the resistance between ABS actuator and electric unit (control unit) connector terminals.

ABS actuator and electric unit (control unit)	Resistance (Approx.)
Terminal	
25 – 45	120 Ω

Is the inspection result normal?

YES >> INSPECTION END
NO >> Replace ABS actuator and electric unit (control unit).

Component Inspection (Yaw Rate/Side G Sensor)

INFOID:0000000005650376

1. CHECK YAW RATE/SIDE G SENSOR

1. Turn the ignition switch OFF.
2. Remove yaw rate/side G sensor. Refer to BRC-107, "Exploded View".

3. Check the resistance between yaw rate/side G sensor connector terminals.

Yaw rate/side G sensor Terminal	Resistance (Approx.)
2 – 3	120 Ω

Is the inspection result normal?

YES >> INSPECTION END
NO >> Replace yaw rate/side G sensor.

Special Repair Requirement

INFOID:0000000005650377

BEFORE REPLACING 4WAS FRONT CONTROL UNIT

- Record the self-diagnosis results (history).

CAUTION:

- **Never erase the memory (history) of self-diagnosis results when replacing 4WAS front control unit after diagnosis.**
- **Erase the memory of the self-diagnosis results (record) after printing out or recording all the values of “DATA MONITOR”.**

BEFORE REPLACING 4WAS MAIN ACTUATOR

- Record the self-diagnosis results (history).

CAUTION:

- **Never erase the memory (history) of self-diagnosis results when replacing 4WAS main control unit after diagnosis.**
- **Erase the memory of the self-diagnosis results (record) after printing out or recording all the values of “DATA MONITOR”.**

AFTER REPLACING 4WAS FRONT CONTROL UNIT

- Perform 4WAS front actuator adjustment after replacing 4WAS front control unit. Refer to STC-30, "4WAS FRONT ACTUATOR NEUTRAL POSITION ADJUSTMENT : Special Repair Requirement (Pattern 3)".

C1686 4WAS MAIN CONTROL UNIT

Description

INFOID:0000000005650378

- It transmits the value calculated by 4WAS main control unit to 4WAS front control unit with 4WAS communication line (line for 4WAS system). 4WAS front control unit controls 4WAS front actuator according to the received command value.

DTC Logic

INFOID:0000000005650379

DTC DETECTION LOGIC

DTC	Items (CONSULT-III screen terms)	Diagnostic item is detected when...	Possible cause
C1686	4WAS MAIN ECU	An error is detected on 4WAS main control unit side. (4WAS main control unit fail-safe mode)	4WAS main control unit fail-safe mode

DTC CONFIRMATION PROCEDURE

1. RECHECK DTC

With CONSULT-III

1. Turn the ignition switch from OFF to ON.
2. Perform 4WAS front control unit self-diagnosis.

Is DTC “C1686” detected?

YES >> Proceed to diagnosis procedure. Refer to STC-83, "Diagnosis Procedure".
NO >> INSPECTION END

Diagnosis Procedure

INFOID:0000000005650380

1. PERFORM SELF-DIAGNOSIS (4WAS FRONT CONTROL UNIT)

With CONSULT-III

Perform 4WAS front control unit self-diagnosis.

Is any DTC other than “C1686” detected?

YES >> Check the error system.
NO >> Perform 4WAS main control unit self-diagnosis.

U1000, U1002 4WAS COMMUNICATION CIRCUIT

Description

INFOID:0000000005650381

- 4WAS front control unit and 4WAS main control unit transmit/receive information to/from each other for optimum control of the 4WAS system with the specified 4WAS system line (4WAS communication line) between 4WAS front control unit and 4WAS main control unit.
- Be careful to repair wirings because 4WAS system specified line adopts twisted-pair wires. Refer to STC-179, "Precautions for Harness Repair".

DTC Logic

INFOID:0000000005650382

DTC DETECTION LOGIC

DTC	Items (CONSULT-III screen terms)	Diagnostic item is detected when...	Possible cause
U1000	CAN COMM CIRCUIT	When 4WAS front control unit is not transmitting or receiving 4WAS communication signal for 2 seconds or more.	4WAS communication line*/4WAS main control unit/4WAS front control unit error
U1002	SYSTEM COMM(CAN)	When 4WAS front control unit is not transmitting or receiving 4WAS communication signal for 2 seconds or less.	4WAS communication line*/4WAS main control unit/4WAS front control unit error

*: Communication line between 4WAS front control unit and 4WAS main control unit

DTC CONFIRMATION PROCEDURE

1. RECHECK DTC

With CONSULT-III

1. Turn the ignition switch from OFF to ON.
2. Perform 4WAS front control unit self-diagnosis.

Is DTC “U1000” or “U1002” detected?

YES >> Proceed to diagnosis procedure. Refer to STC-84, "Diagnosis Procedure".
NO >> INSPECTION END

Diagnosis Procedure

INFOID:0000000005650383

1. CHECK COMMUNICATION LINE (1)

1. Turn the ignition switch OFF.
2. Disconnect ABS actuator and electric unit (control unit) harness connector.
3. Disconnect yaw rate/side G sensor harness connector.
4. Disconnect 4WAS front control unit harness connector.
5. Disconnect 4WAS main control unit harness connector.
6. Check the continuity between ABS actuator and electric unit (control unit) harness connector and yaw rate/side G sensor harness connector.

ABS actuator and electric unit (control unit)		Yaw rate/side G sensor.		Continuity
Connector	Terminal	Connector	Terminal	
E41	25	M143	2	Existed
	45		3	

Is the inspection result normal?

YES >> GO TO 2.
NO >> Repair or replace the harnesses and connectors. Refer to STC-179, "Precautions for Harness Repair".

2. CHECK COMMUNICATION LINE (2)

Check the continuity between ABS actuator and electric unit (control unit) harness connector and the ground.

ABS actuator and electric unit (control unit)		Continuity
Connector	Terminal	
E41	25 – Ground	Not existed
	45 – Ground	

Is the inspection result normal?

YES >> GO TO 3.
NO >> Repair or replace the harnesses and connectors. Refer to STC-179, "Precautions for Harness Repair".

3. CHECK COMMUNICATION LINE (3)

Check the continuity between ABS actuator and electric unit (control unit) harness connector.

ABS actuator and electric unit (control unit)		Continuity
Connector	Terminal	
E41	25 – 45	Not existed

Is the inspection result normal?

YES >> GO TO 4.
NO >> Repair or replace the harnesses and connectors. Refer to STC-179, "Precautions for Harness Repair".

4. CHECK ABS ACTUATOR AND ELECTRIC UNIT (CONTROL UNIT)

Check the continuity between ABS actuator and electric unit (control unit). Refer to STC-86, "Component Inspection [ABS Actuator and Electric Unit (Control Unit)]".

Is the inspection result normal?

YES >> GO TO 5.
NO >> Replace ABS actuator and electric unit (control unit). Refer to BRC-105, "Exploded View".

5. CHECK YAW RATE/SIDE G SENSOR

Check the continuity between yaw rate/side G sensor. Refer to STC-86, "Component Inspection (Yaw Rate/Side G Sensor)".

Is the inspection result normal?

YES >> GO TO 6.
NO >> Replace yaw rate/side G sensor. Refer to BRC-107, "Exploded View".

6. CHECK CAN DIAGNOSIS SUPPORT MONITOR (4WAS FRONT CONTROL UNIT)

With CONSULT-III

1. Connect ABS actuator and electric unit (control unit) harness connector.
2. Connect yaw rate/side G sensor harness connector.
3. Connect 4WAS front control unit harness connector.
4. Connect 4WAS main control unit harness connector.
5. Start the engine.
   CAUTION:
   Stop the vehicle.
6. Perform CAN diagnosis support monitor of 4WAS front control unit.
7. Replace 4WAS main control unit error history. Refer to STC-41, "CONSULT-III Function [4WAS(FRONT)]".

What is the indicated item?

All items are “OK”>>GO TO 7.
“TRANSMIT DIAG” is other than “OK”>>GO TO 7.
“4WAS(MAIN)” is other than “OK”>>GO TO 8.

7. CHECK 4WAS FRONT CONTROL UNIT CIRCUIT

1. Turn the ignition switch OFF.
2. Disconnect 4WAS front control unit harness connector.

3. Disconnect ABS actuator and electric unit (control unit) harness connector.
4. Check the continuity between 4WAS front control unit harness connector and ABS actuator and electric unit (control unit) harness connector.

4WAS front control unit		ABS actuator and electric unit (control unit)		Continuity
Connector	Terminal	Connector	Terminal	
M42	14	E41	25	Existed
	25		45	

5. Check that 4WAS front control unit connector No. 14 terminal and No. 25 are connected properly and not deformed.

Is the inspection result normal?

YES >> Replace 4WAS front control unit. Refer to STC-180, "Exploded View".
NO >> Repair or replace the harnesses and connectors. Refer to STC-179, "Precautions for Harness Repair".

8. CHECK 4WAS MAIN CONTROL UNIT CIRCUIT

1. Turn the ignition switch OFF.
2. Disconnect 4WAS main control unit harness connector.
3. Disconnect ABS actuator and electric unit (control unit) harness connector.
4. Check the continuity between 4WAS main control unit harness connector and ABS actuator and electric unit (control unit) harness connector.

4WAS main control unit		ABS actuator and electric unit (control unit)		Continuity
Connector	Terminal	Connector	Terminal	
B54	31	E41	45	Existed
	32		25	

5. Check that 4WAS main control unit connector No. 31 terminal and No. 32 are connected properly and not deformed.

Is the inspection result normal?

YES >> Replace 4WAS main control unit. Refer to STC-181, "Exploded View".
NO >> Repair or replace the harnesses and connectors. Refer to STC-179, "Precautions for Harness Repair".

Component Inspection [ABS Actuator and Electric Unit (Control Unit)]

INFOID:0000000005650384

1. CHECK ABS ACTUATOR AND ELECTRIC UNIT (CONTROL UNIT)

1. Turn the ignition switch OFF.
2. Remove ABS actuator and electric unit (control unit). Refer to BRC-105, "Exploded View".
3. Check the resistance between ABS actuator and electric unit (control unit) connector terminals.

ABS actuator and electric unit (control unit)	Resistance (Approx.)
Terminal	
25 – 45	120 Ω

Is the inspection result normal?

YES >> INSPECTION END
NO >> Replace ABS actuator and electric unit (control unit).

Component Inspection (Yaw Rate/Side G Sensor)

INFOID:0000000005650385

1. CHECK YAW RATE/SIDE G SENSOR

1. Turn the ignition switch OFF.
2. Remove yaw rate/side G sensor. Refer to BRC-107, "Exploded View".

3. Check the resistance between yaw rate/side G sensor connector terminals.

Yaw rate/side G sensor	Resistance (Approx.)
Terminal	
2 – 3	120 Ω

Is the inspection result normal?

YES >> INSPECTION END
NO >> Replace yaw rate/side G sensor.

Special Repair Requirement

INFOID:0000000005650386

BEFORE REPLACING 4WAS FRONT CONTROL UNIT

- Record the self-diagnosis results (history).

CAUTION:

- **Never erase the memory (history) of self-diagnosis results when replacing 4WAS front control unit after diagnosis.**
- **Erase the memory of the self-diagnosis results (record) after printing out or recording all the values of “DATA MONITOR”.**

AFTER REPLACING 4WAS FRONT CONTROL UNIT

- Perform 4WAS front actuator adjustment after replacing 4WAS front control unit. Refer to STC-30, "4WAS FRONT ACTUATOR NEUTRAL POSITION ADJUSTMENT : Special Repair Requirement (Pattern 3)".

U1010 4WAS COMMUNICATION CIRCUIT

Description

INFOID:0000000005650387

- 4WAS front control unit and 4WAS main control unit transmit/receive information to/from each other for optimum control of the 4WAS system with the specified 4WAS system line (4WAS communication line) between 4WAS front control unit and 4WAS main control unit.
- Be careful to repair wirings because 4WAS system specified line adopts twisted-pair wires. Refer to STC-179, "Precautions for Harness Repair".

DTC Logic

INFOID:0000000005650388

DTC DETECTION LOGIC

DTC	Items (CONSULT-III screen terms)	Diagnostic item is detected when...	Possible cause
U1010	CONTROL UNIT(CAN)	When detecting error during the initial diagnosis of 4WAS controller of 4WAS front control unit	4WAS communication line*/4WAS main control unit/4WAS front control unit error

*: Communication line between 4WAS front control unit and 4WAS main control unit

DTC CONFIRMATION PROCEDURE

1. RECHECK DTC

With CONSULT-III

1. Turn the ignition switch from OFF to ON.
2. Perform 4WAS front control unit self-diagnosis.

Is DTC “U1010” detected?

YES >> Proceed to diagnosis procedure. Refer to STC-88, "Diagnosis Procedure".
NO >> INSPECTION END

Diagnosis Procedure

INFOID:0000000005650389

1. 4WAS FRONT CONTROL UNIT

Check that there is no malfunction in 4WAS front control unit harness connector or disconnection.

Is the inspection result normal?

YES >> Replace 4WAS front control unit. Refer to STC-180, "Exploded View".
NO >> Repair or replace the harnesses and connectors. Refer to STC-179, "Precautions for Harness Repair".

Special Repair Requirement

INFOID:0000000005650390

BEFORE REPLACING 4WAS FRONT CONTROL UNIT

- Record the self-diagnosis results (history).

CAUTION:

- **Never erase the memory (history) of self-diagnosis results when replacing 4WAS front control unit after diagnosis.**
- **Erase the memory of the self-diagnosis results (record) after printing out or recording all the values of “DATA MONITOR”.**

AFTER REPLACING 4WAS FRONT CONTROL UNIT

- Perform 4WAS front actuator adjustment after replacing 4WAS front control unit. Refer to STC-30, "4WAS FRONT ACTUATOR NEUTRAL POSITION ADJUSTMENT : Special Repair Requirement (Pattern 3)".

C1900, C1901, C1906, C1907, C1927, C1933 4WAS MAIN CONTROL UNIT

Description

INFOID:0000000005650391

- 4WAS rear actuator and the power steering solenoid valve is controlled by each sensor signal.
- The fail-safe functions stops the rear wheel angle function (the front wheel is the steering wheel cutting angle) when the electric components and the mechanical components are malfunctioning.
- The protective function stops 4WAS system temporarily when the input signal is not inputted to 4WAS main control unit (When battery-power dose not work temporarily).
- 4WAS front control unit and 4WAS main control unit perform two-way transmitting/receiving signals for optimal control of 4WAS system via 4WAS communication line.

DTC Logic

INFOID:0000000005650392

DTC DETECTION LOGIC

DTC	Items (CONSULT-III screen terms)	Diagnostic item is detected when...	Possible cause
C1900	CONTROL UNIT [ABNORMAL1]	An error is detected inside 4WAS main control unit.	4WAS main control unit error
C1901	CONTROL UNIT [ABNORMAL2]	An error is detected inside 4WAS main control unit.	4WAS main control unit error
C1906	CONTROL UNIT [ABNORMAL5]	An error is detected inside 4WAS main control unit.	4WAS main control unit error
C1907	CONTROL UNIT [ABNORMAL4]	An error is detected inside 4WAS main control unit.	4WAS main control unit error
C1927	CONTROL UNIT [ABNORMAL5]	An error is detected inside 4WAS main control unit.	4WAS main control unit error
C1933	CONTROL UNIT	An error is detected inside 4WAS main control unit.	4WAS main control unit error

DTC CONFIRMATION PROCEDURE

1. RECHECK DTC

With CONSULT-III

1. Turn the ignition switch from OFF to ON.
2. Perform 4WAS main control unit self-diagnosis.

Is DTC “C1900”, “C1901”, “C1906”, “C1907”, “C1927” or “C1933” detected?

YES >> Proceed to diagnosis procedure. Refer to STC-89, "Diagnosis Procedure".
NO >> INSPECTION END

Diagnosis Procedure

INFOID:0000000005650393

1. PERFORM SELF-DIAGNOSIS (4WAS MAIN CONTROL UNIT)

With CONSULT-III

Perform 4WAS main control unit self-diagnosis.

Is any DTC “C1900”, “C1901”, “C1906”, “C1907”, “C1927” or “C1933” detected?

YES >> Replace 4WAS main control unit. Refer to STC-181, "Exploded View".
NO >> GO TO 2.

2. CHECK INFORMATION

With CONSULT-III

Check the “DATA MONITOR” value of each DTC detected with the self-diagnosis function. Refer to STC-158, "Reference Value".

Is each data the standard value?

YES >> Check each harness connector pin terminal for disconnection.

NO >> Replace 4WAS main control unit. Refer to STC-181, "Exploded View".

Special Repair Requirement

INFOID:0000000005650394

BEFORE REPLACING 4WAS MAIN CONTROL UNIT

- Record the self-diagnosis results (history).

CAUTION:

- **Never erase the memory (history) of self-diagnosis results when replacing 4WAS main control unit after diagnosis.**
- **Erase the memory of the self-diagnosis results (record) after printing out or recording all the values of “DATA MONITOR”.**

C1902, C1903, C1904, C1910, C1913 4WAS REAR MOTOR OUTPUT

Description

INFOID:0000000005650395

- 4WAS rear motor activates 4WAS rear actuator.
- Maintain the toe-stiffness of rear wheels against the road external force because the irreversible sufficiency performance hypoid gear is used.

DTC Logic

INFOID:0000000005650396

DTC DETECTION LOGIC

DTC	Items (CONSULT-III screen terms)	Diagnostic item is detected when...	Possible cause
C1902	MOTOR OUTPUT [REV CURRENT]	4WAS rear motor current error is detected. (4WAS rear motor current output direction differs.)	4WAS rear motor error
C1903	MOTOR OUTPUT [NO CURRENT]	4WAS rear motor current error is detected. (Current is input to 4WAS main control unit if 4WAS main control unit output is “OFF”.)	4WAS rear motor error
C1904	MOTOR OUTPUT [OVERCURRENT]	4WAS rear motor current error is detected. (4WAS rear motor output is overcurrent.)	4WAS rear motor error
C1910	MOTOR OUTPUT [MOTOR LOCK]	4WAS rear motor inside error is detected. (4WAS rear motor does not move or the rear wheel angle sensor does not change if 4WAS main control unit output is 14A or more.)	4WAS rear motor error
C1913	MOTOR OUTPUT [ABNORML SIG]	4WAS rear motor current error is detected. (4WAS rear motor does not move or the rear wheel angle sensor output does not change when 4WAS main control unit output is 18A or more, and 4WAS main motor output is low.)	4WAS rear motor error

DTC CONFIRMATION PROCEDURE

1. RECHECK DTC

With CONSULT-III

1. Perform “SELF DIAGNOSTIC MODE” item on “ACTIVE TEST” of 4WAS main control unit.
   CAUTION:
   Perform the active test while stopping the vehicle.
2. Perform 4WAS main control unit self-diagnosis.

Is DTC “C1902”, “C1903”, “C1904”, “C1910” or “C1913” detected?

YES >> Proceed to diagnosis procedure. Refer to STC-91, "Diagnosis Procedure".
NO >> INSPECTION END

Diagnosis Procedure

INFOID:0000000005650397

1. CHECK 4WAS REAR MOTOR CIRCUIT

1. Turn the ignition switch OFF.
2. Disconnect 4WAS main control unit harness connector.
3. Disconnect 4WAS rear motor harness connector.
4. Check the continuity between 4WAS main control unit harness connector and 4WAS rear motor harness connector.

4WAS main control unit		4WAS rear motor		Continuity
Connector	Terminal	Connector	Terminal	
B54	38	B36	1	Existed
	39		2	

Is the inspection result normal?

YES >> GO TO 2.
NO >> Repair or replace the harnesses and connectors.

2. CHECK 4WAS REAR MOTOR

Check the continuity between 4WAS rear motor connector terminals. Refer to STC-92, "Component Inspection (4WAS Rear Motor)".

Is the inspection result normal?

YES >> GO TO 3.
NO >> Replace 4WAS rear actuator. Refer to STC-183, "Exploded View".

3. PERFORM ACTIVE TEST (4WAS MAIN CONTROL UNIT)

With CONSULT-III

1. Connect 4WAS main control unit harness connector.
2. Connect 4WAS rear motor harness connector.
3. Perform “SELF DIAGNOSTIC MODE” item on “ACTIVE TEST” of 4WAS main control unit.
   CAUTION:
   Perform the active test while vehicle is stopped.
4. Check “MOTOR VOLTAGE”, “MOTOR CURRENT” and “MTR CRNT OPE” while performing the active test.

Monitor item	Condition	Display value
MOTOR VOLTAGE	Ignition switch: ON	Battery voltage
MOTOR CURRENT	4WAS rear motor running	0 – 20 A
MTR CRNT OPE	4WAS rear actuator neutral condition and vehicle straight-ahead position	Approx. –2 – 2 A
	4WAS rear motor running	Approx. –20 – 20 A

Is “MONITOR” the standard value?

YES >> GO TO 4.
NO >> Replace 4WAS rear actuator. Refer to STC-183, "Exploded View".

4. PERFORM SELF-DIAGNOSIS (4WAS MAIN CONTROL UNIT)

With CONSULT-III

Perform 4WAS main control unit self-diagnosis.

Is any DTC “C1902”, “C1903”, “C1904”, “C1910” or “C1913” detected?

YES >> Replace 4WAS main control unit. Refer to STC-181, "Exploded View".
NO >> GO TO 5.

5. CHECK INFORMATION

With CONSULT-III

Check the “DATA MONITOR” value of each DTC detected with the self-diagnosis function. Refer to STC-158, "Reference Value".

Is each data the standard value?

YES >> Check each harness connector pin terminal for disconnection.
NO >> Replace 4WAS main control unit. Refer to STC-181, "Exploded View".

Component Inspection (4WAS Rear Motor)

INFOID:0000000005650398

1. CHECK 4WAS REAR MOTOR

1. Turn the ignition switch OFF.
2. Disconnect 4WAS main control unit harness connector and 4WAS rear motor harness connector.
3. Check the continuity between 4WAS rear motor connector terminals.

4WAS rear motor	Continuity
Terminal	
1 – 2	Existed

Is the inspection result normal?

YES >> INSPECTION END
NO >> Replace 4WAS rear actuator. Refer to STC-183, "Exploded View".

Special Repair Requirement

INFOID:0000000005650399

BEFORE REPLACING 4WAS MAIN CONTROL UNIT

- Record the self-diagnosis results (history).

CAUTION:

- **Never erase the memory (history) of self-diagnosis results when replacing 4WAS main control unit after diagnosis.**
- **Erase the memory of the self-diagnosis results (record) after printing out or recording all the values of “DATA MONITOR”.**

C1905, C1908, C1922, C1925, C1928 4WAS MAIN CONTROL UNIT

Description

INFOID:0000000005650400

- 4WAS rear actuator and the power steering solenoid valve is controlled by each sensor signal.
- The fail-safe functions stops the rear wheel angle function (the front wheel is the steering wheel cutting angle) when the electric components and the mechanical components are malfunctioning.
- The protective function stops 4WAS system temporarily when the input signal is not inputted to 4WAS main control unit (When battery-power dose not work temporarily).
- 4WAS front control unit and 4WAS main control unit perform two-way transmitting/receiving signals for optimal control of 4WAS system via 4WAS communication line.

DTC Logic

INFOID:0000000005650401

DTC DETECTION LOGIC

DTC	Items (CONSULT-III screen terms)	Diagnostic item is detected when...	Possible cause
C1905	CONTROL UNIT [ABNORMAL3]	An error is detected inside 4WAS main control unit.	4WAS main control unit error
C1908	CONTROL UNIT [ABNORMAL7]	An error is detected inside 4WAS main control unit.	4WAS main control unit error
C1922	CONTROL UNIT [ABNORMAL8]	An error is detected inside 4WAS main control unit.	4WAS main control unit error
C1925	AD CONVERTER	An error is detected inside 4WAS main control unit.	4WAS main control unit error
C1928	CONTROL UNIT [ABNORMAL9]	An error is detected inside 4WAS main control unit.	4WAS main control unit error

DTC CONFIRMATION PROCEDURE

1. RECHECK DTC

With CONSULT-III

1. Turn the ignition switch from OFF to ON.
2. Perform 4WAS main control unit self-diagnosis.

Is any DTC “C1905”, “C1908”, “C1922”, “C1925” or “C1928” detected?

YES >> Proceed to diagnosis procedure. Refer to STC-94, "Diagnosis Procedure".
NO >> INSPECTION END

Diagnosis Procedure

INFOID:0000000005650402

1. PERFORM SELF-DIAGNOSIS (4WAS MAIN CONTROL UNIT)

With CONSULT-III

Perform 4WAS main control unit self-diagnosis.

Is any DTC “C1905”, “C1908”, “C1922”, “C1925” or “C1928” detected?

YES >> Replace 4WAS main control unit. Refer to STC-181, "Exploded View".
NO >> GO TO 2.

2. CHECK INFORMATION

With CONSULT-III

Check the “DATA MONITOR” value of each DTC detected with the self-diagnosis function. Refer to STC-158, "Reference Value".

Is each data the standard value?

YES >> Check each harness connector pin terminal for disconnection.
NO >> Replace 4WAS main control unit. Refer to STC-181, "Exploded View".

Special Repair Requirement

INFOID:0000000005650403

BEFORE REPLACING 4WAS MAIN CONTROL UNIT

- Record the self-diagnosis results (history).

CAUTION:

- **Never erase the memory (history) of self-diagnosis results when replacing 4WAS main control unit after diagnosis.**
- **Erase the memory of the self-diagnosis results (record) after printing out or recording all the values of “DATA MONITOR”.**

C1909 4WAS MAIN CONTROL UNIT

Description

INFOID:0000000005650404

- 4WAS rear actuator and the power steering solenoid valve is controlled by each sensor signal.
- The fail-safe functions stops the rear wheel angle function (the front wheel is the steering wheel cutting angle) when the electric components and the mechanical components are malfunctioning.
- The protective function stops 4WAS system temporarily when the input signal is not inputted to 4WAS main control unit (When battery-power dose not work temporarily).
- 4WAS front control unit and 4WAS main control unit perform two-way transmitting/receiving signals for optimal control of 4WAS system via 4WAS communication line.

DTC Logic

INFOID:0000000005650405

DTC DETECTION LOGIC

DTC	Items (CONSULT-III screen terms)	Diagnostic item is detected when...	Possible cause
C1909	CONTROL UNIT [ABNORMAL6]	An error is detected inside 4WAS main control unit.	4WAS main control unit

DTC CONFIRMATION PROCEDURE

1. RECHECK DTC

With CONSULT-III

1. Turn the ignition switch from OFF to ON.
2. Perform 4WAS main control unit self-diagnosis.

Is DTC “C1909” detected?

YES >> Proceed to diagnosis procedure. Refer to STC-96, "Diagnosis Procedure".
NO >> INSPECTION END

Diagnosis Procedure

INFOID:0000000005650406

1. CHECK 4WAS MAIN CONTROL UNIT POWER SUPPLY

1. Turn the ignition switch OFF.
2. Disconnect 4WAS main control unit harness connector.
3. Check the voltage between 4WAS main control unit harness connector terminal and the ground.

4WAS main control unit		Voltage (Approx.)
Connector	Terminal	
B54	27 – Ground	0 V

4. Turn the ignition switch ON.
   CAUTION:
   Never start the engine.
5. Check the voltage between 4WAS main control unit harness connector terminal and the ground.

4WAS main control unit		Voltage (Approx.)
Connector	Terminal	
B54	27 – Ground	Battery voltage

Is the inspection result normal?

YES >> GO TO 2.
NG >> Check the following items. Repair or replace the malfunctioning parts.
- 10A fuse (#45) open
- Short among 10A fuse (#45) connector, 4WAS main control unit harness connector No. 27 terminal and the ground

- Open between the ignition switch and 4WAS main control unit harness connector No. 27 terminal
- Ignition switch

2. CHECK 4WAS MAIN CONTROL UNIT GROUND

Check the continuity between 4WAS main control unit harness connector and the ground.

4WAS main control unit		Continuity
Connector	Terminal	
B54	34 – Ground	Existed

Is the inspection result normal?

YES >> GO TO 3.
NG >> Repair or replace the harnesses and connectors.

3. PERFORM SELF-DIAGNOSIS (4WAS MAIN CONTROL UNIT)

With CONSULT-III

1. Connect 4WAS main control unit harness connector.
2. Perform 4WAS main control unit self-diagnosis.

Is DTC “C1909” detected?

YES >> Replace 4WAS main control unit. Refer to STC-181, "Exploded View".
NO >> GO TO 4.

4. CHECK INFORMATION

With CONSULT-III

Check the “DATA MONITOR” value of each DTC detected with the self-diagnosis function. Refer to STC-158, "Reference Value".

Is each data the standard value?

YES >> Check each harness connector pin terminal for disconnection.
NO >> Replace 4WAS main control unit. Refer to STC-181, "Exploded View".

Special Repair Requirement

INFOID:0000000005650407

BEFORE REPLACING 4WAS MAIN CONTROL UNIT

- Record the self-diagnosis results (history).

CAUTION:

- **Never erase the memory (history) of self-diagnosis results when replacing 4WAS main control unit after diagnosis.**
- **Erase the memory of the self-diagnosis results (record) after printing out or recording all the values of “DATA MONITOR”.**

C1911, C1912 4WAS REAR MOTOR POWER SUPPLY

Description

INFOID:0000000005650408

The power supply for 4WAS rear motor.

DTC Logic

INFOID:0000000005650409

DTC DETECTION LOGIC

DTC	Items (CONSULT-III screen terms)	Diagnostic item is detected when...	Possible cause
C1911	MOTOR VOLTAGE [LOW VOLTAGE]	4WAS rear motor voltage error is detected. (4WAS rear motor voltage is low.)	4WAS rear motor power supply error
C1912	MOTOR VOLTAGE [BAD OBSTRCT]	4WAS rear motor voltage error is detected. (Voltage is applied to 4WAS main motor when 4WAS main control unit output is “OFF”.)	4WAS rear motor power supply error

DTC CONFIRMATION PROCEDURE

1. RECHECK DTC

1. Turn the ignition switch from OFF to ON.
   CAUTION:
   Stop the vehicle. Wait 15 minutes or more.
2. Perform 4WAS main control unit self-diagnosis.

Is DTC “C1911” or “C1912” detected?

YES >> Proceed to diagnosis procedure. Refer to STC-98, "Diagnosis Procedure".
NO >> INSPECTION END

Diagnosis Procedure

INFOID:0000000005650410

1. CHECK 4WAS MAIN CONTROL UNIT POWER SUPPLY

1. Turn the ignition switch OFF.
2. Disconnect 4WAS main control unit harness connector.
3. Check the voltage between 4WAS main control unit harness connectors and the ground.

4WAS main control unit		Voltage (Approx.)
Connector	Terminal	
B54	27 – Ground	0 V

4. Turn the ignition switch ON.
   CAUTION:
   Never start the engine.
5. Check the voltage between 4WAS main control unit harness connectors and the ground.

4WAS main control unit		Voltage (Approx.)
Connector	Terminal	
B54	27 – Ground	Battery voltage

Is the inspection result normal?

YES >> GO TO 2.
NO >> Check the following items. Repair or replace the malfunctioning parts.
- 10A fuse (#45) open
- Short among 10A fuse (#45) connector, 4WAS main control unit harness connector No. 27 terminal and the ground
- Open between the ignition switch and 4WAS main control unit harness connector No. 27 terminal

- Ignition switch

2. CHECK 4WAS REAR MOTOR POWER SUPPLY CIRCUIT (1)

1. Turn the ignition switch OFF.
2. Remove 4WAS rear motor relay.
3. Check the continuity between 4WAS rear motor relay harness connector terminal and the ground.

4WAS rear motor relay		Continuity
Connector	Terminal	
B53	1 – Ground	Not existed
	2 – Ground	Existed

4. Check the continuity between 4WAS rear motor relay harness connector terminal and 4WAS main control unit harness connector terminal.

4WAS rear motor relay		4WAS main control unit		Continuity
Connector	Terminal	Connector	Terminal	
B53	1	B54	25	Existed

Is the inspection result normal?

YES >> GO TO 3.
NO >> Repair or replace the harnesses and connectors.

3. CHECK 4WAS REAR MOTOR POWER SUPPLY CIRCUIT (2)

Check the voltage between 4WAS rear motor relay harness connector terminal and the ground.

4WAS rear motor relay		Voltage (Approx.)
Connector	Terminal	
B53	3 – Ground	Battery voltage

Is the inspection result normal?

YES >> GO TO 4.
NO >> Check the following items. Repair or replace the malfunctioning parts.
- 20A fuse (#37) open
- Short among 20A fuse (#37) connector, 4WAS rear motor relay harness connector No. 3 terminal and the ground
- Open between the battery and 4WAS rear motor relay harness connector No. 3 terminal

4. CHECK 4WAS REAR MOTOR POWER SUPPLY CIRCUIT (3)

1. Remove the noise suppressor.
2. Check continuity between the noise suppressor harness connector terminal and the ground.

Noise suppressor		Continuity
Connector	Terminal	
B51	3 – Ground	Not existed
	5 – Ground	
B52	1 – Ground	Not existed
	2 – Ground	Existed

3. Check the continuity between the noise suppressor harness connector terminal and 4WAS rear motor relay harness connector terminal.

Noise suppressor		4WAS rear motor relay		Continuity
Connector	Terminal	Connector	Terminal	
B52	1	B53	5	Existed

4. Check the continuity between the noise suppressor harness connector terminal and 4WAS main control unit harness connector terminal.

Noise suppressor		4WAS main control unit		Continuity
Connector	Terminal	Connector	Terminal	
B51	3	B54	37	Existed
	5		40	Existed

Is the inspection result normal?

YES >> GO TO 5.
NO >> Repair or replace the harnesses and connectors.

5. CHECK 4WAS REAR MOTOR POWER SUPPLY CIRCUIT (4)

1. Connect 4WAS main control unit harness connector.
2. Turn the ignition switch ON.
   CAUTION:
   Never start the engine.
3. Check the voltage between 4WAS main control unit harness connectors and the ground.

4WAS main control unit		Voltage (Approx.)
Connector	Terminal	
B54	25 – Ground	Battery voltage

4. Turn the ignition switch OFF.

Is the inspection result normal?

YES >> GO TO 6.
NO >> Replace 4WAS main control unit. Refer to STC-181, "Exploded View".

6. CHECK 4WAS REAR MOTOR RELAY

Check 4WAS rear motor relay. Refer to STC-101, "Component Inspection (4WAS Rear Motor Relay)".

Is the inspection result normal?

YES >> GO TO 7.
NO >> Replace 4WAS rear motor relay.

7. CHECK NOISE SUPPRESSOR

Check continuity between the noise suppressor connector terminals. Refer to STC-101, "Component Inspection (Noise Suppressor)".

Is the inspection result normal?

YES >> GO TO 8.
NO >> Replace the noise suppressor.

8. CHECK 4WAS REAR MOTOR POWER SUPPLY

1. Install 4WAS rear motor relay.
2. Install the noise suppressor.
3. Turn the ignition switch ON.
   CAUTION:
   Never start the engine.
4. Check the voltage between 4WAS main control unit harness connectors and the ground.

4WAS main control unit		Voltage (Approx.)
Connector	Terminal	
B54	37 – Ground	Battery voltage

Is the inspection result normal?

YES >> GO TO 9.
NO >> Replace 4WAS main control unit. Refer to STC-181, "Exploded View".

9. PERFORM SELF-DIAGNOSIS (4WAS MAIN CONTROL UNIT)

With CONSULT-III
Perform 4WAS main control unit self-diagnosis.

Is DTC "C1911" or "C1912" detected?

YES >> Replace 4WAS main control unit. Refer to STC-181, "Exploded View".
NO >> GO TO 10.

10. CHECK INFORMATION

With CONSULT-III
Check the "DATA MONITOR" value of each DTC detected with the self-diagnosis function. Refer to STC-158, "Reference Value".

Is each data the standard value?

YES >> Check each harness connector pin terminal for disconnection.
NO >> Replace 4WAS main control unit. Refer to STC-181, "Exploded View".

Component Inspection (4WAS Rear Motor Relay)

INFOID:0000000005650411

1. CHECK 4WAS REAR MOTOR RELAY

1. Turn the ignition switch OFF.
2. Remove 4WAS rear motor relay connector.
3. Apply 12 V to 4WAS rear motor relay connector No. 1 terminal and No. 2 terminal.
   CAUTION:
   - **Never make the terminals short.**
   - **Connect the fuse between the terminals when applying the voltage.**
4. Check the continuity between 4WAS rear motor relay connector terminals.

4WAS rear motor relay		Continuity
Terminal	Condition	
3 – 5	Apply the voltage between No. 1 terminal and No. 2 terminal.	Existed
	Do not apply the voltage between No. 1 terminal and No. 2 terminal.	Not existed

5. Check the resistance between 4WAS rear motor relay connector terminals.

4WAS rear motor relay	Resistance (Approx.)
Terminal	
1 – 2	50 Ω

Is the inspection result normal?

YES >> INSPECTION END
NO >> Replace 4WAS rear motor relay.

Component Inspection (Noise Suppressor)

INFOID:0000000005650412

1. NOISE SUPPRESSOR INSPECTION

1. Turn the ignition switch OFF.
2. Remove the noise suppressor.
3. Check continuity between the noise suppressor connector terminals.

Noise suppressor Terminal		Continuity
3	1	Existed
3	5	Not existed
3	2	Not existed
5	2	Existed
5	1	Not existed

Is the inspection result normal?

YES >> INSPECTION END
NO >> Replace the noise suppressor.

Special Repair Requirement

INFOID:0000000005650413

BEFORE REPLACING 4WAS MAIN CONTROL UNIT

- Record the self-diagnosis results (history).

CAUTION:

- **Never erase the memory (history) of self-diagnosis results when replacing 4WAS main control unit after diagnosis.**
- **Erase the memory of the self-diagnosis results (record) after printing out or recording all the values of “DATA MONITOR”.**

C1914 REAR WHEEL STEERING ANGLE SENSOR

Description

INFOID:0000000005650414

- It detects the steering angle condition of rear wheel.
- 2 systems (main and sub sensor) are equipped.

DTC Logic

INFOID:0000000005650415

DTC DETECTION LOGIC

DTC	Items (CONSULT-III screen terms)	Diagnostic item is detected when...	Possible cause
C1914	RR ST ANGLE SENSOR [ABNORML VOL]	The rear wheel angle sensor power supply error is detected.	Rear wheel steering sensor power supply error

DTC CONFIRMATION PROCEDURE

1. RECHECK DTC

With CONSULT-III

1. Turn the ignition switch from OFF to ON.
2. Perform 4WAS main control unit self-diagnosis.

Is DTC “C1914” detected?

YES >> Proceed to diagnosis procedure. Refer to STC-103, "Diagnosis Procedure".
NO >> INSPECTION END

Diagnosis Procedure

INFOID:0000000005650416

1. CHECK REAR WHEEL STEERING ANGLE SENSOR POWER SUPPLY

1. Turn the ignition switch OFF.
2. Check the voltage between 4WAS main control unit harness connector terminal and the ground.

4WAS main control unit		Voltage (Approx.)
Connector	Terminal	
B54	5 – Ground	0 V

3. Turn the ignition switch ON.
   CAUTION:
   Never start the engine.
4. Check the voltage between 4WAS main control unit harness connector terminal and the ground.

4WAS main control unit		Value (Approx.)
Connector	Terminal	
B54	5 – Ground	5 V

Is the inspection result normal?

YES >> GO TO 2.
NO >> Replace 4WAS main control unit. Refer to STC-181, "Exploded View".

2. CHECK REAR WHEEL STEERING ANGLE SENSOR

Check the resistance between the rear wheel steering angle sensor connector terminals. Refer to STC-104, "Component Inspection".

Is the inspection result normal?

YES >> GO TO 3.
NO >> Replace 4WAS rear actuator. Refer to STC-183, "Exploded View".

3. CHECK REAR WHEEL STEERING ANGLE SENSOR POWER SUPPLY CIRCUIT

1. Disconnect 4WAS main control unit harness connector.
2. Check the continuity between 4WAS main control unit harness connector terminal and the rear wheel steering angle sensor harness connector terminal.

4WAS main control unit		Rear wheel steering angle sensor		Continuity
Connector	Terminal	Connector	Terminal	
B54	5	B58	1	Existed
B54	5	B58	3	Not existed
B54	4	B58	3	Existed
B54	4	B58	1	Not existed

Is the inspection result normal?

YES >> GO TO 4.
NO >> Repair or replace the harnesses and connectors.

4. PERFORM SELF-DIAGNOSIS (4WAS MAIN CONTROL UNIT)

With CONSULT-III

1. Connect 4WAS main control unit harness connector.
2. Connect the rear wheel steering angle sensor harness connector.
3. Perform 4WAS main control unit self-diagnosis.

Is DTC “C1914” detected?

YES >> Replace 4WAS main control unit. Refer to STC-181, "Exploded View".
NO >> GO TO 5.

5. CHECK INFORMATION

With CONSULT-III

Check the “DATA MONITOR” value of each DTC detected with the self-diagnosis function. Refer to STC-158, "Reference Value".

Is each data the standard value?

YES >> Check each harness connector pin terminal for disconnection.
NO >> Replace 4WAS main control unit. Refer to STC-181, "Exploded View".

Component Inspection

INFOID:0000000005650417

1. CHECK REAR WHEEL STEERING ANGLE SENSOR

1. Turn the ignition switch OFF.
2. Disconnect rear wheel steering angle sensor harness connector.
3. Check the resistance between rear wheel steering angle sensor connector terminals.

Rear wheel steering angle sensor	Resistance (Approx.)
Terminal	
1 – 3	1 kΩ
1 – 2	1.2 – 1.5 kΩ
1 – 4	1.2 – 1.5 kΩ

Is the inspection result normal?

YES >> INSPECTION END
NO >> Replace 4WAS rear actuator. Refer to STC-183, "Exploded View".

Special Repair Requirement

INFOID:0000000005650418

BEFORE REPLACING 4WAS MAIN CONTROL UNIT

- Record the self-diagnosis results (history).

CAUTION:

- **Never erase the memory (history) of self-diagnosis results when replacing 4WAS main control unit after diagnosis.**
- **Erase the memory of the self-diagnosis results (record) after printing out or recording all the values of “DATA MONITOR”.**

C1915, C1916 REAR WHEEL STEERING ANGLE SENSOR

Description

INFOID:0000000005650419

- It detects the steering angle condition of rear wheel.
- 2 systems (main and sub sensor) are equipped.

DTC Logic

INFOID:0000000005650420

DTC DETECTION LOGIC

DTC	Items (CONSULT-III screen terms)	Diagnostic item is detected when...	Possible cause
C1915	RR ST ANGLE SENSOR [MAIN SIGNAL]	The rear wheel angle sensor signal (main) error is detected.	Rear wheel steering sensor output voltage error
C1916	RR ST ANGLE SENSOR [SUB SIGNAL]	If the rear wheel angle sensor signal (sub) error is detected.	Rear wheel steering sensor output voltage error

DTC CONFIRMATION PROCEDURE

1. RECHECK DTC

With CONSULT-III

1. Turn the ignition switch from OFF to ON.
2. Perform 4WAS main control unit self-diagnosis.

Is DTC “C1915” or “C1916” detected?

YES >> Proceed to diagnosis procedure. Refer to STC-106, "Diagnosis Procedure".
NO >> INSPECTION END

Diagnosis Procedure

INFOID:0000000005650421

1. CHECK 4WAS REAR ACTUATOR

1. Turn the ignition switch OFF.
2. Measure “A” and “B” of 4WAS rear actuator as shown in the figure.

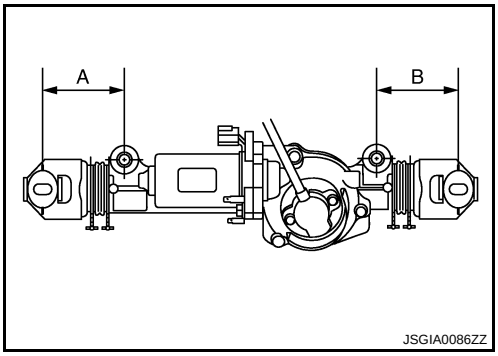

Is the differential of “A” and “B” 5.8 mm (0.228 in) or less?

YES >> GO TO 2.
NO >> Replace 4WAS rear actuator. Refer to STC-183, "Exploded View".

2. CHECK REAR WHEEL STEERING ANGLE SENSOR (1)

With CONSULT-III

1. Start engine.
   CAUTION:
   Check condition with the vehicle stopped.
2. Check DATA MONITOR “RR ST ANG-MAI” and “RR ST ANG-SUB” value of 4WAS main control unit.

Monitored item	Condition	Display value
RR ST ANG-MAI	Straight-ahead	Approx. 2.4 V
RR ST ANG-SUB	Straight-ahead	Approx. 2.6 V

Is the inspection result normal?

YES >> GO TO 3.

NO >> Replace 4WAS rear actuator. Refer to STC-183, "Exploded View".

3. CHECK REAR WHEEL STEERING ANGLE SENSOR (2)

Check the voltage between 4WAS main control unit harness connector terminal and ground.

4WAS main control unit		Voltage (Approx.)
Connector	Terminal	
B54	15 – Ground	2.4 V
	7 – Ground	2.6 V

Is the differential between terminal voltage No. 4 and No.7 approximately 1 V or more?

YES >> Replace 4WAS main control unit. Refer to STC-181, "Exploded View".
NO >> GO TO 4.

4. CHECK REAR WHEEL STEERING ANGLE SENSOR (3)

Check the resistance between rear wheel steering angle sensor connector terminals. Refer to STC-108, "Component Inspection".

Is the inspection result normal?

YES >> GO TO 5.
NO >> Replace 4WAS rear actuator. Refer to STC-183, "Exploded View".

5. CHECK REAR WHEEL STEERING ANGLE SENSOR GROUND CIRCUIT

1. Disconnect 4WAS main control unit harness connector.
2. Check for continuity between 4WAS main control unit harness connector terminal and rear wheel steering angle sensor harness connector terminal.

4WAS main control unit		Rear wheel steering angle sensor		Continuity
Connector	Terminal	Connector	Terminal	
B54	15	B58	1, 2, 3	Not existed
B54	15	B58	4	Existed
B54	7	B58	1, 3, 4	Not existed
B54	7	B58	2	Existed
B54	5	B58	1	Existed
B54	5	B58	2, 3, 4	Not existed
B54	4	B58	1, 2, 4	Not existed
B54	4	B58	3	Existed

Is the inspection result normal?

YES >> GO TO 6.
NO >> Repair or replace each harness and connector.

6. PERFORM SELF-DIAGNOSIS (4WAS MAIN CONTROL UNIT)

With CONSULT-III

1. Connect 4WAS main control unit harness connector.
2. Connect rear wheel steering angle sensor harness connector.
3. Perform 4WAS main control unit self-diagnosis.

Is DTC “C1915” or “C1916” detected?

YES >> Replace 4WAS main control unit. Refer to STC-181, "Exploded View".
NO >> GO TO 7.

7. CHECK INFORMATION

With CONSULT-III

Check the “DATA MONITOR” value of each DTC detected with the self-diagnosis function. Refer to STC-158, "Reference Value".

Is each data standard?

YES >> Check pin terminal and connection of each harness connector for non-standard conditions.
NO >> Replace 4WAS main control unit. Refer to STC-181, "Exploded View".

Component Inspection

INFOID:0000000005650422

1. CHECK REAR WHEEL STEERING ANGLE SENSOR

1. Turn the ignition switch OFF.
2. Disconnect rear wheel steering angle sensor harness connector.
3. Check the resistance between rear wheel steering angle sensor connector terminals.

Rear wheel steering angle sensor	Resistance (Approx.)
Terminal	
1 – 3	1 kΩ
1 – 2	1.2 – 1.5 kΩ
1 – 4	1.2 – 1.5 kΩ

Is the inspection result normal?

YES >> INSPECTION END
NO >> Replace 4WAS rear actuator. Refer to STC-183, "Exploded View".

Special Repair Requirement

INFOID:0000000005650423

BEFORE REPLACING 4WAS MAIN CONTROL UNIT

- Record the self-diagnosis results (history).

CAUTION:

- **Never erase the memory (history) of self-diagnosis results when replacing 4WAS main control unit after diagnosis.**
- **Erase the memory of the self-diagnosis results (record) after printing out or recording all the values of “DATA MONITOR”.**

C1917, C1918 REAR WHEEL STEERING ANGLE SENSOR

Description

INFOID:0000000005650424

- It detects the steering angle condition of rear wheel.
- 2 systems (main and sub sensor) are equipped.

DTC Logic

INFOID:0000000005650425

DTC DETECTION LOGIC

DTC	Items (CONSULT-III screen terms)	Diagnostic item is detected when...	Possible cause
C1917	RR ST ANGLE SENSOR [OFFSET SIG1]	The rear wheel angle sensor signal (main and sub) error is detected. (The output signal value differs temporarily between main and sub.)	Rear wheel steering sensor (main and sub) output signal value error signal
C1918	RR ST ANGLE SENSOR [OFFSET SIG2]	The rear wheel angle sensor signal (main and sub) error is detected. (The output signal value differs between main and sub.)	Rear wheel steering sensor (main and sub) output signal error

DTC CONFIRMATION PROCEDURE

1. RECHECK DTC

With CONSULT-III

1. Start the engine.
   CAUTION:
   Stop the vehicle.
2. Perform the active test.
3. Perform 4WAS main control unit self-diagnosis.

Is DTC “C1917” or “C1918” detected?

YES >> Proceed to diagnosis procedure. Refer to STC-109, "Diagnosis Procedure".
NO >> INSPECTION END

Diagnosis Procedure

INFOID:0000000005650426

1. CHECK REAR WHEEL STEERING ANGLE SENSOR (1)

With CONSULT-III

1. Start engine.
   CAUTION:
   Check the condition with the vehicle stopped.
2. Check “RR ST ANG-MAI” and “RR ST ANG-SUB” item on “DATA MONITOR” of 4WAS main control unit.

Monitored item	Condition	Display value
RR ST ANG-MAI	Straight-ahead	Approx. 2.4 V
RR ST ANG-SUB	Straight-ahead	Approx. 2.6 V

Is the inspection result normal?

YES >> GO TO 2.
NO >> Replace 4WAS rear actuator. Refer to STC-183, "Exploded View".

2. CHECK REAR WHEEL STEERING ANGLE SENSOR (2)

Check the voltage between 4WAS main control unit harness connector terminal and ground.

4WAS main control unit		Voltage (Approx.)
Connector	Terminal	
B54	4 – Ground	2.4 V
	7 – Ground	2.6 V

Is the differential between terminal voltage No. 4 and No.7 approximately 1 V or more?

YES >> Replace 4WAS main control unit. Refer to STC-181, "Exploded View".
NO >> GO TO 3.

3. CHECK REAR WHEEL STEERING ANGLE SENSOR (3)

Check the resistance between rear wheel steering angle sensor connector terminals. Refer to STC-111, "Component Inspection".

Is the inspection result normal?

YES >> GO TO 4.
NO >> Replace 4WAS rear actuator. Refer to STC-183, "Exploded View".

4. CHECK REAR WHEEL STEERING ANGLE SENSOR GROUND CIRCUIT

1. Disconnect 4WAS main control unit harness connector.
2. Check for continuity between 4WAS main control unit harness connector terminal and rear wheel steering angle sensor harness connector terminal.

4WAS main control unit		Rear wheel steering angle sensor		Continuity
Connector	Terminal	Connector	Terminal	
B54	15	B58	1, 2, 3	Not existed
B54	15	B58	4	Existed
B54	7	B58	1, 3, 4	Not existed
B54	7	B58	2	Existed
B54	5	B58	1	Existed
B54	5	B58	2, 3, 4	Not existed
B54	4	B58	1, 2, 4	Not existed
B54	4	B58	3	Existed

Is the inspection result normal?

YES >> GO TO 5.
NO >> Repair or replace each harness and connector.

5. PERFORM SELF-DIAGNOSIS (4WAS MAIN CONTROL UNIT)

With CONSULT-III

1. Connect 4WAS main control unit harness connector.
2. Connect rear wheel steering angle sensor harness connector.
3. Perform 4WAS main control unit self-diagnosis.

Is DTC “C1917” or “C1918” detected?

YES >> Replace 4WAS main control unit. Refer to STC-181, "Exploded View".
NO >> GO TO 6.

6. CHECK INFORMATION

With CONSULT-III

Check the “DATA MONITOR” value of each DTC detected with the self-diagnosis function. Refer to STC-158, "Reference Value".

Is each data standard?

YES >> Check the pin terminal and connection of each harness connector for non-standard conditions.
NO >> Replace 4WAS main control unit. Refer to STC-181, "Exploded View".

Component Inspection

INFOID:0000000005650427

1. CHECK REAR WHEEL STEERING ANGLE SENSOR

1. Turn the ignition switch OFF.
2. Disconnect rear wheel steering angle sensor harness connector.
3. Check the resistance between rear wheel steering angle sensor connector terminals.

Rear wheel steering angle sensor Terminal	Resistance (Approx.)
1 – 3	1 kΩ
1 – 2	1.2 – 1.5 kΩ
1 – 4	1.2 – 1.5 kΩ

Is the inspection result normal?

YES >> INSPECTION END
NO >> Replace 4WAS rear actuator. Refer to STC-183, "Exploded View".

Special Repair Requirement

INFOID:0000000005650428

BEFORE REPLACING 4WAS MAIN CONTROL UNIT

- Record the self-diagnosis results (history).

CAUTION:

- **Never erase the memory (history) of self-diagnosis results when replacing 4WAS main control unit after diagnosis.**
- **Erase the memory of the self-diagnosis results (record) after printing out or recording all the values of “DATA MONITOR”.**

C1919 VEHICLE SPEED SIGNAL

Description

INFOID:0000000005650429

The vehicle speed signal is transmitted from ABS actuator and electric unit (control unit) to 4WAS main control unit via CAN communication.

DTC Logic

INFOID:0000000005650430

DTC DETECTION LOGIC

DTC	Items (CONSULT-III screen terms)	Diagnostic item is detected when...	Possible cause
C1919	VEHICLE SPEED SEN [NO SIGNAL]	Malfunction is detected in vehicle speed signal that is output from ABS actuator and electric unit (control unit) via CAN communication. (Improper signal inputs while driving.)	Vehicle speed signal error

DTC CONFIRMATION PROCEDURE

1. RECHECK DTC

With CONSULT-III

1. Turn the ignition switch from OFF to ON.
2. Perform 4WAS main control unit self-diagnosis.

Is DTC “C1919” detected?

YES >> Proceed to diagnosis procedure. Refer to STC-112, "Diagnosis Procedure".
NO >> INSPECTION END

Diagnosis Procedure

INFOID:0000000005650431

1. PERFORM ABS ACTUATOR AND ELECTRIC UNIT (CONTROL UNIT) SELF-DIAGNOSIS

With CONSULT-III

Perform ABS actuator and electrical unit (control unit) self-diagnosis.

Is any error system detected?

YES >> Check the error system.
NO >> GO TO 2.

2. PERFORM SELF-DIAGNOSIS (4WAS MAIN CONTROL UNIT)

With CONSULT-III

Perform 4WAS main control unit self-diagnosis.

Is DTC “U1000” or “U1010” detected?

YES >> Check the error system.
NO >> GO TO 3.

3. PERFORM SELF-DIAGNOSIS (4WAS MAIN CONTROL UNIT)

With CONSULT-III

Perform 4WAS main control unit self-diagnosis.

Is DTC “C1919” detected?

YES >> Replace 4WAS main control unit. Refer to STC-181, "Exploded View".
NO >> GO TO 4.

4. INFORMATION CHECK

With CONSULT-III

Check the “DATA MONITOR” value of each DTC detected with the self-diagnosis function. Refer to STC-158, "Reference Value".

Is each data the standard value?

YES >> Check that there is no malfunction in each harness connector pin terminal or disconnection.
NO >> Replace 4WAS main control unit. Refer to STC-181, "Exploded View".

Special Repair Requirement

INFOID:0000000005650432

BEFORE REPLACING 4WAS MAIN CONTROL UNIT

- Record the self-diagnosis results (history).

CAUTION:

- **Never erase the memory (history) of self-diagnosis results when replacing 4WAS main control unit after diagnosis.**
- **Erase the memory of the self-diagnosis results (record) after printing out or recording all the values of “DATA MONITOR”.**

C1920 STEERING ANGLE SEN

Description

INFOID:0000000005650433

Steering angle sensor signal is transmitted from steering angle sensor to 4WAS main control unit via CAN communication.

DTC Logic

INFOID:0000000005650434

DTC DETECTION LOGIC

DTC	Items (CONSULT-III screen terms)	Diagnostic item is detected when...	Possible cause
C1920	STEERING ANGLE SEN [NO SIGNAL]	Malfunction is detected in steering angle sensor signal that is output from steering angle sensor via CAN communication. (No transmission from the steering angle sensor)	Steering angle sensor input signal error

DTC CONFIRMATION PROCEDURE

1. RECHECK DTC

With CONSULT-III

1. Turn the ignition switch from OFF to ON.
2. Perform 4WAS main control unit self-diagnosis.

Is DTC “C1920” detected?

YES >> Proceed to diagnosis procedure. Refer to STC-114, "Diagnosis Procedure".
NO >> INSPECTION END

Diagnosis Procedure

INFOID:0000000005650435

1. PERFORM ABS ACTUATOR AND ELECTRIC UNIT (CONTROL UNIT) SELF-DIAGNOSIS

With CONSULT-III

Perform ABS actuator and electric unit (control unit) self-diagnosis.

Is any error system detected?

YES >> Check the error system.
NO >> GO TO 2.

2. PERFORM SELF-DIAGNOSIS (4WAS MAIN CONTROL UNIT)

With CONSULT-III

Perform 4WAS main control unit self-diagnosis.

Is DTC “U1000” or “U1010” detected?

YES >> Check the error system.
NO >> GO TO 3.

3. PERFORM SELF-DIAGNOSIS (4WAS MAIN CONTROL UNIT)

With CONSULT-III

Perform 4WAS main control unit self-diagnosis.

Is DTC “C1920” detected?

YES >> Replace 4WAS main control unit. Refer to STC-181, "Exploded View".
NO >> GO TO 4.

4. INFORMATION CHECK

With CONSULT-III

Check the “DATA MONITOR” value of each DTC detected with the self-diagnosis function. Refer to STC-158, "Reference Value".

Is each data the standard value?

YES >> Check that there is no malfunction in each harness connector pin terminal or disconnection.
NO >> Replace 4WAS main control unit. Refer to STC-181, "Exploded View".

Special Repair Requirement

INFOID:0000000005650436

BEFORE REPLACING 4WAS MAIN CONTROL UNIT

- Record the self-diagnosis results (history).

CAUTION:
- **Never erase the memory (history) of self-diagnosis results when replacing 4WAS main control unit after diagnosis.**
- **Erase the memory of the self-diagnosis results (record) after printing out or recording all the values of "DATA MONITOR".**

AFTER REPLACING STEERING ANGLE SENSOR

1. PERFORM ACTIVE TEST (LOCK OPERATION)

With CONSULT-III

1. Stop vehicle with front wheels in the straight-ahead position.
2. Turn the ignition switch ON.
   CAUTION:
   Never start engine.
3. Select "LOCK OPERATION" item on "ACTIVE" of 4WAS front control unit.
4. Perform "RELEASE" of "ACTIVE TEST".
   CAUTION:
   - **Turn steering wheel 90°, and then check that front tire does not move.**
   - **Never turn steering wheel 1 turn or more while performing "RELEASE".**
5. Place steering wheel in neutral position.
6. Perform "LOCK" item on "ACTIVE TEST" of 4WAS front control unit.
7. Steer 30° leftward slowly. Steer 30° rightward and return the steering wheel to the straight-ahead position.
8. Complete active test of 4WAS front control unit.

>> GO TO 2.

2. STEERING ANGLE SENSOR NEUTRAL POSITION ADJUSTMENT

With CONSULT-III

1. Adjust steering angle sensor neutral position. Refer to BRC-8, "ADJUSTMENT OF STEERING ANGLE SENSOR NEUTRAL POSITION : Special Repair Requirement".
2. Turn the ignition switch OFF.

>> GO TO 3.

3. RETURN TO 4WAS FRONT ACTUATOR INITIAL POSITION

1. Start engine.
   CAUTION:
   Check condition with the vehicle stopped.
2. Turn steering wheel to the left by 90° slowly, and then turn to the right by 90°.
3. Again, turn steering wheel to the left by 90° slowly, and then turn to the right by 90° so that it faces straight ahead.
4. Stop vehicle with front wheels in the straight-ahead position after driving vehicle for a short time. (Engine starting)

>> GO TO 4.

4. CHECK 4WAS FRONT ACTUATOR

With CONSULT-III

1. Check "4WAS STR ANG" item on "DATA MONITOR" of 4WAS front control unit.
   CAUTION:
   Never touch steering wheel while performing.

4WAS STR ANG : –3.5 – 3.5deg

2. Turn the ignition switch OFF.

Is the inspection result normal?

YES >> GO TO 5.
NO >> GO TO 1.

5. PERFORM ACTIVE TEST (SLOW MODE)

With CONSULT-III

1. Start engine.
   CAUTION:
   Check condition with the vehicle stopped.
2. Select “SLOW MODE” item on “ACTIVE TEST” of 4WAS front control unit.
3. Perform “MODE START” of “ACTIVE TEST”.
4. Turn steering wheel to the left slowly until it stops.
5. Turn steering wheel to the right slowly until it stops.

Does “OK” display on both the left and right sides on “SLOW MODE” items of the monitor?

YES >> GO TO 6.
NO >> Refer to STC-32, "4WAS FRONT ACTUATOR NEUTRAL POSITION ADJUSTMENT : Special Repair Requirement (Pattern 4)".

6. PERFORM SELF-DIAGNOSIS (4WAS FRONT CONTROL UNIT)

With CONSULT-III

Perform 4WAS front control unit self-diagnosis.

Is malfunction detected?

YES >> Check malfunctioning circuit.
NO >> GO TO 7.

7. ERASE ERROR RECORD

With CONSULT-III

Erase memories of self-diagnosis results for 4WAS front control unit and 4WAS main control unit.

>> END

C1921 ENGINE SPEED SIGNAL

Description

INFOID:0000000005650437

The engine speed signal is transmitted to 4WAS main control unit via CAN communication.

DTC Logic

INFOID:0000000005650438

DTC DETECTION LOGIC

DTC	Items (CONSULT-III screen terms)	Diagnostic item is detected when...	Possible cause
C1921	ENG REV SIGNAL	Malfunction is detected in engine speed signal that is output from ECM via CAN communication. (Improper signal is input engine speed.)	Engine speed signal error

DTC CONFIRMATION PROCEDURE

1. RECHECK DTC

With CONSULT-III

1. Turn the ignition switch from OFF to ON.
2. Perform 4WAS main control unit self-diagnosis.

Is DTC “C1921” detected?

YES >> Proceed to diagnosis procedure. Refer to STC-117, "Diagnosis Procedure".
NO >> INSPECTION END

Diagnosis Procedure

INFOID:0000000005650439

1. PERFORM ECM SELF-DIAGNOSIS

With CONSULT-III

Perform ECM self-diagnosis.

Is any error system detected?

YES >> Check the error system.
NO >> GO TO 2.

2. PERFORM SELF-DIAGNOSIS (4WAS MAIN CONTROL UNIT)

With CONSULT-III

Perform 4WAS main control unit self-diagnosis.

Is DTC “U1000” or “U1010” detected?

YES >> Check the error system.
NO >> GO TO 3.

3. PERFORM SELF-DIAGNOSIS (4WAS MAIN CONTROL UNIT)

With CONSULT-III

Perform 4WAS main control unit self-diagnosis.

Is DTC “C1921” detected?

YES >> Replace 4WAS main control unit. Refer to STC-181, "Exploded View".
NO >> GO TO 4.

4. INFORMATION CHECK

With CONSULT-III

Check the “DATA MONITOR” value of each DTC detected with the self-diagnosis function. Refer to STC-158, "Reference Value".

Is each data the standard value?

YES >> Check that there is no malfunction in each harness connector pin terminal or disconnection.
NO >> Replace 4WAS main control unit. Refer to STC-181, "Exploded View".

Special Repair Requirement

INFOID:0000000005650440

BEFORE REPLACING 4WAS MAIN CONTROL UNIT

- Record the self-diagnosis results (history).

CAUTION:

- **Never erase the memory (history) of self-diagnosis results when replacing 4WAS main control unit after diagnosis.**
- **Erase the memory of the self-diagnosis results (record) after printing out or recording all the values of “DATA MONITOR”.**

C1923 STEERING ANGLE SEN

Description

INFOID:0000000005650441

Steering angle sensor signal is transmitted from steering angle sensor to 4WAS main control unit via CAN communication.

DTC Logic

INFOID:0000000005650442

DTC DETECTION LOGIC

DTC	Items (CONSULT-III screen terms)	Diagnostic item is detected when...	Possible cause
C1923	STEERING ANGLE SEN [NO CHANGE]	Malfunction is detected in steering angle sensor signal that is output from steering angle sensor via CAN communication. [Steering angle sensor input signal error is detected when driving at 60 km/h (37MPH) or more.]	Steering angle sensor input signal error

DTC CONFIRMATION PROCEDURE

1. RECHECK DTC

With CONSULT-III

1. Drive at 60 km/h (38MPH) or more for 3 minutes or more.
2. Perform 4WAS main control unit self-diagnosis.

Is DTC “C1923” detected?

YES >> Proceed to diagnosis procedure. Refer to STC-119, "Diagnosis Procedure".
NO >> INSPECTION END

Diagnosis Procedure

INFOID:0000000005650443

1. PERFORM ABS ACTUATOR AND ELECTRIC UNIT (CONTROL UNIT) SELF-DIAGNOSIS

With CONSULT-III

Perform ABS actuator and electric unit (control unit) self-diagnosis.

Is any error system detected?

YES >> Check the error system.
NO >> GO TO 2.

2. PERFORM SELF-DIAGNOSIS (4WAS MAIN CONTROL UNIT)

With CONSULT-III

Perform 4WAS main control unit self-diagnosis.

Is DTC “U1000” or “U1010” detected?

YES >> Check the error system.
NO >> GO TO 3.

3. PERFORM SELF-DIAGNOSIS (4WAS MAIN CONTROL UNIT)

With CONSULT-III

Perform 4WAS main control unit self-diagnosis.

Is DTC “C1923” detected?

YES >> Replace 4WAS main control unit. Refer to STC-181, "Exploded View".
NO >> GO TO 4.

4. INFORMATION CHECK

With CONSULT-III

Check the “DATA MONITOR” value of each DTC detected with the self-diagnosis function. Refer to STC-158, "Reference Value".

Is each data the standard value?

YES >> Check that there is no malfunction in each harness connector pin terminal or disconnection.
NO >> Replace 4WAS main control unit. Refer to STC-181, "Exploded View".

Special Repair Requirement

INFOID:0000000005650444

BEFORE REPLACING 4WAS MAIN CONTROL UNIT

- Record the self-diagnosis results (history).

CAUTION:
- **Never erase the memory (history) of self-diagnosis results when replacing 4WAS main control unit after diagnosis.**
- **Erase the memory of the self-diagnosis results (record) after printing out or recording all the values of "DATA MONITOR".**

AFTER REPLACING STEERING ANGLE SENSOR

1. PERFORM ACTIVE TEST (LOCK OPERATION)

With CONSULT-III

1. Stop vehicle with front wheels in the straight-ahead position.
2. Turn the ignition switch ON.
   CAUTION:
   Never start engine.
3. Select "LOCK OPERATION" item on "ACTIVE" of 4WAS front control unit.
4. Perform "RELEASE" of "ACTIVE TEST".
   CAUTION:
   - **Turn steering wheel 90°, and then check that front tire does not move.**
   - **Never turn steering wheel 1 turn or more while performing "RELEASE".**
5. Place steering wheel in neutral position.
6. Perform "LOCK" item on "ACTIVE TEST" of 4WAS front control unit.
7. Steer 30° leftward slowly. Steer 30° rightward and return the steering wheel to the straight-ahead position.
8. Complete active test of 4WAS front control unit.

>> GO TO 2.

2. STEERING ANGLE SENSOR NEUTRAL POSITION ADJUSTMENT

With CONSULT-III

1. Adjust steering angle sensor neutral position. Refer to BRC-8, "ADDITIONAL SERVICE WHEN REPLACING CONTROL UNIT : Special Repair Requirement".
2. Turn the ignition switch OFF.

>> GO TO 3.

3. RETURN TO 4WAS FRONT ACTUATOR INITIAL POSITION

1. Start engine.
   CAUTION:
   Check condition with the vehicle stopped.
2. Turn steering wheel to the left by 90° slowly, and then turn to the right by 90°.
3. Again, turn steering wheel to the left by 90° slowly, and then turn to the right by 90° so that it faces straight ahead.
4. Stop vehicle with front wheels in the straight-ahead position after driving vehicle for a short time. (Engine starting)

>> GO TO 4.

4. CHECK 4WAS FRONT ACTUATOR

With CONSULT-III

1. Check "4WAS STR ANG" item on "DATA MONITOR" of 4WAS front control unit.
   CAUTION:
   Never touch steering wheel while performing.

4WAS STR ANG : –3.5 – 3.5deg

2. Turn the ignition switch OFF.

Is the inspection result normal?

YES >> GO TO 5.
NO >> GO TO 1.

5. PERFORM ACTIVE TEST (SLOW MODE)

With CONSULT-III

1. Start engine.
   CAUTION:
   Check condition with the vehicle stopped.
2. Select “SLOW MODE” item on “ACTIVE TEST” of 4WAS front control unit.
3. Perform “MODE START” of “ACTIVE TEST”.
4. Turn steering wheel to the left slowly until it stops.
5. Turn steering wheel to the right slowly until it stops.

Does “OK” display on both the left and right sides on “SLOW MODE” items of the monitor?

YES >> GO TO 6.
NO >> Refer to STC-32, "4WAS FRONT ACTUATOR NEUTRAL POSITION ADJUSTMENT : Special Repair Requirement (Pattern 4)".

6. PERFORM SELF-DIAGNOSIS (4WAS FRONT CONTROL UNIT)

With CONSULT-III

Perform 4WAS front control unit self-diagnosis.

Is malfunction detected?

YES >> Check malfunctioning circuit.
NO >> GO TO 7.

7. ERASE ERROR RECORD

With CONSULT-III

Erase memories of self-diagnosis results for 4WAS front control unit and 4WAS main control unit.

>> END

C1924 STEERING ANGLE SEN

Description

INFOID:0000000005650445

Steering angle sensor signal is transmitted from steering angle sensor to 4WAS main control unit via CAN communication.

DTC Logic

INFOID:0000000005650446

DTC DETECTION LOGIC

DTC	Items (CONSULT-III screen terms)	Diagnostic item is detected when...	Possible cause
C1924	STEERING ANGLE SEN [NO NEUT STATE]	Driving continuously at 10 km (6 mile) or more while the steering angle sensor value is not L10° - R10°. (Not detected in 4WAS front control unit fail-safe mode)	Steering angle sensor input signal error

DTC CONFIRMATION PROCEDURE

1. RECHECK DTC

With CONSULT-III

1. Drive continuously for 10 km (6 mile) or more.
2. Perform 4WAS main control unit self-diagnosis.

Is DTC “C1924” detected?

YES >> Proceed to diagnosis procedure. Refer to STC-122, "Diagnosis Procedure".
NO >> INSPECTION END

Diagnosis Procedure

INFOID:0000000005650447

1. CHECK DRIVING

Drive for a short time.

Does the vehicle drive with front wheels in the straight-ahead position?

YES >> GO TO 2.
NO >> Adjust the wheel alignment. Refer to FSU-8, "Inspection".

2. PERFORM SELF-DIAGNOSIS OF ABS ACTUATOR AND ELECTRIC UNIT (CONTROL UNIT)

With CONSULT-III

Perform ABS actuator and electric unit (control unit) self-diagnosis.

Is malfunction detected?

YES >> Check malfunctioning circuit.
NO >> GO TO 3.

3. PERFORM SELF-DIAGNOSIS (4WAS MAIN CONTROL UNIT)

With CONSULT-III

Perform 4WAS main control unit self-diagnosis.

Is DTC “U1000” or “U1010” detected?

YES >> Check malfunctioning circuit.
NO >> GO TO 4.

4. PERFORM SELF-DIAGNOSIS (4WAS MAIN CONTROL UNIT)

With CONSULT-III

Perform 4WAS main control unit self-diagnosis.

Is DTC “C1924” detected?

YES >> Replace 4WAS main control unit. Refer to STC-181, "Exploded View".
NO >> GO TO 5.

5. CHECK INFORMATION

With CONSULT-III

Check the “DATA MONITOR” value of each DTC detected with the self-diagnosis function. Refer to STC-158, "Reference Value".

Is each data standard?

YES >> Check pin terminal and connection of each harness connector for non-standard conditions.
NO >> Replace 4WAS main control unit. Refer to STC-181, "Exploded View".

Special Repair Requirement

INFOID:0000000005650448

BEFORE REPLACING 4WAS MAIN CONTROL UNIT

- Record the self-diagnosis results (history).

CAUTION:
- **Never erase the memory (history) of self-diagnosis results when replacing 4WAS main control unit after diagnosis.**
- **Erase the memory of the self-diagnosis results (record) after printing out or recording all the values of “DATA MONITOR”.**

AFTER REPLACING STEERING ANGLE SENSOR

1. PERFORM ACTIVE TEST (LOCK OPERATION)

With CONSULT-III

1. Stop vehicle with front wheels in the straight-ahead position.
2. Turn the ignition switch ON.
   CAUTION:
   Never start engine.
3. Select “LOCK OPERATION” item on “ACTIVE” of 4WAS front control unit.
4. Perform “RELEASE” of “ACTIVE TEST”.
   CAUTION:
   - **Turn steering wheel 90°, and then check that front tire does not move.**
   - **Never turn steering wheel 1 turn or more while performing “RELEASE”.**
5. Place steering wheel in neutral position.
6. Perform “LOCK” item on “ACTIVE TEST” of 4WAS front control unit.
7. Steer 30° leftward slowly. Steer 30° rightward and return the steering wheel to the straight-ahead position.
8. Complete active test of 4WAS front control unit.

>> GO TO 2.

2. STEERING ANGLE SENSOR NEUTRAL POSITION ADJUSTMENT

With CONSULT-III

1. Adjust steering angle sensor neutral position. Refer to BRC-8, "ADJUSTMENT OF STEERING ANGLE SENSOR NEUTRAL POSITION : Special Repair Requirement".
2. Turn the ignition switch OFF.

>> GO TO 3.

3. RETURN TO 4WAS FRONT ACTUATOR INITIAL POSITION

1. Start engine.
   CAUTION:
   Check condition with the vehicle stopped.
2. Turn steering wheel to the left by 90° slowly, and then turn to the right by 90°.
3. Again, turn steering wheel to the left by 90° slowly, and then turn to the right by 90° so that it faces straight ahead.
4. Stop vehicle with front wheels in the straight-ahead position after driving vehicle for a short time. (Engine starting)

>> GO TO 4.

4. CHECK 4WAS FRONT ACTUATOR

With CONSULT-III

1. Check “4WAS STR ANG” item on “DATA MONITOR” of 4WAS front control unit.
   CAUTION:
   Never touch steering wheel while performing.

   4WAS STR ANG : –3.5 – 3.5deg

2. Turn the ignition switch OFF.

Is the inspection result normal?

YES >> GO TO 5.
NO >> GO TO 1.

5. PERFORM ACTIVE TEST (SLOW MODE)

With CONSULT-III

1. Start engine.
   CAUTION:
   Check condition with the vehicle stopped.
2. Select “SLOW MODE” item on “ACTIVE TEST” of 4WAS front control unit.
3. Perform “MODE START” of “ACTIVE TEST”.
4. Turn steering wheel to the left slowly until it stops.
5. Turn steering wheel to the right slowly until it stops.

Does “OK” display on both the left and right sides on “SLOW MODE” items of the monitor?

YES >> GO TO 6.
NO >> Refer to STC-32, "4WAS FRONT ACTUATOR NEUTRAL POSITION ADJUSTMENT : Special Repair Requirement (Pattern 4)".

6. PERFORM SELF-DIAGNOSIS (4WAS FRONT CONTROL UNIT)

With CONSULT-III

Perform 4WAS front control unit self-diagnosis.

Is malfunction detected?

YES >> Check malfunctioning circuit.
NO >> GO TO 7.

7. ERASE ERROR RECORD

With CONSULT-III

Erase memories of self-diagnosis results for 4WAS front control unit and 4WAS main control unit.

>> END

C1926, C1932 STEERING ANGLE SENSOR

Description

INFOID:0000000005650449

Steering angle sensor signal is transmitted from steering angle sensor to 4WAS main control unit via CAN communication.

DTC Logic

INFOID:0000000005650450

DTC DETECTION LOGIC

DTC	Items (CONSULT-III screen terms)	Diagnostic item is detected when...	Possible cause
C1926	STEERING ANGLE SEN	Malfunction is detected in steering angle sensor signal that is output from steering angle sensor via CAN communication. (When improper signal inputs to steering angle sensor and steering angle sensor itself detects the malfunction)	Steering angle sensor error
C1932	STEERING ANGLE SEN	If the steering angle sensor error is detected. (Steering angle sensor output value is abnormal.)	Steering angle sensor input signal error

DTC CONFIRMATION PROCEDURE

1. RECHECK DTC

With CONSULT-III

1. Start the engine.
   CAUTION:
   Stop the vehicle.
2. Turn the steering wheel leftward slowly. Steer until the turning stops.
3. Turn the steering wheel rightward slowly. Steer to the straight-forward position.
4. Perform 4WAS main control unit self-diagnosis.

Is DTC “C1926” or “C1932” detected?

YES >> Proceed to diagnosis procedure. Refer to STC-125, "Diagnosis Procedure".
NO >> INSPECTION END

Diagnosis Procedure

INFOID:0000000005650451

1. PERFORM ABS ACTUATOR AND ELECTRIC UNIT (CONTROL UNIT) SELF-DIAGNOSIS

With CONSULT-III

Perform ABS actuator and electrical unit (control unit) self-diagnosis.

Is any error system detected?

YES >> Check the error system.
NO >> GO TO 2.

2. PERFORM SELF-DIAGNOSIS (4WAS MAIN CONTROL UNIT)

With CONSULT-III

Perform 4WAS main control unit self-diagnosis

Is DTC “U1000” or “U1010” detected?

YES >> Check the error system.
NO >> GO TO 3.

3. PERFORM SELF-DIAGNOSIS (4WAS MAIN CONTROL UNIT)

With CONSULT-III

Perform 4WAS main control unit self-diagnosis

Is DTC “C1926” or “C1932” detected?

C1926 >> Replace 4WAS main control unit. Refer to STC-181, "Exploded View".

C1932 >> Replace steering angle sensor. Refer to BRC-108, "Exploded View".
NO >> GO TO 4.

4. INFORMATION CHECK

With CONSULT-III

Check the "DATA MONITOR" value of each DTC detected with the self-diagnosis function. Refer to STC-158, "Reference Value".

Is each data the standard value?

YES >> Check that there is no malfunction in each harness connector pin terminal or disconnection.
NO >> Replace 4WAS main control unit. Refer to STC-181, "Exploded View".

Special Repair Requirement

INFOID:0000000005650452

BEFORE REPLACING 4WAS MAIN CONTROL UNIT

- Record the self-diagnosis results (history).

CAUTION:
- **Never erase the memory (history) of self-diagnosis results when replacing 4WAS main control unit after diagnosis.**
- **Erase the memory of the self-diagnosis results (record) after printing out or recording all the values of "DATA MONITOR".**

AFTER REPLACING STEERING ANGLE SENSOR

1. PERFORM ACTIVE TEST (LOCK OPERATION)

With CONSULT-III

1. Stop vehicle with front wheels in the straight-ahead position.
2. Turn the ignition switch ON.
   CAUTION:
   Never start engine.
3. Select "LOCK OPERATION" item on "ACTIVE" of 4WAS front control unit.
4. Perform "RELEASE" of "ACTIVE TEST".
   CAUTION:
   - **Turn steering wheel 90°, and then check that front tire does not move.**
   - **Never turn steering wheel 1 turn or more while performing "RELEASE".**
5. Place steering wheel in neutral position.
6. Perform "LOCK" item on "ACTIVE TEST" of 4WAS front control unit.
7. Steer 30° leftward slowly. Steer 30° rightward and return the steering wheel to the straight-ahead position.
8. Complete active test of 4WAS front control unit.

>> GO TO 2.

2. STEERING ANGLE SENSOR NEUTRAL POSITION ADJUSTMENT

With CONSULT-III

1. Adjust steering angle sensor neutral position. Refer to BRC-8, "ADJUSTMENT OF STEERING ANGLE SENSOR NEUTRAL POSITION : Special Repair Requirement".
2. Turn the ignition switch OFF.

>> GO TO 3.

3. RETURN TO 4WAS FRONT ACTUATOR INITIAL POSITION

1. Start engine.
   CAUTION:
   Check condition with the vehicle stopped.
2. Turn steering wheel to the left by 90° slowly, and then turn to the right by 90°.
3. Again, turn steering wheel to the left by 90° slowly, and then turn to the right by 90° so that it faces straight ahead.
4. Stop vehicle with front wheels in the straight-ahead position after driving vehicle for a short time. (Engine starting)

>> GO TO 4.

4. CHECK 4WAS FRONT ACTUATOR

With CONSULT-III

1. Check “4WAS STR ANG” item on “DATA MONITOR” of 4WAS front control unit.
   CAUTION:
   Never touch steering wheel while performing.

   4WAS STR ANG : –3.5 – 3.5deg

2. Turn the ignition switch OFF.

Is the inspection result normal?

YES >> GO TO 5.
NO >> GO TO 1.

5. PERFORM ACTIVE TEST (SLOW MODE)

With CONSULT-III

1. Start engine.
   CAUTION:
   Check condition with the vehicle stopped.
2. Select “SLOW MODE” item on “ACTIVE TEST” of 4WAS front control unit.
3. Perform “MODE START” of “ACTIVE TEST”.
4. Turn steering wheel to the left slowly until it stops.
5. Turn steering wheel to the right slowly until it stops.

Does “OK” display on both the left and right sides on “SLOW MODE” items of the monitor?

YES >> GO TO 6.
NO >> Refer to STC-32, "4WAS FRONT ACTUATOR NEUTRAL POSITION ADJUSTMENT : Special Repair Requirement (Pattern 4)".

6. PERFORM SELF-DIAGNOSIS (4WAS FRONT CONTROL UNIT)

With CONSULT-III

Perform 4WAS front control unit self-diagnosis.

Is malfunction detected?

YES >> Check malfunctioning circuit.
NO >> GO TO 7.

7. ERASE ERROR RECORD

With CONSULT-III

Erase memories of self-diagnosis results for 4WAS front control unit and 4WAS main control unit.

>> END

C1930 4WAS FRONT CONTROL UNIT

Description

INFOID:0000000005650453

It transmits the value calculated by 4WAS main control unit to 4WAS front control unit via 4WAS communication line (line for 4WAS system only). 4WAS front control unit controls 4WAS front actuator according to the received command value.

DTC Logic

INFOID:0000000005650454

DTC DETECTION LOGIC

DTC	Items (CONSULT-III screen terms)	Diagnostic item is detected when...	Possible cause
C1930	4WAS FRONT ECU	An error is detected on 4WAS front control unit side. (4WAS front control unit fail-safe mode)	4WAS front control unit fail-safe mode

DTC CONFIRMATION PROCEDURE

1. RECHECK DTC

With CONSULT-III

1. Turn the ignition switch from OFF to ON.
2. Perform 4WAS main control unit self-diagnosis.

Is DTC “C1930” detected?

YES >> Proceed to diagnosis procedure. Refer to STC-128, "Diagnosis Procedure".
NO >> INSPECTION END

Diagnosis Procedure

INFOID:0000000005650455

1. PERFORM SELF-DIAGNOSIS (4WAS MAIN CONTROL UNIT)

With CONSULT-III

Perform 4WAS main control unit self-diagnosis.

Is any DTC other than “C1930” detected?

YES >> Check the error system.
NO >> Perform 4WAS front control unit self-diagnosis.

C1931 4WAS FRONT CONTROL UNIT COMMUNICATION

Description

INFOID:0000000005650456

- 4WAS front control unit and 4WAS main control unit transmit/receive information to/from each other for optimum control of the 4WAS system with the specified 4WAS system line (4WAS communication line) between 4WAS front control unit and 4WAS main control unit.
- Be careful to repair wirings because 4WAS system specified line adopts twisted-pair wires. Refer to STC-179, "Precautions for Harness Repair".

DTC Logic

INFOID:0000000005650457

DTC DETECTION LOGIC

DTC	Items (CONSULT-III screen terms)	Diagnostic item is detected when...	Possible cause
C1931	4WAS FRONT ECU COMM	4WAS communication line* data communication error is detected. (An error signal is detected from 4WAS front control unit.)	4WAS communication line*/4WAS front control unit/4WAS main control unit error

*: Communication line between 4WAS front control unit and 4WAS main control unit.

DTC CONFIRMATION PROCEDURE

1. RECHECK DTC

With CONSULT-III

1. Turn the ignition switch from OFF to ON.
2. Perform 4WAS main control unit self-diagnosis.

Is DTC “C1931” detected?

YES >> Proceed to diagnosis procedure. Refer to STC-129, "Diagnosis Procedure".
NO >> INSPECTION END

Diagnosis Procedure

INFOID:0000000005650458

1. CHECK COMMUNICATION LINE (1)

1. Turn the ignition switch OFF.
2. Disconnect ABS actuator and electric unit (control unit) harness connector.
3. Disconnect yaw rate/side G sensor harness connector.
4. Disconnect 4WAS front control unit harness connector.
5. Disconnect 4WAS main control unit harness connector.
6. Check the continuity between ABS actuator and electric unit (control unit) harness connector and yaw rate/side G sensor harness connector.

ABS actuator and electric unit (control unit)		Yaw rate/side G sensor.		Continuity
Connector	Terminal	Connector	Terminal	
E41	25	M143	2	Existed
	45		3	

Is the inspection result normal?

YES >> GO TO 2.
NO >> Repair or replace the harnesses and connectors. Refer to STC-179, "Precautions for Harness Repair".

2. CHECK COMMUNICATION LINE (2)

Check the continuity between ABS actuator and electric unit (control unit) harness connector and the ground.

ABS actuator and electric unit (control unit)		Continuity
Connector	Terminal	
E41	25 – Ground	Not existed
	45 – Ground	

Is the inspection result normal?

YES >> GO TO 3.
NO >> Repair or replace the harnesses and connectors. Refer to STC-179, "Precautions for Harness Repair".

3. CHECK COMMUNICATION LINE (3)

Check the continuity between ABS actuator and electric unit (control unit) harness connector.

ABS actuator and electric unit (control unit)		Continuity
Connector	Terminal	
E41	25 – 45	Not existed

Is the inspection result normal?

YES >> GO TO 4.
NO >> Repair or replace the harnesses and connectors. Refer to STC-179, "Precautions for Harness Repair".

4. CHECK ABS ACTUATOR AND ELECTRIC UNIT (CONTROL UNIT)

Check the continuity between ABS actuator and electric unit (control unit) connector. Refer to STC-86, "Component Inspection [ABS Actuator and Electric Unit (Control Unit)]".

Is the inspection result normal?

YES >> GO TO 5.
NO >> Replace ABS actuator and electric unit (control unit). Refer to BRC-105, "Exploded View".

5. CHECK YAW RATE/SIDE G SENSOR

Check the continuity between yaw rate/side G sensor connector. Refer to STC-86, "Component Inspection (Yaw Rate/Side G Sensor)".

Is the inspection result normal?

YES >> GO TO 6.
NO >> Replace yaw rate/side G sensor. Refer to BRC-107, "Exploded View".

6. CHECK CAN DIAGNOSIS SUPPORT MONITOR (4WAS FRONT CONTROL UNIT)

With CONSULT-III

1. Connect ABS actuator and electric unit (control unit) harness connector.
2. Connect yaw rate/side G sensor harness connector.
3. Connect 4WAS front control unit harness connector.
4. Connect 4WAS main control unit harness connector.
5. Start the engine.
   CAUTION:
   Stop the vehicle.
6. Perform CAN diagnosis support monitor of 4WAS front control unit.
7. Replace 4WAS main control unit error history. Refer to STC-41, "CONSULT-III Function [4WAS(FRONT)]".

What is the indicated item?

All items are “OK”>>GO TO 7.
“TRANSMIT DIAG” is other than “OK”>>GO TO 7.
“4WAS(MAIN)” is other than “OK”>>GO TO 8.

7. CHECK 4WAS FRONT CONTROL UNIT CIRCUIT

1. Turn the ignition switch OFF.
2. Disconnect 4WAS front control unit harness connector.
3. Disconnect ABS actuator and electric unit (control unit) harness connector.

4. Check the continuity between 4WAS front control unit harness connector and ABS actuator and electric unit (control unit) harness connector.

4WAS front control unit		ABS actuator and electric unit (control unit)		Continuity
Connector	Terminal	Connector	Terminal	
M42	14	E41	25	Existed
	25		45	

5. Check that 4WAS front control unit connector No. 14 terminal and No. 25 are connected properly and not deformed.

Is the inspection result normal?

YES >> Replace 4WAS front control unit. Refer to STC-180, "Exploded View".
NO >> Repair or replace the harnesses and connectors. Refer to STC-179, "Precautions for Harness Repair".

8. CHECK 4WAS MAIN CONTROL UNIT CIRCUIT

1. Turn the ignition switch OFF.
2. Disconnect 4WAS main control unit harness connector.
3. Disconnect ABS actuator and electric unit (control unit) harness connector.
4. Check the continuity between 4WAS main control unit harness connector and ABS actuator and electric unit (control unit) harness connector.

4WAS main control unit		ABS actuator and electric unit (control unit)		Continuity
Connector	Terminal	Connector	Terminal	
B54	31	E41	45	Existed
	32		25	

5. Check that 4WAS main control unit connector No. 31 terminal and No. 32 are connected properly and not deformed.

Is the inspection result normal?

YES >> Replace 4WAS main control unit. Refer to STC-181, "Exploded View".
NO >> Repair or replace the harnesses and connectors. Refer to STC-179, "Precautions for Harness Repair".

Component Inspection [ABS Actuator and Electric Unit (Control Unit)]

INFOID:0000000005650459

1. CHECK ABS ACTUATOR AND ELECTRIC UNIT (CONTROL UNIT)

1. Turn the ignition switch OFF.
2. Remove ABS actuator and electric unit (control unit). Refer to BRC-105, "Exploded View".
3. Check the resistance between ABS actuator and electric unit (control unit) connector terminals.

ABS actuator and electric unit (control unit)	Resistance (Approx.)
Terminal	
25 – 45	120 Ω

Is the inspection result normal?

YES >> INSPECTION END
NO >> Replace ABS actuator and electric unit (control unit).

Component Inspection (Yaw Rate/Side G Sensor)

INFOID:0000000005650460

1. CHECK YAW RATE/SIDE G SENSOR

1. Turn the ignition switch OFF.
2. Remove yaw rate/side G sensor. Refer to BRC-107, "Exploded View".
3. Check the resistance between yaw rate/side G sensor connector terminals.

Yaw rate/side G sensor Terminal	Resistance (Approx.)
2 – 3	120 Ω

Is the inspection result normal?

YES >> INSPECTION END
NO >> Replace yaw rate/side G sensor.

Special Repair Requirement

INFOID:0000000005650461

BEFORE REPLACING 4WAS FRONT CONTROL UNIT

- Record the self-diagnosis results (history).

CAUTION:

- **Never erase the memory (history) of self-diagnosis results when replacing 4WAS front control unit after diagnosis.**
- **Erase the memory of the self-diagnosis results (record) after printing out or recording all the values of “DATA MONITOR”.**

BEFORE REPLACING 4WAS MAIN CONTROL UNIT

- Record the self-diagnosis results (history).

CAUTION:

- **Never erase the memory (history) of self-diagnosis results when replacing 4WAS main control unit after diagnosis.**
- **Erase the memory of the self-diagnosis results (record) after printing out or recording all the values of “DATA MONITOR”.**

AFTER REPLACING 4WAS FRONT CONTROL UNIT

- Perform 4WAS front actuator adjustment after replacing 4WAS front control unit. Refer to STC-30, "4WAS FRONT ACTUATOR NEUTRAL POSITION ADJUSTMENT : Special Repair Requirement (Pattern 3)".

U1000 CAN COMM CIRCUIT

Description

INFOID:0000000005650462

- CAN (Controller Area Network) is a serial communication line for real time application. It is an on-vehicle multiplex communication line with high data communication speed and excellent error detection ability. Many electronic control units are equipped onto a vehicle, and each control unit shares information and links with other control units during operation (not independent). In CAN communication, control units are connected with 2 communication lines (CAN-H line, CAN-L line) allowing a high rate of information transmission with less wiring. Each control unit transmits/receives data but selectively reads required data only.
- 4WAS front control unit and 4WAS main control unit transmit/receive information to/from each other for optimum control of the 4WAS system with the specified 4WAS system line (4WAS communication line) between 4WAS front control unit and 4WAS main control unit.
- Be careful to repair wirings because 4WAS system specified line adopts twisted-pair wires. Refer to STC-179, "Precautions for Harness Repair".

DTC Logic

INFOID:0000000005650463

DTC DETECTION LOGIC

DTC	Items (CONSULT-III screen terms)	Diagnostic item is detected when...	Possible cause
U1000	CAN COMM	When 4WAS main control unit is not transmitting or receiving CAN communication signal for 2 seconds or more.	CAN communication error
		When 4WAS main control unit is not transmitting or receiving 4WAS communication signal for 2 seconds or more.	4WAS communication line*/4WAS main control unit/4WAS front control unit error

*: Communication line between 4WAS front control unit and 4WAS main control unit

DTC CONFIRMATION PROCEDURE

1. RECHECK DTC

With CONSULT-III

1. Turn the ignition switch from OFF to ON.
2. Perform 4WAS main control unit self-diagnosis.

Is DTC “U1000” detected?

YES >> Proceed to diagnosis procedure. Refer to STC-133, "Diagnosis Procedure".
NO >> INSPECTION END

Diagnosis Procedure

INFOID:0000000005650464

1. CHECK SELF-DIAGNOSIS RUSULT (4WAS MAIN CONTROL UNIT)

With CONSULT-III

Is DTC “U1931” detected with “U1000”?

YES >> Refer to STC-129, "Diagnosis Procedure".
NO >> Perform CAN diagnosis.

Special Repair Requirement

INFOID:0000000005650465

BEFORE REPLACING 4WAS MAIN CONTROL UNIT

- Record the self-diagnosis results (history).

CAUTION:

- **Never erase the memory (history) of self-diagnosis results when replacing 4WAS main control unit after diagnosis.**
- **Erase the memory of the self-diagnosis results (record) after printing out or recording all the values of “DATA MONITOR”.**

U1010 CONTROL UNIT (CAN)

Description

INFOID:0000000005650466

CAN (Controller Area Network) is a serial communication line for real time application. It is an on-vehicle multiplex communication line with high data communication speed and excellent error detection ability. Many electronic control units are equipped onto a vehicle, and each control unit shares information and links with other control units during operation (not independent). In CAN communication, control units are connected with 2 communication lines (CAN-H line, CAN-L line) allowing a high rate of information transmission with less wiring. Each control unit transmits/receives data but selectively reads required data only.

DTC Logic

INFOID:0000000005650467

DTC DETECTION LOGIC

DTC	Items (CONSULT-III screen terms)	Diagnostic item is detected when...	Possible cause
U1010	CONTROL UNIT (CAN)	When detecting error during the initial diagnosis of CAN controller of 4WAS main control unit.	CAN communication line/ 4WAS main control unit/ ECM/ABS actuator and electric unit (control unit) error

DTC CONFIRMATION PROCEDURE

1. RECHECK DTC

With CONSULT-III

1. Turn the ignition switch from OFF to ON.
2. Perform 4WAS main control unit self-diagnosis.

Is DTC “U1010” detected?

YES >> Proceed to diagnosis procedure. Refer to STC-134, "Diagnosis Procedure".
NO >> INSPECTION END

Diagnosis Procedure

INFOID:0000000005650468

1. 4WAS MAIN CONTROL UNIT

Check that there is no malfunction in 4WAS main control unit harness connector or disconnection.

Is the inspection result normal?

YES >> Replace 4WAS main control unit. Refer to STC-181, "Exploded View".
NO >> Repair or replace the harnesses and connectors. Refer to STC-179, "Precautions for Harness Repair".

Special Repair Requirement

INFOID:0000000005650469

BEFORE REPLACING 4WAS MAIN CONTROL UNIT

- Record the self-diagnosis results (history).

CAUTION:

- **Never erase the memory (history) of self-diagnosis results when replacing 4WAS main control unit after diagnosis.**
- **Erase the memory of the self-diagnosis results (record) after printing out or recording all the values of “DATA MONITOR”.**

POWER SUPPLY AND GROUND CIRCUIT

Description

INFOID:0000000005650470

4WAS system power supply

Diagnosis Procedure (4WAS Front Control Unit)

INFOID:0000000005650471

1. CHECK 4WAS FRONT CONTROL UNIT POWER SUPPLY

1. Turn the ignition switch OFF.
2. Disconnect 4WAS front control unit harness connector.
3. Check the voltage between 4WAS front control unit harness connectors and the ground.

4WAS front control unit		Voltage (Approx.)
Connector	Terminal	
M41	11 – Ground	Battery voltage
M42	15 – Ground	0 V

4. Turn the ignition switch ON.
   CAUTION:
   Never start the engine.
5. Check the voltage between 4WAS front control unit harness connectors and the ground.

4WAS front control unit		Voltage (Approx.)
Connector	Terminal	
M41	11 – Ground	Battery voltage
M42	15 – Ground	

Is the inspection result normal?

YES >> GO TO 2.
NO >> Check the following items. Repair or replace the malfunctioning parts.
- 40A fusible link (#I) open
- Short among 40A fusible link (#I) connector, 4WAS front control unit harness connector No. 11 terminal and the ground
- Open between the battery and 4WAS front control unit harness connector No. 11 terminal
- 10A fuse (#3) open
- Short among 10A fuse (#3) connector, 4WAS front control unit harness connector No. 15 terminal and the ground
- Short among 10A fuse (#3) connector, unified meter and A/C amp No. 53 terminal and the ground
- Open between the ignition switch and 4WAS front control unit harness connector No. 15 terminal
- Battery or ignition switch

2. CHECK 4WAS FRONT CONTROL UNIT GROUND

Check the continuity between 4WAS front control unit harness connector and the ground.

4WAS front control unit		Continuity
Connector	Terminal	
M41	12 – Ground	Existed
M42	18 – Ground	
	34 – Ground	

Is the inspection result normal?

YES >> INSPECTION END
NO >> Repair or replace the harnesses and connectors.

Diagnosis Procedure (4WAS Main Control Unit)

INFOID:0000000005650472

1. CHECK 4WAS MAIN CONTROL UNIT POWER SUPPLY

1. Turn the ignition switch OFF.
2. Disconnect 4WAS main control unit harness connector.
3. Check the voltage between 4WAS main control unit harness connectors and the ground.

4WAS main control unit		Voltage (Approx.)
Connector	Terminal	
B54	27 – Ground	0 V

4. Turn the ignition switch ON.
   CAUTION:
   Never start the engine.
5. Check the voltage between 4WAS main control unit harness connectors and the ground.

4WAS main control unit		Voltage (Approx.)
Connector	Terminal	
B54	27 – Ground	Battery voltage

Is the inspection result normal?

YES >> GO TO 2.
NO >> Check the following items. Repair or replace the malfunctioning parts.
- 10A fuse (#45) open
- Short among 10A fuse (#45) connector, 4WAS main control unit harness connector No. 27 terminal and the ground
- Open between the ignition switch and 4WAS main control unit harness connector No. 27 terminal
- Ignition switch

2. CHECK 4WAS REAR MOTOR POWER SUPPLY CIRCUIT (1)

1. Turn the ignition switch OFF.
2. Remove 4WAS rear motor relay.
3. Check the continuity between 4WAS rear motor relay harness connector and the ground.

4WAS rear motor relay		Continuity
Connector	Terminal	
B53	1 – Ground	Not existed
	2 – Ground	Existed

Is the inspection result normal?

YES >> GO TO 3.
NO >> Repair or replace the harnesses and connectors.

3. CHECK 4WAS REAR MOTOR POWER SUPPLY CIRCUIT (2)

Check the voltage between 4WAS rear motor relay harness connector and the ground.

4WAS rear motor relay		Voltage (Approx.)
Connector	Terminal	
B53	3 – Ground	Battery voltage

Is the inspection result normal?

YES >> GO TO 4.
NO >> Check the following items. Repair or replace the malfunctioning parts.
- 20A fuse (#37) open
- Short among 20A fuse (#37) connector, 4WAS rear motor relay harness connector No. 3 terminal and the ground

- Open between the battery and 4WAS rear motor relay harness connector No. 3 terminal

4. CHECK 4WAS REAR MOTOR POWER SUPPLY CIRCUIT (3)

1. Remove the noise suppressor.
2. Check continuity between the noise suppressor harness connector and the ground.

Noise suppressor		Continuity
Connector	Terminal	
B51	3 – Ground	Not existed
	5 – Ground	
B52	1 – Ground	Not existed
	2 – Ground	Existed

Is the inspection result normal?

YES >> GO TO 5.
NO >> Repair or replace the harnesses and connectors.

5. CHECK 4WAS REAR MOTOR POWER SUPPLY CIRCUIT (4)

1. Connect 4WAS main control unit harness connector.
2. Turn the ignition switch ON.
   CAUTION:
   Never start the engine.
3. Check the voltage between 4WAS main control unit harness connectors.

4WAS main control unit		Voltage (Approx.)
Connector	Terminal	
B54	25 – Ground	Battery voltage

4. Turn the ignition switch OFF.

Is the inspection result normal?

YES >> GO TO 6.
NO >> Replace 4WAS main control unit. Refer to STC-181, "Exploded View".

6. CHECK 4WAS REAR MOTOR RELAY

Check 4WAS rear motor relay. Refer to STC-138, "Component Inspection (4WAS Rear Motor Relay)".

Is the inspection result normal?

YES >> GO TO 7.
NO >> Replace 4WAS rear motor relay.

7. CHECK NOISE SUPPRESSOR

Check continuity between the noise suppressor connector terminals. Refer to STC-138, "Component Inspection (Noise Suppressor)".

Is the inspection result normal?

YES >> GO TO 8.
NO >> Replace the noise suppressor.

8. CHECK 4WAS REAR MOTOR POWER SUPPLY

1. Connect 4WAS main control unit harness connector.
2. Install 4WAS rear motor relay.
3. Install the noise suppressor.
4. Turn the ignition switch ON.
   CAUTION:
   Never start the engine.
5. Check the voltage between 4WAS main control unit harness connectors and the ground.

4WAS main control unit		Voltage (Approx.)
Connector	Terminal	
B54	37 – Ground	Battery voltage

Is the inspection result normal?

YES >> INSPECTION END.
NO >> Replace 4WAS main control unit. Refer to STC-181, "Exploded View".

Component Inspection (4WAS Rear Motor Relay)

INFOID:0000000005650473

1. CHECK 4WAS REAR MOTOR RELAY

1. Turn the ignition switch OFF.
2. Remove 4WAS rear motor relay connector.
3. Apply 12 V to 4WAS rear motor relay connector No. 1 terminal and No. 2 terminal.
   CAUTION:
   - **Never make the terminals short.**
   - **Connect the fuse between the terminals when applying the voltage.**
4. Check the continuity between 4WAS rear motor relay connector terminals.

4WAS rear motor relay		Continuity
Terminal	Condition	
3 – 5	Apply the voltage between No. 1 terminal and No. 2 terminal.	Existed
	Do not apply the voltage between No. 1 terminal and No. 2 terminal.	Not existed

5. Check the resistance between 4WAS rear motor relay connector terminals.

4WAS rear motor relay	Resistance (Approx.)
Terminal	
1 – 2	50 Ω

Is the inspection result normal?

YES >> INSPECTION END
NO >> Replace 4WAS rear motor relay.

Component Inspection (Noise Suppressor)

INFOID:0000000005650474

1. NOISE SUPPRESSOR INSPECTION

1. Turn the ignition switch OFF.
2. Remove the noise suppressor.
3. Check continuity between the noise suppressor connector terminals.

Noise suppressor		Continuity
Terminal		
3	1	Existed
3	5	Not existed
3	2	Not existed
5	2	Existed
5	1	Not existed

Is the inspection result normal?

YES >> INSPECTION END

NO >> Replace the noise suppressor.

POWER STEERING SOLENOID VALVE

Description

INFOID:0000000005650475

- The power steering oil pressure in the gear housing assembly is controlled.

Diagnosis Procedure

INFOID:0000000005650476

1. CHECK POWER STEERING SOLENOID VALVE SIGNAL

With CONSULT-III

1. Start the engine.
2. Check “POWER STR SOL” item on “DATA MONITOR” of 4WAS main control unit.

Monitor item	Condition	Display value
POWER STR SOL	Vehicle speed: 0 km/h (0 MPH) (Engine is running)	Approx. 1.10 A
	Vehicle speed: 100 km/h (62 MPH)	Approx. 0.42 A

Without CONSULT-III

1. Start the engine.
2. Check the voltage between 4WAS main control unit harness connector and the ground.

4WAS main control unit			Voltage (Approx.)
Connector	Terminal	Condition	
B54	36 – Ground	Vehicle speed: 0 km/h (0 MPH) (Engine is running)	4.4 – 6.6 V
		Vehicle speed: 100 km/h (62 MPH)	2.4 – 3.6 V

3. Check that there is no malfunction in 4WAS main control unit harness connector or disconnection.

Is the inspection result normal?

YES >> GO TO 2.
NO >> Replace 4WAS main control unit. Refer to STC-181, "Exploded View".

2. CHECK POWER STEERING SOLENOID VALVE CIRCUIT

1. Turn the ignition switch OFF.
2. Disconnect 4WAS main control unit harness connector.
3. Disconnect the power steering solenoid valve harness connector.
4. Check the continuity between 4WAS main control unit harness connector and power steering solenoid valve harness connector.

4WAS main control unit		Power steering solenoid valve		Continuity
Connector	Terminal	Connector	Terminal	
B54	36	F45	1	Existed

5. Check the continuity between power steering solenoid valve harness connector and the ground.

Power steering solenoid valve		Continuity
Connector	Terminal	
F45	2 – Ground	Existed

Is the inspection result normal?

YES >> GO TO 3.
NO >> Repair or replace the harnesses and connectors.

3. CHECK POWER STEERING SOLENOID VALVE

1. Check the resistance between power steering solenoid valve connector terminals.

Power steering solenoid valve		Resistance (Approx.)
Connector	Terminal	
F45	1 – 2	4 – 6 Ω

2. Check for click sound (power steering solenoid valve activation sound) when applying approximately 12 V between the power steering solenoid valve connector terminals.
   CAUTION:
   - **Never make the terminals short.**
   - **Assign the positive terminal to No. 1 terminal, and the negative terminal to No. 2 terminal. Connect the fuse between the terminals when applying the voltage.**

Is the inspection result normal?

YES >> INSPECTION END
NO >> Repair the steering gear. Refer to ST-30, "2WD : Exploded View".

Component Inspection

INFOID:0000000005650477

1. POWER STEERING SOLENOID VALVE INSPECTION

1. Turn the ignition switch OFF.
2. Disconnect the power steering solenoid valve harness connector.
3. Check the resistance between power steering solenoid valve connector terminals.

Power steering solenoid valve		Resistance (Approx.)
Connector	Terminal	
F45	1 – 2	4 – 6 Ω

4. Check for click sound (power steering solenoid valve activation sound) when applying approximately 12 V between the power steering solenoid valve connector terminals.
   CAUTION:
   - **Never make the terminals short.**
   - **Assign the positive terminal to No. 1 terminal, and the negative terminal to No. 2 terminal. Connect the fuse between the terminals when applying the voltage.**

Is the inspection result normal?

YES >> INSPECTION END
NO >> Repair the steering gear.ST-30, "2WD : Exploded View".

4WAS WARNING LAMP

Description

INFOID:0000000005650478

- Turn 4WAS warning lamp ON when ignition switch turns ON from OFF. Then, turn 4WAS warning lamp OFF after the engine is started.
- The check of 4WAS system is performed.
- 4WAS system stops (error) when turning 4WAS warning lamp ON.

Diagnosis Procedure

INFOID:0000000005650479

1. PERFORM UNIFIED METER AND A/C AMP. SELF-DIAGNOSIS

With CONSULT-III

Perform the self-diagnosis of the unified meter and A/C amp.

Is any error system detected?

YES >> Check the error system.
NO >> GO TO 2.

2. PERFORM SELF-DIAGNOSIS (4WAS MAIN CONTROL UNIT)

With CONSULT-III

Perform 4WAS main control unit self-diagnosis.

Is DTC “U1000” or “U1010” detected?

YES >> Check the error system.
NO >> GO TO 3.

3. PERFORM COMBINATION METER CIRCUIT

1. Turn the ignition switch OFF.
2. Disconnect the unified meter and A/C amp. harness connector.
3. Disconnect the combination meter harness connector.
4. Check the continuity between the unified meter and A/C amp. harness connector and the combination meter harness connector terminal.

Unified meter and A/C amp.		Combination meter		Continuity
Connector	Terminal	Connector	Terminal	
M66	7	M53	3	Existed
M66	27	M53	2	

Is the inspection result normal?

YES >> GO TO 4.
NO >> Repair or replace the harnesses and connectors.

4. CHECK 4WAS WARNING LAMP SIGNAL

With CONSULT-III

1. Connect the unified meter and A/C amp. harness connector.
2. Connect the combination meter harness connector.
3. Disconnect 4WAS front control unit harness connector.
4. Turn the ignition switch ON.
   CAUTION:
   Never start the engine.
5. Check “WARNING LAMP” item on DATA MONITOR of 4WAS main control unit.

Does the item on “DATA MONITOR” indicate “On”?

YES >> GO TO 5.
NO >> Replace 4WAS main control unit. Refer to STC-181, "Exploded View".

5. CHECK COMBINATION METER

With CONSULT-III

Perform the trouble diagnosis of the combination meter. Refer to MWI-50, "COMBINATION METER : Diagnosis Procedure".

Is the inspection result normal?

YES >> INSPECTION END
NO >> Replace the combination meter. Refer to MWI-128, "Exploded View".

Special Repair Requirement

INFOID:0000000005650480

BEFORE REPLACING 4WAS MAIN CONTROL UNIT

- Record the self-diagnosis results (history).

CAUTION:

- **Never erase the memory (history) of self-diagnosis results when replacing 4WAS main control unit after diagnosis.**
- **Erase the memory of the self-diagnosis results (record) after printing out or recording all the values of “DATA MONITOR”.**

ECU DIAGNOSIS INFORMATION

4WAS FRONT CONTROL UNIT

Reference Value

INFOID:0000000005650481

VALUES ON THE DIAGNOSIS TOOL

CONSULT-III MONITOR ITEM

Monitor item	Condition		Value/Status
4WAS STR ANG	Steering wheel turned right		Approx. 0 – 550 deg
	Straight-ahead		Approx. 0 deg
	Steering wheel turned left		Approx. 0 – –550 deg
VEHICLE SPEED	Vehicle stopped		0 km/h (0 MPH)
	Vehicle running **CAUTION:** **Check air pressure of tire under standard conditions.**		Approximately equal to the indication on speedometer (Inside of ±10%)
MOTOR CURRENT	The steering wheel is not steered.		Approx. 0 – 1 A
	The steering wheel is steering.		Approx. 0 – 60 A
MTR CRNT ESTM	The steering wheel is not steered.		Approx. 0 – 1 A
	The steering wheel is steering.		Approx. 0 – 60 A
ACTR ROTA ANG	Steering wheel turned to the right (with vehicle stopped).		Approx. 0 – 60 deg
	Straight-ahead		Approx. 0 deg
	Steering wheel turned to the left (with vehicle stopped).		Approx. 0 – –60 deg
LG VOLT	Engine running (idling)		Approx. 0 – 16 V
THERM TEMP	Engine running (idling)		–40 – 100°C
MOTOR VOLT	Ignition switch: ON	Engine running (idling)	Battery voltage
		Engine stopped.	Battery voltage
IGN VOLT	Ignition switch: ON	Engine running (idling)	Battery voltage
		Engine stopped.	Battery voltage
ACTR ANG COMM	Steering wheel turned to the right (with vehicle stopped).		Approx. 0 – 60 deg
	Straight-ahead		Approx. 0 deg
	Steering wheel turned to the left (with vehicle stopped).		Approx. 0 – –60 deg
ACTR ROTA SPD	The steering wheel is not steered.		0 deg/s
	The steering wheel is steering.		Other than 0 deg/s
DUTY COMMAND	Engine running (idling)		0 – 100%
LOCK DTY COMM	Engine running (idling)		0 – 100%
MTR U VOLT	Ignition switch: ON	Engine running (idling)	Approx. 0 – 20 V
		Engine stopped.	0 V
MTR V VOLT	Ignition switch: ON	Engine running (idling)	Approx. 0 – 20 V
		Engine stopped.	0 V
MTR W VOLT	Ignition switch: ON	Engine running (idling)	Approx. 0 – 20 V
		Engine stopped.	0 V
ACT TEMP ESTM	Engine running (idling)		–40 – 100°C
MTR PHZ CRNT	The steering wheel is steering.		Approx. 0 – 20 A
ACTR DEVI ANG	The steering wheel is steering.		Approx. –10 – 10 deg

Monitor item	Condition	Value/Status
ACTR ANGL SUB	Steer the steering wheel leftward slowly. Steer until the steering stops.	Approx. 0 – –60 deg
	Steer the steering wheel rightward slowly. Steer until the steering stops.	Approx. 0 – 60 deg
STR ANGL SPD	The steering wheel is not steered.	0 deg/s
	The steering wheel is steering.	Other than 0 deg/s
OVRLD JDG TMG	It displays record of 4WAS system (entire 4WAS system) high load. (It displays time of occurrence before turning ignition switch ON.)	0 – 39
ACT PRTCT TMG	It displays record of 4WAS system (4WAS front actuator) overheating. (It displays time of occurrence before turning ignition switch ON.)	0 – 39
ECU PRTCT TMG	It displays record of 4WAS system (4WAS front control unit) overheating. (It displays time of occurrence before turning ignition switch ON.)	0 – 39
DRV TMPO TMG	It displays record of 4WAS system (terminal power supply converter of 4WAS front motor) intermittent abnormal. (It displays time of occurrence before turning ignition switch ON.)	0 – 39
MTR PW TMP TM	It displays record of 4WAS system (terminal voltage of 4WAS front motor) intermittent abnormal. (It displays time of occurrence before turning ignition switch ON.)	0 – 39
LOW VOLT TMG	It displays record of 4WAS system (terminal voltage of 4WAS front control unit and 4WAS front actuator) low voltage. (It displays time of occurrence before turning ignition switch ON.)	0 – 39
HIGH VOLT TMG	It displays record of 4WAS system (terminal voltage of 4WAS front control unit and 4WAS front actuator) extreme voltage. (It displays time of occurrence before turning ignition switch ON.)	0 – 39
OVRLD JDG FLG	4WAS system (the entire 4WAS system) heavy load condition judgment (Condition detected in past and present.)	On
	4WAS system (the entire 4WAS system) heavy load condition judgment (Condition not detected in past and present.)*	Off
ACT PRTCT FLG	4WAS front actuator overheat condition judgment (Condition detected in past and present.)	On
	4WAS front actuator overheat condition judgment (Condition not detected in past and present.)*	Off
ECU PRTCT FLG	4WAS front control unit overheat condition judgment (Condition detected in past and present.)	On
	4WAS front control unit overheat condition judgment (Condition not detected in past and present.)*	Off
DRV TMPO FLG	4WAS system (4WAS front motor terminal power supply converter) intermittent error. (Condition detected in past and present.)	On
	4WAS system (4WAS front motor terminal power supply converter) intermittent error. (Condition not detected in past and present.)*	Off
MTR PW TMP FL	4WAS system (4WAS front motor terminal voltage) intermittent error. (Condition detected in past and present.)	On
	4WAS system (4WAS front motor terminal voltage) intermittent error. (Condition not detected in past and present.)*	Off

Monitor item	Condition		Value/Status
LOW VOLT FLG	4WAS system (4WAS front control unit and 4WAS front actuator terminal voltage) voltage-dropped condition (Condition detected in past and present.)		On
	4WAS system (4WAS front control unit and 4WAS front actuator terminal voltage) voltage-dropped condition (Condition not detected in past and present.)*		Off
HIGH VOLT FLG	4WAS system (4WAS front control unit and 4WAS front actuator terminal voltage) over-voltage condition (Condition detected in past and present.)		On
	4WAS system (4WAS front control unit and 4WAS front actuator terminal voltage) over-voltage condition (Condition not detected in past and present.)*		Off
MTR SEN U OUT	The steering wheel is steering.		Hi ⇔ Low
MTR SEN V OUT	The steering wheel is steering.		Hi ⇔ Low
MTR SEN W OUT	The steering wheel is steering.		Hi ⇔ Low
MAIN ECU FAIL	4WAS main control unit fail-safe mode		On
	4WAS system is in the normal condition. (When 4WAS main control unit is the normal condition.)		Off
M-ECU TMPO FL	4WAS main control unit protection function mode		On
	4WAS system is in the normal condition. (When 4WAS main control unit is the normal condition.)		Off
LOCK MODE	4WAS front lock solenoid valve (lock structure) condition	Lock released condition	0
		Lock condition	1, 2, 3, 4, 5
NEUTRAL OUT	4WAS front actuator misaligned angle adjustment control is controlled.		On
	4WAS front actuator misaligned angle adjustment is not controlled.		Off
EX OPERAT	4WAS system enters in the protection function due to the heavy load condition and temporarily abnormal voltage.		On
	4WAS system is in the normal condition.		Off
SLOW MODE	ACTIVE TEST “SLOW MODE” judgment condition (Steer the steering wheel rightward and leftward slowly. Steer until the turning stops.)		Ok
			—

*: “Off” is indicated if the self-diagnosis result memory is erased.

TERMINAL LAYOUT

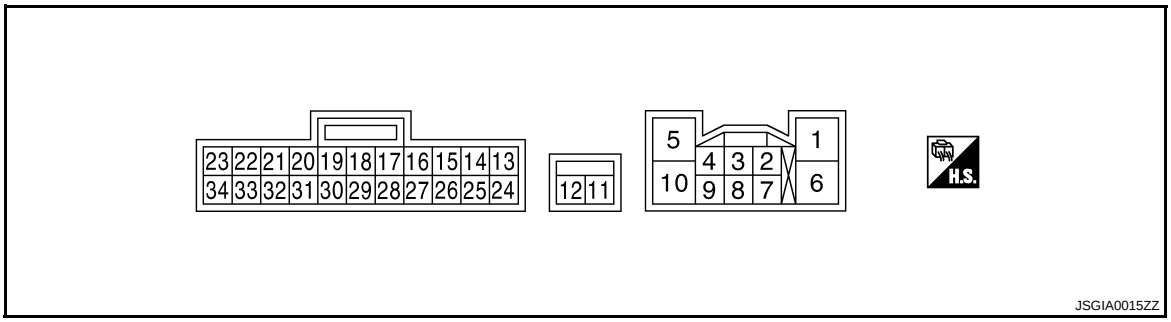

PHYSICAL VALUES

Terminal No.		Wire color	Description		Condition	Value (Approx.)
+	-		Signal name	Input/ Output		
1	—	G	4WAS front motor V terminal	—	—	—
2	Ground	W	Front wheel angle sensor W terminal voltage	Output	Ignition switch: ON	0 – 5 V
3	—	B	4WAS front lock solenoid valve ground	—	—	—
4	Ground	Y	Front wheel angle sensor U terminal voltage	Output	Ignition switch: ON	0 – 5 V
5	—	BR	4WAS front motor U terminal	—	—	—
6	—	L	4WAS front motor W terminal	—	—	—
7	—	GR	Front wheel angle sensor ground	—	—	—
8	Ground	G/R	Front wheel angle sensor V terminal voltage	Output	Ignition switch: ON	0 – 5 V
10	Ground	R	4WAS front lock solenoid valve power supply	Output	Ignition switch: ON	Battery voltage
					Ignition switch: OFF (Wait 10 min. or more.)	0 V
11	Ground	R	Power supply	Input	Ignition switch: ON	Battery voltage
					Ignition switch: OFF	Battery voltage
12	Ground	B	4WAS front motor ground	—	Always	0 V
14	—	V	BUS-L	—	—	—
15	Ground	G	Ignition switch power supply	Input	Ignition switch: ON	Battery voltage
					Ignition switch: OFF	0 V
18	Ground	B	Ground	—	Always	0 V
25	—	LG	BUS-H	—	—	—
34	Ground	B	Ground	—	Always	0 V

CAUTION:

When using circuit tester to measure voltage for inspection, never forcibly extend any connector terminals.

Wiring Diagram - 4WAS SYSTEM -

INFOID:0000000005650482

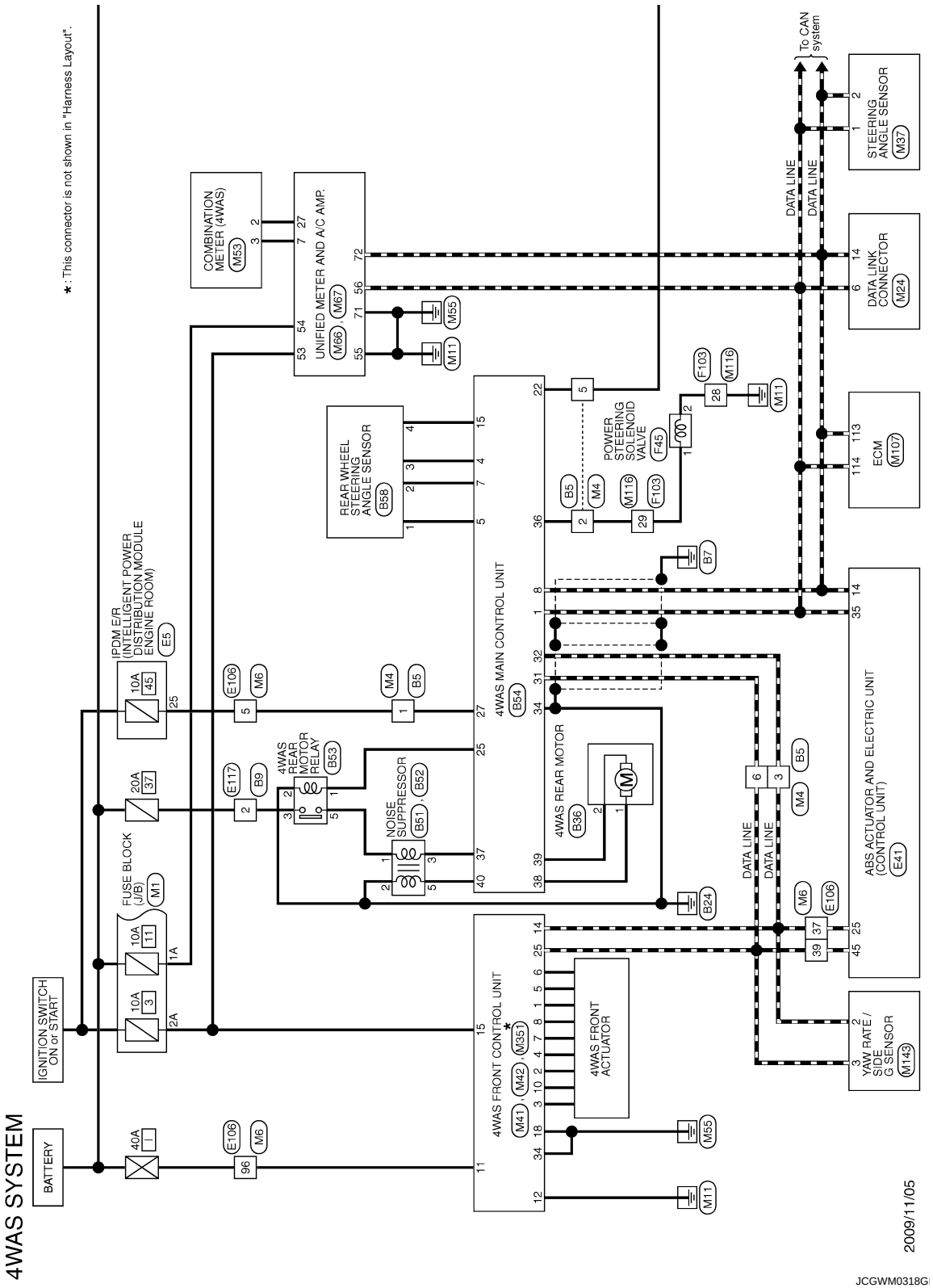

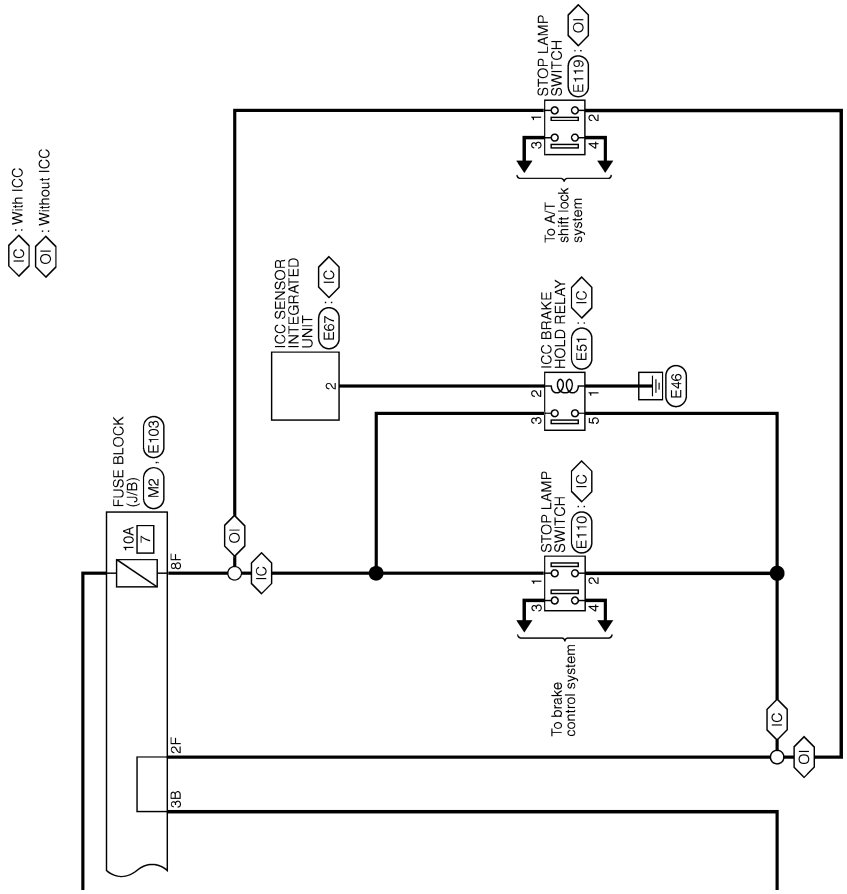
IC : With ICC
OI : Without ICC
FUSE BLOCK (J/B)
M2
E103
10A
7
8F
2F
3B
OI
IC
ICC SENSOR INTEGRATED UNIT
E67
IC
2
ICC BRAKE HOLD RELAY
E51
IC
E46
STOP LAMP SWITCH
E110
IC
To brake control system
STOP LAMP SWITCH
E119
OI
To A/T shift lock system
JCGWM0319GI

4WAS SYSTEM

Connector No.	B5
Connector Name	WIRE TO WIRE
Connector Type	TH08MW-NH

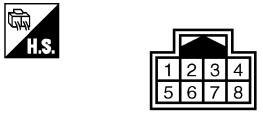

Terminal No.	Color of Wire	Signal Name [Specification]
1	V	–
2	LG	–
3	Y	–
5	GR	–
6	BR	–

Connector No.	B9
Connector Name	WIRE TO WIRE
Connector Type	M06FW-LC

Terminal No.	Color of Wire	Signal Name [Specification]
2	R	–
3	GR	–
4	LG	–
5	BR	–
6	BG	–

Connector No.	B36
Connector Name	4WAS REAR MOTOR
Connector Type	X02FB

Terminal No.	Color of Wire	Signal Name [Specification]
1	Y	–
2	G	–

Connector No.	B51
Connector Name	NOISE SUPPRESSOR
Connector Type	NS03FW-CS

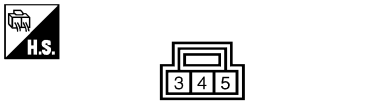

Terminal No.	Color of Wire	Signal Name [Specification]
3	P	–
5	B	–

Connector No.	B52
Connector Name	NOISE SUPPRESSOR
Connector Type	NS02FW-CS

Terminal No.	Color of Wire	Signal Name [Specification]
1	L	–
2	B	–

Connector No.	B53
Connector Name	4WAS REAR MOTOR RELAY
Connector Type	MS02FL-M2

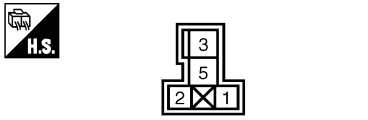

Terminal No.	Color of Wire	Signal Name [Specification]
1	SB	–
2	B	–
3	R	–
5	L	–

Connector No.	B54
Connector Name	4WAS MAIN CONTROL UNIT
Connector Type	A36FW-M4

Terminal No.	Color of Wire	Signal Name [Specification]
1	L	CAN-H
4	BR	R-ANG GND
5	W	R-ANG VCC
7	R	R-ANG SUB SIG
8	P	CAN-L
15	G	R-ANG MAIN SIG
22	GR	STOP LAMP
25	SB	R-MTR RLY
27	V	IGN
31	BR	CAN-H
32	Y	CAN-L
34	B	GND
36	LG	P/S SOL
37	P	R-MTR PWR SUPPLY
38	Y	R-MTR (RH)
39	G	R-MTR (LH)
40	B	R-MTR GND

Connector No.	B58
Connector Name	REAR WHEEL STEERING ANGLE SENSOR
Connector Type	RS04FGY-PR

Terminal No.	Color of Wire	Signal Name [Specification]
1	W	–
2	R	–
3	BR	–
4	G	–

Connector No.	E5
Connector Name	[PDM E/R (INTELLIGENT POWER DISTRIBUTION MODULE ENGINE ROOM)]
Connector Type	TH20FW-CS12-M4-1V

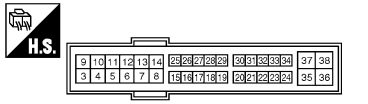

Terminal No.	Color of Wire	Signal Name [Specification]
4	V	–
5	L	–
7	R	–
11	BR	–
12	B/W	–
13	Y	–
16	LG	–
19	W	–
25	G	–
26	R	–
27	BG	–
28	L	–
30	GR	–
32	V	–
33	P	–
36	G	–

JCGWM0320G

4WAS SYSTEM

Connector No.	E41
Connector Name	ABS ACTUATOR AND ELECTRIC UNIT (CONTROL UNIT)
Connector Type	BAA42FB-AHZ4-LH

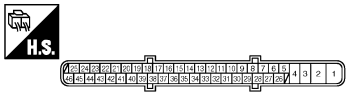

Terminal No.	Color of Wire	Signal Name [Specification]
1	B	GND
2	L	UBMR
3	R	UBVR
4	B	GND
5	Y	DS FL
6	BG	DP RL
7	BR	DP RR
9	B	DP FR
10	W	DS FR
11	V	DIAG-K
14	P	CAN-L
25	Y	BUS-L
26	LG	DP FL
27	GR	DS RL
28	G	UZ
29	P	DS RR
30	SB	BLS
31	R	ESP OFF SWITCH
35	L	CAN-H
45	B	BUS-H

Connector No.	E51
Connector Name	ICC BRAKE HOLD RELAY
Connector Type	MS02FL-M2-LC

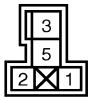

Terminal No.	Color of Wire	Signal Name [Specification]
1	B	–
2	V	–
3	R	–
5	P	–

Connector No.	E67
Connector Name	ICC SENSOR INTEGRATED UNIT
Connector Type	RS06FB-PR

Terminal No.	Color of Wire	Signal Name [Specification]
1	R	IGNITION
2	V	BRAKE HOLD RLY DRIVE SIGNAL
3	L	CAN-H
4	B	GND
6	P	CAN-L

Connector No.	E103
Connector Name	FUSE BLOCK (J/B)
Connector Type	NS16FW-CS

Terminal No.	Color of Wire	Signal Name [Specification]
1F	SB	–
2F	V	–
4F	G	–
6F	BG	–
8F	L	–
9F	R	–

Connector No.	E106
Connector Name	WIRE TO WIRE
Connector Type	TH80FW-CS16-TM4

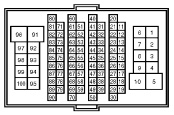

Terminal No.	Color of Wire	Signal Name [Specification]
1	GR	–
3	BG	–
5	G	–
6	BG	–
7	LG	–
10	W	–
11	V	–
12	R	–
13	L	–
14	GR	–
15	P	–
16	W	–
17	V	–
18	BG	–
19	GR	–
20	LG	–
30	R	–
31	L	–
32	BG	–
33	P	–
34	V	–
35	BR	–
36	W	–
37	Y	–
38	R	–
39	B	–
40	G	–
41	W	–
42	LG	–
43	SB	–
44	GR	–
45	BG	–
46	LG	–
47	V	–
48	P	–
49	L	–
59	B	–
66	LG	–
67	SB	–
68	R	–
69	W	–
70	G	–
80	W	–
81	P	–
82	G	–
83	V	–
84	L	–
85	BG	–
86	LG	–
87	Y	–
88	GR	–
89	W	–
91	G	–
93	GR	–
95	Y	–
96	Y	–
97	BR	–
98	SHIELD	–
99	L	–
100	P	–

Connector No.	E110
Connector Name	STOP LAMP SWITCH
Connector Type	M04FW-LC

Terminal No.	Color of Wire	Signal Name [Specification]
1	L	–
2	V	–
3	L	–
4	SB	–

JCGWM0321GI

4WAS SYSTEM

Connector No.	E117
Connector Name	WIRE TO WIRE
Connector Type	M06MW-LC

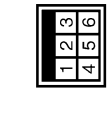

Terminal No.	Color of Wire	Signal Name [Specification]
2	L	-
3	GR	-
4	P	-
5	BR	-
6	BG	-

Connector No.	E119
Connector Name	STOP LAMP SWITCH
Connector Type	M04FW-LC

Terminal No.	Color of Wire	Signal Name [Specification]
1	L	-
2	V	-
3	Y	-
4	W	-

Connector No.	F45
Connector Name	POWER STEERING SOLENOID VALVE
Connector Type	RS02FBR-DGY

Terminal No.	Color of Wire	Signal Name [Specification]
1	LG	-
2	B	-

Connector No.	F103
Connector Name	WIRE TO WIRE
Connector Type	TK36FW-NS10

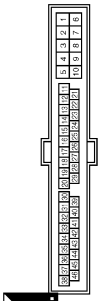

Terminal No.	Color of Wire	Signal Name [Specification]
2	G	-
3	W	-
4	R	-
5	B	-
9	Y	-
10	GR	-
19	O	-
20	Y	-
28	B	-
29	LG	-
30	R	-
31	R	-
33	B	-
34	B	-
35	L	-
36	P	-
37	Y	-
38	G	-
41	O	-
42	BR	-

Connector No.	M1
Connector Name	FUSE BLOCK (J/B)
Connector Type	NS06FW-M2

Terminal No.	Color of Wire	Signal Name [Specification]
1A	V	-
2A	LG	-
3A	L	-
4A	SB	-
5A	L	-
6A	BR	-
7A	R	-
8A	L	-

Connector No.	M2
Connector Name	FUSE BLOCK (J/B)
Connector Type	NS10FW-CS

Terminal No.	Color of Wire	Signal Name [Specification]
1B	SB	-
3B	P	-
4B	G	-
5B	BG	-
6B	Y	-
7B	L	-
8B	R	-
9B	SB	-

Connector No.	M4
Connector Name	WIRE TO WIRE
Connector Type	TH08FW-NH

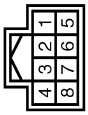

Terminal No.	Color of Wire	Signal Name [Specification]
1	G	-
2	LG	-
3	Y	-
5	P	-
6	SB	-

JCGWM0322G

4WAS SYSTEM

Connector No.	M6
Connector Name	WIRE TO WIRE
Connector Type	TH80MW-CS16-TM4

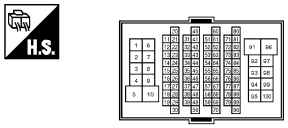

Terminal No.	Color of Wire	Signal Name [Specification]
1	BG	–
3	R	–
5	G	–
6	L	–
7	W	–
10	W	–
11	V	–
12	R	–
13	L	–
14	GR	–
15	P	–
16	W	–
17	BR	–
18	BG	–
19	L	–
20	L	–
30	R	–
31	SB	–
32	Y	–
33	BG	–
34	R	–
35	BR	–
36	SB	–
37	Y	–
38	LG	–
39	SB	–
40	P	–
41	W	–
42	LG	–
43	R	–
44	Y	– [With A/T]
44	P	– [With M/T]
45	BG	–
46	G	–
47	V	–
48	P	–
49	L	–
59	B	–
66	GR	–
67	P	–
68	L	–
69	W	–
70	BR	–
80	L	–
81	R	–
82	V	–
83	W	–
84	L	–
85	BG	–
86	W	–
87	G	–
88	B	–
89	SB	–
91	L	–
93	Y	–
95	Y	–
96	R	–
97	P	–
98	SHIELD	–
99	V	–
100	SB	–

Connector No.	M24
Connector Name	DATA LINK CONNECTOR
Connector Type	BD16FW-P

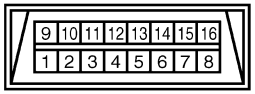

Terminal No.	Color of Wire	Signal Name [Specification]
3	LG	–
4	B	–
5	B	–
6	L	–
7	V	–
8	LG	–
11	SB	–
14	P	–
16	Y	–

Connector No.	M37
Connector Name	STEERING ANGLE SENSOR
Connector Type	TH08FW-NH

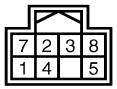

Terminal No.	Color of Wire	Signal Name [Specification]
1	L	CAN-H
2	P	CAN-L
7	B	GND
8	G	IGN

Connector No.	M41
Connector Name	4WAS FRONT CONTROL UNIT
Connector Type	SNA02FGY

Terminal No.	Color of Wire	Signal Name [Specification]
11	R	F-MTR PWR SUPPLY
12	B	F-MTR GND

Connector No.	M42
Connector Name	4WAS FRONT CONTROL UNIT
Connector Type	TK22FW

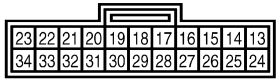

Terminal No.	Color of Wire	Signal Name [Specification]
14	V	BUS-L
15	G	IGN
18	B	GND
25	LG	BUS-H
34	B	GND

Connector No.	M53
Connector Name	COMBINATION METER
Connector Type	SAB40FW

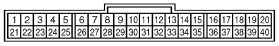

Terminal No.	Color of Wire	Signal Name [Specification]
1	V	BATTERY
2	LG	COMMUNICATION SIGNAL (METER->AMP.)
3	GR	COMMUNICATION SIGNAL (AMP.->METER)
5	B	GROUND
6	W	ALTERNATOR SIGNAL
7	LG	AIR BAG
10	P	SECURITY
15	B	GROUND
16	W	METER CONTROL SWITCH GROUND
18	GR	ILL GND
19	B	ILL GND
20	R	ILL
21	GR	IGNITION POWER SUPPLY
22	B	GROUND
24	BR	COMMUNICATION SIGNAL (LCD->AMP.)
25	Y	COMMUNICATION SIGNAL (AMP.->LCD)
26	G	VEHICLE SPEED (8-PULSE)
27	BG	PARKING BRAKE SWITCH
28	L	BRAKE FLUID LEVEL SWITCH
29	LG	SEAT BELT BUCKLE SW (DRIVER SIDE)
30	G	SEAT BELT
31	L	WASHER LEVEL SWITCH
33	R	ILLUMINATION CONTROL
36	LG	SELECT SWITCH
37	SB	ENTER SWITCH
38	L	TRIP A/B RESET SWITCH
39	P	ILLUMINATION CONTROL SWITCH (-)
40	BG	ILLUMINATION CONTROL SWITCH (+)

JCGWM0323GI

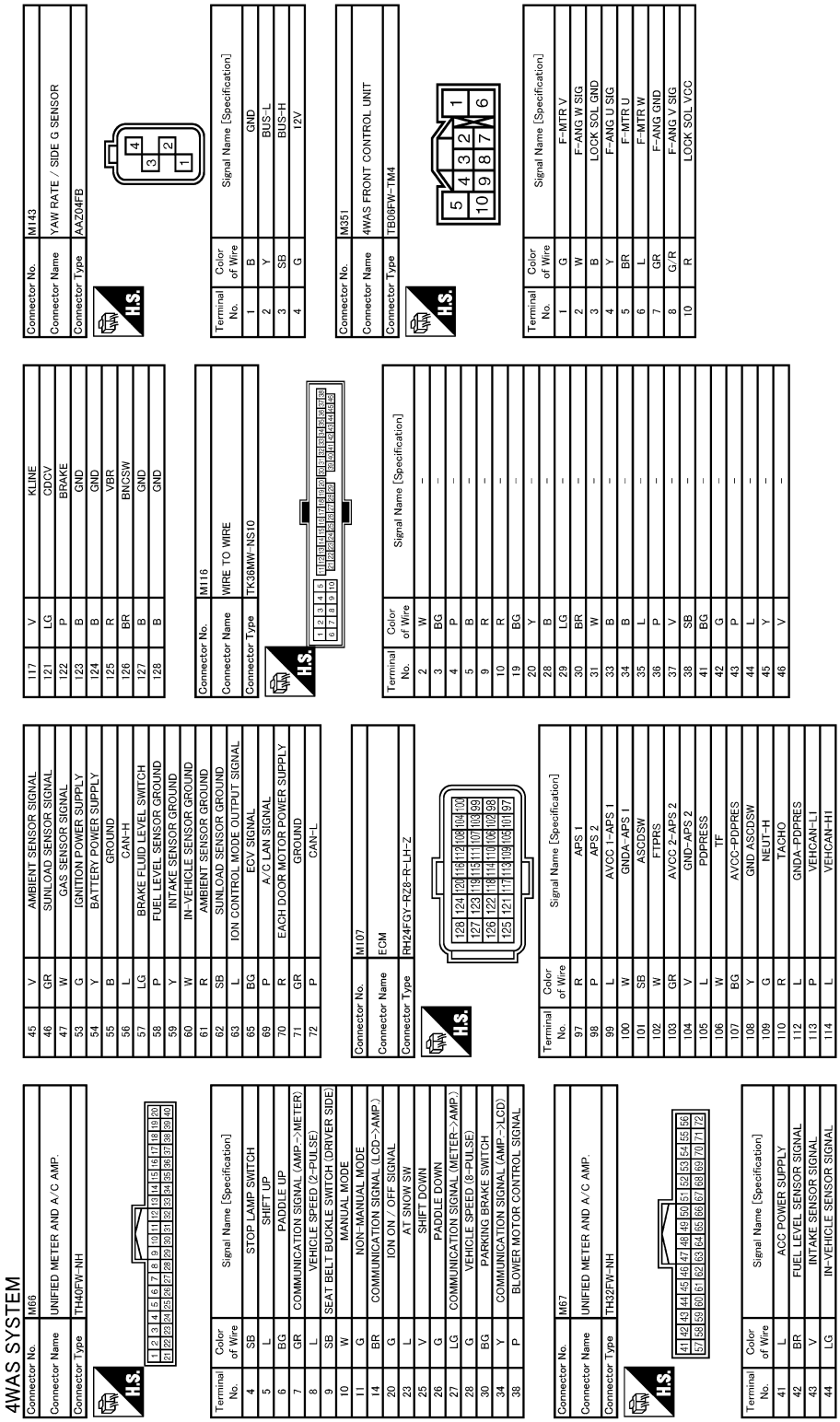

JCGWM0324G

Fail Safe

INFOID:0000000005650483

4WAS system (front)

- 4WAS system enters in the fail-safe mode (4WAS system is stopped), and 4WAS warning lamp turns ON if an error is detected in 4WAS system (4WAS front control unit and 4WAS main control unit) component part.
- 4WAS system enters in the protection function mode (4WAS system is temporarily stopped) if 4WAS system continues the heavy load condition and the overheat condition.4WAS system reactivates automatically if the

heavy load condition and the overheat condition are resolved.4WAS warning lamp continues turning OFF in the protection function mode.

Mode	Warning lamp	DTC	Detected area (Error area)	Error area and root cause
Protection function	Turn-OFF	—	4WAS front control unit	4WAS front control unit overheat condition
	Turn-OFF	—	4WAS front actuator	4WAS front actuator overheat condition
	Turn-OFF	—	4WAS front control unit	4WAS front control unit heavy load condition
Fail-safe	Turn-ON	C1621 C1622	4WAS front actuator	4WAS front control unit or 4WAS front motor error is detected.
	Turn-ON	C1627	4WAS front actuator	4WAS front actuator error
	Turn-ON	C1628	Front wheel steering angle sensor	Front wheel steering angle sensor error
	Turn-ON	C1631 C1632	4WAS front control unit	4WAS front control unit or 4WAS front control unit power supply error is detected.
	Turn-OFF	C1633	4WAS front control unit	4WAS front control unit error
	Turn-ON	C1651	4WAS front control unit	4WAS front control unit or the ignition power supply error is detected.
	Turn-ON	C1652	4WAS front control unit	4WAS front control unit or 4WAS front motor power supply error is detected.
	Turn-ON	C1654	4WAS front control unit	The main relay power supply inside 4WAS front control unit error is detected.
	Turn-ON	C1655	4WAS front control unit	4WAS front control unit or 4WAS front motor power supply error is detected.
	Turn-ON	C1661	4WAS front lock solenoid valve (lock structure)	4WAS front control unit or 4WAS front lock solenoid valve error is detected.
	Turn-ON	C1667	4WAS front actuator	The inside 4WAS front actuator error is detected.
	Turn-ON	C1668	4WAS front actuator	The inside 4WAS front actuator error is detected.
	Turn-ON	C1669	4WAS front actuator	The power steering oil pressure or the inside 4WAS front actuator error is detected.
	Turn-ON	C1671	4WAS front actuator	4WAS front actuator adjustment is not performed.
	Turn-ON	C1672	4WAS main actuator	4WAS front actuator adjustment is incomplete.
	Turn-ON	C1684 C1685 U1000 U1002 U1010	4WAS communication line*/ 4WAS main control unit/4WAS front control unit	4WAS communication line*/4WAS main control unit/4WAS front control unit error
	Turn-ON	C1686	4WAS main control unit	4WAS main control unit fail-safe mode

*: Communication line between 4WAS front control unit and 4WAS main control unit.

DTC Inspection Priority Chart

INFOID:0000000005650484

If some DTCs are displayed at the same time, perform inspections one by one based on the following priority chart.

Priority	Detected items (DTC)
1	• U1000 CANCOMM CIRCUIT* • U1002 SYSTEM COMM(CAN)* • U1010 CONTROL UNIT(CAN)*
2	• C1671 ACT ADJ NOT PRFRM • C1672 INCOMP ACTUATR ADJ
3	• C1631 CONTROL UNIT • C1632 CONTROL UNIT
4	• C1651 IGN POWER SUPPLY • C1652 MOTOR POWER SUPPLY • C1654 ACTUATOR RELAY • C1655 PRE-DRIVER
5	• C1621 ACTUATOR • C1622 ACTUATOR • C1627 ACTUATOR • C1628 ACTUATOR • C1661 LOCK SOLENOID • C1667 LOCK INSERTION • C1668 LOCK HLD GAP DETCT • C1669 INCOMP LOCK RELEAS
6	• C1684 4WAS MAIN ECU COMM • C1685 4WAS MAIN ECU COMM • C1686 4WAS MAIN ECU
7	• C1633 CONTROL UNIT

*: 4WAS communication line

DTC Index

INFOID:0000000005650485

DTC	Items (CONSULT-III screen terms)	Reference
C1621	ACTUATOR	STC-49, "DTC Logic"
C1622	ACTUATOR	STC-49, "DTC Logic"
C1627	ACTUATOR	STC-52, "DTC Logic"
C1628	ACTUATOR	STC-54, "DTC Logic"
C1631	CONTROL UNIT	STC-57, "DTC Logic"
C1632	CONTROL UNIT	STC-57, "DTC Logic"
C1633	CONTROL UNIT	STC-60, "DTC Logic"
C1651	IGN POWER SUPPLY	STC-62, "DTC Logic"
C1652	MOTOR POWER SUPPLY	STC-64, "DTC Logic"
C1654	ACTUATOR RELAY	STC-66, "DTC Logic"
C1655	PRE-DRIVER	STC-68, "DTC Logic"
C1661	LOCK SOLENOID	STC-70, "DTC Logic"
C1667	LOCK INSERTION	STC-72, "DTC Logic"
C1668	LOCK HLD GAP DETCT	STC-74, "DTC Logic"
C1669	INCOMP LOCK RELEAS	STC-75, "DTC Logic"
C1671	ACT ADJ NOT PRFRM	STC-76, "DTC Logic"
C1672	INCOMP ACTUATR ADJ	STC-78, "DTC Logic"
C1684	4WAS MAIN ECU COMM	STC-79, "DTC Logic"
C1685	4WAS MAIN ECU COMM	STC-79, "DTC Logic"
C1686	4WAS MAIN ECU	STC-83, "DTC Logic"
U1000	CAN COMM CIRCUIT	STC-84, "DTC Logic"

DTC	Items (CONSULT-III screen terms)	Reference
U1002	SYSTEM COMM(CAN)	STC-84, "DTC Logic"
U1010	CONTROL UNIT (CAN)	STC-88, "DTC Logic"

4WAS MAIN CONTROL UNIT

Reference Value

INFOID:0000000005650486

VALUES ON THE DIAGNOSIS TOOL

CONSULT-III MONITOR ITEM

Monitor item	Condition	Value/Status
VHCL SPEED SE	Vehicle stopped	0 km/h (0 MPH)
	Start the engine. Wait a minute. Drive the vehicle. **CAUTION:** **Check air pressure of tire under standard conditions.**	Approximately equal to the indication on speedometer (Inside of ±10%)
STEERING ANG	Steering wheel turned right	Approx. 0 – R550°
	Straight-ahead	Approx. 0°
	Steering wheel turned left	Approx. 0 – L550°
ENGINE SPEED	Engine stopped	0 rpm
	Engine running (Engine speed: 400 rpm or more)	Approximately equal to the indication on tachometer
STR ANGL SPD	The steering wheel is not steered.	0 deg/s
	The steering wheel is steering.	1 – 3,000 deg/s
POWER STR SOL	Vehicle speed: 0 km/h (0 MPH) (Engine is running)	Approx. 1.10 A
	Vehicle speed: 100 km/h (62 MPH)	Approx. 0.42 A
RR ST ANG-MAI	4WAS rear actuator turns right completely	Approx. 4.4 V
	4WAS rear actuator is neutral	Approx. 2.4 V
	4WAS rear actuator turns left completely	Approx. 0.4 V
RR ST ANG-SUB	4WAS rear actuator turns right completely	Approx. 4.4 V
	4WAS rear actuator is neutral	Approx. 2.6 V
	4WAS rear actuator turns left completely	Approx. 0.4 V
RR ST ANG-VOL	Ignition switch: ON	Approx. 5 V
C/U VOLTAGE	Ignition switch: ON	Battery voltage
MOTOR VOLTAGE	Ignition switch: ON	Battery voltage
MOTOR CURRENT	4WAS rear motor running	0 – 20 A
MTR CRNT OPE	4WAS rear actuator neutral condition and vehicle straight-ahead position.	Approx. –2 – 2 A
	4WAS rear motor running	Approx. –20 – 20 A
RR ANGLE OPE	4WAS rear actuator turned right	Approx. 0 – 1 deg
	4WAS rear actuator is neutral	Approx. 0 deg
	4WAS rear actuator turned left	Approx. 0 – –1 deg
FR ANGLE OPE	Steering wheel turned to the right (with vehicle stopped).	Approx. 0 – R60°
	Straight-ahead	Approx. 0°
	Steering wheel turned to the left (with vehicle stopped).	Approx. 0 – L60°
STOP LAMP SW	Brake pedal: Depressed	On
	Brake pedal: Released	Off
HICAS RELAY	Ignition switch: ON	On
FAIL SAFE	Fail-safe condition	On
	Normal	Off
WARNING LAMP	4WAS warning lamp: ON	On
	4WAS warning lamp: OFF	Off

Monitor item	Condition	Value/Status
FRNT ECU FAIL	4WAS front control unit fail-safe mode	On
	Normal	Off
FRNT ECU EX	4WAS front control unit enters in the protection function mode	On
	Normal	Off

TERMINAL LAYOUT

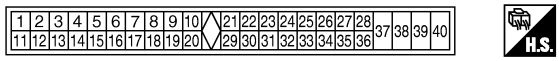

SGIA1449E

PHYSICAL VALUES

Terminal No. +	Terminal No. -	Wire color	Description: Signal name	Description: Input/Output	Condition	Value (Approx.)
1	—	L	CAN-H	—	—	—
4	Ground	BR	Rear wheel steering angle sensor ground	—	Always	0 V
5	Ground	W	Rear wheel steering angle sensor power supply	Output	Ignition switch: ON	5 V
					Ignition switch: OFF	0 V
7	Ground	R	Rear wheel steering angle sensor (sub) output voltage	Output	4WAS rear actuator assembly turns right completely.	4.4 V
					4WAS rear actuator assembly is neutral	2.6 V
					4WAS rear actuator assembly turns left completely.	0.4 V
8	—	P	CAN-L	—	—	—
15	Ground	G	Rear wheel steering angle sensor (main) output voltage	Output	4WAS rear actuator assembly turns right completely.	4.4 V
					4WAS rear actuator assembly is neutral	2.4 V
					4WAS rear actuator assembly turns left completely.	0.4 V
22	Ground	GR	Stop lamp switch	Input	Brake pedal: Depressed	Battery voltage
					Brake pedal: Released	0 V
25	Ground	SB	4WAS rear motor relay	Input	Ignition switch: ON	Battery voltage
					Ignition switch: OFF	0 V
27	Ground	V	Ignition switch	Input	Ignition switch: ON	Battery voltage
					Ignition switch: OFF	0 V
31	—	BR	4WAS communication-H	—	—	—
32	—	Y	4WAS communication-L	—	—	—

Terminal No.		Wire color	Description		Condition	Value (Approx.)
+	-		Signal name	Input/ Output		
34	Ground	B	Ground	—	Always	0 V
36	Ground	LG	Power steering solenoid valve	Output	Vehicle speed: 0 km/h (0 MPH) (Engine is running)	4.4 – 6.6 V
					Vehicle speed: 100 km/h (62 MPH)	2.4 – 3.6 V
37	Ground	P	4WAS rear motor power supply	Input	Ignition switch: ON	Battery voltage
					Ignition switch: OFF	0 V
38	Ground	Y	4WAS rear motor output voltage (right)	Output	While 4WAS rear motor activates rightward	Battery voltage
					While 4WAS rear motor activates leftward	0 V
39	Ground	G	4WAS rear motor output voltage (left)	Output	While 4WAS rear motor activates rightward	0 V
					While 4WAS rear motor activates leftward	Battery voltage
40	Ground	B	4WAS rear motor ground	—	Always	0 V

CAUTION:

When using circuit tester to measure voltage for inspection, never forcibly extend any connector terminals.

Wiring Diagram - 4WAS SYSTEM -

INFOID:0000000005899390

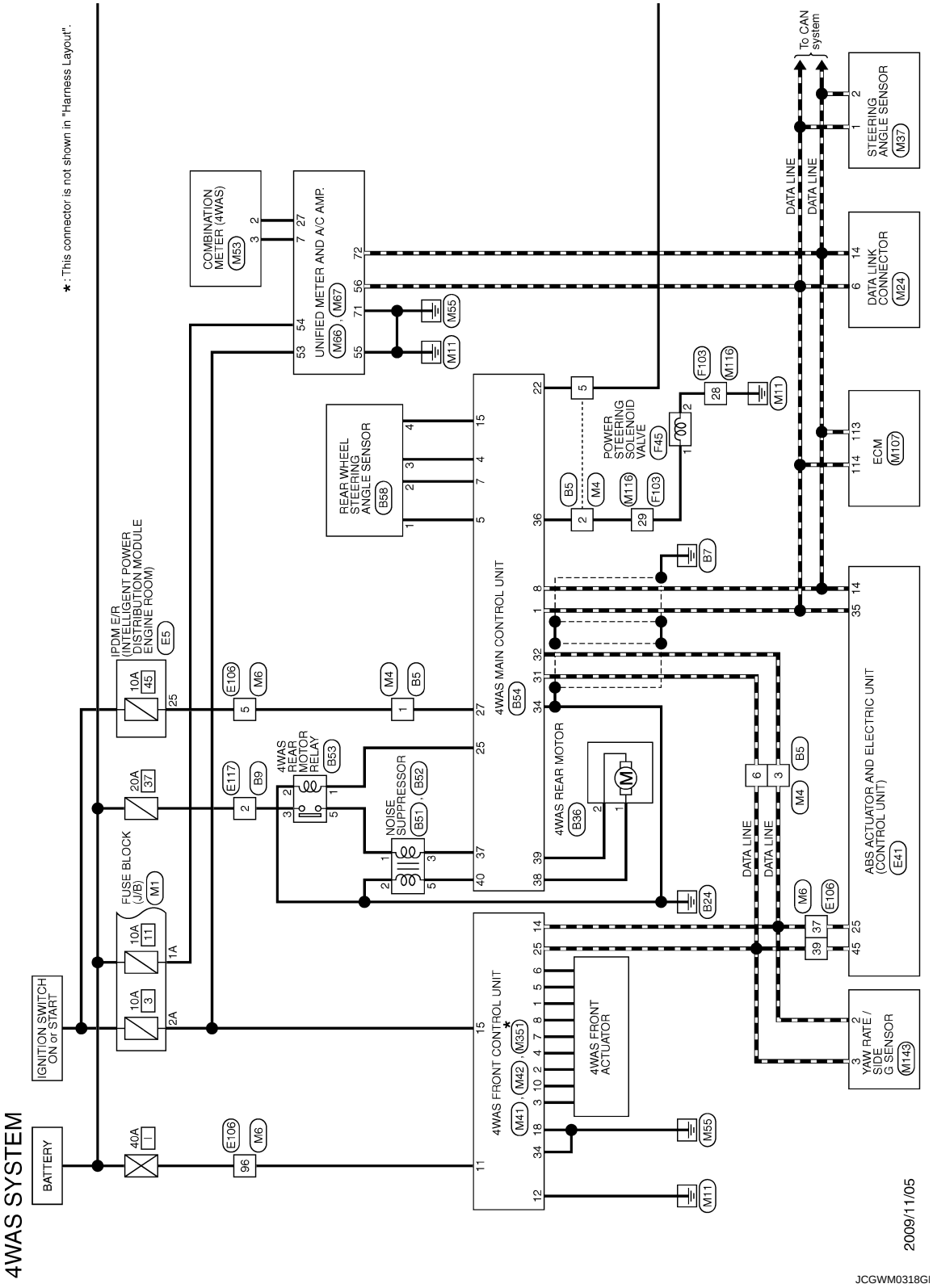

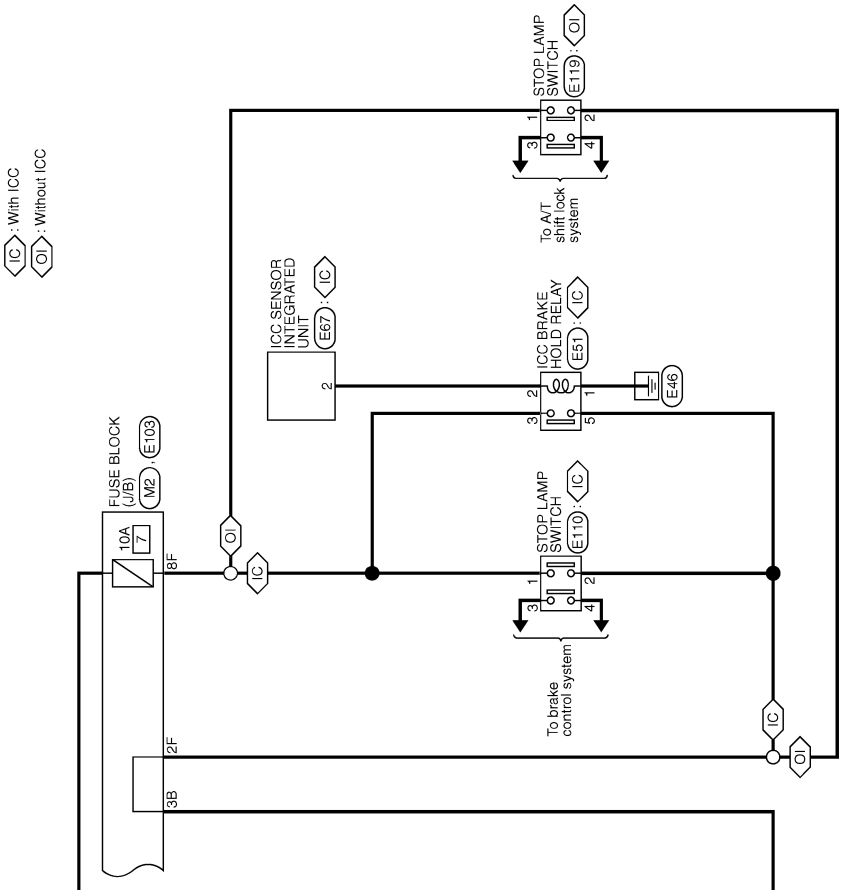
IC : With ICC
OI : Without ICC
FUSE BLOCK (J/B)
M2
E103
10A
7
8F
2F
3B
OI
IC
ICC SENSOR INTEGRATED UNIT
E67
IC
2
STOP LAMP SWITCH
E110
IC
1
2
3
4
To brake control system
ICC BRAKE HOLD RELAY
E51
IC
1
2
3
5
E46
STOP LAMP SWITCH
E119
OI
1
2
3
4
To A/T shift lock system
IC
OI

JCGWM0319G

4WAS SYSTEM

Connector No.	B5
Connector Name	WIRE TO WIRE
Connector Type	TH08MW-NH

Terminal No.	Color of Wire	Signal Name [Specification]
1	V	–
2	LG	–
3	Y	–
5	GR	–
6	BR	–

Connector No.	B9
Connector Name	WIRE TO WIRE
Connector Type	M06FW-LC

Terminal No.	Color of Wire	Signal Name [Specification]
2	R	–
3	GR	–
4	LG	–
5	BR	–
6	BG	–

Connector No.	B36
Connector Name	4WAS REAR MOTOR
Connector Type	X02FB

Terminal No.	Color of Wire	Signal Name [Specification]
1	Y	–
2	G	–

Connector No.	B51
Connector Name	NOISE SUPPRESSOR
Connector Type	NS03FW-CS

Terminal No.	Color of Wire	Signal Name [Specification]
3	P	–
5	B	–

Connector No.	B52
Connector Name	NOISE SUPPRESSOR
Connector Type	NS02FW-CS

Terminal No.	Color of Wire	Signal Name [Specification]
1	L	–
2	B	–

Connector No.	B53
Connector Name	4WAS REAR MOTOR RELAY
Connector Type	MS02FL-M2

Terminal No.	Color of Wire	Signal Name [Specification]
1	SB	–
2	B	–
3	R	–
5	L	–

Connector No.	B54
Connector Name	4WAS MAIN CONTROL UNIT
Connector Type	A38FW-M4

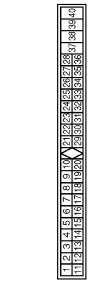

Terminal No.	Color of Wire	Signal Name [Specification]
1	L	CAN-H
4	BR	R-ANG GND
5	W	R-ANG VCC
7	R	R-ANG SUB SIG
8	P	CAN-L
15	G	R-ANG MAIN SIG
22	GR	STOP LAMP
25	SB	R-MTR RLY
27	V	IGN
31	BR	CAN-H
32	Y	CAN-L
34	B	GND
36	LG	P/S SOL
37	P	R-MTR PWR SUPPLY
38	Y	R-MTR (RH)
39	G	R-MTR (LH)
40	B	R-MTR GND

Connector No.	B58
Connector Name	REAR WHEEL STEERING ANGLE SENSOR
Connector Type	RS04FGY-PR

Terminal No.	Color of Wire	Signal Name [Specification]
1	W	–
2	R	–
3	BR	–
4	G	–

Connector No.	E5
Connector Name	IPDM E/R (INTELLIGENT POWER DISTRIBUTION MODULE ENGINE ROOM)
Connector Type	TH20FW-CS12-M4-1V

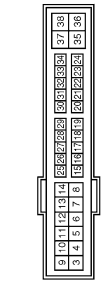

Terminal No.	Color of Wire	Signal Name [Specification]
4	V	–
5	L	–
7	R	–
11	BR	–
12	B/W	–
13	Y	–
16	LG	–
19	W	–
25	G	–
26	R	–
27	BG	–
28	L	–
30	GR	–
32	V	–
33	P	–
36	G	–

JCGWM0320GI

4WAS SYSTEM

Connector No.	E41
Connector Name	ABS ACTUATOR AND ELECTRIC UNIT (CONTROL UNIT)
Connector Type	BAA42FB-AHZ4-LH

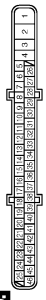

Terminal No.	Color of Wire	Signal Name [Specification]
1	B	GND
2	L	UBMR
3	R	UBVR
4	B	GND
5	Y	DS FL
6	BG	DP RL
7	BR	DP FR
9	B	DP FR
10	W	DS FR
11	V	DIAG-K
14	P	CAN-L
25	Y	BUS-L
26	LG	DP FL
27	GR	DS RL
28	G	UZ
29	P	DS RR
30	SB	BLS
31	R	ESP OFF SWITCH
35	L	CAN-H
45	B	BUS-H

Connector No.	E51
Connector Name	ICC BRAKE HOLD RELAY
Connector Type	MS02FL-M2-LC

Terminal No.	Color of Wire	Signal Name [Specification]
1	B	-
2	V	-
3	R	-
5	P	-

Connector No.	E67
Connector Name	ICC SENSOR INTEGRATED UNIT
Connector Type	RS06FB-PR

Terminal No.	Color of Wire	Signal Name [Specification]
1	R	IGNITION
2	V	BRAKE HOLD RLY DRIVE SIGNAL
3	L	CAN-H
4	B	GND
6	P	CAN-L

Connector No.	E103
Connector Name	FUSE BLOCK (J/B)
Connector Type	NS16FW-CS

Terminal No.	Color of Wire	Signal Name [Specification]
1F	SB	-
2F	V	-
4F	G	-
6F	BG	-
8F	L	-
9F	R	-

Connector No.	E106
Connector Name	WIRE TO WIRE
Connector Type	TH80FW-CS16-TM4

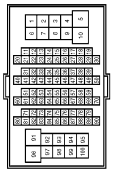

Terminal No.	Color of Wire	Signal Name [Specification]
1	GR	-
3	BG	-
5	G	-
6	BG	-
7	LG	-
10	W	-
11	V	-
12	R	-
13	L	-
14	GR	-
15	P	-
16	W	-
17	V	-
18	BG	-
19	GR	-
20	LG	-
30	R	-
31	L	-
32	BG	-
33	P	-
34	V	-
35	BR	-
36	W	-
37	Y	-
38	R	-
39	B	-
40	G	-
41	W	-
42	LG	-
43	SB	-
44	GR	-
45	BG	-
46	LG	-
47	V	-
48	P	-
49	L	-
59	B	-
66	LG	-
67	SB	-
68	R	-
69	W	-
70	G	-
80	W	-
81	P	-
82	G	-
83	V	-
84	L	-
85	BG	-
86	LG	-
87	Y	-
88	GR	-
89	W	-
91	G	-
93	GR	-
95	Y	-
96	Y	-
97	BR	-
98	SHIELD	-
99	L	-
100	P	-

Connector No.	E110
Connector Name	STOP LAMP SWITCH
Connector Type	M04FW-LC

Terminal No.	Color of Wire	Signal Name [Specification]
1	L	-
2	V	-
3	L	-
4	SB	-

JCGWM0321G

4WAS SYSTEM

Connector No.	E117
Connector Name	WIRE TO WIRE
Connector Type	M06MW-LC

Terminal No.	Color of Wire	Signal Name [Specification]
2	L	–
3	GR	–
4	P	–
5	BR	–
6	BG	–

Connector No.	E119
Connector Name	STOP LAMP SWITCH
Connector Type	M04FW-LC

Terminal No.	Color of Wire	Signal Name [Specification]
1	L	–
2	V	–
3	Y	–
4	W	–

Connector No.	F45
Connector Name	POWER STEERING SOLENOID VALVE
Connector Type	RS02FBR-DGY

Terminal No.	Color of Wire	Signal Name [Specification]
1	LG	–
2	B	–

Connector No.	F103
Connector Name	WIRE TO WIRE
Connector Type	TK36FW-NS10

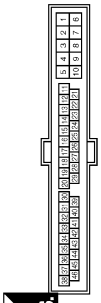

Terminal No.	Color of Wire	Signal Name [Specification]
2	G	–
3	W	–
4	R	–
5	B	–
9	Y	–
10	GR	–
19	O	–
20	Y	–
28	B	–
29	LG	–
30	R	–
31	R	–
33	B	–
34	B	–
35	L	–
36	P	–
37	Y	–
38	G	–
41	O	–
42	BR	–

Connector No.	M4
Connector Name	WIRE TO WIRE
Connector Type	TH08FW-NH

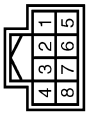

Terminal No.	Color of Wire	Signal Name [Specification]
1	G	–
2	LG	–
3	Y	–
5	P	–
6	SB	–

Terminal No.	Color of Wire	Signal Name [Specification]
43	P	–
44	L	–
45	G	–
46	V	–

Connector No.	M1
Connector Name	FUSE BLOCK (J/B)
Connector Type	NS06FW-M2

Terminal No.	Color of Wire	Signal Name [Specification]
1A	V	–
2A	LG	–
3A	L	–
4A	SB	–
5A	L	–
6A	BR	–
7A	R	–
8A	L	–

Connector No.	M2
Connector Name	FUSE BLOCK (J/B)
Connector Type	NS10FW-CS

Terminal No.	Color of Wire	Signal Name [Specification]
1B	SB	–
3B	P	–
4B	G	–
5B	BG	–
6B	Y	–
7B	L	–
8B	R	–
9B	SB	–

JCGWM0322GI

4WAS SYSTEM

Connector No.	M6
Connector Name	WIRE TO WIRE
Connector Type	TH80MW-CS16-TM4

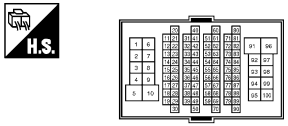

Terminal No.	Color of Wire	Signal Name [Specification]
1	BG	–
3	R	–
5	G	–
6	L	–
7	W	–
10	W	–
11	V	–
12	R	–
13	L	–
14	GR	–
15	P	–
16	W	–
17	BR	–
18	BG	–
19	L	–
20	L	–
30	R	–
31	SB	–
32	Y	–
33	BG	–
34	R	–
35	BR	–
36	SB	–
37	Y	–
38	LG	–
39	SB	–
40	P	–
41	W	–
42	LG	–
43	R	–
44	Y	– [With A/T]
44	P	– [With M/T]
45	BG	–
46	G	–
47	V	–
48	P	–
49	L	–
59	B	–
66	GR	–
67	P	–
68	L	–
69	W	–
70	BR	–
80	L	–
81	R	–
82	V	–
83	W	–
84	L	–
85	BG	–
86	W	–
87	G	–
88	B	–
89	SB	–
91	L	–
93	Y	–
95	Y	–
96	R	–
97	P	–
98	SHIELD	–
99	V	–
100	SB	–

Connector No.	M24
Connector Name	DATA LINK CONNECTOR
Connector Type	BD16FW-P

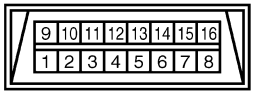

Terminal No.	Color of Wire	Signal Name [Specification]
3	LG	–
4	B	–
5	B	–
6	L	–
7	V	–
8	LG	–
11	SB	–
14	P	–
16	Y	–

Connector No.	M37
Connector Name	STEERING ANGLE SENSOR
Connector Type	TH08FW-NH

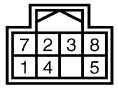

Terminal No.	Color of Wire	Signal Name [Specification]
1	L	CAN-H
2	P	CAN-L
7	B	GND
8	G	IGN

Connector No.	M41
Connector Name	4WAS FRONT CONTROL UNIT
Connector Type	SNA02FGY

Terminal No.	Color of Wire	Signal Name [Specification]
11	R	F-MTR PWR SUPPLY
12	B	F-MTR GND

Connector No.	M42
Connector Name	4WAS FRONT CONTROL UNIT
Connector Type	TK22FW

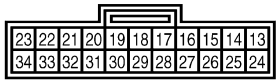

Terminal No.	Color of Wire	Signal Name [Specification]
14	V	BUS-L
15	G	IGN
18	B	GND
25	LG	BUS-H
34	B	GND

Connector No.	M53
Connector Name	COMBINATION METER
Connector Type	SAB40FW

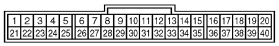

Terminal No.	Color of Wire	Signal Name [Specification]
1	V	BATTERY
2	LG	COMMUNICATION SIGNAL (METER->AMP.)
3	GR	COMMUNICATION SIGNAL (AMP.->METER)
5	B	GROUND
6	W	ALTERNATOR SIGNAL
7	LG	AIR BAG
10	P	SECURITY
15	B	GROUND
16	W	METER CONTROL SWITCH GROUND
18	GR	ILL GND
19	B	ILL GND
20	R	ILL
21	GR	IGNITION POWER SUPPLY
22	B	GROUND
24	BR	COMMUNICATION SIGNAL (LCD->AMP.)
25	Y	COMMUNICATION SIGNAL (AMP.->LCD)
26	G	VEHICLE SPEED (8-PULSE)
27	BG	PARKING BRAKE SWITCH
28	L	BRAKE FLUID LEVEL SWITCH
29	LG	SEAT BELT BUCKLE SW (DRIVER SIDE)
30	G	SEAT BELT
31	L	WASHER LEVEL SWITCH
33	R	ILLUMINATION CONTROL
36	LG	SELECT SWITCH
37	SB	ENTER SWITCH
38	L	TRIP A/B RESET SWITCH
39	P	ILLUMINATION CONTROL SWITCH (-)
40	BG	ILLUMINATION CONTROL SWITCH (+)

JCGWM0323G

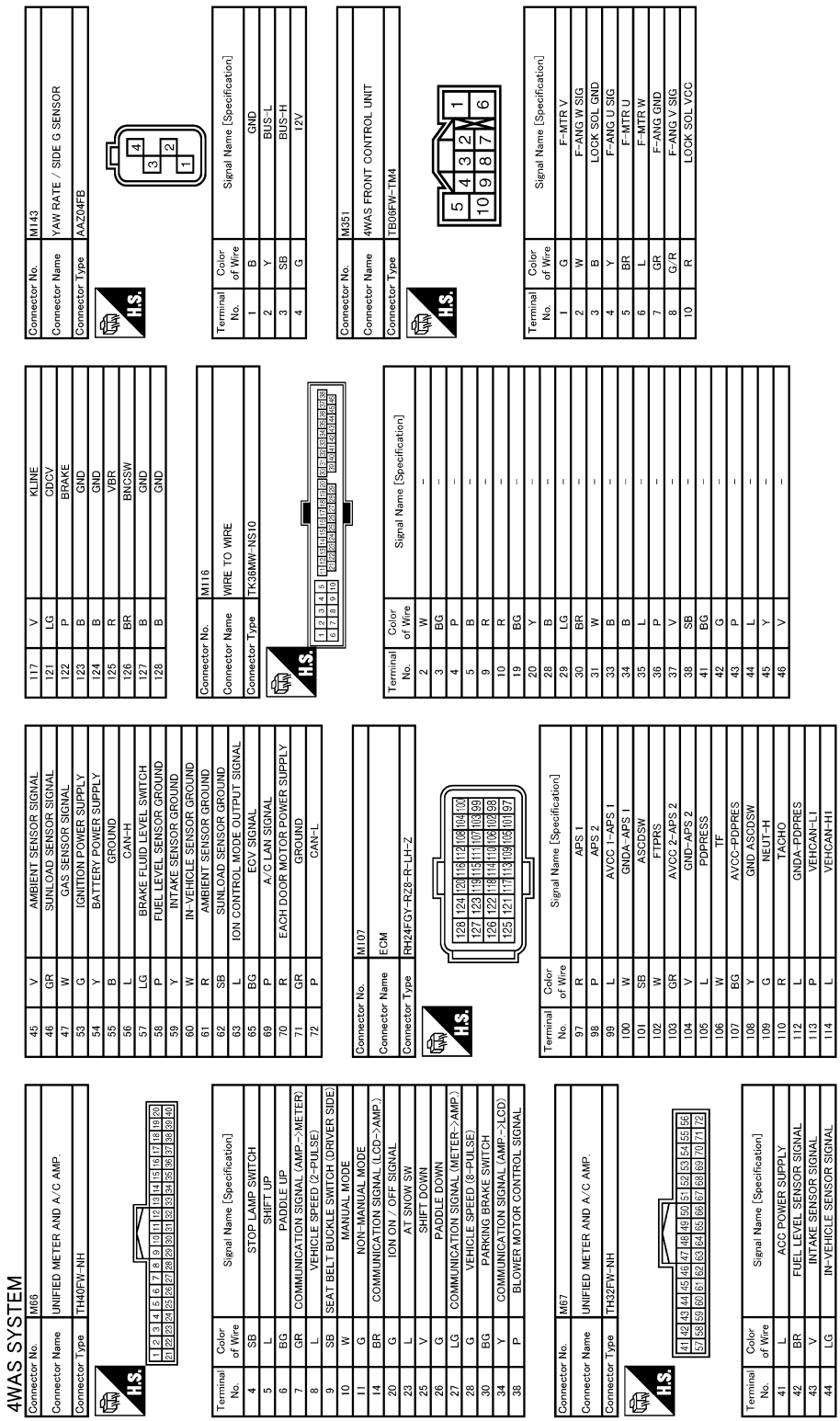

JCGWM0324GI

Fail Safe

INFOID:0000000005650488

4WAS system (Main)

- 4WAS system enters in the fail-safe mode (4WAS system stopped) and 4WAS warning lamp turns ON if an error is detected in 4WAS system (4WAS main control unit) component part.
- 4WAS system enters in the protection function mode (4WAS system temporarily stopped) if 4WAS system continues the heavy load condition or the sensor self-check condition. (4WAS system reactivates automati-

cally if the heavy load condition and the self-check condition are resolved.) 4WAS warning lamp stays OFF in the protection function mode.

Mode	Warning lamp	DTC	Detected area (Error area)	Error area and root cause
Fail-safe	Turn-ON	C1900 C1901 C1905 C1906 C1907 C1908 C1922 C1925 C1927 C1928 C1933	4WAS main control unit	4WAS main control unit error
	Turn-ON	C1902 C1903 C1904 C1910 C1913	4WAS rear motor	4WAS rear motor error
	Turn-ON	C1909	4WAS main control unit	4WAS main control unit
	Turn-ON	C1911 C1912	4WAS rear motor	4WAS rear motor power supply error
	Turn-ON	C1914	Rear wheel steering sensor	Rear wheel steering sensor power supply error
	Turn-ON	C1915 C1916	Rear wheel steering sensor	Rear wheel steering sensor output voltage error
	Turn-OFF	C1917	Rear wheel steering sensor	Rear wheel steering sensor (main and sub) output signal value error signal
	Turn-ON	C1918	Rear wheel steering sensor	Rear wheel steering sensor (main and sub) output signal error
	Turn-ON	C1919	ABS actuator and electric unit (control unit)	Vehicle speed signal error
	Turn-ON	C1920 C1923 C1924	Steering angle sensor	Steering angle sensor input signal error
	Turn-ON	C1921	ECM	Engine speed signal error
	Turn-ON	C1926	Steering angle sensor	Steering angle sensor error
	Turn-ON	C1930	4WAS front control unit	4WAS front control unit fail-safe mode
	Turn-ON	C1931	4WAS communication line*/ 4WAS front control unit/4WAS main control unit	4WAS communication line*/4WAS front control unit/4WAS main control unit error
	Turn-ON	C1932	Steering angle sensor	Steering angle sensor input signal error
	Turn-ON	U1000	CAN communication line*	CAN communication error
	Turn-ON	U1010	CAN communication line*/ 4WAS main control unit/ECM/ ABS actuator and electric unit (control unit)	CAN communication line/4WAS main control unit/ECM/ABS actuator and electric unit (control unit) error

*: Communication line between 4WAS front control unit and 4WAS main control unit.

EPS system

- EPS system (4WAS main control unit) enters the fail-safe mode (that allows the steering force to be controlled without impairing the drive ability) if the input from each sensor is not within the specified range. Then, 4WAS warning lamp turns ON.

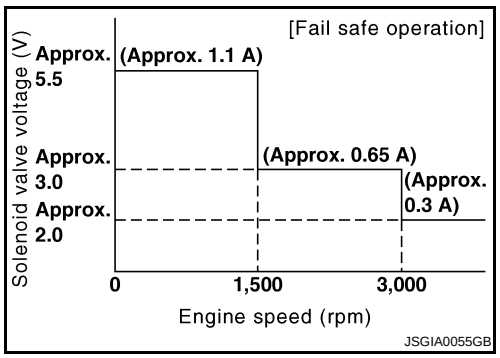

Mode	Warning lamp	DTC	Detected area (Error area)	Error part and root cause
Fail-safe	Turn-ON	C1919	ABS actuator and electronic unit (control unit)	Vehicle speed signal error

DTC Inspection Priority Chart

INFOID:0000000005650489

If some DTCs are displayed at the same time, perform inspections one by one based on the following priority chart.

Priority	Detected items (DTC)
1	• U1000 CAN COMM • U1010 CONTROL UNIT (CAN)
2	• C1900 CONTROL UNIT [ABNORMAL1] • C1901 CONTROL UNIT [ABNORMAL2] • C1905 CONTROL UNIT [ABNORMAL3] • C1906 CONTROL UNIT [ABNORMAL5] • C1907 CONTROL UNIT [ABNORMAL4] • C1908 CONTROL UNIT [ABNORMAL7] • C1909 CONTROL UNIT [ABNORMAL6] • C1922 CONTROL UNIT [ABNORMAL8] • C1925 AD CONVERTER • C1927 CONTROL UNIT [ABNORMAL5] • C1928 CONTROL UNIT [ABNORMAL9] • C1933 CONTROL UNIT
3	• C1902 MOTOR OUTPUT [REV CURRENT] • C1903 MOTOR OUTPUT [NO CURRENT] • C1904 MOTOR OUTPUT [OVERCURRENT] • C1910 MOTOR OUTPUT [MOTOR LOCK] • C1911 MOTOR VOLTAGE [LOW VOLTAGE] • C1912 MOTOR VOLTAGE [BAD OBSTRCT] • C1913 MOTOR OUTPUT [ABNORML SIG] • C1914 RR ST ANGLE SENSOR [ABNORML VOL] • C1915 RR ST ANGLE SENSOR [MAIN SIGNAL] • C1916 RR ST ANGLE SENSOR [SUB SIGNAL] • C1917 RR ST ANGLE SENSOR [OFFSET SIG1] • C1918 RR ST ANGLE SENSOR [OFFSET SIG2]
4	• C1919 VEHICLE SPEED SEN [NO SIGNAL] • C1920 STEERING ANGLE SEN [NO SIGNAL] • C1921 ENG REV SIGNAL • C1923 STEERING ANGLE SEN [NO CHANGE] • C1924 STEERING ANGLE SEN [NO NEUT STATE] • C1926 STEERING ANGLE SEN • C1932 STEERING ANGLE SEN
5	• C1930 4WAS FRONT ECU • C1931 4WAS FRONT ECU COMM

DTC Index

INFOID:0000000005650490

DTC	Items (CONSULT-III screen terms)	Reference
C1900	CONTROL UNIT [ABNORMAL1]	STC-89, "DTC Logic"
C1901	CONTROL UNIT [ABNORMAL2]	STC-89, "DTC Logic"
C1902	MOTOR OUTPUT [REV CURRENT]	STC-91, "DTC Logic"
C1903	MOTOR OUTPUT [NO CURRENT]	STC-91, "DTC Logic"
C1904	MOTOR OUTPUT [OVERCURRENT]	STC-91, "DTC Logic"
C1905	CONTROL UNIT [ABNORMAL3]	STC-94, "DTC Logic"
C1906	CONTROL UNIT [ABNORMAL5]	STC-89, "DTC Logic"
C1907	CONTROL UNIT [ABNORMAL4]	STC-89, "DTC Logic"
C1908	CONTROL UNIT [ABNORMAL7]	STC-94, "DTC Logic"
C1909	CONTROL UNIT [ABNORMAL6]	STC-96, "DTC Logic"
C1910	MOTOR OUTPUT [MOTOR LOCK]	STC-91, "DTC Logic"
C1911	MOTOR VOLTAGE [LOW VOLTAGE]	STC-98, "DTC Logic"
C1912	MOTOR VOLTAGE [BAD OBSTRCT]	STC-98, "DTC Logic"
C1913	MOTOR OUTPUT [ABNORML SIG]	STC-91, "DTC Logic"
C1914	RR ST ANGLE SENSOR [ABNORML VOL]	STC-103, "DTC Logic"
C1915	RR ST ANGLE SENSOR [MAIN SIGNAL]	STC-106, "DTC Logic"
C1916	RR ST ANGLE SENSOR [SUB SIGNAL]	STC-106, "DTC Logic"
C1917	RR ST ANGLE SENSOR [OFFSET SIG1]	STC-109, "DTC Logic"
C1918	RR ST ANGLE SENSOR [OFFSET SIG2]	STC-109, "DTC Logic"
C1919	VEHICLE SPEED SEN [NO SIGNAL]	STC-112, "DTC Logic"
C1920	STEERING ANGLE SEN [NO SIGNAL]	STC-114, "DTC Logic"
C1921	ENG REV SIGNAL	STC-117, "DTC Logic"
C1922	CONTROL UNIT [ABNORMAL8]	STC-94, "DTC Logic"
C1923	STEERING ANGLE SEN [NO CHANGE]	STC-119, "DTC Logic"
C1924	STEERING ANGLE SEN [NO NEUT STATE]	STC-122, "DTC Logic"

DTC	Items (CONSULT-III screen terms)	Reference
C1925	AD CONVERTER	STC-94, "DTC Logic"
C1926	STEERING ANGLE SEN	STC-125, "DTC Logic"
C1927	CONTROL UNIT [ABNORMAL5]	STC-89, "DTC Logic"
C1928	CONTROL UNIT [ABNORMAL9]	STC-94, "DTC Logic"
C1930	4WAS FRONT ECU	STC-128, "DTC Logic"
C1931	4WAS FRONT ECU COMM	STC-129, "DTC Logic"
C1932	STEERING ANGLE SEN	STC-125, "DTC Logic"
C1933	CONTROL UNIT	STC-89, "DTC Logic"
U1000	CAN COMM	STC-133, "DTC Logic"
U1010	CONTROL UNIT (CAN)	STC-134, "DTC Logic"

SYMPTOM DIAGNOSIS

4WAS WARNING LAMP DOES NOT TURN ON

Description

INFOID:0000000005650491

- 4WAS warning lamp does not turn ON when turning ignition switch ON from OFF.

Diagnosis Procedure

INFOID:0000000005650492

1. CHECK 4WAS SYSTEM POWER SUPPLY AND GROUND CIRCUIT

With CONSULT-III

Perform the trouble diagnosis of the power supply and ground circuit.

Is the inspection result normal?

YES >> GO TO 2.
NO >> Repair or replace the specific malfunctioning part.

2. CHECK 4WAS WARNING LAMP

With CONSULT-III

Perform the trouble diagnosis of 4WAS warning lamp. Refer to STC-142, "Diagnosis Procedure".

Is the inspection result normal?

YES >> Check that there is no malfunction in each harness connector pin terminal or disconnection.
NO >> Repair or replace the specific malfunctioning part.

4WAS WARNING LAMP DOES NOT TURN OFF

Description

INFOID:0000000005650493

- 4WAS system stops (error) when turning 4WAS warning lamp ON.

Diagnosis Procedure

INFOID:0000000005650494

1. PERFORM SELF-DIAGNOSIS (4WAS MAIN CONTROL UNIT)

With CONSULT-III

Perform 4WAS main control unit self-diagnosis.

Is any DTC detected other than “C1930” or “C1931”?

YES >> GO TO 2.
NO >> GO TO 3.

2. PERFORM TROUBLE DIAGNOSIS (4WAS MAIN CONTROL UNIT)

With CONSULT-III

1. Check the error system detected from the self-diagnosis.
2. Perform 4WAS main control unit self-diagnosis again after the inspection.

Is any error system detected?

YES >> Check the error system.
NO >> GO TO 3.

3. PERFORM SELF-DIAGNOSIS (4WAS FRONT CONTROL UNIT)

With CONSULT-III

Perform 4WAS front control unit self-diagnosis.

Is any error system detected?

YES >> Check the error system.
NO >> GO TO 4.

4. PERFORM SELF-DIAGNOSIS (4WAS MAIN CONTROL UNIT)

With CONSULT-III

Perform 4WAS main control unit self-diagnosis.

Is any error system detected?

YES >> Check the error system.
NO >> Check that there is no malfunction in each harness connector pin terminal or disconnection.

STEERING WHEEL MISS ALIGNMENT

Description

INFOID:0000000005650495

- The steering wheel position (center) is in the wrong position at driving.
- 4WAS system stops temporarily.

NOTE:
- The steering wheel position (center) is in the wrong position under the following condition. (4WAS system is in the protection mode. This is normal status.)
  - When steering frequently
  - When driving on a rough road
  - When the assist of power steering is not sufficient
  - When the battery voltage is weak
  - When driving under the status that there is a difference in the steering wheel

Diagnosis Procedure

INFOID:0000000005650496

1. CHECK SYMPTOM

Stop the vehicle in the straight-ahead position after driving for a period of time.

Does the steering wheel position (center) misalign?

YES >> INSPECTION END (Entered in 4WAS system protection function mode in past. 4WAS system is normal at present.)
NO >> GO TO 2.

2. 4WAS FRONT ACTUATOR INITIALIZATION

1. Start the engine.
   CAUTION:
   Stop the vehicle.
2. Steer 90° leftward slowly. Steer 90° rightward and return the steering wheel to the straight-ahead position. Repeat the above 10 times.
3. Stop the vehicle in the straight-ahead position after driving for a period of time.

Does the steering wheel position (center) misalign?

YES >> INSPECTION END (Entered in 4WAS system protection function mode in past. 4WAS system is normal at present.)
NO >> GO TO 3.

3. 4WAS SYSTEM CONDITION

With CONSULT-III

1. Start the engine.
   CAUTION:
   Stop the vehicle.
2. Check “EX OPERAT” item on “DATA MONITOR” of 4WAS front control unit.

Does the item on “DATA MONITOR” indicate “On”?

YES >> GO TO 7.
NO >> GO TO 4.

4. CHECK STEERING SYSTEM

Check the steering system. Refer to ST-14, "Inspection".

Is the inspection result normal?

YES >> GO TO 5.
NO >> Repair or replace the specific malfunctioning part.

5. CHECK WHEEL ALIGNMENT

Check the wheel alignment. Refer to FSU-8, "Inspection" (front side), RSU-6, "Inspection" (rear side).

Is the inspection result normal?

YES >> GO TO 6.
NO >> Repair or replace the specific malfunctioning part.

6. PERFORM 4WAS FRONT ACTUATOR ADJUSTMENT

1. Perform 4WAS front actuator adjustment. Refer to STC-30, "4WAS FRONT ACTUATOR NEUTRAL POSITION ADJUSTMENT : Special Repair Requirement (Pattern 3)".
2. Stop the vehicle in the straight-ahead position after driving for a period of time.

Does the steering wheel position (center) misalign?

YES >> INSPECTION END.
NO >> GO TO 7.

7. CHECK 4WAS SYSTEM IGNITION POWER SUPPLY

Perform the trouble diagnosis of the ignition power supply. Refer to STC-62, "Diagnosis Procedure".

Is the inspection result normal?

YES >> GO TO 8.
NO >> Repair or replace the specific malfunctioning part.

8. CHECK 4WAS SYSTEM 4WAS FRONT MOTOR POWER SUPPLY

Perform the trouble diagnosis of 4WAS front motor power supply. Refer to STC-64, "Diagnosis Procedure".

Is the inspection result normal?

YES >> GO TO 9.
NO >> Repair or replace the specific malfunctioning part.

9. CHECK 4WAS SYSTEM HISTORY

With CONSULT-III

1. Turn the ignition switch OFF.
   CAUTION:
   Wait 30 minutes or more after turning the ignition switch OFF.
2. Start the engine.
   CAUTION:
   Stop the vehicle.
3. Check “EX OPERAT” on 4WAS front control unit “DATA MONITOR”.

Monitor item	Condition	Display value
EX OPERAT	4WAS system enters in the protection function due to the heavy load condition and temporarily abnormal voltage.	On

Is the value of DATA MONITOR “On”?

YES >> Replace 4WAS front control unit. Refer to STC-180, "Exploded View".
- Perform 4WAS front actuator adjustment after replacing 4WAS front control unit. Refer to STC-30, "4WAS FRONT ACTUATOR NEUTRAL POSITION ADJUSTMENT : Special Repair Requirement (Pattern 3)".

NO >> INSPECTION END

STEERING SYSTEM VIBRATION AND NOISE

Description

INFOID:0000000005650497

- Vibration or noise occurs in the steering wheel while driving the vehicle.
  NOTE:
  - Vibration or noise occurs in the steering wheel in the following conditions. (4WAS system is not malfunction.)
  - 4WAS system starts and ends (when the engine speed is ON⇔OFF).
  - System protection mode
  - When steering frequently
  - When driving on a rough road
  - When the assist of power steering is not sufficient
  - When the battery voltage is weak

Diagnosis Procedure

INFOID:0000000005650498

1. CHECK 4WAS SYSTEM

With CONSULT-III

1. Start the engine.
   CAUTION:
   Stop the vehicle.
2. Check “OVRLD JDG FLG”, “ACT PRTCT FLG”, “ECU PRTCT FLG”,“LOW VOLT FLG”, “HIGH VOLT FLG”, “EX OPERAT” items on “DATA MONITOR” of 4WAS front control unit.

Does all items on “DATA MONITOR” indicate “Off”?

YES >> INSPECTION END (Vibration and sound occurs in 4WAS system protection function mode. This is normal.)
NO >> GO TO 2.

2. STOP 4WAS FRONT ACTUATOR CONTROL

1. Turn the ignition switch OFF.
2. Disconnect 4WAS front actuator harness connector.
   CAUTION:
   Disconnect 4WAS front actuator harness connector 10 minutes after turning the ignition switch OFF.
3. Drive the vehicle for a period of time. Check the symptom.
   CAUTION:
   Erase the self-diagnosis memory after the inspection is completed to detect 4WAS front control unit DTC “C1661”. [Erase the self diagnosis memory of 4WAS main control unit, ABS actuator and electric unit (control unit) and ICC sensor integrated simultaneously.]

Does symptom not occur?

YES >> Replace 4WAS front actuator. Refer to STC-182, "Removal and Installation".
NO >> Perform the symptom diagnosis for the steering system. Refer to ST-3, "NVH Troubleshooting Chart".

UNBALANCE STEERING WHEEL TURNING FORCE (TORQUE VARIATION)

Description

INFOID:0000000005650499

- The steering force does not change smoothly according to the vehicle speed.
- The steering force is heavy when steering.
- The steering force is light when driving at high speed.

Diagnosis Procedure

INFOID:0000000005650500

1. CHECK 4WAS SYSTEM VEHICLE SPEED SIGNAL

Perform the trouble diagnosis of the vehicle speed signal. Refer to STC-112, "Diagnosis Procedure".

Is the inspection result normal?

YES >> GO TO 2.
NO >> Repair or replace the specific malfunctioning part.

2. CHECK STEERING SYSTEM

Check the steering system. Refer to ST-14, "Inspection".

Is the inspection result normal?

YES >> GO TO 3.
NO >> Repair or replace the specific malfunctioning part.

3. CHECK 4WAS SYSTEM POWER STEERING SOLENOID VALVE

Perform the trouble diagnosis of the power steering solenoid valve. Refer to STC-140, "Diagnosis Procedure".

Is the inspection result normal?

YES >> Check that there is no malfunction in each harness connector pin terminal or disconnection.
NO >> Repair or replace the specific malfunctioning part.

PRECAUTION

PRECAUTIONS

Precaution for Supplemental Restraint System (SRS) "AIR BAG" and "SEAT BELT PRE-TENSIONER"

INFOID:0000000005843147

The Supplemental Restraint System such as “AIR BAG” and “SEAT BELT PRE-TENSIONER”, used along with a front seat belt, helps to reduce the risk or severity of injury to the driver and front passenger for certain types of collision. This system includes seat belt switch inputs and dual stage front air bag modules. The SRS system uses the seat belt switches to determine the front air bag deployment, and may only deploy one front air bag, depending on the severity of a collision and whether the front occupants are belted or unbelted.
Information necessary to service the system safely is included in the “SRS AIR BAG” and “SEAT BELT” of this Service Manual.

WARNING:
- **To avoid rendering the SRS inoperative, which could increase the risk of personal injury or death in the event of a collision which would result in air bag inflation, all maintenance must be performed by an authorized NISSAN/INFINITI dealer.**
- **Improper maintenance, including incorrect removal and installation of the SRS, can lead to personal injury caused by unintentional activation of the system. For removal of Spiral Cable and Air Bag Module, see the “SRS AIR BAG”.**
- **Do not use electrical test equipment on any circuit related to the SRS unless instructed to in this Service Manual. SRS wiring harnesses can be identified by yellow and/or orange harnesses or harness connectors.**

PRECAUTIONS WHEN USING POWER TOOLS (AIR OR ELECTRIC) AND HAMMERS

WARNING:
- **When working near the Air Bag Diagnosis Sensor Unit or other Air Bag System sensors with the ignition ON or engine running, DO NOT use air or electric power tools or strike near the sensor(s) with a hammer. Heavy vibration could activate the sensor(s) and deploy the air bag(s), possibly causing serious injury.**
- **When using air or electric power tools or hammers, always switch the ignition OFF, disconnect the battery, and wait at least 3 minutes before performing any service.**

Precaution Necessary for Steering Wheel Rotation after Battery Disconnect

INFOID:0000000005843153

NOTE:
- Before removing and installing any control units, first turn the push-button ignition switch to the LOCK position, then disconnect both battery cables.
- After finishing work, confirm that all control unit connectors are connected properly, then re-connect both battery cables.
- Always use CONSULT-III to perform self-diagnosis as a part of each function inspection after finishing work. If a DTC is detected, perform trouble diagnosis according to self-diagnosis results.

For vehicle with steering lock unit, if the battery is disconnected or discharged, the steering wheel will lock and cannot be turned.
If turning the steering wheel is required with the battery disconnected or discharged, follow the operation procedure below before starting the repair operation.

OPERATION PROCEDURE

1. Connect both battery cables.
   NOTE:
   Supply power using jumper cables if battery is discharged.
2. Turn the push-button ignition switch to ACC position.
   (At this time, the steering lock will be released.)
3. Disconnect both battery cables. The steering lock will remain released with both battery cables disconnected and the steering wheel can be turned.
4. Perform the necessary repair operation.

5. When the repair work is completed, re-connect both battery cables. With the brake pedal released, turn the push-button ignition switch from ACC position to ON position, then to LOCK position. (The steering wheel will lock when the push-button ignition switch is turned to LOCK position.)
6. Perform self-diagnosis check of all control units using CONSULT-III.

Precautions for Removal and Installation of 4WAS Components

INFOID:0000000005650503

- Set the vehicle to the straight-ahead position when checking 4WAS and removing each component.
- Remove the battery terminal 10 minutes after turning the ignition switch OFF from ON and perform the removal of each component when removing the 4WAS front control unit.
- Perform the neutral position adjustment for the steering angle sensor after the replacement of steering angle sensor. Refer to BRC-8, "ADJUSTMENT OF STEERING ANGLE SENSOR NEUTRAL POSITION : Special Repair Requirement".
- Refer to STC-29, "4WAS FRONT ACTUATOR NEUTRAL POSITION ADJUSTMENT : Description" for the replacement of 4WAS front control unit.
- Refer to STC-29, "4WAS FRONT ACTUATOR NEUTRAL POSITION ADJUSTMENT : Description" for the replacement of 4WAS front actuator.

Precautions for Harness Repair

INFOID:0000000005650504

4WAS COMMUNICATION LINE

- Solder the repaired area and wrap tape around the soldered area.
  NOTE:
  A fray of twisted lines must be within 110 mm (4.33 in).

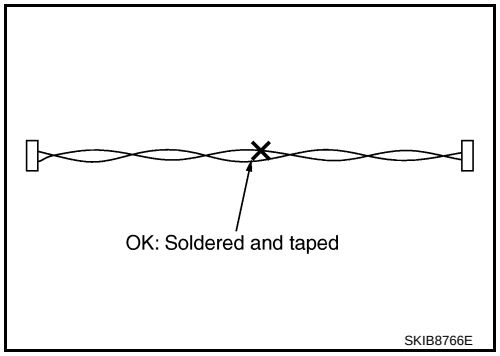

- Bypass connection is never allowed at the repaired area.
  NOTE:
  Bypass connection may cause 4WAS communication error as spliced wires that are separate from the main line or twisted lines lose noise immunity.
- Replace the applicable harness as an assembly if error is detected on the shield lines of 4WAS communication line.

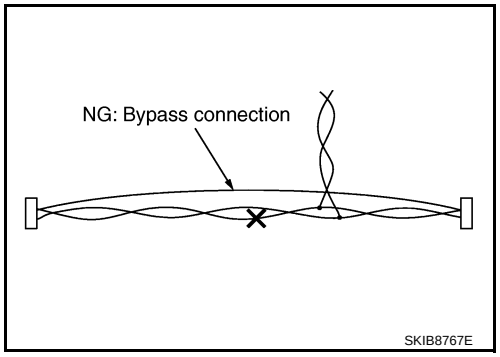

REMOVAL AND INSTALLATION

4WAS FRONT CONTROL UNIT

Exploded View

INFOID:0000000005650505

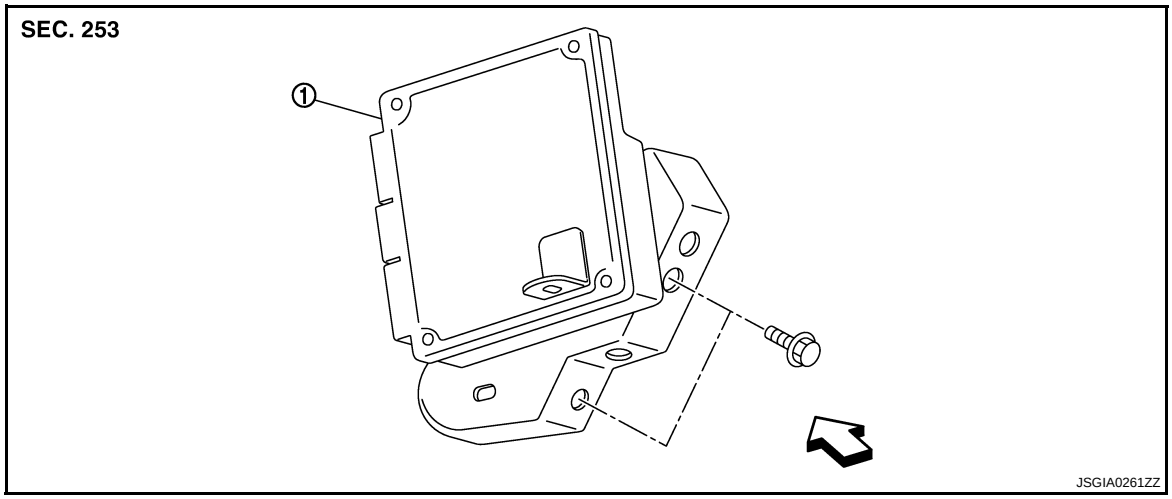

1. 4WAS front control unit

⇦:Vehicle front

Refer to GI-4, "Components" for symbols in the figure.

Removal and Installation

INFOID:0000000005650506

REMOVAL

1. Turn the ignition switch OFF.
2. Remove the instrument driver lower panel. Refer to IP-12, "A/T MODELS : Exploded View"(A/T models), IP-22, "M/T MODELS : Exploded View"(M/T models).
3. Disconnect 4WAS front control unit connectors.
   CAUTION:
   Disconnect 4WAS front control unit connectors 10 minutes after turning the ignition switch OFF.
4. Remove the bolts of 4WAS front control unit.
5. Remove the 4WAS front control unit (1).

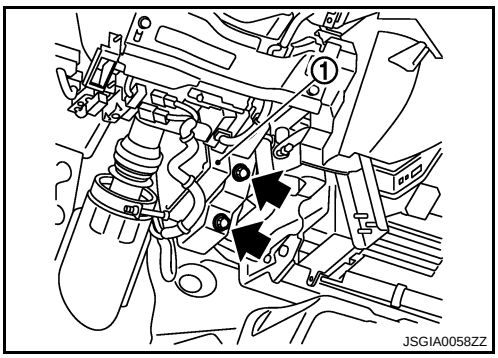

INSTALLATION

Note following, and install in the reverse order of removal.

- Perform 4WAS front actuator adjustment after replacing 4WAS front control unit. Refer to STC-30, "4WAS FRONT ACTUATOR NEUTRAL POSITION ADJUSTMENT : Special Repair Requirement (Pattern 3)".

4WAS MAIN CONTROL UNIT

Exploded View

INFOID:0000000005650507

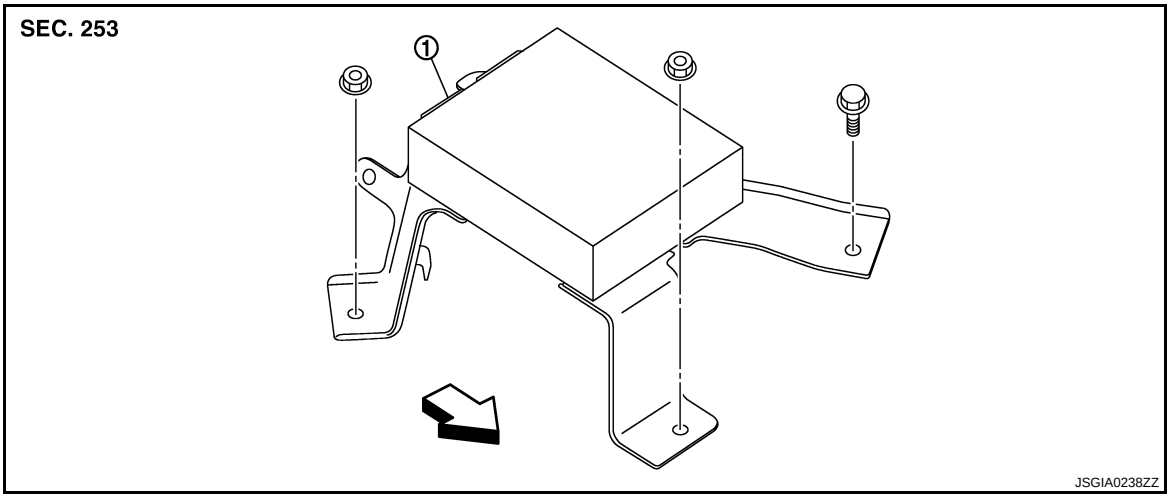

1. 4WAS main control unit

⇦:Vehicle front

Refer to GI-4, "Components" for symbols in the figure.

Removal and Installation

INFOID:0000000005650508

1. Turn the ignition switch OFF.
2. Remove the rear wheel house finisher. Refer to INT-28, "Exploded View".
3. Disconnect 4WAS main control unit connectors, 4WAS rear motor relay connector and noise suppressor connectors.
4. Remove the 4WAS main control unit bolt and nuts.
5. Remove the 4WAS main control unit (1).

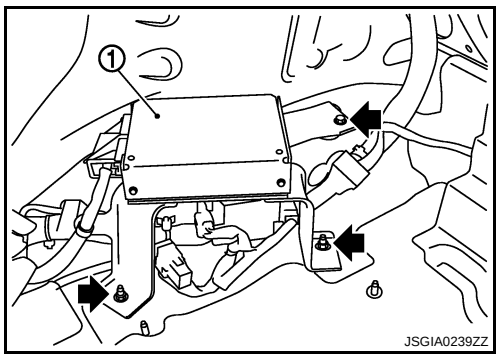

INSTALLATION

Install in the reverse order of removal.

4WAS FRONT ACTUATOR ASSEMBLY

Removal and Installation

INFOID:0000000005650509

Refer to ST section for installation/removal. Refer to ST-26, "WITH 4WAS : Removal and Installation".

4WAS REAR ACTUATOR ASSEMBLY

Exploded View

INFOID:0000000005650510

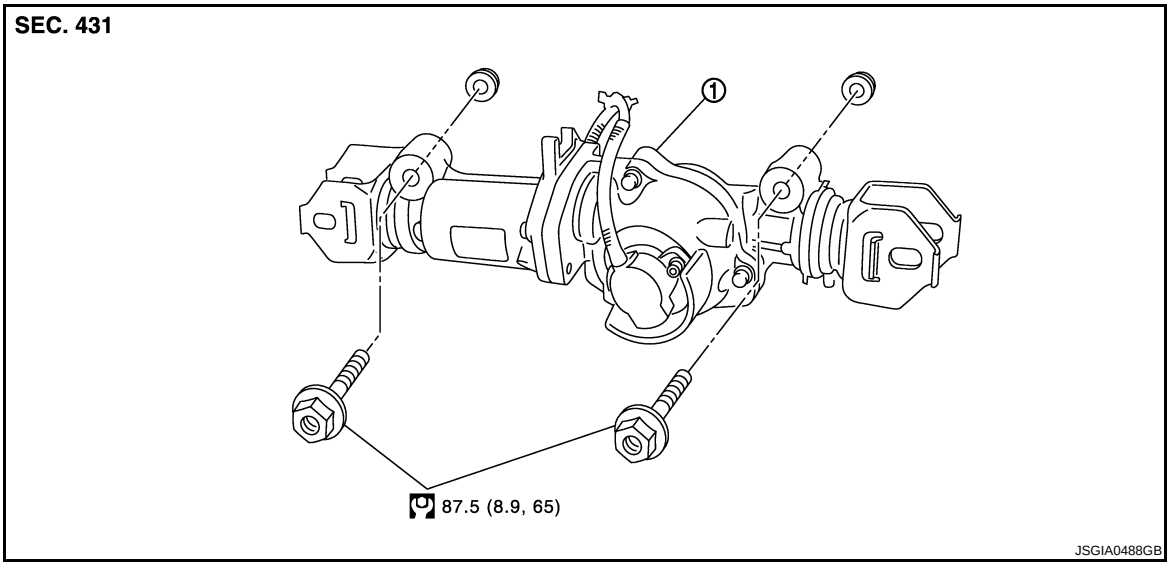

1. 4WAS rear actuator assembly

Refer to GI-4, "Components" for symbols in the figure.

Removal and Installation

INFOID:0000000005650511

REMOVAL

1. Remove coil spring and lower link. Refer to RSU-8, "Exploded View".
2. Disconnect harness connector from 4WAS rear actuator and rear suspension member.
3. Remove fixing bolts and nuts of 4WAS rear actuator (1), and then remove 4WAS rear actuator from rear suspension member.

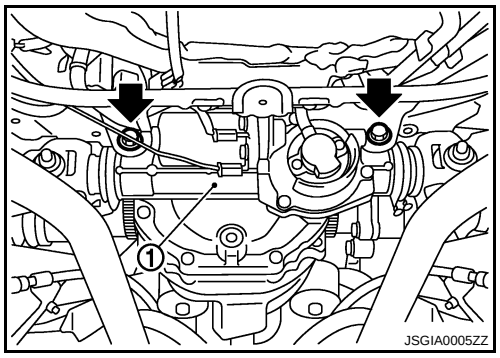

INSTALLATION

Note the following, and install in the reverse order of removal.

- When installing 4WAS rear actuator to rear suspension member, check the mounting surfaces of 4WAS rear actuator and rear suspension member for oil, dirt, sand, or other foreign materials.
- Check rear wheel alignment. Refer to RSU-6, "Inspection".