SECTION CHG
CHARGING SYSTEM

CONTENTS

BASIC INSPECTION

DIAGNOSIS AND REPAIR WORK FLOW

Work Flow (With EXP-800 NI or GR8-1200 NI)

INFOID:0000000011485697

CHARGING SYSTEM DIAGNOSIS WITH EXP-800 NI OR GR8-1200 NI

To test the charging system, use the following special service tools:

- EXP-800 NI Battery and electrical diagnostic analyzer
- GR8-1200 NI Multitasking battery and electrical diagnostic station

NOTE:

Refer to the applicable Instruction Manual for proper charging system diagnosis procedures.

OVERALL SEQUENCE

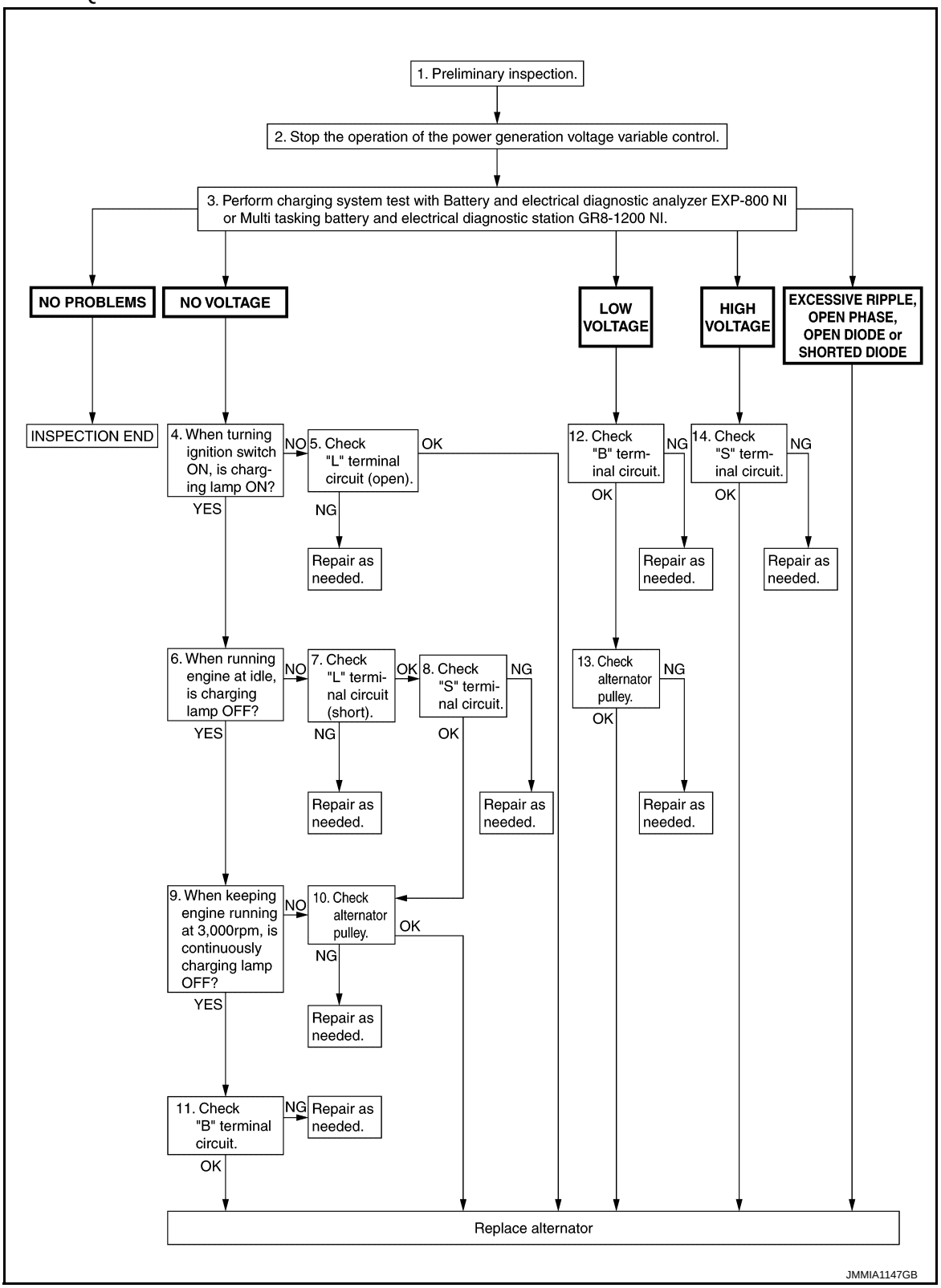

DETAILED FLOW

NOTE:

To ensure a complete and thorough diagnosis, the battery, starter and alternator test segments must be done as a set from start to finish.

1. PRELIMINARY INSPECTION

Perform the preliminary inspection. Refer to CHG-27, "Inspection Procedure".

>> GO TO 2.

2. STOP POWER GENERATION VOLTAGE VARIABLE CONTROL SYSTEM

Stop the operation of the power generation voltage variable control in either of the following procedures.

- After selecting “ENGINE” of “SELECT SYSTEM” using CONSULT, set the DUTY value of “ALTERNATOR DUTY” to 0 % by selecting “ALTERNATOR DUTY” of “Active Test”. Continue “Active Test” until the end of inspection. (When the DUTY value is 0 or 100 %, the normal power generation is performed according to the characteristic of the IC voltage regulator of the alternator.)
- Turn the ignition switch OFF, and disconnect the battery current sensor connector. [However, DTC (P1550 - P1554) of the engine might remain. After finishing the inspection, connect the battery current sensor connector and erase the self-diagnosis results history of the engine using CONSULT.]

>> GO TO 3.

3. DIAGNOSIS WITH EXP-800 NI OR GR8-1200 NI

Perform the charging system test using Multitasking battery and electrical diagnostic station GR8-1200 NI or Battery and electrical diagnostic analyzer EXP-800 NI. Refer to the applicable Instruction Manual for proper testing procedures.

Test result

NO PROBLEMS>>Charging system is normal and will also show “DIODE RIPPLE” test result.
NO VOLTAGE>>GO TO 4.
LOW VOLTAGE>>GO TO 12.
HIGH VOLTAGE>>GO TO 14.
EXCESSIVE RIPPLE, OPEN PHASE, OPEN DIODE or SHORTED DIODE>>Replace the alternator. Perform “DIODE RIPPLE” test again using Multitasking battery and electrical diagnostic station GR8-1200 NI or Battery and electrical diagnostic analyzer EXP-800 NI to confirm repair.

4. INSPECTION WITH CHARGE WARNING LAMP (IGNITION SWITCH IS ON)

Turn the ignition switch ON.

Does the charge warning lamp illuminate?

YES >> GO TO 6.
NO >> GO TO 5.

5. “L” TERMINAL CIRCUIT (OPEN) INSPECTION

Check “L” terminal circuit (open). Refer to CHG-15, "Diagnosis Procedure".

Is the “L” terminal circuit normal?

YES >> Replace alternator. Refer to CHG-31, "Removal and Installation (GT-R certified NISSAN dealer)".
NO >> Repair as needed.

6. INSPECTION WITH CHARGE WARNING LAMP (IDLING)

Start the engine and run it at idle.

Does the charge warning lamp turn OFF?

YES >> GO TO 9.
NO >> GO TO 7.

7. “L” TERMINAL CIRCUIT (SHORT) INSPECTION

Check “L” terminal circuit (short). Refer to CHG-17, "Diagnosis Procedure".

Is the “L” terminal circuit normal?

YES >> GO TO 8.
NO >> Repair as needed.

8. “S” TERMINAL CIRCUIT INSPECTION

Check “S” terminal circuit. Refer to CHG-18, "Diagnosis Procedure".

Is the “S” terminal circuit normal?

YES >> GO TO 10.
NO >> Repair as needed.

9. INSPECTION WITH CHARGE WARNING LAMP (ENGINE AT 3,000 RPM)

Increase and maintain the engine speed at 3,000 rpm.

Does the charge warning lamp remain off?

YES >> GO TO 11.
NO >> GO TO 10.

10. INSPECTION OF ALTERNATOR PULLEY

Check alternator pulley. Refer to CHG-32, "Inspection (GT-R certified NISSAN dealer)".

Is alternator pulley normal?

YES >> Replace alternator. Refer to CHG-31, "Removal and Installation (GT-R certified NISSAN dealer)".
NO >> Repair as needed.

11. "B" TERMINAL CIRCUIT INSPECTION

Check "B" terminal circuit. Refer to CHG-14, "Diagnosis Procedure".

Is "B" terminal circuit normal?

YES >> Replace alternator. Refer to CHG-31, "Removal and Installation (GT-R certified NISSAN dealer)".
NO >> Repair as needed.

12. "B" TERMINAL CIRCUIT INSPECTION

Check "B" terminal circuit. Refer to CHG-14, "Diagnosis Procedure".

Is "B" terminal circuit normal?

YES >> GO TO 13.
NO >> Repair as needed.

13. INSPECTION OF ALTERNATOR PULLEY

Check alternator pulley. Refer to CHG-32, "Inspection (GT-R certified NISSAN dealer)".

Is alternator pulley normal?

YES >> Replace alternator. Refer to CHG-31, "Removal and Installation (GT-R certified NISSAN dealer)".
NO >> Repair as needed.

14. "S" TERMINAL CIRCUIT INSPECTION

Check "S" terminal circuit. Refer to CHG-18, "Diagnosis Procedure".

Is the "S" terminal circuit normal?

YES >> Replace alternator. Refer to CHG-31, "Removal and Installation (GT-R certified NISSAN dealer)".
NO >> Repair as needed.

Work Flow (Without EXP-800 NI or GR8-1200 NI)

INFOID:0000000011485698

OVERALL SEQUENCE

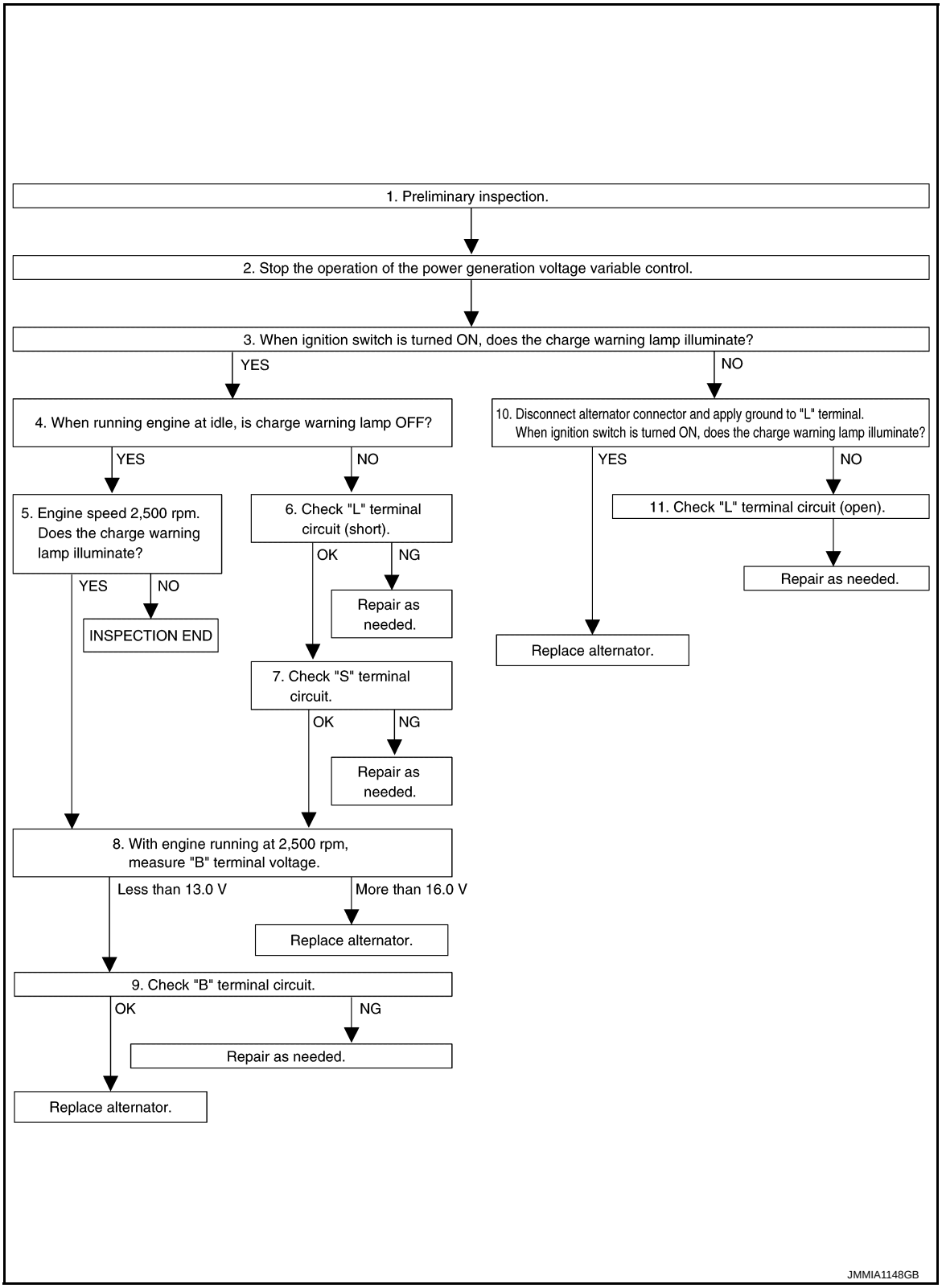

DETAILED FLOW

1. PRELIMINARY INSPECTION

Perform the preliminary inspection. Refer to CHG-27, "Inspection Procedure".

>> GO TO 2.

2. STOP POWER GENERATION VOLTAGE VARIABLE CONTROL SYSTEM

Stop the operation of the power generation voltage variable control in either of the following procedures.

- After selecting “ENGINE” of “SELECT SYSTEM” using CONSULT, set the DUTY value of “ALTERNATOR DUTY” to 0 % by selecting “ALTERNATOR DUTY” of “Active Test”. Continue “Active Test” until the end of inspection. (When the DUTY value is 0 or 100 %, the normal power generation is performed according to the characteristic of the IC regulator of the alternator.)
- Turn the ignition switch OFF, and disconnect the battery current sensor connector. [However, DTC (P1550 - P1554) of the engine might remain. After finishing the inspection, connect the battery current sensor connector and erase the self-diagnostic results history of the engine using CONSULT.]

>> GO TO 3.

3. INSPECTION WITH CHARGE WARNING LAMP (IGNITION SWITCH IS TURNED ON)

When ignition switch is turned ON

Does the charge warning lamp illuminate?

YES >> GO TO 4.
NO >> GO TO 10.

4. INSPECTION WITH CHARGE WARNING LAMP (IDLING)

Start the engine and run it at idle.

Does the charge warning lamp turn OFF?

YES >> GO TO 5.
NO >> GO TO 6.

5. INSPECTION WITH CHARGE WARNING LAMP (ENGINE AT 2,500 RPM)

Increase and maintain the engine speed at 2,500 rpm.

Does the charge warning lamp illuminate?

YES >> GO TO 8.
NO >> INSPECTION END

6. “L” TERMINAL CIRCUIT (SHORT) INSPECTION

Check “L” terminal circuit (short). Refer to CHG-17, "Diagnosis Procedure".

Is the inspection result normal?

YES >> GO TO 7.
NO >> Repair as needed.

7. “S” TERMINAL CIRCUIT INSPECTION

Check “S” terminal circuit. Refer to CHG-18, "Diagnosis Procedure".

Is the inspection result normal?

YES >> GO TO 8.
NO >> Repair as needed.

8. MEASURE “B” TERMINAL VOLTAGE

Start engine. With engine running at 2,500 rpm, measure “B” terminal voltage.

What voltage does the measurement result show?

Less than 13.0 V>>GO TO 9.
More than 16.0 V>>Replace alternator. Refer to CHG-31, "Removal and Installation (GT-R certified NISSAN dealer)".

9. “B” TERMINAL CIRCUIT INSPECTION

Check “B” terminal circuit. Refer to CHG-14, "Diagnosis Procedure".

Is the inspection result normal?

YES >> Replace alternator. Refer to CHG-31, "Removal and Installation (GT-R certified NISSAN dealer)".
NO >> Repair as needed.

10. INSPECTION WITH CHARGE WARNING LAMP (IGNITION SWITCH IS ON)

1. Disconnect alternator connector and apply ground to “L” terminal.
2. Turn the ignition switch ON.

Does the charge warning lamp illuminate?

YES >> Replace alternator. Refer to CHG-31, "Removal and Installation (GT-R certified NISSAN dealer)".
NO >> GO TO 11.

11. CHECK “L” TERMINAL CIRCUIT (OPEN)

Check “L” terminal circuit (open). Refer to CHG-15, "Diagnosis Procedure".

>> Repair as needed.

SYSTEM DESCRIPTION

CHARGING SYSTEM

System Diagram

INFOID:0000000011485699

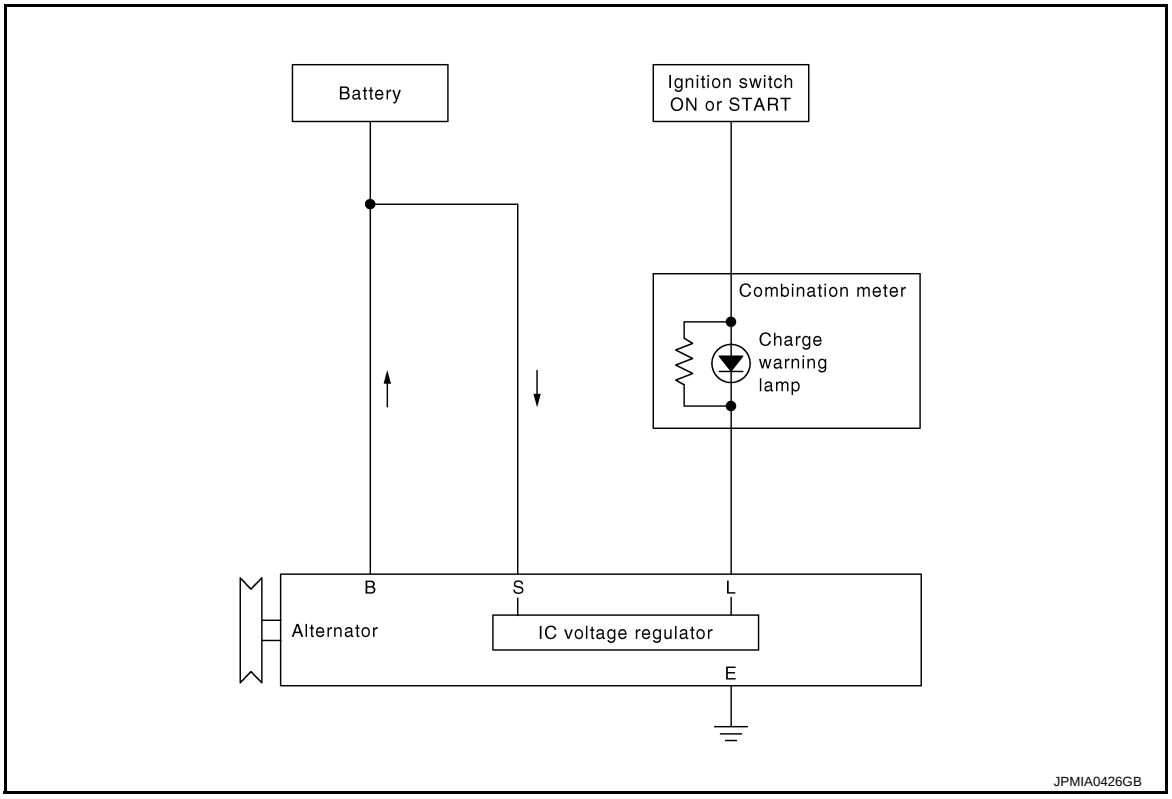

System Description

INFOID:0000000011485700

The alternator provides DC voltage to operate the vehicle's electrical system and to keep the battery charged. The voltage output is controlled by the IC voltage regulator.

Component Parts Location

INFOID:0000000011485701

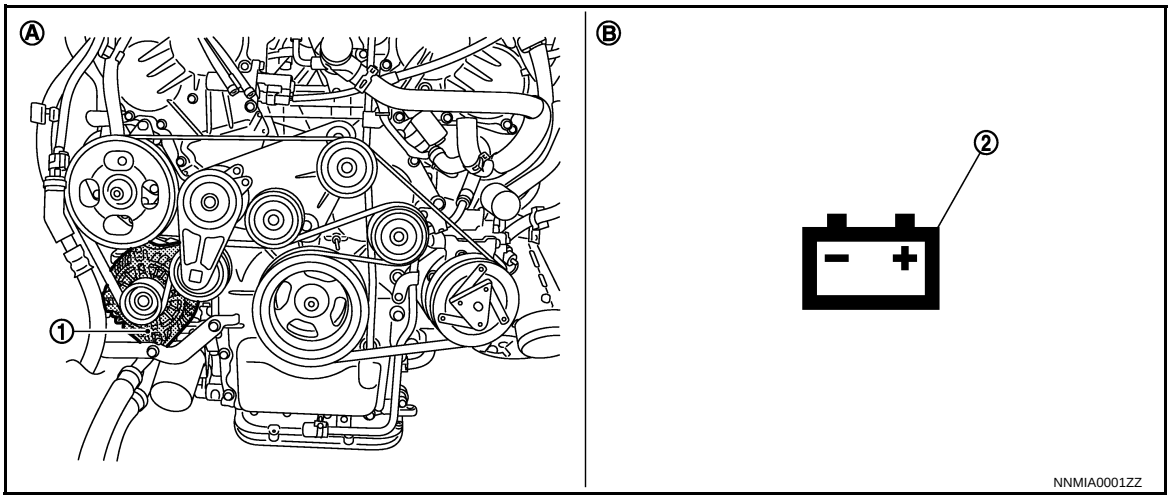

1. Alternator
2. Charge warning lamp

A. Cylinder block (bank 1) side
B. Combination meter

Component Description

INFOID:0000000011485702

Component part	Description
Alternator	The alternator provides DC voltage to operate the vehicle electrical system and to keep the battery charged.
Combination meter (Charge warning lamp)	The IC voltage regulator warning function activates to illuminate the charge warning lamp, if any of the following symptoms occur while alternator is operating: • Excessive voltage is produced. • No voltage is produced.

POWER GENERATION VOLTAGE VARIABLE CONTROL SYSTEM

System Diagram

INFOID:0000000011485703

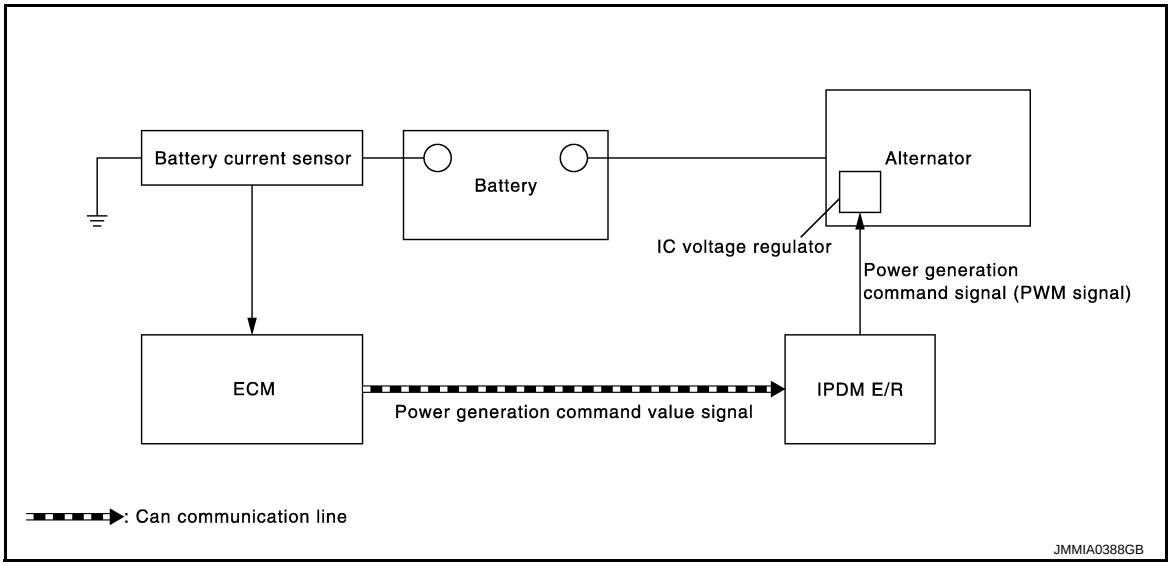

System Description

INFOID:0000000011485704

By performing the power generation voltage variable control, the engine load due to the power generation of the alternator is reduced and fuel consumption is decreased.

NOTE:

When any malfunction is detected in the power generation voltage variable control system, the power generation is performed according to the characteristic of the IC voltage regulator of the alternator.

Component Parts Location

INFOID:0000000011485705

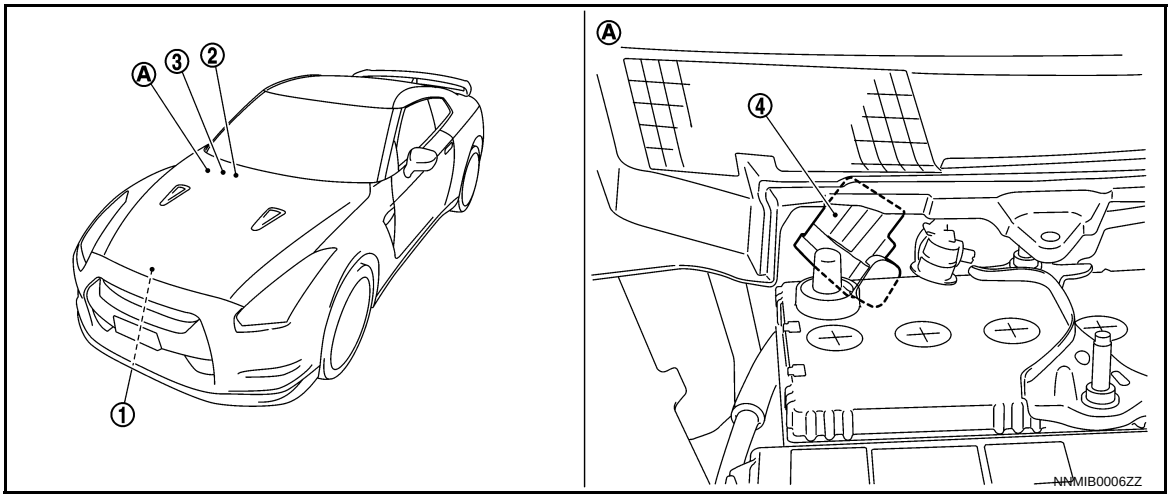

1. Alternator
2. ECM
3. IPDM E/R
4. Battery current sensor

A. Battery

Component Description

INFOID:0000000011485706

Component part	Description
Battery current sensor	Battery current sensor is installed to the battery cable at the negative terminal, and it detects the charging/discharging current of the battery and sends the voltage signal to ECM according to the current value.
ECM	Battery current sensor detects the charging/discharging current of the battery. ECM judges the battery condition based on this signal. ECM judges whether to perform the power generation voltage variable control according to the battery condition. When performing the power generation voltage variable control, ECM calculates the target power generation voltage according to the battery condition and sends the calculated value as the power generation command value to IPDM E/R.
IPDM E/R	IPDM E/R converts the received power generation command value into the power generation command signal (PWM signal) and sends it to the IC voltage regulator.
Alternator (IC voltage regulator)	IC voltage regulator controls the power generation voltage by the target power generation voltage based on the received power generation command signal. When there is no power generation command signal, the alternator performs the normal power generation according to the characteristic of the IC voltage regulator.

DTC/CIRCUIT DIAGNOSIS

B TERMINAL CIRCUIT

Description

INFOID:0000000011485707

"B" terminal circuit supplies power to charge the battery and to operate the vehicle's electrical system.

Diagnosis Procedure

INFOID:0000000011485708

1. CHECK "B" TERMINAL CONNECTION

1. Turn ignition switch OFF.
2. Check if "B" terminal is clean and tight.

Is the inspection result normal?

YES >> GO TO 2.
NO >> Repair "B" terminal connection. Confirm repair by performing complete Charging system test using EXP-800 NI or GR8-1200 NI (if available). Refer to the applicable Instruction Manual for proper testing procedures.

2. CHECK "B" TERMINAL CIRCUIT

Check voltage between alternator "B" terminal and ground.

Terminals			Voltage (Approx.)
(+)		(–)	
Alternator "B" terminal	Terminal		
E254	1	Ground	Battery voltage

Is the inspection result normal?

YES >> GO TO 3.
NO >> Check harness for open between alternator and fusible link.

3. CHECK "B" TERMINAL CONNECTION (VOLTAGE DROP TEST)

1. Start engine, then engine running at idle and warm.
2. Check voltage between battery positive terminal and alternator "B" terminal.

Terminals			Voltage (Approx.)
(+)	(–)		
	Alternator "B" terminal	Terminal	
Battery positive terminal	E254	1	Less than 0.2 V

Is the inspection result normal?

YES >> "B" terminal circuit is normal. Refer to CHG-3, "Work Flow (With EXP-800 NI or GR8-1200 NI)" or CHG-7, "Work Flow (Without EXP-800 NI or GR8-1200 NI)".
NO >> Check harness between battery and alternator for poor continuity.

L TERMINAL CIRCUIT (OPEN)

Description

INFOID:0000000011485709

The “L” terminal circuit controls the charge warning lamp. The charge warning lamp illuminates when the ignition switch is set to ON or START. When the alternator is providing sufficient voltage with the engine running, the charge warning lamp will go off. If the charge warning lamp illuminates with the engine running, a malfunction is indicated.

Diagnosis Procedure

INFOID:0000000011485710

1. CHECK “L” TERMINAL CONNECTION

1. Turn ignition switch OFF.
2. Check if “L” terminal is clean and tight.

Is the inspection result normal?

YES >> GO TO 2.
NO >> Repair “L” terminal connection. Confirm repair by performing complete Charging system test using EXP-800 NI or GR8-1200 NI (if available). Refer to the applicable Instruction Manual for proper testing procedures.

2. CHECK “L” TERMINAL CIRCUIT (OPEN)

1. Disconnect alternator connector.
2. Apply ground to alternator harness connector terminal.
3. Check condition of the charge warning lamp with the ignition switch in the ON position.

Alternator harness connector	Terminal	Ground	Condition	
			Ignition switch position	Charge warning lamp
E254	2		ON	Illuminate

Does it illuminate?

YES >> “L” terminal circuit is normal. Refer to CHG-3, "Work Flow (With EXP-800 NI or GR8-1200 NI)" or CHG-7, "Work Flow (Without EXP-800 NI or GR8-1200 NI)".
NO >> GO TO 3.

3. CHECK HARNESS CONTINUITY (OPEN CIRCUIT)

1. Disconnect the battery cable from the negative terminal.
2. Disconnect the combination meter connector.
3. Check continuity between alternator harness connector and combination meter harness connector.

Alternator harness connector		Combination meter harness connector		Continuity
Connector No.	Terminal No.	Connector No.	Terminal No.	
E254	2	M53	28	Existed

Is the inspection result normal?

YES >> GO TO 4.
NO >> Repair the harness or connector.

4. CHECK HARNESS CONTINUITY (OPEN CIRCUIT)

Check continuity between combination meter harness connector and fuse block.

Combination meter harness connector		Fuse block		Continuity
Connector No.	Terminal No.	Connector No.	Terminal No.	
M53	2	M3	12C	Existed

Is the inspection result normal?

YES >> GO TO 5.
NO >> Repair the harness.

5. CHECK POWER SUPPLY CIRCUIT

1. Connect the battery cable to the negative terminal.
2. Check voltage between combination meter harness connector and ground.

Terminals			Condition	Voltage (Approx.)
(+)		(–)		
Combination meter harness connector	Terminal			
M53	2	Ground	When the ignition switch is in ON position	Battery voltage

Is the inspection result normal?

YES >> Replace combination meter.
NO >> Inspect the power supply circuit. Refer to PG-37, "Wiring Diagram - IGNITION POWER SUPPLY - ".

L TERMINAL CIRCUIT (SHORT)

Description

INFOID:0000000011485711

The “L” terminal circuit controls the charge warning lamp. The charge warning lamp illuminates when the ignition switch is set to ON or START. When the alternator is providing sufficient voltage with the engine running, the charge warning lamp will go off. If the charge warning lamp illuminates with the engine running, a malfunction is indicated.

Diagnosis Procedure

INFOID:0000000011485712

1. CHECK “L” TERMINAL CIRCUIT (SHORT)

1. Turn ignition switch OFF.
2. Disconnect alternator connector.
3. Turn ignition switch ON.

Does charge warning lamp illuminate?

YES >> GO TO 2.
NO >> Refer to CHG-3, "Work Flow (With EXP-800 NI or GR8-1200 NI)" or CHG-7, "Work Flow (Without EXP-800 NI or GR8-1200 NI)".

2. CHECK HARNESS CONTINUITY (SHORT CIRCUIT)

1. Turn the ignition switch OFF.
2. Disconnect the battery cable from the negative terminal.
3. Disconnect combination meter connector.
4. Check continuity between combination meter harness connector and ground.

Combination meter harness connector		Ground	Continuity
Connector No.	Terminal No.		
M53	28		Not existed

Is the inspection result normal?

YES >> Replace combination meter.
NO >> Repair the harness.

S TERMINAL CIRCUIT

Description

INFOID:0000000011485713

The output voltage of the alternator is controlled by the IC voltage regulator at the “S” terminal detecting the input voltage.
The “S” terminal circuit detects the battery voltage to adjust the alternator output voltage with the IC voltage regulator.

Diagnosis Procedure

INFOID:0000000011485714

1.CHECK “S” TERMINAL CONNECTION

1. Turn ignition switch OFF.
2. Check if “S” terminal is clean and tight.

Is the inspection result normal?

YES >> GO TO 2.
NO >> Repair “S” terminal connection. Confirm repair by performing complete Charging system test using EXP-800 NI or GR8-1200 NI (if available). Refer to the applicable Instruction Manual for proper testing procedures.

2.CHECK “S” TERMINAL CIRCUIT

Check voltage between alternator harness connector and ground.

Terminals			Voltage (Approx.)
(+)		(–)	
Alternator harness connector	Terminal		
E254	3	Ground	Battery voltage

Is the inspection result normal?

YES >> Refer to CHG-3, "Work Flow (With EXP-800 NI or GR8-1200 NI)" or CHG-7, "Work Flow (Without EXP-800 NI or GR8-1200 NI)".
NO >> Check harness for open between alternator and fuse.

CHARGING SYSTEM

Wiring Diagram - CHARGING SYSTEM -

INFOID:0000000011485715

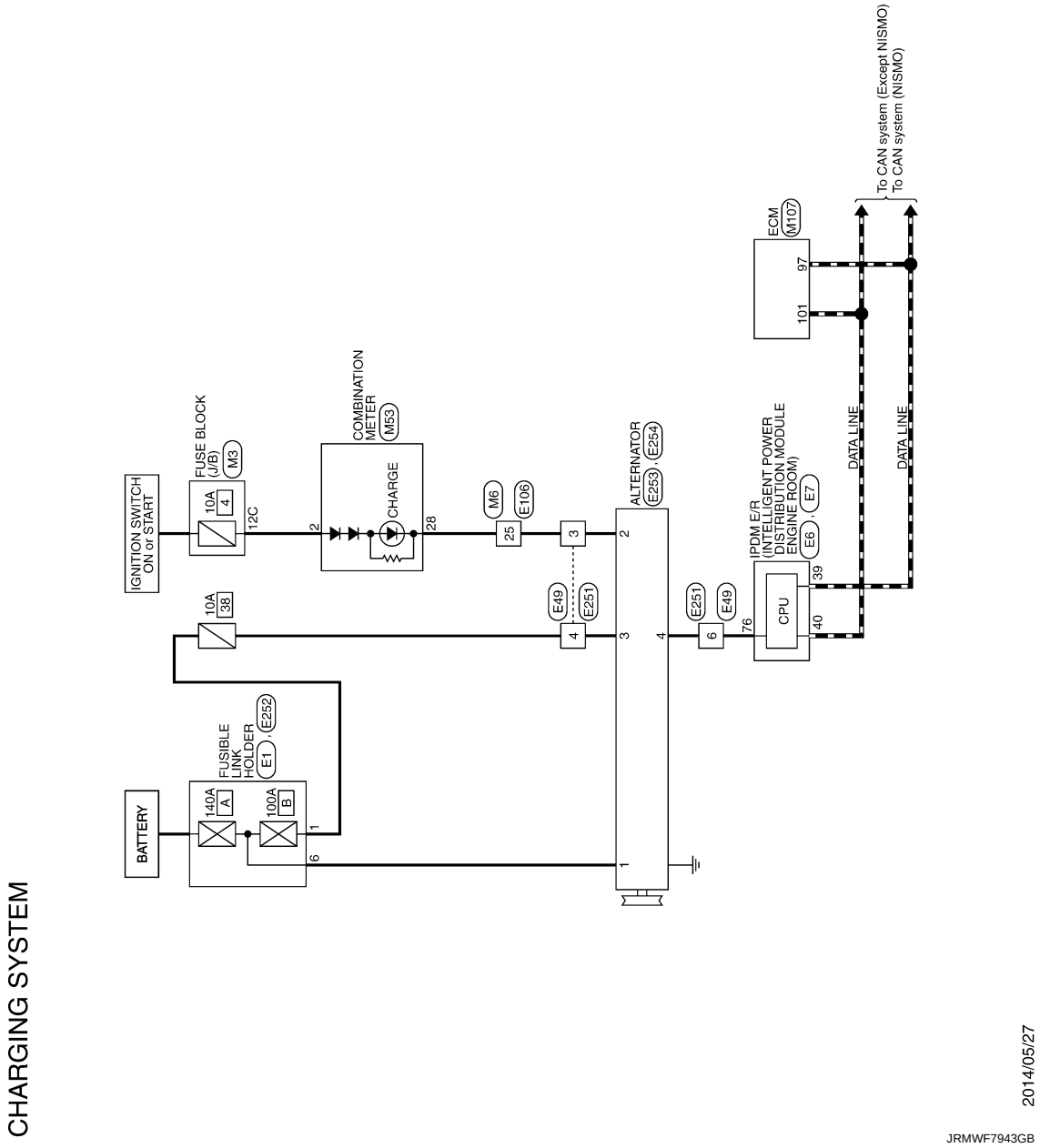

CHARGING SYSTEM

2014/05/27

JRMWF7943GB

CHARGING SYSTEM

Connector No.	E1
Connector Name	FUSIBLE LINK HOLDER
Connector Type	L02FBR-MC

Terminal No.	Color Of Wire	Signal Name [Specification]
1	W	-
2	W	-

Connector No.	E6
Connector Name	IPDM E/R (INTELLIGENT POWER DISTRIBUTION MODULE ENGINE ROOM)
Connector Type	TH08FW-NH

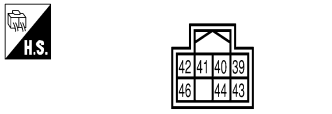

Terminal No.	Color Of Wire	Signal Name [Specification]
39	P	-
40	L	-
41	B/Y	-
42	G	-
43	SB	-
44	W	-
46	BG	-

Connector No.	E7
Connector Name	IPDM E/R (INTELLIGENT POWER DISTRIBUTION MODULE ENGINE ROOM)
Connector Type	TH20FW-CS12-M4

Terminal No.	Color Of Wire	Signal Name [Specification]
48	L	-
49	P	-
51	LG	-
53	SB	-
54	W	-
55	BG	-
56	R	-
57	G	-
58	Y	-
69	BG	-
70	G	-
71	SB	-
74	LG	-
76	P	-
77	B/W	-
80	W	-

Connector No.	E49
Connector Name	WIRE TO WIRE
Connector Type	RH08MB

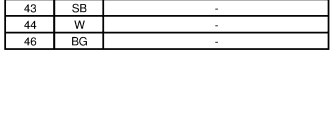

Terminal No.	Color Of Wire	Signal Name [Specification]
2	V	-
3	BR	-
4	P	-
6	P	-
7	B	-
8	Y	-

Connector No.	E106
Connector Name	WIRE TO WIRE
Connector Type	TH80FW-CS16-TM4

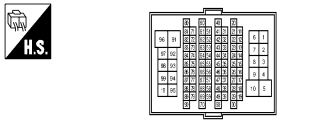

Terminal No.	Color Of Wire	Signal Name [Specification]
1	V	-
3	BG	-
4	BG	-
5	R	-
6	P	-
7	BG	-
8	P	-
9	W	-
10	Y	-
11	SB	-
12	BG	-
13	P	-
14	L	-
15	SB	-
16	BG	-
17	SHIELD	-
18	L	-
19	P	-
20	B	-
21	Y	-
22	V	-
23	Y	-
24	V	-
25	BR	-
26	L	-
27	SHIELD	-
28	G	-
29	R	-
30	W	-
31	V	-
32	G	-
33	GR	-
34	P	-
35	LG	-
36	G	-
37	Y	-
38	SB	-
39	GR	-
40	G	-
41	V	-
42	V	-
43	L	-
44	BR	-
45	G	-
46	SB	-
48	BG	-
49	L	-
50	R	-
51	SHIELD	-
60	P	-
61	L	-
71	LG	-
72	SB	-
74	P	-
75	BR	-
76	LG	-
77	V	-
78	BR	-
79	W	-
80	Y	-
81	GR	-
82	BG	-
84	P	-
85	P	-
86	GR	-
87	R	-
88	L	-
89	BG	-
90	G	-
91	GR	-
92	R	-
93	R	-
94	LG	-
95	G	-
96	GR	-
97	L	-
98	LG	-
99	BG	-
100	L	-

JRMWG8021GB

CHARGING SYSTEM

Connector No.	E251
Connector Name	WIRE TO WIRE
Connector Type	RH08FB

Terminal No.	Color Of Wire	Signal Name [Specification]
2	GR	-
3	BR	-
4	V	-
6	P	-
7	B	-
8	W	-

Connector No.	E252
Connector Name	FUSIBLE LINK HOLDER
Connector Type	24340_79905

Terminal No.	Color Of Wire	Signal Name [Specification]
6	B	-

Connector No.	E253
Connector Name	ALTERNATOR
Connector Type	24340_65F45

Terminal No.	Color Of Wire	Signal Name [Specification]
1	B	-

Connector No.	E254
Connector Name	ALTERNATOR
Connector Type	HS03FB

Terminal No.	Color Of Wire	Signal Name [Specification]
2	BR	L
3	V	S
4	P	C

Connector No.	M3
Connector Name	FUSE BLOCK (J/B)
Connector Type	NS12FW-CS

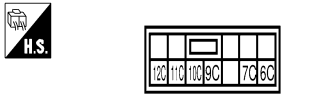

Terminal No.	Color Of Wire	Signal Name [Specification]
10C	L	-
11C	R	-
12C	W	-
6C	R	-
7C	B	-
9C	BR	-

Connector No.	M6
Connector Name	WIRE TO WIRE
Connector Type	TH80MW-CS16-TM4

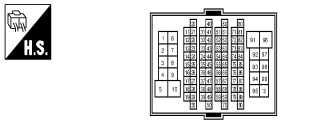

Terminal No.	Color Of Wire	Signal Name [Specification]
1	L	-
3	R	-
4	G	-
5	Y	-
6	P	-
7	W	-
8	V	-
9	L	-
10	Y	-
11	G	-
12	BG	-
13	R	-
14	L	-
15	BR	-
16	R	-
17	SHIELD	-
18	L	-
19	P	-
20	B	-
21	W	-
22	GR	-
23	L	-
24	V	-
25	BR	-
26	G	-
27	SHIELD	-
28	G	-
29	R	-
30	W	-
31	V	-
32	G	-
33	GR	-
34	LG	-
35	P	-
36	L	-
37	W	-
38	Y	-
39	GR	-
40	BG	-
41	W	-
42	R	-
43	Y	-
44	BR	-
45	G	-
46	LG	-
48	W	-
49	L	-
50	R	-
51	SHIELD	-
60	SB	-
61	V	-
71	W	-
72	LG	-
74	R	-
75	BR	-
76	LG	-
77	R	-
78	BR	-
79	W	-
80	Y	-
81	BG	-
82	SB	-
84	Y	-
85	P	-

JRMWG8022GB

CHARGING SYSTEM

86	GR	-
87	R	-
88	L	-
89	G	-
90	P	-
91	W	-
92	R	-
93	LG	-
94	W	-
95	SB	-
96	L	-
97	L	-
98	Y	-
99	BG	-
100	L	-

23	LG	ILLUMINATION CONTROL SWITCH SIGNAL (-)
24	BR	ILLUMINATION CONTROL SWITCH SIGNAL (+)
25	G	TRIP A/B RESET SWITCH SIGNAL
26	BG	ENTER SWITCH SIGNAL
27	SB	SELECT SWITCH SIGNAL
28	BR	ALTERNATOR
29	G	SEAT BELT BUCKLE SWITCH SIGNAL (PASSENGER SIDE)
30	LG	SEAT BELT BUCKLE SWITCH SIGNAL (DRIVER SIDE)
31	V	PARKING BRAKE SWITCH SIGNAL
32	V	BRAKE FLUID LEVEL SWITCH SIGNAL
33	L	WASHER LEVEL SWITCH SIGNAL
34	GR	OIL PRESSURE SENSOR POWER
35	W	OIL PRESSURE SENSOR SIGNAL
38	BG	FUEL LEVEL SENSOR SIGNAL
39	Y	LED HEAD LAMP (LH) WARNING SIGNAL
40	V	ILLUMINATION CONTROL

120	BR	SAPMPRLY
121	P	POWER SUPPLY FOR ECM
122	V	POWER SUPPLY FOR ECM
124	B	ECM GROUND
126	L	FUEL PUMP RELAY
127	G	THROTTLE CONTROL MOTOR RELAY
128	B	ECM GROUND

Connector No.	M53
Connector Name	COMBINATION METER
Connector Type	SAB40FW

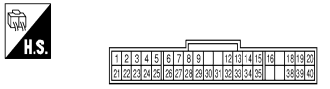

Terminal No.	Color Of Wire	Signal Name [Specification]
1	V	BATTERY POWER SUPPLY
2	W	IGNITION POWER SUPPLY
3	B	GROUND
4	B	ILLUMINATION GROUND
5	B	GROUND
6	W	METER CONTROL SWITCH GROUND
7	Y	A/C AUTO AMP. CONNECTION RECOGNITION SIGNAL
8	SB	AMBIENT SENSOR GROUND
9	P	AMBIENT SENSOR SIGNAL
12	L	VEHICLE SPEED SIGNAL (2-PULSE)
13	V	VEHICLE SPEED SIGNAL (8-PULSE)
14	B	OIL PRESSURE SENSOR GROUND
15	R	AIR BAG SIGNAL
16	R	LED HEAD LAMP (RH) WARNING SIGNAL
18	L	FUEL LEVEL SENSOR GROUND
19	R	OIL LEVEL SENSOR GROUND
20	W	OIL LEVEL SENSOR SIGNAL
21	L	CAN-H
22	P	CAN-L

Connector No.	M107
Connector Name	ECM
Connector Type	RH24FGY-RZ8-R-LH-Z

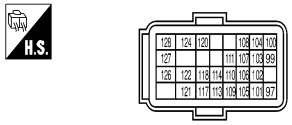

Terminal No.	Color Of Wire	Signal Name [Specification]
97	P	CAN COMMUNICATION LINE
99	SB	SENSOR POWER SUPPLY
100	BR	SENSOR POWER SUPPLY
101	L	CAN COMMUNICATION LINE
102	G	ASCD STEERING SWITCH
103	GR	SENSOR GROUND
104	P	ACCELERATOR PEDAL POSITION SENSOR 1
105	W	ECM RELAY (SELF SHUT-OFF)
106	LG	IGNITION SWITCH
107	BG	SENSOR GROUND
108	L	ACCELERATOR PEDAL POSITION SENSOR 2
109	L	SAVALVERLY
110	P	STOP LAMP SWITCH
111	GR	PNP SIGNAL
113	SB	ENGINE SPEED OUTPUT SIGNAL
114	V	DATA LINK CONNECTOR
117	R	ASCD BRAKE SWITCH
118	W	POWER SUPPLY FOR ECM (BACK-UP)

JRMWG8023GB

SYMPTOM DIAGNOSIS

CHARGING SYSTEM

Symptom Table

INFOID:0000000011485716

Symptom	Reference
Discharged battery	Refer to CHG-3, "Work Flow (With EXP-800 NI or GR8-1200 NI)" or CHG-7, "Work Flow (Without EXP-800 NI or GR8-1200 NI)".
The charge warning lamp does not illuminate when the ignition switch is set to ON.	
The charge warning lamp does not turn OFF after the engine starts.	
The charging warning lamp turns ON when increasing the engine speed.	

PRECAUTION

PRECAUTIONS

Precaution for Supplemental Restraint System (SRS) "AIR BAG" and "SEAT BELT PRE-TENSIONER"

INFOID:0000000011485717

The Supplemental Restraint System such as “AIR BAG” and “SEAT BELT PRE-TENSIONER”, used along with a front seat belt, helps to reduce the risk or severity of injury to the driver and front passenger for certain types of collision. This system includes seat belt switch inputs and dual stage front air bag modules. The SRS system uses the seat belt switches to determine the front air bag deployment, and may only deploy one front air bag, depending on the severity of a collision and whether the front occupants are belted or unbelted.
Information necessary to service the system safely is included in the “SRS AIR BAG” and “SEAT BELT” of this Service Manual.

WARNING:
Always observe the following items for preventing accidental activation.
- **To avoid rendering the SRS inoperative, which could increase the risk of personal injury or death in the event of a collision that would result in air bag inflation, all maintenance must be performed by an authorized NISSAN/INFINITI dealer.**
- **Improper maintenance, including incorrect removal and installation of the SRS, can lead to personal injury caused by unintentional activation of the system. For removal of Spiral Cable and Air Bag Module, see “SRS AIR BAG”.**
- **Never use electrical test equipment on any circuit related to the SRS unless instructed to in this Service Manual. SRS wiring harnesses can be identified by yellow and/or orange harnesses or harness connectors.**

PRECAUTIONS WHEN USING POWER TOOLS (AIR OR ELECTRIC) AND HAMMERS

WARNING:
Always observe the following items for preventing accidental activation.
- **When working near the Air Bag Diagnosis Sensor Unit or other Air Bag System sensors with the ignition ON or engine running, never use air or electric power tools or strike near the sensor(s) with a hammer. Heavy vibration could activate the sensor(s) and deploy the air bag(s), possibly causing serious injury.**
- **When using air or electric power tools or hammers, always switch the ignition OFF, disconnect the battery, and wait at least 3 minutes before performing any service.**

Precaution for Battery Service

INFOID:0000000011485718

Before disconnecting the battery, lower both the driver and passenger windows. This will prevent any interference between the window edge and the vehicle when the door is opened/closed. During normal operation, the window slightly raises and lowers automatically to prevent any window to vehicle interference. The automatic window function will not work with the battery disconnected.

Precaution for Power Generation Voltage Variable Control System

INFOID:0000000011485719

CAUTION:
For this model, the battery current sensor that is installed to the battery cable at the negative terminal measures the charging/discharging current of the battery, and performs various controls. If the electrical component or the ground wire is connected directly to the battery terminal, the current other than that being measured with the battery current sensor is charging to or discharging from the battery. This condition causes the malfunction of the control, and then the battery discharge may occur. Do not connect the electrical component or the ground wire directly to the battery terminal.

Precautions for Removing Battery Terminal

INFOID:0000000011485720

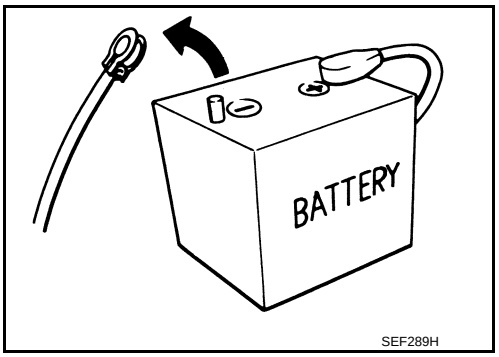

- When removing the 12V battery terminal, turn OFF the ignition switch and wait at least 30 seconds.
  NOTE:
  ECU may be active for several tens of seconds after the ignition switch is turned OFF. If the battery terminal is removed before ECU stops, then a DTC detection error or ECU data corruption may occur.
- For vehicles with the 2-batteries, be sure to connect the main battery and the sub battery before turning ON the ignition switch.
  NOTE:
  If the ignition switch is turned ON with any one of the terminals of main battery and sub battery disconnected, then DTC may be detected.
- After installing the 12V battery, always check "Self Diagnosis Result" of all ECUs and erase DTC.
  NOTE:
  The removal of 12V battery may cause a DTC detection error.

PREPARATION

PREPARATION

Special Service Tools

INFOID:0000000011485721

Tool number (Kent-Moore No.) Tool name	Description
— (—) Model GR8-1200 NI Multitasking battery and electrical diagnostic station  AWIIA1239ZZ	Tests batteries, starting and charging systems and charges batteries. For operating instructions, refer to diagnostic station instruction manual.
— (—) Model EXP-800 NI Battery and electrical diagnostic analyzer 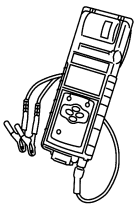 JSMIA0806ZZ	Tests batteries and charging systems. For operating instructions, refer to diagnostic analyzer instruction manual.

Commercial Service Tools

INFOID:0000000011485722

Tool name	Description
Power tool 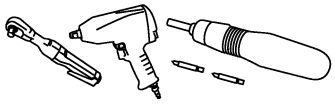 PIIB1407E	Loosening bolts, nuts and screws

PERIODIC MAINTENANCE

CHARGING SYSTEM PRELIMINARY INSPECTION

Inspection Procedure

INFOID:0000000011485723

1. CHECK BATTERY TERMINALS CONNECTION

Check if battery terminals are clean and tight.

Is the inspection result normal?

YES >> GO TO 2.
NO >> Repair battery terminals connection.

2. CHECK FUSE

Check for blown fuse and fusible link.

Unit	Power source (Power supply terminals)	Fuse No.
Alternator	Battery (“S” terminal)	38
Combination meter	Ignition switch ON (“L” terminal)	4

Is the inspection result normal?

YES >> GO TO 3.
NO >> Be sure to eliminate the cause of malfunction before installing new fuse.

3. CHECK DRIVE BELT TENSION

Check drive belt tension. Refer to EM-15, "Checking".

Is the inspection result normal?

YES >> INSPECTION END
NO >> Repair as needed.

POWER GENERATION VOLTAGE VARIABLE CONTROL SYSTEM OPERATION INSPECTION

Inspection Procedure

INFOID:0000000011485724

CAUTION:
When performing this inspection, always use a charged battery that has completed the battery inspection. (When the charging rate of the battery is low, the response speed of the voltage change will become slow. This can cause an incorrect inspection.)

1. CHECK ECM (CONSULT)

Perform ECM self-diagnosis with CONSULT. Refer to EC-172, "CONSULT Function (GT-R certified NISSAN dealer)".

Self-diagnostic results content

No malfunction detected>> GO TO 2.
Malfunction detected>> Check applicable parts, and repair or replace corresponding parts.

2. CHECK OPERATION OF POWER GENERATION VOLTAGE VARIABLE CONTROL SYSTEM

1. Connect CONSULT and start the engine.
2. The selector lever is in “P” or “N” position and all of the electric loads and A/C, etc. are turned OFF.
3. Select “ALTERNATOR DUTY” at “Active Test” of “ENGINE”, and then check the value of “BATTERY VOLT” monitor when DUTY value of “ALTERNATOR DUTY” is set to 40.0%.

“BATTERY VOLT”	
2 seconds after setting the DUTY value of “ALTERNATOR DUTY” to 40.0%	**: 12 - 13.6 V**

4. Check the value of “BATTERY VOLT” monitor when DUTY value of “ALTERNATOR DUTY” is set to 80.0%.

“BATTERY VOLT”	
20 seconds after setting the DUTY value of “ALTERNATOR DUTY” to 80.0%	**: +0.5 V or more against the value of “BATTERY VOLT” monitor when DUTY value is 40.0%**

Is the measurement value within the specification?

YES >> INSPECTION END
NO >> GO TO 3.

3. CHECK IPDM E/R (CONSULT)

Perform IPDM E/R self-diagnosis with CONSULT. Refer to PCS-11, "CONSULT Function (IPDM E/R)".

Self-diagnostic results content

No malfunction detected>> GO TO 4.
Malfunction detected>> Check applicable parts, and repair or replace corresponding parts.

4. CHECK HARNESS BETWEEN ALTERNATOR AND IPDM E/R

1. Turn ignition switch OFF.
2. Disconnect alternator connector and IPDM E/R connector.
3. Check continuity between alternator harness connector and IPDM E/R harness connector.

Alternator harness connector		IPDM E/R harness connector		Continuity
Connector	Terminal	Connector	Terminal	
E254	4	E7	76	Existed

4. Check continuity between alternator harness connector and ground.

Alternator harness connector		Ground	Continuity
Connector	Terminal		
E254	4		Not existed

Is the inspection result normal?

YES >> Replace IPDM E/R.
NO >> Repair harness or connector between IPDM E/R and alternator.

REMOVAL AND INSTALLATION

ALTERNATOR

Exploded View (GT-R certified NISSAN dealer)

INFOID:0000000011485725

REMOVAL

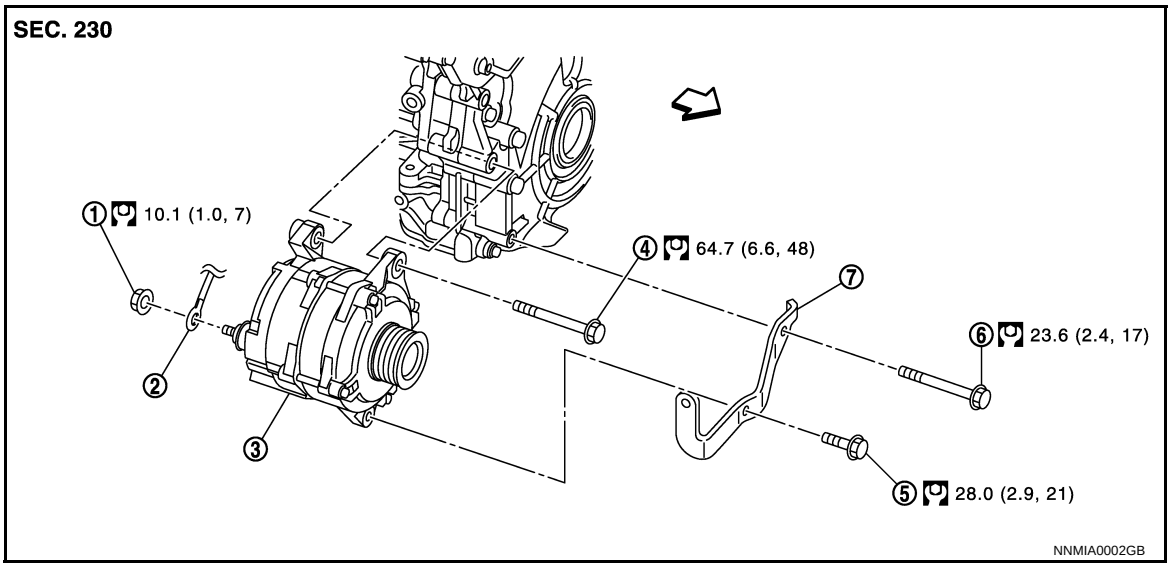

1. “B” terminal nut
2. “B” terminal harness
3. Alternator
4. Alternator mounting upper bolt
5. Alternator mounting lower bolt
6. Alternator stay mounting bolt
7. Alternator stay

⇦ : Engine front

Refer to GI-4, "Components" for symbols in the figure.

DISASSEMBLY

Type: A002TX0091

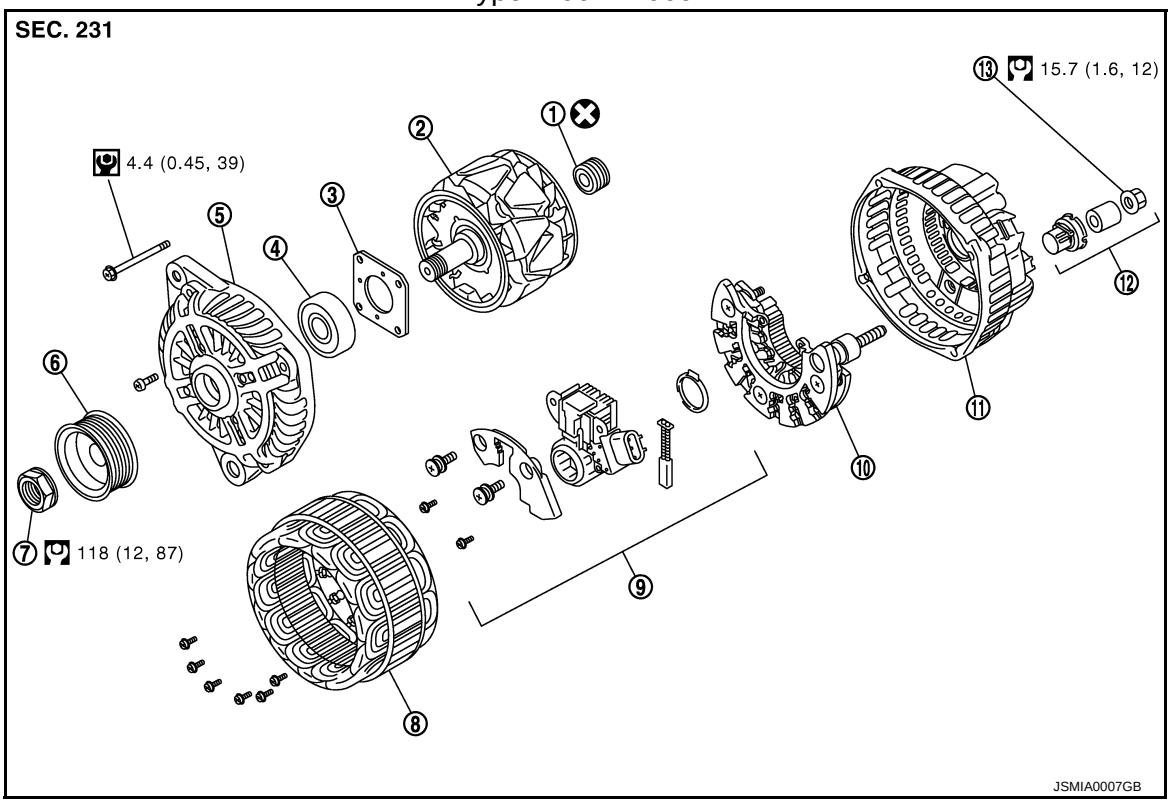

1. Rear bearing
2. Rotor assembly
3. Retainer
4. Front bearing
5. Front bracket assembly
6. Pulley
7. Pulley nut
8. Stator assembly
9. IC voltage regulator assembly
10. Diode assembly
11. Rear bracket assembly
12. Terminal set
13. “B” terminal nut

Refer to GI-4, "Components" for symbols in the figure.

Removal and Installation (GT-R certified NISSAN dealer)

INFOID:0000000011485726

REMOVAL

1. Disconnect the battery cable from the negative terminal. Refer to PG-91, "Removal and Installation".
2. Remove drive belt. Refer to EM-15, "Removal and Installation (GT-R certified NISSAN dealer)".
3. Remove drive belt auto tensioner and idler pulley bracket side. Refer to EM-27, "Exploded View".
4. Remove engine front undercover, using power tools.
5. Remove alternator mounting upper bolt.
6. Disconnect oil pressure switch connector.
7. Pull up alternator, and then disconnect alternator connector (1).
8. Remove “B” terminal nut (2).

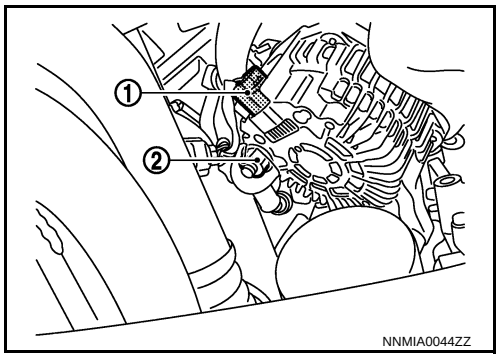

9. Remove alternator assembly upward from the vehicle.

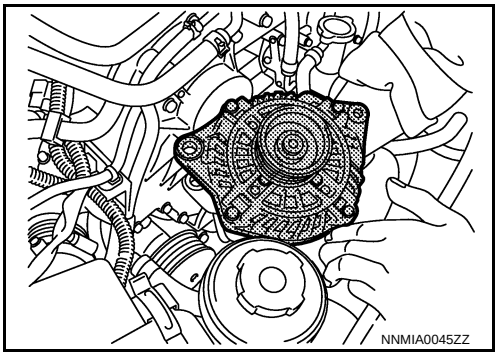

INSTALLATION

Note the following items, and then install in the reverse order of removal.

CAUTION:

- **Be careful to tighten “B” terminal nut to the specified torque.**
- **Install alternator, and check tension of belt. Refer to EM-15, "Checking".**
- **For this model, the power generation voltage variable control system that controls the power generation voltage of the alternator has been adopted. Therefore, the power generation voltage variable control system operation inspection should be performed after replacing the alternator, and then make sure that the system operates normally. Refer to CHG-28, "Inspection Procedure".**

Inspection (GT-R certified NISSAN dealer)

INFOID:0000000011485727

ALTERNATOR PULLEY INSPECTION

Perform the following.

- Make sure that alternator pulley does not rattle.
- Make sure that alternator pulley nut is tight. Refer to CHG-30, "Exploded View (GT-R certified NISSAN dealer)".

SERVICE DATA AND SPECIFICATIONS (SDS)

SERVICE DATA AND SPECIFICATIONS (SDS)

Alternator

INFOID:0000000011485728

Type		A002TX0091
		MITSUBISHI make
Nominal rating	[V - A]	12 -150
Ground polarity		Negative
Minimum revolution under no-load (When 13.5 V is applied)	[rpm]	Less than 1,300
Hot output current (When 13.5 V is applied)	[A/rpm]	More than 57/1,500 More than 126/2,500 More than 152/5,000
Regulated output voltage	[V]	14.1 - 14.7*

*: Adjustment range of power generation voltage variable control is 11.4 - 15.6 V.