SECTION BRC
BRAKE CONTROL SYSTEM

CONTENTS

VDC/TCS/ABS

HOW TO USE THIS MANUAL

HOW TO USE THIS SECTION

Information

INFOID:0000000011487424

Both “VDC” and “ESC” are used in this manual. These indicate the same system.

BASIC INSPECTION

DIAGNOSIS AND REPAIR WORK FLOW

Work Flow (GT-R certified NISSAN dealer)

INFOID:0000000011487425

DETAILED FLOW

1. INTERVIEW FROM THE CUSTOMER

Clarify customer complaints before inspection. First of all, perform an interview utilizing BRC-7, "Diagnostic Work Sheet (GT-R certified NISSAN dealer)" and reproduce the symptom as well as fully understand it. Ask customer about his/her complaints carefully. Check symptoms by driving vehicle with customer, if necessary.

CAUTION:

Customers are not professional. Never guess easily like “maybe the customer means that...,” or “ maybe the customer mentions this symptom”.

>> GO TO 2.

2. CHECK SYMPTOM

Reproduce the symptom that is indicated by the customer, based on the information from the customer obtained by interview. Also check that the symptom is not caused by fail-safe mode. Refer to BRC-131, "Fail-Safe (GT-R certified NISSAN dealer)".

CAUTION:

When the symptom is caused by normal operation, fully inspect each portion and obtain the understanding of customer that the symptom is not caused by a malfunction.

>> GO TO 3.

3. PERFORM THE SELF-DIAGNOSIS

With CONSULT

1. Turn the ignition switch OFF → ON.
   CAUTION:
   Be sure to wait of 10 seconds after turning ignition switch OFF or ON.
2. Perform self-diagnosis for “ABS”.

Is DTC detected?

YES >> Record or print self-diagnosis results and freeze frame data (FFD). GO TO 4.
NO >> GO TO 6.

4. RECHECK THE SYMPTOM

With CONSULT

1. Erase self-diagnostic results for “ABS”.
2. Turn the ignition switch OFF → ON → OFF.
   CAUTION:
   Be sure to wait of 10 seconds after turning ignition switch OFF or ON.
3. Perform DTC confirmation procedures for the error-detected system.
   NOTE:
   If some DTCs are detected at the some time, determine the order for performing the diagnosis based on BRC-132, "DTC Inspection Priority Chart (GT-R certified NISSAN dealer)".

Is DTC detected?

YES >> GO TO 5.
NO >> Check harness and connectors based on the information obtained by interview. Refer to GI-39, "Intermittent Incident".

5. REPAIR OR REPLACE ERROR-DETECTED PART

With CONSULT

1. Repair or replace error-detected parts.
2. Reconnect part or connector after repairing or replacing.
3. When DTC is detected, erase self-diagnostic result for “ABS”.

CAUTION:
- **Turn the ignition switch OFF → ON → OFF after erase self-diagnosis result.**
- **Be sure to wait of 10 seconds after turning ignition switch OFF or ON.**

>> GO TO 7.

6. IDENTIFY ERROR-DETECTED SYSTEM BY SYMPTOM DIAGNOSIS

Estimate error-detected system based on symptom diagnosis and perform inspection.

Can the error-detected system be identified?

YES >> GO TO 7.
NO >> Check harness and connectors based on the information obtained by interview. Refer to GI-39, "Intermittent Incident".

7. FINAL CHECK

With CONSULT
1. Check the reference value for “ABS”.
2. Recheck the symptom and check that the symptom is not reproduced on the same conditions.

Is the symptom reproduced?

YES >> GO TO 3.
NO >> INSPECTION END

Diagnostic Work Sheet (GT-R certified NISSAN dealer)

INFOID:0000000011487426

DESCRIPTION

- In general, customers have their own criteria for a problem. Therefore, it is important to understand the symptom and status well enough by asking the customer about his/her concerns carefully. To systemize all the information for the diagnosis, prepare the interview sheet referring to the interview points.
- In some cases, multiple conditions that appear simultaneously may cause a DTC to be detected.

INTERVIEW SHEET SAMPLE

Interview sheet					
Customer name	MR/MS	Registration number		Initial year registration	
		Vehicle type		VIN	
Storage date		Engine/traction Motor		Mileage	km (Mile)
Symptom		☐ Does not operate ( ) function			
		☐ Warning lamp turns ON.			
		☐ ABS or (ABS) ☐ BRAKE or (!) ☐ ☐ OFF			
		☐ Other ( )			
		☐ Noise (Location:) ☐ Vibration (Location:)			
		☐ Other ( )			
First occurrence		☐ Recently ☐ Other ( )			
Frequency of occurrence		☐ Always ☐ Under a certain conditions of ☐ Sometimes (time(s)/day)			
Climate conditions		☐ Irrelevant			
	Weather	☐ Fine ☐ Cloud ☐ Rain ☐Snow ☐ Others ( )			
	Temperature	☐ Hot ☐Warm ☐ Cool ☐ Cold ☐ Temperature [Approx. °C (°F)]			
	Relative humidity	☐ High ☐ Moderate ☐ Low			
Road conditions		☐ Ordinary road ☐ Highway ☐ Mountainous road (uphill or downhill) ☐ Rough road			

Interview sheet

Customer name	MR/MS	Registration number		Initial year registration	
		Vehicle type		VIN	
Storage date		Engine/traction Motor		Mileage	km (Mile)
Operating condition, etc.		☐ Irrelevant ☐ When engine/traction motor starts ☐ During idling ☐ During driving ☐ During acceleration ☐ At constant speed driving ☐ During deceleration ☐ Immediately before stop [Vehicle speed: Approx. km/h (MPH)] ☐ During cornering (right curve or left curve) ☐ When steering wheel is steered (to right or to left)			
Other conditions	VDC OFF switch operation	☐ Yes ☐ No			
	Use of other functions (ex. ICC)	☐ Yes ☐ No ( )			
	Presence of non-genuine parts installation	☐ Yes ☐ No ( )			
Memo					

INSPECTION AND ADJUSTMENT

ADDITIONAL SERVICE WHEN REPLACING CONTROL UNIT

ADDITIONAL SERVICE WHEN REPLACING CONTROL UNIT : Description (GT-R certified NISSAN dealer)

INFOID:0000000011487427

Perform the steering angle sensor adjustment, decel G sensor calibration, pressure sensor calibration, and valve calibration after replacing the ABS actuator and electric unit (control unit). Refer to BRC-9, "ADDITIONAL SERVICE WHEN REPLACING CONTROL UNIT : Special Repair Requirement (GT-R certified NISSAN dealer)".

ADDITIONAL SERVICE WHEN REPLACING CONTROL UNIT : Special Repair Requirement (GT-R certified NISSAN dealer)

INFOID:0000000011487428

1. PERFORM ADJUSTMENT OF STEERING ANGLE SENSOR, CALIBRATION OF DECEL G SENSOR, CALIBRATION OF PRESSURE SENSOR, AND CALIBRATION OF VALVE

Perform steering angle sensor adjustment, decel G sensor calibration, pressure sensor calibration, and valve calibration.

>>
- Adjustment of steering angle sensor: Refer to BRC-9, "ADJUSTMENT OF STEERING ANGLE SENSOR NEUTRAL POSITION : Description (GT-R certified NISSAN dealer)".
- Calibration of decel G sensor: Refer to BRC-10, "CALIBRATION OF DECEL G SENSOR : Description (GT-R certified NISSAN dealer)".
- Calibration of pressure sensor: Refer to BRC-11, "CALIBRATION OF PRESSURE SENSOR : Description (GT-R certified NISSAN dealer)".
- Calibration of valve: Refer to BRC-12, "CALIBRATION OF VALVE : Description (GT-R certified NISSAN dealer)".

ADJUSTMENT OF STEERING ANGLE SENSOR NEUTRAL POSITION

ADJUSTMENT OF STEERING ANGLE SENSOR NEUTRAL POSITION : Description (GT-R certified NISSAN dealer)

INFOID:0000000011487429

When doing work that applies to the list below, make sure to adjust neutral position of steering angle sensor before running vehicle. Refer to BRC-9, "ADJUSTMENT OF STEERING ANGLE SENSOR NEUTRAL POSITION : Special Repair Requirement (GT-R certified NISSAN dealer)".

×: Required –: Not required

Situation	Adjustment of steering angle sensor neutral position
Removing/Installing ABS actuator and electric unit (control unit)	—
Replacing ABS actuator and electric unit (control unit)	×
Removing/Installing steering angle sensor	×
Replacing steering angle sensor	×
Removing/Installing steering components	×
Replacing steering components	×
Removing/Installing suspension components	×
Replacing suspension components	×
Changing old tires to new ones	—
Adjusting wheel alignment	×

ADJUSTMENT OF STEERING ANGLE SENSOR NEUTRAL POSITION : Special Repair Requirement (GT-R certified NISSAN dealer)

INFOID:0000000011487430

ADJUSTMENT OF STEERING ANGLE SENSOR NEUTRAL POSITION

CAUTION:

To adjust neutral position of steering angle sensor, make sure to use CONSULT.

(Adjustment cannot be done without CONSULT)

1. ALIGN THE VEHICLE STATUS

Stop the vehicle with front wheels in the straight-ahead position.

>> GO TO 2.

2. PERFORM THE NEUTRAL POSITION ADJUSTMENT FOR THE STEERING ANGLE SENSOR

1. Select “ABS”, “WORK SUPPORT” and “ST ANGLE SENSOR ADJUSTMENT” in order with CONSULT.
2. Select “START”.
   CAUTION:
   Never touch steering wheel while adjusting steering angle sensor.
3. After approximately 10 seconds, select “END”.
4. Turn ignition switch OFF, then turn it ON again.
   CAUTION:
   Always perform the above operation.

>> GO TO 3.

3. CHECK DATA MONITOR

1. Run the vehicle with front wheels in the straight-ahead position, then stop.
2. Select “ABS”, “DATA MONITOR” and “STR ANGLE SIG” in order with CONSULT, and check steering angle sensor signal.

STR ANGLE SIG : 0±2.5°

Is the steering angle within the specified range?

YES >> GO TO 4.
NO >> Perform the neutral position adjustment for the steering angle sensor again, GO TO 1.

4. ERASE THE SELF-DIAGNOSIS MEMORY

Erase self-diagnosis memories for “ABS” with CONSULT. Refer to BRC-34, "CONSULT Function (GT-R certified NISSAN dealer)".

Are the memories erased?

YES >> INSPECTION END
NO >> Check the items indicated by the self-diagnosis.

CALIBRATION OF DECEL G SENSOR

CALIBRATION OF DECEL G SENSOR : Description (GT-R certified NISSAN dealer)

INFOID:0000000011487431

When doing work that applies to the list below, make sure to calibrate decel G sensor before running vehicle. Refer to BRC-11, "CALIBRATION OF DECEL G SENSOR : Special Repair Requirement (GT-R certified NISSAN dealer)".

×: Required –: Not required

Situation	Calibration of decel G sensor
Removing/Installing ABS actuator and electric unit (control unit)	×
Replacing ABS actuator and electric unit (control unit)	×
Removing/Installing steering components	—
Replacing steering components	—
Removing/Installing suspension components	—
Replacing suspension components	—
Changing old tires to new ones	—
Adjusting wheel alignment	—
Removing/Installing yaw rate/side/decel G sensor	×
Replacing yaw rate/side/decel G sensor	×

CALIBRATION OF DECEL G SENSOR : Special Repair Requirement (GT-R certified NISSAN dealer)

INFOID:0000000011487432

CALIBRATION OF DECEL G SENSOR

CAUTION:
- **To calibrate decel G sensor, always use CONSULT. (Calibration cannot be done without CONSULT)**
- **Perform the G sensor calibration only with the vehicle parked on level surface.**

1. ALIGN THE VEHICLE STATUS

Stop the vehicle with front wheels in the straight-ahead position.

CAUTION:
- **Keep all tires inflated to correct pressures. Adjust the tire pressure to the specified pressure value.**
- **Check that there is specified-load in vehicle other than the driver (or equivalent weight placed in driver's position).**

>> GO TO 2.

2. PERFORM THE CALIBRATION OF DECEL G SENSOR

1. Select "ABS", "WORK SUPPORT" and "DECEL G SEN CALIBRATION" in order with CONSULT.
2. Select "START".
3. After approximately 10 seconds, select "END".
4. Turn the ignition switch OFF, then turn it ON again.
   CAUTION:
   Always perform the above operation.

>> GO TO 3.

3. CHECK DATA MONITOR

1. Run the vehicle with front wheels in the straight-ahead position, then stop.
2. Select "ABS", "DATA MONITOR" and "DECEL G-SEN" in order with CONSULT, and check decel G sensor signal.

DECEL G-SEN : ±0.08 G

Is the decel G within the specified range?

YES >> GO TO 4.
NO >> Perform the calibration of decel G sensor again, GO TO 1.

4. ERASE THE SELF-DIAGNOSIS MEMORY

Erase self-diagnosis memories for "ABS" with CONSULT. Refer to BRC-34, "CONSULT Function (GT-R certified NISSAN dealer)".

Are the memories erased?

YES >> INSPECTION END
NO >> Check the items indicated by the self-diagnosis.

CALIBRATION OF PRESSURE SENSOR

CALIBRATION OF PRESSURE SENSOR : Description (GT-R certified NISSAN dealer)

INFOID:0000000011487433

When doing work that applies to the list below, make sure to calibrate pressure sensor before running vehicle. Refer to BRC-12, "CALIBRATION OF PRESSURE SENSOR : Special Repair Requirement (GT-R certified NISSAN dealer)".

×: Required –: Not required

Situation	Calibration of pressure sensor
Removing/Installing ABS actuator and electric unit (control unit)	—
Replacing ABS actuator and electric unit (control unit)	×

Removing/Installing brake components	—
Replacing brake components	—
Performing air bleeding from brake piping	—
Replacing brake fluid	—

CALIBRATION OF PRESSURE SENSOR : Special Repair Requirement (GT-R certified NISSAN dealer)

INFOID:0000000011487434

CALIBRATION OF DECEL G SENSOR

CAUTION:

- **To calibrate pressure sensor, make sure to use CONSULT. (Calibration cannot be done without CONSULT.)**
- **Perform the pressure sensor calibration with the vehicle stopped.**
- **Never depress the brake pedal during the pressure sensor calibration.**

1. PERFORM THE CALIBRATION OF PRESSURE SENSOR

1. Select “ABS”, “WORK SUPPORT” and “PRESS SEN CALIBRATION” in order with CONSULT.
2. Select “START”.
3. After approximately 10 seconds, select “END”.
4. Turn the ignition switch OFF, then turn it ON again.
   CAUTION:
   Always perform the above operation.

>> GO TO 2.

2. CHECK DATA MONITOR

Select “ABS”, “DATA MONITOR” and “PRESS SENSOR” in order with CONSULT, and check pressure sensor signal.

Condition	DATA MONITOR
Brake pedal is released	Approx. 0 bar
Brake pedal is depressed	Approx. 0 – 300 bar

Is the pressure within the specified range?

YES >> GO TO 3.
NO >> Check pressure sensor. Refer to BRC-82, "Diagnosis Procedure (GT-R certified NISSAN dealer)".

3. ERASE THE SELF-DIAGNOSIS MEMORY

Erase self-diagnosis memories for “ABS” with CONSULT. Refer to BRC-34, "CONSULT Function (GT-R certified NISSAN dealer)".

Are the memories erased?

YES >> INSPECTION END
NO >> Check the items indicated by the self-diagnosis.

CALIBRATION OF VALVE

CALIBRATION OF VALVE : Description (GT-R certified NISSAN dealer)

INFOID:0000000011487435

When doing work that applies to the list below, make sure to calibration of valve before running vehicle. Refer to BRC-13, "CALIBRATION OF VALVE : Special Repair Requirement (GT-R certified NISSAN dealer)".

×: Required –: Not required

Situation	Calibration of valve
Removing/Installing ABS actuator and electric unit (control unit)	—
Replacing ABS actuator and electric unit (control unit)	×
Removing/Installing brake components	—
Replacing brake components	—

Performing air bleeding from brake piping	—
Replacing brake fluid	—

CALIBRATION OF VALVE : Special Repair Requirement (GT-R certified NISSAN dealer)

INFOID:0000000011487436

CALIBRATION OF VALVE

CAUTION:

- **To calibrate valve, always use CONSULT.**
  (Calibration cannot be done without CONSULT)
- **Always perform the valve calibration after finishing the pressure sensor calibration. (If the pressure sensor calibration is not completed, the valve calibration cannot be performed.)**
- **Perform the valve calibration with the vehicle stopped.**
- **Never depress the brake pedal during the valve calibration.**

1. PERFORM THE PRESSURE SENSOR CALIBRATION

Perform the pressure sensor calibration. Refer to BRC-12, "CALIBRATION OF PRESSURE SENSOR : Special Repair Requirement (GT-R certified NISSAN dealer)".

>> GO TO 2.

2. PERFORM THE CALIBRATION OF VALVE

1. Select “ABS”, “WORK SUPPORT” and “VALVE CALIBRATION” in order with CONSULT.
2. Select “START”.
3. After approximately 40 seconds, select “END”.
4. Turn the ignition switch OFF, then turn it ON again.
   CAUTION:
   Always perform the above operation.

>> GO TO 3.

3. ERASE THE SELF-DIAGNOSIS MEMORY

Erase self-diagnosis memories for “ABS” with CONSULT. Refer to BRC-34, "CONSULT Function (GT-R certified NISSAN dealer)".

Are the memories erased?

YES >> INSPECTION END
NO >> Check the items indicated by the self-diagnosis.

SYSTEM DESCRIPTION

VDC

System Diagram (GT-R certified NISSAN dealer)

INFOID:0000000011487437

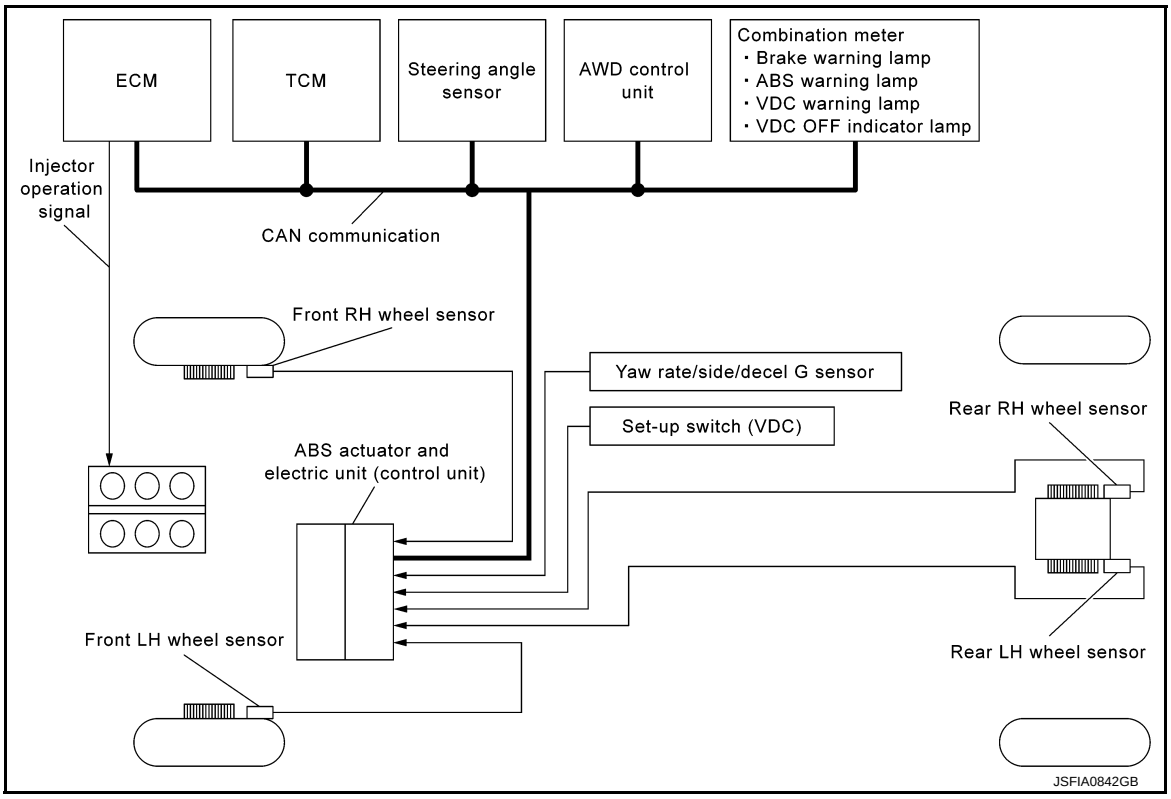

System Description (GT-R certified NISSAN dealer)

INFOID:0000000011487438

- In addition to TCS/ABS functions, Vehicle Dynamics Control (VDC) system controls brake application to four wheels and engine output to improve the stability of the vehicle, judging driving conditions (under/over steering) from the steering angle and brake application data detected by the sensors (steering angle and pressure) and from data by the sensors (yaw rate/side/decel G and wheel speed).
- During VDC operation, it informs driver of system operation by blinking the VDC warning lamp.
- Electrical system diagnosis by CONSULT is available.
- Both “VDC” and “VDC-R” are used in this manual. These indicate the same system.

Component Parts Location (GT-R certified NISSAN dealer)

INFOID:0000000011487439

For USA

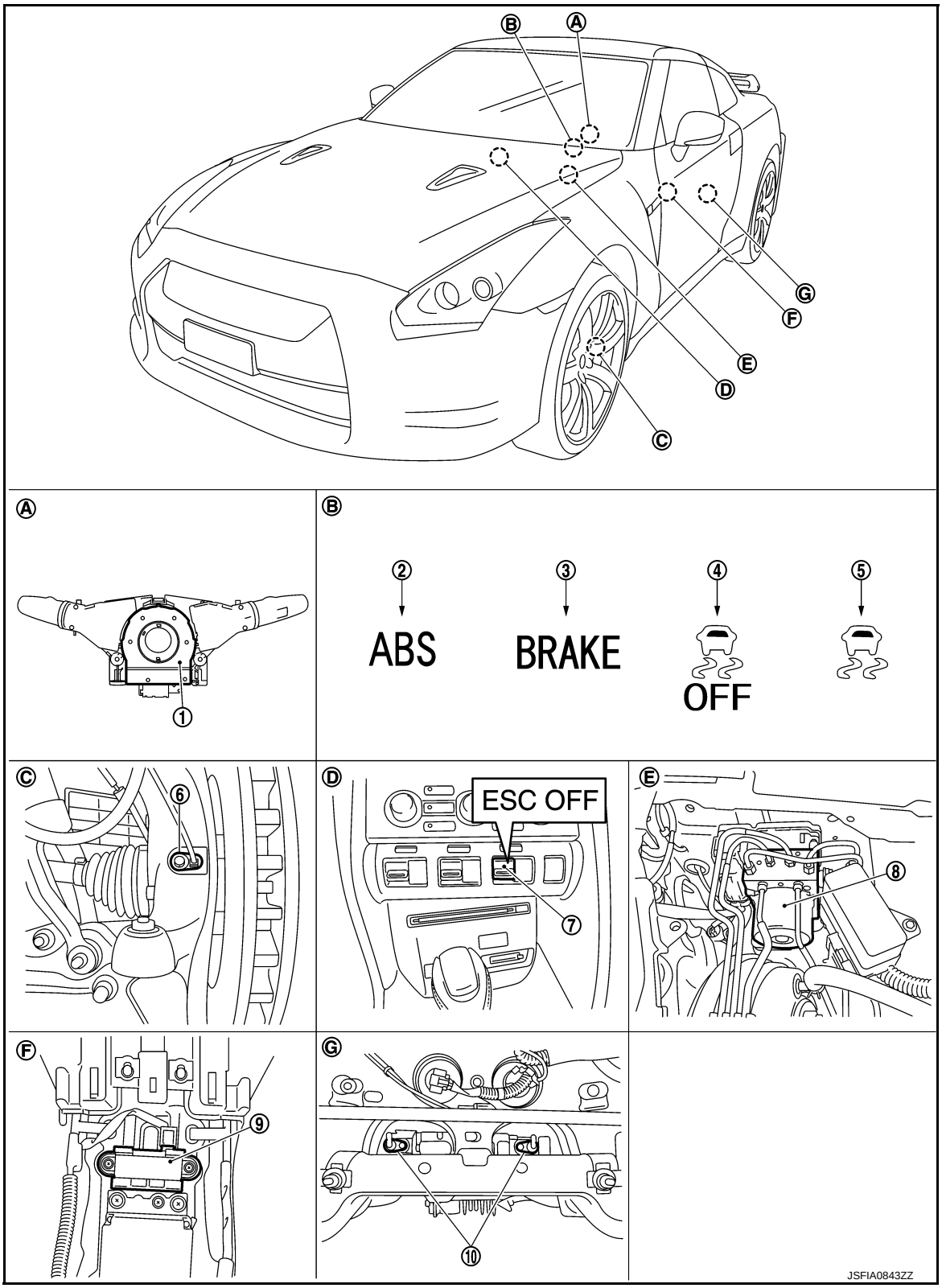

1. Steering angle sensor
2. ABS warning lamp
3. Brake warning lamp
4. VDC OFF indicator lamp
5. VDC warning lamp
6. Front wheel sensor

7. Set-up switch (VDC)
8. ABS actuator and electric unit (control unit)
9. Yaw rate/side/decel G sensor
10. Rear wheel sensor

A. Back of spiral cable assembly
B. Combination meter
C. Steering knuckle
D. Instrument center panel
E. Inside brake master cylinder cover
F. Under rear console assembly
G. Rear final drive assembly

Except for USA

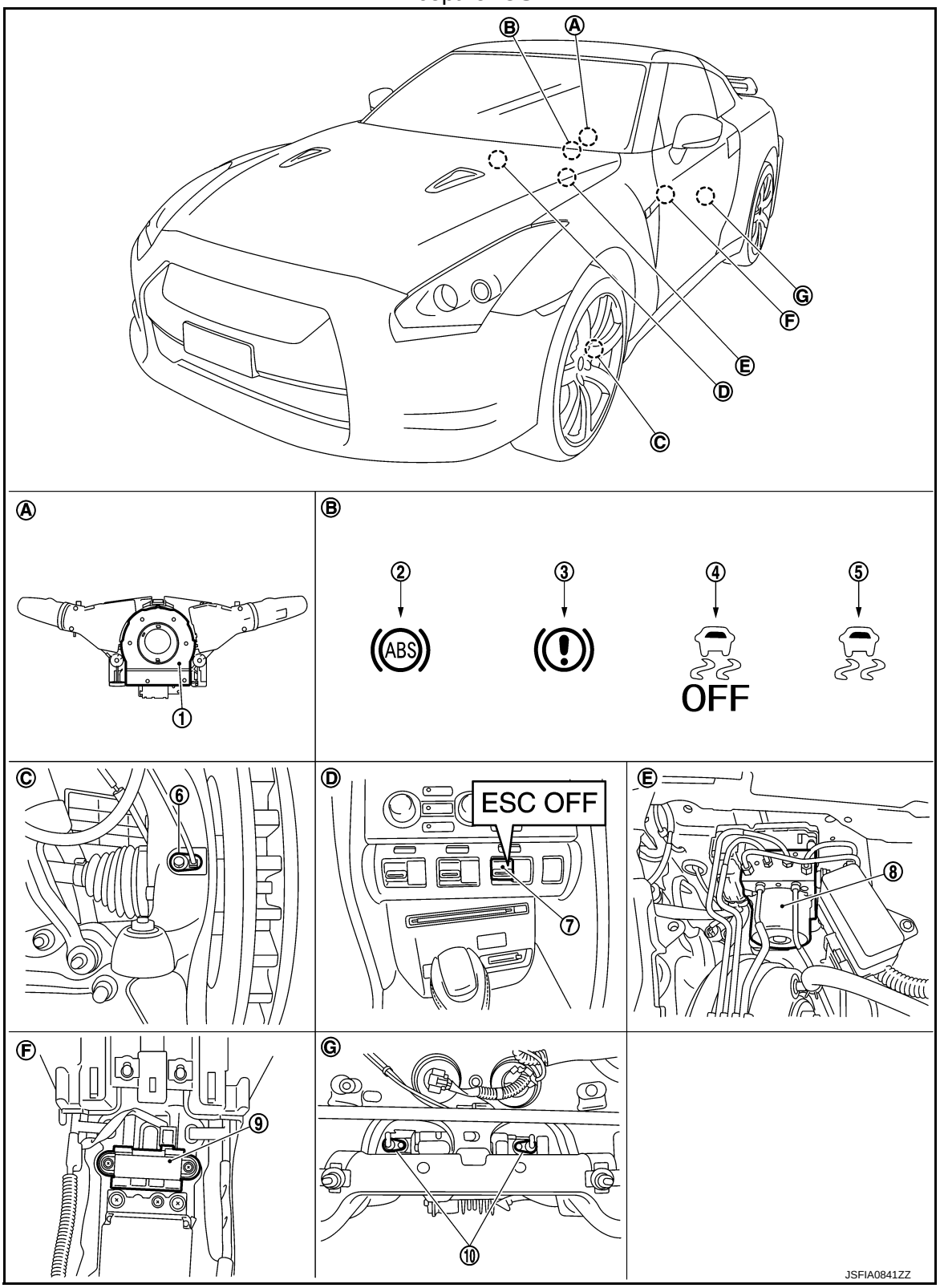

1. Steering angle sensor
2. ABS warning lamp
3. Brake warning lamp
4. VDC OFF indicator lamp
5. VDC warning lamp
6. Front wheel sensor
7. Set-up switch (VDC)
8. ABS actuator and electric unit (control unit)
9. Yaw rate/side/decel G sensor
10. Rear wheel sensor

A. Back of spiral cable assembly
B. Combination meter
C. Steering knuckle
D. Instrument center panel
E. Inside brake master cylinder cover
F. Under rear console assembly
G. Rear final drive assembly

Component Description (GT-R certified NISSAN dealer)

INFOID:0000000011487440

Component parts		Reference
ABS actuator and electric unit (control unit)	Pump	BRC-55, "Description (GT-R certified NISSAN dealer)"
	Motor	
	Actuator relay (main relay)	BRC-80, "Description (GT-R certified NISSAN dealer)"
	Solenoid valve	BRC-74, "Description (GT-R certified NISSAN dealer)"
	Pressure sensor	BRC-82, "Description (GT-R certified NISSAN dealer)"
	Pressure sensor (Front RH, Front LH, Rear RH, Rear LH)	
	VDC switch-over valve (CV1, CV2)	BRC-101, "Description (GT-R certified NISSAN dealer)"
	VDC switch-over valve (SV1, SV2)	BRC-103, "Description (GT-R certified NISSAN dealer)"
Wheel sensor		BRC-39, "Description (GT-R certified NISSAN dealer)"
Yaw rate/side/decel G sensor		BRC-58, "Description (GT-R certified NISSAN dealer)"
Steering angle sensor		BRC-85, "Description (GT-R certified NISSAN dealer)"
Set-up switch (VDC)		BRC-113, "Description (GT-R certified NISSAN dealer)"
ABS warning lamp		BRC-116, "Description (GT-R certified NISSAN dealer)"
Brake warning lamp		BRC-117, "Description (GT-R certified NISSAN dealer)"
VDC OFF indicator lamp		BRC-118, "Description (GT-R certified NISSAN dealer)"
VDC warning lamp		BRC-120, "Description (GT-R certified NISSAN dealer)"

TCS

System Diagram (GT-R certified NISSAN dealer)

INFOID:0000000011487441

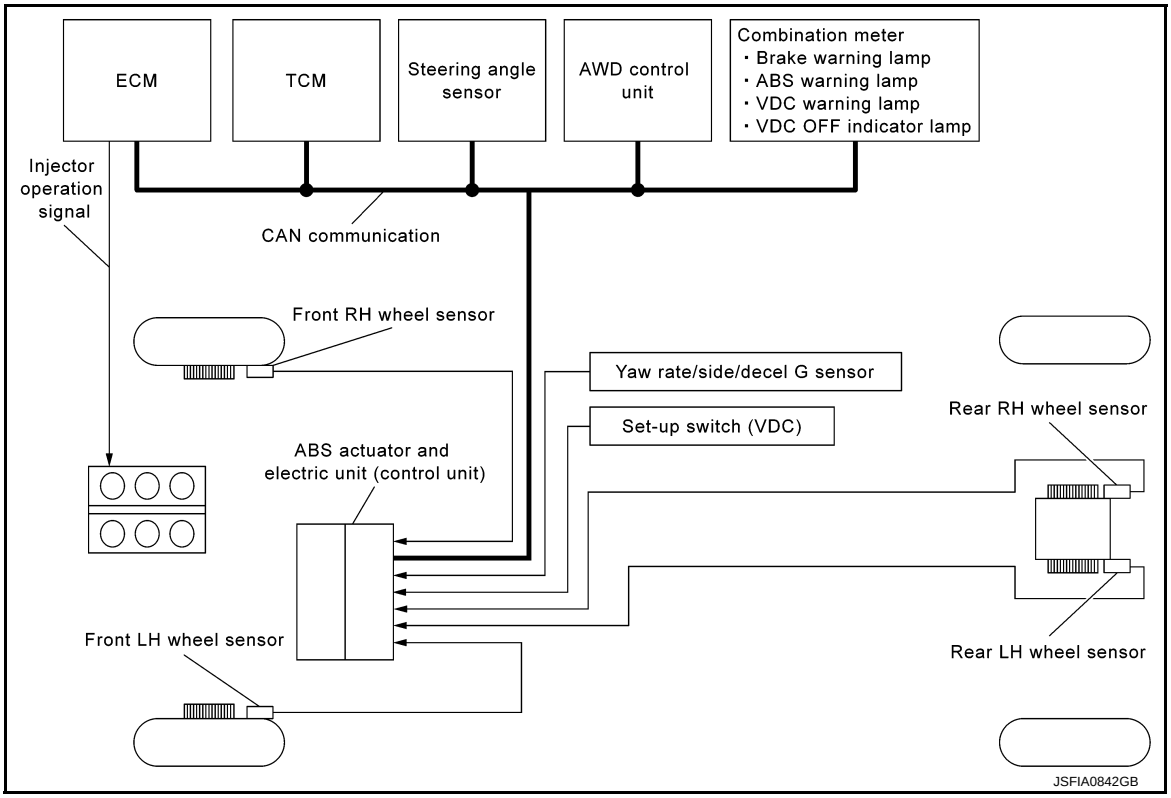

System Description (GT-R certified NISSAN dealer)

INFOID:0000000011487442

- TCS controls electronically controls engine torque, brake fluid pressure, and A/T gear position to ensure the optimum slippage ratio at drive wheels by computing wheel speed signals from 4 wheel sensors. When the ABS actuator and electric unit (control unit) detects a drive wheel spin at drive wheels (rear wheels), it compares wheel speed signals from all 4 wheels. At this time, LH and RH rear brake fluid pressure is controlled, while fuel is cut to engine and throttle valve being is adjusted to reduce engine torque by the control unit. Further more, throttle position is controlled to ensure the optimum engine torque.
- During TCS operation, TCS informs driver of system operation by blinking the VDC warning lamp.
- Electrical system diagnosis by CONSULT is available.

Component Parts Location (GT-R certified NISSAN dealer)

INFOID:0000000011487443

For USA

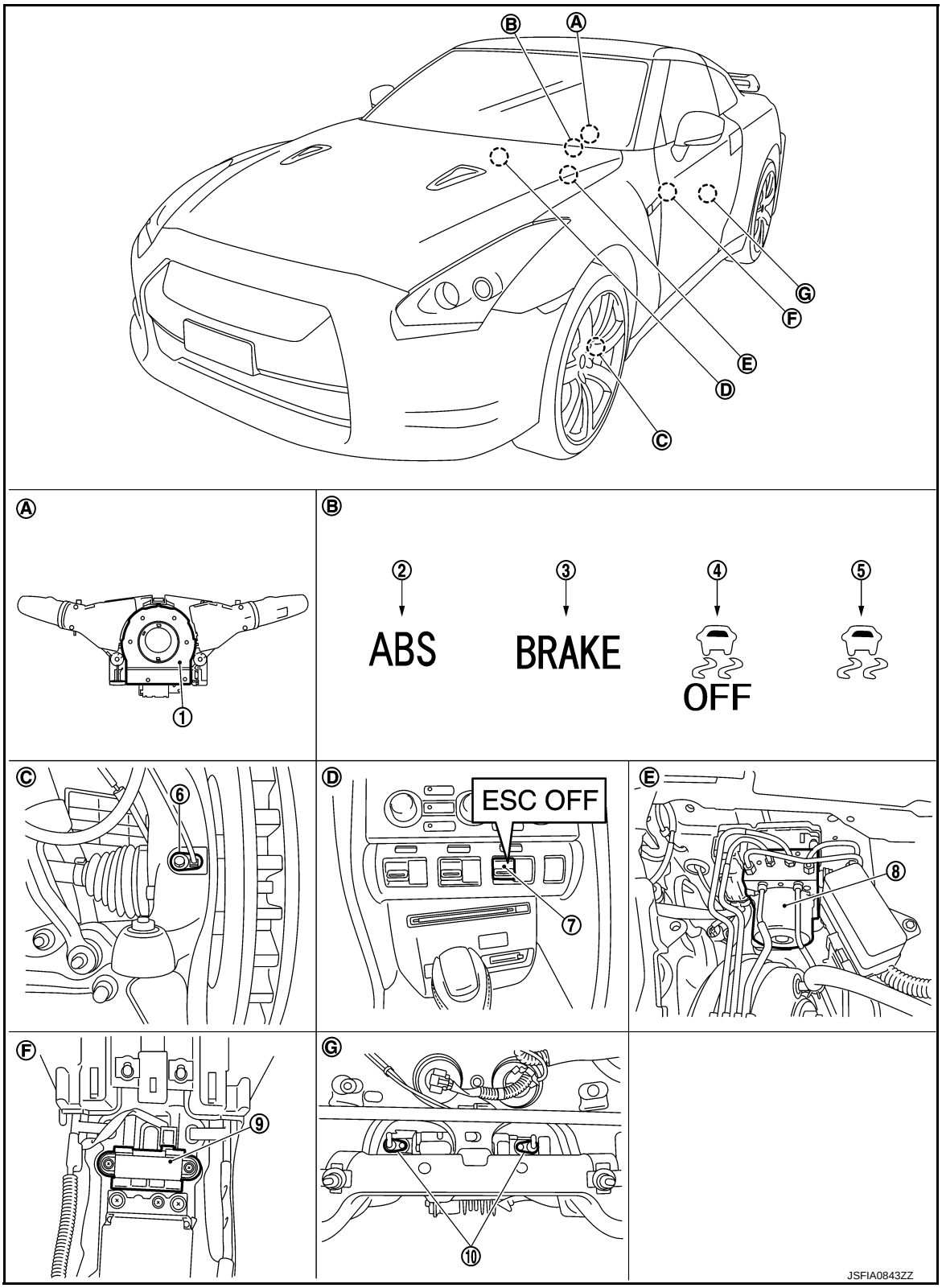

1. Steering angle sensor
2. ABS warning lamp
3. Brake warning lamp
4. VDC OFF indicator lamp
5. VDC warning lamp
6. Front wheel sensor

7. Set-up switch (VDC)
8. ABS actuator and electric unit (control unit)
9. Yaw rate/side/decel G sensor
10. Rear wheel sensor

A. Back of spiral cable assembly
B. Combination meter
C. Steering knuckle
D. Instrument center panel
E. Inside brake master cylinder cover
F. Under rear console assembly
G. Rear final drive assembly

Except for USA

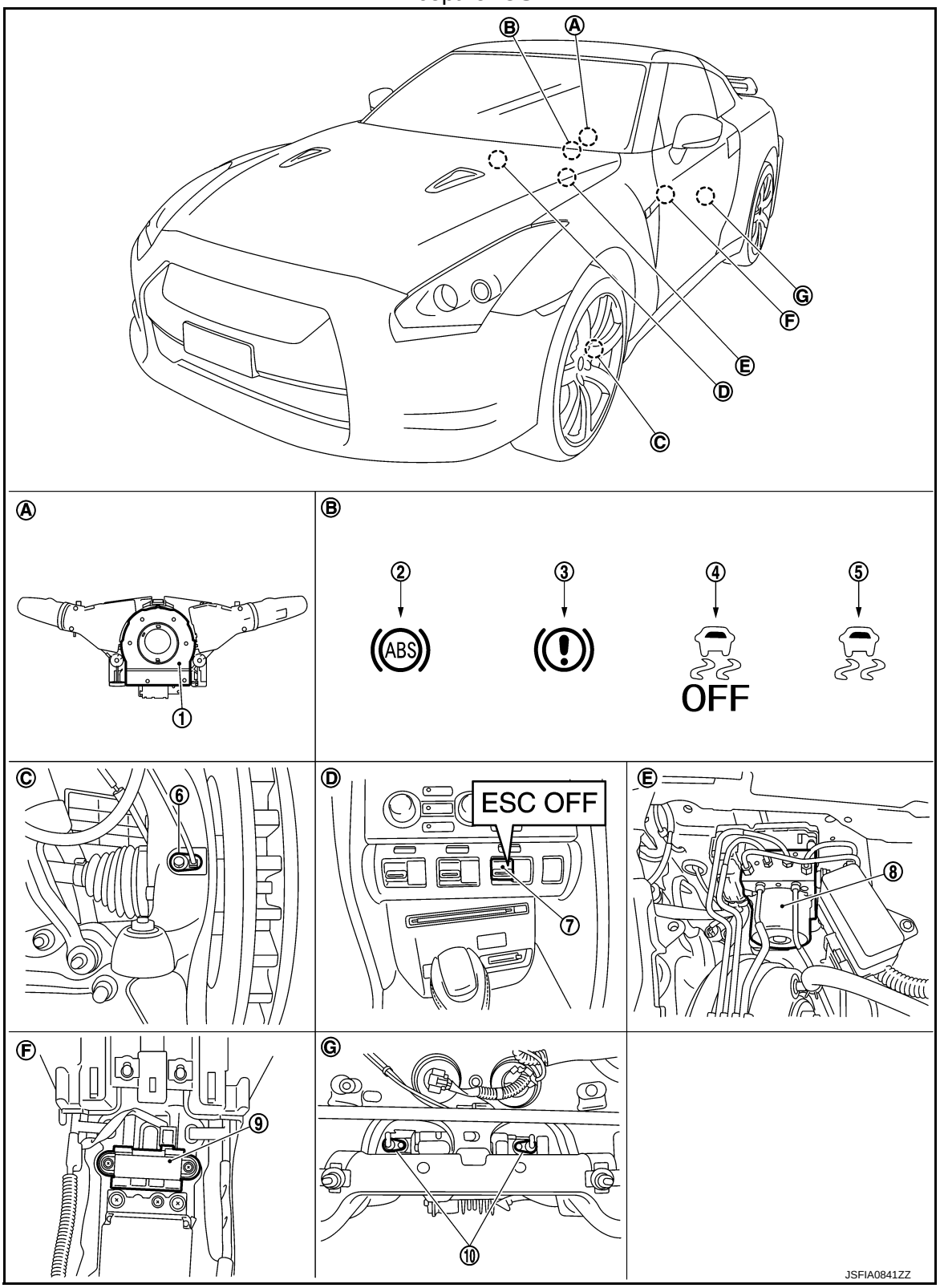

1. Steering angle sensor
2. ABS warning lamp
3. Brake warning lamp
4. VDC OFF indicator lamp
5. VDC warning lamp
6. Front wheel sensor
7. Set-up switch (VDC)
8. ABS actuator and electric unit (control unit)
9. Yaw rate/side/decel G sensor
10. Rear wheel sensor

A. Back of spiral cable assembly
B. Combination meter
C. Steering knuckle
D. Instrument center panel
E. Inside brake master cylinder cover
F. Under rear console assembly
G. Rear final drive assembly

Component Description (GT-R certified NISSAN dealer)

INFOID:0000000011487444

Component parts		Reference
ABS actuator and electric unit (control unit)	Pump	BRC-55, "Description (GT-R certified NISSAN dealer)"
	Motor	
	Actuator relay (main relay)	BRC-80, "Description (GT-R certified NISSAN dealer)"
	Solenoid valve	BRC-74, "Description (GT-R certified NISSAN dealer)"
	Pressure sensor	BRC-82, "Description (GT-R certified NISSAN dealer)"
	Pressure sensor (Front RH, Front LH, Rear RH, Rear LH)	
	VDC switch-over valve (CV1, CV2)	BRC-101, "Description (GT-R certified NISSAN dealer)"
	VDC switch-over valve (SV1, SV2)	BRC-103, "Description (GT-R certified NISSAN dealer)"
Wheel sensor		BRC-39, "Description (GT-R certified NISSAN dealer)"
Yaw rate/side/decel G sensor		BRC-58, "Description (GT-R certified NISSAN dealer)"
Steering angle sensor		BRC-85, "Description (GT-R certified NISSAN dealer)"
Set-up switch (VDC)		BRC-113, "Description (GT-R certified NISSAN dealer)"
ABS warning lamp		BRC-116, "Description (GT-R certified NISSAN dealer)"
Brake warning lamp		BRC-117, "Description (GT-R certified NISSAN dealer)"
VDC OFF indicator lamp		BRC-118, "Description (GT-R certified NISSAN dealer)"
VDC warning lamp		BRC-120, "Description (GT-R certified NISSAN dealer)"

ABS

System Diagram (GT-R certified NISSAN dealer)

INFOID:0000000011487445

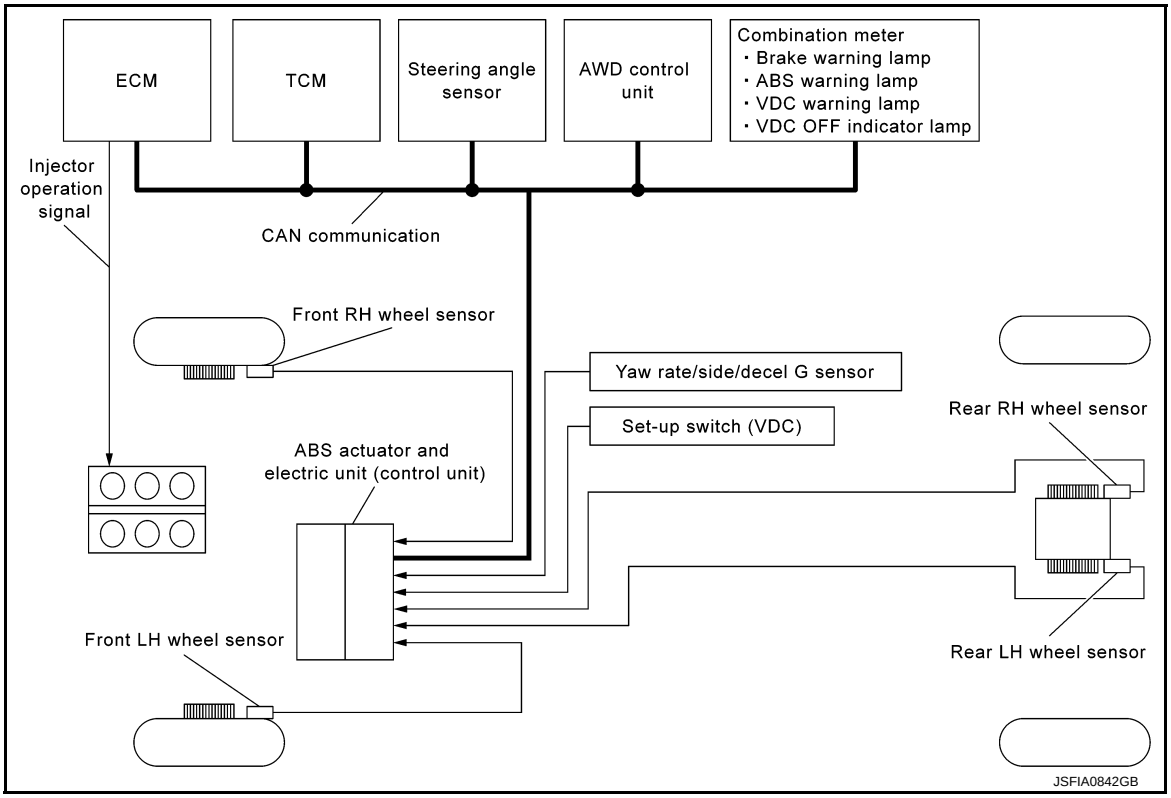

System Description (GT-R certified NISSAN dealer)

INFOID:0000000011487446

- Anti-Lock Braking System detects wheel revolution while braking, electronically controls braking force, and prevents wheel locking during sudden braking. It improves handling stability and maneuverability for avoiding obstacles.
- Electrical system diagnosis by CONSULT is available.

Component Parts Location (GT-R certified NISSAN dealer)

INFOID:0000000011487447

For USA

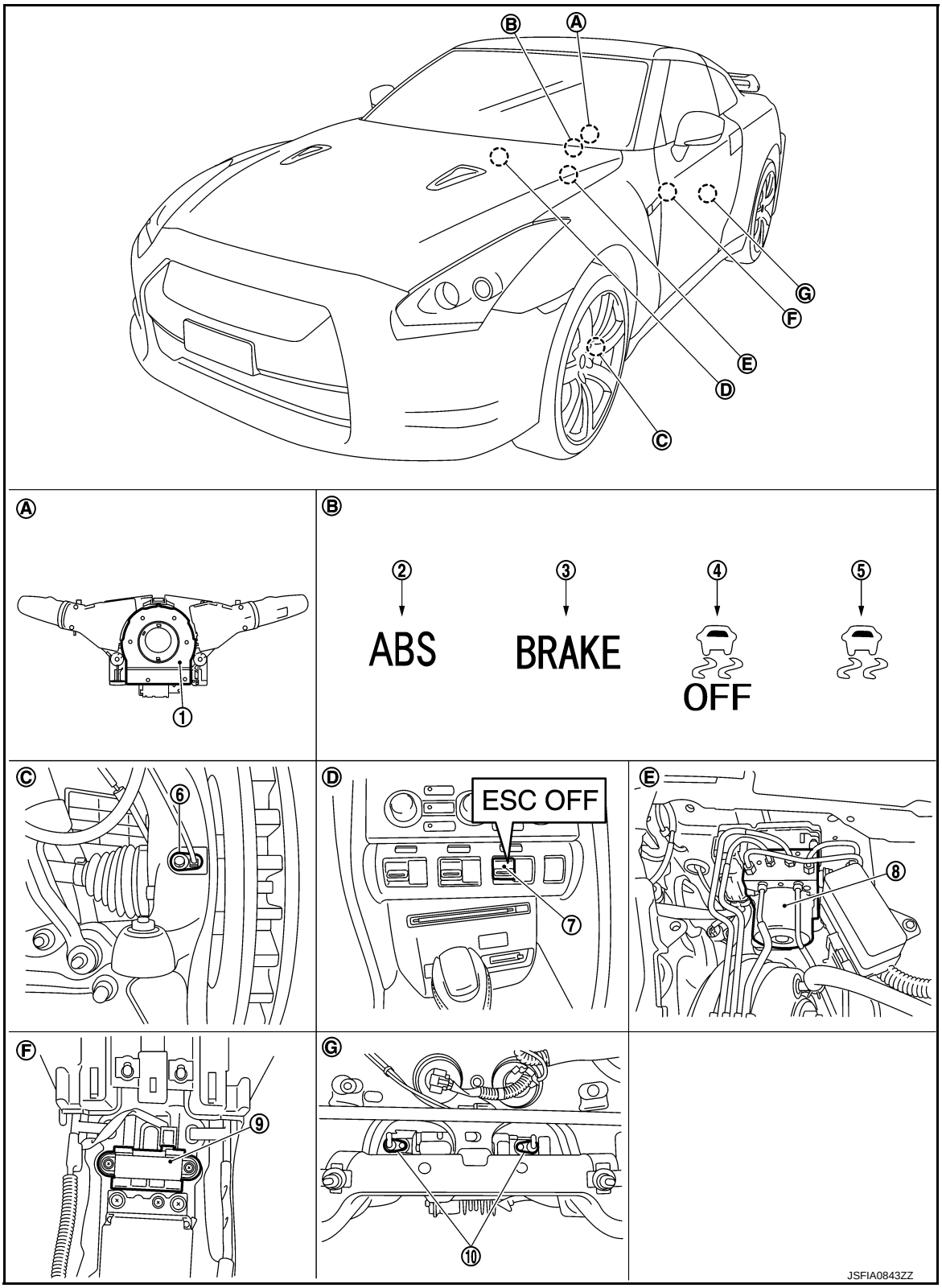

1. Steering angle sensor
2. ABS warning lamp
3. Brake warning lamp
4. VDC OFF indicator lamp
5. VDC warning lamp
6. Front wheel sensor

7. Set-up switch (VDC)
8. ABS actuator and electric unit (control unit)
9. Yaw rate/side/decel G sensor
10. Rear wheel sensor

A. Back of spiral cable assembly
B. Combination meter
C. Steering knuckle
D. Instrument center panel
E. Inside brake master cylinder cover
F. Under rear console assembly
G. Rear final drive assembly

Except for USA

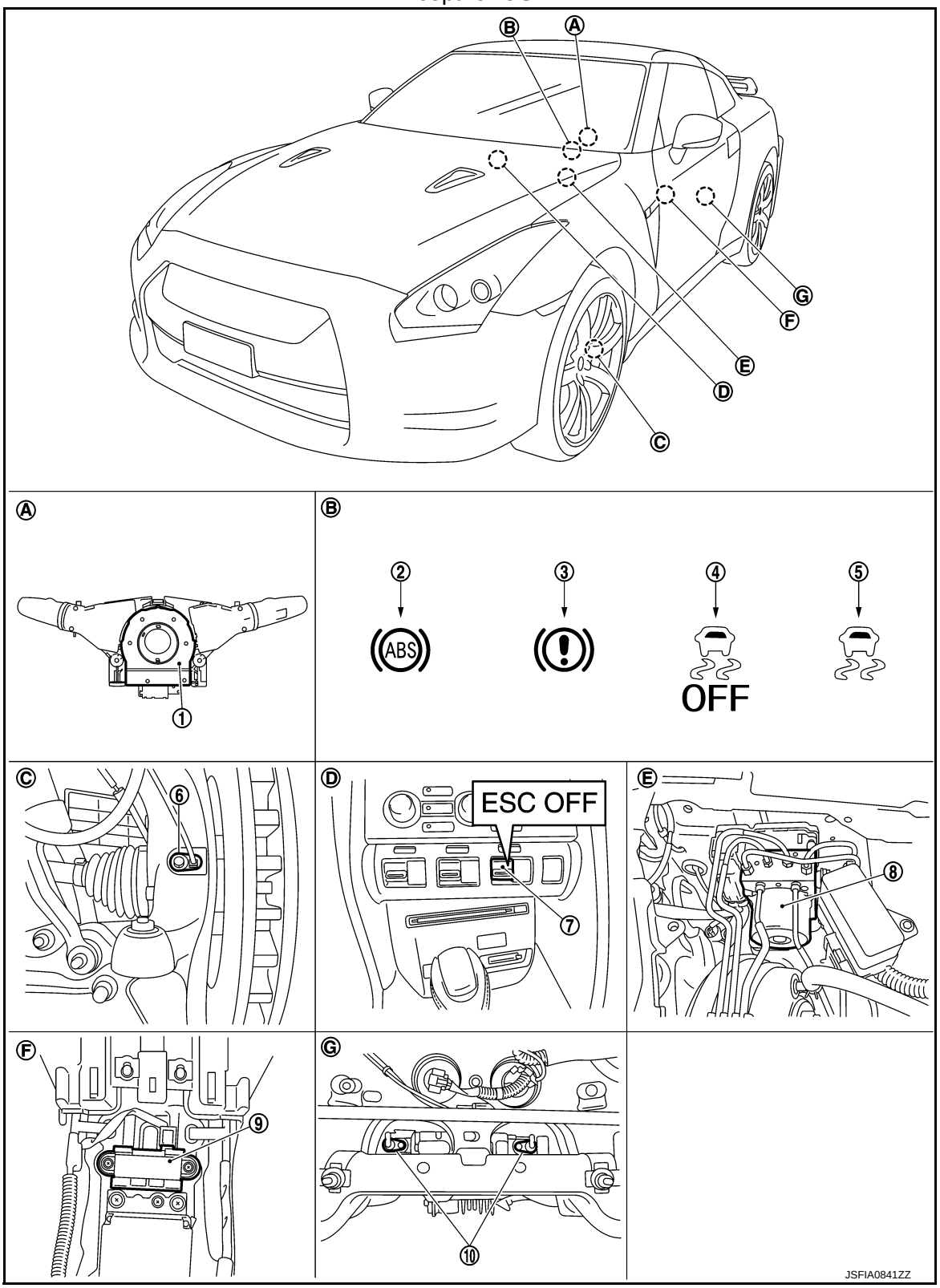

1. Steering angle sensor
2. ABS warning lamp
3. Brake warning lamp
4. VDC OFF indicator lamp
5. VDC warning lamp
6. Front wheel sensor
7. Set-up switch (VDC)
8. ABS actuator and electric unit (control unit)
9. Yaw rate/side/decel G sensor
10. Rear wheel sensor

A. Back of spiral cable assembly
B. Combination meter
C. Steering knuckle
D. Instrument center panel
E. Inside brake master cylinder cover
F. Under rear console assembly
G. Rear final drive assembly

Component Description (GT-R certified NISSAN dealer)

INFOID:0000000011487448

Component parts		Reference
ABS actuator and electric unit (control unit)	Pump	BRC-55, "Description (GT-R certified NISSAN dealer)"
	Motor	
	Actuator relay (main relay)	BRC-80, "Description (GT-R certified NISSAN dealer)"
	Solenoid valve	BRC-74, "Description (GT-R certified NISSAN dealer)"
	Pressure sensor	BRC-82, "Description (GT-R certified NISSAN dealer)"
	Pressure sensor (Front RH, Front LH, Rear RH, Rear LH)	
	VDC switch-over valve (CV1, CV2)	BRC-101, "Description (GT-R certified NISSAN dealer)"
	VDC switch-over valve (SV1, SV2)	BRC-103, "Description (GT-R certified NISSAN dealer)"
Wheel sensor		BRC-39, "Description (GT-R certified NISSAN dealer)"
Yaw rate/side/decel G sensor		BRC-58, "Description (GT-R certified NISSAN dealer)"
Steering angle sensor		BRC-85, "Description (GT-R certified NISSAN dealer)"
Set-up switch (VDC)		BRC-113, "Description (GT-R certified NISSAN dealer)"
ABS warning lamp		BRC-116, "Description (GT-R certified NISSAN dealer)"
Brake warning lamp		BRC-117, "Description (GT-R certified NISSAN dealer)"
VDC OFF indicator lamp		BRC-118, "Description (GT-R certified NISSAN dealer)"
VDC warning lamp		BRC-120, "Description (GT-R certified NISSAN dealer)"

EBD

System Diagram (GT-R certified NISSAN dealer)

INFOID:0000000011487449

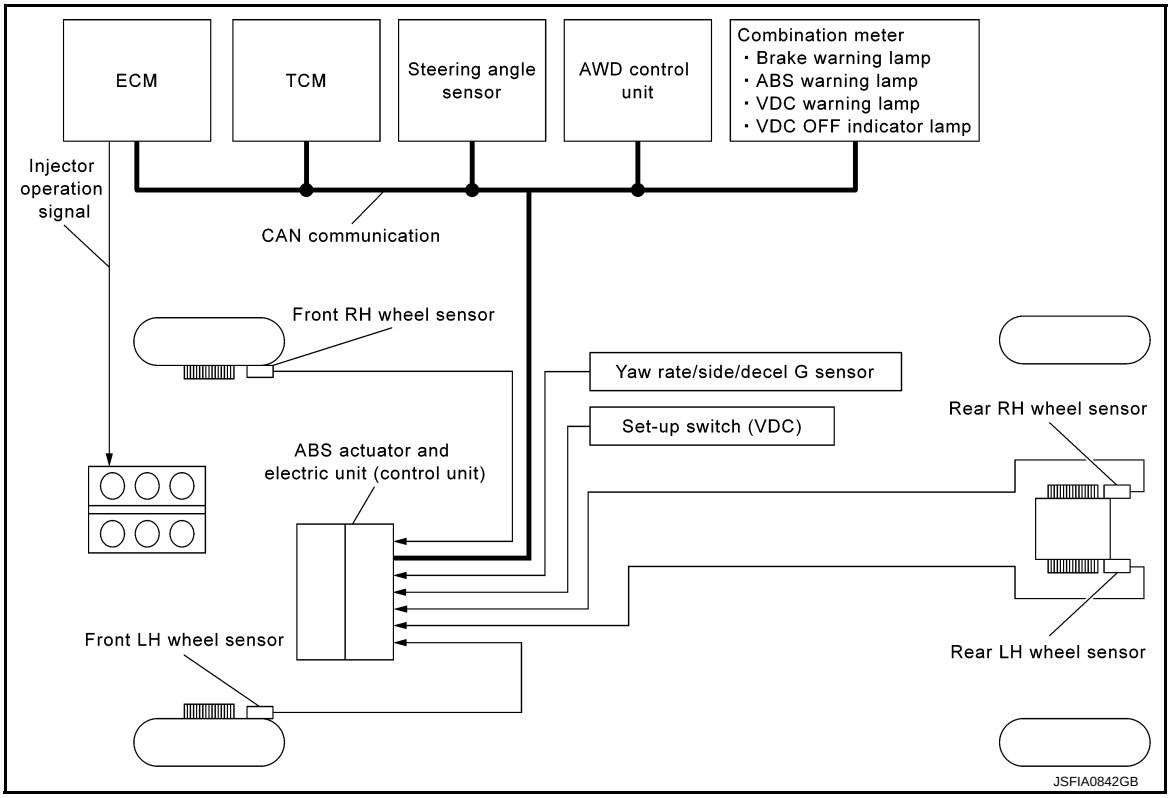

System Description (GT-R certified NISSAN dealer)

INFOID:0000000011487450

- The ABS actuator and electric unit (control unit) detects subtle slippage between the front and rear wheels during braking. Then it reduces the rear braking force (brake fluid pressure) and rear wheel slippage. Thus improving vehicle stability.
- Electrical system diagnosis by CONSULT is available.

Component Parts Location (GT-R certified NISSAN dealer)

INFOID:0000000011487451

For USA

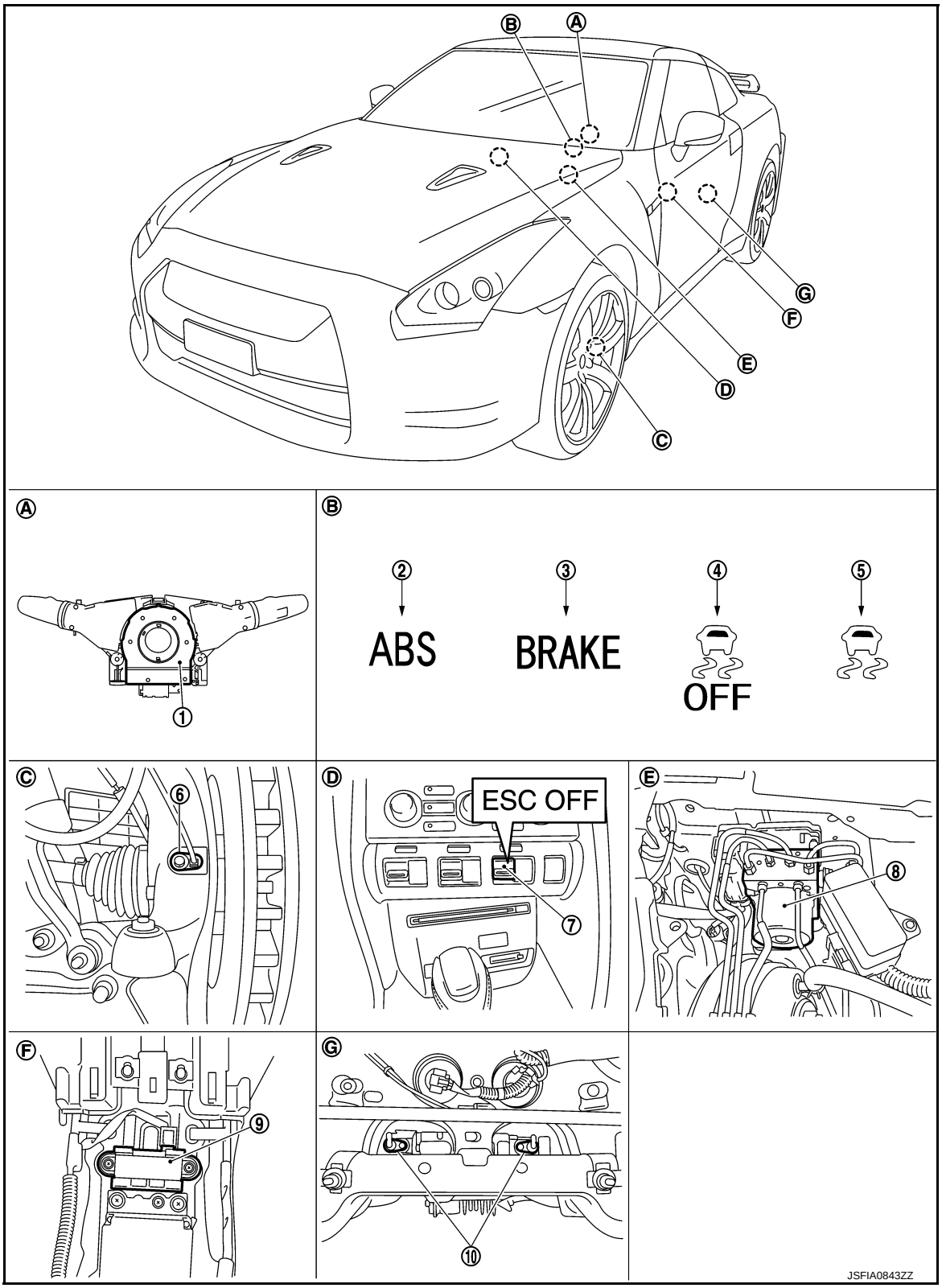

1. Steering angle sensor
2. ABS warning lamp
3. Brake warning lamp
4. VDC OFF indicator lamp
5. VDC warning lamp
6. Front wheel sensor

7. Set-up switch (VDC)
8. ABS actuator and electric unit (control unit)
9. Yaw rate/side/decel G sensor
10. Rear wheel sensor

A. Back of spiral cable assembly
B. Combination meter
C. Steering knuckle
D. Instrument center panel
E. Inside brake master cylinder cover
F. Under rear console assembly
G. Rear final drive assembly

Except for USA

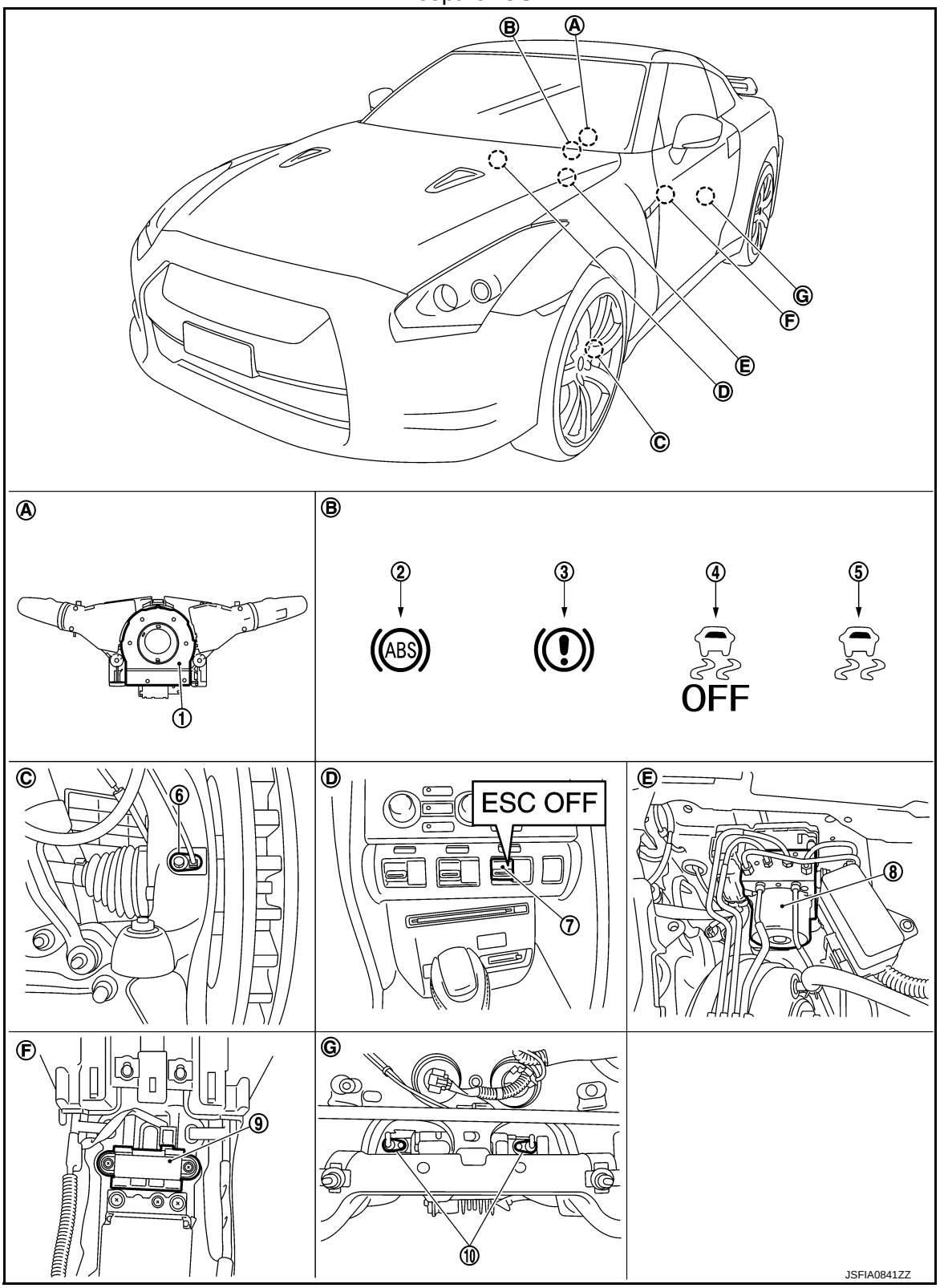

1. Steering angle sensor
2. ABS warning lamp
3. Brake warning lamp
4. VDC OFF indicator lamp
5. VDC warning lamp
6. Front wheel sensor
7. Set-up switch (VDC)
8. ABS actuator and electric unit (control unit)
9. Yaw rate/side/decel G sensor
10. Rear wheel sensor

A. Back of spiral cable assembly
B. Combination meter
C. Steering knuckle
D. Instrument center panel
E. Inside brake master cylinder cover
F. Under rear console assembly
G. Rear final drive assembly

Component Description (GT-R certified NISSAN dealer)

INFOID:0000000011487452

Component parts		Reference
ABS actuator and electric unit (control unit)	Pump	BRC-55, "Description (GT-R certified NISSAN dealer)"
	Motor	
	Actuator relay (main relay)	BRC-80, "Description (GT-R certified NISSAN dealer)"
	Solenoid valve	BRC-74, "Description (GT-R certified NISSAN dealer)"
	Pressure sensor	BRC-82, "Description (GT-R certified NISSAN dealer)"
	Pressure sensor (Front RH, Front LH, Rear RH, Rear LH)	
	VDC switch-over valve (CV1, CV2)	BRC-101, "Description (GT-R certified NISSAN dealer)"
	VDC switch-over valve (SV1, SV2)	BRC-103, "Description (GT-R certified NISSAN dealer)"
Wheel sensor		BRC-39, "Description (GT-R certified NISSAN dealer)"
Yaw rate/side/decel G sensor		BRC-58, "Description (GT-R certified NISSAN dealer)"
Steering angle sensor		BRC-85, "Description (GT-R certified NISSAN dealer)"
Set-up switch (VDC)		BRC-113, "Description (GT-R certified NISSAN dealer)"
ABS warning lamp		BRC-116, "Description (GT-R certified NISSAN dealer)"
Brake warning lamp		BRC-117, "Description (GT-R certified NISSAN dealer)"
VDC OFF indicator lamp		BRC-118, "Description (GT-R certified NISSAN dealer)"
VDC warning lamp		BRC-120, "Description (GT-R certified NISSAN dealer)"

HILL START ASSIST

System Diagram (GT-R certified NISSAN dealer)

INFOID:0000000011487453

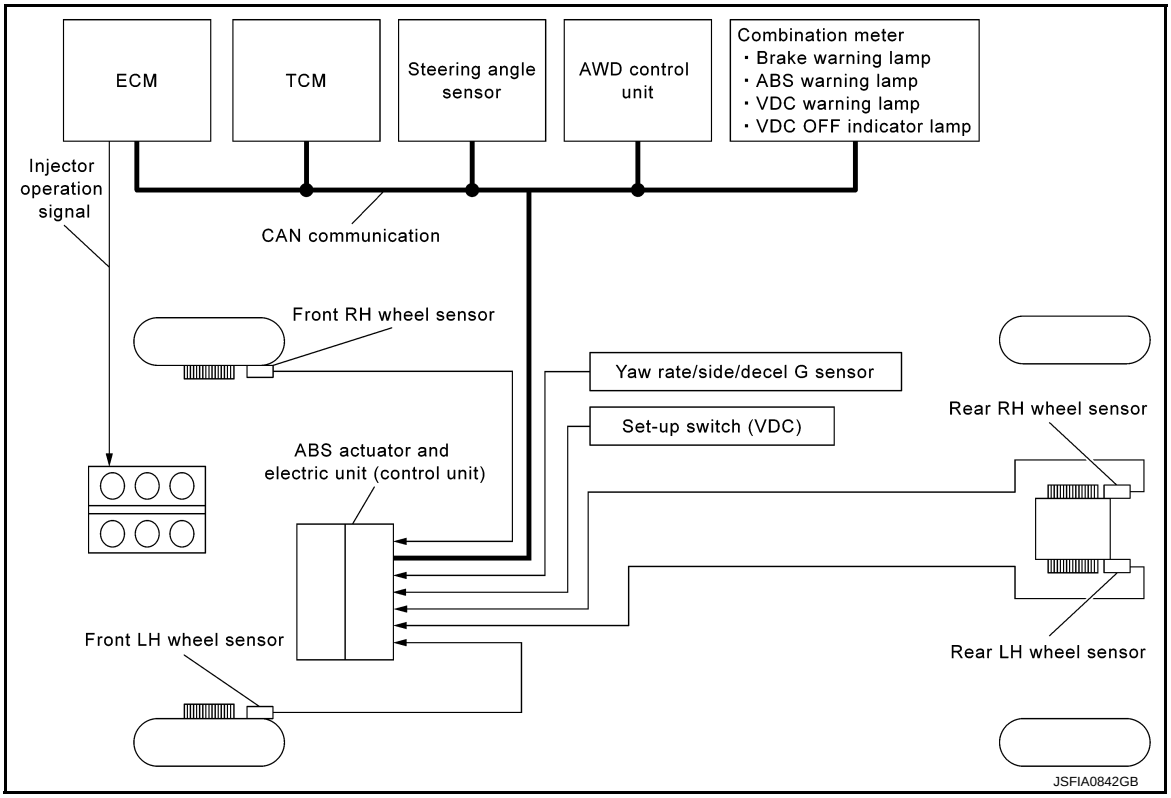

System Description (GT-R certified NISSAN dealer)

INFOID:0000000011487454

- The hill start assist assists the driver during uphill parking by maintaining the brake fluid level and preventing the vehicle from rolling backward until the driver depresses the accelerator.
- This is intended for assistance on starting the vehicle. Releasing the brake pedal, pressure is gradually reduced after maintaining the brake pressure for 2 seconds. In addition, automatic brake releasing enables a smooth start whenever ready.

Component Parts Location (GT-R certified NISSAN dealer)

INFOID:0000000011487455

For USA

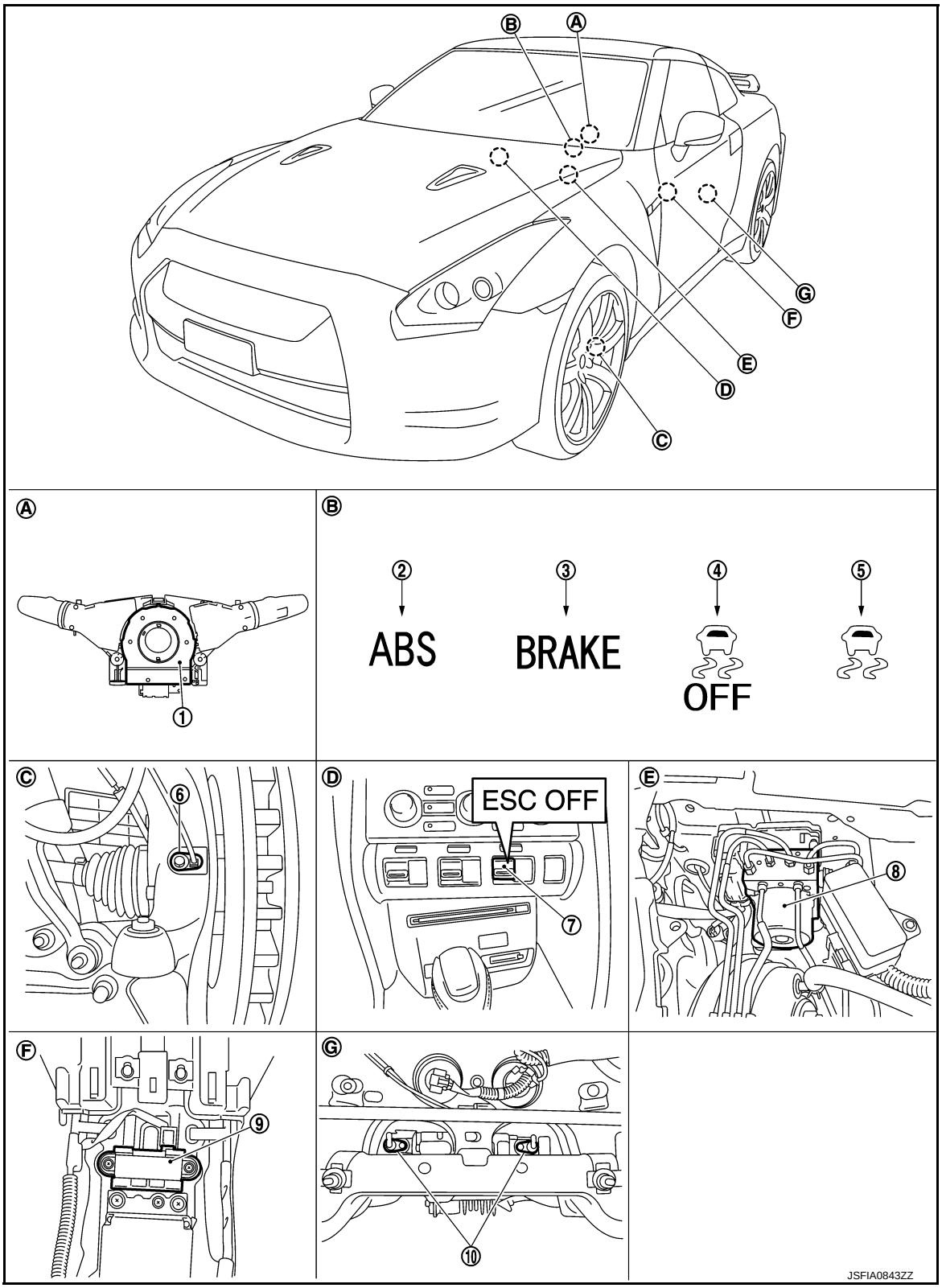

1. Steering angle sensor
2. ABS warning lamp
3. Brake warning lamp
4. VDC OFF indicator lamp
5. VDC warning lamp
6. Front wheel sensor

7. Set-up switch (VDC)
8. ABS actuator and electric unit (control unit)
9. Yaw rate/side/decel G sensor
10. Rear wheel sensor

A. Back of spiral cable assembly
B. Combination meter
C. Steering knuckle
D. Instrument center panel
E. Inside brake master cylinder cover
F. Under rear console assembly
G. Rear final drive assembly

Except for USA

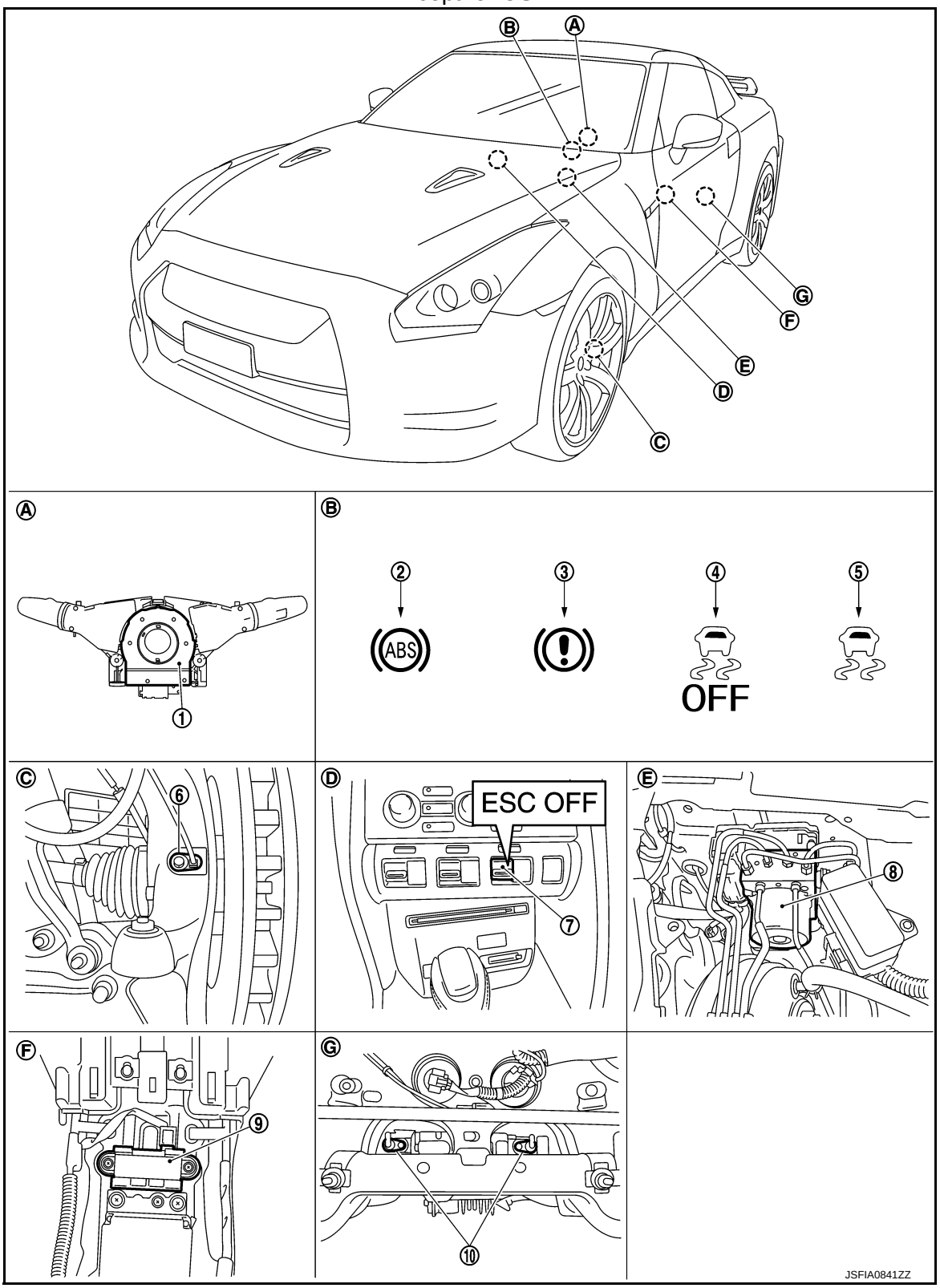

1. Steering angle sensor
2. ABS warning lamp
3. Brake warning lamp
4. VDC OFF indicator lamp
5. VDC warning lamp
6. Front wheel sensor
7. Set-up switch (VDC)
8. ABS actuator and electric unit (control unit)
9. Yaw rate/side/decel G sensor
10. Rear wheel sensor

A. Back of spiral cable assembly
B. Combination meter
C. Steering knuckle
D. Instrument center panel
E. Inside brake master cylinder cover
F. Under rear console assembly
G. Rear final drive assembly

Component Description (GT-R certified NISSAN dealer)

INFOID:0000000011487456

Component parts		Reference
ABS actuator and electric unit (control unit)	Pump	BRC-55, "Description (GT-R certified NISSAN dealer)"
	Motor	
	Actuator relay (main relay)	BRC-80, "Description (GT-R certified NISSAN dealer)"
	Solenoid valve	BRC-74, "Description (GT-R certified NISSAN dealer)"
	Pressure sensor	BRC-82, "Description (GT-R certified NISSAN dealer)"
	Pressure sensor (Front RH, Front LH, Rear RH, Rear LH)	
	VDC switch-over valve (CV1, CV2)	BRC-101, "Description (GT-R certified NISSAN dealer)"
	VDC switch-over valve (SV1, SV2)	BRC-103, "Description (GT-R certified NISSAN dealer)"
Wheel sensor		BRC-39, "Description (GT-R certified NISSAN dealer)"
Yaw rate/side/decel G sensor		BRC-58, "Description (GT-R certified NISSAN dealer)"
Steering angle sensor		BRC-85, "Description (GT-R certified NISSAN dealer)"
Set-up switch (VDC)		BRC-113, "Description (GT-R certified NISSAN dealer)"
ABS warning lamp		BRC-116, "Description (GT-R certified NISSAN dealer)"
Brake warning lamp		BRC-117, "Description (GT-R certified NISSAN dealer)"
VDC OFF indicator lamp		BRC-118, "Description (GT-R certified NISSAN dealer)"
VDC warning lamp		BRC-120, "Description (GT-R certified NISSAN dealer)"

DIAGNOSIS SYSTEM [ABS ACTUATOR AND ELECTRIC UNIT (CONTROL UNIT)]

CONSULT Function (GT-R certified NISSAN dealer)

INFOID:0000000011487457

FUNCTION

CONSULT displays each diagnostic item, using the diagnostic test modes shown below.

Diagnostic test mode	Function
Work support	This mode enables a technician to adjust some devices faster and more accurately by following the indications on CONSULT.
Self diagnostic result	Self-diagnostic results can be read and erased quickly.
Data monitor	Input/Output data in the ABS actuator and electric unit (control unit) can be read.
Active test	CONSULT drives some actuators apart from ABS actuator and electric unit (control unit) and also shifts some parameters in a specified range.
ECU identification	ABS actuator and electric unit (control unit) part number can be read.

WORK SUPPORT

Item	Description
ST ANGLE SENSOR ADJUSTMENT	Adjusts the neutral position of the steering angle sensor.
DECEL G SEN CALIBRATION	Calibrates yaw rate/side/decel G sensor.
PRESS SEN CALIBRATION	Calibrates pressure sensor.
VALVE CALIBRATION	Calibrates valve.

SELF DIAGNOSTIC RESULT

Operation Procedure

Before performing the self-diagnosis, start engine and drive vehicle at 30 km/h (19 MPH) or more for approximately 1 minute.

Display Item List

Refer to BRC-133, "DTC No. Index (GT-R certified NISSAN dealer)".

How to Erase Self-diagnosis Results

After erasing DTC memory for “ABS” with CONSULT, start the engine and drive the vehicle at 30 km/h (19 MPH) or more for approximately 1 minute as the final inspection, and check that the ABS warning lamp, VDC warning lamp, and brake warning lamp turn OFF.

CAUTION:

If memory cannot be erased, perform applicable diagnosis.

NOTE:

- When the wheel sensor malfunctions, after inspecting the wheel sensor system, ABS warning lamp, VDC warning lamp, and brake warning lamp do not turn OFF even when the system is normal unless the vehicle is driven at approximately 30 km/h (19 MPH) or more for approximately 1 minute.
- Brake warning lamp turns ON when parking brake operation (when switch is ON) or when brake fluid level switch operation (when brake fluid is insufficient).
- Set-up switch (VDC) should not stay in the “OFF mode” position.

DATA MONITOR

Display Item List

NOTE:

The following table includes information (items) inapplicable to this vehicle. For information (items) applicable to this vehicle, refer to CONSULT display items.

×: Applicable ▼: Optional item

Monitor item (Unit)	SELECT MONITOR ITEM		Remarks
	ECU INPUT SIGNALS	MAIN SIGNALS	
FR LH SENSOR [km/h (MPH)]	×	×	Wheel speed
FR RH SENSOR [km/h (MPH)]	×	×	
RR LH SENSOR [km/h (MPH)]	×	×	
RR RH SENSOR [km/h (MPH)]	×	×	
BATTERY VOLT (V)	×	×	Battery voltage supplied to the ABS actuator and electric unit (control unit)
STOP LAMP SW (On/Off)	×	×	Stop lamp switch signal status
OFF SW (On/Off)	×	×	Set-up switch (VDC) signal status
GEAR	×	×	Gear position determined by TCM
SLCT LVR POSI	×	×	Shift lever position determined by TCM
DECEL G-SEN (G)	×	×	Decel G detected by yaw rate/side/decel G sensor
YAW RATE SEN (d/s)	×	×	Yaw rate detected by yaw rate/side/decel G sensor
FR RH IN SOL (On/Off) (Note)	▼	×	Operation status of each solenoid valve
FR RH OUT SOL (On/Off) (Note)	▼	×	
FR LH IN SOL (On/Off) (Note)	▼	×	
FR LH OUT SOL (On/Off) (Note)	▼	×	
RR RH IN SOL (On/Off) (Note)	▼	×	
RR RH OUT SOL (On/Off) (Note)	▼	×	
RR LH IN SOL (On/Off) (Note)	▼	×	
RR LH OUT SOL (On/Off) (Note)	▼	×	
MOTOR RELAY (On/Off)	▼	×	Motor and motor relay operation
ACTUATOR RLY (On/Off) (Note)	▼	×	Actuator relay operation
ABS WARN LAMP (On/Off)	▼	×	ABS warning lamp
OFF LAMP (On/Off)	▼	×	VDC OFF indicator lamp
SLIP/VDC LAMP (On/Off)	▼	×	VDC warning lamp
ACCEL POS SIG (%)	×	▼	Throttle actuator opening/closing is displayed (linked with accelerator pedal)
SIDE G-SENSOR (m/s^2)	×	▼	Side G detected by yaw rate/side/decel G sensor

Monitor item (Unit)	SELECT MONITOR ITEM		Remarks
	ECU INPUT SIGNALS	MAIN SIGNALS	
STR ANGLE SIG (°)	×	▼	Steering angle detected by steering angle sensor
ENGINE RPM [tr/min (rpm)]	×	▼	Engine speed
PRESS SENSOR (bar)	×	▼	Brake fluid pressure detected by pressure sensor
FLUID LEV SW (On/Off)	×	▼	Brake fluid level switch signal status
CV1 (On/Off) (Note)	▼	▼	VDC switch-over valve
CV2 (On/Off) (Note)	▼	▼	
SV1 (On/Off) (Note)	▼	▼	
SV2 (On/Off) (Note)	▼	▼	
EBD SIGNAL (On/Off)	▼	▼	EBD operation
ABS SIGNAL (On/Off)	▼	▼	ABS operation
TCS SIGNAL (On/Off)	▼	▼	TCS operation
VDC SIGNAL (On/Off)	▼	▼	VDC operation
EBD FAIL SIG (On/Off)	▼	▼	EBD fail-safe signal
ABS FAIL SIG (On/Off)	▼	▼	ABS fail-safe signal
TCS FAIL SIG (On/Off)	▼	▼	TCS fail-safe signal
VDC FAIL SIG (On/Off)	▼	▼	VDC fail-safe signal
CRANKING SIG (On/Off)	▼	▼	Crank operation
V/R OUTPUT (On/Off) (Note)	▼	▼	Solenoid valve relay activated
M/R OUTPUT (On/Off)	▼	▼	Actuator motor and motor relay activated

NOTE:

The On/Off indication may switch briefly at irregular intervals after turning ON the ignition switch. This is a validation operation and not a malfunction.

ACTIVE TEST

CAUTION:

- **Never perform active test while driving vehicle.**
- **Always completely bleed air from brake system.**
- **The active test cannot be started when ABS warning lamp, VDC OFF indicator lamp, VDC warning lamp, and brake warning lamp are ON.**
- **ABS warning lamp, VDC OFF indicator lamp, VDC warning lamp, and brake warning lamp are ON during active test.**

NOTE:

- When active test is performed while depressing the pedal, the pedal depression amount will change. This is normal.

- “TEST IS STOPPED” is displayed 10 seconds after operation start.
- After “TEST IS STOPPED” is displayed, to perform test again.

Test Item

ABS SOLENOID VALVE
- Select “Up”, “Keep”, and “Down”. Then use screen monitor to check that solenoid valve operates as shown in the table below.

Test item	Display item	Display (Note)		
		Up	Keep	Down
FR RH SOL	FR RH IN SOL	Off	On	On
	FR RH OUT SOL	Off	Off	On*
	CV1	Off	Off	Off
	SV1	Off	Off	Off
FR LH SOL	FR LH IN SOL	Off	On	On
	FR LH OUT SOL	Off	Off	On*
	CV1	Off	Off	Off
	SV1	Off	Off	Off
RR RH SOL	RR RH IN SOL	Off	On	On
	RR RH OUT SOL	Off	Off	On*
	CV2	Off	Off	Off
	SV2	Off	Off	Off
RR LH SOL	RR LH IN SOL	Off	On	On
	RR LH OUT SOL	Off	Off	On*
	CV2	Off	Off	Off
	SV2	Off	Off	Off

*: “On” is indicated for 1 to 2 seconds after the select and then changes to “Off”.

NOTE:

The On/Off indication may switch briefly at irregular intervals after turning ON the ignition switch. This is a validation operation and not a malfunction.

ABS SOLENOID VALVE (ACT)
- Select “Up”, “ACT UP” and “ACT KEEP”. Then use screen monitor to check that solenoid valve operates as shown in the table below.

Test item	Display item	Display (Note)		
		Up	ACT UP	ACT KEEP
FR RH ABS SOLENOID (ACT)	FR RH IN SOL	Off	Off	Off
	FR RH OUT SOL	Off	Off	Off
	CV1	Off	On	On
	SV1	Off	On*	Off
FR LH ABS SOLENOID (ACT)	FR LH IN SOL	Off	Off	Off
	FR LH OUT SOL	Off	Off	Off
	CV1	Off	On	On
	SV1	Off	On*	Off
RR RH ABS SOLENOID (ACT)	RR RH IN SOL	Off	Off	Off
	RR RH OUT SOL	Off	Off	Off
	CV2	Off	On	On
	SV2	Off	On*	Off

Test item	Display item	Display (Note)		
		Up	ACT UP	ACT KEEP
RR LH ABS SOLENOID (ACT)	RR LH IN SOL	Off	Off	Off
	RR LH OUT SOL	Off	Off	Off
	CV2	Off	On	On
	SV2	Off	On*	Off

*: “On” is indicated for 1 to 2 seconds after the select and then changes to “Off”.

NOTE:

The On/Off indication may switch briefly at irregular intervals after turning ON the ignition switch. This is a validation operation and not a malfunction.

ABS MOTOR

- Select “On” and “Off” on screen. Check that motor relay and actuator relay operates as shown in table below.

Test item	Display item	Display	
		On	Off
ABS MOTOR	MOTOR RELAY	On	Off
	ACTUATOR RLY (Note)	On	On

NOTE:

The On/Off indication may switch briefly at irregular intervals after turning ON the ignition switch. This is a validation operation and not a malfunction.

ECU IDENTIFICATION

ABS actuator and electric unit (control unit) part number can be read.

DTC/CIRCUIT DIAGNOSIS

C1101, C1102, C1103, C1104 WHEEL SENSOR

Description (GT-R certified NISSAN dealer)

INFOID:0000000011487458

When the sensor rotor rotates, the magnetic field changes. The sensor rotor converts the changes in the magnetic field to current signals (rectangular wave), and transmits them to the ABS actuator and electric unit (control unit).

DTC Logic (GT-R certified NISSAN dealer)

INFOID:0000000011487459

DTC DETECTION LOGIC

DTC	Display Item (Trouble diagnosis content)	Malfunction detected condition
C1101	RR RH SENSOR-1 (Rear RH wheel sensor-1)	When an open circuit is detected in rear RH wheel sensor circuit.
C1102	RR LH SENSOR-1 (Rear LH wheel sensor-1)	When an open circuit is detected in rear LH wheel sensor circuit.
C1103	FR RH SENSOR-1 (Front RH wheel sensor-1)	When an open circuit is detected in front RH wheel sensor circuit.
C1104	FR LH SENSOR-1 (Front LH wheel sensor-1)	When an open circuit is detected in front LH wheel sensor circuit.

POSSIBLE CAUSE

NOTE:
Confirm if DTC is PAST or CRNT. If DTC is CRNT, proceed with Diagnosis Procedure. If DTC is PAST, clear DTC. Do not replace the ABS actuator and electric unit (control unit) for a PAST DTC.

PAST DTC	CRNT DTC
• Harness or connector • ABS actuator and electric unit (control unit) power supply system • Fuse • Fusible link • Battery	• Harness or connector • Wheel sensor • ABS actuator and electric unit (control unit) • ABS actuator and electric unit (control unit) power supply system • Fuse • Fusible link • Battery • Vehicle was not driven after previous repair

DTC CONFIRMATION PROCEDURE

1. PRECONDITIONING

If “DTC CONFIRMATION PROCEDURE” has been previously conducted, always turn the ignition switch OFF and wait at least 10 seconds before conducting the next test.

>> GO TO 2.

2. CHECK DTC DETECTION

With CONSULT
1. Start the engine.
2. Drive the vehicle at approx. 50 km/h (31 MPH) or more for approx. 2 minutes.
3. Stop the vehicle.
4. Turn the ignition switch OFF.
   NOTE:
   Wait at least 10 seconds after turning ignition switch OFF.
5. Start the engine.
   NOTE:
   Wait at least 10 seconds after start the engine.

6. Perform self-diagnosis for “ABS”.

Is DTC “C1101”, “C1102”, “C1103” or “C1104” detected?

YES-1 >> “C1101”, “C1102”, “C1103” or “C1104” is displayed by “CRNT”: Proceed to BRC-40, "Diagnosis Procedure (GT-R certified NISSAN dealer)".
YES-2 >> “C1101”, “C1102”, “C1103” and “C1104” are displayed by “PAST”: INSPECTION END (Erase the memory of self-diagnosis results.)
NO-1 >> To check malfunction symptom before repair: Refer to GI-39, "Intermittent Incident".
NO-2 >> Confirmation after repair: INSPECTION END

Diagnosis Procedure (GT-R certified NISSAN dealer)

INFOID:0000000011487460

CAUTION:
Never check between wheel sensor harness connector terminals.

1. CHECK WHEEL SENSOR

1. Turn the ignition switch OFF.
2. Check the wheel sensor for damage.

Is the inspection result normal?

YES >> GO TO 3.
NO >> GO TO 2.

2. REPLACE WHEEL SENSOR (1)

With CONSULT
1. Replace the wheel sensor.
- Front: Refer to BRC-147, "FRONT WHEEL SENSOR : Removal and Installation (GT-R certified NISSAN dealer)".
- Rear: Refer to BRC-148, "REAR WHEEL SENSOR : Removal and Installation (GT-R certified NISSAN dealer)".
2. Erase self-diagnosis result for “ABS”.
3. Turn the ignition switch OFF → ON → OFF.
   NOTE:
   Wait at least 10 seconds after turning ignition switch OFF or ON.
4. Start the engine.
5. Drive the vehicle at approx. 50 km/h (31 MPH) or more for approx. 2 minutes.
   NOTE:
   Vehicle must be driven after repair or replacement to erase the previous DTCs.
6. Stop the vehicle.
7. Turn the ignition switch OFF.
   NOTE:
   Wait at least 10 seconds after turning ignition switch OFF.
8. Start the engine.
   NOTE:
   Wait at least 10 seconds after start the engine.
9. Perform self-diagnosis for “ABS”.

Is DTC “C1101”, “C1102”, “C1103” or “C1104” detected?

YES >> GO TO 3.
NO >> INSPECTION END

3. CHECK CONNECTOR

1. Turn the ignition switch OFF.
2. Check the ABS actuator and electric unit (control unit) harness connector for disconnection or looseness.
3. Check the wheel sensor harness connector for disconnection or looseness.

Is the inspection result normal?

YES >> GO TO 5.
NO >> Repair / replace harness or connector, securely lock the connector, and GO TO 4.

4. PERFORM SELF-DIAGNOSIS (1)

With CONSULT
1. Erase self-diagnosis result for “ABS”.

2. Turn the ignition switch OFF → ON → OFF.
   NOTE:
   Wait at least 10 seconds after turning ignition switch OFF or ON.
3. Start the engine.
4. Drive the vehicle at approx. 50 km/h (31 MPH) or more for approx. 2 minutes.
   NOTE:
   Vehicle must be driven after repair or replacement to erase the previous DTCs.
5. Stop the vehicle.
6. Turn the ignition switch OFF.
   NOTE:
   Wait at least 10 seconds after turning ignition switch OFF.
7. Start the engine.
   NOTE:
   Wait at least 10 seconds after start the engine.
8. Perform self-diagnosis for “ABS”.

Is DTC “C1101”, “C1102”, “C1103” or “C1104” detected?

YES >> GO TO 5.
NO >> INSPECTION END

5. CHECK ABS ACTUATOR AND ELECTRIC UNIT (CONTROL UNIT) POWER SUPPLY AND GROUND CIRCUIT

Check the ABS actuator and electric unit (control unit) power supply and ground circuit. Refer to BRC-110, "Diagnosis Procedure (GT-R certified NISSAN dealer)".

Is the inspection result normal?

YES >> GO TO 6.
NO >> Repair / replace harness, connector, fuse, or fusible link.

6. CHECK TERMINAL

1. Turn the ignition switch OFF.
2. Disconnect ABS actuator and electric unit (control unit) harness connector and then check the ABS actuator and electric unit (control unit) pin terminals for damage or loose connection with harness connector.
3. Disconnect wheel sensor harness connector and check each wheel sensor pin terminals for damage or loose connection with harness connector.

Is the inspection result normal?

YES >> GO TO 8.
NO >> Repair / replace harness, connector, or terminal, and GO TO 7.

7. PERFORM SELF-DIAGNOSIS (2)

With CONSULT
1. Connect ABS actuator and electric unit (control unit) harness connector.
2. Connect wheel sensor harness connector.
3. Erase self-diagnosis result for “ABS”.
4. Turn the ignition switch OFF → ON → OFF.
   NOTE:
   Wait at least 10 seconds after turning ignition switch OFF or ON.
5. Start the engine.
6. Drive the vehicle at approx. 50 km/h (31 MPH) or more for approx. 2 minutes.
   NOTE:
   Vehicle must be driven after repair or replacement to erase the previous DTCs.
7. Stop the vehicle.
8. Turn the ignition switch OFF.
   NOTE:
   Wait at least 10 seconds after turning ignition switch OFF.
9. Start the engine.
   NOTE:
   Wait at least 10 seconds after start the engine.
10. Perform self-diagnosis for “ABS”.

Is DTC “C1101”, “C1102”, “C1103” or “C1104” detected?

YES >> GO TO 8.

NO >> INSPECTION END

8. CHECK WHEEL SENSOR HARNESS

1. Turn the ignition switch OFF.
2. Disconnect ABS actuator and electric unit (control unit) harness connector.
3. Disconnect wheel sensor harness connector.
4. Check the continuity between ABS actuator and electric unit (control unit) harness connector and wheel sensor harness connector. (Check the continuity while turning steering wheel left and right, or while moving center harness in wheel housing.)

- Measurement connector and terminal for power supply circuit

ABS actuator and electric unit (control unit)		Wheel sensor			Continuity
Connector	Terminal	Connector		Terminal	
E41	45	E27	(Front LH wheel)	1	Existed
	34	E60	(Front RH wheel)		
	36	B249	(Rear LH wheel)	1	
	43		(Rear RH wheel)	3	

- Measurement connector and terminal for signal circuit

ABS actuator and electric unit (control unit)		Wheel sensor			Continuity
Connector	Terminal	Connector		Terminal	
E41	46	E27	(Front LH wheel)	2	Existed
	33	E60	(Front RH wheel)		
	37	B249	(Rear LH wheel)	2	
	42		(Rear RH wheel)	4	

Is the inspection result normal?

YES >> GO TO 10.
NO >> Repair / replace harness or connector, and GO TO 9.

9. PERFORM SELF-DIAGNOSIS (3)

With CONSULT

1. Connect ABS actuator and electric unit (control unit) harness connector.
2. Connect wheel sensor harness connector.
3. Erase self-diagnosis result for “ABS”.
4. Turn the ignition switch OFF → ON → OFF.
   NOTE:
   Wait at least 10 seconds after turning ignition switch OFF or ON.
5. Start the engine.
6. Drive the vehicle at approx. 50 km/h (31 MPH) or more for approx. 2 minutes.
   NOTE:
   Vehicle must be driven after repair or replacement to erase the previous DTCs.
7. Stop the vehicle.
8. Turn the ignition switch OFF.
   NOTE:
   Wait at least 10 seconds after turning ignition switch OFF.
9. Start the engine.
   NOTE:
   Wait at least 10 seconds after start the engine.
10. Perform self-diagnosis for “ABS”.

Is DTC “C1101”, “C1102”, “C1103” or “C1104” detected?

YES >> GO TO 10.
NO >> INSPECTION END

10. CHECK WHEEL SENSOR OUTPUT SIGNAL

1. Disconnect ABS actuator and electric unit (control unit) harness connector.

2. Disconnect wheel sensor harness connector.
3. Connect ABS active wheel sensor tester (SST: J-45741-A) to wheel sensor using appropriate adapter.
4. Turn the ABS active wheel sensor tester power switch ON.
   NOTE:
   The green POWER indicator should illuminate. If the POWER indicator does not illuminate, replace the battery in the ABS active wheel sensor tester before proceeding.
5. Spin the wheel of the vehicle by hand and observe the red SENSOR indicator on the ABS active wheel sensor tester. The red SENSOR indicator should flash ON and OFF to indicate an output signal.
   NOTE:
   If the red SENSOR indicator illuminates but does not flash, reverse the polarity of the tester leads and retest.

Does the ABS active wheel sensor tester detect a signal?

YES >> Replace the ABS actuator and electric unit (control unit). Refer to BRC-150, "Removal and Installation (GT-R certified NISSAN dealer)".
NO >> GO TO 11.

11. REPLACE WHEEL SENSOR

With CONSULT
1. Replace the wheel sensor.
- Front: Refer to BRC-147, "FRONT WHEEL SENSOR : Removal and Installation (GT-R certified NISSAN dealer)".
- Rear: Refer to BRC-148, "REAR WHEEL SENSOR : Removal and Installation (GT-R certified NISSAN dealer)".
2. Connect ABS actuator and electric unit (control unit) harness connector.
3. Erase self-diagnosis result for “ABS”.
4. Turn the ignition switch OFF → ON → OFF.
   NOTE:
   Wait at least 10 seconds after turning ignition switch OFF or ON.
5. Start the engine.
6. Drive the vehicle at approx. 50 km/h (31 MPH) or more for approx. 2 minutes.
   NOTE:
   Vehicle must be driven after repair or replacement to erase the previous DTCs.
7. Stop the vehicle.
8. Turn the ignition switch OFF.
   NOTE:
   Wait at least 10 seconds after turning ignition switch OFF.
9. Start the engine.
   NOTE:
   Wait at least 10 seconds after start the engine.
10. Perform self-diagnosis for “ABS”.

Is DTC “C1101”, “C1102”, “C1103” or “C1104” detected?

YES >> Replace the ABS actuator and electric unit (control unit). Refer to BRC-150, "Removal and Installation (GT-R certified NISSAN dealer)".
NO >> INSPECTION END

C1105, C1106, C1107, C1108 WHEEL SENSOR

Description (GT-R certified NISSAN dealer)

INFOID:0000000011487462

When the sensor rotor rotates, the magnetic field changes. The sensor rotor converts the changes in the magnetic field to current signals (rectangular wave), and transmits them to the ABS actuator and electric unit (control unit).

DTC Logic (GT-R certified NISSAN dealer)

INFOID:0000000011487463

DTC DETECTION LOGIC

DTC	Display Item (Trouble diagnosis content)	Malfunction detected condition
C1105	RR RH SENSOR-2 (Rear RH wheel sensor-2)	• When power supply voltage of rear RH wheel sensor is low. • When distance between rear RH wheel sensor and rear RH wheel sensor rotor is large. • When installation of rear RH wheel sensor or rear RH wheel sensor rotor is not normal. • When there is contamination on or damage to the rear RH wheel sensor or rear RH sensor rotor.
C1106	RR LH SENSOR-2 (Rear LH wheel sensor-2)	• When power supply voltage of rear LH wheel sensor is low. • When distance between rear LH wheel sensor and rear LH wheel sensor rotor is large. • When installation of rear LH wheel sensor or rear LH wheel sensor rotor is not normal. • When there is contamination on or damage to the rear LH wheel sensor or rear LH sensor rotor.
C1107	FR RH SENSOR-2 (Front RH wheel sensor-2)	• When power supply voltage of front RH wheel sensor is low. • When distance between front RH wheel sensor and front RH wheel sensor rotor is large. • When installation of front RH wheel sensor or front RH wheel sensor rotor is not normal. • When there is contamination on or damage to the front RH wheel sensor or front RH sensor rotor.
C1108	FR LH SENSOR-2 (Front LH wheel sensor-2)	• When power supply voltage of front LH wheel sensor is low. • When distance between front LH wheel sensor and front LH wheel sensor rotor is large. • When installation of front LH wheel sensor or front LH wheel sensor rotor is not normal. • When there is contamination on or damage to the front LH wheel sensor or front LH sensor rotor.

POSSIBLE CAUSE

NOTE:
Confirm if DTC is PAST or CRNT. If DTC is CRNT, proceed with Diagnosis Procedure. If DTC is PAST, clear DTC. Do not replace the ABS actuator and electric unit (control unit) for a PAST DTC.

PAST DTC	CRNT DTC
• Harness or connector • Wheel sensor • Sensor rotor • Tire size • ABS actuator and electric unit (control unit) power supply system • Fuse • Fusible link • Battery	• Harness or connector • Wheel sensor • Sensor rotor • ABS actuator and electric unit (control unit) • Tire size • ABS actuator and electric unit (control unit) power supply system • Fuse • Fusible link • Battery • Vehicle was not driven after previous repair

DTC CONFIRMATION PROCEDURE

1. PRECONDITIONING

If “DTC CONFIRMATION PROCEDURE” has been previously conducted, always turn the ignition switch OFF and wait at least 10 seconds before conducting the next test.

>> GO TO 2.

2. CHECK DTC DETECTION

With CONSULT
1. Start the engine.
2. Drive the vehicle at approx. 50 km/h (31 MPH) or more for approx. 2 minutes.
3. Stop the vehicle.
4. Turn the ignition switch OFF.
   NOTE:
   Wait at least 10 seconds after turning ignition switch OFF.
5. Start the engine.
   NOTE:
   Wait at least 10 seconds after start the engine.
6. Perform self-diagnosis for “ABS”.

Is DTC “C1105”, “C1106”, “C1107” or “C1108” detected?

YES-1 >> “C1105”, “C1106”, “C1107” or “C1108” is displayed by “CRNT”: Proceed to BRC-45, "Diagnosis Procedure (GT-R certified NISSAN dealer)".
YES-2 >> “C1105”, “C1106”, “C1107” and “C1108” are displayed by “PAST”: INSPECTION END (Erase the memory of self-diagnosis results.)
NO-1 >> To check malfunction symptom before repair: Refer to GI-39, "Intermittent Incident".
NO-2 >> Confirmation after repair: INSPECTION END

Diagnosis Procedure (GT-R certified NISSAN dealer)

INFOID:0000000011487464

CAUTION:
Never check between wheel sensor harness connector terminals.

1. CHECK WHEEL HUB ASSEMBLY

Check that there is no excessive looseness in wheel hub assembly.
- Front: Refer to FAX-7, "Inspection".
- Rear: Refer to RAX-7, "Inspection".

Is the inspection result normal?

YES >> GO TO 2.
NO >> Repair or replace the wheel hub assembly, and GO TO 2.
- Front: Refer to FAX-9, "Removal and Installation (GT-R certified NISSAN dealer)".
- Rear
  - Type 1: Refer to RAX-9, "TYPE 1 : Removal and Installation (GT-R certified NISSAN dealer)".
  - Type 2: Refer to RAX-11, "TYPE 2 : Removal and Installation (GT-R certified NISSAN dealer)".
  About rear wheel hub assembly type, refer to RAX-2, "How to Check Vehicle Type".

2. CHECK ABS ACTUATOR AND ELECTRIC UNIT (CONTROL UNIT) POWER SUPPLY AND GROUND CIRCUIT

Check the ABS actuator and electric unit (control unit) power supply and ground circuit. Refer to BRC-110, "Diagnosis Procedure (GT-R certified NISSAN dealer)".

Is the inspection result normal?

YES >> GO TO 3.
NO >> Repair / replace harness, connector, fuse, or fusible link.

3. CHECK TIRE

1. Turn the ignition switch OFF.
2. Check the tire air pressure, wear and size. Refer to WT-81, "Tire".

Is the inspection result normal?

YES >> GO TO 6.
NO >> Adjust air pressure or replace tire, and GO TO 4.

4. CHECK DATA MONITOR (1)

With CONSULT
1. Erase self-diagnosis result for “ABS”.
2. Turn the ignition switch OFF → ON → OFF.
   NOTE:

Wait at least 10 seconds after turning ignition switch OFF or ON.
3. Start the engine.
4. Select “ABS” and “DATA MONITOR”, check “FR LH SENSOR”, “FR RH SENSOR”, “RR LH SENSOR” and “RR RH SENSOR”.
   NOTE:
   Set the “DATA MONITOR” recording speed to “10 msec”.
5. Read a value (wheel speed) of both normal wheel sensors and error-detecting wheel sensor.
   NOTE:
   Vehicle must be driven after repair or replacement to erase the previous DTCs.

Note the difference at 50 km/h (31 MPH) between the wheel speed detected by the error detecting wheel sensor and the maximum/minimum wheel speed detected by the normal wheel sensors, is the difference within 5%, respectively?

YES >> GO TO 5.
NO >> GO TO 6.

5. PERFORM SELF-DIAGNOSIS (1)

With CONSULT
1. Stop the vehicle.
2. Turn the ignition switch OFF.
   NOTE:
   Wait at least 10 seconds after turning ignition switch OFF.
3. Start the engine.
   NOTE:
   Wait at least 10 seconds after start the engine.
4. Perform self-diagnosis for “ABS”.

Is DTC “C1105”, “C1106”, “C1107” or “C1108” detected?

YES >> GO TO 6.
NO >> INSPECTION END

6. CHECK WHEEL SENSOR AND SENSOR ROTOR

1. Turn the ignition switch OFF.
2. Disconnect wheel sensor harness connector.
3. Remove dust and foreign matter adhered to the wheel sensor and sensor rotor with a vacuum dust collector through the wheel sensor mounting hole.
   CAUTION:
   Install wheel sensor with no backlash and float, and tighten the mounting bolt to the specified torque.
   - **Front: Refer to BRC-147, "FRONT WHEEL SENSOR : Exploded View (GT-R certified NISSAN dealer)".**
   - **Rear: Refer to BRC-148, "REAR WHEEL SENSOR : Exploded View (GT-R certified NISSAN dealer)".**

>> GO TO 7.

7. CHECK WHEEL SENSOR

Check the wheel sensor for damage.

Is the inspection result normal?

YES >> GO TO 8.
NO >> GO TO 9.

8. CHECK WHEEL SENSOR OUTPUT SIGNAL

1. Disconnect ABS actuator and electric unit (control unit) harness connector.
2. Connect ABS active wheel sensor tester (SST: J-45741-A) to wheel sensor using appropriate adapter.
3. Turn the ABS active wheel sensor tester power switch ON.
   NOTE:
   The green POWER indicator should illuminate. If the POWER indicator does not illuminate, replace the battery in the ABS active wheel sensor tester before proceeding.
4. Spin the wheel of the vehicle by hand and observe the red SENSOR indicator on the ABS active wheel sensor tester. The red SENSOR indicator should flash ON and OFF to indicate an output signal.

NOTE:
If the red SENSOR indicator illuminates but does not flash, reverse the polarity of the tester leads and retest.

Does the ABS active wheel sensor tester detect a signal?

YES >> GO TO 12.
NO >> GO TO 9.

9. REPLACE WHEEL SENSOR (1)

With CONSULT

1. Replace the wheel sensor.
- Front: Refer to BRC-147, "FRONT WHEEL SENSOR : Removal and Installation (GT-R certified NISSAN dealer)".
- Rear: Refer to BRC-148, "REAR WHEEL SENSOR : Removal and Installation (GT-R certified NISSAN dealer)".
2. Connect ABS actuator and electric unit (control unit) harness connector.
3. Erase self-diagnosis result for “ABS”.
4. Turn the ignition switch OFF → ON → OFF.
   NOTE:
   Wait at least 10 seconds after turning ignition switch OFF or ON.
5. Start the engine.
6. Select “ABS” and “DATA MONITOR”, check “FR LH SENSOR”, “FR RH SENSOR”, “RR LH SENSOR” and “RR RH SENSOR”.
   NOTE:
   Set the “DATA MONITOR” recording speed to “10 msec”.
7. Read a value (wheel speed) of both normal wheel sensors and error-detecting wheel sensor.
   NOTE:
   Vehicle must be driven after repair or replacement to erase the previous DTCs.

Note the difference at 50 km/h (31 MPH) between the wheel speed detected by the error detecting wheel sensor and the maximum/minimum wheel speed detected by the normal wheel sensors, is the difference within 5%, respectively?

YES >> GO TO 10.
NO >> GO TO 20.

10. PERFORM SELF-DIAGNOSIS (2)

With CONSULT

1. Stop the vehicle.
2. Turn the ignition switch OFF.
   NOTE:
   Wait at least 10 seconds after turning ignition switch OFF.
3. Start the engine.
   NOTE:
   Wait at least 10 seconds after start the engine.
4. Perform self-diagnosis for “ABS”.

Is DTC “C1105”, “C1106”, “C1107” or “C1108” detected?

YES >> GO TO 11.
NO >> INSPECTION END

11. CHECK CONNECTOR

1. Turn the ignition switch OFF.
2. Check the ABS actuator and electric unit (control unit) harness connector for disconnection or looseness.
3. Check the wheel sensor harness connector for disconnection or looseness.

Is the inspection result normal?

YES >> GO TO 14.
NO >> Repair / replace harness or connector, securely lock the connector, and GO TO 12.

12. CHECK DATA MONITOR (2)

With CONSULT

1. Erase self-diagnosis result for “ABS”.
2. Turn the ignition switch OFF → ON → OFF.

NOTE:
Wait at least 10 seconds after turning ignition switch OFF or ON.

3. Start the engine.
4. Select “ABS” and “DATA MONITOR”, check “FR LH SENSOR”, “FR RH SENSOR”, “RR LH SENSOR” and “RR RH SENSOR”.
   NOTE:
   Set the “DATA MONITOR” recording speed to “10 msec”.
5. Read a value (wheel speed) of both normal wheel sensors and error-detecting wheel sensor.
   NOTE:
   Vehicle must be driven after repair or replacement to erase the previous DTCs.

Note the difference at 50 km/h (31 MPH) between the wheel speed detected by the error detecting wheel sensor and the maximum/minimum wheel speed detected by the normal wheel sensors, is the difference within 5%, respectively?

YES >> GO TO 13.
NO >> GO TO 14.

13. PERFORM SELF-DIAGNOSIS (3)

With CONSULT

1. Stop the vehicle.
2. Turn the ignition switch OFF.
   NOTE:
   Wait at least 10 seconds after turning ignition switch OFF.
3. Start the engine.
   NOTE:
   Wait at least 10 seconds after start the engine.
4. Perform self-diagnosis for “ABS”.

Is DTC “C1105”, “C1106”, “C1107” or “C1108” detected?

YES >> GO TO 14.
NO >> INSPECTION END

14. CHECK TERMINAL

1. Turn the ignition switch OFF.
2. Disconnect ABS actuator and electric unit (control unit) harness connector and then check the ABS actuator and electric unit (control unit) pin terminals for damage or loose connection with harness connector.
3. Disconnect wheel sensor harness connector and check each wheel sensor pin terminals for damage or loose connection with harness connector.

Is the inspection result normal?

YES >> GO TO 17.
NO >> Repair / replace harness, connector, or terminal, and GO TO 15.

15. CHECK DATA MONITOR (3)

With CONSULT

1. Connect ABS actuator and electric unit (control unit) harness connector.
2. Connect wheel sensor harness connector.
3. Erase self-diagnosis result for “ABS”.
4. Turn the ignition switch OFF → ON → OFF.
   NOTE:
   Wait at least 10 seconds after turning ignition switch OFF or ON.
5. Start the engine.
6. Select “ABS” and “DATA MONITOR”, check “FR LH SENSOR”, “FR RH SENSOR”, “RR LH SENSOR” and “RR RH SENSOR”.
   NOTE:
   Set the “DATA MONITOR” recording speed to “10 msec”.
7. Read a value (wheel speed) of both normal wheel sensors and error-detecting wheel sensor.
   NOTE:
   Vehicle must be driven after repair or replacement to erase the previous DTCs.

Note the difference at 50 km/h (31 MPH) between the wheel speed detected by the error detecting wheel sensor and the maximum/minimum wheel speed detected by the normal wheel sensors, is the difference within 5%, respectively?

YES >> GO TO 16.
NO >> GO TO 17.

16. PERFORM SELF-DIAGNOSIS (4)

With CONSULT
1. Stop the vehicle.
2. Turn the ignition switch OFF.
   NOTE:
   Wait at least 10 seconds after turning ignition switch OFF.
3. Start the engine.
   NOTE:
   Wait at least 10 seconds after start the engine.
4. Perform self-diagnosis for “ABS”.

Is DTC “C1105”, “C1106”, “C1107” or “C1108” detected?

YES >> GO TO 17.
NO >> INSPECTION END

17. CHECK WHEEL SENSOR HARNESS

1. Turn the ignition switch OFF.
2. Disconnect ABS actuator and electric unit (control unit) harness connector.
3. Disconnect wheel sensor harness connector.
4. Check the continuity between ABS actuator and electric unit (control unit) harness connector and the ground.

ABS actuator and electric unit (control unit)		—	Continuity
Connector	Terminal		
E41	45, 46	Ground	Not existed
	34, 33		
	36, 37		
	43, 42		

Is the inspection result normal?

YES >> GO TO 18.
NO >> Repair / replace harness or connector, and GO TO 18.

18. CHECK DATA MONITOR (4)

With CONSULT
1. Connect ABS actuator and electric unit (control unit) harness connector.
2. Connect wheel sensor harness connector.
3. Erase self-diagnosis result for “ABS”.
4. Turn the ignition switch OFF → ON → OFF.
   NOTE:
   Wait at least 10 seconds after turning ignition switch OFF or ON.
5. Start the engine.
6. Select “ABS” and “DATA MONITOR”, check “FR LH SENSOR”, “FR RH SENSOR”, “RR LH SENSOR” and “RR RH SENSOR”.
   NOTE:
   Set the “DATA MONITOR” recording speed to “10 msec”.
7. Read a value (wheel speed) of both normal wheel sensors and error-detecting wheel sensor.
   NOTE:
   Vehicle must be driven after repair or replacement to erase the previous DTCs.

Note the difference at 50 km/h (31 MPH) between the wheel speed detected by the error detecting wheel sensor and the maximum/minimum wheel speed detected by the normal wheel sensors, is the difference within 5%, respectively?

YES >> GO TO 19.
NO >> Replace the ABS actuator and electric unit (control unit). Refer to BRC-150, "Removal and Installation (GT-R certified NISSAN dealer)".

19. PERFORM SELF-DIAGNOSIS (5)

With CONSULT

1. Stop the vehicle.
2. Turn the ignition switch OFF.
   NOTE:
   Wait at least 10 seconds after turning ignition switch OFF.
3. Start the engine.
   NOTE:
   Wait at least 10 seconds after start the engine.
4. Perform self-diagnosis for “ABS”.

Is DTC “C1105”, “C1106”, “C1107” or “C1108” detected?

YES >> Replace the ABS actuator and electric unit (control unit). Refer to BRC-150, "Removal and Installation (GT-R certified NISSAN dealer)".

NO >> INSPECTION END

20. REPLACE SENSOR ROTOR

With CONSULT

1. Replace the sensor rotor.
- Front: Refer to BRC-149, "FRONT SENSOR ROTOR : Removal and Installation (GT-R certified NISSAN dealer)".
- Rear: Refer to BRC-149, "REAR SENSOR ROTOR : Removal and Installation (GT-R certified NISSAN dealer)".

2. Erase self-diagnosis result for “ABS”.
3. Turn the ignition switch OFF → ON → OFF.
   NOTE:
   Wait at least 10 seconds after turning ignition switch OFF or ON.
4. Start the engine.
5. Drive the vehicle at approx. 50 km/h (31 MPH) or more for approx. 2 minutes.
   NOTE:
   Vehicle must be driven after repair or replacement to erase the previous DTCs.
6. Stop the vehicle.
7. Turn the ignition switch OFF.
   NOTE:
   Wait at least 10 seconds after turning ignition switch OFF.
8. Start the engine.
   NOTE:
   Wait at least 10 seconds after start the engine.
9. Perform self-diagnosis for “ABS”.

Is DTC “C1105”, “C1106”, “C1107” or “C1108” detected?

YES >> Replace the ABS actuator and electric unit (control unit). Refer to BRC-150, "Removal and Installation (GT-R certified NISSAN dealer)".

NO >> INSPECTION END

C1109 POWER AND GROUND SYSTEM

Description (GT-R certified NISSAN dealer)

INFOID:0000000011487466

Supplies electric power to the ABS actuator and electric unit (control unit).

DTC Logic (GT-R certified NISSAN dealer)

INFOID:0000000011487467

DTC DETECTION LOGIC

DTC	Display Item (Trouble diagnosis content)	Malfunction detected condition
C1109	BATTERY VOLTAGE [ABNORMAL] (Battery voltage [abnormal])	When ignition power supply voltage is in following state. • Ignition power supply voltage: 10 V ≥ ignition power supply voltage. • Ignition power supply voltage: 16 V ≤ ignition power supply voltage.

POSSIBLE CAUSE

NOTE:
Confirm if DTC is PAST or CRNT. If DTC is CRNT, proceed with Diagnosis Procedure. If DTC is PAST, clear DTC. Do not replace the ABS actuator and electric unit (control unit) for a PAST DTC.

PAST DTC	CRNT DTC
• Harness or connector • ABS actuator and electric unit (control unit) power supply system • Fuse • Fusible link • Battery • Charge system	• Harness or connector • ABS actuator and electric unit (control unit) • IPDM E/R • ABS actuator and electric unit (control unit) power supply system • Fuse • Fusible link • Battery • Charge system

DTC CONFIRMATION PROCEDURE

1. PRECONDITIONING

If “DTC CONFIRMATION PROCEDURE” has been previously conducted, always turn the ignition switch OFF and wait at least 10 seconds before conducting the next test.

>> GO TO 2.

2. CHECK DTC DETECTION

With CONSULT

1. Turn the ignition switch OFF.
   NOTE:
   Wait at least 10 seconds after turning ignition switch OFF.
2. Start the engine.
   NOTE:
   Wait at least 10 seconds after start the engine.
3. Perform self-diagnosis for “ABS”.

Is DTC “C1109” detected?

YES-1 >> “CRNT” is displayed: Proceed to BRC-51, "Diagnosis Procedure (GT-R certified NISSAN dealer)".
YES-2 >> “PAST” is displayed: INSPECTION END (Erase the memory of self-diagnosis results.)
NO-1 >> To check malfunction symptom before repair: Refer to GI-39, "Intermittent Incident".
NO-2 >> Confirmation after repair: INSPECTION END

Diagnosis Procedure (GT-R certified NISSAN dealer)

INFOID:0000000011487468

1. CHECK CONNECTOR

1. Turn the ignition switch OFF.
2. Check the ABS actuator and electric unit (control unit) harness connector for disconnection or looseness.

Is the inspection result normal?

YES >> GO TO 3.
NO >> Repair / replace harness or connector, securely lock the connector, and GO TO 2.

2. PERFORM SELF-DIAGNOSIS

With CONSULT

1. Turn the ignition switch OFF.
   NOTE:
   Wait at least 10 seconds after turning ignition switch OFF.
2. Start the engine.
   NOTE:
   Wait at least 10 seconds after start the engine.
3. Perform self-diagnosis for “ABS”.

Is DTC “C1109” detected?

YES >> GO TO 3.
NO >> INSPECTION END

3. CHECK ABS ACTUATOR AND ELECTRIC UNIT (CONTROL UNIT) POWER SUPPLY AND GROUND CIRCUIT

Check the ABS actuator and electric unit (control unit) power supply and ground circuit. Refer to BRC-110, "Diagnosis Procedure (GT-R certified NISSAN dealer)".

Is the inspection result normal?

YES >> GO TO 4.
NO >> Repair / replace harness, connector, fuse, or fusible link.

4. CHECK TERMINAL

1. Check the ABS actuator and electric unit (control unit) pin terminals for damage or loose connection with harness connector.
2. Check the IPDM E/R pin terminals for damage or loose connection with harness connector.

Is the inspection result normal?

YES >> Replace the ABS actuator and electric unit (control unit). Refer to BRC-150, "Removal and Installation (GT-R certified NISSAN dealer)".
NO >> Repair / replace harness, connector, or terminal.

C1110 ABS ACTUATOR AND ELECTRIC UNIT (CONTROL UNIT)

DTC Logic (GT-R certified NISSAN dealer)

INFOID:0000000011487470

DTC DETECTION LOGIC

DTC	Display Item (Trouble diagnosis content)	Malfunction detected condition
C1110	CONTROLLER FAILURE (Controller failure)	When there is an internal malfunction in the ABS actuator and electric unit (control unit).

POSSIBLE CAUSE

NOTE:
Confirm if DTC is PAST or CRNT. If DTC is CRNT, proceed with Diagnosis Procedure. If DTC is PAST, clear DTC. Do not replace the ABS actuator and electric unit (control unit) for a PAST DTC.

PAST DTC	CRNT DTC
• The vehicle travels near high-voltage electrical power lines. • Motor built-in the ABS actuator and electric unit (control unit) operates temporarily without a break. • Harness or connector • ABS actuator and electric unit (control unit) power supply system • Fuse • Fusible link • Battery	• Incomplete neutral position adjustment of steering angle sensor • ABS actuator and electric unit (control unit) • Harness or connector • ABS actuator and electric unit (control unit) power supply system • Fuse • Fusible link • Battery

DTC CONFIRMATION PROCEDURE

1. PRECONDITIONING

If “DTC CONFIRMATION PROCEDURE” has been previously conducted, always turn the ignition switch OFF and wait at least 10 seconds before conducting the next test.

>> GO TO 2.

2. CHECK DTC DETECTION

With CONSULT
1. Turn the ignition switch OFF.
   NOTE:
   Wait at least 10 seconds after turning ignition switch OFF.
2. Start the engine.
   NOTE:
   Wait at least 10 seconds after start the engine.
3. Perform self-diagnosis for “ABS”.

Is DTC “C1110” detected?

YES-1 >> “C1110” is displayed by “CRNT”: Proceed to BRC-53, "Diagnosis Procedure (GT-R certified NISSAN dealer)".
YES-2 >> “C1110” is displayed by “PAST”: INSPECTION END (Erase the memory of self-diagnosis results.)
NO-1 >> To check malfunction symptom before repair: Refer to GI-39, "Intermittent Incident".
NO-2 >> Confirmation after repair: INSPECTION END

Diagnosis Procedure (GT-R certified NISSAN dealer)

INFOID:0000000011487471

1. ADJUST THE NEUTRAL POSITION OF STEERING ANGLE SENSOR

With CONSULT
Perform neutral position adjustment of steering angle sensor. Refer to BRC-9, "ADJUSTMENT OF STEERING ANGLE SENSOR NEUTRAL POSITION : Description (GT-R certified NISSAN dealer)".

Was neutral position adjustment of steering angle sensor finished?

YES >> GO TO 2.

NO >> Check the steering angle sensor system. Refer to BRC-85, "DTC Logic (GT-R certified NISSAN dealer)".

2. CHECK ABS ACTUATOR AND ELECTRIC UNIT (CONTROL UNIT) POWER SUPPLY AND GROUND CIRCUIT

Check the ABS actuator and electric unit (control unit) power supply and ground circuit. Refer to BRC-110, "Diagnosis Procedure (GT-R certified NISSAN dealer)".

Is the inspection result normal?

YES >> GO TO 3.
NO >> Repair / replace harness, connector, fuse, or fusible link.

3. PERFORM SELF-DIAGNOSIS

With CONSULT
Perform self-diagnosis for “ABS”.
NOTE:
Replace the ABS actuator and electric unit (control unit) even if other DTCs are displayed along with “C1110” in self-diagnosis for “ABS”.

Is DTC “C1110” detected?

YES >> Replace the ABS actuator and electric unit (control unit). Refer to BRC-150, "Removal and Installation (GT-R certified NISSAN dealer)".
NO >> INSPECTION END (Although motor built-in the ABS actuator and electric unit (control unit) operates temporarily without a break, this is not a malfunction. Erase the memory of self-diagnosis results.)

C1111 ABS MOTOR, MOTOR RELAY SYSTEM

Description (GT-R certified NISSAN dealer)

INFOID:0000000011487473

PUMP

The pump returns the brake fluid stored in the reservoir to the master cylinder by reducing the pressure.

MOTOR

The motor drives the pump according to the signals transmitted by the ABS actuator and electric unit (control unit).

MOTOR RELAY

Activates or deactivates motor according to the signals transmitted by the ABS actuator and electric unit (control unit).

DTC Logic (GT-R certified NISSAN dealer)

INFOID:0000000011487474

DTC DETECTION LOGIC

DTC	Display Item (Trouble diagnosis content)	Malfunction detected condition
C1111	PUMP MOTOR (Pump motor and motor relay)	When a malfunction is detected in motor or motor relay.

POSSIBLE CAUSE

NOTE:
Confirm if DTC is PAST or CRNT. If DTC is CRNT, proceed with Diagnosis Procedure. If DTC is PAST, clear DTC. Do not replace the ABS actuator and electric unit (control unit) for a PAST DTC.

PAST DTC	CRNT DTC
• Harness or connector • ABS actuator and electric unit (control unit) power supply system • Fuse • Fusible link • Battery	• Harness or connector • ABS actuator and electric unit (control unit) • ABS actuator and electric unit (control unit) power supply system • Fuse • Fusible link • Battery

DTC CONFIRMATION PROCEDURE

1. PRECONDITIONING

If “DTC CONFIRMATION PROCEDURE” has been previously conducted, always turn the ignition switch OFF and wait at least 10 seconds before conducting the next test.

>> GO TO 2.

2. CHECK DTC DETECTION

With CONSULT

1. Turn the ignition switch OFF → ON, and wait 30 seconds.
2. Drive the vehicle at approx. 50 km/h (31 MPH) or more for approx. 2 minutes.
3. Stop the vehicle.
4. Turn the ignition switch OFF.
   NOTE:
   Wait at least 10 seconds after turning ignition switch OFF.
5. Start the engine.
   NOTE:
   Wait at least 10 seconds after start the engine.
6. Perform self-diagnosis for “ABS”.

Is DTC “C1111” detected?

YES-1 >> “CRNT” is displayed: Proceed to BRC-56, "Diagnosis Procedure (GT-R certified NISSAN dealer)".

YES-2 >> “PAST” is displayed: INSPECTION END (Erase the memory of self-diagnosis results.)
NO-1 >> To check malfunction symptom before repair: Refer to GI-39, "Intermittent Incident".
NO-2 >> Confirmation after repair: INSPECTION END

Diagnosis Procedure (GT-R certified NISSAN dealer)

INFOID:0000000011487475

1. CHECK CONNECTOR

1. Turn the ignition switch OFF.
2. Check the ABS actuator and electric unit (control unit) harness connector for disconnection or looseness.

Is the inspection result normal?

YES >> GO TO 3.
NO >> Repair / replace harness or connector, securely lock the connector, and GO TO 2.

2. PERFORM SELF-DIAGNOSIS

With CONSULT

1. Turn the ignition switch OFF → ON, and wait 30 seconds.
2. Drive the vehicle at approx. 50 km/h (31 MPH) or more for approx. 2 minutes.
   NOTE:
   Vehicle must be driven after repair or replacement to erase the previous DTCs.
3. Stop the vehicle.
4. Turn the ignition switch OFF.
   NOTE:
   Wait at least 10 seconds after turning ignition switch OFF.
5. Start the engine.
   NOTE:
   Wait at least 10 seconds after start the engine.
6. Perform self-diagnosis for “ABS”.

Is DTC “C1111” detected?

YES >> GO TO 3.
NO >> INSPECTION END

3. CHECK ABS ACTUATOR AND ELECTRIC UNIT (CONTROL UNIT) POWER SUPPLY AND GROUND CIRCUIT

Check the ABS actuator and electric unit (control unit) power supply and ground circuit. Refer to BRC-110, "Diagnosis Procedure (GT-R certified NISSAN dealer)".

Is the inspection result normal?

YES >> GO TO 5.
NO >> Repair / replace harness, connector, or fuse, and GO TO 4.

4. ERASE SELF-DIAGNOSIS RESULT (1)

With CONSULT

1. Drive the vehicle at approx. 50 km/h (31 MPH) or more for approx. 2 minutes.
   NOTE:
   Vehicle must be driven after repair or replacement to erase the previous DTCs.
2. Stop the vehicle.
3. Erase self-diagnosis result for “ABS”.
4. Turn the ignition switch OFF → ON → OFF.
   NOTE:
   Wait at least 10 seconds after turning ignition switch OFF or ON.

>> INSPECTION END

5. CHECK TERMINAL

1. Turn the ignition switch OFF.
2. Check the ABS actuator and electric unit (control unit) pin terminals for damage or loose connection with harness connector.

Is the inspection result normal?

YES >> Replace the ABS actuator and electric unit (control unit). Refer to BRC-150, "Removal and Installation (GT-R certified NISSAN dealer)".

NO >> Repair / replace harness or connector, and GO TO 6.

6. ERASE SELF-DIAGNOSIS RESULT (2)

With CONSULT

1. Drive the vehicle at approx. 50 km/h (31 MPH) or more for approx. 2 minutes.
   NOTE:
   Vehicle must be driven after repair or replacement to erase the previous DTCs.
2. Stop the vehicle.
3. Erase self-diagnosis result for “ABS”.
4. Turn the ignition switch OFF → ON → OFF.
   NOTE:
   Wait at least 10 seconds after turning ignition switch OFF or ON.

>> INSPECTION END

C1113, C1145, C1146 YAW RATE/SIDE/DECEL G SENSOR

Description (GT-R certified NISSAN dealer)

INFOID:0000000011487477

The yaw rate/side/decel G sensor detects the yaw rate/side/decel G affecting the vehicle, and transmits the data to the ABS actuator and electric unit (control unit) as an analog voltage signal.

DTC Logic (GT-R certified NISSAN dealer)

INFOID:0000000011487478

DTC DETECTION LOGIC

DTC	Display Item (Trouble diagnosis content)	Malfunction detected condition
C1113	G-SENSOR (Decel G sensor circuit)	When a malfunction is detected in decel G signal.
C1145	YAW RATE SENSOR (Yaw rate sensor circuit)	• When a malfunction is detected in yaw rate signal. • When a signal line of yaw rate/side/decel G sensor is open or shorted.
C1146	SIDE G SEN CIRCUIT (Side G sensor circuit)	• When a malfunction is detected in side/decel G signal. • When a signal line of yaw rate/side/decel G sensor is open or shorted.

POSSIBLE CAUSE

NOTE:
Confirm if DTC is PAST or CRNT. If DTC is CRNT, proceed with Diagnosis Procedure. If DTC is PAST, clear DTC. Do not replace the ABS actuator and electric unit (control unit) for a PAST DTC.

DTC	PAST DTC	CRNT DTC
C1113	• Harness or connector • ABS actuator and electric unit (control unit) power supply system • Fuse • Fusible link • Battery • Change in vehicle posture (e.g. different tire sizes on front and rear, overload)	• Harness or connector • Yaw rate/side/decel G sensor • ABS actuator and electric unit (control unit) • ABS actuator and electric unit (control unit) power supply system • Fuse • Fusible link • Battery • Change in vehicle posture (e.g. different tire sizes on front and rear, overload)
C1145 C1146	• Harness or connector • ABS actuator and electric unit (control unit) power supply system • Fuse • Fusible link • Battery	• Harness or connector • Yaw rate/side/decel G sensor • ABS actuator and electric unit (control unit) • ABS actuator and electric unit (control unit) power supply system • Fuse • Fusible link • Battery

DTC CONFIRMATION PROCEDURE

1. PRECONDITIONING

If “DTC CONFIRMATION PROCEDURE” has been previously conducted, always turn the ignition switch OFF and wait at least 10 seconds before conducting the next test.

>> GO TO 2.

2. CHECK DTC DETECTION

With CONSULT

1. Turn the ignition switch OFF.
   NOTE:
   Wait at least 10 seconds after turning ignition switch OFF.
2. Start the engine.
   NOTE:

Wait at least 10 seconds after start the engine.
3. Perform self-diagnosis for “ABS”.

Is DTC “C1113”, “C1145” or “C1146” detected?

YES-1 >> “C1113”, “C1145”, or “C1146” is displayed by “CRNT”: Proceed to BRC-59, "Diagnosis Procedure (GT-R certified NISSAN dealer)".
YES-2 >> “C1113”, “C1145”, and “C1146” are displayed by “PAST”: INSPECTION END (Erase the memory of self-diagnosis results.)
NO-1 >> To check malfunction symptom before repair: Refer to GI-39, "Intermittent Incident".
NO-2 >> Confirmation after repair: INSPECTION END

Diagnosis Procedure (GT-R certified NISSAN dealer)

INFOID:0000000011487479

CAUTION:
- **A malfunction in yaw rate/side/decel G sensor system may be detected when the vehicle sharply turns during a spin turn, acceleration turn or drift driving while VDC function is OFF (VDC OFF indicator lamp is in ON status). This is not a malfunction if the status returns to normal after engine is started again. In that case, erase self-diagnosis result memory using CONSULT.**
- **When the engine is in running status and the vehicle is on a turntable at the entrance of parking lot or on a moving unit, VDC warning lamp may turn ON and “ABS” self-diagnosis may display “YAW RATE SENSOR”. In this case, yaw rate sensor is not malfunctioning. The status returns to normal when the vehicle is left from the turntable or moving unit and the engine is started again. In that case, erase self-diagnosis result memory using CONSULT.**

1. CHECK YAW RATE/SIDE/DECEL G SENSOR POWER SUPPLY

1. Turn the ignition switch OFF.
2. Disconnect yaw rate/side/decel G sensor harness connector.
3. Check the voltage between yaw rate/side/decel G sensor harness connector and ground.

+		–	Voltage
Yaw rate/side/decel G sensor			
Connector	Terminal		
B36	3	Ground	Approx. 0 V

4. Turn the ignition switch ON.
   NOTE:
   Never start engine.
5. Check the voltage between yaw rate/side/decel G sensor harness connector and ground.

+		–	Voltage
Yaw rate/side/decel G sensor			
Connector	Terminal		
B36	3	Ground	Battery voltage

Is the inspection result normal?

YES >> GO TO 2.
NO >> Repair / replace harness or connector.

2. CHECK YAW RATE/SIDE/DECEL G SENSOR GROUND CIRCUIT

1. Turn the ignition switch OFF.
2. Check the continuity between yaw rate/side/decel G sensor harness connector and ground.

Yaw rate/side/decel G sensor		—	Continuity
Connector	Terminal		
B36	5	Ground	Existed

Is the inspection result normal?

YES >> GO TO 3.
NO >> Repair / replace harness or connector.

3. CHECK ABS ACTUATOR AND ELECTRIC UNIT (CONTROL UNIT) POWER SUPPLY AND GROUND CIRCUIT

Check the ABS actuator and electric unit (control unit) power supply and ground circuit. Refer to BRC-110, "Diagnosis Procedure (GT-R certified NISSAN dealer)".

Is the inspection result normal?

YES >> GO TO 4.
NO >> Repair / replace harness, connector, fuse, or fusible link.

4. CHECK COMMUNICATION LINE

1. Turn the ignition switch OFF.
2. Disconnect ABS actuator and electric unit (control unit) harness connector.
3. Check the continuity between yaw rate/side/decel G sensor harness connector and ABS actuator and electric unit (control unit) harness connector.

Yaw rate/side/decel G sensor		ABS actuator and electric unit (control unit)		Continuity
Connector	Terminal	Connector	Terminal	
B36	1	E41	26	Existed
	2		11	

Is the inspection result normal?

YES >> GO TO 5.
NO >> Repair / replace harness or connector. Refer to BRC-145, "Precautions for Harness Repair".

5. CHECK TERMINAL

1. Check the ABS actuator and electric unit (control unit) pin terminals for damage or loose connection with harness connector.
2. Check the yaw rate/side/decel G sensor pin terminals for damage or loose connection with harness connector.

Is the inspection result normal?

YES >> GO TO 6.
NO >> Repair / replace harness, connector, or terminal.

6. REPLACE YAW RATE/SIDE/DECEL G SENSOR

With CONSULT.

1. Connect ABS actuator and electric unit (control unit) harness connector.
2. Replace the yaw rate/side/decel G sensor. Refer to BRC-152, "Removal and Installation (GT-R certified NISSAN dealer)".
3. Erase self-diagnosis result for “ABS”.
4. Turn the ignition switch OFF.
5. Turn the ignition switch ON.
   NOTE:
   Never start engine.
6. Perform self-diagnosis for “ABS”.

Is DTC “C1113”, “C1145” or “C1146” detected?

YES >> Replace the ABS actuator and electric unit (control unit). Refer to BRC-150, "Removal and Installation (GT-R certified NISSAN dealer)".
NO >> INSPECTION END

C1115 WHEEL SENSOR

Description (GT-R certified NISSAN dealer)

INFOID:0000000011487481

When the sensor rotor rotates, the magnetic field changes. The sensor rotor converts the changes in the magnetic field to current signals (rectangular wave), and transmits them to the ABS actuator and electric unit (control unit).

DTC Logic (GT-R certified NISSAN dealer)

INFOID:0000000011487482

DTC DETECTION LOGIC

DTC	Display Item (Trouble diagnosis content)	Malfunction detected condition
C1115	ABS SENSOR [ABNORMAL SIGNAL] (Wheel sensor [abnormal signal])	When difference in wheel speed between any wheel and others is detected the vehicle is driven, because of installation of other tires than specified.

POSSIBLE CAUSE

NOTE:
Confirm if DTC is PAST or CRNT. If DTC is CRNT, proceed with Diagnosis Procedure. If DTC is PAST, clear DTC. Do not replace the ABS actuator and electric unit (control unit) for a PAST DTC.

PAST DTC	CRNT DTC
• Harness or connector • Wheel sensor • Sensor rotor • ABS actuator and electric unit (control unit) power supply system • Fuse • Fusible link • Battery	• Harness or connector • Wheel sensor • Sensor rotor • ABS actuator and electric unit (control unit) • ABS actuator and electric unit (control unit) power supply system • Fuse • Fusible link • Battery • Tire size

DTC CONFIRMATION PROCEDURE

1. PRECONDITIONING

If “DTC CONFIRMATION PROCEDURE” has been previously conducted, always turn the ignition switch OFF and wait at least 10 seconds before conducting the next test.

>> GO TO 2.

2. CHECK DTC DETECTION

With CONSULT
1. Start the engine.
2. Drive the vehicle at approx. 50 km/h (31 MPH) or more for approx. 2 minutes.
3. Stop the vehicle.
4. Turn the ignition switch OFF.
   NOTE:
   Wait at least 10 seconds after turning ignition switch OFF.
5. Start the engine.
   NOTE:
   Wait at least 10 seconds after start the engine.
6. Perform self-diagnosis for “ABS”.

Is DTC “C1115” detected?

YES-1 >> “CRNT” is displayed: Proceed to BRC-62, "Diagnosis Procedure (GT-R certified NISSAN dealer)".
YES-2 >> “PAST” is displayed: INSPECTION END (Erase the memory of self-diagnosis results.)
NO-1 >> To check malfunction symptom before repair: Refer to GI-39, "Intermittent Incident".

NO-2 >> Confirmation after repair: INSPECTION END

Diagnosis Procedure (GT-R certified NISSAN dealer)

INFOID:0000000011487483

CAUTION:
Never check between wheel sensor harness connector terminals.

1. CHECK TIRE

Check the tire air pressure, wear and size. Refer to WT-81, "Tire".

Is the inspection result normal?

YES >> GO TO 4.
NO >> Adjust air pressure or replace tire and GO TO 2.

2. CHECK DATA MONITOR (1)

With CONSULT

1. Erase self-diagnosis result for “ABS”.
2. Turn the ignition switch OFF → ON → OFF.
   NOTE:
   Wait at least 10 seconds after turning ignition switch OFF or ON.
3. Start the engine.
4. Select “ABS” and “DATA MONITOR”, check “FR LH SENSOR”, “FR RH SENSOR”, “RR LH SENSOR” and “RR RH SENSOR”.
   NOTE:
   Set the “DATA MONITOR” recording speed to “10 msec”.
5. Read a value (wheel speed) of both normal wheel sensors and error-detecting wheel sensor.
   NOTE:
   Vehicle must be driven after repair or replacement to erase the previous DTCs.

Note the difference at 50 km/h (31 MPH) between the wheel speed detected by the error detecting wheel sensor and the maximum/minimum wheel speed detected by the normal wheel sensors, is the difference within 5%, respectively?

YES >> GO TO 3.
NO >> GO TO 4.

3. PERFORM SELF-DIAGNOSIS (1)

With CONSULT

1. Stop the vehicle.
2. Turn the ignition switch OFF.
   NOTE:
   Wait at least 10 seconds after turning ignition switch OFF.
3. Start the engine.
   NOTE:
   Wait at least 10 seconds after start the engine.
4. Perform self-diagnosis for “ABS”.

Is DTC “C1115” detected?

YES >> GO TO 4.
NO >> INSPECTION END

4. CHECK ABS ACTUATOR AND ELECTRIC UNIT (CONTROL UNIT) POWER SUPPLY AND GROUND CIRCUIT

Check the ABS actuator and electric unit (control unit) power supply and ground circuit. Refer to BRC-110, "Diagnosis Procedure (GT-R certified NISSAN dealer)".

Is the inspection result normal?

YES >> GO TO 5.
NO >> Repair / replace harness, connector, fuse, or fusible link.

5. CHECK WHEEL SENSOR AND SENSOR ROTOR

1. Turn the ignition switch OFF.
2. Disconnect wheel sensor harness connector.

3. Remove dust and foreign matter adhered to the wheel sensor and sensor rotor with a vacuum dust collector through the wheel sensor mounting hole.
   CAUTION:
   Install wheel sensor with no backlash and float, and tighten the mounting bolt to the specified torque.
   - **Front: Refer to BRC-147, "FRONT WHEEL SENSOR : Exploded View (GT-R certified NISSAN dealer)".**
   - **Rear: Refer to BRC-148, "REAR WHEEL SENSOR : Exploded View (GT-R certified NISSAN dealer)".**

>> GO TO 6.

6. CHECK WHEEL SENSOR

Check the wheel sensor for damage.

Is the inspection result normal?

YES >> GO TO 7.
NO >> GO TO 8.

7. CHECK WHEEL SENSOR OUTPUT SIGNAL

1. Disconnect ABS actuator and electric unit (control unit) harness connector.
2. Connect ABS active wheel sensor tester (SST: J-45741-A) to wheel sensor using appropriate adapter.
3. Turn the ABS active wheel sensor tester power switch ON.
   NOTE:
   The green POWER indicator should illuminate. If the POWER indicator does not illuminate, replace the battery in the ABS active wheel sensor tester before proceeding.
4. Spin the wheel of the vehicle by hand and observe the red SENSOR indicator on the ABS active wheel sensor tester. The red SENSOR indicator should flash ON and OFF to indicate an output signal.
   NOTE:
   If the red SENSOR indicator illuminates but does not flash, reverse the polarity of the tester leads and retest.

Does the ABS active wheel sensor tester detect a signal?

YES >> GO TO 11.
NO >> GO TO 8.

8. REPLACE WHEEL SENSOR (1)

With CONSULT

1. Replace the wheel sensor.
- Front: Refer to BRC-147, "FRONT WHEEL SENSOR : Removal and Installation (GT-R certified NISSAN dealer)".
- Rear: Refer to BRC-148, "REAR WHEEL SENSOR : Removal and Installation (GT-R certified NISSAN dealer)".
2. Connect ABS actuator and electric unit (control unit) harness connector.
3. Erase self-diagnosis result for “ABS”.
4. Turn the ignition switch OFF → ON → OFF.
   NOTE:
   Wait at least 10 seconds after turning ignition switch OFF or ON.
5. Start the engine.
6. Select “ABS” and “DATA MONITOR”, check “FR LH SENSOR”, “FR RH SENSOR”, “RR LH SENSOR” and “RR RH SENSOR”.
   NOTE:
   Set the “DATA MONITOR” recording speed to “10 msec”.
7. Read a value (wheel speed) of both normal wheel sensors and error-detecting wheel sensor.
   NOTE:
   Vehicle must be driven after repair or replacement to erase the previous DTCs.

Note the difference at 50 km/h (31 MPH) between the wheel speed detected by the error detecting wheel sensor and the maximum/minimum wheel speed detected by the normal wheel sensors, is the difference within 5%, respectively?

YES >> GO TO 9.
NO >> GO TO 19.

9. PERFORM SELF-DIAGNOSIS (2)

With CONSULT
1. Stop the vehicle.
2. Turn the ignition switch OFF.
   NOTE:
   Wait at least 10 seconds after turning ignition switch OFF.
3. Start the engine.
   NOTE:
   Wait at least 10 seconds after start the engine.
4. Perform self-diagnosis for “ABS”.

Is DTC “C1115” detected?

YES >> GO TO 10.
NO >> INSPECTION END

10. CHECK CONNECTOR

1. Turn the ignition switch OFF.
2. Check the ABS actuator and electric unit (control unit) harness connector for disconnection or looseness.
3. Check the wheel sensor harness connector for disconnection or looseness.

Is the inspection result normal?

YES >> GO TO 12.
NO >> Repair / replace harness or connector, securely lock the connector, and GO TO 11.

11. CHECK DATA MONITOR (2)

With CONSULT
1. Erase self-diagnosis result for “ABS”.
2. Turn the ignition switch OFF → ON → OFF.
   NOTE:
   Wait at least 10 seconds after turning ignition switch OFF or ON.
3. Start the engine.
4. Select “ABS” and “DATA MONITOR”, check “FR LH SENSOR”, “FR RH SENSOR”, “RR LH SENSOR” and “RR RH SENSOR”.
   NOTE:
   Set the “DATA MONITOR” recording speed to “10 msec”.
5. Read a value (wheel speed) of both normal wheel sensors and error-detecting wheel sensor.
   NOTE:
   Vehicle must be driven after repair or replacement to erase the previous DTCs.

Note the difference at 50 km/h (31 MPH) between the wheel speed detected by the error detecting wheel sensor and the maximum/minimum wheel speed detected by the normal wheel sensors, is the difference within 5%, respectively?

YES >> GO TO 12.
NO >> GO TO 13.

12. PERFORM SELF-DIAGNOSIS (3)

With CONSULT
1. Stop the vehicle.
2. Turn the ignition switch OFF.
   NOTE:
   Wait at least 10 seconds after turning ignition switch OFF.
3. Start the engine.
   NOTE:
   Wait at least 10 seconds after start the engine.
4. Perform self-diagnosis for “ABS”.

Is DTC “C1115” detected?

YES >> GO TO 13.
NO >> INSPECTION END

13. CHECK TERMINAL

1. Turn the ignition switch OFF.

2. Disconnect ABS actuator and electric unit (control unit) harness connector and then check the ABS actuator and electric unit (control unit) pin terminals for damage or loose connection with harness connector.
3. Disconnect wheel sensor harness connector and check each wheel sensor pin terminals for damage or loose connection with harness connector.

Is the inspection result normal?

YES >> GO TO 16.
NO >> Repair / replace harness, connector, or terminal, and GO TO 14.

14. CHECK DATA MONITOR (3)

With CONSULT
1. Connect ABS actuator and electric unit (control unit) harness connector.
2. Connect wheel sensor harness connector.
3. Erase self-diagnosis result for “ABS”.
4. Turn the ignition switch OFF → ON → OFF.
   NOTE:
   Wait at least 10 seconds after turning ignition switch OFF or ON.
5. Start the engine.
6. Select “ABS” and “DATA MONITOR”, check “FR LH SENSOR”, “FR RH SENSOR”, “RR LH SENSOR” and “RR RH SENSOR”.
   NOTE:
   Set the “DATA MONITOR” recording speed to “10 msec”.
7. Read a value (wheel speed) of both normal wheel sensors and error-detecting wheel sensor.
   NOTE:
   Vehicle must be driven after repair or replacement to erase the previous DTCs.

Note the difference at 50 km/h (31 MPH) between the wheel speed detected by the error detecting wheel sensor and the maximum/minimum wheel speed detected by the normal wheel sensors, is the difference within 5%, respectively?

YES >> GO TO 15.
NO >> GO TO 16.

15. PERFORM SELF-DIAGNOSIS (4)

With CONSULT
1. Stop the vehicle.
2. Turn the ignition switch OFF.
   NOTE:
   Wait at least 10 seconds after turning ignition switch OFF.
3. Start the engine.
   NOTE:
   Wait at least 10 seconds after start the engine.
4. Perform self-diagnosis for “ABS”.

Is DTC “C1115” detected?

YES >> GO TO 16.
NO >> INSPECTION END

16. CHECK WHEEL SENSOR HARNESS

1. Turn the ignition switch OFF.
2. Disconnect ABS actuator and electric unit (control unit) harness connector.
3. Disconnect wheel sensor harness connector.
4. Check the continuity between ABS actuator and electric unit (control unit) harness connector and wheel sensor harness connector. (Check continuity while turning steering wheel left and right, or while moving center harness in wheel housing.)

- Measurement connector and terminal for power supply circuit

ABS actuator and electric unit (control unit)		Wheel sensor			Continuity
Connector	Terminal	Connector		Terminal	
E41	45	E27	(Front LH wheel)	1	Existed
	34	E60	(Front RH wheel)		
	36	B249	(Rear LH wheel)	1	
	43		(Rear RH wheel)	3	

- Measurement connector and terminal for signal circuit

ABS actuator and electric unit (control unit)		Wheel sensor			Continuity
Connector	Terminal	Connector		Terminal	
E41	46	E27	(Front LH wheel)	2	Existed
	33	E60	(Front RH wheel)		
	37	B249	(Rear LH wheel)	2	
	42		(Rear RH wheel)	4	

5. Check the continuity between ABS actuator and electric unit (control unit) harness connector and the ground.

ABS actuator and electric unit (control unit)		—	Continuity
Connector	Terminal		
E41	45, 46	Ground	Not existed
	34, 33		
	36, 37		
	43, 42		

Is the inspection result normal?

YES >> GO TO 17.
NO >> Repair / replace harness or connector, and GO TO 17.

17. CHECK DATA MONITOR (4)

With CONSULT

1. Connect ABS actuator and electric unit (control unit) harness connector.
2. Connect wheel sensor harness connector.
3. Erase self-diagnosis result for “ABS”.
4. Turn the ignition switch OFF → ON → OFF.
   NOTE:
   Wait at least 10 seconds after turning ignition switch OFF or ON.
5. Start the engine.
6. Select “ABS” and “DATA MONITOR”, check “FR LH SENSOR”, “FR RH SENSOR”, “RR LH SENSOR” and “RR RH SENSOR”.
   NOTE:
   Set the “DATA MONITOR” recording speed to “10 msec”.
7. Read a value (wheel speed) of both normal wheel sensors and error-detecting wheel sensor.
   NOTE:
   Vehicle must be driven after repair or replacement to erase the previous DTCs.

Note the difference at 50 km/h (31 MPH) between the wheel speed detected by the error detecting wheel sensor and the maximum/minimum wheel speed detected by the normal wheel sensors, is the difference within 5%, respectively?

YES >> GO TO 18.
NO >> Replace the ABS actuator and electric unit (control unit). Refer to BRC-150, "Removal and Installation (GT-R certified NISSAN dealer)".

18. PERFORM SELF-DIAGNOSIS (5)

With CONSULT
1. Stop the vehicle.
2. Turn the ignition switch OFF.
   NOTE:
   Wait at least 10 seconds after turning ignition switch OFF.
3. Start the engine.
   NOTE:
   Wait at least 10 seconds after start the engine.
4. Perform self-diagnosis for “ABS”.

Is DTC “C1115” detected?

YES >> Replace the ABS actuator and electric unit (control unit). Refer to BRC-150, "Removal and Installation (GT-R certified NISSAN dealer)".
NO >> INSPECTION END

19. REPLACE SENSOR ROTOR

With CONSULT
1. Replace the sensor rotor.
- Front: Refer to BRC-149, "FRONT SENSOR ROTOR : Removal and Installation (GT-R certified NISSAN dealer)".
- Rear: Refer to BRC-149, "REAR SENSOR ROTOR : Removal and Installation (GT-R certified NISSAN dealer)".
2. Erase self-diagnosis result for “ABS”.
3. Turn the ignition switch OFF → ON → OFF.
   NOTE:
   Wait at least 10 seconds after turning ignition switch OFF or ON.
4. Start the engine.
5. Drive the vehicle at approx. 50 km/h (31 MPH) or more for approx. 2 minutes.
   NOTE:
   Vehicle must be driven after repair or replacement to erase the previous DTCs.
6. Stop the vehicle.
7. Turn the ignition switch OFF.
   NOTE:
   Wait at least 10 seconds after turning ignition switch OFF.
8. Start the engine.
   NOTE:
   Wait at least 10 seconds after start the engine.
9. Perform self-diagnosis for “ABS”.

Is DTC “C1115” detected?

YES >> Replace the ABS actuator and electric unit (control unit). Refer to BRC-150, "Removal and Installation (GT-R certified NISSAN dealer)".
NO >> INSPECTION END

C1116 STOP LAMP SWITCH

Description (GT-R certified NISSAN dealer)

INFOID:0000000011487485

The stop lamp switch transmits the stop lamp switch signal (ON/OFF) to the ABS actuator and electric unit (control unit).

DTC Logic (GT-R certified NISSAN dealer)

INFOID:0000000011487486

DTC DETECTION LOGIC

DTC	Display Item (Trouble diagnosis content)	Malfunction detected condition
C1116	STOP LAMP SW (Stop lamp switch)	When stop lamp switch signal is not input when brake pedal operates.

POSSIBLE CAUSE

NOTE:
Confirm if DTC is PAST or CRNT. If DTC is CRNT, proceed with Diagnosis Procedure. If DTC is PAST, clear DTC. Do not replace the ABS actuator and electric unit (control unit) for a PAST DTC.

PAST DTC	CRNT DTC
• Harness or connector • Stop lamp switch signal circuit	• Harness or connector • Stop lamp switch • ABS actuator and electric unit (control unit) • ABS actuator and electric unit (control unit) power supply system • Fuse • Fusible link • Battery

DTC CONFIRMATION PROCEDURE

1. PRECONDITIONING

If “DTC CONFIRMATION PROCEDURE” has been previously conducted, always turn the ignition switch OFF and wait at least 10 seconds before conducting the next test.

>> GO TO 2.

2. CHECK DTC DETECTION

With CONSULT

1. Turn the ignition switch OFF, and wait 10 seconds or more.
2. Start the engine.
   NOTE:
   Stop the vehicle.
3. Wait 1 minute or more.
   NOTE:
   Never depress brake pedal.
4. Depress brake pedal by 100 mm (3.94 in) or more, and maintain at that position for a minimum of 1 minute or more.
5. Release brake pedal, and wait 1 minute or more.
6. Repeat step 4 to 5 ten or more times.
7. Turn the ignition switch OFF.
   NOTE:
   Wait at least 10 seconds after turning ignition switch OFF.
8. Start the engine.
   NOTE:
   Wait at least 10 seconds after start the engine.
9. Perform self-diagnosis for “ABS”.

Is DTC “C1116” detected?

YES-1 >> “CRNT” is displayed: Proceed to BRC-69, "Diagnosis Procedure (GT-R certified NISSAN dealer)".
YES-2 >> “PAST” is displayed: INSPECTION END (Erase the memory of self-diagnosis results.)
NO-1 >> To check malfunction symptom before repair: Refer to GI-39, "Intermittent Incident".
NO-2 >> Confirmation after repair: INSPECTION END

Diagnosis Procedure (GT-R certified NISSAN dealer)

INFOID:0000000011487487

NOTE:
DTC “C1116” may be detected when the brake pedal and the accelerator pedal are simultaneously depressed for 1 minute or more while driving the vehicle. This is not a malfunction.

1. INTERVIEW FROM THE CUSTOMER

Check if the brake pedal and the accelerator pedal are simultaneously depressed for 1 minute or more while driving the vehicle.

Is there such a history?

YES >> GO TO 2.
NO >> GO TO 3.

2. PERFORM SELF-DIAGNOSIS

With CONSULT
1. Erase self-diagnosis result for “ABS”.
2. Turn the ignition switch OFF → ON → OFF.
   NOTE:
   Wait at least 10 seconds after turning ignition switch OFF or ON.
3. Start the engine.
   NOTE:
   Stop the vehicle.
4. Depress the brake pedal several times.
5. Turn the ignition switch OFF.
   NOTE:
   Wait at least 10 seconds after turning ignition switch OFF.
6. Start the engine.
   NOTE:
   Wait at least 10 seconds after start the engine.
7. Perform self-diagnosis for “ABS”.

Is DTC “C1116” detected?

YES >> GO TO 3.
NO >> INSPECTION END

3. STOP LAMP FOR ILLUMINATION

Depress brake pedal and check that stop lamp turns ON.

Does stop lamp turn ON?

YES >> GO TO 5.
NO >> Check the stop lamp system circuit. GO TO 4.

4. CHECK DATA MONITOR (1)

With CONSULT
1. Erase self-diagnosis result for “ABS”.
2. Turn the ignition switch OFF → ON → OFF.
   NOTE:
   Wait at least 10 seconds after turning ignition switch OFF or ON.
3. Start the engine.
   NOTE:
   Stop the vehicle.
4. Select “ABS”, “DATA MONITOR” and “STOP LAMP SW” according to this order. Check that data monitor displays “On” or “Off” when brake pedal is depressed or released. Refer to BRC-121, "Reference Value (GT-R certified NISSAN dealer)".
5. Select “ABS”, “DATA MONITOR” and “PRESS SENSOR” according to this order. Check that data monitor displays “5 bar” or less when brake pedal is depressed. Refer to BRC-121, "Reference Value (GT-R certified NISSAN dealer)".

Is the inspection result normal?

YES >> INSPECTION END
NO >> GO TO 5.

5. CHECK CONNECTOR

1. Turn the ignition switch OFF.
2. Check the ABS actuator and electric unit (control unit) harness connector for disconnection or looseness.
3. Check the stop lamp switch harness connector for disconnection or looseness.

Is the inspection result normal?

YES >> GO TO 6.
NO >> Repair / replace harness or connector, and GO TO 6.

6. CHECK ABS ACTUATOR AND ELECTRIC UNIT (CONTROL UNIT) POWER SUPPLY AND GROUND CIRCUIT

Check the ABS actuator and electric unit (control unit) power supply and ground circuit. Refer to BRC-110, "Diagnosis Procedure (GT-R certified NISSAN dealer)".

Is the inspection result normal?

YES >> GO TO 7.
NO >> Repair / replace harness, connector, fuse, or fusible link.

7. CHECK STOP LAMP SWITCH CLEARANCE

1. Turn the ignition switch OFF.
2. Check the stop lamp switch clearance. Refer to BR-8, "Inspection and Adjustment".

Is the inspection result normal?

YES >> GO TO 9.
NO >> Adjust stop lamp switch clearance. Refer to BR-8, "Inspection and Adjustment". GO TO 8.

8. CHECK DATA MONITOR (2)

With CONSULT

1. Erase self-diagnosis result for “ABS”.
2. Turn the ignition switch OFF → ON → OFF.
   NOTE:
   Wait at least 10 seconds after turning ignition switch OFF or ON.
3. Start the engine.
   NOTE:
   Stop the vehicle.
4. Select “ABS”, “DATA MONITOR” and “STOP LAMP SW” according to this order. Check that data monitor displays “On” or “Off” when brake pedal is depressed or released. Refer to BRC-121, "Reference Value (GT-R certified NISSAN dealer)".
5. Select “ABS”, “DATA MONITOR” and “PRESS SENSOR” according to this order. Check that data monitor displays “5 bar” or less when brake pedal is depressed. Refer to BRC-121, "Reference Value (GT-R certified NISSAN dealer)".

Is the inspection result normal?

YES >> INSPECTION END
NO >> GO TO 9.

9. CHECK STOP LAMP SWITCH

Check the stop lamp switch. Refer to BRC-72, "Component Inspection (GT-R certified NISSAN dealer)".

Is the inspection result normal?

YES >> GO TO 10.
NO >> Replace the stop lamp switch. Refer to BR-21, "Removal and Installation (GT-R certified NISSAN dealer)". GO TO 10.

10. CHECK DATA MONITOR (3)

With CONSULT

1. Erase self-diagnosis result for “ABS”.
2. Turn the ignition switch OFF → ON → OFF.
   NOTE:

Wait at least 10 seconds after turning ignition switch OFF or ON.
3. Start the engine.
NOTE:
Start the vehicle.
4. Select “ABS”, “DATA MONITOR” and “STOP LAMP SW” according to this order. Check that data monitor displays “On” or “Off” when brake pedal is depressed or released. Refer to BRC-121, "Reference Value (GT-R certified NISSAN dealer)".
5. Select “ABS”, “DATA MONITOR” and “PRESS SENSOR” according to this order. Check that data monitor displays “5 bar” or less when brake pedal is depressed. Refer to BRC-121, "Reference Value (GT-R certified NISSAN dealer)".

Is the inspection result normal?

YES >> INSPECTION END
NO >> GO TO 11.

11. CHECK CONNECTOR AND TERMINAL

1. Turn the ignition switch OFF.
2. Disconnect ABS actuator and electric unit (control unit) harness connector.
3. Check the ABS actuator and electric unit (control unit) harness connector for disconnection or looseness.
4. Check the ABS actuator and electric unit (control unit) pin terminals for damage or loose connection with harness connector.
5. Disconnect stop lamp switch harness connector.
6. Check the stop lamp switch harness connector for disconnection or looseness.
7. Check the stop lamp switch pin terminals for damage or loose connection with harness connector.

Is the inspection result normal?

YES >> GO TO 13.
NO >> Repair / replace harness, connector, or terminal, and GO TO 12.

12. CHECK DATA MONITOR (4)

With CONSULT
1. Connect ABS actuator and electric unit (control unit) harness connector.
2. Connect stop lamp switch harness connector.
3. Erase self-diagnosis result for “ABS”.
4. Turn the ignition switch OFF → ON → OFF.
NOTE:
Wait at least 10 seconds after turning ignition switch OFF or ON.
5. Start the engine.
NOTE:
Stop the vehicle.
6. Select “ABS”, “DATA MONITOR” and “STOP LAMP SW” according to this order. Check that data monitor displays “On” or “Off” when brake pedal is depressed or released. Refer to BRC-121, "Reference Value (GT-R certified NISSAN dealer)".
7. Select “ABS”, “DATA MONITOR” and “PRESS SENSOR” according to this order. Check that data monitor displays “5 bar” or less when brake pedal is depressed. Refer to BRC-121, "Reference Value (GT-R certified NISSAN dealer)".

Is the inspection result normal?

YES >> INSPECTION END
NO >> GO TO 13.

13. CHECK STOP LAMP SWITCH CIRCUIT (1)

1. Turn the ignition switch OFF.
2. Disconnect ABS actuator and electric unit (control unit) harness connector.
3. Check the voltage between ABS actuator and electric unit (control unit) harness connector and ground.

+		–	Condition	Voltage
ABS actuator and electric unit (control unit)				
Connector	Terminal			
E41	4	Ground	Brake pedal depressed	Battery voltage
			Brake pedal not depressed	Approx. 0 V

Is the inspection result normal?

YES >> Replace the ABS actuator and electric unit (control unit). Refer to BRC-150, "Removal and Installation (GT-R certified NISSAN dealer)".

NO >> Repair / replace harness or connector, and GO TO 14.

14. CHECK STOP LAMP SWITCH CIRCUIT (2)

1. Turn the ignition switch OFF.
2. Disconnect stop lamp switch harness connector.
3. Check the continuity between ABS actuator and electric unit (control unit) harness connector and stop lamp switch harness connector.

ABS actuator and electric unit (control unit)		Stop lamp switch		Continuity
Connector	Terminal	Connector	Terminal	
E41	4	E110	2	Existed

4. Check the continuity between ABS actuator and electric unit (control unit) harness connector and the ground.

ABS actuator and electric unit (control unit)		—	Continuity
Connector	Terminal		
E41	4	Ground	Not existed

Is the inspection result normal?

YES >> Replace the ABS actuator and electric unit (control unit). Refer to BRC-150, "Removal and Installation (GT-R certified NISSAN dealer)".

NO >> Repair / replace harness or connector, and GO TO 15.

15. CHECK DATA MONITOR (5)

With CONSULT

1. Connect ABS actuator and electric unit (control unit) harness connector.
2. Connect stop lamp switch harness connector.
3. Erase self-diagnosis result for “ABS”.
4. Turn the ignition switch OFF → ON → OFF.
   NOTE:
   Wait at least 10 seconds after turning ignition switch OFF or ON.
5. Start the engine.
   NOTE:
   Stop the vehicle.
6. Select “ABS”, “DATA MONITOR” and “STOP LAMP SW” according to this order. Check that data monitor displays “On” or “Off” when brake pedal is depressed or released. Refer to BRC-121, "Reference Value (GT-R certified NISSAN dealer)".
7. Select “ABS”, “DATA MONITOR” and “PRESS SENSOR” according to this order. Check that data monitor displays “5 bar” or less when brake pedal is depressed. Refer to BRC-121, "Reference Value (GT-R certified NISSAN dealer)".

Is the inspection result normal?

YES >> INSPECTION END

NO >> Replace the ABS actuator and electric unit (control unit). Refer to BRC-150, "Removal and Installation (GT-R certified NISSAN dealer)".

Component Inspection (GT-R certified NISSAN dealer)

INFOID:0000000011487488

1. CHECK STOP LAMP SWITCH

1. Turn the ignition switch OFF.
2. Disconnect stop lamp switch harness connector.
3. Check the continuity when stop lamp switch is operated.

Stop lamp switch Terminal	Condition	Continuity
1 – 2	When stop lamp switch is released (When brake pedal is depressed)	Existed
	When stop lamp switch is pressed (When brake pedal is released)	Not existed

Is the inspection result normal?

YES >> INSPECTION END
NO >> Replace the stop lamp switch. Refer to BR-21, "Removal and Installation (GT-R certified NISSAN dealer)".

C1120, C1122, C1124, C1126 IN ABS SOL

Description (GT-R certified NISSAN dealer)

INFOID:0000000011487490

The solenoid valve increases, holds, or decreases the fluid pressure of each brake caliper according to the signals transmitted by the ABS actuator and electric unit (control unit).

DTC Logic (GT-R certified NISSAN dealer)

INFOID:0000000011487491

DTC DETECTION LOGIC

DTC	Display Item (Trouble diagnosis content)	Malfunction detected condition
C1120	FR LH IN ABS SOL (Front LH ABS IN solenoid valve)	When a malfunction is detected in front LH ABS IN valve.
C1122	FR RH IN ABS SOL (Front RH ABS IN solenoid valve)	When a malfunction is detected in front RH ABS IN valve.
C1124	RR LH IN ABS SOL (Rear LH ABS IN solenoid valve)	When a malfunction is detected in rear LH ABS IN valve.
C1126	RR RH IN ABS SOL (Rear RH ABS IN solenoid valve)	When a malfunction is detected in rear RH ABS IN valve.

POSSIBLE CAUSE

NOTE:
Confirm if DTC is PAST or CRNT. If DTC is CRNT, proceed with Diagnosis Procedure. If DTC is PAST, clear DTC. Do not replace the ABS actuator and electric unit (control unit) for a PAST DTC.

PAST DTC	CRNT DTC
• Harness or connector • ABS actuator and electric unit (control unit) power supply system • Fuse • Fusible link • Battery	• Harness or connector • ABS actuator and electric unit (control unit) • ABS actuator and electric unit (control unit) power supply system • Fuse • Fusible link • Battery

DTC CONFIRMATION PROCEDURE

1. PRECONDITIONING

If “DTC CONFIRMATION PROCEDURE” has been previously conducted, always turn the ignition switch OFF and wait at least 10 seconds before conducting the next test.

>> GO TO 2.

2. CHECK DTC DETECTION

With CONSULT

1. Turn the ignition switch OFF.
   NOTE:
   Wait at least 10 seconds after turning ignition switch OFF.
2. Start the engine.
   NOTE:
   Wait at least 10 seconds after start the engine.
3. Perform self-diagnosis for “ABS”.

Is DTC “C1120”, “C1122”, “C1124” or “C1126” detected?

YES-1 >> “C1120”, “C1122”, “C1124” or “C1126” is displayed by “CRNT”: Proceed to BRC-75, "Diagnosis Procedure (GT-R certified NISSAN dealer)".

YES-2 >> “C1120”, “C1122”, “C1124” or “C1126” is displayed by “PAST”: INSPECTION END (Erase the memory of self-diagnosis results.)

NO-1 >> To check malfunction symptom before repair: Refer to GI-39, "Intermittent Incident".

NO-2 >> Confirmation after repair: INSPECTION END

Diagnosis Procedure (GT-R certified NISSAN dealer)

INFOID:0000000011487492

1. CHECK CONNECTOR

1. Turn the ignition switch OFF.
2. Check the ABS actuator and electric unit (control unit) harness connector for disconnection or looseness.

Is the inspection result normal?

YES >> GO TO 3.
NO >> Repair / replace harness or connector, securely lock the connector, and GO TO 2.

2. PERFORM SELF-DIAGNOSIS

With CONSULT

1. Turn the ignition switch OFF.
   NOTE:
   Wait at least 10 seconds after turning ignition switch OFF.
2. Start the engine.
   NOTE:
   Wait at least 10 seconds after start the engine.
3. Perform self-diagnosis for “ABS”.

Is DTC “C1120”, “C1122”, “C1124” or “C1126” detected?

YES >> GO TO 3.
NO >> INSPECTION END

3. CHECK ABS ACTUATOR AND ELECTRIC UNIT (CONTROL UNIT) POWER SUPPLY AND GROUND CIRCUIT

Check the ABS actuator and electric unit (control unit) power supply and ground circuit. Refer to BRC-110, "Diagnosis Procedure (GT-R certified NISSAN dealer)".

Is the inspection result normal?

YES >> GO TO 4.
NO >> Repair / replace harness, connector, fuse, or fusible link.

4. CHECK TERMINAL

Check the ABS actuator and electric unit (control unit) pin terminals for damage or loose connection with harness connector.

Is the inspection result normal?

YES >> Replace the ABS actuator and electric unit (control unit). Refer to BRC-150, "Removal and Installation (GT-R certified NISSAN dealer)".
NO >> Repair / replace harness, connector, or terminal.

C1121, C1123, C1125, C1127 OUT ABS SOL

Description (GT-R certified NISSAN dealer)

INFOID:0000000011487494

The solenoid valve increases, holds, or decreases the fluid pressure of each brake caliper according to the signals transmitted by the ABS actuator and electric unit (control unit).

DTC Logic (GT-R certified NISSAN dealer)

INFOID:0000000011487495

DTC DETECTION LOGIC

DTC	Display Item (Trouble diagnosis content)	Malfunction detected condition
C1121	FR LH OUT ABS SOL (Front LH ABS OUT solenoid valve)	When a malfunction is detected in front LH ABS OUT valve.
C1123	FR RH OUT ABS SOL (Front RH ABS OUT solenoid valve)	When a malfunction is detected in front RH ABS OUT valve.
C1125	RR LH OUT ABS SOL (Rear LH ABS OUT solenoid valve)	When a malfunction is detected in rear LH ABS OUT valve.
C1127	RR RH OUT ABS SOL (Rear RH ABS OUT solenoid valve)	When a malfunction is detected in rear RH ABS OUT valve.

POSSIBLE CAUSE

NOTE:
Confirm if DTC is PAST or CRNT. If DTC is CRNT, proceed with Diagnosis Procedure. If DTC is PAST, clear DTC. Do not replace the ABS actuator and electric unit (control unit) for a PAST DTC.

PAST DTC	CRNT DTC
• Harness or connector • ABS actuator and electric unit (control unit) power supply system • Fuse • Fusible link • Battery	• Harness or connector • ABS actuator and electric unit (control unit) • ABS actuator and electric unit (control unit) power supply system • Fuse • Fusible link • Battery

DTC CONFIRMATION PROCEDURE

1. PRECONDITIONING

If “DTC CONFIRMATION PROCEDURE” has been previously conducted, always turn the ignition switch OFF and wait at least 10 seconds before conducting the next test.

>> GO TO 2.

2. CHECK DTC DETECTION

With CONSULT

1. Turn the ignition switch OFF.
   NOTE:
   Wait at least 10 seconds after turning ignition switch OFF.
2. Start the engine.
   NOTE:
   Wait at least 10 seconds after start the engine.
3. Perform self-diagnosis for “ABS”.

Is DTC “C1121”, “C1123”, “C1125” or “C1127” detected?

YES-1 >> “C1121”, “C1123”, “C1125” or “C1127” is displayed by “CRNT”: Proceed to BRC-77, "Diagnosis Procedure (GT-R certified NISSAN dealer)".

YES-2 >> “C1121”, “C1123”, “C1125” and “C1127” are displayed by “PAST”: INSPECTION END (Erase the memory of self-diagnosis results.)

NO-1 >> To check malfunction symptom before repair: Refer to GI-39, "Intermittent Incident".

NO-2 >> Confirmation after repair: INSPECTION END

Diagnosis Procedure (GT-R certified NISSAN dealer)

INFOID:0000000011487496

1. CHECK CONNECTOR

1. Turn the ignition switch OFF.
2. Check the ABS actuator and electric unit (control unit) harness connector for disconnection or looseness.

Is the inspection result normal?

YES >> GO TO 3.
NO >> Repair / replace harness or connector, securely lock the connector, and GO TO 2.

2. PERFORM SELF-DIAGNOSIS

With CONSULT

1. Turn the ignition switch OFF.
   NOTE:
   Wait at least 10 seconds after turning ignition switch OFF.
2. Start the engine.
   NOTE:
   Wait at least 10 seconds after start the engine.
3. Perform self-diagnosis for “ABS”.

Is DTC “C1121”, “C1123”, “C1125” or “C1127” detected?

YES >> GO TO 3.
NO >> INSPECTION END

3. CHECK ABS ACTUATOR AND ELECTRIC UNIT (CONTROL UNIT) POWER SUPPLY AND GROUND CIRCUIT

Check the ABS actuator and electric unit (control unit) power supply and ground circuit. Refer to BRC-110, "Diagnosis Procedure (GT-R certified NISSAN dealer)".

Is the inspection result normal?

YES >> GO TO 4.
NO >> Repair / replace harness, connector, fuse, or fusible link.

4. CHECK TERMINAL

Check the ABS actuator and electric unit (control unit) pin terminals for damage or loose connection with harness connector.

Is the inspection result normal?

YES >> Replace the ABS actuator and electric unit (control unit). Refer to BRC-150, "Removal and Installation (GT-R certified NISSAN dealer)".
NO >> Repair / replace harness, connector, or terminal.

C1130 ENGINE SIGNAL

Description (GT-R certified NISSAN dealer)

INFOID:0000000011487498

ABS actuator and electric unit (control unit) and ECM exchange the engine signal with CAN communication line.

DTC Logic (GT-R certified NISSAN dealer)

INFOID:0000000011487499

DTC DETECTION LOGIC

DTC	Display Item (Trouble diagnosis content)	Malfunction detected condition
C1130	ENGINE SIGNAL 1 (Engine system signal)	When a malfunction is detected in ECM system.

POSSIBLE CAUSE

NOTE:
Confirm if DTC is PAST or CRNT. If DTC is CRNT, proceed with Diagnosis Procedure. If DTC is PAST, clear DTC. Do not replace the ABS actuator and electric unit (control unit) for a PAST DTC.

PAST DTC	CRNT DTC
• Harness or connector • ABS actuator and electric unit (control unit) power supply system • Fuse • Fusible link • Battery • CAN communication line	• Harness or connector • ECM • ABS actuator and electric unit (control unit) • ABS actuator and electric unit (control unit) power supply system • Fuse • Fusible link • Battery • CAN communication line

DTC CONFIRMATION PROCEDURE

1. PRECONDITIONING

If “DTC CONFIRMATION PROCEDURE” has been previously conducted, always turn the ignition switch OFF and wait at least 10 seconds before conducting the next test.

>> GO TO 2.

2. CHECK DTC DETECTION

With CONSULT

1. Turn the ignition switch OFF.
   NOTE:
   Wait at least 10 seconds after turning ignition switch OFF.
2. Start the engine.
   NOTE:
   Wait at least 10 seconds after start the engine.
3. Perform self-diagnosis for “ABS”.

Is DTC “C1130” detected?

YES-1 >> “CRNT” is displayed: Proceed to BRC-78, "Diagnosis Procedure (GT-R certified NISSAN dealer)".
YES-2 >> “PAST” is displayed: INSPECTION END (Erase the memory of self-diagnosis results.)
NO-1 >> To check malfunction symptom before repair: Refer to GI-39, "Intermittent Incident".
NO-2 >> Confirmation after repair: INSPECTION END

Diagnosis Procedure (GT-R certified NISSAN dealer)

INFOID:0000000011487500

1. CHECK ENGINE SYSTEM

With CONSULT

Perform self-diagnosis for “ENGINE”. Refer to EC-172, "CONSULT Function (GT-R certified NISSAN dealer)".

Is DTC detected?

YES >> Check the DTC. Refer to EC-592, "DTC Index".
NO >> GO TO 2.

2. CHECK ABS ACTUATOR AND ELECTRIC UNIT (CONTROL UNIT) POWER SUPPLY AND GROUND CIRCUIT

Check the ABS actuator and electric unit (control unit) power supply and ground circuit. Refer to BRC-110, "Diagnosis Procedure (GT-R certified NISSAN dealer)".

Is the inspection result normal?

YES >> GO TO 3.
NO >> Repair / replace harness, connector, fuse, or fusible link.

3. CHECK CONNECTOR AND TERMINAL

1. Turn the ignition switch OFF.
2. Disconnect ECM harness connector.
3. Disconnect ABS actuator and electric unit (control unit) harness connector.
4. Check the connector for disconnection or looseness.
5. Check the pin terminals for damage or loose connection with harness connector.

Is the inspection result normal?

YES >> GO TO 4.
NO >> Repair / replace harness, connector, or terminal, securely lock the connector, and GO TO 4.

4. PERFORM SELF-DIAGNOSIS

With CONSULT

1. Connect ECM harness connector.
2. Connect ABS actuator and electric unit (control unit) harness connector.
3. Erase self-diagnosis result for “ABS”.
4. Turn the ignition switch OFF.
   NOTE:
   Wait at least 10 seconds after turning ignition switch OFF.
5. Start the engine.
   NOTE:
   Wait at least 10 seconds after start the engine.
6. Perform self-diagnosis for “ABS”.

Is DTC “C1130” or “U1000”detected?

YES (“C1130”)>>Replace the ABS actuator and electric unit (control unit). Refer to BRC-150, "Removal and Installation (GT-R certified NISSAN dealer)".
YES (“U1000”)>>Refer to LAN-15, "Trouble Diagnosis Flow Chart".
NO >> INSPECTION END

C1140 ACTUATOR RELAY SYSTEM

Description (GT-R certified NISSAN dealer)

INFOID:0000000011487502

Activates or deactivates each solenoid valve according to the signals transmitted by the ABS actuator and electric unit (control unit).

DTC Logic (GT-R certified NISSAN dealer)

INFOID:0000000011487503

DTC DETECTION LOGIC

DTC	Display Item (Trouble diagnosis content)	Malfunction detected condition
C1140	ACTUATOR RLY (Actuator relay)	When a malfunction is detected in actuator relay.

POSSIBLE CAUSE

NOTE:
Confirm if DTC is PAST or CRNT. If DTC is CRNT, proceed with Diagnosis Procedure. If DTC is PAST, clear DTC. Do not replace the ABS actuator and electric unit (control unit) for a PAST DTC.

PAST DTC	CRNT DTC
• Harness or connector • ABS actuator and electric unit (control unit) power supply system • Fuse • Fusible link • Battery	• Harness or connector • ABS actuator and electric unit (control unit) • ABS actuator and electric unit (control unit) power supply system • Fuse • Fusible link • Battery

DTC CONFIRMATION PROCEDURE

1. PRECONDITIONING

If “DTC CONFIRMATION PROCEDURE” has been previously conducted, always turn the ignition switch OFF and wait at least 10 seconds before conducting the next test.

>> GO TO 2.

2. CHECK DTC DETECTION

With CONSULT

1. Turn the ignition switch OFF.
   NOTE:
   Wait at least 10 seconds after turning ignition switch OFF.
2. Start the engine.
   NOTE:
   Wait at least 10 seconds after start the engine.
3. Perform self-diagnosis for “ABS”.

Is DTC “C1140” detected?

YES-1 >> “CRNT” is displayed: Proceed to BRC-80, "Diagnosis Procedure (GT-R certified NISSAN dealer)".
YES-2 >> “PAST” is displayed: INSPECTION END (Erase the memory of self-diagnosis results.)
NO-1 >> To check malfunction symptom before repair: Refer to GI-39, "Intermittent Incident".
NO-2 >> Confirmation after repair: INSPECTION END

Diagnosis Procedure (GT-R certified NISSAN dealer)

INFOID:0000000011487504

1. CHECK CONNECTOR

1. Turn the ignition switch OFF.
2. Check the ABS actuator and electric unit (control unit) harness connector for disconnection or looseness.

Is the inspection result normal?

YES >> GO TO 3.
NO >> Repair / replace harness or connector, securely lock the connector, and GO TO 2.

2. PERFORM SELF-DIAGNOSIS

With CONSULT

1. Turn the ignition switch OFF.
   NOTE:
   Wait at least 10 seconds after turning ignition switch OFF.
2. Start the engine.
   NOTE:
   Wait at least 10 seconds after start the engine.
3. Perform self-diagnosis for “ABS”.

Is DTC “C1140” detected?

YES >> GO TO 3.
NO >> INSPECTION END

3. CHECK ABS ACTUATOR AND ELECTRIC UNIT (CONTROL UNIT) POWER SUPPLY AND GROUND CIRCUIT

Check the ABS actuator and electric unit (control unit) power supply and ground circuit. Refer to BRC-110, "Diagnosis Procedure (GT-R certified NISSAN dealer)".

Is the inspection result normal?

YES >> GO TO 4.
NO >> Repair / replace harness, connector, fuse, or fusible link.

4. CHECK TERMINAL

Check the ABS actuator and electric unit (control unit) pin terminals for damage or loose connection with harness connector.

Is the inspection result normal?

YES >> Replace the ABS actuator and electric unit (control unit). Refer to BRC-150, "Removal and Installation (GT-R certified NISSAN dealer)".
NO >> Repair / replace harness, connector, or terminal.

C1142 PRESS SENSOR

Description (GT-R certified NISSAN dealer)

INFOID:0000000011487506

The pressure sensor converts the brake fluid pressure to an electric signal and transmits it to the ABS actuator and electric unit (control unit). [The pressure sensor is integrated in the ABS actuator and electric unit (control unit)]

DTC Logic (GT-R certified NISSAN dealer)

INFOID:0000000011487507

DTC DETECTION LOGIC

DTC	Display Item (Trouble diagnosis content)	Malfunction detected condition
C1142	PRESS SEN CIRCUIT (Pressure sensor circuit)	When a malfunction is detected in pressure sensor.

POSSIBLE CAUSE

NOTE:
Confirm if DTC is PAST or CRNT. If DTC is CRNT, proceed with Diagnosis Procedure. If DTC is PAST, clear DTC. Do not replace the ABS actuator and electric unit (control unit) for a PAST DTC.

PAST DTC	CRNT DTC
• Harness or connector • Air inclusion in the brake piping • Stop lamp switch system • ABS actuator and electric unit (control unit) power supply system • Fuse • Fusible link • Battery	• Stop lamp switch system • ABS actuator and electric unit (control unit) • Brake system • ABS actuator and electric unit (control unit) power supply system • Fuse • Fusible link • Battery • Air inclusion in the brake piping

DTC CONFIRMATION PROCEDURE

1. PRECONDITIONING

If “DTC CONFIRMATION PROCEDURE” has been previously conducted, always turn the ignition switch OFF and wait at least 10 seconds before conducting the next test.

>> GO TO 2.

2. CHECK DTC DETECTION

With CONSULT

1. Turn the ignition switch OFF.
   NOTE:
   Wait at least 10 seconds after turning ignition switch OFF.
2. Start the engine.
   NOTE:
   Wait at least 10 seconds after start the engine.
3. Perform self-diagnosis for “ABS”.

Is DTC “C1142” detected?

YES-1 >> “CRNT” is displayed: Proceed to BRC-82, "Diagnosis Procedure (GT-R certified NISSAN dealer)".
YES-2 >> “PAST” is displayed: INSPECTION END (Erase the memory of self-diagnosis results.)
NO-1 >> To check malfunction symptom before repair: Refer to GI-39, "Intermittent Incident".
NO-2 >> Confirmation after repair: INSPECTION END

Diagnosis Procedure (GT-R certified NISSAN dealer)

INFOID:0000000011487508

1. STOP LAMP SWITCH SYSTEM

Check the stop lamp switch system. Refer to BRC-68, "DTC Logic (GT-R certified NISSAN dealer)".

Is the inspection result normal?

YES >> GO TO 2.
NO >> Repair or replace stop lamp switch system.

2. CHECK BRAKE FLUID LEAKAGE

Check the brake fluid leakage. Refer to BR-10, "Inspection".

Is the inspection result normal?

YES >> GO TO 3.
NO >> Repair or replace brake fluid leakage part.

3. CHECK BRAKE PIPING

Check the brake piping.
- Front: Refer to BR-25, "FRONT : Inspection (GT-R certified NISSAN dealer)".
- Rear: Refer to BR-27, "REAR : Inspection (GT-R certified NISSAN dealer)".

Is the inspection result normal?

YES >> GO TO 4.
NO >> Repair or replace brake piping.
- Front: Refer to BR-24, "FRONT : Removal and Installation (GT-R certified NISSAN dealer)".
- Rear: Refer to BR-26, "REAR : Removal and Installation (GT-R certified NISSAN dealer)".

4. CHECK BRAKE PEDAL

Check the brake pedal.
- Brake pedal height: Refer to BR-8, "Inspection and Adjustment".
- Brake pedal assembly: Refer to BR-21, "Inspection and Adjustment (GT-R certified NISSAN dealer)".

Is the inspection result normal?

YES >> GO TO 5.
NO >> Adjust the brake pedal height or replace brake pedal assembly.
- Adjust the brake pedal: Refer to BR-8, "Inspection and Adjustment".
- Replace the brake pedal: Refer to BR-21, "Removal and Installation (GT-R certified NISSAN dealer)".

5. CHECK BRAKE MASTER CYLINDER

Check the brake master cylinder. Refer to BR-13, "Inspection".

Is the inspection result normal?

YES >> GO TO 6.
NO >> Repair or replace brake master cylinder. Refer to BR-28, "Removal and Installation (GT-R certified NISSAN dealer)".

6. CHECK BRAKE BOOSTER

Check the brake booster. Refer to BR-14, "Inspection".

Is the inspection result normal?

YES >> GO TO 7.
NO >> Repair or replace brake booster. Refer to BR-31, "Removal and Installation (GT-R certified NISSAN dealer)".

7. CHECK VACUUM PIPING

Check the vacuum piping. Refer to BR-34, "Inspection (GT-R certified NISSAN dealer)".

Is the inspection result normal?

YES >> GO TO 8.
NO >> Repair or replace vacuum piping. Refer to BR-34, "Removal and Installation (GT-R certified NISSAN dealer)".

8. CHECK FRONT DISC BRAKE

Check the front disc brake. Refer to BR-43, "BRAKE CALIPER ASSEMBLY : Inspection (GT-R certified NISSAN dealer)".

Is the inspection result normal?

YES >> GO TO 9.

NO >> Repair or replace front disc brake. Refer to BR-40, "BRAKE CALIPER ASSEMBLY : Removal and Installation (GT-R certified NISSAN dealer)".

9. CHECK REAR DISC BRAKE

Check the rear disc brake. Refer to BR-49, "BRAKE CALIPER ASSEMBLY : Inspection (GT-R certified NISSAN dealer)"

Is the inspection result normal?

YES >> GO TO 10.
NO >> Repair or replace rear disc brake. Refer to BR-47, "BRAKE CALIPER ASSEMBLY : Removal and Installation (GT-R certified NISSAN dealer)".

10. CHECK ABS ACTUATOR AND ELECTRIC UNIT (CONTROL UNIT) POWER SUPPLY AND GROUND CIRCUIT

Check the ABS actuator and electric unit (control unit) power supply and ground circuit. Refer to BRC-110, "Diagnosis Procedure (GT-R certified NISSAN dealer)".

Is the inspection result normal?

YES >> GO TO 11.
NO >> Repair / replace harness, connector, fuse, or fusible link.

11. PERFORM SELF-DIAGNOSIS

With CONSULT

1. Erase self-diagnosis result for “ABS”.
2. Turn the ignition switch OFF.
   NOTE:
   Wait at least 10 seconds after turning ignition switch OFF.
3. Start the engine.
   NOTE:
   Wait at least 10 seconds after start the engine.
4. Start the engine and drive the vehicle for a short period of time.
   NOTE:
   Vehicle must be driven after repair or replacement to erase the previous DTCs.
5. Stop the vehicle.
6. Perform self-diagnosis for “ABS”.

Is DTC “C1142” detected?

YES >> Replace the ABS actuator and electric unit (control unit). Refer to BRC-150, "Removal and Installation (GT-R certified NISSAN dealer)".
NO >> Check the ABS actuator and electric unit (control unit) harness connector and terminal for damage, looseness and disconnection. Repair / replace harness, connector, or terminal.

C1143 STEERING ANGLE SENSOR

Description (GT-R certified NISSAN dealer)

INFOID:0000000011487510

The steering angle sensor detects the rotation amount, angular velocity and direction of the steering wheel, and transmits the data to the ABS actuator and electric unit (control unit) via CAN communication.

DTC Logic (GT-R certified NISSAN dealer)

INFOID:0000000011487511

DTC DETECTION LOGIC

DTC	Display Item (Trouble diagnosis content)	Malfunction detected condition
C1143	ST ANG SEN CIRCUIT (Steering angle sensor circuit)	When a malfunction is detected in steering angle sensor.

POSSIBLE CAUSE

NOTE:
Confirm if DTC is PAST or CRNT. If DTC is CRNT, proceed with Diagnosis Procedure. If DTC is PAST, clear DTC. Do not replace the ABS actuator and electric unit (control unit) for a PAST DTC.

PAST DTC	CRNT DTC
• Harness or connector • ABS actuator and electric unit (control unit) power supply system • Fuse • Fusible link • Battery • CAN communication line • Incomplete neutral position adjustment of steering angle sensor • Improper installation of steering angle sensor	• Harness or connector • Steering angle sensor • ABS actuator and electric unit (control unit) • IPDM E/R • CAN communication line • Wheel alignment • Incomplete neutral position adjustment of steering angle sensor • ABS actuator and electric unit (control unit) power supply system • Fuse • Fusible link • Battery

DTC CONFIRMATION PROCEDURE

1. PRECONDITIONING

If “DTC CONFIRMATION PROCEDURE” has been previously conducted, always turn the ignition switch OFF and wait at least 10 seconds before conducting the next test.

>> GO TO 2.

2. CHECK DTC DETECTION

With CONSULT

1. Turn the ignition switch OFF.
   NOTE:
   Wait at least 10 seconds after turning ignition switch OFF.
2. Start the engine.
   NOTE:
   Wait at least 10 seconds after start the engine.
3. Perform self-diagnosis for “ABS”.

Is DTC “C1143” detected?

YES-1 >> “CRNT” is displayed: Proceed to BRC-86, "Diagnosis Procedure (GT-R certified NISSAN dealer)".
YES-2 >> “PAST” is displayed: INSPECTION END (Erase the memory of self-diagnosis results.)
NO-1 >> To check malfunction symptom before repair: Refer to GI-39, "Intermittent Incident".
NO-2 >> Confirmation after repair: INSPECTION END

Diagnosis Procedure (GT-R certified NISSAN dealer)

INFOID:0000000011487512

1. ADJUST THE NEUTRAL POSITION OF STEERING ANGLE SENSOR

With CONSULT
Perform neutral position adjustment of steering angle sensor. Refer to BRC-9, "ADJUSTMENT OF STEERING ANGLE SENSOR NEUTRAL POSITION : Description (GT-R certified NISSAN dealer)".

>> GO TO 2.

2. PERFORM SELF-DIAGNOSIS (1)

With CONSULT
1. Turn the ignition switch OFF.
   NOTE:
   Wait at least 10 seconds after turning ignition switch OFF.
2. Start the engine.
   NOTE:
   Wait at least 10 seconds after start the engine.
3. Perform self-diagnosis for “ABS”.

Is DTC “C1143” detected?

YES-1 >> “CRNT” is displayed: GO TO 3.
YES-2 >> “PAST” is displayed: INSPECTION END (Erase the memory of self-diagnosis results.)
NO >> INSPECTION END

3. CHECK CONNECTOR

1. Turn the ignition switch OFF.
2. Check the ABS actuator and electric unit (control unit) harness connector for disconnection or looseness.
3. Check the steering angle sensor harness connector for disconnection or looseness.

Is the inspection result normal?

YES >> GO TO 5.
NO >> Repair / replace harness or connector, securely lock the connector, and GO TO 4.

4. PERFORM SELF-DIAGNOSIS (2)

With CONSULT
1. Turn the ignition switch OFF.
   NOTE:
   Wait at least 10 seconds after turning ignition switch OFF.
2. Start the engine.
   NOTE:
   Wait at least 10 seconds after start the engine.
3. Perform self-diagnosis for “ABS”.

Is DTC “C1143” detected?

YES >> GO TO 5.
NO >> INSPECTION END

5. CHECK STEERING ANGLE SENSOR POWER SUPPLY

1. Turn the ignition switch OFF.
2. Disconnect steering angle sensor harness connector.
3. Check the voltage between steering angle sensor harness connector and ground.

+		–	Voltage
Steering angle sensor			
Connector	Terminal		
M37	4	Ground	Approx. 0 V

4. Turn the ignition switch ON.
   NOTE:
   Start the engine.

5. Check the voltage between steering angle sensor harness connector and ground.

+		–	Voltage
Steering angle sensor			
Connector	Terminal		
M37	4	Ground	Battery voltage

Is the inspection result normal?

YES >> GO TO 7.
NO >> GO TO 6.

6. CHECK STEERING ANGLE SENSOR POWER SUPPLY CIRCUIT

1. Turn the ignition switch OFF.
2. Check the 10A fuse (#45).
3. Disconnect IPDM E/R harness connector.
4. Check the continuity between steering angle sensor harness connector and IPDM E/R harness connector.

Steering angle sensor		IPDM E/R		Continuity
Connector	Terminal	Connector	Terminal	
M37	4	E5	25	Existed

5. Check the continuity between steering angle sensor harness connector and ground.

Steering angle sensor		—	Continuity
Connector	Terminal		
M37	4	Ground	Not existed

Is the inspection result normal?

YES >> Perform trouble diagnosis for ignition power supply.
NO >> Repair / replace harness, connector, or fuse.

7. CHECK STEERING ANGLE SENSOR GROUND CIRCUIT

1. Turn the ignition switch OFF.
2. Check the continuity between steering angle sensor harness connector and ground.

Steering angle sensor		—	Continuity
Connector	Terminal		
M37	1	Ground	Existed

Is the inspection result normal?

YES >> GO TO 8.
NO >> Repair / replace harness or connector.

8. CHECK ABS ACTUATOR AND ELECTRIC UNIT (CONTROL UNIT) POWER SUPPLY AND GROUND CIRCUIT

Check the ABS actuator and electric unit (control unit) power supply and ground circuit. Refer to BRC-110, "Diagnosis Procedure (GT-R certified NISSAN dealer)".

Is the inspection result normal?

YES >> GO TO 9.
NO >> Repair / replace harness, connector, fuse, or fusible link.

9. CHECK TERMINAL

1. Check the steering angle sensor pin terminals for damage or loose connection with harness connector.
2. Check the IPDM E/R pin terminals for damage or loose connection with harness connector

Is the inspection result normal?

YES >> GO TO 10.
NO >> Repair / replace harness, connector, or terminal.

10. CHECK CAN COMMUNICATION LINE

1. Connect steering angle sensor harness connector.
2. Connect IPDM E/R harness connector.
3. Check the CAN communication line. Refer to LAN-15, "Trouble Diagnosis Flow Chart".

Is the inspection result normal?

YES >> GO TO 11.
NO >> Repair / replace harness or connector. Refer to LAN-5, "Precautions for Harness Repair".

11. CHECK DATA MONITOR

With CONSULT

1. “ABS”, “DATA MONITOR” and “STR ANGLE SIG” according to this order.
2. Check that the indication changes with the steering angle when the steering wheel is turned left/right from the neutral position. Refer to BRC-121, "Reference Value (GT-R certified NISSAN dealer)".

Is the inspection result normal?

YES >> Replace the ABS actuator and electric unit (control unit). Refer to BRC-150, "Removal and Installation (GT-R certified NISSAN dealer)".
NO >> Replace the steering angle sensor. Refer to BRC-153, "Removal and Installation (GT-R certified NISSAN dealer)".

C1144 INCOMPLETE STEERING ANGLE SENSOR ADJUSTMENT

DTC Logic (GT-R certified NISSAN dealer)

INFOID:0000000011487514

DTC DETECTION LOGIC

DTC	Display Item (Trouble diagnosis content)	Malfunction detected condition
C1144	ST ANG SEN SIGNAL (Steering angle sensor not complete)	When neutral position adjustment of steering angle sensor is not complete.

POSSIBLE CAUSE

NOTE:
Confirm if DTC is PAST or CRNT. If DTC is CRNT, proceed with Diagnosis Procedure. If DTC is PAST, clear DTC. Do not replace the ABS actuator and electric unit (control unit) for a PAST DTC.

PAST DTC	CRNT DTC
Incomplete neutral position adjustment of steering angle sensor	• Harness or connector • Steering angle sensor • ABS actuator and electric unit (control unit) • Incomplete neutral position adjustment of steering angle sensor

DTC CONFIRMATION PROCEDURE

1. PRECONDITIONING

If “DTC CONFIRMATION PROCEDURE” has been previously conducted, always turn the ignition switch OFF and wait at least 10 seconds before conducting the next test.

>> GO TO 2.

2. CHECK DTC DETECTION

With CONSULT
1. Turn the ignition switch OFF.
   NOTE:
   Wait at least 10 seconds after turning ignition switch OFF.
2. Start the engine.
   NOTE:
   Wait at least 10 seconds after start the engine.
3. Perform self-diagnosis for “ABS”.

Is DTC “C1144” detected?

YES-1 >> “CRNT” is displayed: Proceed to BRC-89, "Diagnosis Procedure (GT-R certified NISSAN dealer)".
YES-2 >> “PAST” is displayed: INSPECTION END (Erase the memory of self-diagnosis results.)
NO-1 >> To check malfunction symptom before repair: Refer to GI-39, "Intermittent Incident".
NO-2 >> Confirmation after repair: INSPECTION END

Diagnosis Procedure (GT-R certified NISSAN dealer)

INFOID:0000000011487515

1. ADJUST THE NEUTRAL POSITION OF STEERING ANGLE SENSOR

Perform neutral position adjustment of steering angle sensor. Refer to BRC-9, "ADJUSTMENT OF STEERING ANGLE SENSOR NEUTRAL POSITION : Description (GT-R certified NISSAN dealer)".

>> GO TO 2.

2. PERFORM SELF-DIAGNOSIS

With CONSULT
1. Turn the ignition switch OFF.
   NOTE:

Wait at least 10 seconds after turning ignition switch OFF.
2. Start the engine.
NOTE:
Wait at least 10 seconds after start the engine.
3. Perform self-diagnosis for “ABS”.

Is DTC “C1144” detected?

YES >> GO TO 3.
NO >> INSPECTION END

3. CHECK STEERING ANGLE SENSOR SYSTEM

1. Turn the ignition switch OFF.
2. Check the steering angle sensor system. Refer to BRC-85, "DTC Logic (GT-R certified NISSAN dealer)".

Is the inspection result normal?

YES >> GO TO 4.
NO >> Repair / replace harness, connector, or terminal.

4. CHECK DATA MONITOR

With CONSULT
1. “ABS”, “DATA MONITOR” and “STR ANGLE SIG” according to this order.
2. Check that the indication changes with the steering angle when the steering wheel is turned left/right from the neutral position. Refer to BRC-121, "Reference Value (GT-R certified NISSAN dealer)".

Is the inspection result normal?

YES >> Replace the ABS actuator and electric unit (control unit). Refer to BRC-150, "Removal and Installation (GT-R certified NISSAN dealer)".
NO >> Replace the steering angle sensor. Refer to BRC-153, "Removal and Installation (GT-R certified NISSAN dealer)".

C1155 BRAKE FLUID LEVEL SWITCH

Description (GT-R certified NISSAN dealer)

INFOID:0000000011487517

The brake fluid level switch converts the brake fluid level to an electric signal and transmits it to the ABS actuator and electric unit (control unit).

DTC Logic (GT-R certified NISSAN dealer)

INFOID:0000000011487518

DTC DETECTION LOGIC

DTC	Display Item (Trouble diagnosis content)	Malfunction detected condition
C1155	BR FLUID LEVEL LOW (Brake fluid level low)	• When brake fluid level low signal is detected. • When an open circuit is detected in brake fluid level switch circuit.

POSSIBLE CAUSE

NOTE:
Confirm if DTC is PAST or CRNT. If DTC is CRNT, proceed with Diagnosis Procedure. If DTC is PAST, clear DTC. Do not replace the ABS actuator and electric unit (control unit) for a PAST DTC.

PAST DTC	CRNT DTC
• Harness or connector • Brake fluid level is low	• Harness or connector • ABS actuator and electric unit (control unit) • Brake fluid level switch • Combination meter • Brake fluid level is low

DTC CONFIRMATION PROCEDURE

1. PRECONDITIONING

If “DTC CONFIRMATION PROCEDURE” has been previously conducted, always turn the ignition switch OFF and wait at least 10 seconds before conducting the next test.

>> GO TO 2.

2. CHECK DTC DETECTION

With CONSULT

1. Turn the ignition switch OFF.
   NOTE:
   Wait at least 10 seconds after turning ignition switch OFF.
2. Start the engine.
   NOTE:
   Wait at least 10 seconds after start the engine.
3. Perform self-diagnosis for “ABS”.

Is DTC “C1155” detected?

YES-1 >> “CRNT” is displayed: Proceed to BRC-91, "Diagnosis Procedure (GT-R certified NISSAN dealer)".
YES-2 >> “PAST” is displayed: INSPECTION END (Erase the memory of self-diagnosis results.)
NO-1 >> To check malfunction symptom before repair: Refer to GI-39, "Intermittent Incident".
NO-2 >> Confirmation after repair: INSPECTION END

Diagnosis Procedure (GT-R certified NISSAN dealer)

INFOID:0000000011487519

1. CHECK BRAKE FLUID LEVEL

1. Turn the ignition switch OFF.
2. Check the brake fluid level. Refer to BR-10, "Inspection".

Is the inspection result normal?

YES >> GO TO 3.
NO >> Refill brake fluid. Refer to BR-10, "Refilling". GO TO 2.

2. PERFORM SELF-DIAGNOSIS (1)

With CONSULT
1. Erase self-diagnosis result for “ABS”.
2. Turn the ignition switch OFF → ON → OFF.
   NOTE:
   Wait at least 10 seconds after turning ignition switch OFF or ON.
3. Start the engine.
   NOTE:
   Wait at least 10 seconds after start the engine.
4. Perform self-diagnosis for “ABS”.

Is DTC “C1155” detected?

YES >> GO TO 3.
NO >> INSPECTION END

3. CHECK CONNECTOR

1. Turn the ignition switch OFF.
2. Check the brake fluid level switch harness connector for disconnection or looseness.
3. Check the combination meter harness connector for disconnection or looseness.
4. Check the ABS actuator and electric unit (control unit) harness connector for disconnection or looseness.

Is the inspection result normal?

YES >> GO TO 5.
NO >> Repair / replace harness or connector, and GO TO 4.

4. PERFORM SELF-DIAGNOSIS (2)

With CONSULT
1. Turn the ignition switch OFF.
   NOTE:
   Wait at least 10 seconds after turning ignition switch OFF.
2. Start the engine.
   NOTE:
   Wait at least 10 seconds after start the engine.
3. Perform self-diagnosis for “ABS”.

Is DTC “C1155” detected?

YES >> GO TO 5.
NO >> INSPECTION END

5. CHECK BRAKE FLUID LEVEL SWITCH

Check the brake fluids level switch. Refer to BRC-94, "Component Inspection (GT-R certified NISSAN dealer)".

Is the inspection result normal?

YES >> GO TO 7.
NO >> Replace the reservoir tank. Refer to BR-29, "Disassembly and Assembly (GT-R certified NISSAN dealer)". GO TO 6.

6. PERFORM SELF-DIAGNOSIS (3)

With CONSULT
1. Erase self-diagnosis result for “ABS”.
2. Turn the ignition switch OFF → ON → OFF.
   NOTE:
   Wait at least 10 seconds after turning ignition switch OFF or ON.
3. Start the engine.
   NOTE:
   Wait at least 10 seconds after start the engine.
4. Perform self-diagnosis for “ABS”.

Is DTC “C1155” detected?

YES >> GO TO 7.
NO >> INSPECTION END

7. CHECK CONNECTOR AND TERMINAL

1. Turn the ignition switch OFF.
2. Disconnect brake fluid level switch harness connector.
3. Check the brake fluid level switch harness connector for disconnection or looseness.
4. Check the brake fluid level switch pin terminals for damage or loose connection with harness connector.
5. Disconnect combination meter harness connector.
6. Check the combination meter harness connector for disconnection or looseness.
7. Check the combination meter pin terminals for damage or loose connection with harness connector.
8. Disconnect ABS actuator and electric unit (control unit) harness connector.
9. Check the ABS actuator and electric unit (control unit) harness connector for disconnection or looseness.
10. Check the ABS actuator and electric unit (control unit) pin terminals for damage or loose connection with harness connector.

Is the inspection result normal?

YES >> GO TO 9.
NO >> Repair / replace harness, connector, or terminal, and GO TO 8.

8. PERFORM SELF-DIAGNOSIS (4)

With CONSULT

1. Connect brake fluid level switch harness connector.
2. Connect combination meter harness connector.
3. Connect ABS actuator and electric unit (control unit) harness connector.
4. Erase self-diagnosis result for “ABS”.
5. Turn the ignition switch OFF → ON → OFF.
   NOTE:
   Wait at least 10 seconds after turning ignition switch OFF or ON.
6. Start the engine.
   NOTE:
   Wait at least 10 seconds after start the engine.
7. Perform self-diagnosis for “ABS”.

Is DTC “C1155” detected?

YES >> GO TO 9.
NO >> INSPECTION END

9. CHECK BRAKE FLUID LEVEL SWITCH CIRCUIT (1)

1. Turn the ignition switch OFF.
2. Disconnect brake fluid level switch harness connector.
3. Disconnect combination meter harness connector.
4. Check the continuity between brake fluid level switch harness connector and combination meter harness connector.

Brake fluid level switch		Combination meter		Continuity
Connector	Terminal	Connector	Terminal	
E47	1	M53	32	Existed

5. Check the continuity between brake fluid level switch harness connector and ground.

Brake fluid level switch		—	Continuity
Connector	Terminal		
M47	1	Ground	Not existed

Is the inspection result normal?

YES >> GO TO 10.
NO >> Repair / replace harness or connector, and GO TO 10.

10. CHECK BRAKE FLUID LEVEL SWITCH CIRCUIT (2)

1. Disconnect ABS actuator and electric unit (control unit) harness connector.
2. Check the continuity between brake fluid level switch harness connector and ABS actuator and electric unit (control unit) harness connector.

Brake fluid level switch		ABS actuator and electric unit (control unit)		Continuity
Connector	Terminal	Connector	Terminal	
E47	1	E41	38	Existed

3. Check the continuity between brake fluid level switch harness connector and ground.

Brake fluid level switch		—	Continuity
Connector	Terminal		
E47	1	Ground	Not existed

Is the inspection result normal?

YES >> GO TO 11.
NO >> Repair / replace harness or connector, and GO TO 11.

11. CHECK BRAKE FLUID LEVEL SWITCH GROUND CIRCUIT

Check the continuity between brake fluid level switch harness connector and ground.

Brake fluid level switch		—	Continuity
Connector	Terminal		
E47	2	Ground	Existed

Is the inspection result normal?

YES >> GO TO 12.
NO >> Repair / replace harness or connector, and GO TO 12.

12. CHECK COMBINATION METER

1. Connect brake fluid level switch harness connector.
2. Connect combination meter harness connector.
3. Connect ABS actuator and electric unit (control unit) harness connector.
4. Check the combination meter. Refer to MWI-54, "Diagnosis Description".

Is the inspection result normal?

YES >> Replace the ABS actuator and electric unit (control unit). Refer to BRC-150, "Removal and Installation (GT-R certified NISSAN dealer)".
NO >> Repair or replace combination meter. Refer to MWI-114, "Removal and Installation".

Component Inspection (GT-R certified NISSAN dealer)

INFOID:0000000011487520

1. CHECK BRAKE FLUID LEVEL SWITCH

1. Turn the ignition switch OFF.
2. Disconnect brake fluid level switch harness connector.
3. Check the continuity between terminals of brake fluid level switch.

Brake fluid level switch	Condition	Continuity
Terminal		
1 – 2	When brake fluid level in reservoir tank is within the specified level.	Not existed
	When brake fluid level in reservoir tank is less than the specified level.	Existed

Is the inspection result normal?

YES >> INSPECTION END
NO >> Replace the reservoir tank. Refer to BR-29, "Disassembly and Assembly (GT-R certified NISSAN dealer)".

C1160 INCOMPLETE DECEL G SENSOR CALIBRATION

DTC Logic (GT-R certified NISSAN dealer)

INFOID:0000000011487522

DTC DETECTION LOGIC

DTC	Display Item (Trouble diagnosis content)	Malfunction detected condition
C1160	DECEL G SEN SET (Decel G sensor set)	When calibration of yaw rate/side/decel G sensor is not complete.

POSSIBLE CAUSE

NOTE:
Confirm if DTC is PAST or CRNT. If DTC is CRNT, proceed with Diagnosis Procedure. If DTC is PAST, clear DTC. Do not replace the ABS actuator and electric unit (control unit) for a PAST DTC.

PAST DTC	CRNT DTC
• Harness or connector • ABS actuator and electric unit (control unit) power supply system • Fuse • Fusible link • Battery	• Incomplete calibration of decel G sensor • ABS actuator and electric unit (control unit) • Yaw rate/side/decel G sensor • Harness or connector

DTC CONFIRMATION PROCEDURE

1. PRECONDITIONING

If “DTC CONFIRMATION PROCEDURE” has been previously conducted, always turn the ignition switch OFF and wait at least 10 seconds before conducting the next test.

>> GO TO 2.

2. CHECK DTC DETECTION

With CONSULT
1. Turn the ignition switch ON.
2. Perform decel G sensor calibration. Refer to BRC-10, "CALIBRATION OF DECEL G SENSOR : Description (GT-R certified NISSAN dealer)".
3. Turn the ignition switch OFF.
   NOTE:
   Wait at least 10 seconds after turning ignition switch OFF.
4. Start the engine.
   NOTE:
   Wait at least 10 seconds after start the engine.
5. Perform self-diagnosis for “ABS”.

Is DTC “C1160” detected?

YES-1 >> “CRNT” is displayed: Proceed to BRC-95, "Diagnosis Procedure (GT-R certified NISSAN dealer)".
YES-2 >> “PAST” is displayed: INSPECTION END (Erase the memory of self-diagnosis results.)
NO-1 >> To check malfunction symptom before repair: Refer to GI-39, "Intermittent Incident".
NO-2 >> Confirmation after repair: INSPECTION END

Diagnosis Procedure (GT-R certified NISSAN dealer)

INFOID:0000000011487523

1. DECEL G SENSOR CALIBRATION

Perform decel G sensor calibration. Refer to BRC-10, "CALIBRATION OF DECEL G SENSOR : Description (GT-R certified NISSAN dealer)".

>> GO TO 2.

2. PERFORM SELF-DIAGNOSIS

With CONSULT
Perform self-diagnosis for “ABS”.

Is DTC “C1160” detected?

YES >> GO TO 3.
NO >> INSPECTION END

3. CHECK YAW RATE/SIDE/DECEL G SENSOR SYSTEM

1. Turn the ignition switch OFF.
2. Check the yaw rate/side/decel G sensor system. Refer to BRC-58, "DTC Logic (GT-R certified NISSAN dealer)".

Is the inspection result normal?

YES >> Replace the ABS actuator and electric unit (control unit). Refer to BRC-150, "Removal and Installation (GT-R certified NISSAN dealer)".
NO >> Replace the yaw rate/side/decel G sensor. Refer to BRC-152, "Removal and Installation (GT-R certified NISSAN dealer)".

C1161 INCOMPLETE SIDE G SENSOR CALIBRATION

DTC Logic (GT-R certified NISSAN dealer)

INFOID:0000000011487525

DTC DETECTION LOGIC

DTC	Display item (Trouble diagnosis content)	Malfunction detected condition
C1161	SIDE G SEN SET (Side G sensor set)	When there is an internal malfunction in the ABS actuator and electric unit (control unit).

POSSIBLE CAUSE

NOTE:
Confirm if DTC is PAST or CRNT. If DTC is CRNT, proceed with Diagnosis Procedure. If DTC is PAST, clear DTC. Do not replace the ABS actuator and electric unit (control unit) for a PAST DTC.

PAST DTC	CRNT DTC
• Harness or connector • ABS actuator and electric unit (control unit) power supply system • Fuse • Fusible link • Battery	• Decel G sensor calibration is not yet performed • Yaw rate/side/decel G sensor • ABS actuator and electric unit (control unit)

DTC CONFIRMATION PROCEDURE

1. PRECONDITIONING

If “DTC CONFIRMATION PROCEDURE” has been previously conducted, always turn ignition switch OFF and wait at least 10 seconds before conducting the next test.

>> GO TO 2.

2. CHECK DTC DETECTION

With CONSULT
1. Turn the ignition switch ON.
2. Perform decel G sensor calibration. Refer to BRC-10, "CALIBRATION OF DECEL G SENSOR : Description (GT-R certified NISSAN dealer)".
3. Turn the ignition switch OFF.
   NOTE:
   Wait at least 10 seconds after turning ignition switch OFF.
4. Start the engine.
   NOTE:
   Wait at least 10 seconds after start the engine.
5. Perform self-diagnosis for “ABS”.

Is DTC “C1161” detected?

YES-1 >> “CRNT” is displayed: Proceed to BRC-97, "Diagnosis Procedure (GT-R certified NISSAN dealer)".
YES-2 >> “PAST” is displayed: INSPECTION END (Erase the memory of self-diagnosis results.)
NO-1 >> To check malfunction symptom before repair: Refer to GI-39, "Intermittent Incident".
NO-2 >> Confirmation after repair: INSPECTION END

Diagnosis Procedure (GT-R certified NISSAN dealer)

INFOID:0000000011487526

1. SIDE G SENSOR CALIBRATION

Perform side G sensor calibration. Refer to BRC-10, "CALIBRATION OF DECEL G SENSOR : Description (GT-R certified NISSAN dealer)".

>> GO TO 2.

2. PERFORM SELF-DIAGNOSIS

With CONSULT
Perform self-diagnosis for “ABS”.

Is DTC “C1161” detected?

YES >> GO TO 3.
NO >> INSPECTION END

3. CHECK YAW RATE/SIDE/DECEL G SENSOR SYSTEM

1. Turn the ignition switch OFF.
2. Check the yaw rate/side/decel G sensor system. Refer to BRC-58, "DTC Logic (GT-R certified NISSAN dealer)".

Is the inspection result normal?

YES >> Replace the ABS actuator and electric unit (control unit). Refer to BRC-150, "Removal and Installation (GT-R certified NISSAN dealer)".
NO >> Replace the yaw rate/side/decel G sensor. Refer to BRC-152, "Removal and Installation (GT-R certified NISSAN dealer)".

C1162 INCOMPLETE PRESSURE SENSOR CALIBRATION

DTC Logic (GT-R certified NISSAN dealer)

INFOID:0000000011487528

DTC DETECTION LOGIC

DTC	Display item (Trouble diagnosis content)	Malfunction detected condition	Possible cause
C1162	PRESS SEN SET (Pressure sensor set)	When there is an internal malfunction in the ABS actuator and electric unit (control unit).	ABS actuator and electric unit (control unit)

POSSIBLE CAUSE

NOTE:
Confirm if DTC is PAST or CRNT. If DTC is CRNT, proceed with Diagnosis Procedure. If DTC is PAST, clear DTC. Do not replace the ABS actuator and electric unit (control unit) for a PAST DTC.

PAST DTC	CRNT DTC
• Harness or connector • ABS actuator and electric unit (control unit) power supply system • Fuse • Fusible link • Battery	ABS actuator and electric unit (control unit)

DTC CONFIRMATION PROCEDURE

1. PRECONDITIONING

If “DTC CONFIRMATION PROCEDURE” has been previously conducted, always turn ignition switch OFF and wait at least 10 seconds before conducting the next test.

>> GO TO 2.

2. CHECK DTC DETECTION

With CONSULT
1. Turn the ignition switch ON.
2. Perform pressure sensor calibration. Refer to BRC-11, "CALIBRATION OF PRESSURE SENSOR : Description (GT-R certified NISSAN dealer)".
3. Turn the ignition switch OFF.
   NOTE:
   Wait at least 10 seconds after turning ignition switch OFF.
4. Start the engine.
   NOTE:
   Wait at least 10 seconds after start the engine.
5. Perform self-diagnosis for “ABS”.

Is DTC “C1162” detected?

YES-1 >> “CRNT” is displayed: Proceed to BRC-99, "Diagnosis Procedure (GT-R certified NISSAN dealer)".
YES-2 >> “PAST” is displayed: INSPECTION END (Erase the memory of self-diagnosis results.)
NO-1 >> To check malfunction symptom before repair: Refer to GI-39, "Intermittent Incident".
NO-2 >> Confirmation after repair: INSPECTION END

Diagnosis Procedure (GT-R certified NISSAN dealer)

INFOID:0000000011487529

1. PERFORM CALIBRATION OF PRESSURE SENSOR

Perform pressure sensor calibration. Refer to BRC-11, "CALIBRATION OF PRESSURE SENSOR : Description (GT-R certified NISSAN dealer)".

>> GO TO 2.

2. PERFORM SELF-DIAGNOSIS

With CONSULT

1. Erase self-diagnosis result for “ABS”.
2. Turn the ignition switch OFF.
   NOTE:
   Wait at least 10 seconds after turning ignition switch OFF.
3. Start the engine.
   NOTE:
   Wait at least 10 seconds after start the engine.
4. Perform self-diagnosis for “ABS”.

Is DTC “C1162” detected?

YES >> Replace the ABS actuator and electric unit (control unit). Refer to BRC-150, "Removal and Installation (GT-R certified NISSAN dealer)".

NO >> INSPECTION END

C1164, C1165 CV SYSTEM

Description (GT-R certified NISSAN dealer)

INFOID:0000000011487531

The cut valve shuts off the normal brake fluid path from the master cylinder, when VDC/TCS is activated.

DTC Logic (GT-R certified NISSAN dealer)

INFOID:0000000011487532

DTC DETECTION LOGIC

DTC	Display Item (Trouble diagnosis content)	Malfunction detected condition
C1164	CV 1 (Cut valve 1)	When a malfunction is detected in cut valve 1.
C1165	CV 2 (Cut valve 2)	When a malfunction is detected in cut valve 2.

POSSIBLE CAUSE

NOTE:
Confirm if DTC is PAST or CRNT. If DTC is CRNT, proceed with Diagnosis Procedure. If DTC is PAST, clear DTC. Do not replace the ABS actuator and electric unit (control unit) for a PAST DTC.

PAST DTC	CRNT DTC
• Harness or connector • ABS actuator and electric unit (control unit) power supply system • Fuse • Fusible link • Battery	• Harness or connector • ABS actuator and electric unit (control unit) • ABS actuator and electric unit (control unit) power supply system • Fuse • Fusible link • Battery

DTC CONFIRMATION PROCEDURE

1. PRECONDITIONING

If “DTC CONFIRMATION PROCEDURE” has been previously conducted, always turn the ignition switch OFF and wait at least 10 seconds before conducting the next test.

>> GO TO 2.

2. CHECK DTC DETECTION

With CONSULT

1. Turn the ignition switch OFF.
   NOTE:
   Wait at least 10 seconds after turning ignition switch OFF.
2. Start the engine.
   NOTE:
   Wait at least 10 seconds after start the engine.
3. Perform self-diagnosis for “ABS”.

Is DTC “C1164” or “C1165” detected?

YES-1 >> “C1164” or “C1165” is displayed by “CRNT”: Proceed to BRC-101, "Diagnosis Procedure (GT-R certified NISSAN dealer)".
YES-2 >> “C1164” and “C1165” are displayed by “PAST”: INSPECTION END (Erase the memory of self-diagnosis results.)
NO-1 >> To check malfunction symptom before repair: Refer to GI-39, "Intermittent Incident".
NO-2 >> Confirmation after repair: INSPECTION END

Diagnosis Procedure (GT-R certified NISSAN dealer)

INFOID:0000000011487533

1. CHECK CONNECTOR

1. Turn the ignition switch OFF.
2. Check the ABS actuator and electric unit (control unit) harness connector for disconnection or looseness.

Is the inspection result normal?

YES >> GO TO 3.
NO >> Repair / replace harness or connector, securely lock the connector, and GO TO 2.

2. PERFORM SELF-DIAGNOSIS

With CONSULT
Perform self-diagnosis for “ABS” again.

Is DTC “C1164” or “C1165” detected?

YES >> GO TO 3.
NO >> INSPECTION END

3. CHECK ABS ACTUATOR AND ELECTRIC UNIT (CONTROL UNIT) POWER SUPPLY AND GROUND CIRCUIT

Check the ABS actuator and electric unit (control unit) power supply and ground circuit. Refer to BRC-110, "Diagnosis Procedure (GT-R certified NISSAN dealer)".

Is the inspection result normal?

YES >> GO TO 4.
NO >> Repair / replace harness, connector, fuse, or fusible link.

4. CHECK TERMINAL

Check the ABS actuator and electric unit (control unit) pin terminals for damage or loose connection with harness.

Is the inspection result normal?

YES >> Replace the ABS actuator and electric unit (control unit). Refer to BRC-150, "Removal and Installation (GT-R certified NISSAN dealer)".
NO >> Repair / replace harness, connector, or terminal.

C1166, C1167 SV SYSTEM

Description (GT-R certified NISSAN dealer)

INFOID:0000000011487535

The suction valve supplies the brake fluid from the master cylinder to the pump, when VDC/TCS is activated.

DTC Logic (GT-R certified NISSAN dealer)

INFOID:0000000011487536

DTC DETECTION LOGIC

DTC	Display Item (Trouble diagnosis content)	Malfunction detected condition
C1166	SV 1 (Suction valve 1)	When a malfunction is detected in suction valve 1.
C1167	SV 2 (Suction valve 2)	When a malfunction is detected in suction valve 2.

POSSIBLE CAUSE

NOTE:
Confirm if DTC is PAST or CRNT. If DTC is CRNT, proceed with Diagnosis Procedure. If DTC is PAST, clear DTC. Do not replace the ABS actuator and electric unit (control unit) for a PAST DTC.

PAST DTC	CRNT DTC
• Harness or connector • ABS actuator and electric unit (control unit) power supply system • Fuse • Fusible link • Battery	• Harness or connector • ABS actuator and electric unit (control unit) • ABS actuator and electric unit (control unit) power supply system • Fuse • Fusible link • Battery

DTC CONFIRMATION PROCEDURE

1. PRECONDITIONING

If “DTC CONFIRMATION PROCEDURE” has been previously conducted, always turn the ignition switch OFF and wait at least 10 seconds before conducting the next test.

>> GO TO 2.

2. CHECK DTC DETECTION

With CONSULT

1. Turn the ignition switch OFF.
   NOTE:
   Wait at least 10 seconds after turning ignition switch OFF.
2. Start the engine.
   NOTE:
   Wait at least 10 seconds after start the engine.
3. Perform self-diagnosis for “ABS”.

Is DTC “C1166” or “C1167” detected?

YES-1 >> “C1166” or “C1167” is displayed by “CRNT”: Proceed to BRC-103, "Diagnosis Procedure (GT-R certified NISSAN dealer)".
YES-2 >> “C1166” and “C1167” is displayed by “PAST”: INSPECTION END (Erase the memory of self-diagnosis results.)
NO-1 >> To check malfunction symptom before repair: Refer to GI-39, "Intermittent Incident".
NO-2 >> Confirmation after repair: INSPECTION END

Diagnosis Procedure (GT-R certified NISSAN dealer)

INFOID:0000000011487537

1. CHECK CONNECTOR

1. Turn the ignition switch OFF.
2. Check the ABS actuator and electric unit (control unit) harness connector for disconnection or looseness.

Is the inspection result normal?

YES >> GO TO 3.
NO >> Repair / replace harness or connector, securely lock the connector, and GO TO 2.

2. PERFORM SELF-DIAGNOSIS

With CONSULT
Perform self-diagnosis for “ABS” again.

Is DTC “C1166” or “C1167” detected?

YES >> GO TO 3.
NO >> INSPECTION END

3. CHECK ABS ACTUATOR AND ELECTRIC UNIT (CONTROL UNIT) POWER SUPPLY AND GROUND CIRCUIT

Check the ABS actuator and electric unit (control unit) power supply and ground circuit. Refer to BRC-110, "Diagnosis Procedure (GT-R certified NISSAN dealer)".

Is the inspection result normal?

YES >> GO TO 4.
NO >> Repair / replace harness, connector, fuse, or fusible link.

4. CHECK TERMINAL

Check the ABS actuator and electric unit (control unit) pin terminals for damage or loose connection with harness.

Is the inspection result normal?

YES >> Replace the ABS actuator and electric unit (control unit). Refer to BRC-150, "Removal and Installation (GT-R certified NISSAN dealer)".
NO >> Repair / replace harness, connector, or terminal.

C1193 INCOMPLETE VALVE CALIBRATION

DTC Logic (GT-R certified NISSAN dealer)

INFOID:0000000011487539

DTC DETECTION LOGIC

DTC	Display item (Trouble diagnosis content)	Malfunction detected condition
C1193	VALVE SET (Valve set)	Calibration of valve is not complete.

POSSIBLE CAUSE

NOTE:
Confirm if DTC is PAST or CRNT. If DTC is CRNT, proceed with Diagnosis Procedure. If DTC is PAST, clear DTC. Do not replace the ABS actuator and electric unit (control unit) for a PAST DTC.

PAST DTC	CRNT DTC
Valve calibration is not yet performed	• ABS actuator and electric unit (control unit) • Valve calibration is not yet performed

DTC CONFIRMATION PROCEDURE

1. PRECONDITIONING

If “DTC CONFIRMATION PROCEDURE” has been previously conducted, always turn the ignition switch OFF and wait at least 10 seconds before conducting the next test.

>> GO TO 2.

2. DTC REPRODUCTION PROCEDURE

With CONSULT
1. Turn the ignition switch ON.
2. Perform pressure sensor calibration. Refer to BRC-11, "CALIBRATION OF PRESSURE SENSOR : Description (GT-R certified NISSAN dealer)".
3. Perform valve calibration. Refer to BRC-12, "CALIBRATION OF VALVE : Description (GT-R certified NISSAN dealer)".
4. Turn the ignition switch OFF.
   NOTE:
   Wait at least 10 seconds after turning ignition switch OFF.
5. Start the engine.
   NOTE:
   Wait at least 10 seconds after start the engine.
6. Perform self-diagnosis for “ABS”.

Is DTC “C1193” detected?

YES-1 >> “CRNT” is displayed: Proceed to BRC-105, "Diagnosis Procedure (GT-R certified NISSAN dealer)".
YES-2 >> “PAST” is displayed: INSPECTION END (Erase the memory of self-diagnosis results.)
NO-1 >> To check malfunction symptom before repair: Refer to GI-39, "Intermittent Incident".
NO-2 >> Confirmation after repair: INSPECTION END

Diagnosis Procedure (GT-R certified NISSAN dealer)

INFOID:0000000011487540

1. PERFORM CALIBRATION OF PRESSURE SENSOR

Perform pressure sensor calibration. Refer to BRC-11, "CALIBRATION OF PRESSURE SENSOR : Description (GT-R certified NISSAN dealer)".

>> GO TO 2.

2. PERFORM CALIBRATION OF VALVE

Perform valve calibration. Refer to BRC-12, "CALIBRATION OF VALVE : Description (GT-R certified NISSAN dealer)".

Is calibration of valve finished?

YES >> INSPECTION END
NO >> GO TO 3.

3. PERFORM SELF-DIAGNOSIS

With CONSULT

1. Erase self-diagnosis result for “ABS”.
2. Turn the ignition switch OFF.
   NOTE:
   Wait at least 10 seconds after turning ignition switch OFF.
3. Start the engine.
   NOTE:
   Wait at least 10 seconds after start the engine.
4. Perform self-diagnosis for “ABS”.

Is DTC “C1193” detected?

YES >> Replace ABS actuator and electric unit (control unit). Refer to BRC-150, "Removal and Installation (GT-R certified NISSAN dealer)".
NO >> Repair or replace error-detected parts.

U1000 CAN COMM CIRCUIT

Description (GT-R certified NISSAN dealer)

INFOID:0000000011487542

CAN (Controller Area Network) is a serial communication line for real time application. It is an on-vehicle multiplex communication line with high data communication speed and excellent error detection ability. Many electronic control units are equipped onto a vehicle, and each control unit shares information and links with other control units during operation (not independent). In CAN communication, control units are connected with 2 communication lines (CAN-H line, CAN-L line) allowing a high rate of information transmission with less wiring. Each control unit transmits/receives data but selectively reads required data only.

DTC Logic (GT-R certified NISSAN dealer)

INFOID:0000000011487543

DTC DETECTION LOGIC

DTC	Display Item (Trouble diagnosis content)	Malfunction detected condition
U1000	CAN COMM CIRCUIT (CAN communication circuit)	When CAN communication signal is not continuously transmitted or received for 2 seconds or more.

POSSIBLE CAUSE

NOTE:
Confirm if DTC is PAST or CRNT. If DTC is CRNT, proceed with Diagnosis Procedure. If DTC is PAST, clear DTC. Do not replace the ABS actuator and electric unit (control unit) for a PAST DTC.

PAST DTC	CRNT DTC
• Harness or connector • CAN communication line	CAN communication system malfunction

DTC CONFIRMATION PROCEDURE

1. PRECONDITIONING

If “DTC CONFIRMATION PROCEDURE” has been previously conducted, always turn the ignition switch OFF and wait at least 10 seconds before conducting the next test.

>> GO TO 2.

2. CHECK DTC DETECTION

With CONSULT

1. Turn the ignition switch OFF.
   NOTE:
   Wait at least 10 seconds after turning ignition switch OFF.
2. Start the engine.
   NOTE:
   Wait at least 10 seconds after start the engine.
3. Perform self-diagnosis for “ABS”.

Is DTC “U1000” detected?

YES-1 >> “CRNT” is displayed: Proceed to BRC-107, "Diagnosis Procedure (GT-R certified NISSAN dealer)".
YES-2 >> “PAST” is displayed: INSPECTION END (Erase the memory of self-diagnosis results.)
NO-1 >> To check malfunction symptom before repair: Refer to GI-39, "Intermittent Incident".
NO-2 >> Confirmation after repair: INSPECTION END

Diagnosis Procedure (GT-R certified NISSAN dealer)

INFOID:0000000011487544

Proceed to LAN-15, "Trouble Diagnosis Flow Chart".

U1002 SYSTEM COMM (CAN)

Description (GT-R certified NISSAN dealer)

INFOID:0000000011487546

CAN (Controller Area Network) is a serial communication line for real time application. It is an on-vehicle multiplex communication line with high data communication speed and excellent error detection ability. Many electronic control units are equipped onto a vehicle, and each control unit shares information and links with other control units during operation (not independent). In CAN communication, control units are connected with 2 communication lines (CAN-H line, CAN-L line) allowing a high rate of information transmission with less wiring. Each control unit transmits/receives data but selectively reads required data only.

DTC Logic (GT-R certified NISSAN dealer)

INFOID:0000000011487547

DTC DETECTION LOGIC

DTC	Display item (Trouble diagnosis content)	Malfunction detected condition
U1002	SYSTEM COMM (CAN) (CAN system communication)	When ABS actuator and electric unit (control unit) is not transmitting or receiving CAN communication signal for 2 seconds or less.

POSSIBLE CAUSE

NOTE:
Confirm if DTC is PAST or CRNT. If DTC is CRNT, proceed with Diagnosis Procedure. If DTC is PAST, clear DTC. Do not replace the ABS actuator and electric unit (control unit) for a PAST DTC.

PAST DTC	CRNT DTC
• CAN communication line • Harness or connector	• CAN communication line • ABS actuator and electric unit (control unit) • Steering angle sensor

DTC CONFIRMATION PROCEDURE

1. PRECONDITIONING

If “DTC CONFIRMATION PROCEDURE” has been previously conducted, always turn the ignition switch OFF and wait at least 10 seconds before conducting the next test.

>> GO TO 2.

2. DTC REPRODUCTION PROCEDURE

With CONSULT
1. Turn the ignition switch OFF.
   NOTE:
   Wait at least 10 seconds after turning ignition switch OFF.
2. Start the engine.
   NOTE:
   Wait at least 10 seconds after start the engine.
3. Perform self-diagnosis for “ABS”.

Is DTC “U1002” detected?

YES-1 >> “CRNT” is displayed: Proceed to BRC-108, "Diagnosis Procedure (GT-R certified NISSAN dealer)".
YES-2 >> “PAST” is displayed: INSPECTION END (Erase the memory of self-diagnosis results.)
NO-1 >> To check malfunction symptom before repair: Refer to GI-39, "Intermittent Incident".
NO-2 >> Confirmation after repair: INSPECTION END

Diagnosis Procedure (GT-R certified NISSAN dealer)

INFOID:0000000011487548

CAUTION:
- **Never apply 7.0 V or more to the measurement terminal.**
- **Use a tester with open terminal voltage of 7.0 V or less.**

- **Turn the ignition switch OFF and disconnect the battery cable from the negative terminal when checking the harness.**

1. CHECK CAN DIAGNOSIS SUPPORT MONITOR

With CONSULT
1. Select “ABS” and “CAN Diagnosis Support Monitor” in order.
2. Check the malfunction history between each control unit connected to ABS actuator and electric unit (control unit).

Check the result of “PAST”?

All items are “OK”>>Check the intermittent incident. Refer to GI-39, "Intermittent Incident".
“TRANSMIT DIAG” is other than “OK”>>GO TO 2.
A control unit other than ABS actuator and electric unit (control unit) is anything other than “OK”>>GO TO 3.

2. CHECK TRANSMITTING SIDE UNIT

Check the ABS actuator and electric unit (control unit) harness connector terminals No. 15 and 30 for damage or loose connection.

Is the inspection result normal?

YES >> Erase self-diagnosis results. Then perform self-diagnosis for “ABS” with CONSULT.
NO >> Recheck the terminals for damage or loose connection. Refer to LAN-5, "Precautions for Harness Repair".

3. CHECK APPLICABLE CONTROL UNIT

Check the terminals of each harness connector for damage or loose connection.

Is the inspection result normal?

YES >> Erase self-diagnosis results. Then perform self-diagnosis for applicable control unit with CONSULT.
NO >> Recheck the terminals for damage or loose connection. Refer to LAN-5, "Precautions for Harness Repair".

POWER SUPPLY AND GROUND CIRCUIT

Description (GT-R certified NISSAN dealer)

INFOID:0000000011487550

Supplies power to ABS actuator and electric unit (control unit).

Diagnosis Procedure (GT-R certified NISSAN dealer)

INFOID:0000000011487551

1. CHECK ABS ACTUATOR AND ELECTRIC UNIT (CONTROL UNIT) IGNITION POWER SUPPLY (1)

1. Turn the ignition switch OFF.
2. Disconnect ABS actuator and electric unit (control unit) harness connector.
3. Check the voltage between ABS actuator and electric unit (control unit) harness connector and ground.

+		–	Voltage
ABS actuator and electric unit (control unit)			
Connector	Terminal		
E41	29	Ground	Approx. 0 V

4. Turn the ignition switch ON
   NOTE:
   Start the engine.
5. Check the voltage between ABS actuator and electric unit (control unit) harness connector and ground.

+		–	Voltage
ABS actuator and electric unit (control unit)			
Connector	Terminal		
E41	29	Ground	Battery voltage

Is the inspection result normal?

YES >> GO TO 3.
NO >> GO TO 2.

2. CHECK ABS ACTUATOR AND ELECTRIC UNIT (CONTROL UNIT) IGNITION POWER SUPPLY CIRCUIT

1. Turn the ignition switch OFF.
2. Check the 10A fuse (#45).
3. Disconnect IPDM E/R harness connector.
4. Check the continuity between ABS actuator and electric unit (control unit) harness connector and IPDM E/R harness connector.

ABS actuator and electric unit (control unit)		IPDM E/R		Continuity
Connector	Terminal	Connector	Terminal	
E41	29	E5	25	Existed

5. Check the continuity between ABS actuator and electric unit (control unit) harness connector and ground.

ABS actuator and electric unit (control unit)		—	Continuity
Connector	Terminal		
E41	29	Ground	No existed

Is the inspection result normal?

YES >> Perform trouble diagnosis for ignition power supply.
NO >> Repair / replace harness, connector, or fuse.

3. CHECK MOTOR AND MOTOR RELAY POWER SUPPLY

1. Turn the ignition switch OFF.
2. Check the voltage between ABS actuator and electric unit (control unit) harness connector and ground.

+		–	Voltage
ABS actuator and electric unit (control unit)			
Connector	Terminal		
E41	1	Ground	Battery voltage

Is the inspection result normal?

YES >> GO TO 5.
NO >> GO TO 4.

4. CHECK MOTOR AND MOTOR RELAY POWER SUPPLY CIRCUIT

1. Turn the ignition switch OFF.
2. Check the 40A fusible link (#H).
3. Check the continuity and short circuit between ABS actuator and electric unit (control unit) harness connector terminal (1) and 40A fusible link (#H).

Is the inspection result normal?

YES >> Perform trouble diagnosis for battery power supply.
NO >> Repair / replace harness, connector, or fusible link.

5. CHECK ACTUATOR RELAY, ABS IN VALVE, ABS OUT VALVE POWER SUPPLY

1. Turn the ignition switch OFF.
2. Check the voltage between ABS actuator and electric unit (control unit) harness connector and ground.

+		–	Voltage
ABS actuator and electric unit (control unit)			
Connector	Terminal		
E41	32	Ground	Battery voltage

Is the inspection result normal?

YES >> GO TO 7.
NO >> GO TO 6.

6. CHECK ACTUATOR RELAY, ABS IN VALVE, ABS OUT VALVE POWER SUPPLY CIRCUIT

1. Turn the ignition switch OFF.
2. Check the 20A fuse (#32).
3. Check the continuity and short circuit between ABS actuator and electric unit (control unit) harness connector terminal (32) and 20A fuse (#32).

Is the inspection result normal?

YES >> Perform trouble diagnosis for battery power supply.
NO >> Repair / replace harness, connector, or fusible link.

7. CHECK ABS ACTUATOR AND ELECTRIC UNIT (CONTROL UNIT) GROUND CIRCUIT

Check the continuity between ABS actuator and electric unit (control unit) harness connector and the ground.

ABS actuator and electric unit (control unit)		—	Continuity
Connector	Terminal		
E41	16	Ground	Existed
	47		

Is the inspection result normal?

YES >> GO TO 8.
NO >> Repair / replace harness, connector, or terminal.

8. CHECK TERMINAL

1. Check the ABS actuator and electric unit (control unit) pin terminals for damage or loose connection with harness connector.
2. Check the IPDM E/R pin terminals for damage or loose connection with harness connector.

Is the inspection result normal?

YES >> Replace the ABS actuator and electric unit (control unit). Refer to BRC-150, "Removal and Installation (GT-R certified NISSAN dealer)".

NO >> Repair / replace harness, connector, or terminal.

SET-UP SWITCH (VDC)

Description (GT-R certified NISSAN dealer)

INFOID:0000000011487553

The VDC/TCS function can be changed (R mode, normal mode, OFF mode) by the operation of set-up switch (VDC).

Component Function Check (GT-R certified NISSAN dealer)

INFOID:0000000011487554

1. CHECK SET-UP SWITCH (VDC) 1

Check that the R mode indicator lamp (next to the switch) illuminates when pulling up the set-up switch (VDC) for approximately 1 second or more.

Is the inspection result normal?

YES >> GO TO 2.
NO >> Check the set-up switch (VDC). Refer to BRC-113, "Diagnosis Procedure (GT-R certified NISSAN dealer)".

2. CHECK SET-UP SWITCH (VDC) 2

Check that the OFF mode indicator lamp (next to the switch) illuminates when pushing down the set-up switch (VDC) for approximately 1 second or more.

Is the inspection result normal?

YES >> GO TO 3.
NO >> Check the set-up switch (VDC). Refer to BRC-113, "Diagnosis Procedure (GT-R certified NISSAN dealer)".

3. CHECK SET-UP SWITCH (VDC) 3

Check that the VDC OFF indicator lamp in the combination meter illuminates when pushing down the set-up switch (VDC) for approximately 1 second or more.

Is the inspection result normal?

YES >> INSPECTION END
NO >> Check the set-up switch (VDC). Refer to BRC-113, "Diagnosis Procedure (GT-R certified NISSAN dealer)".

Diagnosis Procedure (GT-R certified NISSAN dealer)

INFOID:0000000011487555

1. CHECK CONNECTOR

1. Turn the ignition switch OFF.
2. Disconnect ABS actuator and electric unit (control unit) harness connector.
3. Disconnect set-up switch (VDC) harness connector.
4. Check terminal for deformation, disconnection, looseness, etc.

Is the inspection result normal?

YES >> GO TO 2.
NO >> Repair or replace error-detected parts.

2. CHECK SET-UP SWITCH (VDC) HARNESS

1. Check the continuity between set-up switch (VDC) harness connector and ABS actuator and electric unit (control unit) harness connector.

ABS actuator and electric unit (control unit)		Set-up switch (VDC)		Continuity
Connector	Terminal	Connector	Terminal	
E41	6	M73	5	Existed
	3		12	

2. Check the continuity between the ABS actuator and electric unit (control unit) harness connector and ground.

ABS actuator and electric unit (control unit)		—	Continuity
Connector	Terminal		
E41	6	Ground	Not existed
	3		

3. Check the continuity between set-up switch (VDC) harness connector and ground.

Set-up switch (VDC)		—	Continuity
Connector	Terminal		
M73	17	Ground	Existed

Is the inspection result normal?

YES >> GO TO 3.
NO >> If there is an open or short in the harness, repair or replace the harness.

3. CHECK SET-UP SWITCH (VDC)

Check set-up switch (VDC). Refer to BRC-114, "Component Inspection (GT-R certified NISSAN dealer)".

Is the inspection result normal?

YES >> GO TO 4.
NO >> Set-up switch (VDC) is malfunctioning. Replace set-up switch (VDC). Refer to IP-12, "Exploded View".

4. CHECK SET-UP SWITCH SIGNAL

Select “ABS”, “DATA MONITOR” and “OFF SW” in order with CONSULT, and perform the set-up switch (VDC) inspection.

Condition	OFF SW (DATA MONITOR)
Pushing down the set-up switch (VDC) when VDC OFF indicator lamp is OFF.	On
Pushing down the set-up switch (VDC) when VDC OFF indicator lamp is OFF.	Off

Is the inspection result normal?

YES >> Check the combination meter.
NO >> Replace ABS actuator and electric unit (control unit). Refer to BRC-150, "Exploded View (GT-R certified NISSAN dealer)".

Component Inspection (GT-R certified NISSAN dealer)

INFOID:0000000011487556

1. CHECK SET-UP SWITCH (VDC)

1. Turn the ignition switch OFF.
2. Disconnect set-up switch (VDC) harness connector.
3. Check the continuity between set-up switch (VDC) connector terminals.

Set-up switch (VDC)	Condition	Continuity
Terminal		
12 – 17	When the set-up switch (VDC) is operated upward	Not existed
	When the set-up switch (VDC) is operated downward	Existed
5 – 17	When the set-up switch (VDC) is operated upward	Existed
	When the set-up switch (VDC) is operated downward	Not existed

Set-up switch (VDC) Terminal	Condition	Continuity
1 – 18	—	Existed
3 – 18	—	Existed

Is the inspection result normal?

YES >> INSPECTION END
NO >> Replace set-up switch (VDC). Refer to IP-12, "Exploded View".

ABS WARNING LAMP

Description (GT-R certified NISSAN dealer)

INFOID:0000000011487558

×: ON –: OFF

Condition	ABS warning lamp
Ignition switch OFF	–
For 2 seconds after turning ignition switch ON	×
2 seconds later after turning ignition switch ON	–
ABS function is malfunctioning.	×
EBD function is malfunctioning.	×

Component Function Check (GT-R certified NISSAN dealer)

INFOID:0000000011487559

1. CHECK ABS WARNING LAMP OPERATION

Check that the lamp illuminates for approximately 2 seconds after the ignition switch is turned ON.

Is the inspection result normal?

YES >> INSPECTION END
NO >> Proceed to diagnosis procedure. Refer to BRC-116, "Diagnosis Procedure (GT-R certified NISSAN dealer)".

Diagnosis Procedure (GT-R certified NISSAN dealer)

INFOID:0000000011487560

1. CHECK SELF-DIAGNOSIS

Perform self-diagnosis for “ABS” with CONSULT.

Is the inspection result normal?

YES >> GO TO 2.
NO >> Check items displayed by self-diagnosis.

2. CHECK COMBINATION METER

Check if the indication and operation of combination meter are normal. Refer to MWI-55, "CONSULT Function (METER/M&A)".

Is the inspection result normal?

YES >> Replace ABS actuator and electric unit (control unit). Refer to BRC-150, "Exploded View (GT-R certified NISSAN dealer)".
NO >> Repair or replace combination meter.

BRAKE WARNING LAMP

Description (GT-R certified NISSAN dealer)

INFOID:0000000011487562

×: ON –: OFF

Condition	Brake warning lamp (Note 1)
Ignition switch OFF	–
For 2 seconds after turning ignition switch ON	× (Note 2)
2 seconds later after turning ignition switch ON	× (Note 2)
EBD function is malfunctioning.	×

NOTE:

- 1: Brake warning lamp will turn on when parking brake operation (when switch is ON) or when brake fluid level switch operation (when brake fluid is insufficient).
- 2: After starting the engine, brake warning lamp is turned off.

Component Function Check (GT-R certified NISSAN dealer)

INFOID:0000000011487563

1. BRAKE WARNING LAMP OPERATION CHECK 1

Check that the lamp illuminates for approximately 2 seconds after the ignition switch is turned ON.

Is the inspection result normal?

YES >> GO TO 2.
NO >> Proceed to diagnosis procedure. Refer to BRC-117, "Diagnosis Procedure (GT-R certified NISSAN dealer)".

2. BRAKE WARNING LAMP OPERATION CHECK 2

Check that the brake warning lamp in the combination meter turns ON/OFF correctly when operating the parking brake pedal.

Is the inspection result normal?

YES >> INSPECTION END
NO >> Check parking brake switch. Refer to MWI-76, "Diagnosis Procedure".

Diagnosis Procedure (GT-R certified NISSAN dealer)

INFOID:0000000011487564

1. CHECK PARKING BRAKE SWITCH

Check that the brake warning lamp in the combination meter turns ON/OFF correctly when operating the parking brake pedal.

Is the inspection result normal?

YES >> GO TO 2.
NO >> Check parking brake switch. Refer to MWI-76, "Diagnosis Procedure".

2. CHECK SELF-DIAGNOSIS

Perform self-diagnosis for “ABS” with CONSULT.

Is the inspection result normal?

YES >> GO TO 3.
NO >> Check items displayed by self-diagnosis.

3. CHECK COMBINATION METER

Check if the indication and operation of combination meter are normal. Refer to MWI-55, "CONSULT Function (METER/M&A)".

Is the inspection result normal?

YES >> Replace ABS actuator and electric unit (control unit). Refer to BRC-150, "Exploded View (GT-R certified NISSAN dealer)".
NO >> Repair or replace combination meter.

VDC OFF INDICATOR LAMP

Description (GT-R certified NISSAN dealer)

INFOID:0000000011487566

×: ON –: OFF

Condition	VDC OFF indicator lamp
Ignition switch OFF	–
For 2 second after turning ignition switch ON (Under the normal system condition)	×
2 second later after turning ignition switch ON	–
OFF mode is selected by set-up switch (VDC) (VDC function is OFF)	×
VDC/TCS is malfunctioning.	–
ABS is malfunctioning.	–
EBD is malfunctioning.	–
Hill start assist is malfunctioning.	–

Component Function Check (GT-R certified NISSAN dealer)

INFOID:0000000011487567

1. VDC OFF INDICATOR LAMP OPERATION CHECK 1

Check that the lamp illuminates for approximately 2 second after the ignition switch is turned ON.

Is the inspection result normal?

YES >> GO TO 2.
NO >> Check combination meter. Refer to MWI-55, "CONSULT Function (METER/M&A)".

2. VDC OFF INDICATOR LAMP OPERATION CHECK 2

Check that the VDC OFF indicator lamp in the combination meter turns ON/OFF correctly when changing the mode to OFF mode with the set-up switch (VDC).

Is the inspection result normal?

YES >> INSPECTION END
NO >> Check VDC OFF switch. Refer to BRC-113, "Diagnosis Procedure (GT-R certified NISSAN dealer)".

Diagnosis Procedure (GT-R certified NISSAN dealer)

INFOID:0000000011487568

1. CHECK VDC OFF INDICATOR LAMP

Check that the VDC OFF indicator lamp in the combination meter turns ON/OFF correctly when changing the mode to OFF mode with the set-up switch (VDC).

Is the inspection result normal?

YES >> GO TO 2.
NO >> Replace the set-up switch (VDC). Refer to IP-12, "Exploded View".

2. CHECK SELF-DIAGNOSIS RESULTS

Perform self-diagnosis for “ABS” with CONSULT.

Is the inspection result normal?

YES >> GO TO 3.
NO >> Perform inspection according to the displayed items.

3. CHECK COMBINATION METER

Check that the VDC OFF indicator lamp in the combination meter turns ON/OFF correctly when changing the mode to OFF mode with the set-up switch (VDC).

Is the inspection result normal?

YES >> Replace ABS actuator and electric unit (control unit). Refer to BRC-150, "Exploded View (GT-R certified NISSAN dealer)".

NO >> Check the combination meter. Refer to MWI-55, "CONSULT Function (METER/M&A)".

VDC WARNING LAMP

Description (GT-R certified NISSAN dealer)

INFOID:0000000011487570

×: ON △: Blink –: OFF

Condition	VDC warning lamp
Ignition switch OFF	–
For 2 seconds after turning ignition switch ON	×
2 seconds later after turning ignition switch ON	–
VDC/TCS is activated while driving	△
VDC/TCS function is malfunctioning.	×
ABS function is malfunctioning.	×
EBD function is malfunctioning.	×

Component Function Check (GT-R certified NISSAN dealer)

INFOID:0000000011487571

1. CHECK VDC WARNING LAMP OPERATION

Check that the lamp illuminates for approximately 2 seconds after the ignition switch is turned ON.

Is the inspection result normal?

YES >> INSPECTION END
NO >> Proceed to diagnosis procedure. Refer to BRC-120, "Diagnosis Procedure (GT-R certified NISSAN dealer)".

Diagnosis Procedure (GT-R certified NISSAN dealer)

INFOID:0000000011487572

1. CHECK SELF-DIAGNOSIS

Perform self-diagnosis for “ABS” with CONSULT.

Is the inspection result normal?

YES >> GO TO 2.
NO >> Check items displayed by self-diagnosis.

2. CHECK COMBINATION METER

Check that the lamp illuminates for approximately 2 seconds after the ignition switch is turned ON.

Is the inspection result normal?

YES >> Replace ABS actuator and electric unit (control unit). Refer to BRC-150, "Exploded View (GT-R certified NISSAN dealer)".
NO >> Repair or replace combination meter.

ECU DIAGNOSIS INFORMATION

ABS ACTUATOR AND ELECTRIC UNIT (CONTROL UNIT)

Reference Value (GT-R certified NISSAN dealer)

INFOID:0000000011487574

VALUES ON THE DIAGNOSIS TOOL

CAUTION:

The display shows the control unit calculation data, so a normal value might be displayed even in the event the output circuit (harness) is open or short-circuited.

NOTE:

The following table includes information (items) inapplicable to this vehicle. For information (items) applicable to this vehicle, refer to CONSULT display items.

Monitor item	Display content	Data monitor	
		Condition	Reference value in normal operation
FR LH SENSOR	Wheel speed	Vehicle stopped	0 [km/h (MPH)]
		Vehicle running (Note 1)	Nearly matches the speedometer display (± 10% or less)
FR RH SENSOR	Wheel speed	Vehicle stopped	0 [km/h (MPH)]
		Vehicle running (Note 1)	Nearly matches the speedometer display (± 10% or less)
RR LH SENSOR	Wheel speed	Vehicle stopped	0 [km/h (MPH)]
		Vehicle running (Note 1)	Nearly matches the speedometer display (± 10% or less)
RR RH SENSOR	Wheel speed	Vehicle stopped	0 [km/h (MPH)]
		Vehicle running (Note 1)	Nearly matches the speedometer display (± 10% or less)
STOP LAMP SW	Stop lamp switch signal status	When brake pedal is depressed	On
		When brake pedal is not depressed	Off
BATTERY VOLT	Battery voltage supplied to the ABS actuator and electric unit (control unit)	Ignition switch ON	10 – 16 V
OFF SW	Set-up switch (VDC) On/Off states	When the switch is not operated	Off
		When the switch is pushed down for 1 second or more	On
GEAR	Gear position	Vehicle running	1 – 6
SLCT LVR POSI	Shift lever position	P position R position N position D position	P R N D
DECEL G-SEN	Decel G detected by yaw rate/side/decel G sensor	Vehicle stopped	Approx. 0 G
		During acceleration	Positive value
		During deceleration	Negative value
YAW RATE SEN	Yaw rate detected by yaw rate/side/decel G sensor	Vehicle stopped	Approx. 0 d/s
		Vehicle turning right	Negative value
		Vehicle turning left	Positive value

Monitor item	Display content	Data monitor	
		Condition	Reference value in normal operation
FR RH IN SOL	Operation status of each solenoid valve	Actuator (solenoid valve) is active ("ACTIVE TEST" in "ABS" with CONSULT)	On
		When the actuator (solenoid valve) is not active and actuator relay is active (ignition switch ON)	Off
FR RH OUT SOL	Operation status of each solenoid valve	Actuator (solenoid valve) is active ("ACTIVE TEST" in "ABS" with CONSULT)	On
		When the actuator (solenoid valve) is not active and actuator relay is active (ignition switch ON)	Off
FR LH IN SOL	Operation status of each solenoid valve	Actuator (solenoid valve) is active ("ACTIVE TEST" in "ABS" with CONSULT)	On
		When the actuator (solenoid valve) is not active and actuator relay is active (ignition switch ON)	Off
FR LH OUT SOL	Operation status of each solenoid valve	Actuator (solenoid valve) is active ("ACTIVE TEST" in "ABS" with CONSULT)	On
		When the actuator (solenoid valve) is not active and actuator relay is active (ignition switch ON)	Off
RR RH IN SOL	Operation status of each solenoid valve	Actuator (solenoid valve) is active ("ACTIVE TEST" in "ABS" with CONSULT)	On
		When the actuator (solenoid valve) is not active and actuator relay is active (ignition switch ON)	Off
RR RH OUT SOL	Operation status of each solenoid valve	Actuator (solenoid valve) is active ("ACTIVE TEST" in "ABS" with CONSULT)	On
		When the actuator (solenoid valve) is not active and actuator relay is active (ignition switch ON)	Off
RR LH IN SOL	Operation status of each solenoid valve	Actuator (solenoid valve) is active ("ACTIVE TEST" in "ABS" with CONSULT)	On
		When the actuator (solenoid valve) is not active and actuator relay is active (ignition switch ON)	Off
RR LH OUT SOL	Operation status of each solenoid valve	Actuator (solenoid valve) is active ("ACTIVE TEST" in "ABS" with CONSULT)	On
		When the actuator (solenoid valve) is not active and actuator relay is active (ignition switch ON)	Off
MOTOR RELAY	Motor and motor relay operation	When the motor relay and motor are operating	On
		When the motor relay and motor are not operating	Off
ACTUATOR RLY (Note 2)	Actuator relay operation	When the actuator relay is operating	On
		When the actuator relay is not operating	Off
ABS WARN LAMP	ABS warning lamp (Note 3)	When ABS warning lamp is ON	On
		When ABS warning lamp is OFF	Off
OFF LAMP	VDC OFF indicator lamp (Note 3)	When VDC OFF indicator lamp is ON	On
		When VDC OFF indicator lamp is OFF	Off

Monitor item	Display content	Data monitor	
		Condition	Reference value in normal operation
SLIP/VDC LAMP	VDC warning lamp (Note 3)	When VDC warning lamp is ON	On
		When VDC warning lamp is OFF	Off
ACCEL POS SIG	Throttle actuator opening/closing is displayed (linked with accelerator pedal)	Accelerator pedal not depressed (ignition switch is ON)	0%
		Depress accelerator pedal (ignition switch is ON)	0 - 100%
SIDE G-SENSOR	Transverse G detected by yaw rate/side/decel G sensor	Vehicle stopped	Approx. 0 m/s^2
		Vehicle turning right	Negative value
		Vehicle turning left	Positive value
STR ANGLE SIG	Steering angle detected by steering angle sensor	Driving straight	±2.5°
		Turn 90 degrees to right	Approx. +90°
		Turn 90 degrees to left	Approx. –90°
ENGINE RPM	With engine running	With engine stopped	0 rpm
		Engine running	Almost in accordance with tachometer display
PRESS SENSOR	Brake fluid pressure detected by pressure sensor	With ignition switch turned ON and brake pedal released	Approx. 0 bar
		With ignition switch turned ON and brake pedal depressed	Approx. 0 to 300 bar
CV1 (Note 2)	VDC switch-over valve	When actuator (switch-over valve) is active (“ACTIVE TEST” in “ABS” with CONSULT)	On
		When actuator (switch-over valve) is not active and actuator relay is active (ignition switch ON)	Off
CV2 (Note 2)	VDC switch-over valve	When actuator (switch-over valve) is active (“ACTIVE TEST” in “ABS” with CONSULT)	On
		When actuator (switch-over valve) is not active and actuator relay is active (ignition switch ON)	Off
SV1 (Note 2)	VDC switch-over valve	When actuator (switch-over valve) is active (“ACTIVE TEST” in “ABS” with CONSULT)	On
		When actuator (switch-over valve) is not active and actuator relay is active (ignition switch ON)	Off
SV2 (Note 2)	VDC switch-over valve	When actuator (switch-over valve) is active (“ACTIVE TEST” in “ABS” with CONSULT)	On
		When actuator (switch-over valve) is not active and actuator relay is active (ignition switch ON)	Off
V/R OUTPUT (Note 2)	Solenoid valve relay activated	When the solenoid valve relay is active (When engine running)	On
		When the solenoid valve relay is not active (in the fail-safe mode or engine stopped)	Off

Monitor item	Display content	Data monitor	
		Condition	Reference value in normal operation
M/R OUTPUT	Actuator motor and motor relay activated	When the actuator motor and motor relay are active (“ACTIVE TEST” in “ABS” with CONSULT)	On
		When the actuator motor and motor relay are inactive	Off
EBD SIGNAL	EBD operation	EBD is active	On
		EBD is inactive	Off
ABS SIGNAL	ABS operation	ABS is active	On
		ABS is inactive	Off
TCS SIGNAL	TCS operation	TCS is active	On
		TCS is inactive	Off
VDC SIGNAL	VDC operation	VDC is active	On
		VDC is inactive	Off
EBD FAIL SIG	EBD fail-safe signal	In EBD fail-safe	On
		EBD is normal	Off
ABS FAIL SIG	ABS fail-safe signal	In ABS fail-safe	On
		ABS is normal	Off
TCS FAIL SIG	TCS fail-safe signal	In TCS fail-safe	On
		TCS is normal	Off
VDC FAIL SIG	VDC fail-safe signal	In VDC fail-safe	On
		VDC is normal	Off
CRANKING SIG	Crank operation	Crank is active	On
		Crank is inactive	Off
FLUID LEV SW	Brake fluid level switch signal status	When brake fluid level switch ON	On
		When brake fluid level switch OFF	Off

NOTE:

- 1: Confirm tire pressure is normal.
- 2: The On/Off indication may switch briefly at irregular intervals after turning ON the ignition switch. This is a validation operation and not a malfunction.
- 3: On and off timing for warning lamp and indicator lamp.

- ABS warning lamp: Refer to BRC-116, "Description (GT-R certified NISSAN dealer)".
- Brake warning lamp: Refer to BRC-117, "Description (GT-R certified NISSAN dealer)".
- VDC OFF indicator lamp: Refer to BRC-118, "Description (GT-R certified NISSAN dealer)".
- VDC warning lamp: Refer to BRC-120, "Description (GT-R certified NISSAN dealer)".

Wiring Diagram - BRAKE CONTROL SYSTEM - (GT-R certified NISSAN dealer)

INFOID:0000000011487575

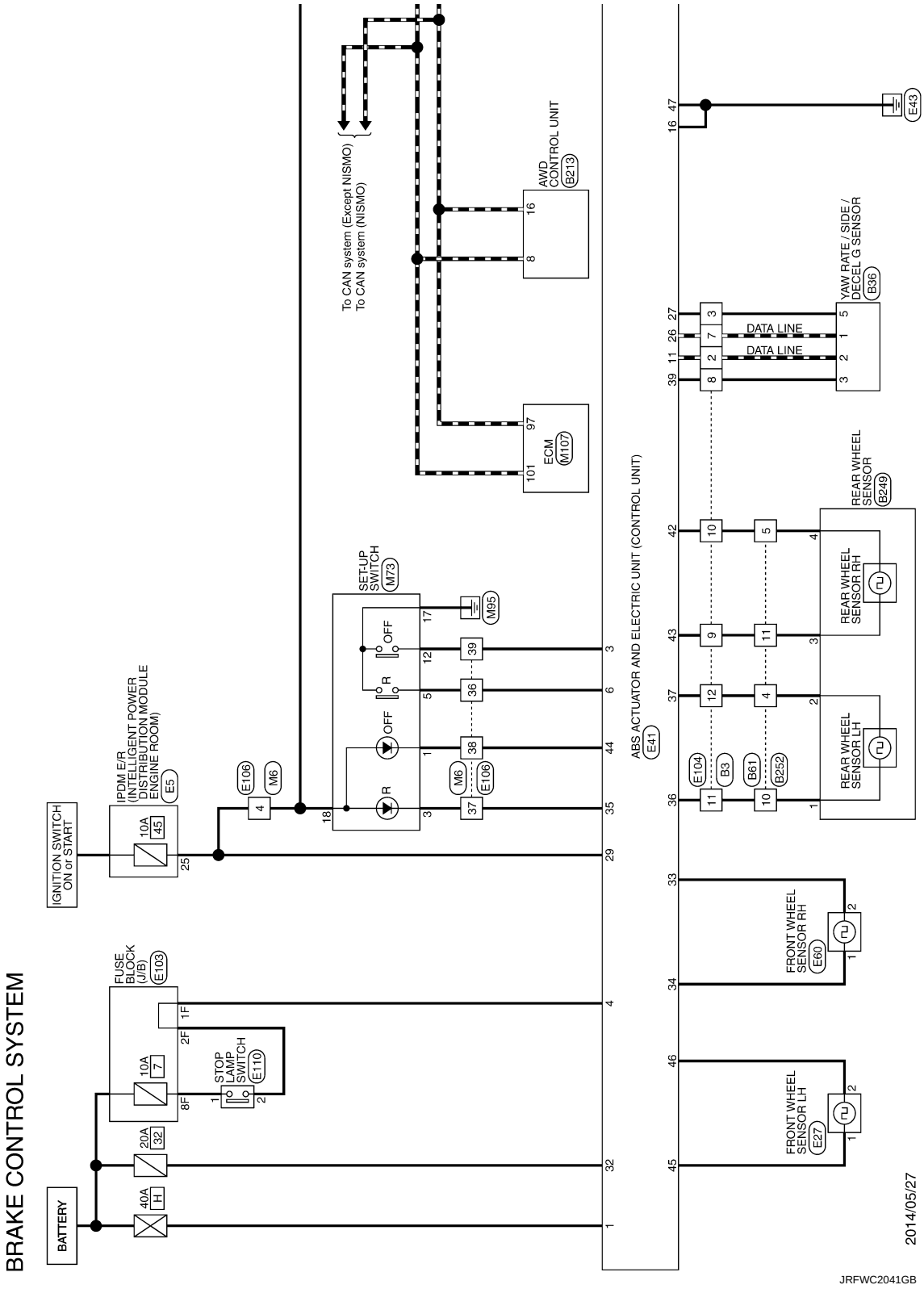

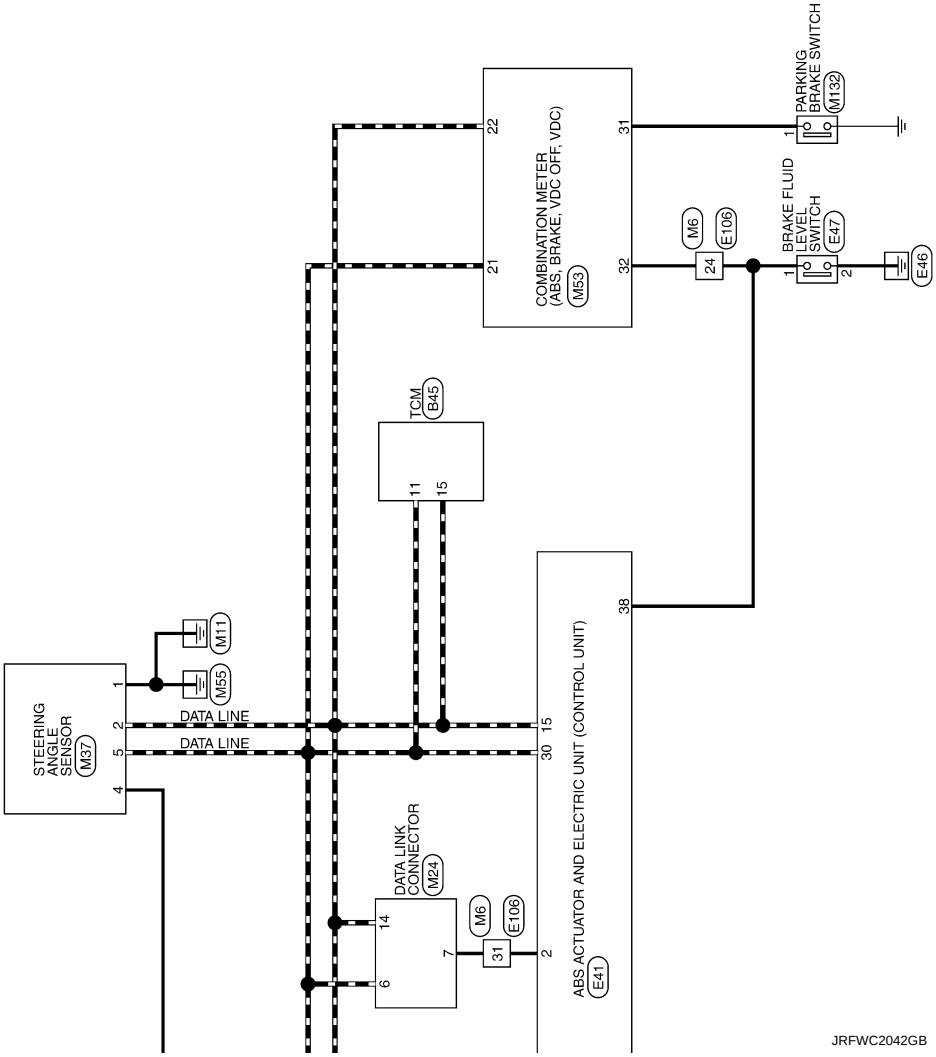
STEERING ANGLE SENSOR
M37
1
2
5
4
M11
M55
DATA LINE
DATA LINE
DATA LINK CONNECTOR
M24
14
6
7
M6
31
E106
TCM
B45
11
15
COMBINATION METER (ABS, BRAKE, VDC OFF, VDC)
M53
22
21
31
32
M6
24
E106
ABS ACTUATOR AND ELECTRIC UNIT (CONTROL UNIT)
E41
15
30
2
38
PARKING BRAKE SWITCH
M132
1
BRAKE FLUID LEVEL SWITCH
E47
1
2
E46
JRFWC2042GB

BRAKE CONTROL SYSTEM

Connector No.	B3
Connector Name	WIRE TO WIRE
Connector Type	NS12FW-CS

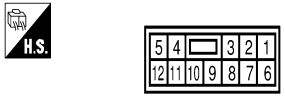

Terminal No.	Color Of Wire	Signal Name [Specification]
1	L	-
2	BG	-
3	BR	-
4	Y	-
5	R	-
6	P	-
7	W	-
8	SB	-
9	LG	-
10	V	-
11	GR	-
12	G	-

Connector No.	B36
Connector Name	YAW RATE / SIDE / DECEL G SENSOR
Connector Type	AAZ06FB2

Terminal No.	Color Of Wire	Signal Name [Specification]
1	W	CAN-L
2	BG	CAN-H
3	SB	BATTERY
5	BR	GROUND

Connector No.	B45
Connector Name	TCM
Connector Type	RH40FB-RZ8-L-LH-Z

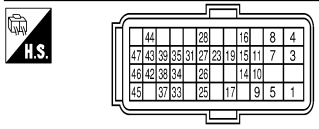

Terminal No.	Color Of Wire	Signal Name [Specification]
1	W	POWER SUPPLY (MEMORY BACK-UP)-2
3	B	GROUND
4	B	GROUND
5	W	POWER SUPPLY (MEMORY BACK-UP)-3
7	B	GROUND
8	B	GROUND
9	P	POWER SUPPLY (MEMORY BACK-UP)-1
10	LG	BACK-UP LAMP SIGNAL
11	L	CAN-H
14	V	POWER OFF
15	P	CAN-L
16	W	STOP LAMP SWITCH SIGNAL
17	Y	IGNITION SWITCH SIGNAL
19	GR	STARTER RELAY SIGNAL
23	BR	AUTO/MANUAL RANGE CHANGE SWITCH 1 SIGNAL
25	L	RANGE SENSOR POWER SOURCE 1
26	LG	RANGE SENSOR POWER SOURCE 2
27	G	RANGE SENSOR NO.- SIGNAL
28	V	AUTO/MANUAL RANGE CHANGE SWITCH 2 SIGNAL
31	SB	ENGINE SPEED SIGNAL
33	V	RANGE SENSOR NO.1 SIGNAL
34	BG	SAVE MODE SWITCH SIGNAL
35	G	RANGE SENSOR NO.3 SIGNAL
37	GR	R MODE SWITCH SIGNAL
38	R	RANGE SENSOR NO.2 SIGNAL
39	W	PADDLE SHIFTER (SHIFT-UP SWITCH) SIGNAL
42	L	PADDLE SHIFTER (SHIFT-DOWN SWITCH) SIGNAL
43	P	RANGE SENSOR NO.4 SIGNAL
44	GR	RANGE SENSOR NO.5 SIGNAL
45	BG	R MODE LAMP SIGNAL
46	W	SHIFT LOCK SOLENOID CONTROL SIGNAL
47	G	SAVE MODE LAMP SIGNAL

Connector No.	B61
Connector Name	WIRE TO WIRE
Connector Type	TH12FW-NH

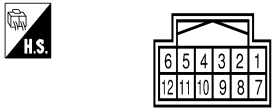

Terminal No.	Color Of Wire	Signal Name [Specification]
1	R	-
2	W	-
3	G	-
4	G	-
5	V	-
6	W	-
7	V	-
8	L	-
9	BG	-
10	GR	-
11	LG	-

Connector No.	B213
Connector Name	AWD CONTROL UNIT
Connector Type	TH16FW-NH

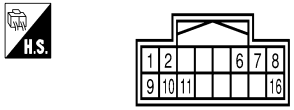

Terminal No.	Color Of Wire	Signal Name [Specification]
1	R	SOL+
2	G	SOL-
6	V	-
7	W	IGN
8	L	CAN-H
9	Y	SOLVB
10	B	GROUND
11	B	GROUND
16	P	CAN-L

Connector No.	B249
Connector Name	REAR WHEEL SENSOR
Connector Type	RS04FGY-PR

Terminal No.	Color Of Wire	Signal Name [Specification]
1	GR	-
2	G	-
3	LG	-
4	V	-

Connector No.	B252
Connector Name	WIRE TO WIRE
Connector Type	TH12MW-NH

Terminal No.	Color Of Wire	Signal Name [Specification]
1	R	-
2	Y	-
3	SB	-
4	G	-
5	V	-
6	W	-
7	R	-
8	G	-
9	BG	-
10	GR	-
11	LG	-
12	SHIELD	-

JRFWC2872GB

BRAKE CONTROL SYSTEM

Connector No.	E5
Connector Name	IPDM E/R (INTELLIGENT POWER DISTRIBUTION MODULE ENGINE ROOM)
Connector Type	TH20FW-CS12-M4-1V

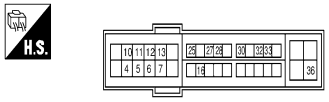

Terminal No.	Color Of Wire	Signal Name [Specification]
4	V	-
5	L	-
6	Y	-
7	R	-
10	W	-
11	SB	-
12	B/W	-
13	R	-
16	LG	-
25	BG	-
27	Y	-
28	G	-
30	GR	-
32	L	-
33	P	-
36	LG	-

Connector No.	E27
Connector Name	FRONT WHEEL SENSOR LH
Connector Type	RK02FGY

Terminal No.	Color Of Wire	Signal Name [Specification]
1	W	-
2	R	-

Connector No.	E41
Connector Name	ABS ACTUATOR AND ELECTRIC UNIT (CONTROL UNIT)
Connector Type	AEZ43FB-AJZ4

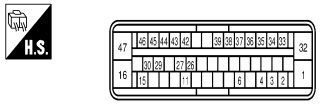

Terminal No.	Color Of Wire	Signal Name [Specification]
1	R	UBMR
2	V	DIAG-K
3	GR	VDC OFF SW
4	W	BLS
6	G	VDC UP SW
11	Y	CAN-H
15	P	CAN-L
16	B	GROUND
26	W	CAN-L
27	BR	G SENSOR GROUND
29	BG	UZ
30	L	CAN-H
32	BG	UBVR
33	W	DS FR
34	BG	DP FR
35	Y	VDC TOP POSITION LED
36	L	DP RL
37	R	DS RL
38	V	BRAKE FLUID LEVEL SW
39	G	G SENSOR POWER
42	V	DS RR
43	LG	DP RR
44	SB	VDC TOP POSITION LED
45	W	DP FL
46	R	DS FL
47	B	GROUND

Connector No.	E47
Connector Name	BRAKE FLUID LEVEL SWITCH
Connector Type	YV02FGY

Terminal No.	Color Of Wire	Signal Name [Specification]
1	V	-
2	B/W	-

Connector No.	E60
Connector Name	FRONT WHEEL SENSOR RH
Connector Type	RK02FGY

Terminal No.	Color Of Wire	Signal Name [Specification]
1	BG	-
2	W	-

Connector No.	E103
Connector Name	FUSE BLOCK (J/B)
Connector Type	NS16FW-CS

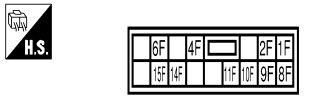

Terminal No.	Color Of Wire	Signal Name [Specification]
10F	GR	-
11F	Y	-
14F	LG	-
15F	P	-
1F	W	-
2F	W	-
4F	G	-
6F	BG	-
8F	L	-
9F	R	-

Connector No.	E104
Connector Name	WIRE TO WIRE
Connector Type	NS12MW-CS

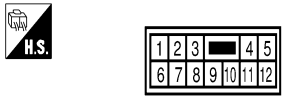

Terminal No.	Color Of Wire	Signal Name [Specification]
1	L	-
2	Y	-
3	BR	-
4	Y	-
5	R	-
6	P	-
7	W	-
8	G	-
9	LG	-
10	V	-

JRFWC2873GB

BRAKE CONTROL SYSTEM

11	L	-
12	R	-

Connector No.	E106
Connector Name	WIRE TO WIRE
Connector Type	TH80FW-CS16-TM4

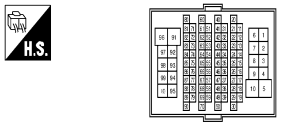

Terminal No.	Color Of Wire	Signal Name [Specification]
1	V	-
3	BG	-
4	BG	-
5	R	-
6	P	-
7	BG	-
8	P	-
9	W	-
10	Y	-
11	SB	-
12	BG	-
13	P	-
14	L	-
15	SB	-
16	BG	-
17	SHIELD	-
18	L	-
19	P	-
20	B	-
21	Y	-
22	V	-
23	Y	-
24	V	-
25	BR	-
26	L	-
27	SHIELD	-
28	G	-
29	R	-
30	W	-
31	V	-
32	G	-
33	GR	-
34	P	-
35	LG	-
36	G	-
37	Y	-
38	SB	-
39	GR	-
40	G	-
41	V	-
42	V	-
43	L	-
44	BR	-
45	G	-
46	SB	-
48	BG	-
49	L	-
50	R	-
51	SHIELD	-
60	P	-
61	L	-
71	LG	-
72	SB	-
74	P	-
75	BR	-
76	LG	-
77	V	-
78	BR	-
79	W	-
80	Y	-
81	GR	-
82	BG	-
84	P	-
85	P	-
86	GR	-
87	R	-
88	L	-
89	BG	-
90	G	-
91	GR	-
92	R	-
93	R	-
94	LG	-
95	G	-
96	GR	-
97	L	-
98	LG	-
99	BG	-
100	L	-

Connector No.	E110
Connector Name	STOP LAMP SWITCH
Connector Type	M04FW-LC

Terminal No.	Color Of Wire	Signal Name [Specification]
1	L	-
2	W	-

Connector No.	M6
Connector Name	WIRE TO WIRE
Connector Type	TH80MW-CS16-TM4

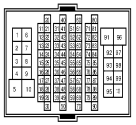

Terminal No.	Color Of Wire	Signal Name [Specification]
1	L	-
3	R	-
4	G	-
5	Y	-
6	P	-
7	W	-
8	V	-
9	L	-
10	Y	-
11	G	-
12	BG	-
13	R	-
14	L	-
15	BR	-
16	R	-
17	SHIELD	-
18	L	-
19	P	-
20	B	-
21	W	-
22	GR	-
23	L	-
24	V	-
25	BR	-
26	G	-
27	SHIELD	-
28	G	-
29	R	-
30	W	-
31	V	-
32	G	-
33	GR	-
34	LG	-
35	P	-
36	L	-
37	W	-
38	Y	-
39	GR	-
40	BG	-
41	W	-
42	R	-
43	Y	-
44	BR	-
45	G	-
46	LG	-
48	W	-
49	L	-
50	R	-
51	SHIELD	-
60	SB	-
61	V	-
71	W	-
72	LG	-
74	R	-
75	BR	-
76	LG	-
77	R	-
78	BR	-
79	W	-
80	Y	-
81	BG	-
82	SB	-
84	Y	-
85	P	-
86	GR	-
87	R	-
88	L	-
89	G	-

JRFWC2874GB

BRAKE CONTROL SYSTEM

90	P	-
91	W	-
92	R	-
93	LG	-
94	W	-
95	SB	-
96	L	-
97	L	-
98	Y	-
99	BG	-
100	L	-

Connector No.	M24
Connector Name	DATA LINK CONNECTOR
Connector Type	BD16FW

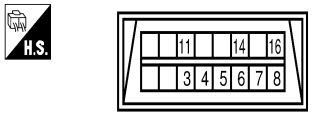

Terminal No.	Color Of Wire	Signal Name [Specification]
3	R	-
4	B	-
5	B	-
6	L	-
7	V	-
8	G	-
11	G	-
14	P	-
16	Y	-

Connector No.	M37
Connector Name	STEERING ANGLE SENSOR
Connector Type	TH08FW-NH

Terminal No.	Color Of Wire	Signal Name [Specification]
1	B	GROUND
2	P	CAN-L
4	BG	IGN
5	L	CAN-H

Connector No.	M53
Connector Name	COMBINATION METER
Connector Type	SAB40FW

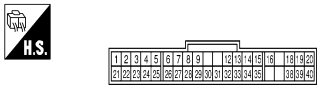

Terminal No.	Color Of Wire	Signal Name [Specification]
1	V	BATTERY POWER SUPPLY
2	W	IGNITION POWER SUPPLY
3	B	GROUND
4	B	ILLUMINATION GROUND
5	B	GROUND
6	W	METER CONTROL SWITCH GROUND
7	Y	A/C AUTO AMP. CONNECTION RECOGNITION SIGNAL
8	SB	AMBIENT SENSOR GROUND
9	P	AMBIENT SENSOR SIGNAL
12	L	VEHICLE SPEED SIGNAL (2-PULSE)
13	V	VEHICLE SPEED SIGNAL (8-PULSE)
14	B	OIL PRESSURE SENSOR GROUND
15	R	AIR BAG SIGNAL
16	R	LED HEAD LAMP (RH) WARNING SIGNAL
18	L	FUEL LEVEL SENSOR GROUND
19	R	OIL LEVEL SENSOR GROUND

20	W	OIL LEVEL SENSOR SIGNAL
21	L	CAN-H
22	P	CAN-L
23	LG	ILLUMINATION CONTROL SWITCH SIGNAL (-)
24	BR	ILLUMINATION CONTROL SWITCH SIGNAL (+)
25	G	TRIP A/B RESET SWITCH SIGNAL
26	BG	ENTER SWITCH SIGNAL
27	SB	SELECT SWITCH SIGNAL
28	BR	ALTERNATOR
29	G	SEAT BELT BUCKLE SWITCH SIGNAL (PASSENGER SIDE)
30	LG	SEAT BELT BUCKLE SWITCH SIGNAL (DRIVER SIDE)
31	V	PARKING BRAKE SWITCH SIGNAL
32	V	BRAKE FLUID LEVEL SWITCH SIGNAL
33	L	WASHER LEVEL SWITCH SIGNAL
34	GR	OIL PRESSURE SENSOR POWER
35	W	OIL PRESSURE SENSOR SIGNAL
38	BG	FUEL LEVEL SENSOR SIGNAL
39	Y	LED HEAD LAMP (LH) WARNING SIGNAL
40	V	ILLUMINATION CONTROL

Connector No.	M73
Connector Name	SET-UP SWITCH
Connector Type	TK24FW-1V

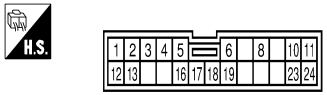

Terminal No.	Color Of Wire	Signal Name [Specification]
1	Y	VDC TOP POSITION LED
2	R	ILL+
3	W	VDC TOP POSITION LED
4	V	ILL GND
5	L	VDC UP SW
6	P	E-SUS R MODE SW SIG
8	LG	E-SUS COMF MODE LAMP SIG
10	G	SAVE MODE LAMP SIGNAL
11	W	R MODE SWITCH SIGNAL
12	GR	VDC DN SW
13	G	HAZARD SW
16	R	R MODE LAMP SIGNAL
17	B	SW GND
18	G	IGN
19	BG	E-SUS R MODE LAMP SIG

23	BR	SAVE MODE SWITCH SIGNAL
24	R	E-SUS COMF MODE SW SIG

Connector No.	M107
Connector Name	ECM
Connector Type	RH24FGY-RZ8-R-LH-Z

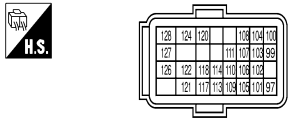

Terminal No.	Color Of Wire	Signal Name [Specification]
97	P	CAN COMMUNICATION LINE
99	SB	SENSOR POWER SUPPLY
100	BR	SENSOR POWER SUPPLY
101	L	CAN COMMUNICATION LINE
102	G	ASCD STEERING SWITCH
103	GR	SENSOR GROUND
104	P	ACCELERATOR PEDAL POSITION SENSOR 1
105	W	ECM RELAY (SELF SHUT-OFF)
106	LG	IGNITION SWITCH
107	BG	SENSOR GROUND
108	L	ACCELERATOR PEDAL POSITION SENSOR 2
109	L	SAVALVERLY
110	P	STOP LAMP SWITCH
111	GR	PNP SIGNAL
113	SB	ENGINE SPEED OUTPUT SIGNAL
114	V	DATA LINK CONNECTOR
117	R	ASCD BRAKE SWITCH
118	W	POWER SUPPLY FOR ECM (BACK-UP)
120	BR	SAPMPRLY
121	P	POWER SUPPLY FOR ECM
122	V	POWER SUPPLY FOR ECM
124	B	ECM GROUND
126	L	FUEL PUMP RELAY
127	G	THROTTLE CONTROL MOTOR RELAY
128	B	ECM GROUND

JRFWC2875GB

BRAKE CONTROL SYSTEM

Connector No.	M132
Connector Name	PARKING BRAKE SWITCH
Connector Type	P01FB-A

Terminal No.	Color Of Wire	Signal Name [Specification]
1	V	-

JRFWC2876GB

Fail-Safe (GT-R certified NISSAN dealer)

INFOID:0000000011487576

ABS, EBD SYSTEM

If ABS malfunctions electrically, ABS warning lamp, and VDC warning lamp will turn on. If EBD malfunctions electrically, brake warning lamp, ABS warning lamp, and VDC warning lamp will turn on. Simultaneously, the VDC/TCS/ABS changes to one of the following conditions of the fail-safe function.

- For malfunction of ABS, only the EBD is activated and the condition of vehicle is the same condition of vehicles without TCS/ABS system.
  NOTE:
  ABS self-diagnosis sound may be heard. That is a normal condition because a self-diagnosis for “Ignition switch ON” and “The first starting” are being performed.
- When EBD and ABS is inoperative because of a malfunction, and the condition of vehicle becomes the same as the condition of vehicles without TCS/ABS, EBD system.

VDC/TCS, Hill start assist

If VDC/TCS/ABS and hill start assist system malfunction electrically, VDC warning lamp are turned on, and the condition of vehicle is the same as the condition of vehicles without VDC/TCS control and hill start assist system.

CAUTION:

If the Fail-Safe function is activated, then perform self-diagnosis for “ABS” with CONSULT.

DTC Inspection Priority Chart (GT-R certified NISSAN dealer)

INFOID:0000000011487577

If some DTCs are displayed at the same time, perform inspections one by one based on the following priority chart.

Priority	Detected items (DTC)
1	• U1000 CAN COMM CIRCUIT • U1002 SYSTEM COMM (CAN)
2	• C1110 CONTROLLER FAILURE
3	• C1130 ENGINE SIGNAL 1 • C1144 ST ANG SEN SIGNAL
4	• C1109 BATTERY VOLTAGE [ABNORMAL] • C1111 PUMP MOTOR • C1114 MAIN RELAY
5	• C1101 RR RH SENSOR-1 • C1102 RR LH SENSOR-1 • C1103 FR RH SENSOR-1 • C1104 FR LH SENSOR-1 • C1105 RR RH SENSOR-2 • C1106 RR LH SENSOR-2 • C1107 FR RH SENSOR-2 • C1108 FR LH SENSOR-2 • C1113 G-SENSOR • C1115 ABS SENSOR [ABNORMAL SIGNAL] • C1116 STOP LAMP SW • C1120 FR LH IN ABS SOL • C1121 FR LH OUT ABS SOL • C1122 FR RH IN ABS SOL • C1123 FR RH OUT ABS SOL • C1124 RR LH IN ABS SOL • C1125 RR LH OUT ABS SOL • C1126 RR RH IN ABS SOL • C1127 RR RH OUT ABS SOL • C1142 PRESS SEN CIRCUIT • C1143 ST ANG SEN CIRCUIT • C1145 YAW RATE SENSOR • C1146 SIDE G-SEN CIRCUIT • C1160 DECEL G SEN SET • C1161 SIDE G SEN SET • C1162 PRESS SEN SET • C1164 CV1 • C1165 CV2 • C1166 SV1 • C1167 SV2 • C1193 VALVE SET
6	• C1155 BR FLUID LEVEL LOW

DTC No. Index (GT-R certified NISSAN dealer)

INFOID:0000000011487578

DTC	Items (CONSULT screen terms)	Reference
C1101	RR RH SENSOR-1	BRC-39, "DTC Logic (GT-R certified NISSAN dealer)"
C1102	RR LH SENSOR-1	
C1103	FR RH SENSOR-1	
C1104	FR LH SENSOR-1	
C1105	RR RH SENSOR-2	BRC-44, "DTC Logic (GT-R certified NISSAN dealer)"
C1106	RR LH SENSOR-2	
C1107	FR RH SENSOR-2	
C1108	FR LH SENSOR-2	
C1109	BATTERY VOLTAGE [ABNORMAL]	BRC-51, "DTC Logic (GT-R certified NISSAN dealer)"
C1110	CONTROLLER FAILURE	BRC-53, "DTC Logic (GT-R certified NISSAN dealer)"
C1111	PUMP MOTOR	BRC-55, "DTC Logic (GT-R certified NISSAN dealer)"
C1113	G-SENSOR	BRC-58, "DTC Logic (GT-R certified NISSAN dealer)"
C1115	ABS SENSOR [ABNORMAL SIGNAL]	BRC-61, "DTC Logic (GT-R certified NISSAN dealer)"
C1116	STOP LAMP SW	BRC-68, "DTC Logic (GT-R certified NISSAN dealer)"
C1120	FR LH IN ABS SOL	BRC-74, "DTC Logic (GT-R certified NISSAN dealer)"
C1121	FR LH OUT ABS SOL	BRC-76, "DTC Logic (GT-R certified NISSAN dealer)"
C1122	FR RH IN ABS SOL	BRC-74, "DTC Logic (GT-R certified NISSAN dealer)"
C1123	FR RH OUT ABS SOL	BRC-76, "DTC Logic (GT-R certified NISSAN dealer)"
C1124	RR LH IN ABS SOL	BRC-74, "DTC Logic (GT-R certified NISSAN dealer)"
C1125	RR LH OUT ABS SOL	BRC-76, "DTC Logic (GT-R certified NISSAN dealer)"
C1126	RR RH IN ABS SOL	BRC-74, "DTC Logic (GT-R certified NISSAN dealer)"
C1127	RR RH OUT ABS SOL	BRC-76, "DTC Logic (GT-R certified NISSAN dealer)"
C1130	ENGINE SIGNAL 1	BRC-78, "DTC Logic (GT-R certified NISSAN dealer)"
C1140	ACTUATOR RLY	BRC-80, "DTC Logic (GT-R certified NISSAN dealer)"
C1142	PRESS SEN CIRCUIT	BRC-82, "DTC Logic (GT-R certified NISSAN dealer)"
C1143	ST ANG SEN CIRCUIT	BRC-85, "DTC Logic (GT-R certified NISSAN dealer)"
C1144	ST ANG SEN SIGNAL	BRC-89, "DTC Logic (GT-R certified NISSAN dealer)"
C1145	YAW RATE SENSOR	BRC-58, "DTC Logic (GT-R certified NISSAN dealer)"
C1146	SIDE G-SEN CIRCUIT	

DTC	Items (CONSULT screen terms)	Reference
C1155	BR FLUID LEVEL LOW	BRC-91, "DTC Logic (GT-R certified NISSAN dealer)"
C1160	DECEL G SEN SET	BRC-95, "DTC Logic (GT-R certified NISSAN dealer)"
C1161	SIDE G SEN SET	BRC-97, "DTC Logic (GT-R certified NISSAN dealer)"
C1162	PRESS SEN SET	BRC-99, "DTC Logic (GT-R certified NISSAN dealer)"
C1164	CV 1	BRC-101, "DTC Logic (GT-R certified NISSAN dealer)"
C1165	CV 2	
C1166	SV 1	BRC-103, "DTC Logic (GT-R certified NISSAN dealer)"
C1167	SV 2	
C1193	VALVE SET	BRC-105, "DTC Logic (GT-R certified NISSAN dealer)"
U1000	CAN COMM CIRCUIT	BRC-107, "DTC Logic (GT-R certified NISSAN dealer)"
U1002	SYSTEM COMM (CAN)	BRC-108, "DTC Logic (GT-R certified NISSAN dealer)"

SYMPTOM DIAGNOSIS

EXCESSIVE ABS FUNCTION OPERATION FREQUENCY

Diagnosis Procedure (GT-R certified NISSAN dealer)

INFOID:0000000011487579

1. CHECK START

Check front and rear brake force distribution using a brake tester. Refer to BR-51, "General Specifications (GT-R certified NISSAN dealer)".

Is the inspection result normal?

YES >> GO TO 2.
NO >> Check brake system.

2. CHECK FRONT AND REAR AXLE

Make sure that there is no excessive play in the front and rear axles.
- Front: Refer to FAX-7, "Inspection".
- Rear: Refer to RAX-7, "Inspection".

Is the inspection result normal?

YES >> GO TO 3.
NO >> Repair or replace malfunctioning components.

3. CHECK WHEEL SENSOR AND SENSOR ROTOR

Check the following items:
- Wheel sensor installation for damage.
- Sensor rotor installation for damage.
- Wheel sensor connector connection.
- Wheel sensor harness inspection.

Is the inspection result normal?

YES >> GO TO 4.
NO >>
- Replace wheel sensor or sensor rotor. Refer to BRC-147, "FRONT WHEEL SENSOR : Exploded View (GT-R certified NISSAN dealer)" [wheel sensor (front), BRC-148, "REAR WHEEL SENSOR : Exploded View (GT-R certified NISSAN dealer)" [wheel sensor (rear)], BRC-149, "FRONT SENSOR ROTOR : Removal and Installation (GT-R certified NISSAN dealer)" [sensor rotor (front)], BRC-149, "REAR SENSOR ROTOR : Removal and Installation (GT-R certified NISSAN dealer)" [sensor rotor (rear)].
- Repair harness.

4. CHECK ABS WARNING LAMP DISPLAY

Make sure that the ABS warning lamp is turned off after the ignition switch is turned ON or when driving.

Is the ABS warning lamp illuminated?

YES >> Perform self-diagnosis for “ABS” with CONSULT.
NO >> Normal

UNEXPECTED PEDAL REACTION

Diagnosis Procedure (GT-R certified NISSAN dealer)

INFOID:0000000011487580

1. CHECK BRAKE PEDAL STROKE

Check brake pedal stroke. Refer to BR-8, "Inspection and Adjustment".

Is the stroke too large?

YES >> • Bleed air from brake tube and hose. Refer to BR-11, "Bleeding Brake System".
• Check brake pedal, brake booster, and master cylinder for mount play, looseness, brake system fluid leakage, etc.
- Brake pedal: Refer to BR-21, "Exploded View".
- Brake booster: Refer to BR-31, "Exploded View (GT-R certified NISSAN dealer)".
- Master cylinder: Refer to BR-28, "Exploded View (GT-R certified NISSAN dealer)".

NO >> GO TO 2.

2. CHECK FUNCTION

Disconnect ABS actuator and electric unit (control unit) harness connector to deactivate ABS. Check if braking force is normal in this condition. Connect harness connector after inspection.

Is the inspection result normal?

YES >> Normal
NO >> Check brake system.

THE BRAKING DISTANCE IS LONG

Diagnosis Procedure (GT-R certified NISSAN dealer)

INFOID:0000000011487581

CAUTION:
The stopping distance on slippery road surfaces might be longer when the ABS is operating than when the ABS is not operating.

1. CHECK FUNCTION

Turn ignition switch OFF and disconnect ABS actuator and electric unit (control unit) harness connector to deactivate ABS. In this condition, check stopping distance. After inspection, connect harness connector.

Is the inspection result normal?

YES >> Normal
NO >> Check brake system.

ABS FUNCTION DOES NOT OPERATE

Diagnosis Procedure (GT-R certified NISSAN dealer)

INFOID:0000000011487582

CAUTION:
ABS does not operate when speed is 10 km/h (6 MPH) or lower.

1. CHECK ABS WARNING LAMP DISPLAY

Make sure that the ABS warning lamp turns OFF after ignition switch is turned ON or when driving.

Is the inspection result normal?

YES >> Normal
NO >> Perform self-diagnosis for “ABS” with CONSULT.

PEDAL VIBRATION OR ABS OPERATION SOUND OCCURS

Diagnosis Procedure (GT-R certified NISSAN dealer)

INFOID:0000000011487583

CAUTION:
Under the following conditions, ABS is activated and vibration is felt when brake pedal is lightly depressed (just place a foot on it). However, this is normal.
- **When shifting gears**
- **When driving on slippery road**
- **During cornering at high speed**
- **When passing over bumps or grooves [approximately 50 mm (1.97 in) or more]**
- **When pulling away just after starting engine [approximately 10 km/h (6 MPH) or higher]**

1. SYMPTOM CHECK 1

Check that there is pedal vibration when the engine is started.

Does vibrations occur?

YES >> GO TO 2.
NO >> Inspect the brake pedal.

2. SYMPTOM CHECK 2

Check that there is ABS operation noises when the engine is started.

Does the operation noise occur?

YES >> GO TO 3.
NO >> Perform self-diagnosis for “ABS” with CONSULT.

3. SYMPTOM CHECK 3

Check symptoms when electrical component (headlamps, etc.) switches are operated.

Do symptoms occur?

YES >> Check if there is a radio, antenna, antenna lead wire, or wiring close to the control unit. If there is, move it farther away.
NO >> Normal

VEHICLE JERKS DURING VDC/TCS/ABS CONTROL

Diagnosis Procedure (GT-R certified NISSAN dealer)

INFOID:0000000011487584

1. SYMPTOM CHECK

Check if the vehicle jerks during VDC/TCS/ABS control.

Is the inspection result normal?

YES >> Normal.
NO >> GO TO 2.

2. CHECK SELF-DIAGNOSIS RESULTS

Perform self-diagnosis for “ABS” with CONSULT.

Are self-diagnosis results indicated?

YES >> Check corresponding items, make repairs, and perform ABS actuator and electric unit (control unit) self-diagnosis.
NO >> GO TO 3.

3. CHECK CONNECTOR

- Turn ignition switch OFF, disconnect ABS actuator and electric unit (control unit) harness connector and check terminal for deformation, disconnection, looseness, etc.
- Check that harness connectors are connected and perform self-diagnosis for “ABS” with CONSULT.

Are self-diagnosis results indicated?

YES >> If poor contact, damage, open or short circuit of harness connector terminal is found, repair or replace.
NO >> GO TO 4.

4. CHECK ECM AND A/T SELF-DIAGNOSIS RESULTS

Perform self-diagnosis for “ENGINE” and “TRANSMISSION” with CONSULT.

Are self-diagnosis results indicated?

YES >> Check the corresponding items.
NO >> Replace ABS actuator and electric unit (control unit). Refer to BRC-150, "Exploded View (GT-R certified NISSAN dealer)".

INFORMATION DISPLAY IS NOT DISPLAYED

Description (GT-R certified NISSAN dealer)

INFOID:0000000011487585

Condition	Display item
VDC/TCS, Hill start assist malfunction	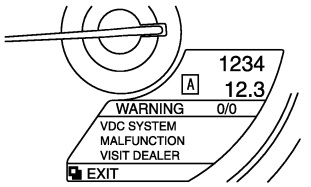 JSFIA0318ZZ
ABS malfunction	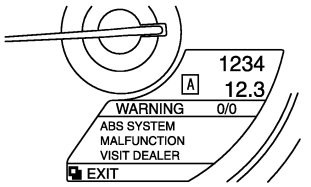 JSFIA0319ZZ

Diagnosis Procedure (GT-R certified NISSAN dealer)

INFOID:0000000011487586

1. CHECK INFORMATION DISPLAY

Check that information except ABS, VDC system is displayed on information display.

Is the inspection result normal?

YES >> Replace ABS actuator and electric unit (control unit). Refer to BRC-150, "Exploded View (GT-R certified NISSAN dealer)".

NO >> Check information display. Refer to MWI-55, "CONSULT Function (METER/M&A)".

NORMAL OPERATING CONDITION

Description (GT-R certified NISSAN dealer)

INFOID:0000000011487587

Symptom	Result
Slight vibration is felt on the brake pedal and operation noise occurs, when VDC, TCS, hill start assist or ABS is activated.	This is a normal condition due to the VDC, TCS, hill start assist or ABS activation.
Stopping distance is longer than that of vehicles without ABS when the vehicle drives on rough, gravel, or snow-covered (fresh, deep snow) roads.	
The brake pedal moves and generates noise, when TCS or VDC is activated due to rapid acceleration or sharp turn.	
The brake pedal vibrates and motor operation noises occur from the engine room, after the engine starts and just after the vehicle.	This is a normal, and it is caused by the ABS operation check.
Depending on the road conditions, the driver may experience a sluggish feel.	This is normal, because TCS places the highest priority on the optimum traction (stability).
TCS may activate momentarily if wheel speed changes when driving over location where friction coefficient varies, when downshifting, or when fully depressing accelerator pedal.	
The ABS warning lamp and VDC warning lamp may turn ON when the vehicle is subject to strong shaking or large vibration, such as when the vehicle is rotating on a turntable or located on a ship while the engine is running.	In this case, restart the engine on a normal road. If the normal condition is restored, there is no malfunction. At that time, erase the self-diagnosis memory.
VDC may not operate normally, or the ABS warning lamp and VDC warning lamp may illuminate, when running on a special road that is extremely slanted (e.g. bank in a circuit course).	
A malfunction may occur in the yaw rate/side G sensor system, when the vehicle turns sharply, such as during a spin turn, axle turn, or drift driving, while the VDC function is off (VDC OFF indicator lamp illuminated).	
The vehicle speed will not increase even though the accelerator pedal is depressed, when inspecting the speedometer on a 2-wheel chassis dynamometer.	Normal. (Deactivate the VDC/TCS function before performing an inspection on a chassis dynamometer)

PRECAUTION

PRECAUTIONS

Precaution for Supplemental Restraint System (SRS) "AIR BAG" and "SEAT BELT PRE-TENSIONER"

INFOID:0000000011487588

The Supplemental Restraint System such as “AIR BAG” and “SEAT BELT PRE-TENSIONER”, used along with a front seat belt, helps to reduce the risk or severity of injury to the driver and front passenger for certain types of collision. This system includes seat belt switch inputs and dual stage front air bag modules. The SRS system uses the seat belt switches to determine the front air bag deployment, and may only deploy one front air bag, depending on the severity of a collision and whether the front occupants are belted or unbelted.
Information necessary to service the system safely is included in the “SRS AIR BAG” and “SEAT BELT” of this Service Manual.

WARNING:
Always observe the following items for preventing accidental activation.
- **To avoid rendering the SRS inoperative, which could increase the risk of personal injury or death in the event of a collision that would result in air bag inflation, all maintenance must be performed by an authorized NISSAN/INFINITI dealer.**
- **Improper maintenance, including incorrect removal and installation of the SRS, can lead to personal injury caused by unintentional activation of the system. For removal of Spiral Cable and Air Bag Module, see “SRS AIR BAG”.**
- **Never use electrical test equipment on any circuit related to the SRS unless instructed to in this Service Manual. SRS wiring harnesses can be identified by yellow and/or orange harnesses or harness connectors.**

PRECAUTIONS WHEN USING POWER TOOLS (AIR OR ELECTRIC) AND HAMMERS

WARNING:
Always observe the following items for preventing accidental activation.
- **When working near the Air Bag Diagnosis Sensor Unit or other Air Bag System sensors with the ignition ON or engine running, never use air or electric power tools or strike near the sensor(s) with a hammer. Heavy vibration could activate the sensor(s) and deploy the air bag(s), possibly causing serious injury.**
- **When using air or electric power tools or hammers, always switch the ignition OFF, disconnect the battery, and wait at least 3 minutes before performing any service.**

Precaution for Battery Service

INFOID:0000000011487589

Before disconnecting the battery, lower both the driver and passenger windows. This will prevent any interference between the window edge and the vehicle when the door is opened/closed. During normal operation, the window slightly raises and lowers automatically to prevent any window to vehicle interference. The automatic window function will not work with the battery disconnected.

Precaution for Procedure without Cowl Top Cover

INFOID:0000000011487590

When performing the procedure after removing cowl top cover, cover the lower end of windshield with urethane, etc to prevent damage to windshield.

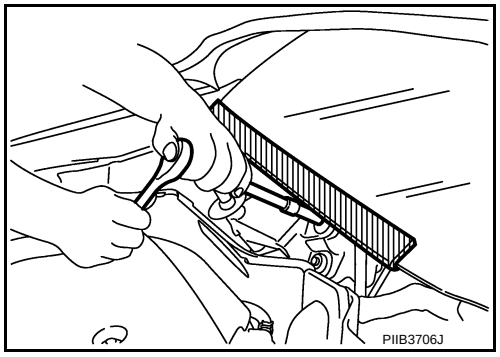

Precautions for Removing Battery Terminal

INFOID:0000000011487591

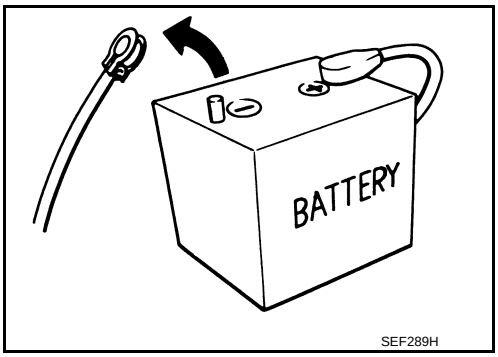

- When removing the 12V battery terminal, turn OFF the ignition switch and wait at least 30 seconds.
  NOTE:
  ECU may be active for several tens of seconds after the ignition switch is turned OFF. If the battery terminal is removed before ECU stops, then a DTC detection error or ECU data corruption may occur.
- For vehicles with the 2-batteries, be sure to connect the main battery and the sub battery before turning ON the ignition switch.
  NOTE:
  If the ignition switch is turned ON with any one of the terminals of main battery and sub battery disconnected, then DTC may be detected.
- After installing the 12V battery, always check "Self Diagnosis Result" of all ECUs and erase DTC.
  NOTE:
  The removal of 12V battery may cause a DTC detection error.

Titanium Muffler Handling

INFOID:0000000011487592

CAUTION:
- **Never touch the titanium muffler directly with bare hands or allow oils to adhere to it during inspection, removal, and installation.**
- **Always wear new thick cotton gloves or working gloves. (Never use oil-adhered gloves.)**
- **After oil adhesion, wait until the titanium muffler cools and immediately remove oil with parts cleaner.**
- **Always use genuine parts cleaner (dry type) or the equivalent.**
- **When cleaning oil in on-board condition, apply parts cleaner to a waste to wipe out oil. By doing so, peripheral parts can be protected from parts cleaner adhesion.**
- **Be careful not to cut fingers with the insulator edge or the main muffler cooling fin.**

General Precautions

INFOID:0000000011487593

CAUTION:
After finishing servicing, check that all the tools and waste are stored in a customary place.

Precaution for Brake System

INFOID:0000000011487594

WARNING:
Since dust covering the front and rear brakes has an affect on human body, the dust must be removed with a dust collector. Never splatter the dust with an air blow gun.
- Brake fluid use refer to MA-21, "Fluids and Lubricants".
- Never reuse drained brake fluid.
- The brake fluid used for this vehicle has a higher boiling point and readily absorbs moisture in the air. Accordingly, when brake temperature rises, water in brake fluid vaporizes with the higher potential of vapor lock and uncomfortable brake pedal feeling (increase in pedal stroke). Therefore, the following items must be carefully observed.
- Never change, bleed, or fill with brake fluid under humid conditions such as rainy or foggy days, in principle, because the brake fluid absorbs moisture in the air. (Vapor lock occurs more easily during performance driving because brake temperature becomes higher, compared with normal driving.)
- If it is necessary to change, bleed, or fill with brake fluid under humid conditions such as rainy or foggy days, perform this in a place with low humidity in minimal time.
- When it is necessary to change, bleed, or fill with brake fluid, explain the customer the precautions on brake fluid before deciding the place and schedule of the work.
- Always discard residual brake fluid remaining in the container because the fluid is deteriorated by moisture.
- Never spill or splash brake fluid on painted surfaces. Brake fluid may seriously damage paint. Wipe it off immediately and wash with water if it gets on a painted surface.
- Never use mineral oils such as gasoline or light oil. They may damage rubber parts and cause improper operation.
- Always loosen the brake tube flare nut with a flare nut wrench.

- Tighten the brake tube flare nut to the specified torque with a crow-foot (A) and torque wrench (B).
- Always conform the specified tightening torque when installing the brake pipes.
- Brake system is an important safety part. If brake fluid leakage is detected, always disassemble the affected part. If a malfunction is detected, replace part with a new one.
- Turn the ignition switch OFF and disconnect the ABS actuator and electric unit (control unit) harness connector or the battery negative terminal before performing the work.

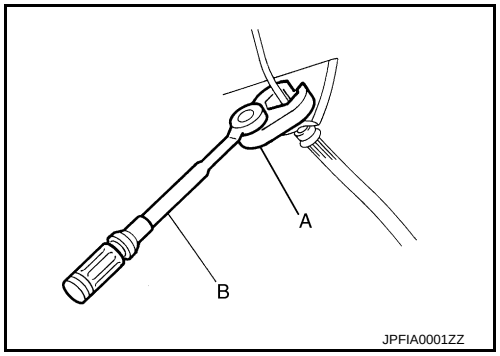

Precaution for Brake Control

INFOID:0000000011487595

- When starting engine or when starting vehicle just after starting engine, brake pedal may vibrate or motor operating noise may be heard from engine compartment. This is normal.
- When an error is indicated by ABS or another warning lamp, collect all necessary information from customer (what symptoms are present under what conditions) and check for estimate causes before starting diagnostic servicing. Besides electrical system inspection, check brake booster operation, brake fluid level, and for oil leakage.
- If tire size and type are used in an improper combination, or brake pads are not Genuine NISSAN parts, stopping distance or steering stability may deteriorate.
- ABS might be out of order or malfunctioning by putting a radio (wiring inclusive), an antenna, or a lead-in wire near the control unit.
- VDC system may not operate normally or a VDC warning lamp may illuminate.
- When replacing the following parts with parts other than genuine parts or making modifications: Suspension related parts (shock absorber, spring, bushing, etc.), tires, wheels (other than specified sizes), brake-related parts (pad, rotor, caliper, etc.), engine-related parts (muffler, ECM, etc.), and body reinforcement-related parts (roll bar, tower bar, etc.).
- When driving with worn or deteriorated suspension, tires, or brake-related parts.
- Both “VDC” and “VDC-R” are used in this manual. These indicate the same system.

Precautions for Harness Repair

INFOID:0000000011487596

COMMUNICATION LINE

- Solder the repaired area and wrap tape around the soldered area.
  NOTE:
  A fray of twisted lines must be within 110 mm (4.33 in).

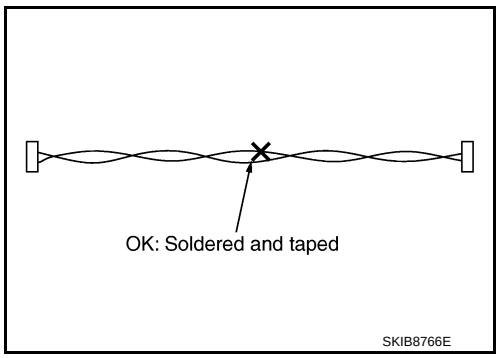

- Bypass connection is never allowed at the repaired area.
  NOTE:
  Bypass connection may cause communication error as spliced wires that are separate from the main line or twisted lines lose noise immunity.
- Replace the applicable harness as an assembly if error is detected on the shield lines of communication line.

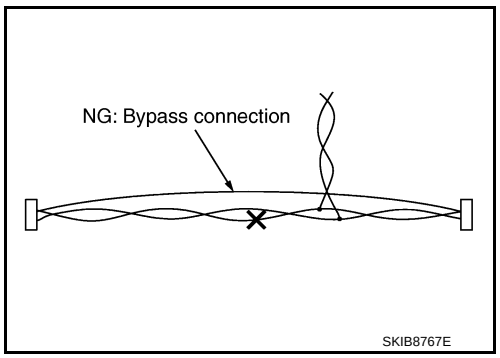

PREPARATION

PREPARATION

Special Service Tool (GT-R certified NISSAN dealer)

INFOID:0000000012779230

The actual shapes of the tools may differ from those illustrated here.

Tool number (TechMate No.) Tool name		Description
KV991J0080 (J-45741-A) ABS active wheel sensor tester	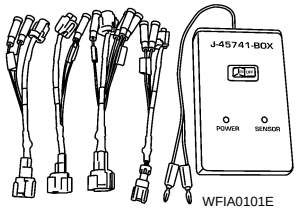 WFIA0101E	Checking operation of wheel sensors

Commercial Service Tool (GT-R certified NISSAN dealer)

INFOID:0000000011487597

Tool name		Description
1. Flare nut crowfoot a: 10 mm (0.39 in) /12 mm (0.47 in) 2. Torque wrench	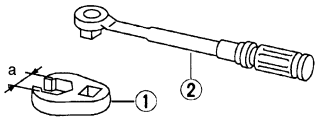 S-NT360	Installs brake tube

REMOVAL AND INSTALLATION

WHEEL SENSOR

FRONT WHEEL SENSOR

FRONT WHEEL SENSOR : Exploded View (GT-R certified NISSAN dealer)

INFOID:0000000011487598

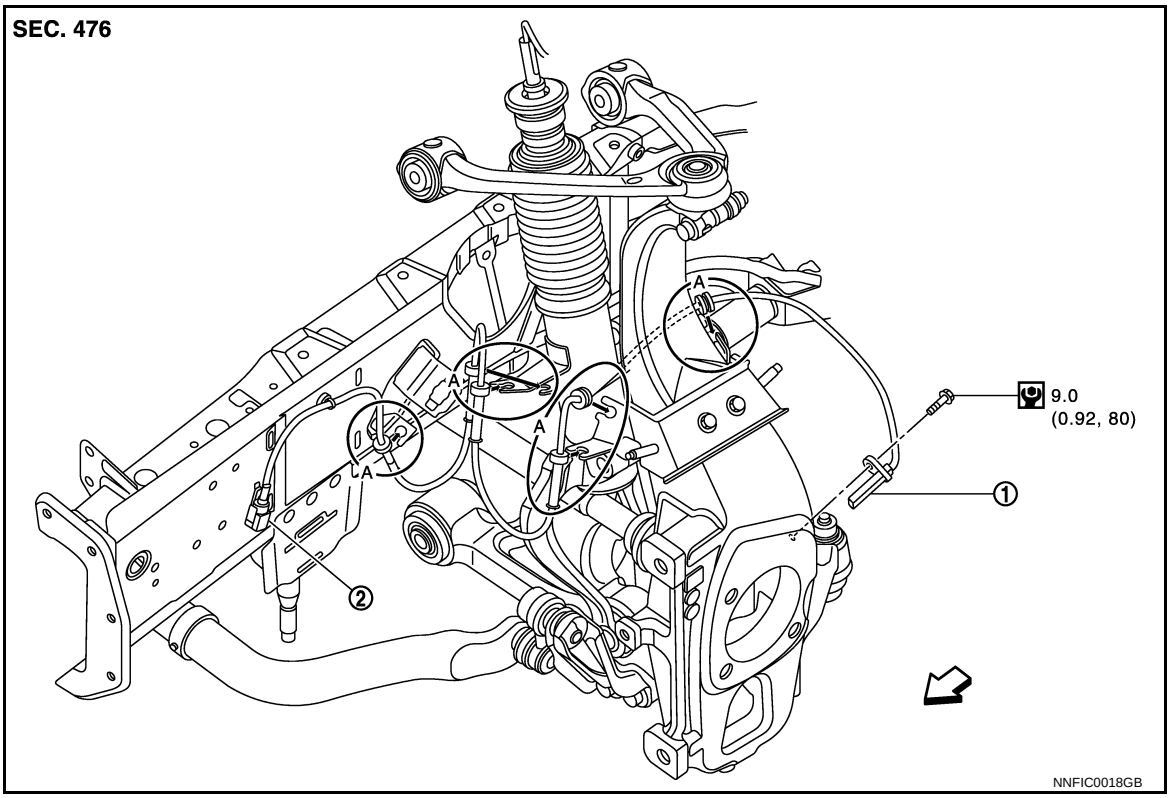

1. Front LH wheel sensor
2. Front LH wheel sensor harness connector

⇦: Vehicle front

Refer to GI section GI-4, "Components" for symbol marks in the figure.

NOTE:
The above figure shows left side. Right side is the mirror image.

FRONT WHEEL SENSOR : Removal and Installation (GT-R certified NISSAN dealer)

INFOID:0000000011487599

REMOVAL

Be careful with the following items when removing sensor.

CAUTION:
Never twist sensor harness, when removing it. Pull sensors out without pulling sensor harness.

INSTALLATION

Be careful with the following items when installing wheel sensor. Tighten installation bolts to the specified torques. Refer to BRC-147, "FRONT WHEEL SENSOR : Exploded View (GT-R certified NISSAN dealer)".

CAUTION:
- **When installing, check that there is no foreign matter such as iron chips on or in the mounting hole of the wheel sensor. Check that no foreign matter is caught in the sensor rotor. Remove any foreign matter and clean the mount.**
- **When installing wheel sensor, always press rubber grommets (A) in until they lock at the locations shown above in the figure. When installed, harness must not be twisted.**

REAR WHEEL SENSOR

REAR WHEEL SENSOR : Exploded View (GT-R certified NISSAN dealer)

INFOID:0000000011487600

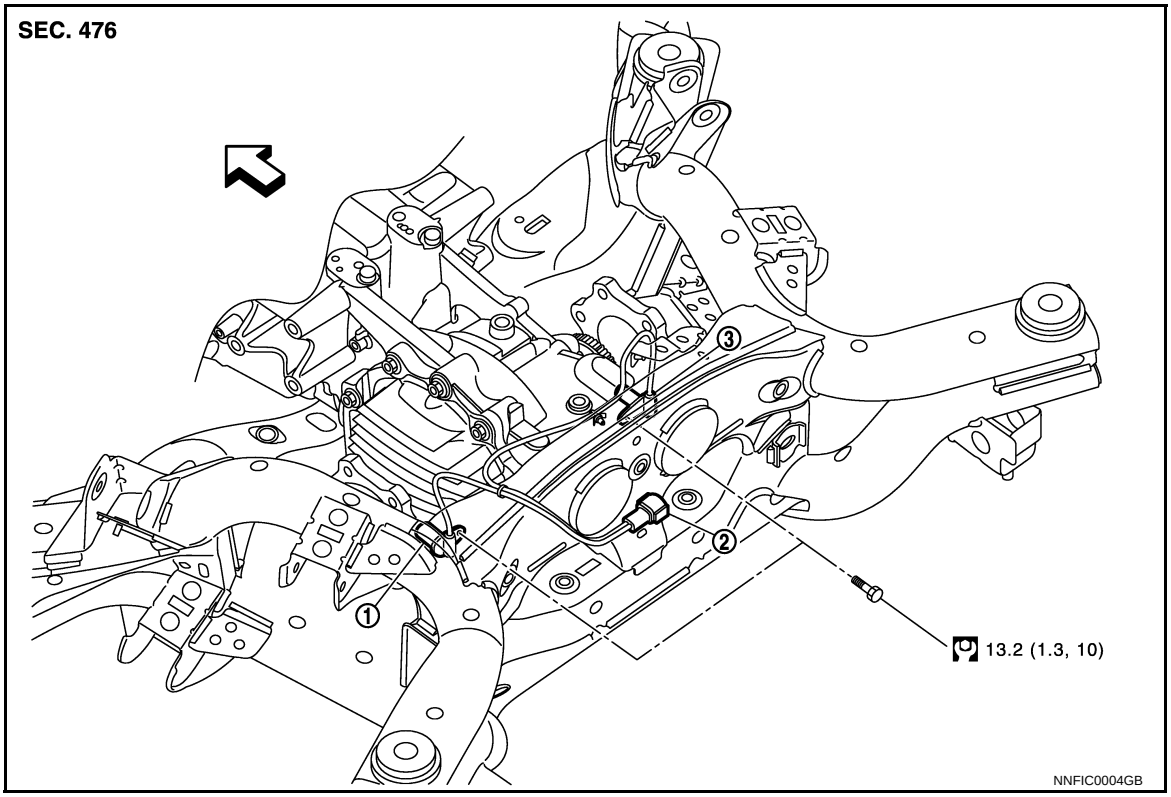

1. Rear LH wheel sensor
2. Rear wheel sensor harness connector
3. Rear RH wheel sensor

⇦: Vehicle front

Refer to GI section GI-4, "Components" for symbol marks in the figure.

REAR WHEEL SENSOR : Removal and Installation (GT-R certified NISSAN dealer)

INFOID:0000000011487601

REMOVAL

Be careful with the following items when removing sensor.

CAUTION:

Never twist sensor harness as much as possible, when removing it. Pull sensors out without pulling sensor harness.

INSTALLATION

Be careful with the following items when installing wheel sensor. Tighten installation bolts to the specified torques. Refer to BRC-148, "REAR WHEEL SENSOR : Exploded View (GT-R certified NISSAN dealer)".

CAUTION:

When installing, check that there is no foreign matter such as iron chips on or in the mounting hole of the wheel sensor. Check that no foreign matter is caught in the sensor rotor. Remove any foreign matter and clean the mount.

SENSOR ROTOR

FRONT SENSOR ROTOR

FRONT SENSOR ROTOR : Removal and Installation (GT-R certified NISSAN dealer)

INFOID:0000000011487602

REMOVAL

Sensor rotor cannot be disassembled. Remove the sensor rotor together with hub and bearing assembly. Refer to FAX-9, "Exploded View".

INSTALLATION

Sensor rotor cannot be disassembled. Install the sensor rotor together with hub and bearing assembly. Refer to FAX-9, "Exploded View".

REAR SENSOR ROTOR

REAR SENSOR ROTOR : Removal and Installation (GT-R certified NISSAN dealer)

INFOID:0000000011487603

REMOVAL

Sensor rotor cannot be disassembled. Remove the sensor rotor together with side flange assembly. Refer to DLN-115, "Exploded View (GT-R certified NISSAN dealer)".

INSTALLATION

Sensor rotor cannot be disassembled. Install the sensor rotor together with side flange assembly. Refer to DLN-115, "Exploded View (GT-R certified NISSAN dealer)".

ABS ACTUATOR AND ELECTRIC UNIT (CONTROL UNIT)

Exploded View (GT-R certified NISSAN dealer)

INFOID:0000000011487604

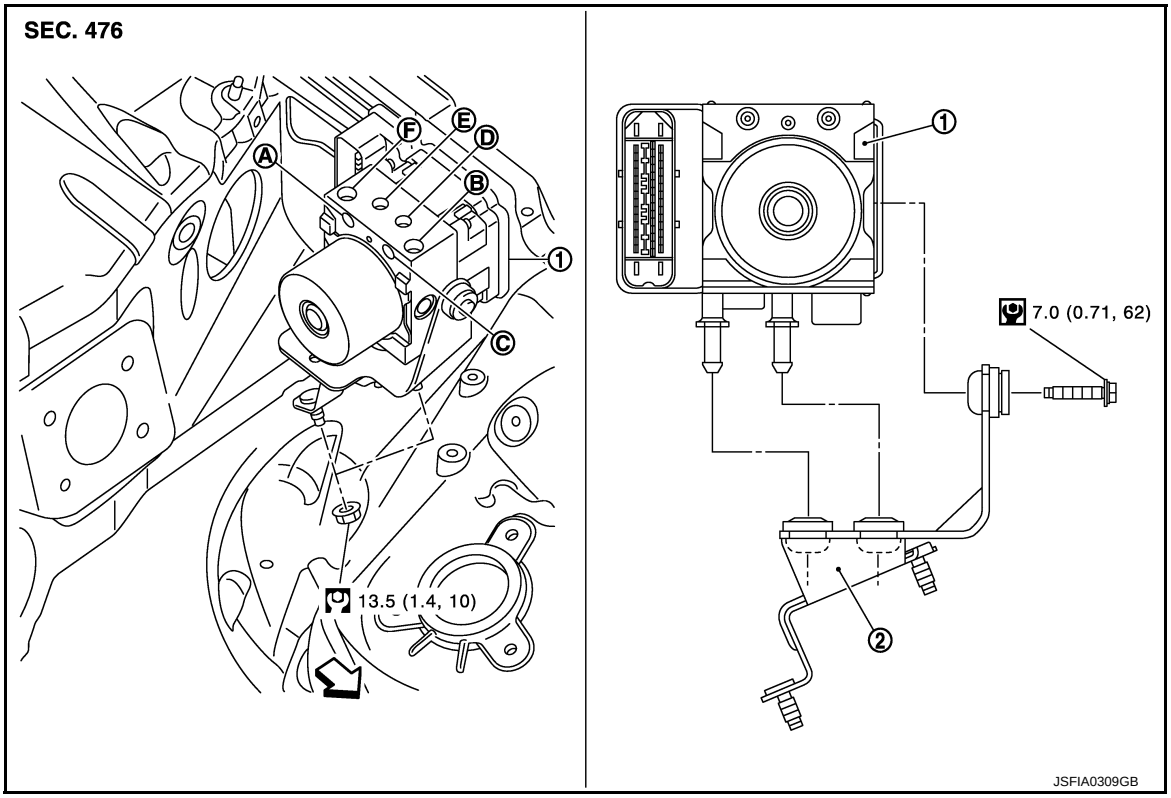

1.	ABS actuator and electric unit (control unit)	2.	Bracket		
A.	To rear RH caliper	B.	From master cylinder primary side	C.	To front LH brake caliper
D.	To front RH brake caliper	E.	To rear LH brake caliper	F.	From master cylinder secondary side

⇦: Vehicle front

Refer to GI section GI-4, "Components" for symbol marks in the figure.

Removal and Installation (GT-R certified NISSAN dealer)

INFOID:0000000011487605

REMOVAL

CAUTION:

- **Before servicing, disconnect the battery cable from negative terminal.**
- **To remove brake tube, use a flare nut wrench to prevent flare nuts and brake tube from being damaged. To install, use flare nut crowfoot and torque wrench.**
- **Never apply excessive impact to ABS actuator and electric unit (control unit), such as dropping it.**
- **Never hold the actuator harness when removing the actuator.**

1. Remove hoodledge cover (LH). Refer to EXT-28, "Exploded View".
2. Disconnect harness connector of ABS actuator and electric unit (control unit).
3. Loosen brake tube flare nuts with flare nut wrench to remove brake tube from the ABS actuator and electric unit (control unit).
4. Remove relay box bracket to disconnect the brake tube between brake master cylinder and the ABS actuator and electric unit (control unit) from the vehicle.
5. Remove tire (front LH side).
6. Remove fender protector (rear): (front LH side). Refer to EXT-31, "FENDER PROTECTOR : Exploded View".
7. Remove ABS actuator and electric unit (control unit) from vehicle.

8. Remove mounting bolts of the ABS actuator and electric unit (control unit) to separate the ABS actuator and electric unit (control unit) from the bracket.

INSTALLATION

Note the following items, and install in the reverse order of removal.

CAUTION:

- **When installing brake tube, tighten the flare nut to the specified torque with a flare nut crowfoot and torque wrench. Never damage the flare nut and brake tube.**
- **Before servicing, disconnect the battery cable from negative terminal.**
- **Never apply excessive impact to ABS actuator and electric unit (control unit), such as dropping it.**
- **Never hold the actuator harness when installing the actuator.**
- **After work is completed, bleed the brake tube. Refer to BR-11, "Bleeding Brake System".**
- **After installing harness connector in the ABS actuator and electric unit (control unit), check that connector is securely locked.**
- **When replacing ABS actuator and electric unit (control unit), be sure to perform the following procedure.**
  - **Steering angle sensor neutral position adjustment: Refer to BRC-9, "ADJUSTMENT OF STEERING ANGLE SENSOR NEUTRAL POSITION : Description (GT-R certified NISSAN dealer)".**
  - **Decel G sensor calibration: Refer to BRC-10, "CALIBRATION OF DECEL G SENSOR : Description (GT-R certified NISSAN dealer)".**
  - **Pressure sensor calibration: Refer to BRC-11, "CALIBRATION OF PRESSURE SENSOR : Description (GT-R certified NISSAN dealer)".**
  - **Valve calibration: Refer to BRC-12, "CALIBRATION OF VALVE : Description (GT-R certified NISSAN dealer)".**

YAW RATE/SIDE/DECEL G SENSOR

Exploded View (GT-R certified NISSAN dealer)

INFOID:0000000011487606

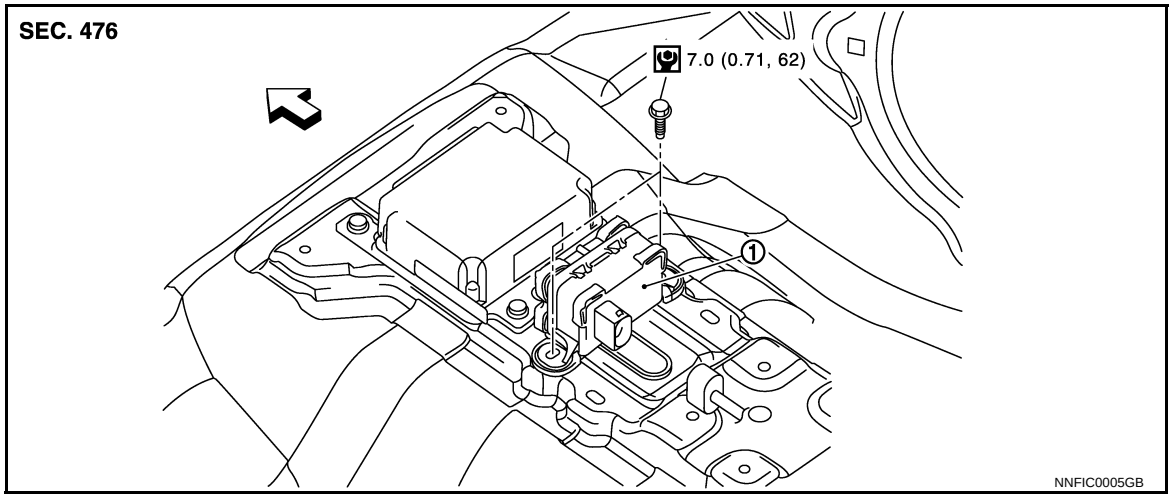

1. Yaw rate/side/decel G sensor

⇦: Vehicle front

Refer to GI section GI-4, "Components" for symbol makes in the figure.

Removal and Installation (GT-R certified NISSAN dealer)

INFOID:0000000011487607

REMOVAL

CAUTION:

Never drop or strike yaw rate/side/decel G sensor or use power tool etc., because yaw rate/side G sensor is sensitive to the impact.

1. Remove rear console. Refer to IP-23, "Exploded View".
2. Disconnect yaw rate/side/decel G sensor harness connector.
3. Remove mounting bolts. Remove yaw rate/side/decel G sensor.

INSTALLATION

Note the following items, and install in the reverse order of removal.

CAUTION:

- **Never drop or strike yaw rate/side/decel G sensor or use power tool etc., because yaw rate/side/decel G sensor is sensitive to the impact.**
- **After work, always calibrate of decel G sensor. Refer to BRC-10, "CALIBRATION OF DECEL G SENSOR : Description (GT-R certified NISSAN dealer)".**

STEERING ANGLE SENSOR

Exploded View (GT-R certified NISSAN dealer)

INFOID:0000000011487608

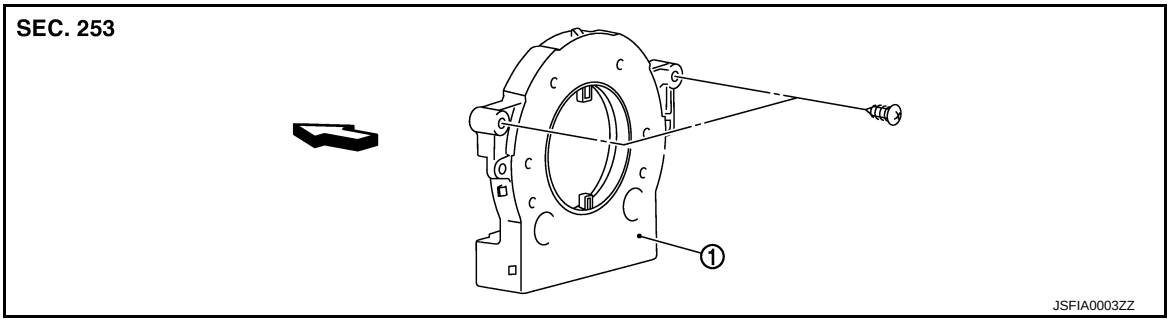

1. Steering angle sensor

⇦: Vehicle front

Removal and Installation (GT-R certified NISSAN dealer)

INFOID:0000000011487609

REMOVAL

1. Remove spiral cable assembly. Refer to SR-14, "Exploded View".
2. Remove steering angle sensor from spiral cable assembly.

INSTALLATION

Note the following items, and install in the reverse order of removal.

CAUTION:

After work, always to adjust neutral position of steering angle sensor. Refer to BRC-9, "ADJUSTMENT OF STEERING ANGLE SENSOR NEUTRAL POSITION : Description (GT-R certified NISSAN dealer)".