SECTION STR
STARTING SYSTEM

CONTENTS

PRECAUTION

PRECAUTIONS

Precaution for Supplemental Restraint System (SRS) "AIR BAG" and "SEAT BELT PRE-TENSIONER"

INFOID:0000000011464403

The Supplemental Restraint System such as “AIR BAG” and “SEAT BELT PRE-TENSIONER”, used along with a front seat belt, helps to reduce the risk or severity of injury to the driver and front passenger for certain types of collision. This system includes seat belt switch inputs and dual stage front air bag modules. The SRS system uses the seat belt switches to determine the front air bag deployment, and may only deploy one front air bag, depending on the severity of a collision and whether the front occupants are belted or unbelted.
Information necessary to service the system safely is included in the “SRS AIR BAG” and “SEAT BELT” of this Service Manual.

WARNING:
Always observe the following items for preventing accidental activation.
- **To avoid rendering the SRS inoperative, which could increase the risk of personal injury or death in the event of a collision that would result in air bag inflation, all maintenance must be performed by an authorized NISSAN/INFINITI dealer.**
- **Improper maintenance, including incorrect removal and installation of the SRS, can lead to personal injury caused by unintentional activation of the system. For removal of Spiral Cable and Air Bag Module, see “SRS AIR BAG”.**
- **Never use electrical test equipment on any circuit related to the SRS unless instructed to in this Service Manual. SRS wiring harnesses can be identified by yellow and/or orange harnesses or harness connectors.**

PRECAUTIONS WHEN USING POWER TOOLS (AIR OR ELECTRIC) AND HAMMERS

WARNING:
Always observe the following items for preventing accidental activation.
- **When working near the Air Bag Diagnosis Sensor Unit or other Air Bag System sensors with the ignition ON or engine running, never use air or electric power tools or strike near the sensor(s) with a hammer. Heavy vibration could activate the sensor(s) and deploy the air bag(s), possibly causing serious injury.**
- **When using air or electric power tools or hammers, always switch the ignition OFF, disconnect the battery, and wait at least 3 minutes before performing any service.**

Precautions for Removing Battery Terminal

INFOID:0000000011464405

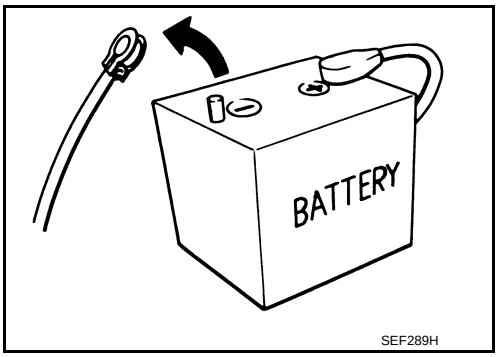

- When removing the 12V battery terminal, turn OFF the ignition switch and wait at least 30 seconds.
  NOTE:
  ECU may be active for several tens of seconds after the ignition switch is turned OFF. If the battery terminal is removed before ECU stops, then a DTC detection error or ECU data corruption may occur.
- For vehicles with the 2-batteries, be sure to connect the main battery and the sub battery before turning ON the ignition switch.
  NOTE:
  If the ignition switch is turned ON with any one of the terminals of main battery and sub battery disconnected, then DTC may be detected.
- After installing the 12V battery, always check "Self Diagnosis Result" of all ECUs and erase DTC.
  NOTE:
  The removal of 12V battery may cause a DTC detection error.

Precautions When Battery Is Discharged

INFOID:0000000011464406

When battery is discharged, disconnect the negative terminal of the battery and wait for 1 minute before connecting jumper cables to restart the engine. (This is necessary for resetting information in ECM.)

PREPARATION

PREPARATION

Special Service Tools

INFOID:0000000011464407

Tool number (Kent-Moore No.) Tool name	Description
— (—) Model GR8-1200 NI Multitasking battery and electrical diagnostic station  AWIIA1239ZZ	Tests batteries, starting and charging systems and charges batteries. For operating instructions, refer to diagnostic station instruction manual.

Commercial Service Tools

INFOID:0000000011464408

Tool name	Description
Power tool 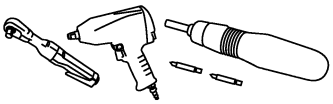 PIIB1407E	Loosening bolts, nuts and screws

SYSTEM DESCRIPTION

COMPONENT PARTS

Component Parts Location

INFOID:0000000011464409

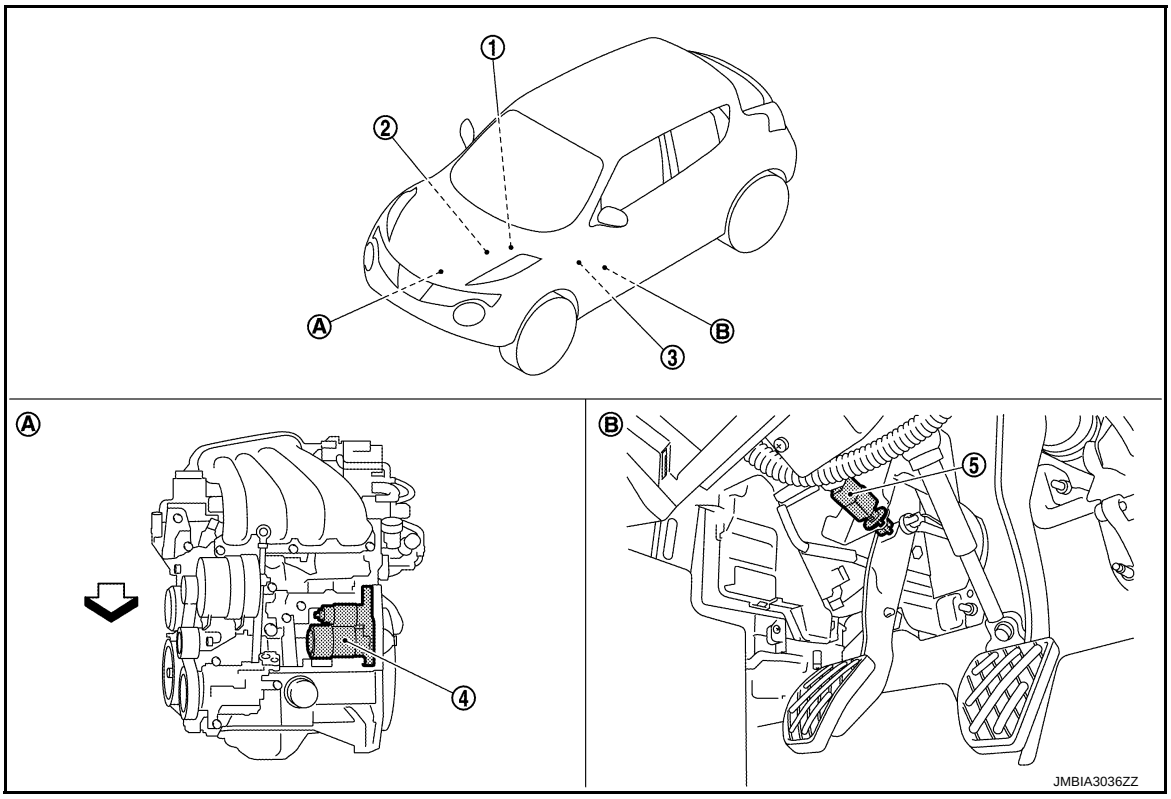

1. IPDM E/R
   Refer to PCS-4, "Component Parts Location".
2. Transmission range switch (CVT models)
   Refer to TM-154, "CVT CONTROL SYSTEM : Component Parts Location".
3. BCM
   Refer to BCS-4, "BODY CONTROL SYSTEM : Component Parts Location".
4. Starter motor
5. Clutch interlock switch (M/T models)

A. Engine
B. Clutch pedal (M/T models)

⇦ : Vehicle front

Component Description

INFOID:0000000011464410

Component part	Description
BCM	BCM controls the starter relay.
IPDM E/R	CPU inside IPDM E/R controls the starter control relay.
Starter motor	The starter motor plunger closes and the motor is supplied with battery power, which in turn cranks the engine, when the “S” terminal is supplied with electric power.
Transmission range switch (CVT models)	Transmission range switch supplies power to the starter relay and starter control relay inside IPDM E/R when the selector lever is shifted to the “P” or “N” position.
Clutch interlock switch (M/T models)	The switch turns ON and electric power is supplied to the starter relay and starter control relay inside IPDM E/R when the clutch pedal is depressed.

SYSTEM

System Diagram

INFOID:0000000011464413

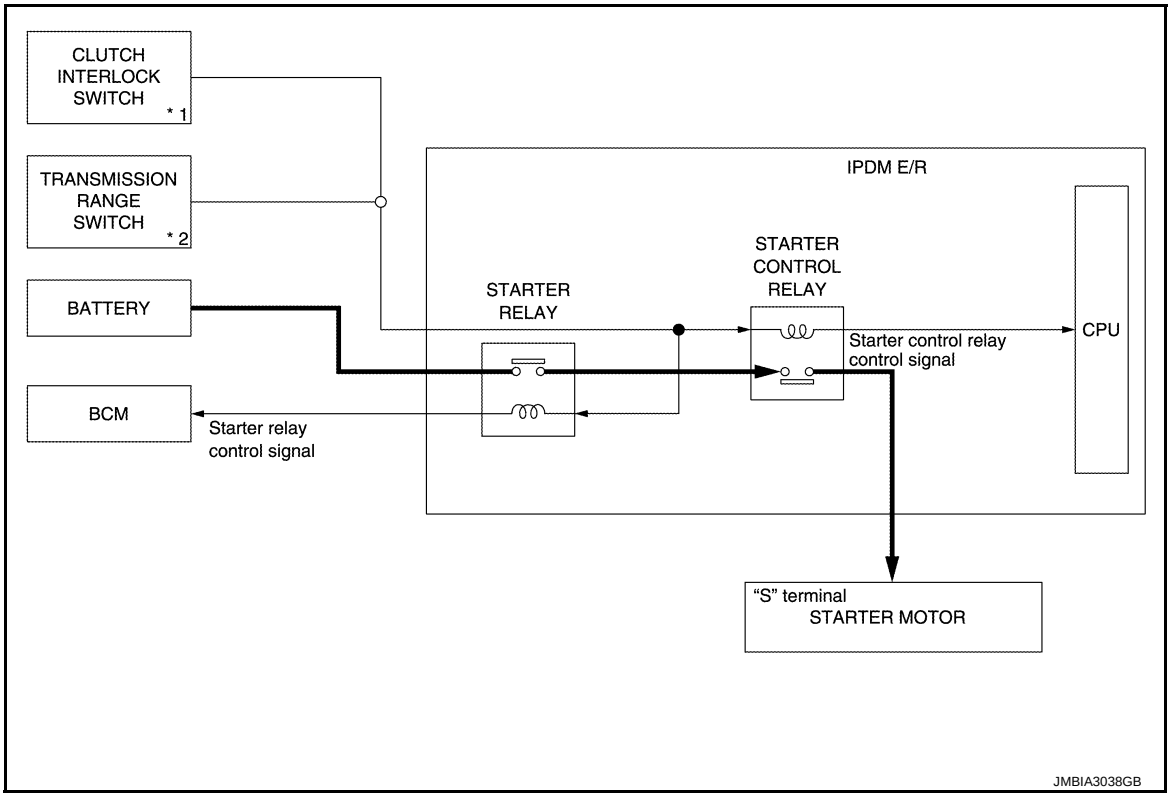

*1: M/T models

*2: CVT models

System Description

INFOID:0000000011464414

CVT MODELS

- When selector lever is "P" or "N", power is supplied to starter relay and starter control relay by transmission range switch. And BCM and IPDM E/R (CPU) detect selector lever P/N condition by the inputted signal.
- When starter operating condition is satisfied, IPDM E/R turns starter control relay ON by starter control relay control signal.
- When engine cranking condition is satisfied, BCM turns starter relay ON by starter relay control signal.
- Then battery power is supplied to starter motor ("S" terminal) through starter control relay and starter relay.

M/T MODELS

- When the clutch interlock switch is turned ON position (clutch pedal is depressed) power is supplied to starter relay and starter control relay. And BCM and IPDM E/R (CPU) detect ignition switch position by the inputted signal.
- When starter operating condition is satisfied, IPDM E/R turns starter control relay ON by starter control relay control signal.
- When engine cranking condition is satisfied, BCM turns starter relay ON by starter relay control signal.
- Then battery power is supplied to starter motor ("S" terminal) through starter control relay and starter relay.

WIRING DIAGRAM

STARTING SYSTEM

Wiring Diagram (CVT Models)

INFOID:0000000011464417

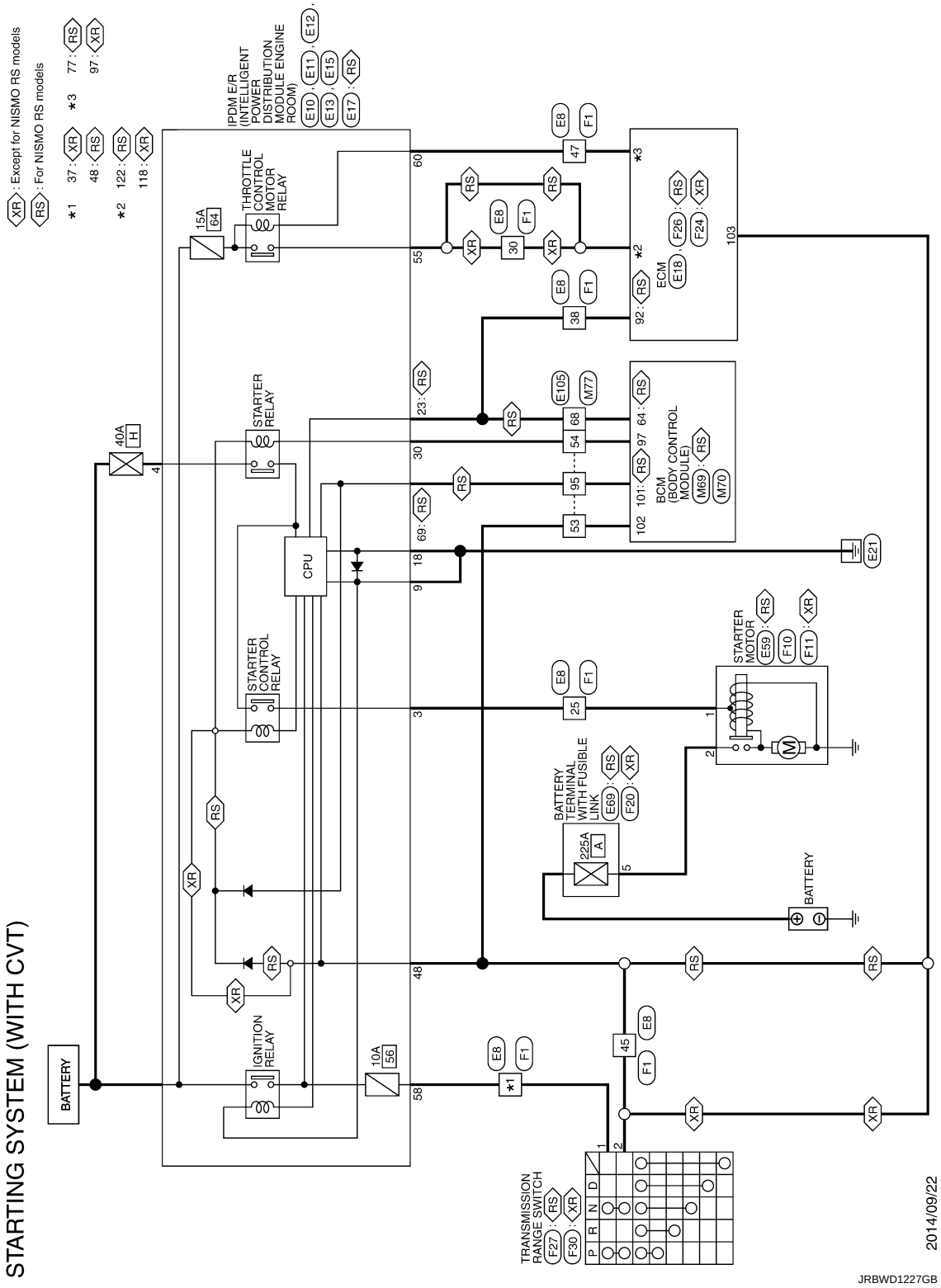

STARTING SYSTEM (WITH CVT)

Connector No.	E8
Connector Name	WIRE TO WIRE
Connector Type	SAA36MB-RS10-SJZ2

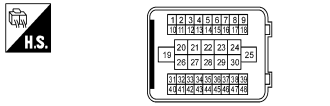

Terminal No.	Color Of Wire	Signal Name [Specification]
1	P	–
2	L	–
3	O	–
4	LG	– [MR engine for NISMO RS]
4	V	– [MR engine except for NISMO RS]
5	O	–
7	BR	–
10	R	–
11	G	– [MR engine except for NISMO RS]
11	O	– [MR engine for NISMO RS]
12	G	–
13	B	– [MR engine except for NISMO RS]
13	Y	– [MR engine for NISMO RS]
14	L	– [MR engine for NISMO RS]
14	LG	– [MR engine except for NISMO RS]
15	R	–
16	SB	–
17	GR	–
18	W	–
19	L/B	–
20	L/W	–
21	G	–
22	G	– [MR engine for NISMO RS]
22	Y	– [MR engine except for NISMO RS]
23	B	– [MR engine except for NISMO RS]
23	SHIELD	– [MR engine for NISMO RS]
24	P	–
25	R	–
26	B	–
27	B	–
28	LG	–
29	SB	–
30	G	– [MR engine except for NISMO RS]
30	P	– [MR engine for NISMO RS]
31	G	–
32	Y	–
33	BR	–
34	P	– [MR engine except for NISMO RS]
34	W	– [MR engine for NISMO RS]
37	L	– [Without Intelligent Key]
37	LG	– [With Intelligent Key]
38	SB	–
39	B	–
40	P	–
41	V	–
42	L	–
43	BR	– [MR engine for NISMO RS]
43	W	– [MR engine except for NISMO RS]
44	BR	– [MR engine except for NISMO RS]
44	G	– [MR engine for NISMO RS]
45	BR	–
46	Y	–
47	SB	–
48	LG	– [With Intelligent Key]
48	Y	– [Without Intelligent Key]

Connector No.	E10
Connector Name	IPDM E/R (INTELLIGENT POWER DISTRIBUTION MODULE ENGINE ROOM)
Connector Type	M06FW-LC

Terminal No.	Color Of Wire	Signal Name [Specification]
3	R	–
4	P	–

Connector No.	E11
Connector Name	IPDM E/R (INTELLIGENT POWER DISTRIBUTION MODULE ENGINE ROOM)
Connector Type	M06FB-LC

Terminal No.	Color Of Wire	Signal Name [Specification]
9	B/Y	–
14	R	–

Connector No.	E12
Connector Name	IPDM E/R (INTELLIGENT POWER DISTRIBUTION MODULE ENGINE ROOM)
Connector Type	NS08FBR-CS

Terminal No.	Color Of Wire	Signal Name [Specification]
18	GR	–
19	R	– [Without front fog lamp]
19	W	– [With front fog lamp]
20	G	– [Without front fog lamp]
20	V	– [With front fog lamp]

Connector No.	E13
Connector Name	IPDM E/R (INTELLIGENT POWER DISTRIBUTION MODULE ENGINE ROOM)
Connector Type	TH12FW-NH

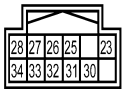

Terminal No.	Color Of Wire	Signal Name [Specification]
23	SB	–
25	BR	–
26	P	–
27	L	–
28	Y	–
30	V	–
31	Y	–
32	R	–
33	G	–
34	L	–

Connector No.	E15
Connector Name	IPDM E/R (INTELLIGENT POWER DISTRIBUTION MODULE ENGINE ROOM)
Connector Type	NS16FW-CS

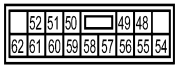

Terminal No.	Color Of Wire	Signal Name [Specification]
48	BR	–
49	Y	–
50	G	–
51	L	–
52	P	–
54	P	–
55	G	–
56	SB	–
57	O	–

JRBWD1228GB

STARTING SYSTEM (WITH CVT)

58	LG	–
59	V	–
60	SB	–
61	LG	–
62	BE	–

Connector No.	E17
Connector Name	IPDM E/R (INTELLIGENT POWER DISTRIBUTION MODULE ENGINE ROOM)
Connector Type	TH10FB-NH

Terminal No.	Color Of Wire	Signal Name [Specification]
64	Y	–
66	G	–
67	L	–
68	BE	–
69	BR	–
72	W	–

Connector No.	E18
Connector Name	ECM
Connector Type	RH24FGY-RZ8-R-RH

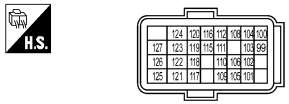

Terminal No.	Color Of Wire	Signal Name [Specification]
99	P	CAN COMMUNICATION LINE (CAN-L)
100	L	CAN COMMUNICATION LINE (CAN-H)
101	V	SENSOR POWER SUPPLY
102	R	ACCELERATOR PEDAL POSITION SENSOR 1
103	BR	PNP SIGNAL
104	R	DATA LINK CONNECTOR
105	GR	SENSOR GROUND

106	Y	POWER SUPPLY FOR ECM (BACKUP)
108	GR	CLUTCH PEDAL POSITION SWITCH
109	O	IGNITION SWITCH
110	P	ASCD STEERING SWITCH
111	B	SENSOR GROUND
112	BR	ECM RELAY (SELF SHAT-OFF)
115	R	STOP LAMP SWITCH
116	G	BRAKE PEDAL POSITION SWITCH
117	Y	FUEL PUMP RELAY
118	O	SENSOR POWER SUPPLY
119	W	ACCELERATOR PEDAL POSITION SENSOR 2
120	Y	SENSOR GROUND
121	G	POWER SUPPLY FOR ECM
122	G	THROTTLE CONTROL MOTOR POWER SUPPLY
123	GR	ECM GROUND
124	GR	ECM GROUND
125	L	A/F SENSOR 1 HEATER
126	W	HEATED OXYGEN SENSOR 2 HEATER
127	GR	ECM GROUND

Connector No.	E59
Connector Name	STARTER MOTOR
Connector Type	24340_EN03B

Terminal No.	Color Of Wire	Signal Name [Specification]
2	B/R	–

Connector No.	E69
Connector Name	BATTERY TERMINAL WITH FUSIBLE LINK
Connector Type	24340_79906

Terminal No.	Color Of Wire	Signal Name [Specification]
5	B/R	–

Connector No.	E105
Connector Name	WIRE TO WIRE
Connector Type	TH80MW-CS16-TM4

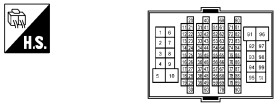

Terminal No.	Color Of Wire	Signal Name [Specification]
1	L	–
4	Y	–
6	P	–
10	R	–
11	W	–
12	B	–
13	R	–
14	SHIELD	–
34	BE	–
35	R	–
36	B	–
37	P	–
52	R	–
53	BR	–
54	V	–
55	BE	–
58	G	–
59	Y	–
62	Y	–

63	V	–
64	LG	–
65	L	–
66	R	–
67	W	–
68	SB	–
70	BR	–
71	LG	–
72	V	–
73	L	–
76	R	–
78	B	–
79	W	–
80	L	–
83	Y	–
84	LG	–
85	P	–
86	BE	–
90	SHIELD	–
91	G	–
92	R	–
95	BR	–
96	P	–
97	GR	–
98	W	–
99	V	–
100	O	–

Connector No.	F1
Connector Name	WIRE TO WIRE
Connector Type	SAA36FB-RS10-SJZ2

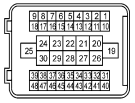

Terminal No.	Color Of Wire	Signal Name [Specification]
1	P	–
2	L	–
3	W	– [MR engine except for NISMO RS]
3	Y	– [MR engine for NISMO RS]
4	BG	– [MR engine for NISMO RS]
4	GR	– [MR engine except for NISMO RS]
5	LG	–

JRBWD1229GB

STARTING SYSTEM

STARTING SYSTEM (WITH CVT)

7	G	–
10	R	– [MR engine except for NISMO RS]
10	Y	– [MR engine for NISMO RS]
11	G	– [MR engine except for NISMO RS]
11	Y	– [MR engine for NISMO RS]
12	G	–
13	B	– [MR engine except for NISMO RS]
13	BG	– [MR engine for NISMO RS]
14	L	– [MR engine for NISMO RS]
14	V	– [MR engine except for NISMO RS]
15	BR	–
16	P	–
17	SB	–
18	G	–
19	G	–
20	BR	–
21	G	–
22	BR	– [MR engine for NISMO RS]
22	Y	– [MR engine except for NISMO RS]
23	B	–
24	R	–
25	R	–
26	B	–
27	B	–
28	R	–
29	W	–
30	GR	– [MR engine except for NISMO RS]
30	R	– [MR engine for NISMO RS]
31	BG	–
32	LG	–
33	BR	–
34	G	– [MR engine for NISMO RS]
34	P	– [MR engine except for NISMO RS]
37	G	– [Without Intelligent Key]
37	GR	– [With Intelligent Key]
38	R	–
39	GR	–
40	P	–
41	BR	– [MR engine for NISMO RS]
41	V	– [MR engine except for NISMO RS]
42	L	– [MR engine except for NISMO RS]
42	W	– [MR engine for NISMO RS]
43	L	– [MR engine for NISMO RS]
43	W	– [MR engine except for NISMO RS]
44	BR	– [MR engine except for NISMO RS]
44	G	– [MR engine for NISMO RS]
45	BR	–
46	R	–
47	Y	–
48	GR	– [With Intelligent Key]
48	Y	– [Without Intelligent Key]

Connector No.	F10
Connector Name	STARTER MOTOR
Connector Type	24340_ED024

H.S.

1

Terminal No.	Color Of Wire	Signal Name [Specification]
1	R	–

Connector No.	F11
Connector Name	STARTER MOTOR
Connector Type	24340_EN03B

H.S.

2

Terminal No.	Color Of Wire	Signal Name [Specification]
2	B/R	–

Connector No.	F20
Connector Name	BATTERY TERMINAL WITH FUSIBLE LINK
Connector Type	24340_79906

H.S.

5

Terminal No.	Color Of Wire	Signal Name [Specification]
5	B/R	–

Connector No.	F24
Connector Name	ECM
Connector Type	MAB55FB-MEB10-LH

H.S.

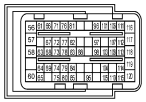

Terminal No.	Color Of Wire	Signal Name [Specification]
56	R	EGR VOLUME CONTROL VALVE POWER SUPPLY
57	W	EGR VOLUME CONTROL VALVE MOTOR (+)
58	R	EGR VOLUME CONTROL VALVE MOTOR (–)
60	B	ECM GROUND
61	W	SENSOR POWER SUPPLY
63	L	SENSOR GROUND
64	SHIELD	SHIELD
65	R	WASTEGATE CONTROL VALVE POSITION SENSOR
66	G	SENSOR POWER SUPPLY
67	BR	CAMSHAFT POSITION SENSOR
68	GR	EGR VOLUME CONTROL VALVE POSITION SENSOR
69	LG	EXHAUST VALVE TIMING CONTROL POSITION SENSOR
71	L	SENSOR GROUND
72	B	SENSOR GROUND
73	GR	SENSOR POWER SUPPLY
74	B	A/F SENSOR 1
75	L	MULTI-WAY CONTROL VALVE POSITION SENSOR
76	R	EGR TEMPERATURE SENSOR
77	V	INTAKE AIR TEMPERATURE SENSOR 2
78	R	SENSOR GROUND
79	W	A/F SENSOR 1
80	W	THROTTLE POSITION SENSOR 2
81	BR	ECM RELAY (SELF SHUT-OFF)
82	Y	FUEL PUMP RELAY
83	B	SENSOR POWER SUPPLY
84	W	HEATED OXYGEN SENSOR 2
85	R	SENSOR GROUND
88	G	THROTTLE POSITION SENSOR 1
95	LG	IGNITION SIGNAL NO.2
96	R	IGNITION SIGNAL NO.1
97	Y	THROTTLE CONTROL MOTOR RELAY
98	R	ENGINE OIL PRESSURE CONTROL SOLENOID VALVE
101	SB	IGNITION SIGNAL NO.4
103	BR	PNP SIGNAL
104	P	IGNITION SIGNAL NO.3
105	BR	TURBOCHARGER BYPASS CONTROL VALVE
106	R	ELECTRIC WASTEGATE CONTROL ACTUATOR POWER SUPPLY
107	L/Y	ELECTRIC WASTEGATE CONTROL ACTUATOR MOTOR (+)
108	P/L	ELECTRIC WASTEGATE CONTROL ACTUATOR MOTOR (–)
110	B	ECM GROUND
111	W	INTAKE VALVE TIMING CONTROL SOLENOID VALVE
112	G	EXHAUST VALVE TIMING CONTROL SOLENOID VALVE
113	Y	POWER SUPPLY FOR ECM (ENGINE OFF TIMER)
114	L	INTAKE VALVE TIMING INTERMEDIATE LOCK CONTROL SOLENOID VALVE
115	L	EVAP CANISTER PURGE VOLUME CONTROL SOLENOID VALVE
116	G	A/F SENSOR 1 HEATER
117	G	HEATED OXYGEN SENSOR 2 HEATER
118	GR	THROTTLE CONTROL MOTOR POWER SUPPLY
119	G	THROTTLE CONTROL MOTOR (OPEN)
120	BR	THROTTLE CONTROL MOTOR (CLOSE)

Connector No.	F26
Connector Name	ECM
Connector Type	RH40FBR-RZ8-L-RH

H.S.

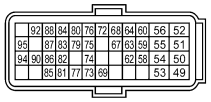

Terminal No.	Color Of Wire	Signal Name [Specification]
49	G	FUEL INJECTOR DRIVER POWER SUPPLY 1
50	B	ECM GROUND (HIGH PRESSURE FUEL PUMP)
51	GR	THROTTLE CONTROL MOTOR (OPEN)

JRBWD1230GB

STARTING SYSTEM (WITH CVT)

52	BR	THROTTLE CONTROL MOTOR (CLOSE)
53	BR	FUEL INJECTOR DRIVER POWER SUPPLY 2
54	R	HIGH PRESSURE FUEL PUMP DRIVER POWER SUPPLY
55	BR	HIGH PRESSURE FUEL PUMP (HI)
56	Y	HIGH PRESSURE FUEL PUMP (LO)
58	G	SENSOR POWER SUPPLY
59	L	SENSOR GROUND
60	W	SENSOR GROUND
62	B	SENSOR POWER SUPPLY
63	BR	CAMSHAFT POSITION SENSOR (PHASE)
64	R	CRANKSHAFT POSITION SENSOR (POS)
67	LG	EXHAUST VALVE TIMING CONTROL POSITION SENSOR
68	Y	SENSOR POWER SUPPLY
69	L	EVAP CANISTER VENT CONTROL VALVE
72	GR	SENSOR POWER SUPPLY
73	BR	TURBOCHARGER BOOST CONTROL SOLENOID VALVE
74	R	SENSOR GROUND
75	G	THROTTLE POSITION SENSOR 1
76	W	THROTTLE POSITION SENSOR 2
77	Y	THROTTLE CONTROL RELAY
79	BG	BATTERY TEMPERATURE SENSOR
80	G	BATTERY CURRENT SENSOR
81	W	INTAKE VALVE TIMING CONTROL SOLENOID VALVE
82	R	IGNITION SIGNAL NO.1
83	G	G SENSOR
84	P	FUEL TANK TEMPERATURE SENSOR
85	G	EXHAUST VALVE TIMING CONTROL SOLENOID VALVE
86	LG	IGNITION SIGNAL NO.2
87	BR	SENSOR GROUND
88	V	INTAKE AIR TEMPERATURE SENSOR 2
90	P	IGNITION SIGNAL NO.3
92	R	CRANKING ENABLE SIGNAL
94	SB	IGNITION SIGNAL NO.4
95	L	EVAP CANISTER PURGE VOLUME CONTROL SOLENOID VALVE

Connector No.	F27
Connector Name	TRANSMISSION RANGE SWITCH
Connector Type	RK08FG

Terminal No.	Color Of Wire	Signal Name [Specification]
1	GR	–
2	BR	–
3	LG	–
4	L	–
5	G	–
6	Y	–
7	W	–
8	V	–

Connector No.	F30
Connector Name	TRANSMISSION RANGE SWITCH
Connector Type	YDX06FB-HS4

Terminal No.	Color Of Wire	Signal Name [Specification]
1	GR	–
2	BR	–
3	LG	–
4	SB	–
5	G	–
6	LG	–
7	W	–
8	BR	–

Connector No.	M69
Connector Name	BCM (BODY CONTROL MODULE)
Connector Type	FEA09FW-FHA6-SA

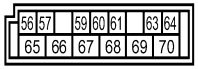

Terminal No.	Color Of Wire	Signal Name [Specification]
56	P	INT ROOM LAMP PWR SPLY
57	P	BATT(FUSE)
59	SB	PASS DOOR UNLK OUTPUT
60	V	TURN SIG LH OUTPUT
61	W	TURN SIG RH OUTPUT
63	BR	INT ROOM LAMP CONT
64	R	REVERSE SW
65	V	ALL DOOR LOCK OUTPUT
66	SB	DOOR_UNLOCK_DR
67	B	GND
68	L	PW PWR SPLY (IGN)
69	P	PW PWR SPLY (BAT)
70	Y	BAT (F/L)

Connector No.	M70
Connector Name	BCM (BODY CONTROL MODULE)
Connector Type	TH40FW-NH

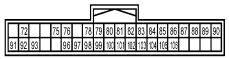

Terminal No.	Color Of Wire	Signal Name [Specification]
72	SB	A/C IND OUTPUT
75	LG	DR DOOR REQ SW
76	LG	PASS DOOR REQ SW
78	P	DRIVER DOOR ANT+
79	V	DRIVER DOOR ANT-
80	BR	PASS DOOR ANT+
81	G	PASS DOOR ANT-
82	W	REAR BMPR ANT+
83	B	REAR BMPR ANT-
84	BR	ROOM ANT 1+
85	GR	ROOM ANT 1-
86	G	ROOM ANT 2+
87	R	ROOM ANT 2-
88	V	LUGGAGE ROOM ANT+
89	LG	LUGGAGE ROOM ANT-
90	W	PUSH-BTN IGN SW ILL PWR
91	V	ACC / ON IND
92	R	PUSH-BTN IGN SW ILL GND
93	GR	I-KEY WARN BUZZER
96	BR	ACC RELAY CONT
97	SB	STARTER RELAY CONT
98	P	IGN RELAY (IPDM E/R) CONT
99	R	IGN RELAY (F/B) CONT
100	P	PUSH SW
101	Y	CLUTCH INTERLOCK SW
102	L	NEUTRAL SW
103	G	FR DEFROST SW
104	SB	CVT SHIFT SELECT PWR SPLY
105	V	STOP LAMP SW 2
106	Y	BLWR RELAY CONT

Connector No.	M77
Connector Name	WIRE TO WIRE
Connector Type	TH80FW-CS16-TM4

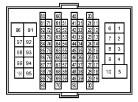

Terminal No.	Color Of Wire	Signal Name [Specification]
1	L	–
4	V	–
6	P	–
10	R	–
11	R	–
12	LG	–
13	V	–
14	SHIELD	–
34	LG	–
35	SB	–
36	B	–

JRBWD1231GB

STARTING SYSTEM (WITH CVT)

37	P	–
52	R	–
53	L	–
54	SB	–
55	P	–
58	LG	–
59	G	–
62	Y	–
63	W	–
64	G	–
65	GR	–
66	Y	–
67	V	–
68	R	–
70	V	–
71	R	–
72	GR	–
73	G	–
76	W	–
78	LG	–
79	V	–
80	LG	–
83	P	–
84	G	–
85	BR	–
86	LG	–
90	SHIELD	–
91	Y	–
92	BR	–
95	Y	–
96	L	–
97	GR	–
98	G	–
99	R	–
100	LG	–

JRBWD1232GB

Wiring Diagram (M/T Models)

INFOID:0000000011464418

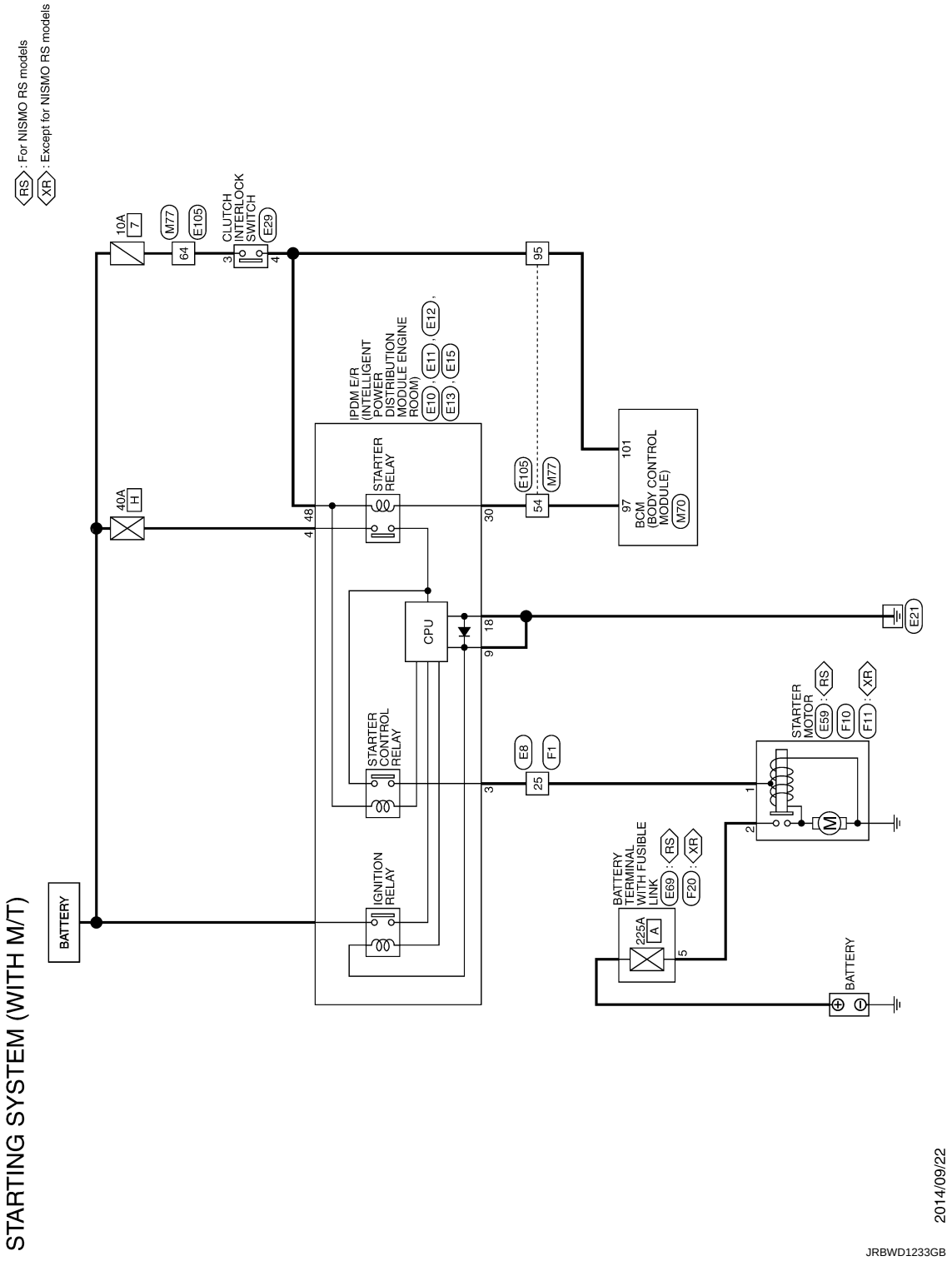

STARTING SYSTEM (WITH M/T)

Connector No.	E8
Connector Name	WIRE TO WIRE
Connector Type	SAA36MB-RS10-SJZ2

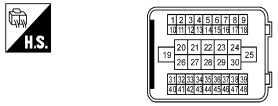

Terminal No.	Color Of Wire	Signal Name [Specification]
1	P	–
2	L	–
3	O	–
4	LG	– [MR engine for NISMO RS]
4	V	– [MR engine except for NISMO RS]
5	O	–
7	BR	–
10	R	–
11	G	– [MR engine except for NISMO RS]
11	O	– [MR engine for NISMO RS]
12	G	–
13	B	– [MR engine except for NISMO RS]
13	Y	– [MR engine for NISMO RS]
14	L	– [MR engine for NISMO RS]
14	LG	– [MR engine except for NISMO RS]
15	R	–
16	SB	–
17	GR	–
18	W	–
19	L/B	–
20	L/W	–
21	G	–
22	G	– [MR engine for NISMO RS]
22	Y	– [MR engine except for NISMO RS]
23	B	– [MR engine except for NISMO RS]
23	SHIELD	– [MR engine for NISMO RS]
24	P	–
25	R	–
26	B	–
27	B	–
28	LG	–
29	SB	–
30	G	– [MR engine except for NISMO RS]
30	P	– [MR engine for NISMO RS]
31	G	–
32	Y	–
33	BR	–
34	P	– [MR engine except for NISMO RS]
34	W	– [MR engine for NISMO RS]
37	L	– [Without Intelligent Key]
37	LG	– [With Intelligent Key]
38	SB	–
39	B	–
40	P	–
41	V	–
42	L	–
43	BR	– [MR engine for NISMO RS]
43	W	– [MR engine except for NISMO RS]
44	BR	– [MR engine except for NISMO RS]
44	G	– [MR engine for NISMO RS]
45	BR	–
46	Y	–
47	SB	–
48	LG	– [With Intelligent Key]
48	Y	– [Without Intelligent Key]

Connector No.	E10
Connector Name	IPDM E/R (INTELLIGENT POWER DISTRIBUTION MODULE ENGINE ROOM)
Connector Type	M06FW-LC

Terminal No.	Color Of Wire	Signal Name [Specification]
3	R	–
4	P	–

Connector No.	E11
Connector Name	IPDM E/R (INTELLIGENT POWER DISTRIBUTION MODULE ENGINE ROOM)
Connector Type	M06FB-LC

Terminal No.	Color Of Wire	Signal Name [Specification]
9	B/Y	–
14	R	–

Connector No.	E12
Connector Name	IPDM E/R (INTELLIGENT POWER DISTRIBUTION MODULE ENGINE ROOM)
Connector Type	NS08FBR-CS

Terminal No.	Color Of Wire	Signal Name [Specification]
18	GR	–
19	R	– [Without front fog lamp]
19	W	– [With front fog lamp]
20	G	– [Without front fog lamp]
20	V	– [With front fog lamp]

Connector No.	E13
Connector Name	IPDM E/R (INTELLIGENT POWER DISTRIBUTION MODULE ENGINE ROOM)
Connector Type	TH12FW-NH

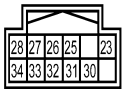

Terminal No.	Color Of Wire	Signal Name [Specification]
23	SB	–
25	BR	–
26	P	–
27	L	–
28	Y	–
30	V	–
31	Y	–
32	R	–
33	G	–
34	L	–

Connector No.	E15
Connector Name	IPDM E/R (INTELLIGENT POWER DISTRIBUTION MODULE ENGINE ROOM)
Connector Type	NS16FW-CS

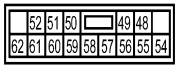

Terminal No.	Color Of Wire	Signal Name [Specification]
48	BR	–
49	Y	–
50	G	–
51	L	–
52	P	–
54	P	–
55	G	–
56	SB	–
57	O	–

JRBWD1234GB

STARTING SYSTEM (WITH M/T)

58	LG	–
59	V	–
60	SB	–
61	LG	–
62	BE	–

Connector No.	E29
Connector Name	CLUTCH INTERLOCK SWITCH
Connector Type	M04FW-LC

Terminal No.	Color Of Wire	Signal Name [Specification]
3	LG	–
4	BR	–

Connector No.	E59
Connector Name	STARTER MOTOR
Connector Type	24340_EN03B

Terminal No.	Color Of Wire	Signal Name [Specification]
2	B/R	–

Connector No.	E69
Connector Name	BATTERY TERMINAL WITH FUSIBLE LINK
Connector Type	24340_79906

Terminal No.	Color Of Wire	Signal Name [Specification]
5	B/R	–

Connector No.	E105
Connector Name	WIRE TO WIRE
Connector Type	TH80MW-CS16-TM4

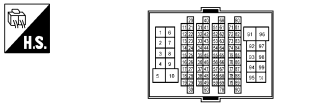

Terminal No.	Color Of Wire	Signal Name [Specification]
1	L	–
4	Y	–
6	P	–
10	R	–
11	W	–
12	B	–
13	R	–
14	SHIELD	–
34	BE	–
35	R	–
36	B	–
37	P	–
52	R	–
53	BR	–
54	V	–
55	BE	–
58	G	–
59	Y	–
62	Y	–
63	V	–
64	LG	–
65	L	–
66	R	–
67	W	–
68	SB	–
70	BR	–
71	LG	–
72	V	–
73	L	–
76	R	–
78	B	–
79	W	–
80	L	–
83	Y	–
84	LG	–
85	P	–
86	BE	–
90	SHIELD	–
91	G	–
92	R	–
95	BR	–
96	P	–
97	GR	–
98	W	–
99	V	–
100	O	–

Connector No.	F1
Connector Name	WIRE TO WIRE
Connector Type	SAA36FB-RS10-SJZ2

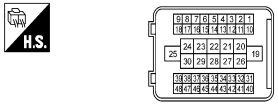

Terminal No.	Color Of Wire	Signal Name [Specification]
1	P	–
2	L	–
3	W	– [MR engine except for NISMO RS]
3	Y	– [MR engine for NISMO RS]
4	BG	– [MR engine for NISMO RS]
4	GR	– [MR engine except for NISMO RS]
5	LG	–
7	G	–
10	R	– [MR engine except for NISMO RS]
10	Y	– [MR engine for NISMO RS]
11	G	– [MR engine except for NISMO RS]
11	Y	– [MR engine for NISMO RS]
12	G	–
13	B	– [MR engine except for NISMO RS]
13	BG	– [MR engine for NISMO RS]
14	L	– [MR engine for NISMO RS]
14	V	– [MR engine except for NISMO RS]
15	BR	–
16	P	–
17	SB	–
18	G	–
19	G	–
20	BR	–
21	G	–
22	BR	– [MR engine for NISMO RS]
22	Y	– [MR engine except for NISMO RS]
23	B	–
24	R	–
25	R	–
26	B	–
27	B	–
28	R	–
29	W	–
30	GR	– [MR engine except for NISMO RS]
30	R	– [MR engine for NISMO RS]
31	BG	–
32	LG	–
33	BR	–
34	G	– [MR engine for NISMO RS]
34	P	– [MR engine except for NISMO RS]
37	G	– [Without Intelligent Key]
37	GR	– [With Intelligent Key]
38	R	–
39	GR	–
40	P	–
41	BR	– [MR engine for NISMO RS]
41	V	– [MR engine except for NISMO RS]
42	L	– [MR engine except for NISMO RS]
42	W	– [MR engine for NISMO RS]
43	L	– [MR engine for NISMO RS]
43	W	– [MR engine except for NISMO RS]
44	BR	– [MR engine except for NISMO RS]
44	G	– [MR engine for NISMO RS]
45	BR	–
46	R	–
47	Y	–
48	GR	– [With Intelligent Key]

JRBWD1235GB

STARTING SYSTEM

STARTING SYSTEM (WITH M/T)

48	Y	– [Without Intelligent Key]

Connector No.	F10
Connector Name	STARTER MOTOR
Connector Type	24340_ED024

H.S.

1

Terminal No.	Color Of Wire	Signal Name [Specification]
1	R	–

Connector No.	F11
Connector Name	STARTER MOTOR
Connector Type	24340_EN03B

H.S.

2

Terminal No.	Color Of Wire	Signal Name [Specification]
2	B/R	–

Connector No.	F20
Connector Name	BATTERY TERMINAL WITH FUSIBLE LINK
Connector Type	24340_79906

H.S.

5

Terminal No.	Color Of Wire	Signal Name [Specification]
5	B/R	–

Connector No.	M70
Connector Name	BCM (BODY CONTROL MODULE)
Connector Type	TH40FW-NH

H.S.

Terminal No.	Color Of Wire	Signal Name [Specification]
72	SB	A/C IND OUTPUT
75	LG	DR DOOR REQ SW
76	LG	PASS DOOR REQ SW
78	P	DRIVER DOOR ANT+
79	V	DRIVER DOOR ANT–
80	BR	PASS DOOR ANT+
81	G	PASS DOOR ANT–
82	W	REAR BMPR ANT+
83	B	REAR BMPR ANT–
84	BR	ROOM ANT 1+
85	GR	ROOM ANT 1–
86	G	ROOM ANT 2+
87	R	ROOM ANT 2–
88	V	LUGGAGE ROOM ANT+
89	LG	LUGGAGE ROOM ANT–
90	W	PUSH–BTN IGN SW ILL PWR
91	V	ACC / ON IND
92	R	PUSH–BTN IGN SW ILL GND
93	GR	I–KEY WARN BUZZER
96	BR	ACC RELAY CONT
97	SB	STARTER RELAY CONT
98	P	IGN RELAY (IPDM E/R) CONT
99	R	IGN RELAY (F/B) CONT
100	P	PUSH SW
101	Y	CLUTCH INTERLOCK SW
102	L	NEUTRAL SW
103	G	FR DEFROST SW
104	SB	CVT SHIFT SELECT PWR SPLY
105	V	STOP LAMP SW 2
106	Y	BLWR RELAY CONT

Connector No.	M77
Connector Name	WIRE TO WIRE
Connector Type	TH80FW-CS16-TM4

H.S.

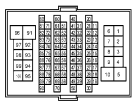

Terminal No.	Color Of Wire	Signal Name [Specification]
1	L	–
4	V	–
6	P	–
10	R	–
11	R	–
12	LG	–
13	V	–
14	SHIELD	–
34	LG	–
35	SB	–
36	B	–
37	P	–
52	R	–
53	L	–
54	SB	–
55	P	–
58	LG	–
59	G	–
62	Y	–
63	W	–
64	G	–
65	GR	–
66	Y	–
67	V	–
68	R	–
70	V	–
71	R	–
72	GR	–
73	G	–
76	W	–
78	LG	–
79	V	–
80	LG	–
83	P	–
84	G	–
85	BR	–
86	LG	–
90	SHIELD	–
91	Y	–
92	BR	–
95	Y	–
96	L	–
97	GR	–
98	G	–
99	R	–
100	LG	–

JRBWD1236GB

BASIC INSPECTION

DIAGNOSIS AND REPAIR WORK FLOW

Work Flow (With GR8-1200 NI)

INFOID:0000000011464421

STARTING SYSTEM DIAGNOSIS WITH GR8-1200 NI

To test the starting system, use the following special service tool:

- GR8-1200 NI Multitasking battery and electrical diagnostic station

NOTE:

Refer to the diagnostic station Instruction Manual for proper starting system diagnosis procedures.

OVERALL SEQUENCE

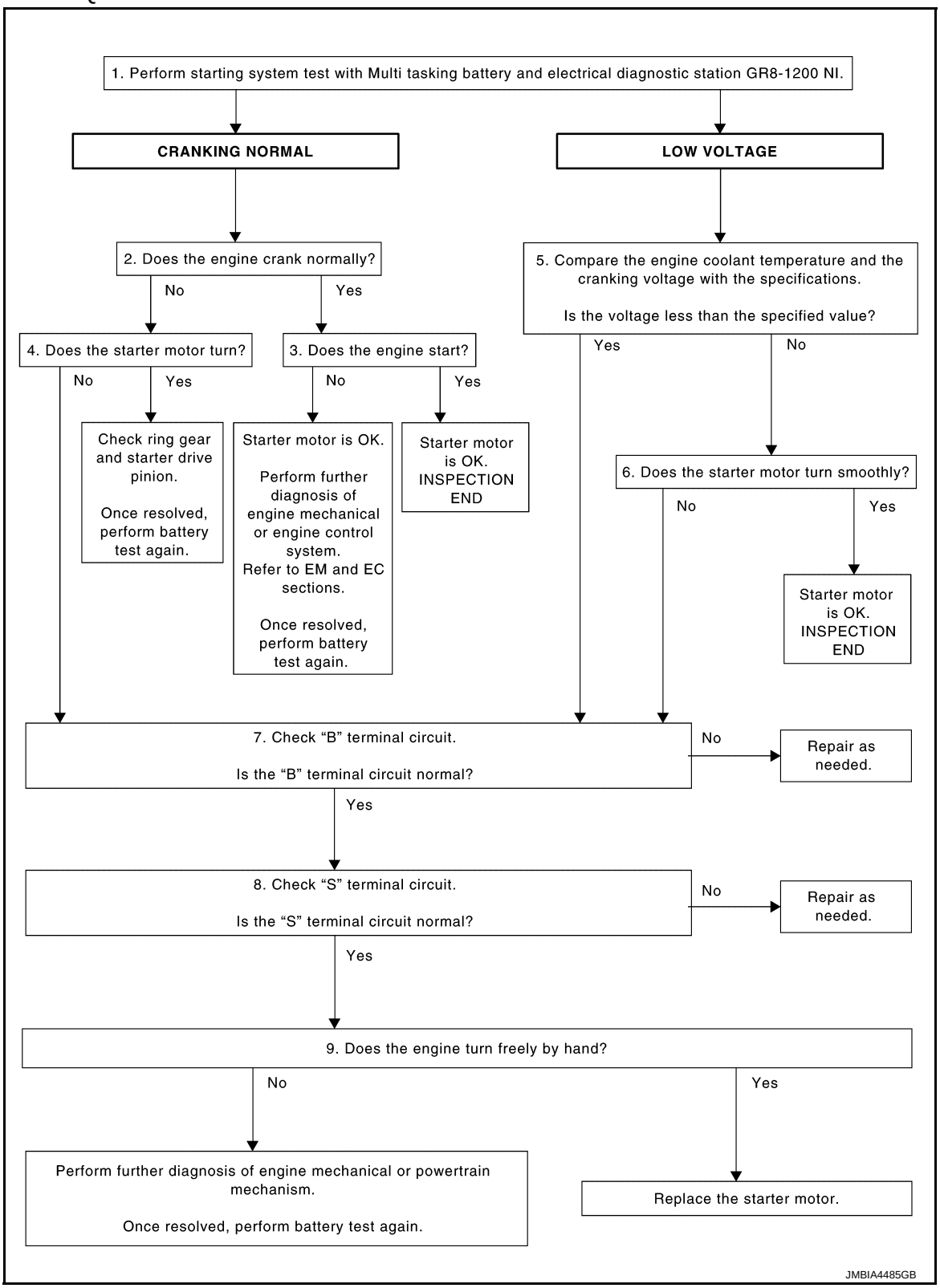

DETAILED FLOW

NOTE:
To ensure a complete and thorough diagnosis, the battery, starter motor and alternator test segments must be done as a set from start to finish.

1. DIAGNOSIS WITH MULTITASKING BATTERY AND ELECTRICAL DIAGNOSTIC STATION GR8-1200 NI

Perform the starting system test with Multitasking battery and electrical diagnostic station GR8-1200 NI. For details and operating instructions, refer to diagnostic station Instruction Manual.

Test result

CRANKING NORMAL>>GO TO 2.
LOW VOLTAGE>>GO TO 5.
CHARGE BATTERY>>Perform the slow battery charging procedure. (Initial rate of charge is 10A for 12 hours.) Perform battery test again. Refer to diagnostic station instruction manual.
REPLACE BATTERY>>Before replacing battery, clean the battery cable clamps and battery posts. Perform battery test again. Refer to diagnostic station instruction manual. If second test result is “REPLACE BATTERY”, then do so. Perform battery test again to confirm repair.

2. CRANKING CHECK

Check that the starter motor operates correctly.

Does the engine crank normally?

YES >> GO TO 3.
NO >> GO TO 4.

3. ENGINE START CHECK

Check that the engine starts.

Does the engine start?

YES >> Starter motor is OK. INSPECTION END
NO >> Perform further diagnosis of engine mechanical or engine control system. Refer EM and EC sections. Once resolved, perform battery test again.

4. STARTER MOTOR ACTIVATION

Check that the starter motor operates.

Does the starter motor turn?

YES >> Check ring gear and starter motor drive pinion. Once resolved, perform battery test again.
NO >> GO TO 7.

5. COMPARISON BETWEEN ENGINE COOLANT AND CRANKING VOLTAGE

Compare the engine coolant temperature and the cranking voltage with the specifications.

Minimum Specification of Cranking Voltage Referencing Coolant Temperature

Engine coolant temperature [°C (°F)]	Voltage [V]
–30 to –20 (–22 to –4)	8.6
–19 to –10 (–2 to 14)	9.1
–9 to 0 (16 to 32)	9.5
More than 1 (More than 34)	9.9

Is the voltage less than the specified value?

YES >> GO TO 7.
NO >> GO TO 6.

6. STARTER OPERATION

Check the starter operation status.

Does the starter motor turn smoothly?

YES >> Starter motor is OK. INSPECTION END
NO >> GO TO 7.

7. “B” TERMINAL CIRCUIT INSPECTION

Check “B” terminal circuit. Refer to STR-21, "Diagnosis Procedure".

Is “B” terminal circuit normal?

YES >> GO TO 8.
NO >> Repair as needed.

8. “S” TERMINAL CIRCUIT INSPECTION

Check “S” terminal circuit. Refer to STR-23, "Diagnosis Procedure".

Is “S” terminal circuit normal?

YES >> GO TO 9.
NO >> Repair as needed.

9. ENGINE ROTATION STATUS

Check that the engine can be rotated by hand.

Does the engine turn freely by hand?

YES >> Replace starter motor. Refer to STR-26, "MR16DDT : Removal and Installation".
NO >> Perform further diagnosis of engine mechanical or powertrain mechanism. Once resolved, perform battery test again using Multitasking battery and electrical diagnostic station GR8-1200 NI. Refer to the diagnostic station Instruction Manual for proper testing procedures.

Work Flow (Without GR8-1200 NI)

INFOID:0000000011464422

OVERALL SEQUENCE

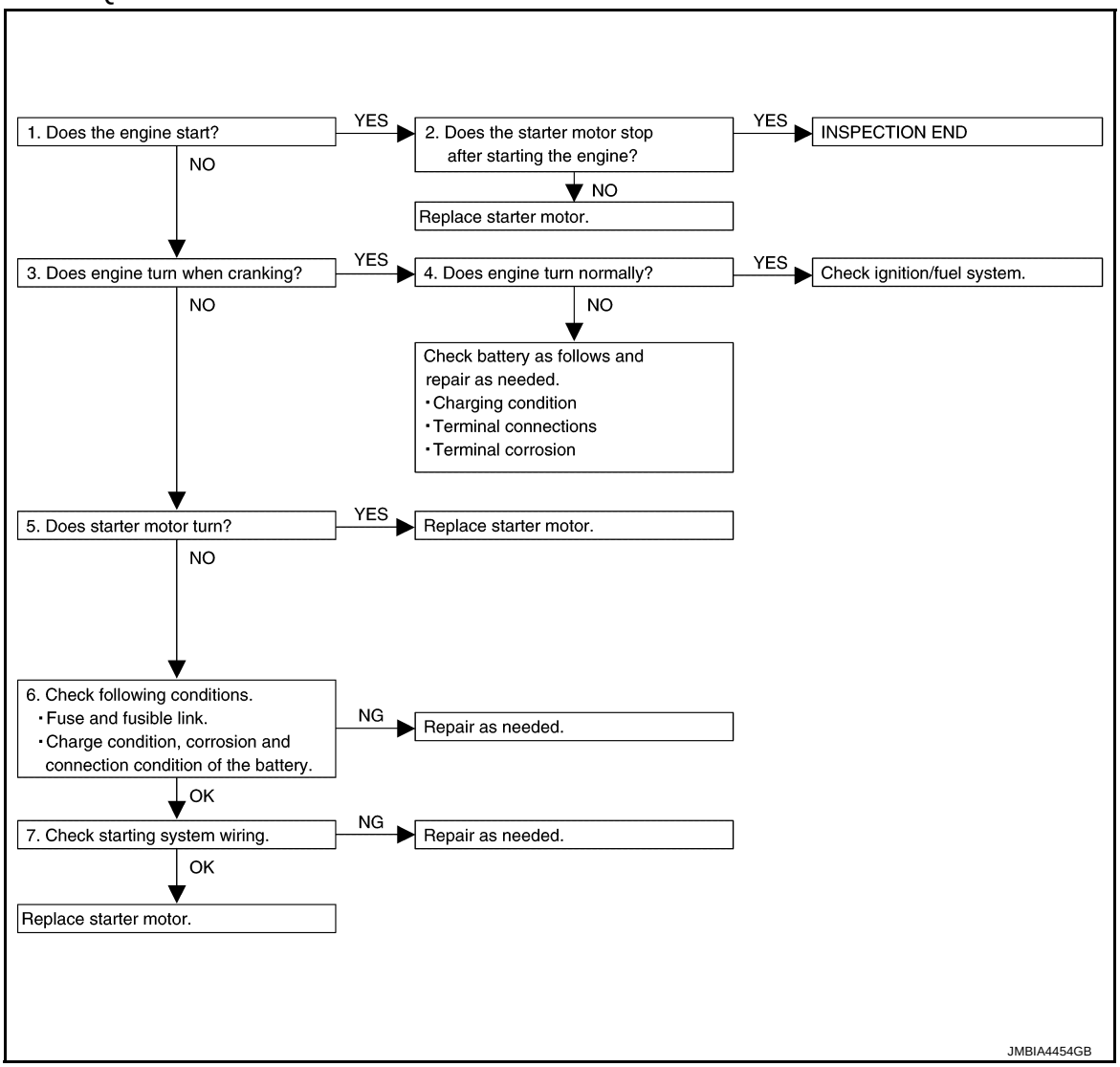

DETAILED FLOW

NOTE:
If any malfunction is found, immediately disconnect the battery cable from the negative terminal.

1. CHECK ENGINE START

Crank the engine and check that the engine starts.

Does the engine start?

YES >> GO TO 2.

NO >> GO TO 3.

2. CHECK THAT THE STARTER MOTOR STOPS

Check that the starter motor stops after starting the engine.

Does the starter motor stop?

YES >> INSPECTION END
NO >> Replace starter motor. Refer to STR-26, "MR16DDT : Removal and Installation".

3. CHECK THAT THE ENGINE TURNS WHEN CRANKING

Check that the engine turns when cranking.

Does engine turn when cranking?

YES >> GO TO 4.
NO >> GO TO 5.

4. CHECK THE ENGINE SPEED WHEN CRANKING

Check that the engine speed is not low when cranking.

Does engine turn normally?

YES >> Check ignition/fuel system.
NO >> Check charge condition, corrosion and connection condition of the battery. Refer to PG-108, "Work Flow".

5. CHECK STARTER MOTOR ACTIVATION

Check that the starter motor runs at cranking.

Does starter motor turn?

YES >> Replace starter motor. Refer to STR-26, "MR16DDT : Removal and Installation".
NO >> GO TO 6.

6. CHECK POWER SUPPLY CIRCUIT

Check the following conditions.
- Fuse and fusible link
- Charge condition, corrosion and connection condition of the battery. Refer to PG-108, "Work Flow".

Are these inspection results normal?

YES >> GO TO 7.
NO >> Repair as needed.

7. CHECK STARTING SYSTEM WIRING

Check the following.
- “B” terminal circuit. Refer to STR-21, "Diagnosis Procedure".
- “S” terminal circuit. Refer to STR-23, "Diagnosis Procedure".

Are these inspection results normal?

YES >> Replace starter motor. Refer to STR-26, "MR16DDT : Removal and Installation".
NO >> Repair as needed.

DTC/CIRCUIT DIAGNOSIS

B TERMINAL CIRCUIT

Description

INFOID:0000000011464423

The “B” terminal is constantly supplied with battery power.

Diagnosis Procedure

INFOID:0000000011464424

CAUTION:
Perform diagnosis under the condition that engine cannot start by the following procedure.
1. **Remove fuel pump fuse.**
2. **Crank or start the engine (where possible) until the fuel pressure is released.**

1. CHECK FUSIBLE LINK

Check that the following fusible link is not blown.

Terminal No.	Signal name	Fusible link No.
2	Battery power supply	A (225 A)

Is the fusible link blown?

YES >> Replace the blown fusible link after repairing the affected circuit if a fusible link is blown.
NO >> GO TO 2.

2. CHECK “B” TERMINAL CIRCUIT

1. Turn ignition switch OFF.
2. Check that starter motor “B” terminal connection is clean and tight.
3. Check voltage between starter motor “B” terminal and ground.

For NISMO RS models

Terminals			Voltage (Approx.)
(+)		(–)	
Starter motor “B” terminal	Terminal		
E59	2	Ground	Battery voltage

Except for NISMO RS models

Terminals			Voltage (Approx.)
(+)		(–)	
Starter motor “B” terminal	Terminal		
F11	2	Ground	Battery voltage

Is the inspection result normal?

YES >> GO TO 3.
NO >> Check harness between battery and starter motor for open circuit.

3. CHECK BATTERY CABLE CONNECTION STATUS (VOLTAGE DROP TEST)

1. Shift selector lever to “P” or “N” position. (CVT models)
   Keep depressing clutch pedal fully. (M/T models)
2. Check voltage between battery positive terminal and starter motor “B” terminal.

For NISMO RS models

Terminals			Condition	Voltage (Approx.)
(+)	(–)			
	Starter motor “B” terminal	Terminal		
Battery positive terminal	E59	2	When the ignition switch is in START position	Less than 0.5 V

Except for NISMO RS models

Terminals			Condition	Voltage (Approx.)
(+)	(–)			
	Starter motor “B” terminal	Terminal		
Battery positive terminal	F11	2	When the ignition switch is in START position	Less than 0.5 V

Is the inspection result normal?

YES >> GO TO 4.
NO >> Check harness between the battery and the starter motor for poor continuity.

4. CHECK GROUND CIRCUIT STATUS (VOLTAGE DROP TEST)

1. Shift selector lever to “P” or “N” position. (CVT models)
   Keep depressing clutch pedal fully. (M/T models)
2. Check voltage between starter motor case and battery negative terminal.

Terminals		Condition	Voltage (Approx.)
(+)	(–)		
Starter motor case	Battery negative terminal	When the ignition switch is in START position	Less than 0.2 V

Is the inspection result normal?

YES >> “B” terminal circuit is OK. Further inspection is necessary. Refer to STR-16, "Work Flow (With GR8-1200 NI)" or STR-19, "Work Flow (Without GR8-1200 NI)".
NO >> Check the starter motor case and ground for poor continuity.

S TERMINAL CIRCUIT

Description

INFOID:0000000011464425

The starter motor magnetic switch is supplied with power when the ignition switch is turned to the START position while the selector lever is in the P or N position for CVT models or the clutch pedal is depressed for M/T models.

Diagnosis Procedure

INFOID:0000000011464426

CAUTION:
Perform diagnosis under the condition that engine cannot start by the following procedure.
1. Remove fuel pump fuse.
2. Crank or start the engine (where possible) until the fuel pressure is released.

1. CHECK “S” TERMINAL CIRCUIT

1. Turn ignition switch OFF.
2. Disconnect starter motor connector.
3. Shift selector lever to “P” or “N” position. (CVT models)
   Keep depressing clutch pedal fully. (M/T models)
4. Check voltage between starter motor harness connector and ground.

Terminals			Condition	Voltage (Approx.)
(+)		(–)		
Starter motor harness connector	Terminal			
F10	1	Ground	When the ignition switch is in START position	Battery voltage

Is the inspection result normal?

YES >> “S” terminal circuit is OK. Further inspection is necessary. Refer to STR-16, "Work Flow (With GR8-1200 NI)" or STR-19, "Work Flow (Without GR8-1200 NI)".

NO >> GO TO 2.

2. CHECK HARNESS CONTINUITY (OPEN CIRCUIT)

1. Disconnect IPDM E/R connector.
2. Check continuity between starter motor harness connector and IPDM E/R harness connector.

Starter motor harness connector		IPDM E/R harness connector		Continuity
Connector No.	Terminal No.	Connector No.	Terminal No.	
F10	1	E10	3	Existed

Is the inspection result normal?

YES >> Further inspection is necessary. Refer to STR-16, "Work Flow (With GR8-1200 NI)" or STR-19, "Work Flow (Without GR8-1200 NI)".

NO >> Repair the harness.

SYMPTOM DIAGNOSIS

STARTING SYSTEM

Symptom Table

INFOID:0000000011464427

Symptom	Reference
No normal cranking	Refer to STR-16, "Work Flow (With GR8-1200 NI)" or STR-19, "Work Flow (Without GR8-1200 NI)".
Starter motor does not rotate	

REMOVAL AND INSTALLATION

STARTER MOTOR

MR16DDT

MR16DDT : Exploded View

INFOID:0000000011611973

REMOVAL

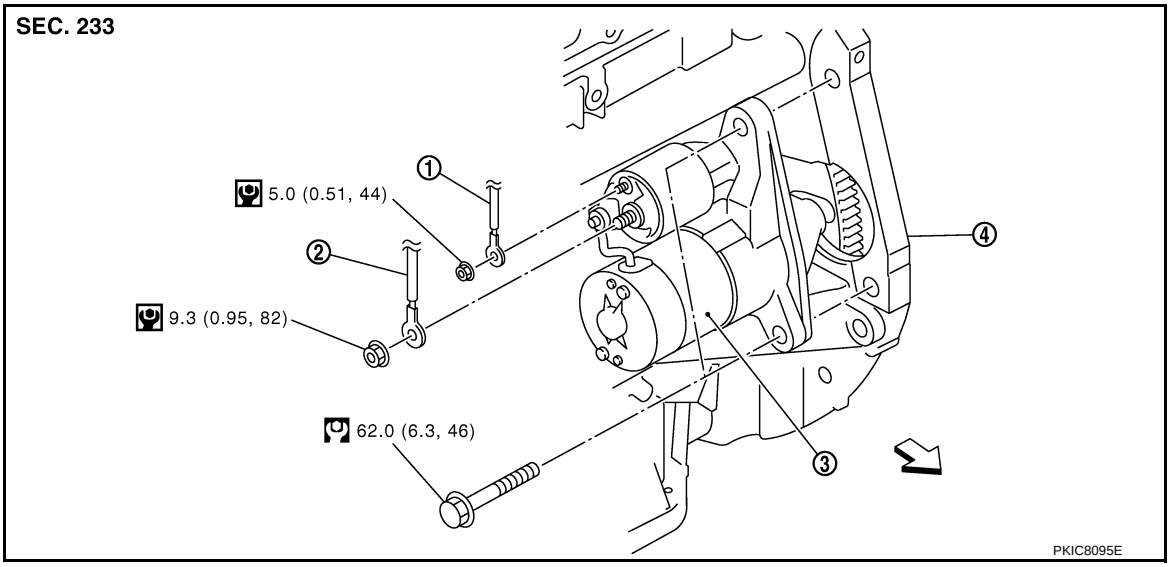

1. “S” terminal harness
2. “B” terminal harness
3. Starter motor
4. Cylinder block

⇦ : Vehicle front

: N·m (kg-m, in-lb)

: N·m (kg-m, ft-lb)

DISASSEMBLY

Type: S114-955

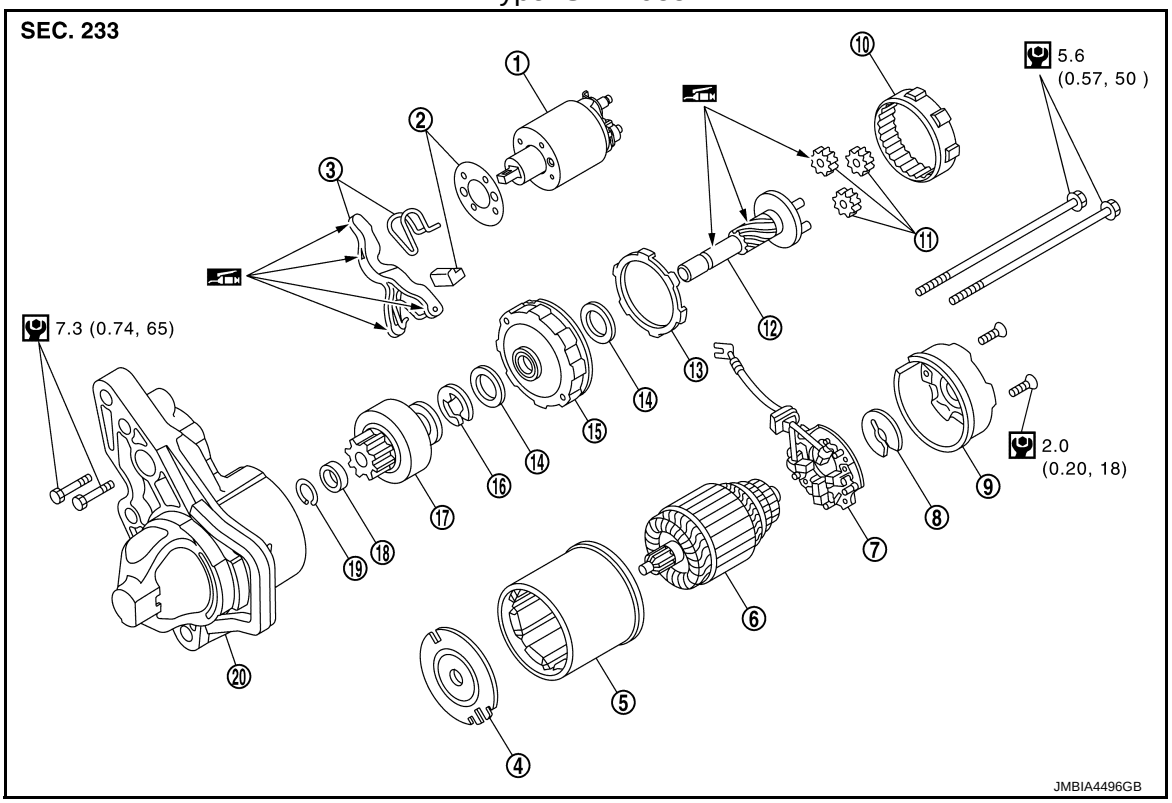

1. Magnetic switch assembly	2. Dust cover kit	3. Shift lever set
4. Center bracket (A)	5. Yoke assembly	6. Armature assembly
7. Brush holder assembly	8. Thrust washer	9. Rear cover assembly
10. Internal gear	11. Planetary gear	12. Pinion shaft
13. Packing	14. Thrust washer	15. Center bracket (P)
16. E-ring	17. Pinion assembly	18. Pinion stopper
19. Pinion stopper clip	20. Gear case assembly	

: N·m (kg-m, in-lb)

: High-temperature grease point

NOTE:
Apply high-temperature grease to lubricate the bearing, gears and frictional surface when assembling the starter.

MR16DDT : Removal and Installation

INFOID:0000000011611974

REMOVAL

1. Disconnect the battery cable from the negative terminal. Refer to PG-116, "Removal and Installation".
2. Drain engine coolant from radiator. Refer to CO-9, "Draining" (MR for NISMO RS models) or CO-39, "Draining and Filling" (MR except for NISMO RS models).
   CAUTION:
   Perform this step when engine is cold.
3. Remove charge air cooler. Refer to EM-32, "Removal and Installation" (MR for NISMO RS models) or EM-193, "Removal and Installation" (MR except for NISMO RS models).
4. Remove CVT water hose on thermostat housing side (MR for NISMO RS CVT models). Refer to CO-22, "Exploded View".
5. Remove radiator hose (lower) on thermostat housing side. Refer to CO-15, "Removal and Installation" (MR for NISMO RS models) or CO-45, "Removal and Installation" (MR except for NISMO RS models).
6. Move CVT water hose and radiator hose (lower) to a location where they do not inhibit work.

7. Open “B” terminal cover, in the direction indicated by an arrow as shown in the figure.

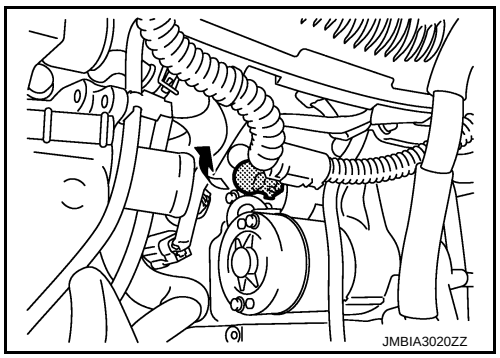

8. Remove “B” terminal nut and “B” terminal harness.
9. Remove “S” terminal nut and “S” terminal harness.
10. Disconnect harness connector (1) from crankshaft position sensor.
11. Remove harness fixing clip (A) from oil pan (upper), and then move harness (2) to a location where they do not inhibit work.

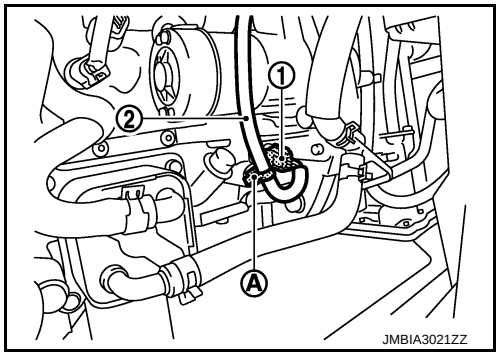

12. Remove starter motor mounting bolts.
13. Remove starter motor forward from the vehicle.

INSTALLATION

Note the following items, and install in the reverse order of removal.

CAUTION:

- **Be careful to tighten “B” terminal nut to the specified torque.**
- **After work is complete fill engine coolant. Refer to CO-10, "Refilling" (MR for NISMO RS models) or CO-39, "Draining and Filling" (MR except for NISMO RS models).**

SERVICE DATA AND SPECIFICATIONS (SDS)

SERVICE DATA AND SPECIFICATIONS (SDS)

Starter Motor

INFOID:0000000011464430

Type			S114 - 955
			HITACHI make
			Reduction gear type
System voltage		[V]	12
No-load	Terminal voltage	[V]	11
	Current	[A]	Less than 110
	Revolution	[rpm]	More than 3000