SECTION DLK

DOOR & LOCK

CONTENTS

PRECAUTION

PRECAUTIONS

Precaution for Technicians Using Medical Electric

INFOID:0000000007071871

OPERATION PROHIBITION

WARNING:

- **Parts with strong magnet is used in this vehicle.**
- **Technicians using a medical electric device such as pacemaker must never perform operation on the vehicle, as magnetic field can affect the device function by approaching to such parts.**

NORMAL CHARGE PRECAUTION

WARNING:

- **If a technician uses a medical electric device such as an implantable cardiac pacemaker or an implantable cardioverter defibrillator, the possible effects on the devices must be checked with the device manufacturer before starting the charge operation.**
- **As radiated electromagnetic wave generated by on board charger at normal charge operation may effect medical electric devices, a technician using a medical electric device such as implantable cardiac pacemaker or an implantable cardioverter defibrillator must not enter the vehicle compartment (including luggage room) during normal charge operation.**

PRECAUTION AT TELEMATICS SYSTEM OPERATION

WARNING:

- **If a technician uses implantable cardiac pacemaker or implantable cardioverter defibrillator (ICD), avoid the device implanted part from approaching within approximately 220 mm (8.66 in) from interior/exterior antenna.**
- **The electromagnetic wave of TCU might affect the function of the implantable cardiac pacemaker or the implantable cardioverter defibrillator (ICD), when using the service, etc.**
- **If a technician uses other medical electric devices than implantable cardiac pacemaker or implantable cardioverter defibrillator (ICD), the electromagnetic wave of TCU might affect the function of the device. The possible effects on the devices must be checked with the device manufacturer before TCU use.**

PRECAUTION AT INTELLIGENT KEY SYSTEM OPERATION

WARNING:

- **If a technician uses implantable cardiac pacemaker or implantable cardioverter defibrillator (ICD), avoid the device implanted part from approaching within approximately 220 mm (8.66 in) from interior/exterior antenna.**
- **The electromagnetic wave of Intelligent Key might affect the function of the implantable cardiac pacemaker or the implantable cardioverter defibrillator (ICD), at door operation, at each request switch operation, or at engine starting.**
- **If a technician uses other medical electric devices than implantable cardiac pacemaker or implantable cardioverter defibrillator (ICD), the electromagnetic wave of Intelligent Key might affect the function of the device. The possible effects on the devices must be checked with the device manufacturer before Intelligent Key use.**

Point to Be Checked Before Starting Maintenance Work

INFOID:0000000007079488

The high voltage system may starts automatically. It is required to check that the timer air conditioner and timer charge (during EVSE connection) are not set before starting maintenance work.

NOTE:

If the timer air conditioner or timer charge (during EVSE connection) is set, the high voltage system starts automatically even when the power switch is in OFF state.

High Voltage Precautions

INFOID:0000000006985460

DANGER:

Since hybrid vehicles and electric vehicles contain a high voltage battery, there is the risk of electric shock, electric leakage, or similar accidents if the high voltage component and vehicle are

handled incorrectly. Be sure to follow the correct work procedures when performing inspection and maintenance.

WARNING:

- **Be sure to remove the service plug in order to disconnect the high voltage circuits before performing inspection or maintenance of high voltage system harnesses and parts.**
- **The removed service plug must always be carried in a pocket of the responsible worker or placed in the tool box during the procedure to prevent the plug from being connected by mistake.**
- **Be sure to wear insulated protective equipment before beginning work on the high voltage system.**
- **Never allow workers other than the responsible person to touch the vehicle containing high voltage parts. To keep others from touching the high voltage parts, these parts must be covered with an insulating sheet except when using them.**

CAUTION:

Never bring the vehicle into the READY status with the service plug removed unless otherwise instructed in the Service Manual. A malfunction may occur if this is not observed.

HIGH VOLTAGE HARNESS AND EQUIPMENT IDENTIFICATION

All the high voltage harnesses and connectors are orange. The Li-ion battery and other high voltage devices include an orange high voltage label. Never touch these harnesses and high voltage parts.

HANDLING OF HIGH VOLTAGE HARNESS AND TERMINALS

Immediately insulate disconnected high voltage connectors and terminals with insulating tape.

REGULATIONS ON WORKERS WITH MEDICAL ELECTRONICS

WARNING:

The vehicle contains parts that contain powerful magnets. If a person who is wearing a heart pacemaker or other medical device is close to these parts, the medical device may be affected by the magnets. Such persons must not perform work on the vehicle.

PROHIBITED ITEMS TO CARRY DURING THE WORK

Hybrid vehicles and electric vehicles contain parts with high voltage and intense magnetic force. Never carry metal products and magnetic recording media (e.g. cash card, prepaid card) to repair/inspect high voltage parts. If this is not observed, the metal products may create a risk of short circuit and the magnetic recording media may lose their magnetic recording.

POSTING A SIGN OF “DANGER! HIGH VOLTAGE AREA. KEEP OUT”

< PRECAUTION >

Indicate "HIGH VOLTAGE. DO NOT TOUCH" on the vehicle under repair/inspection to call attention to other workers.

DANGER:
HIGH VOLTAGE
REPAIR IN PROGRESS.
DO NOT TOUCH!

Person in charge:_____

DANGER:
HIGH VOLTAGE
REPAIR IN PROGRESS.
DO NOT TOUCH!

Person in charge:_____

Copy this page and put it after folding on the roof of the vehicle in service.

JSAIA1600GB

Precautions for Removing Battery Terminal

INFOID:0000000006985461

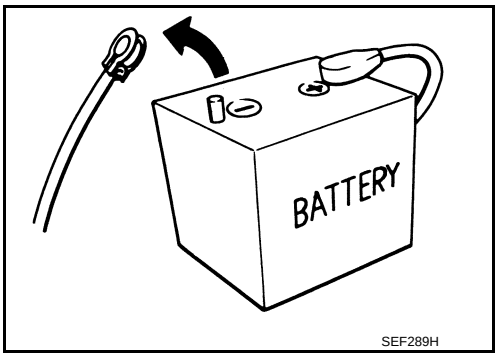

- When removing the 12V battery terminal, turn OFF the power switch and wait at least 5 minutes.
  NOTE:
  ECU may be active for several minutes after the power switch is turned OFF. If the battery terminal is removed before ECU stops, then a DTC detection error or ECU data corruption may occur.
- Always disconnect the battery terminal within 60 minutes after turning OFF the power switch. Even when the power switch is OFF, the 12V battery automatic charge control may automatically start after a lapse of 60 minutes from power switch OFF.
- Disconnect 12V battery terminal according to the following steps.

WORK PROCEDURE

1. Check that EVSE is not connected.
   NOTE:
   If EVSE is connected, the air conditioning system may be automatically activated by the timer A/C function.
2. Turn the power switch OFF → ON → OFF. Get out of the vehicle. Close all doors (including back door).
3. Check that the charge status indicator lamp does not blink and wait for 5 minutes or more.
   NOTE:
   If the battery is removed within 5 minutes after the power switch is turned OFF, plural DTCs may be detected.
4. Remove 12V battery terminal within 60 minutes after turning the power switch OFF → ON → OFF.
   CAUTION:
   - **After all doors (including back door) are closed, if a door (including back door) is opened before battery terminals are disconnected, start over from Step 1.**
   - **After turning the power switch OFF, if "Remote A/C" is activated by user operation, stop the air conditioner and start over from Step 1.**

   NOTE:
   Once the power switch is turned ON → OFF, the 12V battery automatic charge control does not start for approximately 1 hour.

- For vehicles with the 2-batteries, be sure to connect the main battery and the sub battery before turning ON the power switch.
  NOTE:
  If the power switch is turned ON with any one of the terminals of main battery and sub battery disconnected, then DTC may be detected.
- After installing the 12V battery, always check "Self Diagnosis Result" of all ECUs and erase DTC.
  NOTE:
  The removal of 12V battery may cause a DTC detection error.

Precaution for Supplemental Restraint System (SRS) "AIR BAG" and "SEAT BELT PRE-TENSIONER"

INFOID:0000000007037030

The Supplemental Restraint System such as "AIR BAG" and "SEAT BELT PRE-TENSIONER", used along with a front seat belt, helps to reduce the risk or severity of injury to the driver and front passenger for certain types of collision. This system includes seat belt switch inputs and dual stage front air bag modules. The SRS system uses the seat belt switches to determine the front air bag deployment, and may only deploy one front air bag, depending on the severity of a collision and whether the front occupants are belted or unbelted. Information necessary to service the system safely is included in the "SRS AIR BAG" and "SEAT BELT" of this Service Manual.

WARNING:

Always observe the following items for preventing accidental activation.

- **To avoid rendering the SRS inoperative, which could increase the risk of personal injury or death in the event of a collision that would result in air bag inflation, all maintenance must be performed by an authorized NISSAN/INFINITI dealer.**

- **Improper maintenance, including incorrect removal and installation of the SRS, can lead to personal injury caused by unintentional activation of the system. For removal of Spiral Cable and Air Bag Module, see “SRS AIR BAG”.**
- **Never use electrical test equipment on any circuit related to the SRS unless instructed to in this Service Manual. SRS wiring harnesses can be identified by yellow and/or orange harnesses or harness connectors.**

PRECAUTIONS WHEN USING POWER TOOLS (AIR OR ELECTRIC) AND HAMMERS

WARNING:

Always observe the following items for preventing accidental activation.

- **When working near the Air Bag Diagnosis Sensor Unit or other Air Bag System sensors with the power switch ON, never use air or electric power tools or strike near the sensor(s) with a hammer. Heavy vibration could activate the sensor(s) and deploy the air bag(s), possibly causing serious injury.**
- **When using air or electric power tools or hammers, always switch the power switch OFF, disconnect the 12V battery, and wait at least 3 minutes before performing any service.**

Precaution for Procedure without Cowl Top Cover

INFOID:0000000006855491

When performing the procedure after removing cowl top cover, cover the lower end of windshield with urethane, etc to prevent damage to windshield.

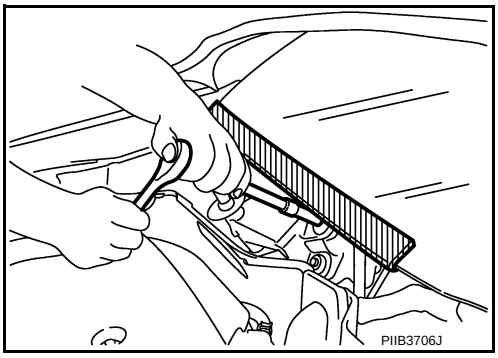

Work

INFOID:0000000006855492

- After removing and installing the opening/closing parts, be sure to carry out fitting adjustments to check their operational.
- Check the lubrication level, damage, and wear of each part. If necessary, grease or replace it.

PREPARATION

PREPARATION

Special Service Tools

INFOID:0000000007034990

The actual shapes of Kent-Moore tools may differ from those of special service tools illustrated here.

Tool number (Kent-Moore No.) Tool name		Description
(J-39570) Chassis ear	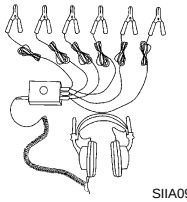 SIIA0993E	Locates the noise
(J-43980) NISSAN Squeak and Rattle Kit	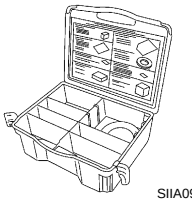 SIIA0994E	Repairs the cause of noise

Commercial Service Tools

INFOID:0000000006855493

Tool name		Description
Insulated gloves [Guaranteed insulation performance for 1000V/300A]	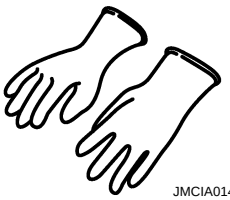 JMCIA0149ZZ	Removing and installing high voltage components
Leather gloves [Use leather gloves that can fasten the wrist tight]	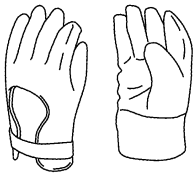 JPCIA0066ZZ	• Removing and installing high voltage components • Protect insulated gloves
Insulated safety shoes	 JPCIA0011ZZ	Removing and installing high voltage components

Tool name		Description
Safety glasses [ANSI Z87.1]	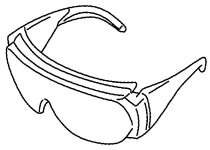 JPCIA0012ZZ	• Removing and installing high voltage components • To protect eye from the spatter on the work to electric line
Face shield	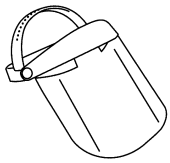 JPCIA0167ZZ	• Removing and installing high voltage components • To protect eye from the spatter on the work to electric line
Insulated helmet	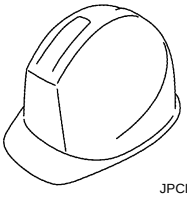 JPCIA0013ZZ	Removing and installing high voltage components
Engine ear	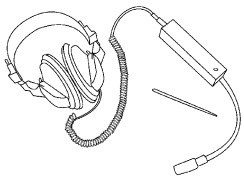 SIIA0995E	Locates the noise
Remover tool	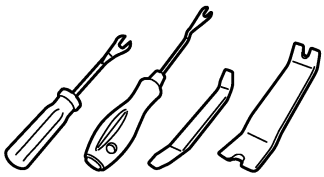 JMKIA3050ZZ	Removes the clips, pawls, and metal clips
Power tool	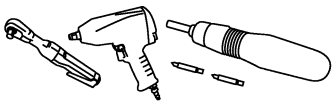 PIIB1407E	

SYSTEM DESCRIPTION

COMPONENT PARTS

Component Parts Location

INFOID:0000000008166260

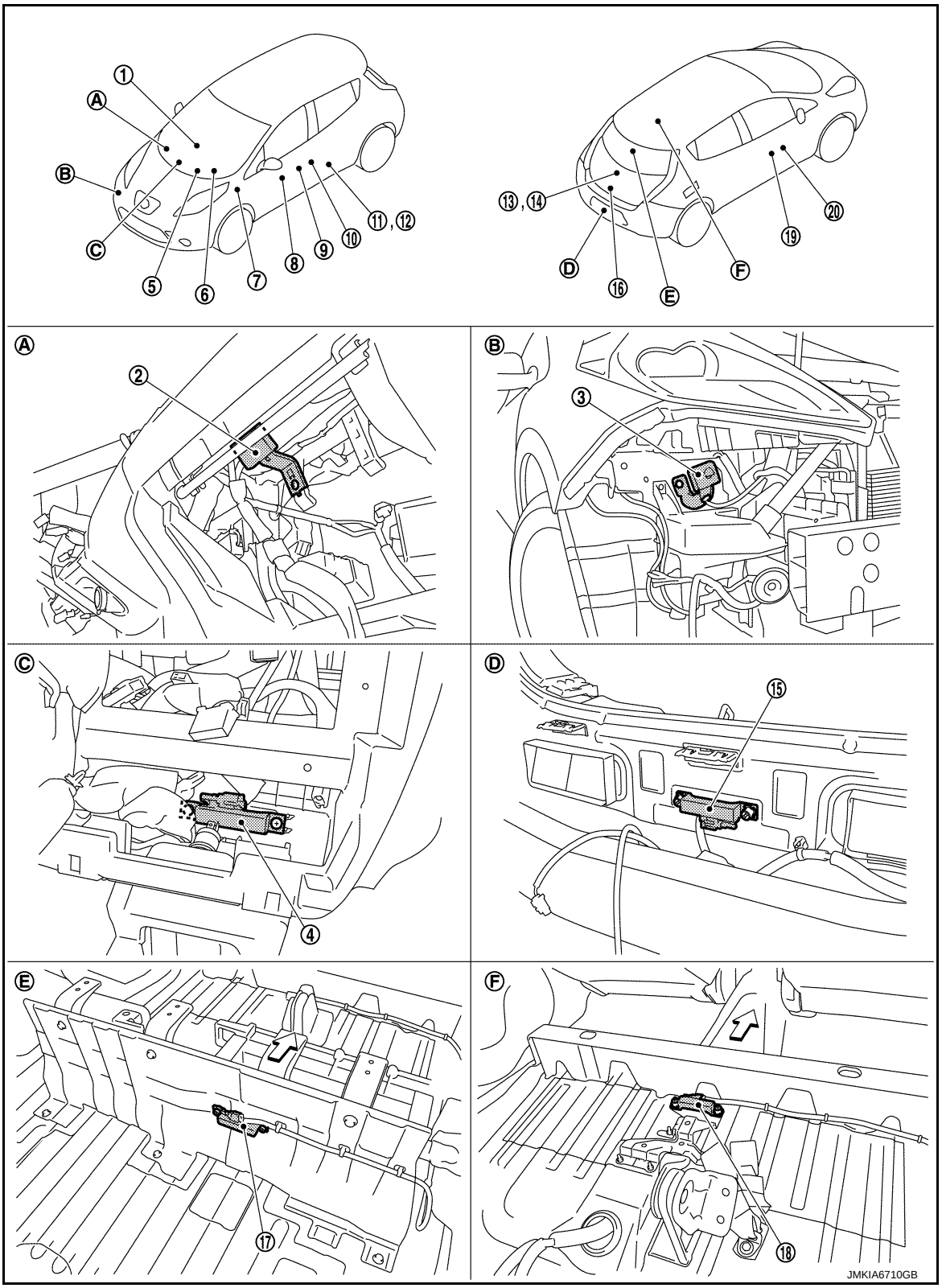

COMPONENT PARTS

A. View with glove box lid removed
B. View with front bumper removed
C. View with cluster lid C removed
D. View with rear bumper removed
E. View with luggage floor upper finisher removed
F. View with rear seat removed

No.	Component	Function
1.	Electric shift control module	Transmits P position signal to BCM Refer to TM-33, "Component Parts Location" for detailed installation location
2.	Remote keyless entry receiver	DLK-16, "Remote Keyless Entry Receiver"
3.	Intelligent Key warning buzzer	DLK-17, "Intelligent Key Warning Buzzer"
4.	Inside key antenna (instrument center)	DLK-15, "Inside Key Antenna (Instrument Center)"
5.	Power switch	• Changes power position • Inputs power switch ON/OFF condition to BCM Refer to SEC-9, "Component Parts Location" for detailed installation location
6.	Combination meter	• Displays each operation method guide and warning for system malfunction • Performs operation method guide and warning with buzzer • Transmits vehicle speed signal to CAN communication line Refer to MWI-7, "METER SYSTEM : Component Parts Location" for detailed installation location
7.	BCM	BCM detects the vehicle status according to signals from each door switch, each outside/inside key antenna, and unlock sensor. BCM transmits drive signal to door lock actuator when BCM receives operation signal from remote keyless entry receiver and each switch. Refer to BCS-6, "BODY CONTROL SYSTEM : Component Parts Location" for detailed installation location
8.	Door lock and unlock switch	DLK-17, "Door Lock and Unlock Switch"
9.	Outside key antenna (driver side)	DLK-16, "Outside Key Antenna (Driver Side)"
10.	Front door request switch (driver side)	DLK-17, "Front Door Request Switch (Driver Side)"
11.	Front door lock assembly (driver side)	DLK-16, "Front Door Lock Assembly (Driver Side)"
12.	Door switch	DLK-18, "Door Switch"
13.	Back door request switch	DLK-18, "Back Door Request Switch"
14.	Back door opener switch	DLK-18, "Back Door Opener Switch"
15.	Outside antenna (rear bumper)	DLK-15, "Outside Key Antenna (Rear Bumper)"
16.	Back door lock assembly (door opener actuator)	DLK-17, "Back Door Lock Assembly"
17.	Inside key antenna (luggage room)	DLK-15, "Inside Key Antenna (Luggage Room)"
18.	Inside key antenna (rear seat)	DLK-15, "Inside Key Antenna (Rear Seat)"
19.	Front door request switch (passenger side)	DLK-18, "Front Door Request Switch (Passenger Side)"
20.	Outside key antenna (passenger side)	DLK-16, "Outside Key Antenna (Passenger Side)"

Inside Key Antenna (Instrument Center)

INFOID:0000000008166261

- Inside key antenna (instrument center) detects that Intelligent Key is within the inside detection area, and then transmits detection status to BCM.
- Inside key antenna (instrument center) is installed in the rear of cluster lid C of instrument center.

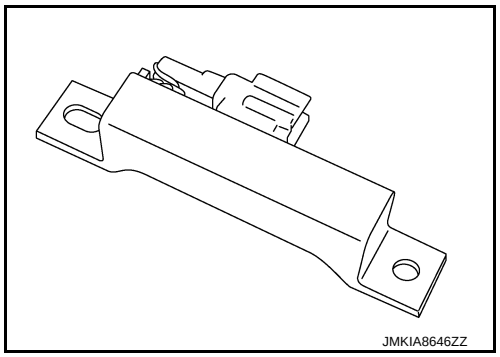

Inside Key Antenna (Rear Seat)

INFOID:0000000008166262

- Inside key antenna (rear seat) detects that Intelligent Key is within the inside detection area, and then transmits detection status to BCM.
- Inside key antenna (rear seat) is installed underneath rear seat cushion.

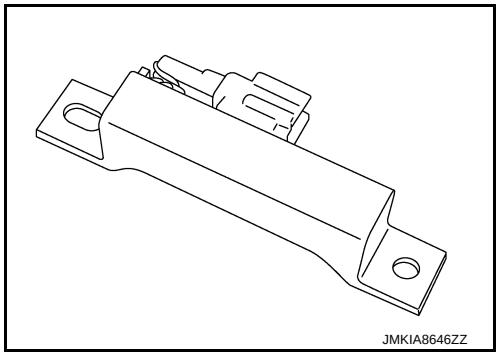

Inside Key Antenna (Luggage Room)

INFOID:0000000008166263

- Inside key antenna (luggage room) detects that Intelligent Key is within the inside detection area, and then transmits detection status to BCM.
- Inside key antenna (luggage room) is installed in the rear of luggage floor upper finisher.

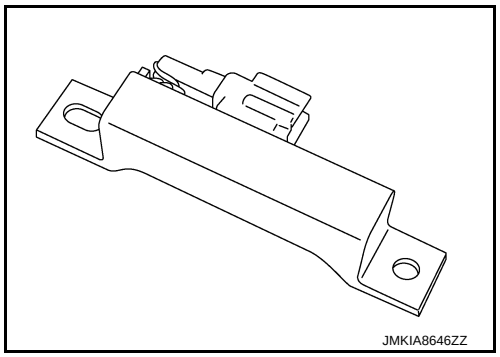

Outside Key Antenna (Rear Bumper)

INFOID:0000000008166264

- Outside key antenna (rear bumper) detects that Intelligent Key is within the outside detection area, and then transmits detection status to BCM. Request signal is transmitted simultaneously to Intelligent Key.
- Outside key antenna (rear bumper) is installed in the rear of rear bumper.

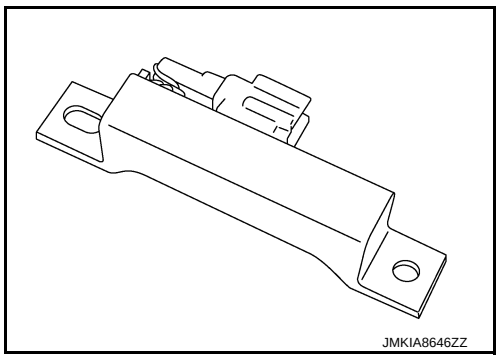

Outside Key Antenna (Driver Side)

INFOID:0000000008166265

- Outside key antenna (driver side) detects that Intelligent Key is within the outside detection area, and then transmits detection status to BCM. Request signal is transmitted simultaneously to Intelligent Key.
- Outside key antenna (driver side) is installed in driver side outside handle.

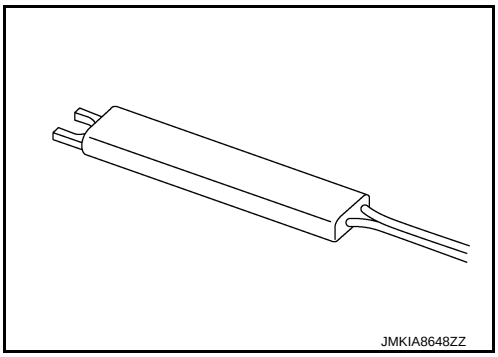

Outside Key Antenna (Passenger Side)

INFOID:0000000008166266

- Outside key antenna (passenger side) detects that Intelligent Key is within the outside detection area, and then transmits detection status to BCM. Request signal is transmitted simultaneously to Intelligent Key.
- Outside key antenna (passenger side) is installed in driver side outside handle.

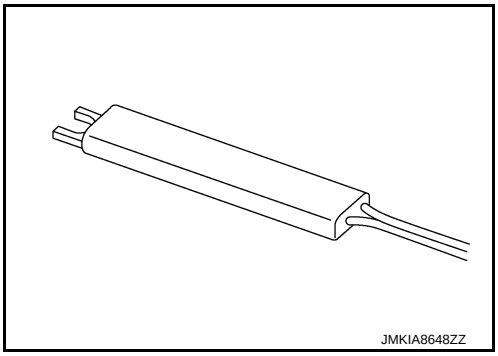

Front Door Lock Assembly (Driver Side)

INFOID:0000000008166267

- Door lock actuator and unlock sensor are Integrated in driver door lock assembly.
- Door lock actuator receives lock/unlock signal from BCM, and then locks/unlocks driver door.
- Only front door lock assembly (driver side) integrates unlock sensor. Unlock sensor transmits lock/unlock status of driver seat to BCM.

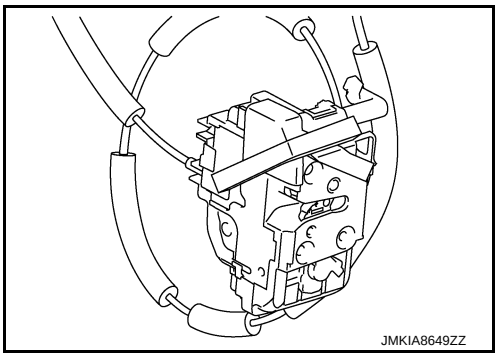

Remote Keyless Entry Receiver

INFOID:0000000008166268

- Remote keyless entry receiver receives button operation signal and key ID signal of Intelligent Key, and then transmits them to BCM.
- Remote keyless entry receiver is installed in the rear of glove box lid.

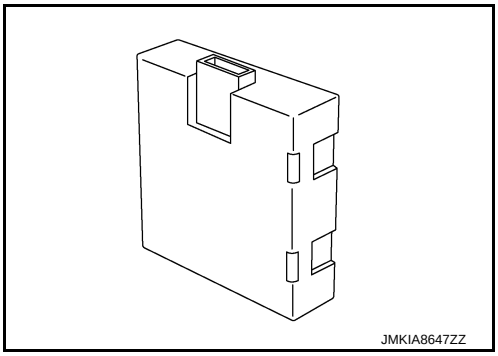

Intelligent Key Warning Buzzer

INFOID:0000000008166269

- Intelligent Key warning buzzer warns the user, who is outside vehicle, of operation confirmation according to Intelligent Key operation and door request switch operation, or of an inappropriate operation.
- Intelligent Key warning buzzer is installed in the rear of front bumper and underneath headlight RH.

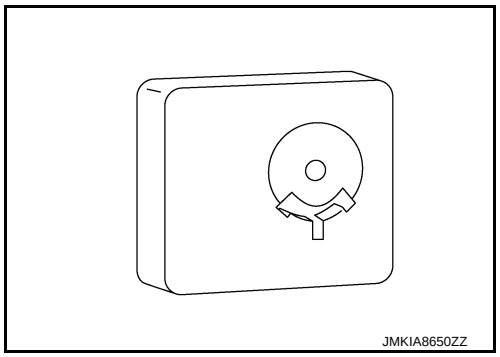

Back Door Lock Assembly

INFOID:0000000008166270

- Back door lock assembly lock assembly integrates door opener actuator and back door switch.
- Door opener actuator opens the back door according to the door open signal from BCM.
- Back door switch detects open/close status of back door.

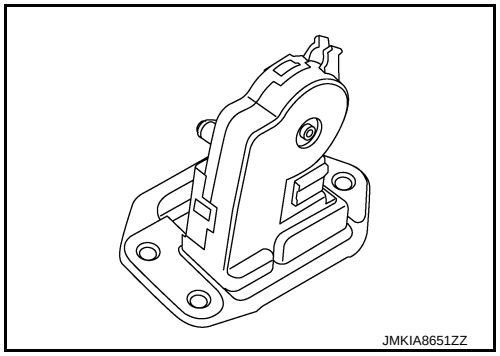

Door Lock and Unlock Switch

INFOID:0000000008166271

- Door lock and unlock switch transmits door lock/unlock signal operation to BCM.
- Door lock and unlock switch (1) is Integrated in the power window main switch and front power window switch (passenger side).

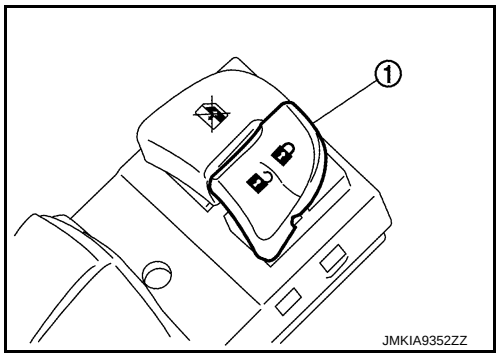

Front Door Request Switch (Driver Side)

INFOID:0000000008166272

- Front door request switch (driver side) transmits door request switch signal to BCM.
- Front door request switch (driver side) (1) is integrated in driver side outside handle.

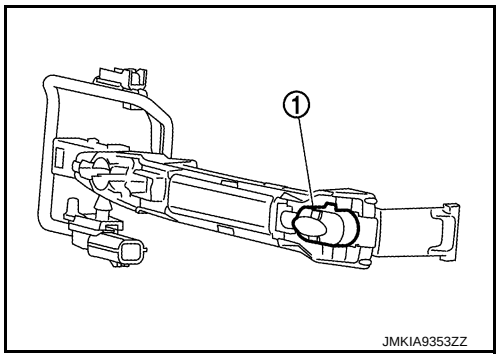

Front Door Request Switch (Passenger Side)

INFOID:0000000008166273

- Front door request switch (passenger side) transmits door request switch signal to BCM.
- Front door request switch (passenger side) (1) is integrated in passenger side outside handle.

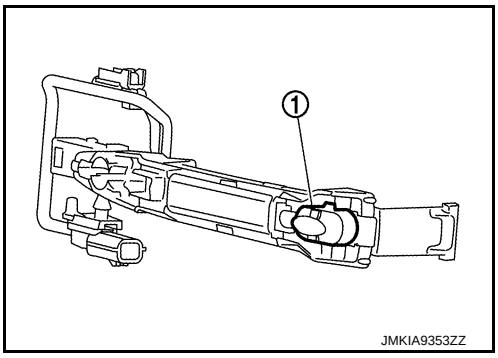

Door Switch

INFOID:0000000008166274

Door switch detects open/close status of door and transmits door switch signal to BCM.

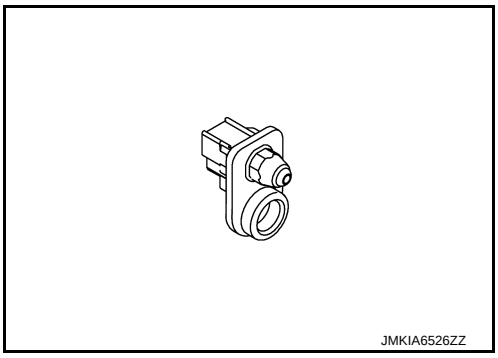

Back Door Request Switch

INFOID:0000000008166275

- Back door request switch transmits back door request switch signal to BCM.
- Back door request switch (1) is integrated in outside handle (back door).

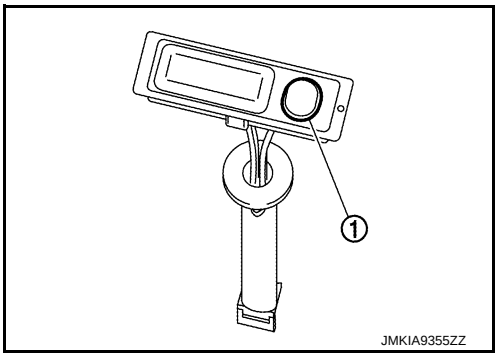

Back Door Opener Switch

INFOID:0000000008166276

- Back door opener switch transmits back door opener switch signal to BCM.
- Back door opener switch (1) is integrated in outside handle (back door).

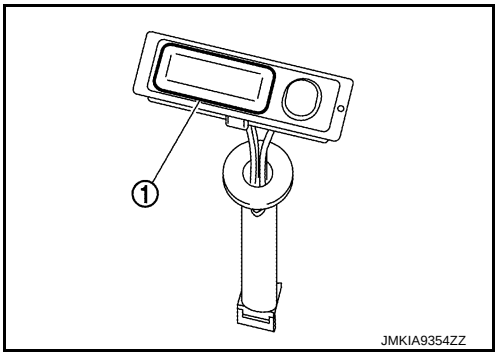

SYSTEM (POWER DOOR LOCK SYSTEM)

System Description

INFOID:0000000006855495

SYSTEM DIAGRAM

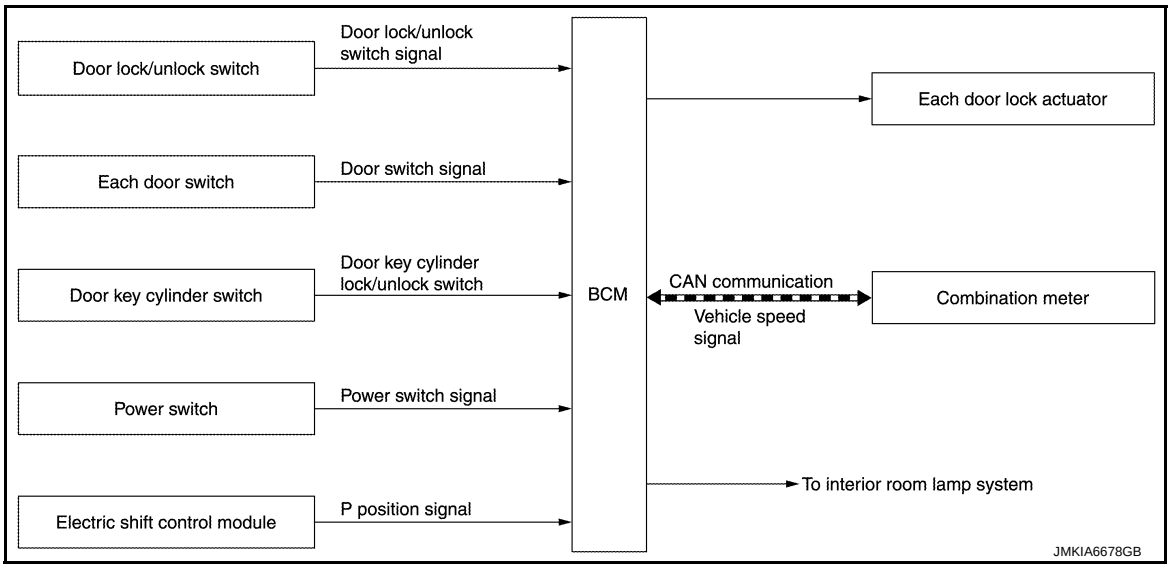

DOOR LOCK FUNCTION

Door Lock and Unlock Switch

- The door lock and unlock switch (driver side) is built into power window main switch.
- The door lock and unlock switch (passenger side) is built into front power window switch (passenger side).
- Interlocked with the locking operation of door lock and unlock switch, door lock actuators of all doors are locked.
- Interlocked with the unlocking operation of door lock and unlock switch, door lock actuators of all doors are unlocked.

Door Key Cylinder Switch

- With the mechanical key inserted in the door key cylinder on driver side, turning it to lock position, locks door lock actuator of all doors.
- With the mechanical key inserted in the door key cylinder on driver side, turning it to unlock position once unlocks the driver side door, turning it to unlock position again within 5 seconds after the first unlock operation unlocks all of the other doors actuator. (SELECTIVE UNLOCK OPERATION)

Selective unlock operation mode can be changed using CONSULT.
Refer to DLK-42, "INTELLIGENT KEY : CONSULT Function (BCM - INTELLIGENT KEY)".

POWER POSITION WARNING FUNCTION

When door lock and unlock switch are operated while driver side door is open and power position is ACC or ON, door locks once but immediately unlocks.

INTERIOR ROOM LAMP CONTROL FUNCTION

Interior room lamp is controlled according to door lock /unlock state. Refer to INL-8, "INTERIOR ROOM LAMP CONTROL SYSTEM : System Description".

AUTOMATIC DOOR LOCK/UNLOCK FUNCTION (LOCK OPERATION)

The interlock door lock function is the function that locks all doors linked with the vehicle speed or shift position. It has 2 types as per the following items.

Vehicle Speed Sensing Auto Door Lock

All doors are locked when the vehicle speed reaches 24 km/h (15 MPH) or more.
BCM outputs the lock signal to all door lock actuators when it detects that the power switch is turned ON, all doors are closed and the vehicle speed received from the combination meter via CAN communication becomes 24 km/h (15 MPH) or more.

P Position Interlock Door Lock

All doors are locked when shifting the selector lever from the P position to any position other than P.

BCM outputs the lock signal to all door lock actuators when it detects that the power switch is in the ON position and the shift signal received from the electric shift control module is shifted from the P position to any position other than P.

Setting change of Automatic Door Lock/Unlock Function

The lock operation setting of the automatic door lock/unlock function can be changed.

With CONSULT

The ON/OFF switching of the automatic door lock function and the type selection of the automatic door lock/unlock function can be performed at the WORK SUPPORT setting of CONSULT.

Without CONSULT

The automatic door lock function ON/OFF can be switched by performing the following operation.

1. Close all doors (door switch OFF)
2. Power switch: OFF→ON
3. Press and hold the door lock and unlock switch for 5 seconds or more in the lock direction within 20 seconds after turning the power switch ON.
4. The switching complete when the hazard lamp blinks.

OFF → ON	: 2 blinks
ON → OFF	: 1 blink

AUTOMATIC DOOR LOCK/UNLOCK FUNCTION (UNLOCK OPERATION)

The automatic door lock/unlock function is the function that unlocks all doors linked with the power switch position or shift position. It has 2 types as per the following items.

POWER OFF Interlock Door Unlock

All doors are unlocked when the power switch position is changed from ON to OFF.
BCM outputs the unlock signal to all door lock actuators when it detects that the power switch position is changed from ON to OFF.

P Position Interlock Door Unlock

All doors are unlocked when shifting the selector lever from any position other than P to P position.
BCM outputs the unlock signal to all door lock actuators when it detects that the power switch is in the ON position and the shift signal received from electric shift control module is shifted from any position other than P to P position.

Setting change of Automatic Door Lock/Unlock Function

The unlock operation setting of the automatic door lock/unlock function can be changed.

With CONSULT

The ON/OFF switching of the automatic door lock/unlock function and the type selection of the automatic door lock/unlock function can be performed at the WORK SUPPORT setting of CONSULT.

Without CONSULT

The automatic door lock/unlock function ON/OFF can be switched by performing the following operation.

1. Close all doors below (door switch OFF)
2. Power switch: OFF→ON
3. Press and hold the door lock and unlock switch for 5 seconds or more in the unlock direction within 20 seconds after turning the power switch position ON.
4. The switching is complete when the hazard lamp blinks.

OFF → ON	: 2 blinks
ON → OFF	: 1 blink

Circuit Diagram

INFOID:0000000006855496

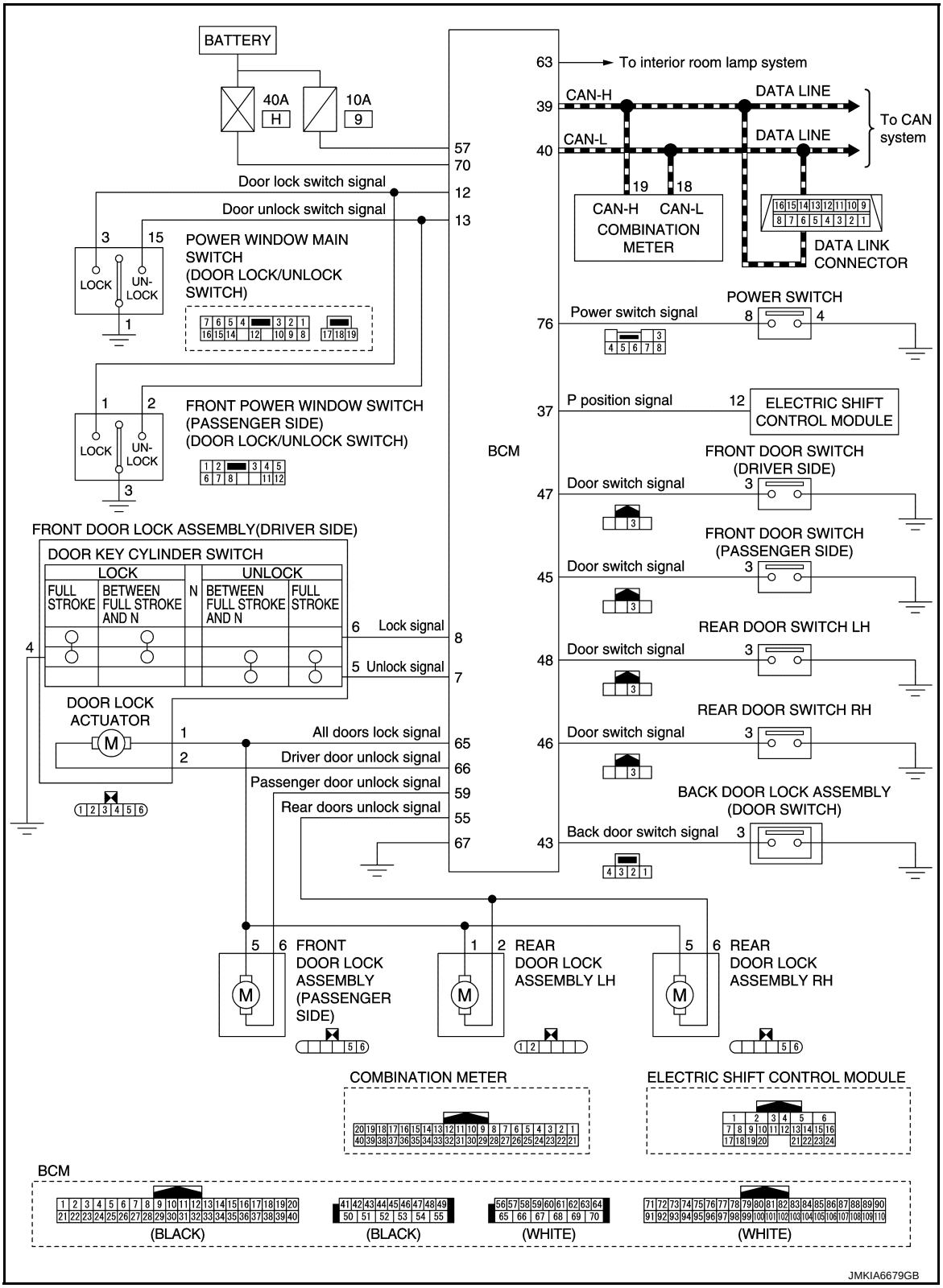

SYSTEM (INTELLIGENT KEY SYSTEM)

INTELLIGENT KEY SYSTEM

INTELLIGENT KEY SYSTEM : System Description

INFOID:0000000006855497

SYSTEM DIAGRAM

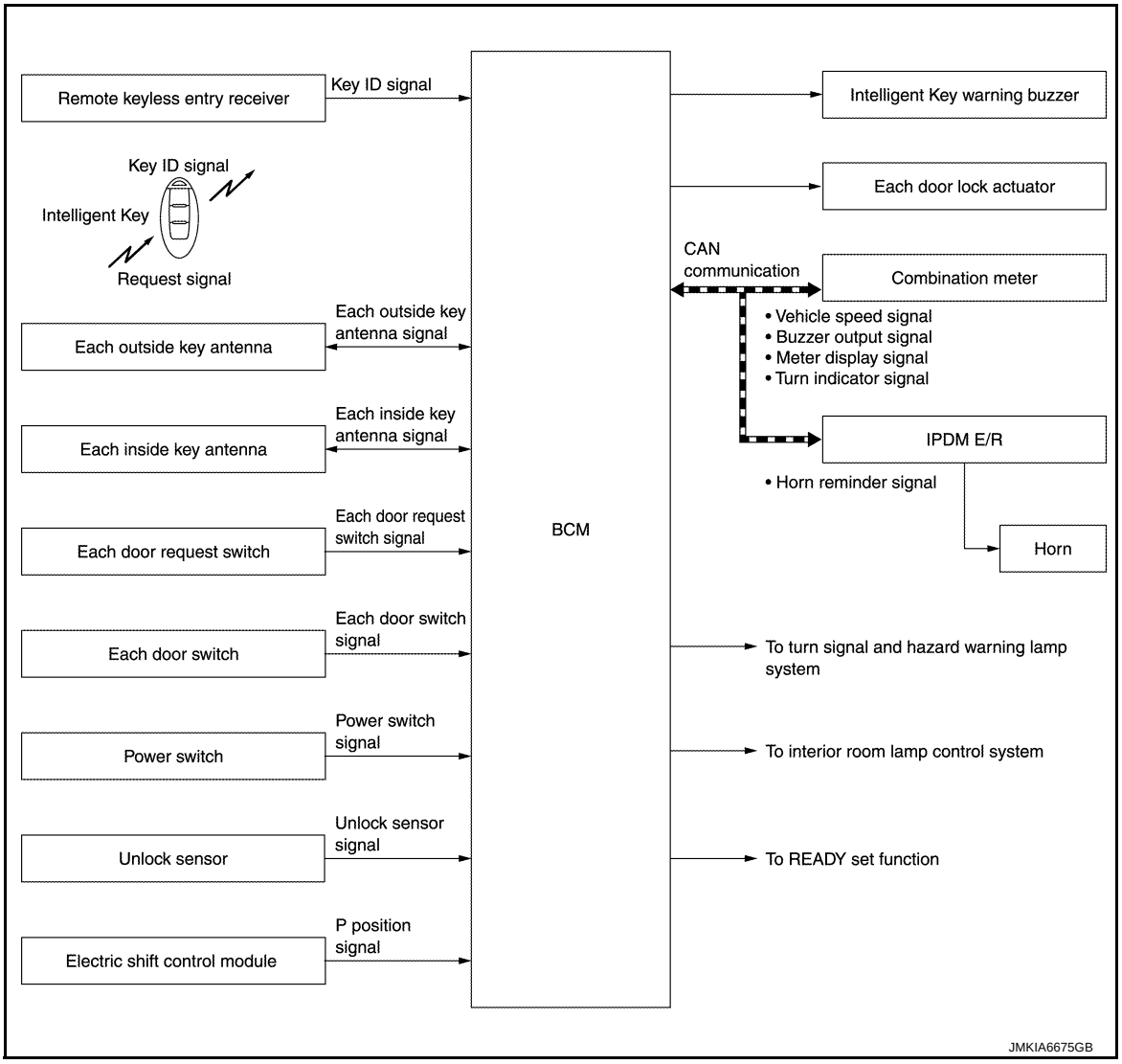

- The Intelligent Key system is a system that makes it possible to lock and unlock the door locks (door lock/unlock function) by carrying the Intelligent Key, which operates based on the results of electronic ID verification using two-way communication between the Intelligent Key and the vehicle (BCM).
  NOTE:
  The driver should always carry the Intelligent Key
- The settings for each function can be changed with CONSULT.
- If an Intelligent Key is lost, a new Intelligent Key can be registered. A maximum of 4 Intelligent Keys can be registered.
- It is possible to perform a diagnosis on the system and register an Intelligent Key with CONSULT.

Function	Description	Refer
Door lock	Lock/unlock can be performed by pressing the request switch	DLK-26
Back door opener	The back door can be opened by carrying the Intelligent Key and pressing the back door opener switch	DLK-28
Remote keyless entry	Lock/unlock can be performed by pressing the remote controller button of the Intelligent Key	DLK-29

Function	Description	Refer
Key reminder	The key reminder buzzer sounds a warning if the door is locked with the key left inside the vehicle	DLK-32
Warning	If an action that does not meet the operating condition of the Intelligent Key system is taken, the buzzer sounds to inform the driver	DLK-32
READY set function	The vehicle can be set READY while carrying the Intelligent Key	SEC-12
Panic alarm	When Intelligent Key panic alarm button is pressed, horn sounds	SEC-22
Interior room lamp control	Interior room lamp is controlled according to door lock/unlock state	INL-8

INTELLIGENT KEY SYSTEM : Circuit Diagram

INFOID:0000000006855503

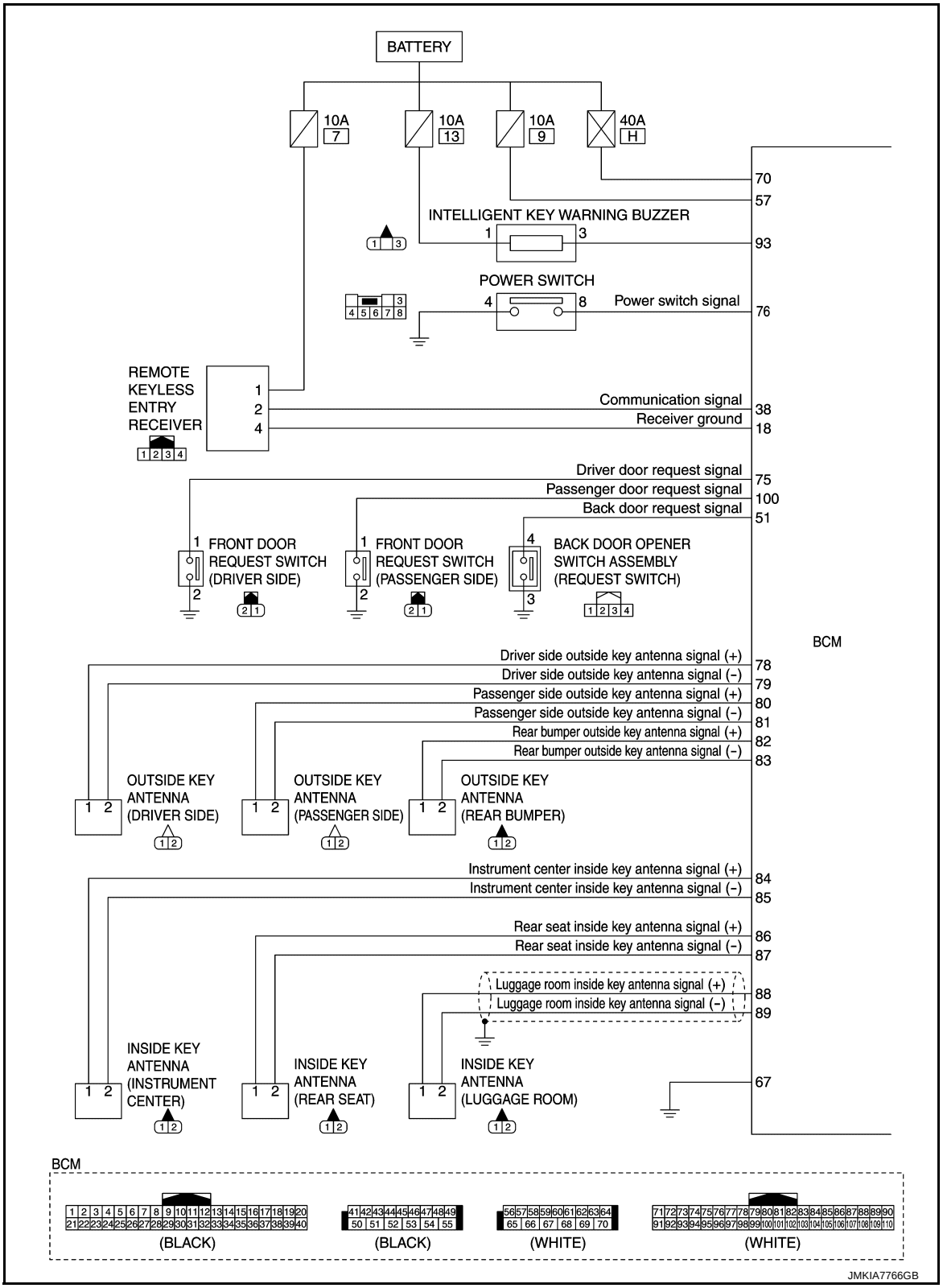

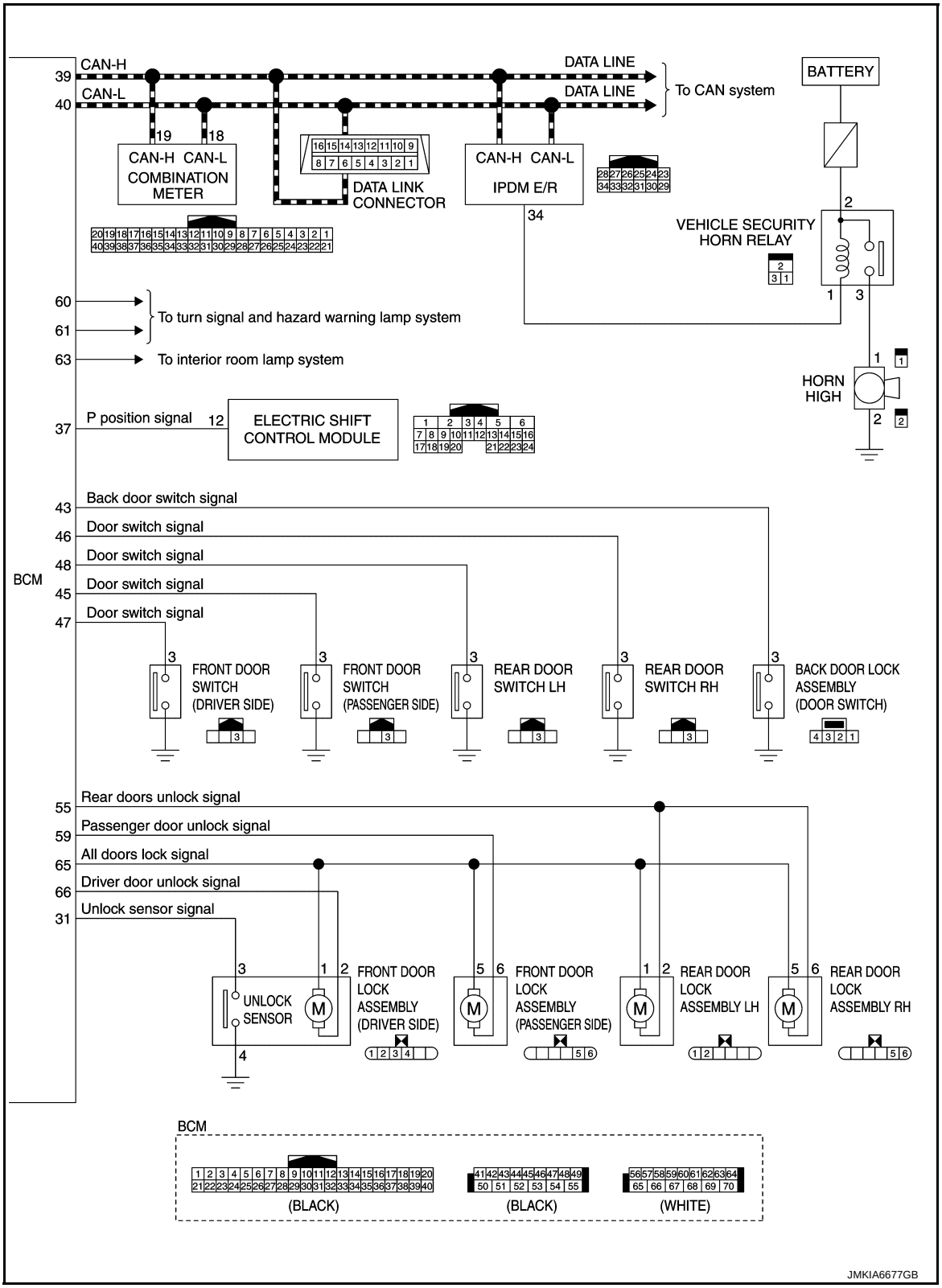

DOOR LOCK FUNCTION

DOOR LOCK FUNCTION : System Description

INFOID:0000000006855498

SYSTEM DIAGRAM

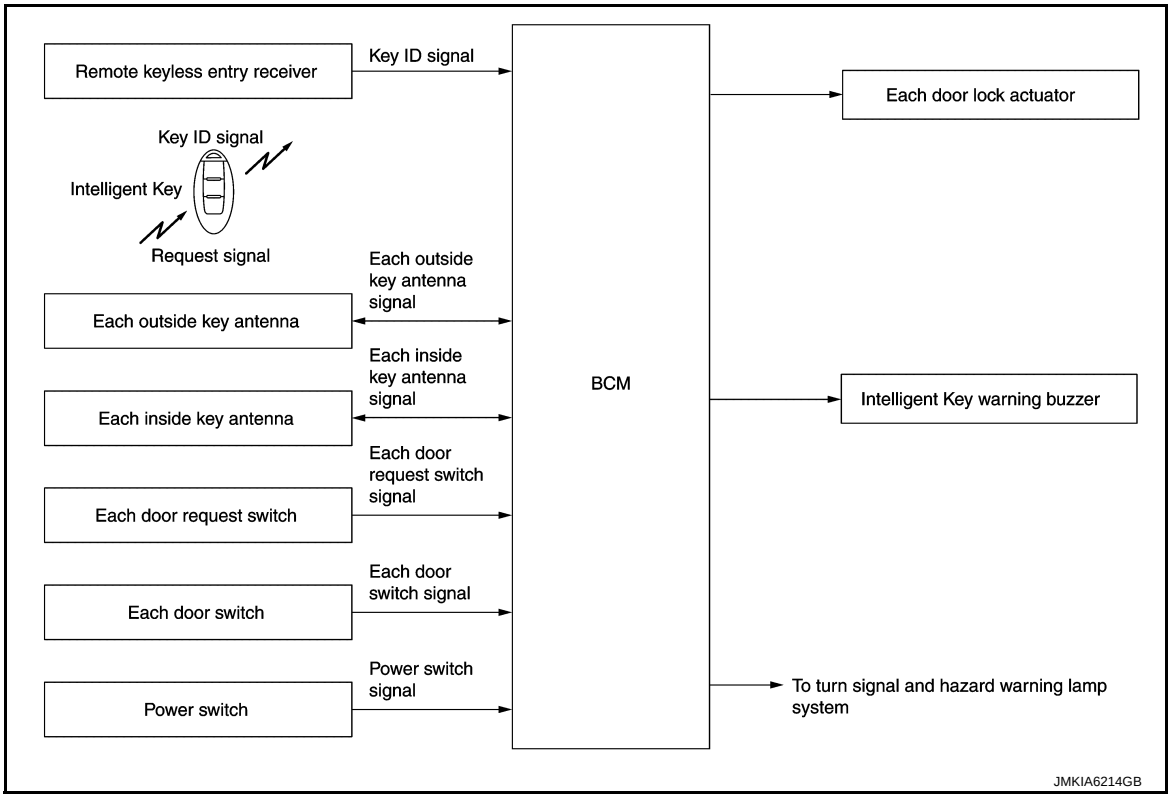

DOOR REQUEST SWITCH OPERATION

When pressing the door request switch, it is possible to lock and unlock the door by carrying the Intelligent Key.

OPERATION DESCRIPTION

- When the BCM detects that each door request switch is pressed, it activates the outside key antenna and inside key antenna corresponding to the pressed door request switch and transmits the request signal to the Intelligent Key. And then, check that the Intelligent Key is near the door.
- If the Intelligent Key is within the outside key antenna detection area, it receives the request signal and transmits the key ID signal to the BCM via remote keyless entry receiver.
- BCM receives the key ID signal and compares it with the registered key ID.
- BCM transmits door lock/unlock signal and operates each door lock actuator. At the same time, BCM blinks hazard warning lamp (lock: 2 times, unlock: 1 time) and sounds Intelligent Key buzzer (lock: 2 times, unlock: 1 time) as a reminder.

OPERATION CONDITION

If the following conditions are satisfied, door lock/unlock operation is performed if the door request switch is operated.

Each door request switch operation	Operation condition
Lock	• All doors are closed • Panic alarm is not activated • Power switch is in the OFF position • Intelligent Key is outside the vehicle • Intelligent Key is within outside key antenna detection area *
Unlock	• Power switch is in the OFF position • Intelligent Key is outside the vehicle • Intelligent Key is within outside key antenna detection area *

*: Even with a registered Intelligent Key remaining inside the vehicle, door locks can be locked and unlocked from outside of the vehicle with a spare Intelligent Key as long as key IDs are different.

OUTSIDE KEY ANTENNA DETECTION AREA

The outside key antenna detection area of door lock/unlock function is in the range of approximately 80 cm (31.50 in) surrounding the driver, passenger door handles (1) and back door handle (2). However, this operating range depends on the ambient conditions.

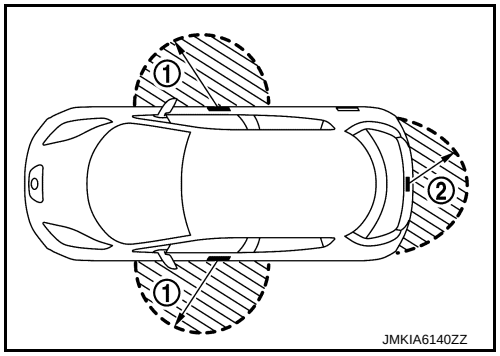

SELECTIVE UNLOCK FUNCTION

Lock Operation

When an LOCK signal is sent from door request switch (driver side, passenger side or back door), all doors are locked.

Unlock Operation

- When an UNLOCK signal from front door request switch (driver side) is transmitted, driver side door unlocks. When another UNLOCK signal is transmitted within 60 seconds, all door unlocks.
- When an UNLOCK signal from front door request switch (passenger side) is transmitted, passenger side door unlocks. When another UNLOCK signal is transmitted within 60 seconds, all door unlocks.
- When an UNLOCK signal from back door request switch is transmitted, back door unlocks. When another UNLOCK signal is transmitted within 60 seconds, all door unlocks.

How to Change Selective Unlock Operation Mode

Selective unlock operation mode can be changed using CONSULT.
Refer to DLK-42, "INTELLIGENT KEY : CONSULT Function (BCM - INTELLIGENT KEY)".

HAZARD AND BUZZER REMINDER FUNCTION

During lock, unlock, operation by each request switch, the hazard warning lamps and Intelligent Key warning buzzer will blink or honk as a reminder.
When doors are locked, unlocked by each request switch, BCM honks Intelligent Key warning buzzer as a reminder and blinks.

Operating Function of Hazard and Buzzer Reminder

Operation	Hazard warning lamp blinks	Intelligent Key warning buzzer honk
Unlock	Once	Once
Lock	Twice	Twice

Hazard and buzzer reminder does not operate if power switch ON position.

How to Change Hazard and Buzzer Reminder Operation Mode

Hazard and buzzer reminder operation mode can be changed using CONSULT.
Refer to DLK-42, "INTELLIGENT KEY : CONSULT Function (BCM - INTELLIGENT KEY)".

AUTO DOOR LOCK FUNCTION

After door is unlocked by door request switch operation and if 60 seconds or more passes without performing the following operation, all doors are automatically locked. However, operation check function does not activate.

Operating condition	• Door switch is ON (door is open) • Door is locked • Power switch is pressed

Auto door lock mode can be changed by the “AUTO LOCK SET” mode in “WORK SUPPORT”. Refer to DLK-42, "INTELLIGENT KEY : CONSULT Function (BCM - INTELLIGENT KEY)".

LIST OF OPERATION RELATED PARTS

Parts marked with × are the parts related to operation.

Door lock function	Intelligent Key	Remote keyless entry receiver	Door switch	Door request switch	Door lock actuator	Inside key antenna	Outside key antenna	CAN communication system	BCM	Hazard warning lamp	Power switch	Combination meter
Door lock/unlock function	×	×	×	×	×	×	×		×			
Hazard reminder function								×	×	×		×
Door lock status indicator operation									×			
Selective unlock function	×			×	×	×	×		×			
Auto door lock function	×				×				×		×	

BACK DOOR OPEN FUNCTION

BACK DOOR OPEN FUNCTION : System Description

INFOID:0000000006855499

SYSTEM DIAGRAM

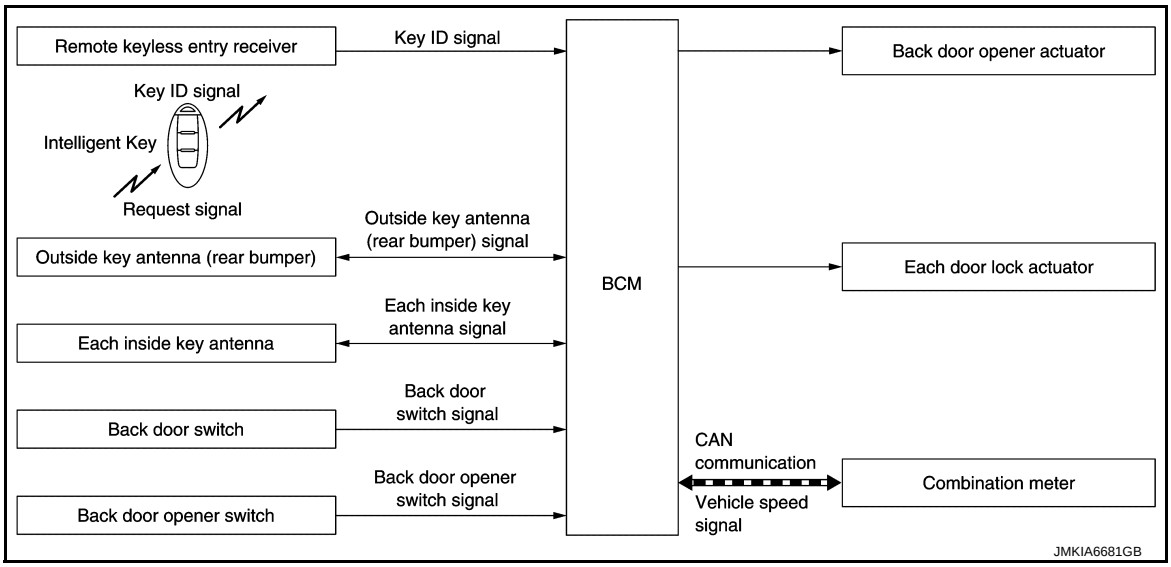

BACK DOOR OPEN OPERATION

This section describes the operation of the back door opener switch. The operation of the back door opener request switch is the same as the door lock function. Refer to DLK-36, "System Description".

- The back door open function can open the back door by pressing the back door opener switch while carrying the Intelligent Key and all doors are locked.
- The back door open function enables the back door to be opened by pressing back door opener switch after BCM transmits UNLOCK signal to each door.

BACK DOOR OPEN

- When the BCM detects that back door opener switch is pressed, it starts the outside key antenna (rear bumper) and inside key antenna and transmits the request signal to the Intelligent Key. Then, check that the Intelligent Key is near the back door.
- If the Intelligent Key is within the outside key antenna detection area, it receives the request signal and transmits the key ID signal to the BCM via remote keyless entry receiver.
- BCM receives the key ID signal and compares it with the registered key ID.
- BCM opens back door and simultaneously unlocks all doors.

NOTE:

In selective unlock mode, only back door opens. All doors do not unlock.

OPERATION CONDITION

If the following conditions are satisfied, the back door can be opened.

Back door open function	Operation condition
Back door open operation	• Vehicle speed is less than 5 km/h (3 MPH) • Panic alarm is not activated • Intelligent Key is outside of vehicle • Intelligent Key is within outside key antenna detection area • Back door is closed

OUTSIDE KEY ANTENNA DETECTION AREA

The outside key antenna detection area of back door open function is in the range of approximately 80 cm (31.50 in) surrounding the back door opener switch (1). However, this operating range depends on the ambient conditions.

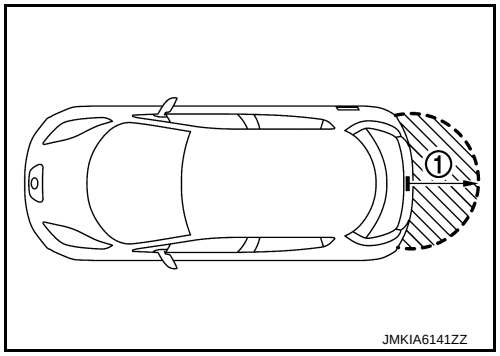

LIST OF OPERATION RELATED PARTS

Parts marked with × are the parts related to operation.

Back door open function	Intelligent Key	Remote keyless entry receiver	Back door opener actuator	Door lock actuator	Inside key antenna	Outside key antenna (rear bumper)	CAN communication system	BCM	Back door opener switch	Combination meter
Back door open function	×	×	×	×	×	×	×	×	×	×

REMOTE KEYLESS ENTRY FUNCTION

REMOTE KEYLESS ENTRY FUNCTION : System Description

INFOID:0000000006855500

SYSTEM DIAGRAM

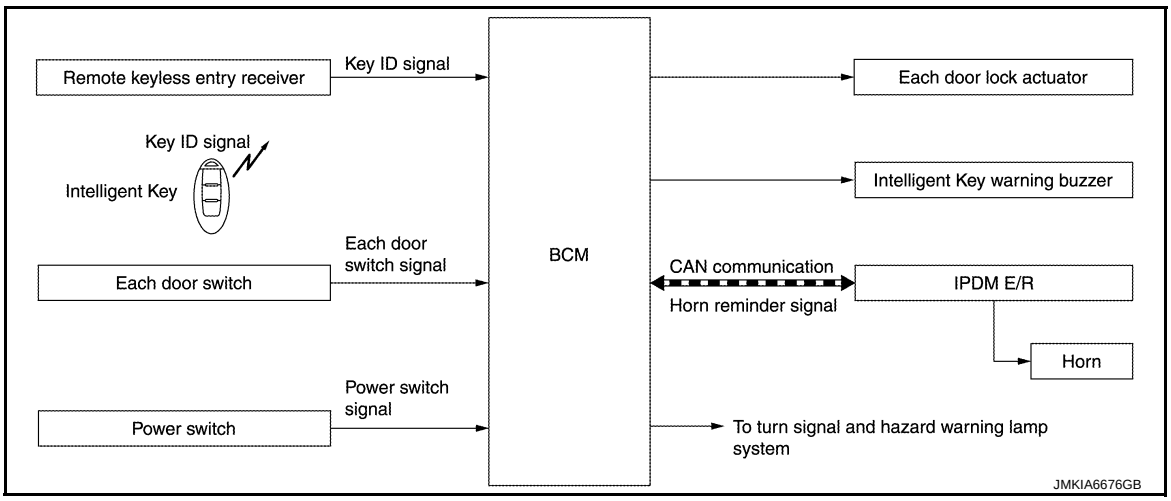

BASIC OPERATION

The Intelligent Key has the same functions as the remote control entry system. Therefore, it can be used in the same manner as the remote controller by operating the door lock/unlock button.

OPERATION

Remote keyless entry system controls operation of the following items.

- Door lock/unlock
- Selective Unlock function
- Hazard reminder function
- Auto door lock

OPERATION AREA

To check that the Intelligent Key works normally, use within 1 m (3 ft) range of each doors, however the operable range may differ according to surroundings.

DOOR LOCK/UNLOCK FUNCTION

- When door lock/unlock button of the Intelligent Key is pressed, lock signal or unlock signal transmitted from Intelligent Key to BCM via remote keyless entry receiver.
- BCM receives the signal and compares it with the registered key ID to the vehicle.
- When BCM receives the door lock/unlock signal, it operates all door lock actuators and the hazard lamp (lock: 2 time, unlock: 1 times) and horn chirp signal to IPDM E/R at the same time as a reminder.
- IPDM E/R honks horn (lock: 1 times) as a reminder.

OPERATION CONDITION

If the following condition are satisfied, remote keyless entry operation is performed when the Intelligent Key is operated.

Remote controller operation	Operation condition
Lock / Unlock	Panic alarm is not activated

SELECTIVE UNLOCK FUNCTION

- When an LOCK signal is transmitted from Intelligent Key, all doors are locked.
- When an UNLOCK signal is transmitted from Intelligent Key once, driver side door is unlocked.
- Then, if an UNLOCK signal is transmitted from Intelligent Key again within 60 seconds, all other doors are unlocked.

How To Change Selective Unlock Operation Mode

Selective unlock operation mode can be changed using CONSULT.
Refer to DLK-42, "INTELLIGENT KEY : CONSULT Function (BCM - INTELLIGENT KEY)".

HAZARD AND HORN REMINDER FUNCTION

When doors are locked or unlocked by Intelligent Key, BCM blinks hazard warning lamps as a reminder and transmits horn chirp signal to IPDM E/R. IPDM E/R sounds horn as a reminder.
The hazard and horn reminder has a horn chirp mode (C mode) and a non-horn chirp mode (S mode).

Operating Function of Hazard and Horn Reminder

	C mode			S mode		
Intelligent Key operation	Lock	Unlock	Back door open	Lock	Unlock	Back door open
Hazard warning lamp blinks	Twice	Once	—	Twice	—	—
Horn sound	Once	—	—	—	—	—

Hazard and horn reminder does not operate if power switch ON position.

How to change hazard and horn reminder mode

With CONSULT

Refer to DLK-42, "INTELLIGENT KEY : CONSULT Function (BCM - INTELLIGENT KEY)".

Without CONSULT

When LOCK and UNLOCK signals are sent from the Intelligent Key for more than 2 seconds at the same time, the hazard and horn reminder mode is changed and hazard warning lamp blinks and horn sounds as per the following items:

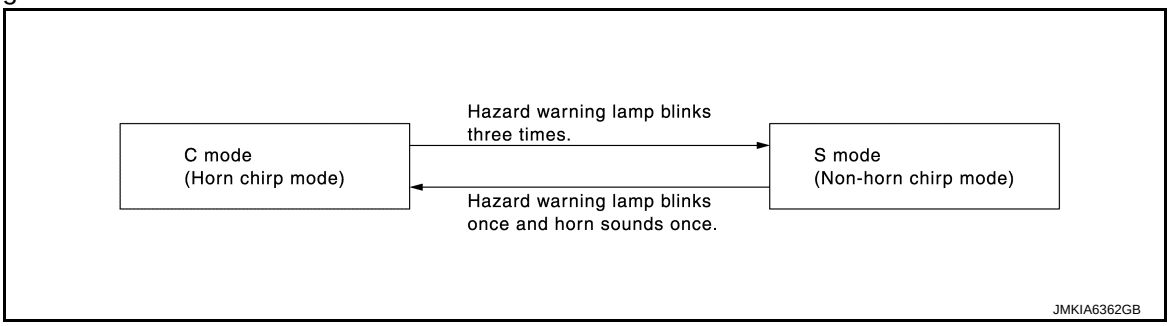

AUTO DOOR LOCK FUNCTION

After door is unlocked by Intelligent Key button operation and if 60 seconds or more passes without performing the following operation, all doors are locked. However, operation check function does not activate.

Operating condition	• Door switch is ON (door is open) • Door is locked • Power switch is pressed

How To Change Auto Door Lock Operation Mode

Auto door lock operation mode can be changed using CONSULT.
Refer to DLK-42, "INTELLIGENT KEY : CONSULT Function (BCM - INTELLIGENT KEY)".

LIST OF OPERATION RELATED PARTS

Parts marked with × are the parts related to operation.

Remote keyless entry functions	Intelligent Key	Door switch	Door lock actuator	Power switch	Intelligent Key warning buzzer	CAN communication system	BCM	Combination meter	Hazard warning lamp	IPDM E/R
Door lock/unlock function by remote control button	×	×	×			×	×			
Hazard reminder function	×			×	×	×	×	×	×	×
Selective Unlock function	×	×	×	×		×	×			
Auto door lock function	×					×	×			

KEY REMINDER FUNCTION

KEY REMINDER FUNCTION : System Description

INFOID:0000000006855501

SYSTEM DIAGRAM

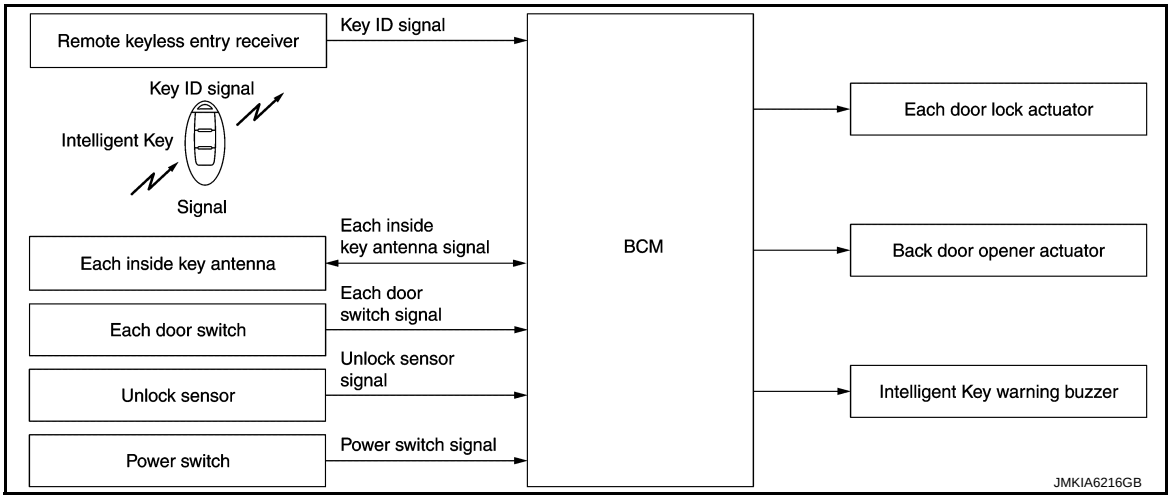

BASIC OPERATION

Key reminder is the function that prevents the key from being left in the vehicle.
Key reminder has the following 3 functions.

Key remainder function	Operation condition	Operation
Driver side door closed*	Right after driver side door is closed under the following conditions • Intelligent Key is inside the vehicle • Driver side door is opened • Driver side door is in unlock state	All doors unlock
Door is open or closed	Right after all doors are closed under the following conditions • Intelligent Key is inside the vehicle • Any door is opened • All doors are locked.	• All doors unlock • Honk Intelligent Key warning buzzer
Back door is closed	Right after back door is closed under the following conditions • Intelligent Key is inside the vehicle • All doors (except back door) are closed • All doors (except back door) are locked	• All doors unlock • Back door can open with back door opener switch • Honk Intelligent Key warning buzzer

*:If the door closing impact shocks the door lock knob, or contacts against baggage with the door lock knob might activate the door locks accidentally but unlock operation is perform in these cases.

NOTE:

- The above function operates when the Intelligent Key is inside the vehicle. However, there may be times when the Intelligent Key cannot be detected, and this function does not operate when the Intelligent Key is on the instrument panel, rear parcel shelf, or in the glove box. Also, this system sometimes does not operate if the Intelligent Key is in the door pocket for the open door.

WARNING FUNCTION

WARNING FUNCTION : System Description

INFOID:0000000006855502

OPERATION DESCRIPTION

The warning function are as per the following items and are given to the user as warning information and warnings using combinations of Intelligent Key warning buzzer, combination meter buzzer and information display in combination meter.

- Intelligent Key system malfunction
- OFF position warning
- Take away warning
- Door lock operation warning
- Key ID warning

- READY set information
- Plug in information
- Intelligent Key low battery warning
- Key ID verification information

OPERATION CONDITION

Once the following condition from below is established, alert or warning is executed.

Warning/Information functions		Operation procedure
Intelligent Key system malfunction		When a malfunction is detected on BCM
OFF position warning		When condition A, B or condition C is satisfied • Condition A - Power switch: ACC position - Door switch (driver side): ON (Door is open) • Condition B - Turn power switch from ON to OFF while door is open • Condition C - Intelligent Key backside is contacted to power switch while brake pedal is depressed and power switch is LOCK or OFF (When the Intelligent Key battery is discharged) - Door switch (driver side): ON (Door is open)
Take away warning	Door is open to close	• Power switch: Except LOCK position • Door switch: ON to OFF (Door is open to close) • Intelligent Key cannot be detected inside the vehicle
	Door is open	• Power switch: Except LOCK position • Door switch: ON (Door is open) • Key ID verification every 5 seconds when registered Intelligent Key cannot be detected inside the vehicle
	Power switch operation	• Power switch: Except LOCK position • Press power switch • Intelligent Key cannot be detected inside the vehicle
Door lock operation warning		When door lock operation is requested while door lock operating condition of door request switch or Intelligent Key are not satisfied
Key ID warning		When registered intelligent Key cannot be detected inside the vehicle after Power switch is turned ON
READY set information*	Power switch is ON position	• Power switch: ON position • Electric shift selector position: P position • The vehicle is not READY • When charge port is not connected
	Power switch is except ON position	• Power switch: Except ON position • Electric shift selector position: P position • Intelligent Key is detected inside the vehicle after driver door is open and then closed • When charge port is not connected
Plug in indicator*		When charge port is connected
Intelligent Key low battery warning		When Intelligent Key is low battery, BCM is detected after power switch is turned ON
Key ID verification information		• When registered Intelligent Key can not be detected inside the vehicle • Intelligent Key battery is discharged • When NATS antenna amp cannot be detected NATS ID

*:One of either item is displayed according to connection status of charge port connector.

WARNING METHOD

The following table shows the alarm or warning methods with chime.
Information display (combination meter) when the warning conditions are met.

Warning/Information functions		Information display (combination meter)	Warning chime	
			Combination meter buzzer	Intelligent Key warning buzzer
Intelligent Key system malfunction		 JMKIA5196ZZ	—	—
OFF position warning		—	Sounds (beeps continuously) (pipipipi)	—
Take away warning	Door is open to close	 JMKIA5192ZZ	Sounds (beeps 3 times) (pipi)	Sounds (beeps 1 time) (pi-pi-pi-)
	Door is open		—	—
	Power switch operation		Sounds (beeps 3 times) (pipi)	—
Door lock operation warning	Request switch operation	—	—	Sounds (for 2 seconds) (pipipipipi···)
	Intelligent Key operation	—	—	Sounds (for 2 seconds) (pipipipipi···)
Key ID warning		 JMKIA5192ZZ	—	—
READY set information		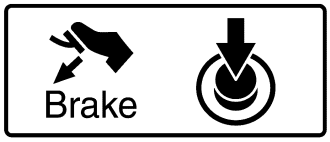 JMKIA6134GB	—	—
Plug in indicator		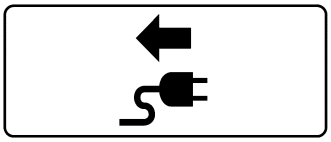 JMKIA6370GB	—	—

Warning/Information functions	Information display (combination meter)	Warning chime	
		Combination meter buzzer	Intelligent Key warning buzzer
Intelligent Key low battery warning	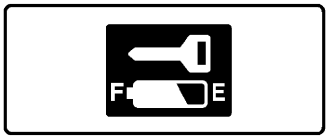 JMKIA3049ZZ	—	—
Key ID verification information	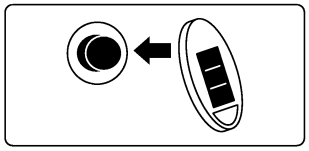 JMKIA4907ZZ	—	—

LIST OF OPERATION RELATED PARTS

Parts marked with × are the parts related to operation.

Warning function		Intelligent Key	Power switch	Door switch	Door request switch	Inside key antenna	Outside key antenna	Intelligent Key warning buzzer	Combination meter buzzer	CAN communication system	BCM	Information display
Intelligent Key system malfunction										×	×	×
OFF position warning				×					×	×	×	
Take away warning	Door is open or close	×		×		×		×	×	×	×	×
	Door is open	×		×		×				×	×	×
	Power switch operation	×	×			×			×	×	×	×
Door lock operation warning		×		×	×	×	×	×			×	
Key ID warning			×			×				×	×	×
READY set information	Power switch is ON position	×	×			×				×	×	×
	Power switch is except ON position	×	×			×				×	×	×
Plug in indicator												×
Intelligent Key low battery warning		×				×				×	×	×
Key ID verification information		×				×				×	×	×

SYSTEM (BACK DOOR OPENER SYSTEM)

System Description

INFOID:0000000006855504

SYSTEM DIAGRAM

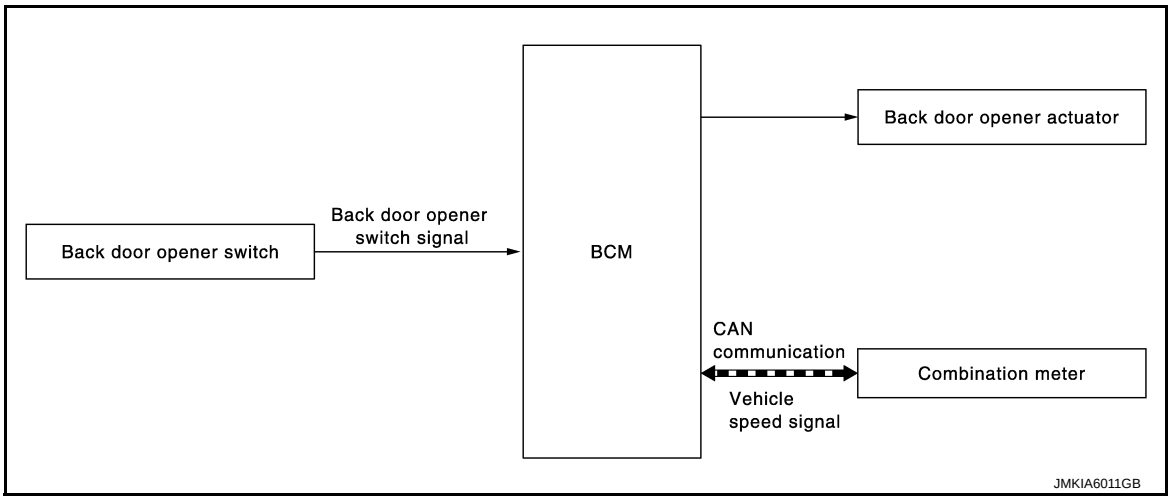

BACK DOOR OPENER OPERATION

When back door opener switch is pressed, BCM operates back door opener actuator.

NOTE:

Back door opener actuator is not for locking the back door. The function is only to open the back door.

OPERATION CONDITION

If the following conditions are satisfied, back door opener operation is performed.

Back door opener switch operation	Operation condition
Back door open	• When back door opener switch is pressed while all doors are in unlock status. • Vehicle speed is less than 5 km/h (3 MPH)

NOTE:

- When 12V battery terminal is disconnected and reconnected during all doors unlock state, back door may not open.
- Regardless of door lock actuator state, BCM resets recognition of all doors unlock state approximately 30 seconds after 12V battery terminal is disconnected and BCM recognizes that all doors are in lock state.
- When 12V battery terminal is reconnected and back door does not open, have BCM recognize that all doors are in unlock state.

Circuit Diagram

INFOID:0000000006855505

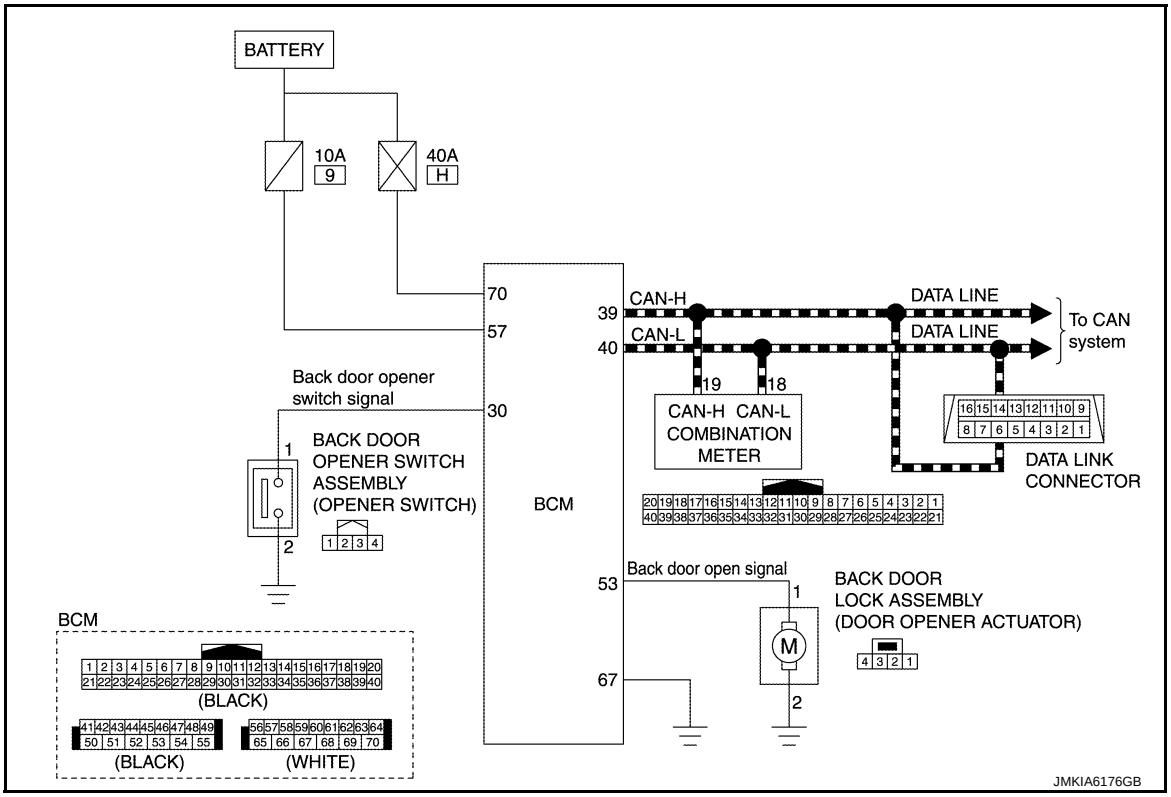

SYSTEM (INTEGRATED HOMELINK TRANSMITTER)

System Description

INFOID:0000000006923774

Item	Function
Integrated homelink transmitter	A maximum of 3 radio signals can be stored and transmitted to operate the garage door, etc.

DIAGNOSIS SYSTEM (BCM)

COMMON ITEM

COMMON ITEM : CONSULT Function (BCM - COMMON ITEM)

INFOID:0000000007049952

APPLICATION ITEM

CONSULT performs the following functions via CAN communication with BCM.

Diagnosis mode	Function Description
Work Support	Changes the setting for each system function.
Self Diagnostic Result	Displays the diagnosis results judged by BCM.
CAN Diag Support Monitor	Monitors the reception status of CAN communication viewed from BCM.
Data Monitor	The BCM input/output signals are displayed.
Active Test	The signals used to activate each device are forcibly supplied from BCM.
Ecu Identification	The BCM part number is displayed.
Configuration	• Read and save the vehicle specification. • Write the vehicle specification when replacing BCM.

SYSTEM APPLICATION

BCM can perform the following functions for each system.

NOTE:

It can perform the diagnosis modes except the following for all sub system selection items.

×: Applicable item

System	Sub system selection item	Diagnosis mode		
		Work Support	Data Monitor	Active Test
Door lock	DOOR LOCK	×	×	×
Rear window defogger	REAR DEFOGGER		×	×
Warning chime	BUZZER		×	×
Interior room lamp timer	INT LAMP	×	×	×
Exterior lamp	HEAD LAMP	×	×	×
Wiper and washer	WIPER	×	×	×
Turn signal and hazard warning lamps	FLASHER	×	×	×
—	AIR CONDITONER*		×	×
Intelligent Key system	INTELLIGENT KEY	×	×	×
Combination switch	COMB SW		×	
Body control system	BCM	×		
NVIS - NATS	IMMU	×	×	×
Interior room lamp battery saver	BATTERY SAVER	×	×	×
Back door open	TRUNK		×	
Theft warning alarm	THEFT ALM	×	×	×
RAP system	RETAINED PWR		×	
Signal buffer system	SIGNAL BUFFER		×	×
TPMS	AIR PRESSURE MONITOR	×	×	×

*: This item is displayed, but not used.

FREEZE FRAME DATA (FFD)

The BCM records the following vehicle condition at the time a particular DTC is detected, and displays on CONSULT.

CONSULT screen item	Indication/Unit	Description	
Vehicle Speed	km/h	Vehicle speed of the moment a particular DTC is detected	
Odo/Trip Meter	km	Total mileage (Odometer value) of the moment a particular DTC is detected	
Vehicle Condition	SLEEP>LOCK	Power supply position status of the moment a particular DTC is detected*	While turning BCM status from low power consumption mode to normal mode [Power supply position is OFF (LOCK)]
	SLEEP>OFF		While turning BCM status from low power consumption mode to normal mode [Power supply position is OFF (OFF)]
	LOCK>ACC		While turning power supply position from OFF (LOCK) to ACC
	ACC>ON		While turning power supply position from ACC to ON
	RUN>ACC		While turning power supply position from READY (RUN) to ACC (Except emergency stop operation)
	CRANK>RUN		While turning power supply position from READY (CRANK) to READY (RUN)
	RUN>URGENT		While turning power supply position from READY (RUN) to ACC (Emergency stop operation)
	ACC>OFF		While turning power supply position from ACC to OFF (OFF)
	OFF>LOCK		While turning power supply position from OFF (OFF) to OFF (LOCK)
	OFF>ACC		While turning power supply position from OFF (OFF) to ACC
	ON>CRANK		While turning power supply position from ON to READY (CRANK)
	OFF>SLEEP		While turning BCM status from normal mode [Power supply position is OFF (OFF)] to low power consumption mode
	LOCK>SLEEP		While turning BCM status from normal mode [Power supply position is OFF (LOCK)] to low power consumption mode
	LOCK		Power supply position is OFF (LOCK)
	OFF		Power supply position is OFF (OFF)
	ACC		Power supply position is ACC
	ON		Power supply position is ON
	ENGINE RUN		Power supply position is READY (RUN)
	CRANKING		Power supply position is READY (CRANK)
IGN Counter	0 - 39	The number of times that power switch is turned ON after DTC is detected • The number is 0 when a malfunction is detected now. • The number increases like 1 → 2 → 3...38 → 39 after returning to the normal condition whenever power switch OFF → ON. • The number is fixed to 39 until the self-diagnosis results are erased if it is over 39.	

NOTE:

*: Refer to the following for details of the power supply position.

- OFF (OFF, LOCK): Power switch OFF
- ACC: Power switch ACC
- ON: Power switch ON
- READY (CRANK): Shifting to vehicle condition READY (Transmitting the READY signal from BCM to VCM)
- READY (RUN): Vehicle condition READY

Power supply position shifts to “OFF (LOCK)” from “OFF (OFF)”, when power switch is in the OFF position, shift position is in the P position, and any of the following conditions are met.

- Closing door
- Opening door
- Door is locked using door request switch
- Door is locked using Intelligent Key

The power supply position shifts to “ACC” when the power switch (push switch) is pushed at “OFF (LOCK)”.

DOOR LOCK

DOOR LOCK : CONSULT Function (BCM - DOOR LOCK)

INFOID:0000000006855507

WORK SUPPORT

Monitor item	Description
DOOR LOCK-UNLOCK SET	Selective unlock function mode can be changed to operation with this mode • On: Operate • Off: Non-operation
AUTOMATIC DOOR LOCK SELECT	Automatic door lock function mode can be selected from the following in this mode • VH SPD: All doors are locked when vehicle speed more than 24km/h (15MPH) • P RANGE: All doors are locked when shifting the selector lever from P position to other than the P position
AUTOMATIC DOOR UNLOCK SELECT	Automatic door unlock function mode can be selected from the following in the mode • MODE 1: All doors are unlocked when the power supply position is changed from ON to OFF • MODE 2: All doors are unlocked when shifting the selector lever from any position other than the P to P position • MODE 3: Driver side door is unlocked when the power supply position is changed from ON to OFF • MODE 4: Driver side door is unlocked when shifting the selector lever from any position other than the P to P position • MODE 5: This item is displayed, but cannot be used • MODE 6: This item is displayed, but cannot be used
AUTOMATIC LOCK/UNLOCK SET	Automatic door lock/unlock function mode can be selected from the following in this mode • Off: Non-operational • Unlock Only: Door unlock operation only • Lock Only: Door lock operation only • Lock/Unlock: Lock and unlock operation

DATA MONITOR

Monitor Item	Contents
REQ SW-DR	Indicated [On/Off] condition of door request switch (driver side)
REQ SW-AS	Indicated [On/Off] condition of door request switch (passenger side)
REQ SW-BD/TR	Indicated [On/Off] condition of back door request switch
DOOR SW-DR	Indicated [On/Off] condition of front door switch (driver side)
DOOR SW-AS	Indicated [On/Off] condition of front door switch (passenger side)
DOOR SW-RR	Indicated [On/Off] condition of rear door switch RH
DOOR SW-RL	Indicated [On/Off] condition of rear door switch LH
DOOR SW-BK	Indicated [On/Off] condition of back door switch
CDL LOCK SW	Indicated [On/Off] condition of lock signal from door lock unlock switch
CDL UNLOCK SW	Indicated [On/Off] condition of unlock signal from door lock unlock switch
KEY CYL LK-SW	Indicated [On/Off] condition of lock signal from door key cylinder
KEY CYL UN-SW	Indicated [On/Off] condition of unlock signal from door key cylinder

ACTIVE TEST

Test item	Description
DOOR LOCK	This test is able to check door lock/unlock operation • The all door lock actuators are locked when “ALL LOCK” on CONSULT screen is touched • The all door lock actuators are unlocked when “ALL UNLK” on CONSULT screen is touched • The door lock actuator (driver side) is unlocked when “DR UNLK” on CONSULT screen is touched • The door lock actuator (passenger side) is unlocked when “ UNLK” on CONSULT screen is touched • The door lock actuator (other) is unlocked when “OTR ULK” on CONSULT screen is touched

INTELLIGENT KEY

INTELLIGENT KEY : CONSULT Function (BCM - INTELLIGENT KEY)

INFOID:0000000006855508

WORK SUPPORT

Monitor item	Description
INSIDE ANT DIAGNOSIS	This function allows inside key antenna self-diagnosis
LOCK/UNLOCK BY I-KEY	Door lock/unlock function by door request switch mode can be changed to operation in this mode • On: Operate • Off: Non-operation
ENGINE START BY I-KEY	READY set function mode can be changed to operation with this mode • On: Operate • Off: Non-operation
TRUNK/GLASS HATCH OPEN	**NOTE:** This item is displayed, but cannot be used
HORN WITH KEYLESS LOCK	Horn reminder function mode by Intelligent Key button can be changed to operate (ON) or not operate (OFF) with this mode • On: Operate • Off: Non-operation
PANIC ALARM SET	Panic alarm button pressing time on Intelligent Key remote control button can be selected from the following with this mode • MODE 1: 0.5 sec. • MODE 2: Non-operation • MODE 3: 1.5 sec.
TRUNK OPEN DELAY	**NOTE:** This item is displayed, but cannot be used
LO- BATT OF KEY FOB WARN	Intelligent Key low battery warning mode can be changed to operation with this mode • On: Operate • Off: Non-operation
ANTI KEY LOCK IN FUNCTI	Key reminder function mode can be changed to operation with this mode • On: Operate • Off: Non-operation
HAZARD ANSWER BACK	Hazard reminder function mode by door request switch and Intelligent Key button can be selected from the following with this mode • Lock Only: Door lock operation only • Unlock Only: Door unlock operation only • Lock/Unlock: Lock and unlock operation • Off: Non-operation
ANS BACK I-KEY LOCK	Buzzer reminder function (lock operation) mode by door request switch can be selected from the following with this mode • Horn Chirp: Sound horn • Buzzer: Sound Intelligent Key warning buzzer • Off: Non-operation
ANS BACK I-KEY UNLOCK	Buzzer reminder function (unlock operation) mode by door request switch can be changed to operation with this mode • On: Operate • Off: Non-operation
SHORT CRANKING OUTPUT	**NOTE:** This item is displayed, but cannot be used
CONFIRM KEY FOB ID	It can be checked whether Intelligent Key ID code is registered or not in this mode
AUTO LOCK SET	Auto door lock operation time can be changed in this mode • MODE 1: OFF • MODE 2: 30 sec. • MODE 3: 1 minute • MODE 4: 2 minutes • MODE 5: 3 minutes • MODE 6: 4 minutes • MODE 7: 5 minutes

SELF-DIAG RESULT

Refer to BCS-55, "DTC Index".

DATA MONITOR

Monitor Item	Condition
REQ SW -DR	Indicates [On/Off] condition of door request switch (driver side)
REQ SW -AS	Indicates [On/Off] condition of door request switch (passenger side)
REQ SW -BD/TR	Indicates [On/Off] condition of back door request switch
PUSH SW	Indicates [On/Off] condition of power switch
CLUTCH SW	**NOTE:** This item is displayed, but cannot be monitored
BRAKE SW 1	Indicates [On/Off]* condition of stop lamp switch power supply
BRAKE SW 2	Indicates [On/Off] condition of stop lamp switch
DETE/CANCL SW	Indicates [On/Off] condition of P position
SFT PN/N SW	Indicates [On/Off] condition of P or N position
UNLK SEN -DR	Indicates [On/Off] condition of driver door UNLOCK status
PUSH SW -IPDM	Indicates [On/Off] condition of power switch
IGN RLY1 -F/B	Indicates [On/Off] condition of ignition relay 1
DETE SW -IPDM	Indicates [On/Off] condition of P position
SFT PN -IPDM	**NOTE:** This item is displayed, but cannot be monitored
SFT P -MET	Indicates [On/Off] condition of P position
SFT N -MET	Indicates [On/Off] condition of N position
ENGINE STATE	**NOTE:** This item is displayed, but cannot be monitored
S/L LOCK-IPDM	**NOTE:** This item is displayed, but cannot be monitored
S/L UNLK-IPDM	**NOTE:** This item is displayed, but cannot be monitored
S/L RELAY-REQ	**NOTE:** This item is displayed, but cannot be monitored
VEH SPEED 1	Display the vehicle speed signal received from combination meter by numerical value [km/h]
VEH SPEED 2	Display the vehicle speed signal received from ABS actuator and electric unit (control unit) by numerical value [km/h]
DOOR STAT-DR	Indicates [LOCK/READY/UNLK] condition of driver side door status
DOOR STAT-AS	Indicates [LOCK/READY/UNLK] condition of passenger side door status
ID OK FLAG	Indicates [Set/Reset] condition of key ID
PRMT ENG STRT	Indicates [Set/Reset] condition of ENGINE START BY I-KEY setting in WORK SUPPORT mode
PRMT RKE STRT	**NOTE:** This item is displayed, but cannot be monitored
TRNK/HAT MNTR	**NOTE:** This item is displayed, but cannot be monitored
RKE-LOCK	Indicates [On/Off] condition of LOCK signal from Intelligent Key
RKE-UNLOCK	Indicates [On/Off] condition of UNLOCK signal from Intelligent Key
RKE-TR/BD	**NOTE:** This item is displayed, but cannot be monitored
RKE-PANIC	Indicates [On/Off] condition of PANIC button of Intelligent Key
RKE-MODE CHG	Indicates [On/Off] condition of MODE CHANGE signal from Intelligent Key

Monitor Item	Condition
RKE OPE COUN1	When remote keyless entry receiver receives the signal transmitted while operating on Intelligent Key, the numerical value start changing
RKE OPE COUN2	**NOTE:** This item is displayed, but cannot be monitored

*: OFF is displayed when brake pedal is depressed while brake switch power supply is OFF.

ACTIVE TEST

Test item	Description
OUTSIDE BUZZER	This test is able to check Intelligent Key warning buzzer operation • On: Operate • Off: Non-operation
INSIDE BUZZER	This test is able to check warning chime in combination meter operation • Take Out: Take away warning chime sounds when CONSULT screen is touched • Key: Key warning chime sounds when CONSULT screen is touched • Knob: OFF position warning chime sounds when CONSULT screen is touched • Off: Non-operation
INDICATOR	This test is able to check warning lamp operation • KEY ON: “KEY” Warning lamp illuminates when CONSULT screen is touched • KEY IND: “KEY” Warning lamp blinks when CONSULT screen is touched • Off: Non-operation
INT LAMP	This test is able to check interior room lamp operation • On: Operate • Off: Non-operation
LCD	This test is able to check meter display information • Traction motor start information displays when “BP N” on CONSULT screen is touched • Traction motor start information displays when “BP I” on CONSULT screen is touched • Key ID warning displays when “ID NG” on CONSULT screen is touched • ROTAT: This item is displayed, but cannot be used • INSRT: This item is displayed, but cannot be used • Intelligent Key low battery warning displays when “BATT” on CONSULT screen is touched • Take away warning displays when “OUTKEY” on CONSULT screen is touched • OFF position warning displays when “LK WN” on CONSULT screen is touched
FLASHER	This test is able to check security hazard lamp operation The hazard lamps are activated after “LH/RH/Off” on CONSULT screen is touched
HORN	This test is able to check horn operation • On: Operate • Off: Non-operation
P RANGE	This test is able to check P position signal from electric shift control unit • On: Operate • Off: Non-operation
ENGINE SW ILLUMI	This test is able to check power switch illumination operation Power switch illumination illuminates when “ON” on CONSULT screen is touched
PUSH SWITCH INDICATOR	This test is able to check LOCK indicator in power switch operation LOCK indicator in power switch illuminates when “ON” on CONSULT screen is touched
BATTERY SAVER	This test is able to check interior room lamp operation. The interior room lamp will be activated after “ON” on CONSULT screen is touched.
TRUNK/BACK DOOR	This test is able to check back door opener actuator open operation. This actuator opens when “Open” on CONSULT screen is touched.

TRUNK

TRUNK : CONSULT Function (BCM - TRUNK)

INFOID:0000000006855509

DATA MONITOR

Monitor Item	Contents
PUSH SW	Indicates [On/Off] condition of power switch
UNLK SEN -DR	Indicates [On/Off] condition of unlock sensor
VEH SPEED 1	Indicates [km/h] condition of vehicle speed signal from combination meter
TR/BD OPEN SW	Indicates [On/Off] condition of back door opener switch.
TRNK/HAT MNTR	**NOTE:** This item is displayed, but cannot be monitored
RKE-TR/BD	**NOTE:** This item is displayed, but cannot be monitored

ECU DIAGNOSIS INFORMATION

BCM

List of ECU Reference

INFOID:0000000006855510

ECU	Reference
BCM	BCS-33, "Reference Value"
	BCS-53, "Fail-safe"
	BCS-54, "DTC Inspection Priority Chart"
	BCS-55, "DTC Index"

WIRING DIAGRAM

DOOR & LOCK SYSTEM

Wiring Diagram

INFOID:0000000006855511

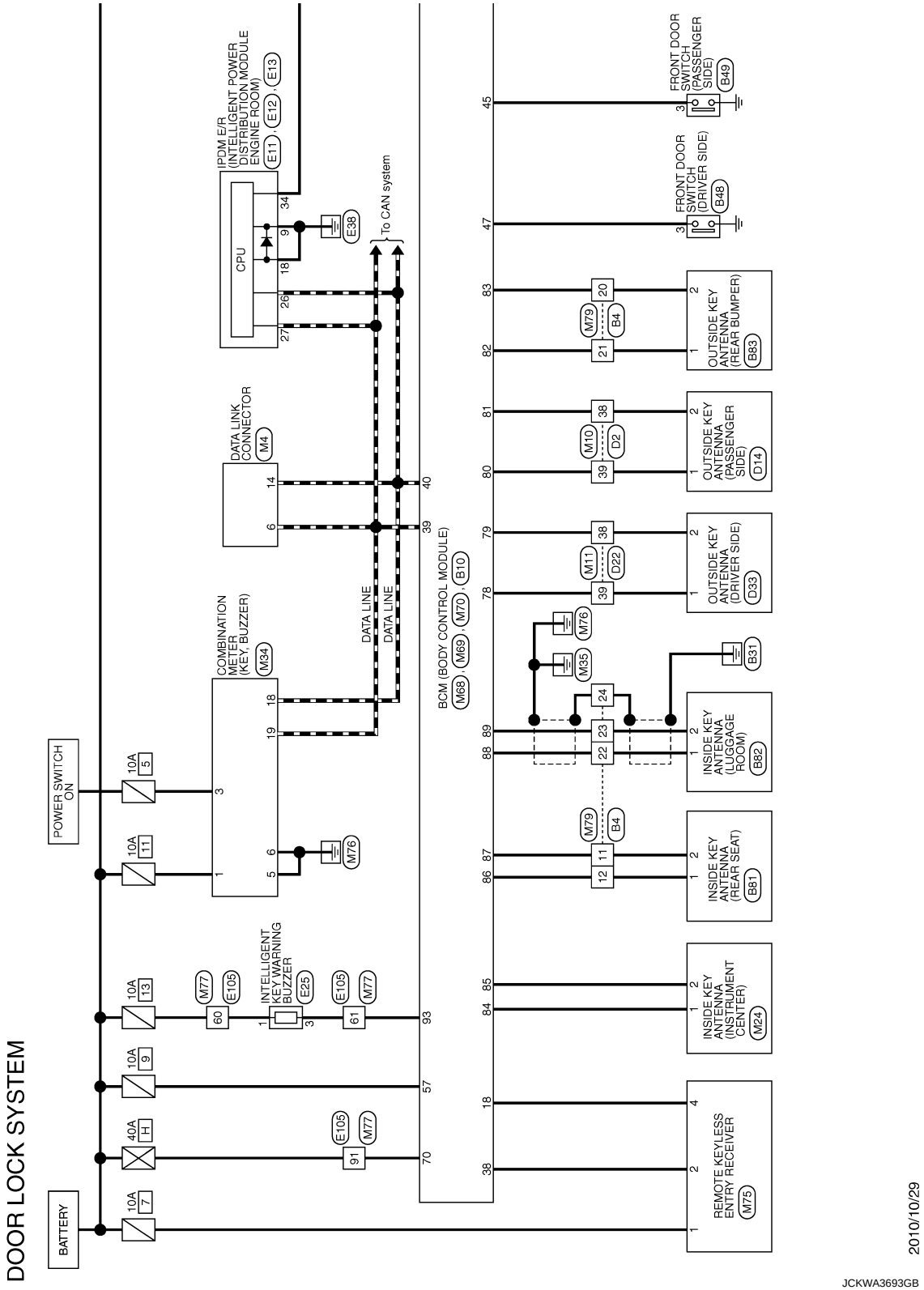

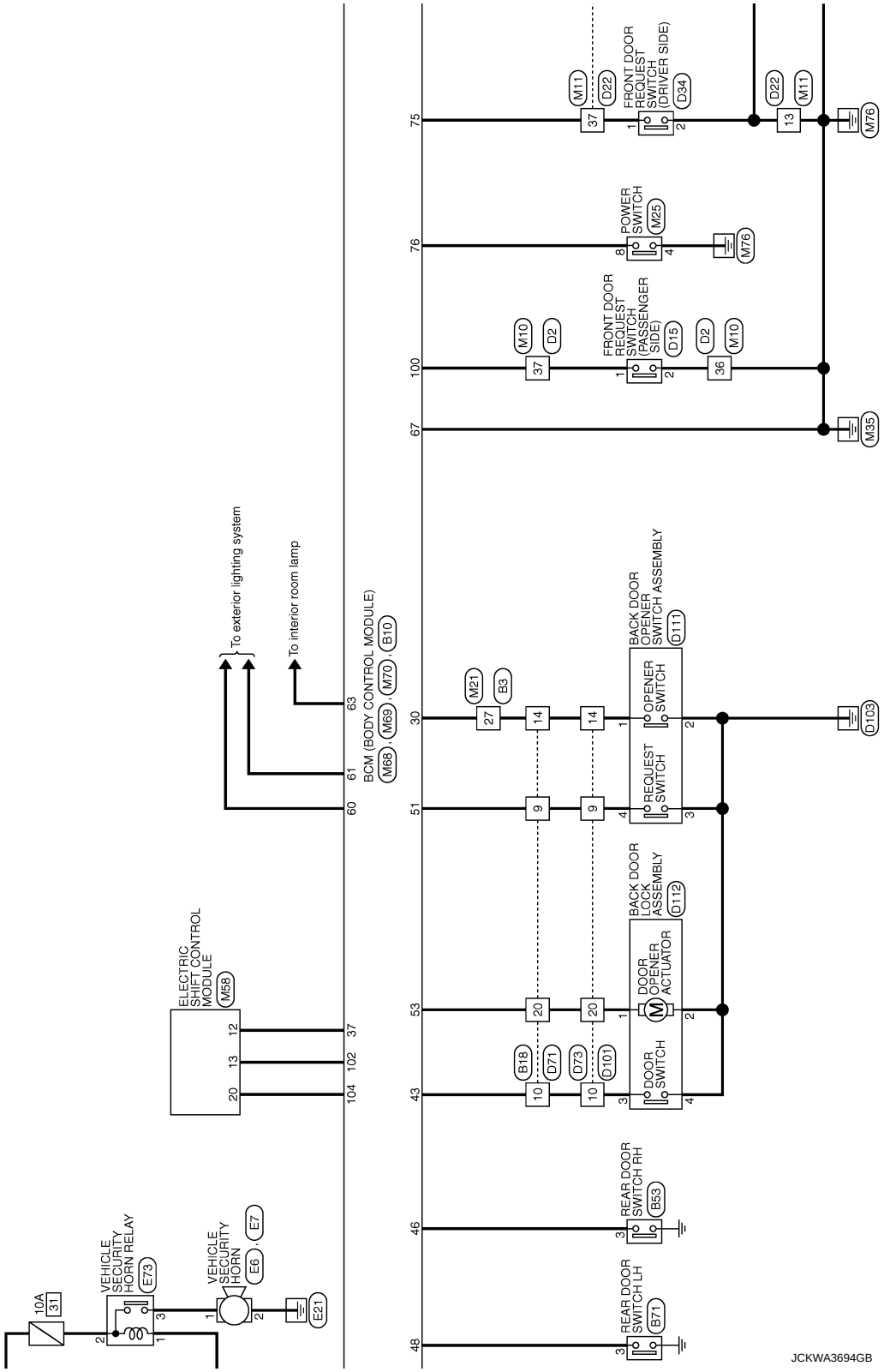
10A
31
VEHICLE SECURITY HORN RELAY
E73
VEHICLE SECURITY HORN
E6, E7
E21
ELECTRIC SHIFT CONTROL MODULE
M58
To exterior lighting system
To interior room lamp
BCM (BODY CONTROL MODULE)
M68, M69, M70, B10
REAR DOOR SWITCH LH
B71
REAR DOOR SWITCH RH
B53
DOOR SWITCH
DOOR OPENER ACTUATOR
BACK DOOR LOCK ASSEMBLY
D112
REQUEST SWITCH
OPENER SWITCH
BACK DOOR OPENER SWITCH ASSEMBLY
D111
D103
FRONT DOOR REQUEST SWITCH (PASSENGER SIDE)
D15
FRONT DOOR REQUEST SWITCH (DRIVER SIDE)
D34
POWER SWITCH
M25
M76
M35
JCKWA3694GB

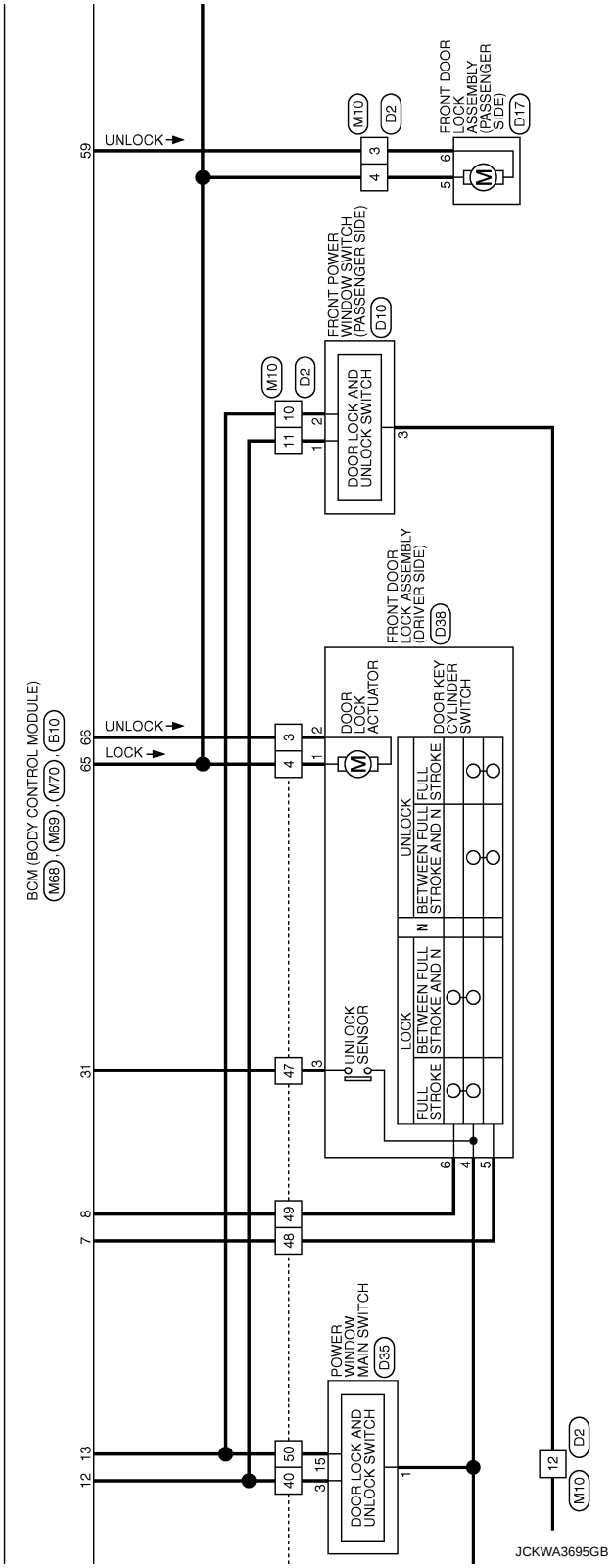
BCM (BODY CONTROL MODULE)
(M68), (M69), (M70), (B10)
59
UNLOCK
66
UNLOCK
65
LOCK
31
8
7
13
12
M10
D2
3
4
FRONT DOOR LOCK ASSEMBLY (PASSENGER SIDE)
D17
6
5
M
FRONT POWER WINDOW SWITCH (PASSENGER SIDE)
D10
10
11
2
1
DOOR LOCK AND UNLOCK SWITCH
FRONT DOOR LOCK ASSEMBLY (DRIVER SIDE)
D38
DOOR LOCK ACTUATOR
DOOR KEY CYLINDER SWITCH
UNLOCK
BETWEEN FULL STROKE AND N
FULL STROKE
N
LOCK
FULL STROKE
BETWEEN FULL STROKE AND N
UNLOCK SENSOR
47
49
48
POWER WINDOW MAIN SWITCH
D35
50
40
15
DOOR LOCK AND UNLOCK SWITCH
12
JCKWA3695GB

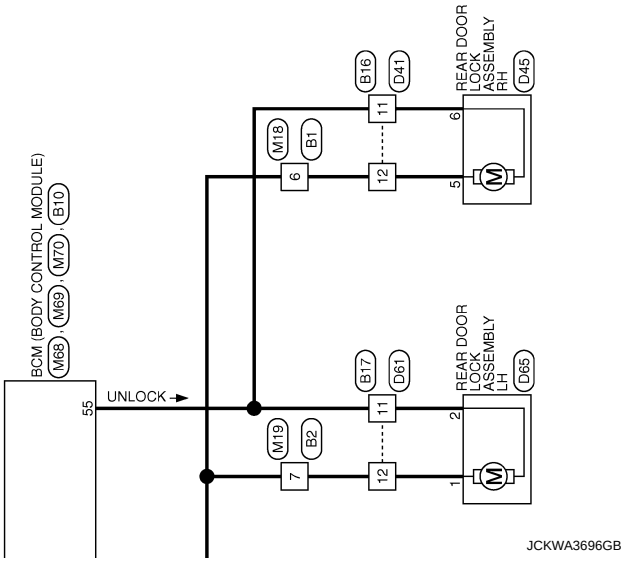
BCM (BODY CONTROL MODULE)
M68
M69
M70
B10
55
UNLOCK
M19
B2
7
M18
B1
6
B17
D61
11
B16
D41
11
12
12
REAR DOOR LOCK ASSEMBLY LH
D65
REAR DOOR LOCK ASSEMBLY RH
D45
1
2
5
6
JCKWA3696GB

DOOR LOCK SYSTEM

Connector No.	B1
Connector Name	WIRE TO WIRE
Connector Type	NS16MW-CS

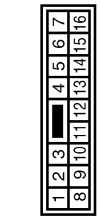

Terminal No.	Color of Wire	Signal Name [Specification]
1	G	–
6	R	–
7	BR	–
8	P	–
9	GR	–
10	W	–
11	LG	–
12	P	–
13	V	–
14	Y	–
15	W	–
16	L	–

Connector No.	B2
Connector Name	WIRE TO WIRE
Connector Type	NS16MW-CS

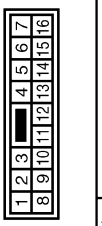

Terminal No.	Color of Wire	Signal Name [Specification]
4	V	–
7	V	–
8	P	–
9	GR	–
10	SB	–
11	V	–
12	LG	–
13	V	–
14	GR	–
15	L	–

Terminal No.	Color of Wire
16	G

Connector No.	B3
Connector Name	WIRE TO WIRE
Connector Type	TH32MW-NH

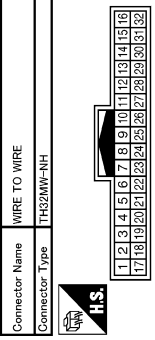

Terminal No.	Color of Wire	Signal Name [Specification]
1	R	–
3	SHIELD	–
4	B	–
5	W	–
6	R	–
11	G	–
15	L	–
16	G	–
18	L	–
19	BR	–
20	V	–
22	B	–
27	L	–
31	L	–
32	P	–

Connector No.	B4
Connector Name	WIRE TO WIRE
Connector Type	TH24MW-NH

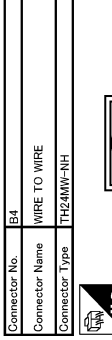

Terminal No.	Color of Wire	Signal Name [Specification]
8	BR	–
11	R	–
12	G	–
17	G	–

Terminal No.	Color of Wire
18	R
20	B
21	W
22	V
23	LG
24	SHIELD

Connector No.	B10
Connector Name	BCM (BODY CONTROL MODULE)
Connector Type	FEA09FB-FHA6-SA

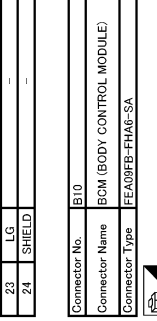

Terminal No.	Color of Wire	Signal Name [Specification]
43	Y	BACK DOOR SW
44	LG	REAR WIPER STOP POSITION
45	BR	PASSENGER DOOR SW
46	R	REAR RH DOOR SW
47	SB	DRIVER DOOR SW
48	W	REAR LH DOOR SW
49	L	LUGGAGE LAMP OUTPUT
51	P	BACK DOOR REQ SW
53	GR	BK DOOR OPEN OUTPUT
54	P	REAR WIPER OUTPUT
55	GR	PASS, RR DOOR UNLK OUTPUT

Connector No.	B16
Connector Name	WIRE TO WIRE
Connector Type	TK10FW-NS8

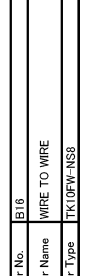

Terminal No.	Color of Wire	Signal Name [Specification]
1	LG	–
2	P	–
11	G	–

Terminal No.	Color of Wire
12	R
14	W
15	Y
16	L

Connector No.	B17
Connector Name	WIRE TO WIRE
Connector Type	TK10FW-NS8

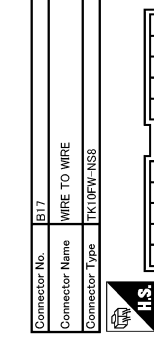

Terminal No.	Color of Wire	Signal Name [Specification]
1	V	–
2	LG	–
11	GR	–
12	V	–
14	L	–
15	V	–
16	GR	–

JCKWA4392GB

DOOR LOCK SYSTEM

Connector No.	B18
Connector Name	WIRE TO WIRE
Connector Type	NH10MW-CS10

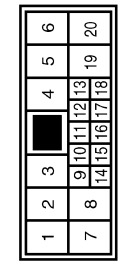

Terminal No.	Color of Wire	Signal Name [Specification]
5	P	–
6	R	–
7	P	–
9	P	–
10	Y	–
11	B	–
12	W	–
13	R	–
14	L	–
15	LG	–
17	SHIELD	–
18	B	–
20	GR	–

Connector No.	B48
Connector Name	FRONT DOOR SWITCH (DRIVER SIDE)
Connector Type	TH04FW-NH

Terminal No.	Color of Wire	Signal Name [Specification]
3	SB	–

Connector No.	B49
Connector Name	FRONT DOOR SWITCH (PASSENGER SIDE)
Connector Type	TH04FW-NH

Terminal No.	Color of Wire	Signal Name [Specification]
3	BR	–

Connector No.	B53
Connector Name	REAR DOOR SWITCH RH
Connector Type	TH04FW-NH

Terminal No.	Color of Wire	Signal Name [Specification]
3	R	–

Connector No.	B71
Connector Name	REAR DOOR SWITCH LH
Connector Type	TH04FW-NH

Terminal No.	Color of Wire	Signal Name [Specification]
3	W	–

Connector No.	B81
Connector Name	INSIDE KEY ANTENNA (REAR SEAT)
Connector Type	RK02FL

Terminal No.	Color of Wire	Signal Name [Specification]
1	G	–
2	R	–

Connector No.	B82
Connector Name	INSIDE KEY ANTENNA (LUGGAGE ROOM)
Connector Type	RK02FL

Terminal No.	Color of Wire	Signal Name [Specification]
1	V	–
2	LG	–

Connector No.	B83
Connector Name	OUTSIDE KEY ANTENNA (REAR BUMPER)
Connector Type	RK02FL

Terminal No.	Color of Wire	Signal Name [Specification]
1	W	–
2	B	–

Connector No.	D2
Connector Name	WIRE TO WIRE
Connector Type	TH40FW-CS15

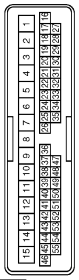

Terminal No.	Color of Wire	Signal Name [Specification]
1	BR	–
2	R	–
3	Y	–
4	V	–
10	BR	–
11	Y	–
12	B	–
13	W	–
14	SB	–
15	R	–
24	Y	–
25	BR	–
26	SHIELD	–
36	B	–
37	P	–
38	Y	–
39	LG	–
44	V	–
45	W	–
46	BG	–
52	B	–
53	P	–

JCKWA4393GB

DOOR LOCK SYSTEM

Connector No.	D10
Connector Name	FRONT POWER WINDOW SWITCH (PASSENGER SIDE)
Connector Type	NS12FW-CS

H.S.

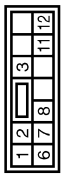

Terminal No.	Color of Wire	Signal Name [Specification]
1	Y	–
2	BR	–
3	B	–
6	Y	–
7	R	–
8	R	–
11	SB	–
12	W	–

Connector No.	D14
Connector Name	OUTSIDE KEY ANTENNA (PASSENGER SIDE)
Connector Type	RK02MGY

H.S.

Terminal No.	Color of Wire	Signal Name [Specification]
1	LG	–
2	Y	–

Connector No.	D15
Connector Name	FRONT DOOR REQUEST SWITCH (PASSENGER SIDE)
Connector Type	RH02FB

H.S.

Terminal No.	Color of Wire	Signal Name [Specification]
1	P	–
2	B	–

Connector No.	D17
Connector Name	FRONT DOOR LOCK ASSEMBLY (PASSENGER SIDE)
Connector Type	E06FGY-RS

H.S.

Terminal No.	Color of Wire	Signal Name [Specification]
5	V	–
6	Y	–

Connector No.	D22
Connector Name	WIRE TO WIRE
Connector Type	TH40FW-CS15

H.S.

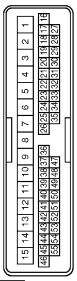

Terminal No.	Color of Wire	Signal Name [Specification]
1	L	–
2	V	–

Connector No.	D34
Connector Name	FRONT DOOR REQUEST SWITCH (DRIVER SIDE)
Connector Type	RH02FB

H.S.

Terminal No.	Color of Wire	Signal Name [Specification]
1	LG	–
2	B	–

Connector No.	D35
Connector Name	POWER WINDOW MAIN SWITCH
Connector Type	NS16FW-CS

H.S.

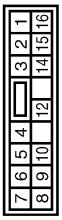

Terminal No.	Color of Wire	Signal Name [Specification]
1	B	–
2	SB	–
3	Y	–
4	W	–
5	Y	–
6	Y	–
7	LG	–
8	BR	–
9	P	–
10	V	–
12	R	–
14	G	–
15	BR	–
16	W	–

Terminal No.	Color of Wire	Signal Name [Specification]
3	SB	–
4	V	–
7	P	–
8	BR	–
9	LG	–
10	Y	–
11	W	–
12	SB	–
13	B	–
14	V	–
15	R	–
24	R	–
25	G	–
26	SHIELD	–
37	LG	–
38	V	–
39	P	–
40	Y	–
41	GR	–
42	V	–
43	L	–
44	L	–
45	LG	–
46	BR	–
47	G	–
48	L	–
49	R	–
50	BR	–
53	P	–

Connector No.	D33
Connector Name	OUTSIDE KEY ANTENNA (DRIVER SIDE)
Connector Type	RK02MGY

H.S.

Terminal No.	Color of Wire	Signal Name [Specification]
1	P	–
2	V	–

JCKWA4394GB

DOOR LOCK SYSTEM

Connector No.	D38
Connector Name	FRONT DOOR LOCK ASSEMBLY (DRIVER SIDE)
Connector Type	E06FGY-RS

H.S.

Terminal No.	Color of Wire	Signal Name [Specification]
1	V	–
2	SB	–
3	G	–
4	B	–
5	L	–
6	R	–

Connector No.	D41
Connector Name	WIRE TO WIRE
Connector Type	TK10MW-NS8

H.S.

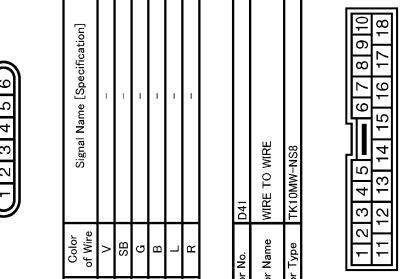

Terminal No.	Color of Wire	Signal Name [Specification]
1	LG	–
2	P	–
I1	G	–
I2	V	–
I4	LG	–
I5	Y	–
I6	L	–

Connector No.	D45
Connector Name	REAR DOOR LOCK ASSEMBLY RH
Connector Type	E06FGY-RS

H.S.

Terminal No.	Color of Wire	Signal Name [Specification]
5	V	–
6	G	–

Connector No.	D61
Connector Name	WIRE TO WIRE
Connector Type	TK10MW-NS8

H.S.

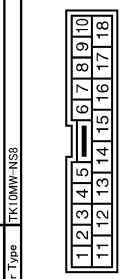

Terminal No.	Color of Wire	Signal Name [Specification]
1	V	–
2	LG	–
I1	G	–
I2	V	–
I4	L	–
I5	BR	–
I6	Y	–

Connector No.	D65
Connector Name	REAR DOOR LOCK ASSEMBLY LH
Connector Type	E06FGY-RS

H.S.

Terminal No.	Color of Wire	Signal Name [Specification]
1	V	–
2	G	–

Connector No.	D71
Connector Name	WIRE TO WIRE
Connector Type	NH10FW-CS10

H.S.

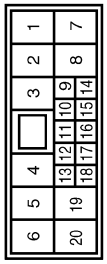

Terminal No.	Color of Wire	Signal Name [Specification]
5	W	–
6	R	–
7	P	–
9	P	–
10	P	–
12	W	–
13	R	–
14	L	–
15	LG	–
17	SHIELD	–
18	Y	–
20	GR	–

Connector No.	D73
Connector Name	WIRE TO WIRE
Connector Type	NH10FW-CS10

H.S.

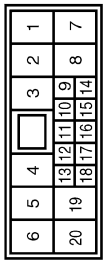

Terminal No.	Color of Wire	Signal Name [Specification]
5	W	–
6	R	–
7	P	–
9	P	–
10	P	–
12	W	–
13	R	–
14	L	–
15	LG	–
17	SHIELD	–
18	Y	–
20	GR	–

JCKWA4395GB

DOOR LOCK SYSTEM

Connector No.	D101
Connector Name	WIRE TO WIRE
Connector Type	NH10MW-CS10

H.S.

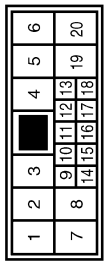

Terminal No.	Color of Wire	Signal Name [Specification]
5	P	–
6	R	–
7	P	–
9	P	–
10	P	–
12	W	–
13	R	–
14	L	–
15	LG	–
17	SHIELD	–
18	B	–
20	GR	–

Connector No.	D111
Connector Name	BACK DOOR OPENER SWITCH ASSEMBLY
Connector Type	TH04MGY-RC

H.S.

Terminal No.	Color of Wire	Signal Name [Specification]
1	L	–
2	B	–
3	B	–
4	P	–

Connector No.	D112
Connector Name	BACK DOOR LOCK ASSEMBLY
Connector Type	NS04FW-CS

H.S.

Terminal No.	Color of Wire	Signal Name [Specification]
1	GR	–
2	B	–
3	P	–
4	B	–

Connector No.	E6
Connector Name	VEHICLE SECURITY HORN
Connector Type	P01FB-A

H.S.

Terminal No.	Color of Wire	Signal Name [Specification]
1	G	–

Connector No.	E7
Connector Name	VEHICLE SECURITY HORN
Connector Type	P01FB-A

H.S.

Terminal No.	Color of Wire	Signal Name [Specification]
2	B/Y	–

Connector No.	E11
Connector Name	IPDM E/R (INTELLIGENT POWER DISTRIBUTION MODULE ENGINE ROOM)
Connector Type	M06FB-LC

H.S.

Terminal No.	Color of Wire	Signal Name [Specification]
9	B	–
14	R	–

Connector No.	E12
Connector Name	IPDM E/R (INTELLIGENT POWER DISTRIBUTION MODULE ENGINE ROOM)
Connector Type	NS08FBR-CS

H.S.

Terminal No.	Color of Wire	Signal Name [Specification]
18	B/W	–
19	W	–
20	V	–

Connector No.	E13
Connector Name	IPDM E/R (INTELLIGENT POWER DISTRIBUTION MODULE ENGINE ROOM)
Connector Type	TH12FW-NH

H.S.

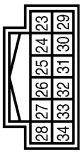

Terminal No.	Color of Wire	Signal Name [Specification]
25	R	–

Terminal No.	Color of Wire	Signal Name [Specification]
26	P	–
27	L	–
28	G	–
32	SB	–
34	W	–

Connector No.	E25
Connector Name	INTELLIGENT KEY WARNING BUZZER
Connector Type	RK03FBR

H.S.

Terminal No.	Color of Wire	Signal Name [Specification]
1	LG	–
3	GR	–

Connector No.	E73
Connector Name	VEHICLE SECURITY HORN RELAY
Connector Type	M03FW-R-LC

H.S.

Terminal No.	Color of Wire	Signal Name [Specification]
1	R	–
2	O	–
3	G	–

JCKWA4396GB

DOOR LOCK SYSTEM

Connector No.	E105
Connector Name	WIRE TO WIRE
Connector Type	TH80MW-CS16-TM4

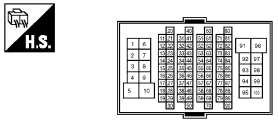

Terminal No.	Color of Wire	Signal Name [Specification]
1	BR	–
2	R	–
3	GR	–
4	LG	–
6	W	–
7	V	–
8	P	–
9	G	–
10	R	–
11	O	–
12	W	–
13	B	–
14	Y	–
15	BR	–
16	LG	–
17	L	–
19	G	–
20	V	–
21	P	–
22	LG	–
23	GR	–
24	L	–
25	R	–
26	SB	–
27	B	–
29	BR	–
30	W	–
31	V	–
32	LG	–
33	O	–
34	L	–
35	BR	–
38	SB	–
39	GR	–
40	Y	–
41	R	–
42	W	–
43	SB	–
44	GR	–
45	G	–
46	P	–
47	LG	–
48	V	–
49	G	–
50	L	–
51	W	–
54	P	–
55	O	–
56	Y	–
57	P	–
58	LG	–
60	LG	–
61	GR	–
62	BR	–
63	O	–
64	R	–
65	Y	–
66	G	–
67	V	–
68	W	–
69	SB	–
71	Y	–
72	L	–
73	R	–
74	L	–
75	V	–
76	P	–
80	O	–
81	L	–
82	SB	–
83	G	–
84	BR	–
85	LG	–
86	GR	–
88	B	–
89	W	–
90	SHIELD	–
91	Y	–
92	BR	–
93	W	–
94	R	–
95	V	–
96	P	–
97	G	–
98	SB	–
99	O	–

Connector No.	M4
Connector Name	DATA LINK CONNECTOR
Connector Type	BD16FW

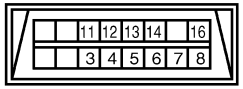

Terminal No.	Color of Wire	Signal Name [Specification]
3	LG	–
4	B	–
5	B	–
6	L	–
7	GR	–
8	G	–
11	SB	–
12	G	–
13	L	–
14	P	–
16	Y	–

Connector No.	M10
Connector Name	WIRE TO WIRE
Connector Type	TH40MW-CS15

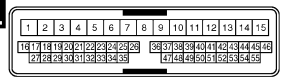

Terminal No.	Color of Wire	Signal Name [Specification]
1	R	–
2	G	–
3	LG	–
4	V	–
10	BR	–
11	Y	–
12	B	–
13	W	–
14	SB	–
15	L	–
24	Y	–
25	BR	–
26	SHIELD	–
36	B	–
37	P	–
38	Y	–
39	LG	–
44	L	–
45	LG	–
46	BR	–
52	B	–
53	V	–

JCKWA4397GB

DOOR LOCK SYSTEM

Connector No.	M11
Connector Name	WIRE TO WIRE
Connector Type	TH40MW-CS15

H.S.

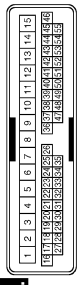

Terminal No.	Color of Wire	Signal Name [Specification]
1	P	–
2	L	–
3	G	–
4	V	–
7	BR	–
8	Y	–
9	LG	–
10	Y	–
11	W	–
12	SB	–
13	B	–
14	L	–
15	R	–
24	R	–
25	G	–
26	SHIELD	–
37	LG	–
38	V	–
39	P	–
40	Y	–
41	B	–
42	P	–
43	L	–
44	L	–
45	LG	–
46	BR	–
47	W	–
48	GR	–
49	R	–
50	BR	–
53	V	–

Connector No.	M18
Connector Name	WIRE TO WIRE
Connector Type	NS16FW-CS

H.S.

Terminal No.	Color of Wire	Signal Name [Specification]
1	G	–
6	V	–
7	P	–
8	P	–
9	B	–
10	W	–
11	LG	–
12	GR	–
13	W	–
14	Y	–
15	LG	–
16	L	–

Connector No.	M19
Connector Name	WIRE TO WIRE
Connector Type	NS16FW-CS

H.S.

Terminal No.	Color of Wire	Signal Name [Specification]
4	BR	–
7	V	–
8	P	–
9	L	–
10	V	–
11	V	–
12	R	–
13	BR	–
14	Y	–
15	L	–

16	G	–

Connector No.	M21
Connector Name	WIRE TO WIRE
Connector Type	TH32FW-NH

H.S.

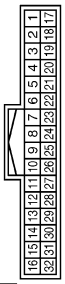

Terminal No.	Color of Wire	Signal Name [Specification]
1	W	–
3	SHIELD	–
4	B	–
5	W	–
6	R	–
11	G	–
15	L	–
16	G	–
18	BR	–
19	G	–
20	V	–
22	B	–
27	L	–
31	L	–
32	P	–

Connector No.	M24
Connector Name	INSIDE KEY ANTENNA (INSTRUMENT CENTER)
Connector Type	RK02FL

H.S.

Terminal No.	Color of Wire	Signal Name [Specification]
1	BR	–
2	Y	–

Connector No.	M25
Connector Name	POWER SWITCH
Connector Type	TK08FBR

H.S.

Terminal No.	Color of Wire	Signal Name [Specification]
3	G	–
4	B	–
5	W	–
6	B	–
7	V	–
8	SB	–

JCKWA4398GB

DOOR LOCK SYSTEM

Connector No.	M34
Connector Name	COMBINATION METER
Connector Type	TH40FW-NH

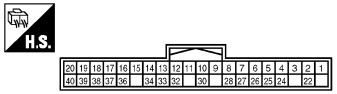

Terminal No.	Color of Wire	Signal Name [Specification]
1	LG	BATTERY POWER SUPPLY
2	R	BATTERY POWER SUPPLY(FOR UPPER METTER)
3	GR	POWER SWITCH SUPPLY
4	BR	POWER SWITCH SUPPLY (FOR UPPER METER)
5	B	GROUND
6	B	GROUND
7	V	ELECTRIC SHIFT WARNING SIGNAL
8	Y	WASHER LEVEL SWITCH SIGNAL
9	G	PLUG IN SIGNAL
10	L	COMMUNICATION SIGNAL (METER → VSP)
11	P	COMMUNICATION SIGNAL (VSP → METER)
12	V	METER CONTROLSWITCH GROUND
13	LG	ENTER SWITCH SIGNAL
14	W	SELECT SWITCH SIGNAL
15	BR	TRIP RESET SWITCH SIGNAL
16	BR	ILLUMINATION CONTROL SWITCH SIGNAL
17	V	ILLUMINATION CONTROL SIGNAL (FOR UPPER METER)
18	P	CAN-L
19	L	CAN-H
20	V	SEAT BELT BUCKLE SWITCH SIGNAL (PASSENGER SIDE)
22	GR	GROUND (FOR UPPER METER)
24	BR	ELECTRIC PARKING BRAKE CONTROL MODULE WAKEUP SIGNAL
25	SB	BRAKE FLUID LEVEL SWITCH SIGNAL
26	B	ILLUMINATION CONTROL SIGNAL
27	R	AIR BAG SIGNAL
28	R	SECURITY SIGNAL
30	GR	VEHICLE SPEED SIGNAL (8-PULSE)
32	W	COMMUNICATION SIGNAL (METER → UPPER)
33	LG	CLOCK SIGNAL
34	L	PLUG IN INDICATOR LAMP SIGNAL
38	V	LED HEADLAMP (RH) WARNING SIGNAL
39	LG	LED HEADLAMP (LH) WARNING SIGNAL
40	Y	SEAT BELT BUCKLE SWITCH SIGNAL (DRIVER SIDE)

Connector No.	M58
Connector Name	ELECTRIC SHIFT CONTROL MODULE
Connector Type	TH20FW-TB4-1V

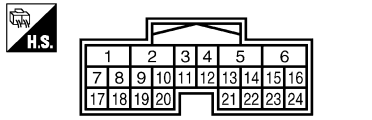

Terminal No.	Color of Wire	Signal Name [Specification]
1	L	MOTOR COIL A U-PHASE
2	G	MOTOR COIL A V-PHASE
3	B	GND
4	B	GND
5	Y	MOTOR COIL A W-PHASE
6	B	GND (MOTOR)
7	W	MAIN POWER SUPPLY 1
8	R	BACK UP POWER SUPPLY
9	BR	POWER SW 1
10	Y	ANGLE SENSOR 1 POWER SUPPLY
11	L	ANGLE SENSOR 1 SIGNAL
12	W	P POSITION SIGNAL
13	R	P/N POSITION SIGNAL
14	P	STOP LAMP SWITCH
15	LG	ENCODER SIGNAL B
16	R	ENCODER POWER SUPPLY
17	V	ELECTRIC SHIFT POWER SUPPLY RELAY
18	SB	PARKING ACTUATOR RELAY A
19	P	ELECTRIC SHIFT SENSOR POWER SUPPLY 1
20	LG	WAKE UP SIGNAL
21	GR	ANGLE SENSOR 1 GND
22	L	N POSITION OUTPUT
23	G	ENCODER GND
24	W	ENCODER SIGNAL A

Connector No.	M68
Connector Name	BCM (BODY CONTROL MODULE)
Connector Type	TH40FB-NH

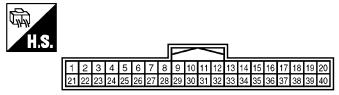

Terminal No.	Color of Wire	Signal Name [Specification]
2	L	COMBI SW INPUT 5
3	GR	COMBI SW INPUT 4
4	BR	COMBI SW INPUT 3
5	G	COMBI SW INPUT 2
6	V	COMBI SW INPUT 1
7	GR	KEY CYL UNLK SW
8	R	KEY CYL LOCK SW
9	BR	STOP LAMP SW 1
12	Y	DOOR LK & UNLK SW LOCK
13	BR	DOOR LK & UNLK SW UNLOCK
14	G	OPTICAL SENS
15	W	REAR WINDOW DEF SW
16	R	DIMMER
17	Y	OPTICAL SENS PWR SPLY
18	V	SENS/RECEIV GND
21	P	NATS ANTENNA AMP.
23	R	SECURITY IND LAMP CONT
24	SB	DONGLE LINK
25	LG	NATS ANTENNA AMP.
29	P	HAZARD SW
30	L	BK DOOR OPENER SW
31	W	DR DOOR UNLK SENS
32	LG	COMBI SW OUTPUT 5
33	Y	COMBI SW OUTPUT 4
34	W	COMBI SW OUTPUT 3
35	R	COMBI SW OUTPUT 2
36	P	COMBI SW OUTPUT 1
37	W	P POSITION
38	SB	RECEIVER COMM
39	L	CAN-H
40	P	CAN-L

Connector No.	M69
Connector Name	BCM (BODY CONTROL MODULE)
Connector Type	FEA09FW-FHA6-SA

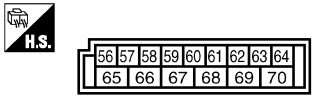

Terminal No.	Color of Wire	Signal Name [Specification]
56	P	INT ROOM LAMP PWR SPLY
57	P	BAT (FUSE)
59	LG	PASS DOOR UNLK OUTPUT
60	V	TURN SIG LH OUTPUT
61	W	TURN SIG RH OUTPUT
63	BR	INT ROOM LAMP CONT
65	V	ALL DOOR LOCK OUTPUT
66	G	DR DOOR UNLK OUTPUT
67	B	GND
68	L	PW PWR SPLY (ON)
69	P	PW PWR SPLY (BAT)
70	Y	BAT (F/L)

Connector No.	M70
Connector Name	BCM (BODY CONTROL MODULE)
Connector Type	TH40FW-NH

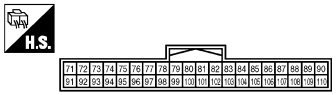

Terminal No.	Color of Wire	Signal Name [Specification]
75	LG	DR DOOR REQ SW
76	SB	POWER SW (PUSH SW)
78	P	DRIVER DOOR ANT+
79	V	DRIVER DOOR ANT-
80	LG	PASS DOOR ANT+
81	Y	PASS DOOR ANT-
82	W	REAR BMPR ANT+
83	B	REAR BMPR ANT-
84	BR	ROOM ANT 1+
85	Y	ROOM ANT 1-
86	G	ROOM ANT 2+
87	R	ROOM ANT 2-
88	V	LUGGAGE ROOM ANT+
89	LG	LUGGAGE ROOM ANT-
90	W	POWER SW ILL PWR
91	V	ACC / ON IND
92	B	POWER SW ILL GND CONT
93	GR	I-KEY WARN BUZZER
96	BR	ACC RELAY CONT
97	W	READY
98	G	IGN RELAY (IPDM E/R) CONT
99	R	IGN RELAY (F/B) CONT
100	P	PASS DOOR REQ SW
102	R	P/N POSITION
104	LG	WAKE-UP
105	P	STOP LAMP SW 2

JCKWA4399GB

DOOR LOCK SYSTEM

Connector No.	M75
Connector Name	REMOTE KEYLESS ENTRY RECEIVER
Connector Type	TH04FW-NH

H.S.

Terminal No.	Color of Wire	Signal Name [Specification]
1	G	GND
2	SB	SIGNAL
4	V	POWER

Connector No.	M77
Connector Name	WIRE TO WIRE
Connector Type	TH80FW-CS16-TM4

H.S.

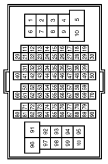

Terminal No.	Color of Wire	Signal Name [Specification]
1	GR	–
2	V	–
3	GR	–
4	LG	–
6	W	–
7	V	–
8	P	–
9	SB	–
10	L	–
11	LG	–
12	W	–
13	R	–
14	Y	–
15	R	–
16	G	–
17	BR	–
19	G	–
20	G	–
21	P	–
22	LG	–
23	GR	–
24	L	–
25	Y	–
26	G	–
27	L	–
29	V	–
30	W	–
31	SB	–
32	LG	–
33	V	–
34	L	–
35	SB	–
38	LG	–
39	GR	–
40	Y	–
41	R	–
42	W	–
43	SB	–
44	GR	–
45	P	–
46	R	–
47	W	–
48	L	–
49	G	–
50	L	–
51	L	–
54	W	–
55	G	–
56	BR	–
57	P	–
58	R	–
60	Y	–
61	GR	–
62	SB	–
63	Y	–
64	G	–
65	V	–
66	P	–
67	Y	–
68	P	–
69	BR	–
71	Y	–
72	L	–
73	G	–
74	L	–
75	V	–
76	R	–
80	W	–
81	L	–
82	SB	–
83	R	–
84	BR	–
85	R	–
86	GR	–
88	R	–
89	W	–
90	SHIELD	–
91	Y	–
92	BR	–
93	W	–
94	P	–
95	V	–
96	P	–
97	G	–
98	R	–
99	LG	–

Connector No.	M79
Connector Name	WIRE TO WIRE
Connector Type	TH24FW-NH

H.S.

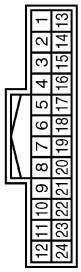

Terminal No.	Color of Wire	Signal Name [Specification]
8	BR	–
11	R	–
12	G	–
17	G	–
18	V	–
20	B	–
21	W	–
22	V	–
23	LG	–
24	SHIELD	–

JCKWA4400GB

INTEGRATED HOMELINK TRANSMITTER SYSTEM

Wiring Diagram

INFOID:0000000006923776

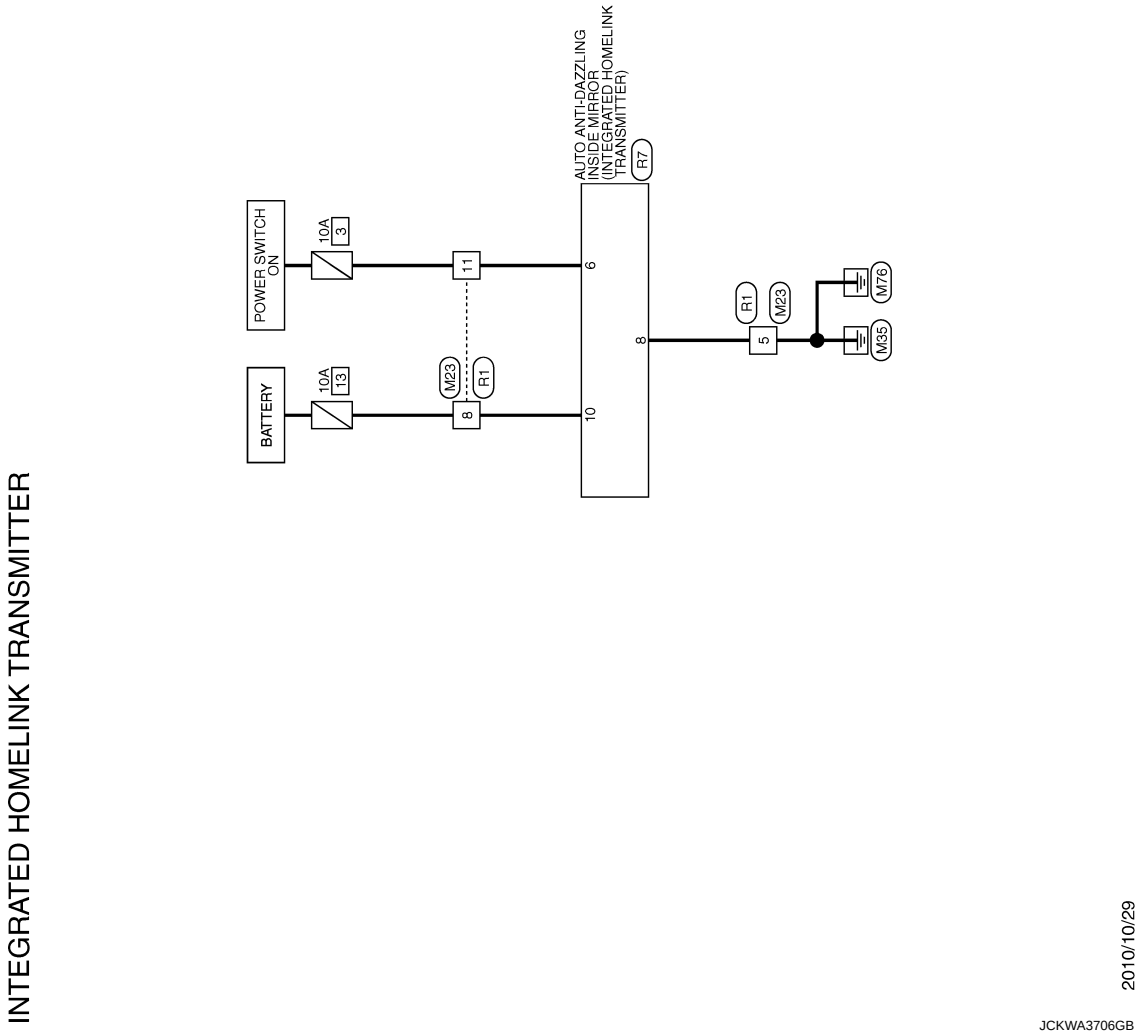

INTEGRATED HOMELINK TRANSMITTER

Connector No.	M23
Connector Name	WIRE TO WIRE
Connector Type	TH16MW-NH

H.S.

Terminal No.	Color of Wire	Signal Name [Specification]
1	Y	–
2	L	–
3	SHIELD	–
5	B	–
6	BR	–
7	P	–
8	Y	–
9	R	–
10	B	–
11	O	–

Connector No.	R7
Connector Name	AUTO ANTI-DAZZLING INSIDE MIRROR
Connector Type	TH10FB-NH

H.S.

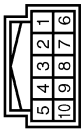

Terminal No.	Color of Wire	Signal Name [Specification]
6	B/R	IGN
8	B	GND
10	B/Y	BAT

Connector No.	R1
Connector Name	WIRE TO WIRE
Connector Type	TH16FW-NH

H.S.

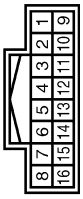

Terminal No.	Color of Wire	Signal Name [Specification]
1	P	–
2	L	–
3	SHIELD	–
5	B	–
6	R	–
7	Y	–
8	B/Y	–
9	V	–
10	G	–
11	B/R	–

JCKWA4401GB

BASIC INSPECTION

DIAGNOSIS AND REPAIR WORK FLOW

Work Flow

INFOID:0000000007423367

OVERALL SEQUENCE

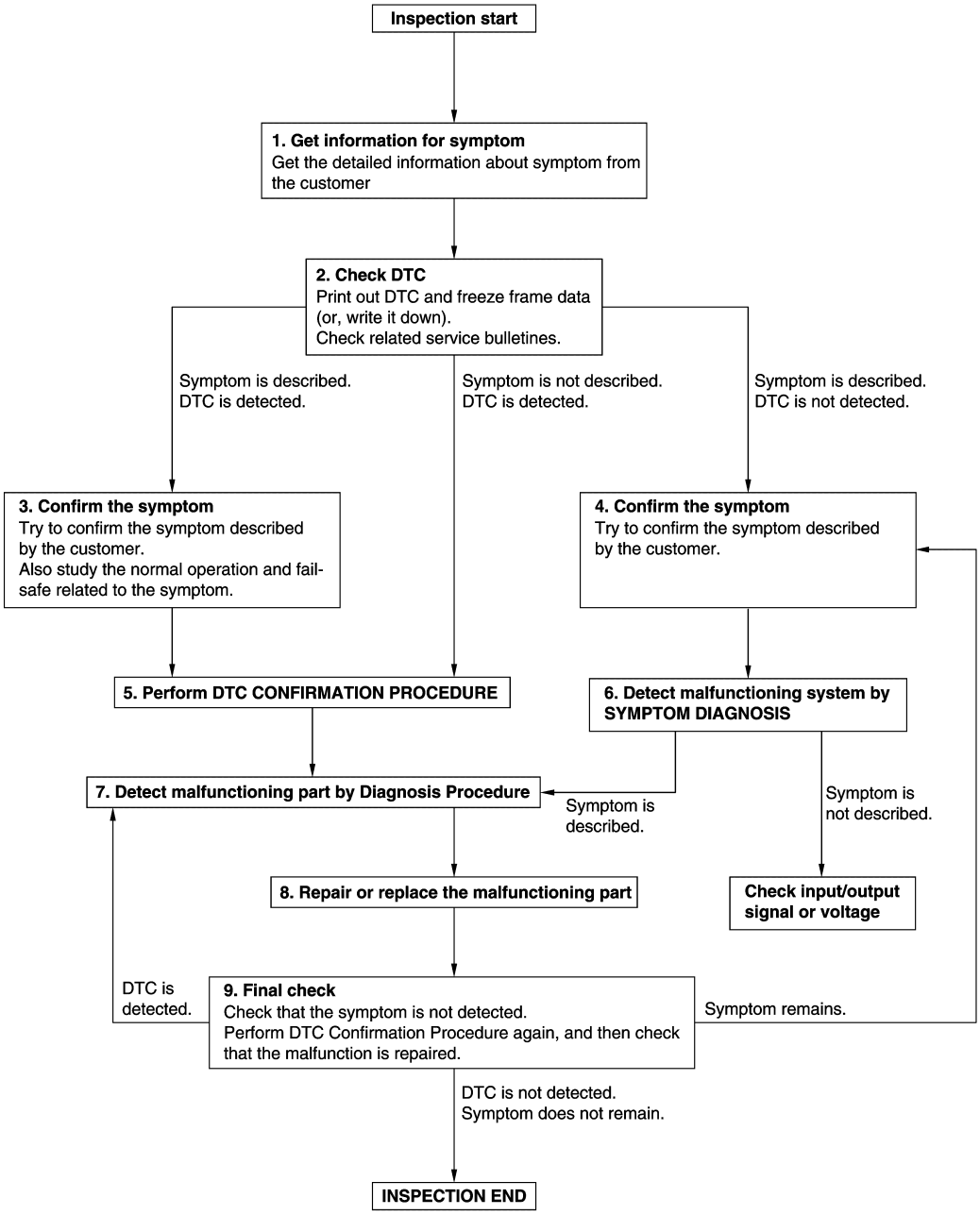

JMKIA8652GB

DETAILED FLOW

1. GET INFORMATION FOR SYMPTOM

1. Get detailed information from the customer about the symptom (the condition and the environment when the incident/malfunction occurs).
2. Check operation condition of the function that is malfunctioning.

>> GO TO 2.

2. CHECK DTC

1. Check DTC.
2. Perform the following procedure if DTC is detected.
- Record DTC and freeze frame data (Print them out using CONSULT.)
- Erase DTC.
- Study the relationship between the cause detected by DTC and the symptom described by the customer.
3. Check related service bulletins for information.

Are any symptoms described and any DTC detected?

Symptom is described, DTC is detected>>GO TO 3.
Symptom is described, DTC is not detected>>GO TO 4.
Symptom is not described, DTC is detected>>GO TO 5.

3. CONFIRM THE SYMPTOM

Try to confirm the symptom described by the customer.
Also study the normal operation and fail-safe related to the symptom.
Verify relation between the symptom and the condition when the symptom is detected.

>> GO TO 5.

4. CONFIRM THE SYMPTOM

Try to confirm the symptom described by the customer.
Verify relation between the symptom and the condition when the symptom is detected.

>> GO TO 6.

5. PERFORM DTC CONFIRMATION PROCEDURE

Perform DTC CONFIRMATION PROCEDURE for the detected DTC, and then check that DTC is detected again. At this time, always connect CONSULT to the vehicle, and check self diagnostic results in real time.
If two or more DTCs are detected, refer to BCS-54, "DTC Inspection Priority Chart" (BCM), and determine trouble diagnosis order.

NOTE:
- Freeze frame data is useful if the DTC is not detected.
- Perform Component Function Check if DTC CONFIRMATION PROCEDURE is not included on Service Manual. This simplified check procedure is an effective alternative though DTC cannot be detected during this check.
  If the result of Component Function Check is NG, it is the same as the detection of DTC by DTC CONFIRMATION PROCEDURE.

Is DTC detected?

YES >> GO TO 7.
NO >> Check according to GI-51, "Intermittent Incident".

6. DETECT MALFUNCTIONING SYSTEM BY SYMPTOM DIAGNOSIS

Detect malfunctioning system according to SYMPTOM DIAGNOSIS based on the confirmed symptom in step 4, and determine the trouble diagnosis order based on possible causes and symptom.

Is the symptom described?

YES >> GO TO 7.
NO >> Monitor input data from related sensors or check voltage of related module terminals using CONSULT.

7. DETECT MALFUNCTIONING PART BY DIAGNOSTIC PROCEDURE

Inspect according to Diagnostic Procedure of the system.

Is malfunctioning part detected?

YES >> GO TO 8.
NO >> Check according to GI-51, "Intermittent Incident".

8. REPAIR OR REPLACE THE MALFUNCTIONING PART

1. Repair or replace the malfunctioning part.
2. Reconnect parts or connectors disconnected during Diagnostic Procedure again after repair and replacement.
3. Check DTC. If DTC is detected, erase it.

>> GO TO 9.

9. FINAL CHECK

When DTC is detected in step 2, perform DTC CONFIRMATION PROCEDURE again, and then check that the malfunction is repaired securely.
When symptom is described by the customer, refer to confirmed symptom in step 3 or 4, and check that the symptom is not detected.

Is DTC detected and does symptom remain?

YES-1 >> DTC is detected: GO TO 7.
YES-2 >> Symptom remains: GO TO 4.
NO >> Before returning the vehicle to the customer, always erase DTC.

DTC/CIRCUIT DIAGNOSIS

B2621 INSIDE ANTENNA

DTC Logic

INFOID:0000000006855513

DTC DETECTION LOGIC

DTC	CONSULT display description	DTC detecting condition	Possible cause
B2621	INSIDE ANTENNA	An excessive high or low voltage from inside antenna (instrument center) is sent to BCM	• Inside key antenna (instrument center) • Harness or connector [Inside key antenna (instrument center) circuit is open or shorted]

DTC CONFIRMATION PROCEDURE

1. PERFORM DTC CONFIRMATION PROCEDURE

1. Select “INTELLIGENT KEY” of “BCM” using CONSULT.
2. Select “INSIDE ANT DIAGNOSIS” in “WORK SUPPORT” mode.
3. Perform inside key antenna (“INSIDE ANT DIAGNOSIS”) on “WORK SUPPORT” of “INTELLIGENT KEY”.
4. Check BCM for DTC.

Is inside key antenna DTC detected?

YES >> Refer to DLK-65, "Diagnosis Procedure".
NO >> Inside key antenna (instrument center) is OK.

Diagnosis Procedure

INFOID:0000000006855514

1. CHECK INSIDE KEY ANTENNA INPUT SIGNAL 1

1. Turn power switch ON.
2. Check signal between BCM harness connector and ground using oscilloscope.

(+) BCM Connector	(+) BCM Terminal	(–)	Condition	Signal (Reference value)
M70	84 85	Ground	When Intelligent Key is in the antenna detection area	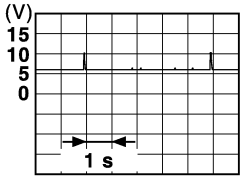 JMKIA3839GB
			When Intelligent Key is not in the antenna detection area	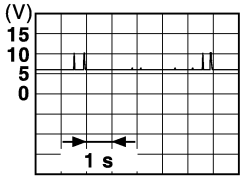 JMKIA5951GB

Is the inspection result normal?

YES >> Replace BCM. Refer to BCS-77, "Removal and Installation".
NO >> GO TO 2.

2. CHECK INSIDE KEY ANTENNA CIRCUIT

1. Turn power switch OFF.
2. Disconnect BCM connector and inside key antenna (instrument center) connector.
3. Check continuity between BCM harness connector and inside key antenna (instrument center) harness connector.

BCM		Inside key antenna (instrument center)		Continuity
Connector	Terminal	Connector	Terminal	
M70	84	M24	1	Existed
	85		2	

4. Check continuity between BCM harness connector and ground.

BCM		Ground	Continuity
Connector	Terminal		
M70	84		Not existed
	85		

Is the inspection result normal?

YES >> GO TO 3.
NO >> Repair or replace harness.

3. CHECK INSIDE KEY ANTENNA INPUT SIGNAL 2

1. Replace inside key antenna (instrument center). (New antenna or other antenna)
2. Connect BCM connector and inside key antenna (instrument center) connector.
3. Turn power switch ON.
4. Check signal between BCM harness connector and ground using oscilloscope.

(+)		(–)	Condition	Signal (Reference value)
BCM				
Connector	Terminal			
M70	84 85	Ground	When Intelligent Key is in the antenna detection area	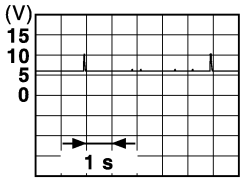 JMKIA3839GB
			When Intelligent Key is not in the antenna detection area	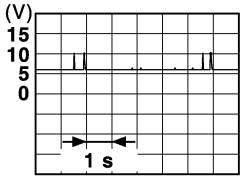 JMKIA5951GB

Is the inspection result normal?

YES >> Replace inside key antenna (instrument center).
NO >> Replace BCM. Refer to BCS-77, "Removal and Installation".

B2622 INSIDE ANTENNA

DTC Logic

INFOID:0000000006855515

DTC DETECTION LOGIC

DTC	CONSULT display description	DTC detecting condition	Possible cause
B2622	INSIDE ANTENNA	An excessive high or low voltage from inside antenna (rear seat) is sent to BCM	• Inside key antenna (rear seat) • Harness or connector [Inside key antenna (rear seat) circuit is open or shorted]

DTC CONFIRMATION PROCEDURE

1. PERFORM DTC CONFIRMATION PROCEDURE

1. Select “INTELLIGENT KEY” of “BCM” using CONSULT.
2. Select “INSIDE ANT DIAGNOSIS” in “WORK SUPPORT” mode.
3. Perform inside key antenna (“INSIDE ANT DIAGNOSIS”) on “WORK SUPPORT” of “INTELLIGENT KEY”.
4. Check BCM for DTC.

Is inside key antenna DTC detected?

YES >> Refer to DLK-67, "Diagnosis Procedure".
NO >> Inside key antenna (rear seat) is OK.

Diagnosis Procedure

INFOID:0000000006855516

1. CHECK INSIDE KEY ANTENNA INPUT SIGNAL 1

1. Turn power switch ON.
2. Check signal between BCM harness connector and ground using oscilloscope.

(+) BCM Connector	(+) BCM Terminal	(–)	Condition	Signal (Reference value)
M70	86 87	Ground	When Intelligent Key is in the antenna detection area	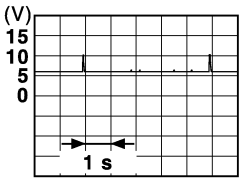 JMKIA3839GB
			When Intelligent Key is not in the antenna detection area	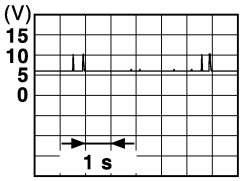 JMKIA5951GB

Is the inspection result normal?

YES >> Replace BCM. Refer to BCS-77, "Removal and Installation".
NO >> GO TO 2.

2. CHECK INSIDE KEY ANTENNA CIRCUIT

1. Turn power switch OFF.
2. Disconnect BCM connector and inside key antenna (rear seat) connector.
3. Check continuity between BCM harness connector and inside key antenna (rear seat) harness connector.

BCM		Inside key antenna (rear seat)		Continuity
Connector	Terminal	Connector	Terminal	
M70	86	B81	1	Existed
	87		2	

4. Check continuity between BCM harness connector and ground.

BCM		Ground	Continuity
Connector	Terminal		
M70	86		Not existed
	87		

Is the inspection result normal?

YES >> GO TO 3.
NO >> Repair or replace harness.

3. CHECK INSIDE KEY ANTENNA INPUT SIGNAL 2

1. Replace inside key antenna (rear seat). (New antenna or other antenna)
2. Connect BCM connector and inside key antenna (rear seat) connector.
3. Turn power switch ON.
4. Check signal between BCM harness connector and ground using oscilloscope.

(+) BCM Connector	(+) BCM Terminal	(–)	Condition	Signal (Reference value)
M70	86 87	Ground	When Intelligent Key is in the antenna detection area	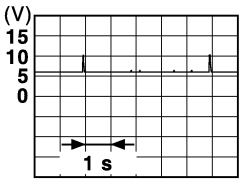 JMKIA3839GB
			When Intelligent Key is not in the antenna detection area	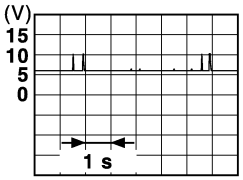 JMKIA5951GB

Is the inspection result normal?

YES >> Replace inside key antenna (rear seat).
NO >> Replace BCM. Refer to BCS-77, "Removal and Installation".

B2623 INSIDE ANTENNA

DTC Logic

INFOID:0000000006855517

DTC DETECTION LOGIC

DTC	CONSULT display description	DTC detecting condition	Possible cause
B2623	INSIDE ANTENNA	An excessive high or low voltage from inside antenna (luggage room) is sent to BCM	• Inside key antenna (luggage room) • Harness or connector [Inside key antenna (luggage room) circuit is open or shorted]

DTC CONFIRMATION PROCEDURE

1. PERFORM DTC CONFIRMATION PROCEDURE

1. Select “INTELLIGENT KEY” of “BCM” using CONSULT.
2. Select “INSIDE ANT DIAGNOSIS” in “WORK SUPPORT” mode.
3. Perform inside key antenna (“INSIDE ANT DIAGNOSIS”) on “WORK SUPPORT” of “INTELLIGENT KEY”.
4. Check BCM for DTC.

Is inside key antenna DTC detected?

YES >> Refer to DLK-69, "Diagnosis Procedure".
NO >> Inside key antenna (luggage room) is OK.

Diagnosis Procedure

INFOID:0000000006855518

1. CHECK INSIDE KEY ANTENNA INPUT SIGNAL 1

1. Turn power switch ON.
2. Check signal between BCM harness connector and ground using oscilloscope.

(+) BCM Connector	(+) BCM Terminal	(–)	Condition	Signal (Reference value)
M70	88 89	Ground	When Intelligent Key is in the antenna detection area	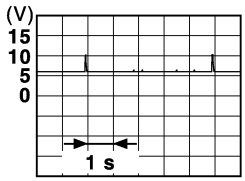 JMKIA3839GB
			When Intelligent Key is not in the antenna detection area	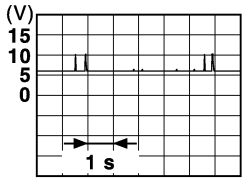 JMKIA5951GB

Is the inspection result normal?

YES >> Replace BCM. Refer to BCS-77, "Removal and Installation".
NO >> GO TO 2.

2. CHECK INSIDE KEY ANTENNA CIRCUIT

1. Turn power switch OFF.
2. Disconnect BCM connector and inside key antenna (luggage room) connector.

3. Check continuity between BCM harness connector and inside key antenna (luggage room) harness connector.

BCM		Inside key antenna (luggage room)		Continuity
Connector	Terminal	Connector	Terminal	
M70	88	B82	1	Existed
	89		2	

4. Check continuity between BCM harness connector and ground.

BCM		Ground	Continuity
Connector	Terminal		
M70	88		Not existed
	89		

Is the inspection result normal?

YES >> GO TO 3.
NO >> Repair or replace harness.

3. CHECK INSIDE KEY ANTENNA INPUT SIGNAL 2

1. Replace inside key antenna (luggage room). (New antenna or other antenna)
2. Connect BCM connector and inside key antenna (luggage room) connector.
3. Turn power switch ON.
4. Check signal between BCM harness connector and ground using oscilloscope.

(+) BCM Connector	(+) BCM Terminal	(–)	Condition	Signal (Reference value)
M70	88 89	Ground	When Intelligent Key is in the antenna detection area	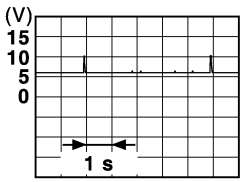 JMKIA3839GB
			When Intelligent Key is not in the antenna detection area	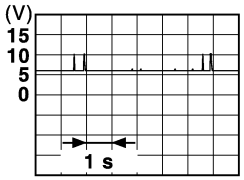 JMKIA5951GB

Is the inspection result normal?

YES >> Replace inside key antenna (luggage room).
NO >> Replace BCM. Refer to BCS-77, "Removal and Installation".

B2626 OUTSIDE ANTENNA

DTC Logic

INFOID:0000000006855521

DTC DETECTION LOGIC

DTC	CONSULT display description	DTC detecting condition	Possible cause
B2626	OUTSIDE ANTENNA	An excessive high or low voltage from front door right outside key antenna is sent to BCM	• Front door right outside key antenna • Harness or connector [Front door right outside key antenna circuit is open or shorted]

DTC CONFIRMATION PROCEDURE

1. PERFORM DTC CONFIRMATION PROCEDURE

1. Disconnect outside key antenna (passenger side) connector.
2. Perform “INTELLIGENT KEY” Self Diagnostic Result.

Is outside key antenna DTC detected?

YES >> Refer to DLK-71, "Diagnosis Procedure".
NO >> Outside key antenna (passenger side) is OK.

Diagnosis Procedure

INFOID:0000000006855522

1. CHECK OUTSIDE KEY ANTENNA INPUT SIGNAL 1

1. Turn power switch OFF.
2. Check signal between BCM harness connector and ground using oscilloscope.

(+) BCM Connector	(+) BCM Terminal	(–)	Condition		Signal (Reference value)
M70	80 81	Ground	When the passenger door request switch is operated with power switch OFF	When Intelligent Key is in the antenna detection area (The distance between Intelligent Key and antenna: 80 cm or less)	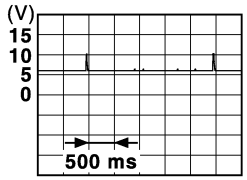 JMKIA5955GB
				When Intelligent Key is not in the antenna detection area (The distance between Intelligent Key and antenna: Approx. 2 m)	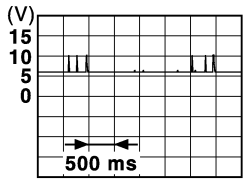 JMKIA5954GB

Is the inspection result normal?

YES >> Replace BCM. Refer to BCS-77, "Removal and Installation".
NO >> GO TO 2.

2. CHECK OUTSIDE KEY ANTENNA CIRCUIT

1. Disconnect BCM connector and outside key antenna (passenger side) connector.
2. Check continuity between BCM harness connector and outside key antenna (passenger side) harness connector.

BCM		Outside key antenna (passenger side)		Continuity
Connector	Terminal	Connector	Terminal	
M70	80	D14	1	Existed
	81		2	

3. Check continuity between BCM harness connector and ground.

BCM		Ground	Continuity
Connector	Terminal		
M70	80		Not existed
	81		

Is the inspection result normal?

YES >> GO TO 3.
NO >> Repair or replace harness.

3. CHECK OUTSIDE KEY ANTENNA INPUT SIGNAL 2

1. Replace outside key antenna (passenger side). (New antenna or other antenna)
2. Connect BCM connector and outside key antenna (passenger side) connector.
3. Check signal between BCM harness connector and ground using oscilloscope.

(+) BCM Connector	(+) BCM Terminal	(–)	Condition		Signal (Reference value)
M70	80 81	Ground	When the passenger door request switch is operated with power switch OFF	When Intelligent Key is in the antenna detection area (The distance between Intelligent Key and antenna: 80 cm or less)	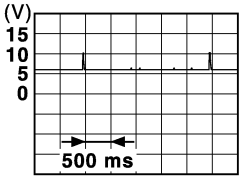 JMKIA5955GB
				When Intelligent Key is not in the antenna detection area (The distance between Intelligent Key and antenna: Approx. 2 m)	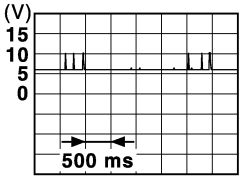 JMKIA5954GB

Is the inspection result normal?

YES >> Replace passenger side outside handle.
NO >> Replace BCM. Refer to BCS-77, "Removal and Installation".

B2627 OUTSIDE ANTENNA

DTC Logic

INFOID:0000000006855519

DTC DETECTION LOGIC

DTC	CONSULT display description	DTC detecting condition	Possible cause
B2627	OUTSIDE ANTENNA	An excessive high or low voltage from front door left outside key antenna is sent to BCM	• Front door left outside key antenna • Harness or connector [Front door left outside key antenna circuit is open or shorted]

DTC CONFIRMATION PROCEDURE

1. PERFORM DTC CONFIRMATION PROCEDURE

1. Disconnect outside key antenna (driver side) connector.
2. Perform “INTELLIGENT KEY” Self Diagnostic Result.

Is outside key antenna DTC detected?

YES >> Refer to DLK-73, "Diagnosis Procedure".
NO >> Outside key antenna (driver side) is OK.

Diagnosis Procedure

INFOID:0000000006855520

1. CHECK OUTSIDE KEY ANTENNA INPUT SIGNAL 1

1. Turn power switch OFF.
2. Check signal between BCM harness connector and ground using oscilloscope.

(+) BCM Connector	(+) BCM Terminal	(–)	Condition		Signal (Reference value)
M70	78 79	Ground	When the driver door request switch is operated with power switch OFF	When Intelligent Key is in the antenna detection area (The distance between Intelligent Key and antenna: 80 cm or less)	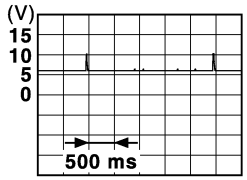 JMKIA5955GB
				When Intelligent Key is not in the antenna detection area (The distance between Intelligent Key and antenna: Approx. 2 m)	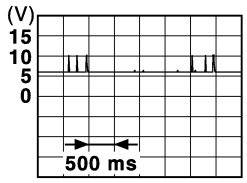 JMKIA5954GB

Is the inspection result normal?

YES >> Replace BCM. Refer to BCS-77, "Removal and Installation".
NO >> GO TO 2.

2. CHECK OUTSIDE KEY ANTENNA CIRCUIT

1. Disconnect BCM connector and outside key antenna (driver side) connector.
2. Check continuity between BCM harness connector and outside key antenna (driver side) harness connector.

BCM		Outside key antenna (driver side)		Continuity
Connector	Terminal	Connector	Terminal	
M70	78	D33	1	Existed
	79		2	

3. Check continuity between BCM harness connector and ground.

BCM		Ground	Continuity
Connector	Terminal		
M70	78		Not existed
	79		

Is the inspection result normal?

YES >> GO TO 3.
NO >> Repair or replace harness.

3. CHECK OUTSIDE KEY ANTENNA INPUT SIGNAL 2

1. Replace outside key antenna (driver side). (New antenna or other antenna)
2. Connect BCM connector and outside key antenna (driver side) connector.
3. Check signal between BCM harness connector and ground using oscilloscope.

(+) BCM Connector	(+) BCM Terminal	(–)	Condition		Signal (Reference value)
M70	78 79	Ground	When the driver door request switch is operated with power switch OFF	When Intelligent Key is in the antenna detection area (The distance between Intelligent Key and antenna: 80 cm or less)	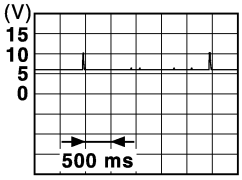 JMKIA5955GB
				When Intelligent Key is not in the antenna detection area (The distance between Intelligent Key and antenna: Approx. 2 m)	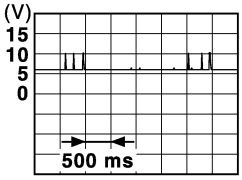 JMKIA5954GB

Is the inspection result normal?

YES >> Replace driver side outside handle.
NO >> Replace BCM. Refer to BCS-77, "Removal and Installation".

B2628 OUTSIDE ANTENNA

DTC Logic

INFOID:0000000006855523

DTC DETECTION LOGIC

DTC	CONSULT display description	DTC detecting condition	Possible cause
B2628	OUTSIDE ANTENNA	An excessive high or low voltage from outside key antenna (rear bumper) is sent to BCM	• Outside key antenna (rear bumper) • Harness or connector [Outside key antenna (rear bumper) circuit is open or shorted]

DTC CONFIRMATION PROCEDURE

1. PERFORM DTC CONFIRMATION PROCEDURE

1. Disconnect outside key antenna (rear bumper) connector.
2. Perform “INTELLIGENT KEY” Self Diagnostic Result.

Is outside key antenna DTC detected?

YES >> Refer to DLK-75, "Diagnosis Procedure".
NO >> Outside key antenna (rear bumper) is OK.

Diagnosis Procedure

INFOID:0000000006855524

1. CHECK OUTSIDE KEY ANTENNA INPUT SIGNAL 1

1. Turn power switch OFF.
2. Check signal between BCM harness connector and ground using oscilloscope.

(+) BCM Connector	(+) BCM Terminal	(–)	Condition		Signal (Reference value)
M70	82 83	Ground	When the back door request switch is operated with power switch OFF	When Intelligent Key is in the antenna detection area (The distance between Intelligent Key and antenna: 80 cm or less)	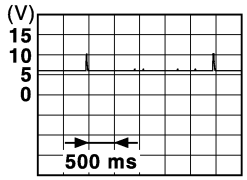 JMKIA5955GB
				When Intelligent Key is not in the antenna detection area (The distance between Intelligent Key and antenna: Approx. 2 m)	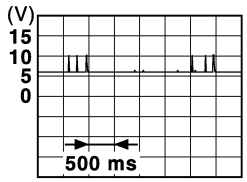 JMKIA5954GB

Is the inspection result normal?

YES >> Replace BCM. Refer to BCS-77, "Removal and Installation".
NO >> GO TO 2.

2. CHECK OUTSIDE KEY ANTENNA CIRCUIT

1. Disconnect BCM connector and outside key antenna (rear bumper) connector.
2. Check continuity between BCM harness connector and outside key antenna (rear bumper) harness connector.

BCM		Outside key antenna (rear bumper)		Continuity
Connector	Terminal	Connector	Terminal	
M70	82	B83	1	Existed
	83		2	

3. Check continuity between BCM harness connector and ground.

BCM		Ground	Continuity
Connector	Terminal		
M70	82		Not existed
	83		

Is the inspection result normal?

YES >> GO TO 3.
NO >> Repair or replace harness.

3. CHECK OUTSIDE KEY ANTENNA INPUT SIGNAL 2

1. Replace outside key antenna (rear bumper). (New antenna or other antenna)
2. Connect BCM and outside key antenna (rear bumper) connector.
3. Check signal between BCM harness connector and ground using oscilloscope.

(+) BCM		(–)	Condition		Signal (Reference value)
Connector	Terminal				
M70	82 83	Ground	When the back door request switch is operated with power switch OFF	When Intelligent Key is in the antenna detection area (The distance between Intelligent Key and antenna: 80 cm or less)	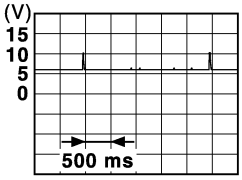 JMKIA5955GB
				When Intelligent Key is not in the antenna detection area (The distance between Intelligent Key and antenna: Approx. 2 m)	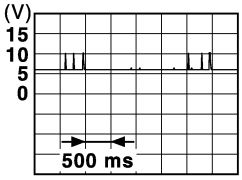 JMKIA5954GB

Is the inspection result normal?

YES >> Replace outside key antenna (rear bumper).
NO >> Replace BCM. Refer to BCS-77, "Removal and Installation".

BACK DOOR OPENER ACTUATOR

Component Function Check

INFOID:0000000006855525

1. CHECK FUNCTION

1. Select “INTELLIGENT KEY” of “BCM” using CONSULT.
2. Select “TRUNK/BACK DOOR” in “ACTIVE TEST” mode.
3. Touch “OPEN” to check that it works normally.

Is the inspection result normal?

YES >> Back door opener actuator is OK.
NO >> Refer to DLK-77, "Diagnosis Procedure".

Diagnosis Procedure

INFOID:0000000006855526

1. CHECK BACK DOOR OPENER ACTUATOR INPUT SIGNAL

1. Turn power switch OFF.
2. Disconnect back door lock assembly connector.
3. Check voltage between back door lock assembly harness connector and ground.

(+)		(–)	Condition		Voltage (Approx.)
Back door lock assembly					
Connector	Terminal				
D112	1	Ground	Back door opener switch	ON	9 - 16 V

Is the inspection result normal?

YES >> GO TO 3.
NO >> GO TO 2.

2. CHECK BACK DOOR OPENER ACTUATOR CIRCUIT

1. Disconnect BCM connector.
2. Check continuity between BCM harness connector and back door lock assembly harness connector.

BCM		Back door lock assembly		Continuity
Connector	Terminal	Connector	Terminal	
B10	53	D112	1	Existed

3. Check continuity between BCM harness connector and ground.

BCM		Ground	Continuity
Connector	Terminal		
B10	53		Not existed

Is the inspection result normal?

YES >> Replace BCM. Refer to BCS-77, "Removal and Installation".
NO >> Repair or replace harness.

3. CHECK BACK DOOR OPENER ACTUATOR GROUND CIRCUIT

Check continuity between back door lock assembly harness connector and ground.

Back door lock assembly		Ground	Continuity
Connector	Terminal		
D112	2		Existed

Is the inspection normal?

YES >> Replace back door lock assembly.

NO >> Repair or replace harness.

BACK DOOR OPENER SWITCH

Component Function Check

INFOID:0000000006855527

1. CHECK FUNCTION

1. Select “TRUNK” of “BCM” using CONSULT.
2. Select “TR/BD OPEN SW” in “DATA MONITOR” mode.
3. Check that the function operates normally according to the following conditions.

Monitor item	Condition		Status
TR/BD OPEN SW	Back door opener switch	Pressed	ON
		Released	OFF

Is the inspection result normal?

YES >> Back door opener switch is OK.
NO >> Refer to DLK-79, "Diagnosis Procedure".

Diagnosis Procedure

INFOID:0000000006855528

1. CHECK BACK DOOR OPENER SWITCH INPUT SIGNAL

1. Turn power switch OFF.
2. Disconnect back door opener switch assembly connector.
3. Check signal between back door opener switch assembly harness connector and ground using oscilloscope.

(+)		(–)	Signal (Reference value)
Back door opener switch assembly			
Connector	Terminal		
D111	1	Ground	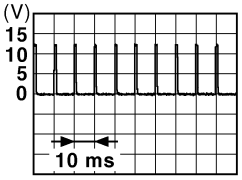 JPMIA0012GB

Is the inspection result normal?

YES >> GO TO 3.
NO >> GO TO 2.

2. CHECK BACK DOOR OPENER SWITCH CIRCUIT

1. Disconnect BCM connector.
2. Check continuity between BCM harness connector and back door opener switch assembly harness connector.

BCM		Back door opener switch assembly		Continuity
Connector	Terminal	Connector	Terminal	
M68	30	D111	1	Existed

3. Check continuity between BCM harness connector and ground.

BCM		Ground	Continuity
Connector	Terminal		
M68	30		Not existed

Is the inspection result normal?

YES >> Replace BCM. Refer to BCS-77, "Removal and Installation".

NO >> Repair or replace harness.

3. CHECK BACK DOOR OPENER SWITCH GROUND CIRCUIT

Check continuity between back door opener switch assembly harness connector and ground.

Back door opener switch assembly		Ground	Continuity
Connector	Terminal		
D111	2		Existed

Is the inspection result normal?

YES >> GO TO 4.
NO >> Repair or replace harness.

4. CHECK BACK DOOR OPENER SWITCH

Refer to DLK-80, "Component Inspection".

Is the inspection result normal?

YES >> GO TO 5.
NO >> Replace back door opener switch assembly.

5. CHECK INTERMITTENT INCIDENT

Refer to GI-51, "Intermittent Incident".

>> INSPECTION END

Component Inspection

INFOID:0000000006855529

1. CHECK BACK DOOR OPENER SWITCH

1. Turn power switch OFF.
2. Disconnect back door opener switch assembly connector.
3. Check continuity between back door opener switch assembly terminals.

Back door opener switch assembly		Condition		Continuity
Terminal				
1	2	Back door opener switch	Pressed	Existed
			Released	Not existed

Is the inspection result normal?

YES >> INSPECTION END
NO >> Replace back door opener switch assembly.

BACK DOOR REQUEST SWITCH

Component Function Check

INFOID:0000000006855530

1. CHECK FUNCTION

1. Select “INTELLIGENT KEY” of “BCM” using CONSULT.
2. Select “REQ SW-BD/TR” in “DATA MONITOR” mode.
3. Check that the function operates normally according to the following conditions.

Monitor item	Condition		Status
REQ SW-BD/TR	Back door request switch	Pressed	ON
		Released	OFF

Is the inspection result normal?

YES >> Back door request switch is OK.
NO >> Refer to DLK-81, "Diagnosis Procedure".

Diagnosis Procedure

INFOID:0000000006855531

1. CHECK BACK DOOR REQUEST SWITCH INPUT SIGNAL

1. Turn power switch OFF.
2. Disconnect back door opener switch assembly connector.
3. Check voltage between back door opener switch assembly harness connector and ground.

(+)		(–)	Voltage (Approx.)
Back door opener switch assembly			
Connector	Terminal		
D111	4	Ground	9 - 16 V

Is the inspection result normal?

YES >> GO TO 3.
NO >> GO TO 2.

2. CHECK BACK DOOR REQUEST SWITCH CIRCUIT

1. Disconnect BCM connector.
2. Check continuity between BCM harness connector and back door opener switch assembly harness connector.

BCM		Back door opener switch assembly		Continuity
Connector	Terminal	Connector	Terminal	
B10	51	D111	4	Existed

3. Check continuity between BCM harness connector and ground.

BCM		Ground	Continuity
Connector	Terminal		
B10	51		Not existed

Is the inspection result normal?

YES >> Replace BCM. Refer to BCS-77, "Removal and Installation".
NO >> Repair harness or connector.

3. CHECK BACK DOOR REQUEST SWITCH GROUND CIRCUIT

Check continuity between back door opener switch assembly harness connector and ground.

Back door opener switch assembly		Ground	Continuity
Connector	Terminal		
D111	3		Existed

Is the inspection result normal?

YES >> GO TO 4.
NO >> Repair or replace harness.

4. CHECK BACK DOOR REQUEST SWITCH

Refer to DLK-82, "Component Inspection".

Is the inspection result normal?

YES >> GO TO 5.
NO >> Replace back door opener switch assembly.

5. CHECK INTERMITTENT INCIDENT

Refer to GI-51, "Intermittent Incident".

>> INSPECTION END

Component Inspection

INFOID:0000000006855532

1. CHECK BACK DOOR REQUEST SWITCH

1. Turn power switch OFF.
2. Disconnect back door opener switch assembly connector.
3. Check continuity between back door opener switch assembly terminals.

Back door opener switch assembly		Condition		Continuity
Terminal				
3	4	Back door request switch	Pressed	Existed
			Released	Not existed

Is the inspection result normal?

YES >> INSPECTION END
NO >> Replace back door opener switch assembly.

BUZZER (COMBINATION METER)

Component Function Check

INFOID:0000000006855533

1.CHECK FUNCTION

1. Select “INTELLIGENT KEY” of “BCM” using CONSULT.
2. Select “INSIDE BUZZER” in “ACTIVE TEST” mode.
3. Touch “Key”, “Knob” or “Take Out” to check that it works normally.

Is the inspection result normal?

Yes >> Buzzer (combination meter) is OK.
No >> Refer to DLK-83, "Diagnosis Procedure".

Diagnosis Procedure

INFOID:0000000006855534

1.CHECK METER BUZZER CIRCUIT

Refer to WCS-41, "Component Function Check".

Is the inspection result normal?

Yes >> GO TO 2.
No >> Repair or replace the malfunctioning parts.

2.CHECK INTERMITTENT INCIDENT

Refer to GI-51, "Intermittent Incident".

>> INSPECTION END

DOOR KEY CYLINDER SWITCH

Component Function Check

INFOID:0000000006889716

1. CHECK FUNCTION

1. Select “DOOR LOCK” of “BCM” using CONSULT.
2. Select “KEY CYL LK SW”, “KEY CYL UN-SW” in “DATA MONITOR” mode.
3. Check that the function operates normally according to the following conditions.

Monitor item	Condition		Status
KEY CYL LK-SW	Driver side door key cylinder	Lock	ON
		Neutral / Unlock	OFF
KEY CYL UN-SW		Unlock	ON
		Neutral / Lock	OFF

Is the inspection result normal?

YES >> Door key cylinder switch is OK.
NO >> Refer to DLK-84, "Diagnosis Procedure".

Diagnosis Procedure

INFOID:0000000006889717

1. CHECK DOOR KEY CYLINDER SWITCH INPUT SIGNAL

1. Turn pawer switch OFF.
2. Disconnect front door lock assembly (driver side) connector.
3. Check voltage between front door lock assembly (driver side) harness connector and ground.

(+)		(–)	Voltage (V) (Approx.)
Front door lock assembly (driver side)			
Connector	Terminal		
D38	5	Ground	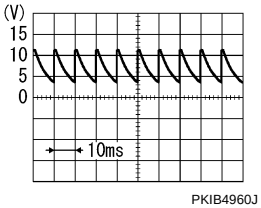 7.0 - 8.0 V
	6		

Is the inspection result normal?

YES >> GO TO 3.
NO >> GO TO 2.

2. CHECK DOOR KEY CYLINDER SWITCH SIGNAL CIRCUIT

1. Disconnect BCM connector.
2. Check continuity between BCM harness connector and front door lock assembly (driver side) harness connector.

BCM		Front door lock assembly (driver side)		Continuity
Connector	Terminal	Connector	Terminal	
M68	7	D38	5	Existed
	8		6	

3. Check continuity between BCM harness connector and ground.

BCM		Ground	Continuity
Connector	Terminal		
M68	7		Not existed
	8		

Is the inspection result normal?

YES >> Replace BCM. Refer to BCS-77, "Removal and Installation".
NO >> Repair or replace harness.

3. CHECK DOOR KEY CYLINDER SWITCH GROUND CIRCUIT

Check continuity between front door lock assembly (driver side) harness connector and ground.

Front door lock assembly (driver side)		Ground	Continuity
Connector	Terminal		
D38	4		Existed

Is the inspection result normal?

YES >> GO TO 4.
NO >> Repair or replace harness.

4. CHECK DOOR KEY CYLINDER SWITCH

Refer to DLK-85, "Component Inspection".

Is the inspection result normal?

YES >> GO TO 5.
NO >> Replace front door lock assembly (driver side).

5. CHECK INTERMITTENT INCIDENT

Refer to GI-51, "Intermittent Incident".

>> INSPECTION END

Component Inspection

INFOID:0000000006889718

1. CHECK DOOR KEY CYLINDER SWITCH

1. Turn power switch OFF.
2. Disconnect front door lock assembly (driver side) terminal.
3. Check continuity between front door lock assembly (driver side) terminals.

Front door lock assembly (driver side) Terminal		Condition		Continuity
5	4	Driver side door key cylinder	Unlock	Existed
			Neutral / Lock	Not existed
6			Lock	Existed
			Neutral / Unlock	Not existed

Is the inspection result normal?

YES >> INSPECTION END
NO >> Replace front door lock assembly (driver side).

DOOR LOCK ACTUATOR
DRIVER SIDE

DRIVER SIDE : Component Function Check

INFOID:0000000006855535

1.CHECK FUNCTION

1. Select “DOOR LOCK” of “BCM” using CONSULT.
2. Select “DOOR LOCK” in “ACTIVE TEST” mode.
3. Touch “ALL LOCK” or “ALL UNLOCK” to check that it works normally.

Is the inspection result normal?

YES >> Door lock actuator is OK.
NO >> Refer to DLK-86, "DRIVER SIDE : Diagnosis Procedure".

DRIVER SIDE : Diagnosis Procedure

INFOID:0000000006855536

1.CHECK DOOR LOCK ACTUATOR INPUT SIGNAL

1. Turn power switch OFF.
2. Disconnect front door lock assembly (driver side) connector.
3. Check voltage between front door lock assembly (driver side) harness connector and ground.

(+)		(–)	Condition		Voltage (Approx.)
Front door lock assembly (driver side)					
Connector	Terminal				
D38	1	Ground	Door lock and unlock switch	Lock	9 - 16 V
	2			Unlock	

Is the inspection result normal?

YES >> Replace front door lock assembly (driver side).
NO >> GO TO 2.

2.CHECK DOOR LOCK ACTUATOR CIRCUIT

1. Disconnect BCM connector and all door lock assembly connectors.
2. Check continuity between BCM harness connector and front door lock assembly (driver side) harness connector.

BCM		Front door lock assembly (driver side)		Continuity
Connector	Terminal	Connector	Terminal	
M69	65	D38	1	Existed
	66		2	

3. Check continuity between BCM harness connector and ground.

BCM		Ground	Continuity
Connector	Terminal		
M69	65		Not existed
	66		

Is the inspection result normal?

YES >> GO TO 3.
NO >> Repair or replace harness.

3.CHECK BCM OUTPUT SIGNAL

1. Connect BCM connector.
2. Check voltage between BCM harness connector and ground.

(+)		(–)	Condition		Voltage (Approx.)
BCM					
Connector	Terminal				
M69	65	Ground	Door lock and unlock switch	Lock	9 - 16 V
	66			Unlock	

Is the inspection result normal?

YES >> Check for internal short of each door lock actuator.
NO >> Replace BCM. Refer to BCS-77, "Removal and Installation".

PASSENGER SIDE

PASSENGER SIDE : Component Function Check

INFOID:0000000006855537

1. CHECK FUNCTION

1. Select “DOOR LOCK” of “BCM” using CONSULT.
2. Select “DOOR LOCK” in “ACTIVE TEST” mode.
3. Check that the function operates normally according to the following conditions.

Monitor item		Status	
DOOR LOCK	ALL LOCK	Door lock actuators	LOCK
	ALL UNLK		UNLOCK

Is the inspection result normal?

YES >> Door lock actuator is OK.
NO >> Refer to DLK-86, "DRIVER SIDE : Diagnosis Procedure".

PASSENGER SIDE : Diagnosis Procedure

INFOID:0000000006855538

1. CHECK DOOR LOCK ACTUATOR INPUT SIGNAL

1. Turn power switch OFF.
2. Disconnect front door lock assembly (passenger side) connector.
3. Check voltage between front door lock assembly (passenger side) harness connector and ground.

(+)		(–)	Condition		Voltage (Approx.)
Front door lock assembly (passenger side)					
Connector	Terminal				
D17	5	Ground	Door lock and unlock switch	Lock	9 - 16 V
	6			Unlock	

Is the inspection result normal?

YES >> Replace front door lock assembly (passenger side).
NO >> GO TO 2.

2. CHECK DOOR LOCK ACTUATOR CIRCUIT

1. Disconnect BCM connector and all door lock assembly connectors.
2. Check continuity between BCM harness connector and front door lock assembly (passenger side) harness connector.

BCM		Front door lock assembly (passenger side)		Continuity
Connector	Terminal	Connector	Terminal	
M69	59	D17	6	Existed
	65		5	

3. Check continuity between BCM harness connector and ground.

BCM		Ground	Continuity
Connector	Terminal		
M69	59		Not existed
	65		

Is the inspection result normal?

YES >> GO TO 3.
NO >> Repair or replace harness.

3. CHECK BCM OUTPUT SIGNAL

1. Connect BCM connector.
2. Check voltage between BCM harness connector and ground.

(+)		(–)	Condition		Voltage (Approx.)
BCM					
Connector	Terminal				
M69	59	Ground	Door lock and unlock switch	Unlock	9 - 16 V
	65			Lock	

Is the inspection result normal?

YES >> Check for internal short of each door lock actuator.
NO >> Replace BCM. Refer to BCS-77, "Removal and Installation".

REAR LH

REAR LH : Component Function Check

INFOID:0000000006855539

1. CHECK FUNCTION

1. Select “DOOR LOCK” of “BCM” using CONSULT.
2. Select “DOOR LOCK” in “ACTIVE TEST” mode.
3. Check that the function operates normally according to the following conditions.

Monitor item		Status	
DOOR LOCK	ALL LOCK	Door lock actuators	LOCK
	ALL UNLK		UNLOCK

Is the inspection result normal?

YES >> Door lock actuator is OK.
NO >> Refer to DLK-86, "DRIVER SIDE : Diagnosis Procedure".

REAR LH : Diagnosis Procedure

INFOID:0000000006855540

1. CHECK DOOR LOCK ACTUATOR INPUT SIGNAL

1. Turn power switch OFF.
2. Disconnect rear door lock assembly LH connector.
3. Check voltage between rear door lock assembly LH harness connector and ground.

(+)		(–)	Condition		Voltage (Approx.)
Rear door lock assembly LH					
Connector	Terminal				
D65	1	Ground	Door lock and unlock switch	Lock	9 - 16 V
	2			Unlock	

Is the inspection result normal?

YES >> Replace rear door lock assembly LH.
NO >> GO TO 2.

2. CHECK DOOR LOCK ACTUATOR CIRCUIT

1. Disconnect BCM connector and all door lock assembly connectors.
2. Check continuity between BCM harness connector and rear door lock assembly LH harness connector.

BCM		Rear door lock assembly LH		Continuity
Connector	Terminal	Connector	Terminal	
B10	55	D65	2	Existed
M69	65		1	

3. Check continuity between BCM harness connector and ground.

BCM		Ground	Continuity
Connector	Terminal		
B10	55		Not existed
M69	65		

Is the inspection result normal?

YES >> GO TO 3.
NO >> Repair or replace harness.

3. CHECK BCM OUTPUT SIGNAL

1. Connect BCM connector.
2. Check voltage between BCM harness connector and ground.

(+)		(–)	Condition		Voltage (Approx.)
BCM					
Connector	Terminal				
B10	55	Ground	Door lock and unlock switch	Unlock	9 - 16 V
M69	65			Lock	

Is the inspection result normal?

YES >> Check for internal short of each door lock actuator.
NO >> Replace BCM. Refer to BCS-77, "Removal and Installation".

REAR RH

REAR RH : Component Function Check

INFOID:0000000006855541

1. CHECK FUNCTION

1. Select “DOOR LOCK” of “BCM” using CONSULT.
2. Select “DOOR LOCK” in “ACTIVE TEST” mode.
3. Check that the function operates normally according to the following conditions.

Monitor item		Status	
DOOR LOCK	ALL LOCK	Door lock actuators	LOCK
	ALL UNLK		UNLOCK

Is the inspection result normal?

YES >> Door lock actuator is OK.
NO >> Refer to DLK-86, "DRIVER SIDE : Diagnosis Procedure".

REAR RH : Diagnosis Procedure

INFOID:0000000006855542

1. CHECK DOOR LOCK ACTUATOR INPUT SIGNAL

1. Turn power switch OFF.
2. Disconnect rear door lock assembly RH connector.
3. Check voltage between rear door lock assembly RH harness connector and ground.

(+)		(–)	Condition		Voltage (Approx.)
Rear door lock assembly RH					
Connector	Terminal				
D45	5	Ground	Door lock and unlock switch	Lock	9 - 16 V
	6			Unlock	

Is the inspection result normal?

YES >> Replace rear door lock assembly RH.
NO >> GO TO 2.

2. CHECK DOOR LOCK ACTUATOR CIRCUIT

1. Disconnect BCM connector and all door lock assembly connectors.
2. Check continuity between BCM harness connector and rear door lock assembly RH harness connector.

BCM		Rear door lock assembly RH		Continuity
Connector	Terminal	Connector	Terminal	
B10	55	D45	6	Existed
M69	65		5	

3. Check continuity between BCM harness connector and ground.

BCM		Ground	Continuity
Connector	Terminal		
B10	55		Not existed
M69	65		

Is the inspection result normal?

YES >> GO TO 3.
NO >> Repair or replace harness.

3. CHECK BCM OUTPUT SIGNAL

1. Connect BCM connector.
2. Check voltage between BCM harness connector and ground.

(+)		(–)	Condition		Voltage (Approx.)
BCM					
Connector	Terminal				
B10	55	Ground	Door lock and unlock switch	Unlock	9 - 16 V
M69	65			Lock	

Is the inspection result normal?

YES >> Check for internal short of each door lock actuator.
NO >> Replace BCM. Refer to BCS-77, "Removal and Installation".

DOOR LOCK AND UNLOCK SWITCH
DRIVER SIDE

DRIVER SIDE : Component Function Check

INFOID:0000000006855543

1. CHECK FUNCTION

1. Select “DOOR LOCK” of “BCM” using CONSULT.
2. Select “CDL LOCK SW”, “CDL UNLOCK SW” in “DATA MONITOR” mode.
3. Check that the function operates normally according to the following conditions.

Monitor item	Condition		Status
CDL LOCK SW	Door lock and unlock switch	Lock	ON
		Unlock	OFF
CDL UNLOCK SW		Lock	OFF
		Unlock	ON

Is the inspection result normal?

YES >> Door lock and unlock switch is OK.
NO >> Refer to DLK-91, "DRIVER SIDE : Diagnosis Procedure".

DRIVER SIDE : Diagnosis Procedure

INFOID:0000000006855544

1. CHECK DOOR LOCK AND UNLOCK SWITCH INPUT SIGNAL

1. Turn power switch OFF.
2. Disconnect power window main switch connector.
3. Check signal between power window main switch harness connector and ground using oscilloscope.

(+)		(–)	Signal (Reference value)
Power window main switch			
Connector	Terminal		
D35	3	Ground	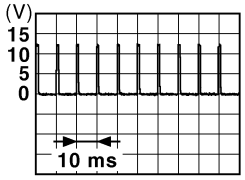 JPMIA0012GB 1.0 - 1.5 V
	15		

Is the inspection result normal?

YES >> GO TO 3.
NO >> GO TO 2.

2. CHECK DOOR LOCK AND UNLOCK SWITCH CIRCUIT

1. Disconnect BCM connector and front power window switch (passenger side) connector.
2. Check continuity between BCM harness connector and power window main switch harness connector.

BCM		Power window main switch		Continuity
Connector	Terminal	Connector	Terminal	
M68	12	D35	3	Existed
	13		15	

3. Check continuity between BCM harness connector and ground.

BCM		Ground	Continuity
Connector	Terminal		
M68	12		Not existed
	13		

Is the inspection result normal?

YES >> Replace BCM. Refer to BCS-77, "Removal and Installation".
NO >> Repair or replace harness.

3. CHECK DOOR LOCK AND UNLOCK SWITCH GROUND

Check continuity between power window main switch harness connector and ground.

Power window main switch		Ground	Continuity
Connector	Terminal		
D35	1		Existed

Is the inspection result normal?

YES >> GO TO 4.
NO >> Repair or replace harness.

4. CHECK DOOR LOCK AND UNLOCK SWITCH

Refer to DLK-92, "DRIVER SIDE : Component Inspection".

Is the inspection result normal?

YES >> GO TO 5.
NO >> Replace power window main switch. Refer to PWC-55, "Removal and Installation".

5. CHECK INTERMITTENT INCIDENT

Refer to GI-51, "Intermittent Incident".

>> INSPECTION END

DRIVER SIDE : Component Inspection

INFOID:0000000006855545

1. CHECK DOOR LOCK AND UNLOCK SWITCH

1. Turn power switch OFF.
2. Disconnect power window main switch connector.
3. Check continuity between power window main switch terminals.

Power window main switch		Condition		Continuity
Terminal				
3	1	Door lock and unlock switch	LOCK	Existed
			UNLOCK	Not existed
15			LOCK	Not existed
			UNLOCK	Existed

Is the inspection result normal?

YES >> INSPECTION END
NO >> Replace power window main switch.

PASSENGER SIDE

PASSENGER SIDE : Component Function Check

INFOID:0000000006855546

1. CHECK FUNCTION

1. Select “DOOR LOCK” of “BCM” using CONSULT.
2. Select “CDL LOCK SW”, “CDL UNLOCK SW” in “DATA MONITOR” mode.

3. Check that the function operates normally according to the following conditions.

Monitor item	Condition		Status
CDL LOCK SW	Door lock and unlock switch	Lock	ON
		Unlock	OFF
CDL UNLOCK SW		Lock	OFF
		Unlock	ON

Is the inspection result normal?

YES >> Door lock and unlock switch is OK.
NO >> Refer to DLK-93, "PASSENGER SIDE : Diagnosis Procedure".

PASSENGER SIDE : Diagnosis Procedure

INFOID:0000000006855547

1. CHECK DOOR LOCK AND UNLOCK SWITCH INPUT SIGNAL

1. Turn power switch OFF.
2. Disconnect front power window switch (passenger side) connector.
3. Check signal between front power window switch (passenger side) harness connector and ground using oscilloscope.

(+)		(–)	Signal (Reference value)
Front power window switch (passenger side)			
Connector	Terminal		
D10	1	Ground	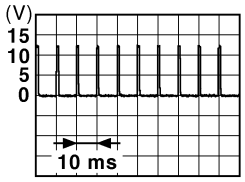 JPMIA0012GB 1.0 - 1.5 V
	2		

Is the inspection result normal?

YES >> GO TO 3.
NO >> GO TO 2.

2. CHECK DOOR LOCK AND UNLOCK SWITCH CIRCUIT

1. Disconnect BCM connector and power window main switch connector.
2. Check continuity between BCM harness connector and front power window switch (passenger side) harness connector.

BCM		Front power window switch (passenger side)		Continuity
Connector	Terminal	Connector	Terminal	
M68	12	D10	1	Existed
	13		2	

3. Check continuity between BCM harness connector and ground.

BCM		Ground	Continuity
Connector	Terminal		
M68	12		Not existed
	13		

Is the inspection result normal?

YES >> Replace BCM. Refer to BCS-77, "Removal and Installation".
NO >> Repair or replace harness.

3. CHECK DOOR LOCK AND UNLOCK SWITCH GROUND

Check continuity between front power window switch (passenger side) harness connector and ground.

Front power window switch (passenger side)		Ground	Continuity
Connector	Terminal		
D10	3		Existed

Is the inspection result normal?

YES >> GO TO 4.
NO >> Repair or replace harness.

4. CHECK DOOR LOCK AND UNLOCK SWITCH

Refer to DLK-94, "PASSENGER SIDE : Component Inspection".

Is the inspection result normal?

YES >> GO TO 5.
NO >> Replace front power window switch (passenger side). Refer to PWC-55, "Removal and Installation".

5. CHECK INTERMITTENT INCIDENT

Refer to GI-51, "Intermittent Incident".

>> INSPECTION END

PASSENGER SIDE : Component Inspection

INFOID:0000000006855548

1. CHECK DOOR LOCK AND UNLOCK SWITCH

1. Turn power switch OFF.
2. Disconnect power window main switch connector.
3. Check continuity between power window main switch terminals.

Power window main switch		Condition		Continuity
Terminal				
1	3	Door lock and unlock switch	LOCK	Existed
			UNLOCK	Not existed
2			LOCK	Not existed
			UNLOCK	Existed

Is the inspection result normal?

YES >> INSPECTION END
NO >> Replace power window main switch.

DOOR REQUEST SWITCH

Component Function Check

INFOID:0000000006855549

1. CHECK FUNCTION

1. Select “INTELLIGENT KEY” of “BCM” using CONSULT.
2. Select “REQ SW-DR”, “REQ SW-AS” in “DATA MONITOR” mode.
3. Check that the function operates normally according to the following conditions.

Monitor item	Condition		Status
REQ SW -DR	Driver side door request switch	Pressed	ON
		Released	OFF
REQ SW -AS	Passenger side door request switch	Pressed	ON
		Released	OFF

Is the inspection result normal?

YES >> Front door request switch is OK.
NO >> Refer to DLK-95, "Diagnosis Procedure".

Diagnosis Procedure

INFOID:0000000006855550

1. CHECK DOOR REQUEST SWITCH INPUT SIGNAL

1. Turn power switch OFF.
2. Disconnect malfunctioning front door request switch connector.
3. Check voltage between malfunctioning front door request switch harness connector and ground.

(+)			(–)	Voltage (Approx.)
Front door request switch				
Connector		Terminal		
Driver side	D34	1	Ground	9 - 16 V
Passenger side	D15			

Is the inspection result normal?

YES >> GO TO 3.
NO >> GO TO 2.

2. CHECK DOOR REQUEST SWITCH CIRCUIT

1. Disconnect BCM connector.
2. Check continuity between malfunctioning front door request switch harness connector and BCM harness connector.

Front door request switch			BCM		Continuity
Connector		Terminal	Connector	Terminal	
Driver side	D34	1	M70	75	Existed
Passenger side	D15			100	

3. Check continuity between malfunctioning front door request switch harness connector and ground.

Front door request switch			Ground	Continuity
Connector		Terminal		
Driver side	D34	1		Not existed
Passenger side	D15			

Is the inspection result normal?

YES >> Replace BCM. Refer to BCS-77, "Removal and Installation".
NO >> Repair or replace harness.

3. CHECK DOOR REQUEST SWITCH GROUND CIRCUIT

Check continuity between malfunctioning front door request switch harness connector and ground.

Front door request switch			Ground	Continuity
Connector		Terminal		
Driver side	D34	2		Existed
Passenger side	D15			

Is the inspection result normal?

YES >> GO TO 4.
NO >> Repair or replace harness.

4. CHECK DOOR REQUEST SWITCH

Refer to DLK-96, "Component Inspection".

Is the inspection result normal?

YES >> GO TO 5.
NO >> Replace malfunctioning front door request switch.

5. CHECK INTERMITTENT INCIDENT

Refer to GI-51, "Intermittent Incident".

>> INSPECTION END

Component Inspection

INFOID:0000000006855551

1. CHECK DOOR REQUEST SWITCH

1. Turn power switch OFF.
2. Disconnect malfunctioning front door request switch connector.
3. Check continuity between malfunctioning front door request switch terminals.

Front door request switch		Condition		Continuity
Terminal				
1	2	Door request switch	Pressed	Existed
			Released	Not existed

Is the inspection result normal?

YES >> INSPECTION END
NO >> Replace malfunctioning front door request switch.

DOOR SWITCH

Component Function Check

INFOID:0000000006855552

1. CHECK FUNCTION

1. Select “DOOR LOCK” of “BCM” using CONSULT.
2. Select “DOOR SW-DR”, “DOOR SW-AS”, “DOOR SW-RL”, “DOOR SW-RR”, “DOOR SW-BK” in “DATA MONITOR” mode.
3. Check that the function operates normally according to the following conditions.

Monitor item	Condition		Status
DOOR SW-DR	Driver side door	Open	ON
		Closed	OFF
DOOR SW-AS	Passenger side door	Open	ON
		Closed	OFF
DOOR SW-RL	Rear door LH	Open	ON
		Closed	OFF
DOOR SW-RR	Rear door RH	Open	ON
		Closed	OFF
DOOR SW-BK	Back door	Open	ON
		Closed	OFF

Is the inspection result normal?

YES >> Door switch is OK.
NO >> Refer to DLK-97, "Diagnosis Procedure".

Diagnosis Procedure

INFOID:0000000006855553

1. CHECK DOOR SWITCH INPUT SIGNAL

1. Turn power switch OFF.
2. Disconnect malfunctioning door switch connector.
3. Check signal between malfunctioning door switch harness connector and ground using oscilloscope.

(+)			(–)	Signal (Reference value)
Door switch				
Connector		Terminal		
Driver side	B48	3	Ground	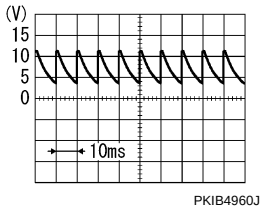 7.0 - 8.0 V
Passenger side	B49			
Rear LH	B71			
Rear RH	B53			
Back door	D112			

Is the inspection result normal?

YES-1 >> Back door: GO TO 3.
YES-2 >> Other door: GO TO 4.
NO >> GO TO 2.

2. CHECK DOOR SWITCH CIRCUIT

1. Disconnect BCM connector.
2. Check continuity between door switch harness connector and BCM harness connector.

Door switch			BCM		Continuity
Connector		Terminal	Connector	Terminal	
Driver side	B48	3	B10	47	Existed
Passenger side	B49			45	
Rear LH	B71			48	
Rear RH	B53			46	
Back door	D112			43	

3. Check continuity between door switch harness connector and ground.

Door switch			Ground	Continuity
Connector		Terminal		
Driver side	B48	3	Ground	Not existed
Passenger side	B49			
Rear LH	B71			
Rear RH	B53			
Back door	D112			

Is the inspection result normal?

YES >> Replace BCM. Refer to BCS-77, "Removal and Installation".
NO >> Repair or replace harness.

3. CHECK BACK DOOR SWITCH GROUND CIRCUIT

Check continuity between back door lock assembly harness connector and ground.

Back door lock assembly		Ground	Continuity
Connector	Terminal		
D112	4		Existed

Is the inspection result normal?

YES >> GO TO 4.
NO >> Repair or replace harness.

4. CHECK DOOR SWITCH

Refer to DLK-98, "Component Inspection".

Is the inspection result normal?

YES >> GO TO 5.
NO >> Replace malfunctioning door switch.

5. CHECK INTERMITTENT INCIDENT

Refer to GI-51, "Intermittent Incident".

>> INSPECTION END

Component Inspection

INFOID:0000000006855554

1. CHECK DOOR SWITCH

1. Turn power switch OFF.
2. Disconnect malfunctioning door switch connector.
3. Check continuity between door switch terminals.

Door switch			Condition		Continuity
Terminal					
• Driver side • Passenger side • Rear LH • Rear RH	3	Ground part of door switch	Door switch	Pressed	Existed
				Released	Not existed
Back door		4	Back door lock	Lock	Existed
				Unlock	Not existed

Is the inspection result normal?

YES >> INSPECTION END
NO >> Replace malfunction door switch.

HAZARD FUNCTION

Component Function Check

INFOID:0000000006855555

1.CHECK FUNCTION

1. Select “INTELLIGENT KEY” of “BCM” using CONSULT.
2. Select “FLASHER” in “ACTIVE TEST” mode.
3. Touch “LH” or “RH” to check that it works normally.

Is the inspection result normal?

YES >> Hazard warning lamp circuit is OK.
NO >> Refer to DLK-100, "Diagnosis Procedure".

Diagnosis Procedure

INFOID:0000000006855556

1.CHECK HAZARD SWITCH CIRCUIT

Refer to EXL-85, "Component Function Check".

Is the inspection result normal?

YES >> GO TO 2.
NO >> Repair or replace the malfunctioning parts.

2.CHECK INTERMITTENT INCIDENT

Refer to GI-51, "Intermittent Incident".

>> INSPECTION END

INTELLIGENT KEY

Component Function Check

INFOID:0000000006855557

1.CHECK FUNCTION

1. Select “INTELLIGENT KEY” of “BCM” using CONSULT.
2. Select “RKE OPE COUN1” in “DATA MONITOR” mode.
3. Check that the function operates normally according to the following conditions.

Monitor item	Condition
RKE OPE COUN1	Check that the numerical value is changing while operating on the Intelligent Key.

Is the inspection result normal?

YES >> Intelligent Key is OK.
NO >> Refer to DLK-101, "Diagnosis Procedure".

Diagnosis Procedure

INFOID:0000000006855558

1.CHECK INTELLIGENT KEY BATTERY

Check by connecting a resistance (approximately 300 Ω) so that the current value becomes about 10 mA. Refer to DLK-198, "Removal and Installation".

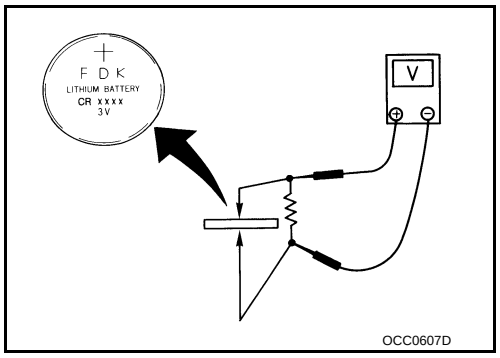

Standard : Approx. 2.5 - 3.0 V

Is the measurement value within the specification?

YES >> Replace Intelligent Key.
NO >> Replace Intelligent Key battery.

INTELLIGENT KEY WARNING BUZZER

Component Function Check

INFOID:0000000006855559

1. CHECK FUNCTION

1. Select “INTELLIGENT KEY” of “BCM” using CONSULT.
2. Select “OUTSIDE BUZZER” in “ACTIVE TEST” mode.
3. Touch “ON” to check that it works normally.

Is the inspection result normal?

YES >> Intelligent Key warning buzzer is OK.
NO >> Refer to DLK-102, "Diagnosis Procedure".

Diagnosis Procedure

INFOID:0000000006855560

1. CHECK FUSE

1. Turn power switch OFF.
2. Check 10 A fuse, [No. 13, located in fuse block (J/B)].

Is the inspection result normal?

YES >> GO TO 2.
NO >> Replace the blown fuse after repairing the affected circuit if a fuse is blown.

2. CHECK INTELLIGENT KEY WARNING BUZZER POWER SUPPLY CIRCUIT

1. Disconnect Intelligent Key warning buzzer connector.
2. Check voltage between Intelligent Key warning buzzer harness connector and ground.

(+)		(–)	Voltage (Approx.)
Intelligent Key warning buzzer			
Connector	Terminal		
E25	1	Ground	9 - 16 V

Is the inspection result normal?

YES >> GO TO 3.
NO >> Repair or replace harness.

3. CHECK INTELLIGENT KEY WARNING BUZZER CIRCUIT

1. Disconnect BCM connector.
2. Check continuity between BCM harness connector and Intelligent Key warning buzzer harness connector.

BCM		Intelligent Key warning buzzer		Continuity
Connector	Terminal	Connector	Terminal	
M70	93	E25	3	Existed

3. Check continuity between BCM harness connector and ground.

BCM		Ground	Continuity
Connector	Terminal		
M70	93		Not existed

Is the inspection result normal?

YES >> GO TO 4.
NO >> Repair or replace harness.

4. CHECK INTELLIGENT KEY WARNING BUZZER

Refer to DLK-103, "Component Inspection".

Is the inspection result normal?

YES >> Replace BCM. Refer to BCS-77, "Removal and Installation".
NO >> Replace Intelligent Key warning buzzer.

Component Inspection

INFOID:0000000006855561

1. CHECK INTELLIGENT KEY WARNING BUZZER

1. Turn power switch OFF.
2. Disconnect Intelligent Key warning buzzer connector.
3. Connect battery power supply directly to Intelligent Key warning buzzer terminals and check the operation.

Intelligent Key warning buzzer		Operation
Terminal		
(+)	(–)	
1	3	Buzzer sounds

Is the inspection result normal?

YES >> INSPECTION END
NO >> Replace Intelligent Key warning buzzer.

REMOTE KEYLESS ENTRY RECEIVER

Component Function Check

INFOID:0000000006889719

1.CHECK FUNCTION

1. Select “INTELLIGENT KEY” of “BCM” using CONSULT.
2. Select “RKE OPE COUN1” in “DATA MONITOR” mode.
3. Check that the function operates normally according to the following conditions.

Monitor item	Condition
RKE OPE COUN1	Checks whether value changes when operating Intelligent Key

Is the inspection result normal?

YES >> Remote keyless entry receiver is OK.
NO >> Refer to DLK-104, "Diagnosis Procedure".

Diagnosis Procedure

INFOID:0000000006889720

1.CHECK REMOTE KEYLESS ENTRY RECEIVER POWER SUPPLY

1. Turn ignition switch OFF.
2. Disconnect remote keyless entry receiver connector.
3. Check voltage between remote keyless entry receiver harness connector and ground.

(+)		(–)	Voltage (Approx)
Remote keyless entry receiver			
Connector	Terminal		
M75	1	Ground	9 - 16

Is the inspection result normal?

YES >> GO TO 3.
NO >> GO TO 2.

2.DETECT MALFUNCTIONING PART

Check the following.
- 10 A fuse (No. 7)
- Harness for open or short between remote keyless entry receiver and battery

Is the inspection result normal?

YES >> GO TO 7.
NO >> Repair or replace the malfunctioning parts.

3.CHECK REMOTE KEYLESS ENTRY RECEIVER GROUND CIRCUIT

1. Disconnect BCM connector.
2. Check continuity between BCM harness connector and remote keyless entry receiver harness connector.

BCM		Remote keyless entry receiver		Continuity
Connector	Terminal	Connector	Terminal	
M68	18	M75	4	Existed

3. Check continuity between BCM harness connector and ground.

BCM		Ground	Continuity
Connector	Terminal		
M68	18		Not existed

Is the inspection result normal?

YES >> GO TO 4.
NO >> Repair or replace harness.

4. CHECK BCM SIGNAL

1. Reconnect BCM connector.
2. Check voltage between remote keyless entry receiver harness connector and ground.

(+)		(–)	Voltage (Approx)
Remote keyless entry receiver			
Connector	Terminal		
M75	2	Ground	12

Is the inspection result normal?

YES >> GO TO 6.
NO >> GO TO 5.

5. CHECK REMOTE KEYLESS ENTRY RECEIVER CIRCUIT

1. Disconnect BCM connector.
2. Check continuity between BCM harness connector and remote keyless entry receiver harness connector.

BCM		Remote keyless entry receiver		Continuity
Connector	Terminal	Connector	Terminal	
M68	38	M75	2	Existed

3. Check continuity between BCM harness connector and ground.

BCM		Ground	Continuity
Connector	Terminal		
M68	38		Not existed

Is the inspection result normal?

YES >> Replace BCM. Refer to BCS-77, "Removal and Installation".
NO >> Repair or replace harness.

6. CHECK REMOTE KEYLESS ENTRY RECEIVER OUTPUT SIGNAL

1. Reconnect remote keyless entry receiver connector.
2. Check signal between remote keyless entry receiver harness connector and ground using oscilloscope.

(+)		(–)	Condition	Signal (Reference value)
Remote keyless entry receiver				
Connector	Terminal			
M75	2	Ground	Waiting	(Approx) 12 V
			Press the Intelligent Key lock or unlock button	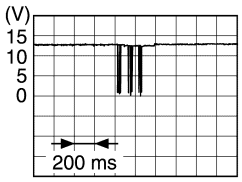 JMMIA0572GB

Is the inspection result normal?

YES >> GO TO 7.
NO >> Replace remote keyless entry receiver.

7. CHECK INTERMITTENT INCIDENT

Refer to GI-51, "Intermittent Incident".

>> INSPECTION END

UNLOCK SENSOR

Component Function Check

INFOID:0000000006855564

1.CHECK FUNCTION

1. Select “INTELLIGENT KEY” of “BCM” using CONSULT.
2. Select “UNLK SEN -DR” in “DATA MONITOR” mode.
3. Check that the function operates normally according to the following conditions.

Monitor item	Condition		Status
UNLK SEN -DR	Driver side door	Lock	OFF
		Unlock	ON

Is the inspection result normal?

YES >> Unlock sensor is OK.
NO >> Refer to DLK-106, "Diagnosis Procedure".

Diagnosis Procedure

INFOID:0000000006855565

1.CHECK BCM OUTPUT SIGNAL

1. Turn power switch OFF.
2. Disconnect front door lock assembly (driver side) connector.
3. Check signal between front door lock assembly (driver side) harness connector and ground using oscilloscope.

(+)		(–)	Signal (Reference value)
Front door lock assembly (driver side)			
Connector	Terminal		
D38	3	Ground	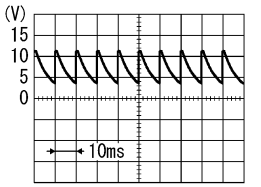 PKIB4960J

Is the inspection result normal?

YES >> GO TO 3.
NO >> GO TO 2.

2.CHECK UNLOCK SENSOR CIRCUIT

1. Disconnect BCM connector.
2. Check continuity between BCM harness connector and front door lock assembly (driver side) harness connector.

BCM		Front door lock assembly (driver side)		Continuity
Connector	Terminal	Connector	Terminal	
M68	31	D38	3	Existed

3. Check continuity between BCM harness connector and ground.

BCM		Ground	Continuity
Connector	Terminal		
M68	31		Not existed

Is the inspection result normal?

YES >> Replace BCM. Refer to BCS-77, "Removal and Installation".

NO >> Repair or replace harness.

3. CHECK UNLOCK SENSOR GROUND CIRCUIT

Check continuity between front door lock assembly (driver side) harness connector and ground.

Front door lock assembly (driver side)		Ground	Continuity
Connector	Terminal		
D38	4		Existed

Is the inspection result normal?

YES >> GO TO 4.
NO >> Repair or replace harness.

4. CHECK UNLOCK SENSOR

Refer to DLK-107, "Component Inspection".

Is the inspection result normal?

YES >> GO TO 5.
NO >> Replace front door lock assembly (driver side).

5. CHECK INTERMITTENT INCIDENT

Refer to GI-51, "Intermittent Incident".

>> INSPECTION END

Component Inspection

INFOID:0000000006855566

1. CHECK UNLOCK SENSOR

1. Turn power switch OFF.
2. Disconnect front door lock assembly (driver side) connector.
3. Check continuity between front door lock assembly (driver side) terminals.

Front door lock assembly (driver side)		Condition		Continuity
Terminal				
3	4	Driver side door	Unlock	Existed
			Lock	Not existed

Is the inspection result normal?

YES >> INSPECTION END
NO >> Replace front door lock assembly (driver side).

INFORMATION DISPLAY

Component Function Check

INFOID:0000000006855567

1.CHECK FUNCTION

1. Select “INTELLIGENT KEY” of “BCM” using CONSULT.
2. Select “LCD” in “ACTIVE TEST” mode.
3. Check each warning display on meter display.

Is the inspection result normal?

YES >> Information display is OK.
NO >> Refer to DLK-108, "Diagnosis Procedure".

Diagnosis Procedure

INFOID:0000000006855568

1.CHECK COMBINATION METER

Refer to MWI-50, "On Board Diagnosis Function".

Is the inspection result normal?

YES >> GO TO 2.
NO >> Repair or replace the malfunctioning parts.

2.CHECK INTERMITTENT INCIDENT

Refer to GI-51, "Intermittent Incident".

>> INSPECTION END

INTEGRATED HOMELINK TRANSMITTER

Component Function Check

INFOID:0000000006924331

1. CHECK FUNCTION

Check that system receiver (garage door opener, etc.) operates with original hand-held transmitter.

Is the inspection result normal?

YES >> GO TO 2.
NO >> Receiver or hand-held transmitter is malfunctioning.

2. CHECK ILLUMINATE

1. Turn power switch OFF.
2. Does red light of transmitter illuminate when any transmitter button is pressed?

Is the inspection result normal?

YES >> GO TO 3.
NO >> Refer to DLK-109, "Diagnosis Procedure".

3. CHECK TRANSMITTER

Check transmitter with Tool*.
*:For details, refer to Technical Service Bulletin.

Is the inspection result normal?

YES >> Receiver or hand-held transmitter malfunction, not vehicle related.
NO >> Replace auto anti-dazzling inside mirror (integrated homelink transmitter).

Diagnosis Procedure

INFOID:0000000006924332

1. CHECK POWER SUPPLY

1. Turn power switch OFF.
2. Disconnect auto anti-dazzling inside mirror (integrated homelink transmitter) connector.
3. Check voltage between auto anti-dazzling inside mirror (integrated homelink transmitter) harness connector and ground.

(+)		(–)	Voltage (Approx.)
Auto anti-dazzling inside mirror (Integrated homelink transmitter)			
Connector	Terminal		
R7	6	Ground	9 - 16
	10		

Is the inspection result normal?

YES >> GO TO 2.
NO-1 >> Check 10 A fuse [No. 3, No13].
NO-2 >> Harness for open or short between fuse and auto anti-dazzling inside mirror (integrated homelink transmitter).

2. CHECK GROUND CIRCUIT

Check continuity between auto anti-dazzling inside mirror (integrated homelink transmitter) harness connector and ground.

Auto anti-dazzling inside mirror (Integrated homelink transmitter)		Ground	Continuity
Connector	Terminal		
R7	8		Existed

Is the inspection result normal?

YES >> GO TO 3.
NO >> Repair or replace harness.

3. CHECK INTERMITTENT INCIDENT

Refer to GI-51, "Intermittent Incident".

>> INSPECTION END

SYMPTOM DIAGNOSIS

DOOR DOES NOT LOCK/UNLOCK WITH DOOR LOCK AND UNLOCK SWITCH

ALL DOOR

ALL DOOR : Description

INFOID:0000000006855569

All doors do not lock/unlock using door lock and unlock switch.

ALL DOOR : Diagnosis Procedure

INFOID:0000000006855570

1. CHECK DOOR LOCK AND UNLOCK SWITCH

Check door lock and unlock switch.
Refer to DLK-91, "DRIVER SIDE : Component Function Check".

Is the inspection result normal?

YES >> GO TO 2.
NO >> Repair or replace the malfunctioning parts.

2. CHECK DOOR LOCK ACTUATOR

Check front door lock assembly (driver side).
Refer to DLK-86, "DRIVER SIDE : Component Function Check".

Is the inspection result normal?

YES >> GO TO 3.
NO >> Repair or replace the malfunctioning parts.

3. CHECK DOOR SWITCH

Check door switch.
Refer to DLK-97, "Component Function Check".

Is the inspection result normal?

YES >> GO TO 4.
NO >> Repair or replace the malfunctioning parts.

4. REPLACE BCM

1. Replace BCM. Refer to BCS-77, "Removal and Installation".
2. Confirm the operation after replacement.

Is the result normal?

YES >> INSPECTION END
NO >> Check intermittent incident. Refer to GI-51, "Intermittent Incident".

DRIVER SIDE

DRIVER SIDE : Description

INFOID:0000000006855571

Driver side door does not lock/unlock using door lock and unlock switch.

DRIVER SIDE : Diagnosis Procedure

INFOID:0000000006855572

1. CHECK DOOR LOCK ACTUATOR

Check front door lock assembly (driver side).
Refer to DLK-86, "DRIVER SIDE : Component Function Check".

Is the inspection result normal?

YES >> GO TO 2.
NO >> Repair or replace the malfunctioning parts.

2. REPLACE BCM

1. Replace BCM. Refer to BCS-77, "Removal and Installation".

2. Confirm the operation after replacement.

Is the result normal?

YES >> INSPECTION END
NO >> Check intermittent incident. Refer to GI-51, "Intermittent Incident".

PASSENGER SIDE

PASSENGER SIDE : Description

INFOID:0000000006855573

Passenger side door does not lock/unlock using door lock and unlock switch.

PASSENGER SIDE : Diagnosis Procedure

INFOID:0000000006855574

1.CHECK DOOR LOCK ACTUATOR

Check front door lock assembly (passenger side).
Refer to DLK-87, "PASSENGER SIDE : Component Function Check".

Is the inspection result normal?

YES >> GO TO 2.
NO >> Repair or replace the malfunctioning parts.

2.REPLACE BCM

1. Replace BCM. Refer to BCS-77, "Removal and Installation".
2. Confirm the operation after replacement.

Is the result normal?

YES >> INSPECTION END
NO >> Check intermittent incident. Refer to GI-51, "Intermittent Incident".

REAR LH

REAR LH : Description

INFOID:0000000006855575

Rear LH side door does not lock/unlock using door lock and unlock switch.

REAR LH : Diagnosis Procedure

INFOID:0000000006855576

1.CHECK DOOR LOCK ACTUATOR

Check rear door lock assembly LH.
Refer to DLK-88, "REAR LH : Component Function Check".

Is the inspection result normal?

YES >> GO TO 2.
NO >> Repair or replace the malfunctioning parts.

2.REPLACE BCM

1. Replace BCM. Refer to BCS-77, "Removal and Installation".
2. Confirm the operation after replacement.

Is the result normal?

YES >> INSPECTION END
NO >> Check intermittent incident. Refer to GI-51, "Intermittent Incident".

REAR RH

REAR RH : Description

INFOID:0000000006855577

Rear RH side door does not lock/unlock using door lock and unlock switch.

REAR RH : Diagnosis Procedure

INFOID:0000000006855578

1.CHECK DOOR LOCK ACTUATOR

Check rear door lock assembly RH.
Refer to DLK-89, "REAR RH : Component Function Check".

Is the inspection result normal?

YES >> GO TO 2.
NO >> Repair or replace the malfunctioning parts.

2. REPLACE BCM

1. Replace BCM. Refer to BCS-77, "Removal and Installation".
2. Confirm the operation after replacement.

Is the result normal?

YES >> INSPECTION END
NO >> Check intermittent incident. Refer to GI-51, "Intermittent Incident".

DOOR DOES NOT LOCK/UNLOCK WITH DOOR REQUEST SWITCH

ALL DOOR REQUEST SWITCHES

ALL DOOR REQUEST SWITCHES : Description

INFOID:0000000006855580

All doors do not lock/unlock using all door request switches.

ALL DOOR REQUEST SWITCHES : Diagnosis Procedure

INFOID:0000000006855581

1. CHECK REMOTE KEYLESS ENTRY FUNCTION

Check remote keyless entry function.

Does door lock/unlock with Intelligent Key button?

YES >> GO TO 2.
NO >> Refer to DLK-118, "Diagnosis Procedure".

2. CHECK “LOCK/UNLOCK BY I-KEY” SETTING IN “WORK SUPPORT”

1. Select “INTELLIGENT KEY” of “BCM” using CONSULT.
2. Select “LOCK/UNLOCK BY I-KEY” in “WORK SUPPORT” mode.
3. Check “LOCK/UNLOCK BY I-KEY” in “WORK SUPPORT”.
   Refer to DLK-42, "INTELLIGENT KEY : CONSULT Function (BCM - INTELLIGENT KEY)".

Is the inspection result normal?

YES >> GO TO 3.
NO >> Set “LOCK/UNLOCK BY I-KEY” in “WORK SUPPORT”.

3. CHECK INSIDE KEY ANTENNA

Check inside key antenna.
- Instrument center: Refer to DLK-65, "DTC Logic".
- Rear seat: Refer to DLK-67, "DTC Logic".
- Luggage room: Refer to DLK-69, "DTC Logic".

Is the inspection result normal?

YES >> GO TO 4.
NO >> Repair or replace the malfunctioning parts.

4. CHECK OUTSIDE KEY ANTENNA

Check outside key antenna.
- Driver side: Refer to DLK-73, "DTC Logic".
- Passenger side: Refer to DLK-71, "DTC Logic".
- Rear bumper: Refer to DLK-75, "DTC Logic".

Is the inspection result normal?

YES >> GO TO 5.
NO >> Repair or replace the malfunctioning parts.

5. REPLACE BCM

1. Replace BCM. Refer to BCS-77, "Removal and Installation".
2. Confirm the operation after replacement.

Is the result normal?

YES >> INSPECTION END
NO >> Check intermittent incident. Refer to GI-51, "Intermittent Incident".

DRIVER SIDE DOOR REQUEST SWITCH

DRIVER SIDE DOOR REQUEST SWITCH : Description

INFOID:0000000006855582

All doors do not lock/unlock using driver side door request switch.

DRIVER SIDE DOOR REQUEST SWITCH : Diagnosis Procedure

INFOID:0000000006855583

1. CHECK DTC WITH BCM

Check that DTC is not detected with BCM.

Is the inspection result normal?

YES >> GO TO 2.
NO >> Refer to BCS-55, "DTC Index".

2. CHECK DRIVER SIDE DOOR REQUEST SWITCH

Check driver side door request switch.
Refer to DLK-81, "Component Function Check".

Is the inspection result normal?

YES >> GO TO 3.
NO >> Repair or replace the malfunctioning parts.

3. CHECK OUTSIDE KEY ANTENNA

Check outside key antenna (driver side).
Refer to DLK-73, "DTC Logic".

Is the inspection result normal?

YES >> GO TO 4.
NO >> Repair or replace the malfunctioning parts.

4. REPLACE BCM

1. Replace BCM. Refer to BCS-77, "Removal and Installation".
2. Confirm the operation after replacement.

Is the result normal?

YES >> INSPECTION END
NO >> Check intermittent incident. Refer to GI-51, "Intermittent Incident".

PASSENGER SIDE DOOR REQUEST SWITCH

PASSENGER SIDE DOOR REQUEST SWITCH : Description

INFOID:0000000006855584

All doors do not lock/unlock using passenger side door request switch.

PASSENGER SIDE DOOR REQUEST SWITCH : Diagnosis Procedure

INFOID:0000000006855585

1. CHECK PASSENGER SIDE DOOR REQUEST SWITCH

Check passenger side door request switch.
Refer to DLK-81, "Component Function Check".

Is the inspection result normal?

YES >> GO TO 2.
NO >> Repair or replace the malfunctioning parts.

2. CHECK OUTSIDE KEY ANTENNA

Check outside key antenna (passenger side).
Refer toDLK-71, "DTC Logic".

Is the inspection result normal?

YES >> GO TO 3.
NO >> Repair or replace the malfunctioning parts.

3. REPLACE BCM

1. Replace BCM. Refer to BCS-77, "Removal and Installation".
2. Confirm the operation after replacement.

Is the result normal?

YES >> INSPECTION END
NO >> Check intermittent incident. Refer to GI-51, "Intermittent Incident".

BACK DOOR REQUEST SWITCH

BACK DOOR REQUEST SWITCH : Description

INFOID:0000000006855586

All doors do not lock/unlock using back door request switch.

BACK DOOR REQUEST SWITCH : Diagnosis Procedure

INFOID:0000000006855587

1. CHECK BACK DOOR REQUEST SWITCH

Check back door request switch.
Refer to DLK-81, "Component Function Check".

Is the inspection result normal?

YES >> GO TO 2.
NO >> Repair or replace the malfunctioning parts.

2. CHECK OUTSIDE KEY ANTENNA

Check outside key antenna (rear bumper).
Refer to BCS-55, "DTC Index".

Is the inspection result normal?

YES >> GO TO 3.
NO >> Repair or replace the malfunctioning parts.

3. REPLACE BCM

1. Replace BCM. Refer to BCS-77, "Removal and Installation".
2. Confirm the operation after replacement.

Is the result normal?

YES >> INSPECTION END
NO >> Check intermittent incident. Refer to GI-51, "Intermittent Incident".

DOOR DOES NOT LOCK/UNLOCK WITH DOOR KEY CYLINDER OPERATION

Diagnosis Procedure

INFOID:0000000006889721

1. CHECK POWER DOOR LOCK OPERATION

Check power door lock operation.

Does door lock/unlock with door lock and unlock switch?

YES >> GO TO 2.
NO >> Refer to DLK-91, "DRIVER SIDE : Component Function Check".

2. CHECK DOOR KEY CYLINDER SWITCH

Check door key cylinder switch.
Refer to DLK-84, "Component Function Check".

Is the inspection result normal?

YES >> GO TO 3.
NO >> Repair or replace the malfunctioning parts.

3. REPLACE BCM

1. Replace BCM. Refer to BCS-77, "Removal and Installation".
2. Confirm the operation after replacement.

Is the result normal?

YES >> INSPECTION END
NO >> Check intermittent incident. Refer to GI-51, "Intermittent Incident".

DOOR DOES NOT LOCK/UNLOCK WITH INTELLIGENT KEY

Diagnosis Procedure

INFOID:0000000006855588

1. CHECK DTC WITH BCM

Check that DTC is not detected with BCM.

Is the inspection result normal?

YES >> GO TO 2.
NO >> Refer to BCS-55, "DTC Index".

2. CHECK POWER DOOR LOCK OPERATION

Check door lock/unlock using door lock and unlock switch.

Does door lock/unlock using door lock and unlock switch?

YES >> GO TO 3.
NO >> Refer to DLK-91, "DRIVER SIDE : Component Function Check".

3. CHECK REMOTE KEYLESS ENTRY RECEIVER

Check remote keyless entry receiver.
Refer to DLK-104, "Component Function Check".

Is the inspection result normal?

YES >> GO TO 4.
NO >> Repair or replace the malfunctioning parts.

4. CHECK INTELLIGENT KEY

Check Intelligent Key.
Refer to DLK-101, "Component Function Check".

Is the inspection result normal?

YES >> GO TO 5.
NO >> Repair or replace the malfunctioning parts.

5. REPLACE BCM

1. Replace BCM. Refer to BCS-77, "Removal and Installation".
2. Confirm the operation after replacement.

Is the result normal?

YES >> INSPECTION END
NO >> Check intermittent incident. Refer to GI-51, "Intermittent Incident".

POWER POSITION WARNING DOES NOT OPERATE

Diagnosis Procedure

INFOID:0000000006855589

1. CHECK DTC WITH BCM

Check that DTC is not detected with BCM.

Is the inspection result normal?

YES >> GO TO 2.
NO >> Refer to BCS-55, "DTC Index".

2. CHECK POWER DOOR LOCK OPERATION

Check power door lock operation.

Does door lock/unlock with driver side door lock knob and door key cylinder?

YES >> GO TO 3.
NO >> Refer to DLK-19, "System Description".

3. CHECK DOOR SWITCH

Check door switch.
Refer to DLK-97, "Component Function Check".

Is the inspection result normal?

YES >> GO TO 4.
NO >> Repair or replace the malfunctioning parts.

4. CHECK COMBINATION METER BUZZER

Check combination meter buzzer.
Refer to DLK-83, "Component Function Check".

Is the inspection result normal?

YES >> GO TO 5.
NO >> Repair or replace the malfunctioning parts.

5. REPLACE BCM

1. Replace BCM. Refer to BCS-77, "Removal and Installation".
2. Confirm the operation after replacement.

Is the result normal?

YES >> INSPECTION END
NO >> Check intermittent incident. Refer to GI-51, "Intermittent Incident".

SELECTIVE UNLOCK FUNCTION DOES NOT OPERATE

Diagnosis Procedure

INFOID:0000000006855590

1. CHECK “DOOR LOCK–UNLOCK SET” SETTING IN “WORK SUPPORT”

1. Select “DOOR LOCK” of “BCM” using CONSULT.
2. Select “DOOR LOCK-UNLOCK SET” in “WORK SUPPORT” mode.
3. Check “DOOR LOCK-UNLOCK SET” in “WORK SUPPORT”
   Refer to DLK-41, "DOOR LOCK : CONSULT Function (BCM - DOOR LOCK)".

Is the inspection result normal?

YES >> GO TO 2
NO >> Set “DOOR LOCK-UNLOCK SET” in “WORK SUPPORT”.

2. REPLACE BCM

1. Replace BCM. Refer to BCS-77, "Removal and Installation".
2. Confirm the operation after replacement.

Is the result normal?

YES >> INSPECTION END
NO >> Check intermittent incident. Refer to GI-51, "Intermittent Incident".

BACK DOOR DOES NOT OPENED

Diagnosis Procedure

INFOID:0000000006855591

1. CHECK DTC WITH BCM

Check that DTC is not detected with BCM.

Is the inspection result normal?

YES >> GO TO 2.
NO >> Refer to BCS-55, "DTC Index".

2. CHECK BACK DOOR OPENER SWITCH

Check back door opener switch.
Refer to DLK-79, "Component Function Check".

Is the inspection result normal?

YES >> GO TO 3.
NO >> Repair or replace the malfunctioning parts.

3. CHECK BACK DOOR OPENER ACTUATOR

Check back door opener actuator.
Refer to DLK-77, "Component Function Check".

Is the inspection result normal?

YES >> GO TO 4.
NO >> Repair or replace the malfunctioning parts.

4. CHECK VEHICLE SPEED SIGNAL

Check vehicle speed signal.
Refer to MWI-68, "DTC Index".

Is the inspection result normal?

YES >> GO TO 5.
NO >> Repair or replace the malfunctioning parts.

5. REPLACE BCM

1. Replace BCM. Refer to BCS-77, "Removal and Installation".
2. Confirm the operation after replacement.

Is the result normal?

YES >> INSPECTION END
NO >> Check intermittent incident. Refer to GI-51, "Intermittent Incident".

AUTO DOOR LOCK OPERATION DOES NOT OPERATE

Diagnosis Procedure

INFOID:0000000006855592

1. CHECK “AUTO LOCK SET” SETTING IN “WORK SUPPORT”

1. Select “INTELLIGENT KEY” of “BCM” using CONSULT.
2. Select “AUTO LOCK SET” in “WORK SUPPORT” mode.
3. Check “AUTO LOCK SET” in “WORK SUPPORT”.
   Refer to DLK-42, "INTELLIGENT KEY : CONSULT Function (BCM - INTELLIGENT KEY)".

Is the inspection result normal?

YES >> GO TO 2.
NO >> Set “AUTO LOCK SET” setting in “WORK SUPPORT”.

2. REPLACE BCM

1. Replace BCM. Refer to BCS-77, "Removal and Installation".
2. Confirm the operation after replacement.

Is the result normal?

YES >> INSPECTION END
NO >> Check intermittent incident. Refer to GI-51, "Intermittent Incident".

VEHICLE SPEED SENSING AUTO LOCK OPERATION DOES NOT OPERATE

Diagnosis Procedure

INFOID:0000000006855593

1. CHECK “AUTOMATIC LOCK/UNLOCK SELECT” SETTING IN “WORK SUPPORT”

1. Select “DOOR LOCK” of “BCM” using CONSULT.
2. Select “AUTOMATIC LOCK/UNLOCK SELECT” in “WORK SUPPORT” mode.
3. Check “AUTOMATIC LOCK/UNLOCK SELECT” in “WORK SUPPORT”.
   Refer to DLK-41, "DOOR LOCK : CONSULT Function (BCM - DOOR LOCK)".

Is the inspection result normal?

YES >> GO TO 2.
NO >> Set “AUTOMATIC LOCK/UNLOCK SELECT” in “WORK SUPPORT”.

2. CHECK “AUTOMATIC DOOR LOCK SELECT” SETTING IN “WORK SUPPORT”

1. Select “DOOR LOCK” of “BCM” using CONSULT.
2. Select “AUTOMATIC DOOR LOCK SELECT” in “WORK SUPPORT” mode.
3. Check “AUTOMATIC DOOR LOCK SELECT” in “WORK SUPPORT”.
   Refer to DLK-41, "DOOR LOCK : CONSULT Function (BCM - DOOR LOCK)".

Is the inspection result normal?

YES >> GO TO 3.
NO >> Set “AUTOMATIC DOOR LOCK SELECT” in “WORK SUPPORT”.

3. REPLACE BCM

1. Replace BCM. Refer to BCS-77, "Removal and Installation".
2. Confirm the operation after replacement.

Is the result normal?

YES >> INSPECTION END
NO >> Check intermittent incident. Refer to GI-51, "Intermittent Incident".

POWER SWITCH OFF INTERLOCK DOOR UNLOCK FUNCTION DOES NOT OPERATE

Diagnosis Procedure

INFOID:0000000006855594

1. CHECK “AUTOMATIC LOCK/UNLOCK SELECT” SETTING IN “WORK SUPPORT”

1. Select “DOOR LOCK” of “BCM” using CONSULT.
2. Select “AUTOMATIC LOCK/UNLOCK SELECT” in “WORK SUPPORT” mode.
3. Check “AUTOMATIC LOCK/UNLOCK SELECT” in “WORK SUPPORT”.
   Refer to DLK-41, "DOOR LOCK : CONSULT Function (BCM - DOOR LOCK)".

Is the inspection result normal?

YES >> GO TO 2.
NO >> Set “AUTOMATIC LOCK/UNLOCK SELECT” in “WORK SUPPORT”.

2. CHECK “AUTOMATIC DOOR UNLOCK SELECT” SETTING IN “WORK SUPPORT”

1. Select “DOOR LOCK” of “BCM” using CONSULT.
2. Select “AUTOMATIC DOOR UNLOCK SELECT” in “WORK SUPPORT” mode.
3. Check “AUTOMATIC DOOR UNLOCK SELECT” in “WORK SUPPORT”.
   Refer to DLK-41, "DOOR LOCK : CONSULT Function (BCM - DOOR LOCK)".

Is the inspection result normal?

YES >> GO TO 3.
NO >> Set “AUTOMATIC DOOR UNLOCK SELECT” in “WORK SUPPORT”.

3. REPLACE BCM

1. Replace BCM. Refer to BCS-77, "Removal and Installation".
2. Confirm the operation after replacement.

Is the result normal?

YES >> INSPECTION END
NO >> Check intermittent incident. Refer to GI-51, "Intermittent Incident".

P POSITION INTERLOCK DOOR LOCK/UNLOCK FUNCTION DOES NOT OPERATE

Diagnosis Procedure

INFOID:0000000006855595

1. CHECK “AUTOMATIC LOCK/UNLOCK SELECT” SETTING IN “WORK SUPPORT”

1. Select “DOOR LOCK” of “BCM” using CONSULT.
2. Select “AUTOMATIC LOCK/UNLOCK SELECT” in “WORK SUPPORT” mode.
3. Check “AUTOMATIC LOCK/UNLOCK SELECT” in “WORK SUPPORT”.
   Refer to DLK-41, "DOOR LOCK : CONSULT Function (BCM - DOOR LOCK)".

Is the inspection result normal?

YES >> GO TO 2.
NO >> Set “AUTOMATIC LOCK/UNLOCK SELECT” in “WORK SUPPORT”.

2. CHECK “AUTOMATIC DOOR LOCK SELECT” SETTING IN “WORK SUPPORT”

1. Select “DOOR LOCK” of “BCM” using CONSULT.
2. Select “AUTOMATIC DOOR LOCK SELECT” in “WORK SUPPORT” mode.
3. Check “AUTOMATIC DOOR LOCK SELECT” in “WORK SUPPORT”.
   Refer to DLK-41, "DOOR LOCK : CONSULT Function (BCM - DOOR LOCK)".

Is the inspection result normal?

YES >> GO TO 3.
NO >> Set “AUTOMATIC DOOR LOCK SELECT” in “WORK SUPPORT”.

3. CHECK “AUTOMATIC DOOR UNLOCK SELECT” SETTING IN “WORK SUPPORT”

1. Select “DOOR LOCK” of “BCM” using CONSULT.
2. Select “AUTOMATIC DOOR UNLOCK SELECT” in “WORK SUPPORT” mode.
3. Check “AUTOMATIC DOOR UNLOCK SELECT” in “WORK SUPPORT”.
   Refer to DLK-41, "DOOR LOCK : CONSULT Function (BCM - DOOR LOCK)".

Is the inspection result normal?

YES >> GO TO 4.
NO >> Set “AUTOMATIC DOOR UNLOCK SELECT” in “WORK SUPPORT”.

4. REPLACE BCM

1. Replace BCM. Refer to BCS-77, "Removal and Installation".
2. Confirm the operation after replacement.

Is the result normal?

YES >> INSPECTION END
NO >> Check intermittent incident. Refer to GI-51, "Intermittent Incident".

HAZARD AND BUZZER REMINDER DOES NOT OPERATE

Diagnosis Procedure

INFOID:0000000006855596

1. CHECK DTC WITH BCM AND COMBINATION METER

Check that DTC is not detected with BCM and combination meter.

Is the inspection result normal?

YES >> GO TO 2.
NO-1 >> Refer to BCS-55, "DTC Index". (BCM)
NO-2 >> Refer to MWI-68, "DTC Index". (Combination meter)

2. CHECK “HAZARD ANSWER BACK” SETTING IN “WORK SUPPORT”

1. Select “INTELLIGENT KEY” of “BCM” using CONSULT.
2. Select “HAZARD ANSWER BACK” in “WORK SUPPORT” mode.
3. Check the “HAZARD ANSWER BACK” in “WORK SUPPORT”.
   Refer to DLK-42, "INTELLIGENT KEY : CONSULT Function (BCM - INTELLIGENT KEY)".

Is the inspection result normal?

YES >> GO TO 3.
NO >> Set “HAZARD ANSWER BACK” in “WORK SUPPORT”.

3. CHECK “ANS BACK I-KEY LOCK” SETTING IN “WORK SUPPORT”

1. Select “INTELLIGENT KEY” of “BCM” using CONSULT.
2. Select “ANS BACK I-KEY LOCK” in “WORK SUPPORT” mode.
3. Check the “ANS BACK I-KEY LOCK” in “WORK SUPPORT”.
   Refer to DLK-42, "INTELLIGENT KEY : CONSULT Function (BCM - INTELLIGENT KEY)".

Is the inspection result normal?

YES >> GO TO 4.
NO >> Set “ANS BACK I-KEY LOCK” in “WORK SUPPORT”.

4. CHECK “ANS BACK I-KEY UNLOCK” SETTING IN “WORK SUPPORT”

1. Select “INTELLIGENT KEY” of “BCM” using CONSULT.
2. Select “ANS BACK I-KEY UNLOCK” in “WORK SUPPORT” mode.
3. Check the “ANS BACK I-KEY UNLOCK” in “WORK SUPPORT”.
   Refer to DLK-42, "INTELLIGENT KEY : CONSULT Function (BCM - INTELLIGENT KEY)".

Is the inspection result normal?

YES >> GO TO 5.
NO >> Set “ANS BACK I-KEY UNLOCK” in “WORK SUPPORT”.

5. CHECK HAZARD FUNCTION

Check hazard function.
Refer to DLK-100, "Component Function Check".

Is the inspection result normal?

YES >> GO TO 6.
NO >> Repair or replace the malfunctioning parts.

6. CHECK INTELLIGENT KEY WARNING BUZZER

Check Intelligent Key warning buzzer.
Refer to DLK-102, "Component Function Check".

Is the inspection result normal?

YES >> GO TO 7.
NO >> Repair or replace the malfunctioning parts.

7. REPLACE BCM

1. Replace BCM. Refer to BCS-77, "Removal and Installation".
2. Confirm the operation after replacement.

Is the result normal?

YES >> INSPECTION END

NO >> Check intermittent incident. Refer to GI-51, "Intermittent Incident".

KEY REMINDER FUNCTION DOES NOT OPERATE

Diagnosis Procedure

INFOID:0000000006855597

1. CHECK DTC WITH BCM

Check that DTC is not detected with BCM.

Is the inspection result normal?

YES >> GO TO 2.
NO >> Refer to BCS-55, "DTC Index".

2. CHECK “ANTI KEY LOCK IN FUNCTI” SETTING IN “WORK SUPPORT”

1. Select “INTELLIGENT KEY” of “BCM” using CONSULT.
2. Select “ANTI KEY LOCK IN FUNCTI” in “WORK SUPPORT” mode.
3. Check “ANTI KEY LOCK IN FUNCTI” in “WORK SUPPORT”.
   Refer to DLK-42, "INTELLIGENT KEY : CONSULT Function (BCM - INTELLIGENT KEY)".

Is the inspection result normal?

YES >> GO TO 3.
NO >> Set “ANTI KEY LOCK IN FUNCTI” in “WORK SUPPORT”.

3. CHECK DOOR SWITCH

Check door switch.
Refer to DLK-97, "Component Function Check".

Is the inspection result normal?

YES >> GO TO 4.
NO >> Repair or replace the malfunctioning parts.

4. CHECK INSIDE KEY ANTENNA

Check inside key antenna.
- Instrument center: Refer to DLK-65, "DTC Logic".
- Rear seat: Refer to DLK-67, "DTC Logic".
- Luggage room: Refer to DLK-69, "DTC Logic".

Is the inspection result normal?

YES >> GO TO 5.
NO >> Repair or replace the malfunctioning parts.

5. CHECK UNLOCK SENSOR

Check unlock sensor.
Refer to DLK-106, "Component Function Check".

Is the inspection result normal?

YES >> GO TO 6.
NO >> Repair or replace the malfunctioning parts.

6. REPLACE BCM

1. Replace BCM. Refer to BCS-77, "Removal and Installation".
2. Confirm the operation after replacement.

Is the result normal?

YES >> INSPECTION END
NO >> Check intermittent incident. Refer to GI-51, "Intermittent Incident".

OFF POSITION WARNING DOES NOT OPERATE

Diagnosis Procedure

INFOID:0000000006855598

1. CHECK DTC WITH BCM AND COMBINATION METER

Check that DTC is not detected with BCM and combination meter.

Is the inspection result normal?

YES >> GO TO 2.
NO-1 >> Refer to BCS-55, "DTC Index". (BCM)
NO-2 >> Refer to MWI-68, "DTC Index". (Combination meter)

2. CHECK COMBINATION METER BUZZER

Check combination meter buzzer.
Refer to DLK-83, "Component Function Check".

Is the inspection result normal?

YES >> GO TO 3.
NO >> Repair or replace the malfunctioning parts.

3. CHECK INTELLIGENT KEY WARNING BUZZER

Check Intelligent Key warning buzzer.
Refer to DLK-102, "Component Function Check".

Is the inspection result normal?

YES >> GO TO 4.
NO >> Repair or replace the malfunctioning parts.

4. CHECK DOOR SWITCH

Check front door switch (driver side).
Refer to DLK-97, "Component Function Check".

Is the inspection result normal?

YES >> GO TO 5.
NO >> Repair or replace the malfunctioning parts.

5. REPLACE BCM

1. Replace BCM. Refer to BCS-77, "Removal and Installation".
2. Confirm the operation after replacement.

Is the result normal?

YES >> INSPECTION END
NO >> Check intermittent incident. Refer to GI-51, "Intermittent Incident".

TAKE AWAY WARNING DOES NOT OPERATE

Diagnosis Procedure

INFOID:0000000006855599

1. CHECK DTC WITH BCM AND COMBINATION METER

Check that DTC is not detected with BCM and combination meter.

Is the inspection result normal?

YES >> GO TO 2.
NO-1 >> Refer to BCS-55, "DTC Index". (BCM)
NO-2 >> Refer to MWI-68, "DTC Index". (Combination meter)

2. CHECK COMBINATION METER BUZZER

Check combination meter buzzer.
Refer to DLK-102, "Component Function Check".

Is the inspection result normal?

YES >> GO TO 3.
NO >> Repair or replace the malfunctioning parts.

3. CHECK INFORMATION DISPLAY

Check information display.
Refer to DLK-108, "Component Function Check".

Is the inspection result normal?

YES >> GO TO 4.
NO >> Repair or replace the malfunctioning parts.

4. CHECK INTELLIGENT KEY WARNING BUZZER

Check Intelligent Key warning buzzer.
Refer to DLK-102, "Component Function Check".

Is the inspection result normal?

YES >> GO TO 5.
NO >> Repair or replace the malfunctioning parts.

5. CHECK DOOR SWITCH

Check door switch.
Refer to DLK-97, "Component Function Check".

Is the inspection result normal?

YES >> GO TO 6.
NO >> Repair or replace the malfunctioning parts.

6. CHECK INSIDE KEY ANTENNA

Check inside key antenna.
- Instrument center: Refer to DLK-65, "DTC Logic".
- Rear seat: Refer to DLK-67, "DTC Logic".
- Luggage room: Refer to DLK-69, "DTC Logic".

Is the inspection result normal?

YES >> GO TO 7.
NO >> Repair or replace the malfunctioning parts.

7. REPLACE BCM

1. Replace BCM. Refer to BCS-77, "Removal and Installation".
2. Confirm the operation after replacement.

Is the result normal?

YES >> INSPECTION END
NO >> Check intermittent incident. Refer to GI-51, "Intermittent Incident".

INTELLIGENT KEY LOW BATTERY WARNING DOES NOT OPERATE

Diagnosis Procedure

INFOID:0000000006855600

1. CHECK DTC WITH BCM AND COMBINATION METER

Check that DTC is not detected with BCM and combination meter.

Is the inspection result normal?

YES >> GO TO 2.
NO-1 >> Refer to BCS-55, "DTC Index". (BCM)
NO-2 >> Refer to MWI-68, "DTC Index". (Combination meter)

2. CHECK “LO- BATT OF KEY FOB WARN” SETTING IN “WORK SUPPORT”

1. Select “INTELLIGENT KEY” of “BCM”.
2. Select “LO- BATT OF KEY FOB WARN” in “WORK SUPPORT” mode.
3. Check “LO- BATT OF KEY FOB WARN” in “WORK SUPPORT”.
   Refer to DLK-42, "INTELLIGENT KEY : CONSULT Function (BCM - INTELLIGENT KEY)".

Is the inspection result normal?

YES >> GO TO 3.
NO >> Set “LO- BATT OF KEY FOB WARN” in “WORK SUPPORT”.

3. CHECK INTELLIGENT KEY

Check Intelligent key.
Refer to DLK-101, "Component Function Check".

Is the inspection result normal?

YES >> GO TO 4.
NO >> Repair or replace the malfunctioning parts.

4. CHECK INFORMATION DISPLAY

Check information display.
Refer to DLK-108, "Diagnosis Procedure".

Is the inspection result normal?

YES >> GO TO 5.
NO >> Repair or replace the malfunctioning parts.

5. CHECK INSIDE KEY ANTENNA

Check inside key antenna.
- Instrument center: Refer to DLK-65, "DTC Logic".
- Rear seat: Refer to DLK-67, "DTC Logic".
- Luggage room: Refer to DLK-69, "DTC Logic".

Is the inspection result normal?

YES >> GO TO 6.
NO >> Repair or replace the malfunctioning parts.

6. REPLACE BCM

1. Replace BCM. Refer to BCS-77, "Removal and Installation".
2. Confirm the operation after replacement.

Is the result normal?

YES >> INSPECTION END
NO >> Check intermittent incident. Refer to GI-51, "Intermittent Incident".

DOOR LOCK OPERATION WARNING DOES NOT OPERATE

Diagnosis Procedure

INFOID:0000000006855601

1. CHECK DOOR LOCK FUNCTION

Check door lock function.

Does door lock/unlock using door request switch?

YES >> GO TO 2.
NO >> Refer to DLK-95, "Component Function Check".

2. CHECK INTELLIGENT KEY WARNING BUZZER

Check Intelligent Key warning buzzer.
Refer to DLK-102, "Component Function Check".

Is the inspection result normal?

YES >> GO TO 3.
NO >> Repair or replace the malfunctioning parts.

3. REPLACE BCM

1. Replace BCM. Refer to BCS-77, "Removal and Installation".
2. Confirm the operation after replacement.

Is the result normal?

YES >> INSPECTION END
NO >> Check intermittent incident. Refer to GI-51, "Intermittent Incident".

KEY ID WARNING DOES NOT OPERATE

Diagnosis Procedure

INFOID:0000000006855602

1. CHECK DTC WITH BCM AND COMBINATION METER

Check that DTC is not detected with BCM and combination meter.

Is the inspection result normal?

YES >> GO TO 2.
NO-1 >> Refer to BCS-55, "DTC Index". (BCM)
NO-2 >> Refer to MWI-68, "DTC Index". (Combination meter)

2. CHECK INTELLIGENT KEY

Check Intelligent Key.
Refer to DLK-101, "Component Function Check".

Is the inspection result normal?

YES >> GO TO 3.
NO >> Repair or replace the malfunctioning parts.

3. CHECK INFORMATION DISPLAY

Check information display.
Refer to DLK-108, "Component Function Check".

Is the inspection result normal?

YES >> GO TO 4.
NO >> Repair or replace the malfunctioning parts.

4. CHECK INSIDE KEY ANTENNA

Check inside key antenna.
- Instrument center: Refer to DLK-65, "DTC Logic".
- Rear seat: Refer to DLK-67, "DTC Logic".
- Luggage room: Refer to DLK-69, "DTC Logic".

Is the inspection result normal?

YES >> GO TO 5.
NO >> Repair or replace the malfunctioning parts.

5. REPLACE BCM

1. Replace BCM. Refer to BCS-77, "Removal and Installation".
2. Confirm the operation after replacement.

Is the result normal?

YES >> INSPECTION END
NO >> Check intermittent incident. Refer to GI-51, "Intermittent Incident".

INTEGRATED HOMELINK TRANSMITTER DOES NOT OPERATE

Diagnosis Procedure

INFOID:0000000006924348

1. CHECK INTEGRATED HOMELINK TRANSMITTER

Check integrated homelink transmitter.
Refer to DLK-109, "Component Function Check".

Is the inspection result normal?

YES >> GO TO 2.
NO >> Repair or replace the malfunctioning parts.

2. REPLACE AUTO ANTI-DAZZLING INSIDE MIRROR

Replace auto anti-dazzling inside mirror.
Refer to MIR-11, "Removal and Installation".

Is the result normal?

YES >> INSPECTION END
NO >> Check intermittent incident. Refer to GI-51, "Intermittent Incident".

SQUEAK AND RATTLE TROUBLE DIAGNOSES

Work Flow

INFOID:0000000007050852

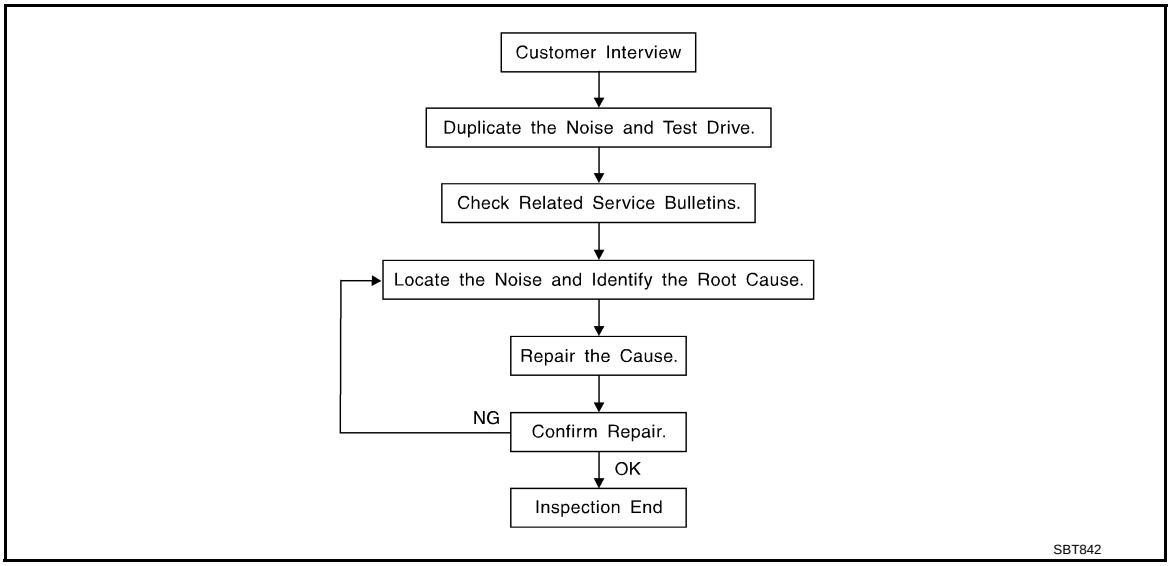

CUSTOMER INTERVIEW

Interview the customer if possible, to determine the conditions that exist when the noise occurs. Use the Diagnostic Worksheet during the interview to document the facts and conditions when the noise occurs and any customer comments. Refer to DLK-139, "Diagnostic Worksheet". This information is necessary to duplicate the conditions that exist when the noise occurs.

- The customer may not be able to provide a detailed description or the location of the noise. Attempt to obtain all the facts and conditions that exist when the noise occurs (or does not occur).
- If there is more than one noise in the vehicle, perform a diagnosis and repair the noise that the customer is concerned about. This can be accomplished by performing a test drive with the customer.
- After identifying the type of noise, isolate the noise in terms of its characteristics. The noise characteristics are provided so that the customer, service adviser, and technician use the same language when describing the noise.
- Squeak – (Like tennis shoes on a clean floor)
  Squeak characteristics include the light contact / fast movement / brought on by road conditions / hard surfaces = high-pitched noise / softer surfaces = low-pitched noises / edge to surface = chirping
- Creak – (Like walking on an old wooden floor)
  Creak characteristics include firm contact / slow movement/twisting with a rotational movement / pitch dependent on materials / often brought on by activity.
- Rattle – (Like shaking a baby rattle)
  Rattle characteristics include fast repeated contact / vibration or similar movement / loose parts/missing clip or fastener / incorrect clearance.
- Knock – (Like a knock on a door)
  Knock characteristics include hollow sounds / sometimes repeating / often brought on by driver action.
- Tick – (Like a clock second hand)
  Tick characteristics include gentle contacting of light materials / loose components / can be caused by driver action or road conditions.
- Thump – (Heavy, muffled knock noise)
  Thump characteristics include softer knock / dull sounds often brought on by activity.
- Buzz – (Like a bumblebee)
  Buzz characteristics include high frequency rattle / firm contact.
- Often the degree of acceptable noise level varies depending upon the person. A noise that a technician may judge as acceptable may be very irritating to a customer.
- Weather conditions, especially humidity and temperature, may have a great effect on noise level.

DUPLICATE THE NOISE AND TEST DRIVE

If possible, drive the vehicle with the customer until the noise is duplicated. Note any additional information on the Diagnostic Worksheet regarding the conditions or location of the noise. This information can be used to duplicate the same conditions when the repair is reconfirmed.

If the noise can be duplicated easily during the test drive, to help identify the source of the noise, try to duplicate the noise with the vehicle stopped by doing one or all of the following items:
1) Close a door.
2) Tap or push/pull around the area where the noise appears to be coming from.
3) Rev the motor.
4) Use a floor jack to recreate vehicle “twist”.
5) At idle, apply motor load (electrical load, half-clutch on M/T models, drive position on A/T models).
6) Raise the vehicle on a hoist and hit a tire with a rubber hammer.

- Drive the vehicle and attempt to duplicate the conditions the customer states exist when the noise occurs.
- If it is difficult to duplicate the noise, drive the vehicle slowly on an undulating or rough road to stress the vehicle body.

CHECK RELATED SERVICE BULLETINS

After verifying the customer concern or symptom, check ASIST for Technical Service Bulletins (TSBs) related to the concern or symptom.
If a TSB relates to the symptom, follow the procedure to repair the noise.

LOCATE THE NOISE AND IDENTIFY THE ROOT CAUSE

1. Narrow down the noise to a general area. To help pinpoint the source of the noise, use a listening tool (Chassis ear: J-39570, engine ear, and mechanics stethoscope).
2. Narrow down the noise to a more specific area and identify the cause of the noise by:

- Removing the component(s) in the area that is / are suspected to be the cause of the noise.
  Do not use too much force when removing clips and fasteners, otherwise clips and fasteners can be broken or lost during the repair, resulting in the creation of new noise.
- Tapping or pushing/pulling the component(s) that is / are suspected to be the cause of the noise.
  Do not tap or push/pull the component(s) with excessive force, otherwise the noise is eliminated only temporarily.
- Feeling for a vibration by hand by touching the component(s) that is / are suspected to be the cause of the noise.
- Placing a piece of paper between components that are suspected to be the cause of the noise.
- Looking for loose components and contact marks.
  Refer to DLK-137, "Inspection Procedure".

REPAIR THE CAUSE

- If the cause is a loose component, tighten the component securely.
- If the cause is insufficient clearance between components:
- Separate components by repositioning or loosening and retightening the components, if possible.
- Insulate components with a suitable insulator such as urethane pads, foam blocks, felt cloth tape, or urethane tape. A NISSAN Squeak and Rattle Kit (J-43980) is available through the authorized NISSAN Parts Department.

CAUTION:
Never use excessive force as many components are constructed of plastic and may be damaged.
NOTE:
Always check with the Parts Department for the latest parts information.
The following materials are contained in the NISSAN Squeak and Rattle Kit (J-43980). Each item can be ordered separately as needed.
URETHANE PADS [1.5 mm (0.059 in) thick]
Insulates connectors, harness, etc.
- 76268-9E005: 100 × 135 mm (3.937 × 5.315 in)
- 76884-71L01: 60 × 85 mm (2.362 × 3.346 in)
- 76884-71L02: 15 × 25 mm (0.591 × 0.984 in)

INSULATOR (Foam blocks)
Insulates components from contact. Can be used to fill space behind a panel.
- 73982-9E000: 45 mm (1.772 in) thick, 50 × 50 mm (1.969 × 1.969 in)
- 73982-50Y00: 10 mm (0.394 in) thick, 50 × 50 mm (1.969 × 1.969 in)

INSULATOR (Light foam block)
80845-71L00: 30 mm (1.181 in) thick, 30 × 50 mm (1.181 × 1.969in)
FELT CLOTHTAPE
Used to insulate where movement does not occur. Ideal for instrument panel applications.
- 68370-4B000: 15 × 25 mm (0.591 × 0.984 in) pad
- 68239-13E00: 5 mm (0.197 in) wide tape roll

The following materials, not found in the kit, can also be used to repair squeaks and rattles.
UHMW (TEFLON) TAPE
Insulates where slight movement is present. Ideal for instrument panel applications.
SILICONE GREASE
Used in place of UHMW tape that is visible or does not fit. Only lasts a few months.
SILICONE SPRAY
Used when grease cannot be applied.
DUCT TAPE
Used to eliminate movement.

CONFIRM THE REPAIR

After repair is complete, test drive the vehicle to confirm that the cause of noise is repaired by test driving the vehicle. Operate the vehicle under the same conditions as when the noise originally occurred. Refer to the notes on the Diagnostic Worksheet.

Inspection Procedure

INFOID:0000000007050853

Refer to Table of Contents for specific component removal and installation information.

INSTRUMENT PANEL

Most incidents are caused by contact and movement between:

1. The cluster lid A and instrument panel
2. Acrylic lens and combination meter housing
3. Instrument panel to front pillar garnish
4. Instrument panel to windshield
5. Instrument panel mounting pins
6. Wiring harnesses behind the combination meter
7. A/C defroster duct and duct joint
   These incidents can usually be located by tapping or moving the components to duplicate the noise or by pressing on the components while driving to stop the noise. Most of these incidents can be repaired by applying felt cloth tape or silicon spray (in hard to reach areas). Urethane pads can be used to insulate wiring harness.
   CAUTION:
   Never use silicone spray to isolate a squeak or rattle. If the area is saturated with silicone, the recheck of repair becomes impossible.

CENTER CONSOLE

Components to check include:

1. Shifter assembly cover to finisher
2. A/C control unit and cluster lid C
3. Wiring harnesses behind audio and A/C control unit

The instrument panel repair and isolation procedures also apply to the center console.

DOORS

Check the following items:

1. Finisher and inner panel making a slapping noise
2. Inside handle escutcheon connection to door finisher
3. Wiring harnesses tapping
4. Door striker out of alignment causing a popping noise on starts and stops

Tapping, moving the components, or pressing on them while driving to duplicate the conditions can isolate many of these incidents. The areas can usually be insulated with felt cloth tape or insulator foam blocks from the NISSAN Squeak and Rattle Kit (J-43980) to repair the noise.

TRUNK

Trunk noises are often caused by a loose jack or loose items put into the trunk by the customer.
In addition check for the following items:

1. Trunk lid dumpers out of adjustment
2. Trunk lid striker out of adjustment

3. Trunk lid torsion bars knocking together
4. A loose license plate or bracket

Most of these incidents can be repaired by adjusting, securing, or insulating the item(s) or component(s) causing the noise.

SUNROOF/HEADLINING

Noises in the sunroof / headlining area can often be traced to one of the following items:

1. Sunroof lid, rail, linkage, or seals making a rattle or light knocking noise
2. Sunvisor shaft shaking in the holder
3. Front or rear windshield touching headlining and squeaking

Again, pressing on the components to stop the noise while duplicating the conditions can isolate most of these incidents. Repairs usually consist of insulating with felt cloth tape.

SEATS

When isolating seat noise it is important to note the position the seat is in and the load placed on the seat when the noise occurs. These conditions should be duplicated when verifying and isolating the cause of the noise.
Causes of seat noise include:

1. Headrest rods and holder
2. A squeak between the seat pad cushion and frame
3. The rear seatback lock and bracket

These noises can be isolated by moving or pressing on the suspected components while duplicating the conditions under which the noise occurs. Most of these incidents can be repaired by repositioning the component or applying urethane tape to the contact area.

UNDERHOOD

Some interior noise may be caused by components under the hood or on the motor wall. The noise is then transmitted into the passenger compartment.
Causes of transmitted underhood noise include:

1. Any component mounted to the motor wall
2. Components that pass through the motor wall
3. Motor wall mounts and connectors
4. Loose radiator mounting pins
5. Hood bumpers out of adjustment
6. Hood striker out of adjustment

These noises can be difficult to isolate since they cannot be reached from the interior of the vehicle. The best method is to secure, move, or insulate one component at a time and test drive the vehicle. Also, motor RPM or load can be changed to isolate the noise. Repairs can usually be made by moving, adjusting, securing, or insulating the component causing the noise.

Diagnostic Worksheet

INFOID:0000000007050854

SQUEAK & RATTLE DIAGNOSTIC WORKSHEET

Dear Nissan Customer:
We are concerned about your satisfaction with your Nissan vehicle. Repairing a squeak or rattle sometimes can be very difficult. To help us fix your Nissan right the first time, please take a moment to note the area of the vehicle where the squeak or rattle occurs and under what conditions. You may be asked to take a test drive with a service advisor or technician to ensure we confirm the noise you are hearing.

I. WHERE DOES THE NOISE COME FROM? (circle the area of the vehicle)
The illustrations are for reference only, and may not reflect the actual configuration of your vehicle.

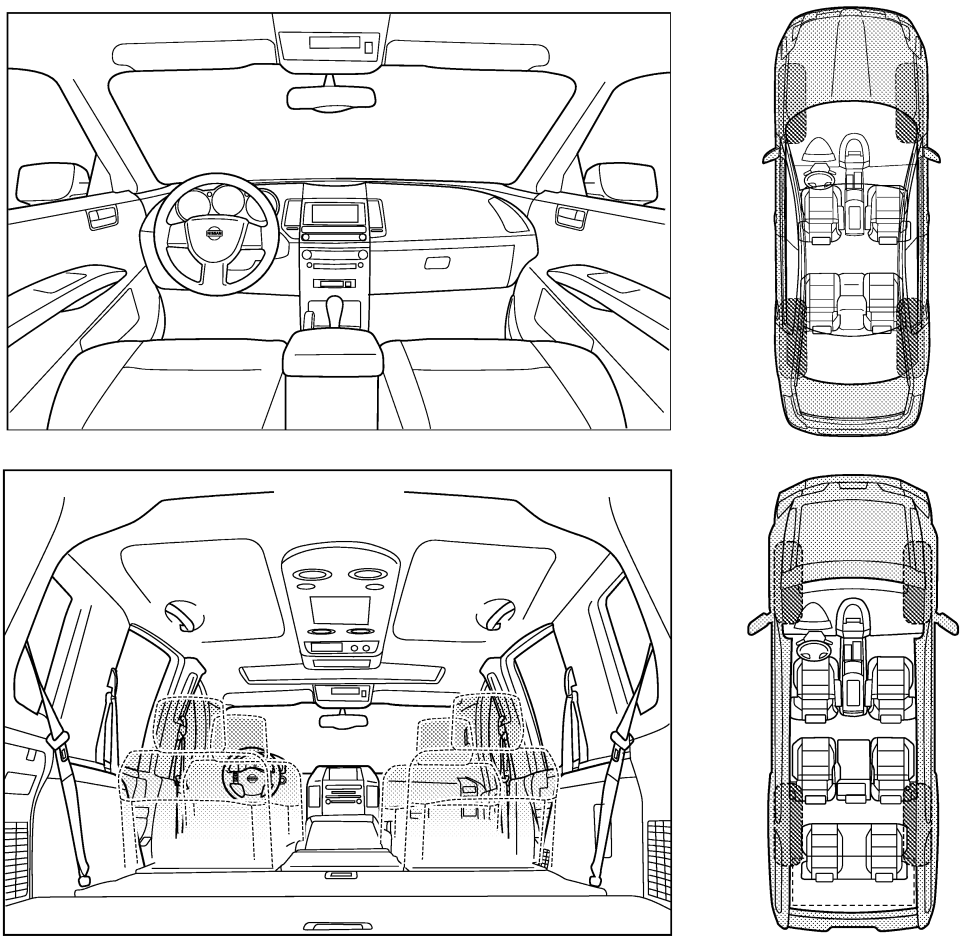

Continue to page 2 of the worksheet and briefly describe the location of the noise or rattle. In addition, please indicate the conditions which are present when the noise occurs.

PIIB8740E

SQUEAK & RATTLE DIAGNOSTIC WORKSHEET - page 2

Briefly describe the location where the noise occurs:

_____

_____

II. WHEN DOES IT OCCUR? (please check the boxes that apply)

- ☐ anytime
- ☐ 1st time in the morning
- ☐ only when it is cold outside
- ☐ only when it is hot outside
- ☐ after sitting out in the rain
- ☐ when it is raining or wet
- ☐ dry or dusty conditions
- ☐ other:

III. WHEN DRIVING:

- ☐ through driveways
- ☐ over rough roads
- ☐ over speed bumps
- ☐ only about ____ mph
- ☐ on acceleration
- ☐ coming to a stop
- ☐ on turns: left, right or either (circle)
- ☐ with passengers or cargo
- ☐ other: _____
- ☐ after driving _____ miles or _____ minutes

IV. WHAT TYPE OF NOISE

- ☐ squeak (like tennis shoes on a clean floor)
- ☐ creak (like walking on an old wooden floor)
- ☐ rattle (like shaking a baby rattle)
- ☐ knock (like a knock at the door)
- ☐ tick (like a clock second hand)
- ☐ thump (heavy, muffled knock noise)
- ☐ buzz (like a bumble bee)

TO BE COMPLETED BY DEALERSHIP PERSONNEL

Test Drive Notes:

_____

_____

_____

	YES	NO	Initials of person performing
Vehicle test driven with customer	☐	☐	_____
- Noise verified on test drive	☐	☐	_____
- Noise source located and repaired	☐	☐	_____
- Follow up test drive performed to confirm repair	☐	☐	_____

VIN: _____ Customer Name: _____

W.O.# _____ Date: _____

This form must be attached to Work Order

PIIB8742E

REMOVAL AND INSTALLATION

HOOD

Exploded View

INFOID:0000000006986904

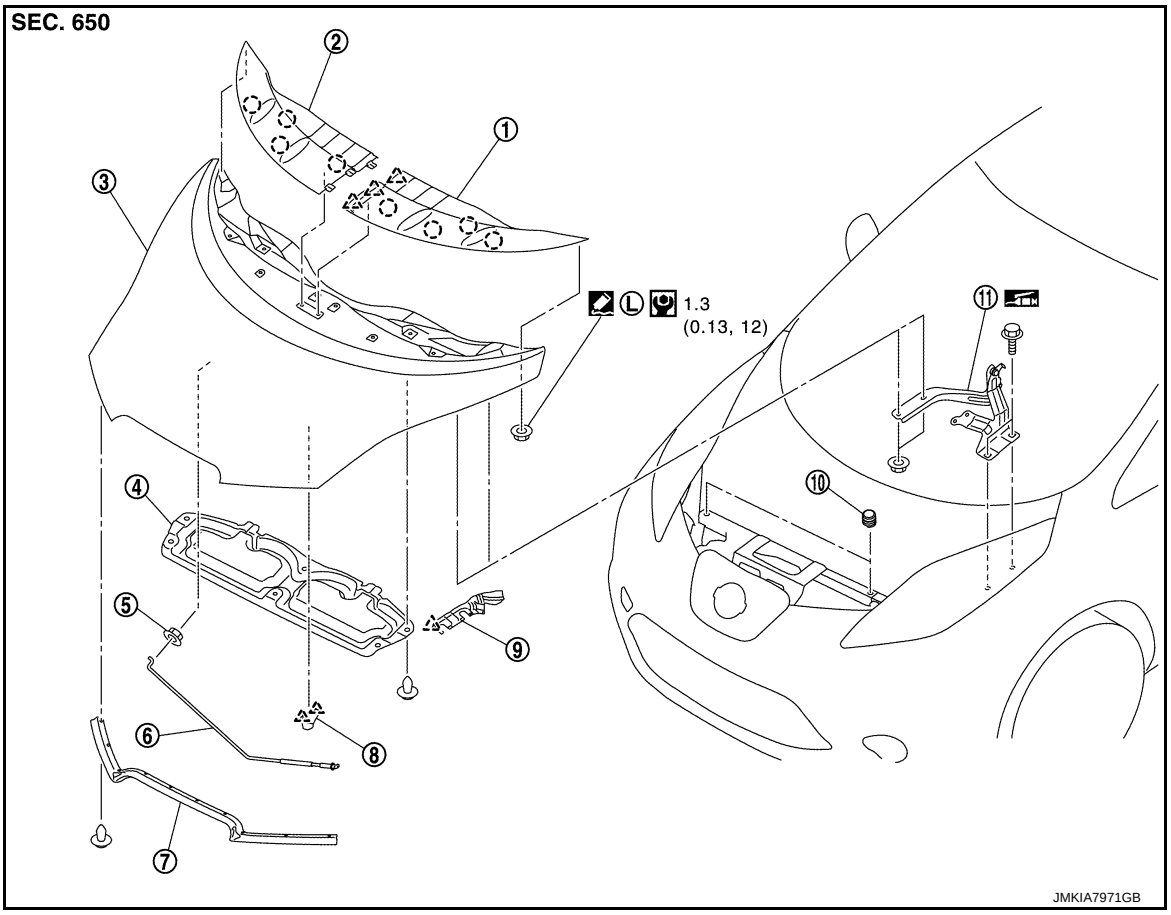

1.	Hood cover LH	2.	Hood cove RH	3.	Hood assembly
4.	Hood insulator	5.	Grommet	6.	Hood support rod
7.	Hood front seal	8.	Clamp	9.	Hood hinge cover
10.	Hood bumper rubber	11.	Hood hinge		

: Clip

: Pawl

: N·m (kg-m, in-lb)

: Body grease

: Sealing point with locking sealant

HOOD ASSEMBLY

HOOD ASSEMBLY : Removal and Installation

INFOID:0000000006986905

CAUTION:
- **Operate with two workers, because of its heavy weight.**
- **Use protective tape or shop cloth to protect from damage during removal and installation.**

REMOVAL

1. Support hood assembly with the proper material to prevent it from falling.

WARNING:
Injury may occur if hood assembly is not supported with appropriate material when removing hood assembly.

2. Remove hood hinge cover (2) from hood hinge (1).

: Pawl

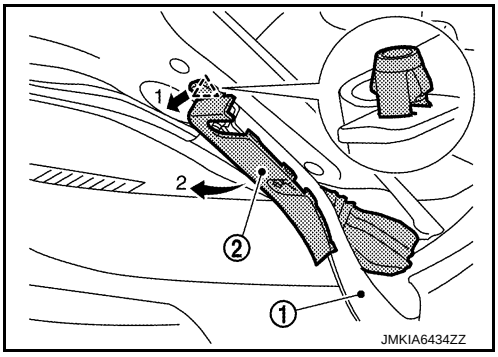

3. Remove hood hinge mounting nuts on the hood to remove the hood assembly.

INSTALLATION

Note the following items, and then install in the reverse order of removal.

CAUTION:

- **After installation, apply touch-up paint (the body color) onto the heads of hood hinge mounting nuts.**
- **After installing, perform hood fitting adjustment. Refer to DLK-143, "HOOD ASSEMBLY : Adjustment".**

HOOD ASSEMBLY : Adjustment

INFOID:0000000006986906

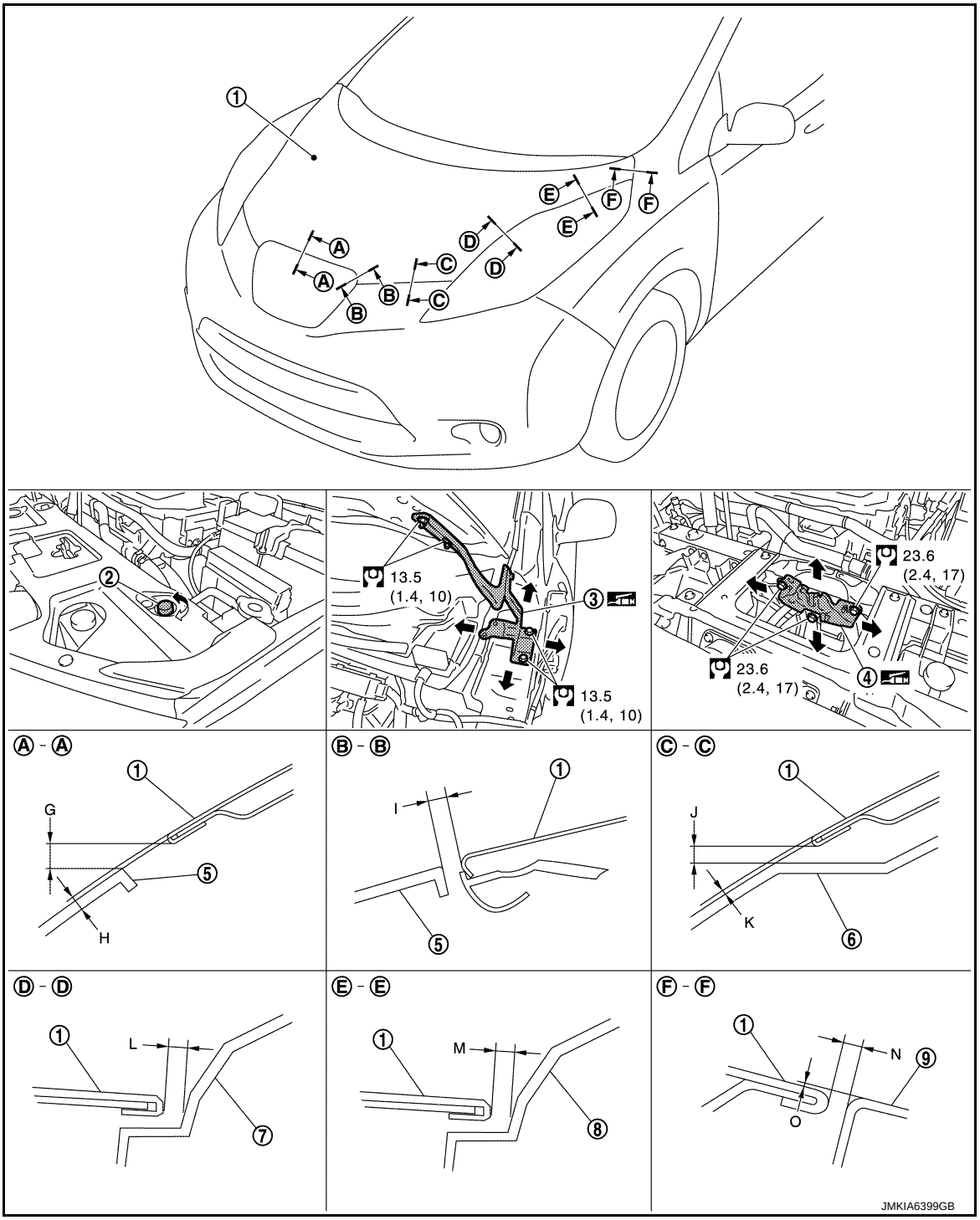

1.	Hood assembly	2.	Hood bumper rubber	3.	Hood hinge
4.	Hood lock assembly	5.	Charge port lid	6.	Front bumper fascia
7.	Front combination lamp	8.	Front side maker lamp	9.	Front fender

: N·m (kg-m, ft-lb)

: Body grease

Check the clearance and the surface height between hood and each part by visually and touching.
If the clearance and the surface height are out of specification, adjust them according to the procedures shown below.

Portion				Standard	Difference (RH/LH, MAX)
Hood – Charge port lid	A – A	G	Clearance	2.3 – 7.7 mm (0.091 – 0.303 in)	—
		H	Surface height	(-1.0) – (+3.0) mm [(-0.039) – (+0.118) in]	—
Hood – Charge port lid	B – B	I	Clearance	2.3 – 7.7 mm (0.091 – 0.303 in)	2.9 mm (0.114 in)
Hood – Front bumper fascia	C – C	J	Clearance	2.3 – 7.7 mm (0.091 – 0.303 in)	2.0 mm (0.079 in)
		K	Surface height	(-1.0) – (+3.0) mm [(-0.039) – (+0.118) in]	1.0 mm (0.039 in)
Hood – Front combi-nation lamp	D – D	L	Clearance	1.5 – 6.5 mm (0.059 – 0.256 in)	2.9 mm (0.114 in)
Hood – Front side maker lamp	E – E	M	Clearance	1.5 – 6.5 mm (0.059 – 0.256 in)	2.9 mm (0.114 in)
Hood – Front fender	F – F	N	Clearance	2.5 – 4.5 mm (0.098 – 0.177 in)	1.5 mm (0.059 in)
		O	Surface height	(–1.0) – (+1.0) mm [(–0.039) – (+0.039) in]	—

FITTING ADJUSTMENT PROCEDURE

1. Remove radiator upper grille. Refer to DLK-155, "RADIATOR UPPER GRILLE : Removal and Installation".
2. Remove hood lock assembly, and then adjust the surface height of hood assembly, charge port lid assembly and front bumper fascia according to the specified value, by rotating hood bumper rubber.
3. Position hood lock assembly and engage hood striker. Check hood lock assembly and hood striker for looseness.
4. Move hood lock assembly laterally until the center of hood striker and hood lock assembly are vertical when viewed from the front.
5. After adjustment, tighten lock bolts to the specified torque.
6. Open hood. Rotate bumper rubber counterclockwise between half a turn and three-quarters of a turn.
7. Check that secondary latch is securely engaged with secondary striker (charge port bracket) from the dead load of the hood assembly.
8. Check that primary latch is securely engaged with primary hood striker when hood assembly is closed [free-fall from approximately 200 mm (7.874 in) height].
   CAUTION:
   Never free-fall hood assembly from a height of 300 (11.811 in) mm or more.
9. Install radiator upper grille. Refer to DLK-155, "RADIATOR UPPER GRILLE : Removal and Installation".

HOOD HINGE

HOOD HINGE : Removal and Installation

INFOID:0000000006986907

REMOVAL

1. Remove hood assembly. Refer to DLK-141, "HOOD ASSEMBLY : Removal and Installation".
2. Remove front fender. Refer to DLK-158, "Removal and Installation".
3. Remove hood hinge mounting bolts, and then remove hood hinge.

INSTALLATION

Note the following items, and then install in the reverse order of removal.

CAUTION:

- **After installation, perform hood fitting adjustment. Refer to DLK-143, "HOOD ASSEMBLY : Adjustment".**
- **After installation, apply touch-up paint (the body color) onto the head of the hinge mounting bolts and nuts.**
- **Check hood hinge rotating part for poor lubrication. If necessary, apply grease.**

: Grease up point

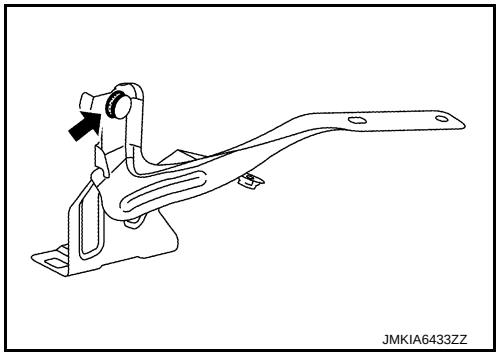

HOOD SUPPORT ROD

HOOD SUPPORT ROD : Removal and Installation

INFOID:0000000006986908

REMOVAL

CAUTION:

Two workers are required to support the hood.

1. Support hood assembly with a appropriate material to prevent it from falling.

   WARNING:

   Injury may occur if hood assembly is not supported by the appropriate material when removing hood assembly.
2. Pull hood support rod from grommet and remove.

INSTALLATION

Install in the reverse order of removal.

HOOD COVER

HOOD COVER : Removal and Installation

INFOID:0000000006986909

REMOVAL

1. Remove hood cover (LH and RH) mounting nuts.
2. Apply protective tape (A) on the hood assembly to protect the painted surface from damage.

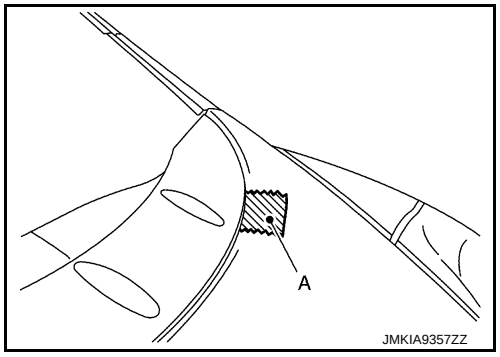

3. Disengage mounting clips using a remover tool (A), and then remove hood cover (LH and RH).

: Clip

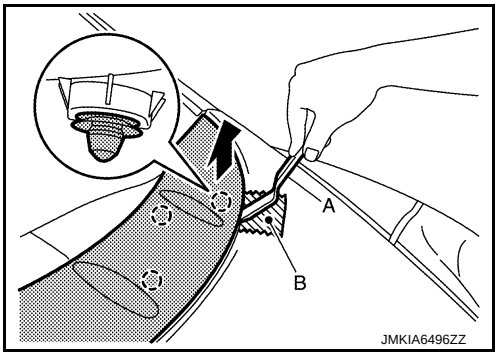

INSTALLATION

Install in the reverse order of removal.

CHARGE PORT LID

Exploded View

INFOID:0000000006986910

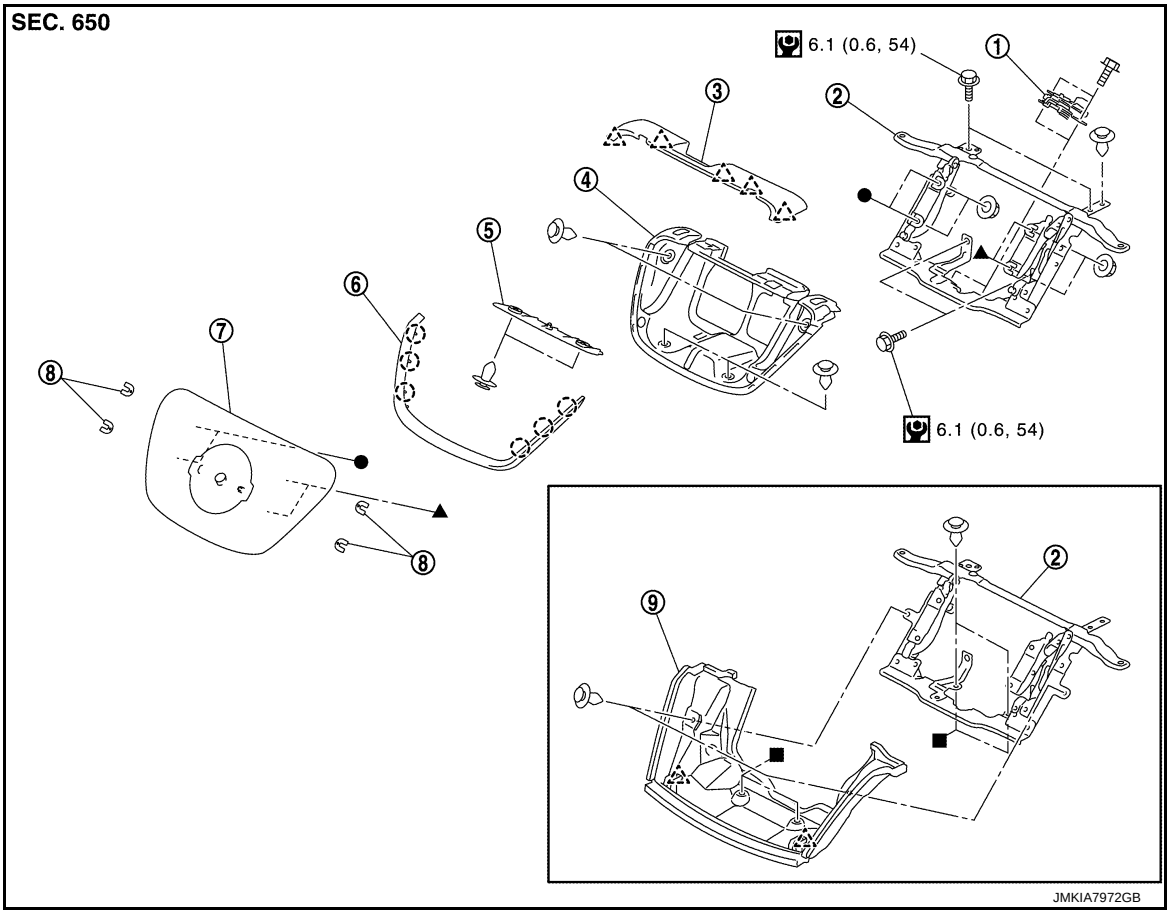

1.	Charge port lid lock	2.	Charge port lid hinge assembly	3.	Charge port upper cover
4.	Charge port cover	5.	Seal rubber	6.	Charge port lid parting seal
7.	Charge port lid assembly	8.	Shim [t: 0.5mm (0.020 in)] (charge port lid hinge assembly parts)	9.	Charge port rear cover (cold spec models)

: Clip

: Pawl

: N·m (kg-m, in-lb)

●, ▲, ■: Indicates that the part is connected at points with same symbol in actual vehicle.

CHARGE PORT LID ASSEMBLY

CHARGE PORT LID ASSEMBLY : Removal and Installation

INFOID:0000000006986911

REMOVAL

Remove charge port hinge assembly mounting nuts on the charge port lid assembly.

INSTALLATION

Note the following item, and then install in the reverse order of removal.

CAUTION:

After installing, perform charge port lid assembly fitting adjustment. Refer to DLK-148, "CHARGE PORT LID ASSEMBLY : Adjustment".

CHARGE PORT LID ASSEMBLY : Adjustment

INFOID:0000000006986912

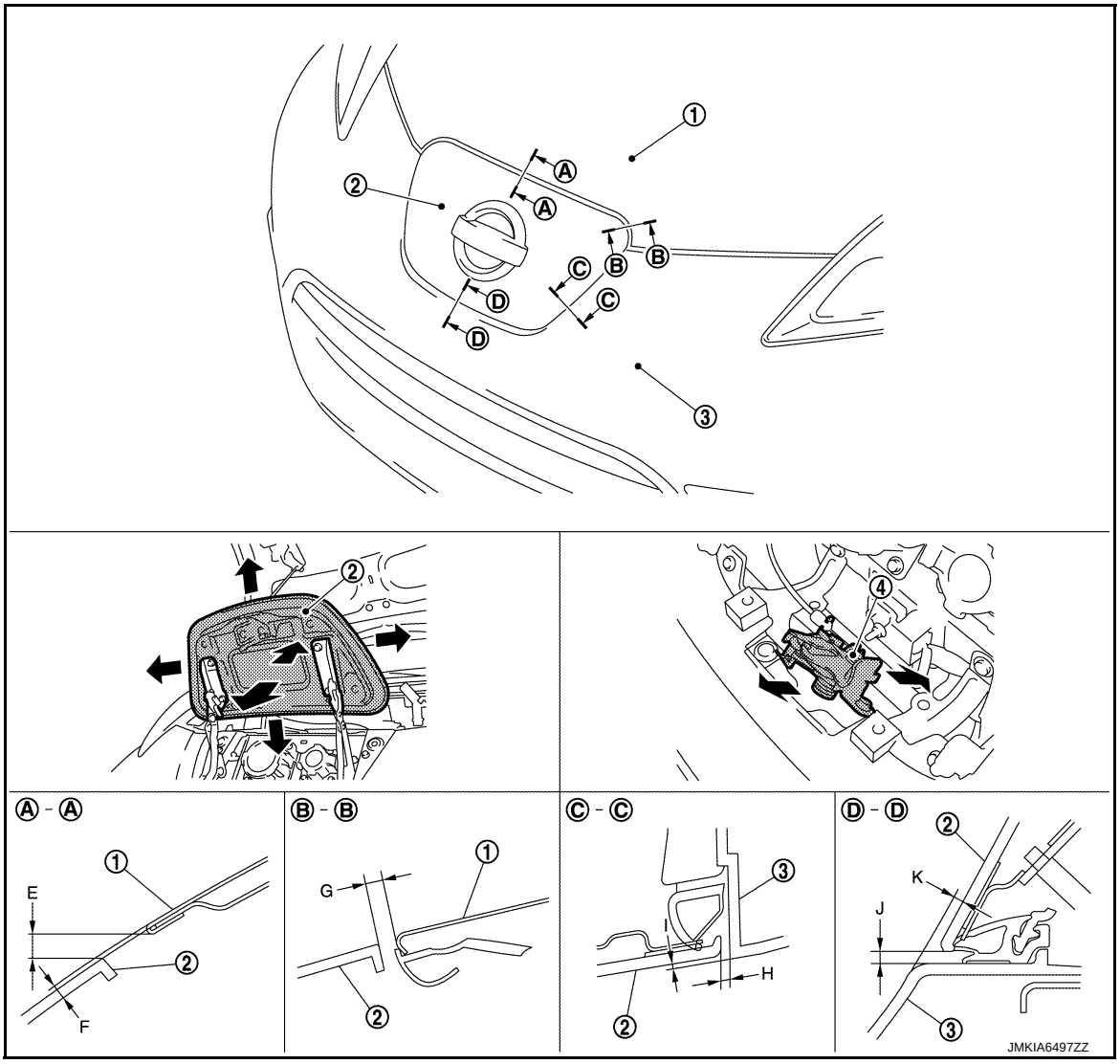

1. Hood assembly
2. Charge port lid assembly
3. Front bumper fascia
4. Charge port lid lock

Check the clearance and the surface height between charge port lid and each part by visually and touching. If the clearance and the surface height are out of specification, adjust them according to the procedures shown below.

Portion				Standard	Difference (RH/LH, MAX)
Charge port lid – Hood	A – A	E	Clearance	2.3 – 7.7 mm (0.091 – 0.303 in)	—
		F	Surface height	(-1.0) – (+3.0) mm [(-0.039) – (+0.118) in]	—
Charge port lid – Hood	B – B	G	Clearance	2.3 – 7.7 mm (0.091 – 0.303 in)	2.9 mm (0.114 in)

Portion				Standard	Difference (RH/LH, MAX)
Charge port lid – Front bumper fascia	C – C	H	Clearance	1.4 – 3.8 mm (0.055 – 0.150 in)	2.9 mm (0.114)
		I	Surface height	0.0 – 3.0 mm (0.000 – 0.118 in)	1.9 mm (0.075 in)
Charge port lid – Front bumper fascia	D – D	J	Clearance	2.1 – 4.5 mm (0.083 – 0.177 in)	—
		K	Surface height	2.0 – 5.0 mm (0.079) – (0.197 in)	—

FITTING ADJUSTMENT PROCEDURE

1. Remove charge port cover. Refer to DLK-149, "CHARGE PORT COVER : Removal and Installation".
2. Remove charge port lid lock.
3. Loosen charge port lid assembly mounting nuts.
4. Adjust the clearance of charge port lid assembly, hood assembly and front bumper fascia according to the specified value, by moving charge port lid assembly.
5. Tighten charge port lid.
6. Temporarily tighten charge port lid lock.
7. Adjust the surface height of charge port lid assembly, hood assembly and front bumper fascia according to the specified value, by moving charge port lid lock.
8. After adjustment, tighten charge port lid lock mounting bolts.
9. Install charge port cover. Refer to DLK-149, "CHARGE PORT COVER : Removal and Installation".

CHARGE PORT LID HINGE ASSEMBLY

CHARGE PORT LID HINGE ASSEMBLY : Removal and Installation

INFOID:0000000006986913

REMOVAL

1. Remove charge port lid assembly. Refer to DLK-147, "CHARGE PORT LID ASSEMBLY : Removal and Installation".
2. Remove charge port cover. Refer to DLK-149, "CHARGE PORT COVER : Removal and Installation".
3. Remove front bumper fascia. Refer to EXT-13, "Removal and Installation".
4. Remove charge port lid lock assembly. Refer to DLK-180, "Removal and Installation".
5. Remove fixing clips, and then remove charge port rear cover (cold spec models).
6. Remove charge port lid hinge mounting bolts and clip, and then remove charge port lid hinge assembly.

INSTALLATION

Note the following item, and then install in the reverse order of removal.

CAUTION:

After installation, perform charge port lid assembly fitting adjustment. Refer to DLK-148, "CHARGE PORT LID ASSEMBLY : Adjustment".

CHARGE PORT COVER

CHARGE PORT COVER : Removal and Installation

INFOID:0000000006986914

REMOVAL

1. Remove charge port upper cover.
2. Remove charge port cover fixing clips.
3. Remove charge port cover.
4. Remove fixing clips of seal rubber, and then remove seal rubber from charge port cover.
5. Remove charge port lid parting seal from charge port cover.

INSTALLATION

< REMOVAL AND INSTALLATION >

Install in the reverse order of removal.

RADIATOR CORE SUPPORT

Exploded View

INFOID:0000000006986915

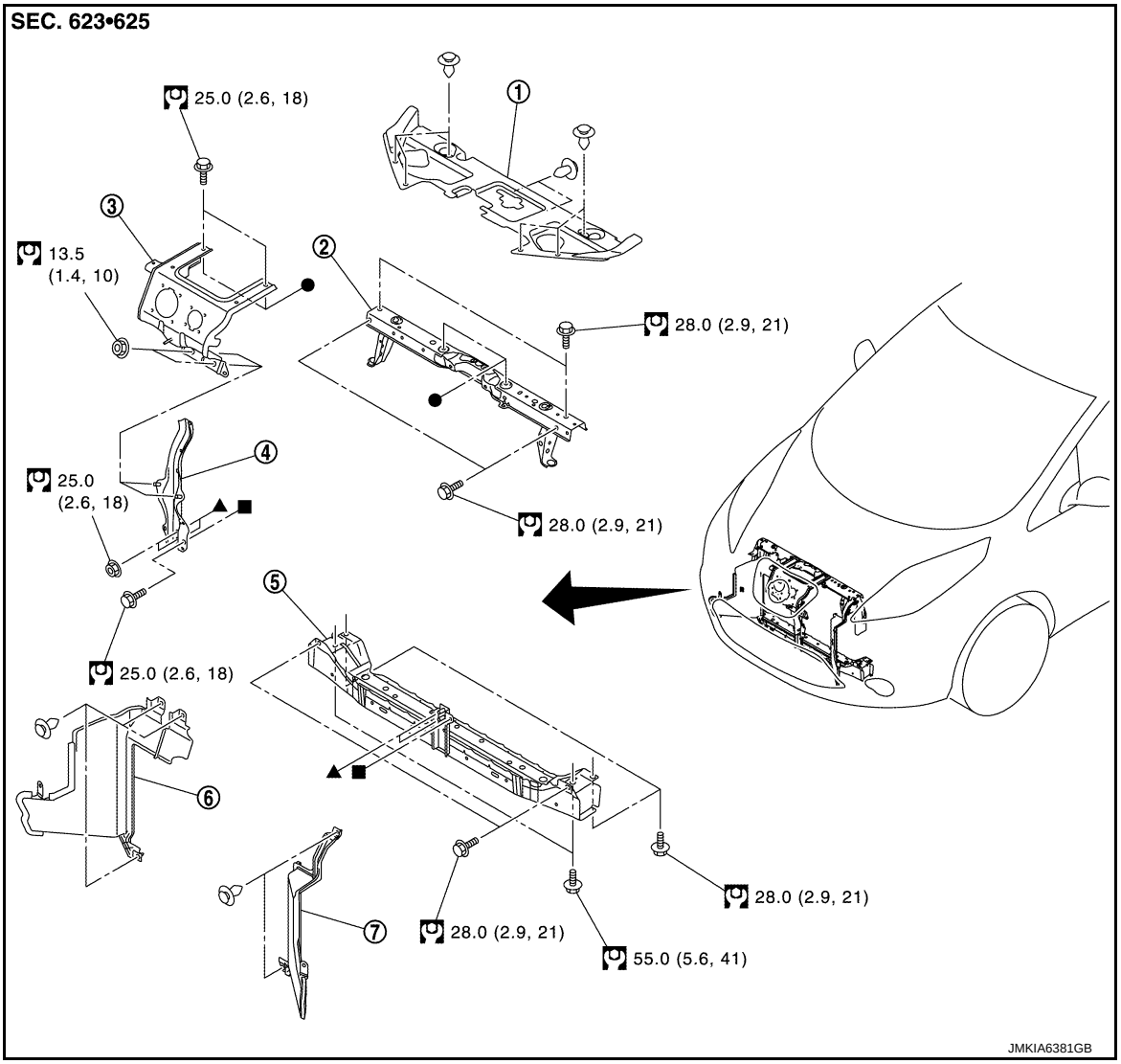

1. Radiator upper grille
2. Radiator core support upper
3. Charge port bracket
4. Radiator core support lower stay
5. Radiator core support lower
6. Air guide RH
7. Air guide LH

: N·m (kg-m, ft-lb)

●, ▲, ■: Indicates that the part is connected at points with same symbol in actual vehicle.

RADIATOR CORE SUPPORT UPPER

RADIATOR CORE SUPPORT UPPER : Removal and Installation

INFOID:0000000006986916

WARNING:

- **Because hybrid vehicles and electric vehicles contain a high voltage battery, there is the risk of electric shock, electric leakage, or similar accidents if the high voltage component and vehicle are handled incorrectly. Be sure to follow the correct work procedures when performing inspection and maintenance.**
- **Be sure to remove the service plug in order to disconnect the high voltage circuits before performing inspection or maintenance of high voltage system harnesses and parts.**

- **To prevent the removed service plug from being connected by mistake during the procedure, always carry it in your pocket or put it in the tool box.**
- **Be sure to wear insulating protective equipment consisting of glove, shoes, face shield and glasses before beginning work on the high voltage system.**
- **Clearly identify the persons responsible for high voltage work and ensure that other persons do not touch the vehicle. When not working, cover high voltage parts with an insulating cover sheet or similar item to prevent other persons from contacting them.**
- **Refer to GI-33, "High Voltage Precautions".**

CAUTION:
There is the possibility of a malfunction occurring if the vehicle is changed to READY status while the service plug is removed. Therefore do not change the vehicle to READY status unless instructed to do so in the Service Manual.

REMOVAL

WARNING:
Disconnect the high voltage. Refer to GI-31, "How to Disconnect High Voltage".

1. Check voltage in high voltage circuit. (Check that condenser are discharged.)

a. Lift up the vehicle and remove the Li-ion battery under covers. refer to EVB-169, "Exploded View".

b. Disconnect high voltage connector from front side of Li-ion battery. Refer to EVB-169, "Removal and Installation".

c. Measure voltage between high voltage harness terminals.

DANGER:

Always use protective equipments as touching high voltage components without using them will cause electrocution. (where high voltage might remain/is present on terminals.)

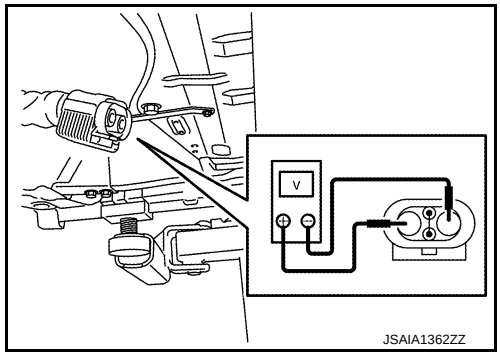

Standard : 5 V or less

CAUTION:
For voltage measurements, use a tester which can measure to 500V or higher.

2. Remove front bumper fascia, energy absorber and apron bracket. Refer to EXT-13, "Removal and Installation".
3. Remove hood lock assembly. Refer to DLK-177, "HOOD LOCK : Removal and Installation".
4. Remove air guide RH fixing clips (A) and washer tank inlet fixing clip (B).

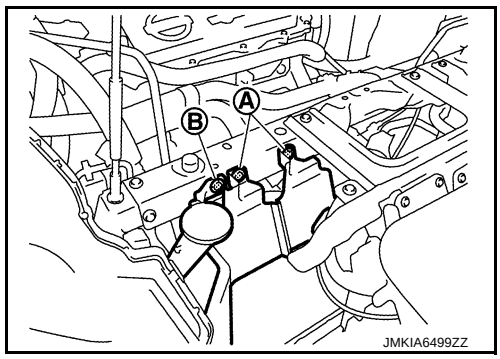

5. Remove reservoir tank mounting bolts (A), air guide LH fixing clip (B) and degas tank mounting bolt (C).

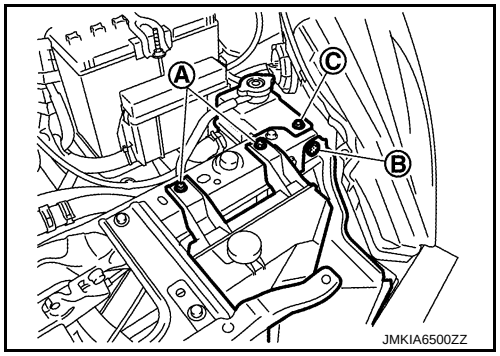

6. Remove harness fixing clips (A).

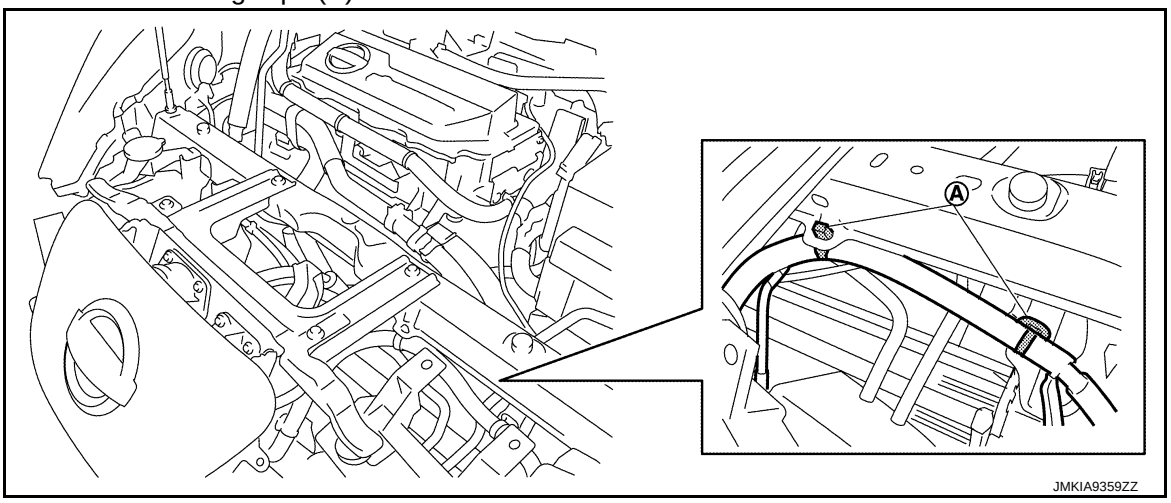

7. Disconnect quick charge port connector. Refer to VC-117, "Removal and Installation".
8. Disconnect normal charge port connector. Refer to VC-122, "Removal and Installation".
9. Remove upper mounting bolts of charge port bracket.
10. Remove lower mounting nuts and bolt of radiator core support lower stay.
11. Move charge port bracket and radiator core support lower stay.
12. Support hood assembly with the proper material to prevent it from falling.

    WARNING:
    Injury may occur if hood assembly is not supported with appropriate material when removing hood assembly.
13. Remove mounting bolts, and then remove radiator core support upper.

INSTALLATION

Install in the reverse order of removal.

RADIATOR CORE SUPPORT LOWER

RADIATOR CORE SUPPORT LOWER : Removal and Installation

INFOID:0000000006986917

WARNING:
- **Because hybrid vehicles and electric vehicles contain a high voltage battery, there is the risk of electric shock, electric leakage, or similar accidents if the high voltage component and vehicle are handled incorrectly. Be sure to follow the correct work procedures when performing inspection and maintenance.**
- **Be sure to remove the service plug in order to disconnect the high voltage circuits before performing inspection or maintenance of high voltage system harnesses and parts.**
- **To prevent the removed service plug from being connected by mistake during the procedure, always carry it in your pocket or put it in the tool box.**
- **Be sure to wear insulating protective equipment consisting of glove, shoes, face shield and glasses before beginning work on the high voltage system.**

- **Clearly identify the persons responsible for high voltage work and ensure that other persons do not touch the vehicle. When not working, cover high voltage parts with an insulating cover sheet or similar item to prevent other persons from contacting them.**
- **Refer to GI-33, "High Voltage Precautions".**

CAUTION:
There is the possibility of a malfunction occurring if the vehicle is changed to READY status while the service plug is removed. Therefore do not change the vehicle to READY status unless instructed to do so in the Service Manual.

RAMOVAL

WARNING:
Disconnect the high voltage. Refer to GI-31, "How to Disconnect High Voltage".

1. Check voltage in high voltage circuit. (Check that condenser are discharged.)

a. Lift up the vehicle and remove the Li-ion battery under covers. refer to EVB-169, "Exploded View".

b. Disconnect high voltage connector from front side of Li-ion battery. Refer to EVB-169, "Removal and Installation".

c. Measure voltage between high voltage harness terminals.

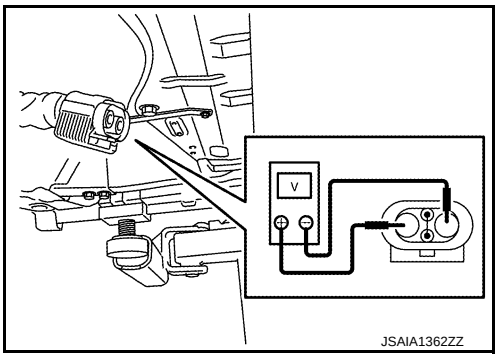

DANGER:

Always use protective equipments as touching high voltage components without using them will cause electrocution. (where high voltage might remain/is present on terminals.)

Standard : 5 V or less

CAUTION:
For voltage measurements, use a tester which can measure to 500V or higher.

2. Remove front bumper fascia, energy absorber, and apron bracket. Refer to EXT-13, "Removal and Installation".

3. Remove reservoir tank mounting bolts (A).

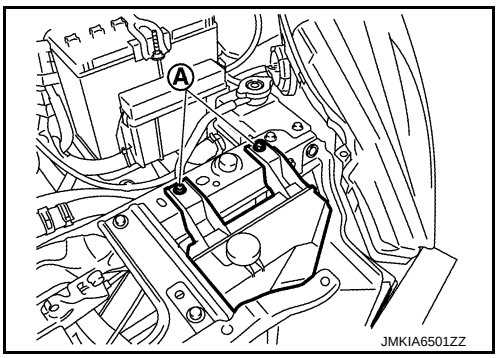

4. Remove harness fixing clips (A).

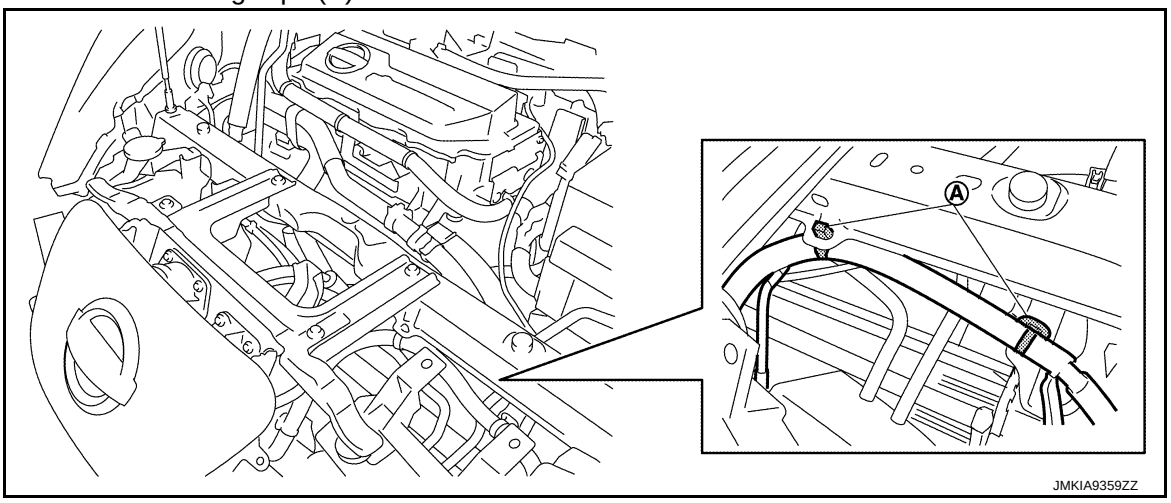

5. Disconnect quick charge port connector. Refer to VC-117, "Removal and Installation".
6. Disconnect normal charge port connector. Refer to VC-122, "Removal and Installation".
7. Remove lower mounting bolts of hood lock assembly.
8. Remove upper mounting bolts of charge port bracket.
9. Remove lower mounting nuts and bolt of radiator core support lower stay.
10. Move charge port bracket and radiator core support lower stay.
11. Remove air guide (LH and RH).
12. Use belts (A) to suspend radiator and condenser to prevent them from falling.
    CAUTION:
    Never damage radiator and condenser.

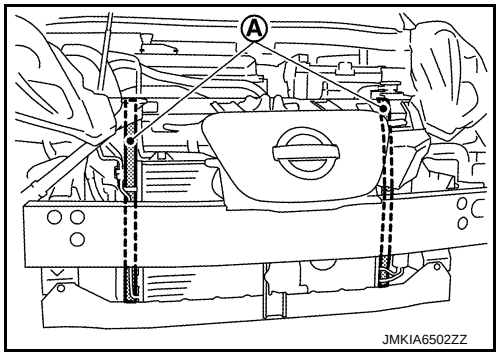

13. Remove front fixing clip of fender protector (LH and RH) from radiator core support lower.
14. Remove mounting bolts, and then remove radiator core support lower.

INSTALLATION

Install in the reverse order of removal.

RADIATOR UPPER GRILLE

RADIATOR UPPER GRILLE : Removal and Installation

INFOID:0000000006986918

REMOVAL

Remove fixing clips, and then remove radiator upper grille.

INSTALLATION

Install in the reverse order of removal.

CHARGE PORT BRACKET

CHARGE PORT BRACKET : Removal and Installation

INFOID:0000000006986919

WARNING:

- **Because hybrid vehicles and electric vehicles contain a high voltage battery, there is the risk of electric shock, electric leakage, or similar accidents if the high voltage component and vehicle are han-**

dled incorrectly. Be sure to follow the correct work procedures when performing inspection and maintenance.

- **Be sure to remove the service plug in order to disconnect the high voltage circuits before performing inspection or maintenance of high voltage system harnesses and parts.**
- **To prevent the removed service plug from being connected by mistake during the procedure, always carry it in your pocket or put it in the tool box.**
- **Be sure to wear insulating protective equipment consisting of glove, shoes, face shield and glasses before beginning work on the high voltage system.**
- **Clearly identify the persons responsible for high voltage work and ensure that other persons do not touch the vehicle. When not working, cover high voltage parts with an insulating cover sheet or similar item to prevent other persons from contacting them.**
- **Refer to GI-33, "High Voltage Precautions".**

CAUTION:

There is the possibility of a malfunction occurring if the vehicle is changed to READY status while the service plug is removed. Therefore do not change the vehicle to READY status unless instructed to do so in the Service Manual.

REMOVAL

WARNING:

Disconnect the high voltage. Refer to GI-31, "How to Disconnect High Voltage".

1. Check voltage in high voltage circuit. (Check that condenser are discharged.)

a. Lift up the vehicle and remove the Li-ion battery under covers. refer to EVB-169, "Exploded View".

b. Disconnect high voltage connector from front side of Li-ion battery. Refer to EVB-169, "Removal and Installation".

c. Measure voltage between high voltage harness terminals.

DANGER:

Always use protective equipments as touching high voltage components without using them will cause electrocution. (where high voltage might remain/is present on terminals.)

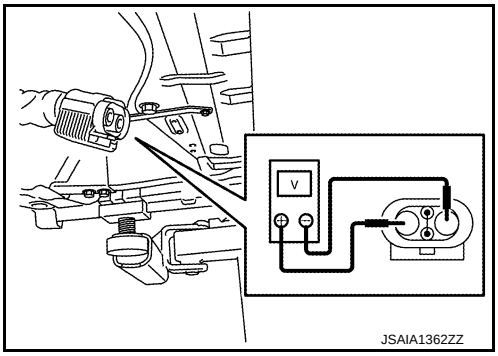

Standard : 5 V or less

CAUTION:

For voltage measurements, use a tester which can measure to 500V or higher.

2. Remove charge port hinge assembly. Refer to DLK-149, "CHARGE PORT LID HINGE ASSEMBLY : Removal and Installation".
3. Remove quick charge port. Refer to VC-117, "Removal and Installation".
4. Remove normal charge port. Refer to VC-122, "Removal and Installation".
5. Remove crash zone sensor. Refer to SR-30, "Removal and Installation".
6. Remove harness fixing clips (A).

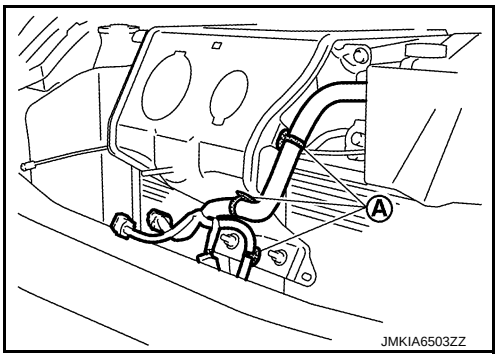

7. Remove mounting bolts and nuts, and then remove charge port bracket.

INSTALLATION

Install in the reverse order of removal.

FRONT FENDER

Exploded View

INFOID:0000000006986920

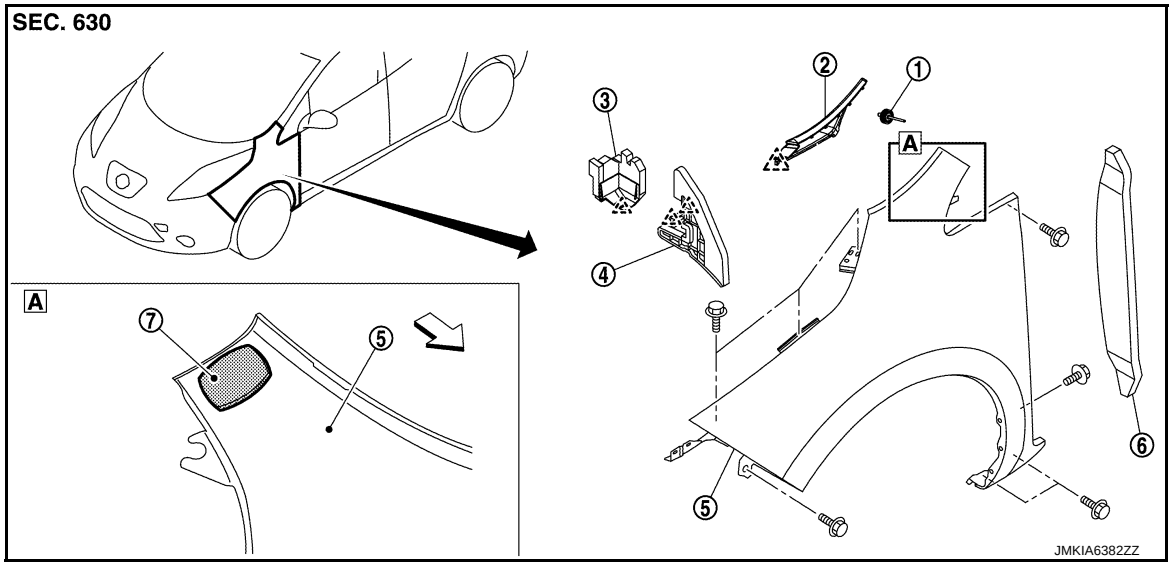

1. Rivet
2. Front fender cover
3. Front fender seal
4. Front fender upper insulator
5. Front fender assembly
6. Front fender seal
7. Front fender stiffener

: Pawl

: Vehicle front

Removal and Installation

INFOID:0000000006986921

REMOVAL

1. Remove front bumper fascia assembly. Refer to EXT-13, "Removal and Installation".
2. Remove fender protector. Refer to EXT-21, "FENDER PROTECTOR : Removal and Installation".
3. Remove front fender cover.
4. Remove front side maker lamp. Refer to EXL-103, "Removal and Installation".
5. Remove front combination lamp. Refer to EXL-103, "Removal and Installation".
6. Remove side turn signal lamp. Refer to EXL-109, "Removal and Installation".
7. Remove mounting bolts of front fender assembly.
8. Apply protective tape (A) on the body side outer panel to protect the painted surface from damage.

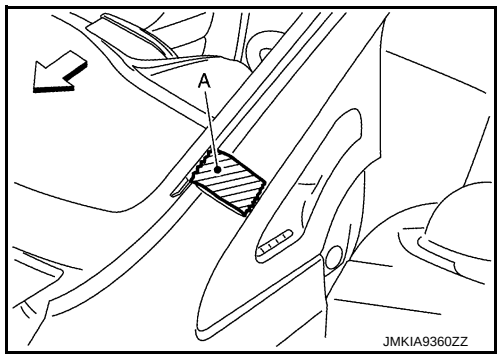

9. Using a remover tool (A), remove front fender stiffener (2) from the vehicle body while carefully pulling the portion of front fender (1) toward vehicle outside.

   ⇦ : Vehicle front

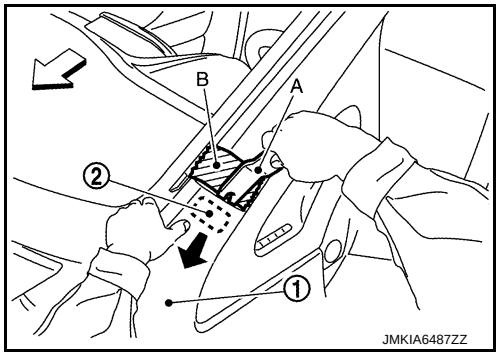

10. Remove front fender assembly.
    CAUTION:
    An viscous urethane foam is installed on the back surface of front fender. When removing the front fender, be careful to not deform the front fender while performing the procedure and removing the viscous urethane foam a little at a time.

INSTALLATION

Note the following items, and install in the reverse order of removal.

CAUTION:

- **After installation, apply the touch-up paint (the body color) onto the head of front fender mounting bolts.**
- **After installation, adjust the following part.**
- **Hood assembly: Refer to DLK-143, "HOOD ASSEMBLY : Adjustment".**
- **Front door: Refer to DLK-162, "DOOR ASSEMBLY : Adjustment".**

FRONT DOOR

Exploded View

INFOID:0000000006986922

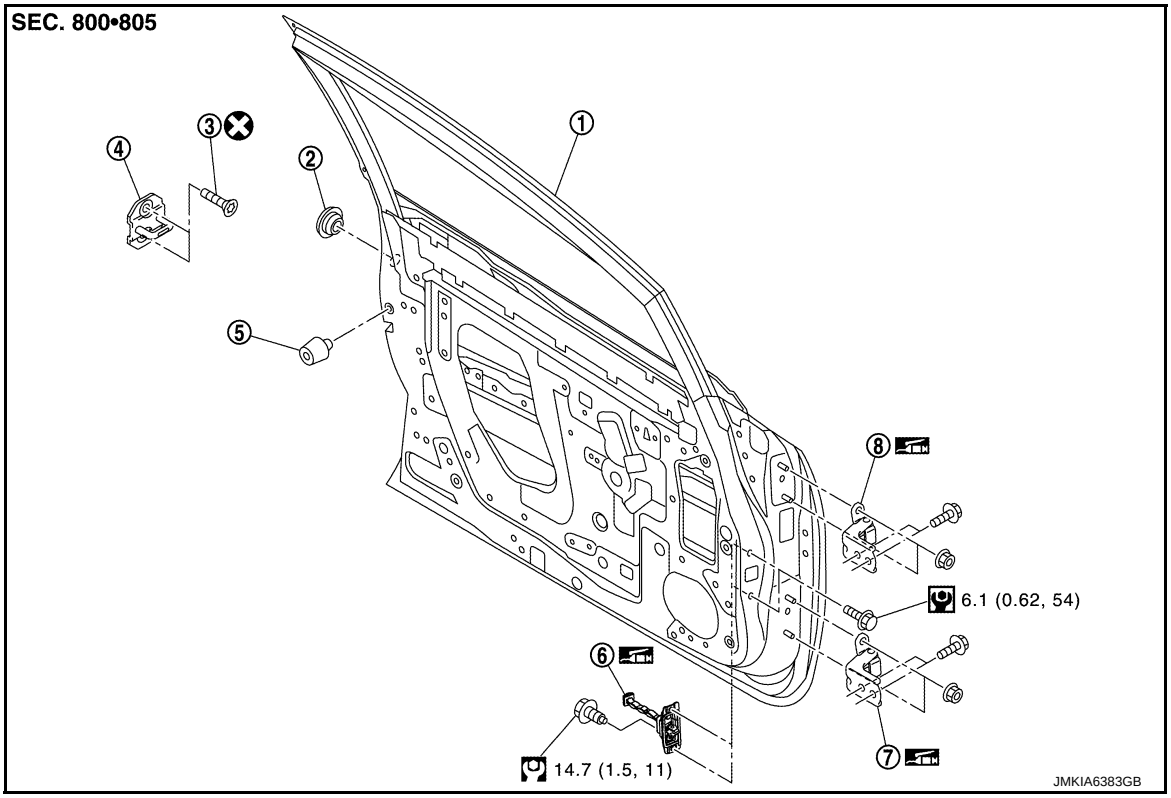

1.	Front door panel	2.	Grommet	3.	TORX bolt
4.	Door striker	5.	Bumper rubber	6.	Door check link
7.	Door hinge (lower)	8.	Door hinge (upper)		

: Always replace after every disassembly

: N·m (kg-m, in-lb)

: N·m (kg-m, ft-lb)

: Body grease

DOOR ASSEMBLY

DOOR ASSEMBLY : Removal and Installation

INFOID:0000000006986923

WARNING:
Before servicing, push power switch OFF, disconnect 12V battery negative terminal and wait 5 minutes or more. Refer to DLK-9, "Precautions for Removing Battery Terminal".

CAUTION:
- **Perform work with 2 workers, because of its heavy weight.**
- **When removing and installing front door assembly, support door with a jack and shop cloth to protect door and body.**

REMOVAL

1. Disconnect front door harness connector.

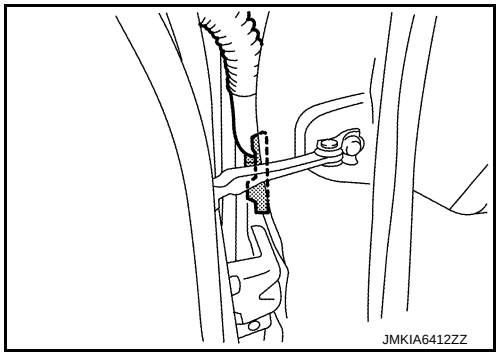

2. Remove mounting bolt of door check link on the vehicle.
3. Remove door hinge mounting nuts (door side), and then remove door assembly.

INSTALLATION

Note the following items, and install in the reverse order of removal.

CAUTION:

- **Apply anticorrosive agent onto the mounting surface.**
- **Check front door open/close, lock/unlock operation after installation.**
- **Check door hinge rotating part for poor lubrication. If necessary, apply body grease.**
- **After installation, perform the fitting adjustment. Refer to DLK-162, "DOOR ASSEMBLY : Adjustment".**
- **After installation, apply touch-up paint (the body color) onto the head of door hinge mounting nuts.**
- **If malfunction is detected by the air bag warning lamp, after repair or replacement of the malfunctioning parts, reset the memory using self-diagnosis or CONSULT. Refer to SRC-13, "On Board Diagnosis Function" or SRC-17, "CONSULT Function".**
- **After the work is completed, check that no system malfunction is detected by air bag warning lamp.**

DOOR ASSEMBLY : Adjustment

INFOID:0000000006986924

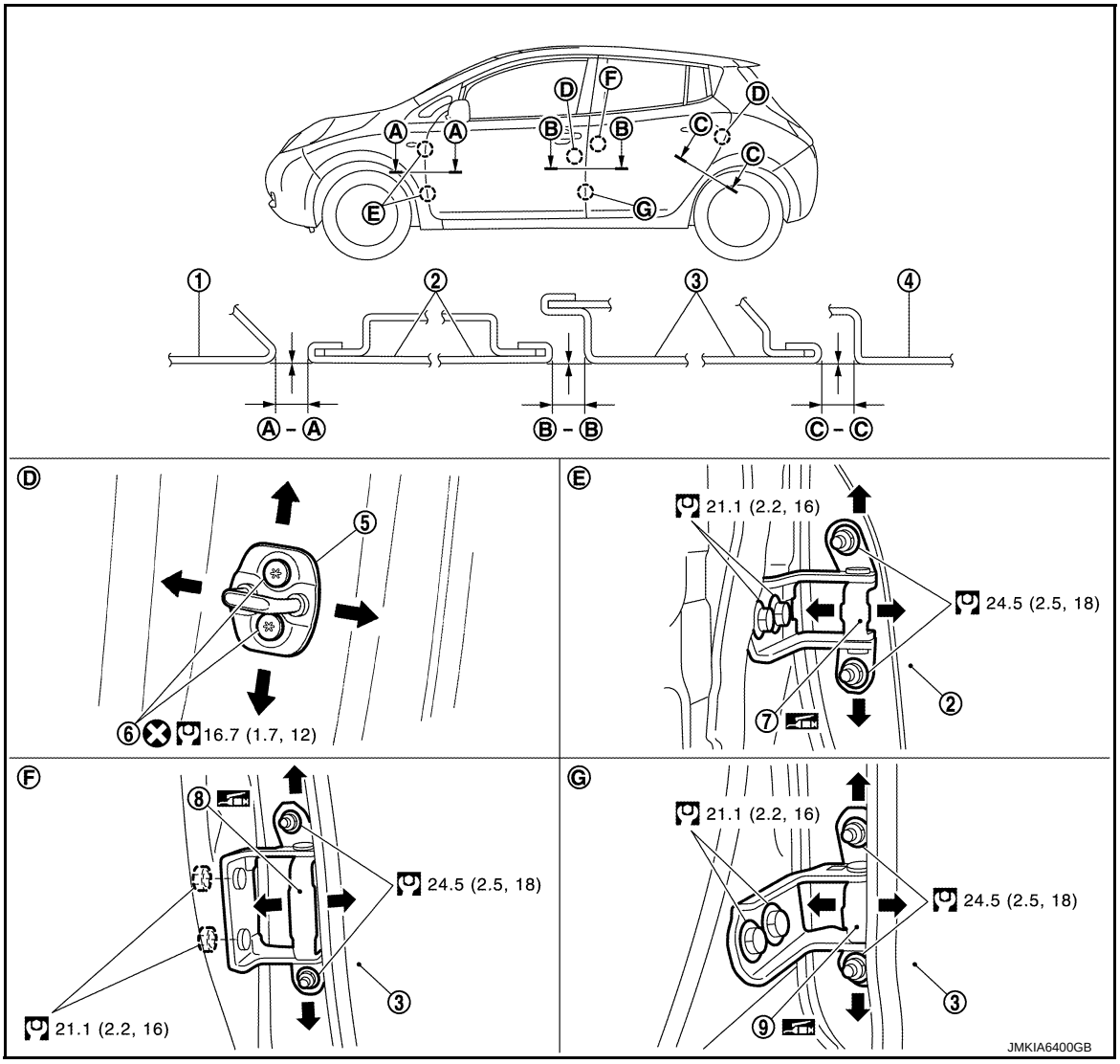

1. Front fender
2. Front door
3. Rear door
4. Body side outer
5. Door striker
6. TORX bolt
7. Front door hinge
8. Rear door hinge (upper)
9. Rear door hinge (lower)

: Always replace after every disassembly

: N·m (kg-m, ft-lb)

: Body grease

Check the clearance and surface height between front door and each part by visually and touching.
If the clearance and the surface height are out of specification, adjust them according to the procedures shown below.

Portion		Clearance	Surface height
Front fender – Front door	A – A	3.0 – 5.0 mm (0.118 – 0.197 in)	(-1.0) – (+1.0) mm [(-0.039) – (+0.039) in]
Front door – Rear door	B – B	3.5 – 5.5 mm (0.138 – 0.217 in)	(-1.0) – (+1.0) mm [(-0.039) – (+0.039) in]

FITTING ADJUSTMENT PROCEDURE

1. Remove front fender. Refer to DLK-158, "Removal and Installation".
2. Loosen door hinge mounting nuts on door side.
3. Adjust the surface height of front door according to the fitting standard dimension.
4. Temporarily tighten door hinge mounting nuts on door side.
5. Loosen door hinge mounting bolts on body side.
6. Raise front door at rear end to adjust clearance of the front door according to the fitting standard dimension.
7. After adjustment tighten bolts and nuts to the specified torque.
   CAUTION:
   - **After installation, apply touch-up paint (the body color) onto the head of hinge mounting bolts and nuts.**
   - **Check door hinge rotating part for poor lubrication. If necessary, apply body grease.**
8. Install front fender. Refer to refer to DLK-158, "Removal and Installation".

DOOR STRIKER ADJUSTMENT

Adjust door striker so that it becomes parallel with door lock insertion direction.

DOOR STRIKER

DOOR STRIKER : Removal and Installation

INFOID:0000000006986925

REMOVAL

Remove TORX bolts, and then remove door striker.

INSTALLATION

Note the following items, and install in the reverse order of removal.

CAUTION:
- **Check front door open/close, lock/unlock operation after installation.**
- **After installation, be sure to perform the fitting adjustment. Refer to DLK-162, "DOOR ASSEMBLY : Adjustment".**

DOOR HINGE

DOOR HINGE : Removal and Installation

INFOID:0000000006986926

WARNING:
Before servicing, push power switch OFF, disconnect 12V battery negative terminal and wait 5 minutes or more. Refer to DLK-9, "Precautions for Removing Battery Terminal".

CAUTION:
- **Perform work with 2 workers, because of its heavy weight.**
- **When removing and installing front door assembly, support door with a jack and shop cloth to protect door and body.**

REMOVAL

1. Remove front fender. Refer to DLK-158, "Removal and Installation".
2. Remove front door assembly. Refer to DLK-160, "DOOR ASSEMBLY : Removal and Installation".
3. Remove front door hinge mounting bolts (body side), and then remove front door hinge.

INSTALLATION

Note the following items, and install in the reverse order of removal.

CAUTION:
- **Apply anticorrosive agent onto the mounting surface.**
- **Check front door open/close, lock/unlock operation after installation.**
- **After installation, perform the fitting adjustment. Refer to DLK-162, "DOOR ASSEMBLY : Adjustment".**
- **After installation, apply touch-up paint (the body color) onto the head of door hinge mounting nuts.**

- **Check door hinge rotating part for poor lubrication. If necessary, apply body grease.**

  ⬅ : Grease up point

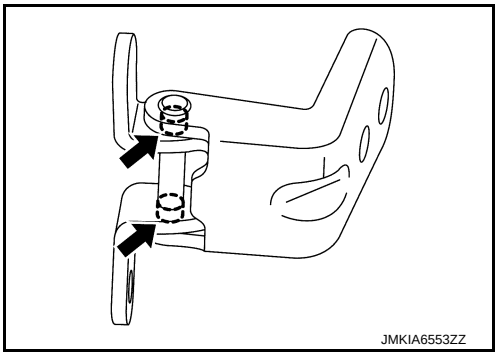

- **If malfunction is detected by the air bag warning lamp, after repair or replacement of the malfunctioning parts, reset the memory using self-diagnosis or CONSULT. Refer to SRC-13, "On Board Diagnosis Function" or SRC-17, "CONSULT Function".**
- **After the work is completed, check that no system malfunction is detected by air bag warning lamp.**

DOOR CHECK LINK

DOOR CHECK LINK : Removal and Installation

INFOID:0000000006986927

REMOVAL

1. Fully close the front door window.
2. Remove front door finisher. Refer to INT-14, "Removal and Installation".
3. Remove sealing screen.
   NOTE:
   Cut the butyl-tape so that some parts of the butyl-tape do not remain on the sealing screen, if the sealing screen is reused.
4. Remove mounting bolt of door check link on the vehicle.
5. Remove mounting bolts of door check link on door panel.
6. Take door check link (1) out from the hole of door panel (2).

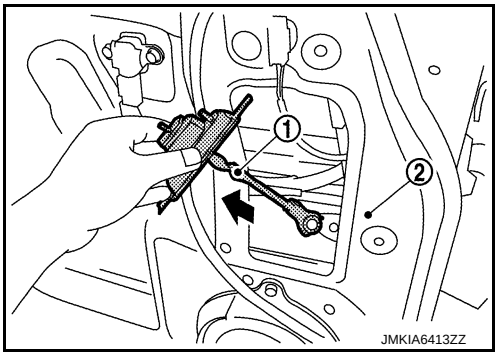

INSTALLATION

Note the following item, and install in the reverse order of removal.

CAUTION:

- **Check front door open/close operation after installation.**
- **Check door check link rotating part for poor lubrication. If necessary, apply grease.**

  ⬅ : Grease up point

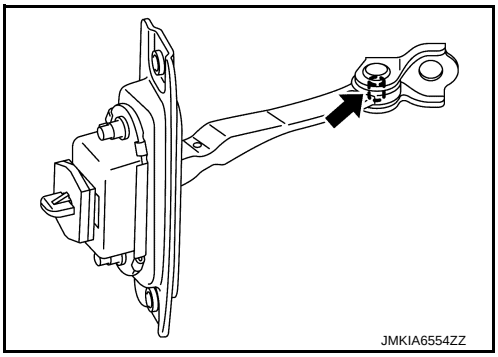

REAR DOOR

Exploded View

INFOID:0000000006986928

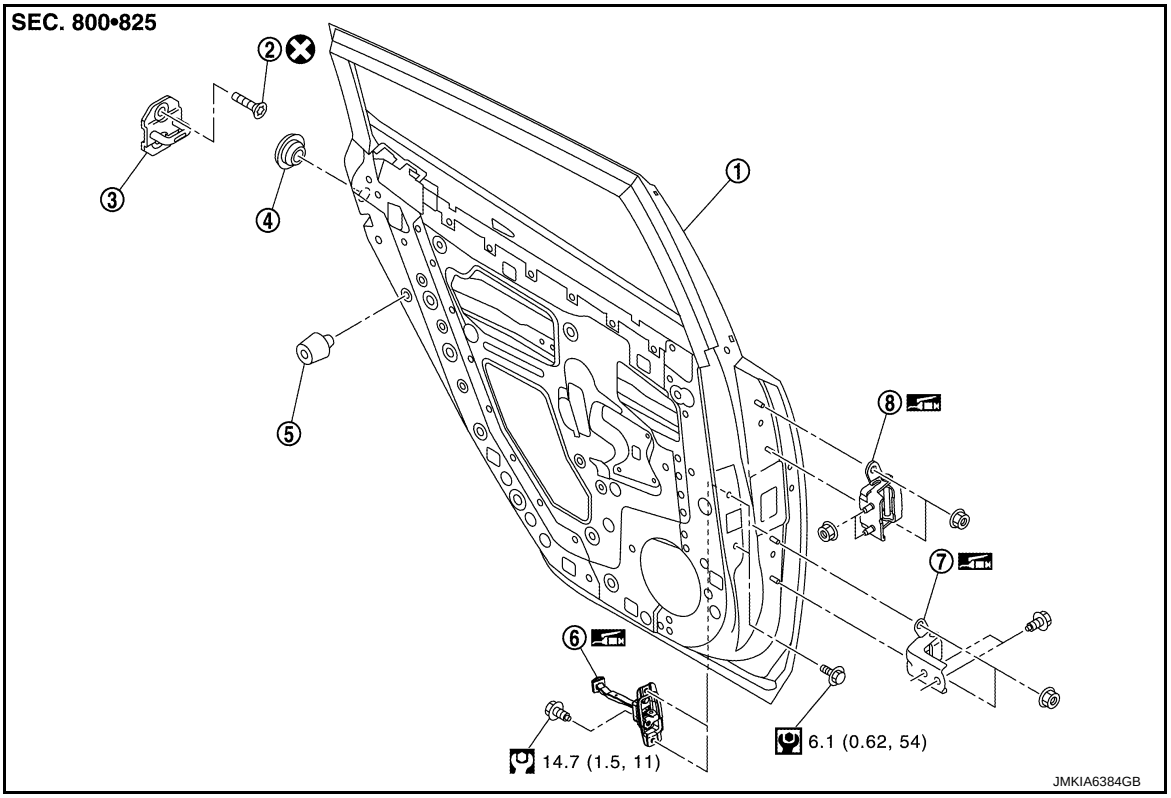

1.	Rear door panel	2.	TORX bolt	3.	Door striker
4.	Grommet	5.	Bumper rubber	6.	Door check link
7.	Door hinge (lower)	8.	Door hinge (upper)		

: Always replace after every disassembly

: N·m (kg-m, in-lb)

: N·m (kg-m, ft-lb)

: Body grease

DOOR ASSEMBLY

DOOR ASSEMBLY : Removal and Installation

INFOID:0000000006986929

CAUTION:
- **Perform work with 2 workers, because of it's heavy weight.**
- **When removing and installing rear door assembly, support door with a jack and shop cloth to protect door and body.**

REMOVAL

1. Remove rear door harness grommet (2) from body side outer (1), and then pull out rear door harness.

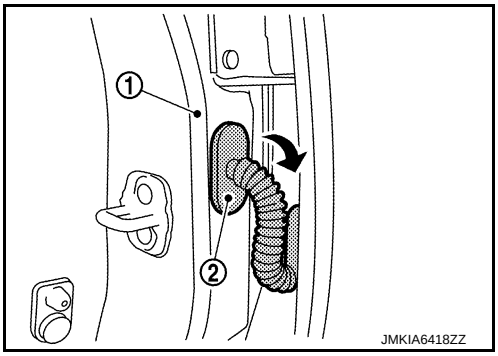

2. Disconnect rear door harness connector.

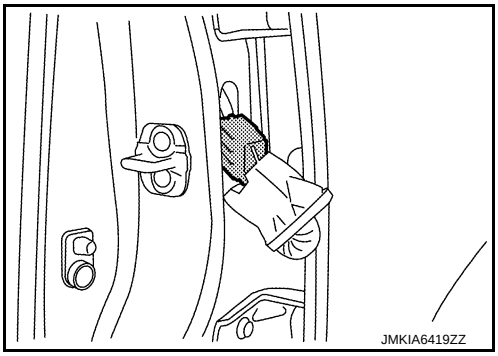

3. Remove mounting bolt of door check link on the vehicle.
4. Remove door hinge mounting nuts (door side), and then remove rear door assembly.

INSTALLATION

Note the following items, and install in the reverse order of removal.

CAUTION:

- **Apply anticorrosive agent onto the mounting surface.**
- **Check rear door open/close, lock/unlock operation after installation.**
- **Check door hinge rotating part for poor lubrication. If necessary, apply body grease.**
- **After installation, perform the fitting adjustment. Refer to DLK-167, "DOOR ASSEMBLY : Adjustment".**
- **After installation, apply touch-up paint (the body color) onto the head of door hinge mounting nuts.**

DOOR ASSEMBLY : Adjustment

INFOID:0000000006986930

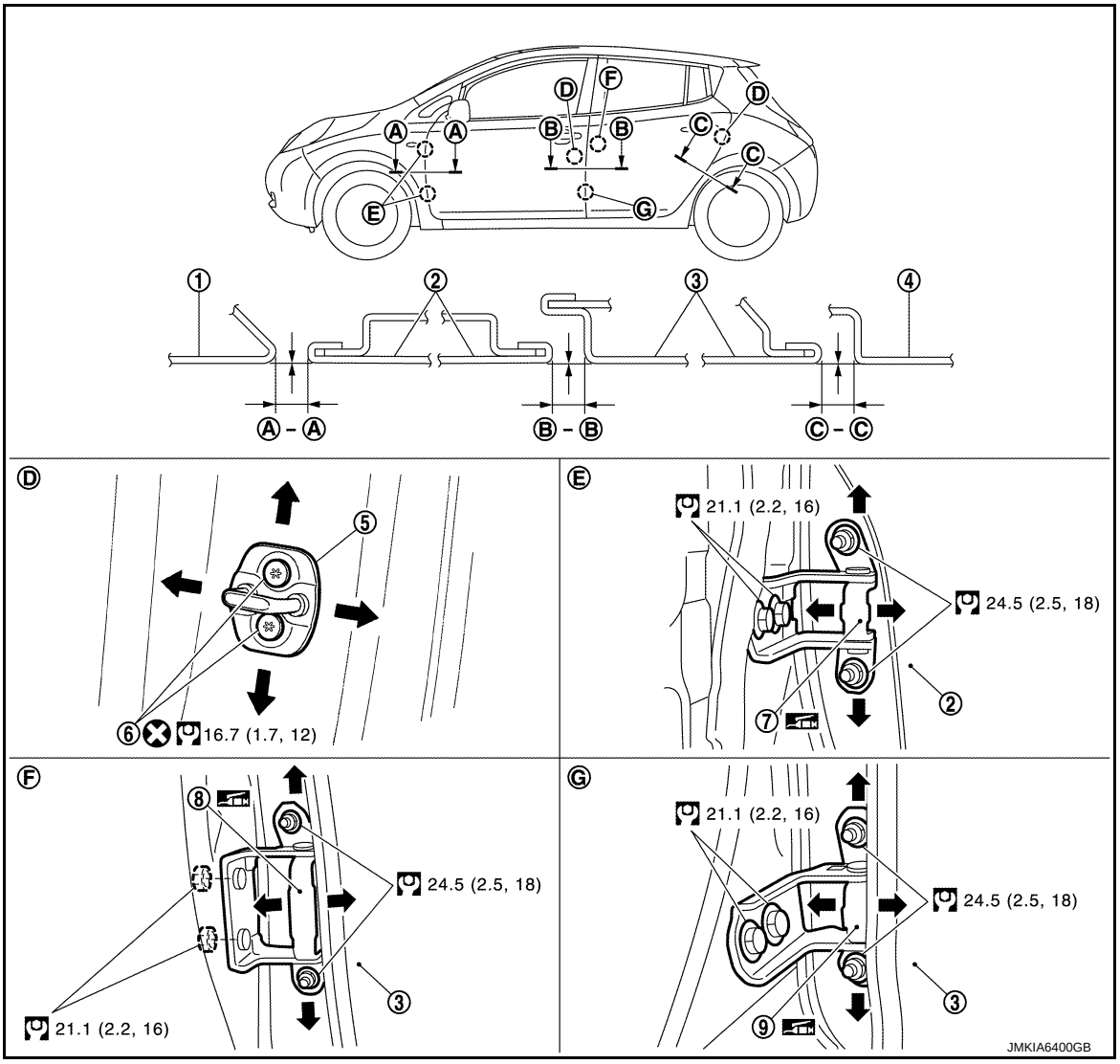

1. Front fender	2. Front door	3. Rear door
4. Body side outer	5. Door striker	6. TORX bolt
7. Front door hinge	8. Rear door hinge (upper)	9. Rear door hinge (lower)

: Always replace after every disassembly

: N·m (kg-m, ft-lb)

: Body grease

Check the clearance and surface height between rear door and each part by visually and touching.
If the clearance and the surface height are out of specification, adjust them according to the procedures shown below.

Portion		Clearance	Surface height
Front door – Rear door	**B – B**	**3.5 – 5.5 mm (0.138 – 0.217 in)**	**(-1.0) – (+1.0) mm [(-0.039) – (+0.039) in]**
Rear door – Body side outer	**C – C**	**3.0 – 5.0 mm (0.118 – 0.197 in)**	**(-1.0) – (+1.0) mm [(-0.039) – (+0.039) in]**

FITTING ADJUSTMENT PROCEDURE

1. Remove center pillar lower garnish. Refer to INT-25, "CENTER PILLAR LOWER GARNISH : Removal and Installation".
2. Loosen door hinge mounting nuts on door side.
3. Adjust the surface height of rear door according to the fitting standard dimension.
4. Temporarily tighten door hinge mounting nuts on door side.
5. Loosen door hinge mounting nuts and bolts on body side.
6. Raise rear door at rear end to adjust clearance of rear door according to the fitting standard dimension.
7. After adjustment tighten bolts and nuts to the specified torque.
   CAUTION:
   - **After installation, apply touch-up paint (the body color) onto the head of hinge mounting bolts and nuts.**
   - **Check door hinge rotating part for poor lubrication. If necessary, apply body grease.**
8. Install center pillar lower garnish. Refer to INT-25, "CENTER PILLAR LOWER GARNISH : Removal and Installation".

DOOR STRIKER ADJUSTMENT

Adjust door striker so that it becomes parallel with door lock insertion direction.

DOOR STRIKER

DOOR STRIKER : Removal and Installation

INFOID:0000000006986931

REMOVAL

Remove TORX bolts, and then remove door striker.

INSTALLATION

Note the following items, and install in the reverse order of removal.

CAUTION:
- **Check rear door open/close, lock/unlock operation after installation.**
- **After installation, be sure to perform the fitting adjustment. Refer to DLK-167, "DOOR ASSEMBLY : Adjustment".**

DOOR HINGE

DOOR HINGE : Removal and Installation

INFOID:0000000006986932

CAUTION:
- **Perform work with 2 workers, because of it's heavy weight.**
- **When removing and installing rear door assembly, support door with a jack and shop cloth to protect door and body.**

REMOVAL

1. Remove rear door assembly. Refer to DLK-165, "DOOR ASSEMBLY : Removal and Installation".
2. Remove center pillar lower garnish. Refer to INT-25, "CENTER PILLAR LOWER GARNISH : Removal and Installation".
3. Remove rear door hinge mounting bolts and nuts (body side), and then remove door hinge.

INSTALLATION

Note the following items, and install in the reverse order of removal.

CAUTION:
- **Apply anticorrosive agent onto the mounting surface.**
- **Check rear door open/close operation after installation.**
- **When removing and installing rear door assembly, perform the fitting adjustment. Refer to DLK-167, "DOOR ASSEMBLY : Adjustment".**
- **After installing, apply the touch-up paint (the body color) onto the head of door hinge mounting nuts.**

- **Check door hinge rotating part for poor lubrication. If necessary, apply body grease.**

⬅ : Grease up point

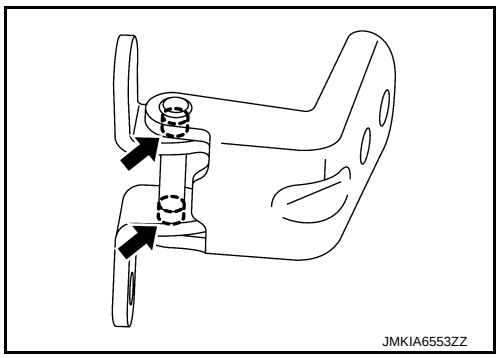

DOOR CHECK LINK

DOOR CHECK LINK : Removal and Installation

INFOID:0000000006986933

REMOVAL

1. Fully close the rear door window.
2. Remove rear door finisher. Refer to INT-17, "Removal and Installation".
3. Remove mounting bolts of rear door speaker, and then remove rear door speaker.
4. Disconnect harness connector of rear door speaker.
5. Remove mounting bolt of the check link on the vehicle.
6. Remove mounting bolts of the check link on door panel.
7. Take door check link (1) out from the hole of door panel (2).

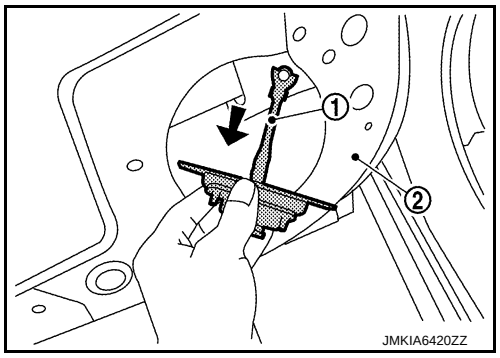

INSTALLATION

Note the following items, and install in the reverse order of removal.

CAUTION:

- **Check rear door open/close operation after installation.**
- **Check door check link rotating part for poor lubrication. If necessary, apply grease.**

⬅ : Grease up point

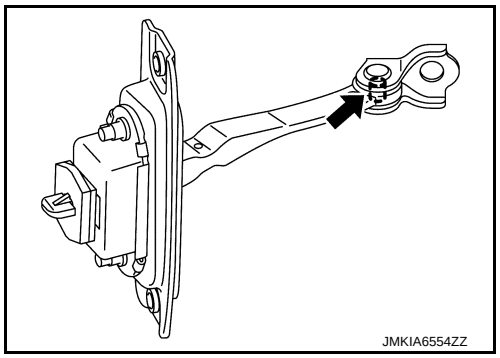

BACK DOOR

Exploded View

INFOID:0000000006986934

REMOVAL

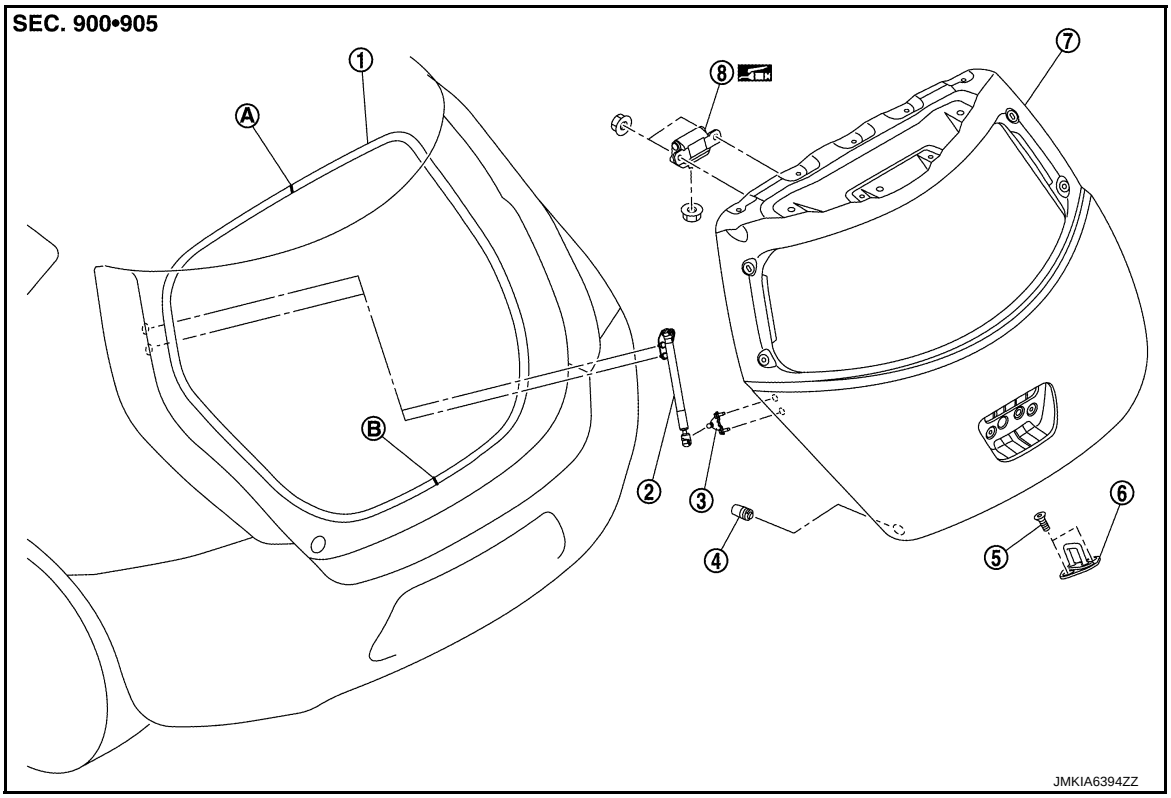

1. Back door weather-strip
2. Back door stay assembly
3. Back door stay lower bracket
4. Bumper rubber
5. TORX bolt
6. Back door striker
7. Back door panel
8. Back door hinge

A : Center mark

B : Seam

: Body grease

BACK DOOR ASSEMBLY

BACK DOOR ASSEMBLY : Removal and Installation

INFOID:0000000006986935

CAUTION:
- **Operate with two workers, because of its heavy weight.**
- **Use protective tape or shop cloth to protect from damage during removal and installation.**

REMOVAL

1. Remove rear pillar finisher (LH and RH). Refer to INT-26, "REAR PILLAR FINISHER : Removal and Installation".

2. Disconnect harness connector (A) and (B).
3. Remove harness clip (C).
4. Remove ground cable mounting bolt (D).

⇦ : Vehicle front

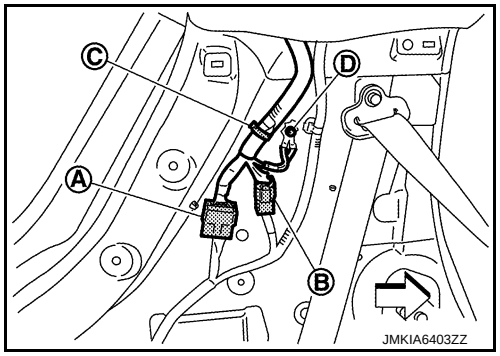

5. Remove rear washer hose (1) from hose joint (2).

⇦ : Vehicle front

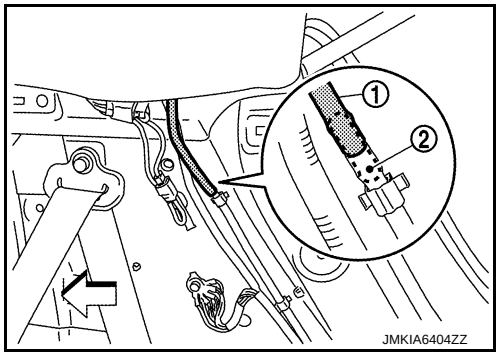

6. Remove grommet (1), and then pull out harness from rear fender extension LH (2).

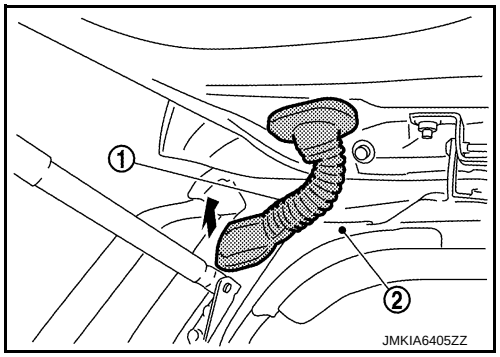

7. Remove grommet (1), and then pull out harness from rear fender extension RH (2).

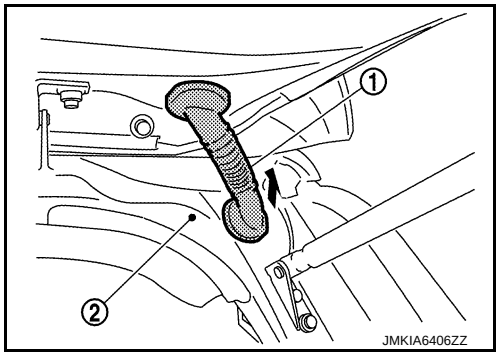

8. Support back door with appropriate material to prevent it from falling.

   WARNING:
   Bodily injury may occur if no supporting rod is holding the back door open when removing the back door stay.
9. Remove back door stay assembly (back door side). Refer to DLK-174, "BACK DOOR STAY : Removal and Installation".
10. Remove back door hinge mounting nuts on back door and remove back door assembly.

INSTALLATION

Note the following items, and install in the reverse order of removal.

CAUTION:

- **Check back door hinge rotating part for poor lubrication. If necessary, apply body grease.**

- **After installation, check back door open/close, lock/unlock operation.**
- **After installation, perform the fitting adjustment. Refer to DLK-172, "BACK DOOR ASSEMBLY : Adjustment".**

BACK DOOR ASSEMBLY : Adjustment

INFOID:0000000006986936

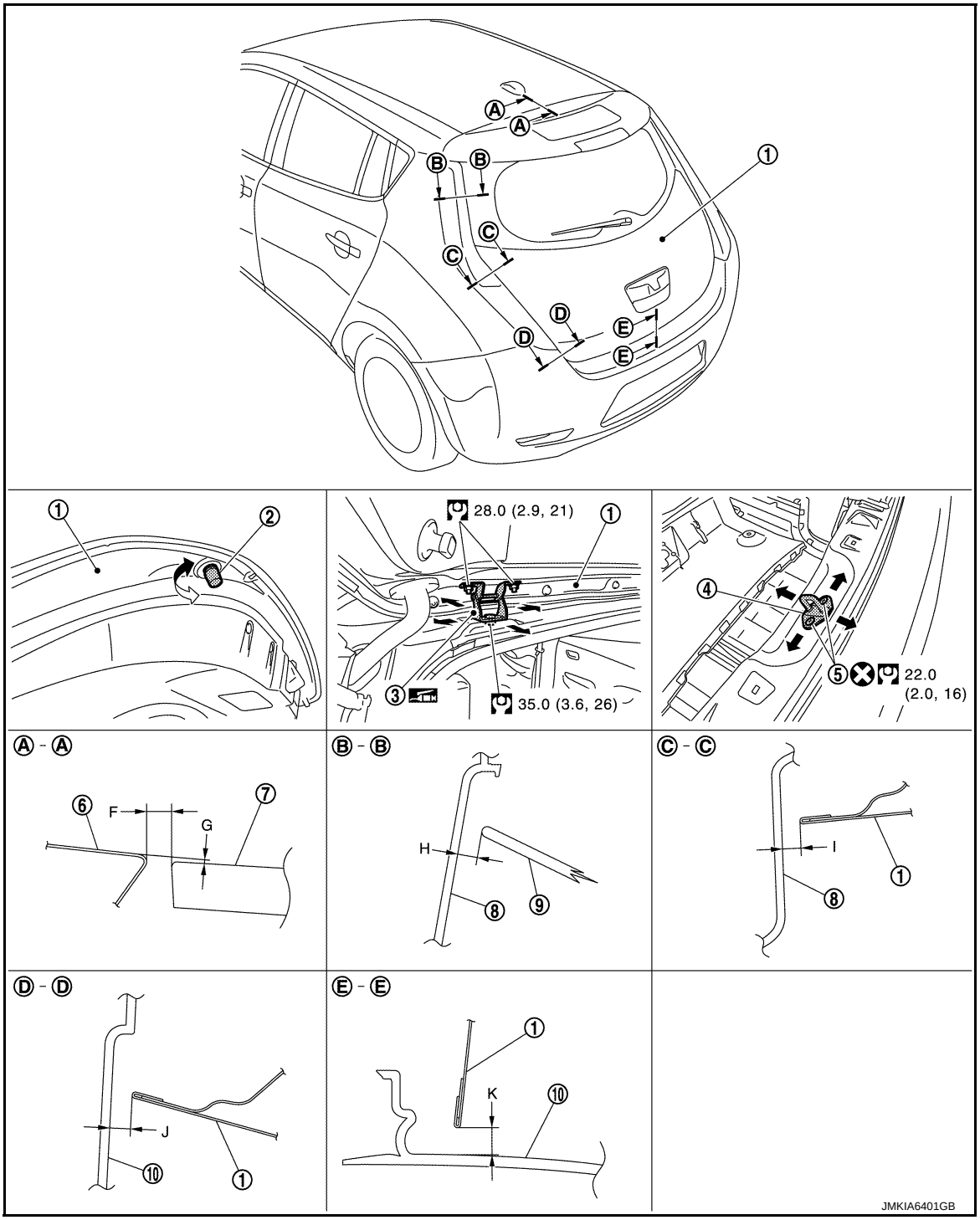

1.	Back door assembly	2.	Bumper rubber	3.	Back door hinge
4.	Back door striker	5.	TORX bolt	6.	Roof panel
7.	Rear spoiler assembly	8.	Rear combination lamp	9.	Back door glass
10.	Rear bumper fascia				

⊗ : Always replace after every disassembly

: N·m (kg-m, ft-lb)

: Body grease

Check the clearance and the surface height between back door and each part by seeing and touching.
If the clearance and the surface height are out of specification, adjust them according to the procedures shown below.

Portion				Standard	Difference (LH/RH, MAX)
Roof panel – Rear spoiler assembly	A – A	F	Clearance	5.0 – 9.0 mm (0.197 – 0.354 in)	—
		G	Surface height	(–1.2) – (+2.8) mm [(–0.047) – (+0.110 in)	—
Rear combination lamp – Back door glass	B – B	H	Clearance	2.7 – 7.3 mm (0.106 – 0.287 in)	2.9 mm (0.114 in)
Rear combination lamp – Back door	C – C	I	Clearance	2.8 – 7.2 mm (0.110 – 0.283 in)	2.9 mm (0.114 in)
Rear bumper fascia – Back door	D – D	J	Clearance	3.3 – 7.3 mm (0.130 – 0.287 in)	2.0 mm (0.079 in)
Rear bumper fascia – Back door	E – E	K	Clearance	6.0 – 10.0 mm (0.236 – 0.394 in)	—

FITTING ADJUSTMENT PROCEDURE

1. Loosen back door striker mounting bolts.
2. Loosen back door hinge mounting nuts (back door side).
3. Adjust back door using back door striker and back door hinge to the specified value, as shown in the following table.
4. After adjustment tighten back door striker mounting bolts and back door hinge mounting nuts (back door side) to the specified torque.
5. Screw bumper rubber into the stopper position (A), and then loosen by a half turn.

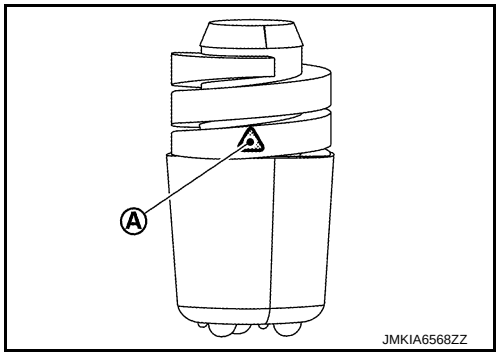

CAUTION:
After installation, apply touch-up paint (the body color) onto the head of back door hinge mounting nuts.

BACK DOOR STRIKER ADJUSTMENT

Adjust back door striker so that it becomes parallel with back door lock insertion direction.

BACK DOOR STRIKER

BACK DOOR STRIKER : Removal and Installation

INFOID:0000000006986937

REMOVAL

1. Remove luggage rear plate. Refer to INT-36, "LUGGAGE REAR PLATE : Removal and Installation".
2. Remove TORX bolts, and then remove back door striker.

INSTALLATION

Note the following items, and install in the reverse order of removal.

CAUTION:

- **After installation, check back door open/close, lock/unlock operation.**
- **After installation, perform the fitting adjustment. Refer to DLK-172, "BACK DOOR ASSEMBLY : Adjustment".**

BACK DOOR HINGE

BACK DOOR HINGE : Removal and Installation

INFOID:0000000006986938

REMOVAL

1. Remove back door assembly. Refer to DLK-170, "BACK DOOR ASSEMBLY : Removal and Installation".
2. Remove upper side of back door weather-strip. Refer to DLK-175, "BACK DOOR WEATHER-STRIP : Removal and Installation".
3. Remove rear assist grips (LH and RH) and mounting clips for rear portion of headlining, and then remove rear portion of headlining. Refer to INT-31, "Exploded View".
4. Remove insulator (A).

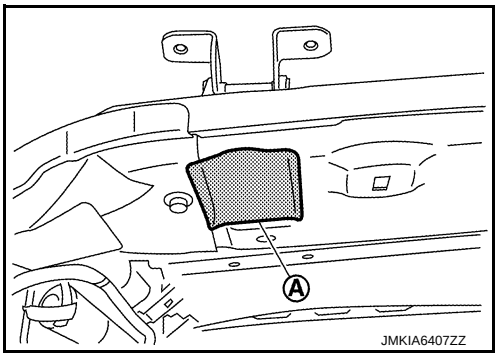

5. Remove back door hinge mounting nuts (body side), and then remove back door hinge.

INSTALLATION

Note the following items, and install in the reverse order of removal.

CAUTION:

- **After installation, check back door open/close, lock/unlock operation.**
- **After installation, perform the fitting adjustment. Refer to DLK-170, "BACK DOOR ASSEMBLY : Removal and Installation".**
- **Check back door hinge rotating part for poor lubrication. If necessary, apply body grease.**

⬅ : Grease up point

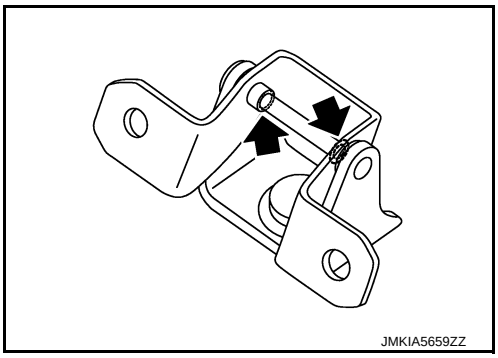

BACK DOOR STAY

BACK DOOR STAY : Removal and Installation

INFOID:0000000006986939

REMOVAL

1. Support the back door with the suitable material to prevent it from falling.

   WARNING:
   Bodily injury may occur if no supporting rod is holding the back door open when removing the back door stay.
2. Remove back door stay mounting bolts (body side).

3. Remove the metal clip (3) located on the connection between the back door stay assembly (1) and the back door stay lower bracket (2) by using a flat-bladed screwdriver (A).
   CAUTION:
   Be careful not to damage painted surface.
4. Remove back door stay assembly (back door side).

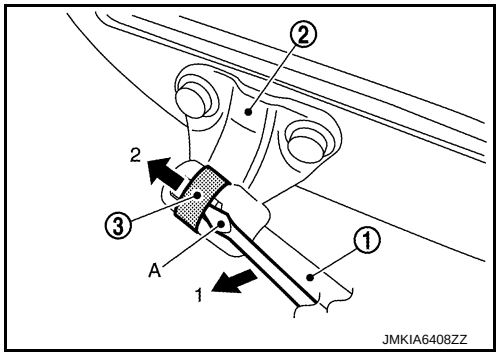

5. Remove mounting bolts, and then remove back door stay assembly.

INSTALLATION

Note the following items, and install in the reverse order of removal.

CAUTION:
- **Apply anticorrosive agent onto the mounting surface.**
- **After installation, check back door open/close, lock/unlock operation.**

BACK DOOR STAY : Disposal

INFOID:0000000006986940

1. Fix back door stay (1) using a vise (C).
2. Using hacksaw (A) slowly make 2 holes in the back door stay, in numerical order as shown in the figure.
   CAUTION:
   - **When cutting a hole on back door stay, always cover a hacksaw using a shop cloth (B) to avoid scattering metal fragments or oil.**
   - **Wear eye protection (safety glasses).**
   - **Wear gloves.**

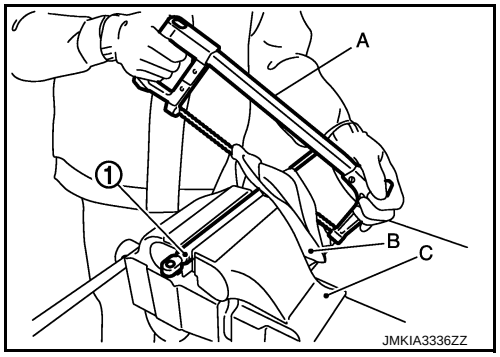

A: 20.0 mm (0.787 in)

B: Cut at the groove.

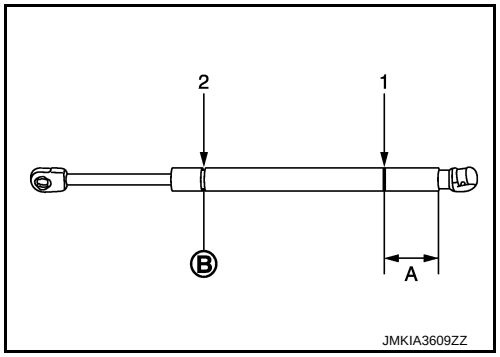

BACK DOOR WEATHER-STRIP

BACK DOOR WEATHER-STRIP : Removal and Installation

INFOID:0000000006986941

REMOVAL

Pull and remove engagement with body from weather-strip joint.

CAUTION:
Never pull strongly on weather-strip.

INSTALLATION

1. Working from the upper section, align weather-strip center mark (A) with vehicle center mark (cutting position) and install weather-strip onto the vehicle.

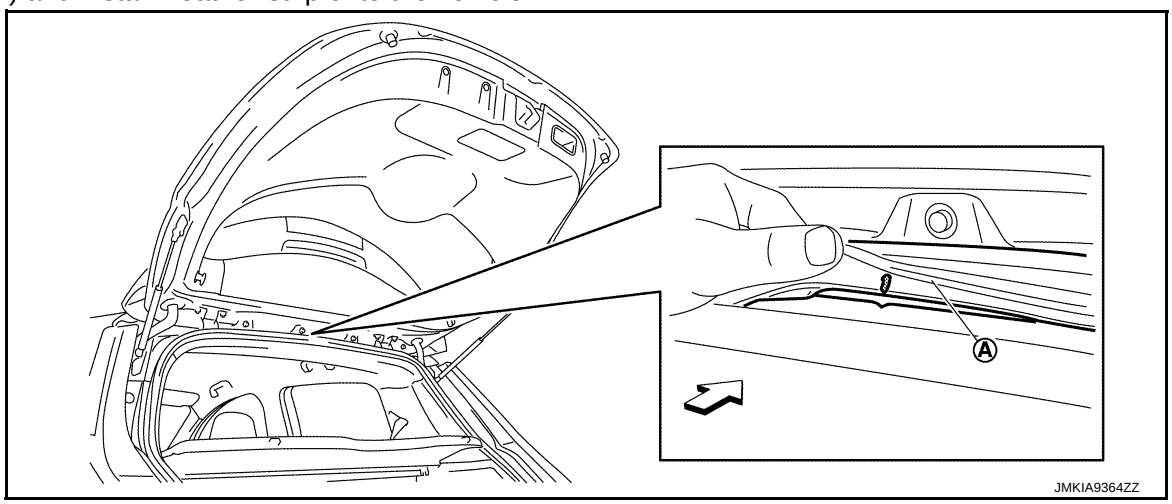

⇦ : Vehicle front

2. Align the connecting point (B) of weather-strip (2) to the center (A) of striker (1), and then install as shown in the figure.

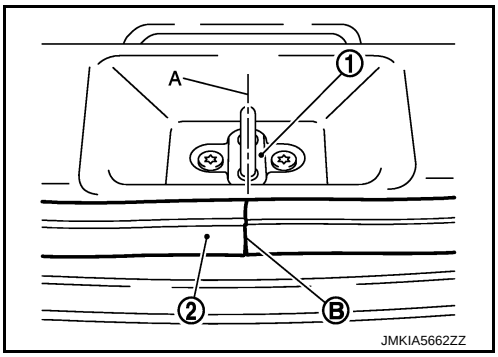

3. Pull weather-strip gently to ensure that there is no loose section.
   NOTE:
   Check that weather-strip fits tightly in each corner and luggage rear plate.

HOOD LOCK

Exploded View

INFOID:0000000006986942

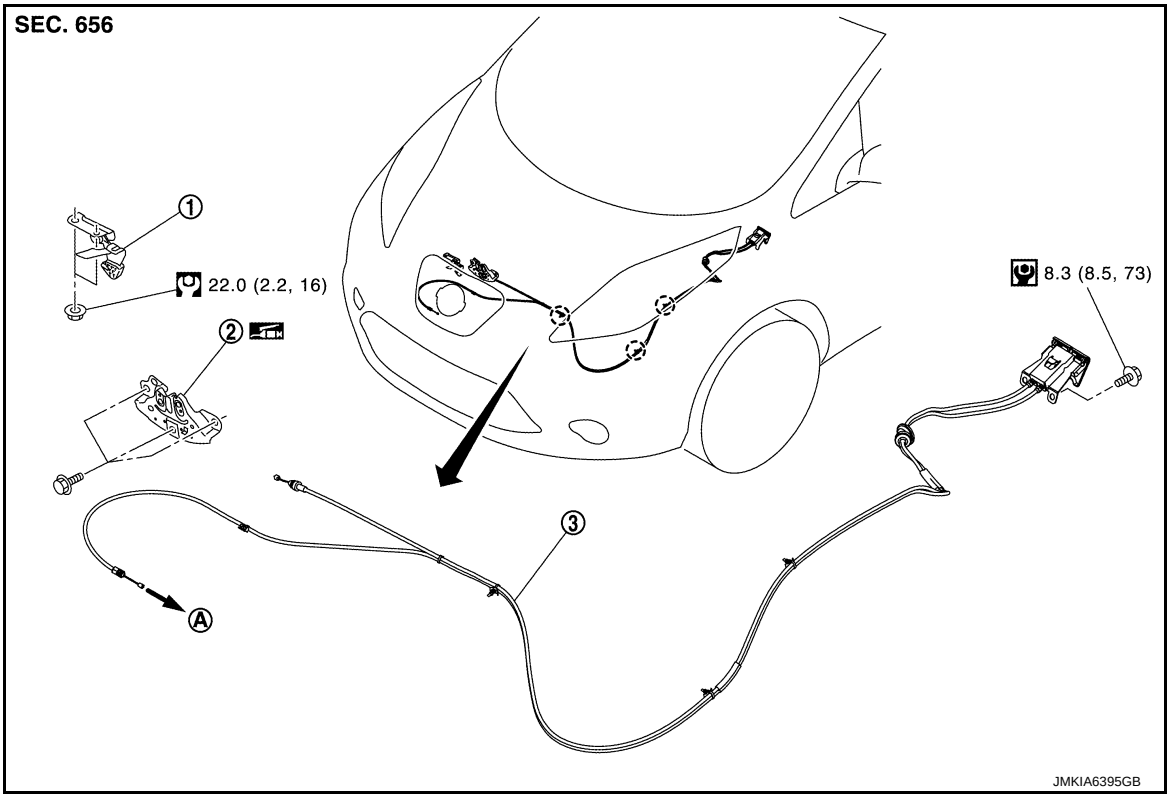

1. Hood lock control secondary assembly
2. Hood lock assembly
3. Hood lock control cable assembly

A. To charge port lid lock

: Clip

: N·m (kg-m, in-lb)

: N·m (kg-m, ft-lb)

: Body grease

HOOD LOCK

HOOD LOCK : Removal and Installation

INFOID:0000000006986943

REMOVAL

1. Remove radiator upper grille. Refer to DLK-155, "RADIATOR UPPER GRILLE : Removal and Installation".
2. Remove hood lock assembly mounting bolts, and then remove hood lock assembly.

3. Disconnect hood lock control cable (2) from hood lock assembly (1).

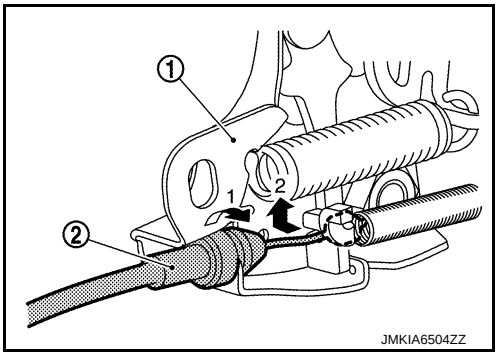

INSTALLATION

Note the following items, and install in the reverse order of removal.

CAUTION:

- **Check that hood lock control cable is properly engaged with hood lock.**
- **After installation, perform hood fitting adjustment. Refer to DLK-143, "HOOD ASSEMBLY : Adjustment".**
- **After installation, perform hood lock control inspection. Refer to DLK-179, "Inspection".**

HOOD LOCK CONTROL CABLE

HOOD LOCK CONTROL CABLE : Removal and Installation

INFOID:0000000006986944

REMOVAL

1. Disconnect hood lock control cable from hood lock assembly. Refer to DLK-177, "HOOD LOCK : Removal and Installation".
2. Disconnect charge port control cable from charge port lid lock. Refer to DLK-180, "Removal and Installation".
3. Remove fender protector (LH). Refer to EXT-21, "FENDER PROTECTOR : Removal and Installation".
4. Remove hood lock cable assembly fixing clips.
5. Remove grommet on the lower dash, and pull the hood lock control cable toward the passenger compartment.

   CAUTION:

   While pulling, never to damage (peeling) the outside of hood lock control cable.

INSTALLATION

Note the following items, and install in the reverse order of removal.

CAUTION:

- **Never to bend cable too much, keeping the radius 100 mm (3.937 in) or more.**
- **Check that cable is not offset from the positioning grommet, and apply the sealant to the grommet (at * mark) properly.**

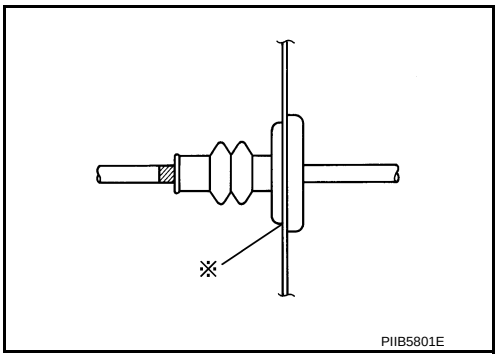

- **Check that hood lock control cable is properly engaged with hood lock.**
- **After installation, perform hood fitting adjustment. Refer to DLK-143, "HOOD ASSEMBLY : Adjustment".**
- **After installation, perform hood lock control inspection. Refer to DLK-179, "Inspection".**

HOOD LOCK SECONDARY CONTROL

HOOD LOCK SECONDARY CONTROL : Removal and Installation

INFOID:0000000006986945

REMOVAL

Remove mounting nuts, and then remove hood lock secondary assembly.

INSTALLATION

Note the following item, and install in the reverse order of removal.

CAUTION:

After installation, perform hood lock control inspection. Refer to DLK-179, "Inspection".

Inspection

INFOID:0000000006986946

NOTE:

If the hood lock cable is bent or deformed, replace it.

1. Check that secondary latch is securely engaged with securely striker from the dead load of the hood assembly.
2. Check that primary latch is securely engaged with primary striker when hood assembly is closed [free-fall from approximately 200 mm (7.874 in) height].
   CAUTION:
   Never free-fall hood assembly from a height of 300 (11.811 in) mm or more.
3. While operating the hood opener carefully, check that the front end of the hood is lifted by approximately 20 mm (0.787 in) (A). Also, check that the hood opener returns to the original position.

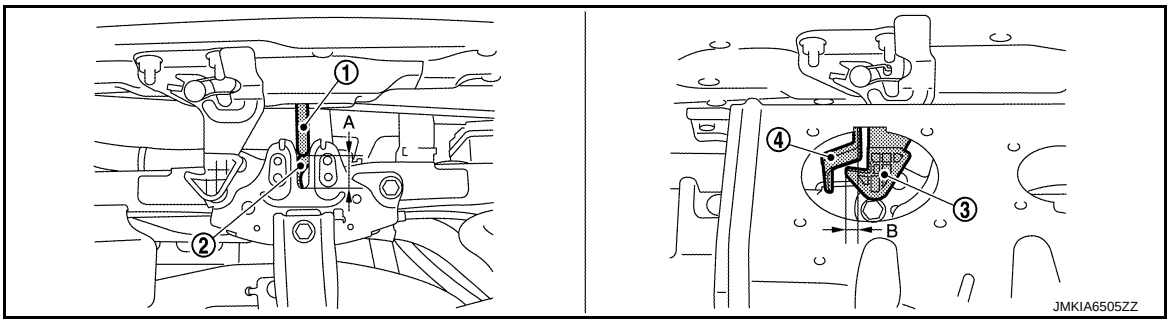

1. Primary striker
2. Primary latch
3. Secondary latch
4. Secondary striker

4. Check that secondary latch is properly engaged with secondary striker [6.8 mm (0.268 in)] (B).
5. Check the hood lock lubrication condition. If necessary, apply body grease to hood lock.

⬅ : Grease up point

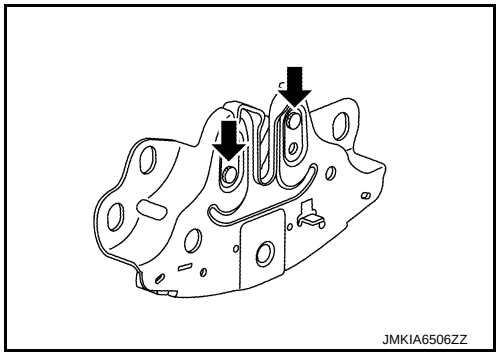

CHARGE PORT LID LOCK

Exploded View

INFOID:0000000006986947

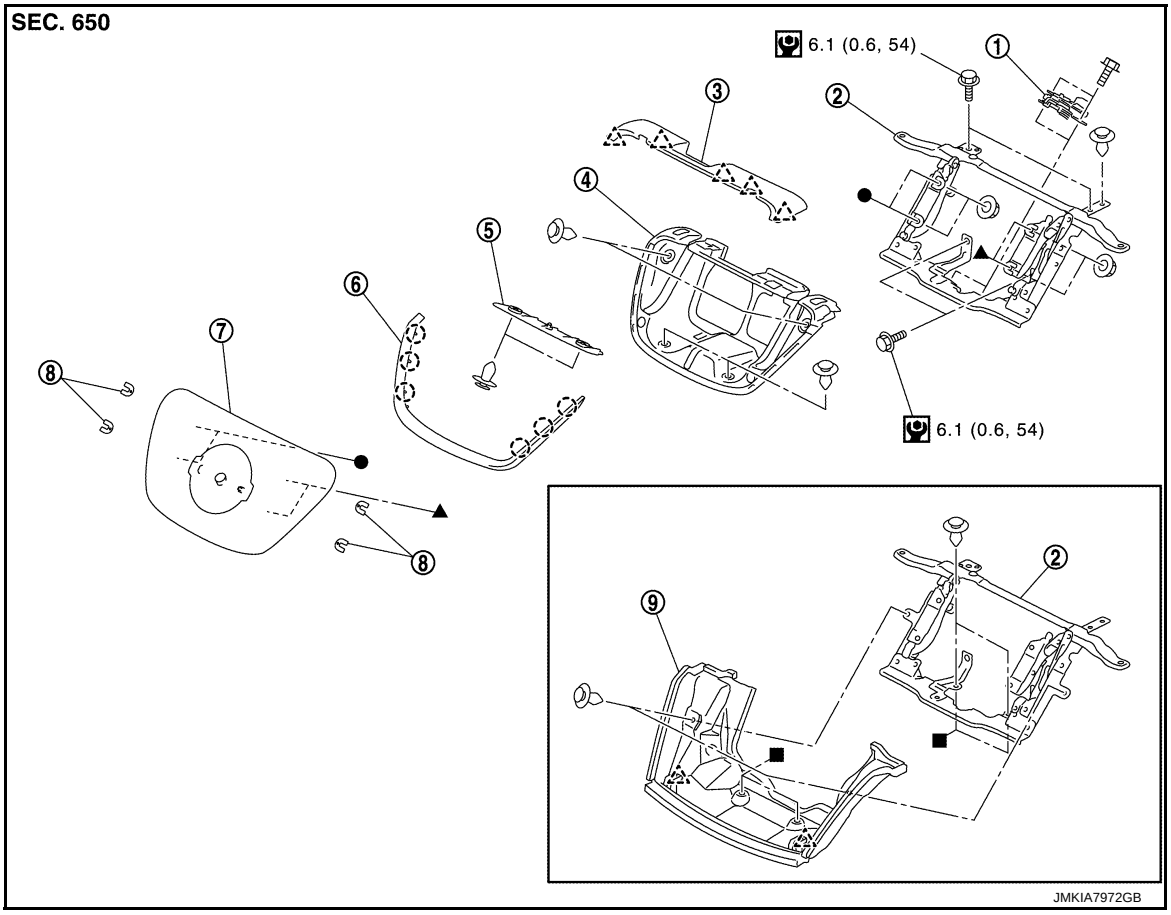

1.	Charge port lid lock	2.	Charge port lid hinge assembly	3.	Charge port upper cover
4.	Charge port cover	5.	Seal rubber	6.	Charge port lid parting seal
7.	Charge port lid assembly	8.	Shim [t: 0.5mm (0.020 in)] (charge port lid hinge assembly parts)	9.	Charge port rear cover (cold spec models)

: Clip

: Pawl

: N·m (kg-m, in-lb)

●, ▲, ■: Indicates that the part is connected at points with same symbol in actual vehicle.

Removal and Installation

INFOID:0000000006986948

REMOVAL

1. Remove charge port cover. Refer to DLK-149, "CHARGE PORT COVER : Removal and Installation".

2. Disconnect charge port lid control cable (2) from charge port lid lock (1).

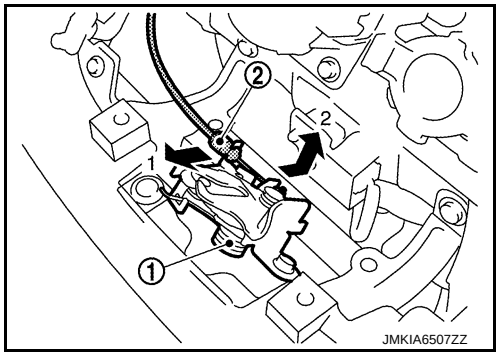

3. Remove charge port lid lock mounting bolts, and then charge port lid lock.

INSTALLATION

Note the following items, and install in the reverse order of removal.

CAUTION:

- **Check that charge port lid lock control cable is properly engaged with charge port lid lock.**
- **After installation, perform charge port lid fitting adjustment. Refer to DLK-148, "CHARGE PORT LID ASSEMBLY : Adjustment".**

FRONT DOOR LOCK

Exploded View

INFOID:0000000006986949

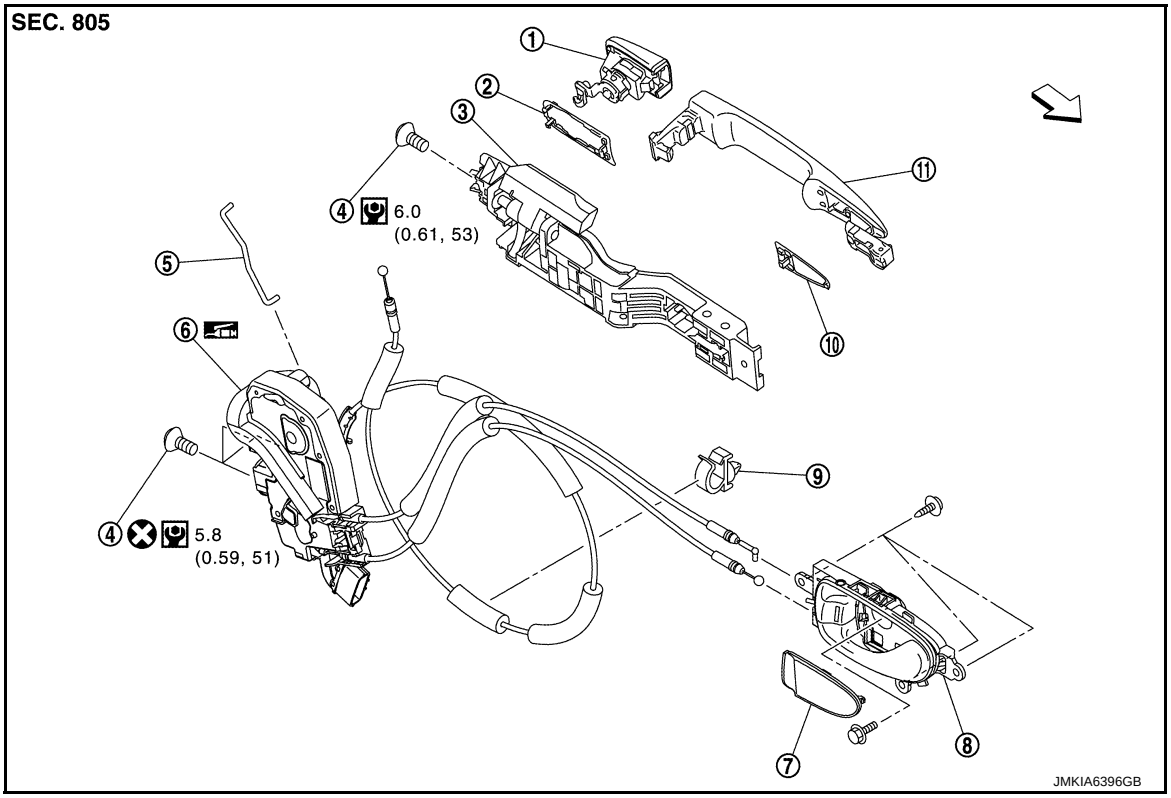

1. Door key cylinder assembly (driver side) Outside handle escutcheon (passenger side)	2. Rear gasket	3. Outside handle bracket
4. TORX bolt	5. Key rod (driver side)	6. Door lock assembly
7. Inside handle escutcheon	8. Inside handle	9. Cable clip
10. Front gasket	11. Outside handle	

⇦ : Vehicle front

: Always replace after every disassembly

: N·m (kg-m, in-lb)

: Body grease

DOOR LOCK

DOOR LOCK : Removal and Installation

INFOID:0000000006986950

REMOVAL

1. Remove outside handle bracket. Refer to DLK-183, "OUTSIDE HANDLE : Removal and Installation".
2. Remove front door lower sash. Refer to GW-19, "Exploded View".
3. Remove door lock assembly TORX bolts.
4. Disconnect door lock actuator harness connector, and then remove door lock assembly.

INSTALLATION

Note the following items, and install in the reverse order of removal.

CAUTION:

- **Never reuse TORX bolt. Always replace it with a new one when it is removed.**

- **Check door open/close, lock/unlock operation after installation.**
- **Check door lock cable is properly engaged with outside handle bracket.**
- **Check door lock assembly for poor lubrication. Apply body grease to door lock if necessary.**

⬅ : Grease up point

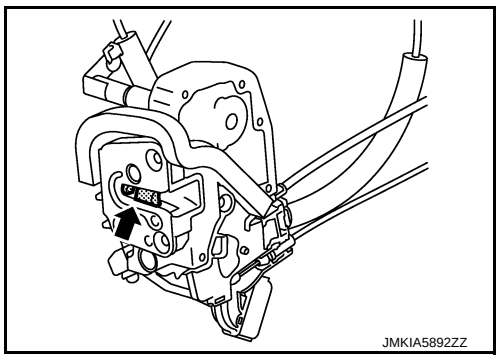

INSIDE HANDLE

INSIDE HANDLE : Removal and Installation

INFOID:0000000006986951

REMOVAL

1. Remove front door finisher. Refer to INT-14, "Removal and Installation".
2. Remove inside handle mounting screws, and then remove inside handle.

INSTALLATION

Note the following item, and install in the reverse order of removal.

CAUTION:

Check door open/close, lock/unlock operation after installation.

OUTSIDE HANDLE

OUTSIDE HANDLE : Removal and Installation

INFOID:0000000006986952

REMOVAL

1. Fully close the front door glass.
2. Remove front door finisher. Refer to INT-14, "Removal and Installation".
3. Remove sealing screen.
   NOTE:
   Cut the butyl-tape so that some parts of the butyl-tape do not remain on the sealing screen, if the sealing screen is reused.
4. Disengage rod holder (1), and then separate key rod (3) from door lock assembly (2).(Driver side)

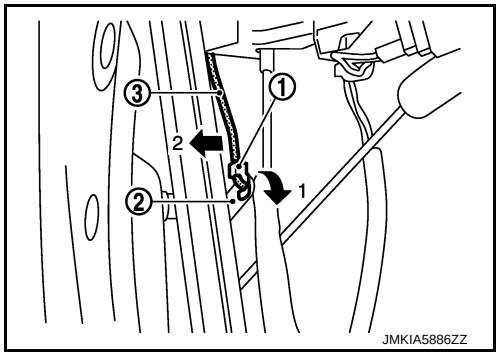

5. Disconnect harness connector of door antenna (1) and door request switch (2) and remove harness clamps (A).

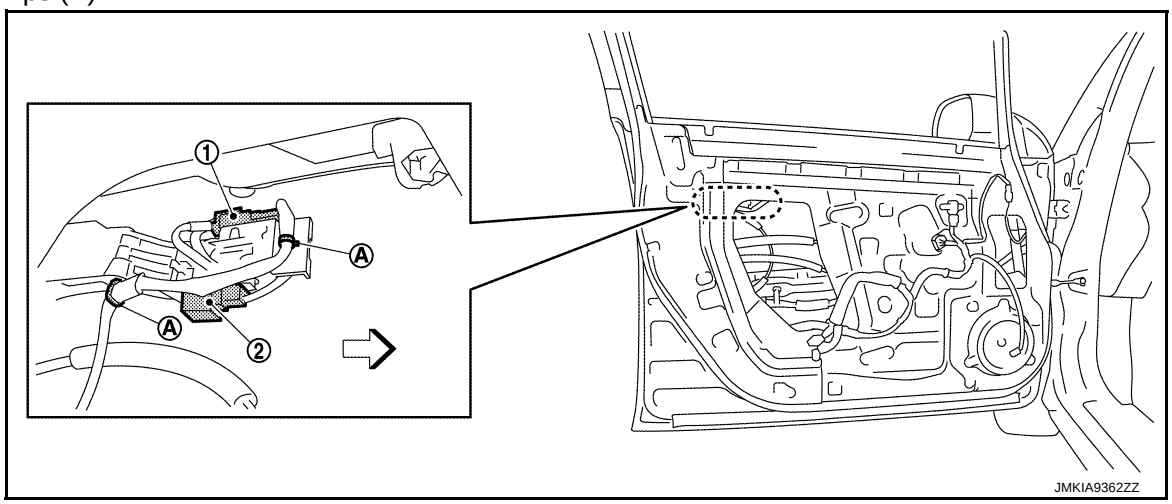

⇦ : Vehicle front

6. Remove grommet (1) of door side. Loosen, through grommet hole, TORX bolt (2) that fixes door lock cylinder. (For passenger side, TORX bolt fixes outside handle escutcheon.)

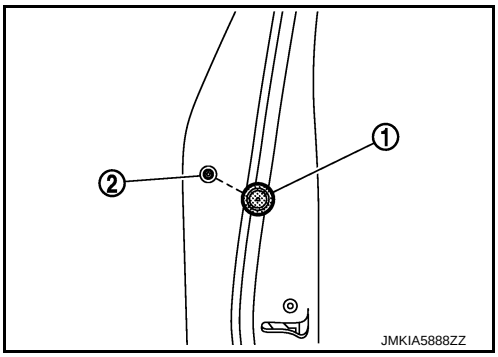

7. While pulling outside handle, remove door key cylinder assembly (diver side) or outside handle escutcheon (passenger side).

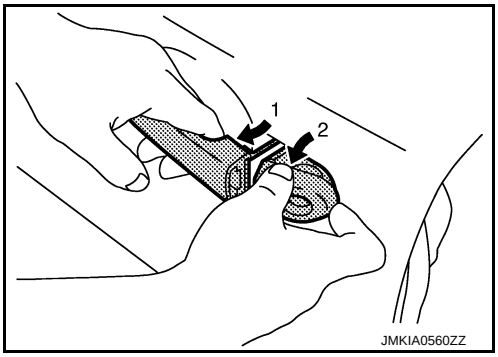

8. While pulling outside handle (1), slide toward rear of vehicle to remove outside handle.

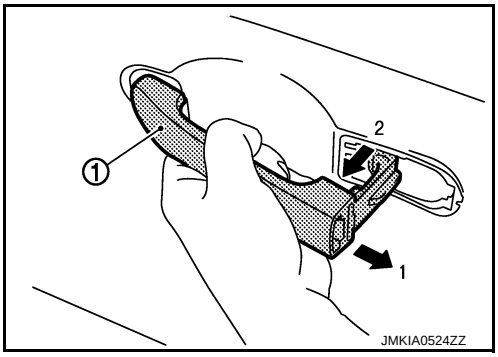

9. Remove front gasket (1) and rear gasket (2).

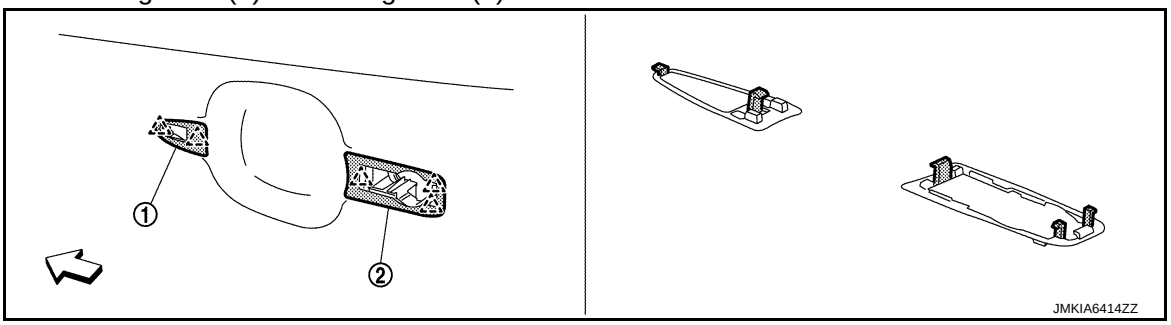

: Pawl

: Vehicle front

10. Slide outside handle bracket toward rear of vehicle to remove.

: Vehicle front

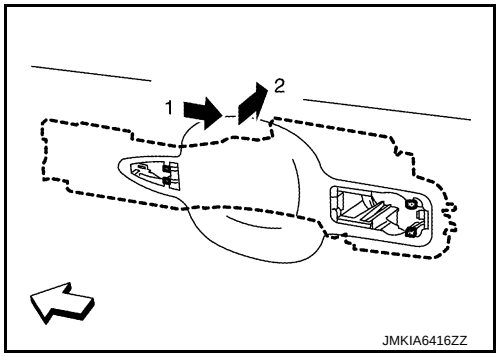

11. Disconnect outside handle cable (1) from outside handle bracket (2).

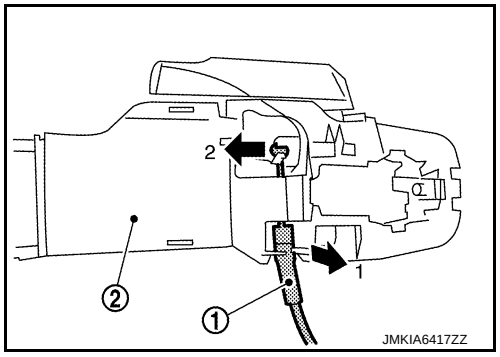

INSTALLATION

Note the following items, and install in the reverse order of removal.

CAUTION:

- **When installing key rod, rotate key rod holder until a click is felt.**
- **Check that door lock cables are normally engaged with inside handle and outside handle.**
- **After installation, check door open/close, and lock/unlock operation.**

REAR DOOR LOCK

Exploded View

INFOID:0000000006986953

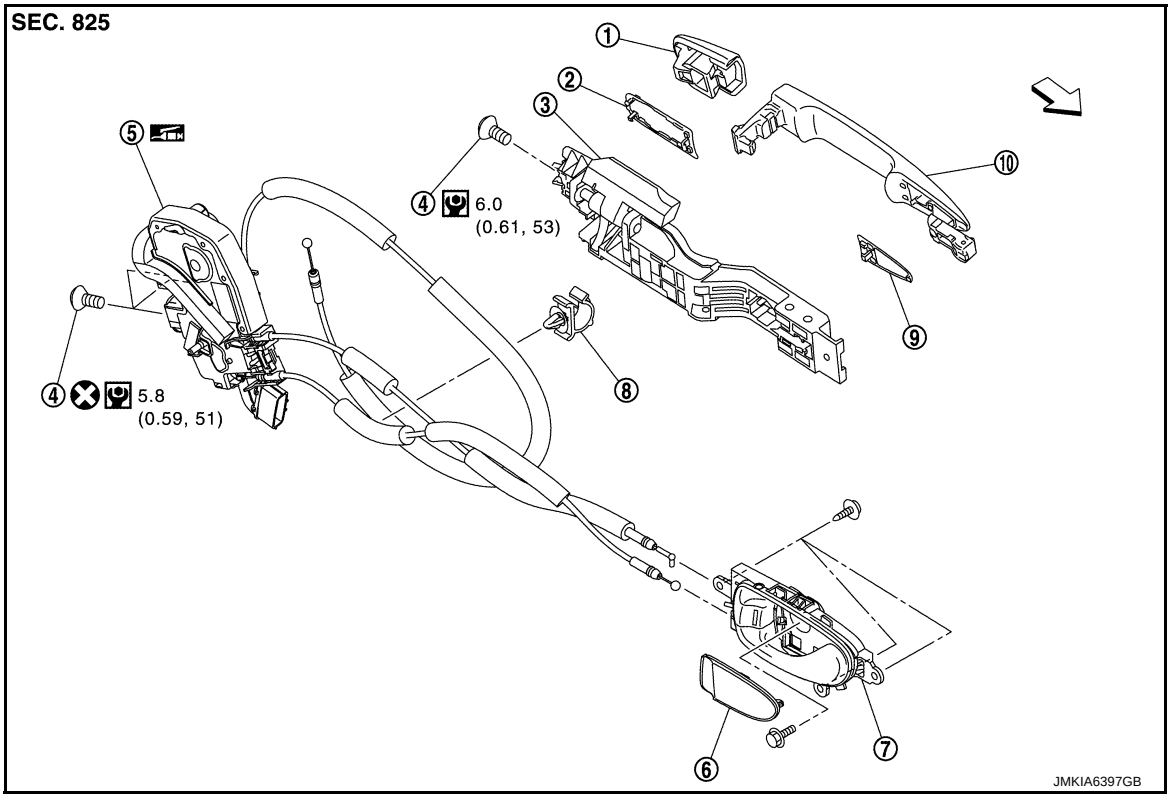

1. Outside handle escutcheon
2. Rear gasket
3. Outside handle bracket
4. TORX bolt
5. Door lock assembly
6. Inside handle escutcheon
7. Inside handle
8. Cable clip
9. Front gasket
10. Outside handle

⇦ : Vehicle front

: Always replace after every disassembly

: N·m (kg-m, in-lb)

: Body grease

DOOR LOCK

DOOR LOCK : Removal and Installation

INFOID:0000000006986954

REMOVAL

1. Remove outside handle bracket. Refer to DLK-187, "OUTSIDE HANDLE : Removal and Installation".

2. Disengage inside handle cable (1) from cable clip (A).

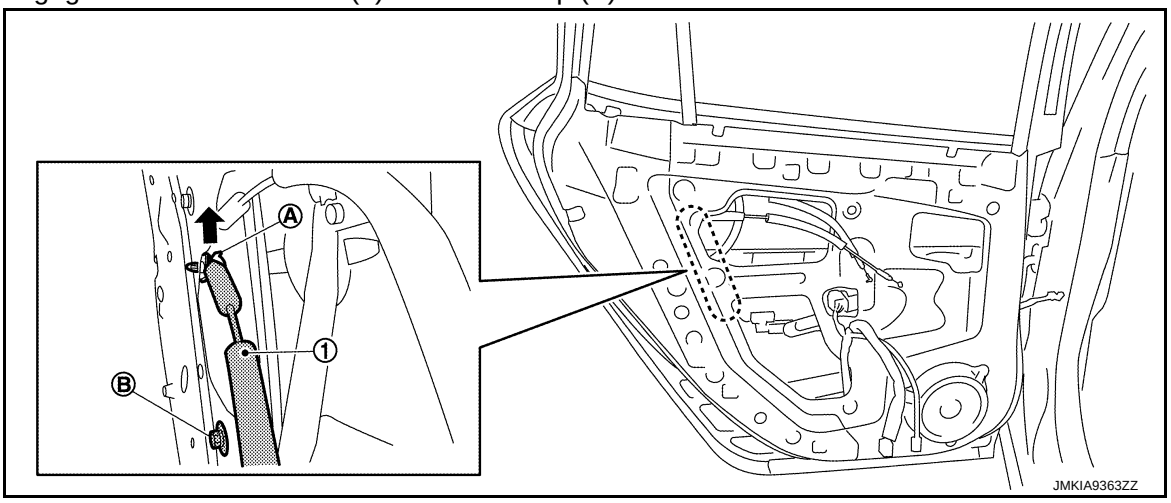

3. Remove lower mounting bolt (B) of partition sash.
4. Disconnect door lock actuator harness connector.
5. Remove door lock assembly TORX bolts.
6. Remove door lock assembly while locating Inside handle cable and door lock cable to the bottom side of rear partition sash.

INSTALLATION

Note the following items, and install in the reverse order of removal.

CAUTION:

- **Check door open/close, lock/unlock operation after installation.**
- **Check door lock cable is properly engaged with outside handle bracket.**
- **Check door lock assembly for poor lubrication. Apply body grease to door lock if necessary.**

⬅ : Grease up point

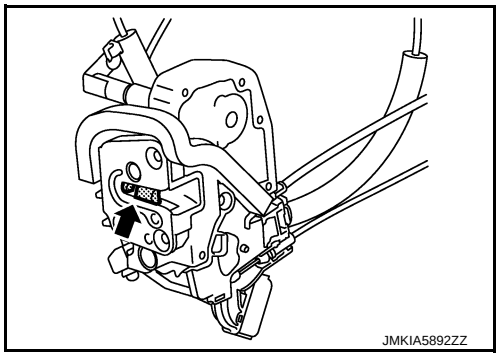

INSIDE HANDLE

INSIDE HANDLE : Removal and Installation

INFOID:0000000006986955

REMOVAL

1. Remove rear door finisher. Refer to INT-17, "Removal and Installation".
2. Remove inside handle mounting screws, and then remove inside handle.

INSTALLATION

Note the following item, and install in the reverse order of removal.

CAUTION:

Check door open/close, lock/unlock operation after installation.

OUTSIDE HANDLE

OUTSIDE HANDLE : Removal and Installation

INFOID:0000000006986956

REMOVAL

1. Fully close rear door glass.
2. Remove rear door finisher. Refer to INT-17, "Removal and Installation".

3. Remove sealing screen.
   NOTE:
   Cut the butyl-tape so that some parts of the butyl-tape do not remain on the sealing screen, if the sealing screen is reused.
4. Remove door side grommet, and loosen TORX bolt from grommet hole.

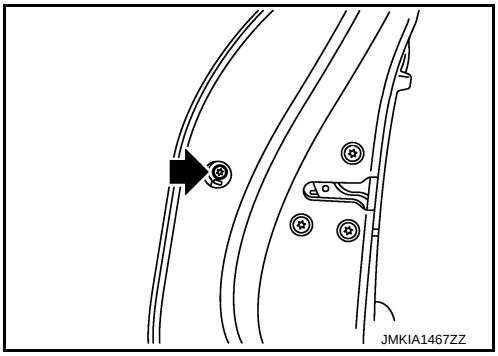

5. While pulling outside handle, remove outside handle escutcheon.

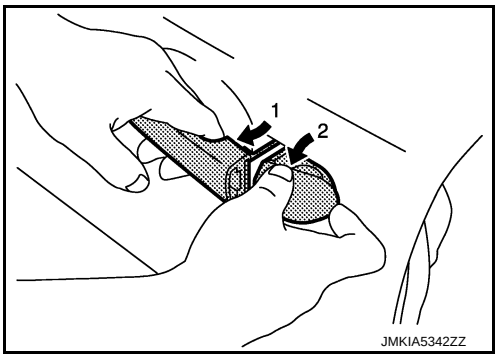

6. While pulling outside handle (1), slide toward rear of vehicle to remove outside handle.

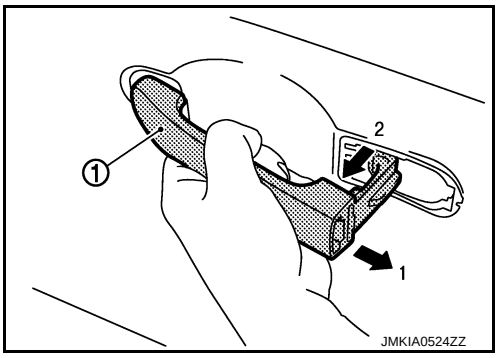

7. Remove front gasket (1) and rear gasket (2).

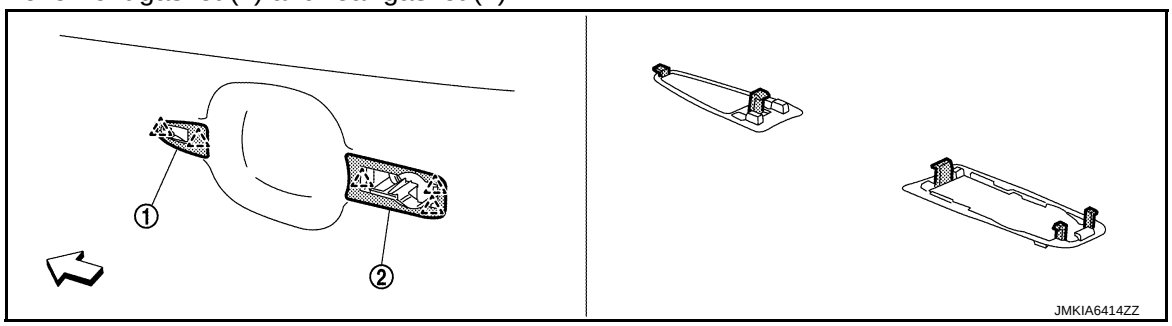

: Pawl

: Vehicle front

8. Slide outside handle bracket toward rear of vehicle to remove.

⇦ : Vehicle front

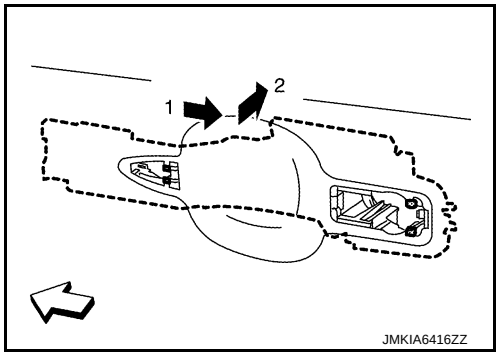

9. Disconnect outside handle cable (1) from outside handle bracket (2).

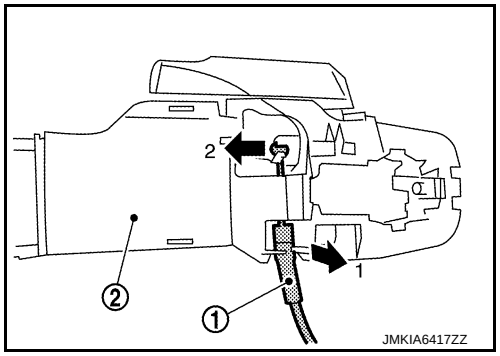

INSTALLATION

Note the following items, and install in the reverse order of removal.

CAUTION:

- **Check door open/close, lock/unlock operation after installation.**
- **Check door lock cable is properly engaged with outside handle bracket.**

BACK DOOR LOCK

Exploded View

INFOID:0000000006986957

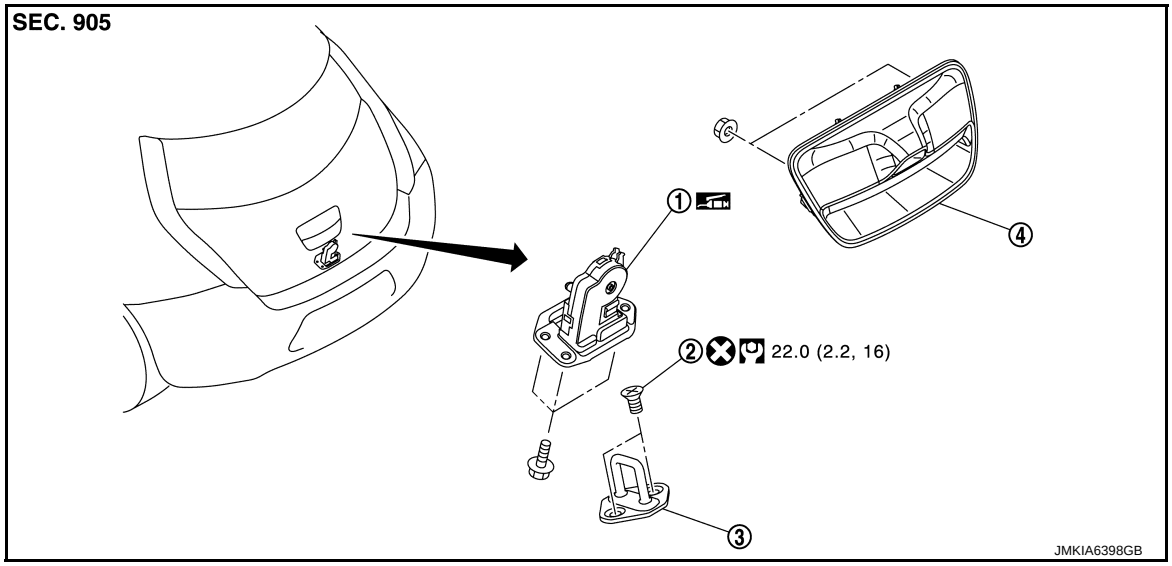

1. Back door lock assembly
2. TORX bolt
3. Back door striker
4. Outside handle

: Always replace after every disassembly

: N·m (kg-m, ft-lb)

: Body grease

DOOR LOCK

DOOR LOCK : Removal and Installation

INFOID:0000000006986958

REMOVAL

1. Remove the back door lower finisher. Refer to INT-43, "BACK DOOR LOWER FINISHER : Removal and Installation".
2. Remove back door lock harness (1) from back door lock assembly (2).
3. Disconnect back door lock harness connector (A).

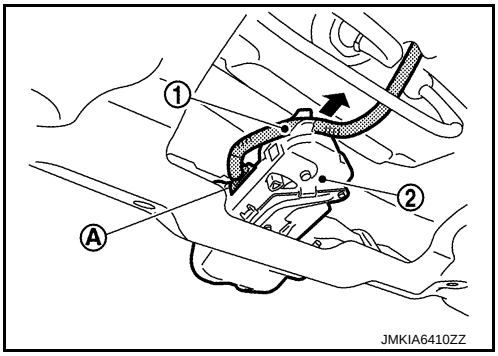

4. Remove back door lock assembly mounting bolts, and then remove back door lock assembly.

INSTALLATION

Note the following item, and install in the reverse order of removal.

CAUTION:

After installation, check back door open/close, and lock/unlock operation.

OUTSIDE HANDLE

OUTSIDE HANDLE : Removal and Installation

INFOID:0000000006986959

REMOVAL

1. Remove the back door lower finisher. Refer to INT-43, "BACK DOOR LOWER FINISHER : Removal and Installation".
2. Disconnect harness connector.

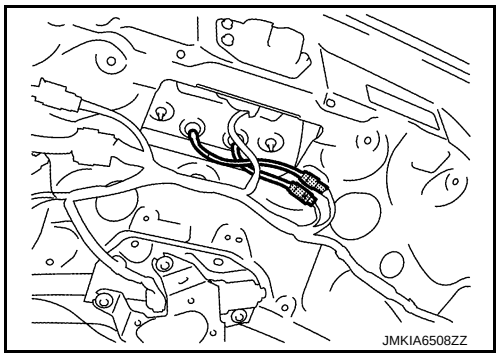

3. Remove back door handle mounting nuts.
4. Remove harness grommet from back door panel, and then Remove back door handle.

INSTALLATION

Note the following item, and install in the reverse order of removal.

CAUTION:

After installation, check back door open/close, and lock/unlock operation.

EMERGENCY LEVER

EMERGENCY LEVER : Unlock procedures

INFOID:0000000006986960

UNLOCK PROCEDURES

NOTE:

If back door lock cannot be unlocked due to a malfunction or 12V battery discharge, follow the procedures to unlock back door.

1. Remove emergency lid. Refer to INT-44, "EMERGENCY LID : Removal and Installation".
2. From inside the vehicle, rotate emergency lever toward lower direction and unlock.

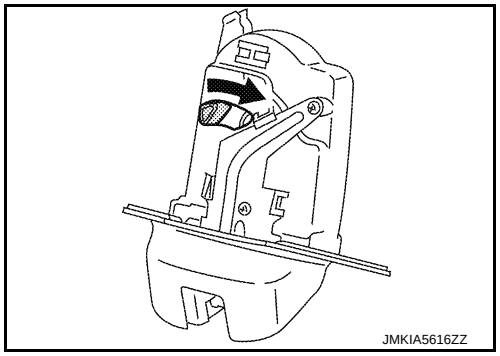

DOOR SWITCH

Removal and Installation

INFOID:0000000006855662

REMOVAL

Remove the TORX bolt (A), and then remove door switch (1).

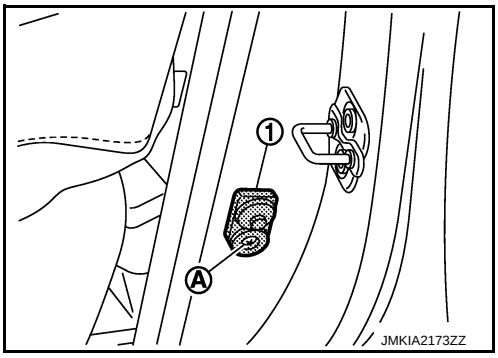

INSTALLATION

Install in the reverse order of removal.

INSIDE KEY ANTENNA

INSTRUMENT CENTER

INSTRUMENT CENTER : Removal and Installation

INFOID:0000000006855663

REMOVAL

1. Remove the cluster lid C. Refer to IP-14, "Removal and Installation".
2. Remove the inside key antenna (instrument center) mounting screw (A), and then remove inside key antenna (instrument center) (1).
   CAUTION:
   Be careful not to drop mounting screw (A) into instrument panel.

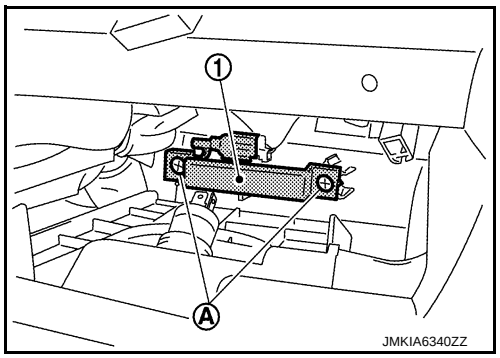

INSTALLATION

Install in the reverse order of removal.

REAR SEAT

REAR SEAT : Removal and Installation

INFOID:0000000006855664

REMOVAL

1. Remove the rear seat. Refer to SE-36, "SEAT CUSHION : Removal and Installation".
2. Remove the inside key antenna (rear seat) mounting clip (A), and then remove inside key antenna (rear seat) (1).

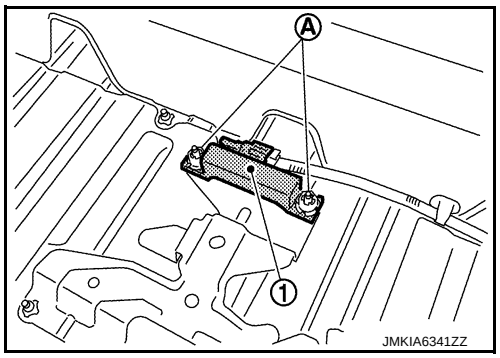

INSTALLATION

Install in the reverse order of removal.

LUGGAGE ROOM

LUGGAGE ROOM : Removal and Installation

INFOID:0000000006855665

REMOVAL

1. Remove the luggage floor upper finisher. Refer to INT-37, "LUGGAGE FLOOR UPPER FINISHER : Removal and Installation".

2. Remove the inside key antenna (luggage room) (1) using a remover tool (A).

CAUTION:

- **When removing and installing, use shop cloths to protect from damage.**
- **Be careful that mounting clips (B) may pop put.**

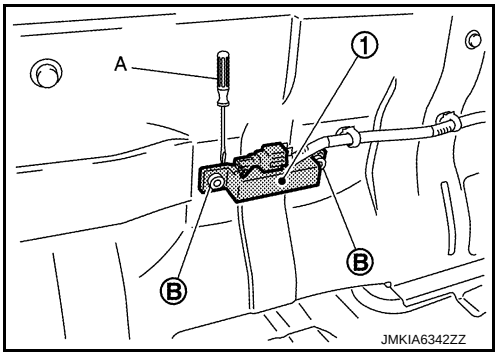

INSTALLATION

Install in the reverse order of removal.

OUTSIDE KEY ANTENNA

DRIVER SIDE

DRIVER SIDE : Removal and Installation

INFOID:0000000006855666

REMOVAL

Remove the driver side outside handle. Refer to DLK-183, "OUTSIDE HANDLE : Removal and Installation".

INSTALLATION

Install in the reverse order of removal.

PASSENGER SIDE

PASSENGER SIDE : Removal and Installation

INFOID:0000000006855667

REMOVAL

Remove the passenger side outside handle. Refer to DLK-183, "OUTSIDE HANDLE : Removal and Installation".

INSTALLATION

Install in the reverse order of removal.

REAR BUMPER

REAR BUMPER : Removal and Installation

INFOID:0000000006855668

REMOVAL

1. Remove the rear bumper fascia. Refer to EXT-17, "Removal and Installation".
2. Remove the outside key antenna (rear bumper) mounting clip (A), then remove outside key antenna (rear bumper) (1).

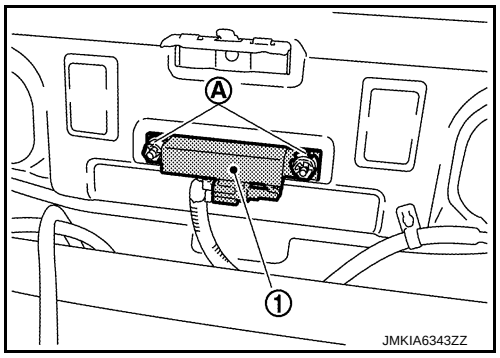

INSTALLATION

Install in the reverse order of removal.

INTELLIGENT KEY WARNING BUZZER

Removal and Installation

INFOID:0000000006855669

REMOVAL

1. Remove the front bumper fascia. Refer to EXT-13, "Removal and Installation".
2. Remove the Intelligent Key warning buzzer mounting bolt (A), and then remove the Intelligent Key warning buzzer (1).

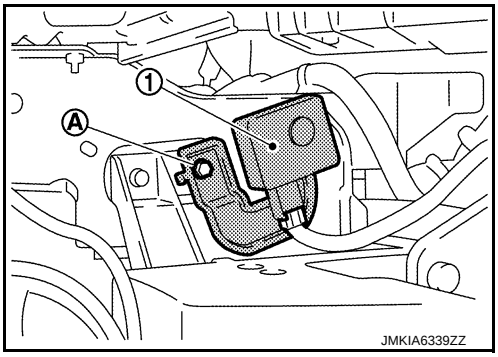

INSTALLATION

Install in the reverse order of removal.

REMOTE KEYLESS ENTRY RECEIVER

Removal and Installation

INFOID:0000000006855670

REMOVAL

1. Remove the glove box lid. Refer to IP-14, "Removal and Installation"
2. Remove the remote keyless entry receiver mounting bolt (A), and then remote keyless entry receiver (1).

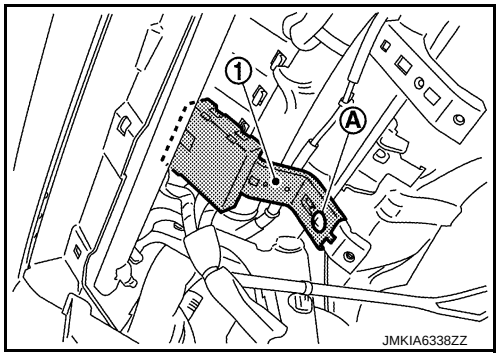

INSTALLATION

Install in the reverse order of removal.IP-14, "Removal and Installation"

INTELLIGENT KEY BATTERY

Removal and Installation

INFOID:0000000006855671

1. Release the lock knob at the back of the Intelligent Key and remove the mechanical key.

2. Insert a remover tool (A) wrapped with a cloth into the slit of the corner and twist it to separate the upper part from the lower part.
   CAUTION:
   - **Do not touch the circuit board or battery terminal.**
   - **The key fob is water-resistant. However, if it does get wet, immediately wipe it dry.**

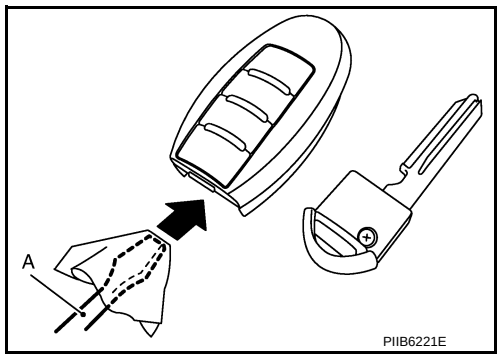

3. Replace the battery with new one.

Battery replacement	**:Coin-type lithium battery (CR2025)**

4. Align the tips of the upper and lower parts, and then push them together until it is securely closed.
   CAUTION:
   - **When replacing battery, keep dirt, grease, and other foreign materials off the electrode contact area.**
   - **After replacing the battery, check that all Intelligent Key functions work normally.**