SECTION VTL
VENTILATION SYSTEM

CONTENTS

PRECAUTION

PRECAUTIONS

Precaution for Technicians Using Medical Electric

INFOID:0000000007635379

OPERATION PROHIBITION

WARNING:

- **Parts with strong magnet is used in this vehicle.**
- **Technicians using a medical electric device such as pacemaker must never perform operation on the vehicle, as magnetic field can affect the device function by approaching to such parts.**

NORMAL CHARGE PRECAUTION

WARNING:

- **If a technician uses a medical electric device such as an implantable cardiac pacemaker or an implantable cardioverter defibrillator, the possible effects on the devices must be checked with the device manufacturer before starting the charge operation.**
- **As radiated electromagnetic wave generated by on board charger at normal charge operation may effect medical electric devices, a technician using a medical electric device such as implantable cardiac pacemaker or an implantable cardioverter defibrillator must not enter the vehicle compartment (including luggage room) during normal charge operation.**

PRECAUTION AT TELEMATICS SYSTEM OPERATION

WARNING:

- **If a technician uses implantable cardiac pacemaker or implantable cardioverter defibrillator (ICD), avoid the device implanted part from approaching within approximately 220 mm (8.66 in) from interior/exterior antenna.**
- **The electromagnetic wave of TCU might affect the function of the implantable cardiac pacemaker or the implantable cardioverter defibrillator (ICD), when using the service, etc.**
- **If a technician uses other medical electric devices than implantable cardiac pacemaker or implantable cardioverter defibrillator (ICD), the electromagnetic wave of TCU might affect the function of the device. The possible effects on the devices must be checked with the device manufacturer before TCU use.**

PRECAUTION AT INTELLIGENT KEY SYSTEM OPERATION

WARNING:

- **If a technician uses implantable cardiac pacemaker or implantable cardioverter defibrillator (ICD), avoid the device implanted part from approaching within approximately 220 mm (8.66 in) from interior/exterior antenna.**
- **The electromagnetic wave of Intelligent Key might affect the function of the implantable cardiac pacemaker or the implantable cardioverter defibrillator (ICD), at door operation, at each request switch operation, or at engine starting.**
- **If a technician uses other medical electric devices than implantable cardiac pacemaker or implantable cardioverter defibrillator (ICD), the electromagnetic wave of Intelligent Key might affect the function of the device. The possible effects on the devices must be checked with the device manufacturer before Intelligent Key use.**

Point to Be Checked Before Starting Maintenance Work

INFOID:0000000007635380

The high voltage system may starts automatically. It is required to check that the timer air conditioner and timer charge (during EVSE connection) are not set before starting maintenance work.

NOTE:

If the timer air conditioner or timer charge (during EVSE connection) is set, the high voltage system starts automatically even when the power switch is in OFF state.

Precautions for Removing Battery Terminal

INFOID:0000000007635381

- When removing the 12V battery terminal, turn OFF the power switch and wait at least 5 minutes.
  NOTE:
  ECU may be active for several minutes after the power switch is turned OFF. If the battery terminal is removed before ECU stops, then a DTC detection error or ECU data corruption may occur.
- Always disconnect the battery terminal within 60 minutes after turning OFF the power switch. Even when the power switch is OFF, the 12V battery automatic charge control may automatically start after a lapse of 60 minutes from power switch OFF.
- Disconnect 12V battery terminal according to the following steps.

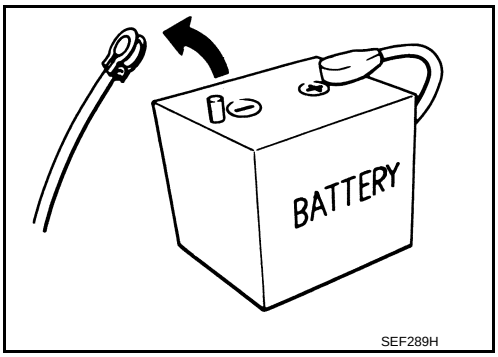

WORK PROCEDURE

1. Check that EVSE is not connected.
   NOTE:
   If EVSE is connected, the air conditioning system may be automatically activated by the timer A/C function.
2. Turn the power switch OFF → ON → OFF. Get out of the vehicle. Close all doors (including back door).
3. Check that the charge status indicator lamp does not blink and wait for 5 minutes or more.
   NOTE:
   If the battery is removed within 5 minutes after the power switch is turned OFF, plural DTCs may be detected.
4. Remove 12V battery terminal within 60 minutes after turning the power switch OFF → ON → OFF.
   CAUTION:
   - **After all doors (including back door) are closed, if a door (including back door) is opened before battery terminals are disconnected, start over from Step 1.**
   - **After turning the power switch OFF, if "Remote A/C" is activated by user operation, stop the air conditioner and start over from Step 1.**

   NOTE:
   Once the power switch is turned ON → OFF, the 12V battery automatic charge control does not start for approximately 1 hour.

- For vehicles with the 2-batteries, be sure to connect the main battery and the sub battery before turning ON the power switch.
  NOTE:
  If the power switch is turned ON with any one of the terminals of main battery and sub battery disconnected, then DTC may be detected.
- After installing the 12V battery, always check "Self Diagnosis Result" of all ECUs and erase DTC.
  NOTE:
  The removal of 12V battery may cause a DTC detection error.

Precaution for Supplemental Restraint System (SRS) "AIR BAG" and "SEAT BELT PRE-TENSIONER"

INFOID:0000000007635382

The Supplemental Restraint System such as "AIR BAG" and "SEAT BELT PRE-TENSIONER", used along with a front seat belt, helps to reduce the risk or severity of injury to the driver and front passenger for certain types of collision. This system includes seat belt switch inputs and dual stage front air bag modules. The SRS system uses the seat belt switches to determine the front air bag deployment, and may only deploy one front air bag, depending on the severity of a collision and whether the front occupants are belted or unbelted.
Information necessary to service the system safely is included in the "SRS AIR BAG" and "SEAT BELT" of this Service Manual.

WARNING:

Always observe the following items for preventing accidental activation.

- **To avoid rendering the SRS inoperative, which could increase the risk of personal injury or death in the event of a collision that would result in air bag inflation, all maintenance must be performed by an authorized NISSAN/INFINITI dealer.**

- **Improper maintenance, including incorrect removal and installation of the SRS, can lead to personal injury caused by unintentional activation of the system. For removal of Spiral Cable and Air Bag Module, see “SRS AIR BAG”.**
- **Never use electrical test equipment on any circuit related to the SRS unless instructed to in this Service Manual. SRS wiring harnesses can be identified by yellow and/or orange harnesses or harness connectors.**

PRECAUTIONS WHEN USING POWER TOOLS (AIR OR ELECTRIC) AND HAMMERS

WARNING:

Always observe the following items for preventing accidental activation.

- **When working near the Air Bag Diagnosis Sensor Unit or other Air Bag System sensors with the power switch ON, never use air or electric power tools or strike near the sensor(s) with a hammer. Heavy vibration could activate the sensor(s) and deploy the air bag(s), possibly causing serious injury.**
- **When using air or electric power tools or hammers, always switch the power switch OFF, disconnect the 12V battery, and wait at least 3 minutes before performing any service.**

Precaution for Procedure without Cowl Top Cover

INFOID:0000000007635383

When performing the procedure after removing cowl top cover, cover the lower end of windshield with urethane, etc to prevent damage to windshield.

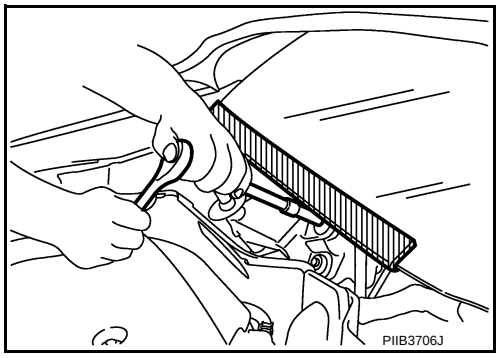

PREPARATION

PREPARATION

Commercial Service Tool

INFOID:0000000007635384

Tool name	Description
Remover tool 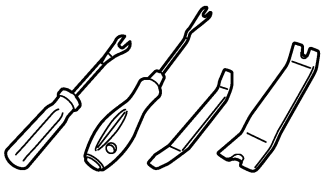 JMKIA3050ZZ	Removes clips, pawls, and metal clips

SYSTEM DESCRIPTION

DESCRIPTION

Description

INFOID:0000000007635385

- This system utilizes an A/C unit that combines the blower unit, heater unit, and cooling unit.
- An in-cabin microfilter is installed downstream of the blower motor.

COMPONENT PARTS

Outlets and Drafters

INFOID:0000000007635386

VENTILATORS

A grille with shutter is installed on the center ventilators (1) and side ventilators (2). The air direction can be adjusted by opening and closing the grille.

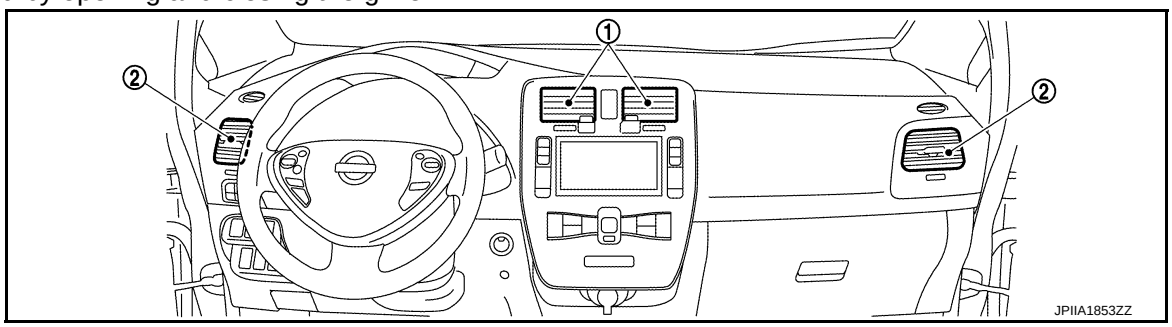

DEFROSTERS

A front defroster (1) is used for defogging the front window and side defrosters (2) are used for defogging the driver and passenger seat door windows.

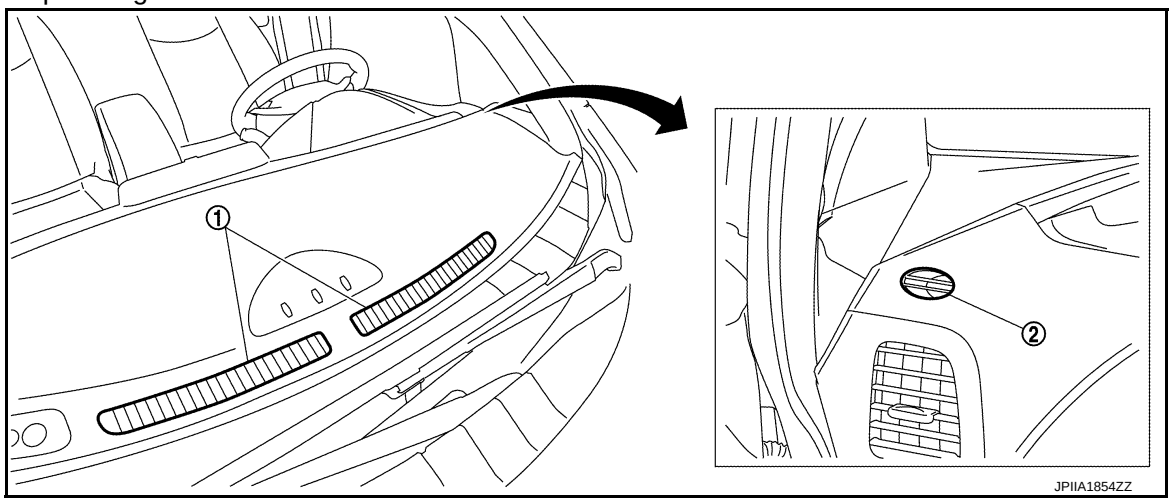

FOOT OUTLET

Front

Outlets (1) are installed in order to equalize the distribution of temperatures at the foot area of the front seats during heating.

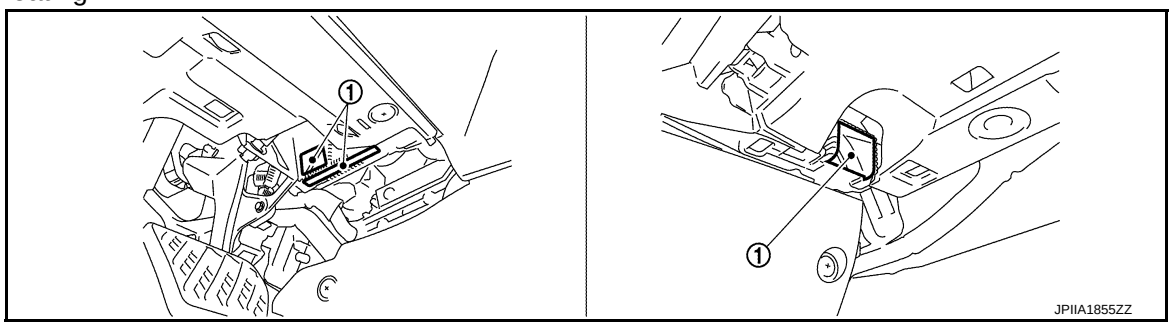

Rear (With rear foot duct)

Outlets (1) are installed in order to equalize the distribution of temperatures at the foot area of the front seats and to improve the feeling of warmth for rear seat occupants during heating.

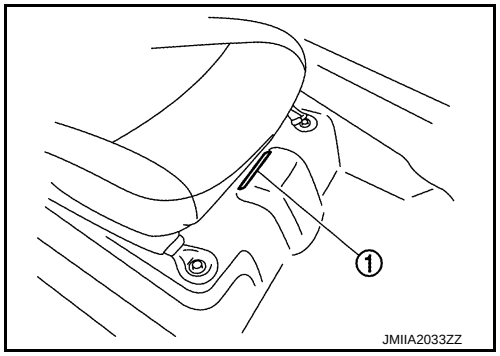

DRAFTERS

Drafters (1) are installed on the rear of the vehicle body (reverse side of rear bumper).

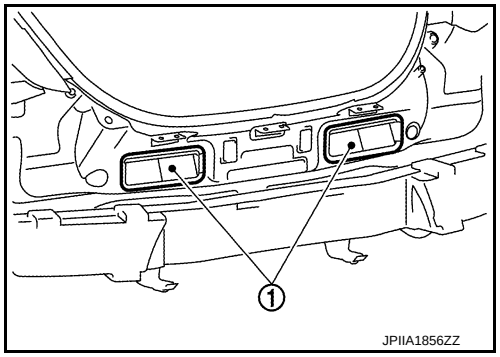

Blower Motor

INFOID:0000000007635387

- The blower motor is installed on the right side of the A/C unit.
- It uses a one-touch structure that does not require screws for installation.

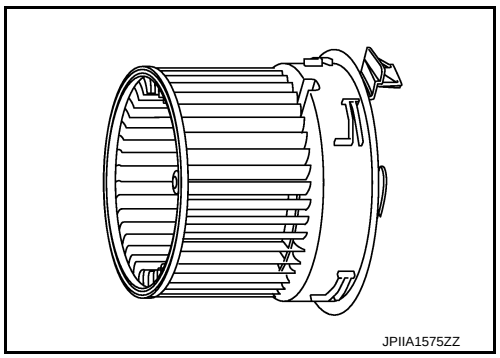

In-cabin Microfilter

INFOID:0000000007635388

COMPONENT DESCRIPTION

- For improving visibility during work to replace the in-cabin microfilter, a glove box mask (1) is adopted inside the glove box.

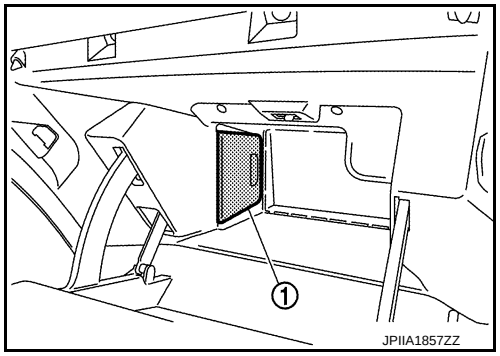

- The A/C unit utilizes a filter cover (1) and in-cabin microfilter.

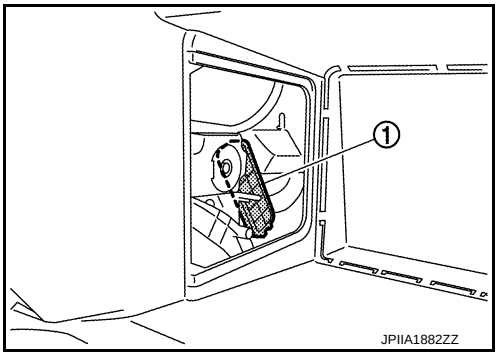

- The in-cabin microfilter used can remove dust, pollen, and dirt that is approximately 0.3 micrometers in size or larger.

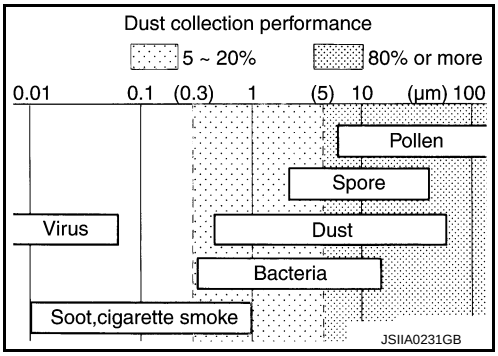

- The in-cabin microfilter is replaced regularly at the following times. However, the filter lifetime may be lower depending on the region of use and how often the A/C is used. If the discharged air flow significantly decreases or glass fogging occur more often when the A/C is used, the filter needs to be replaced.

Replacement Interval **: Refer to MA-8, "FOR NORTH AMERICA : Schedule 1" and MA-9, "FOR NORTH AMERICA : Schedule 2".**

SYSTEM

VENTILATION SYSTEM

VENTILATION SYSTEM : System Description

INFOID:0000000007635389

DESCRIPTION

Ventilation system is controlled by A/C auto amp.. For details of air conditioning system. Refer to HAC-15, "AUTOMATIC AIR CONDITIONING SYSTEM : System Description".

OUTLETS AND AIR MIX RATIO (WITHOUT REAR FOOT DUCT)

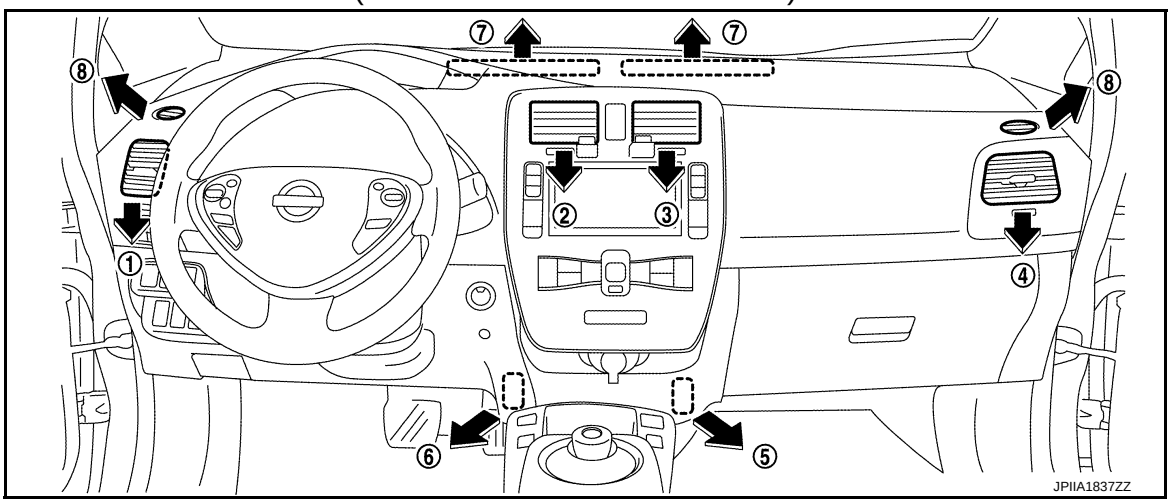

MODE/DEF setting	Air mix ratio (%)							
	Ventilator				Foot		Defroster	
	Left side (1)	Left center (2)	Right center (3)	Right side (4)	Right (5)	Left (6)	Front (7)	Side (8)
	23.2	27.3	24.9	24.6	–	–	–	–
	12.2	18.3	16.6	14.2	18.3	20.5	–	–
	8.8	–	–	9.6	30.2	30.6	16.4	4.5
	7.3	–	–	7.6	20.9	24.1	31.8	8.3
	8.6	–	–	9.4	–	–	65.5	16.5

OUTLETS AND AIR MIX RATIO (WITH REAR FOOT DUCT)

Front

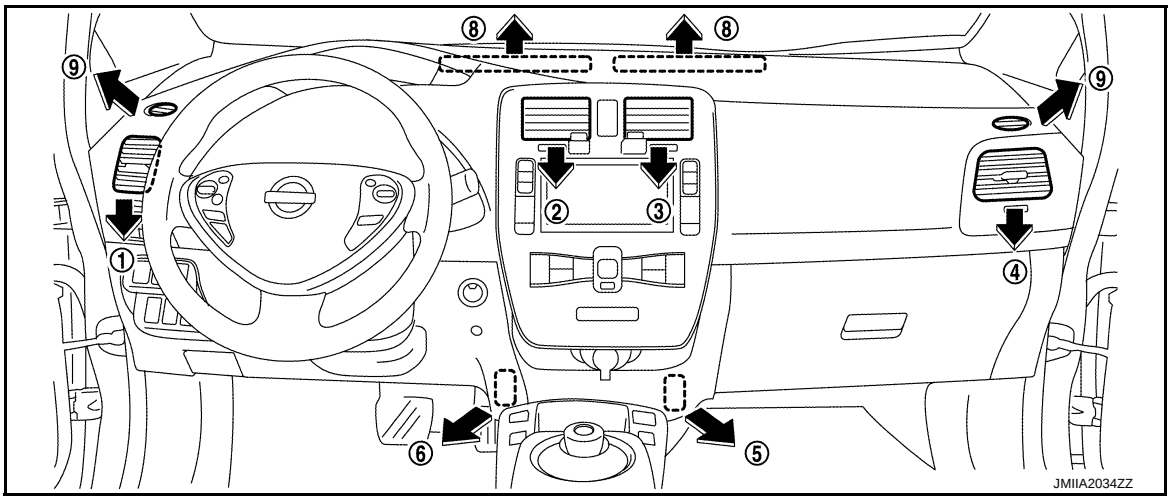

Rear

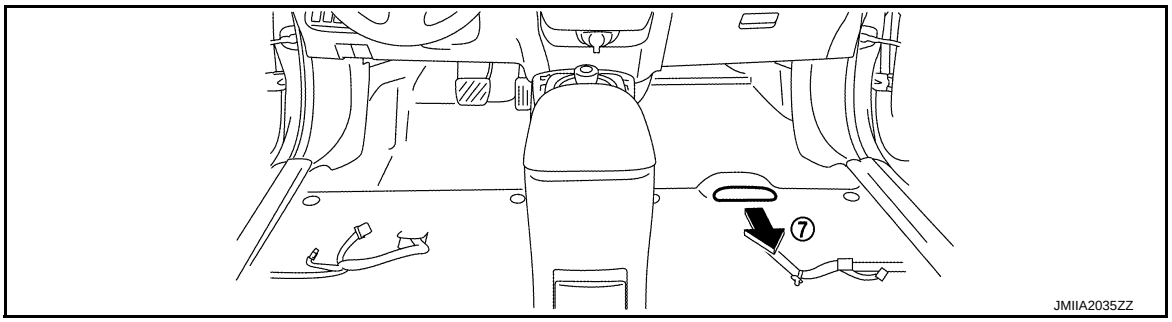

MODE/DEF setting	Air mix ratio (%)								
	Ventilator				Foot			Defroster	
	Left side (1)	Left center (2)	Right center (3)	Right side (4)	Front right (5)	Front left (6)	Rear right (7)	Front (8)	Side (9)
	23.2	27.3	24.9	24.6	–	–		–	–
	11.8	17.2	15.6	13.5	15.8	17.6	8.5	–	–
	8.0	–	–	8.7	25.4	26.6	12.2	15.4	3.8
	6.8	–	–	7.2	18.1	22.0	8.7	29.5	7.8
	8.6	–	–	9.4	–	–		65.5	16.5

RELATIONSHIP OF SWITCH POSITIONS AND DOOR POSITIONS

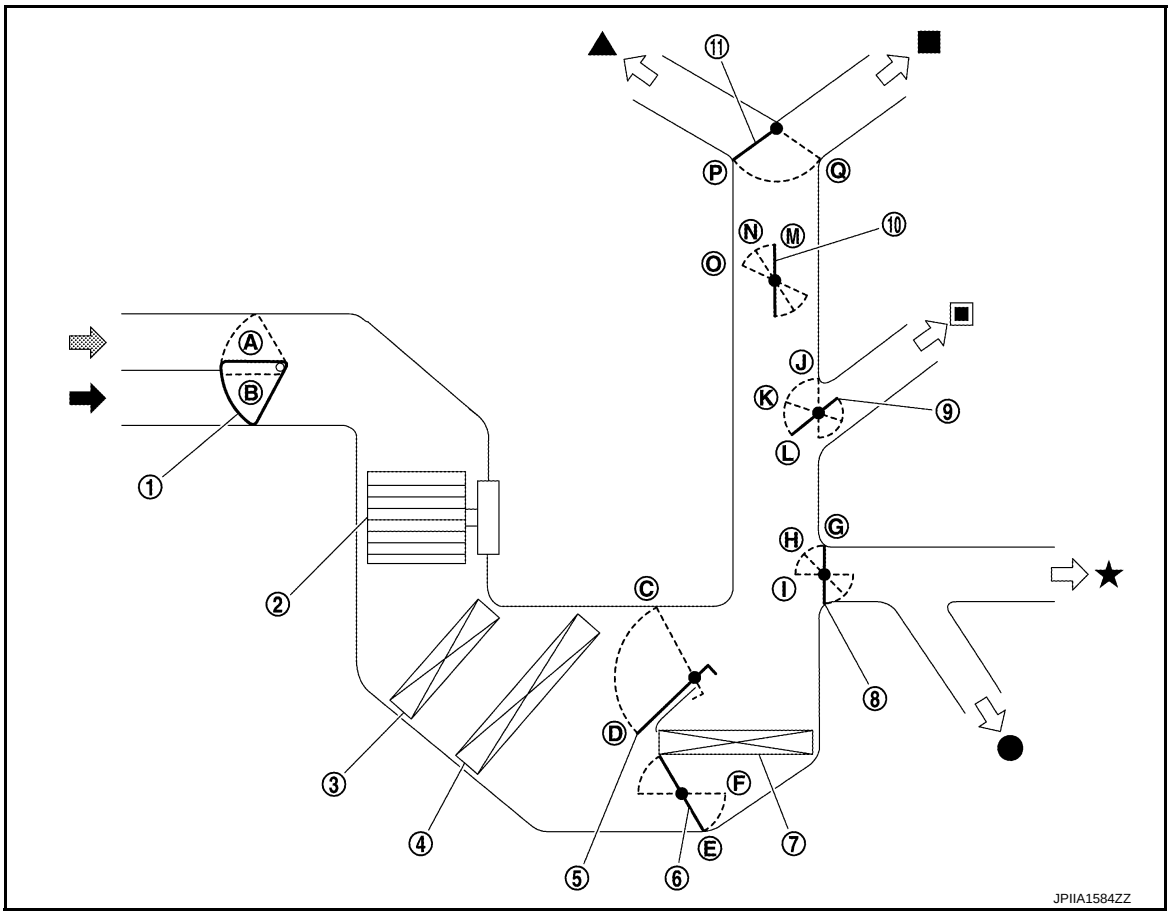

1. Intake door
2. Blower motor
3. Air conditioner filter
4. Evaporator
5. Upper air mix door
6. Lower air mix door

7. Heater core
8. Foot door
9. Side ventilator door
10. Sub defroster door
11. Center ventilator· defroster door

Fresh air intake
Recirculation
Defrosters
Center ventilator
Side ventilator
Foot
Rear foot (With rear foot duct)

Switch operation			Door position						
			Center ventilator· defroster door	Sub defroster door	Side ventilator door	Foot door	Intake door	Upper air mix door	Lower air mix door
AUTO switch			Automatic control						
MODE switch	VENT		P	M	L	G	—	—	—
	B/L			N	K	H			
	FOOT		Q	O	J	I			
	D/F			N					
DEF switch				M		G			
FRE switch*			—	—	—	—	A		
REC switch*							B		
Temperature control switches		Full cold [18°C (64°F)]					—	D position	E
		18.5°C – 31.5°C (65°F – 89°F)						Automatic control	Automatic control
		Full hot [32°C (90°F)]						C	F
ON/OFF switch	OFF		Q	O	J	G	B	—	—
	ON		Returns to status before OFF switch is pressed.						

*: Status is also displayed during automatic control.

REMOVAL AND INSTALLATION

DUCT AND GRILLE

Exploded View

INFOID:0000000007635390

FRONT

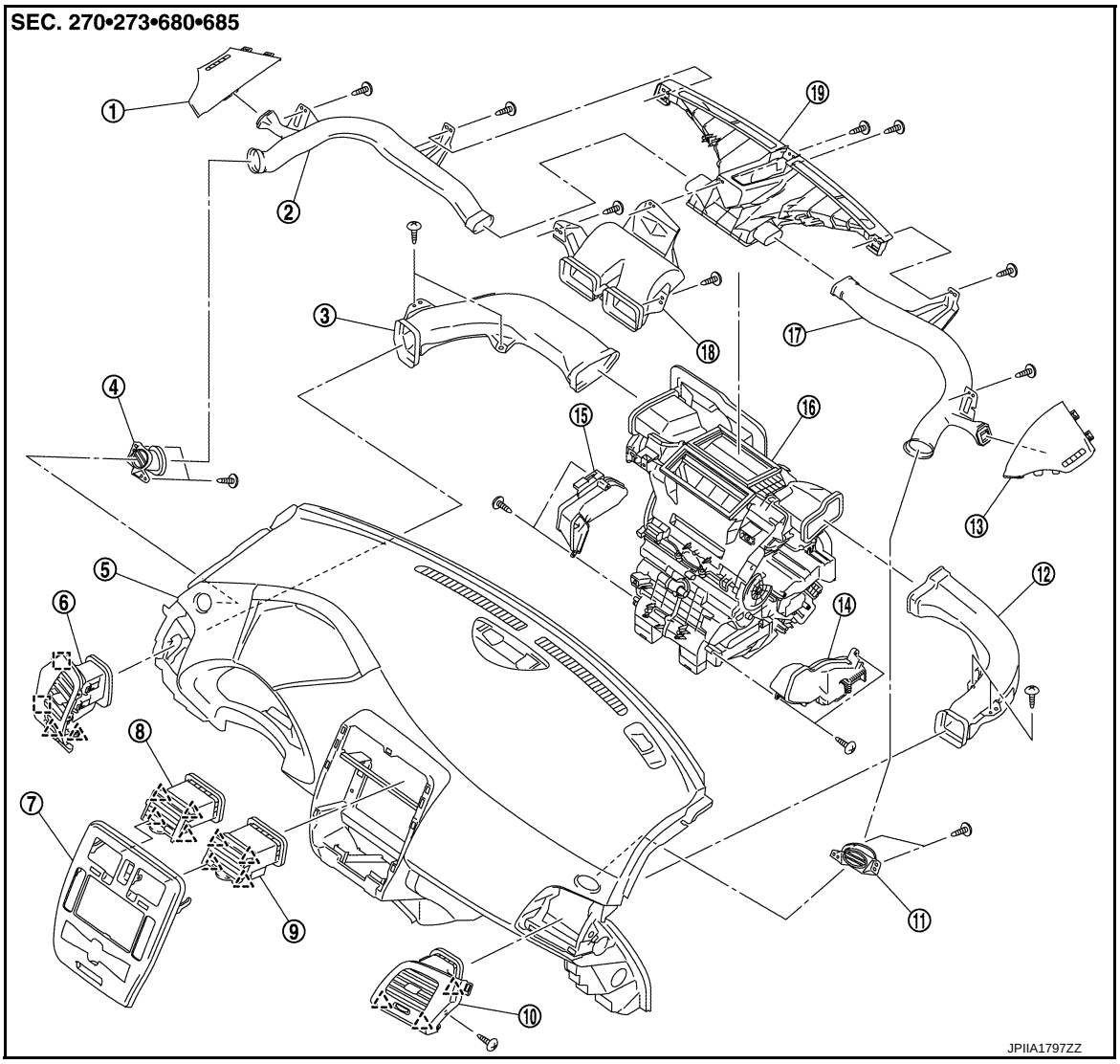

1. Side defroster nozzle 2 LH (Instrument side panel LH)	2. Side defroster nozzle 1 LH	3. Side ventilator duct LH
4. Side defroster grille LH	5. Instrument panel assembly	6. Side ventilator grille LH
7. Cluster lid C	8. Center ventilator grille LH	9. Center ventilator grille RH
10. Side ventilator grille RH	11. Side defroster grille RH	12. Side ventilator duct RH
13. Side defroster nozzle 2 RH (Instrument side panel RH)	14. Foot duct RH	15. Foot duct LH
16. A/C unit assembly	17. Side defroster nozzle 1 RH	18. Center ventilator duct
19. Front defroster nozzle		

: Pawl

: Metal clip

REAR

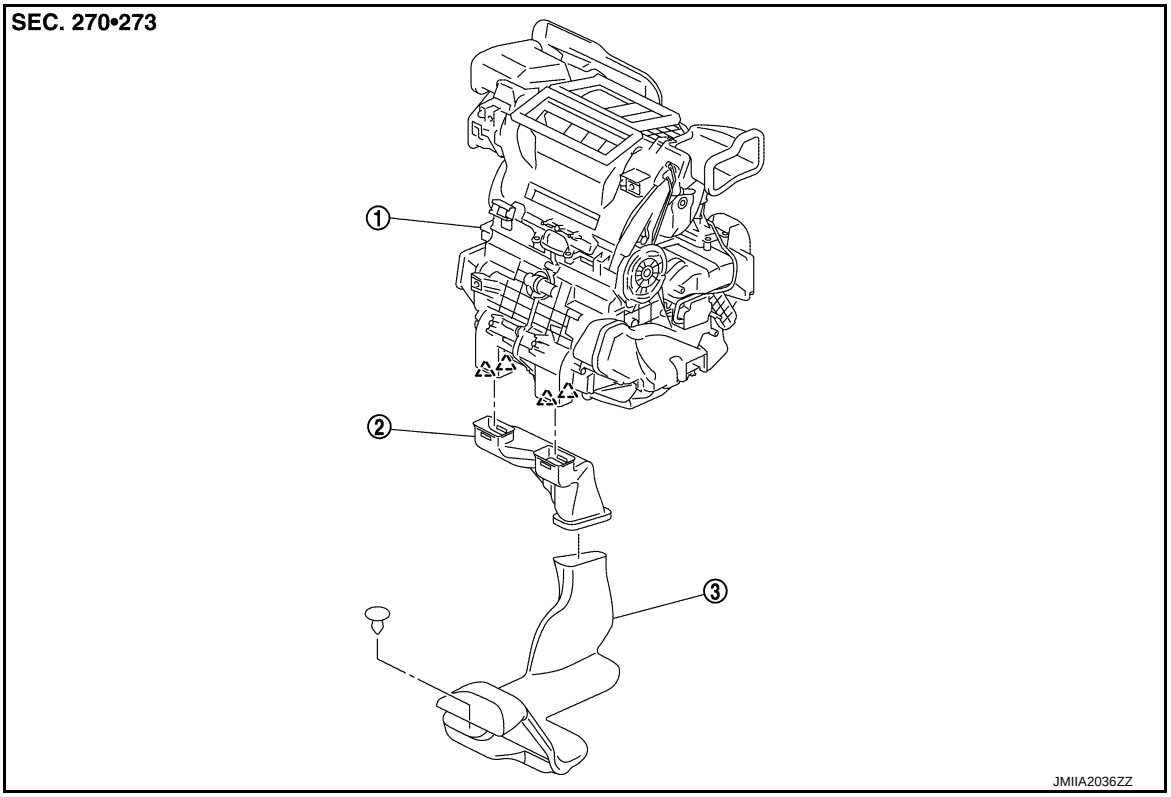

1. A/C unit assembly
2. Rear foot duct 1
3. Rear foot duct 2

: Pawl

CENTER VENTILATOR GRILLE

CENTER VENTILATOR GRILLE : Removal and Installation

INFOID:0000000007635391

REMOVAL

1. Remove cluster lid C. Refer to IP-14, "Removal and Installation".
2. Disengage fixing pawls, and then remove center ventilator grille (1) from cluster lid C.

: Pawl

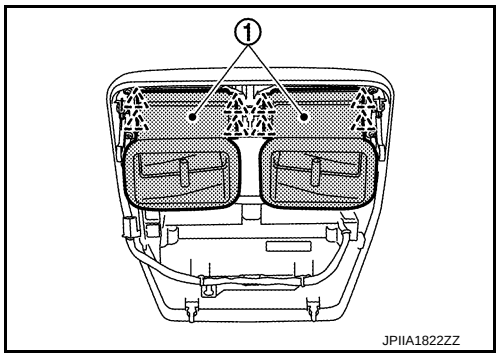

INSTALLATION

Install in the reverse order of removal.

SIDE VENTILATOR GRILLE

SIDE VENTILATOR GRILLE : Removal and Installation

INFOID:0000000007635392

REMOVAL

Driver side

1. Remove instrument mask LH. Refer to IP-14, "Removal and Installation".

2. Remove instrument side panel LH. Refer to INT-20, "INSTRUMENT SIDE PANEL : Removal and Installation".
3. Remove front pillar garnish LH. Refer to INT-21, "FRONT PILLAR GARNISH : Removal and Installation".
4. Remove instrument lower panel LH. Refer to IP-14, "Removal and Installation".
5. Disengage side ventilator grille LH (1) fixing pawls and metal clips.

: Pawl

: Metal clip

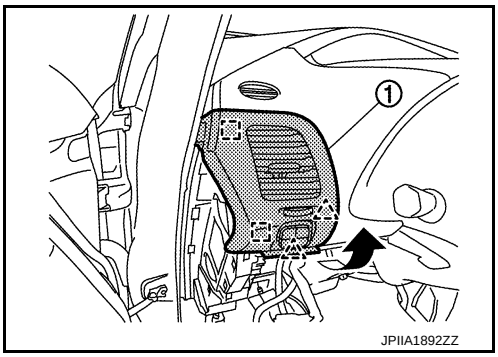

6. Disconnect switch connector, and then remove side ventilator grille LH from instrument panel assembly.

Passenger side

1. Remove instrument mask RH. Refer to IP-14, "Removal and Installation".
2. Remove instrument side panel RH. Refer to INT-20, "INSTRUMENT SIDE PANEL : Removal and Installation".
3. Remove front pillar garnish RH. Refer to INT-21, "FRONT PILLAR GARNISH : Removal and Installation".
4. Remove fixing screw (A) from side ventilator grille RH (1).

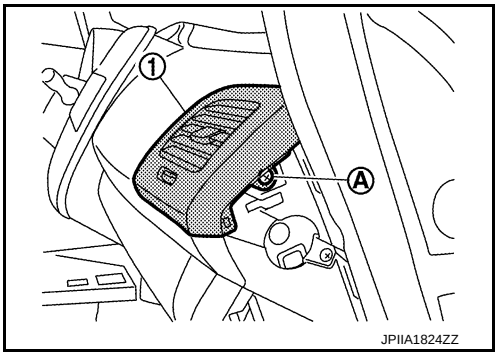

5. Apply protective tape (B) on the part to protect it from damage.

1. : Side ventilator grille RH

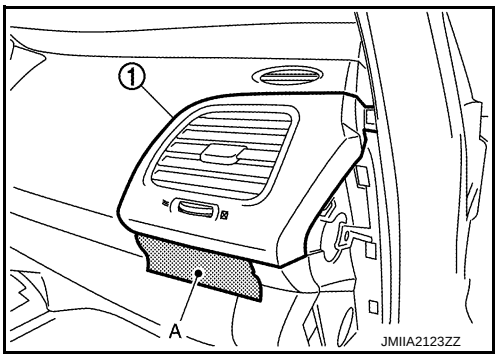

6. Disengage side ventilator grille RH (1) fixing pawls using a remover tool (A).

: Pawl

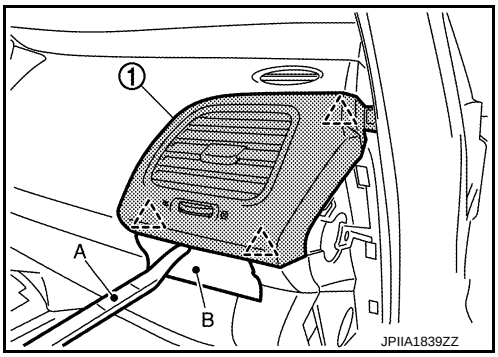

7. Remove side ventilator grille RH from instrument panel assembly.

INSTALLATION

Install in the reverse order of removal.

SIDE DEFROSTER GRILLE

SIDE DEFROSTER GRILLE : Removal and Installation

INFOID:0000000007635393

REMOVAL

1. Remove side defroster nozzle 1. Refer to VTL-18, "SIDE DEFROSTER NOZZLE 1 : Removal and Installation".
2. Remove fixing screws (A), and then remove side defroster grille (1) from instrument panel assembly.

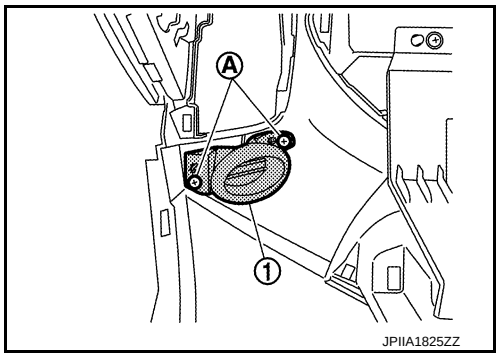

INSTALLATION

Install in the reverse order of removal.

CENTER VENTILATOR DUCT

CENTER VENTILATOR DUCT : Removal and Installation

INFOID:0000000007635394

REMOVAL

1. Remove front defroster nozzle. Refer to VTL-18, "FRONT DEFROSTER NOZZLE : Removal and Installation".
2. Remove fixing screws (A), and then remove center ventilator duct (1) from instrument panel assembly.

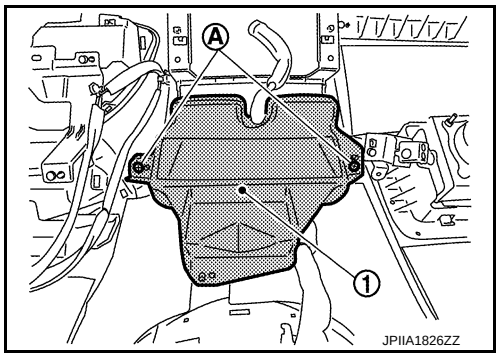

INSTALLATION

Install in the reverse order of removal.

SIDE VENTILATOR DUCT

SIDE VENTILATOR DUCT : Removal and Installation

INFOID:0000000007635395

REMOVAL

1. Remove instrument panel assembly. Refer to IP-14, "Removal and Installation".

2. Remove fixing screws (A), and then remove side ventilator duct (1) from the vehicle.

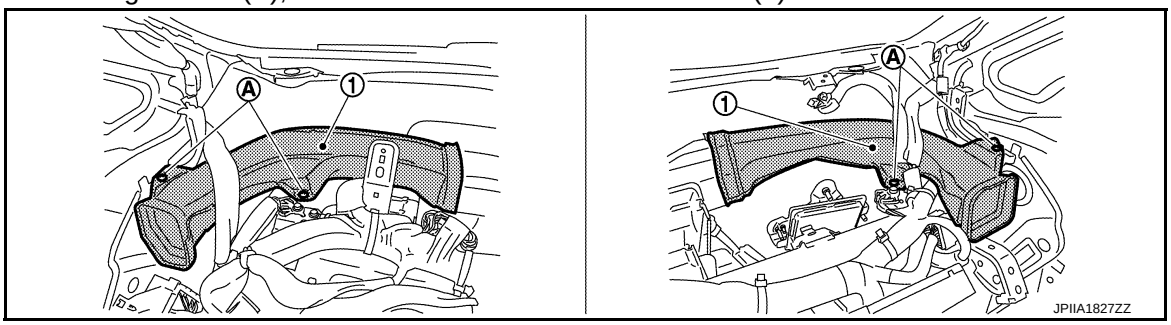

INSTALLATION

Install in the reverse order of removal.

FRONT DEFROSTER NOZZLE

FRONT DEFROSTER NOZZLE : Removal and Installation

INFOID:0000000007635396

REMOVAL

1. Remove side defroster nozzle 1. Refer to VTL-18, "SIDE DEFROSTER NOZZLE 1 : Removal and Installation".
2. Remove fixing screws (A), and then remove front defroster nozzle (1) from instrument panel assembly.

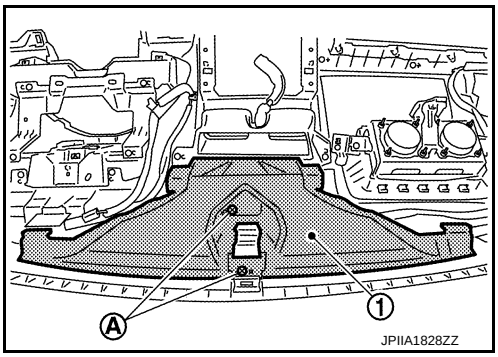

INSTALLATION

Install in the reverse order of removal.

SIDE DEFROSTER NOZZLE 1

SIDE DEFROSTER NOZZLE 1 : Removal and Installation

INFOID:0000000007635397

REMOVAL

Driver side

1. Remove instrument panel assembly. Refer to IP-14, "Removal and Installation".
2. Remove fixing screws (A), and then remove side defroster nozzle 1 (1) from instrument panel assembly.

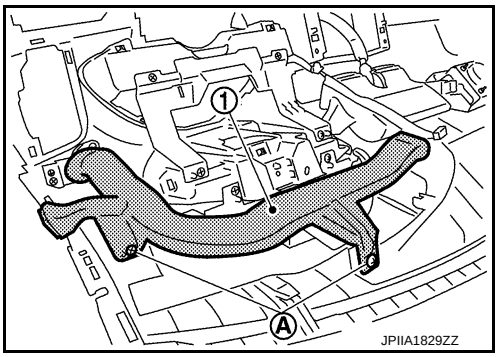

Passenger side

1. Remove instrument panel assembly. Refer to IP-14, "Removal and Installation".

2. Remove fixing screws (A) and harness clip (B), and then remove side defroster nozzle 1 (1) from instrument panel assembly.

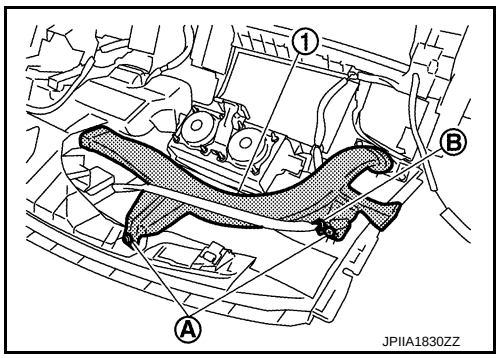

INSTALLATION

Install in the reverse order of removal.

SIDE DEFROSTER NOZZLE 2

SIDE DEFROSTER NOZZLE 2 : Removal and Installation

INFOID:0000000007635398

REMOVAL

Remove instrument side panel. Refer to INT-20, "INSTRUMENT SIDE PANEL : Removal and Installation".

INSTALLATION

Install in the reverse order of removal.

FOOT DUCT

FOOT DUCT : Removal and Installation

INFOID:0000000007635399

REMOVAL

Driver side

1. Remove instrument lower panel LH. Refer to IP-14, "Removal and Installation".
2. Remove knee protector.
3. Remove mounting nuts (A), and then remove knee protector bracket (1).

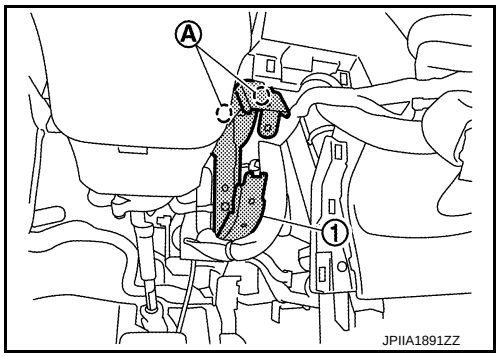

4. Disconnect harness connector.
5. Remove harness connector fixing clamp.
6. Remove fixing screws (A), and then remove foot duct (1).

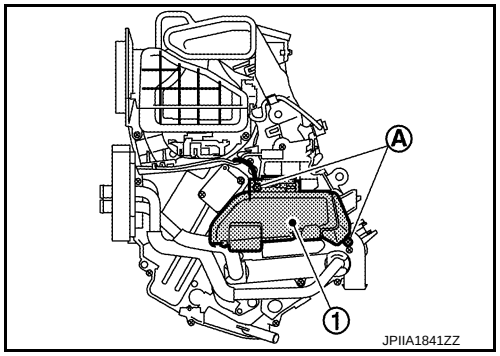

Passenger side

1. Remove A/C unit assembly. Refer to HA-62, "A/C UNIT ASSEMBLY : Removal and Installation".
2. Remove fixing screws (A), and then remove foot duct (1).

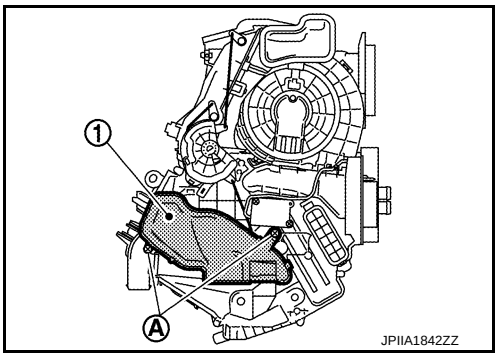

INSTALLATION

Install in the reverse order of removal.

REAR FOOT DUCT 1

REAR FOOT DUCT 1 : Removal and Installation

INFOID:0000000007635400

REMOVAL

1. Remove rear foot duct 2. Refer to VTL-20, "REAR FOOT DUCT 2 : Removal and Installation".
2. Remove instrument lower center cover. Refer to IP-14, "Removal and Installation".
3. Remove instrument lower cover RH. Refer to IP-14, "Removal and Installation".
4. Disengage rear foot duct 1 fixing pawls, and then remove rear foot duct 1 from the vehicle.

: Pawl

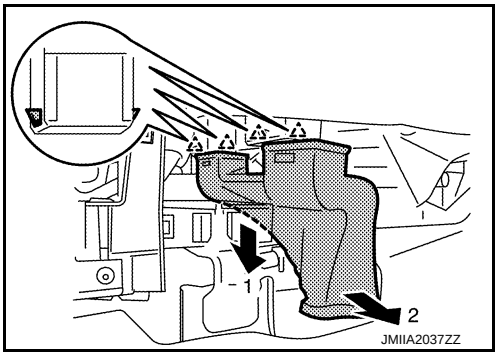

INSTALLATION

Install in the reverse order of removal.

REAR FOOT DUCT 2

REAR FOOT DUCT 2 : Removal and Installation

INFOID:0000000007635401

REMOVAL

1. Remove passenger seat assembly. Refer to SE-22, "Removal and Installation".
2. Remove front kicking plate inner RH and rear kicking plate inner RH. Refer to INT-23, "KICKING PLATE INNER : Removal and Installation".
3. Remove center pillar lower garnish RH. Refer to INT-25, "CENTER PILLAR LOWER GARNISH : Removal and Installation".
4. Remove dash side finisher RH. Refer to INT-24, "DASH SIDE FINISHER : Removal and Installation".

5. Peel off floor carpet (1).
6. Remove rear foot duct 2 (2) fixing clip (A), and then remove rear foot duct 2 from the vehicle.

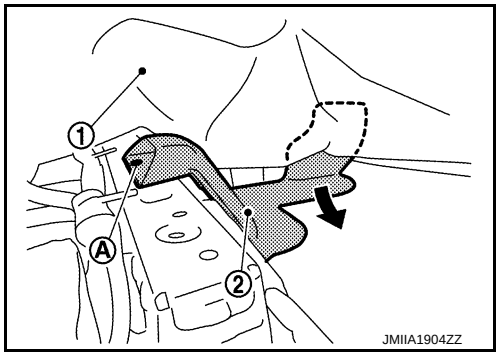

INSTALLATION

Install in the reverse order of removal.

BLOWER MOTOR

Exploded View

INFOID:0000000007635402

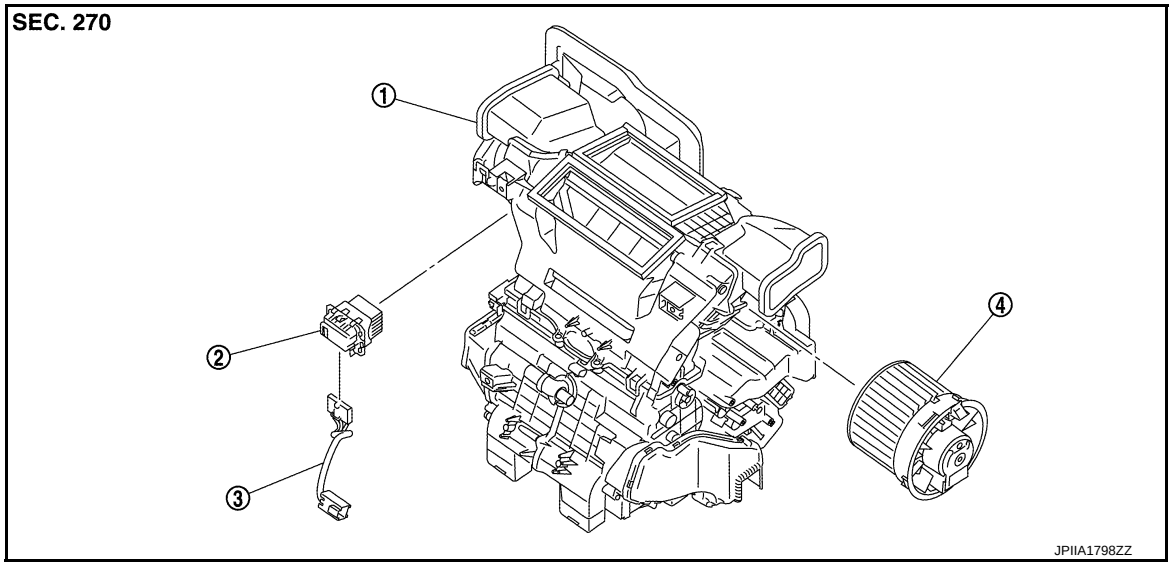

1. A/C unit assembly
2. Power transistor
3. Sub harness
4. Blower motor

Removal and Installation

INFOID:0000000007635403

REMOVAL

1. Remove glove box cover assembly. Refer to IP-14, "Removal and Installation".
2. Disconnect blower motor harness connector.
3. Press flange holding hook (A), and then turn blower motor (1) clockwise.

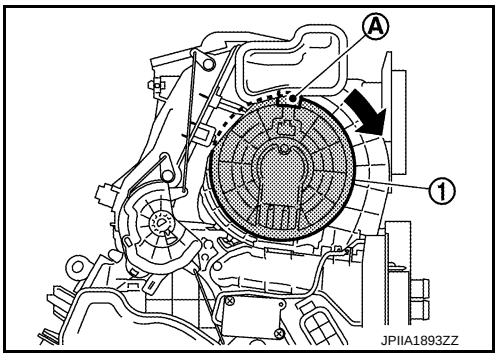

4. Remove blower motor from A/C unit assembly.

INSTALLATION

Install in the reverse order of removal.

IN-CABIN MICROFILTER

Exploded View

INFOID:0000000007635404

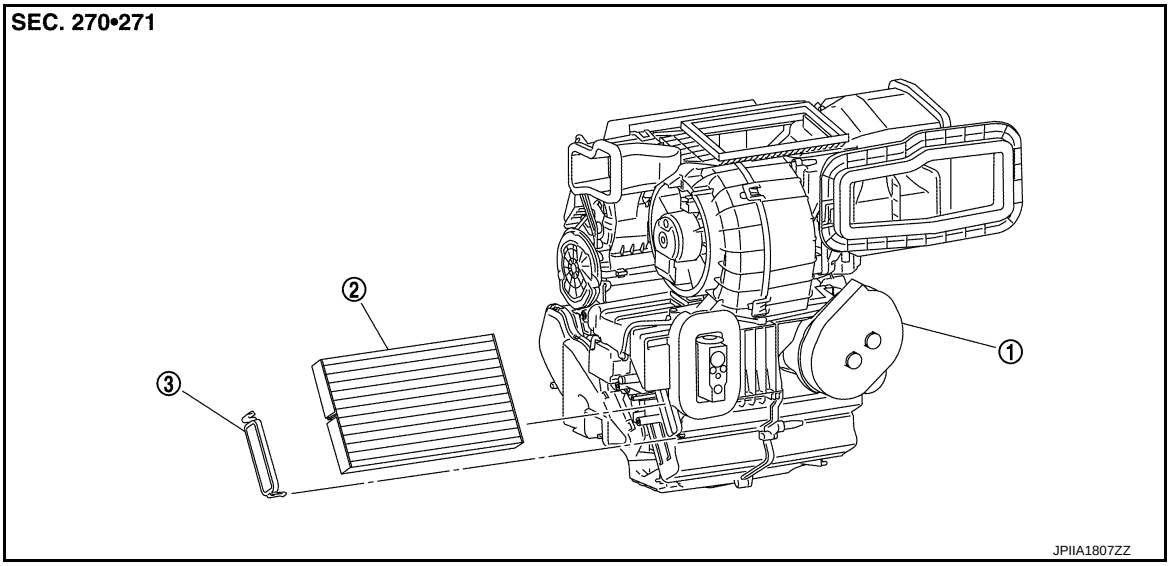

1. A/C unit assembly
2. In-cabin microfilter
3. Filter cover

Removal and Installation

INFOID:0000000007635405

REMOVAL

NOTE:
When removing in-cabin microfilter, visually check the operation through glove box mask opening.

1. Remove instrument under cover RH. Refer to IP-14, "Removal and Installation".
2. Open glove box lid.
3. Disengage fixing pawls, and then remove glove box mask (1).

: Pawl

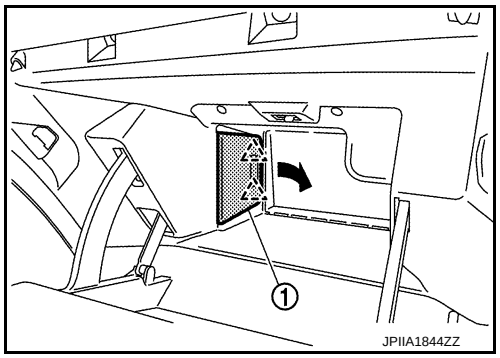

4. Disengage fixing pawl, and then remove filter cover (1) from A/C unit assembly.

: Pawl

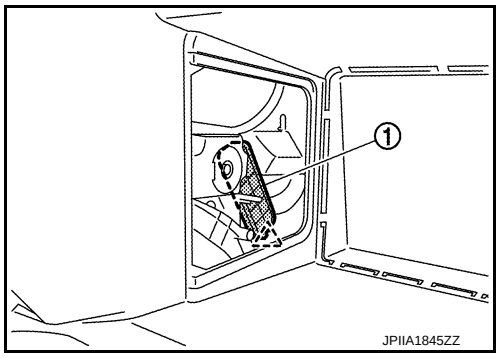

5. Pull out in-cabin microfilter (1) from A/C unit assembly, and then remove in-cabin microfilter through bottom of glove box.
   CAUTION:
   If the filter is deformed/damaged when removing, replace it with a new one. Deformed/damaged filter may deteriorate the dust collecting performance.

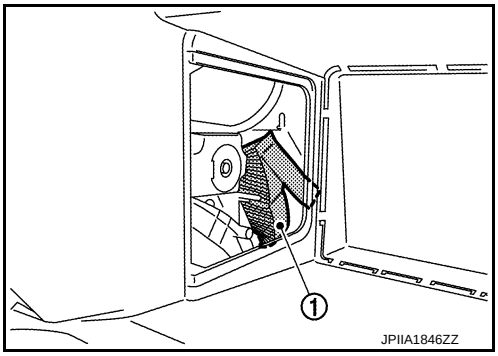

INSTALLATION

Note the following items, and then install in the reverse order of removal.

NOTE:

When installing in-cabin microfilter, visually check the operation through glove box mask opening.

CAUTION:

When installing, handle the filter with extreme care to avoid deforming/damaging.

Replacement

INFOID:0000000007635406

Replace in-cabin microfilter.

Refer to VTL-23, "Removal and Installation".

SERVICE DATA AND SPECIFICATIONS (SDS)

SERVICE DATA AND SPECIFICATIONS (SDS)

In-cabin Microfilter

INFOID:0000000007635407

Replacement interval	MA-8, "FOR NORTH AMERICA : Schedule 1" and MA-9, "FOR NORTH AMERICA : Schedule 2".