SECTION EXL
EXTERIOR LIGHTING SYSTEM

CONTENTS

HALOGEN HEADLAMP

A B C D E F G H I J K EXL M N O P

PRECAUTION

PRECAUTIONS

Precaution for Technicians Using Medical Electric

INFOID:0000000010634515

OPERATION PROHIBITION

WARNING:

- **Parts with strong magnet is used in this vehicle.**
- **Technicians using a medical electric device such as pacemaker must never perform operation on the vehicle, as magnetic field can affect the device function by approaching to such parts.**

NORMAL CHARGE PRECAUTION

WARNING:

- **If a technician uses a medical electric device such as an implantable cardiac pacemaker or an implantable cardioverter defibrillator, the possible effects on the devices must be checked with the device manufacturer before starting the charge operation.**
- **As radiated electromagnetic wave generated by PDM (Power Delivery Module) at normal charge operation may affect medical electric devices, a technician using a medical electric device such as implantable cardiac pacemaker or an implantable cardioverter defibrillator must not approach motor room [PDM (Power Delivery Module)] at the hood-opened condition during normal charge operation.**

PRECAUTION AT TELEMATICS SYSTEM OPERATION

WARNING:

- **If a technician uses implantable cardiac pacemaker or implantable cardioverter defibrillator (ICD), avoid the device implanted part from approaching within approximately 220 mm (8.66 in) from interior/exterior antenna.**
- **The electromagnetic wave of TCU might affect the function of the implantable cardiac pacemaker or the implantable cardioverter defibrillator (ICD), when using the service, etc.**
- **If a technician uses other medical electric devices than implantable cardiac pacemaker or implantable cardioverter defibrillator (ICD), the electromagnetic wave of TCU might affect the function of the device. The possible effects on the devices must be checked with the device manufacturer before TCU use.**

PRECAUTION AT INTELLIGENT KEY SYSTEM OPERATION

WARNING:

- **If a technician uses implantable cardiac pacemaker or implantable cardioverter defibrillator (ICD), avoid the device implanted part from approaching within approximately 220 mm (8.66 in) from interior/exterior antenna.**
- **The electromagnetic wave of Intelligent Key might affect the function of the implantable cardiac pacemaker or the implantable cardioverter defibrillator (ICD), at door operation, at each request switch operation, or at engine starting.**
- **If a technician uses other medical electric devices than implantable cardiac pacemaker or implantable cardioverter defibrillator (ICD), the electromagnetic wave of Intelligent Key might affect the function of the device. The possible effects on the devices must be checked with the device manufacturer before Intelligent Key use.**

Point to Be Checked Before Starting Maintenance Work

INFOID:0000000010634516

The high voltage system may starts automatically. It is required to check that the timer air conditioner and timer charge (during EVSE connection) are not set before starting maintenance work.

NOTE:

If the timer air conditioner or timer charge (during EVSE connection) is set, the high voltage system starts automatically even when the power switch is in OFF state.

Precaution for Supplemental Restraint System (SRS) "AIR BAG" and "SEAT BELT PRE-TENSIONER"

INFOID:0000000010634517

The Supplemental Restraint System such as “AIR BAG” and “SEAT BELT PRE-TENSIONER”, used along with a front seat belt, helps to reduce the risk or severity of injury to the driver and front passenger for certain types of collision. This system includes seat belt switch inputs and dual stage front air bag modules. The SRS

system uses the seat belt switches to determine the front air bag deployment, and may only deploy one front air bag, depending on the severity of a collision and whether the front occupants are belted or unbelted. Information necessary to service the system safely is included in the SR and SB section of this Service Manual.

WARNING:

- **To avoid rendering the SRS inoperative, which could increase the risk of personal injury or death in the event of a collision which would result in air bag inflation, all maintenance must be performed by an authorized NISSAN/INFINITI dealer.**
- **Improper maintenance, including incorrect removal and installation of the SRS, can lead to personal injury caused by unintentional activation of the system. For removal of Spiral Cable and Air Bag Module, see the SR section.**
- **Do not use electrical test equipment on any circuit related to the SRS unless instructed to in this Service Manual. SRS wiring harnesses can be identified by yellow and/or orange harnesses or harness connectors.**

PRECAUTIONS WHEN USING POWER TOOLS (AIR OR ELECTRIC) AND HAMMERS

WARNING:

- **When working near the Airbag Diagnosis Sensor Unit or other Airbag System sensors with the Ignition ON or engine running, DO NOT use air or electric power tools or strike near the sensor(s) with a hammer. Heavy vibration could activate the sensor(s) and deploy the air bag(s), possibly causing serious injury.**
- **When using air or electric power tools or hammers, always switch the Ignition OFF, disconnect the battery and wait at least three minutes before performing any service.**

Precaution for Removing 12V Battery

INFOID:0000000010634518

1. Check that EVSE is not connected.
   NOTE:
   If EVSE is connected, the air conditioning system may be automatically activated by the timer A/C function.
2. Turn the power switch OFF → ON → OFF. Get out of the vehicle. Close all doors (including back door).
3. Check that the charge status indicator lamp does not blink and wait for 5 minutes or more.
   NOTE:
   If the battery is removed within 5 minutes after the power switch is turned OFF, plural DTCs may be detected.
4. Remove 12V battery within 1 hour after turning the power switch OFF → ON → OFF.
   NOTE:
   - The 12V battery automatic charge control may start automatically even when the power switch is in OFF state.
   - Once the power switch is turned ON → OFF, the 12V battery automatic charge control does not start for approximately 1 hour.

   CAUTION:

   - **After all doors (including back door) are closed, if a door (including back door) is opened before battery terminals are disconnected, start over from Step 1.**
   - **After turning the power switch OFF, if “Remote A/C” is activated by user operation, stop the air conditioner and start over from Step 1.**

Precaution for Work

INFOID:0000000011107754

- When removing or disassembling each component, be careful not to damage or deform it. If a component may be subject to interference, be sure to protect it with a shop cloth.
- When removing (disengaging) components with a screwdriver or similar tool, be sure to wrap the component with a shop cloth or vinyl tape to protect it.
- Protect the removed parts with a shop cloth and prevent them from being dropped.
- Replace a deformed or damaged clip.
- If a part is specified as a non-reusable part, always replace it with a new one.
- Be sure to tighten bolts and nuts securely to the specified torque.
- After installation is complete, be sure to check that each part works properly.
- Follow the steps below to clean components:

- Water soluble dirt:

- Dip a soft cloth into lukewarm water, wring the water out of the cloth and wipe the dirty area.

- Then rub with a soft, dry cloth.
- Oily dirt:
- Dip a soft cloth into lukewarm water with mild detergent (concentration: within 2 to 3%) and wipe the dirty area.
- Then dip a cloth into fresh water, wring the water out of the cloth and wipe the detergent off.
- Then rub with a soft, dry cloth.
- Do not use organic solvent such as thinner, benzene, alcohol or gasoline.
- For genuine leather seats, use a genuine leather seat cleaner.

PREPARATION

PREPARATION

Special Service Tool

INFOID:0000000010634519

The actual shape of the tools may differ from those illustrated here.

Tool number (TechMate No.) Tool name	Description
— (J-46534) Trim Tool Set 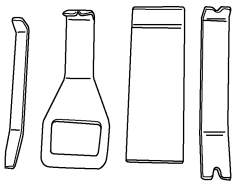 AWJIA0483ZZ	Removing trim components

SYSTEM DESCRIPTION

COMPONENT PARTS

Component Parts Location

INFOID:0000000010634520

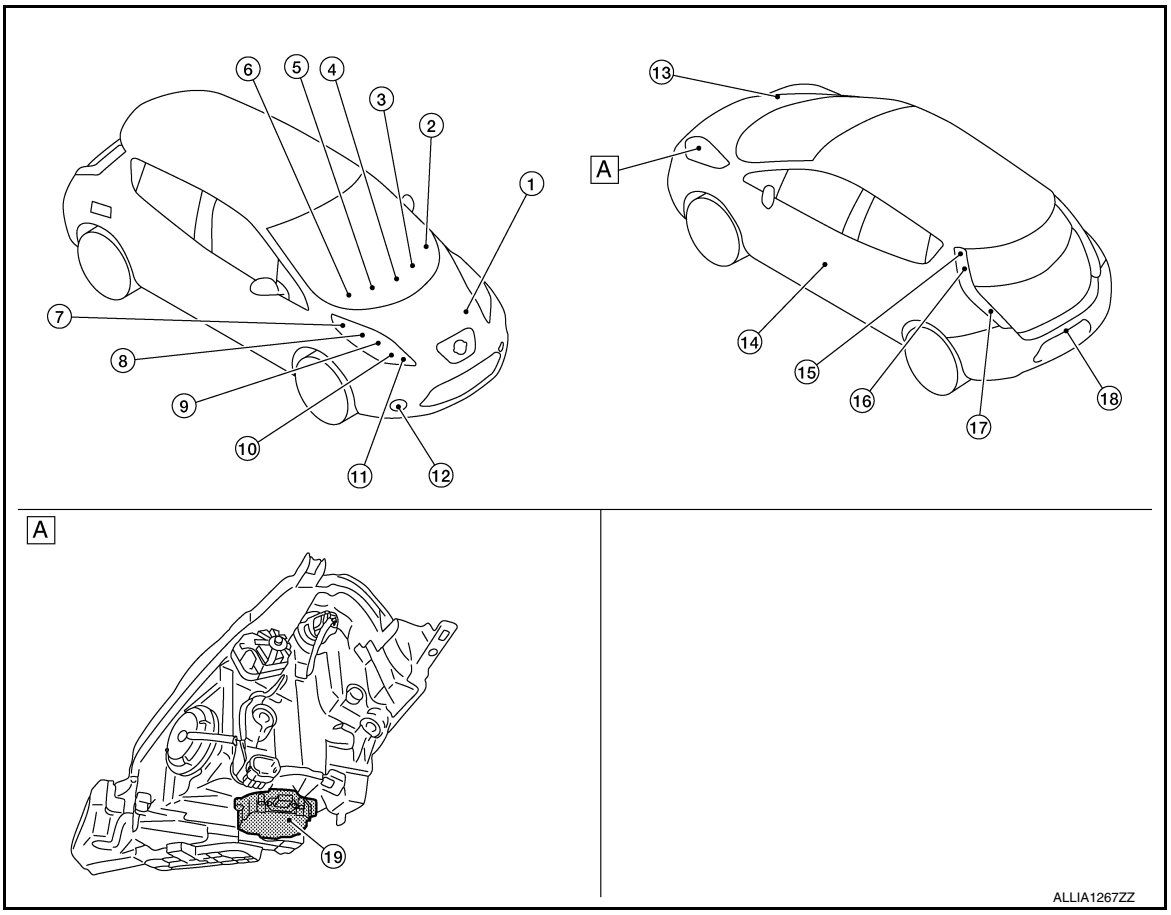

A. Front combination lamp (back)

No.	Part	Function
1.	IPDM E/R	• Controls the integrated relay, and supplies voltage to the load according to the request from BCM (via CAN communication). • Refer to PCS-7, "Component Parts Location" for detailed installation location.
2.	Combination switch (Lighting & turn signal switch)	Refer to BCS-8, "COMBINATION SWITCH READING SYSTEM : System Description".
3.	Combination meter	• Blinks the turn signal indicator lamp and outputs the turn signal operating sound with integrated buzzer according to the request from BCM (via CAN communication). • Turns the tail lamp indicator lamp, high beam indicator lamp, front fog lamp indicator lamp and rear fog lamp indicator lamp ON according to the request from BCM (via CAN communication). • Inputs headlamp warning lamp signal from LED headlamp control module and turns headlamp warning lamp ON.
4.	Hazard switch	Refer to EXL-14, "Hazard Switch".

No.	Part	Function
5.	BCM	• Detects each switch condition by the combination switch reading function • Judges that the exterior lamps are turned ON according to the vehicle condition • Requests the headlamp relay (HI/LO), tail lamp relay and front fog lamp relay ON to IPDM E/R (via CAN communication) • Requests the high beam indicator lamp, tail lamp indicator lamp and front fog lamp indicator lamp ON to the combination meter (via CAN communication) • Judges the outside brightness from the optical sensor signal. • Judges the ON/OFF timing according to the vehicle condition. • Judges the ON/OFF status of the exterior lamp according to the outside brightness and the vehicle condition. • Refer to BCS-5, "BODY CONTROL SYSTEM : Component Parts Location" for detailed installation location.
6.	Optical sensor	Refer to EXL-13, "Optical Sensor".
7.	Front side marker lamp	Refer to EXL-149, "Bulb Specifications".
8.	Front turn signal lamp	Refer to EXL-149, "Bulb Specifications".
9.	Headlamp LO (LED headlamp)	Refer to EXL-15, "HEADLAMP SYSTEM : System Description".
10.	Headlamp HI	Refer to EXL-149, "Bulb Specifications".
11.	Parking Lamp	Refer to EXL-149, "Bulb Specifications".
12.	Front fog lamp (if equipped)	Refer to EXL-149, "Bulb Specifications".
13.	Daytime running light relay*	Headlamp HI ground circuit is switched according to request from IPDM E/R.
14.	Front door switch (LH)	Refer to DLK-21, "Door Switch".
15.	Rear side marker lamp	Refer to EXL-149, "Bulb Specifications".
16.	Tail lamp	Refer to EXL-149, "Bulb Specifications".
17.	Rear turn signal lamp	Refer to EXL-149, "Bulb Specifications".
18.	License plate lamp	Refer to EXL-149, "Bulb Specifications".
19.	LED headlamp control module	Refer to EXL-13, "LED Headlamp Control Module".

*: With daytime running light system

LED Headlamp

INFOID:0000000010634521

OUTLINE

- Semiconductor device (Light emitting diode: LED), which is illuminated when forward bias electric voltage is applied, is adopted as the source of light instead of halogen bulb or xenon bulb.
- Comparing to halogen headlamp or xenon headlamp, LED headlamp is electrically power saving, durable, and is illuminated in the similar color to the sunlight. Bright, natural, and eye-friendly visibility can be obtained.

ILLUMINATION PRINCIPLE

White LED emits the white light through fluorescent substance on luminescent surface of blue LED using semiconductor (joint construction of P type and N type).

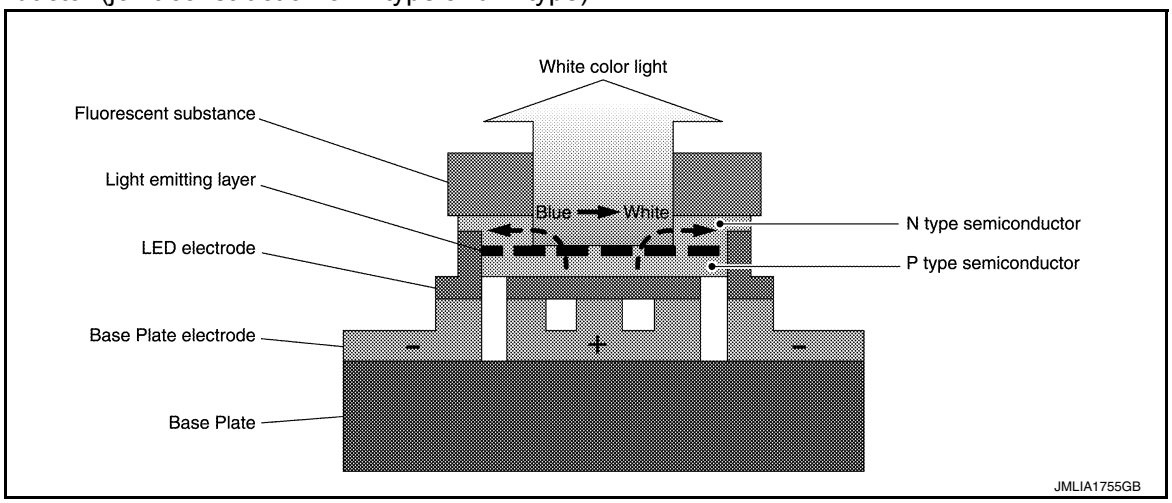

1. When forward bias electric voltage is applied to LED, hole (positive characteristics) and electron (negative characteristics) move toward each electrode, and electric current flows.
2. Hole and electron move inside of semiconductor crystal and are connected (re-connection) again at connecting portion. A part of energies that is produced at this moment is emitted as the light.

PRECAUTIONS FOR TROUBLE DIAGNOSIS

Representative malfunction examples are; “Light does not turn ON”, “Light blinks”, and “Brightness is inadequate.” Such malfunctions, however, occasionally by occur LED control module malfunction or lamp case malfunction. Specify the malfunctioning part with diagnosis procedure.

CAUTION:

- **Never touch the harness, LED headlamp control module, the inside and metal part of lamp when turning the headlamp ON or operating the lighting switch, for preventing electrical shock.**
- **Never work with wet hands, for preventing electrical shock.**
- **Never perform LED headlamp control module circuit diagnosis with a circuit tester or an equivalent.**
- **Temporarily install the headlamps on the vehicle. Always connect power supply to the connector (vehicle side) when checking ON/OFF status.**
- **Disconnect the 12V battery negative terminal before disconnecting the lamp socket connector or the harness connector. Refer to EXL-8, "Precaution for Removing 12V Battery".**
- **Check for fusing of the fusible link(s), open around connector, short, disconnection if the symptom is caused by electric error.**
- **Always check for deformation or hole of headlamp housing and engagement of bulb cover. Otherwise, water may enter into headlamp because of damage of headlamp housing and contact to LED headlamp control module connector. The normal operation may be inhibited when short circuit to power supply is detected.**

NOTE:

Turn the switch OFF once before turning ON, if the ON/OFF is inoperative.

LED Headlamp Control Module

INFOID:0000000010634522

- Headlamp (LO) circuit is connected to LED headlamp control module integrated in the front combination lamp.
- Headlamp (LO) circuit turns LED headlamp ON.
- Outputs the headlamp warning lamp signal to the combination meter.

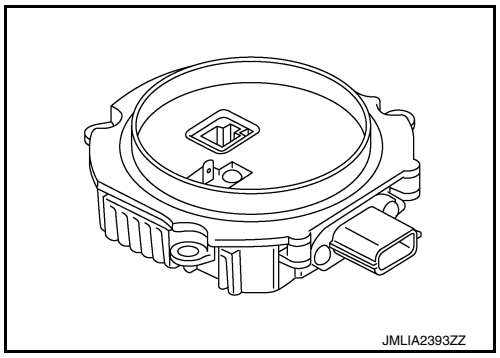

Optical Sensor

INFOID:0000000010634523

Optical sensor converts the outside brightness (lux) to voltage and transmits the optical sensor signal to BCM.

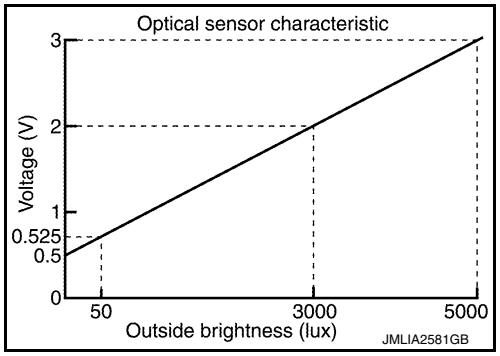

Hazard Switch

INFOID:0000000010634524

Inputs the hazard switch ON/OFF signal to BCM.

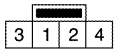

		OFF	ON
1	Hazard switch ON/OFF signal		●
2	Ground		●
3	Illumination +	●	
		⊕	
4	Illumination –	●	

JMLIA2580GB

SYSTEM

HEADLAMP SYSTEM

HEADLAMP SYSTEM : System Description

INFOID:0000000010634525

SYSTEM DIAGRAM

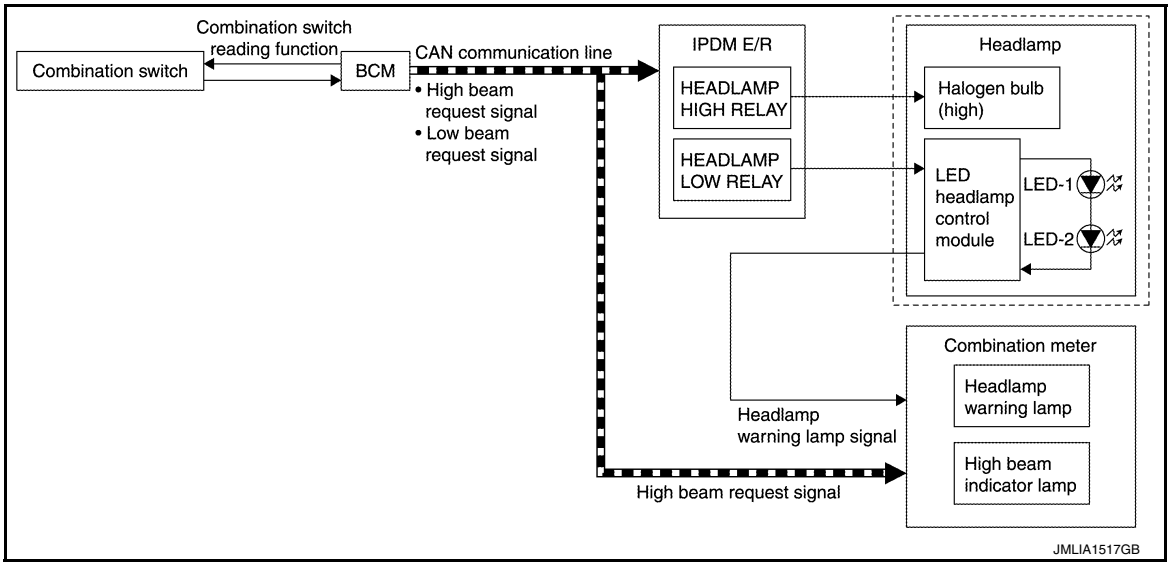

OUTLINE

Headlamp is controlled by combination switch reading function and headlamp control function of BCM, and relay control function of IPDM E/R.

HEADLAMP (LO) OPERATION

- BCM detects the combination switch condition with the combination switch reading function.
- BCM transmits the low beam request signal to IPDM E/R with CAN communication according to the headlamp (LO) ON condition.

Headlamp (LO) ON condition:
- Lighting switch 2ND
- Lighting switch AUTO (auto light function ON judgment)
- Lighting switch AUTO, with the front fog lamp switch ON and the power switch ON
- Lighting switch PASS

- IPDM E/R turns integrated headlamp low relay ON according to low beam request signal and supplies power supply to LED headlamp control module.
- LED headlamp control module turns the headlamp (LO) ON according to the power supply from IPDM E/R.

HEADLAMP (HI) OPERATION

- BCM transmits the high beam request signal to IPDM E/R and the combination meter with CAN communication according to the headlamp (HI) ON condition.

Headlamp (HI) ON condition:
- Lighting switch HI with the lighting switch 2ND or AUTO (auto light function ON judgment)
- Lighting switch PASS
- Lighting switch AUTO, with the front fog lamp switch ON, the power switch ON and lighting switch HI

- Combination meter turns the high beam indicator lamp ON according to the high beam request signal.
- IPDM E/R turns the integrated headlamp high relay ON, and turns the headlamp ON according to the high beam request signal.

HEADLAMP WARNING LAMP OPERATION

- LED headlamp control module outputs the headlamp warning lamp signal to combination meter when the following malfunction is detected:
- LED
- LED headlamp control module
- Circuit between LED headlamp control module and LED.
- Circuit between LED headlamp control module and combination meter.

- Combination meter turn the headlamp warning lamp ON according to the headlamp waning lamp signal inputs.

NOTE:
Headlamp LO may turn ON while headlamp warning lamp is turned ON, because 2 pieces of LED are used so that headlamp may continuously turn ON even if one of LED is not operative.

HEADLAMP SYSTEM : Fail-Safe

INFOID:0000000010634526

CAN COMMUNICATION CONTROL

When CAN communication with BCM is impossible, IPDM E/R performs fail-safe control. After CAN communication recovers normally, it also returns to normal control.

If No CAN Communication Is Available With BCM

Control part	Fail-safe operation
Headlamp	• Turns ON the headlamp low relay when the power switch is turned ON • Turns OFF the headlamp low relay when the power switch is turned OFF • Headlamp high relay OFF

AUTO LIGHT SYSTEM (EXCEPT FOR CANADA)

AUTO LIGHT SYSTEM (EXCEPT FOR CANADA) : System Description

INFOID:0000000010634527

SYSTEM DIAGRAM

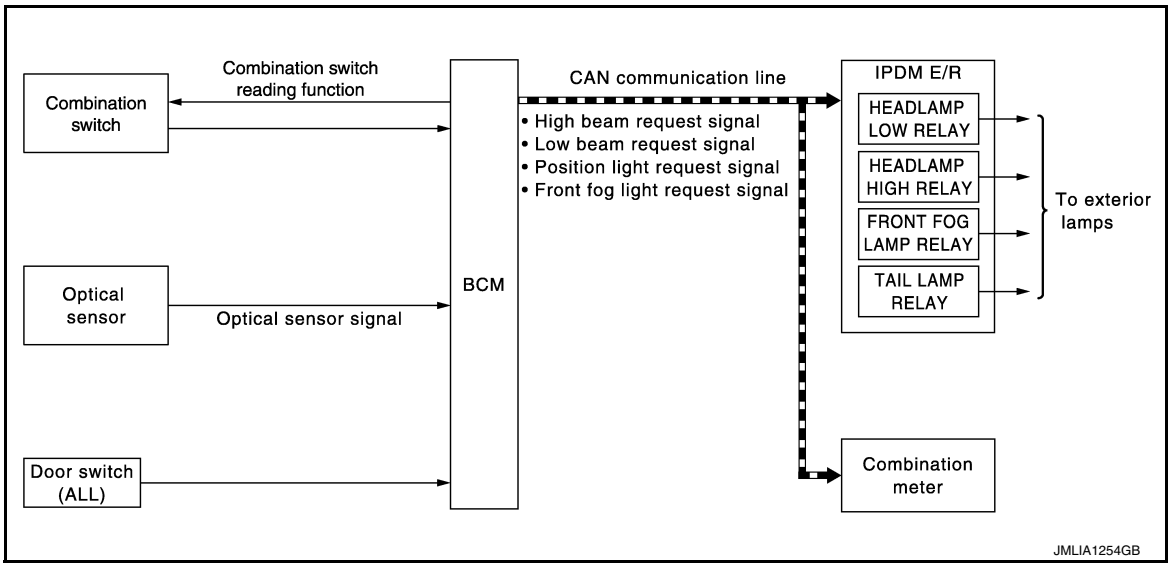

OUTLINE

- Auto light system is controlled by each function of BCM and IPDM E/R.

Control by BCM:
- Combination switch reading function
- Headlamp control function
- Auto light function
- Delay timer function
- Wiper linked auto lighting function
- Auto light adjustment system

Control by IPDM E/R:
- Relay control function
- Auto light system has the auto light function (with twilight lighting function), wiper linked auto lighting function and delay timer function.
- Auto light function automatically turns ON/OFF the exterior lamps* and each illumination automatically, depending on the outside brightness.
- Wiper linked auto lighting function automatically turns ON/OFF the exterior lamps* and each illumination when the light switch is in the AUTO position, according to a front wiper operation.

- When auto light system turns the exterior lamps ON with the power switch OFF, delay timer function turns the exterior lamps OFF, depending on the vehicle condition with the auto light function after a certain period of time.

*: Headlamp (LO/HI), parking lamp, tail lamp, front fog lamp and side marker lamp (Headlamp HI and front fog lamp depend on the combination switch condition.)

NOTE:
The settings of the twilight lighting function and the wiper linked auto lighting function can be changed with CONSULT. Refer to BCS-17, "HEADLAMP : CONSULT Function (BCM - HEAD LAMP)".

AUTO LIGHT FUNCTION (WITH TWILIGHT LIGHTING FUNCTION)

Description
- BCM detects the combination switch condition with the combination switch reading function.
- BCM supplies voltage to the optical sensor when the power switch is turned ON or ACC.
- Optical sensor converts outside brightness (lux) to voltage and transmits the optical sensor signal to BCM.
- BCM filters outside brightness based on the optical sensor signal and judges outside brightness.
- BCM detects change status of outside brightness according to outside brightness from the optical sensor signal and filtered outside brightness. Based on the change status, BCM judges ON/OFF condition of the exterior lamp.
- BCM transmits each request signal to IPDM E/R and combination meter via CAN communication, according to ON/OFF condition by the auto light function.

NOTE:
As to ON/OFF timing, the sensitivity depends on settings. The settings can be changed with CONSULT. Refer to BCS-17, "HEADLAMP : CONSULT Function (BCM - HEAD LAMP)".

WIPER LINKED AUTO LIGHTING FUNCTION

BCM turns the exterior lamps ON when detecting 4 operations of the front wiper work the light switch in AUTO position.

NOTE:
BCM turns OFF the headlamps 3 seconds after the front wiper switch is turned from ON⇒OFF.

AUTO LIGHT ADJUSTMENT SYSTEM

The auto light adjustment system automatically, dims/brightens the display and combination meter, according to brightness outside the vehicle, when lighting switch 1ST, lighting switch 2ND or lighting switch AUTO is operated. Refer to INL-13, "AUTO LIGHT ADJUSTMENT SYSTEM : System Description".

DELAY TIMER FUNCTION

BCM turns the exterior lamps OFF depending on the vehicle condition with the auto light function when the power switch is turned OFF.
- Turns the exterior lamps OFF 5 minutes after detecting that any door opens. (Door switch ON).
- Turns the exterior lamps OFF a certain period of time* after closing all doors. (Door switch ON→OFF).
- Turns the exterior lamps OFF with the power switch ACC or the light switch OFF.

*: The preset time is 45 seconds. The timer operating time can be set by CONSULT. Refer to BCS-17, "HEADLAMP : CONSULT Function (BCM - HEAD LAMP)".

NOTE:
When any position other than the light switch AUTO is set, the auto light system function switches to the exterior lamp battery saver function.

FOG OVERRIDE FUNCTION

When front fog lamp switch is ON while power switch is in ON position and lighting switch is in AUTO position, BCM turns ON exterior lamps* regardless of outside brightness.

*: Headlamp (LO/HI), front fog lamp, parking lamp, license plate lamp, side marker lamp and tail lamp.

NOTE:
- Headlamp (HI) depending on the combination switch condition.
- Front fog light reminder warning is cancelled when fog override function is Off.

How to Set

With CONSULT
1. Turn power switch ON.
2. Select “INT LAMP” of “BCM” using CONSULT.
3. Select “FOG LAMP OVERRIDE” in “Work Support” mode.

Service item	Setting item	Setting
FOG LAMP OVERRIDE	On	With fog override function
	Off	Without fog override function

AUTO LIGHT SYSTEM (FOR CANADA)

AUTO LIGHT SYSTEM (FOR CANADA) : System Description

INFOID:0000000010634528

SYSTEM DIAGRAM

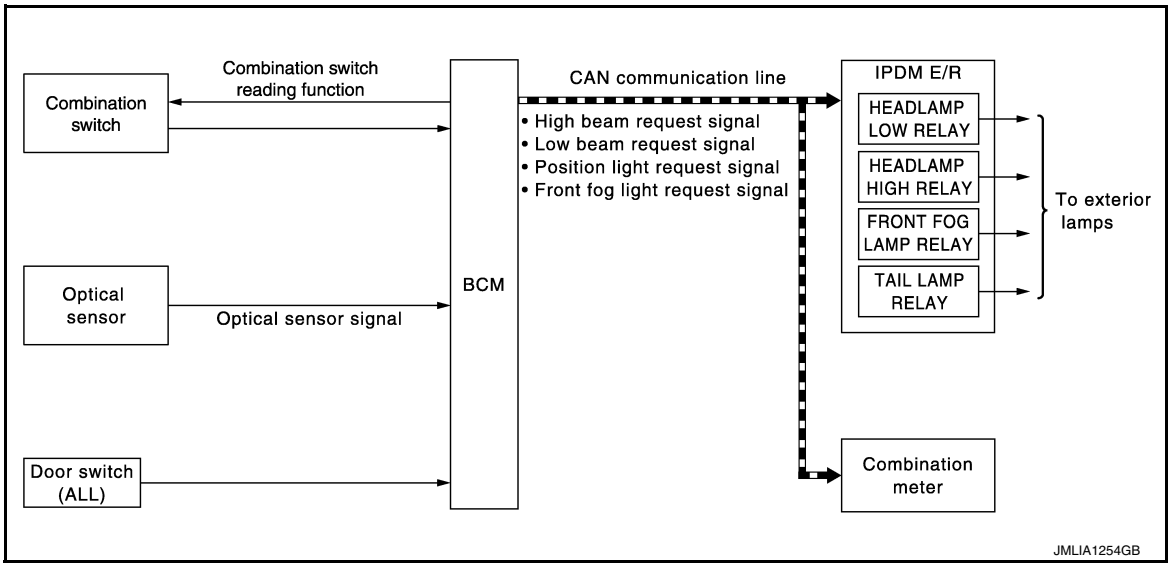

OUTLINE

- Auto light system is controlled by each function of BCM and IPDM E/R.

Control by BCM:
- Combination switch reading function
- Headlamp control function
- Auto light function
- Delay timer function
- Auto light adjustment system

Control by IPDM E/R:
- Relay control function
- Auto light system has the auto light function and delay timer function.
- Auto light function automatically turns ON/OFF the exterior lamps* and each illumination automatically, depending on the outside brightness.
- When auto light system turns the exterior lamps ON with the power switch OFF, delay timer function turns the exterior lamps OFF, depending on the vehicle condition with the auto light function after a certain period of time.

*: Headlamp (LO/HI), parking lamp, side marker lamp, tail lamp and front fog lamp (Headlamp HI and front fog lamp depend on the combination switch condition.)

AUTO LIGHT FUNCTION

- BCM detects the combination switch condition with the combination switch reading function.
- BCM supplies voltage to optical sensor when the power switch is turned ON or ACC.
- Optical sensor converts outside brightness (lux) to voltage and transmits the optical sensor signal to BCM.
- BCM judges outside brightness from the optical sensor signal and judges ON/OFF condition of the exterior lamp and each illumination according to the outside brightness.
- BCM transmits each request signal to IPDM E/R and combination meter via CAN communication according to ON/OFF condition by the auto light function.

NOTE:
ON/OFF timing differs based on the sensitivity from the setting. The setting can be set by CONSULT. Refer to BCS-17, "HEADLAMP : CONSULT Function (BCM - HEAD LAMP)".

AUTO LIGHT ADJUSTMENT SYSTEM

The auto light adjustment system automatically, dims/brightens the display, according to brightness outside the vehicle, when lighting switch 1ST, lighting switch 2ND or lighting switch AUTO is operated. Refer to INL-13, "AUTO LIGHT ADJUSTMENT SYSTEM : System Description".

DELAY TIMER FUNCTION

BCM turns the exterior lamp OFF depending on the vehicle condition with the auto light function when the power switch is turned OFF.

- Turns the exterior lamp OFF 5 minutes after detecting that any door opens. (Door switch ON).
- Turns the exterior lamp OFF a certain period of time* after closing all doors. (Door switch ON→OFF).
- Turns the exterior lamp OFF with the power switch ACC or the light switch OFF.

*: The preset time is 45 seconds. The timer operating time can be set by CONSULT. Refer to BCS-17, "HEADLAMP : CONSULT Function (BCM - HEAD LAMP)".

NOTE:

When any position other than the light switch AUTO is set, the auto light system function switches to the exterior lamp battery saver function.

FOG OVERRIDE FUNCTION

When front fog lamp switch is ON while power switch is in ON position and lighting switch is in AUTO position, BCM turns ON exterior lamps* regardless of outside brightness.

*: Headlamp (LO/HI), front fog lamp, parking lamp, license plate lamp, side marker lamp and tail lamp.

NOTE:

- Headlamp (HI) depending on the combination switch condition.
- Front fog light reminder warning is cancelled when fog override function is Off.

How to Set

With CONSULT

1. Turn power switch ON.
2. Select “INT LAMP” of “BCM” using CONSULT.
3. Select “FOG LAMP OVERRIDE” in “Work Support” mode.

Service item	Setting item	Setting
FOG LAMP OVERRIDE	On	With fog override function
	Off	Without fog override function

DAYTIME RUNNING LIGHT SYSTEM

DAYTIME RUNNING LIGHT SYSTEM : System Description

INFOID:0000000010634529

SYSTEM DIAGRAM

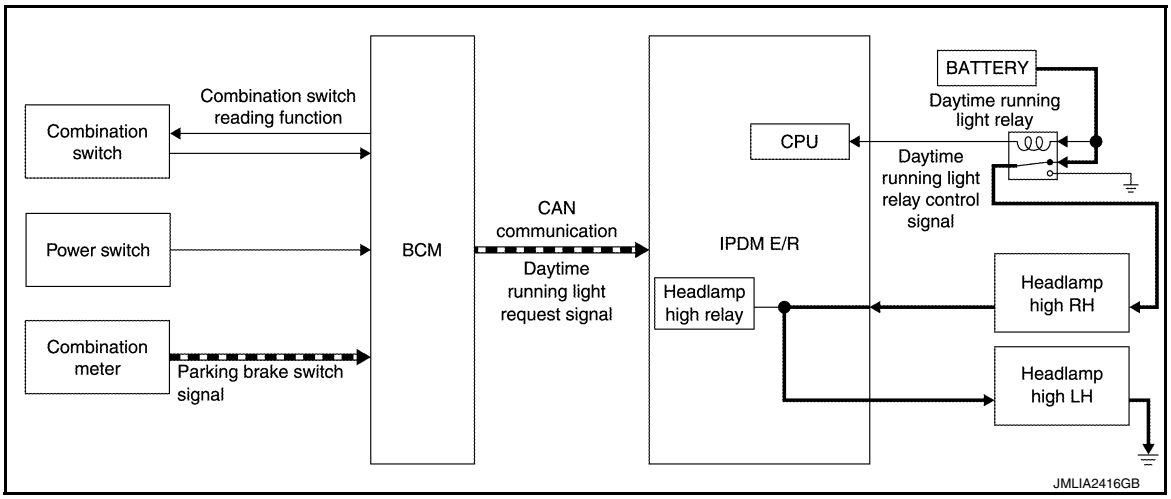

OUTLINE

- Turns the headlamp high ON (high beam at approximately half illumination) as the daytime running light.
- Daytime running light is controlled by daytime running light control function and combination switch reading function of BCM, and relay control function of IPDM E/R.

DAYTIME RUNNING LIGHT OPERATION

- BCM detects the combination switch condition by the combination switch reading function.
- BCM detects the vehicle condition according to power switch
- BCM detects the parking brake condition by the parking brake switch signal received from combination meter using CAN communication.
- BCM transmits the daytime running light request signal to IPDM E/R using CAN communication according to the daytime running light ON condition.

Daytime running light ON condition:
- Vehicle condition READY
- Lighting switch OFF or 1ST
- Lighting switch AUTO, and the auto light function OFF judgment
- Parking brake switch OFF

- IPDM E/R controls the daytime running light relay (ground-side) to turn ON according to the daytime running light request signal.
- Power is supplied from the daytime running light relay through headlamp high RH and IPDM E/R to headlamp high LH. And high beam headlamps are illuminated (approximately half illumination) as the daytime running light.

TURN SIGNAL AND HAZARD WARNING LAMP SYSTEM

TURN SIGNAL AND HAZARD WARNING LAMP SYSTEM : System Description

INFOID:0000000010634530

SYSTEM DIAGRAM

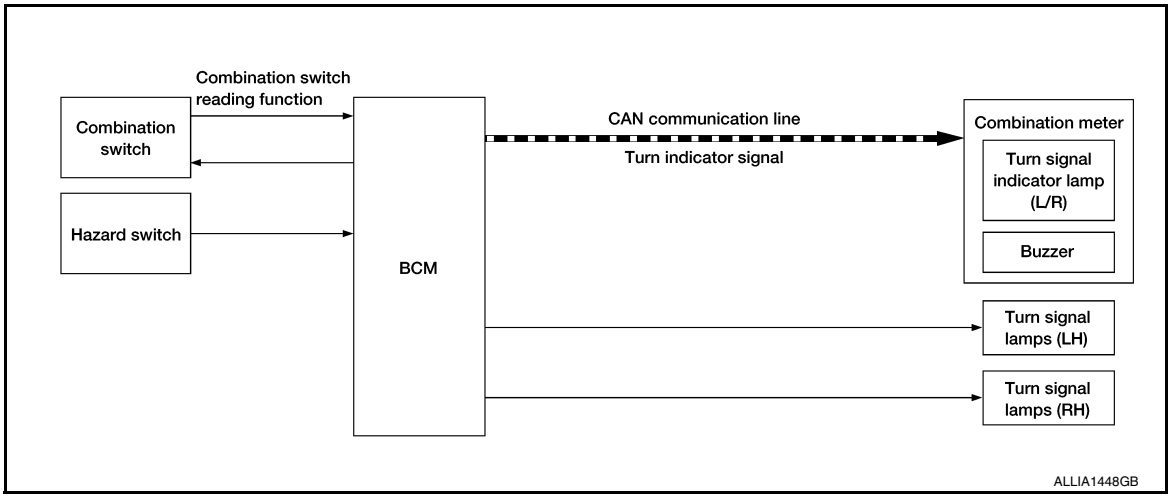

OUTLINE

Turn signal lamp and the hazard warning lamp is controlled by combination switch reading function and the flasher control function of BCM.

TURN SIGNAL LAMP OPERATION

- BCM detects the combination switch condition by the combination switch reading function.
- BCM supplies voltage to the right (left) turn signal lamp circuit when the power switch is ON and the turn signal switch is in the right (left) position. BCM blinks the turn signal lamp.

HAZARD WARNING LAMP OPERATION

BCM supplies voltage to both turn signal lamp circuit when the hazard switch is ON. BCM blinks the hazard warning lamp.

TURN SIGNAL INDICATOR LAMP AND TURN SIGNAL OPERATION

- BCM transmits the turn signal indicator lamp signal to the combination meter using CAN communication while the turn signal lamp and the hazard warning lamp are operating.
- Combination meter outputs the turn signal sound with the integrated buzzer while blinking the turn signal indicator lamp according to the turn signal indicator lamp signal.

3-TIME FLASH FUNCTION

- By a short touch of the turn signal lever, BCM blinks the turn signal 3 times in the selected direction.

- Cancels the operation when short touch of the turn signal lever in the reverse direction during the 3_time flasher function operation.

HIGH FLASHER OPERATION

- BCM detects the turn signal lamp circuit status from the current value.
- BCM increases the turn signal lamp blinking speed if the bulb or harness open is detected with the turn signal lamp operating.

NOTE:
The blinking speed is normal while operating the hazard warning lamp.

PARKING, LICENSE PLATE, SIDE MARKER AND TAIL LAMP SYSTEM

PARKING, LICENSE PLATE, SIDE MARKER AND TAIL LAMP SYSTEM : System Description

INFOID:0000000010634531

SYSTEM DIAGRAM

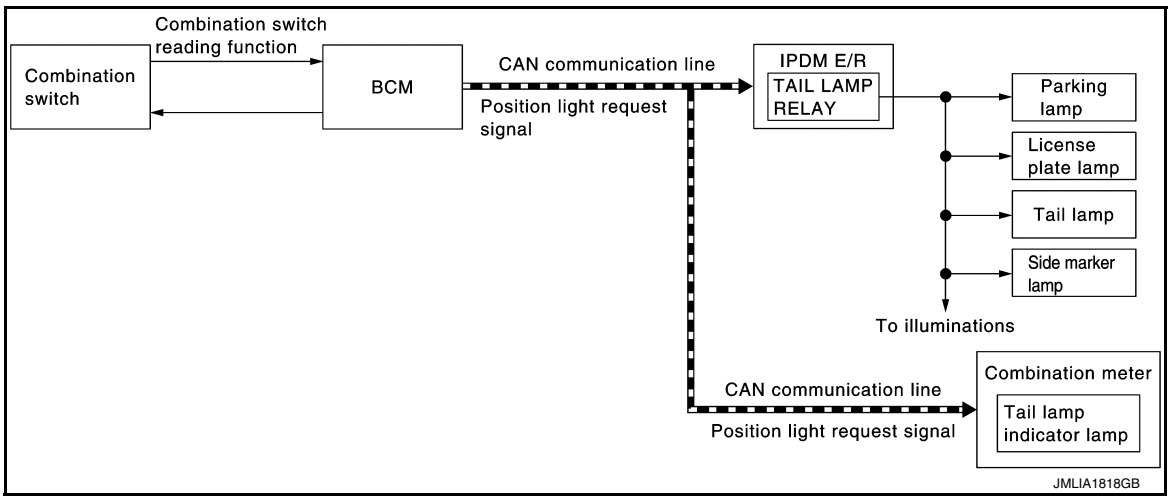

OUTLINE

Parking, license plate, side marker and tail lamps are controlled by combination switch reading function and headlamp control function of BCM, and relay control function of IPDM E/R.

PARKING, LICENSE PLATE, SIDE MARKER AND TAIL LAMPS OPERATION

- BCM detects the combination switch condition by the combination switch reading function.
- BCM transmits the position light request signal to IPDM E/R and the combination meter via CAN communication according to the ON/OFF condition of the parking, license plate, side marker and tail lamps.

Parking, license plate, side marker and tail lamps ON condition:
- Lighting switch 1ST
- Lighting switch 2ND
- Lighting switch AUTO, and the auto light function ON judgment
- Lighting switch AUTO, with the front fog lamp switch ON and the power switch ON

- IPDM E/R turns the integrated tail lamp relay ON and turns the parking, license plate, side marker and tail lamps ON according to the position light request signal.
- Combination meter turns the tail lamp indicator lamp ON according to the position light request signal.

PARKING, LICENSE PLATE, SIDE MARKER AND TAIL LAMP SYSTEM : Fail-Safe

INFOID:0000000010634532

CAN COMMUNICATION CONTROL

When CAN communication with BCM is impossible, IPDM E/R performs fail-safe control. After CAN communication recovers normally, it also returns to normal control.

If No CAN Communication Is Available With BCM

Control part	Fail-safe operation
• Parking lamp • License plate lamp • Illumination • Tail lamp • Side marker lamp	• Turns ON the tail lamp relay when the power switch is turned ON • Turns OFF the tail lamp relay when the power switch is turned OFF

FRONT FOG LAMP SYSTEM

FRONT FOG LAMP SYSTEM : System Description

INFOID:0000000010634533

SYSTEM DIAGRAM

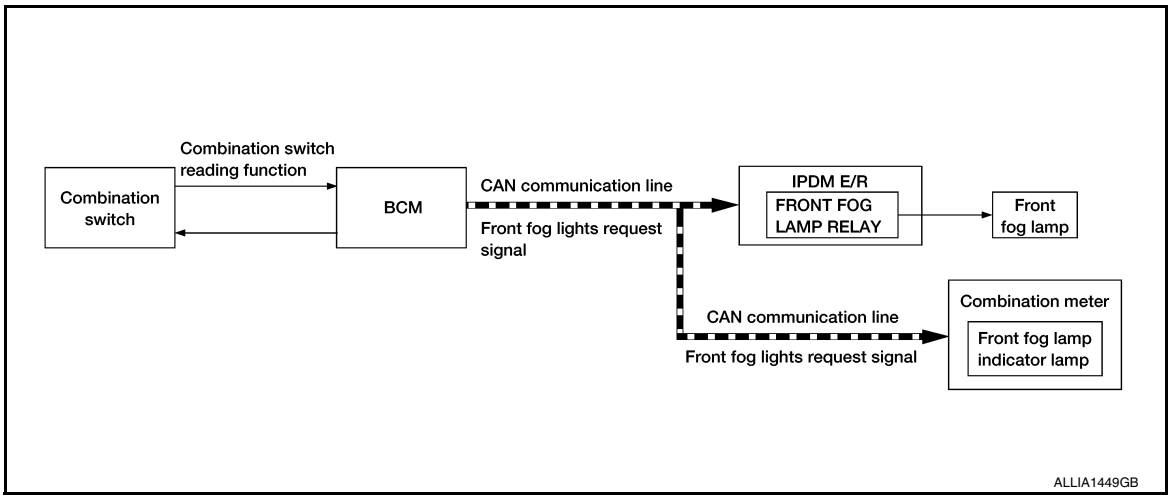

OUTLINE

Front fog lamp is controlled by combination switch reading function, front fog lamp control function of BCM, and relay control function of IPDM E/R.

FRONT FOG LAMP OPERATION

- BCM detects the combination switch condition by the combination switch reading function.
- BCM transmits the front fog lights request signal to IPDM E/R and the combination meter via CAN communication according to the front fog lamp ON condition.

Front fog lamp ON condition

- Front fog lamp switch ON, and any of the following condition is satisfied.(except for the high beam ON):
- Lighting switch 2ND
- Lighting switch AUTO and the power switch ON

IPDM E/R turns the integrated front fog lamp relay ON, and turns the front fog lamp ON according to the front fog lights request signal.
Combination meter turns the front fog lamp indicator lamp ON according to the front fog lights request signal.

FRONT FOG LAMP SYSTEM : Fail-Safe

INFOID:0000000010634534

CAN COMMUNICATION CONTROL

When CAN communication with BCM is impossible, IPDM E/R performs fail-safe control. After CAN communication recovers normally, it also returns to normal control.

If No CAN Communication Is Available With BCM

Control part	Fail-safe operation
Front fog lamp	Front fog lamp relay OFF

EXTERIOR LAMP BATTERY SAVER SYSTEM

EXTERIOR LAMP BATTERY SAVER SYSTEM : System Description

INFOID:0000000010634535

SYSTEM DIAGRAM

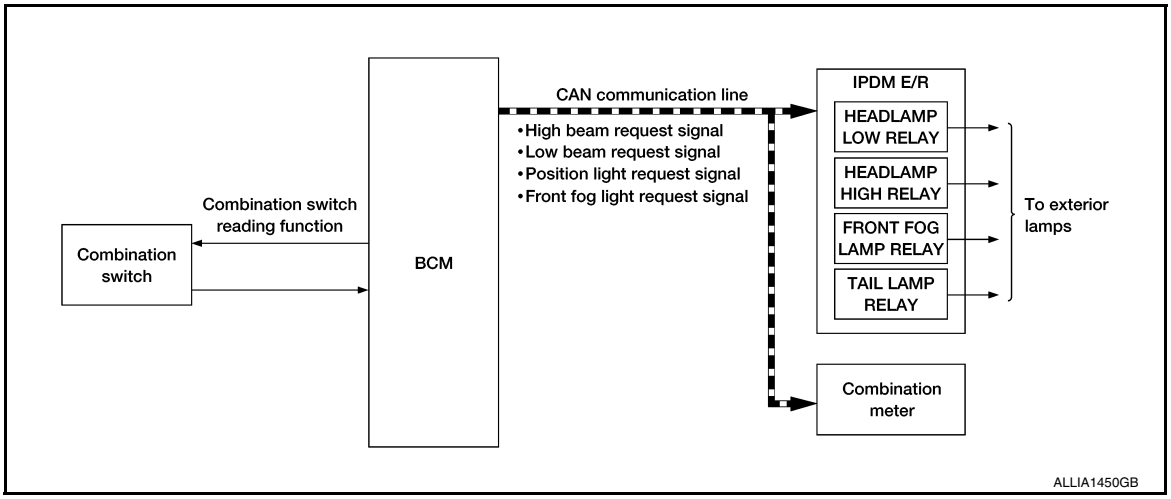

OUTLINE

- Exterior lamp battery saver system is controlled by each function of BCM and IPDM E/R.

Control by BCM:
- Combination switch reading function
- Headlamp control function
- Exterior lamp battery saver function

Control by IPDM E/R:
- Relay control function
- BCM turns the exterior lamps* OFF after a period of time to prevent the battery from over-discharge when the power switch is turned OFF with the exterior lamps ON.

*: Headlamp (LO/HI), parking lamp, tail lamp, side marker lamp, license plate lamp and front fog lamp

EXTERIOR LAMP BATTERY SAVER ACTIVATION

BCM activates the timer and turns the exterior lamp OFF 5 minutes after the power switch is turned from ON → OFF with the exterior lamps ON.

NOTE:
- Headlamp control function turns the exterior lamps ON normally when the power switch is turned ACC or set the vehicle to READY (both before and after the exterior lamp battery saver is turned OFF).
- The timer starts at the time that the lighting switch is turned from OFF → 1ST or 2ND with the exterior lamps OFF.

DIAGNOSIS SYSTEM (BCM)

COMMON ITEM

COMMON ITEM : CONSULT Function (BCM - COMMON ITEM)

INFOID:0000000010634536

APPLICATION ITEM

CONSULT performs the following functions via CAN communication with BCM.

Direct Diagnostic Mode	Description
Ecu Identification	The BCM part number is displayed.
Self Diagnostic Result	The BCM self diagnostic results are displayed.
Data Monitor	The BCM input/output data is displayed in real time.
Active Test	The BCM activates outputs to test components.
Work support	The settings for BCM functions can be changed.
Configuration	• The vehicle specification can be read and saved. • The vehicle specification can be written when replacing BCM.
CAN Diag Support Mntr	The result of transmit/receive diagnosis of CAN communication is displayed.

SYSTEM APPLICATION

BCM can perform the following functions.

System	Sub System	Direct Diagnostic Mode						
		Ecu Identification	Self Diagnostic Result	Data Monitor	Active Test	Work support	Configuration	CAN Diag Support Mntr
Door lock	DOOR LOCK		×	×	×	×		
Rear window defogger	REAR DEFOGGER			×	×			
Warning chime	BUZZER			×	×			
Interior room lamp timer	INT LAMP			×	×	×		
Exterior lamp	HEADLAMP			×	×	×		
Wiper and washer	WIPER			×	×	×		
Turn signal and hazard warning lamps	FLASHER			×	×	×		
Air conditioner	AIR CONDITIONER			×	×			
Intelligent Key system	INTELLIGENT KEY		×	×	×	×		
Combination switch	COMB SW			×				
BCM	BCM	×	×			×	×	×
Immobilizer	IMMU		×	×	×	×		
Interior room lamp battery saver	BATTERY SAVER			×	×	×		
Trunk open	TRUNK			×				
Vehicle security system	THEFT ALM			×	×	×		
RAP system	RETAINED PWR			×				
Signal buffer system	SIGNAL BUFFER			×				
TPMS	AIR PRESSURE MONITOR		×	×	×	×		

HEADLAMP

HEADLAMP : CONSULT Function (BCM - HEAD LAMP)

INFOID:0000000010634537

DATA MONITOR

Monitor Item [Unit]	Description
PUSH SW [On/Off]	Indicates condition of power switch.
ENGINE STATE [Stop/Stall/Crank/Run]	Indicates engine status received from ECM on CAN communication line.
VEH SPEED 1 [km/h]	Indicates vehicle speed signal received from ABS on CAN communication line.
TURN SIGNAL R [On/Off]	Indicates condition of combination switch.
TURN SIGNAL L [On/Off]	
TAIL LAMP SW [On/Off]	
HI BEAM SW [On/Off]	
HEAD LAMP SW 1 [On/Off]	
HEAD LAMP SW 2 [On/Off]	
PASSING SW [On/Off]	
AUTO LIGHT SW [On/Off]	
FR FOG SW [On/Off]	
DOOR SW-DR [On/Off]	Indicates condition of front door switch LH.
DOOR SW-AS [On/Off]	Indicates condition of front door switch RH.
DOOR SW-RR [On/Off]	Indicates condition of rear door switch RH.
DOOR SW-RL [On/Off]	Indicates condition of rear door switch LH.
DOOR SW-BK [On/Off]	Indicates condition of trunk switch.
OPTI SEN (DTCT) [V]	Indicates outside brightness voltage signal from optical sensor.
OPTI SEN (FILT) [V]	Indicates outside brightness voltage signal from optical sensor filtered by BCM.

ACTIVE TEST

Test Item	Description
FR FOG LAMP	This test is able to check front fog lamp operation [On/Off].
HEAD LAMP	This test is able to check headlamp operation [Off/Low/Hi].
ILL DIM SIGNAL	This test is able to check head lamp illumination dimming operation [On/Off].
TAIL LAMP	This test is able to check taillamp operation [Off/On].

WORK SUPPORT

Support Item	Setting	Description
AUTO LIGHT LOGIC SET	MODE6	Autolamp function OFF.
	MODE5	
	MODE4	
	MODE3	Autolamp function ON at twilight.
	MODE2	Autolamp function ON at twilight or with wiper LO and HI operation.
	MODE1*	Autolamp function ON at twilight or with wiper INT, LO and HI operation.
BATTERY SAVER SET	Off	Exterior lamp battery saver function OFF.
	On*	Exterior lamp battery saver function ON.

Support Item	Setting		Description
CUSTOM A/LIGHT SETTING	MODE4		Less sensitive than normal setting (turns ON later).
	MODE3		More sensitive than MODE2.
	MODE2		More sensitive than normal setting (turns ON earlier).
	MODE1*		Normal setting.
ILL DELAY SET	MODE 8	180 sec.	Autolamp delay timer operation time.
	MODE 7	150 sec.	
	MODE 6	120 sec.	
	MODE 4	90 sec.	
	MODE 5	60 sec.	
	MODE 3	30 sec.	
	MODE 2	OFF	
	MODE 1*	45 sec.	

*: Initial setting

FLASHER

FLASHER : CONSULT Function (BCM - FLASHER)

INFOID:0000000010634538

DATA MONITOR

Monitor Item [Unit]	Description
REQ SW -DR [On/Off]	Indicates condition of door request switch LH.
REQ SW -AS [On/Off]	Indicates condition of door request switch RH.
PUSH SW [On/Off]	Indicates condition of power switch.
TURN SIGNAL R [On/Off]	Indicates condition of turn signal function of combination switch.
TURN SIGNAL L [On/Off]	
HAZARD SW [On/Off]	Indicates condition of hazard switch.
RKE-LOCK [On/Off]	Indicates condition of lock signal from Intelligent Key.
RKE-UNLOCK [On/Off]	Indicates condition of unlock signal from Intelligent Key.
RKE-PANIC [On/Off]	Indicates condition of panic alarm signal from Intelligent Key.

ACTIVE TEST

Test Item	Description
FLASHER	This test is able to check turn signal lamp operation [Off/LH/RH].

WORK SUPPORT

Support Item	Setting	Description
HAZARD ANSWER BACK	Lock/Unlock	Hazard warning lamp answer back for LOCK and UNLOCK with request switch or Intelligent Key.
	Unlock Only	Hazard warning lamp answer back for UNLOCK only with request switch or Intelligent Key.
	Lock Only	Hazard warning lamp answer back for LOCK only with request switch or Intelligent Key.
	Off	Hazard warning lamp answer back OFF.

DIAGNOSIS SYSTEM (IPDM E/R)

Diagnosis Description

INFOID:0000000010634539

AUTO ACTIVE TEST

Description

In auto active test mode, the IPDM E/R sends a drive signal to the following systems to check their operation.

- Rear window defogger
- Front wiper motor
- Parking lamp
- License plate lamp
- Tail lamp
- Front fog lamp
- Side marker lamp
- Headlamp (LO, HI)

Operation Procedure

NOTE:

Never perform auto active test in the following conditions.

- CONSULT is connected.
- Passenger door is open.

1. Turn the power switch OFF.
2. Turn the power switch ON, and within 20 seconds, press the driver door switch 10 times. Then turn the power switch OFF.
3. Turn the power switch ON within 10 seconds. After that the horn sounds once and the auto active test starts.
   NOTE:
   Never depress brake pedal while operating power switch so that auto active test is not activated.
4. After a series of the following operations is repeated 3 times, auto active test is completed.

NOTE:

- When auto active test mode has to be cancelled halfway through test, turn the power switch OFF.
- When auto active test is not activated, door switch may be the cause. Check door switch. Refer to DLK-103, "Component Function Check".

Inspection in Auto Active Test Mode

When auto active test mode is actuated, the following operation sequence is repeated 3 times.

Operation sequence	Inspection location	Operation
1	Rear window defogger	10 seconds
2	Front wiper motor	LO for 5 seconds → HI for 5 seconds
3	• Parking lamp • License plate lamp • Tail lamp • Front fog lamp • Side marker lamp	10 seconds
4	Headlamp	LO for 10 seconds →HI ON ⇔ OFF 5 times

Concept of auto active test

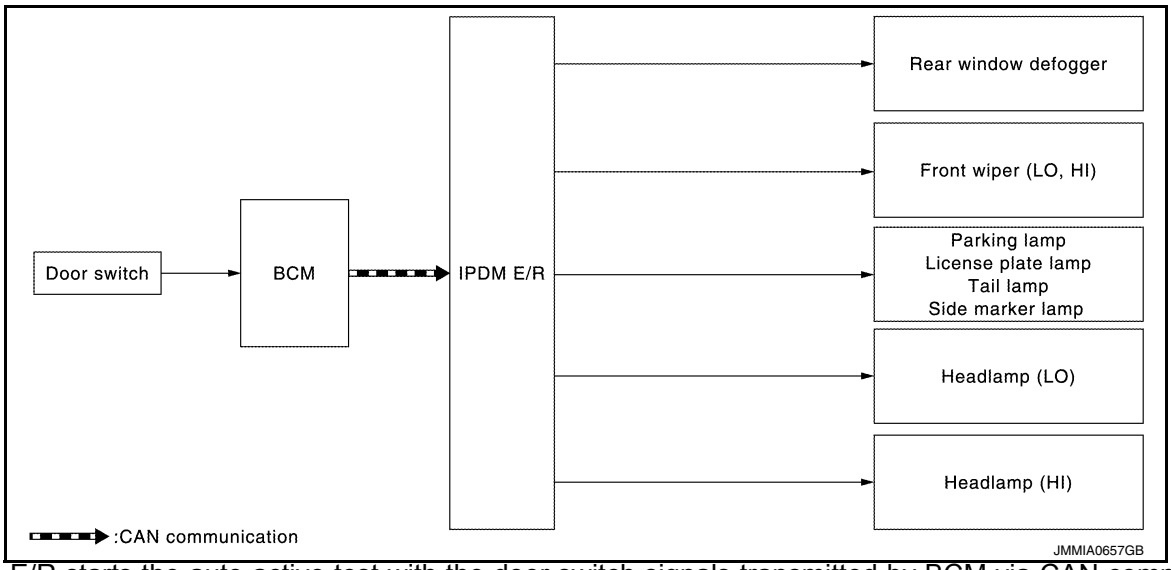

- IPDM E/R starts the auto active test with the door switch signals transmitted by BCM via CAN communication. Therefore, the CAN communication line between IPDM E/R and BCM is considered normal if the auto active test starts successfully.
- The auto active test facilitates troubleshooting if any systems controlled by IPDM E/R cannot be operated.

Diagnosis chart in auto active test mode

Symptom	Inspection contents		Possible cause
Rear window defogger does not operate	Perform auto active test. Does the rear window defogger operate?	YES	BCM signal input circuit
		NO	• Rear window defogger • Rear window defogger ground circuit • Harness or connector between IPDM E/R and rear window defogger • IPDM E/R
Any of the following components do not operate • Parking lamp • License plate lamp • Tail lamp • Front fog lamp • Headlamp (HI, LO) • Side marker lamp • Front wiper motor	Perform auto active test. Does the applicable system operate?	YES	BCM signal input circuit
		NO	• Lamp or motor • Lamp or motor ground circuit • Harness or connector between IPDM E/R and applicable system • IPDM E/R

CONSULT Function (IPDM E/R)

INFOID:0000000010634540

APPLICATION ITEM

CONSULT performs the following functions via CAN communication with IPDM E/R.

Direct Diagnostic Mode	Description
Ecu Identification	The IPDM E/R part number is displayed.
Self Diagnostic Result	The IPDM E/R self diagnostic results are displayed.
Data Monitor	The IPDM E/R input/output data is displayed in real time.
Active Test	The IPDM E/R activates outputs to test components.
CAN Diag Support Mntr	The result of transmit/receive diagnosis of CAN communication is displayed.

SELF DIAGNOSTIC RESULT

Refer to PCS-19, "DTC Index".

DATA MONITOR

Monitor Item [Unit]	Main Signals	Description
TAIL&CLR REQ [On/Off]	×	Indicates position light request signal received from BCM on CAN communication line
HL LO REQ [On/Off]	×	Indicates low beam request signal received from BCM on CAN communication line
HL HI REQ [On/Off]	×	Indicates high beam request signal received from BCM on CAN communication line
FR FOG REQ [On/Off]	×	Indicates front fog light request signal received from BCM on CAN communication line
FR WIP REQ [Stop/1LOW/Low/Hi]	×	Indicates front wiper request signal received from BCM on CAN communication line
WIP AUTO STOP [STOP P/ACT P]	×	Indicates condition of front wiper auto stop signal
WIP PROT [Off/BLOCK]	×	Indicates condition of front wiper fail-safe operation
IGN RLY1 -REQ [On/Off]		Indicates power switch ON signal received from BCM on CAN communication line
IGN RLY [On/Off]	×	Indicates condition of ignition relay-1
PUSH SW [On/Off]		Indicates condition of power switch
DETENT SW [On/Off]		Indicates condition of shift position (park position switch)
DTRL REQ [Off]		Indicates daytime light request signal received from BCM on CAN communication line
HOOD SW [On/Off]		Indicates condition of hood switch
THFT HRN REQ [On/Off]		Indicates theft warning horn request signal received from BCM on CAN communication line
HORN CHIRP [On/Off]		Indicates horn reminder signal received from BCM on CAN communication line

ACTIVE TEST

Test item	Description
HORN	This test is able to check horn operation [On].
REAR DEFOGGER	This test is able to check rear window defogger operation [On/Off].
FRONT WIPER	This test is able to check wiper motor operation [Hi/Lo/Off].
EXTERNAL LAMPS	This test is able to check external lamp operation [Fog/Hi/Lo/TAIL/Off].

CAN DIAG SUPPORT MNTR

Refer to LAN-14, "CAN Diagnostic Support Monitor".

ECU DIAGNOSIS INFORMATION

BCM, IPDM E/R

List of ECU Reference

INFOID:0000000010634541

ECU	Reference
BCM	BCS-28, "Reference Value"
	BCS-46, "Fail-safe"
	BCS-47, "DTC Inspection Priority Chart"
	BCS-48, "DTC Index"
IPDM E/R	PCS-15, "Reference Value"
	PCS-18, "Fail-Safe"
	PCS-19, "DTC Index"

WIRING DIAGRAM

HEADLAMP

Wiring Diagram

INFOID:0000000010634542

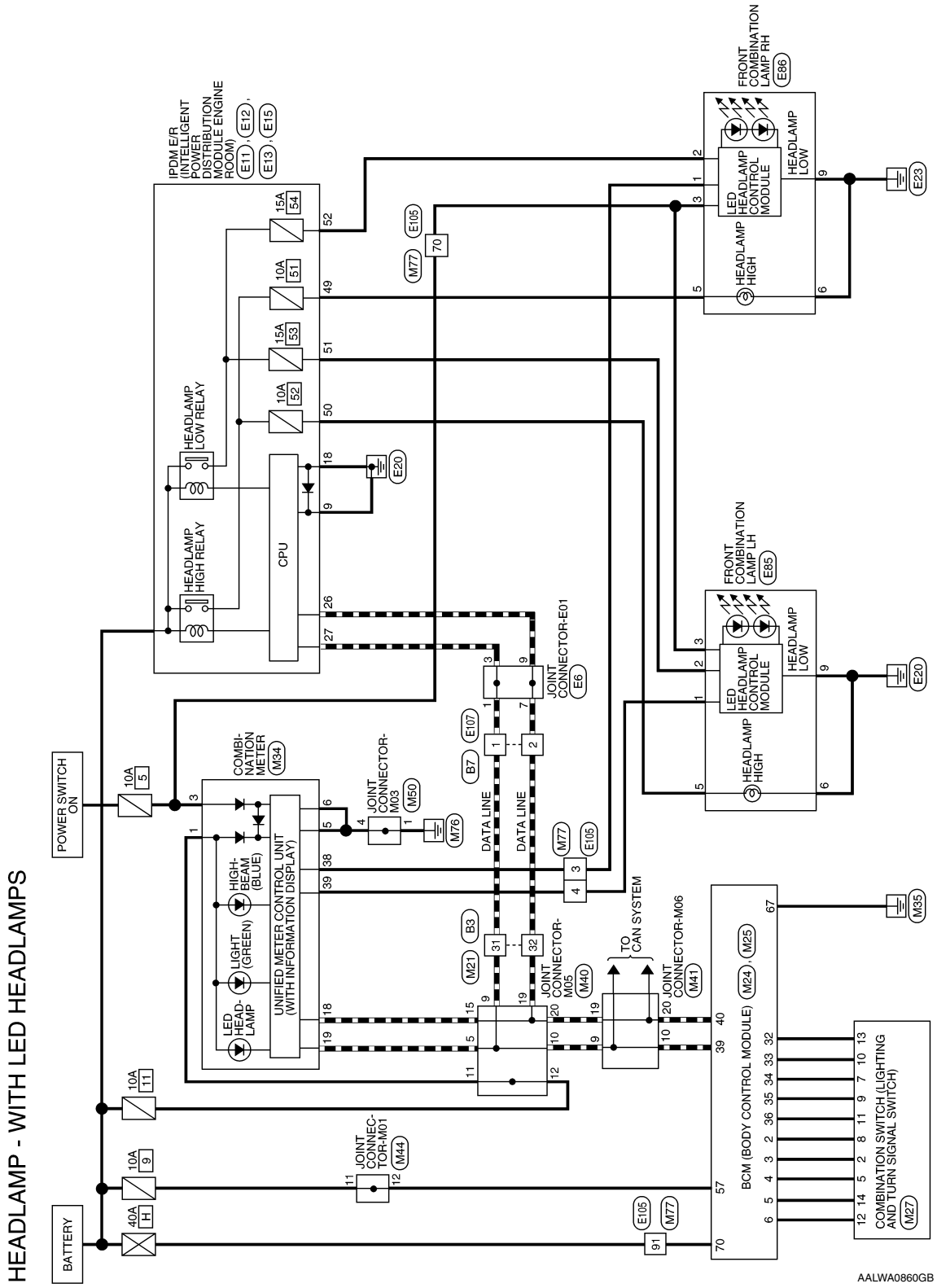

HEADLAMP - WITH LED HEADLAMPS CONNECTORS

Connector No.	M21
Connector Name	WIRE TO WIRE
Connector Color	WHITE

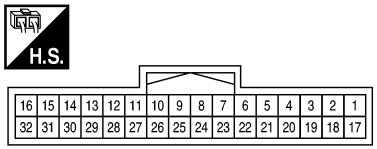

Terminal No.	Color of Wire	Signal Name
31	L	–
32	P	–

Connector No.	M24
Connector Name	BCM (BODY CONTROL MODULE)
Connector Color	BLACK

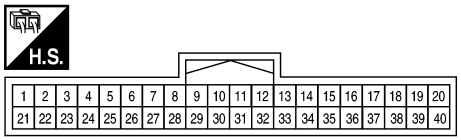

Terminal No.	Color of Wire	Signal Name
2	L	COMBINATION SW INPUT 5
3	GR	COMBINATION SW INPUT 4
4	BR	COMBINATION SW INPUT 3
5	G	COMBINATION SW INPUT 2
6	V	COMBINATION SW INPUT 1
32	GR	COMBINATION SW OUTPUT 5
33	Y	COMBINATION SW OUTPUT 4
34	W	COMBINATION SW OUTPUT 3
35	BG	COMBINATION SW OUTPUT 2
36	P	COMBINATION SW OUTPUT 1
39	L	CAN-H
40	P	CAN-L

Connector No.	M25
Connector Name	BCM (BODY CONTROL MODULE)
Connector Color	WHITE

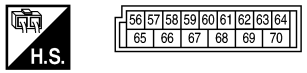

Terminal No.	Color of Wire	Signal Name
57	P	BATTERY (FUSE)
67	B	GND
70	Y	BATTERY (F/L)

Connector No.	M27
Connector Name	COMBINATION SWITCH
Connector Color	WHITE

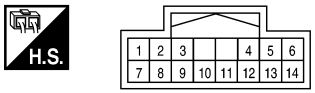

Terminal No.	Color of Wire	Signal Name
2	GR	–
5	BR	–
7	W	–
8	L	–
9	BG	–
10	Y	–
11	P	–
12	V	–
13	GR	–
14	G	–

Connector No.	M34
Connector Name	COMBINATION METER
Connector Color	WHITE

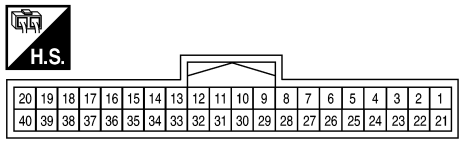

Terminal No.	Color of Wire	Signal Name
1	LG	BAT
3	GR	IGN
5	B	GND
6	B	GND
18	P	CAN-L
19	L	CAN-H
38	V	LED HEAD LAMP-R CUT SIG
39	LG	LED HEAD LAMP-L CUT SIG

AALIA2502GB

Connector No.	M40
Connector Name	JOINT CONNECTOR-M05
Connector Color	BLUE

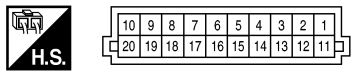

Terminal No.	Color of Wire	Signal Name
5	L	–
9	L	–
10	L	–
11	LG	–
12	LG	–
15	P	–
19	P	–
20	P	–

Connector No.	M41
Connector Name	JOINT CONNECTOR-M06
Connector Color	BLUE

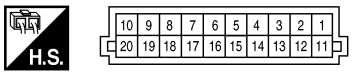

Terminal No.	Color of Wire	Signal Name
9	L	–
10	L	–
19	P	–
20	P	–

Connector No.	M44
Connector Name	JOINT CONNECTOR-M01
Connector Color	GRAY

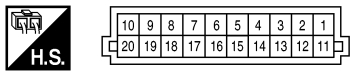

Terminal No.	Color of Wire	Signal Name
11	P	–
12	P	–

Connector No.	M50
Connector Name	JOINT CONNECTOR-M03
Connector Color	PINK

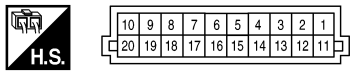

Terminal No.	Color of Wire	Signal Name
1	B	–
4	B	–

Connector No.	M77
Connector Name	WIRE TO WIRE
Connector Color	WHITE

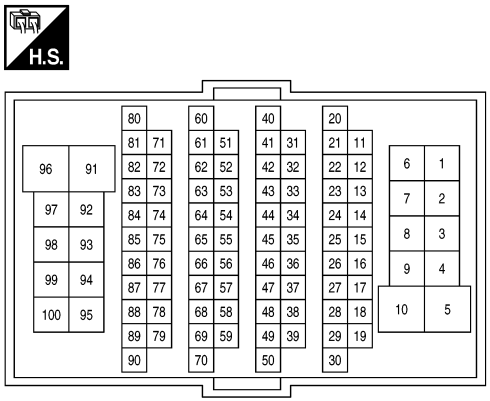

Terminal No.	Color of Wire	Signal Name
3	V	–
4	LG	–
70	GR	–
91	Y	–

AALIA2503GB

Connector No.	E6
Connector Name	JOINT CONNECTOR-E01
Connector Color	BLUE

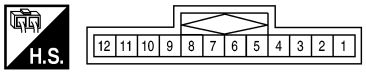

Terminal No.	Color of Wire	Signal Name
1	L	–
3	L	–
7	P	–
9	P	–

Connector No.	E11
Connector Name	IPDM E/R (INTELLIGENT POWER DISTRIBUTION MODULE ENGINE ROOM)
Connector Color	BLACK

Terminal No.	Color of Wire	Signal Name
9	B	POWER GROUND

Connector No.	E12
Connector Name	IPDM E/R (INTELLIGENT POWER DISTRIBUTION MODULE ENGINE ROOM)
Connector Color	BROWN

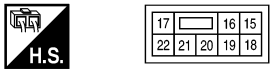

Terminal No.	Color of Wire	Signal Name
18	B/W	S GND

Connector No.	E13
Connector Name	IPDM E/R (INTELLIGENT POWER DISTRIBUTION MODULE ENGINE ROOM)
Connector Color	WHITE

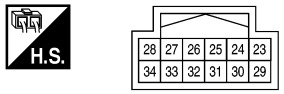

Terminal No.	Color of Wire	Signal Name
26	P	CAN-L
27	L	CAN-H

Connector No.	E15
Connector Name	IPDM E/R (INTELLIGENT POWER DISTRIBUTION MODULE ENGINE ROOM)
Connector Color	WHITE

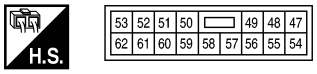

Terminal No.	Color of Wire	Signal Name
49	Y	H/LAMP HI RH
50	G	H/LAMP HI LH
51	L	H/LAMP LO LH
52	P	H/LAMP LO RH

Connector No.	E85
Connector Name	FRONT COMBINATION LAMP LH (WITH LED HEADLAMPS)
Connector Color	BLACK

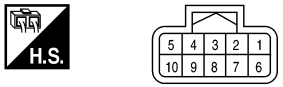

Terminal No.	Color of Wire	Signal Name
1	LG	–
2	L	–
3	BR	–
5	G	–
6	B/W	–
9	B/W	–

AALIA2504GB

Connector No.	E86
Connector Name	FRONT COMBINATION LAMP RH (WITH LED HEADLAMPS)
Connector Color	BLACK

H.S.

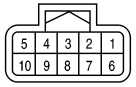

Terminal No.	Color of Wire	Signal Name
1	R	–
2	P	–
3	BR	–
5	Y	–
6	L	– (WITH DAYTIME RUNNING LIGHT)
6	B/Y	– (WITHOUT DAYTIME RUNNING LIGHT)
9	B/Y	–

Connector No.	E105
Connector Name	WIRE TO WIRE
Connector Color	WHITE

H.S.

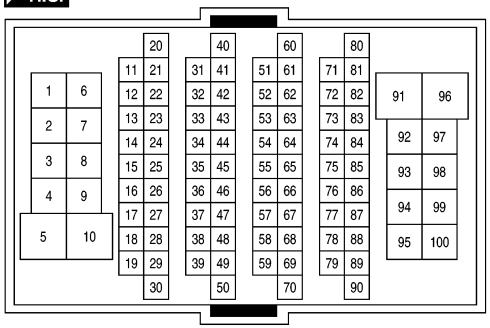

Terminal No.	Color of Wire	Signal Name
3	R	–
4	LG	–
70	BR	–
91	Y	–

Connector No.	E107
Connector Name	WIRE TO WIRE
Connector Color	WHITE

H.S.

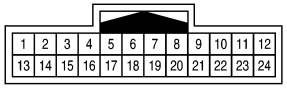

Terminal No.	Color of Wire	Signal Name
1	L	–
2	P	–

Connector No.	B3
Connector Name	WIRE TO WIRE
Connector Color	WHITE

H.S.

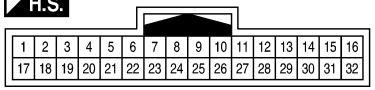

Terminal No.	Color of Wire	Signal Name
31	L	–
32	P	–

Connector No.	B7
Connector Name	WIRE TO WIRE
Connector Color	WHITE

H.S.

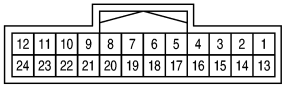

Terminal No.	Color of Wire	Signal Name
1	L	–
2	P	–

AALIA2505GB

DAYTIME LIGHT SYSTEM

Wiring Diagram

INFOID:0000000010634543

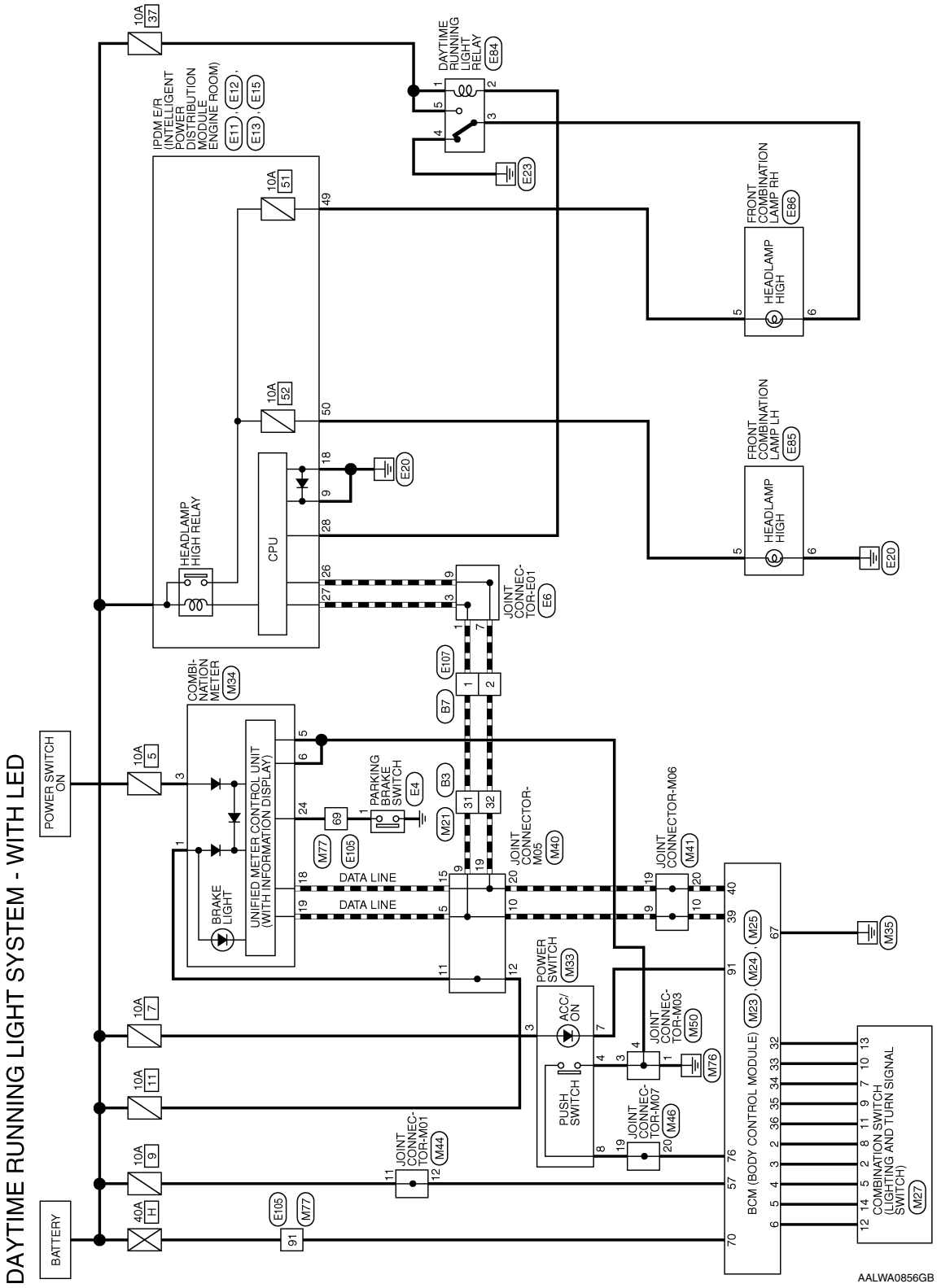

DAYTIME RUNNING LIGHT SYSTEM WITH LED CONNECTORS

Connector No.	M21
Connector Name	WIRE TO WIRE
Connector Color	WHITE

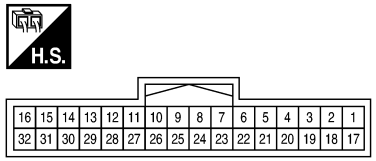

Terminal No.	Color of Wire	Signal Name
31	L	–
32	P	–

Connector No.	M23
Connector Name	BCM (BODY CONTROL MODULE)
Connector Color	WHITE

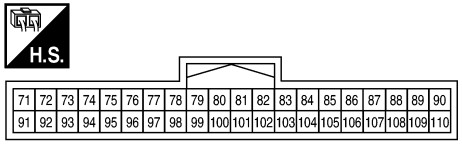

Terminal No.	Color of Wire	Signal Name
76	SB	ENG START SW
91	V	POWER POSITION LED

Connector No.	M24
Connector Name	BCM (BODY CONTROL MODULE)
Connector Color	BLACK

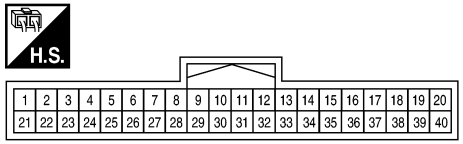

Terminal No.	Color of Wire	Signal Name
2	L	COMBINATION SW INPUT 5
3	GR	COMBINATION SW INPUT 4
4	BR	COMBINATION SW INPUT 3
5	G	COMBINATION SW INPUT 2
6	V	COMBINATION SW INPUT 1

Terminal No.	Color of Wire	Signal Name
32	GR	COMBINATION SW OUTPUT 5
33	Y	COMBINATION SW OUTPUT 4
34	W	COMBINATION SW OUTPUT 3
35	BG	COMBINATION SW OUTPUT 2
36	P	COMBINATION SW OUTPUT 1
39	L	CAN-H
40	P	CAN-L

Connector No.	M25
Connector Name	BCM (BODY CONTROL MODULE)
Connector Color	WHITE

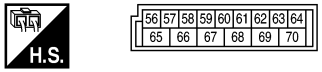

Terminal No.	Color of Wire	Signal Name
57	P	BATTERY (FUSE)
67	B	GND
70	Y	BATTERY (F/L)

AALIA2485GB

Connector No.	M27
Connector Name	COMBINATION SWITCH
Connector Color	WHITE

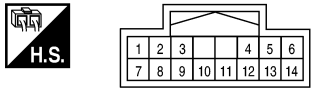

Terminal No.	Color of Wire	Signal Name
2	GR	–
5	BR	–
7	W	–
8	L	–
9	BG	–
10	Y	–
11	P	–
12	V	–
13	GR	–
14	G	–

Connector No.	M33
Connector Name	POWER SWITCH
Connector Color	WHITE

Terminal No.	Color of Wire	Signal Name
3	G	–
4	B	–
7	V	–
8	SB	–

Connector No.	M34
Connector Name	COMBINATION METER
Connector Color	WHITE

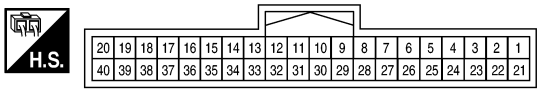

Terminal No.	Color of Wire	Signal Name
1	LG	BAT
3	GR	IGN
5	B	GND
6	B	GND
18	P	CAN-L
19	L	CAN-H
24	BG	E-PKB

Connector No.	M40
Connector Name	JOINT CONNECTOR-M05
Connector Color	BLUE

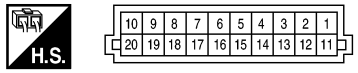

Terminal No.	Color of Wire	Signal Name
5	L	–
9	L	–
10	L	–
11	LG	–
12	LG	–
15	P	–
19	P	–
20	P	–

Connector No.	M41
Connector Name	JOINT CONNECTOR-M06
Connector Color	BLUE

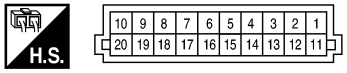

Terminal No.	Color of Wire	Signal Name
9	L	–
10	L	–
19	P	–
20	P	–

Connector No.	M44
Connector Name	JOINT CONNECTOR-M01
Connector Color	GRAY

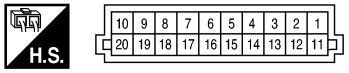

Terminal No.	Color of Wire	Signal Name
11	P	–
12	P	–

AALIA2486GB

Connector No.	M46
Connector Name	JOINT CONNECTOR-M07
Connector Color	ORANGE

H.S.

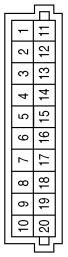

Terminal No.	Color of Wire	Signal Name
19	SB	–
20	SB	–

Connector No.	M50
Connector Name	JOINT CONNECTOR-M03
Connector Color	PINK

H.S.

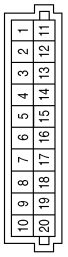

Terminal No.	Color of Wire	Signal Name
1	B	–
3	B	–
4	B	–

Connector No.	M77
Connector Name	WIRE TO WIRE
Connector Color	WHITE

H.S.

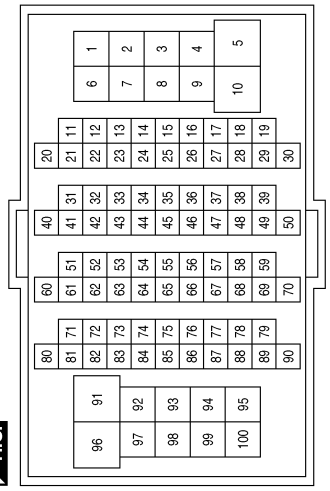

Terminal No.	Color of Wire	Signal Name
69	BG	–
91	Y	–

Connector No.	E4
Connector Name	PARKING BRAKE SWITCH
Connector Color	BLACK

H.S.

Terminal No.	Color of Wire	Signal Name
1	B	–

Connector No.	E6
Connector Name	JOINT CONNECTOR-E01
Connector Color	BLUE

H.S.

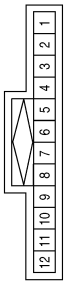

Terminal No.	Color of Wire	Signal Name
1	L	–
3	L	–
7	P	–
9	P	–

AALIA2487GB

Connector No.	E11
Connector Name	IPDM E/R (INTELLIGENT POWER DISTRIBUTION MODULE ENGINE ROOM)
Connector Color	BLACK

H.S.

Terminal No.	Color of Wire	Signal Name
9	B	POWER GROUND

Connector No.	E12
Connector Name	IPDM E/R (INTELLIGENT POWER DISTRIBUTION MODULE ENGINE ROOM)
Connector Color	BROWN

H.S.

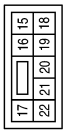

Terminal No.	Color of Wire	Signal Name
18	B/W	S GND

Connector No.	E13
Connector Name	IPDM E/R (INTELLIGENT POWER DISTRIBUTION MODULE ENGINE ROOM)
Connector Color	WHITE

H.S.

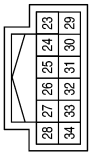

Terminal No.	Color of Wire	Signal Name
26	P	CAN-L
27	L	CAN-H
28	G	DTRL RLY

Connector No.	E15
Connector Name	IPDM E/R (INTELLIGENT POWER DISTRIBUTION MODULE ENGINE ROOM)
Connector Color	WHITE

H.S.

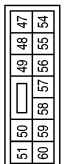

Terminal No.	Color of Wire	Signal Name
49	Y	H/LAMP HI RH
50	G	H/LAMP HI LH

Connector No.	E84
Connector Name	DAYTIME RUNNING LIGHT RELAY
Connector Color	BLACK

H.S.

Terminal No.	Color of Wire	Signal Name
1	LG	–
2	G	–
3	L	–
4	B/Y	–
5	LG	–

Connector No.	E85
Connector Name	FRONT COMBINATION LAMP LH (WITH LED HEADLAMPS)
Connector Color	BLACK

H.S.

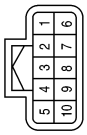

Terminal No.	Color of Wire	Signal Name
5	G	–
6	B/W	–

AALIA2488GB

Connector No.	E86
Connector Name	FRONT COMBINATION LAMP RH (WITH LED HEADLAMPS)
Connector Color	BLACK

H.S.

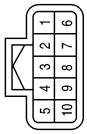

Terminal No.	Color of Wire	Signal Name
5	Y	–
6	L	–

Connector No.	E105
Connector Name	WIRE TO WIRE
Connector Color	WHITE

H.S.

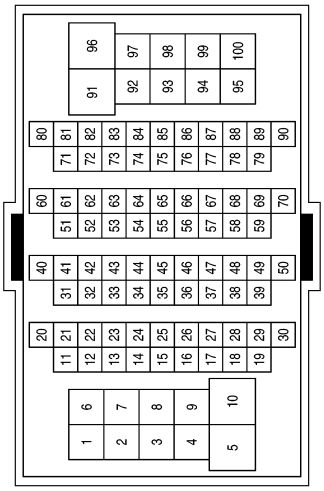

Terminal No.	Color of Wire	Signal Name
69	B	–
91	Y	–

Connector No.	E107
Connector Name	WIRE TO WIRE
Connector Color	WHITE

H.S.

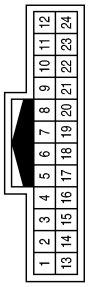

Terminal No.	Color of Wire	Signal Name
1	L	–
2	P	–

Connector No.	B3
Connector Name	WIRE TO WIRE
Connector Color	WHITE

H.S.

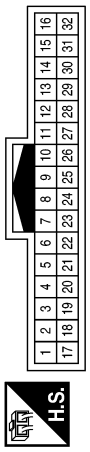

Terminal No.	Color of Wire	Signal Name
31	L	–
32	P	–

Connector No.	B7
Connector Name	WIRE TO WIRE
Connector Color	WHITE

H.S.

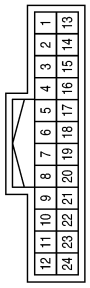

Terminal No.	Color of Wire	Signal Name
1	L	–
2	P	–

AALIA2489GB

AUTO LIGHT SYSTEM

Wiring Diagram

INFOID:0000000010634544

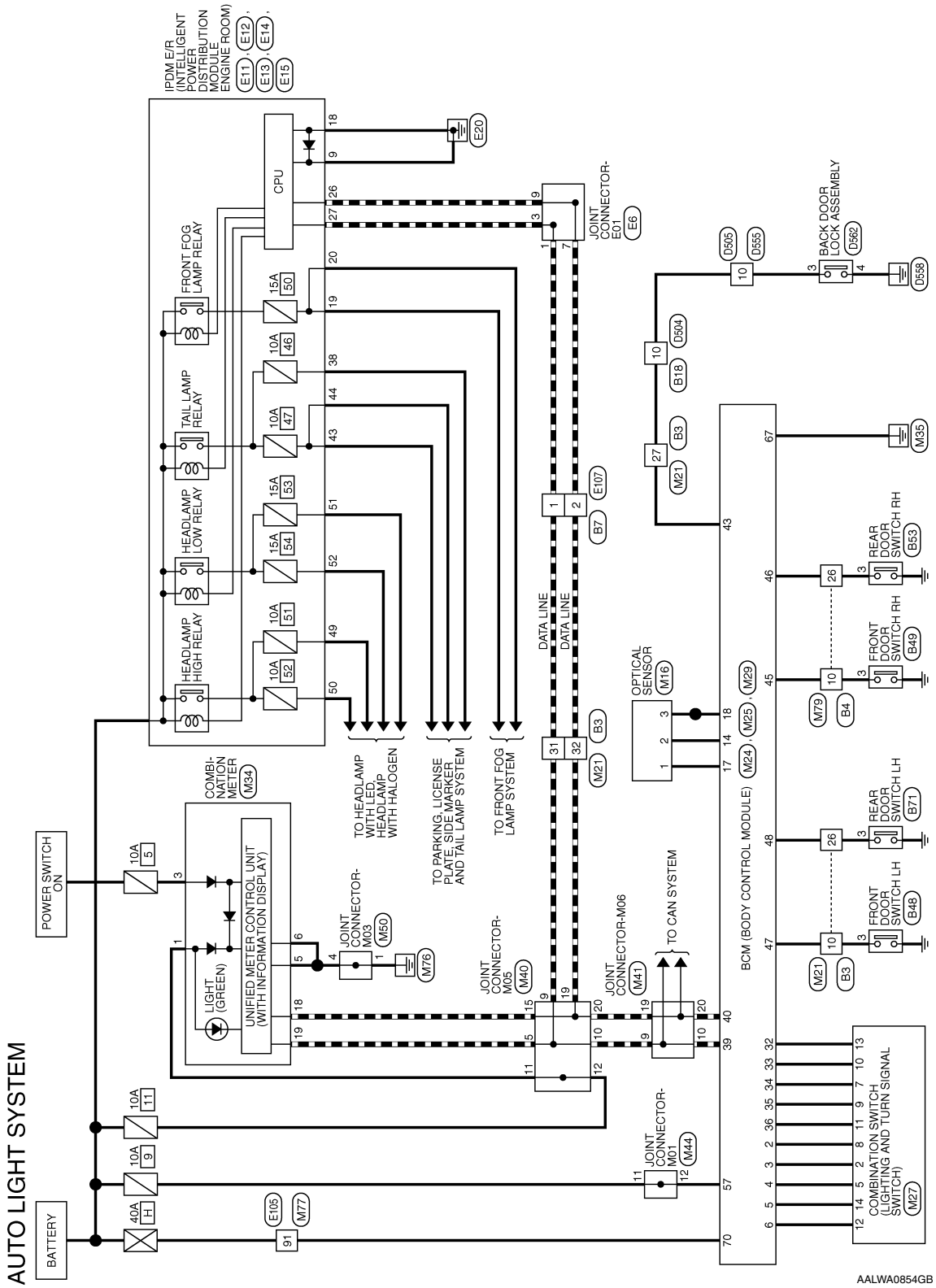

AUTO LIGHT SYSTEM CONNECTORS

Connector No.	M16
Connector Name	OPTICAL SENSOR
Connector Color	WHITE

Terminal No.	Color of Wire	Signal Name
1	Y	–
2	G	–
3	V	–

Connector No.	M21
Connector Name	WIRE TO WIRE
Connector Color	WHITE

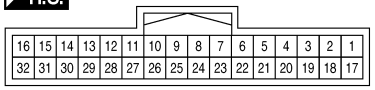

Terminal No.	Color of Wire	Signal Name
10	SB	–
26	W	–
27	Y	–
31	L	–
32	P	–

Connector No.	M24
Connector Name	BCM (BODY CONTROL MODULE)
Connector Color	BLACK

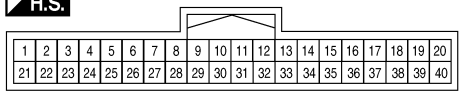

Terminal No.	Color of Wire	Signal Name
2	L	COMBINATION SW INPUT 5
3	GR	COMBINATION SW INPUT 4
4	BR	COMBINATION SW INPUT 3
5	G	COMBINATION SW INPUT 2
6	V	COMBINATION SW INPUT 1
14	G	AUTO LIGHT SENSOR INPUT
17	Y	AUTO LIGHT SENSOR POWER SUPPLY OUTPUT
18	L	KEYLESS TUNER, AUTO LIGHT SENSOR GND
32	GR	COMBINATION SW OUTPUT 5
33	Y	COMBINATION SW OUTPUT 4
34	W	COMBINATION SW OUTPUT 3
35	BG	COMBINATION SW OUTPUT 2
36	P	COMBINATION SW OUTPUT 1
39	L	CAN-H
40	P	CAN-L

Connector No.	M25
Connector Name	BCM (BODY CONTROL MODULE)
Connector Color	WHITE

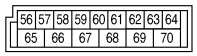

Terminal No.	Color of Wire	Signal Name
57	P	BATTERY (FUSE)
67	B	GND
70	Y	BATTERY (F/L)

AALIA2473GB

Connector No.	M27
Connector Name	COMBINATION SWITCH
Connector Color	WHITE

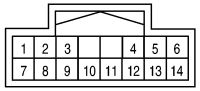

Terminal No.	Color of Wire	Signal Name
2	GR	–
5	BR	–
7	W	–
8	L	–
9	BG	–
10	Y	–
11	P	–
12	V	–
13	GR	–
14	G	–

Connector No.	M29
Connector Name	BCM (BODY CONTROL MODULE)
Connector Color	BLACK

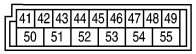

Terminal No.	Color of Wire	Signal Name
43	Y	DOOR SW (BACK)
45	BR	DOOR SW (AS)
46	R	DOOR SW (RR)
47	SB	DOOR SW (DR)
48	W	DOOR SW (RL)

Connector No.	M34
Connector Name	COMBINATION METER
Connector Color	WHITE

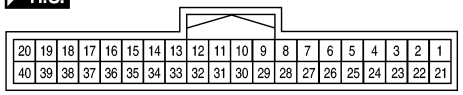

Terminal No.	Color of Wire	Signal Name
1	LG	BAT
3	GR	IGN
5	B	GND
6	B	GND
18	P	CAN-L
19	L	CAN-H

Connector No.	M40
Connector Name	JOINT CONNECTOR-M05
Connector Color	BLUE

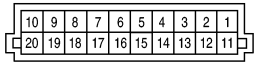

Terminal No.	Color of Wire	Signal Name
5	L	–
9	L	–

Terminal No.	Color of Wire	Signal Name
10	L	–
11	LG	–
12	LG	–
15	P	–
19	P	–
20	P	–

Connector No.	M41
Connector Name	JOINT CONNECTOR-M06
Connector Color	BLUE

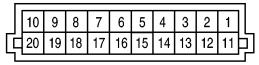

Terminal No.	Color of Wire	Signal Name
9	L	–
10	L	–
19	P	–
20	P	–

AALIA2474GB

Connector No.	M44
Connector Name	JOINT CONNECTOR-M01
Connector Color	GRAY

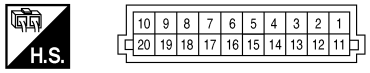

Terminal No.	Color of Wire	Signal Name
11	P	–
12	P	–

Connector No.	M50
Connector Name	JOINT CONNECTOR-M03
Connector Color	PINK

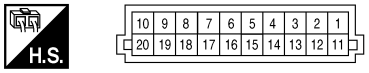

Terminal No.	Color of Wire	Signal Name
1	B	–
4	B	–

Connector No.	M77
Connector Name	WIRE TO WIRE
Connector Color	WHITE

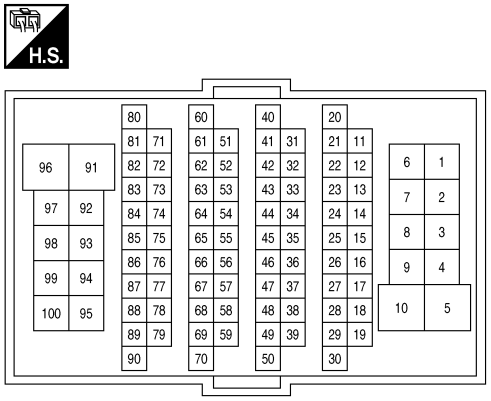

Terminal No.	Color of Wire	Signal Name
91	Y	–

Connector No.	M79
Connector Name	WIRE TO WIRE
Connector Color	WHITE

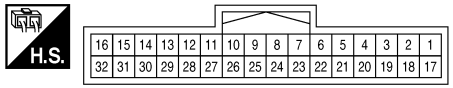

Terminal No.	Color of Wire	Signal Name
10	BR	–
26	R	–

Connector No.	E6
Connector Name	JOINT CONNECTOR-E01
Connector Color	BLUE

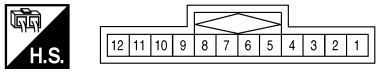

Terminal No.	Color of Wire	Signal Name
1	L	–
3	L	–
7	P	–
9	P	–

Connector No.	E11
Connector Name	IPDM E/R (INTELLIGENT POWER DISTRIBUTION MODULE ENGINE ROOM)
Connector Color	BLACK

Terminal No.	Color of Wire	Signal Name
9	B	POWER GROUND

AALIA2475GB

Connector No.	E12
Connector Name	IPDM E/R (INTELLIGENT POWER DISTRIBUTION MODULE ENGINE ROOM)
Connector Color	BROWN

Terminal No.	Color of Wire	Signal Name
18	B/W	S GND
19	W	FR FOG RH
20	V	FR FOG LH

Connector No.	E13
Connector Name	IPDM E/R (INTELLIGENT POWER DISTRIBUTION MODULE ENGINE ROOM)
Connector Color	WHITE

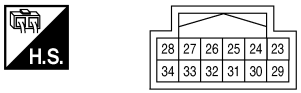

Terminal No.	Color of Wire	Signal Name
26	P	CAN-L
27	L	CAN-H

Connector No.	E14
Connector Name	IPDM E/R (INTELLIGENT POWER DISTRIBUTION MODULE ENGINE ROOM)
Connector Color	BROWN

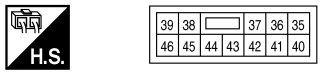

Terminal No.	Color of Wire	Signal Name
38	LG	TAIL 1 (WITHOUT SOLAR CELL)
38	R	TAIL 1 (WITH SOLAR CELL)
43	O	CLEARANCE/L LH
44	B	TAIL 2

Connector No.	E15
Connector Name	IPDM E/R (INTELLIGENT POWER DISTRIBUTION MODULE ENGINE ROOM)
Connector Color	WHITE

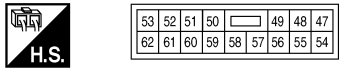

Terminal No.	Color of Wire	Signal Name
49	Y	H/LAMP HI RH
50	G	H/LAMP HI LH
51	L	H/LAMP LO LH
52	P	H/LAMP LO RH

Connector No.	E105
Connector Name	WIRE TO WIRE
Connector Color	WHITE

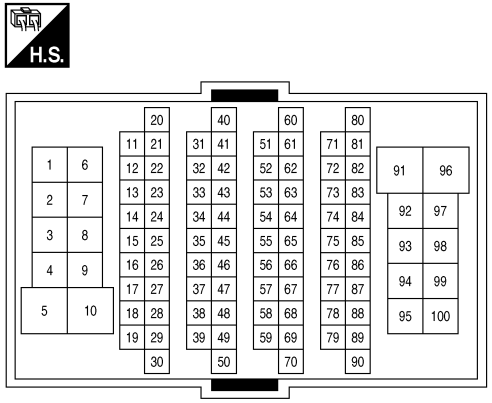

Terminal No.	Color of Wire	Signal Name
91	Y	–

AALIA2476GB

Connector No.	E107
Connector Name	WIRE TO WIRE
Connector Color	WHITE

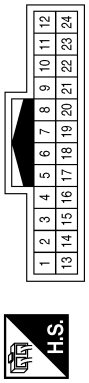

Terminal No.	Color of Wire	Signal Name
1	L	–
2	P	–

Connector No.	B3
Connector Name	WIRE TO WIRE
Connector Color	WHITE

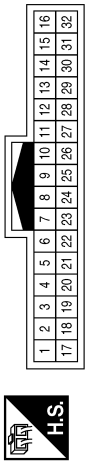

Terminal No.	Color of Wire	Signal Name
10	SB	–
26	LG	–
27	Y	–
31	L	–
32	P	–

Connector No.	B4
Connector Name	WIRE TO WIRE
Connector Color	WHITE

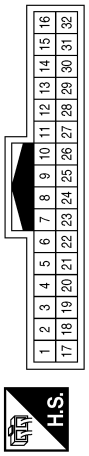

Terminal No.	Color of Wire	Signal Name
10	BR	–
26	R	–

Connector No.	B7
Connector Name	WIRE TO WIRE
Connector Color	WHITE

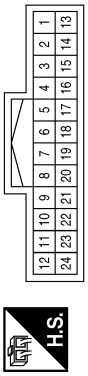

Terminal No.	Color of Wire	Signal Name
1	L	–
2	P	–

Connector No.	B18
Connector Name	WIRE TO WIRE
Connector Color	WHITE

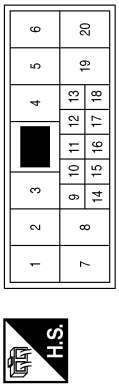

Terminal No.	Color of Wire	Signal Name
10	Y	–

Connector No.	B48
Connector Name	FRONT DOOR SWITCH LH
Connector Color	WHITE

Terminal No.	Color of Wire	Signal Name
3	SB	–

AALIA2477GB

Connector No.	B49
Connector Name	FRONT DOOR SWITCH RH
Connector Color	WHITE

H.S.

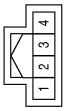

Terminal No.	Color of Wire	Signal Name
3	BR	–

Connector No.	B53
Connector Name	REAR DOOR SWITCH RH
Connector Color	WHITE

H.S.

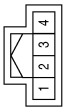

Terminal No.	Color of Wire	Signal Name
3	R	–

Connector No.	B71
Connector Name	REAR DOOR SWITCH LH
Connector Color	WHITE

H.S.

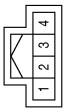

Terminal No.	Color of Wire	Signal Name
3	LG	–

Connector No.	D504
Connector Name	WIRE TO WIRE
Connector Color	WHITE

H.S.

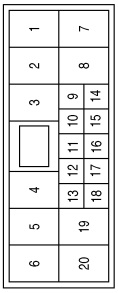

Terminal No.	Color of Wire	Signal Name
10	SB	–

Connector No.	D505
Connector Name	WIRE TO WIRE
Connector Color	WHITE

H.S.

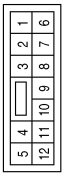

Terminal No.	Color of Wire	Signal Name
10	SB	–

Connector No.	D555
Connector Name	WIRE TO WIRE
Connector Color	WHITE

H.S.

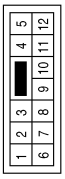

Terminal No.	Color of Wire	Signal Name
10	SB	–

AALIA2478GB

Connector No.	D562
Connector Name	BACK DOOR LOCK ASSEMBLY
Connector Color	WHITE

H.S.

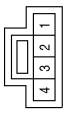

Terminal No.	Color of Wire	Signal Name
3	SB	–
4	B	–

AALIA2479GB

EXTERIOR LAMP BATTERY SAVER SYSTEM

Wiring Diagram

INFOID:0000000010634545

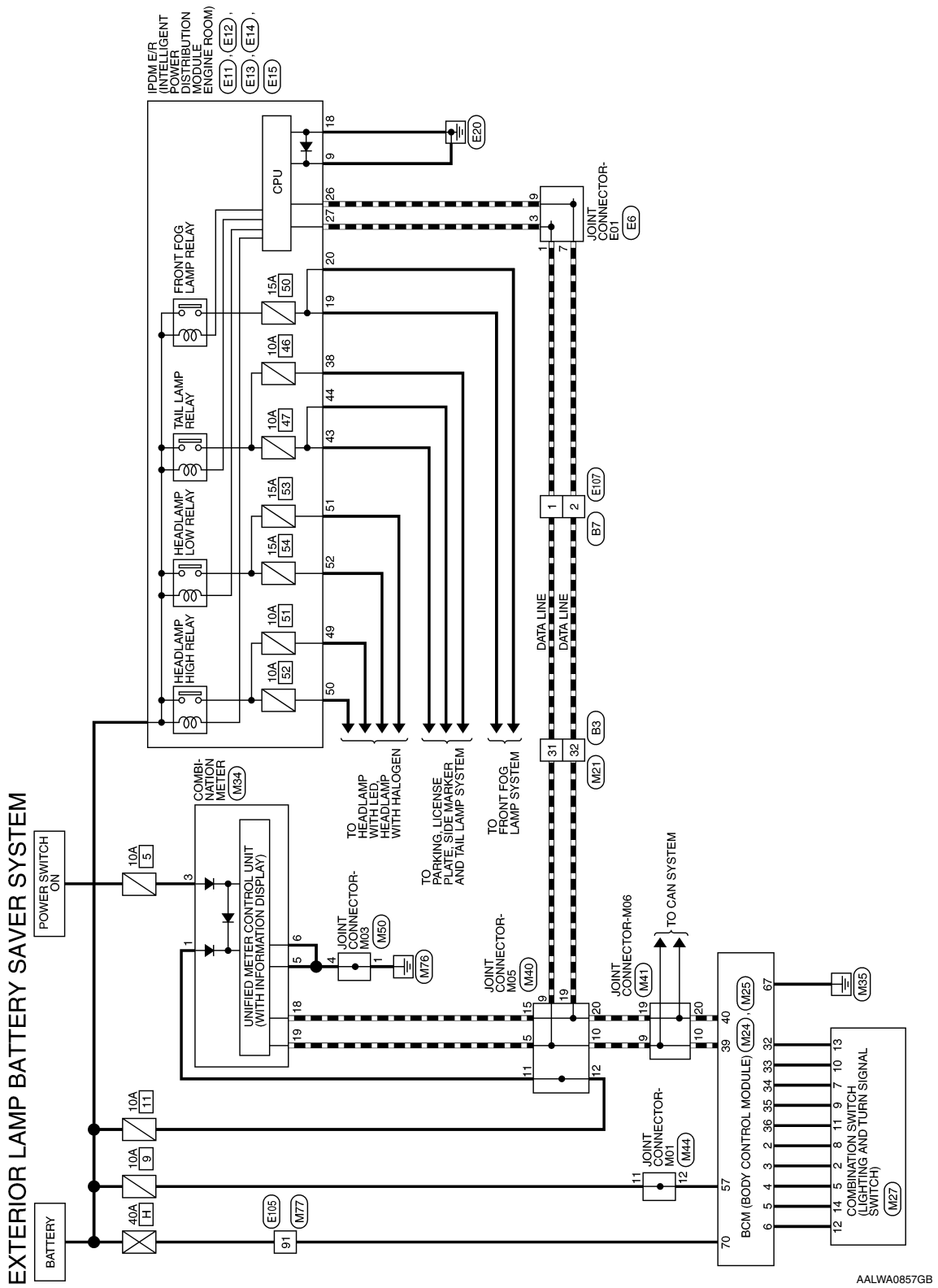

EXTERIOR LAMP BATTERY SAVER SYSTEM CONNECTORS

Connector No.	M21
Connector Name	WIRE TO WIRE
Connector Color	WHITE

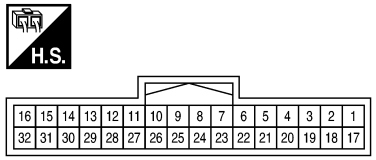

Terminal No.	Color of Wire	Signal Name
31	L	–
32	P	–

Connector No.	M24
Connector Name	BCM (BODY CONTROL MODULE)
Connector Color	BLACK

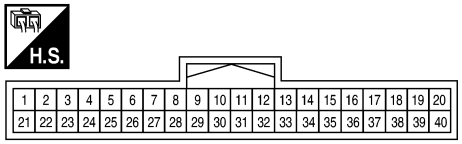

Terminal No.	Color of Wire	Signal Name
2	L	COMBINATION SW INPUT 5
3	GR	COMBINATION SW INPUT 4
4	BR	COMBINATION SW INPUT 3
5	G	COMBINATION SW INPUT 2
6	V	COMBINATION SW INPUT 1
32	GR	COMBINATION SW OUTPUT 5
33	Y	COMBINATION SW OUTPUT 4
34	W	COMBINATION SW OUTPUT 3
35	BG	COMBINATION SW OUTPUT 2
36	P	COMBINATION SW OUTPUT 1
39	L	CAN-H
40	P	CAN-L

Connector No.	M25
Connector Name	BCM (BODY CONTROL MODULE)
Connector Color	WHITE

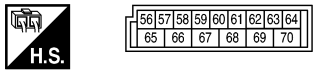

Terminal No.	Color of Wire	Signal Name
57	P	BATTERY (FUSE)
67	B	GND
70	Y	BATTERY (F/L)

Connector No.	M27
Connector Name	COMBINATION SWITCH
Connector Color	WHITE

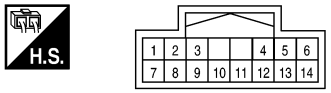

Terminal No.	Color of Wire	Signal Name
2	GR	–
5	BR	–
7	W	–

Terminal No.	Color of Wire	Signal Name
8	L	–
9	BG	–
10	Y	–
11	P	–
12	V	–
13	GR	–
14	G	–

AALIA2490GB

Connector No.	M34
Connector Name	COMBINATION METER
Connector Color	WHITE

H.S.

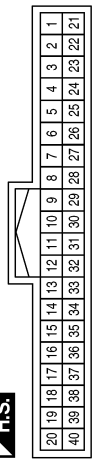

Terminal No.	Color of Wire	Signal Name
1	LG	BAT
3	GR	IGN
5	B	GND
6	B	GND
18	P	CAN-L
19	L	CAN-H

Connector No.	M40
Connector Name	JOINT CONNECTOR-M05
Connector Color	BLUE

H.S.

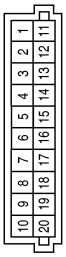

Terminal No.	Color of Wire	Signal Name
5	L	–
9	L	–
10	L	–
11	LG	–
12	LG	–
15	P	–
19	P	–
20	P	–

Connector No.	M41
Connector Name	JOINT CONNECTOR-M06
Connector Color	BLUE

H.S.

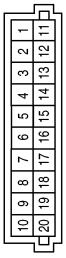

Terminal No.	Color of Wire	Signal Name
9	L	–
10	L	–
19	P	–
20	P	–

Connector No.	M44
Connector Name	JOINT CONNECTOR-M01
Connector Color	GRAY

H.S.

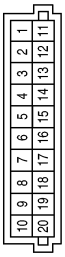

Terminal No.	Color of Wire	Signal Name
11	P	–
12	P	–

Connector No.	M50
Connector Name	JOINT CONNECTOR-M03
Connector Color	PINK

H.S.

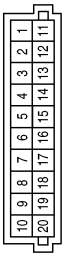

Terminal No.	Color of Wire	Signal Name
1	B	–
4	B	–

Connector No.	M77
Connector Name	WIRE TO WIRE
Connector Color	WHITE

H.S.

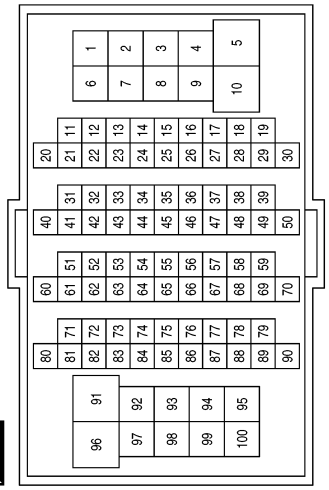

Terminal No.	Color of Wire	Signal Name
91	Y	–

AALIA2491GB

Connector No.	E6
Connector Name	JOINT CONNECTOR-E01
Connector Color	BLUE

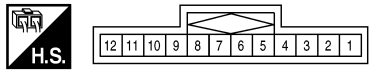

Terminal No.	Color of Wire	Signal Name
1	L	–
3	L	–
7	P	–
9	P	–

Connector No.	E11
Connector Name	IPDM E/R (INTELLIGENT POWER DISTRIBUTION MODULE ENGINE ROOM)
Connector Color	BLACK

Terminal No.	Color of Wire	Signal Name
9	B	POWER GROUND

Connector No.	E12
Connector Name	IPDM E/R (INTELLIGENT POWER DISTRIBUTION MODULE ENGINE ROOM)
Connector Color	BROWN

Terminal No.	Color of Wire	Signal Name
18	B/W	S GND
19	W	FR FOG RH
20	V	FR FOG LH

Connector No.	E13
Connector Name	IPDM E/R (INTELLIGENT POWER DISTRIBUTION MODULE ENGINE ROOM)
Connector Color	WHITE

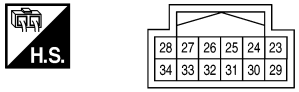

Terminal No.	Color of Wire	Signal Name
26	P	CAN-L
27	L	CAN-H

Connector No.	E14
Connector Name	IPDM E/R (INTELLIGENT POWER DISTRIBUTION MODULE ENGINE ROOM)
Connector Color	BROWN

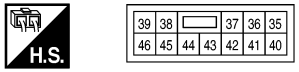

Terminal No.	Color of Wire	Signal Name
38	LG	TAIL 1 (WITHOUT SOLAR CELL)
38	R	TAIL 1 (WITH SOLAR CELL)
43	O	CLEARANCE/L LH
44	B	TAIL 2

Connector No.	E15
Connector Name	IPDM E/R (INTELLIGENT POWER DISTRIBUTION MODULE ENGINE ROOM)
Connector Color	WHITE

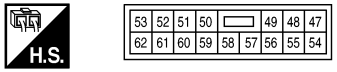

Terminal No.	Color of Wire	Signal Name
49	Y	H/LAMP HI RH
50	G	H/LAMP HI LH
51	L	H/LAMP LO LH
52	P	H/LAMP LO RH

AALIA2492GB

Connector No.	E105
Connector Name	WIRE TO WIRE
Connector Color	WHITE

H.S.

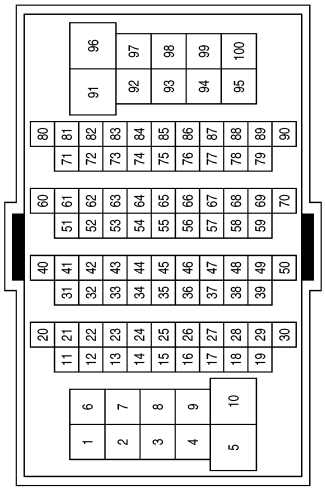

Terminal No.	Color of Wire	Signal Name
91	Y	–

Connector No.	E107
Connector Name	WIRE TO WIRE
Connector Color	WHITE

H.S.

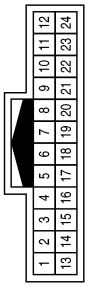

Terminal No.	Color of Wire	Signal Name
1	L	–
2	P	–

Connector No.	B3
Connector Name	WIRE TO WIRE
Connector Color	WHITE

H.S.

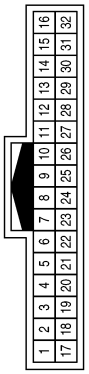

Terminal No.	Color of Wire	Signal Name
31	L	–
32	P	–

Connector No.	B7
Connector Name	WIRE TO WIRE
Connector Color	WHITE

H.S.

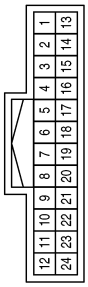

Terminal No.	Color of Wire	Signal Name
1	L	–
2	P	–

AALIA2493GB

FRONT FOG LAMP SYSTEM

Wiring Diagram

INFOID:0000000010634546

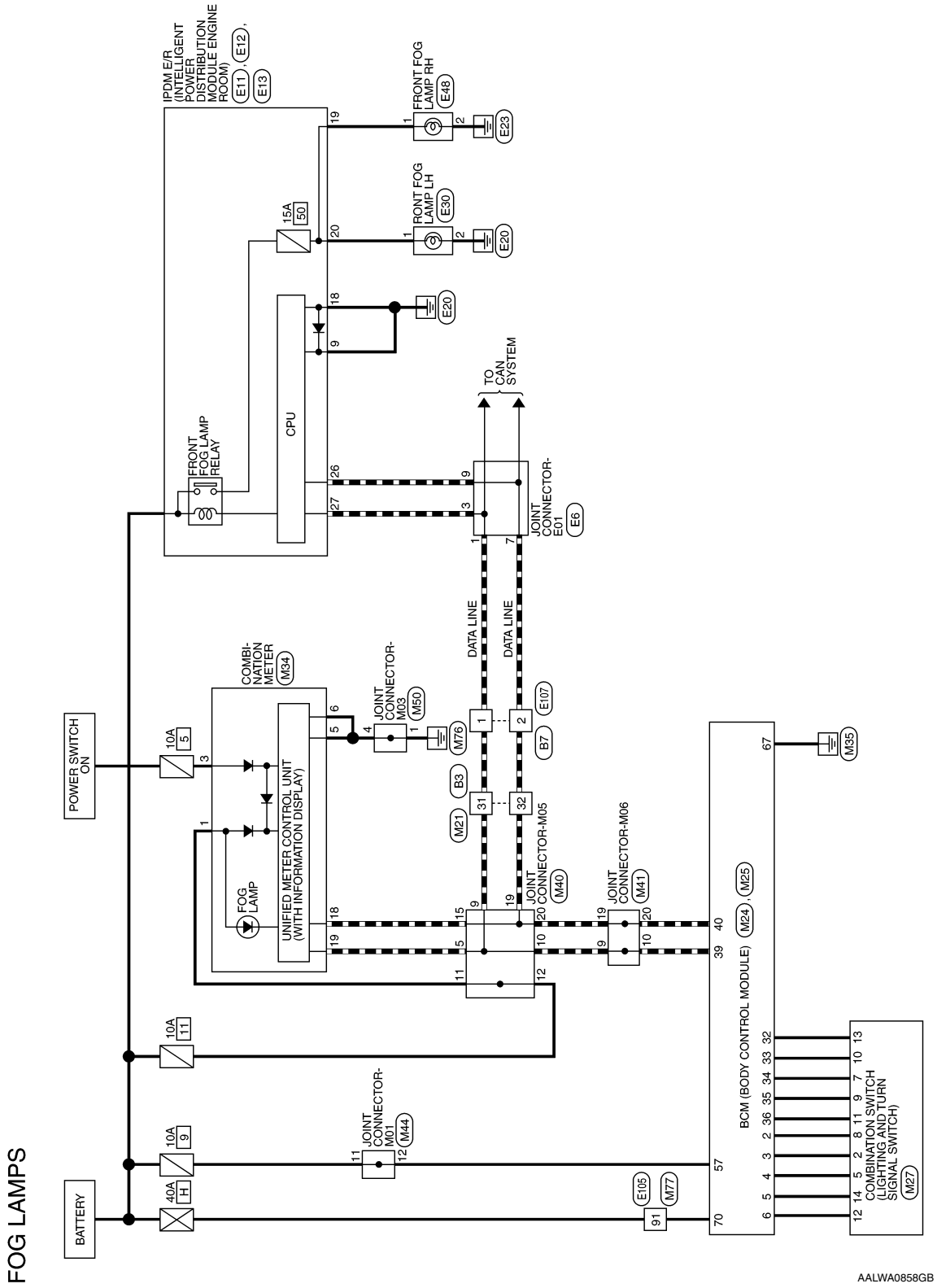

FOG LAMPS CONNECTORS

Connector No.	M21
Connector Name	WIRE TO WIRE
Connector Color	WHITE

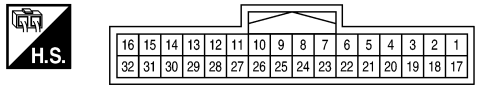

Terminal No.	Color of Wire	Signal Name
31	L	–
32	P	–

Connector No.	M24
Connector Name	BCM (BODY CONTROL MODULE)
Connector Color	BLACK

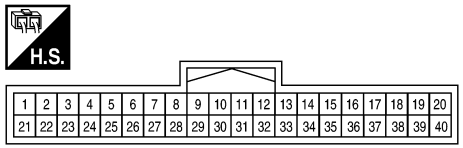

Terminal No.	Color of Wire	Signal Name
2	L	COMBINATION SW INPUT 5
3	GR	COMBINATION SW INPUT 4
4	BR	COMBINATION SW INPUT 3
5	G	COMBINATION SW INPUT 2
6	V	COMBINATION SW INPUT 1

Terminal No.	Color of Wire	Signal Name
32	GR	COMBINATION SW OUTPUT 5
33	Y	COMBINATION SW OUTPUT 4
34	W	COMBINATION SW OUTPUT 3
35	BG	COMBINATION SW OUTPUT 2
36	P	COMBINATION SW OUTPUT 1
39	L	CAN-H
40	P	CAN-L

Connector No.	M25
Connector Name	BCM (BODY CONTROL MODULE)
Connector Color	WHITE

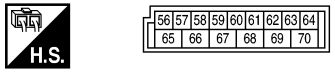

Terminal No.	Color of Wire	Signal Name
57	P	BATTERY (FUSE)
67	B	GND
70	Y	BATTERY (F/L)

Connector No.	M27
Connector Name	COMBINATION SWITCH
Connector Color	WHITE

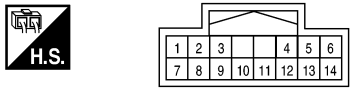

Terminal No.	Color of Wire	Signal Name
2	GR	–
5	BR	–
7	W	–
8	L	–

Terminal No.	Color of Wire	Signal Name
9	BG	–
10	Y	–
11	P	–
12	V	–
13	GR	–
14	G	–

AALIA2494GB

Connector No.	M34
Connector Name	COMBINATION METER
Connector Color	WHITE

H.S.

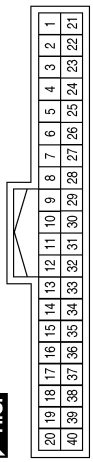

Terminal No.	Color of Wire	Signal Name
1	LG	BAT
3	GR	IGN
5	B	GND
6	B	GND
18	P	CAN-L
19	L	CAN-H

Connector No.	M40
Connector Name	JOINT CONNECTOR-M05
Connector Color	BLUE

H.S.

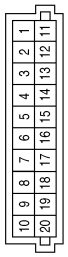

Terminal No.	Color of Wire	Signal Name
5	L	–
9	L	–
10	L	–
11	LG	–
12	LG	–
15	P	–
19	P	–
20	P	–

Connector No.	M41
Connector Name	JOINT CONNECTOR-M06
Connector Color	BLUE

H.S.

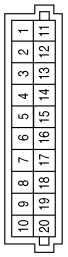

Terminal No.	Color of Wire	Signal Name
9	L	–
10	L	–
19	P	–
20	P	–

Connector No.	M44
Connector Name	JOINT CONNECTOR-M01
Connector Color	GRAY

H.S.

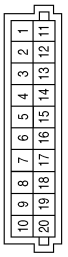

Terminal No.	Color of Wire	Signal Name
11	P	–
12	P	–

Connector No.	M50
Connector Name	JOINT CONNECTOR-M03
Connector Color	PINK

H.S.

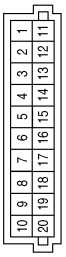

Terminal No.	Color of Wire	Signal Name
1	B	–
4	B	–

AALIA2495GB

Connector No.	M77
Connector Name	WIRE TO WIRE
Connector Color	WHITE

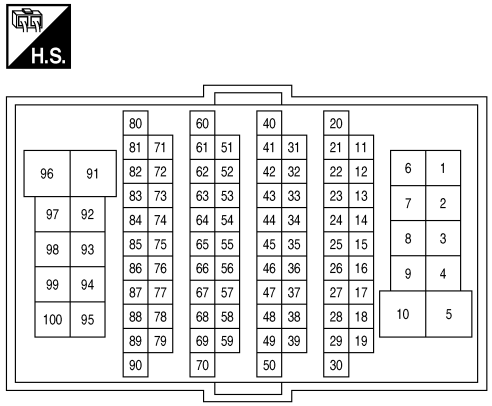

Terminal No.	Color of Wire	Signal Name
91	Y	–

Connector No.	E6
Connector Name	JOINT CONNECTOR-E01
Connector Color	BLUE

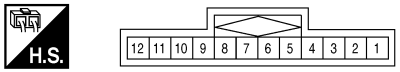

Terminal No.	Color of Wire	Signal Name
1	L	–
3	L	–
7	P	–
9	P	–

Connector No.	E11
Connector Name	IPDM E/R (INTELLIGENT POWER DISTRIBUTION MODULE ENGINE ROOM)
Connector Color	BLACK

Terminal No.	Color of Wire	Signal Name
9	B	POWER GROUND

Connector No.	E12
Connector Name	IPDM E/R (INTELLIGENT POWER DISTRIBUTION MODULE ENGINE ROOM)
Connector Color	BROWN

Terminal No.	Color of Wire	Signal Name
18	B/W	S GND
19	W	FR FOG RH
20	V	FR FOG LH

Connector No.	E13
Connector Name	IPDM E/R (INTELLIGENT POWER DISTRIBUTION MODULE ENGINE ROOM)
Connector Color	WHITE

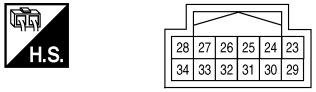

Terminal No.	Color of Wire	Signal Name
26	P	CAN-L
27	L	CAN-H

AALIA2496GB

Connector No.	E30
Connector Name	FRONT FOG LAMP LH
Connector Color	BLACK

H.S.

Terminal No.	Color of Wire	Signal Name
1	V	–
2	B/W	–

Connector No.	E48
Connector Name	FRONT FOG LAMP RH
Connector Color	BLACK

H.S.

Terminal No.	Color of Wire	Signal Name
1	W	–
2	B/Y	–

Connector No.	E105
Connector Name	WIRE TO WIRE
Connector Color	WHITE

H.S.

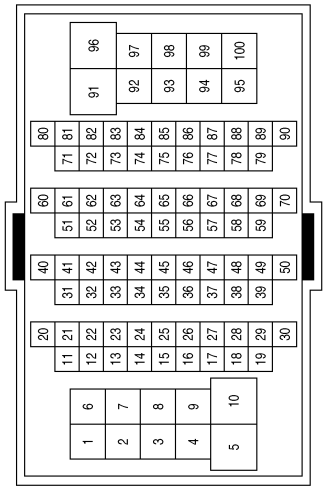

Terminal No.	Color of Wire	Signal Name
91	T	–

Connector No.	E107
Connector Name	WIRE TO WIRE
Connector Color	WHITE

H.S.

Terminal No.	Color of Wire	Signal Name
1	L	–
2	P	–

Connector No.	B3
Connector Name	WIRE TO WIRE
Connector Color	WHITE

H.S.

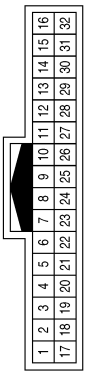

Terminal No.	Color of Wire	Signal Name
31	L	–
32	P	–

Connector No.	B7
Connector Name	WIRE TO WIRE
Connector Color	WHITE

H.S.

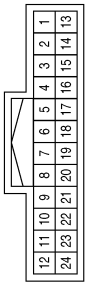

Terminal No.	Color of Wire	Signal Name
1	L	–
2	P	–

AALIA2497GB

TURN SIGNAL AND HAZARD WARNING LAMP SYSTEM

Wiring Diagram

INFOID:0000000010634547

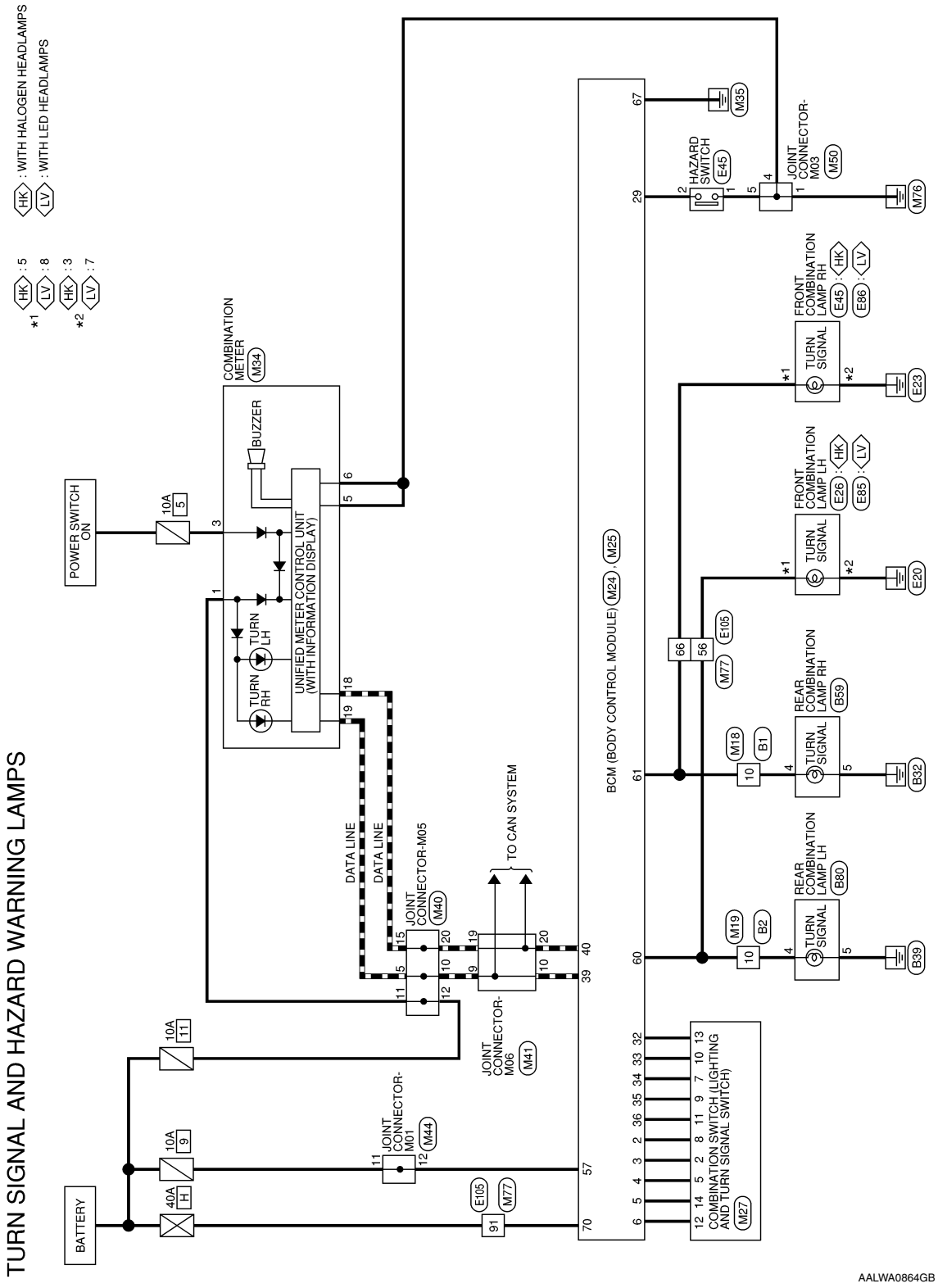

TURN SIGNAL AND HAZARD WARNING LAMPS CONNECTORS

Connector No.	M18
Connector Name	WIRE TO WIRE
Connector Color	WHITE

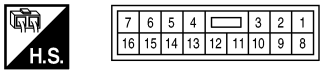

Terminal No.	Color of Wire	Signal Name
10	R	–

Connector No.	M19
Connector Name	WIRE TO WIRE
Connector Color	WHITE

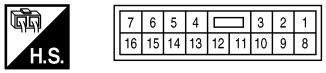

Terminal No.	Color of Wire	Signal Name
10	V	–

Connector No.	M24
Connector Name	BCM (BODY CONTROL MODULE)
Connector Color	BLACK

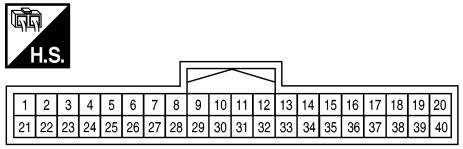

Terminal No.	Color of Wire	Signal Name
2	L	COMBINATION SW INPUT 5
3	GR	COMBINATION SW INPUT 4
4	BR	COMBINATION SW INPUT 3
5	G	COMBINATION SW INPUT 2
6	V	COMBINATION SW INPUT 1
29	G	HAZARD SW
32	GR	COMBINATION SW OUTPUT 5
33	Y	COMBINATION SW OUTPUT 4
34	W	COMBINATION SW OUTPUT 3
35	BG	COMBINATION SW OUTPUT 2
36	P	COMBINATION SW OUTPUT 1
39	L	CAN-H
40	P	CAN-L

Connector No.	M25
Connector Name	BCM (BODY CONTROL MODULE)
Connector Color	WHITE

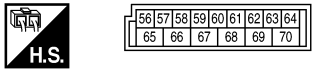

Terminal No.	Color of Wire	Signal Name
57	P	BATTERY (FUSE)
60	V	FLASHER OUTPUT (LEFT)
61	R	FLASHER OUTPUT (RIGHT)
67	B	GND
70	Y	BATTERY (F/L)

AALIA2516GB

Connector No.	M27
Connector Name	COMBINATION SWITCH
Connector Color	WHITE

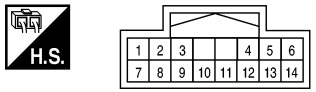

Terminal No.	Color of Wire	Signal Name
2	GR	–
5	BR	–
7	W	–
8	L	–
9	BG	–
10	Y	–
11	P	–
12	V	–
13	GR	–
14	G	–

Connector No.	M34
Connector Name	COMBINATION METER
Connector Color	WHITE

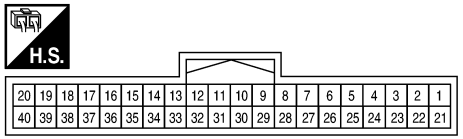

Terminal No.	Color of Wire	Signal Name
1	LG	BAT
3	GR	IGN
5	B	GND
6	B	GND
18	P	CAN-L
19	L	CAN-H

Connector No.	M40
Connector Name	JOINT CONNECTOR-M05
Connector Color	BLUE

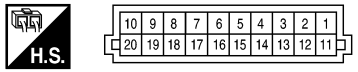

Terminal No.	Color of Wire	Signal Name
5	L	–
9	L	–
10	L	–
11	LG	–
12	LG	–
15	P	–
19	P	–
20	P	–

Connector No.	M41
Connector Name	JOINT CONNECTOR-M06
Connector Color	BLUE

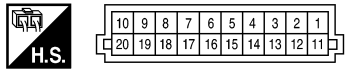

Terminal No.	Color of Wire	Signal Name
9	L	–
10	L	–
19	P	–
20	P	–

Connector No.	M44
Connector Name	JOINT CONNECTOR-M01
Connector Color	GRAY

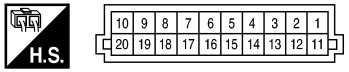

Terminal No.	Color of Wire	Signal Name
11	P	–
12	P	–

Connector No.	M45
Connector Name	HAZARD SWITCH
Connector Color	WHITE

Terminal No.	Color of Wire	Signal Name
1	B	–
2	G	–

AALIA2517GB

Connector No.	M50
Connector Name	JOINT CONNECTOR-M03
Connector Color	PINK

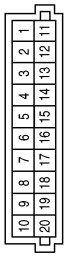

Terminal No.	Color of Wire	Signal Name
1	B	–
4	B	–
5	B	–

Connector No.	M77
Connector Name	WIRE TO WIRE
Connector Color	WHITE

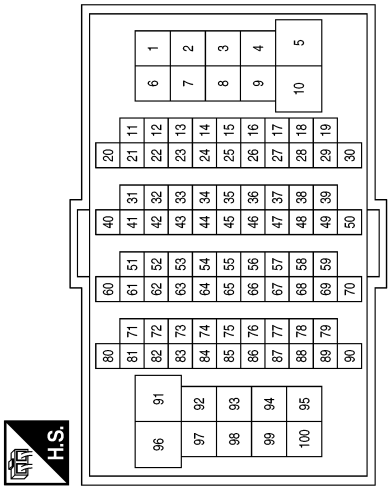

Terminal No.	Color of Wire	Signal Name
56	V	–
66	LG	–
91	Y	–

Connector No.	E26
Connector Name	FRONT COMBINATION LAMP LH (WITH HALOGEN HEADLAMPS)
Connector Color	GRAY

Terminal No.	Color of Wire	Signal Name
3	B/W	–
5	Y	–

Connector No.	E45
Connector Name	FRONT COMBINATION LAMP RH (WITH HALOGEN HEADLAMPS)
Connector Color	GRAY

Terminal No.	Color of Wire	Signal Name
3	B/Y	–
5	G	–

Connector No.	E85
Connector Name	FRONT COMBINATION LAMP LH (WITH LED HEADLAMPS)
Connector Color	BLACK

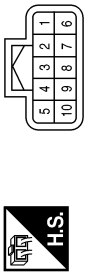

Terminal No.	Color of Wire	Signal Name
7	B/W	–
8	Y	–

Connector No.	E86
Connector Name	FRONT COMBINATION LAMP RH (WITH LED HEADLAMPS)
Connector Color	BLACK

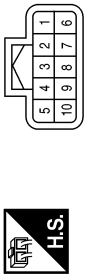

Terminal No.	Color of Wire	Signal Name
7	B/Y	–
8	G	–

AALIA2518GB

Connector No.	M105
Connector Name	WIRE TO WIRE
Connector Color	WHITE

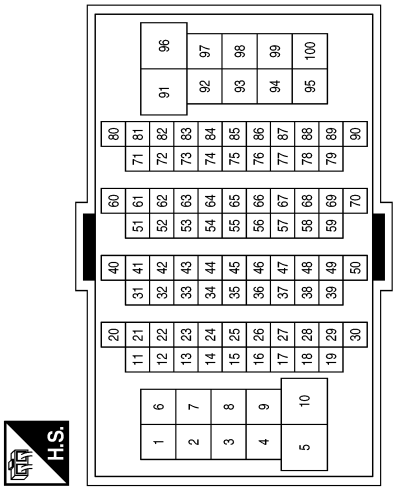

Terminal No.	Color of Wire	Signal Name
56	Y	–
66	G	–
91	Y	–

Connector No.	B1
Connector Name	WIRE TO WIRE
Connector Color	WHITE

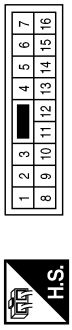

Terminal No.	Color of Wire	Signal Name
10	W	–

Connector No.	B2
Connector Name	WIRE TO WIRE
Connector Color	WHITE

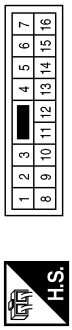

Terminal No.	Color of Wire	Signal Name
10	SB	–

Connector No.	B59
Connector Name	REAR COMBINATION LAMP RH
Connector Color	WHITE

Terminal No.	Color of Wire	Signal Name
4	W	–
5	B	–

Connector No.	B80
Connector Name	REAR COMBINATION LAMP LH
Connector Color	WHITE

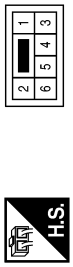

Terminal No.	Color of Wire	Signal Name
4	SB	–
5	B	–

AALIA2519GB

PARKING, LICENSE PLATE AND TAIL LAMPS SYSTEM

Wiring Diagram

INFOID:0000000010634548

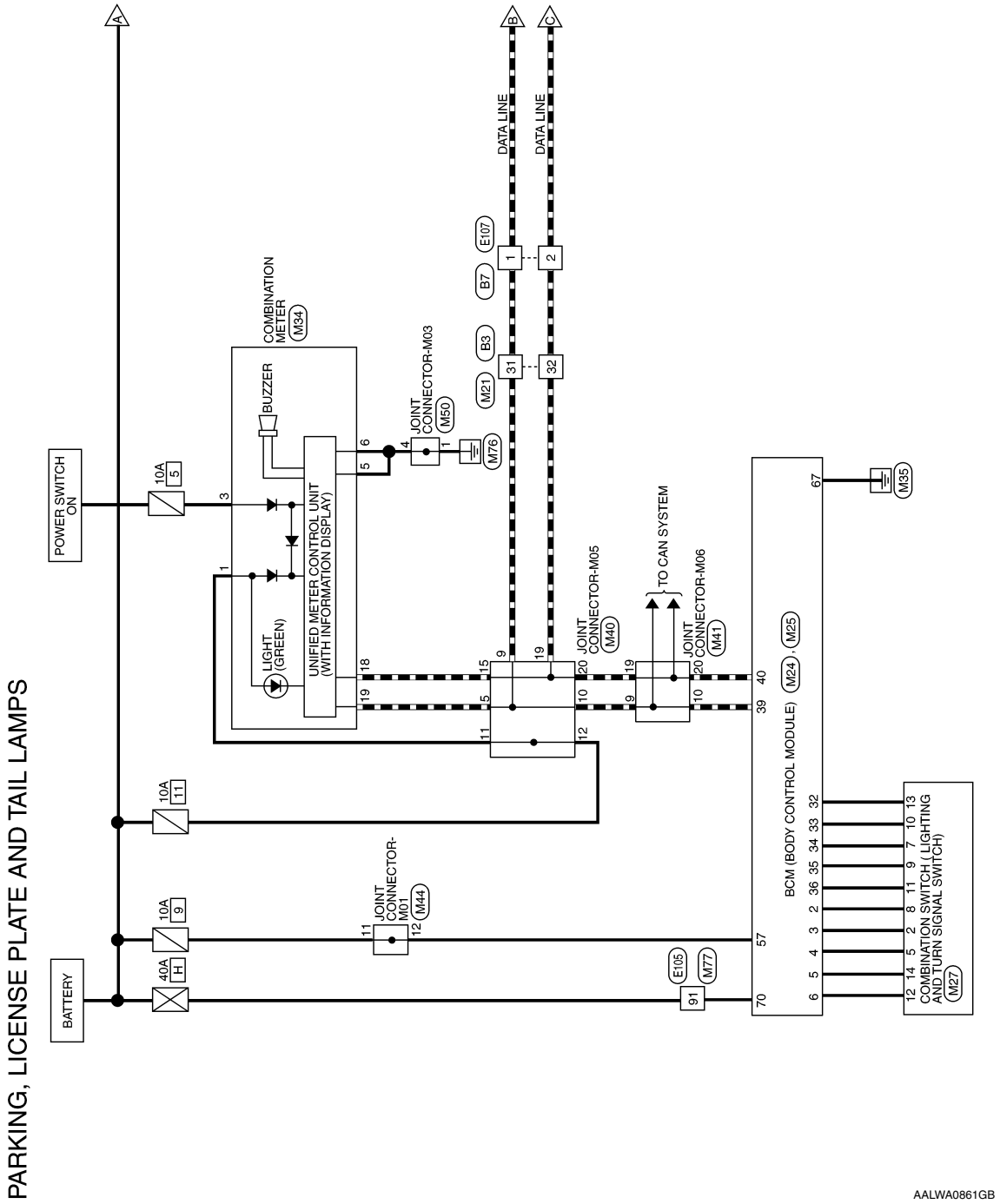

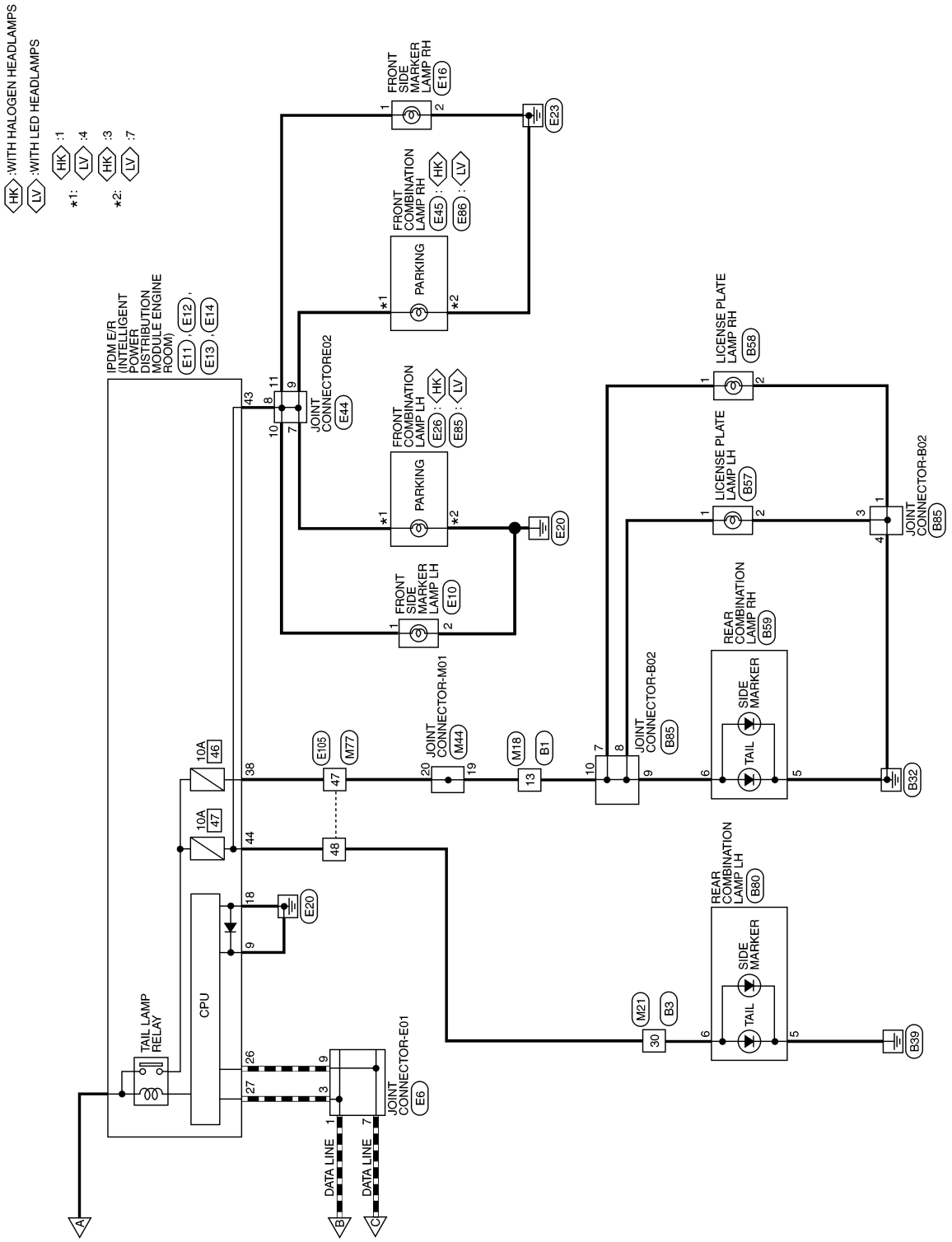

AALWA0862GB

PARKING, LICENSE PLATE AND TAIL LAMPS CONNECTORS

Connector No.	M18
Connector Name	WIRE TO WIRE
Connector Color	WHITE

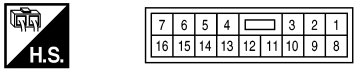

Terminal No.	Color of Wire	Signal Name
13	W	–

Connector No.	M21
Connector Name	WIRE TO WIRE
Connector Color	WHITE

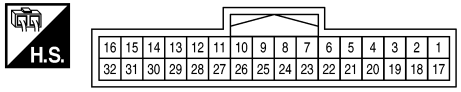

Terminal No.	Color of Wire	Signal Name
30	L	–
31	L	–
32	P	–

Connector No.	M24
Connector Name	BCM (BODY CONTROL MODULE)
Connector Color	BLACK

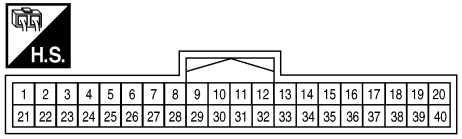

Terminal No.	Color of Wire	Signal Name
2	L	COMBINATION SW INPUT 5
3	GR	COMBINATION SW INPUT 4
4	BR	COMBINATION SW INPUT 3
5	G	COMBINATION SW INPUT 2
6	V	COMBINATION SW INPUT 1
32	GR	COMBINATION SW OUTPUT 5
33	Y	COMBINATION SW OUTPUT 4
34	W	COMBINATION SW OUTPUT 3
35	BG	COMBINATION SW OUTPUT 2
36	P	COMBINATION SW OUTPUT 1
39	L	CAN-H
40	P	CAN-L

Connector No.	M25
Connector Name	BCM (BODY CONTROL MODULE)
Connector Color	WHITE

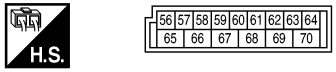

Terminal No.	Color of Wire	Signal Name
57	P	BATTERY (FUSE)
67	B	GND
70	Y	BATTERY (F/L)

AALIA2506GB

Connector No.	M27
Connector Name	COMBINATION SWITCH
Connector Color	WHITE

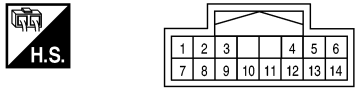

Terminal No.	Color of Wire	Signal Name
2	GR	–
5	BR	–
7	W	–
8	L	–
9	BG	–
10	Y	–
11	P	–
12	V	–
13	GR	–
14	G	–

Connector No.	M34
Connector Name	COMBINATION METER
Connector Color	WHITE

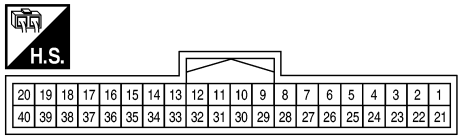

Terminal No.	Color of Wire	Signal Name
1	LG	BAT
3	GR	IGN
5	B	GND
6	B	GND
18	P	CAN-L
19	L	CAN-H

Connector No.	M40
Connector Name	JOINT CONNECTOR-M05
Connector Color	BLUE

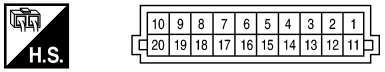

Terminal No.	Color of Wire	Signal Name
5	L	–
9	L	–
10	L	–
11	LG	–
12	LG	–
15	P	–
19	P	–
20	P	–

Connector No.	M41
Connector Name	JOINT CONNECTOR-M06
Connector Color	BLUE

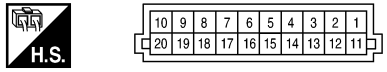

Terminal No.	Color of Wire	Signal Name
9	L	–
10	L	–
19	P	–
20	P	–

Connector No.	M44
Connector Name	JOINT CONNECTOR-M01
Connector Color	GRAY

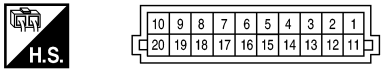

Terminal No.	Color of Wire	Signal Name
11	P	–
12	P	–
19	W	–
20	W	–

Connector No.	M50
Connector Name	JOINT CONNECTOR-M03
Connector Color	PINK

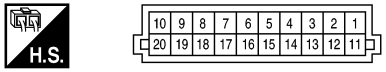

Terminal No.	Color of Wire	Signal Name
1	B	–
4	B	–

AALIA2507GB

Connector No.	M77
Connector Name	WIRE TO WIRE
Connector Color	WHITE

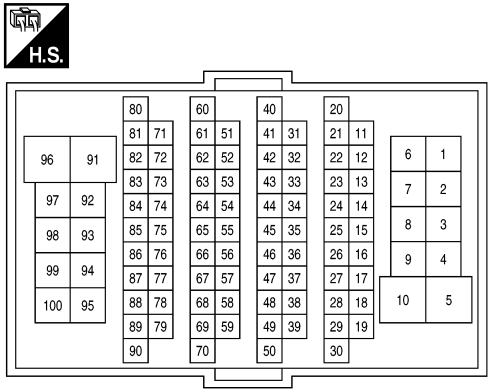

Terminal No.	Color of Wire	Signal Name
47	W	–
48	L	–
91	Y	–

Connector No.	E6
Connector Name	JOINT CONNECTOR-E01
Connector Color	BLUE

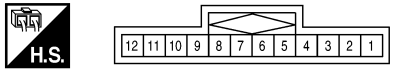

Terminal No.	Color of Wire	Signal Name
1	L	–
3	L	–
7	P	–
9	P	–

Connector No.	E10
Connector Name	FRONT SIDE MARKER LAMP LH
Connector Color	GRAY

Terminal No.	Color of Wire	Signal Name
1	O	–
2	B/W	–

Connector No.	E11
Connector Name	IPDM E/R (INTELLIGENT POWER DISTRIBUTION MODULE ENGINE ROOM)
Connector Color	BLACK

Terminal No.	Color of Wire	Signal Name
9	B	POWER GROUND

Connector No.	E12
Connector Name	IPDM E/R (INTELLIGENT POWER DISTRIBUTION MODULE ENGINE ROOM)
Connector Color	BROWN

Terminal No.	Color of Wire	Signal Name
18	B/W	S GND

Connector No.	E13
Connector Name	IPDM E/R (INTELLIGENT POWER DISTRIBUTION MODULE ENGINE ROOM)
Connector Color	WHITE

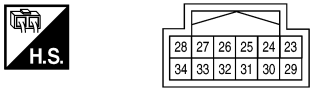

Terminal No.	Color of Wire	Signal Name
26	P	CAN-L
27	L	CAN-H

AALIA2508GB

Connector No.	E14
Connector Name	IPDM E/R (INTELLIGENT POWER DISTRIBUTION MODULE ENGINE ROOM)
Connector Color	BROWN

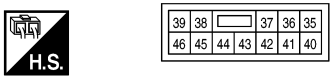

Terminal No.	Color of Wire	Signal Name
38	LG	TAIL 1 (WITHOUT SOLAR CELL)
38	R	TAIL 1 (WITH SOLAR CELL)
43	O	CLEARANCE/L LH
44	B	TAIL 2

Connector No.	E16
Connector Name	FRONT SIDE MARKER LAMP RH
Connector Color	GRAY

Terminal No.	Color of Wire	Signal Name
1	O	–
2	B/R	–

Connector No.	E26
Connector Name	FRONT COMBINATION LAMP LH (WITH HALOGEN HEADLAMPS)
Connector Color	GRAY

Terminal No.	Color of Wire	Signal Name
1	O	–
3	B/W	–

Connector No.	E44
Connector Name	JOINT CONNECTOR-E02
Connector Color	BLUE

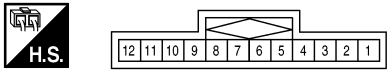

Terminal No.	Color of Wire	Signal Name
7	O	–
8	O	–
9	O	–
10	O	–
11	O	–

Connector No.	E45
Connector Name	FRONT COMBINATION LAMP RH (WITH HALOGEN HEADLAMPS)
Connector Color	GRAY

Terminal No.	Color of Wire	Signal Name
1	O	–
3	B/Y	–

Connector No.	E85
Connector Name	FRONT COMBINATION LAMP LH (WITH LED HEADLAMPS)
Connector Color	BLACK

Terminal No.	Color of Wire	Signal Name
4	O	–
7	B/W	–

AALIA2509GB

Connector No.	E86
Connector Name	FRONT COMBINATION LAMP RH (WITH LED HEADLAMPS)
Connector Color	BLACK

H.S.

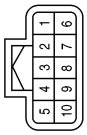

Terminal No.	Color of Wire	Signal Name
4	O	–
7	B/Y	–

Connector No.	E105
Connector Name	WIRE TO WIRE
Connector Color	WHITE

H.S.

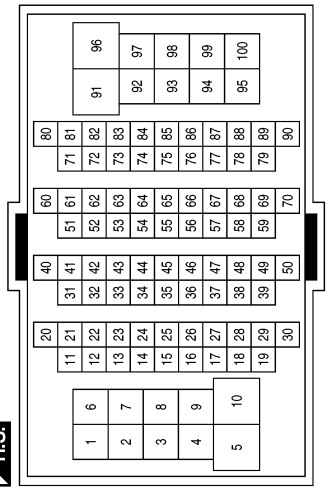

Terminal No.	Color of Wire	Signal Name
47	LG	– (WITHOUT SOLAR CELL)
47	R	– (WITH SOLAR CELL)
48	B	–
91	Y	–

Connector No.	E107
Connector Name	WIRE TO WIRE
Connector Color	WHITE

H.S.

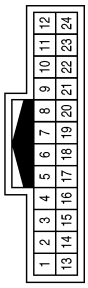

Terminal No.	Color of Wire	Signal Name
1	L	–
2	P	–

Connector No.	B1
Connector Name	WIRE TO WIRE
Connector Color	WHITE

H.S.

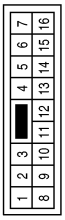

Terminal No.	Color of Wire	Signal Name
13	V	–

Connector No.	B3
Connector Name	WIRE TO WIRE
Connector Color	WHITE

H.S.

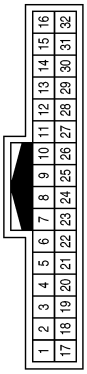

Terminal No.	Color of Wire	Signal Name
30	GR	–
31	L	–
32	P	–

Connector No.	B7
Connector Name	WIRE TO WIRE
Connector Color	WHITE

H.S.

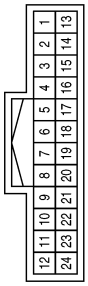

Terminal No.	Color of Wire	Signal Name
1	L	–
2	P	–

AALIA2510GB

Connector No.	B57
Connector Name	LICENSE PLATE LAMP LH
Connector Color	BROWN

H.S.

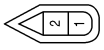

Terminal No.	Color of Wire	Signal Name
1	W	–
2	B	–

Connector No.	B58
Connector Name	LICENSE PLATE LAMP RH
Connector Color	BROWN

H.S.

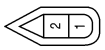

Terminal No.	Color of Wire	Signal Name
1	L	–
2	B	–

Connector No.	B59
Connector Name	REAR COMBINATION LAMP RH
Connector Color	WHITE

H.S.

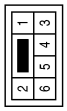

Terminal No.	Color of Wire	Signal Name
5	B	–
6	V	–

Connector No.	B80
Connector Name	REAR COMBINATION LAMP LH
Connector Color	WHITE

H.S.

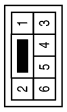

Terminal No.	Color of Wire	Signal Name
5	B	–
6	GR	–

Connector No.	B85
Connector Name	JOINT CONNECTOR-B02
Connector Color	BLACK

H.S.

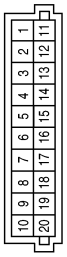

Terminal No.	Color of Wire	Signal Name
1	B	–
3	B	–
4	B	–
7	L	–
8	W	–
9	V	–
10	V	–

AALIA2511GB

STOP LAMP

Wiring Diagram

INFOID:0000000010634549

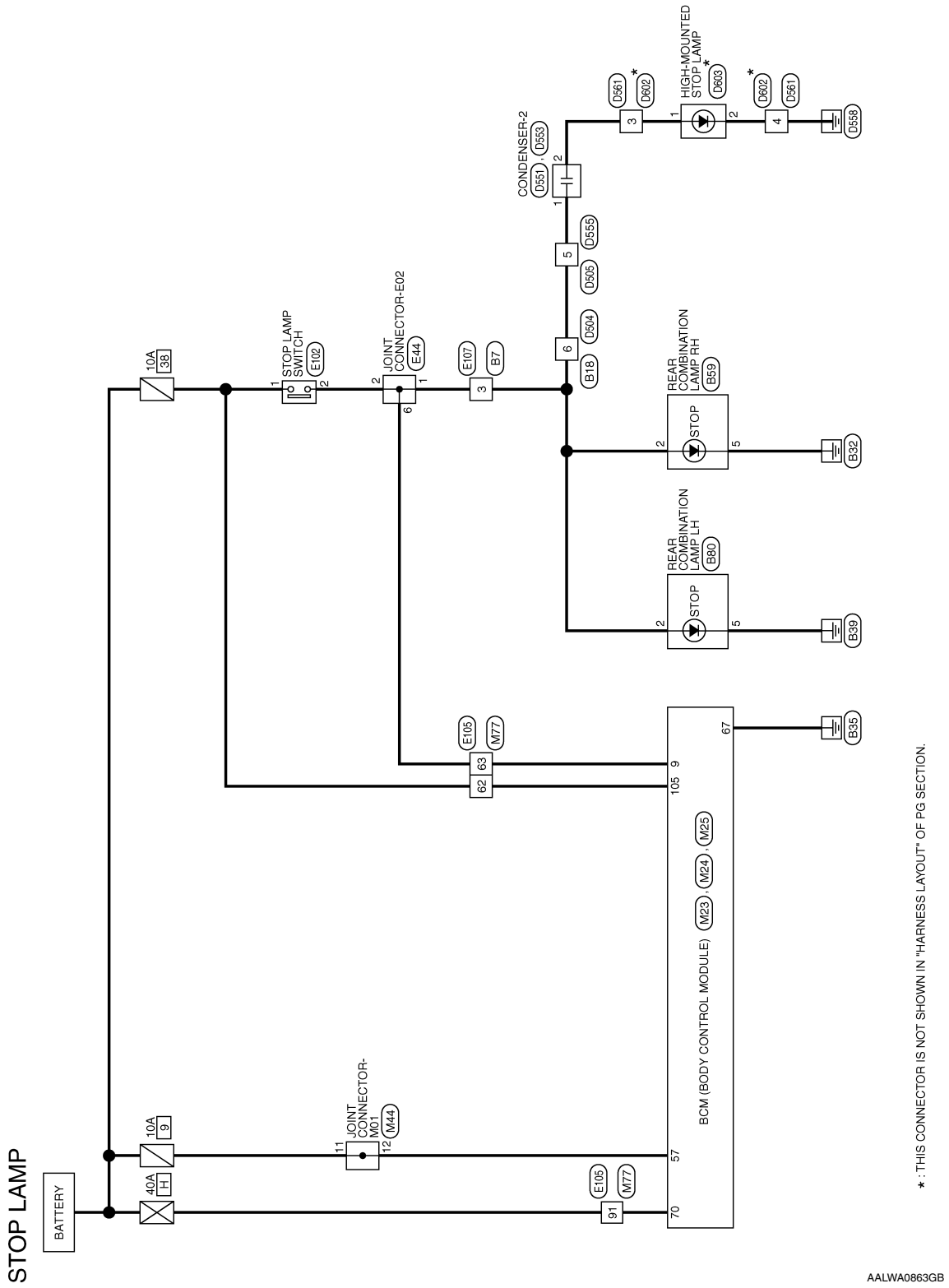

*: THIS CONNECTOR IS NOT SHOWN IN "HARNESS LAYOUT" OF PG SECTION.

STOP LAMP CONNECTORS

Connector No.	M23
Connector Name	BCM (BODY CONTROL MODULE)
Connector Color	WHITE

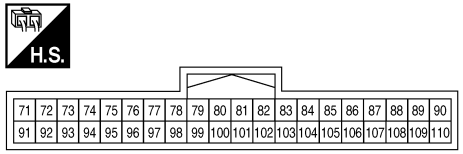

Terminal No.	Color of Wire	Signal Name
105	W	BRAKE SW2

Connector No.	M24
Connector Name	BCM (BODY CONTROL MODULE)
Connector Color	BLACK

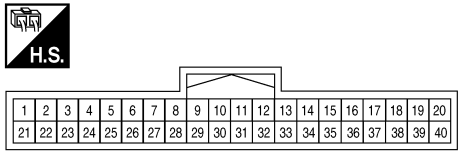

Terminal No.	Color of Wire	Signal Name
9	BR	BRAKE SW1

Connector No.	M25
Connector Name	BCM (BODY CONTROL MODULE)
Connector Color	WHITE

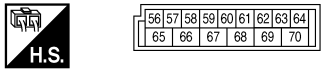

Terminal No.	Color of Wire	Signal Name
57	P	BATTERY (FUSE)
67	B	GND
70	Y	BATTERY (F/L)

Connector No.	M44
Connector Name	JOINT CONNECTOR-M01
Connector Color	GRAY

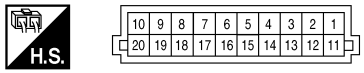

Terminal No.	Color of Wire	Signal Name
11	P	–
12	P	–

Connector No.	M77
Connector Name	WIRE TO WIRE
Connector Color	WHITE

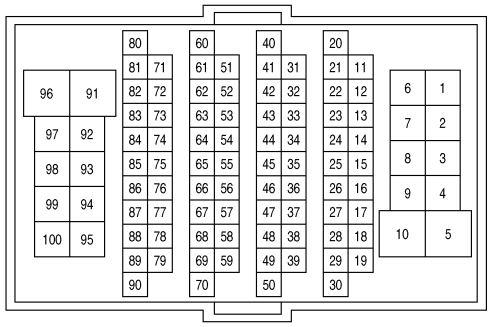

Terminal No.	Color of Wire	Signal Name
62	W	–
63	BR	–
91	Y	–

AALIA2512GB

Connector No.	E44
Connector Name	JOINT CONNECTOR-E02
Connector Color	BLUE

H.S.

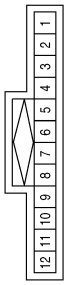

Terminal No.	Color of Wire	Signal Name
1	SB	–
2	SB	–
6	SB	–

Connector No.	E102
Connector Name	STOP LAMP SWITCH
Connector Color	WHITE

H.S.

Terminal No.	Color of Wire	Signal Name
1	W	–
2	SB	–

Connector No.	E105
Connector Name	WIRE TO WIRE
Connector Color	WHITE

H.S.

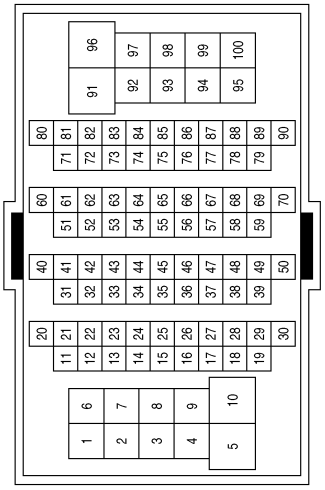

Terminal No.	Color of Wire	Signal Name
62	W	–
63	SB	–
91	Y	–

Connector No.	E107
Connector Name	WIRE TO WIRE
Connector Color	WHITE

H.S.

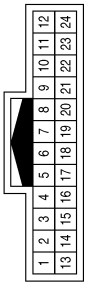

Terminal No.	Color of Wire	Signal Name
3	SB	–

AALIA2513GB

Connector No.	B7
Connector Name	WIRE TO WIRE
Connector Color	WHITE

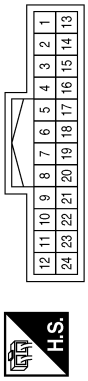

Terminal No.	Color of Wire	Signal Name
3	Y	–

Connector No.	B18
Connector Name	WIRE TO WIRE
Connector Color	WHITE

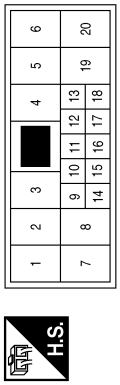

Terminal No.	Color of Wire	Signal Name
6	BR	–

Connector No.	B59
Connector Name	REAR COMBINATION LAMP RH
Connector Color	WHITE

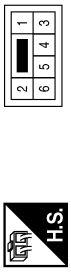

Terminal No.	Color of Wire	Signal Name
2	Y	–
5	B	–

Connector No.	B80
Connector Name	REAR COMBINATION LAMP LH
Connector Color	WHITE

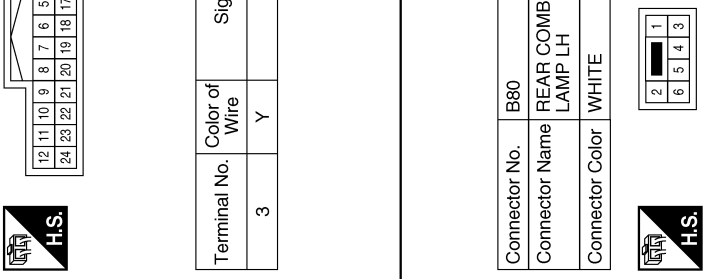

Terminal No.	Color of Wire	Signal Name
2	SB	–
5	B	–

Connector No.	D504
Connector Name	WIRE TO WIRE
Connector Color	WHITE

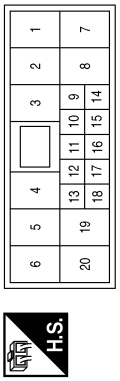

Terminal No.	Color of Wire	Signal Name
6	R	–

Connector No.	D505
Connector Name	WIRE TO WIRE
Connector Color	WHITE

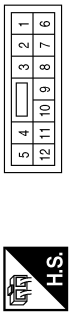

Terminal No.	Color of Wire	Signal Name
5	R	–

AALIA2514GB

Connector No.	D551
Connector Name	CONDENSER-2
Connector Color	BLACK

H.S.

Terminal No.	Color of Wire	Signal Name
1	R	–

Connector No.	D553
Connector Name	CONDENSER-2
Connector Color	BLACK

H.S.

Terminal No.	Color of Wire	Signal Name
2	R	–

Connector No.	D555
Connector Name	WIRE TO WIRE
Connector Color	WHITE

H.S.

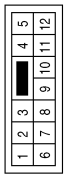

Terminal No.	Color of Wire	Signal Name
5	R	–

Connector No.	D561
Connector Name	WIRE TO WIRE
Connector Color	WHITE

H.S.

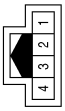

Terminal No.	Color of Wire	Signal Name
3	R	–
4	B	–

Connector No.	D602
Connector Name	WIRE TO WIRE
Connector Color	WHITE

H.S.

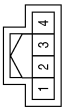

Terminal No.	Color of Wire	Signal Name
3	R	–
4	B	–

Connector No.	D603
Connector Name	HIGH-MOUNTED STOP LAMP
Connector Color	GRAY

H.S.

Terminal No.	Color of Wire	Signal Name
1	R	–
2	B	–

AALIA2515GB

BACK-UP LAMP

Wiring Diagram

INFOID:0000000010634550

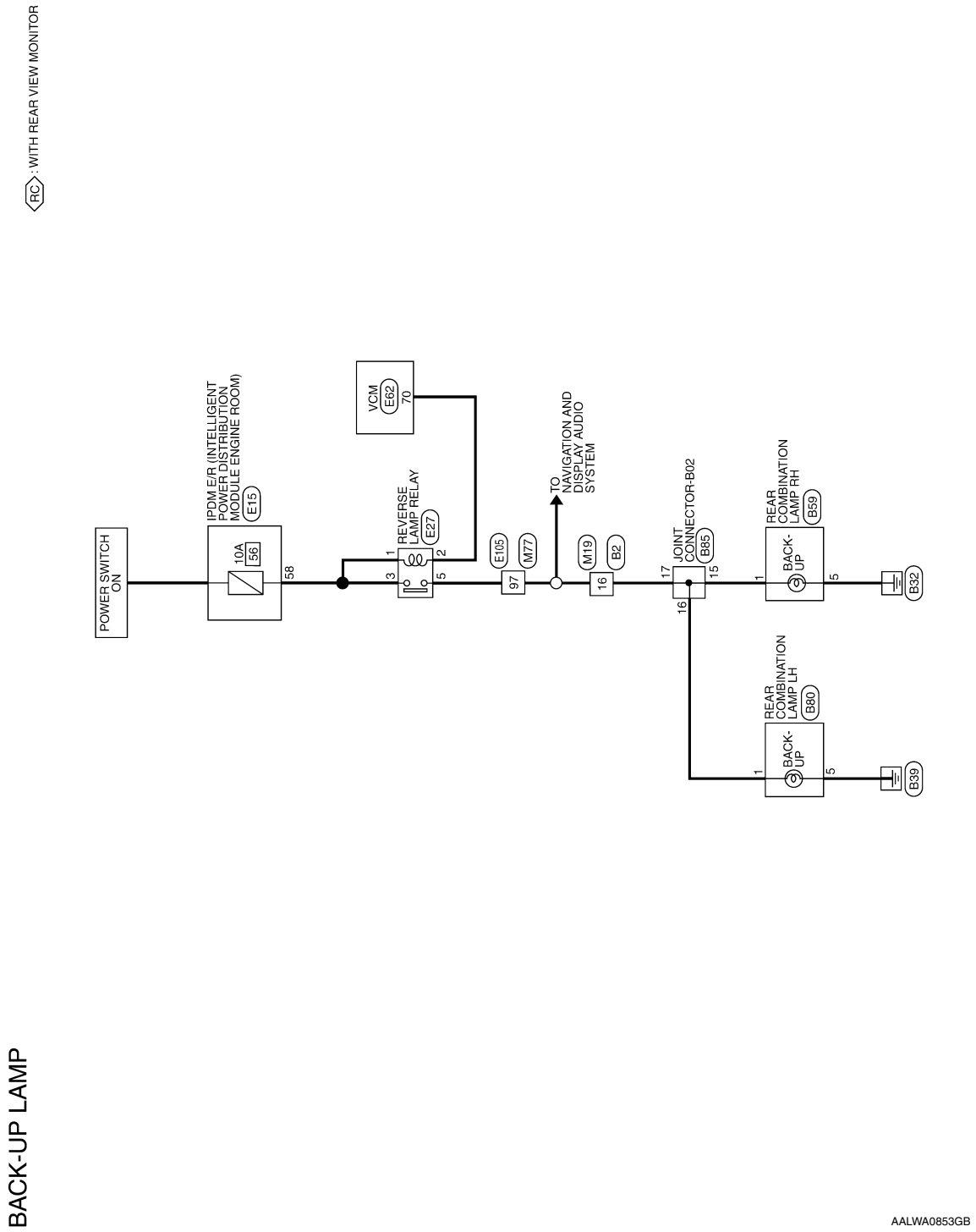

BACK-UP LAMP- CONNECTORS

Connector No.	M19
Connector Name	WIRE TO WIRE
Connector Color	WHITE

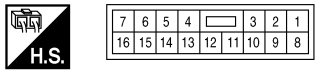

Terminal No.	Color of Wire	Signal Name
16	G	–

Connector No.	M77
Connector Name	WIRE TO WIRE
Connector Color	WHITE

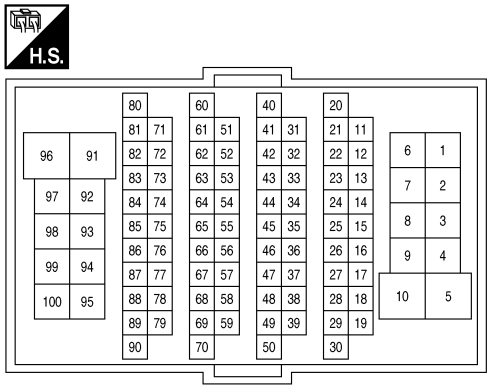

Terminal No.	Color of Wire	Signal Name
97	G	–

Connector No.	E15
Connector Name	IPDM E/R (INTELLIGENT POWER DISTRIBUTION MODULE ENGINE ROOM)
Connector Color	WHITE

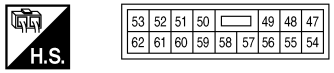

Terminal No.	Color of Wire	Signal Name
58	O	REV LAMP POWER

Connector No.	E27
Connector Name	REVERSE LAMP RELAY
Connector Color	BLUE

Terminal No.	Color of Wire	Signal Name
1	O	–
2	SB	–
3	O	–
5	G	–

Connector No.	E62
Connector Name	VCM
Connector Color	BROWN

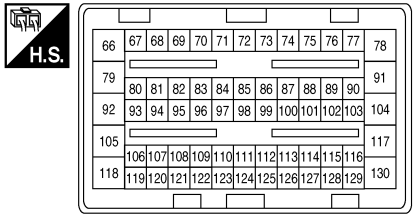

Terminal No.	Color of Wire	Signal Name
70	SB	REVERSE LAMP

AALIA2471GB

Connector No.	E105
Connector Name	WIRE TO WIRE
Connector Color	WHITE

H.S.

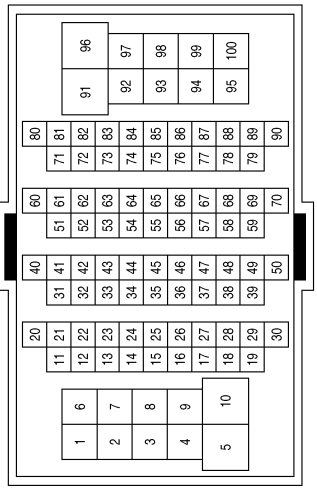

Terminal No.	Color of Wire	Signal Name
97	G	–

Connector No.	B2
Connector Name	WIRE TO WIRE
Connector Color	WHITE

H.S.

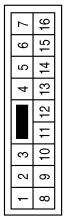

Terminal No.	Color of Wire	Signal Name
16	G	–

Connector No.	B59
Connector Name	REAR COMBINATION LAMP RH
Connector Color	WHITE

H.S.

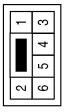

Terminal No.	Color of Wire	Signal Name
1	G	–
5	B	–

Connector No.	B80
Connector Name	REAR COMBINATION LAMP LH
Connector Color	WHITE

H.S.

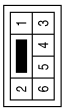

Terminal No.	Color of Wire	Signal Name
1	G	–
5	B	–

Connector No.	B85
Connector Name	JOINT CONNECTOR-B02
Connector Color	BLACK

H.S.

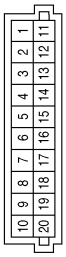

Terminal No.	Color of Wire	Signal Name
15	G	–
16	G	–
17	G	–

AALIA2472GB

BASIC INSPECTION

DIAGNOSIS AND REPAIR WORKFLOW

Work Flow

INFOID:0000000010634551

OVERALL SEQUENCE

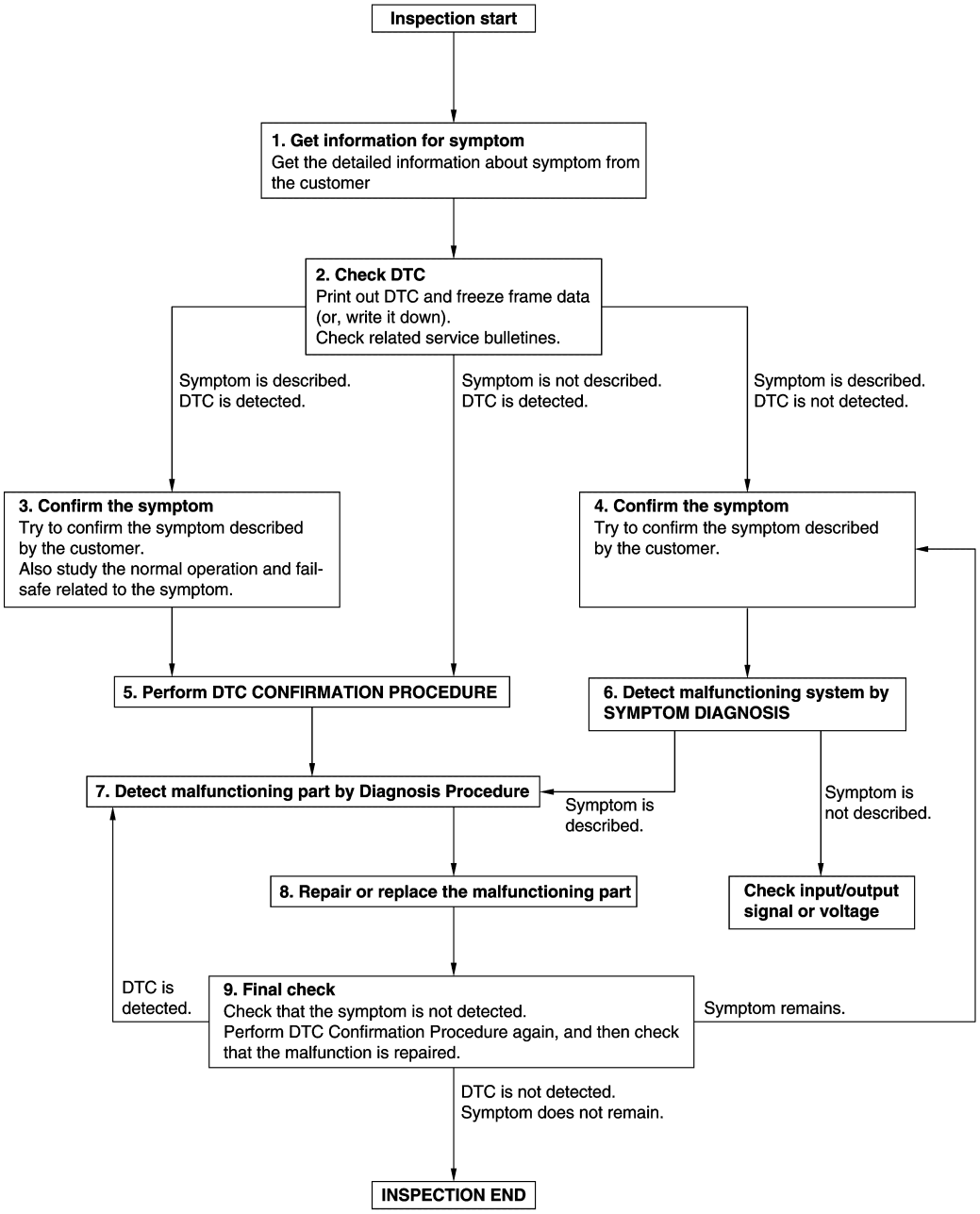

JMKIA8652GB

DETAILED FLOW

1.GET INFORMATION FOR SYMPTOM

1. Get detailed information from the customer about the symptom (the condition and the environment when the incident/malfunction occurs).
2. Check operation condition of the function that is malfunctioning.

>> GO TO 2.

2.CHECK DTC

1. Check DTC.
2. Perform the following procedure if DTC is detected:
- Record DTC and freeze frame data (Print them out using CONSULT.)
- Erase DTC.
- Study the relationship between the cause detected by DTC and the symptom described by the customer.
3. Check related service bulletins for information.

Are any symptoms described and any DTC detected?

Symptom is described, DTC is detected>>GO TO 3.
Symptom is described, DTC is not detected>>GO TO 4.
Symptom is not described, DTC is detected>>GO TO 5.

3.CONFIRM THE SYMPTOM

Try to confirm the symptom described by the customer.
Also study the normal operation and fail-safe related to the symptom.
Verify relation between the symptom and the condition when the symptom is detected.

>> GO TO 5.

4.CONFIRM THE SYMPTOM

Try to confirm the symptom described by the customer.
Verify relation between the symptom and the condition when the symptom is detected.

>> GO TO 6.

5.PERFORM DTC CONFIRMATION PROCEDURE

Perform DTC CONFIRMATION PROCEDURE for the detected DTC, and then check that DTC is detected again. At this time, always connect CONSULT to the vehicle, and check self diagnostic results in real time.
If two or more DTCs are detected, refer to BCS-47, "DTC Inspection Priority Chart" (BCM) or PCS-19, "DTC Index" (IPDM E/R), and determine trouble diagnosis order.

NOTE:
- Freeze frame data is useful if the DTC is not detected.
- Perform Component Function Check if DTC CONFIRMATION PROCEDURE is not included on Service Manual. This simplified check procedure is an effective alternative though DTC cannot be detected during this check.
  If the result of Component Function Check is NG, it is the same as the detection of DTC by DTC CONFIRMATION PROCEDURE.

Is DTC detected?

YES >> GO TO 7.
NO >> Check according to GI-53, "Intermittent Incident".

6.DETECT MALFUNCTIONING SYSTEM BY SYMPTOM DIAGNOSIS

Detect malfunctioning system according to SYMPTOM DIAGNOSIS based on the confirmed symptom in step 4, and determine the trouble diagnosis order based on possible causes and symptom.

Is the symptom described?

YES >> GO TO 7.
NO >> Monitor input data from related sensors or check voltage of related module terminals using CONSULT.

7.DETECT MALFUNCTIONING PART BY DIAGNOSTIC PROCEDURE

Inspect according to Diagnostic Procedure of the system.

Is malfunctioning part detected?

YES >> GO TO 8.
NO >> Check according to GI-53, "Intermittent Incident".

8. REPAIR OR REPLACE THE MALFUNCTIONING PART

1. Repair or replace the malfunctioning part.
2. Reconnect parts or connectors disconnected during Diagnostic Procedure again after repair and replacement.
3. Check DTC. If DTC is detected, erase it.

>> GO TO 9.

9. FINAL CHECK

When DTC is detected in step 2, perform DTC CONFIRMATION PROCEDURE again, and then check that the malfunction is repaired securely.
When symptom is described by the customer, refer to confirmed symptom in step 3 or 4, and check that the symptom is not detected.

Is DTC detected and does symptom remain?

YES-1 >> DTC is detected: GO TO 7.
YES-2 >> Symptom remains: GO TO 4.
NO >> Before returning the vehicle to the customer, always erase DTC.

LED HEADLAMP OPERATION INSPECTION

Diagnosis Procedure

INFOID:0000000010634552

1.CHECK START

1. In the cool LED status (wait for more than 10 minutes after turning headlamp OFF), turn ON and turn OFF headlamp for the several times. Check that headlamp operates normally each time.
2. In the cool LED status, turn headlamp ON, wait until headlamp enters to the stable status (approximately 5 minutes after turning headlamp ON), and then check that headlamp operates normally without blinking or flickering.
3. In the warm LED status (turn headlamp ON for more than 15 minutes and wait for 1 minute after turning OFF), turn ON and turn OFF headlamp for the several times. Check that headlamp operates normally each time.
4. Turn headlamp ON for approximately 30 minutes, and then check that headlamp operates normally without difference in brightness between LH and RH, blinking or flickering.

Is the inspection result normal?

YES >> Inspection End.
NO >> Refer to EXL-115, "WITHOUT DAYTIME RUNNING LIGHT SYSTEM : Symptom Table".

DTC/CIRCUIT DIAGNOSIS

HEADLAMP (HI) CIRCUIT

WITHOUT DAYTIME RUNNING LIGHT SYSTEM

WITHOUT DAYTIME RUNNING LIGHT SYSTEM : Component Function Check

INFOID:0000000010634553

1.CHECK HEADLAMP (HI) OPERATION

CONSULT ACTIVE TEST
1. Select “EXTERNAL LAMPS” in “Active Test” of “IPDM E/R”.
2. While operating the test items, check that the headlamp (HI) is turned ON.

Hi : Headlamp (HI) ON
Off : Headlamp (HI) OFF

NOTE:
ON/OFF is repeated 1 second each.

Is the inspection result normal?

YES >> Headlamp (HI) circuit is normal.
NO >> Refer to EXL-85, "WITHOUT DAYTIME RUNNING LIGHT SYSTEM : Diagnosis Procedure".

WITHOUT DAYTIME RUNNING LIGHT SYSTEM : Diagnosis Procedure

INFOID:0000000010634554

Regarding Wiring Diagram information. Refer to EXL-31, "Wiring Diagram".

1.CHECK HEADLAMP (HI) OUTPUT VOLTAGE

CONSULT ACTIVE TEST
1. Turn power switch OFF.
2. Disconnect front combination lamp connector.
3. Turn power switch ON.
4. Select “EXTERNAL LAMPS” in “Active Test” of “IPDM E/R”.
5. While operating the test items, check voltage between IPDM E/R harness connector and ground.

(+)			(–)	Test item		Voltage (Approx.)
IPDM E/R						
Connector		Terminal				
RH	E15	49	Ground	EXTERNAL LAMPS	Hi	Battery voltage
					Off	0 V
LH		50			Hi	Battery voltage
					Off	0 V

Is the inspection result normal?

YES >> GO TO 2.
NO >> GO TO 3.

2.CHECK HEADLAMP (HI) OPEN CIRCUIT

1. Turn power switch OFF.
2. Disconnect IPDM E/R connector.
3. Check continuity between IPDM E/R harness connector and front combination lamp harness connector.

IPDM E/R			Front combination lamp		Continuity
Connector		Terminal	Connector	Terminal	
RH	E15	49	E86	5	Yes
LH		50	E85		

Is the inspection result normal?

YES >> GO TO 5.
NO >> Repair or replace harness.

3. CHECK HEADLAMP (HI) FUSE

1. Turn power switch OFF.
2. Check that the following fuses are not blown:

Unit	Location	Fuse No.	Capacity
Headlamp HI (RH)	IPDM E/R	51	10 A
Headlamp HI (LH)		52	

Is the inspection result normal?

YES >> Replace IPDM E/R. Refer to PCS-30, "Removal and Installation".
NO >> GO TO 4.

4. CHECK HEADLAMP HIGH (HI) SHORT CIRCUIT

1. Disconnect IPDM E/R connector.
2. Check continuity between IPDM E/R harness connector and ground.

IPDM E/R			Ground	Continuity
Connector		Terminal		
RH	E15	49		No
LH		50		

Is the inspection result normal?

YES >> Replace fuse. (Replace IPDM E/R if the fuse is blown again.)
NO >> Replace the blown fuse after repairing the affected circuit.

5. CHECK HEADLAMP (HI) GROUND OPEN CIRCUIT

1. Disconnect front combination lamp connector.
2. Check continuity between front combination lamp harness connector and ground.

Front combination lamp			Ground	Continuity
Connector		Terminal		
RH	E86	6		Yes
LH	E85			

Is the inspection result normal?

YES >> Replace headlamp (HI) bulb.
NO >> Repair or replace harness.

WITH DAYTIME RUNNING LIGHT SYSTEM

WITH DAYTIME RUNNING LIGHT SYSTEM : Component Function Check

INFOID:0000000010634555

1. CHECK HEADLAMP (HI) OPERATION

CONSULT ACTIVE TEST

1. Select “EXTERNAL LAMPS” in “Active Test” of “IPDM E/R”.
2. While operating the test items, check that the headlamp (HI) is turned ON.

Hi : Headlamp (HI) ON
Off : Headlamp (HI) OFF

NOTE:
ON/OFF is repeated 1 second each.

Is the inspection result normal?

YES >> Headlamp (HI) circuit is normal.
NO >> Refer to EXL-87, "WITH DAYTIME RUNNING LIGHT SYSTEM : Diagnosis Procedure".

WITH DAYTIME RUNNING LIGHT SYSTEM : Diagnosis Procedure

INFOID:0000000010634556

Regarding Wiring Diagram information. Refer to EXL-31, "Wiring Diagram".

1. CHECK HEADLAMP (HI) OUTPUT VOLTAGE

CONSULT ACTIVE TEST
1. Turn power switch OFF.
2. Disconnect headlamp high connector.
3. Turn power switch ON.
4. Select “EXTERNAL LAMPS” in “Active Test” of “IPDM E/R”.
5. While operating the test items, check voltage between IPDM E/R harness connector and ground.

(+)			(–)	Test item		Voltage (Approx.)
IPDM E/R						
Connector		Terminal				
RH	E15	49	Ground	EXTERNAL LAMPS	Hi	Battery voltage
					Off	0 V
LH		50			Hi	Battery voltage
					Off	0 V

Is the inspection result normal?

YES >> GO TO 2.
NO >> GO TO 3.

2. CHECK HEADLAMP (HI) OPEN CIRCUIT

1. Turn power switch OFF.
2. Disconnect IPDM E/R connector.
3. Check continuity between IPDM E/R harness connector and front combination lamp harness connector.

IPDM E/R			Front combination lamp		Continuity
Connector		Terminal	Connector	Terminal	
RH	E15	49	E86	5	Yes
LH		50	E85		

Is the inspection result normal?

YES >> GO TO 5.
NO >> Repair or replace harness.

3. CHECK HEADLAMP (HI) FUSE

1. Turn power switch OFF.
2. Check that the following fuses are not blown:

Unit	Location	Fuse No.	Capacity
Headlamp HI (RH)	IPDM E/R	51	10 A
Headlamp HI (LH)		52	

Is the inspection result normal?

YES >> Replace IPDM E/R. Refer to PCS-30, "Removal and Installation".
NO >> GO TO 4.

4. CHECK HEADLAMP (HI) SHORT CIRCUIT

1. Disconnect IPDM E/R connector.
2. Check continuity between IPDM E/R harness connector and ground.

IPDM E/R			Ground	Continuity
Connector		Terminal		
RH	E15	49		No
LH		50		

Is the inspection result normal?

YES >> Replace fuse. (Replace IPDM E/R if the fuse is blown again.)
NO >> Replace the blown fuse after repairing the affected circuit.

5. CHECK ILLUMINATION STATUS OF HEADLAMPS

Check illumination status of headlamps.

Which headlamp does not turn ON?

RH >> GO TO 6.
LH >> GO TO 9.

6. CHECK HEADLAMP HI (RH) GROUND OPEN CIRCUIT-1

1. Remove daytime running light relay.
2. Check continuity between daytime running light relay harness connector and front combination lamp RH harness connector.

Daytime running light relay		Front combination lamp RH		Continuity
Connector	Terminal	Connector	Terminal	
E84	3	E86	6	Yes

Is the inspection result normal?

YES >> GO TO 7.
NO >> Repair or replace harness.

7. CHECK HEADLAMP HI (RH) GROUND OPEN CIRCUIT-2

Check continuity between daytime running light relay harness connector and ground.

Daytime running light relay		Ground	Continuity
Connector	Terminal		
E84	4		Yes

Is the inspection result normal?

YES >> GO TO 8.
NO >> Repair or replace harness.

8. CHECK HEADLAMP HI (RH) DAYTIME RUNNING LIGHT RELAY CIRCUIT

Check continuity between terminal 3 - 4 of daytime running light relay.

Daytime running light relay	Continuity
Terminal	
3 - 4	Yes

Is the inspection result normal?

YES >> Replace headlamp (HI) bulb. (Bulb socket is abnormal.)
NO >> Replace daytime running light relay.

9. CHECK HEADLAMP HI (LH) GROUND OPEN CIRCUIT

Check continuity between front combination lamp LH harness connector and ground.

Front combination lamp LH		Ground	Continuity
Connector	Terminal		
E85	6		Yes

Is the inspection result normal?

YES >> Replace headlamp (HI) bulb. (Bulb socket is abnormal.)
NO >> Repair or replace harness.

HEADLAMP (LO) CIRCUIT

Component Function Check

INFOID:0000000010634557

1.CHECK HEADLAMP (LO) OPERATION

CONSULT ACTIVE TEST
1. Select “EXTERNAL LAMPS” in “Active Test” of “IPDM E/R”.
2. While operating the test items, check that the headlamp (LO) is turned ON.

Lo : Headlamp (LO) ON
Off : Headlamp (LO) OFF

Is the inspection result normal?

YES >> Headlamp (LO) circuit is normal.
NO >> Refer to EXL-90, "Diagnosis Procedure".

Diagnosis Procedure

INFOID:0000000010634558

Regarding Wiring Diagram information. Refer to EXL-31, "Wiring Diagram".

1.CHECK HEADLAMP (LO) OUTPUT VOLTAGE

CONSULT ACTIVE TEST
1. Turn power switch OFF.
2. Disconnect front combination lamp connector.
3. Turn power switch ON.
4. Select “EXTERNAL LAMPS” in “Active Test” of “IPDM E/R”.
5. While operating the test items, check voltage between IPDM E/R harness connector and ground.

(+)			(–)	Test item		Voltage (Approx.)
IPDM E/R						
Connector		Terminal				
RH	E15	52	Ground	EXTERNAL LAMPS	Lo	Battery voltage
					Off	0 V
LH		51			Lo	Battery voltage
					Off	0 V

Is the inspection result normal?

YES >> GO TO 2.
NO >> GO TO 3.

2.CHECK HEADLAMP (LO) OPEN CIRCUIT

1. Turn power switch OFF.
2. Disconnect IPDM E/R connector.
3. Check continuity between IPDM E/R harness connector and front combination lamp harness connector.

IPDM E/R			Front combination lamp		Continuity
Connector		Terminal	Connector	Terminal	
RH	E15	52	E86	2	Yes
LH		51	E85		

Is the inspection result normal?

YES >> Perform the LED headlamp diagnosis. Refer to EXL-95, "Diagnosis Procedure".
NO >> Repair or replace harness.

3. CHECK HEADLAMP (LO) FUSE

1. Turn power switch OFF.
2. Check that the following fuses are not blown:

Unit	Location	Fuse No.	Capacity
Headlamp LO (RH)	IPDM E/R	54	15 A
Headlamp LO (LH)		53	

Is the inspection result normal?

YES >> Replace IPDM E/R. Refer to PCS-30, "Removal and Installation".
NO >> GO TO 4.

4. CHECK HEADLAMP (LO) SHORT CIRCUIT-1

1. Disconnect IPDM E/R connector.
2. Check continuity between IPDM E/R harness connector and ground.

IPDM E/R			Ground	Continuity
Connector		Terminal		
RH	E15	52		No
LH		51		

Is the inspection result normal?

YES >> GO TO 5.
NO >> Replace the blown fuse after repairing the affected circuit.

5. CHECK HEADLAMP (LO) SHORT CIRCUIT-2

CONSULT ACTIVE TEST

1. Replace fuse.
2. Connect IPDM E/R connector.
3. Turn power switch ON.
4. Select “EXTERNAL LAMPS” in “Active Test” of “IPDM E/R”.
5. Check that fuse is not blown when Lo button is operated.

Is the inspection result normal?

YES >> GO TO 6.
NO >> Replace IPDM E/R. Refer to PCS-30, "Removal and Installation".

6. CHECK HEADLAMP (LO) SHORT CIRCUIT-3

1. Turn power switch OFF.
2. Connect front combination lamp connector.
3. Check that headlamp turns ON when lighting switch is in the 2ND position.

Is the inspection result normal?

YES >> Refer to GI-53, "Intermittent Incident".
NO >> Replace LED headlamp control module. Refer to EXL-132, "Removal and Installation"

DAYTIME RUNNING LIGHT RELAY CIRCUIT

Component Function Check

INFOID:0000000010634559

1. CHECK DAYTIME RUNNING LIGHT OPERATION

CONSULT ACTIVE TEST
1. Select “EXTERNAL LAMPS” in “Active Test” of “IPDM E/R”.
2. While operating the test items, check that daytime running light operation.

On : EXTERNAL LAMPS Hi
Off : EXTERNAL LAMPS Off

Is the inspection result normal?

YES >> Daytime running light relay circuit is normal.
NO >> Refer to EXL-92, "Diagnosis Procedure".

Diagnosis Procedure

INFOID:0000000010634560

Regarding Wiring Diagram information. Refer to EXL-36, "Wiring Diagram".

1. CHECK DAYTIME RUNNING LIGHT RELAY FUSE

1. Turn power switch OFF.
2. Check that the following fuse is not blown:

Unit	Fuse No.	Capacity
Daytime running light relay	37	10 A

Is the inspection result normal?

YES >> GO TO 2.
NO >> Replace the blown fuse after repairing the affected circuit.

2. CHECK DAYTIME RUNNING LIGHT RELAY POWER SUPPLY

1. Remove daytime running light relay.
2. Check voltage between daytime running light relay harness connector and ground.

(+)		(–)	Voltage (Approx.)
Daytime running light relay			
Connector	Terminal		
E84	1	Ground	Battery voltage
	5		

Is the inspection result normal?

YES >> GO TO 3.
NO >> Repair or replace harness.

3. CHECK DAYTIME RUNNING LIGHT RELAY

Check daytime running light relay. Refer to EXL-93, "Component Inspection".

Is the inspection result normal?

YES >> GO TO 4.
NO >> Replace daytime running light relay.

4. CHECK DAYTIME RUNNING LIGHT RELAY CONTROL SIGNAL OUTPUT

CONSULT ACTIVE TEST
1. Install daytime running light relay.
2. Turn power switch ON.

3. Select “EXTERNAL LAMPS” in “Active Test” of “IPDM E/R”.
4. While operating the test item, check voltage between IPDM E/R harness connector and ground.

(+)		(–)	Test item		Voltage (Approx.)
IPDM E/R					
Connector	Terminal				
E13	28	Ground	External Lamps	On	0 V
				Off	Battery voltage

Is the inspection result normal?

YES >> Daytime running light relay circuit is OK.
NO-1 (Fixed at 0 V)>>GO TO 5.
NO-2 (Fixed at battery voltage) >>Replace IPDM E/R. Refer to PCS-30, "Removal and Installation".

5. CHECK DAYTIME RUNNING LIGHT RELAY CONTROL SIGNAL OPEN CIRCUIT

1. Turn power switch OFF.
2. Remove daytime running light relay.
3. Disconnect IPDM E/R harness connector.
4. Check continuity between IPDM E/R harness connector and daytime running light relay harness connector.

IPDM E/R		Daytime running light relay		Continuity
Connector	Terminal	Connector	Terminal	
E13	28	E84	2	Yes

Is the inspection result normal?

YES >> GO TO 6.
NO >> Repair or replace harness.

6. CHECK DAYTIME RUNNING LIGHT RELAY CONTROL SIGNAL SHORT CIRCUIT

Check continuity between IPDM E/R harness connector and ground.

IPDM E/R		Ground	Continuity
Connector	Terminal		
E13	28		No

Is the inspection result normal?

YES >> Replace IPDM E/R. Refer to PCS-30, "Removal and Installation".
NO >> Repair or replace harness.

Component Inspection

INFOID:0000000010634561

1. CHECK DAYTIME RUNNING LIGHT RELAY

1. Turn the power switch OFF.
2. Remove daytime running light relay.
3. Apply battery voltage to daytime running light relay - between terminals 1 and 2.
4. Check continuity between daytime running light relay terminals.

Daytime running light relay			Condition		Continuity
Terminal					
E84	5	3	Voltage	Apply	Yes
				Not Apply	No
	4			Apply	No
				Not Apply	Yes

Is the inspection result normal?

YES >> Daytime running light relay is normal.

NO >> Replace daytime running light relay.

LED HEADLAMP

Diagnosis Procedure

INFOID:0000000010634562

Regarding Wiring Diagram information. Refer to EXL-31, "Wiring Diagram".

1. CHECK HEADLAMP (LO) GROUND OPEN CIRCUIT

1. Turn power switch OFF.
2. Disconnect front combination lamp connector.
3. Check continuity between front combination lamp harness connector and ground.

Front combination lamp			Ground	Continuity
Connector		Terminal		
RH	E86	9		Yes
LH	E85			

Is the inspection result normal?

YES >> GO TO 2.
NO >> Repair or replace harness.

2. CHECK LED HEADLAMP CONTROL MODULE

Install the normal LED headlamp control module to the applicable headlamp. Check that the lighting switch is turned ON. Refer to EXL-84, "Diagnosis Procedure".

Is the headlamp turned ON?

YES >> Replace LED headlamp control module. Refer to EXL-132, "Removal and Installation".
NO >> GO TO 3.

3. CHECK HEADLAMP

Install the normal headlamp to the applicable headlamp. Check that the headlamp is turned ON. Refer to EXL-84, "Diagnosis Procedure".

Is the headlamp turned ON?

YES >> Replace headlamp. Refer to EXL-132, "Removal and Installation".
NO >> LED headlamp is normal. Check headlamp control system.

HEADLAMP WARNING LAMP

Component Function Check

INFOID:0000000010634563

1.CHECK HEADLAMP WARNING LAMP OPERATION

1. Turn power switch OFF.
2. Disconnect front combination lamp connector.
3. Check that headlamp warning lamp on combination meter turns ON when power switch is turned ON.

Is the inspection result normal?

YES >> Headlamp warning lamp is normal.
NO >> Refer to EXL-96, "Diagnosis Procedure".

Diagnosis Procedure

INFOID:0000000010634564

Regarding Wiring Diagram information. Refer to EXL-31, "Wiring Diagram".

1.LED HEADLAMP CONTROL MODULE FUSE

1. Turn power switch OFF.
2. Check that the following fuse is not blown:

Unit	Fuse No.	Capacity
LED headlamp control module	5	10 A

Is the inspection result normal?

YES >> GO TO 2.
NO >> Replace the blown fuse after repairing the affected circuit.

2.CHECK POWER SUPPLY CIRCUIT

1. Disconnect front combination lamp connector.
2. Turn power switch ON.
3. Check voltage between front combination lamp harness connector and ground.

(+)			(–)	Voltage (Approx.)
Front combination lamp				
Connector		Terminal		
RH	E86	2	Ground	Battery voltage
LH	E85			

Is the inspection result normal?

YES >> GO TO 3.
NO >> Repair or replace harness.

3.CHECK HEADLAMP WARNING LAMP SIGNAL CIRCUIT

Check voltage between front combination lamp harness connector and ground.

(+)			(–)	Voltage (Approx.)
Front combination lamp				
Connector		Terminal		
RH	E86	1	Ground	Less than 0.5 V
LH	E85			

Is the inspection result normal?

YES >> GO TO 4.
NO >> Replace LED headlamp control module. Refer to EXL-132, "Removal and Installation".

4. CHECK HEADLAMP WARNING LAMP SIGNAL SHORT CIRCUIT

1. Turn power switch OFF.
2. Disconnect combination meter connector.
3. Check continuity between combination meter harness connector and ground.

Combination meter			Ground	Continuity
Connector		Terminal		
RH	M34	38		No
LH		39		

Is the inspection result normal?

YES >> GO TO 5.
NO >> Repair or replace harness.

5. CHECK COMBINATION METER

Check combination meter. Refer to MWI-80, "Work flow".

Is the inspection result normal?

YES >> Refer to EXL-123, "Diagnosis Procedure".
NO >> Repair or replace malfunctioning part.

PARKING LAMP CIRCUIT

Component Function Check

INFOID:0000000010634565

1.CHECK PARKING LAMP OPERATION

CONSULT ACTIVE TEST
1. Select “EXTERNAL LAMPS” in “Active Test” of “IPDM E/R”.
2. While operating the test items, check that the parking lamp is turned ON.

TAIL : Parking lamp ON
Off : Parking lamp OFF

Is the inspection result normal?

YES >> Parking lamp circuit is normal.
NO >> Refer to EXL-98, "Diagnosis Procedure".

Diagnosis Procedure

INFOID:0000000010634566

Regarding Wiring Diagram information. Refer to EXL-65, "Wiring Diagram".

1.CHECK PARKING LAMP FUSE

1. Turn power switch OFF.
2. Check that the following fuse is not blown:

Unit	Location	Fuse No.	Capacity
• Parking lamp • Front side marker lamp • Tail lamp (LH)	IPDM E/R	47	10 A

Is the inspection result normal?

YES >> GO TO 3.
NO >> GO TO 2.

2.CHECK PARKING LAMP SHORT CIRCUIT

1. Disconnect the following connectors:
- IPDM E/R
- Front combination lamps
- Front side marker lamps
- Rear combination lamp (LH)
2. Check continuity between IPDM E/R harness connector and ground.

IPDM E/R		Ground	Continuity
Connector	Terminal		
E14	43		No
	44		

Is the inspection result normal?

YES >> Replace fuse. (Replace IPDM E/R if blown fuse is found again.)
NO >> Replace the blown fuse after repairing the affected circuit.

3.CHECK PARKING LAMP BULB

Check applicable lamp bulb.

Is the inspection result normal?

YES >> GO TO 4.
NO >> Replace bulb.

4. CHECK PARKING LAMP OUTPUT VOLTAGE

CONSULT ACTIVE TEST
1. Disconnect front combination lamp connector.
2. Turn power switch ON.
3. Select “EXTERNAL LAMPS” in “Active Test” of “IPDM E/R”.
4. While operating the test items, check voltage between IPDM E/R harness connector and ground.

(+)		(–)	Test item		Voltage (Approx.)
IPDM E/R					
Connector	Terminal				
E14	43	Ground	EXTERNAL LAMPS	TAIL	Battery voltage
				Off	0 V

Is the inspection result normal?

YES >> GO TO 5.
NO >> Replace IPDM E/R. Refer to PCS-30, "Removal and Installation".

5. CHECK PARKING LAMP OPEN CIRCUIT

1. Turn power switch OFF.
2. Disconnect IPDM E/R connector.
3. Check continuity between IPDM E/R harness connector and front combination lamp harness connector.

IPDM E/R			Front combination lamp		Continuity
Connector		Terminal	Connector	Terminal	
RH	E14	43	E86	4	Yes
LH			E85		

Is the inspection result normal?

YES >> GO TO 6.
NO >> Repair or replace harness.

6. CHECK PARKING LAMP GROUND OPEN CIRCUIT

Check continuity between front combination lamp harness connector and ground.

Front combination lamp			Ground	Continuity
Connector		Terminal		
RH	E86	7		Yes
LH	E85			

Is the inspection result normal?

YES >> Check corresponding bulb socket and harness. Repair or replace if necessary.
NO >> Repair or replace harness.

FRONT SIDE MARKER LAMP CIRCUIT

Component Function Check

INFOID:0000000010634567

1.CHECK PARKING LAMP OPERATION

Check that the parking lamp is turned ON.

Is the inspection result normal?

YES >> GO TO 2.
NO >> Check parking lamp circuit. Refer to EXL-98, "Component Function Check".

2.CHECK FRONT SIDE MARKER LAMP OPERATION

CONSULT ACTIVE TEST

1. Select “EXTERNAL LAMPS” in “Active Test” of “IPDM E/R”.
2. While operating the test items, check that the front side marker lamp is turned ON.

TAIL : Front side marker lamp ON
Off : Front side marker lamp OFF

Is the inspection result normal?

YES >> Front side marker lamp circuit is normal.
NO >> Refer to EXL-100, "Diagnosis Procedure".

Diagnosis Procedure

INFOID:0000000010634568

Regarding Wiring Diagram information. Refer to EXL-65, "Wiring Diagram".

1.CHECK FRONT SIDE MARKER LAMP BULB

Check applicable lamp bulb.

Is the inspection result normal?

YES >> GO TO 2.
NO >> Replace bulb.

2.CHECK FRONT SIDE MARKER LAMP OPEN CIRCUIT

1. Turn power switch OFF.
2. Disconnect IPDM E/R connector and front side marker lamp connector.
3. Check continuity between IPDM E/R harness connector and front side marker lamp harness connector.

IPDM E/R			Front side marker lamp		Continuity
Connector		Terminal	Connector	Terminal	
RH	E14	43	E16	1	Yes
LH			E10		

Is the inspection result normal?

YES >> GO TO 3.
NO >> Repair or replace harness.

3.CHECK FRONT SIDE MARKER LAMP GROUND OPEN CIRCUIT

Check continuity between front side marker lamp harness connector and ground.

Front side marker lamp			Ground	Continuity
Connector		Terminal		
RH	E16	2		Yes
LH	E10			

Is the inspection result normal?

YES >> Check corresponding bulb socket and harness. Repair or replace if necessary.
NO >> Repair or replace harness.

TAIL LAMP CIRCUIT

Component Function Check

INFOID:0000000010634569

1.CHECK TAIL LAMP OPERATION

CONSULT ACTIVE TEST
1. Select “EXTERNAL LAMPS” in “Active Test” of “IPDM E/R”.
2. While operating the test items, check that the tail lamp is turned ON.

TAIL : Tail Lamp ON
Off : Tail lamp OFF

Is the inspection result normal?

YES >> Tail lamp circuit is normal.
NO >> Refer to EXL-102, "Diagnosis Procedure".

Diagnosis Procedure

INFOID:0000000010634570

Regarding Wiring Diagram information. Refer to EXL-65, "Wiring Diagram".

1.CHECK PARKING LAMP OPERATION

Check that the parking lamp is turned ON.

Is the inspection result normal?

YES-1 [When tail lamp (LH) does not turn ON.]>>GO TO 5.
YES-2 [When tail lamp (RH) does not turn ON.]>>GO TO 2.
NO >> Check parking lamp circuit. Refer to EXL-98, "Component Function Check".

2.CHECK TAIL LAMP (LH) FUSE

1. Turn power switch OFF.
2. Check that the following fuse is not blown:

Unit	Location	Fuse No.	Capacity
Tail lamp (RH)	IPDM E/R	46	10 A

Is the inspection result normal?

YES >> GO TO 3.
NO >> GO TO 4.

3.CHECK TAIL LAMP (RH) OUTPUT VOLTAGE

CONSULT ACTIVE TEST
1. Disconnect rear combination lamp (RH) connector.
2. Turn power switch ON.
3. Select “EXTERNAL LAMPS” in “Active Test” of “IPDM E/R”.
4. While operating the test items, check voltage between IPDM E/R harness connector and ground.

(+)		(–)	Test item		Voltage (Approx.)
IPDM E/R					
Connector	Terminal				
E14	38	Ground	EXTERNAL LAMPS	TAIL	Battery voltage
				Off	0 V

Is the inspection result normal?

YES >> GO TO 5.
NO >> Replace IPDM E/R. Refer to PCS-30, "Removal and Installation".

4. CHECK TAIL LAMP (RH) SHORT CIRCUIT

1. Disconnect IPDM E/R connector and rear combination lamp (RH) connector.
2. Check continuity between IPDM E/R harness connector and ground.

IPDM E/R		Ground	Continuity
Connector	Terminal		
E14	38		No

Is the inspection result normal?

YES >> Replace fuse. (Replace IPDM E/R if blown is found again.)
NO >> Replace the blown fuse after repairing the affected circuit.

5. CHECK TAIL LAMP OPEN CIRCUIT

1. Turn power switch OFF.
2. Disconnect IPDM E/R connector and rear combination lamp connector.
3. Check continuity between IPDM E/R harness connector and rear combination lamp harness connector.

IPDM E/R			Rear combination lamp		Continuity
Connector		Terminal	Connector	Terminal	
RH	E14	38	B59	6	Yes
LH		44	B80		

Is the inspection result normal?

YES >> GO TO 6.
NO >> Repair or replace harness.

6. CHECK TAIL LAMP GROUND OPEN CIRCUIT

Check continuity between rear combination lamp harness connector and ground.

Rear combination lamp			Ground	Continuity
Connector		Terminal		
RH	B59	5		Yes
LH	B80			

Is the inspection result normal?

YES >> Replace rear combination lamp. Refer to EXL-132, "Removal and Installation".
NO >> Repair or replace harness.

LICENSE PLATE LAMP CIRCUIT

Component Function Check

INFOID:0000000010634571

1. CHECK TAIL LAMP (RH) OPERATION

Check that the tail lamp (RH) is turned ON.

Is the inspection result normal?

YES >> GO TO 2.
NO >> Check tail lamp circuit. Refer to EXL-102, "Component Function Check".

2. CHECK LICENSE PLATE LAMP OPERATION

CONSULT ACTIVE TEST

1. Select “EXTERNAL LAMPS” in “Active Test” of “IPDM E/R”.
2. While operating the lighting switch, check that the license plate lamp is turned ON.

TAIL : License plate lamp ON
Off : License plate lamp OFF

Is the inspection result normal?

YES >> License plate lamp circuit is normal.
NO >> Refer to EXL-104, "Diagnosis Procedure".

Diagnosis Procedure

INFOID:0000000010634572

Regarding Wiring Diagram information. Refer to EXL-65, "Wiring Diagram".

1. CHECK LICENSE PLATE LAMP BULB

Check the applicable lamp bulb.

Is the inspection result normal?

YES >> GO TO 2.
NO >> Replace bulb.

2. CHECK LICENSE PLATE LAMP OPEN CIRCUIT

1. Turn power switch OFF.
2. Disconnect IPDM E/R connector and license plate lamp connector.
3. Check continuity between IPDM E/R harness connector and license plate lamp harness connector.

IPDM E/R			License plate lamp		Continuity
Connector		Terminal	Connector	Terminal	
RH	E14	38	B58	1	Yes
LH			B57		

Is the inspection result normal?

YES >> GO TO 3.
NO >> Repair or replace harness.

3. CHECK LICENSE PLATE LAMP GROUND OPEN CIRCUIT

Check continuity between license plate lamp harness connector and ground.

License plate lamp			Ground	Continuity
Connector		Terminal		
RH	B58	2		Yes
LH	B57			

Is the inspection result normal?

YES >> Check corresponding bulb socket and harness. Repair or replace if necessary.
NO >> Repair or replace harness.

FRONT FOG LAMP CIRCUIT

Component Function Check

INFOID:0000000010634573

1.CHECK FRONT FOG LAMP OPERATION

CONSULT ACTIVE TEST
1. Select “EXTERNAL LAMPS” in “Active Test” of “IPDM E/R”.
2. While operating the test items, check that the front fog lamp is turned ON.

Fog : Front fog lamp ON
Off : Front fog lamp OFF

Is the measurement normal?

YES >> Front fog lamp circuit is normal.
NO >> Refer to EXL-106, "Diagnosis Procedure".

Diagnosis Procedure

INFOID:0000000010634574

Regarding Wiring Diagram information. Refer to EXL-55, "Wiring Diagram".

1.CHECK FRONT FOG LAMP FUSE

1. Turn power switch OFF.
2. Check that the following fuse is not blown:

Unit	Location	Fuse No.	Capacity
Front fog lamp	IPDM E/R	50	15 A

Is the inspection result normal?

YES >> GO TO 3.
NO >> GO TO 2.

2.CHECK FRONT FOG LAMP SHORT CIRCUIT

1. Disconnect front fog connector and IPDM E/R connector.
2. Check continuity between IPDM E/R harness connector and ground.

IPDM E/R			Ground	Continuity
Connector		Terminal		
RH	E12	19		No
LH		20		

Is the inspection result normal?

YES >> Replace fuse. (Replace IPDM E/R if the fuse is blown again.)
NO >> Replace the blown fuse after repairing the affected circuit.

3.CHECK FRONT FOG LAMP BULB

Check the applicable lamp bulb.

Is the inspection result normal?

YES >> GO TO 4.
NO >> Replace bulb.

4.CHECK FRONT FOG LAMP OUTPUT VOLTAGE

CONSULT ACTIVE TEST
1. Disconnect front fog lamp connector.
2. Turn power switch ON.
3. Select “EXTERNAL LAMPS” in “Active Test” of “IPDM E/R”.

4. While operating the test items, check the voltage between IPDM E/R harness connector and ground.

(+)			(–)	Test item		Voltage (Approx.)
IPDM E/R						
Connector		Terminal				
RH	E12	19	Ground	EXTERNAL LAMPS	Fog	Battery voltage
					Off	0 V
LH		20			Fog	Battery voltage
					Off	0 V

Is the inspection result normal?

YES >> GO TO 5.
NO >> Replace IPDM E/R. Refer to PCS-30, "Removal and Installation".

5. CHECK FRONT FOG LAMP OPEN CIRCUIT

1. Turn power switch OFF.
2. Disconnect IPDM E/R connector.
3. Check continuity between IPDM E/R harness connector and front fog lamp harness connector.

IPDM E/R			Front fog lamp		Continuity
Connector		Terminal	Connector	Terminal	
RH	E12	19	E48	1	Yes
LH		20	E30		

Is the inspection result normal?

YES >> GO TO 6.
NO >> Repair or replace harness.

6. CHECK FRONT FOG LAMP GROUND CIRCUIT OPEN CIRCUIT

Check continuity between front fog lamp harness connector and ground.

Front fog lamp			Ground	Continuity
Connector		Terminal		
RH	E48	2		Yes
LH	E30			

Is the inspection result normal?

YES >> Refer to GI-53, "Intermittent Incident".
NO >> Repair or replace harness.

TURN SIGNAL LAMP CIRCUIT

Component Function Check

INFOID:0000000010634575

1.CHECK TURN SIGNAL LAMP

CONSULT ACTIVE TEST
1. Select “FLASHER” in “Active Test” of “BCM (FLASHER)”.
2. While operating the test items, check that the turn signal lamps is turned ON.

LH : Turn signal lamps (LH) ON
RH : Turn signal lamps (RH) ON
Off : Turn signal lamps OFF

Is the inspection result normal?

YES >> Turn signal lamp circuit is normal.
NO >> Refer to EXL-108, "Diagnosis Procedure".

Diagnosis Procedure

INFOID:0000000010634576

Regarding Wiring Diagram information. Refer to EXL-60, "Wiring Diagram".

1.CHECK TURN SIGNAL LAMP BULB

Check the applicable lamp bulb.

Is the inspection result normal?

YES >> GO TO 2.
NO >> Replace bulb.

2.CHECK TURN SIGNAL LAMP OUTPUT VOLTAGE

1. Turn power switch OFF.
2. Disconnect front combination lamp connector and rear combination lamp connector.
3. Turn power switch ON.
4. While operating the turn signal switch, check voltage between BCM harness connector and ground.

(+) BCM Connector		(+) BCM Terminal	(–)	Condition		Voltage (Approx.)
LH	M25	60	Ground	Turn signal switch	LH	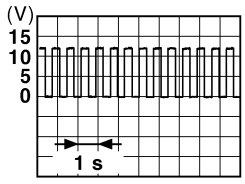
					OFF	0 V
RH		61			RH	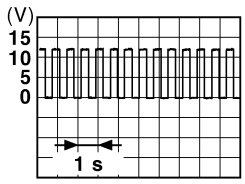
					OFF	0 V

Is the inspection result normal?

YES >> GO TO 3.
NO >> GO TO 4.

3. CHECK TURN SIGNAL LAMP OPEN CIRCUIT

1. Turn power switch OFF.
2. Disconnect BCM connector.
3. Check continuity between BCM harness connector and front combination lamp, side turn signal lamp or rear combination lamp harness connector.

Front turn signal lamp

BCM			Front combination lamp		Continuity
Connector		Terminal	Connector	Terminal	
RH	M25	61	E86	8	Yes
LH		60	E85		

Rear turn signal lamp

BCM			Rear combination lamp		Continuity
Connector		Terminal	Connector	Terminal	
RH	M25	61	B59	4	Yes
LH		60	B80		

Is the inspection result normal?

YES >> GO TO 5.
NO >> Repair or replace harness.

4. CHECK TURN SIGNAL LAMP SHORT CIRCUIT

Check continuity between BCM harness connector and ground.

BCM			Ground	Continuity
Connector		Terminal		
RH	M25	61		No
LH		60		

Is the inspection result normal?

YES >> Check each bulb socket for internal short circuit, and if check result is normal, replace BCM. Refer to BCS-72, "Removal and Installation".
NO >> Repair or replace harness.

5. CHECK TURN SIGNAL LAMP GROUND OPEN CIRCUIT

Check continuity between BCM harness connector and front combination lamp or rear combination lamp and ground.

Front turn signal lamp

Front combination lamp			Ground	Continuity
Connector		Terminal		
RH	E86	7		Yes
LH	E85			

Rear turn signal lamp

Rear combination lamp			Ground	Continuity
Connector		Terminal		
RH	B59	7		Yes
LH	B80			

Is the inspection result normal?

YES >> Check corresponding bulb socket and harness. Repair or replace if necessary.
NO >> Repair or replace harness.

OPTICAL SENSOR

Component Function Check

INFOID:0000000010634577

1. CHECK OPTICAL SENSOR SIGNAL BY CONSULT

CONSULT DATA MONITOR
1. Turn power switch ON.
2. Select “OPTISEN (DTCT)” in “Data Monitor” of “BCM (HEADLAMP)”.
3. Turn lighting switch AUTO.
4. With the optical sensor illuminating, check the monitor status.

Monitor item	Condition		Voltage (Approx.)
OPTISEN (DTCT)	Optical sensor	When illuminating	3.1 V or more *
		When shutting off light	0.6 V or less

*: Illuminates the optical sensor. The value may be less than the standard value if brightness is weak.

Is the inspection result normal?

YES >> Optical sensor is normal.
NO >> Refer to EXL-110, "Diagnosis Procedure".

Diagnosis Procedure

INFOID:0000000010634578

Regarding Wiring Diagram information. Refer to EXL-42, "Wiring Diagram".

1. CHECK OPTICAL SENSOR POWER SUPPLY INPUT

1. Turn power switch ON.
2. Turn lighting switch AUTO.
3. Check voltage between optical sensor harness connector and ground.

(+)		(–)	Voltage (Approx.)
Optical sensor			
Connector	Terminal		
M16	1	Ground	5 V

Is the inspection result normal?

YES >> GO TO 2.
NO >> GO TO 4.

2. CHECK OPTICAL SENSOR GROUND INPUT

Check voltage between optical sensor harness connector and ground.

(+)		(–)	Voltage (Approx.)
Optical sensor			
Connector	Terminal		
M16	3	Ground	0 V

Is the inspection result normal?

YES >> GO TO 3.
NO >> GO TO 6.

3. CHECK OPTICAL SENSOR SIGNAL OUTPUT

With illuminating the optical sensor, check voltage between optical sensor harness connector and ground.

(+)		(–)	Condition		Voltage (Approx.)
Optical sensor					
Connector	Terminal				
M16	2	Ground	Optical sensor	When illuminating	3.1 V or more *
				When shutting off light	0.6 V or less

*: Illuminate the optical sensor. The value may be less than the standard if brightness is weak.

Is the inspection result normal?

YES >> GO TO 7.
NO >> Replace the optical sensor. Refer to EXL-139, "Removal and Installation".

4. CHECK OPTICAL SENSOR OPEN CIRCUIT

1. Turn power switch OFF.
2. Disconnect optical sensor connector and BCM connector.
3. Check continuity between optical sensor harness connector and BCM harness connector.

Optical sensor		BCM		Continuity
Connector	Terminal	Connector	Terminal	
M16	1	M24	17	Yes

Is the inspection result normal?

YES >> GO TO 5.
NO >> Repair or replace harness.

5. CHECK OPTICAL SENSOR SHORT CIRCUIT

Check continuity between optical sensor harness connector and ground.

Optical sensor		Ground	Continuity
Connector	Terminal		
M16	1		No

Is the inspection result normal?

YES >> Replace BCM. Refer to BCS-72, "Removal and Installation".
NO >> Repair or replace harness.

6. CHECK OPTICAL SENSOR GROUND OPEN CIRCUIT

1. Turn power switch OFF.
2. Disconnect optical sensor connector and BCM connector.
3. Check continuity between optical sensor harness connector and BCM harness connector.

Optical sensor		BCM		Continuity
Connector	Terminal	Connector	Terminal	
M16	3	M24	18	Yes

Is the inspection result normal?

YES >> Replace BCM. Refer to BCS-72, "Removal and Installation".
NO >> Repair or replace harness.

7. CHECK OPTICAL SENSOR SIGNAL OPEN CIRCUIT

1. Turn power switch OFF.
2. Disconnect optical sensor connector and BCM connector.
3. Check continuity between optical sensor harness connector and BCM harness connector.

Optical sensor		BCM		Continuity
Connector	Terminal	Connector	Terminal	
M16	2	M24	14	Yes

Is the inspection result normal?

YES >> GO TO 8.
NO >> Repair or replace harness.

8. CHECK OPTICAL SENSOR SHORT CIRCUIT

Check continuity between optical sensor harness connector and ground.

Optical sensor		Ground	Continuity
Connector	Terminal		
M16	2		No

Is the inspection result normal?

YES >> Replace BCM. Refer to BCS-72, "Removal and Installation".
NO >> Repair or replace harness.

HAZARD SWITCH

Component Function Check

INFOID:0000000010634579

1. CHECK HAZARD SWITCH SIGNAL BY CONSULT

CONSULT DATA MONITOR
1. Turn power switch ON.
2. Select “HAZARD SW” in “Data Monitor” of “BCM (FLASHER)”.
3. While operating the hazard switch, check the monitor status.

Monitor item	Condition		Monitor status
HAZARD SW	Hazard switch	ON	On
		OFF	Off

Is the inspection result normal?

YES >> Hazard switch circuit is normal.
NO >> Refer to EXL-113, "Diagnosis Procedure".

Diagnosis Procedure

INFOID:0000000010634580

Regarding Wiring Diagram information. Refer to EXL-60, "Wiring Diagram".

1. CHECK HAZARD SWITCH SIGNAL INPUT

1. Turn power switch OFF.
2. Disconnect hazard switch connector.
3. Check voltage between hazard switch connector and ground.

(+)		(–)	Voltage (Approx.)
Hazard switch			
Connector	Terminal		
M45	2	Ground	Battery voltage

Is the inspection result normal?

YES >> GO TO 4.
NO >> GO TO 2.

2. CHECK HAZARD SWITCH SIGNAL OPEN CIRCUIT

1. Disconnect BCM connector.
2. Check continuity between hazard switch harness connector and BCM harness connector.

Hazard switch		BCM		Continuity
Connector	Terminal	Connector	Terminal	
M45	2	M24	29	Yes

Is the inspection result normal?

YES >> GO TO 3.
NO >> Repair or replace harness.

3. CHECK HAZARD SWITCH SIGNAL SHORT CIRCUIT

Check continuity between hazard switch harness connector and ground.

Hazard switch		Ground	Continuity
Connector	Terminal		
M45	2		No

Is the inspection result normal?

YES >> Replace BCM. Refer to BCS-72, "Removal and Installation".
NO >> Repair or replace harness.

4. CHECK HAZARD SWITCH GROUND OPEN CIRCUIT

Check continuity between hazard switch harness connector and ground.

Hazard switch		Ground	Continuity
Connector	Terminal		
M45	1		Yes

Is the inspection result normal?

YES >> Replace hazard switch. Refer to EXL-140, "Removal and Installation".
NO >> Repair or replace harness.

SYMPTOM DIAGNOSIS

EXTERIOR LIGHTING SYSTEM SYMPTOMS WITHOUT DAYTIME RUNNING LIGHT SYSTEM

WITHOUT DAYTIME RUNNING LIGHT SYSTEM : Symptom Table

INFOID:0000000010634581

CAUTION:
Perform the "Self Diagnostic Result" with CONSULT before the symptom diagnosis. Perform the trouble diagnosis if any DTC is detected.

Symptom		Possible cause	Inspection item
Headlamp (HI) is not turned ON.	One side	• Fuse • Halogen bulb (HI) • Harness between IPDM E/R and front combination lamp • Harness between front combination lamp and ground • IPDM E/R	Headlamp (HI) circuit Refer to EXL-85, "WITHOUT DAYTIME RUNNING LIGHT SYSTEM : Component Function Check".
	Both sides	**Symptom diagnosis** "BOTH SIDE HEADLAMPS (HI) ARE NOT TURNED ON" Refer to EXL-121, "WITHOUT DAYTIME RUNNING LIGHT SYSTEM : Diagnosis Procedure".	
High beam indicator lamp is not turned ON. [Headlamp (HI) is turned ON.]		Combination meter	• Combination meter Data monitor "HI-BEAM IND" • BCM (HEAD LAMP) Active test "HEADLAMP"
Headlamp (LO) is not turned ON. [Headlamp warning lamp is not turned ON.]	One side	• Fuse • Harness between IPDM E/R and front combination lamp • IPDM E/R • LED headlamp control module	Headlamp (LO) circuit Refer to EXL-90, "Component Function Check".
	Both sides	**Symptom diagnosis** "BOTH SIDE HEADLAMPS (LO) ARE NOT TURNED ON" Refer to EXL-123, "Diagnosis Procedure".	
Headlamp (LO) is not turned ON, or only 1 piece of LED is turned ON. [Headlamp warning lamp is turned ON.]		• Front combination lamp • LED headlamp control module • Harness between front combination lamp and ground	LED headlamp Refer to EXL-95, "Diagnosis Procedure".
Each lamp is not turned ON/OFF using lighting switch AUTO.		• Combination switch • Harness between combination switch and BCM • BCM	Combination switch Refer to BCS-71, "Symptom Table".
		• Optical sensor • Harness between optical sensor and BCM • BCM	Optical sensor Refer to EXL-110, "Component Function Check".
Parking lamp is not turned ON.		• Fuse • Parking lamp bulb • Parking lamp bulb socket • Harness between IPDM E/R and front combination lamp • Harness between front combination lamp and ground • IPDM E/R	Parking lamp circuit Refer to EXL-98, "Component Function Check".

Symptom		Possible cause	Inspection item
Front side marker lamp is not turned ON.		• Fuse • Front side marker lamp bulb • Front side marker lamp bulb socket • Harness between IPDM E/R and front side marker lamp • Harness between front side marker lamp and ground	Front side marker lamp circuit Refer to EXL-100, "Component Function Check".
Tail lamp and rear side marker lamp are not turned ON.		• Fuse • Harness between IPDM E/R and rear combination lamp • Harness between rear combination lamp and ground • Rear combination lamp	Tail lamp circuit Refer to EXL-102, "Component Function Check".
License plate lamp is not turned ON.		• License plate lamp bulb • License plate lamp bulb socket • Harness between IPDM E/R and license plate lamp • Harness between license plate lamp and ground	License plate lamp circuit Refer to EXL-104, "Component Function Check".
Parking lamp, side marker lamp, tail lamp and license plate lamp are not turned OFF.		**Symptom diagnosis** “PARKING, LICENSE PLATE, SIDE MARKER AND TAIL LAMPS ARE NOT TURNED ON” Refer to EXL-124, "Diagnosis Procedure".	
Tail lamp indicator lamp is not turned ON. (Parking lamp, side marker lamp, tail lamp and license plate lamp are turned ON.)		Combination meter	• Combination meter Data monitor “LIGHT IND” • BCM (HEAD LAMP) Active test “TAIL LAMP”
Turn signal lamp does not blink.	Indicator lamp is normal. (Applicable side performs high flasher activation.)	• Turn signal lamp bulb • Turn signal lamp bulb socket • Harness between BCM and each turn signal lamp	Turn signal lamp circuit Refer to EXL-108, "Component Function Check".
	Indicator lamp is included.	• Combination switch • Harness between combination switch and BCM • BCM	Combination switch Refer to BCS-71, "Symptom Table".
Turn signal indicator lamp does not blink. (Turn signal lamp is normal.)	One side	Combination meter	—
	Both sides (Always)	• Turn signal indicator lamp signal • BCM • Combination meter	• Combination meter Data monitor “TURN IND” • BCM (FLASHER) Active test “FLASHER”
	Both sides (Only when activating hazard warning lamp with power switch OFF)	• Combination meter power supply and ground circuit • Combination meter	Combination meter Power supply and ground circuit Refer to MWI-85, "COMBINATION METER : Diagnosis Procedure".
• Hazard warning lamp does not activate. • Hazard warning lamp continues activating. (Turn signal is normal.)		• Hazard switch • Harness between hazard switch and BCM • BCM	Hazard switch Refer to EXL-113, "Component Function Check".

Symptom		Possible cause	Inspection item
Front fog lamp is not turned ON.	One side	• Front fog lamp bulb • Harness between IPDM E/R and front fog lamp • IPDM E/R	Front fog lamp circuit Refer to EXL-106, "Component Function Check".
	Both sides	**Symptom diagnosis** "BOTH SIDE FRONT FOG LAMPS ARE NOT TURNED ON" Refer to EXL-125, "Diagnosis Procedure".	
Front fog lamp indicator is not turned ON. (Front fog lamp is turned ON.)		Combination meter	• Combination meter Data monitor "FR FOG IND" • BCM (HEAD LAMP) Active test "FR FOG LAMP"

WITH DAYTIME RUNNING LIGHT SYSTEM

WITH DAYTIME RUNNING LIGHT SYSTEM : Symptom Table

INFOID:0000000010634582

CAUTION:
Perform the "Self Diagnostic Result" with CONSULT before the symptom diagnosis. Perform the trouble diagnosis if any DTC is detected.

Symptom		Possible cause	Inspection item
Headlamp (HI) is not turned ON.	One side	• Fuse • Halogen bulb (HI) • Harness between IPDM E/R and headlamp (HI) • Harness between headlamp (HI) and ground • IPDM E/R	Headlamp (HI) circuit Refer to EXL-86, "WITH DAYTIME RUNNING LIGHT SYSTEM : Component Function Check".
		• Harness between IPDM E/R and daytime running light relay • Daytime running light relay • IPDM E/R	Daytime running light relay circuit Refer to EXL-92, "Component Function Check".
	Both sides	**Symptom diagnosis** "BOTH SIDE HEADLAMPS (HI) ARE NOT TURNED ON" Refer to EXL-121, "WITH DAYTIME RUNNING LIGHT SYSTEM : Diagnosis Procedure".	
High beam indicator lamp is not turned ON. [Headlamp (HI) is turned ON.]		Combination meter	• Combination meter Data monitor "HI-BEAM IND" • BCM (HEAD LAMP) Active test "HEADLAMP"
Headlamp (LO) is not turned ON.	One side	• Fuse • Harness between IPDM E/R and headlamp lamp (LO) • IPDM E/R • LED headlamp control module	Headlamp (LO) circuit Refer to EXL-90, "Component Function Check".
	Both sides	**Symptom diagnosis** "BOTH SIDE HEADLAMPS (LO) ARE NOT TURNED ON" Refer to EXL-123, "Diagnosis Procedure".	
Each lamp is not turned ON/OFF with lighting switch AUTO.		• Combination switch • Harness between combination switch and BCM • BCM	Combination switch Refer to BCS-71, "Symptom Table".
		• Optical sensor • Harness between optical sensor and BCM • BCM	Optical sensor Refer to EXL-110, "Component Function Check".

Symptom		Possible cause	Inspection item
Daytime running light is not turned ON. [Headlamp (HI) is turned ON.]		• Fuse • Harness between IPDM E/R and daytime running light relay • Daytime running light relay • IPDM E/R • BCM • ECM • Combination meter	• Daytime running light relay circuit Refer to EXL-92, "Component Function Check". • BCM (HEADLAMP) Data monitor “ENGINE STATE” • Combination meter Data monitor “PKB SW” • BCM (HEADLAMP) Active test “DAYTIME RUNNING LIGHT”
Parking lamp is not turned ON.		• Fuse • Parking lamp bulb • Harness between IPDM E/R and front combination lamp • IPDM E/R	Parking lamp circuit Refer to EXL-98, "Component Function Check".
Front side marker lamp is not turned ON.		• Front side marker lamp bulb • Harness between IPDM E/R and front side marker lamp • Harness between front side marker lamp and ground • IPDM E/R	Front side marker lamp circuit Refer to EXL-100, "Component Function Check".
Tail lamp (Rear side marker lamp) is not turned ON.		• Fuse • Tail lamp bulb • Harness between IPDM E/R and rear combination lamp • Harness between and rear combination lamp and ground	Tail lamp circuit Refer to EXL-102, "Component Function Check".
License plate lamp is not turned ON.		• License plate lamp bulb • Harness between IPDM E/R and license plate lamp • Harness between license plate lamp and ground	License plate lamp circuit Refer to EXL-104, "Component Function Check".
Parking lamp, side marker lamp, tail lamp and license plate lamp are not turned ON.		**Symptom diagnosis** “PARKING, SIDE MARKER, LICENSE PLATE AND TAIL LAMPS ARE NOT TURNED ON” Refer to EXL-124, "Diagnosis Procedure".	
Tail lamp indicator is not turned ON. (Exterior lamps are turned ON.)		Combination meter	• Combination meter Data monitor “LIGHT IND” • BCM (HEADLAMP) Active test “TAIL LAMP”
Turn signal lamp does not blink.	Indicator lamp is normal. (Applicable side performs high flasher activation.)	• Turn signal lamp bulb • Door mirror • Harness between BCM and each turn signal lamp • Harness between each turn signal lamp and ground	Turn signal lamp circuit Refer to EXL-108, "Component Function Check".
	Indicator lamp is included.	• Combination switch • Harness between combination switch and BCM • BCM	Combination switch Refer to BCS-71, "Symptom Table".
Turn signal indicator lamp does not blink. (Turn signal lamp is normal.)	One side	Combination meter	—
	Both sides (Always)	• Turn signal indicator lamp signal • BCM • Combination meter	• Combination meter Data monitor “TURN IND” • BCM (FLASHER) Active test “FLASHER”
	Both sides (Only when activating hazard warning lamp with power switch OFF)	• Combination meter power supply and ground circuit • Combination meter	Combination meter Power supply and ground circuit Refer to MWI-85, "COMBINATION METER : Diagnosis Procedure".

Symptom		Possible cause	Inspection item
• Hazard warning lamp does not activate. • Hazard warning lamp continues activating. (Turn signal is normal.)		• Hazard switch • Harness between hazard switch and BCM • Harness between hazard switch and ground • BCM	Hazard switch circuit Refer to EXL-113, "Component Function Check".
Front fog lamp is not turned ON.	One side	• Front fog lamp bulb • Harness between IPDM E/R and front fog lamp • Harness between front fog lamp and ground • IPDM E/R	Front fog lamp circuit Refer to EXL-106, "Component Function Check".
	Both sides	**Symptom diagnosis** “BOTH SIDE FRONT FOG LAMPS ARE NOT TURNED ON” Refer to EXL-125, "Diagnosis Procedure".	

NORMAL OPERATING CONDITION

Description

INFOID:0000000010634583

LED HEADLAMP

- LED brightness and color may slightly change until the temperature becomes stable. This is not malfunction.
- Illumination time lag may occur between right and left. This is not malfunction.
- Brightness may be reduced due to aged deterioration of LED.
- Because of the dummy portion of connecting part of front combination lamp, water may be seemed as if it enters in headlamp after the vehicle is washed or after the rain. But, actually water is not entered in headlamp, and this is not malfunction.

AUTO LIGHT SYSTEM

The headlamp may not be turned ON/OFF immediately after passing dark area or bright area (short tunnel, sky bridge, shadowed area, etc.) while using the auto light system. This is caused by the control difference. This is normal.

BOTH SIDE HEADLAMPS (HI) ARE NOT TURNED ON WITHOUT DAYTIME RUNNING LIGHT SYSTEM

WITHOUT DAYTIME RUNNING LIGHT SYSTEM : Description

INFOID:0000000010634584

Both side headlamps (HI) are not turned ON when setting to the lighting switch HI or PASS.

WITHOUT DAYTIME RUNNING LIGHT SYSTEM : Diagnosis Procedure

INFOID:0000000010634585

1. COMBINATION SWITCH INSPECTION

Check combination switch. Refer to BCS-71, "Symptom Table".

Is the inspection result normal?

YES >> GO TO 2.
NO >> Repair or replace the malfunctioning part.

2. CHECK HEADLAMP (HI) REQUEST SIGNAL INPUT

CONSULT DATA MONITOR

1. Select “HL HI REQ” in “Data Monitor” of “IPDM E/R”.
2. While operating the lighting switch, check the monitor status.

Monitor item	Condition		Monitor status
HL HI REQ	Lighting switch (2ND)	HI or PASS	On
		LO	Off

Is the inspection result normal?

YES >> GO TO 3.
NO >> Replace BCM. Refer to BCS-72, "Removal and Installation".

3. HEADLAMP (HI) CIRCUIT INSPECTION

Check headlamp (HI) circuit. Refer to EXL-85, "WITHOUT DAYTIME RUNNING LIGHT SYSTEM : Component Function Check".

Is the inspection result normal?

YES >> Refer to GI-53, "Intermittent Incident".
NO >> Repair or replace the malfunctioning part.

WITH DAYTIME RUNNING LIGHT SYSTEM

WITH DAYTIME RUNNING LIGHT SYSTEM : Description

INFOID:0000000010634586

Both side headlamps (HI) are not turned ON when setting to the lighting switch HI or PASS.

WITH DAYTIME RUNNING LIGHT SYSTEM : Diagnosis Procedure

INFOID:0000000010634587

1. COMBINATION SWITCH INSPECTION

Check combination switch. Refer to BCS-71, "Symptom Table".

Is the inspection result normal?

YES >> GO TO 2.
NO >> Repair or replace the malfunctioning part.

2. CHECK HEADLAMP (HI) REQUEST SIGNAL INPUT

CONSULT DATA MONITOR

1. Select “HL HI REQ” in “Data Monitor” of “IPDM E/R”.
2. While operating the lighting switch, check the monitor status.

Monitor item	Condition		Monitor status
HL HI REQ	Lighting switch (2ND)	HI or PASS	On
		LO	Off

Is the inspection result normal?

YES >> GO TO 3.
NO >> Replace BCM. Refer to BCS-72, "Removal and Installation".

3. HEADLAMP (HI) CIRCUIT INSPECTION

Check headlamp (HI) circuit. Refer to EXL-86, "WITH DAYTIME RUNNING LIGHT SYSTEM : Component Function Check".

Is the inspection result normal?

YES >> Refer to GI-53, "Intermittent Incident".
NO >> Repair or replace the malfunctioning part.

BOTH SIDE HEADLAMPS (LO) ARE NOT TURNED ON

Description

INFOID:0000000010634588

Both side headlamps (LO) are not turned ON in any condition.

Diagnosis Procedure

INFOID:0000000010634589

1. CHECK COMBINATION SWITCH

Check combination switch. Refer to BCS-71, "Symptom Table".

Is the inspection result normal?

YES >> GO TO 2.
NO >> Repair or replace the malfunctioning part.

2. CHECK HEADLAMP (LO) REQUEST SIGNAL INPUT

CONSULT DATA MONITOR

1. Select “HL LO REQ” in “Data Monitor” of “IPDM E/R”.
2. With operating the lighting switch, check the monitor status.

Monitor item	Condition		Monitor status
HL LO REQ	Lighting switch	2ND	On
		OFF	Off

Is the inspection result normal?

YES >> GO TO 3.
NO >> Replace BCM. Refer to BCS-72, "Removal and Installation".

3. HEADLAMP (LO) CIRCUIT INSPECTION

Check headlamp (LO) circuit. Refer to EXL-90, "Component Function Check".

Is the inspection result normal?

YES >> Refer to GI-53, "Intermittent Incident".
NO >> Repair or replace the malfunctioning part.

PARKING, LICENSE PLATE, SIDE MARKER AND TAIL LAMPS ARE NOT TURNED ON

Description

INFOID:0000000010634590

The parking, license plate, side marker, tail lamps and each illumination are not turned ON in any condition.

Diagnosis Procedure

INFOID:0000000010634591

1. COMBINATION SWITCH INSPECTION

Check combination switch. Refer to BCS-71, "Symptom Table".

Is the combination switch normal?

YES >> GO TO 2.
NO >> Repair or replace the malfunctioning part.

2. CHECK TAIL LAMP RELAY REQUEST SIGNAL INPUT

CONSULT DATA MONITOR

1. Select “TAIL & CLR REQ” in “Data Monitor” of “IPDM E/R”.
2. While operating the lighting switch, check the monitor status.

Monitor item	Condition		Monitor status
TAIL & CLR REQ	Lighting switch	1ST	On
		OFF	Off

Is the inspection result normal?

YES >> Replace IPDM E/R. Refer to PCS-30, "Removal and Installation".
NO >> Replace BCM. Refer to BCS-72, "Removal and Installation".

BOTH SIDE FRONT FOG LAMPS ARE NOT TURNED ON

Description

INFOID:0000000010634592

The front fog lamps are not turned ON in any condition.

Diagnosis Procedure

INFOID:0000000010634593

Regarding Wiring Diagram information. Refer to EXL-31, "Wiring Diagram".

1. CHECK FUSE

Check that the following fuse is not blown:

Unit	Location	Fuse No.	Capacity
Front fog lamp	IPDM E/R	50	15 A

Is the inspection result normal?

YES >> GO TO 2.
NO >> Replace the blown fuse after repairing the affected circuit.

2. COMBINATION SWITCH INSPECTION

Check combination switch. Refer to BCS-71, "Symptom Table".

Is the inspection result normal?

YES >> GO TO 3.
NO >> Repair or replace the malfunctioning part.

3. CHECK FRONT FOG LAMP REQUEST SIGNAL INPUT

CONSULT DATA MONITOR

1. Select “FR FOG REQ” in “Data Monitor” of “IPDM E/R”.
2. While operating the front fog lamp switch, check the monitor status.

Monitor item	Condition		Monitor status
FR FOG REQ	Front fog lamp switch (With lighting switch 2ND)	ON	On
		OFF	Off

Is the item status normal?

YES >> Replace IPDM E/R. Refer to PCS-30, "Removal and Installation".
NO >> Replace BCM. Refer to BCS-72, "Removal and Installation".

PERIODIC MAINTENANCE

HEADLAMP AIMING ADJUSTMENT

Description

INFOID:0000000010634594

PREPARATION BEFORE ADJUSTING

NOTE:

- For details, refer to the regulations in your own country.
- Perform aiming if the vehicle front body has been repaired and/or the headlamp assembly has been replaced.

Before performing aiming adjustment, check the following.

- Adjust the tire pressure to the specification.
- Coolant and engine oil filled to correct level, fuel tank full.
- Confirm spare tire, jack and tools are stowed properly.
- Maintain unloaded vehicle condition. (Remove luggage from the passenger compartment and the trunk room.)
- Carefully wipe any dirt from headlamp lens.

  CAUTION:

  Do not use organic solvent (thinner, gasoline etc.)
- Place a driver or equivalent weight of 68.5 kg (150 lb) on the driver seat.

AIMING ADJUSTMENT SCREW

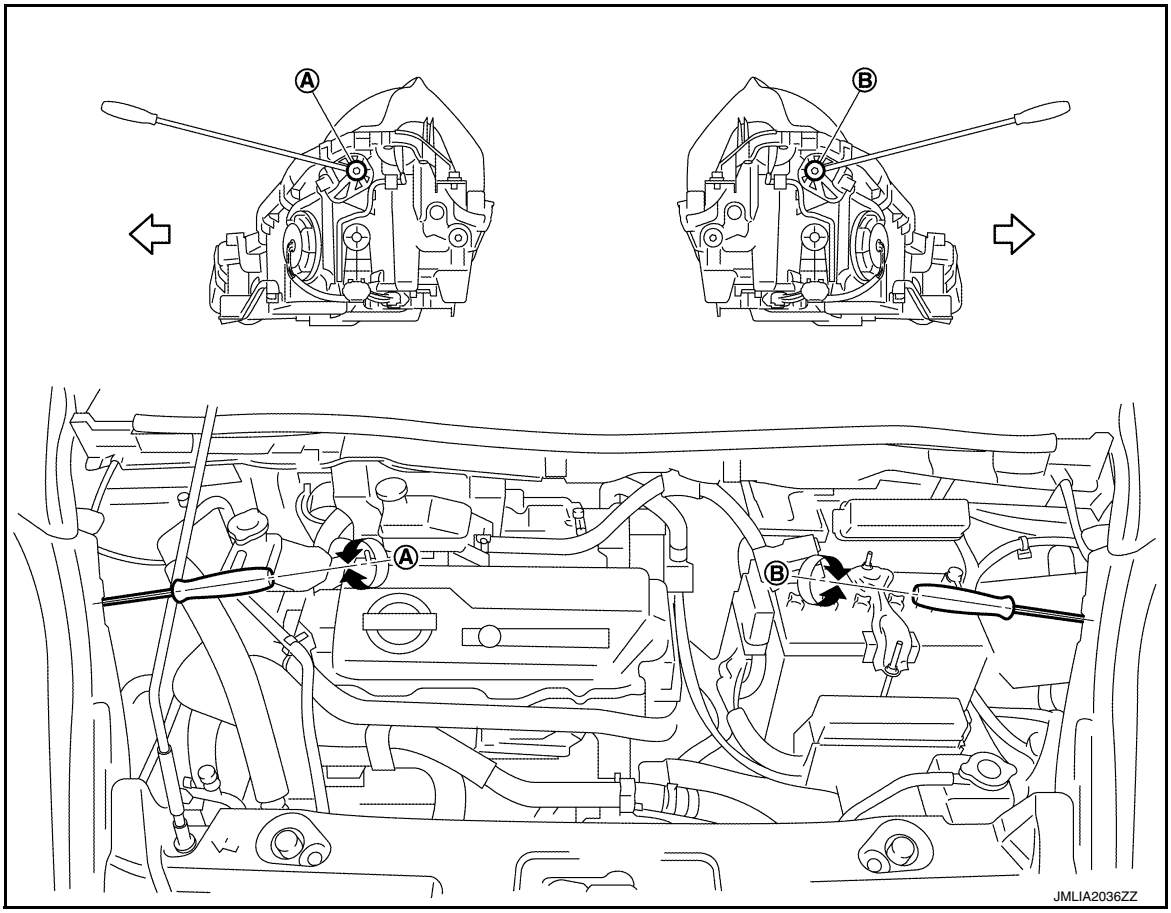

A Headlamp (RH) (UP/DOWN) adjustment screw B. Headlamp (LH) (UP/DOWN) adjustment screw

⇦ Vehicle center

Adjustment screw		Rotation	Facing direction
A	Headlamp RH (UP/DOWN)	Clockwise	DOWN
		Counterclockwise	UP
B	Headlamp LH (UP/DOWN)	Clockwise	DOWN
		Counterclockwise	UP

Aiming Adjustment Procedure

INFOID:0000000010634595

1. Place the screen.
   NOTE:
   - Stop the vehicle facing the wall.
   - Place the aiming screen on the same level and flat surface as the vehicle.
2. Face the aiming screen with the vehicle. Maintain 10 m (33 ft) between the headlamp center and the aiming screen.
3. Start the engine. Turn the headlamp (LO) ON.
   NOTE:
   Block the opposite headlamp from projecting a beam pattern onto the aiming screen, using a suitable object. Aim each headlamp individually.
   CAUTION:
   Do not cover the lens surface with a tape etc. The lens is made of resin.
4. Measure the distance (X) between the horizontal center line of headlamp (H) and the cutoff line (A) within the light axis measurement range (R) from the vertical center line ahead of headlamp (V).

   Light axis measurement range (R) : 350 ± 175 mm (13.78 ± 6.89 in)

   Low beam distribution on the screen

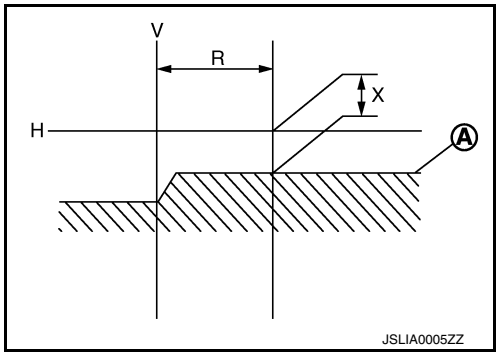

5. Adjust the cutoff line height (X) with the aiming adjustment screw so as to enter in the adjustment range (M–N) according to the horizontal center line of headlamp (H).

unit: mm (in)

Horizontal center line of headlamp (H)	Highest cutoff line height (M)	Lowest cutoff line height (N)
700 (27.56) or less	4 (0.16)	30 (1.18)
701(27.60) – 800 (31.50)	4 (0.16)	30 (1.18)
801 (31.54) or more	17 (0.67)	44 (1.73)

Side view

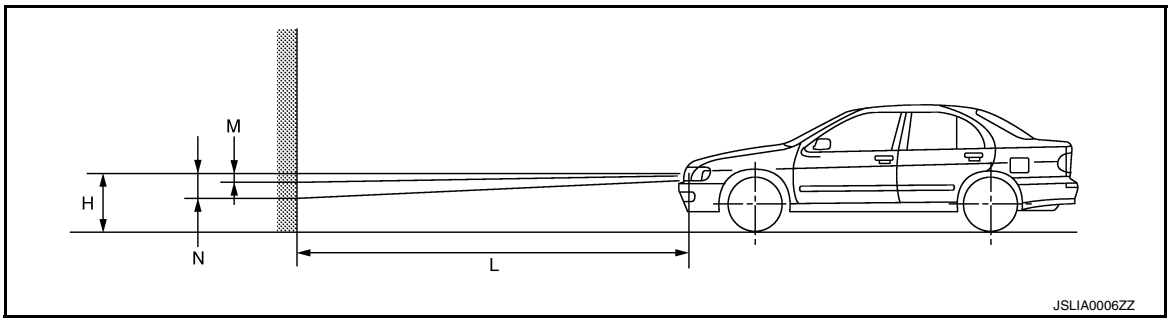

Distance between the headlamp center and the screen (L) : 10 m (33 ft)

FRONT FOG LAMP AIMING ADJUSTMENT

Description

INFOID:0000000010634596

PREPARATION BEFORE ADJUSTING

NOTE:
- For details, refer to the regulations in your own country.
- Perform aiming if the vehicle front body has been repaired and/or the fog lamp assembly has been replaced.

Before performing aiming adjustment, check the following.
- Adjust the tire pressure to the specification.
- Fill with coolant and each oil.
- Maintain the unloaded vehicle condition. (Remove luggage from the passenger compartment and the trunk room.)
  NOTE:
  Do not remove the temporary tire, jack and on-vehicle tool.
- Wipe out dirt on the fog lamp.
  CAUTION:
  Never use organic solvent (thinner, gasoline etc.)
- Ride alone on the driver seat.

AIMING ADJUSTMENT SCREW

- Turn the aiming adjusting screw for adjustment.

  A: DOWN

  B: UP

- For the position and direction of the adjusting screw, refer to the figure.
  NOTE:
  A screwdriver or hexagonal wrench [6 mm (0.24 in)] can be used for adjustment.

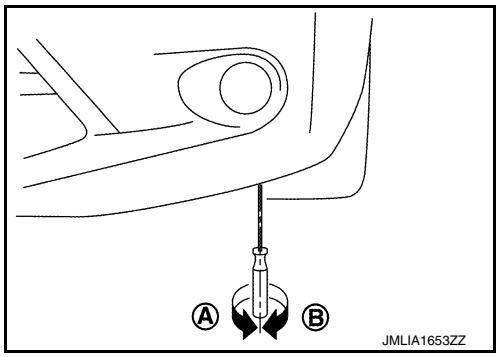

Aiming Adjustment Procedure

INFOID:0000000010634597

1. Place the screen.
   NOTE:
   - Stop the vehicle facing the wall.
   - Place the aiming screen on the same level and flat surface as the vehicle.
2. Face the aiming screen with the vehicle. Maintain 10 m (33 ft) between the front fog lamp center and the screen.
3. Start the motor. Turn the front fog lamp ON.
   NOTE:
   Block the headlamps from projecting a beam pattern onto the aiming screen, using a suitable object. Aim each headlamp individually.
   CAUTION:
   Do not cover the lens surface with a tape etc. The lens is made of resin.
4. Adjust the cutoff line height (A) with the aiming adjustment screw so that the distance (X) between the horizontal center line of front fog lamp (H) and (A) becomes 150 mm (5.906 in).

Front fog lamp light distribution on the screen

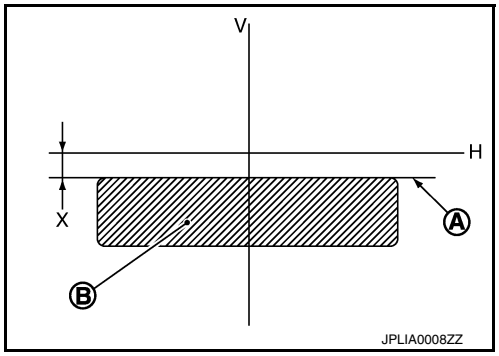

A : Cutoff line
B : High illuminance area
H : Horizontal center line of front fog lamp
V : Vertical center line of front fog lamp
X : Cutoff line height

REMOVAL AND INSTALLATION

FRONT COMBINATION LAMP

Exploded View

INFOID:0000000010634598

REMOVAL

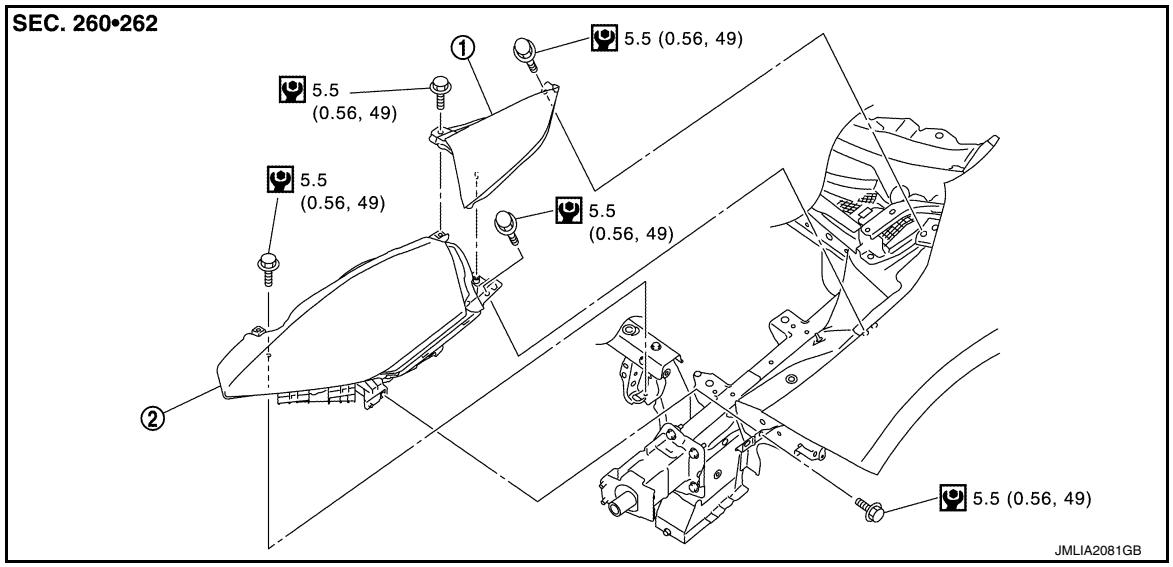

1. Front side marker lamp
2. Front combination lamp

DISASSEMBLY

Front combination lamp

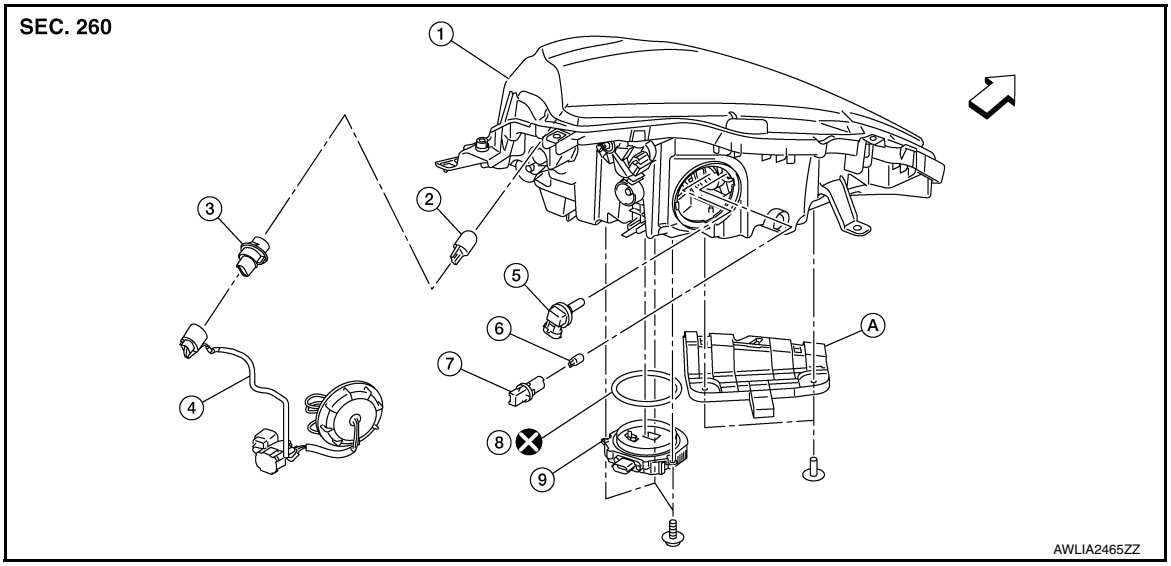

1.	Housing assembly	2.	Front turn signal lamp	3.	Front turn signal lamp socket
4.	Harness	5.	Halogen bulb (HI)	6.	Parking lamp bulb
7.	Parking lamp bulb socket	8.	Seal packing	9.	LED headlamp control module
A.	Bumper bracket	⇦	Vehicle front		

CAUTION:

- **Disconnect the 12V battery negative terminal or remove the fuse to electric leakage. Refer to EXL-8, "Precaution for Removing 12V Battery".**
- **Never disassemble LED headlamp (LO) unit assembly.**

- **Replace front combination lamp, when malfunction LED headlamp unit.**

Removal and Installation

INFOID:0000000010634599

REMOVAL

1. Remove front bumper fascia. Refer to EXT-13, "Removal and Installation".
2. Remove front side marker lamp mounting bolts.
3. Pull up front side marker lamp, disconnect front side marker lamp harness connector and remove front side marker lamp.
4. Remove front combination lamp mounting bolts.
5. Pull out front combination lamp forward the vehicle, and then disconnect the connector before removing front combination lamp.

INSTALLATION

Note the following item, and then install in the reverse order of removal.

NOTE:

After installation, perform aiming adjustment. Refer to EXL-126, "Description".

Bulb Replacement

INFOID:0000000010634600

CAUTION:

- **Disconnect the 12V battery negative terminal or remove the fuse to electric leakage. Refer to EXL-8, "Precaution for Removing 12V Battery".**
- **After installing the bulb, install the resin cap and the bulb socket securely for watertightness.**
- **Never touch the glass of bulb directly by hand. Keep grease and other oily matters away from it to prevent damage to the bulb.**
- **Never touch bulb by hand while it is lit or right after being turned off to prevent a burns.**
- **Never leave bulb out of lamp reflector for a long time because dust, moisture smoke, etc. may affect the performance of lamp. When replacing bulb, be sure to replace it with new one.**

PARKING LAMP BULB

1. Rotate resin cap (1) counterclockwise and unlock it.

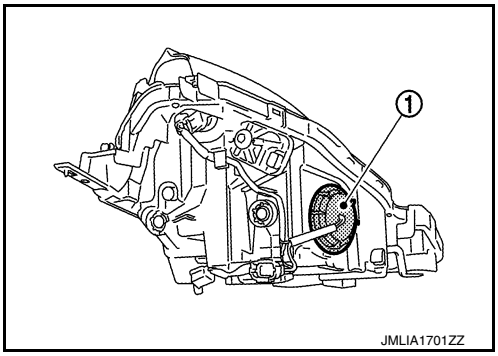

2. Rotate parking lamp bulb socket (1) counterclockwise and unlock it.

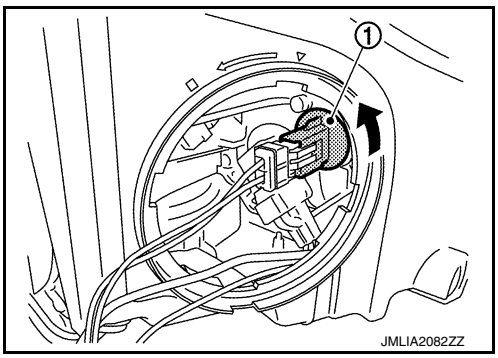

3. Remove parking lamp bulb from bulb socket.

HEADLAMP BULB (LO)

LED is used for headlamp bulb (LO). Always replace front combination lamp assembly as a unit, when bulb is to be replaced because of malfunction. Refer to EXL-132, "Removal and Installation".

HEADLAMP BULB (HI)

1. Rotate resin cap (1) counterclockwise and unlock it.

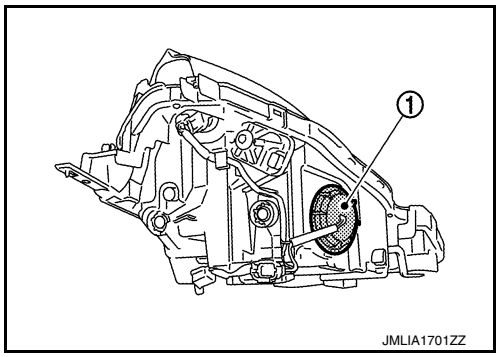

2. Remove parking lamp bulb and socket.
3. Rotate headlamp bulb (HI) (2) counterclockwise and unlock it.
4. Disconnect headlamp bulb (HI) harness connector (1).

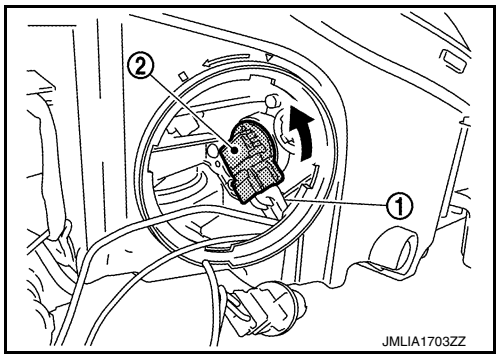

5. Remove headlamp bulb (HI) from the headlamp housing assembly.

FRONT TURN SIGNAL LAMP BULB

1. Rotate bulb socket counterclockwise and unlock it.
2. Remove bulb from the bulb socket.

Disassembly and Assembly

INFOID:0000000010634601

DISASSEMBLY

1. Rotate resin cap counterclockwise and unlock it.
2. Rotate parking lamp bulb socket counterclockwise and unlock it.
3. Disconnect parking lamp harness connector.
4. Rotate headlamp bulb (HI) counterclockwise and unlock it.
5. Disconnect headlamp bulb (HI) harness connector.
6. Rotate turn signal lamp bulb socket counterclockwise and unlock it.
7. Remove turn signal lamp bulb from bulb socket.
8. Remove LED headlamp control module mounting screws.
9. Disconnect LED headlamp control module harness connector, and then remove LED headlamp control module.
10. Remove combination lamp harness connector.

ASSEMBLY

Note the following items, and then assemble in the reverse order of disassembly.

CAUTION:

- **Install LED headlamp control module securely.**
- **Always replace seal packing, when remove/replace LED headlamp control module.**
- **After installing the bulb, install the resin cap and the bulb socket securely for watertightness.**

FRONT SIDE MARKER LAMP

Exploded View

INFOID:0000000010634603

REMOVAL

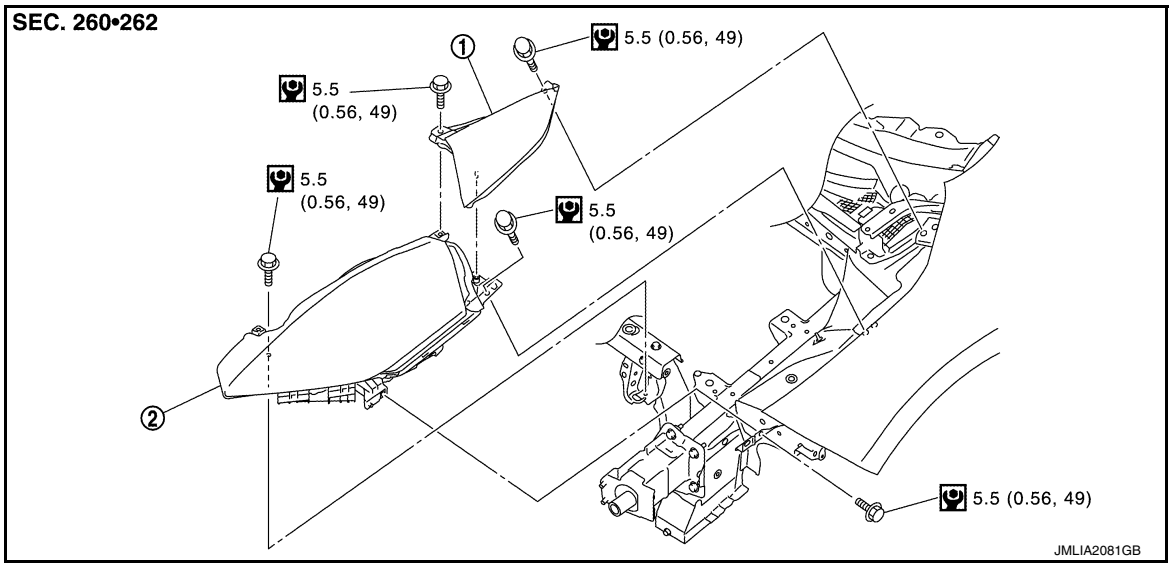

1. Front side marker lamp
2. Front combination lamp

DISASSEMBLY

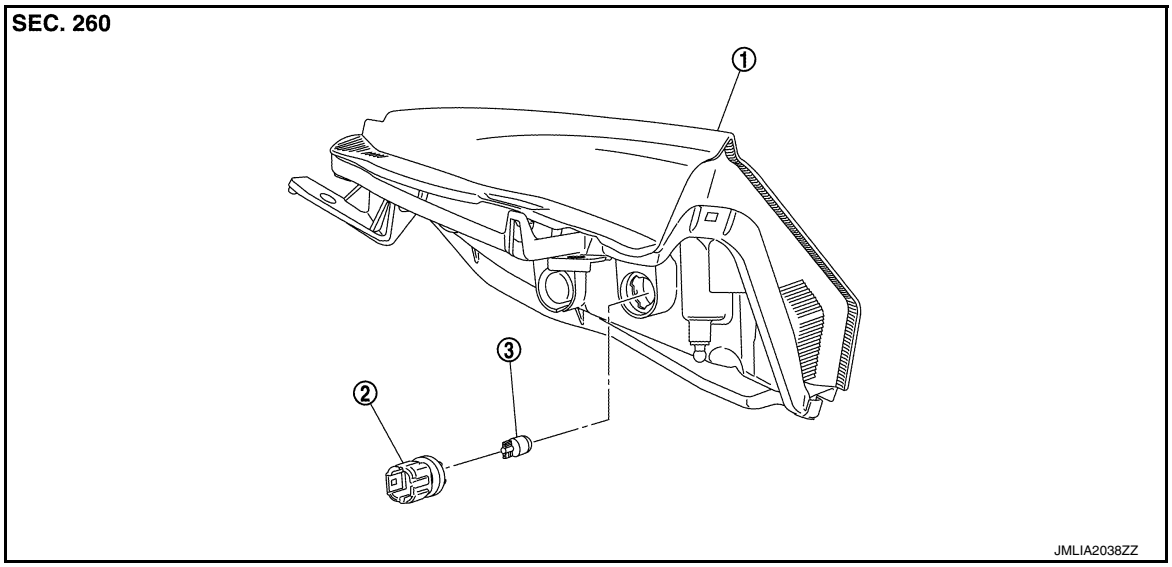

1. Front side marker lamp housing
2. Front side marker lamp bulb socket
3. Front side marker lamp bulb

REMOVAL

1. Remove front side marker lamp mounting bolts.
2. Pull up front side marker lamp and disconnect the harness connector.
3. Remove front side marker lamp.

Removal and Installation

INFOID:0000000010634604

Bulb Replacement

INFOID:0000000010634605

CAUTION:

- **After installing the bulb, install the resin cap and the bulb socket securely for watertightness.**
- **Never touch the glass of bulb directly by hand. Keep grease and other oily matters away from it to prevent damage to the bulb.**
- **Never touch bulb by hand while it is lit or right after being turned off to prevent a burns.**
- **Never leave bulb out of lamp reflector for a long time because dust, moisture smoke, etc. may affect the performance of lamp. When replacing bulb, be sure to replace it with new one.**

FRONT SIDE MARKER LAMP BULB

1. Rotate bulb socket counterclockwise and unlock it.
2. Remove bulb from the bulb socket.

FRONT FOG LAMP

Exploded View

INFOID:0000000010634606

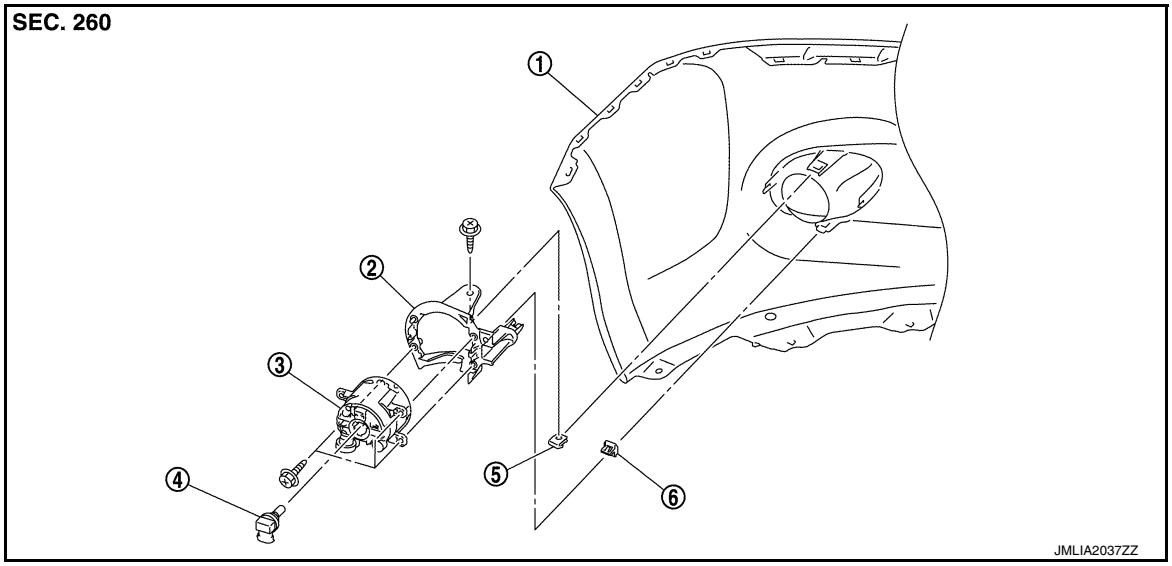

1. Front bumper fascia
2. Front fog lamp bracket
3. Front fog lamp
4. Front fog lamp bulb
5. J nut
6. Metal clip

Removal and Installation

INFOID:0000000010634607

REMOVAL

1. Remove the front under cover. Refer to EXT-23, "FRONT UNDER COVER : Removal and Installation".
2. Remove the fender protector (LH/RH). Refer to EXT-21, "FENDER PROTECTOR : Removal and Installation".
3. Disconnect the front fog lamp harness connector.
4. Remove the front fog lamp fixing screws and remove front fog lamp.

INSTALLATION

Note the following item, and then install in the reverse order of removal.

NOTE:

After installation, perform aiming adjustment. Refer to EXL-129, "Description"

Replacement

INFOID:0000000010634608

CAUTION:

- **Never touch the glass of bulb directly by hand. Keep grease and other oily matters away from it to prevent damage to the bulb.**
- **Never touch bulb by hand while it is lit or right after being turned off to prevent a burns.**
- **Never leave bulb out of lamp reflector for a long time because dust, moisture smoke, etc. may affect the performance of lamp. When replacing bulb, be sure to replace it with new one.**

FRONT FOG LAMP BULB

1. Remove front under cover. Refer to EXT-23, "FRONT UNDER COVER : Removal and Installation".

2. Remove front fender protector mounting bolts (A) and clip (B).

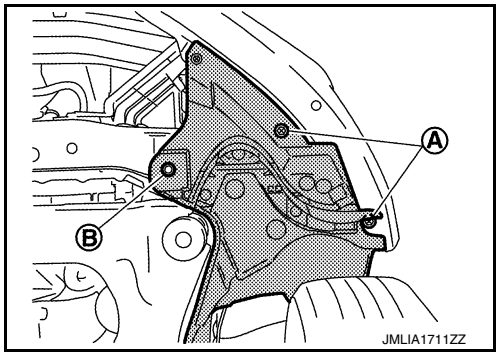

3. Remove front fog lamp bulb connector.
4. Rotate bulb counterclockwise and unlock it.

LIGHTING & TURN SIGNAL SWITCH

Exploded View

INFOID:0000000010634609

The lighting & turn signal switch is integrated in the combination switch. Refer to BCS-73, "Removal and Installation".

OPTICAL SENSOR

Exploded View

INFOID:0000000010634610

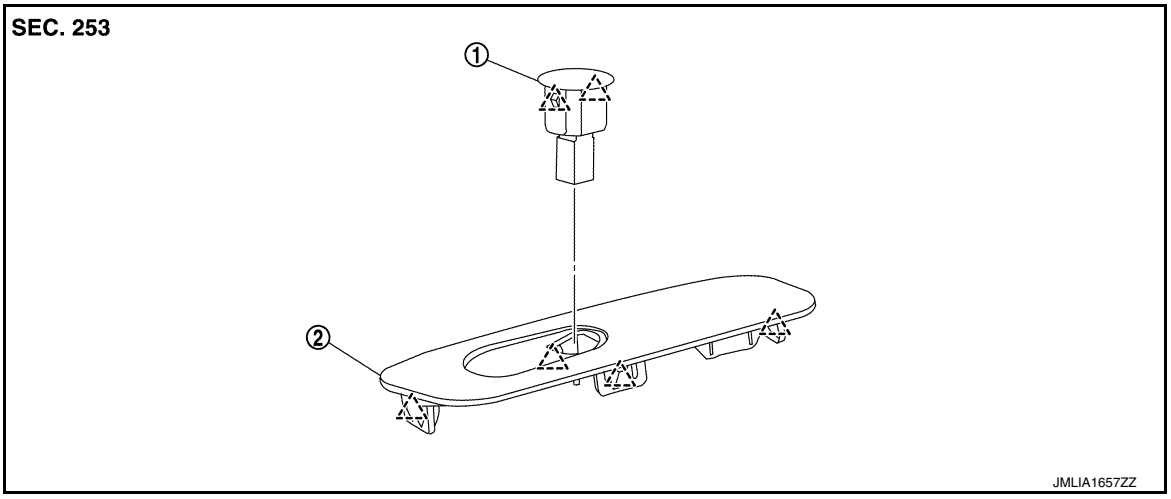

1. Optical sensor
2. Switch panel

: Pawl

Removal and Installation

INFOID:0000000010634611

REMOVAL

1. Insert suitable tool between the switch panel and the instrument upper panel and release switch panel pawls.
2. Disconnect the optical sensor connector.
3. Using a suitable tool release pawls and remove optical sensor from switch panel.

INSTALLATION

Installation is in the reverse order of removal.

HAZARD SWITCH

Exploded View

INFOID:0000000010634612

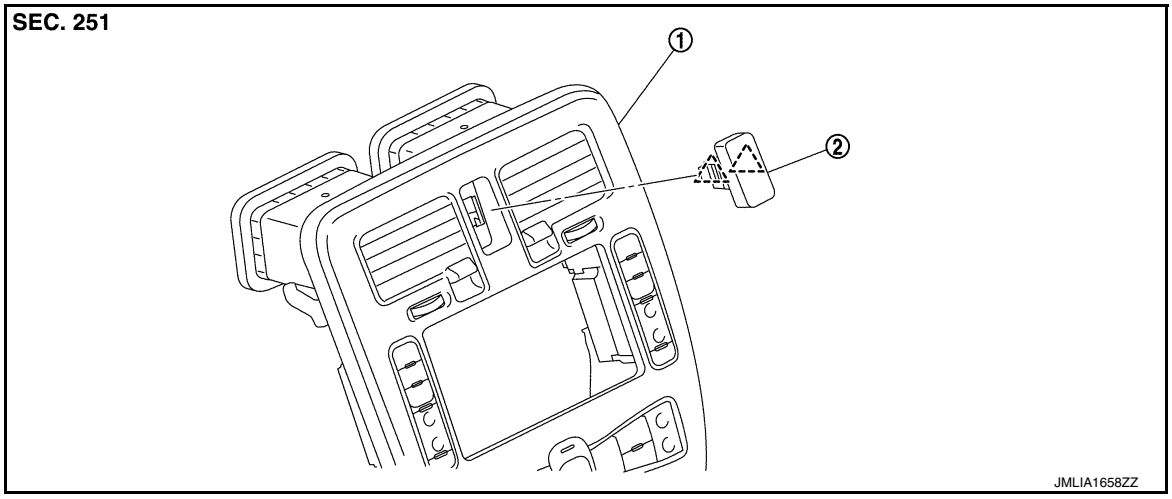

1. Cluster lid C
2. Hazard switch

: Pawl

Removal and Installation

INFOID:0000000010634613

REMOVAL

1. Remove cluster lid C. Refer to IP-17, "Removal and Installation".
2. Disengage hazard switch fixing pawls, and then remove hazard switch.

INSTALLATION

Install in the reverse order of removal.

REAR COMBINATION LAMP

Exploded View

INFOID:0000000010634614

REMOVAL

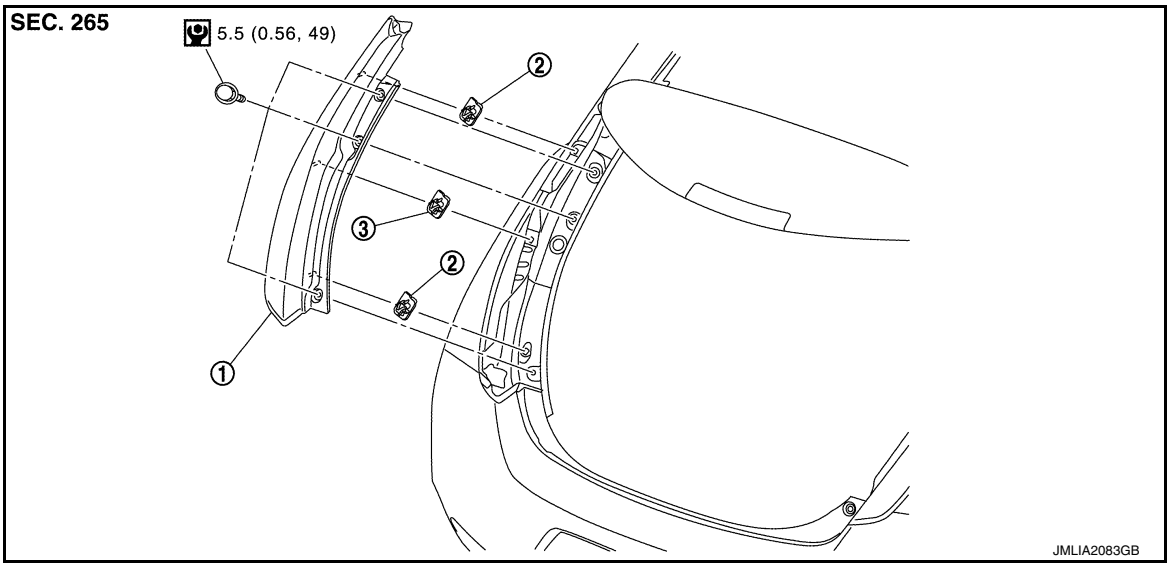

1. Rear combination lamp
2. Grommet A
3. Grommet B

: N·m (kg-m, in-lb)

DISASSEMBLY

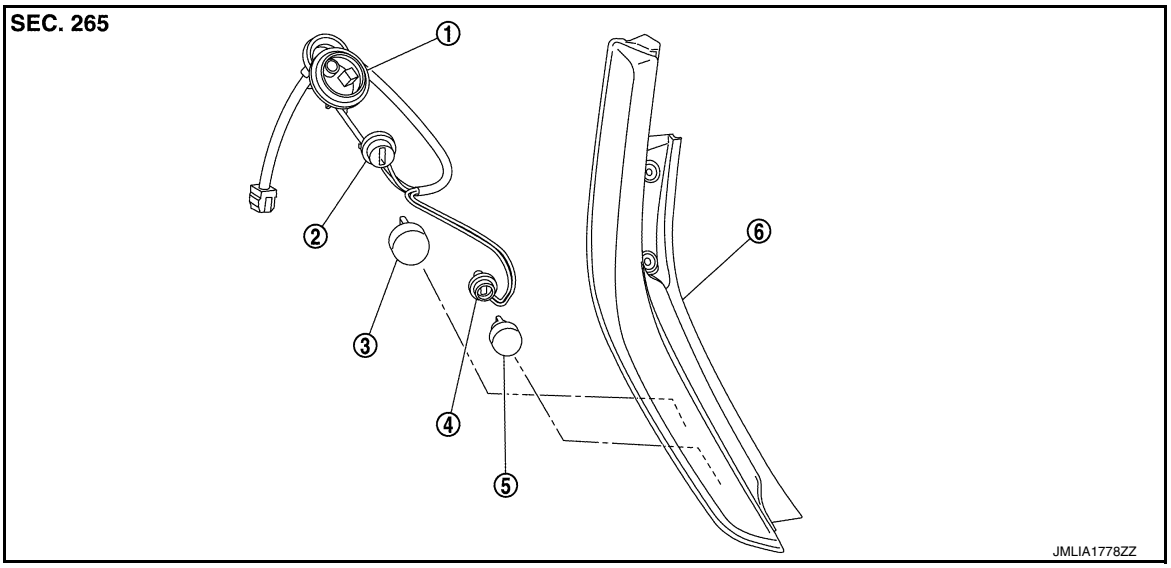

1. Rear combination lamp harness
2. Rear turn signal bulb socket
3. Rear turn signal bulb
4. Buck-up lamp bulb socket
5. Buck-up lamp bulb
6. Rear combination lamp housing assembly

Removal and Installation

INFOID:0000000010634615

CAUTION:

- **Disconnect the 12V battery negative terminal or remove the fuse. Refer to EXL-8, "Precaution for Removing 12V Battery".**

- **Fogging of rear combination lamp inside is not a malfunction. Never replace parts. Fogging is a symptom in which inner surface of lens becomes whitely clouded, without there being visible water drops or water spots, as if lens is made of frosted-glass.**

REMOVAL

1. Remove luggage side lower finisher. Refer to INT-42, "LUGGAGE SIDE LOWER FINISHER : Removal and Installation".
2. Disconnect rear combination lamp connector.
3. Remove rear combination lamp mounting bolts.
4. Insert a shop cloth (B) into clearance (A) between rear combination lamp (1) and rear fender panel (2), or apply protective tape.
   CAUTION:
   - **To prevent rear fender panel paint surface from being damaged, always apply protection using a shop cloth or protective tape.**
   - **When using protective tape, apply protective tape to both rear fender panel and rear combination lamp.**

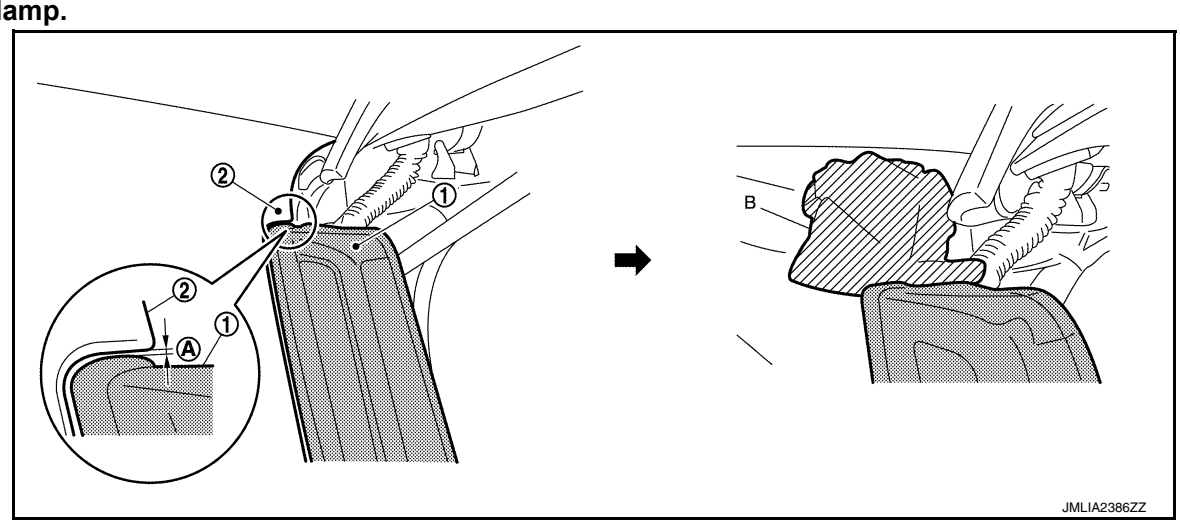

5. Pull rear combination lamp toward vehicle rear side, as shown by the arrow in the figure.

   : Clip

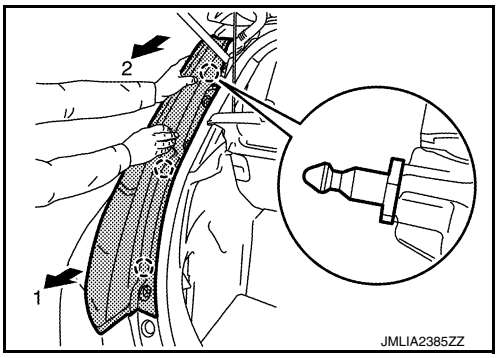

6. Remove rear combination lamp.

INSTALLATION

Note the following item, and then install in the reverse order of removal.

CAUTION:

When installing rear combination lamp, fix harness using harness fixing hook (A) on backside of rear combination lamp housing and place harness toward vehicle inside so that harness is not pinched by rear fender panel.

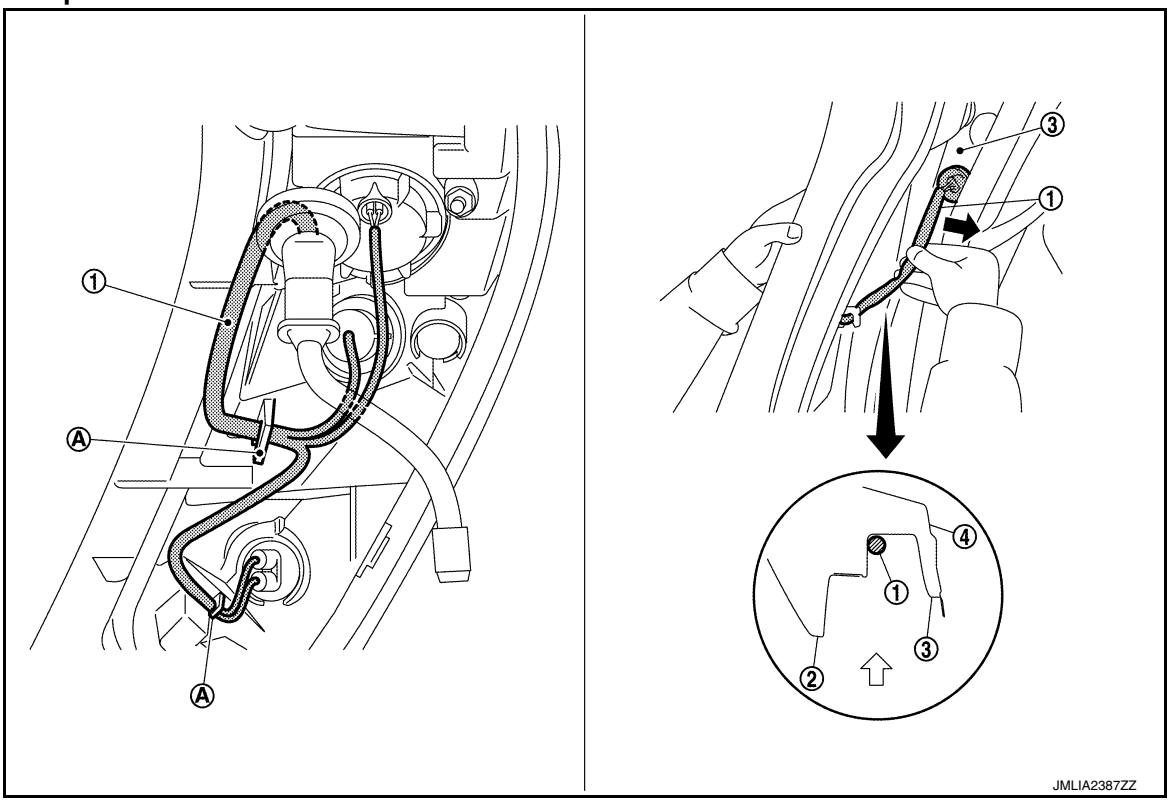

1. Harness
2. Rear fender panel
3. Rear fender extension
4. Rear inner panel

⇦ : Vehicle front

Replacement

INFOID:0000000010634616

CAUTION:

- **Disconnect the 12V battery negative terminal or remove the fuse. Refer to EXL-8, "Precaution for Removing 12V Battery".**
- **Never touch the glass of bulb directly by hand. Keep grease and other oily matters away from it. Never touch bulb by hand while it is lit or right after being turned off.**
- **Never leave bulb out of lamp reflector for a long time because dust, moisture smoke, etc. may affect the performance of lamp. When replacing bulb, be sure to replace it with new one.**

STOP/TAIL LAMP BULB

LED is used for stop/tail lamp bulb. Always replace rear combination lamp assembly as a unit, when bulb is to be replaced because of malfunction.

REAR TURN SIGNAL LAMP BULB

1. Remove rear combination lamp mounting bolts.
2. Insert a shop cloth (B) into clearance (A) between rear combination lamp (1) and rear fender panel (2), or apply protective tape.
   CAUTION:
   - **To prevent rear fender panel paint surface from being damaged, always apply protection using a shop cloth or protective tape.**

- **When using protective tape, apply protective tape to both rear fender panel and rear combination lamp.**

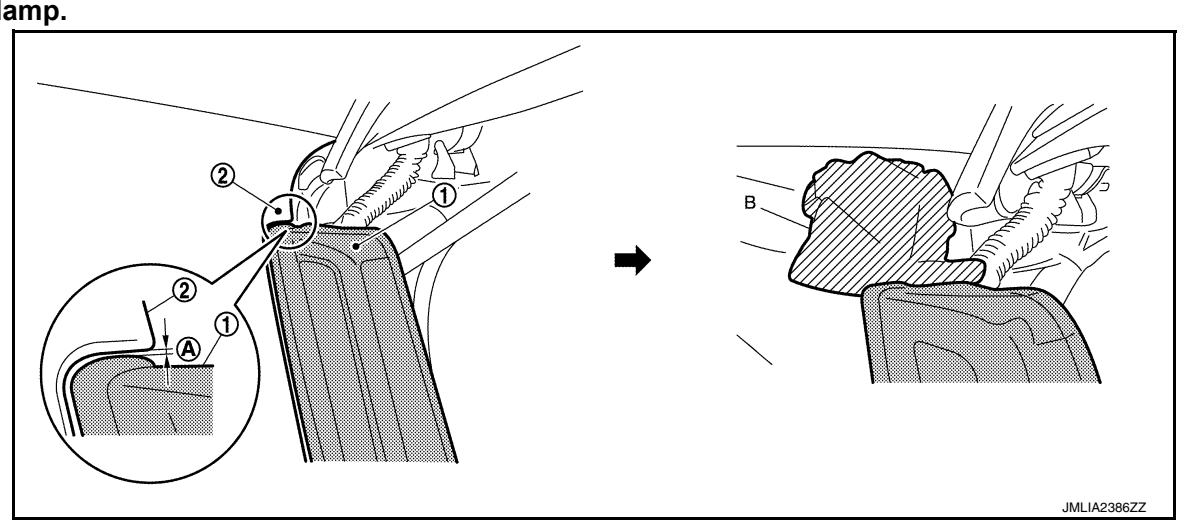

3. Pull rear combination lamp toward vehicle rear side, as shown by the arrow in the figure.

   : Clip

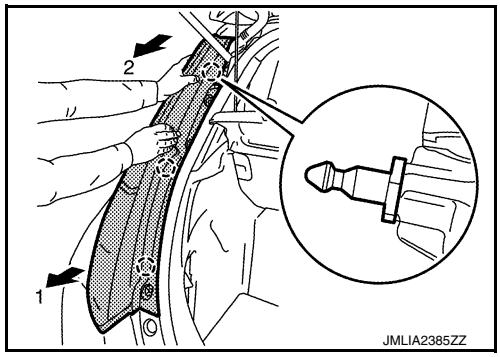

4. Rotate bulb socket counterclockwise and unlock it.
5. Remove bulb from the socket.

BACK-UP LAMP BULB

1. Remove rear combination lamp mounting bolts.
2. Insert a shop cloth (B) into clearance (A) between rear combination lamp (1) and rear fender panel (2), or apply protective tape.

   CAUTION:
   - **To prevent rear fender panel paint surface from being damaged, always apply protection using a shop cloth or protective tape.**
   - **When using protective tape, apply protective tape to both rear fender panel and rear combination lamp.**

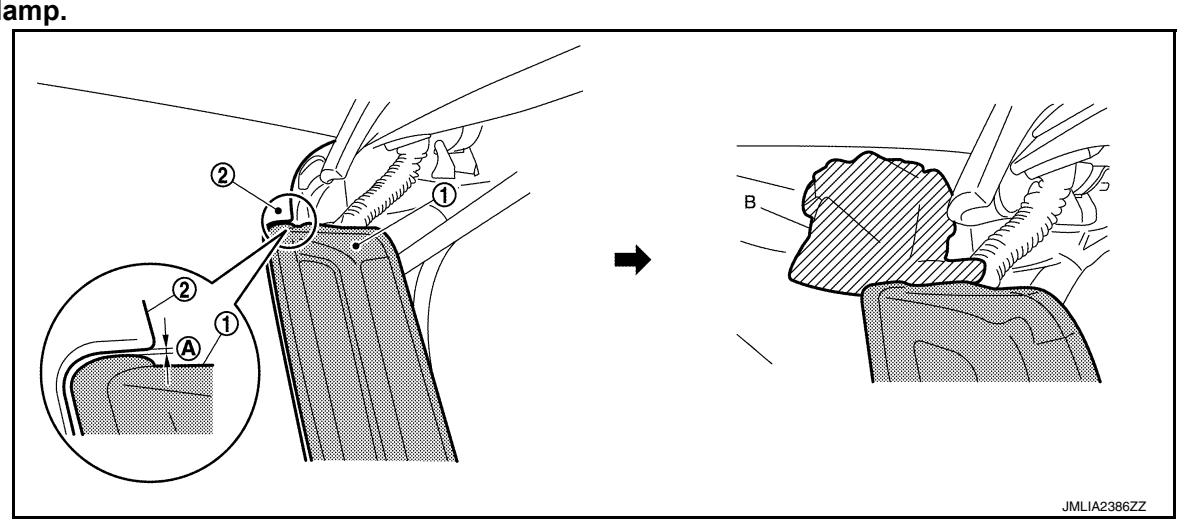

3. Pull rear combination lamp toward vehicle rear side, as shown by the arrow in the figure.

: Clip

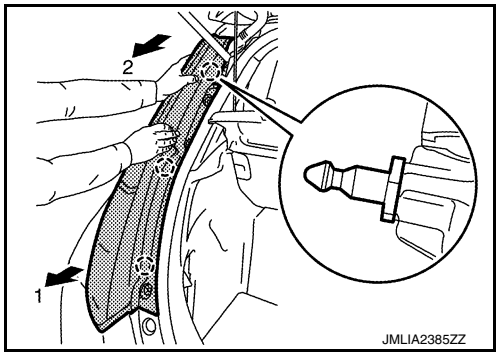

4. Rotate bulb socket counterclockwise and unlock it.
5. Remove bulb from the socket.

HIGH-MOUNTED STOP LAMP

Exploded View

INFOID:0000000010634617

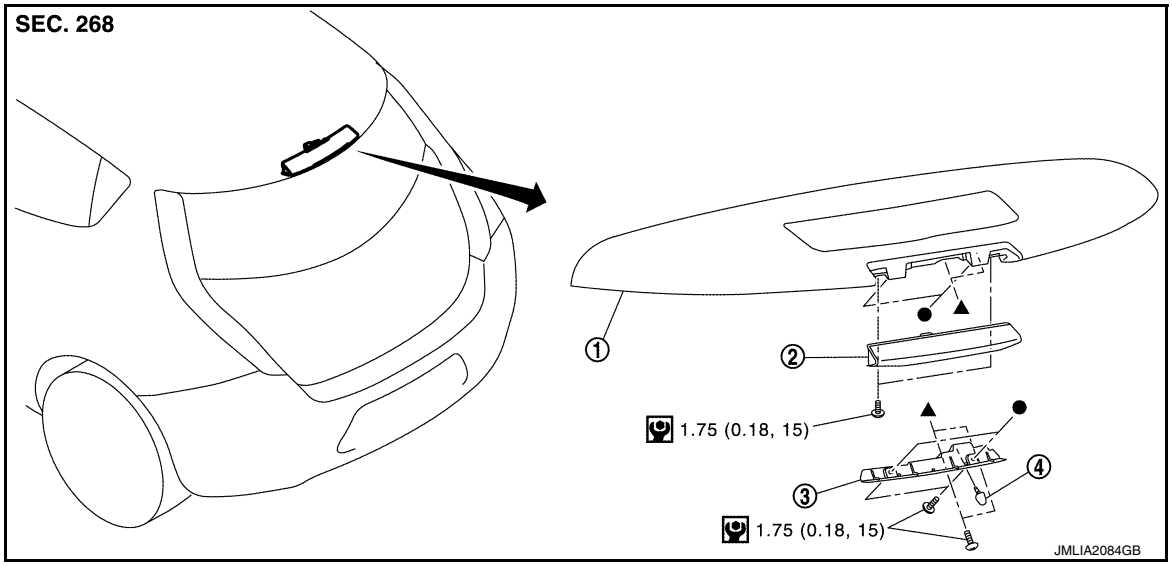

1. Rear spoiler
2. High-mounted stop lamp
3. High-mounted stop lamp cover
4. Rear washer nozzle

: N·m (kg-m, in-lb)

●,▲: Indicates that the part is connected at points with same symbol in actual vehicle.

Removal and Installation

INFOID:0000000010634618

REMOVAL

1. Remove rear spoiler. Refer to EXT-36, "Removal and Installation".
2. Remove high-mounted stop lamp cover mounting screws, and then remove high-mounted stop lamp cover.
3. Remove high-mounted stop lamp mounting screws.
4. Disconnect high-mounted stop lamp harness connector.
5. Remove high-mounted stop lamp.

INSTALLATION

Install in the reverse order of removal.

LICENSE PLATE LAMP

Exploded View

INFOID:0000000010634619

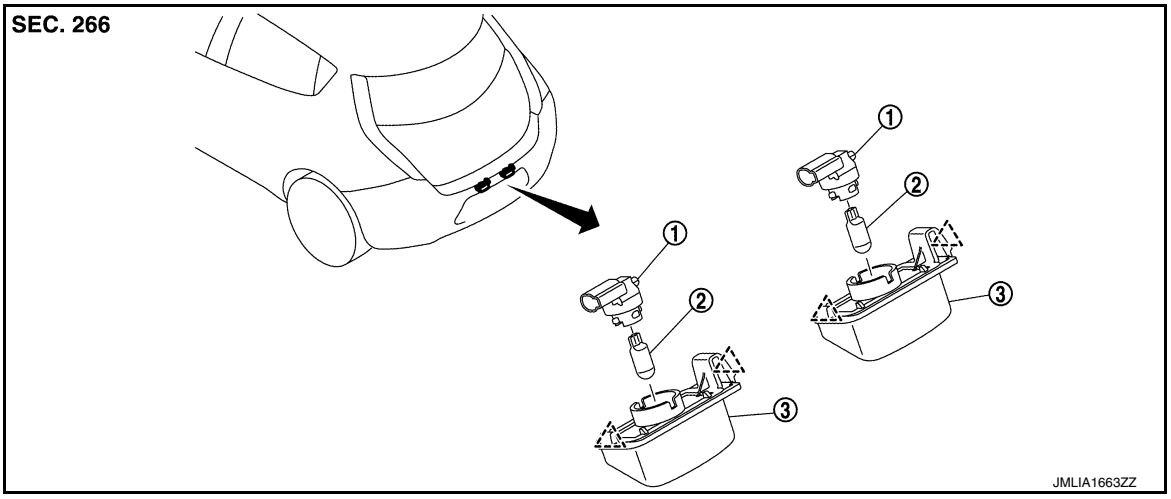

1. License plate lamp bulb socket
2. License plate lamp bulb
3. License plate lamp housing

: Pawl

Removal and Installation

INFOID:0000000010634620

REMOVAL

1. Remove license plate lamp in numerical order shown in the figure.

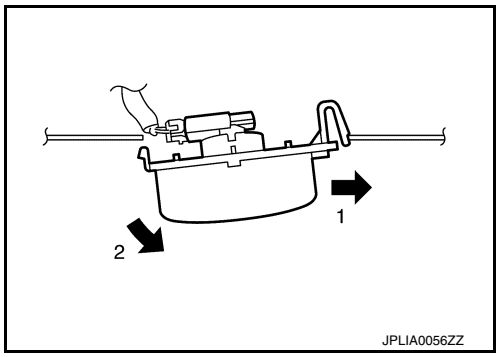

2. Disconnect license plate lamp connector, and then remove license plate lamp.

INSTALLATION

Installation in the reverse order of removal.

Replacement

INFOID:0000000010634621

CAUTION:

- **Do not touch the glass of bulb directly by hand. Keep grease and other oily matters away from it to prevent damage to the bulb.**
- **Do not touch bulb by hand while it is lit or right after being turned off to prevent a burns.**
- **Do not leave bulb out of lamp reflector for a long time because dust, moisture smoke, etc. may affect the performance of lamp. When replacing bulb, be sure to replace it with new one.**

LICENSE PLATE LAMP BULB

1. Remove license plate lamp.
2. Turn the bulb socket counterclockwise and unlock it.
3. Remove the bulb from the socket.

REAR REFLEX REFLECTOR

Exploded View

INFOID:0000000010634622

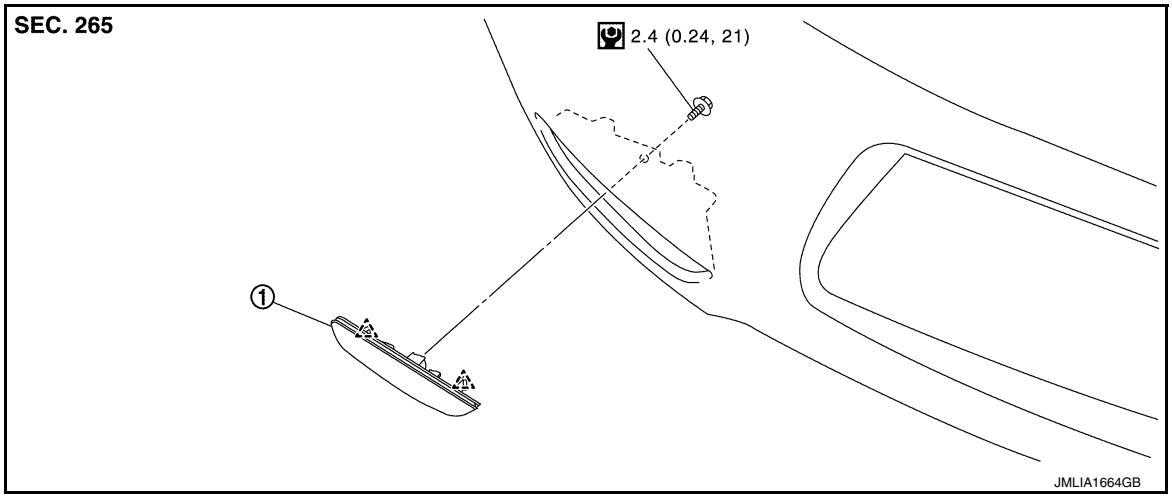

1. Reflex refractor

: Pawl

: N·m (kg-m, in-lb)

Removal and Installation

INFOID:0000000010634623

REMOVAL

1. Remove rear bumper fascia. Refer to EXT-17, "Removal and Installation".
2. Remove rear reflex reflector fixing screws and disengage fixing pawls, and then remove rear reflex reflector.

INSTALLATION

Install in the reverse order of removal.

SERVICE DATA AND SPECIFICATIONS (SDS)

SERVICE DATA AND SPECIFICATIONS (SDS)

Bulb Specifications

INFOID:0000000010634624

Item		Wattage (W)*
Front combination lamp	Headlamp (HI)	65
	Headlamp (LO)	—
	Front turn signal lamp	27
	Parking lamp	5
Front side maker lamp		5
Front fog lamp (if equipped)		55
Rear combination lamp	Stop lamp/Tail lamp	—
	Rear turn signal lamp	21
	Back-up lamp	16
	Rear side maker lamp	—
License plate lamp		5
High-mounted stop lamp		—

*: Always check with the Parts Department for the latest parts info.

PRECAUTION

PRECAUTIONS

Precaution for Technicians Using Medical Electric

INFOID:0000000010634625

OPERATION PROHIBITION

WARNING:
- **Parts with strong magnet is used in this vehicle.**
- **Technicians using a medical electric device such as pacemaker must never perform operation on the vehicle, as magnetic field can affect the device function by approaching to such parts.**

NORMAL CHARGE PRECAUTION

WARNING:
- **If a technician uses a medical electric device such as an implantable cardiac pacemaker or an implantable cardioverter defibrillator, the possible effects on the devices must be checked with the device manufacturer before starting the charge operation.**
- **As radiated electromagnetic wave generated by PDM (Power Delivery Module) at normal charge operation may affect medical electric devices, a technician using a medical electric device such as implantable cardiac pacemaker or an implantable cardioverter defibrillator must not approach motor room [PDM (Power Delivery Module)] at the hood-opened condition during normal charge operation.**

PRECAUTION AT TELEMATICS SYSTEM OPERATION

WARNING:
- **If a technician uses implantable cardiac pacemaker or implantable cardioverter defibrillator (ICD), avoid the device implanted part from approaching within approximately 220 mm (8.66 in) from interior/exterior antenna.**
- **The electromagnetic wave of TCU might affect the function of the implantable cardiac pacemaker or the implantable cardioverter defibrillator (ICD), when using the service, etc.**
- **If a technician uses other medical electric devices than implantable cardiac pacemaker or implantable cardioverter defibrillator (ICD), the electromagnetic wave of TCU might affect the function of the device. The possible effects on the devices must be checked with the device manufacturer before TCU use.**

PRECAUTION AT INTELLIGENT KEY SYSTEM OPERATION

WARNING:
- **If a technician uses implantable cardiac pacemaker or implantable cardioverter defibrillator (ICD), avoid the device implanted part from approaching within approximately 220 mm (8.66 in) from interior/exterior antenna.**
- **The electromagnetic wave of Intelligent Key might affect the function of the implantable cardiac pacemaker or the implantable cardioverter defibrillator (ICD), at door operation, at each request switch operation, or at engine starting.**
- **If a technician uses other medical electric devices than implantable cardiac pacemaker or implantable cardioverter defibrillator (ICD), the electromagnetic wave of Intelligent Key might affect the function of the device. The possible effects on the devices must be checked with the device manufacturer before Intelligent Key use.**

Point to Be Checked Before Starting Maintenance Work

INFOID:0000000010634626

The high voltage system may starts automatically. It is required to check that the timer air conditioner and timer charge (during EVSE connection) are not set before starting maintenance work.
NOTE:
If the timer air conditioner or timer charge (during EVSE connection) is set, the high voltage system starts automatically even when the power switch is in OFF state.

Precaution for Supplemental Restraint System (SRS) "AIR BAG" and "SEAT BELT PRE-TENSIONER"

INFOID:0000000010634627

The Supplemental Restraint System such as “AIR BAG” and “SEAT BELT PRE-TENSIONER”, used along with a front seat belt, helps to reduce the risk or severity of injury to the driver and front passenger for certain types of collision. This system includes seat belt switch inputs and dual stage front air bag modules. The SRS

system uses the seat belt switches to determine the front air bag deployment, and may only deploy one front air bag, depending on the severity of a collision and whether the front occupants are belted or unbelted. Information necessary to service the system safely is included in the SR and SB section of this Service Manual.

WARNING:

- **To avoid rendering the SRS inoperative, which could increase the risk of personal injury or death in the event of a collision which would result in air bag inflation, all maintenance must be performed by an authorized NISSAN/INFINITI dealer.**
- **Improper maintenance, including incorrect removal and installation of the SRS, can lead to personal injury caused by unintentional activation of the system. For removal of Spiral Cable and Air Bag Module, see the SR section.**
- **Do not use electrical test equipment on any circuit related to the SRS unless instructed to in this Service Manual. SRS wiring harnesses can be identified by yellow and/or orange harnesses or harness connectors.**

PRECAUTIONS WHEN USING POWER TOOLS (AIR OR ELECTRIC) AND HAMMERS

WARNING:

- **When working near the Airbag Diagnosis Sensor Unit or other Airbag System sensors with the Ignition ON or engine running, DO NOT use air or electric power tools or strike near the sensor(s) with a hammer. Heavy vibration could activate the sensor(s) and deploy the air bag(s), possibly causing serious injury.**
- **When using air or electric power tools or hammers, always switch the Ignition OFF, disconnect the battery and wait at least three minutes before performing any service.**

Precaution for Removing 12V Battery

INFOID:0000000010634628

1. Check that EVSE is not connected.
   NOTE:
   If EVSE is connected, the air conditioning system may be automatically activated by the timer A/C function.
2. Turn the power switch OFF → ON → OFF. Get out of the vehicle. Close all doors (including back door).
3. Check that the charge status indicator lamp does not blink and wait for 5 minutes or more.
   NOTE:
   If the battery is removed within 5 minutes after the power switch is turned OFF, plural DTCs may be detected.
4. Remove 12V battery within 1 hour after turning the power switch OFF → ON → OFF.
   NOTE:
   - The 12V battery automatic charge control may start automatically even when the power switch is in OFF state.
   - Once the power switch is turned ON → OFF, the 12V battery automatic charge control does not start for approximately 1 hour.

   CAUTION:

   - **After all doors (including back door) are closed, if a door (including back door) is opened before battery terminals are disconnected, start over from Step 1.**
   - **After turning the power switch OFF, if "Remote A/C" is activated by user operation, stop the air conditioner and start over from Step 1.**

Precaution for Work

INFOID:0000000011107755

- When removing or disassembling each component, be careful not to damage or deform it. If a component may be subject to interference, be sure to protect it with a shop cloth.
- When removing (disengaging) components with a screwdriver or similar tool, be sure to wrap the component with a shop cloth or vinyl tape to protect it.
- Protect the removed parts with a shop cloth and prevent them from being dropped.
- Replace a deformed or damaged clip.
- If a part is specified as a non-reusable part, always replace it with a new one.
- Be sure to tighten bolts and nuts securely to the specified torque.
- After installation is complete, be sure to check that each part works properly.
- Follow the steps below to clean components:

- Water soluble dirt:

- Dip a soft cloth into lukewarm water, wring the water out of the cloth and wipe the dirty area.

- Then rub with a soft, dry cloth.
- Oily dirt:
- Dip a soft cloth into lukewarm water with mild detergent (concentration: within 2 to 3%) and wipe the dirty area.
- Then dip a cloth into fresh water, wring the water out of the cloth and wipe the detergent off.
- Then rub with a soft, dry cloth.
- Do not use organic solvent such as thinner, benzene, alcohol or gasoline.
- For genuine leather seats, use a genuine leather seat cleaner.

PREPARATION

PREPARATION

Special Service Tool

INFOID:0000000010634629

The actual shape of the tools may differ from those illustrated here.

Tool number (TechMate No.) Tool name	Description
— (J-46534) Trim Tool Set 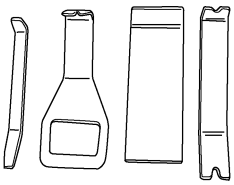 AWJIA0483ZZ	Removing trim components

SYSTEM DESCRIPTION

COMPONENT PARTS

Component Parts Location

INFOID:0000000010634630

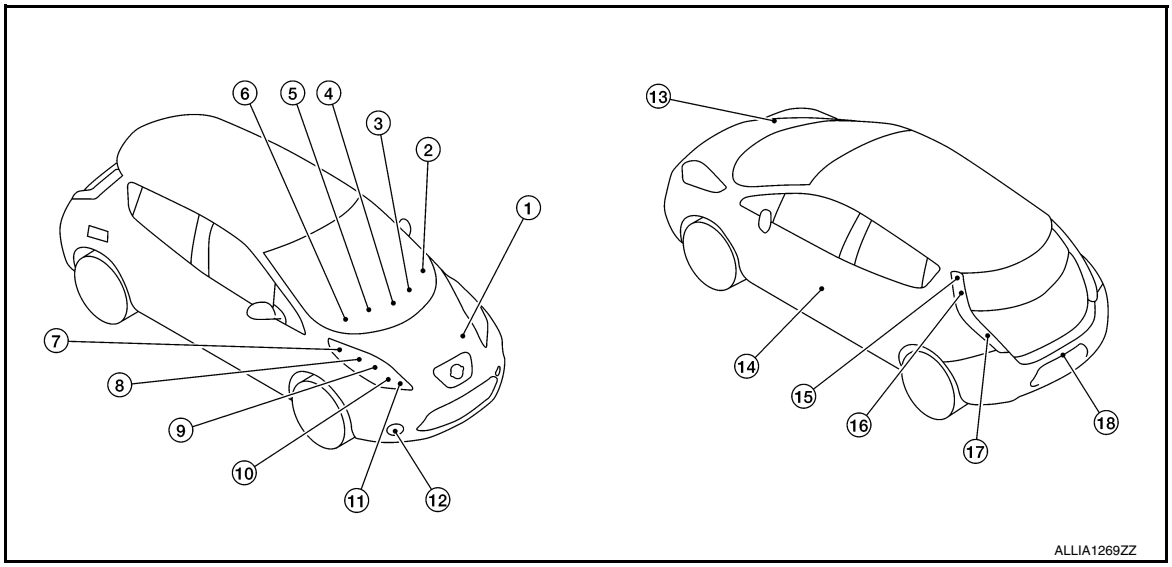

No.	Part	Function
1.	IPDM E/R	• Controls the integrated relay, and supplies voltage to the load according to the request from BCM (via CAN communication). • Refer to PCS-7, "Component Parts Location" for detailed installation location.
2.	Combination switch (Lighting & turn signal switch)	Refer to BCS-8, "COMBINATION SWITCH READING SYSTEM : System Description".
3.	Combination meter	• Blinks the turn signal indicator lamp and outputs the turn signal operating sound with integrated buzzer according to the request from BCM (via CAN communication). • Turns the tail lamp indicator lamp, high beam indicator lamp, front fog lamp indicator lamp and rear fog lamp indicator lamp ON according to the request from BCM (via CAN communication).
4.	Hazard switch	Refer to EXL-155, "Hazard Switch".
5.	BCM	• Detects each switch condition by the combination switch reading function • Judges that the exterior lamps are turned ON according to the vehicle condition • Requests the headlamp relay (HI/LO), tail lamp relay and front fog lamp relay ON to IPDM E/R (via CAN communication) • Requests the high beam indicator lamp, tail lamp indicator lamp and front fog lamp indicator lamp ON to the combination meter (via CAN communication) • Judges the outside brightness from the optical sensor signal. • Judges the ON/OFF timing according to the vehicle condition. • Judges the ON/OFF status of the exterior lamp according to the outside brightness and the vehicle condition. • Refer to BCS-5, "BODY CONTROL SYSTEM : Component Parts Location" for detailed installation location.
6.	Optical sensor	Refer to EXL-155, "Optical Sensor".
7.	Front side marker lamp	Refer to EXL-283, "Bulb Specifications".
8.	Front turn signal lamp	Refer to EXL-283, "Bulb Specifications".
9.	Headlamp LO	Refer to EXL-283, "Bulb Specifications"
10.	Headlamp HI	Refer to EXL-283, "Bulb Specifications".
11.	Parking Lamp	Refer to EXL-283, "Bulb Specifications".
12.	Front fog lamp (if equipped)	Refer to EXL-283, "Bulb Specifications".

No.	Part	Function
13.	Daytime running light relay*	Headlamp HI ground circuit is switched according to request from IPDM E/R.
14.	Front door switch (LH)	Refer to DLK-21, "Door Switch".
15.	Rear side marker lamp	Refer to EXL-283, "Bulb Specifications".
16.	Tail lamp	Refer to EXL-283, "Bulb Specifications".
17.	Rear turn signal lamp	Refer to EXL-283, "Bulb Specifications".
18.	License plate lamp	Refer to EXL-283, "Bulb Specifications".

*: With daytime running light system

Optical Sensor

INFOID:0000000010634631

Optical sensor converts the outside brightness (lux) to voltage and transmits the optical sensor signal to BCM.

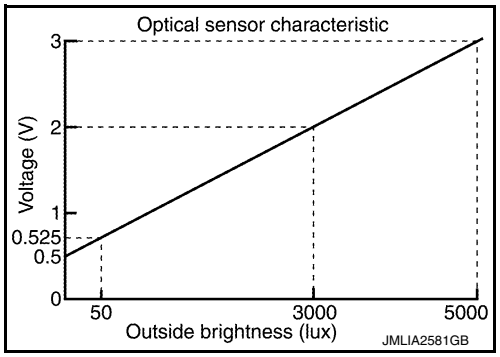

Hazard Switch

INFOID:0000000010634632

Inputs the hazard switch ON/OFF signal to BCM.

		OFF	ON
1	Hazard switch ON/OFF signal		●
2	Ground		●
3	Illumination +	●	
		⊕	
4	Illumination –	●	

JMLIA2580GB

SYSTEM

HEADLAMP SYSTEM

HEADLAMP SYSTEM : System Description

INFOID:0000000010634633

SYSTEM DIAGRAM

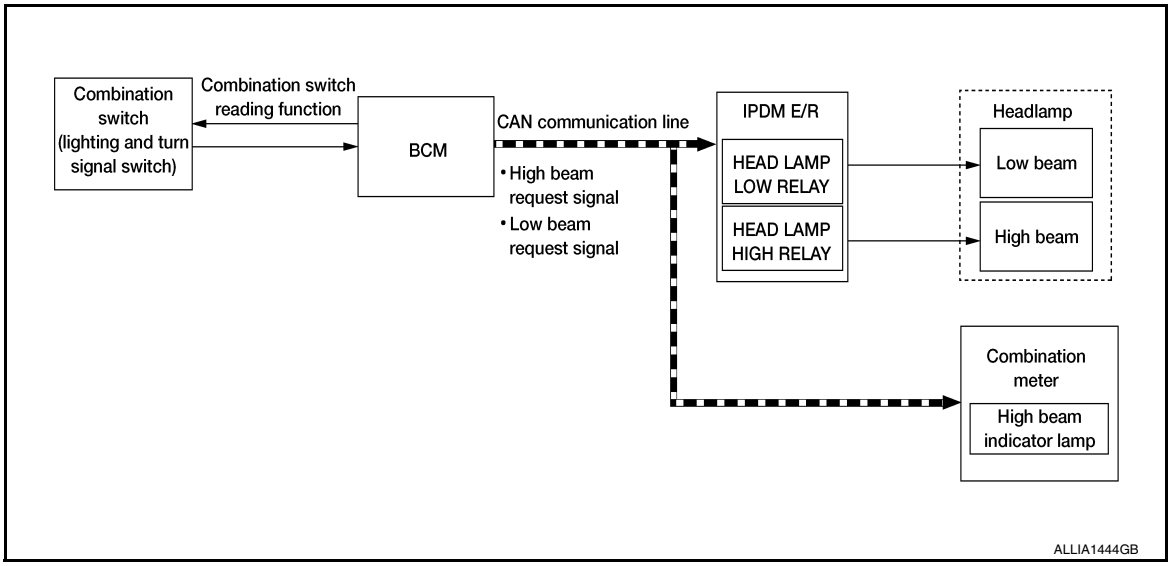

OUTLINE

Headlamp is controlled by combination switch reading function and headlamp control function of BCM, and relay control function of IPDM E/R.

HEADLAMP (LO) OPERATION

- BCM detects the combination switch condition with the combination switch reading function.
- BCM transmits the low beam request signal to IPDM E/R with CAN communication according to the headlamp (LO) ON condition.

Headlamp (LO) ON condition:
- Lighting switch 2ND
- Lighting switch AUTO (auto light function ON judgment)
- Lighting switch AUTO, with the front fog lamp switch ON and the power switch ON
- Lighting switch PASS

HEADLAMP (HI) OPERATION

- BCM transmits the high beam request signal to IPDM E/R and the combination meter with CAN communication according to the headlamp (HI) ON condition.

Headlamp (HI) ON condition:
- Lighting switch HI with the lighting switch 2ND or AUTO (auto light function ON judgment)
- Lighting switch PASS
- Lighting switch AUTO, with the front fog lamp switch ON, the power switch ON and lighting switch HI
- Combination meter turns the high beam indicator lamp ON according to the high beam request signal.
- IPDM E/R turns the integrated headlamp high relay ON, and turns the headlamp ON according to the high beam request signal.

HEADLAMP SYSTEM : Fail-Safe

INFOID:0000000010634634

CAN COMMUNICATION CONTROL

When CAN communication with BCM is impossible, IPDM E/R performs fail-safe control. After CAN communication recovers normally, it also returns to normal control.

If No CAN Communication Is Available With BCM

Control part	Fail-safe operation
Headlamp	• Turns ON the headlamp low relay when the power switch is turned ON • Turns OFF the headlamp low relay when the power switch is turned OFF • Headlamp high relay OFF

AUTO LIGHT SYSTEM (EXCEPT FOR CANADA)

AUTO LIGHT SYSTEM (EXCEPT FOR CANADA) : System Description

INFOID:0000000010634635

SYSTEM DIAGRAM

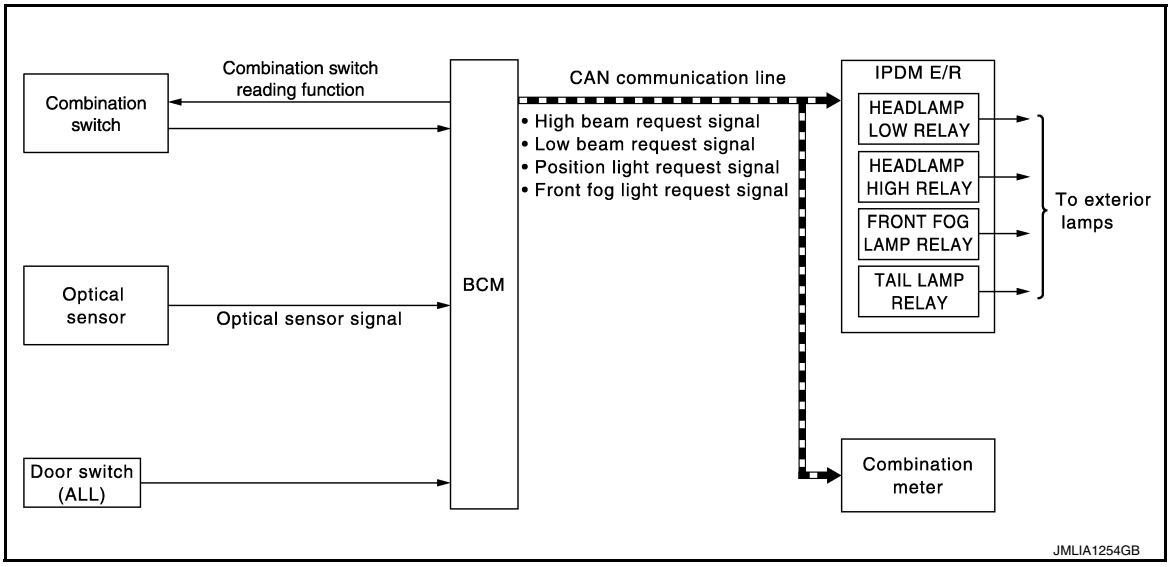

OUTLINE

- Auto light system is controlled by each function of BCM and IPDM E/R.

Control by BCM:
- Combination switch reading function
- Headlamp control function
- Auto light function
- Delay timer function
- Wiper linked auto lighting function
- Auto light adjustment system

Control by IPDM E/R:
- Relay control function
- Auto light system has the auto light function (with twilight lighting function), wiper linked auto lighting function and delay timer function.
  - Auto light function automatically turns ON/OFF the exterior lamps* and each illumination automatically, depending on the outside brightness.
  - Wiper linked auto lighting function automatically turns ON/OFF the exterior lamps* and each illumination when the light switch is in the AUTO position, according to a front wiper operation.
  - When auto light system turns the exterior lamps ON with the power switch OFF, delay timer function turns the exterior lamps OFF, depending on the vehicle condition with the auto light function after a certain period of time.

*: Headlamp (LO/HI), parking lamp, tail lamp, front fog lamp and side marker lamp (Headlamp HI and front fog lamp depend on the combination switch condition.)

NOTE:
The settings of the twilight lighting function and the wiper linked auto lighting function can be changed with CONSULT. Refer to BCS-17, "HEADLAMP : CONSULT Function (BCM - HEAD LAMP)".

AUTO LIGHT FUNCTION (WITH TWILIGHT LIGHTING FUNCTION)

Description
- BCM detects the combination switch condition with the combination switch reading function.
- BCM supplies voltage to the optical sensor when the power switch is turned ON or ACC.

- Optical sensor converts outside brightness (lux) to voltage and transmits the optical sensor signal to BCM.
- BCM filters outside brightness based on the optical sensor signal and judges outside brightness.
- BCM detects change status of outside brightness according to outside brightness from the optical sensor signal and filtered outside brightness. Based on the change status, BCM judges ON/OFF condition of the exterior lamp.
- BCM transmits each request signal to IPDM E/R and combination meter via CAN communication, according to ON/OFF condition by the auto light function.

NOTE:
As to ON/OFF timing, the sensitivity depends on settings. The settings can be changed with CONSULT. Refer to BCS-17, "HEADLAMP : CONSULT Function (BCM - HEAD LAMP)".

WIPER LINKED AUTO LIGHTING FUNCTION

BCM turns the exterior lamps ON when detecting 4 operations of the front wiper work the light switch in AUTO position.

NOTE:
BCM turns OFF the headlamps 3 seconds after the front wiper switch is turned from ON⇒OFF.

AUTO LIGHT ADJUSTMENT SYSTEM

The auto light adjustment system automatically, dims/brightens the display and combination meter, according to brightness outside the vehicle, when lighting switch 1ST, lighting switch 2ND or lighting switch AUTO is operated. Refer to INL-13, "AUTO LIGHT ADJUSTMENT SYSTEM : System Description".

DELAY TIMER FUNCTION

BCM turns the exterior lamps OFF depending on the vehicle condition with the auto light function when the power switch is turned OFF.

- Turns the exterior lamps OFF 5 minutes after detecting that any door opens. (Door switch ON).
- Turns the exterior lamps OFF a certain period of time* after closing all doors. (Door switch ON→OFF).
- Turns the exterior lamps OFF with the power switch ACC or the light switch OFF.

*: The preset time is 45 seconds. The timer operating time can be set by CONSULT. Refer to BCS-17, "HEADLAMP : CONSULT Function (BCM - HEAD LAMP)".

NOTE:
When any position other than the light switch AUTO is set, the auto light system function switches to the exterior lamp battery saver function.

FOG OVERRIDE FUNCTION

When front fog lamp switch is ON while power switch is in ON position and lighting switch is in AUTO position, BCM turns ON exterior lamps* regardless of outside brightness.

*: Headlamp (LO/HI), front fog lamp, parking lamp, license plate lamp, side marker lamp and tail lamp.

NOTE:
- Headlamp (HI) depending on the combination switch condition.
- Front fog light reminder warning is cancelled when fog override function is Off.

How to Set

With CONSULT
1. Turn power switch ON.
2. Select “INT LAMP” of “BCM” using CONSULT.
3. Select “FOG LAMP OVERRIDE” in “Work Support” mode.

Service item	Setting item	Setting
FOG LAMP OVERRIDE	On	With fog override function
	Off	Without fog override function

AUTO LIGHT SYSTEM (FOR CANADA)

AUTO LIGHT SYSTEM (FOR CANADA) : System Description

INFOID:0000000010634636

SYSTEM DIAGRAM

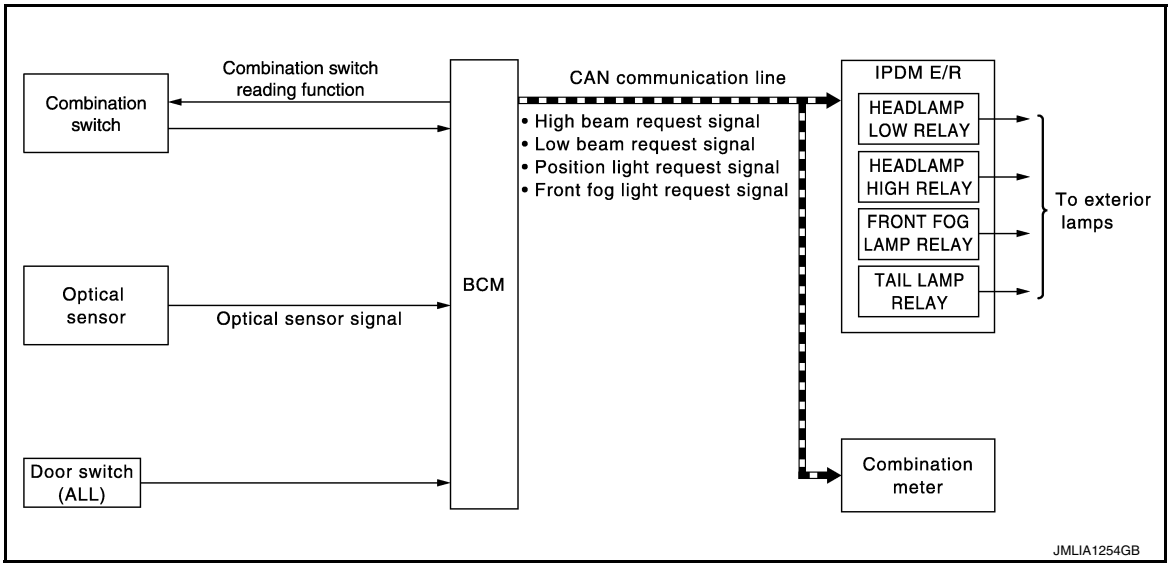

OUTLINE

- Auto light system is controlled by each function of BCM and IPDM E/R.

Control by BCM:
- Combination switch reading function
- Headlamp control function
- Auto light function
- Delay timer function
- Auto light adjustment system

Control by IPDM E/R:
- Relay control function
- Auto light system has the auto light function and delay timer function.
- Auto light function automatically turns ON/OFF the exterior lamps* and each illumination automatically, depending on the outside brightness.
- When auto light system turns the exterior lamps ON with the power switch OFF, delay timer function turns the exterior lamps OFF, depending on the vehicle condition with the auto light function after a certain period of time.

*: Headlamp (LO/HI), parking lamp, side marker lamp, tail lamp and front fog lamp (Headlamp HI and front fog lamp depend on the combination switch condition.)

AUTO LIGHT FUNCTION

- BCM detects the combination switch condition with the combination switch reading function.
- BCM supplies voltage to optical sensor when the power switch is turned ON or ACC.
- Optical sensor converts outside brightness (lux) to voltage and transmits the optical sensor signal to BCM.
- BCM judges outside brightness from the optical sensor signal and judges ON/OFF condition of the exterior lamp and each illumination according to the outside brightness.
- BCM transmits each request signal to IPDM E/R and combination meter via CAN communication according to ON/OFF condition by the auto light function.

NOTE:
ON/OFF timing differs based on the sensitivity from the setting. The setting can be set by CONSULT. Refer to BCS-17, "HEADLAMP : CONSULT Function (BCM - HEAD LAMP)".

AUTO LIGHT ADJUSTMENT SYSTEM

The auto light adjustment system automatically, dims/brightens the display, according to brightness outside the vehicle, when lighting switch 1ST, lighting switch 2ND or lighting switch AUTO is operated. Refer to INL-13, "AUTO LIGHT ADJUSTMENT SYSTEM : System Description".

DELAY TIMER FUNCTION

BCM turns the exterior lamp OFF depending on the vehicle condition with the auto light function when the power switch is turned OFF.
- Turns the exterior lamp OFF 5 minutes after detecting that any door opens. (Door switch ON).
- Turns the exterior lamp OFF a certain period of time* after closing all doors. (Door switch ON→OFF).
- Turns the exterior lamp OFF with the power switch ACC or the light switch OFF.

*: The preset time is 45 seconds. The timer operating time can be set by CONSULT. Refer to BCS-17, "HEADLAMP : CONSULT Function (BCM - HEAD LAMP)".

NOTE:
When any position other than the light switch AUTO is set, the auto light system function switches to the exterior lamp battery saver function.

FOG OVERRIDE FUNCTION

When front fog lamp switch is ON while power switch is in ON position and lighting switch is in AUTO position, BCM turns ON exterior lamps* regardless of outside brightness.
*: Headlamp (LO/HI), front fog lamp, parking lamp, license plate lamp, side marker lamp and tail lamp.

NOTE:
- Headlamp (HI) depending on the combination switch condition.
- Front fog light reminder warning is cancelled when fog override function is Off.

How to Set

With CONSULT
1. Turn power switch ON.
2. Select “INT LAMP” of “BCM” using CONSULT.
3. Select “FOG LAMP OVERRIDE” in “Work Support” mode.

Service item	Setting item	Setting
FOG LAMP OVERRIDE	On	With fog override function
	Off	Without fog override function

DAYTIME RUNNING LIGHT SYSTEM

DAYTIME RUNNING LIGHT SYSTEM : System Description

INFOID:0000000010634637

SYSTEM DIAGRAM

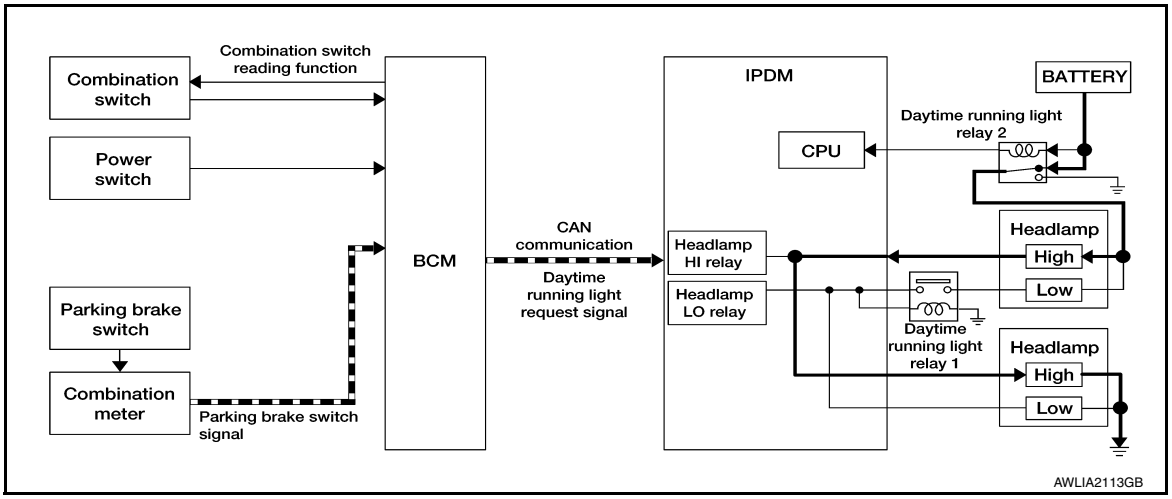

OUTLINE

- Turns the headlamp high ON (high beam at approximately half illumination) as the daytime running light.
- Daytime running light is controlled by daytime running light control function and combination switch reading function of BCM, and relay control function of IPDM E/R.

DAYTIME RUNNING LIGHT OPERATION

- BCM detects the combination switch condition by the combination switch reading function.
- BCM detects the vehicle condition according to power switch
- BCM detects the parking brake condition by the parking brake switch signal received from combination meter using CAN communication.

- BCM transmits the daytime running light request signal to IPDM E/R using CAN communication according to the daytime running light ON condition.

Daytime running light ON condition:
- Vehicle condition READY
- Lighting switch OFF or 1ST
- Lighting switch AUTO, and the auto light function OFF judgment
- Parking brake switch OFF

- IPDM E/R controls the daytime running light relay 2 (ground-side) to turn ON according to the daytime running light request signal.
- Power is supplied from the daytime running light relay through headlamp high RH and IPDM E/R to headlamp high LH. And high beam headlamps are illuminated (approximately half illumination) as the daytime running light.

TURN SIGNAL AND HAZARD WARNING LAMP SYSTEM

TURN SIGNAL AND HAZARD WARNING LAMP SYSTEM : System Description

INFOID:0000000010634638

SYSTEM DIAGRAM

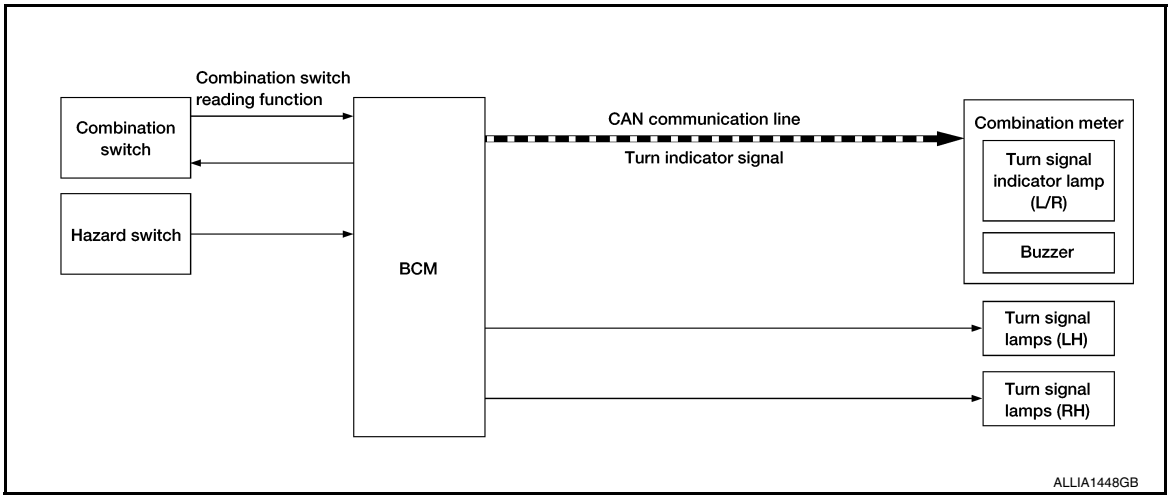

OUTLINE

Turn signal lamp and the hazard warning lamp is controlled by combination switch reading function and the flasher control function of BCM.

TURN SIGNAL LAMP OPERATION

- BCM detects the combination switch condition by the combination switch reading function.
- BCM supplies voltage to the right (left) turn signal lamp circuit when the power switch is ON and the turn signal switch is in the right (left) position. BCM blinks the turn signal lamp.

HAZARD WARNING LAMP OPERATION

BCM supplies voltage to both turn signal lamp circuit when the hazard switch is ON. BCM blinks the hazard warning lamp.

TURN SIGNAL INDICATOR LAMP AND TURN SIGNAL OPERATION

- BCM transmits the turn signal indicator lamp signal to the combination meter using CAN communication while the turn signal lamp and the hazard warning lamp are operating.
- Combination meter outputs the turn signal sound with the integrated buzzer while blinking the turn signal indicator lamp according to the turn signal indicator lamp signal.

3-TIME FLASHER FUNCTION

- By a short touch of the turn signal lever, BCM blinks the turn signal lamps 3 times in the selected direction.
- Cancels the operation when short touch of the turn signal lever in the reverse direction during the 3-time flasher function operation.

HIGH FLASHER OPERATION

- BCM detects the turn signal lamp circuit status from the current value.

- BCM increases the turn signal lamp blinking speed if the bulb or harness open is detected with the turn signal lamp operating.
  NOTE:
  The blinking speed is normal while operating the hazard warning lamp.

PARKING, LICENSE PLATE, SIDE MARKER AND TAIL LAMP SYSTEM

PARKING, LICENSE PLATE, SIDE MARKER AND TAIL LAMP SYSTEM : System Description

INFOID:0000000010634639

SYSTEM DIAGRAM

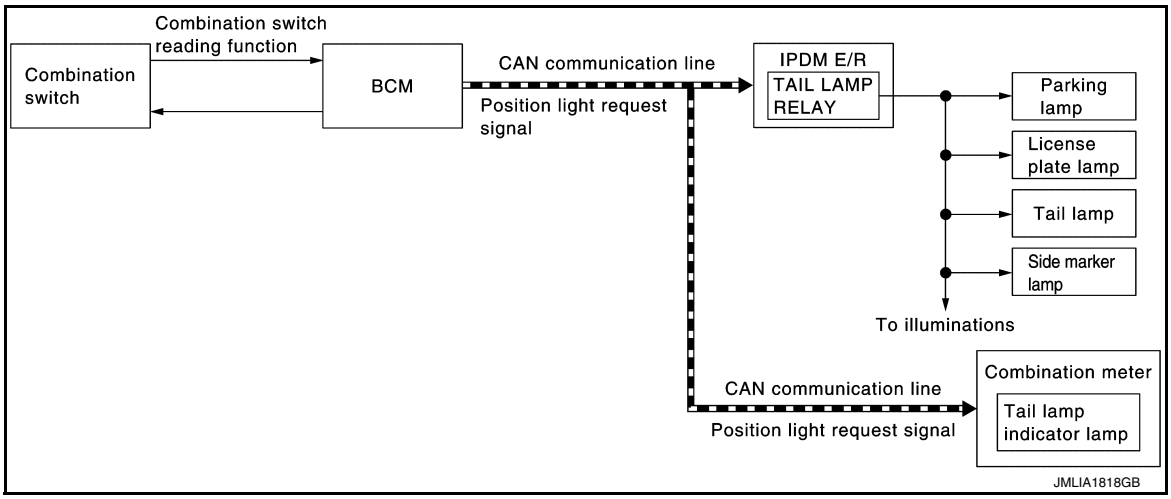

OUTLINE

Parking, license plate, side marker and tail lamps are controlled by combination switch reading function and headlamp control function of BCM, and relay control function of IPDM E/R.

PARKING, LICENSE PLATE, SIDE MARKER AND TAIL LAMPS OPERATION

- BCM detects the combination switch condition by the combination switch reading function.
- BCM transmits the position light request signal to IPDM E/R and the combination meter via CAN communication according to the ON/OFF condition of the parking, license plate, side marker and tail lamps.

Parking, license plate, side marker and tail lamps ON condition:
- Lighting switch 1ST
- Lighting switch 2ND
- Lighting switch AUTO, and the auto light function ON judgment
- Lighting switch AUTO, with the front fog lamp switch ON and the power switch ON

- IPDM E/R turns the integrated tail lamp relay ON and turns the parking, license plate, side marker and tail lamps ON according to the position light request signal.
- Combination meter turns the tail lamp indicator lamp ON according to the position light request signal.

PARKING, LICENSE PLATE, SIDE MARKER AND TAIL LAMP SYSTEM : Fail-Safe

INFOID:0000000010634640

CAN COMMUNICATION CONTROL

When CAN communication with BCM is impossible, IPDM E/R performs fail-safe control. After CAN communication recovers normally, it also returns to normal control.

If No CAN Communication Is Available With BCM

Control part	Fail-safe operation
• Parking lamp • License plate lamp • Illumination • Tail lamp • Side marker lamp	• Turns ON the tail lamp relay when the power switch is turned ON • Turns OFF the tail lamp relay when the power switch is turned OFF

FRONT FOG LAMP SYSTEM

FRONT FOG LAMP SYSTEM : System Description

INFOID:0000000010634641

SYSTEM DIAGRAM

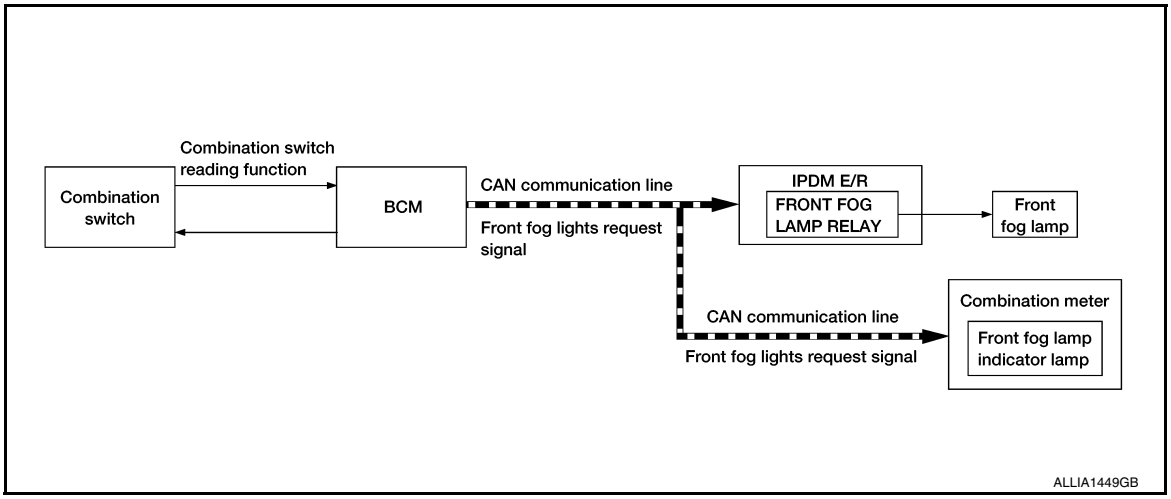

OUTLINE

Front fog lamp is controlled by combination switch reading function, front fog lamp control function of BCM, and relay control function of IPDM E/R.

FRONT FOG LAMP OPERATION

- BCM detects the combination switch condition by the combination switch reading function.
- BCM transmits the front fog lights request signal to IPDM E/R and the combination meter via CAN communication according to the front fog lamp ON condition.

Front fog lamp ON condition

- Front fog lamp switch ON, and any of the following condition is satisfied (except for the high beam ON):
- Lighting switch 2ND
- Lighting switch AUTO and the power switch ON

IPDM E/R turns the integrated front fog lamp relay ON, and turns the front fog lamp ON according to the front fog lights request signal.

Combination meter turns the front fog lamp indicator lamp ON according to the front fog lights request signal.

FRONT FOG LAMP SYSTEM : Fail-Safe

INFOID:0000000010634642

CAN COMMUNICATION CONTROL

When CAN communication with BCM is impossible, IPDM E/R performs fail-safe control. After CAN communication recovers normally, it also returns to normal control.

If No CAN Communication Is Available With BCM

Control part	Fail-safe operation
Front fog lamp	Front fog lamp relay OFF

EXTERIOR LAMP BATTERY SAVER SYSTEM

EXTERIOR LAMP BATTERY SAVER SYSTEM : System Description

INFOID:0000000010634643

SYSTEM DIAGRAM

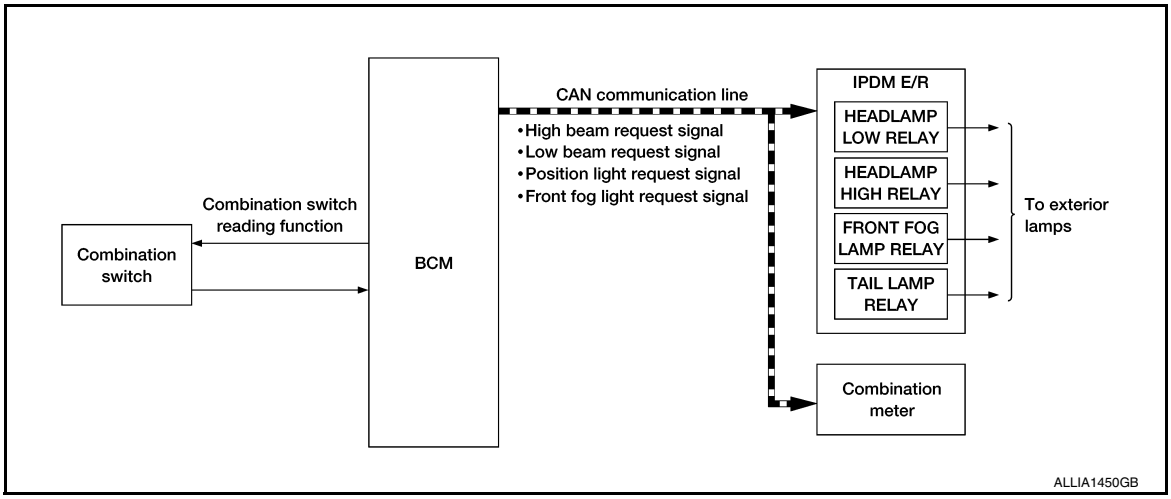

OUTLINE

- Exterior lamp battery saver system is controlled by each function of BCM and IPDM E/R.

Control by BCM:
- Combination switch reading function
- Headlamp control function
- Exterior lamp battery saver function

Control by IPDM E/R:
- Relay control function
- BCM turns the exterior lamps* OFF after a period of time to prevent the battery from over-discharge when the power switch is turned OFF with the exterior lamps ON.

*: Headlamp (LO/HI), parking lamp, tail lamp, side marker lamp, license plate lamp and front fog lamp

EXTERIOR LAMP BATTERY SAVER ACTIVATION

BCM activates the timer and turns the exterior lamp OFF 5 minutes after the power switch is turned from ON → OFF with the exterior lamps ON.

NOTE:
- Headlamp control function turns the exterior lamps ON normally when the power switch is turned ACC or set the vehicle to READY (both before and after the exterior lamp battery saver is turned OFF).
- The timer starts at the time that the lighting switch is turned from OFF → 1ST or 2ND with the exterior lamps OFF.

DIAGNOSIS SYSTEM (BCM)

COMMON ITEM

COMMON ITEM : CONSULT Function (BCM - COMMON ITEM)

INFOID:0000000010634644

APPLICATION ITEM

CONSULT performs the following functions via CAN communication with BCM.

Direct Diagnostic Mode	Description
Ecu Identification	The BCM part number is displayed.
Self Diagnostic Result	The BCM self diagnostic results are displayed.
Data Monitor	The BCM input/output data is displayed in real time.
Active Test	The BCM activates outputs to test components.
Work support	The settings for BCM functions can be changed.
Configuration	• The vehicle specification can be read and saved. • The vehicle specification can be written when replacing BCM.
CAN Diag Support Mntr	The result of transmit/receive diagnosis of CAN communication is displayed.

SYSTEM APPLICATION

BCM can perform the following functions.

System	Sub System	Direct Diagnostic Mode						
		Ecu Identification	Self Diagnostic Result	Data Monitor	Active Test	Work support	Configuration	CAN Diag Support Mntr
Door lock	DOOR LOCK		×	×	×	×		
Rear window defogger	REAR DEFOGGER			×	×			
Warning chime	BUZZER			×	×			
Interior room lamp timer	INT LAMP			×	×	×		
Exterior lamp	HEADLAMP			×	×	×		
Wiper and washer	WIPER			×	×	×		
Turn signal and hazard warning lamps	FLASHER			×	×	×		
Air conditioner	AIR CONDITIONER			×	×			
Intelligent Key system	INTELLIGENT KEY		×	×	×	×		
Combination switch	COMB SW			×				
BCM	BCM	×	×			×	×	×
Immobilizer	IMMU		×	×	×	×		
Interior room lamp battery saver	BATTERY SAVER			×	×	×		
Trunk open	TRUNK			×				
Vehicle security system	THEFT ALM			×	×	×		
RAP system	RETAINED PWR			×				
Signal buffer system	SIGNAL BUFFER			×				
TPMS	AIR PRESSURE MONITOR		×	×	×	×		

HEADLAMP

HEADLAMP : CONSULT Function (BCM - HEAD LAMP)

INFOID:0000000010634645

DATA MONITOR

Monitor Item [Unit]	Description
PUSH SW [On/Off]	Indicates condition of power switch.
ENGINE STATE [Stop/Stall/Crank/Run]	Indicates engine status received from ECM on CAN communication line.
VEH SPEED 1 [km/h]	Indicates vehicle speed signal received from ABS on CAN communication line.
TURN SIGNAL R [On/Off]	Indicates condition of combination switch.
TURN SIGNAL L [On/Off]	
TAIL LAMP SW [On/Off]	
HI BEAM SW [On/Off]	
HEAD LAMP SW 1 [On/Off]	
HEAD LAMP SW 2 [On/Off]	
PASSING SW [On/Off]	
AUTO LIGHT SW [On/Off]	
FR FOG SW [On/Off]	
DOOR SW-DR [On/Off]	Indicates condition of front door switch LH.
DOOR SW-AS [On/Off]	Indicates condition of front door switch RH.
DOOR SW-RR [On/Off]	Indicates condition of rear door switch RH.
DOOR SW-RL [On/Off]	Indicates condition of rear door switch LH.
DOOR SW-BK [On/Off]	Indicates condition of trunk switch.
OPTI SEN (DTCT) [V]	Indicates outside brightness voltage signal from optical sensor.
OPTI SEN (FILT) [V]	Indicates outside brightness voltage signal from optical sensor filtered by BCM.

ACTIVE TEST

Test Item	Description
FR FOG LAMP	This test is able to check front fog lamp operation [On/Off].
HEAD LAMP	This test is able to check headlamp operation [Off/Low/Hi].
ILL DIM SIGNAL	This test is able to check head lamp illumination dimming operation [On/Off].
TAIL LAMP	This test is able to check taillamp operation [Off/On].

WORK SUPPORT

Support Item	Setting	Description
AUTO LIGHT LOGIC SET	MODE6	Autolamp function OFF.
	MODE5	
	MODE4	
	MODE3	Autolamp function ON at twilight.
	MODE2	Autolamp function ON at twilight or with wiper LO and HI operation.
	MODE1*	Autolamp function ON at twilight or with wiper INT, LO and HI operation.
BATTERY SAVER SET	Off	Exterior lamp battery saver function OFF.
	On*	Exterior lamp battery saver function ON.

Support Item	Setting		Description
CUSTOM A/LIGHT SETTING	MODE4		Less sensitive than normal setting (turns ON later).
	MODE3		More sensitive than MODE2.
	MODE2		More sensitive than normal setting (turns ON earlier).
	MODE1*		Normal setting.
ILL DELAY SET	MODE 8	180 sec.	Autolamp delay timer operation time.
	MODE 7	150 sec.	
	MODE 6	120 sec.	
	MODE 4	90 sec.	
	MODE 5	60 sec.	
	MODE 3	30 sec.	
	MODE 2	OFF	
	MODE 1*	45 sec.	

*: Initial setting

FLASHER

FLASHER : CONSULT Function (BCM - FLASHER)

INFOID:0000000010634646

DATA MONITOR

Monitor Item [Unit]	Description
REQ SW -DR [On/Off]	Indicates condition of door request switch LH.
REQ SW -AS [On/Off]	Indicates condition of door request switch RH.
PUSH SW [On/Off]	Indicates condition of power switch.
TURN SIGNAL R [On/Off]	Indicates condition of turn signal function of combination switch.
TURN SIGNAL L [On/Off]	
HAZARD SW [On/Off]	Indicates condition of hazard switch.
RKE-LOCK [On/Off]	Indicates condition of lock signal from Intelligent Key.
RKE-UNLOCK [On/Off]	Indicates condition of unlock signal from Intelligent Key.
RKE-PANIC [On/Off]	Indicates condition of panic alarm signal from Intelligent Key.

ACTIVE TEST

Test Item	Description
FLASHER	This test is able to check turn signal lamp operation [Off/LH/RH].

WORK SUPPORT

Support Item	Setting	Description
HAZARD ANSWER BACK	Lock/Unlock	Hazard warning lamp answer back for LOCK and UNLOCK with request switch or Intelligent Key.
	Unlock Only	Hazard warning lamp answer back for UNLOCK only with request switch or Intelligent Key.
	Lock Only	Hazard warning lamp answer back for LOCK only with request switch or Intelligent Key.
	Off	Hazard warning lamp answer back OFF.

DIAGNOSIS SYSTEM (IPDM E/R)

Diagnosis Description

INFOID:0000000010634647

AUTO ACTIVE TEST

Description

In auto active test mode, the IPDM E/R sends a drive signal to the following systems to check their operation.

- Rear window defogger
- Front wiper motor
- Parking lamp
- License plate lamp
- Tail lamp
- Front fog lamp
- Side marker lamp
- Headlamp (LO, HI)

Operation Procedure

NOTE:

Never perform auto active test in the following conditions.

- CONSULT is connected.
- Passenger door is open.

1. Turn the power switch OFF.
2. Turn the power switch ON, and within 20 seconds, press the driver door switch 10 times. Then turn the power switch OFF.
3. Turn the power switch ON within 10 seconds. After that the horn sounds once and the auto active test starts.
   NOTE:
   Never depress brake pedal while operating power switch so that auto active test is not activated.
4. After a series of the following operations is repeated 3 times, auto active test is completed.

NOTE:

- When auto active test mode has to be cancelled halfway through test, turn the power switch OFF.
- When auto active test is not activated, door switch may be the cause. Check door switch. Refer to DLK-103, "Component Function Check".

Inspection in Auto Active Test Mode

When auto active test mode is actuated, the following operation sequence is repeated 3 times.

Operation sequence	Inspection location	Operation
1	Rear window defogger	10 seconds
2	Front wiper motor	LO for 5 seconds → HI for 5 seconds
3	• Parking lamp • License plate lamp • Tail lamp • Front fog lamp • Side marker lamp	10 seconds
4	Headlamp	LO for 10 seconds →HI ON ⇔ OFF 5 times

Concept of auto active test

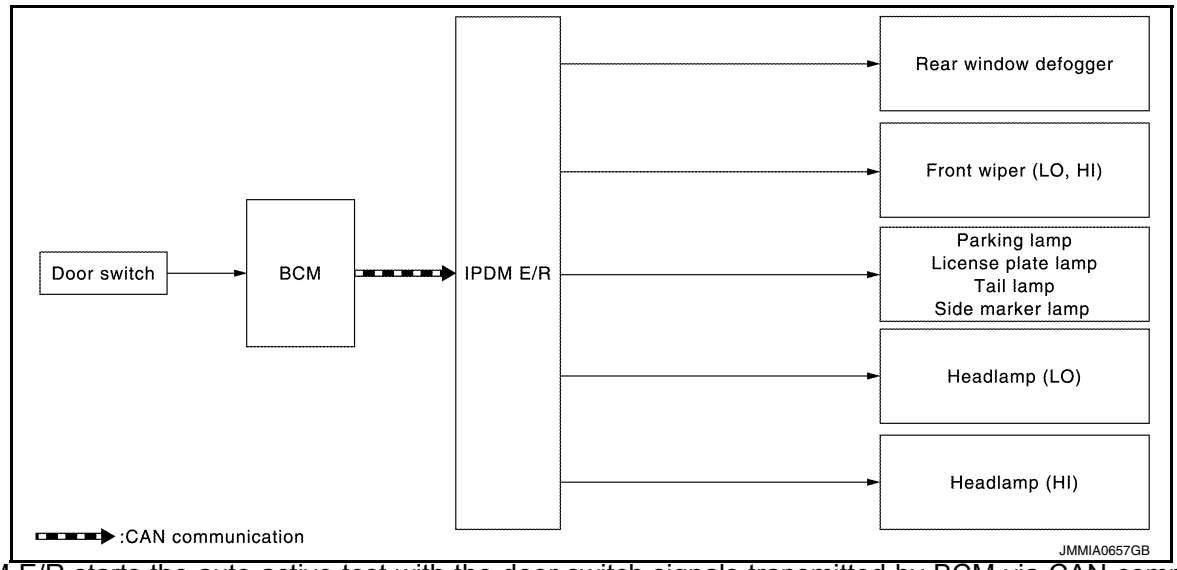

- IPDM E/R starts the auto active test with the door switch signals transmitted by BCM via CAN communication. Therefore, the CAN communication line between IPDM E/R and BCM is considered normal if the auto active test starts successfully.
- The auto active test facilitates troubleshooting if any systems controlled by IPDM E/R cannot be operated.

Diagnosis chart in auto active test mode

Symptom	Inspection contents		Possible cause
Rear window defogger does not operate	Perform auto active test. Does the rear window defogger operate?	YES	BCM signal input circuit
		NO	• Rear window defogger • Rear window defogger ground circuit • Harness or connector between IPDM E/R and rear window defogger • IPDM E/R
Any of the following components do not operate • Parking lamp • License plate lamp • Tail lamp • Front fog lamp • Headlamp (HI, LO) • Side marker lamp • Front wiper motor	Perform auto active test. Does the applicable system operate?	YES	BCM signal input circuit
		NO	• Lamp or motor • Lamp or motor ground circuit • Harness or connector between IPDM E/R and applicable system • IPDM E/R

CONSULT Function (IPDM E/R)

INFOID:0000000010634648

APPLICATION ITEM

CONSULT performs the following functions via CAN communication with IPDM E/R.

Direct Diagnostic Mode	Description
Ecu Identification	The IPDM E/R part number is displayed.
Self Diagnostic Result	The IPDM E/R self diagnostic results are displayed.
Data Monitor	The IPDM E/R input/output data is displayed in real time.
Active Test	The IPDM E/R activates outputs to test components.
CAN Diag Support Mntr	The result of transmit/receive diagnosis of CAN communication is displayed.

SELF DIAGNOSTIC RESULT

Refer to PCS-19, "DTC Index".

DATA MONITOR

Monitor Item [Unit]	Main Signals	Description
TAIL&CLR REQ [On/Off]	×	Indicates position light request signal received from BCM on CAN communication line
HL LO REQ [On/Off]	×	Indicates low beam request signal received from BCM on CAN communication line
HL HI REQ [On/Off]	×	Indicates high beam request signal received from BCM on CAN communication line
FR FOG REQ [On/Off]	×	Indicates front fog light request signal received from BCM on CAN communication line
FR WIP REQ [Stop/1LOW/Low/Hi]	×	Indicates front wiper request signal received from BCM on CAN communication line
WIP AUTO STOP [STOP P/ACT P]	×	Indicates condition of front wiper auto stop signal
WIP PROT [Off/BLOCK]	×	Indicates condition of front wiper fail-safe operation
IGN RLY1 -REQ [On/Off]		Indicates power switch ON signal received from BCM on CAN communication line
IGN RLY [On/Off]	×	Indicates condition of ignition relay-1
PUSH SW [On/Off]		Indicates condition of power switch
DETENT SW [On/Off]		Indicates condition of shift position (park position switch)
DTRL REQ [Off]		Indicates daytime light request signal received from BCM on CAN communication line
HOOD SW [On/Off]		Indicates condition of hood switch
THFT HRN REQ [On/Off]		Indicates theft warning horn request signal received from BCM on CAN communication line
HORN CHIRP [On/Off]		Indicates horn reminder signal received from BCM on CAN communication line

ACTIVE TEST

Test item	Description
HORN	This test is able to check horn operation [On].
REAR DEFOGGER	This test is able to check rear window defogger operation [On/Off].
FRONT WIPER	This test is able to check wiper motor operation [Hi/Lo/Off].
EXTERNAL LAMPS	This test is able to check external lamp operation [Fog/Hi/Lo/TAIL/Off].

CAN DIAG SUPPORT MNTR

Refer to LAN-14, "CAN Diagnostic Support Monitor".

ECU DIAGNOSIS INFORMATION

BCM, IPDM E/R

List of ECU Reference

INFOID:0000000010634649

ECU	Reference
BCM	BCS-28, "Reference Value"
	BCS-46, "Fail-safe"
	BCS-47, "DTC Inspection Priority Chart"
	BCS-48, "DTC Index"
IPDM E/R	PCS-15, "Reference Value"
	PCS-18, "Fail-Safe"
	PCS-19, "DTC Index"

WIRING DIAGRAM

HEADLAMP

Wiring Diagram

INFOID:0000000010634650

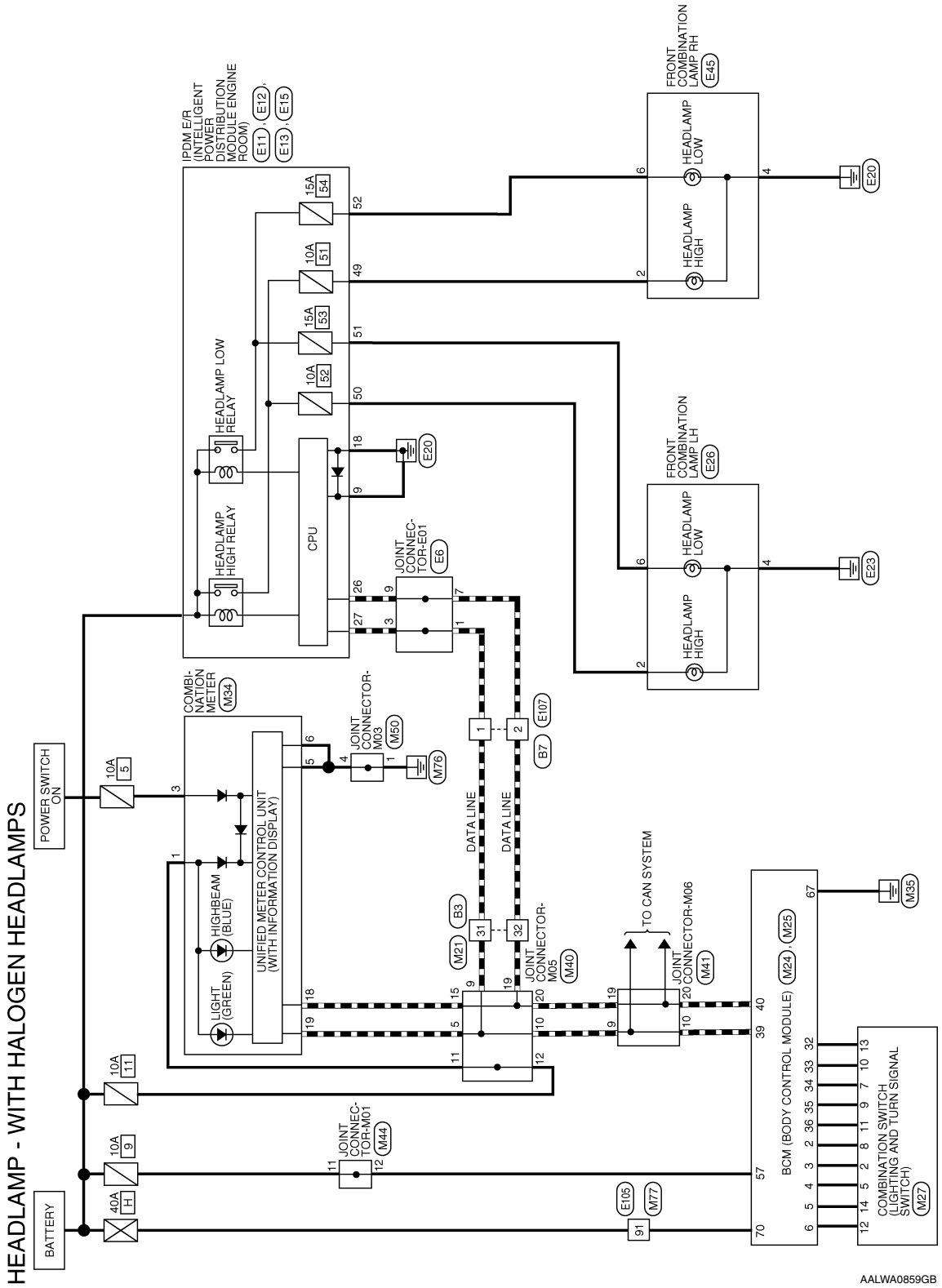

HEADLAMP WITH HALOGEN HEADLAMPS CONNECTORS

Connector No.	M21
Connector Name	WIRE TO WIRE
Connector Color	WHITE

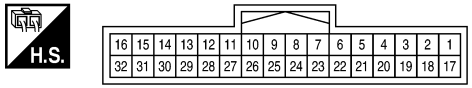

Terminal No.	Color of Wire	Signal Name
31	L	–
32	P	–

Connector No.	M24
Connector Name	BCM (BODY CONTROL MODULE)
Connector Color	BLACK

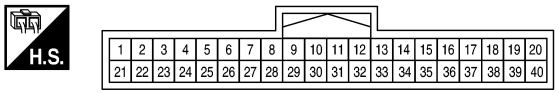

Terminal No.	Color of Wire	Signal Name
2	L	COMBINATION SW INPUT 5
3	GR	COMBINATION SW INPUT 4
4	BR	COMBINATION SW INPUT 3
5	G	COMBINATION SW INPUT 2
6	V	COMBINATION SW INPUT 1
32	GR	COMBINATION SW OUTPUT 5
33	Y	COMBINATION SW OUTPUT 4
34	W	COMBINATION SW OUTPUT 3
35	BG	COMBINATION SW OUTPUT 2
36	P	COMBINATION SW OUTPUT 1
39	L	CAN-H
40	P	CAN-L

Connector No.	M25
Connector Name	BCM (BODY CONTROL MODULE)
Connector Color	WHITE

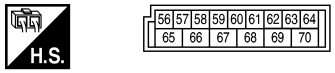

Terminal No.	Color of Wire	Signal Name
57	P	BATTERY (FUSE)
67	B	GND
70	Y	BATTERY (F/L)

Connector No.	M27
Connector Name	COMBINATION SWITCH
Connector Color	WHITE

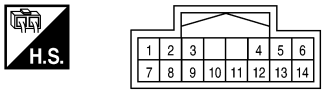

Terminal No.	Color of Wire	Signal Name
2	GR	–
5	BR	–
7	W	–
8	L	–
9	BG	–
10	Y	–
11	P	–
12	V	–
13	GR	–
14	G	–

Connector No.	M34
Connector Name	COMBINATION METER
Connector Color	WHITE

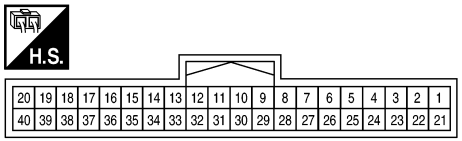

Terminal No.	Color of Wire	Signal Name
1	LG	BAT
3	GR	IGN
5	B	GND
6	B	GND
18	P	CAN-L
19	L	CAN-H

AALIA2498GB

Connector No.	M40
Connector Name	JOINT CONNECTOR-M05
Connector Color	BLUE

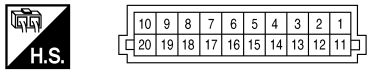

Terminal No.	Color of Wire	Signal Name
5	L	–
9	L	–
10	L	–
11	LG	–
12	LG	–
15	P	–
19	P	–
20	P	–

Connector No.	M41
Connector Name	JOINT CONNECTOR-M06
Connector Color	BLUE

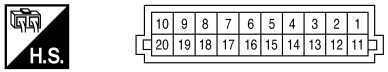

Terminal No.	Color of Wire	Signal Name
9	L	–
10	L	–
19	P	–
20	P	–

Connector No.	M44
Connector Name	JOINT CONNECTOR-M01
Connector Color	GRAY

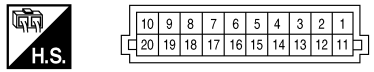

Terminal No.	Color of Wire	Signal Name
11	P	–
12	P	–

Connector No.	M50
Connector Name	JOINT CONNECTOR-M03
Connector Color	PINK

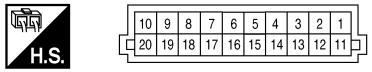

Terminal No.	Color of Wire	Signal Name
1	B	–
4	B	–

Connector No.	M77
Connector Name	WIRE TO WIRE
Connector Color	WHITE

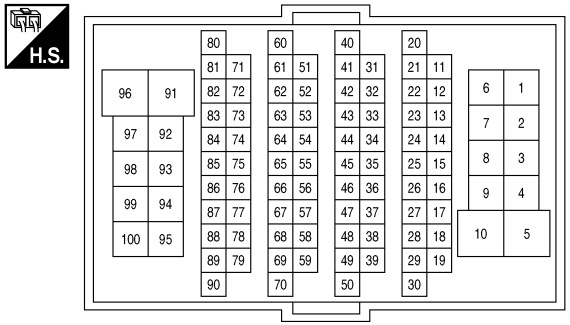

Terminal No.	Color of Wire	Signal Name
91	Y	–

Connector No.	E6
Connector Name	JOINT CONNECTOR-E01
Connector Color	BLUE

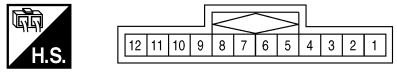

Terminal No.	Color of Wire	Signal Name
1	L	–
3	L	–
7	P	–
9	P	–

AALIA2499GB

Connector No.	E11
Connector Name	IPDM E/R (INTELLIGENT POWER DISTRIBUTION MODULE ENGINE ROOM)
Connector Color	BLACK

Terminal No.	Color of Wire	Signal Name
9	B	POWER GROUND

Connector No.	E12
Connector Name	IPDM E/R (INTELLIGENT POWER DISTRIBUTION MODULE ENGINE ROOM)
Connector Color	BROWN

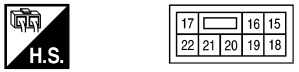

Terminal No.	Color of Wire	Signal Name
18	B/W	S GND

Connector No.	E13
Connector Name	IPDM E/R (INTELLIGENT POWER DISTRIBUTION MODULE ENGINE ROOM)
Connector Color	WHITE

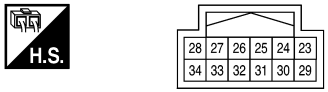

Terminal No.	Color of Wire	Signal Name
26	P	CAN-L
27	L	CAN-H

Connector No.	E15
Connector Name	IPDM E/R (INTELLIGENT POWER DISTRIBUTION MODULE ENGINE ROOM)
Connector Color	WHITE

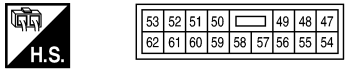

Terminal No.	Color of Wire	Signal Name
49	Y	H/LAMP HI RH
50	G	H/LAMP HI LH
51	L	H/LAMP LO LH
52	P	H/LAMP LO RH

Connector No.	E26
Connector Name	FRONT COMBINATION LAMP LH (WITH HALOGEN HEADLAMPS)
Connector Color	GRAY

Terminal No.	Color of Wire	Signal Name
2	G	–
4	B/Y	–
6	L	–

Connector No.	E45
Connector Name	FRONT COMBINATION LAMP RH (WITH HALOGEN HEADLAMPS)
Connector Color	GRAY

Terminal No.	Color of Wire	Signal Name
2	Y	–
4	B/Y	– (WITH DAYTIME RUNNING SYSTEM)
4	B/W	– (WITHOUT DAYTIME RUNNING SYSTEM)
6	L	– (WITH DAYTIME RUNNING SYSTEM)
6	P	– (WITHOUT DAYTIME RUNNING SYSTEM)

AALIA2500GB

Connector No.	E105
Connector Name	WIRE TO WIRE
Connector Color	WHITE

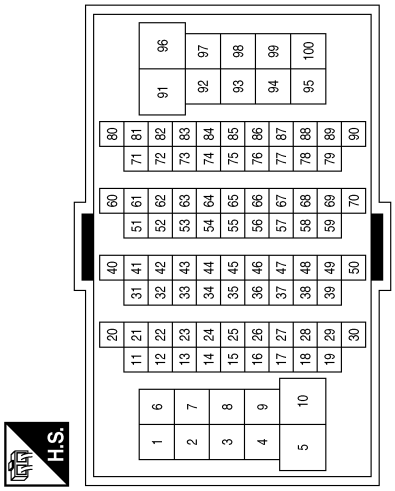

Terminal No.	Color of Wire	Signal Name
91	Y	–

Connector No.	E107
Connector Name	WIRE TO WIRE
Connector Color	WHITE

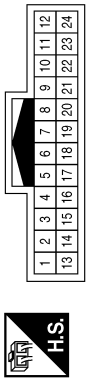

Terminal No.	Color of Wire	Signal Name
1	L	–
2	P	–

Connector No.	B3
Connector Name	WIRE TO WIRE
Connector Color	WHITE

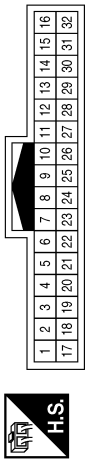

Terminal No.	Color of Wire	Signal Name
31	L	–
32	P	–

Connector No.	B7
Connector Name	WIRE TO WIRE
Connector Color	WHITE

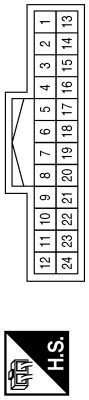

Terminal No.	Color of Wire	Signal Name
1	L	–
2	P	–

AALIA2501GB

DAYTIME LIGHT SYSTEM

Wiring Diagram

INFOID:0000000010634651

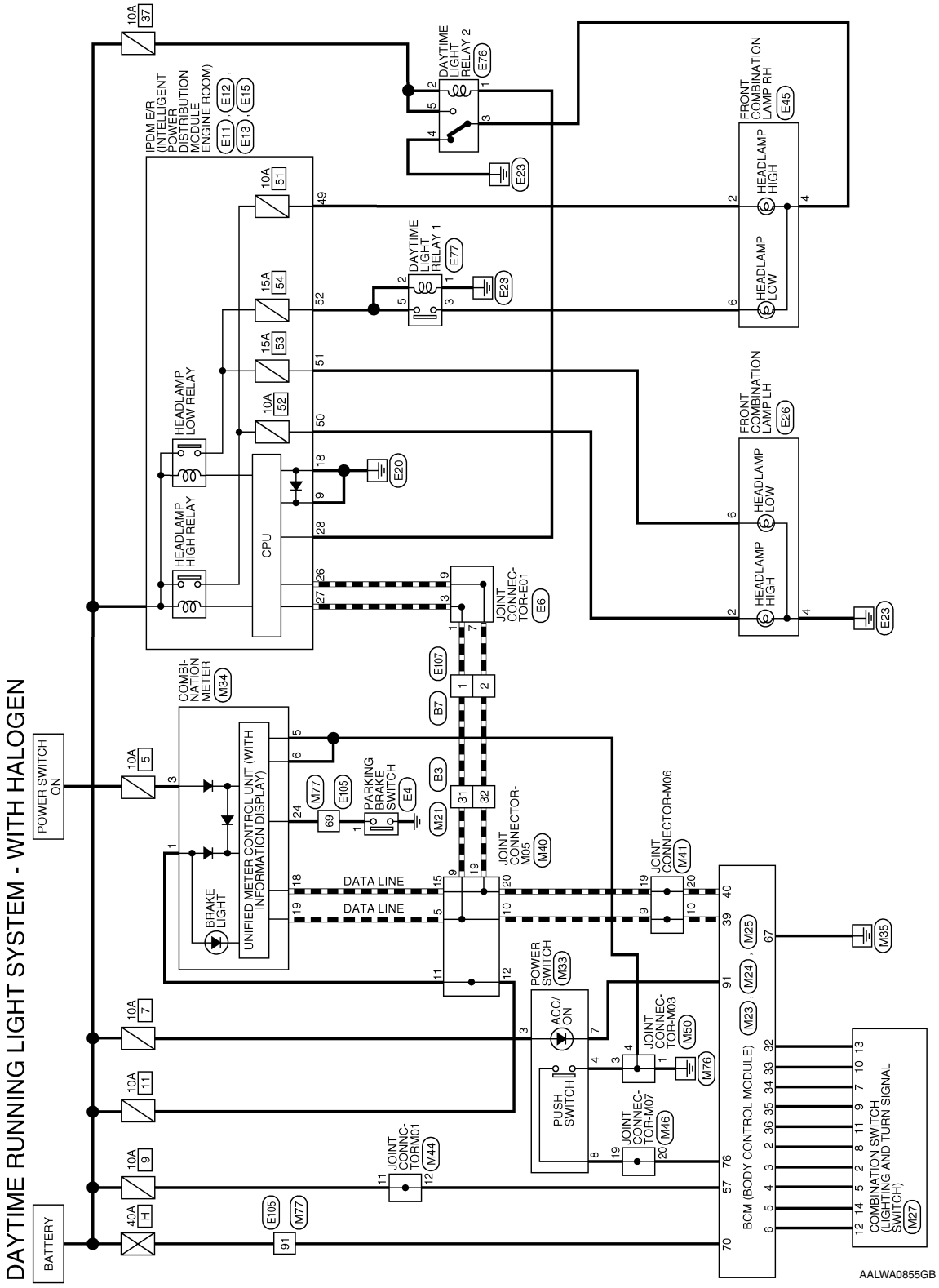

DAYTIME RUNNING LIGHT SYSTEM WITH HALOGEN CONNECTORS

Connector No.	M21
Connector Name	WIRE TO WIRE
Connector Color	WHITE

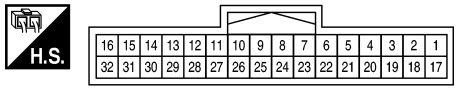

Terminal No.	Color of Wire	Signal Name
31	L	–
32	P	–

Connector No.	M23
Connector Name	BCM (BODY CONTROL MODULE)
Connector Color	WHITE

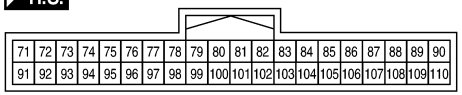

Terminal No.	Color of Wire	Signal Name
76	SB	ENG START SW
91	V	POWER POSITION LED

Connector No.	M24
Connector Name	BCM (BODY CONTROL MODULE)
Connector Color	BLACK

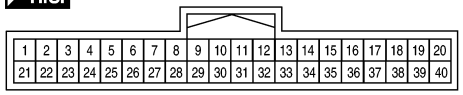

Terminal No.	Color of Wire	Signal Name
2	L	COMBINATION SW INPUT 5
3	GR	COMBINATION SW INPUT 4
4	BR	COMBINATION SW INPUT 3

Terminal No.	Color of Wire	Signal Name
5	G	COMBINATION SW INPUT 2
6	V	COMBINATION SW INPUT 1
32	GR	COMBINATION SW OUTPUT 5
33	Y	COMBINATION SW OUTPUT 4
34	W	COMBINATION SW OUTPUT 3
35	BG	COMBINATION SW OUTPUT 2
36	P	COMBINATION SW OUTPUT 1
39	L	CAN-H
40	P	CAN-L

Connector No.	M25
Connector Name	BCM (BODY CONTROL MODULE)
Connector Color	WHITE

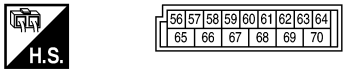

Terminal No.	Color of Wire	Signal Name
57	P	BATTERY (FUSE)
67	B	GND
70	Y	BATTERY (F/L)

AALIA2480GB

Connector No.	M27
Connector Name	COMBINATION SWITCH
Connector Color	WHITE

H.S.

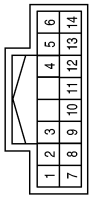

Terminal No.	Color of Wire	Signal Name
2	GR	–
5	BR	–
7	W	–
8	L	–
9	BG	–
10	Y	–
11	P	–
12	V	–
13	GR	–
14	G	–

Connector No.	M33
Connector Name	POWER SWITCH
Connector Color	WHITE

H.S.

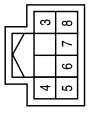

Terminal No.	Color of Wire	Signal Name
3	G	–
4	B	–
7	V	–
8	SB	–

Connector No.	M34
Connector Name	COMBINATION METER
Connector Color	WHITE

H.S.

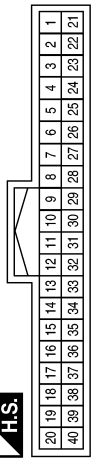

Terminal No.	Color of Wire	Signal Name
1	LG	BAT
3	GR	IGN
5	B	GND
6	B	GND
18	P	CAN-L
19	L	CAN-H
24	BG	E-PKB

Connector No.	M40
Connector Name	JOINT CONNECTOR-M05
Connector Color	BLUE

H.S.

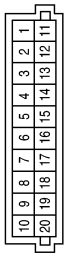

Terminal No.	Color of Wire	Signal Name
5	L	–
9	L	–
10	L	–
11	LG	–
12	LG	–
15	P	–
19	P	–
20	P	–

Connector No.	M41
Connector Name	JOINT CONNECTOR-M06
Connector Color	BLUE

H.S.

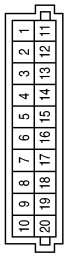

Terminal No.	Color of Wire	Signal Name
9	L	–
10	L	–
19	P	–
20	P	–

Connector No.	M44
Connector Name	JOINT CONNECTOR-M01
Connector Color	GRAY

H.S.

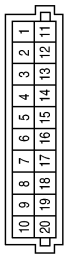

Terminal No.	Color of Wire	Signal Name
11	P	–
12	P	–

AALIA2481GB

Connector No.	M77
Connector Name	WIRE TO WIRE
Connector Color	WHITE

H.S.

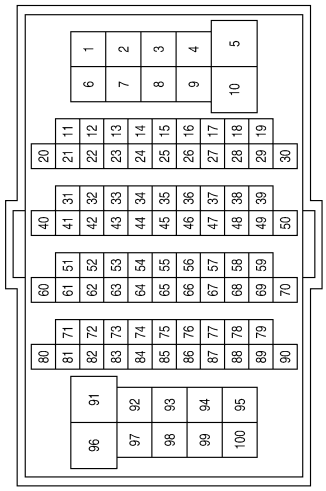

Terminal No.	Color of Wire	Signal Name
69	BG	–
91	Y	–

Connector No.	M50
Connector Name	JOINT CONNECTOR-M03
Connector Color	PINK

H.S.

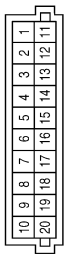

Terminal No.	Color of Wire	Signal Name
1	B	–
3	B	–
4	B	–

Connector No.	M46
Connector Name	JOINT CONNECTOR-M07
Connector Color	ORANGE

H.S.

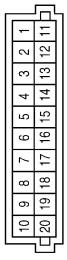

Terminal No.	Color of Wire	Signal Name
19	SB	–
20	SB	–

Connector No.	E11
Connector Name	IPDM E/R (INTELLIGENT POWER DISTRIBUTION MODULE ENGINE ROOM)
Connector Color	BLACK

H.S.

Terminal No.	Color of Wire	Signal Name
9	B	POWER GROUND

Connector No.	E6
Connector Name	JOINT CONNECTOR-E01
Connector Color	BLUE

H.S.

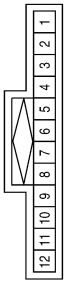

Terminal No.	Color of Wire	Signal Name
1	L	–
3	L	–
7	P	–
9	P	–

Connector No.	E4
Connector Name	PARKING BRAKE SWITCH
Connector Color	BLACK

H.S.

Terminal No.	Color of Wire	Signal Name
1	B	–

AALIA2482GB

Connector No.	E12
Connector Name	IPDM E/R (INTELLIGENT POWER DISTRIBUTION MODULE ENGINE ROOM)
Connector Color	BROWN

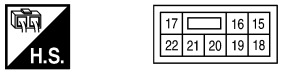

Terminal No.	Color of Wire	Signal Name
18	B/W	S GND

Connector No.	E13
Connector Name	IPDM E/R (INTELLIGENT POWER DISTRIBUTION MODULE ENGINE ROOM)
Connector Color	WHITE

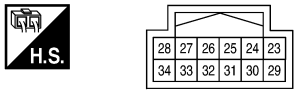

Terminal No.	Color of Wire	Signal Name
26	P	CAN-L
27	L	CAN-H
28	G	DTRL RLY

Connector No.	E15
Connector Name	IPDM E/R (INTELLIGENT POWER DISTRIBUTION MODULE ENGINE ROOM)
Connector Color	WHITE

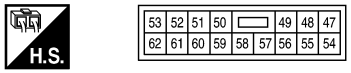

Terminal No.	Color of Wire	Signal Name
49	Y	H/LAMP HI RH
50	G	H/LAMP HI LH
51	L	H/LAMP LO LH
52	P	H/LAMP LO RH

Connector No.	E26
Connector Name	FRONT COMBINATION LAMP LH (WITH HALOGEN HEADLAMPS)
Connector Color	GRAY

Terminal No.	Color of Wire	Signal Name
2	G	–
4	B/Y	–
6	L	–

Connector No.	E45
Connector Name	FRONT COMBINATION LAMP RH (WITH HALOGEN HEADLAMPS)
Connector Color	GRAY

Terminal No.	Color of Wire	Signal Name
2	Y	–
4	B/Y	–
6	L	–

Connector No.	E76
Connector Name	DAYTIME LIGHT RELAY 2
Connector Color	BLACK

Terminal No.	Color of Wire	Signal Name
1	G	–
2	LG	–
3	B/Y	–
4	B/Y	–
5	LG	–

AALIA2483GB

Connector No.	E77
Connector Name	DAYTIME LIGHT RELAY 1
Connector Color	BLUE

H.S.

Terminal No.	Color of Wire	Signal Name
1	B/R	–
2	P	–
3	L	–
4	–	–
5	P	–

Connector No.	E105
Connector Name	WIRE TO WIRE
Connector Color	WHITE

H.S.

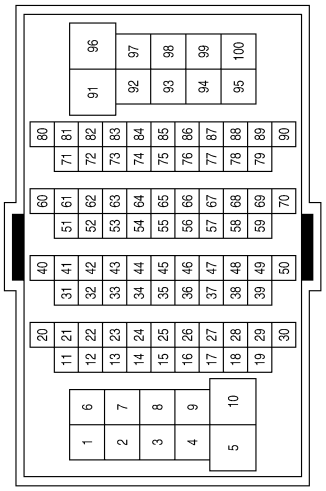

Terminal No.	Color of Wire	Signal Name
69	B	–
91	Y	–

Connector No.	E107
Connector Name	WIRE TO WIRE
Connector Color	WHITE

H.S.

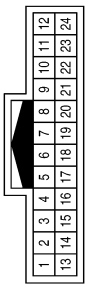

Terminal No.	Color of Wire	Signal Name
1	L	–
2	P	–

Connector No.	B3
Connector Name	WIRE TO WIRE
Connector Color	WHITE

H.S.

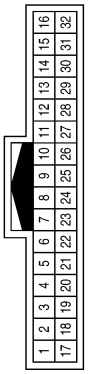

Terminal No.	Color of Wire	Signal Name
31	L	–
32	P	–

Connector No.	B7
Connector Name	WIRE TO WIRE
Connector Color	WHITE

H.S.

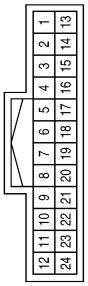

Terminal No.	Color of Wire	Signal Name
1	L	–
2	P	–

AALIA2484GB

AUTO LIGHT SYSTEM

Wiring Diagram

INFOID:0000000010634652

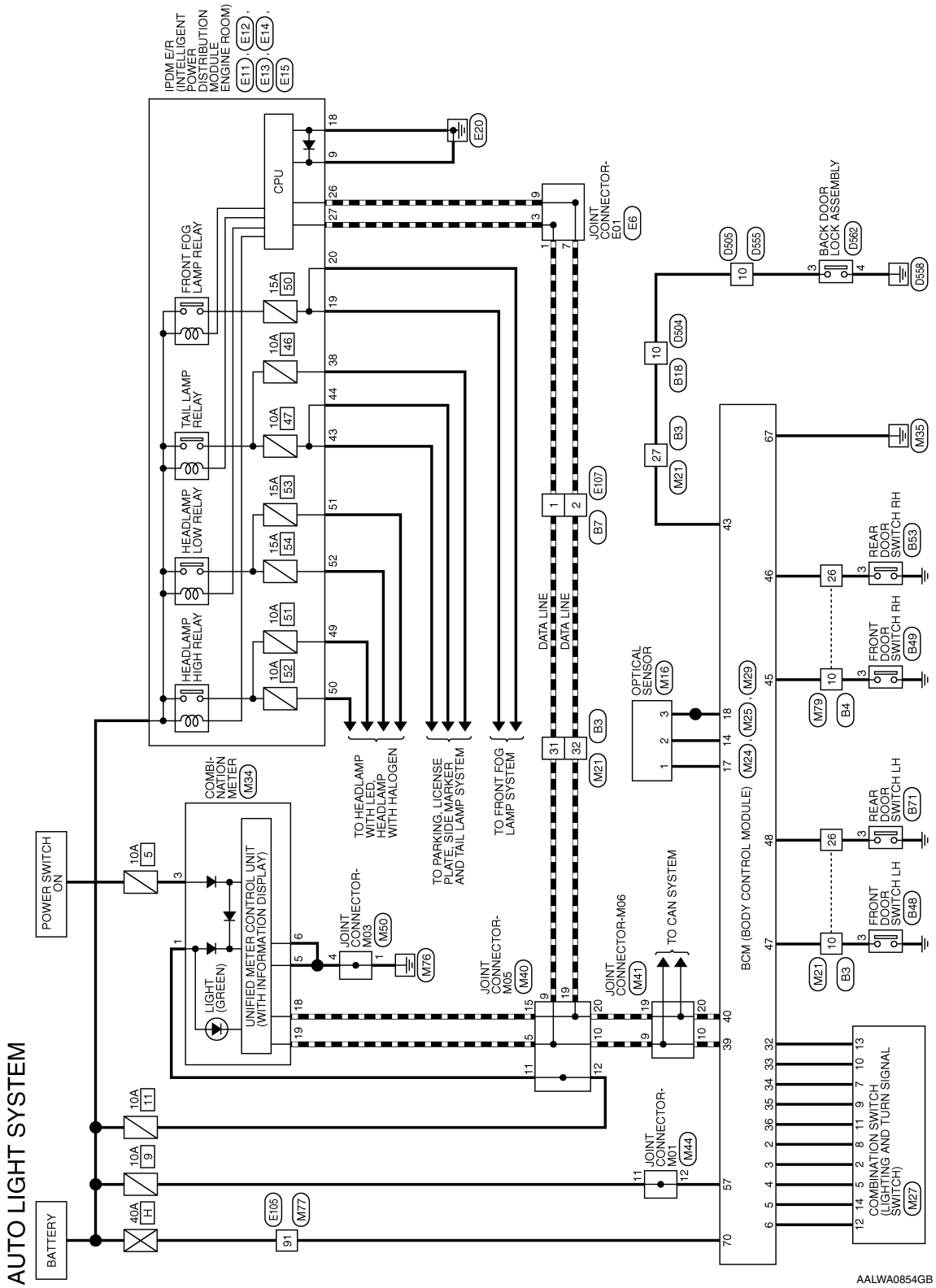

AUTO LIGHT SYSTEM CONNECTORS

Connector No.	M16
Connector Name	OPTICAL SENSOR
Connector Color	WHITE

Terminal No.	Color of Wire	Signal Name
1	Y	–
2	G	–
3	V	–

Connector No.	M21
Connector Name	WIRE TO WIRE
Connector Color	WHITE

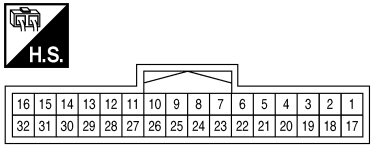

Terminal No.	Color of Wire	Signal Name
10	SB	–
26	W	–
27	Y	–
31	L	–
32	P	–

Connector No.	M24
Connector Name	BCM (BODY CONTROL MODULE)
Connector Color	BLACK

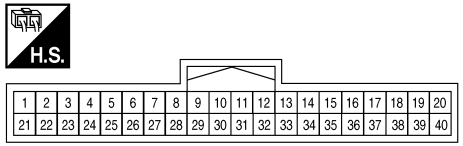

Terminal No.	Color of Wire	Signal Name
2	L	COMBINATION SW INPUT 5
3	GR	COMBINATION SW INPUT 4
4	BR	COMBINATION SW INPUT 3
5	G	COMBINATION SW INPUT 2
6	V	COMBINATION SW INPUT 1
14	G	AUTO LIGHT SENSOR INPUT
17	Y	AUTO LIGHT SENSOR POWER SUPPLY OUTPUT
18	L	KEYLESS TUNER, AUTO LIGHT SENSOR GND
32	GR	COMBINATION SW OUTPUT 5
33	Y	COMBINATION SW OUTPUT 4
34	W	COMBINATION SW OUTPUT 3
35	BG	COMBINATION SW OUTPUT 2
36	P	COMBINATION SW OUTPUT 1
39	L	CAN-H
40	P	CAN-L

Connector No.	M25
Connector Name	BCM (BODY CONTROL MODULE)
Connector Color	WHITE

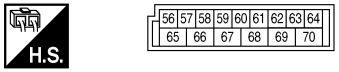

Terminal No.	Color of Wire	Signal Name
57	P	BATTERY (FUSE)
67	B	GND
70	Y	BATTERY (F/L)

AALIA2473GB

Connector No.	M27
Connector Name	COMBINATION SWITCH
Connector Color	WHITE

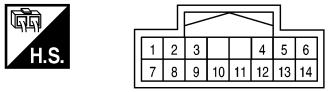

Terminal No.	Color of Wire	Signal Name
2	GR	–
5	BR	–
7	W	–
8	L	–
9	BG	–
10	Y	–
11	P	–
12	V	–
13	GR	–
14	G	–

Connector No.	M29
Connector Name	BCM (BODY CONTROL MODULE)
Connector Color	BLACK

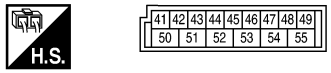

Terminal No.	Color of Wire	Signal Name
43	Y	DOOR SW (BACK)
45	BR	DOOR SW (AS)
46	R	DOOR SW (RR)
47	SB	DOOR SW (DR)
48	W	DOOR SW (RL)

Connector No.	M34
Connector Name	COMBINATION METER
Connector Color	WHITE

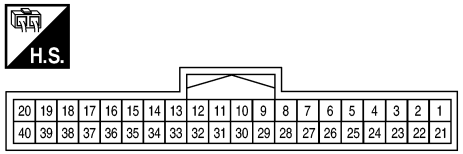

Terminal No.	Color of Wire	Signal Name
1	LG	BAT
3	GR	IGN
5	B	GND
6	B	GND
18	P	CAN-L
19	L	CAN-H

Connector No.	M40
Connector Name	JOINT CONNECTOR-M05
Connector Color	BLUE

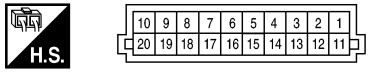

Terminal No.	Color of Wire	Signal Name
5	L	–
9	L	–

Terminal No.	Color of Wire	Signal Name
10	L	–
11	LG	–
12	LG	–
15	P	–
19	P	–
20	P	–

Connector No.	M41
Connector Name	JOINT CONNECTOR-M06
Connector Color	BLUE

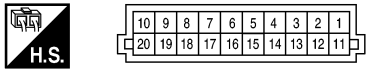

Terminal No.	Color of Wire	Signal Name
9	L	–
10	L	–
19	P	–
20	P	–

AALIA2474GB

Connector No.	M44
Connector Name	JOINT CONNECTOR-M01
Connector Color	GRAY

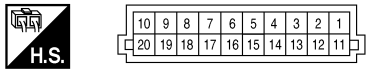

Terminal No.	Color of Wire	Signal Name
11	P	–
12	P	–

Connector No.	M50
Connector Name	JOINT CONNECTOR-M03
Connector Color	PINK

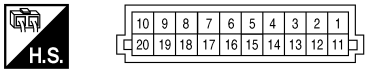

Terminal No.	Color of Wire	Signal Name
1	B	–
4	B	–

Connector No.	M77
Connector Name	WIRE TO WIRE
Connector Color	WHITE

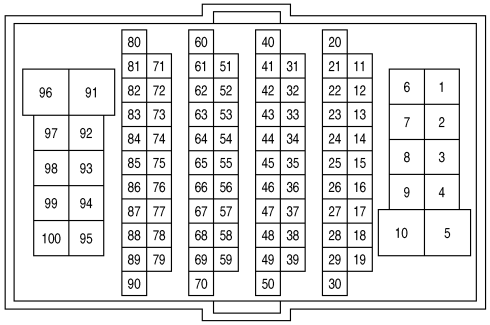

Terminal No.	Color of Wire	Signal Name
91	Y	–

Connector No.	M79
Connector Name	WIRE TO WIRE
Connector Color	WHITE

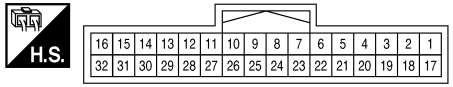

Terminal No.	Color of Wire	Signal Name
10	BR	–
26	R	–

Connector No.	E6
Connector Name	JOINT CONNECTOR-E01
Connector Color	BLUE

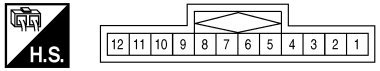

Terminal No.	Color of Wire	Signal Name
1	L	–
3	L	–
7	P	–
9	P	–

Connector No.	E11
Connector Name	IPDM E/R (INTELLIGENT POWER DISTRIBUTION MODULE ENGINE ROOM)
Connector Color	BLACK

Terminal No.	Color of Wire	Signal Name
9	B	POWER GROUND

AALIA2475GB

Connector No.	E12
Connector Name	IPDM E/R (INTELLIGENT POWER DISTRIBUTION MODULE ENGINE ROOM)
Connector Color	BROWN

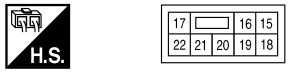

Terminal No.	Color of Wire	Signal Name
18	B/W	S GND
19	W	FR FOG RH
20	V	FR FOG LH

Connector No.	E13
Connector Name	IPDM E/R (INTELLIGENT POWER DISTRIBUTION MODULE ENGINE ROOM)
Connector Color	WHITE

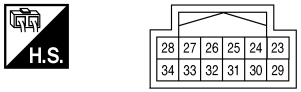

Terminal No.	Color of Wire	Signal Name
26	P	CAN-L
27	L	CAN-H

Connector No.	E14
Connector Name	IPDM E/R (INTELLIGENT POWER DISTRIBUTION MODULE ENGINE ROOM)
Connector Color	BROWN

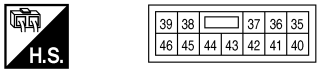

Terminal No.	Color of Wire	Signal Name
38	LG	TAIL 1 (WITHOUT SOLAR CELL)
38	R	TAIL 1 (WITH SOLAR CELL)
43	O	CLEARANCE/L LH
44	B	TAIL 2

Connector No.	E15
Connector Name	IPDM E/R (INTELLIGENT POWER DISTRIBUTION MODULE ENGINE ROOM)
Connector Color	WHITE

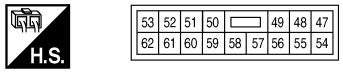

Terminal No.	Color of Wire	Signal Name
49	Y	H/LAMP HI RH
50	G	H/LAMP HI LH
51	L	H/LAMP LO LH
52	P	H/LAMP LO RH

Connector No.	E105
Connector Name	WIRE TO WIRE
Connector Color	WHITE

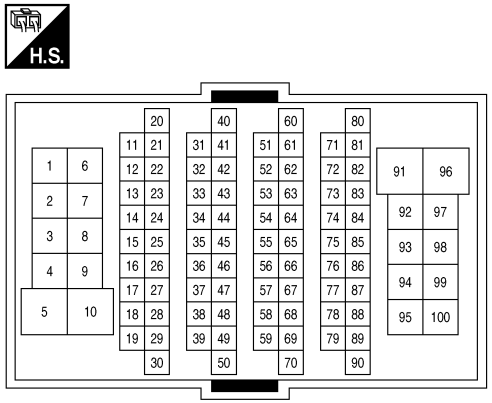

Terminal No.	Color of Wire	Signal Name
91	Y	–

AALIA2476GB

Connector No.	E107
Connector Name	WIRE TO WIRE
Connector Color	WHITE

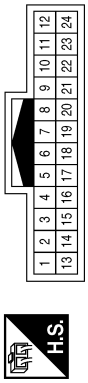

Terminal No.	Color of Wire	Signal Name
1	L	–
2	P	–

Connector No.	B3
Connector Name	WIRE TO WIRE
Connector Color	WHITE

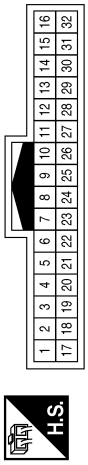

Terminal No.	Color of Wire	Signal Name
10	SB	–
26	LG	–
27	Y	–
31	L	–
32	P	–

Connector No.	B4
Connector Name	WIRE TO WIRE
Connector Color	WHITE

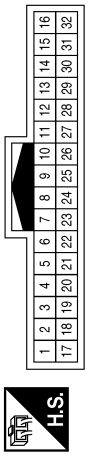

Terminal No.	Color of Wire	Signal Name
10	BR	–
26	R	–

Connector No.	B7
Connector Name	WIRE TO WIRE
Connector Color	WHITE

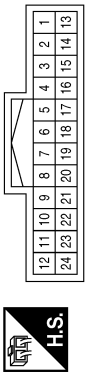

Terminal No.	Color of Wire	Signal Name
1	L	–
2	P	–

Connector No.	B18
Connector Name	WIRE TO WIRE
Connector Color	WHITE

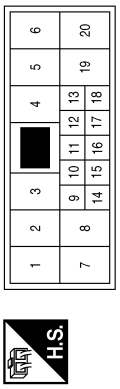

Terminal No.	Color of Wire	Signal Name
10	Y	–

Connector No.	B48
Connector Name	FRONT DOOR SWITCH LH
Connector Color	WHITE

Terminal No.	Color of Wire	Signal Name
3	SB	–

AALIA2477GB

Connector No.	B49
Connector Name	FRONT DOOR SWITCH RH
Connector Color	WHITE

Terminal No.	Color of Wire	Signal Name
3	BR	–

Connector No.	B53
Connector Name	REAR DOOR SWITCH RH
Connector Color	WHITE

Terminal No.	Color of Wire	Signal Name
3	R	–

Connector No.	B71
Connector Name	REAR DOOR SWITCH LH
Connector Color	WHITE

Terminal No.	Color of Wire	Signal Name
3	LG	–

Connector No.	D504
Connector Name	WIRE TO WIRE
Connector Color	WHITE

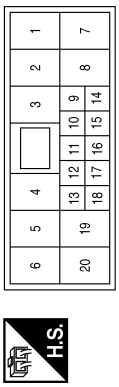

Terminal No.	Color of Wire	Signal Name
10	SB	–

Connector No.	D505
Connector Name	WIRE TO WIRE
Connector Color	WHITE

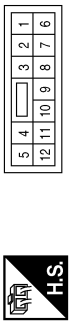

Terminal No.	Color of Wire	Signal Name
10	SB	–

Connector No.	D555
Connector Name	WIRE TO WIRE
Connector Color	WHITE

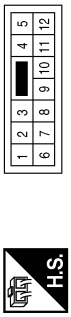

Terminal No.	Color of Wire	Signal Name
10	SB	–

AALIA2478GB

Connector No.	D562
Connector Name	BACK DOOR LOCK ASSEMBLY
Connector Color	WHITE

Terminal No.	Color of Wire	Signal Name
3	SB	–
4	B	–

AALIA2479GB

EXTERIOR LAMP BATTERY SAVER SYSTEM

Wiring Diagram

INFOID:0000000010634653

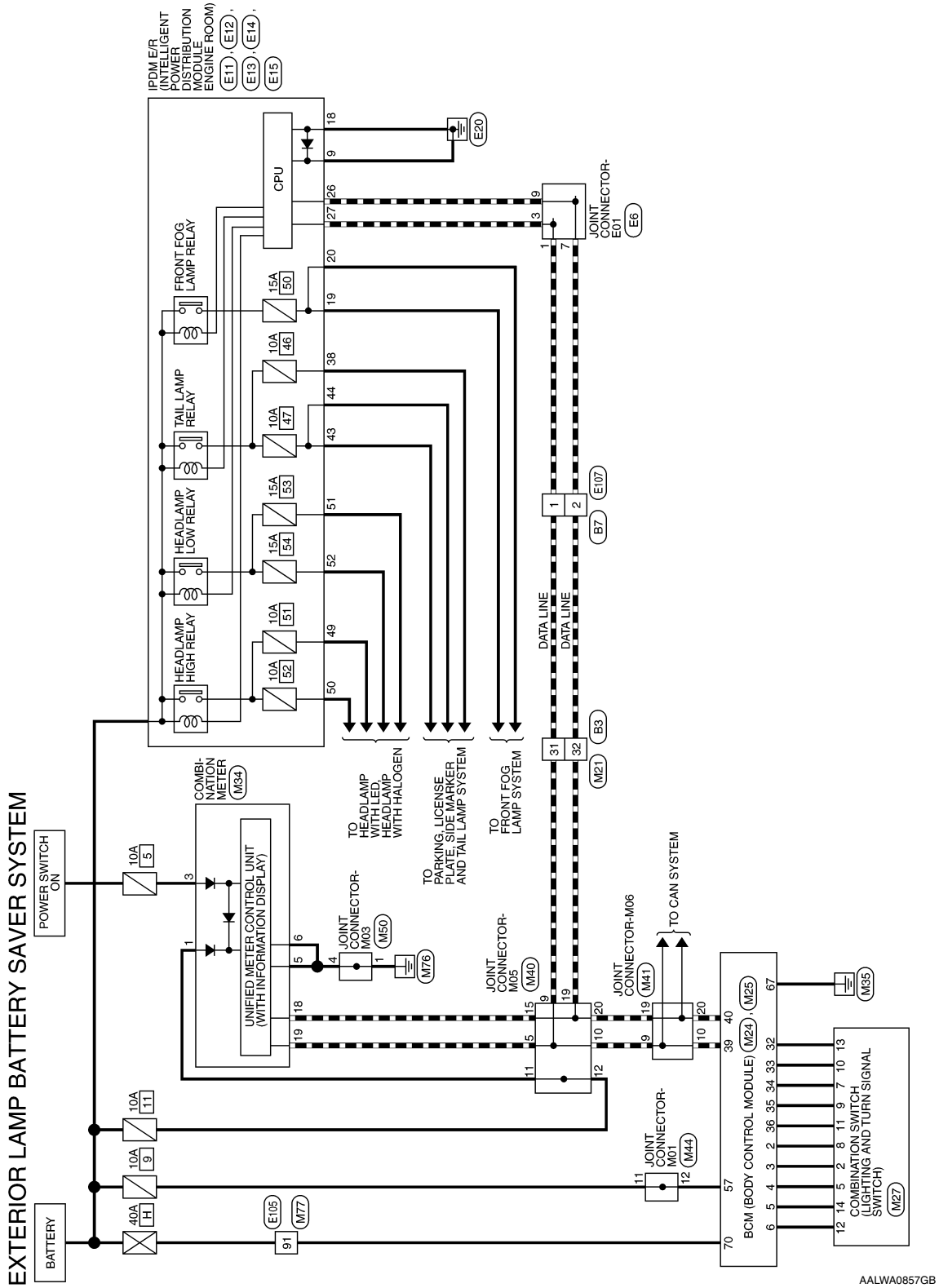

EXTERIOR LAMP BATTERY SAVER SYSTEM CONNECTORS

Connector No.	M21
Connector Name	WIRE TO WIRE
Connector Color	WHITE

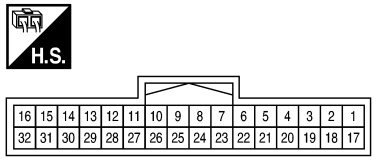

Terminal No.	Color of Wire	Signal Name
31	L	–
32	P	–

Connector No.	M24
Connector Name	BCM (BODY CONTROL MODULE)
Connector Color	BLACK

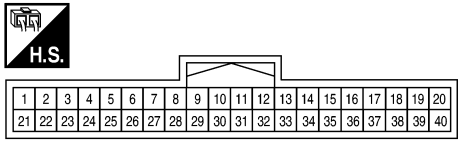

Terminal No.	Color of Wire	Signal Name
2	L	COMBINATION SW INPUT 5
3	GR	COMBINATION SW INPUT 4
4	BR	COMBINATION SW INPUT 3
5	G	COMBINATION SW INPUT 2
6	V	COMBINATION SW INPUT 1
32	GR	COMBINATION SW OUTPUT 5
33	Y	COMBINATION SW OUTPUT 4
34	W	COMBINATION SW OUTPUT 3
35	BG	COMBINATION SW OUTPUT 2
36	P	COMBINATION SW OUTPUT 1
39	L	CAN-H
40	P	CAN-L

Connector No.	M25
Connector Name	BCM (BODY CONTROL MODULE)
Connector Color	WHITE

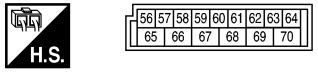

Terminal No.	Color of Wire	Signal Name
57	P	BATTERY (FUSE)
67	B	GND
70	Y	BATTERY (F/L)

Connector No.	M27
Connector Name	COMBINATION SWITCH
Connector Color	WHITE

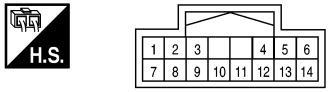

Terminal No.	Color of Wire	Signal Name
2	GR	–
5	BR	–
7	W	–

Terminal No.	Color of Wire	Signal Name
8	L	–
9	BG	–
10	Y	–
11	P	–
12	V	–
13	GR	–
14	G	–

AALIA2490GB

Connector No.	M34
Connector Name	COMBINATION METER
Connector Color	WHITE

H.S.

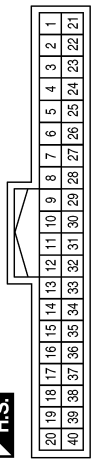

Terminal No.	Color of Wire	Signal Name
1	LG	BAT
3	GR	IGN
5	B	GND
6	B	GND
18	P	CAN-L
19	L	CAN-H

Connector No.	M40
Connector Name	JOINT CONNECTOR-M05
Connector Color	BLUE

H.S.

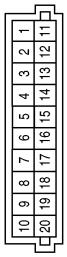

Terminal No.	Color of Wire	Signal Name
5	L	–
9	L	–
10	L	–
11	LG	–
12	LG	–
15	P	–
19	P	–
20	P	–

Connector No.	M41
Connector Name	JOINT CONNECTOR-M06
Connector Color	BLUE

H.S.

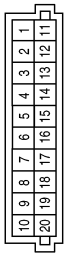

Terminal No.	Color of Wire	Signal Name
9	L	–
10	L	–
19	P	–
20	P	–

Connector No.	M44
Connector Name	JOINT CONNECTOR-M01
Connector Color	GRAY

H.S.

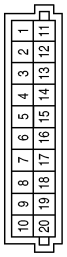

Terminal No.	Color of Wire	Signal Name
11	P	–
12	P	–

Connector No.	M50
Connector Name	JOINT CONNECTOR-M03
Connector Color	PINK

H.S.

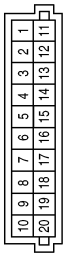

Terminal No.	Color of Wire	Signal Name
1	B	–
4	B	–

Connector No.	M77
Connector Name	WIRE TO WIRE
Connector Color	WHITE

H.S.

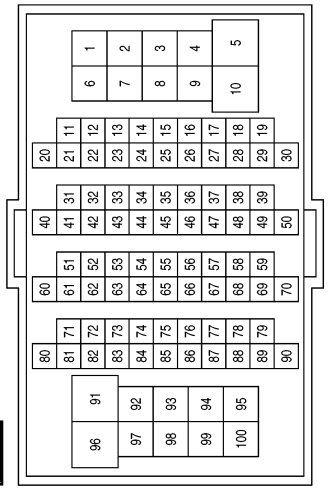

Terminal No.	Color of Wire	Signal Name
91	Y	–

AALIA2491GB

Connector No.	E6
Connector Name	JOINT CONNECTOR-E01
Connector Color	BLUE

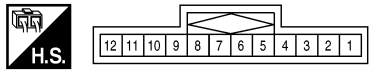

Terminal No.	Color of Wire	Signal Name
1	L	–
3	L	–
7	P	–
9	P	–

Connector No.	E11
Connector Name	IPDM E/R (INTELLIGENT POWER DISTRIBUTION MODULE ENGINE ROOM)
Connector Color	BLACK

Terminal No.	Color of Wire	Signal Name
9	B	POWER GROUND

Connector No.	E12
Connector Name	IPDM E/R (INTELLIGENT POWER DISTRIBUTION MODULE ENGINE ROOM)
Connector Color	BROWN

Terminal No.	Color of Wire	Signal Name
18	B/W	S GND
19	W	FR FOG RH
20	V	FR FOG LH

Connector No.	E13
Connector Name	IPDM E/R (INTELLIGENT POWER DISTRIBUTION MODULE ENGINE ROOM)
Connector Color	WHITE

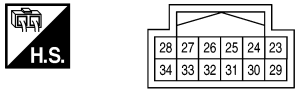

Terminal No.	Color of Wire	Signal Name
26	P	CAN-L
27	L	CAN-H

Connector No.	E14
Connector Name	IPDM E/R (INTELLIGENT POWER DISTRIBUTION MODULE ENGINE ROOM)
Connector Color	BROWN

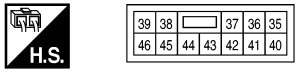

Terminal No.	Color of Wire	Signal Name
38	LG	TAIL 1 (WITHOUT SOLAR CELL)
38	R	TAIL 1 (WITH SOLAR CELL)
43	O	CLEARANCE/L LH
44	B	TAIL 2

Connector No.	E15
Connector Name	IPDM E/R (INTELLIGENT POWER DISTRIBUTION MODULE ENGINE ROOM)
Connector Color	WHITE

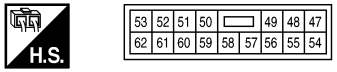

Terminal No.	Color of Wire	Signal Name
49	Y	H/LAMP HI RH
50	G	H/LAMP HI LH
51	L	H/LAMP LO LH
52	P	H/LAMP LO RH

AALIA2492GB

Connector No.	E105
Connector Name	WIRE TO WIRE
Connector Color	WHITE

H.S.

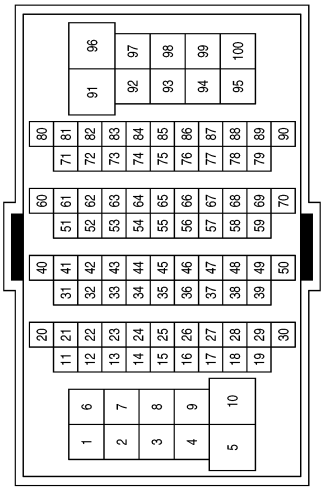

Terminal No.	Color of Wire	Signal Name
91	Y	–

Connector No.	E107
Connector Name	WIRE TO WIRE
Connector Color	WHITE

H.S.

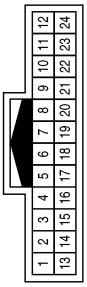

Terminal No.	Color of Wire	Signal Name
1	L	–
2	P	–

Connector No.	B3
Connector Name	WIRE TO WIRE
Connector Color	WHITE

H.S.

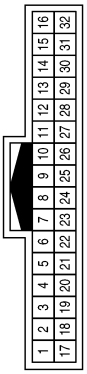

Terminal No.	Color of Wire	Signal Name
31	L	–
32	P	–

Connector No.	B7
Connector Name	WIRE TO WIRE
Connector Color	WHITE

H.S.

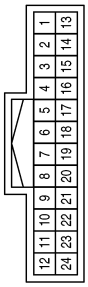

Terminal No.	Color of Wire	Signal Name
1	L	–
2	P	–

AALIA2493GB

FRONT FOG LAMP SYSTEM

Wiring Diagram

INFOID:0000000010634654

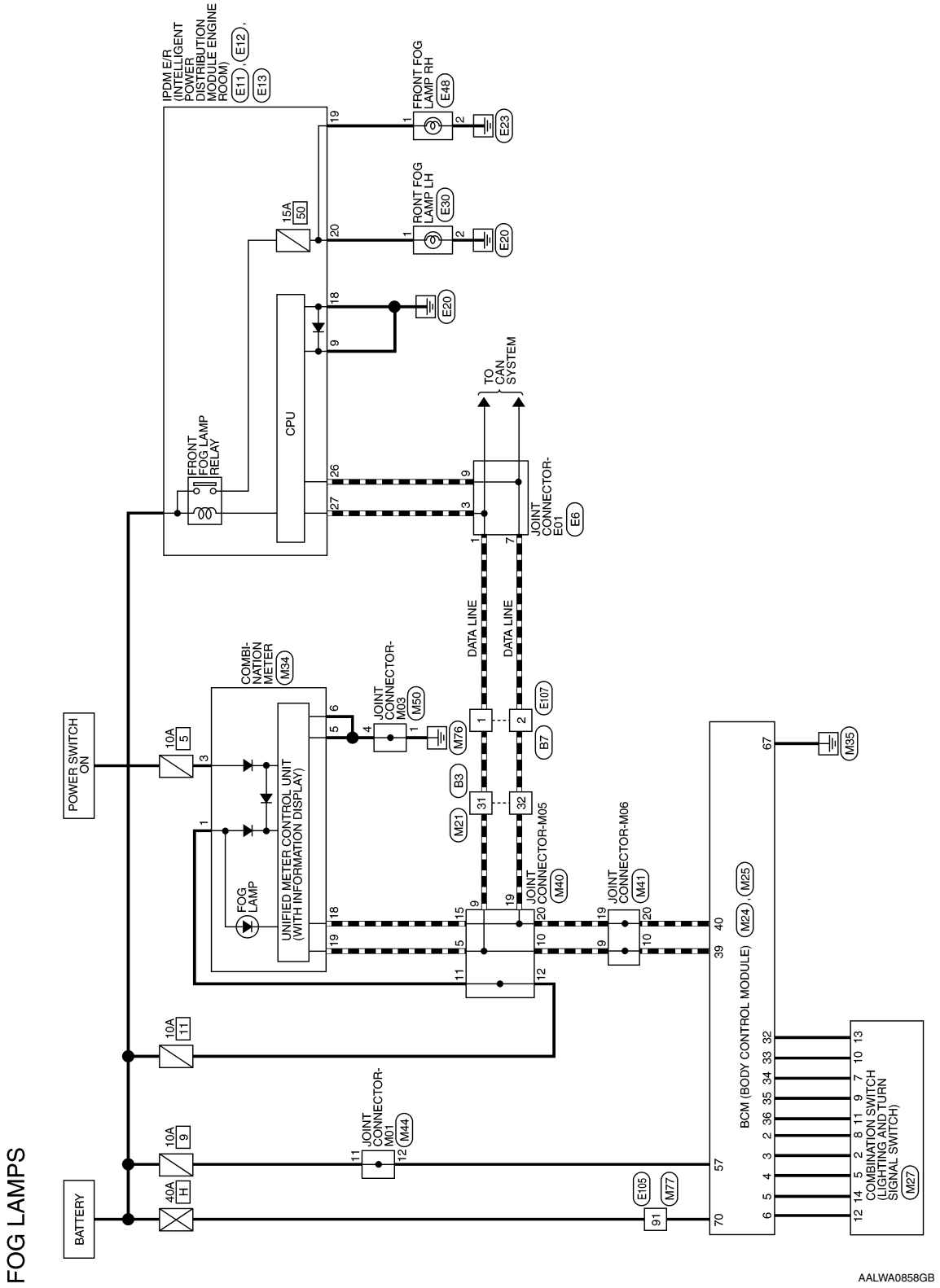

FOG LAMPS CONNECTORS

Connector No.	M21
Connector Name	WIRE TO WIRE
Connector Color	WHITE

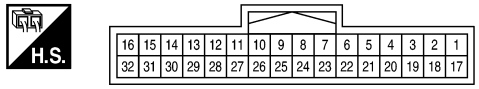

Terminal No.	Color of Wire	Signal Name
31	L	–
32	P	–

Connector No.	M24
Connector Name	BCM (BODY CONTROL MODULE)
Connector Color	BLACK

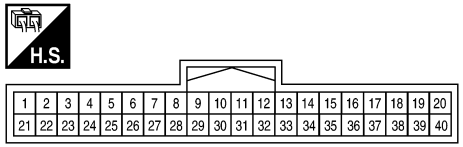

Terminal No.	Color of Wire	Signal Name
2	L	COMBINATION SW INPUT 5
3	GR	COMBINATION SW INPUT 4
4	BR	COMBINATION SW INPUT 3
5	G	COMBINATION SW INPUT 2
6	V	COMBINATION SW INPUT 1

Terminal No.	Color of Wire	Signal Name
32	GR	COMBINATION SW OUTPUT 5
33	Y	COMBINATION SW OUTPUT 4
34	W	COMBINATION SW OUTPUT 3
35	BG	COMBINATION SW OUTPUT 2
36	P	COMBINATION SW OUTPUT 1
39	L	CAN-H
40	P	CAN-L

Connector No.	M25
Connector Name	BCM (BODY CONTROL MODULE)
Connector Color	WHITE

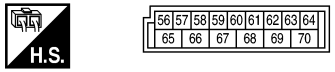

Terminal No.	Color of Wire	Signal Name
57	P	BATTERY (FUSE)
67	B	GND
70	Y	BATTERY (F/L)

Connector No.	M27
Connector Name	COMBINATION SWITCH
Connector Color	WHITE

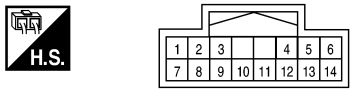

Terminal No.	Color of Wire	Signal Name
2	GR	–
5	BR	–
7	W	–
8	L	–

Terminal No.	Color of Wire	Signal Name
9	BG	–
10	Y	–
11	P	–
12	V	–
13	GR	–
14	G	–

AALIA2494GB

Connector No.	M34
Connector Name	COMBINATION METER
Connector Color	WHITE

H.S.

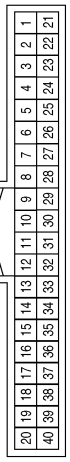

Terminal No.	Color of Wire	Signal Name
1	LG	BAT
3	GR	IGN
5	B	GND
6	B	GND
18	P	CAN-L
19	L	CAN-H

Connector No.	M40
Connector Name	JOINT CONNECTOR-M05
Connector Color	BLUE

H.S.

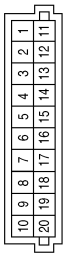

Terminal No.	Color of Wire	Signal Name
5	L	–
9	L	–
10	L	–
11	LG	–
12	LG	–
15	P	–
19	P	–
20	P	–

Connector No.	M41
Connector Name	JOINT CONNECTOR-M06
Connector Color	BLUE

H.S.

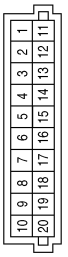

Terminal No.	Color of Wire	Signal Name
9	L	–
10	L	–
19	P	–
20	P	–

Connector No.	M44
Connector Name	JOINT CONNECTOR-M01
Connector Color	GRAY

H.S.

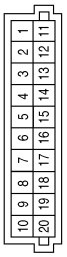

Terminal No.	Color of Wire	Signal Name
11	P	–
12	P	–

Connector No.	M50
Connector Name	JOINT CONNECTOR-M03
Connector Color	PINK

H.S.

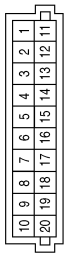

Terminal No.	Color of Wire	Signal Name
1	B	–
4	B	–

AALIA2495GB

Connector No.	M77
Connector Name	WIRE TO WIRE
Connector Color	WHITE

H.S.

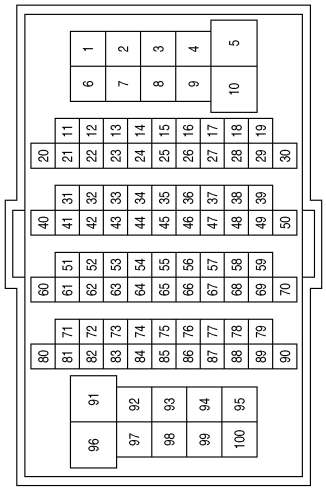

Terminal No.	Color of Wire	Signal Name
91	Y	–

Connector No.	E6
Connector Name	JOINT CONNECTOR-E01
Connector Color	BLUE

H.S.

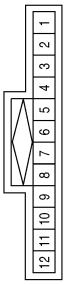

Terminal No.	Color of Wire	Signal Name
1	L	–
3	L	–
7	P	–
9	P	–

Connector No.	E11
Connector Name	IPDM E/R (INTELLIGENT POWER DISTRIBUTION MODULE ENGINE ROOM)
Connector Color	BLACK

H.S.

Terminal No.	Color of Wire	Signal Name
9	B	POWER GROUND

Connector No.	E12
Connector Name	IPDM E/R (INTELLIGENT POWER DISTRIBUTION MODULE ENGINE ROOM)
Connector Color	BROWN

H.S.

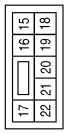

Terminal No.	Color of Wire	Signal Name
18	B/W	S GND
19	W	FR FOG RH
20	V	FR FOG LH

Connector No.	E13
Connector Name	IPDM E/R (INTELLIGENT POWER DISTRIBUTION MODULE ENGINE ROOM)
Connector Color	WHITE

H.S.

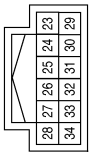

Terminal No.	Color of Wire	Signal Name
26	P	CAN-L
27	L	CAN-H

AALIA2496GB

Connector No.	E30
Connector Name	FRONT FOG LAMP LH
Connector Color	BLACK

H.S.

Terminal No.	Color of Wire	Signal Name
1	V	–
2	B/W	–

Connector No.	E48
Connector Name	FRONT FOG LAMP RH
Connector Color	BLACK

H.S.

Terminal No.	Color of Wire	Signal Name
1	W	–
2	B/Y	–

Connector No.	E105
Connector Name	WIRE TO WIRE
Connector Color	WHITE

H.S.

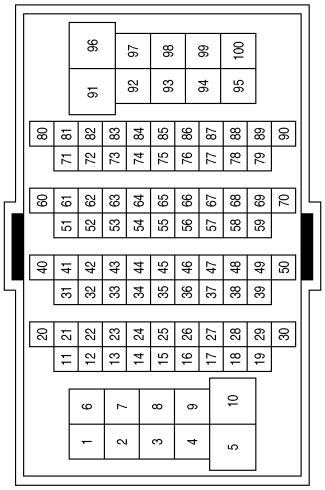

Terminal No.	Color of Wire	Signal Name
91	T	–

Connector No.	E107
Connector Name	WIRE TO WIRE
Connector Color	WHITE

H.S.

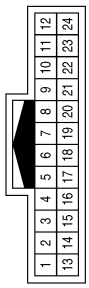

Terminal No.	Color of Wire	Signal Name
1	L	–
2	P	–

Connector No.	B3
Connector Name	WIRE TO WIRE
Connector Color	WHITE

H.S.

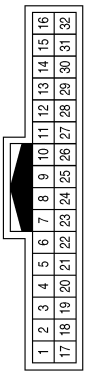

Terminal No.	Color of Wire	Signal Name
31	L	–
32	P	–

Connector No.	B7
Connector Name	WIRE TO WIRE
Connector Color	WHITE

H.S.

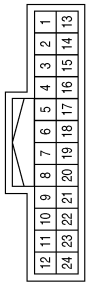

Terminal No.	Color of Wire	Signal Name
1	L	–
2	P	–

AALIA2497GB

TURN SIGNAL AND HAZARD WARNING LAMP SYSTEM

Wiring Diagram

INFOID:0000000010634655

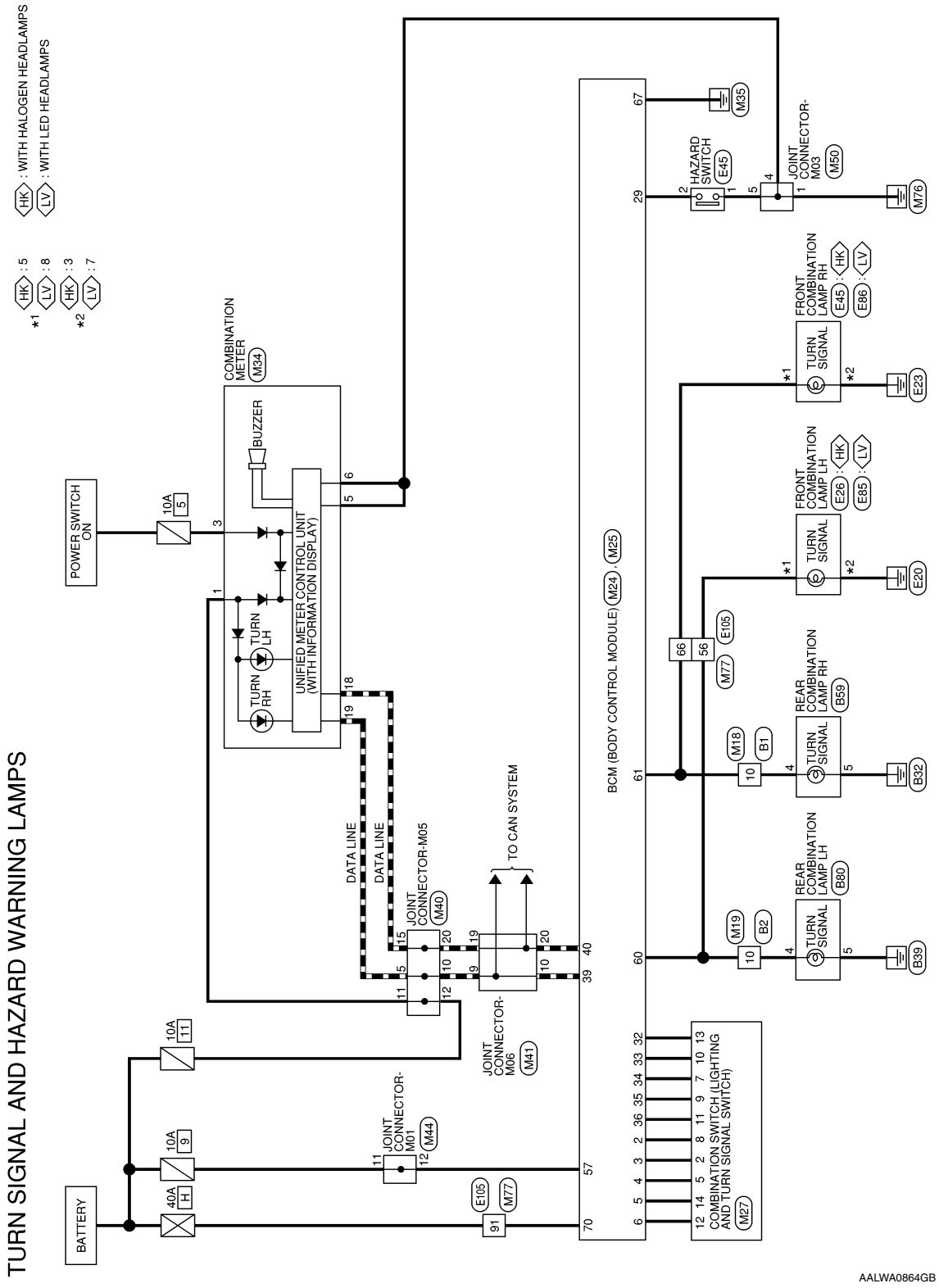

TURN SIGNAL AND HAZARD WARNING LAMPS CONNECTORS

Connector No.	M18
Connector Name	WIRE TO WIRE
Connector Color	WHITE

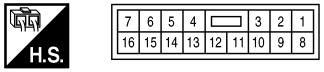

Terminal No.	Color of Wire	Signal Name
10	R	–

Connector No.	M19
Connector Name	WIRE TO WIRE
Connector Color	WHITE

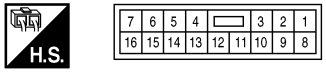

Terminal No.	Color of Wire	Signal Name
10	V	–

Connector No.	M24
Connector Name	BCM (BODY CONTROL MODULE)
Connector Color	BLACK

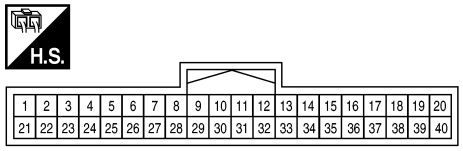

Terminal No.	Color of Wire	Signal Name
2	L	COMBINATION SW INPUT 5
3	GR	COMBINATION SW INPUT 4
4	BR	COMBINATION SW INPUT 3
5	G	COMBINATION SW INPUT 2
6	V	COMBINATION SW INPUT 1
29	G	HAZARD SW
32	GR	COMBINATION SW OUTPUT 5
33	Y	COMBINATION SW OUTPUT 4
34	W	COMBINATION SW OUTPUT 3
35	BG	COMBINATION SW OUTPUT 2
36	P	COMBINATION SW OUTPUT 1
39	L	CAN-H
40	P	CAN-L

Connector No.	M25
Connector Name	BCM (BODY CONTROL MODULE)
Connector Color	WHITE

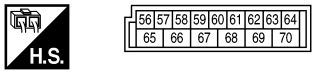

Terminal No.	Color of Wire	Signal Name
57	P	BATTERY (FUSE)
60	V	FLASHER OUTPUT (LEFT)
61	R	FLASHER OUTPUT (RIGHT)
67	B	GND
70	Y	BATTERY (F/L)

AALIA2516GB

Connector No.	M27
Connector Name	COMBINATION SWITCH
Connector Color	WHITE

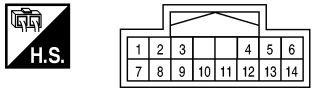

Terminal No.	Color of Wire	Signal Name
2	GR	–
5	BR	–
7	W	–
8	L	–
9	BG	–
10	Y	–
11	P	–
12	V	–
13	GR	–
14	G	–

Connector No.	M34
Connector Name	COMBINATION METER
Connector Color	WHITE

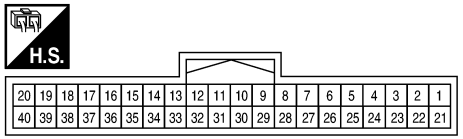

Terminal No.	Color of Wire	Signal Name
1	LG	BAT
3	GR	IGN
5	B	GND
6	B	GND
18	P	CAN-L
19	L	CAN-H

Connector No.	M40
Connector Name	JOINT CONNECTOR-M05
Connector Color	BLUE

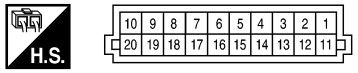

Terminal No.	Color of Wire	Signal Name
5	L	–
9	L	–
10	L	–
11	LG	–
12	LG	–
15	P	–
19	P	–
20	P	–

Connector No.	M41
Connector Name	JOINT CONNECTOR-M06
Connector Color	BLUE

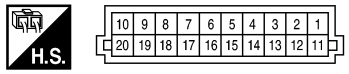

Terminal No.	Color of Wire	Signal Name
9	L	–
10	L	–
19	P	–
20	P	–

Connector No.	M44
Connector Name	JOINT CONNECTOR-M01
Connector Color	GRAY

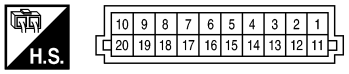

Terminal No.	Color of Wire	Signal Name
11	P	–
12	P	–

Connector No.	M45
Connector Name	HAZARD SWITCH
Connector Color	WHITE

Terminal No.	Color of Wire	Signal Name
1	B	–
2	G	–

AALIA2517GB

Connector No.	M50
Connector Name	JOINT CONNECTOR-M03
Connector Color	PINK

H.S.

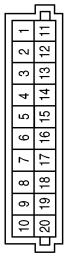

Terminal No.	Color of Wire	Signal Name
1	B	–
4	B	–
5	B	–

Connector No.	M77
Connector Name	WIRE TO WIRE
Connector Color	WHITE

H.S.

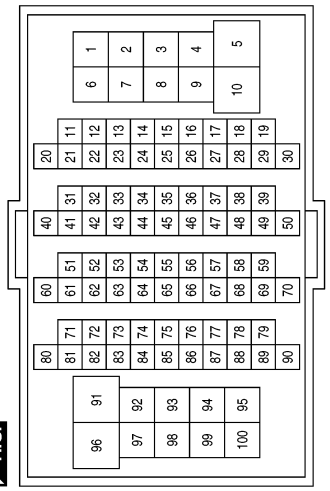

Terminal No.	Color of Wire	Signal Name
56	V	–
66	LG	–
91	Y	–

Connector No.	E26
Connector Name	FRONT COMBINATION LAMP LH (WITH HALOGEN HEADLAMPS)
Connector Color	GRAY

H.S.

Terminal No.	Color of Wire	Signal Name
3	B/W	–
5	Y	–

Connector No.	E45
Connector Name	FRONT COMBINATION LAMP RH (WITH HALOGEN HEADLAMPS)
Connector Color	GRAY

H.S.

Terminal No.	Color of Wire	Signal Name
3	B/Y	–
5	G	–

Connector No.	E85
Connector Name	FRONT COMBINATION LAMP LH (WITH LED HEADLAMPS)
Connector Color	BLACK

H.S.

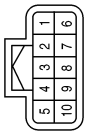

Terminal No.	Color of Wire	Signal Name
7	B/W	–
8	Y	–

Connector No.	E86
Connector Name	FRONT COMBINATION LAMP RH (WITH LED HEADLAMPS)
Connector Color	BLACK

H.S.

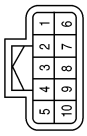

Terminal No.	Color of Wire	Signal Name
7	B/Y	–
8	G	–

AALIA2518GB

Connector No.	M105
Connector Name	WIRE TO WIRE
Connector Color	WHITE

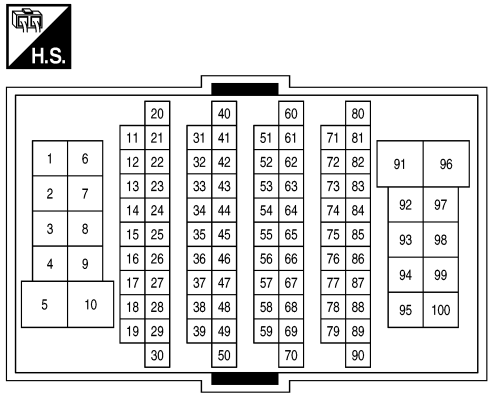

Terminal No.	Color of Wire	Signal Name
56	Y	–
66	G	–
91	Y	–

Connector No.	B1
Connector Name	WIRE TO WIRE
Connector Color	WHITE

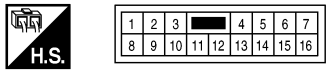

Terminal No.	Color of Wire	Signal Name
10	W	–

Connector No.	B2
Connector Name	WIRE TO WIRE
Connector Color	WHITE

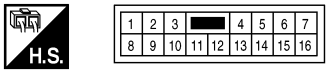

Terminal No.	Color of Wire	Signal Name
10	SB	–

Connector No.	B59
Connector Name	REAR COMBINATION LAMP RH
Connector Color	WHITE

Terminal No.	Color of Wire	Signal Name
4	W	–
5	B	–

Connector No.	B80
Connector Name	REAR COMBINATION LAMP LH
Connector Color	WHITE

Terminal No.	Color of Wire	Signal Name
4	SB	–
5	B	–

AALIA2519GB

PARKING, LICENSE PLATE AND TAIL LAMPS SYSTEM

Wiring Diagram

INFOID:0000000010634656

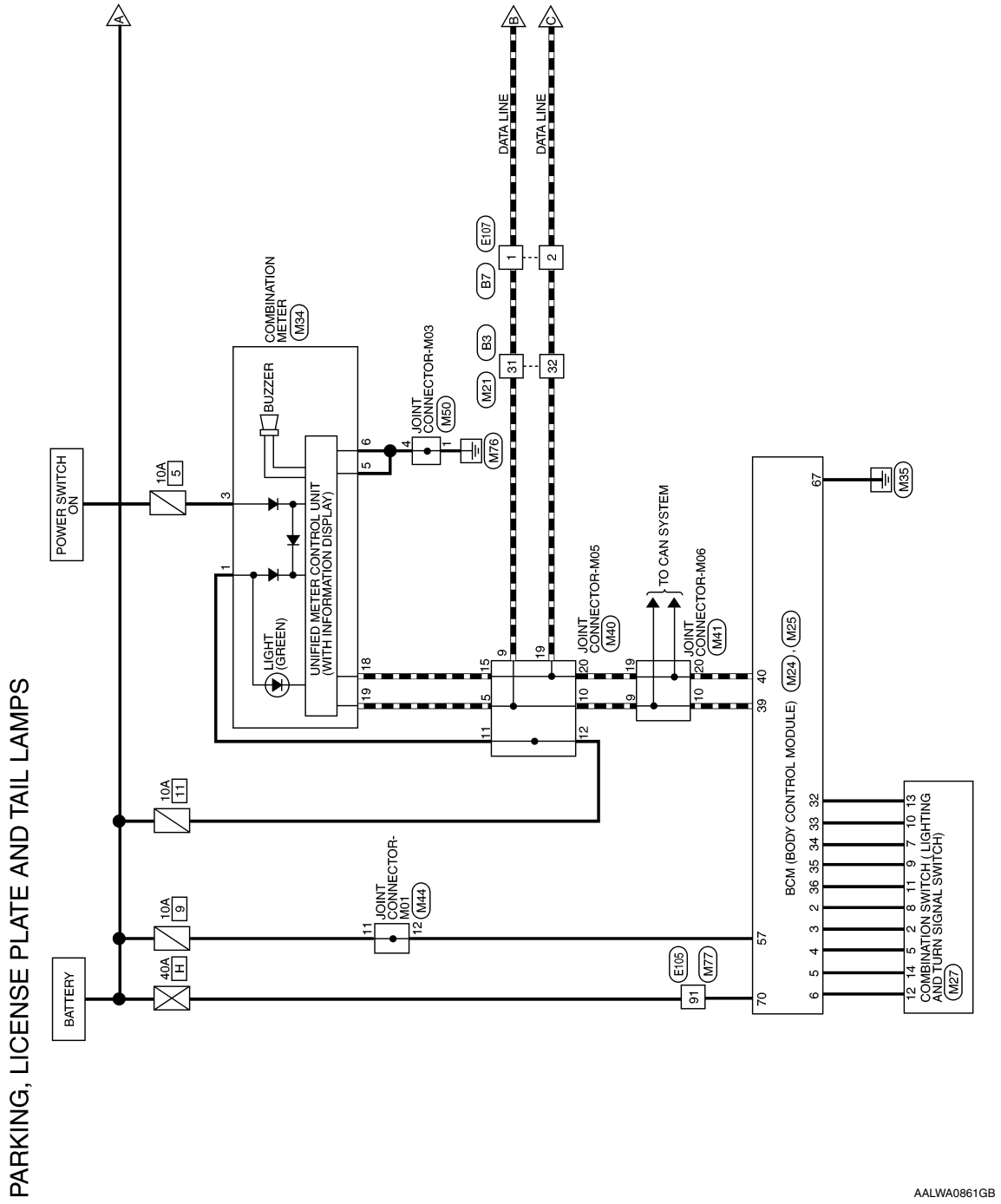

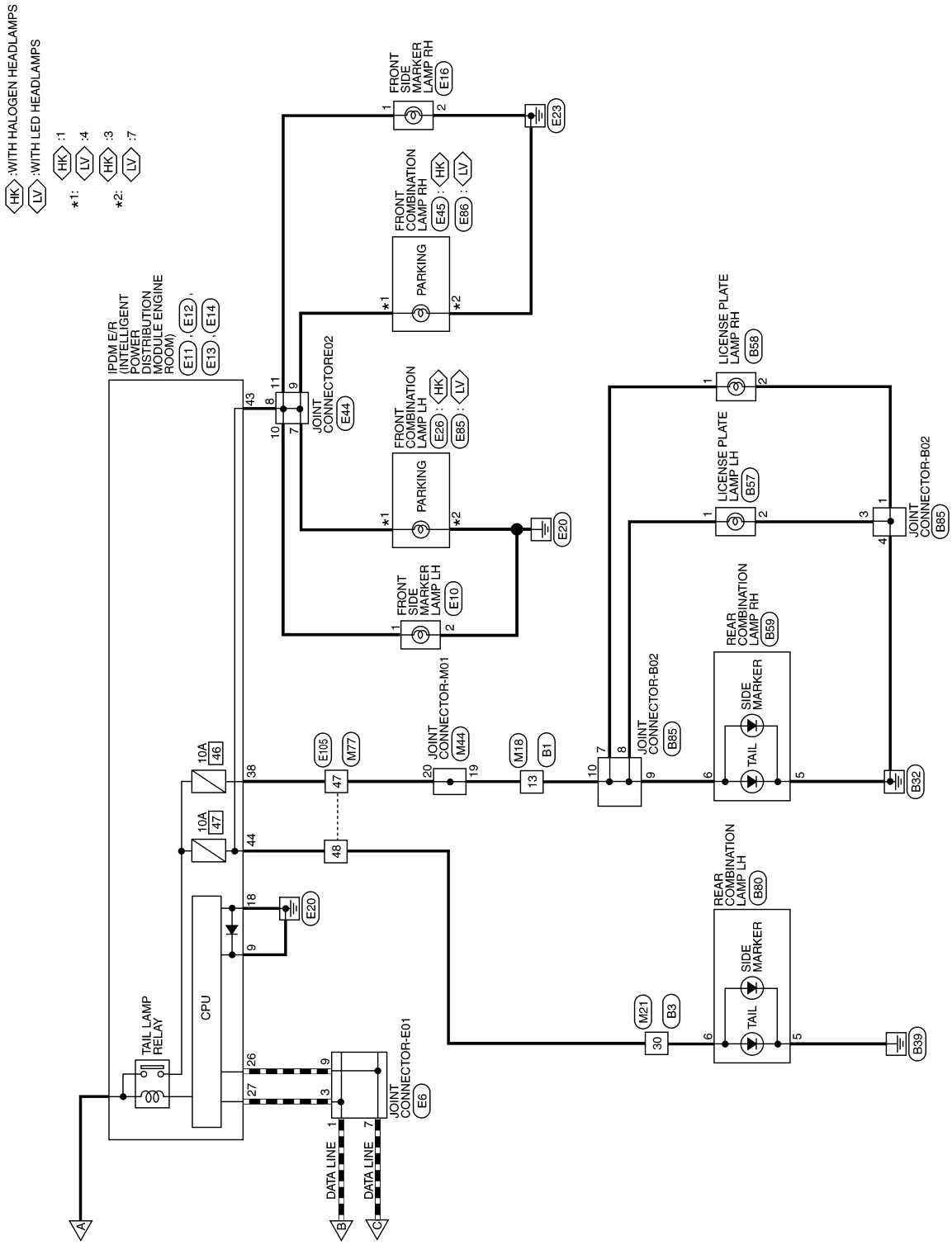
HK :WITH HALOGEN HEADLAMPS
LV :WITH LED HEADLAMPS
*1: HK :1 LV :4
*2: HK :3 LV :7
IPDM E/R (INTELLIGENT POWER DISTRIBUTION MODULE ENGINE ROOM)
E11, E12, E13, E14
TAIL LAMP RELAY
CPU
10A 46
10A 47
JOINT CONNECTOR-E01 E6
DATA LINE
JOINT CONNECTOR-M01 M44
JOINT CONNECTOR-B02 B85
JOINT CONNECTOR-B02 B85
JOINT CONNECTOR-E02 E44
FRONT SIDE MARKER LAMP LH E10
FRONT SIDE MARKER LAMP RH E16
FRONT COMBINATION LAMP LH E26 E85
FRONT COMBINATION LAMP RH E45 E86
PARKING
LICENSE PLATE LAMP LH B57
LICENSE PLATE LAMP RH B58
REAR COMBINATION LAMP LH B80
REAR COMBINATION LAMP RH B59
SIDE MARKER
TAIL
E20
E23
B32
B39
AALWA0862GB

PARKING, LICENSE PLATE AND TAIL LAMPS CONNECTORS

Connector No.	M18
Connector Name	WIRE TO WIRE
Connector Color	WHITE

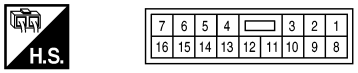

Terminal No.	Color of Wire	Signal Name
13	W	–

Connector No.	M21
Connector Name	WIRE TO WIRE
Connector Color	WHITE

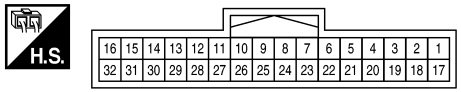

Terminal No.	Color of Wire	Signal Name
30	L	–
31	L	–
32	P	–

Connector No.	M24
Connector Name	BCM (BODY CONTROL MODULE)
Connector Color	BLACK

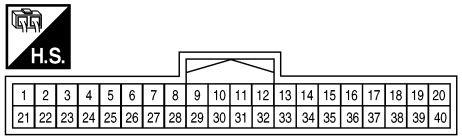

Terminal No.	Color of Wire	Signal Name
2	L	COMBINATION SW INPUT 5
3	GR	COMBINATION SW INPUT 4
4	BR	COMBINATION SW INPUT 3
5	G	COMBINATION SW INPUT 2
6	V	COMBINATION SW INPUT 1
32	GR	COMBINATION SW OUTPUT 5
33	Y	COMBINATION SW OUTPUT 4
34	W	COMBINATION SW OUTPUT 3
35	BG	COMBINATION SW OUTPUT 2
36	P	COMBINATION SW OUTPUT 1
39	L	CAN-H
40	P	CAN-L

Connector No.	M25
Connector Name	BCM (BODY CONTROL MODULE)
Connector Color	WHITE

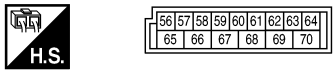

Terminal No.	Color of Wire	Signal Name
57	P	BATTERY (FUSE)
67	B	GND
70	Y	BATTERY (F/L)

AALIA2506GB

Connector No.	M27
Connector Name	COMBINATION SWITCH
Connector Color	WHITE

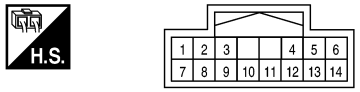

Terminal No.	Color of Wire	Signal Name
2	GR	–
5	BR	–
7	W	–
8	L	–
9	BG	–
10	Y	–
11	P	–
12	V	–
13	GR	–
14	G	–

Connector No.	M34
Connector Name	COMBINATION METER
Connector Color	WHITE

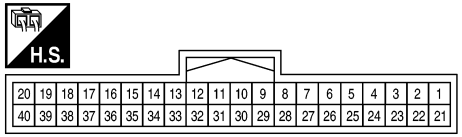

Terminal No.	Color of Wire	Signal Name
1	LG	BAT
3	GR	IGN
5	B	GND
6	B	GND
18	P	CAN-L
19	L	CAN-H

Connector No.	M40
Connector Name	JOINT CONNECTOR-M05
Connector Color	BLUE

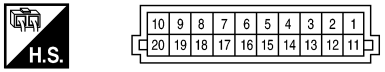

Terminal No.	Color of Wire	Signal Name
5	L	–
9	L	–
10	L	–
11	LG	–
12	LG	–
15	P	–
19	P	–
20	P	–

Connector No.	M41
Connector Name	JOINT CONNECTOR-M06
Connector Color	BLUE

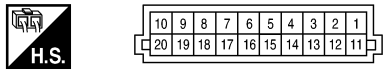

Terminal No.	Color of Wire	Signal Name
9	L	–
10	L	–
19	P	–
20	P	–

Connector No.	M44
Connector Name	JOINT CONNECTOR-M01
Connector Color	GRAY

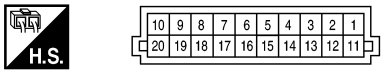

Terminal No.	Color of Wire	Signal Name
11	P	–
12	P	–
19	W	–
20	W	–

Connector No.	M50
Connector Name	JOINT CONNECTOR-M03
Connector Color	PINK

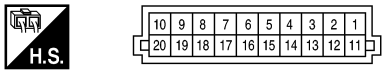

Terminal No.	Color of Wire	Signal Name
1	B	–
4	B	–

AALIA2507GB

Connector No.	M77
Connector Name	WIRE TO WIRE
Connector Color	WHITE

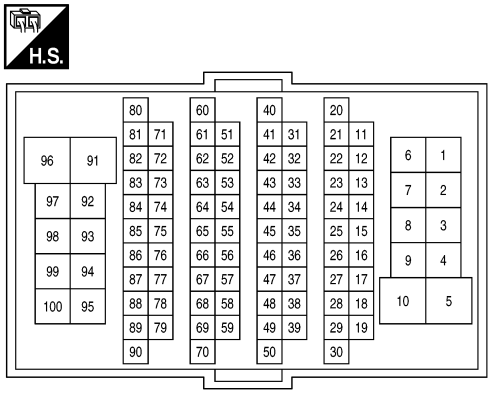

Terminal No.	Color of Wire	Signal Name
47	W	–
48	L	–
91	Y	–

Connector No.	E6
Connector Name	JOINT CONNECTOR-E01
Connector Color	BLUE

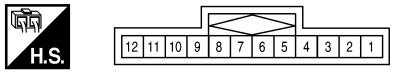

Terminal No.	Color of Wire	Signal Name
1	L	–
3	L	–
7	P	–
9	P	–

Connector No.	E10
Connector Name	FRONT SIDE MARKER LAMP LH
Connector Color	GRAY

Terminal No.	Color of Wire	Signal Name
1	O	–
2	B/W	–

Connector No.	E11
Connector Name	IPDM E/R (INTELLIGENT POWER DISTRIBUTION MODULE ENGINE ROOM)
Connector Color	BLACK

Terminal No.	Color of Wire	Signal Name
9	B	POWER GROUND

Connector No.	E12
Connector Name	IPDM E/R (INTELLIGENT POWER DISTRIBUTION MODULE ENGINE ROOM)
Connector Color	BROWN

Terminal No.	Color of Wire	Signal Name
18	B/W	S GND

Connector No.	E13
Connector Name	IPDM E/R (INTELLIGENT POWER DISTRIBUTION MODULE ENGINE ROOM)
Connector Color	WHITE

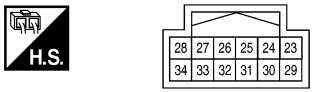

Terminal No.	Color of Wire	Signal Name
26	P	CAN-L
27	L	CAN-H

AALIA2508GB

Connector No.	E14
Connector Name	IPDM E/R (INTELLIGENT POWER DISTRIBUTION MODULE ENGINE ROOM)
Connector Color	BROWN

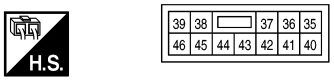

Terminal No.	Color of Wire	Signal Name
38	LG	TAIL 1 (WITHOUT SOLAR CELL)
38	R	TAIL 1 (WITH SOLAR CELL)
43	O	CLEARANCE/L LH
44	B	TAIL 2

Connector No.	E16
Connector Name	FRONT SIDE MARKER LAMP RH
Connector Color	GRAY

Terminal No.	Color of Wire	Signal Name
1	O	–
2	B/R	–

Connector No.	E26
Connector Name	FRONT COMBINATION LAMP LH (WITH HALOGEN HEADLAMPS)
Connector Color	GRAY

Terminal No.	Color of Wire	Signal Name
1	O	–
3	B/W	–

Connector No.	E44
Connector Name	JOINT CONNECTOR-E02
Connector Color	BLUE

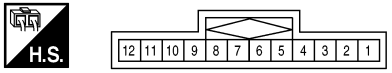

Terminal No.	Color of Wire	Signal Name
7	O	–
8	O	–
9	O	–
10	O	–
11	O	–

Connector No.	E45
Connector Name	FRONT COMBINATION LAMP RH (WITH HALOGEN HEADLAMPS)
Connector Color	GRAY

Terminal No.	Color of Wire	Signal Name
1	O	–
3	B/Y	–

Connector No.	E85
Connector Name	FRONT COMBINATION LAMP LH (WITH LED HEADLAMPS)
Connector Color	BLACK

Terminal No.	Color of Wire	Signal Name
4	O	–
7	B/W	–

AALIA2509GB

Connector No.	E86
Connector Name	FRONT COMBINATION LAMP RH (WITH LED HEADLAMPS)
Connector Color	BLACK

H.S.

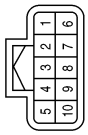

Terminal No.	Color of Wire	Signal Name
4	O	–
7	B/Y	–

Connector No.	E105
Connector Name	WIRE TO WIRE
Connector Color	WHITE

H.S.

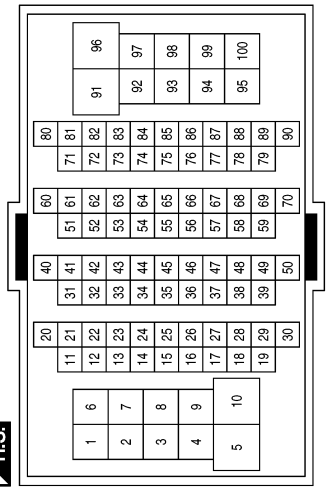

Terminal No.	Color of Wire	Signal Name
47	LG	– (WITHOUT SOLAR CELL)
47	R	– (WITH SOLAR CELL)
48	B	–
91	Y	–

Connector No.	E107
Connector Name	WIRE TO WIRE
Connector Color	WHITE

H.S.

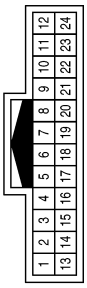

Terminal No.	Color of Wire	Signal Name
1	L	–
2	P	–

Connector No.	B1
Connector Name	WIRE TO WIRE
Connector Color	WHITE

H.S.

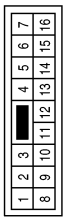

Terminal No.	Color of Wire	Signal Name
13	V	–

Connector No.	B3
Connector Name	WIRE TO WIRE
Connector Color	WHITE

H.S.

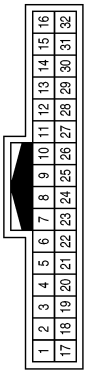

Terminal No.	Color of Wire	Signal Name
30	GR	–
31	L	–
32	P	–

Connector No.	B7
Connector Name	WIRE TO WIRE
Connector Color	WHITE

H.S.

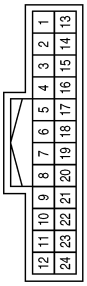

Terminal No.	Color of Wire	Signal Name
1	L	–
2	P	–

AALIA2510GB

Connector No.	B57
Connector Name	LICENSE PLATE LAMP LH
Connector Color	BROWN

H.S.

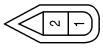

Terminal No.	Color of Wire	Signal Name
1	W	–
2	B	–

Connector No.	B58
Connector Name	LICENSE PLATE LAMP RH
Connector Color	BROWN

H.S.

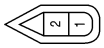

Terminal No.	Color of Wire	Signal Name
1	L	–
2	B	–

Connector No.	B59
Connector Name	REAR COMBINATION LAMP RH
Connector Color	WHITE

H.S.

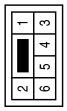

Terminal No.	Color of Wire	Signal Name
5	B	–
6	V	–

Connector No.	B80
Connector Name	REAR COMBINATION LAMP LH
Connector Color	WHITE

H.S.

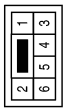

Terminal No.	Color of Wire	Signal Name
5	B	–
6	GR	–

Connector No.	B85
Connector Name	JOINT CONNECTOR-B02
Connector Color	BLACK

H.S.

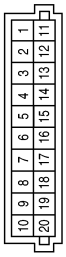

Terminal No.	Color of Wire	Signal Name
1	B	–
3	B	–
4	B	–
7	L	–
8	W	–
9	V	–
10	V	–

AALIA2511GB

STOP LAMP

Wiring Diagram

INFOID:0000000010634657

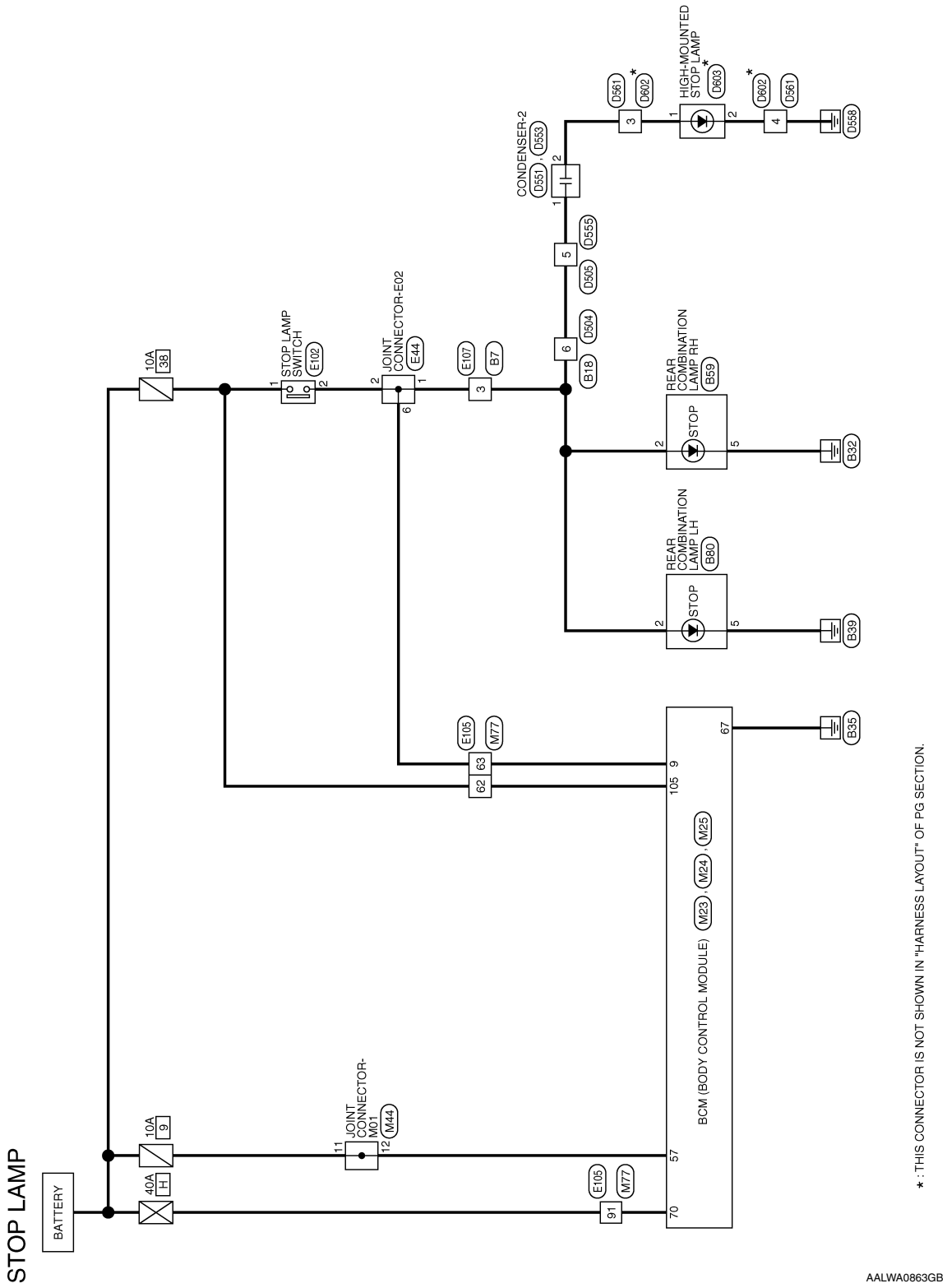

STOP LAMP CONNECTORS

Connector No.	M23
Connector Name	BCM (BODY CONTROL MODULE)
Connector Color	WHITE

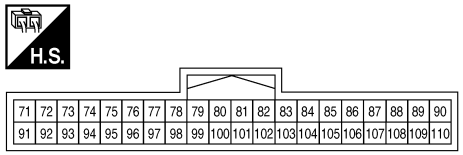

Terminal No.	Color of Wire	Signal Name
105	W	BRAKE SW2

Connector No.	M24
Connector Name	BCM (BODY CONTROL MODULE)
Connector Color	BLACK

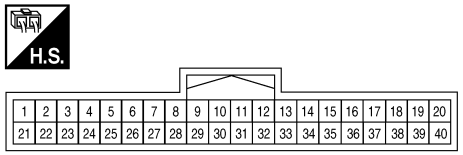

Terminal No.	Color of Wire	Signal Name
9	BR	BRAKE SW1

Connector No.	M25
Connector Name	BCM (BODY CONTROL MODULE)
Connector Color	WHITE

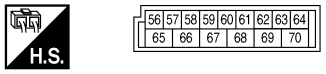

Terminal No.	Color of Wire	Signal Name
57	P	BATTERY (FUSE)
67	B	GND
70	Y	BATTERY (F/L)

Connector No.	M44
Connector Name	JOINT CONNECTOR-M01
Connector Color	GRAY

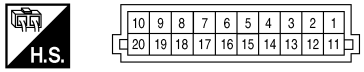

Terminal No.	Color of Wire	Signal Name
11	P	–
12	P	–

Connector No.	M77
Connector Name	WIRE TO WIRE
Connector Color	WHITE

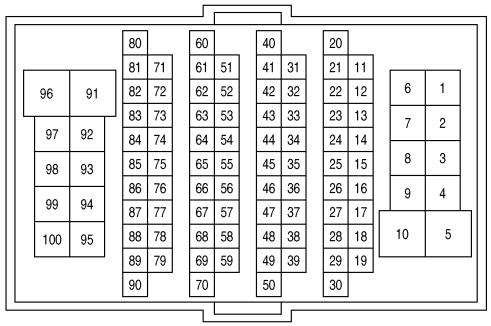

Terminal No.	Color of Wire	Signal Name
62	W	–
63	BR	–
91	Y	–

AALIA2512GB

Connector No.	E44
Connector Name	JOINT CONNECTOR-E02
Connector Color	BLUE

H.S.

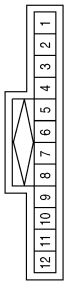

Terminal No.	Color of Wire	Signal Name
1	SB	–
2	SB	–
6	SB	–

Connector No.	E102
Connector Name	STOP LAMP SWITCH
Connector Color	WHITE

H.S.

Terminal No.	Color of Wire	Signal Name
1	W	–
2	SB	–

Connector No.	E105
Connector Name	WIRE TO WIRE
Connector Color	WHITE

H.S.

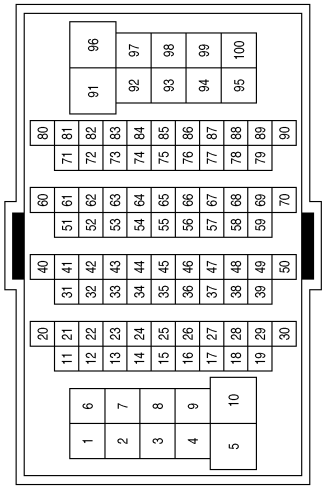

Terminal No.	Color of Wire	Signal Name
62	W	–
63	SB	–
91	Y	–

Connector No.	E107
Connector Name	WIRE TO WIRE
Connector Color	WHITE

H.S.

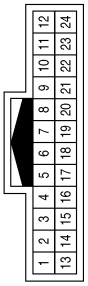

Terminal No.	Color of Wire	Signal Name
3	SB	–

AALIA2513GB

Connector No.	B7
Connector Name	WIRE TO WIRE
Connector Color	WHITE

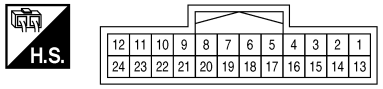

Terminal No.	Color of Wire	Signal Name
3	Y	–

Connector No.	B18
Connector Name	WIRE TO WIRE
Connector Color	WHITE

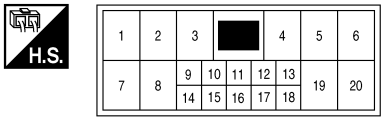

Terminal No.	Color of Wire	Signal Name
6	BR	–

Connector No.	B59
Connector Name	REAR COMBINATION LAMP RH
Connector Color	WHITE

Terminal No.	Color of Wire	Signal Name
2	Y	–
5	B	–

Connector No.	B80
Connector Name	REAR COMBINATION LAMP LH
Connector Color	WHITE

Terminal No.	Color of Wire	Signal Name
2	SB	–
5	B	–

Connector No.	D504
Connector Name	WIRE TO WIRE
Connector Color	WHITE

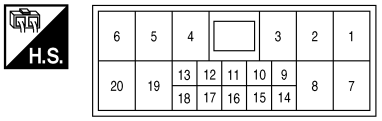

Terminal No.	Color of Wire	Signal Name
6	R	–

Connector No.	D505
Connector Name	WIRE TO WIRE
Connector Color	WHITE

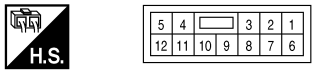

Terminal No.	Color of Wire	Signal Name
5	R	–

AALIA2514GB

Connector No.	D551
Connector Name	CONDENSER-2
Connector Color	BLACK

H.S.

Terminal No.	Color of Wire	Signal Name
1	R	–

Connector No.	D553
Connector Name	CONDENSER-2
Connector Color	BLACK

H.S.

Terminal No.	Color of Wire	Signal Name
2	R	–

Connector No.	D555
Connector Name	WIRE TO WIRE
Connector Color	WHITE

H.S.

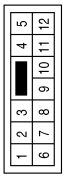

Terminal No.	Color of Wire	Signal Name
5	R	–

Connector No.	D561
Connector Name	WIRE TO WIRE
Connector Color	WHITE

H.S.

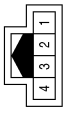

Terminal No.	Color of Wire	Signal Name
3	R	–
4	B	–

Connector No.	D602
Connector Name	WIRE TO WIRE
Connector Color	WHITE

H.S.

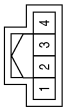

Terminal No.	Color of Wire	Signal Name
3	R	–
4	B	–

Connector No.	D603
Connector Name	HIGH-MOUNTED STOP LAMP
Connector Color	GRAY

H.S.

Terminal No.	Color of Wire	Signal Name
1	R	–
2	B	–

AALIA2515GB

BACK-UP LAMP

Wiring Diagram

INFOID:0000000010634658

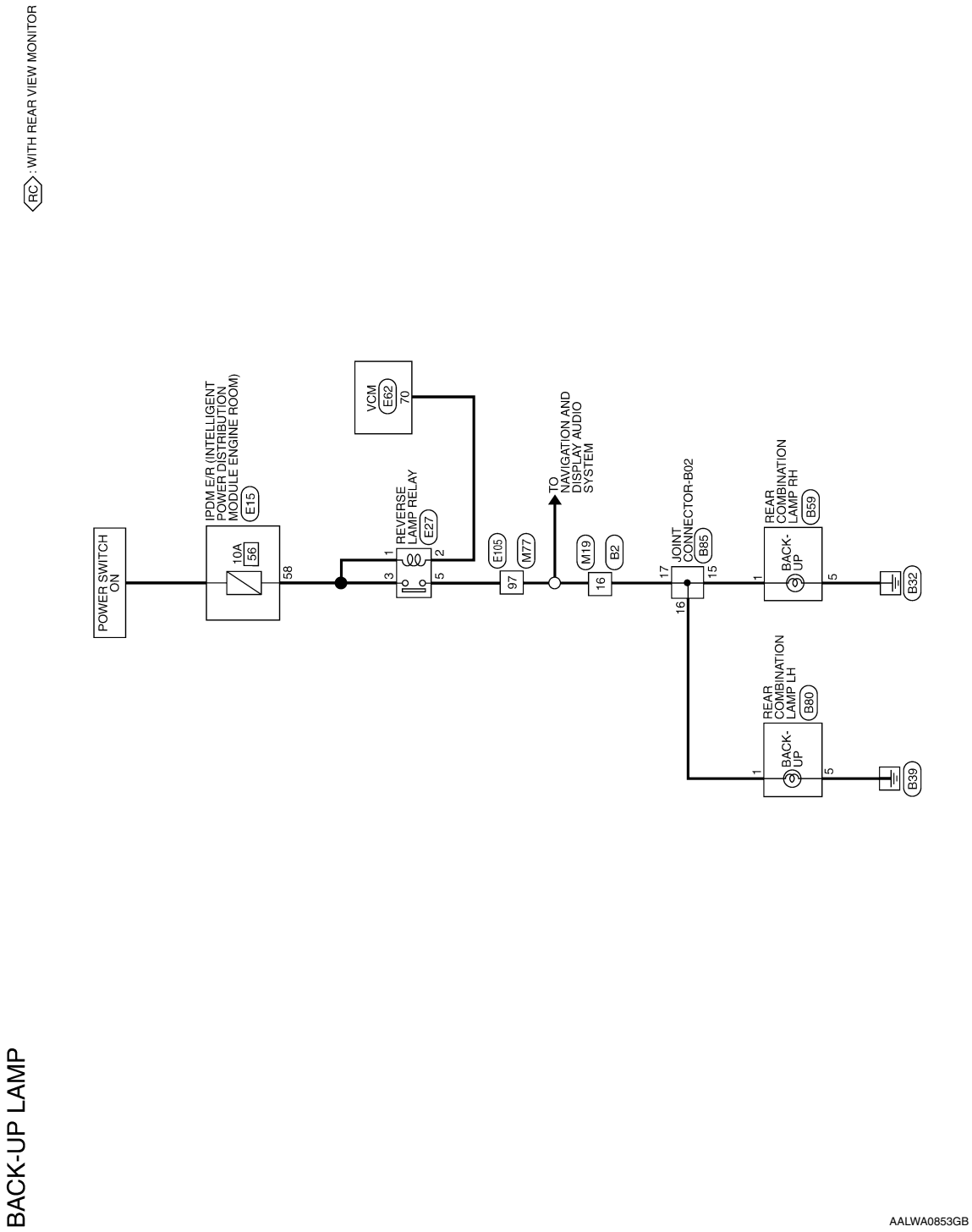

BACK-UP LAMP

BACK-UP LAMP- CONNECTORS

Connector No.	M19
Connector Name	WIRE TO WIRE
Connector Color	WHITE

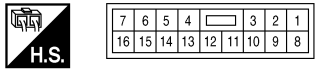

Terminal No.	Color of Wire	Signal Name
16	G	–

Connector No.	M77
Connector Name	WIRE TO WIRE
Connector Color	WHITE

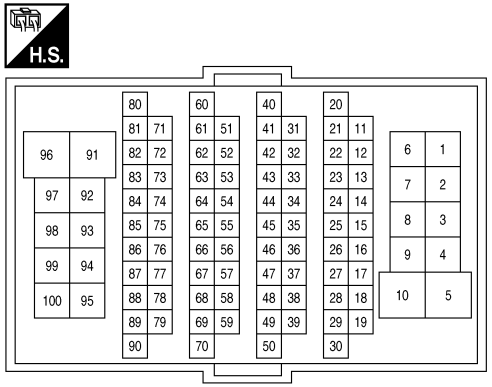

Terminal No.	Color of Wire	Signal Name
97	G	–

Connector No.	E15
Connector Name	IPDM E/R (INTELLIGENT POWER DISTRIBUTION MODULE ENGINE ROOM)
Connector Color	WHITE

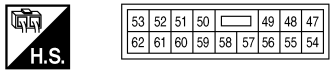

Terminal No.	Color of Wire	Signal Name
58	O	REV LAMP POWER

Connector No.	E27
Connector Name	REVERSE LAMP RELAY
Connector Color	BLUE

Terminal No.	Color of Wire	Signal Name
1	O	–
2	SB	–
3	O	–
5	G	–

Connector No.	E62
Connector Name	VCM
Connector Color	BROWN

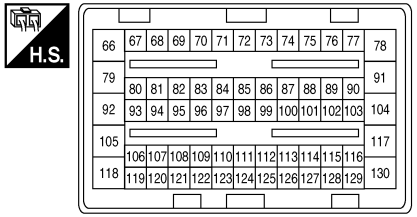

Terminal No.	Color of Wire	Signal Name
70	SB	REVERSE LAMP

AALIA2471GB

Connector No.	E105
Connector Name	WIRE TO WIRE
Connector Color	WHITE

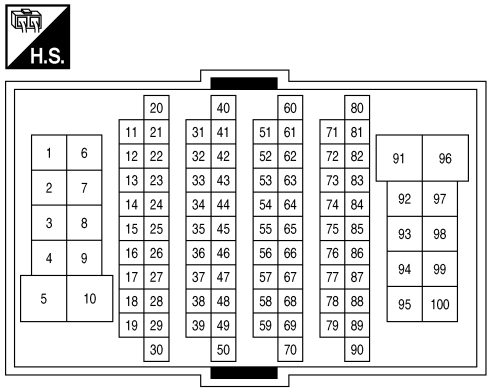

Terminal No.	Color of Wire	Signal Name
97	G	–

Connector No.	B2
Connector Name	WIRE TO WIRE
Connector Color	WHITE

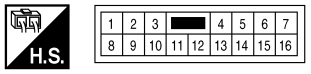

Terminal No.	Color of Wire	Signal Name
16	G	–

Connector No.	B59
Connector Name	REAR COMBINATION LAMP RH
Connector Color	WHITE

Terminal No.	Color of Wire	Signal Name
1	G	–
5	B	–

Connector No.	B80
Connector Name	REAR COMBINATION LAMP LH
Connector Color	WHITE

Terminal No.	Color of Wire	Signal Name
1	G	–
5	B	–

Connector No.	B85
Connector Name	JOINT CONNECTOR-B02
Connector Color	BLACK

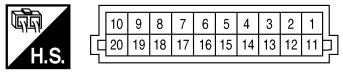

Terminal No.	Color of Wire	Signal Name
15	G	–
16	G	–
17	G	–

AALIA2472GB

BASIC INSPECTION

DIAGNOSIS AND REPAIR WORKFLOW

Work Flow

INFOID:0000000010634659

OVERALL SEQUENCE

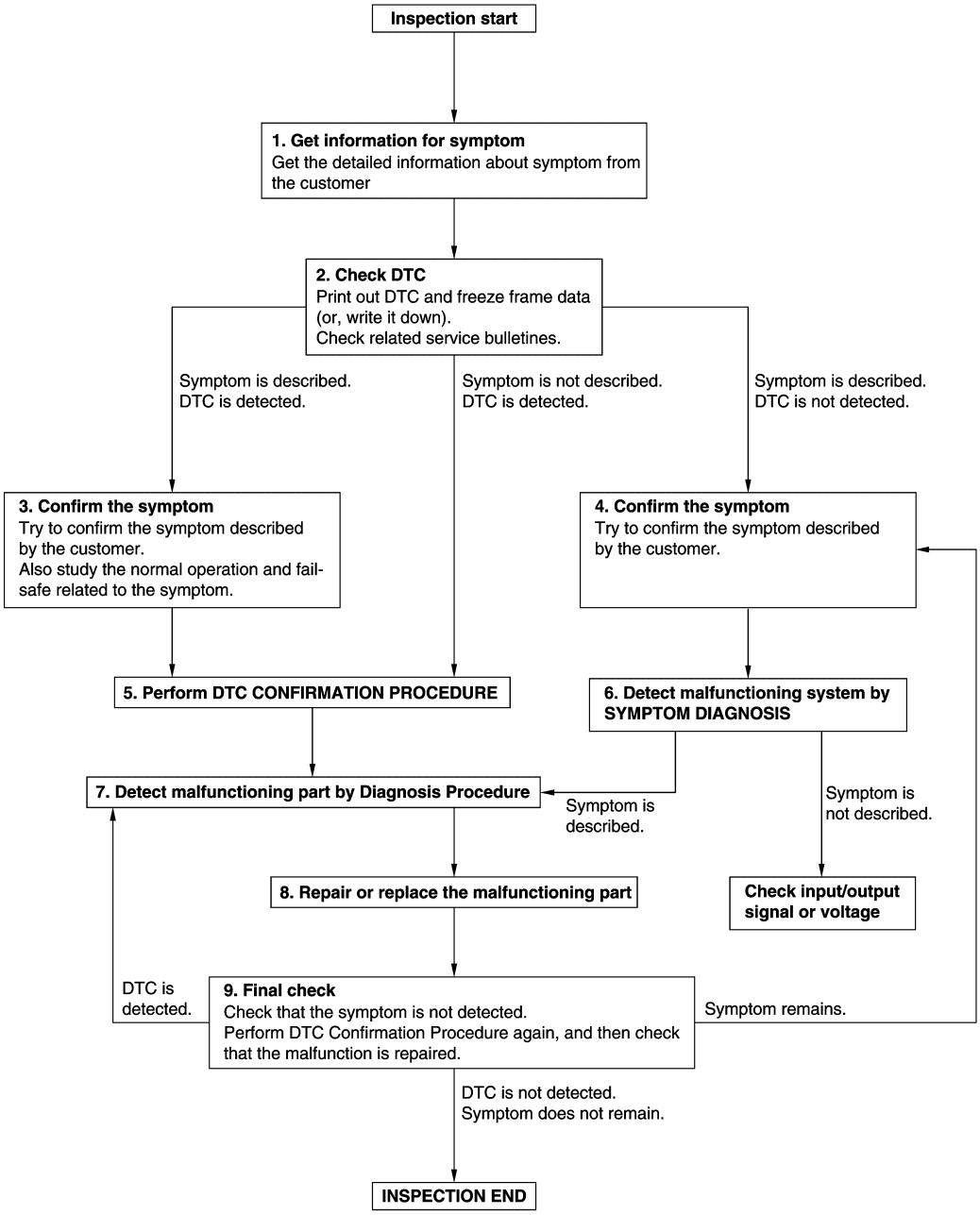

JMKIA8652GB

DETAILED FLOW

1. GET INFORMATION FOR SYMPTOM

1. Get detailed information from the customer about the symptom (the condition and the environment when the incident/malfunction occurs).
2. Check operation condition of the function that is malfunctioning.

>> GO TO 2.

2. CHECK DTC

1. Check DTC.
2. Perform the following procedure if DTC is detected:
- Record DTC and freeze frame data (Print them out using CONSULT.)
- Erase DTC.
- Study the relationship between the cause detected by DTC and the symptom described by the customer.
3. Check related service bulletins for information.

Are any symptoms described and any DTC detected?

Symptom is described, DTC is detected>>GO TO 3.
Symptom is described, DTC is not detected>>GO TO 4.
Symptom is not described, DTC is detected>>GO TO 5.

3. CONFIRM THE SYMPTOM

Try to confirm the symptom described by the customer.
Also study the normal operation and fail-safe related to the symptom.
Verify relation between the symptom and the condition when the symptom is detected.

>> GO TO 5.

4. CONFIRM THE SYMPTOM

Try to confirm the symptom described by the customer.
Verify relation between the symptom and the condition when the symptom is detected.

>> GO TO 6.

5. PERFORM DTC CONFIRMATION PROCEDURE

Perform DTC CONFIRMATION PROCEDURE for the detected DTC, and then check that DTC is detected again. At this time, always connect CONSULT to the vehicle, and check self diagnostic results in real time.
If two or more DTCs are detected, refer to BCS-47, "DTC Inspection Priority Chart" (BCM) or PCS-19, "DTC Index" (IPDM E/R), and determine trouble diagnosis order.

NOTE:
- Freeze frame data is useful if the DTC is not detected.
- Perform Component Function Check if DTC CONFIRMATION PROCEDURE is not included on Service Manual. This simplified check procedure is an effective alternative though DTC cannot be detected during this check.
  If the result of Component Function Check is NG, it is the same as the detection of DTC by DTC CONFIRMATION PROCEDURE.

Is DTC detected?

YES >> GO TO 7.
NO >> Check according to GI-53, "Intermittent Incident".

6. DETECT MALFUNCTIONING SYSTEM BY SYMPTOM DIAGNOSIS

Detect malfunctioning system according to SYMPTOM DIAGNOSIS based on the confirmed symptom in step 4, and determine the trouble diagnosis order based on possible causes and symptom.

Is the symptom described?

YES >> GO TO 7.
NO >> Monitor input data from related sensors or check voltage of related module terminals using CONSULT.

7. DETECT MALFUNCTIONING PART BY DIAGNOSTIC PROCEDURE

Inspect according to Diagnostic Procedure of the system.

Is malfunctioning part detected?

YES >> GO TO 8.
NO >> Check according to GI-53, "Intermittent Incident".

8. REPAIR OR REPLACE THE MALFUNCTIONING PART

1. Repair or replace the malfunctioning part.
2. Reconnect parts or connectors disconnected during Diagnostic Procedure again after repair and replacement.
3. Check DTC. If DTC is detected, erase it.

>> GO TO 9.

9. FINAL CHECK

When DTC is detected in step 2, perform DTC CONFIRMATION PROCEDURE again, and then check that the malfunction is repaired securely.
When symptom is described by the customer, refer to confirmed symptom in step 3 or 4, and check that the symptom is not detected.

Is DTC detected and does symptom remain?

YES-1 >> DTC is detected: GO TO 7.
YES-2 >> Symptom remains: GO TO 4.
NO >> Before returning the vehicle to the customer, always erase DTC.

DTC/CIRCUIT DIAGNOSIS

HEADLAMP (HI) CIRCUIT

WITHOUT DAYTIME RUNNING LIGHT SYSTEM

WITHOUT DAYTIME RUNNING LIGHT SYSTEM : Component Function Check

INFOID:0000000010634660

1.CHECK HEADLAMP (HI) OPERATION

CONSULT ACTIVE TEST
1. Select “EXTERNAL LAMPS” in “Active Test” of “IPDM E/R”.
2. While operating the test items, check that the headlamp (HI) is turned ON.

Hi : Headlamp (HI) ON
Off : Headlamp (HI) OFF

NOTE:
ON/OFF is repeated 1 second each.

Is the inspection result normal?

YES >> Headlamp (HI) circuit is normal.
NO >> Refer to EXL-225, "WITHOUT DAYTIME RUNNING LIGHT SYSTEM : Diagnosis Procedure".

WITHOUT DAYTIME RUNNING LIGHT SYSTEM : Diagnosis Procedure

INFOID:0000000010634661

Regarding Wiring Diagram information. Refer to EXL-31, "Wiring Diagram".

1.CHECK HEADLAMP (HI) OUTPUT VOLTAGE

CONSULT ACTIVE TEST
1. Turn power switch OFF.
2. Disconnect front combination lamp connector.
3. Turn power switch ON.
4. Select “EXTERNAL LAMPS” in “Active Test” of “IPDM E/R”.
5. While operating the test items, check voltage between IPDM E/R harness connector and ground.

(+)			(–)	Test item		Voltage (Approx.)
IPDM E/R						
Connector		Terminal				
RH	E15	49	Ground	EXTERNAL LAMPS	Hi	Battery voltage
					Off	0 V
LH		50			Hi	Battery voltage
					Off	0 V

Is the inspection result normal?

YES >> GO TO 2.
NO >> GO TO 3.

2.CHECK HEADLAMP (HI) OPEN CIRCUIT

1. Turn power switch OFF.
2. Disconnect IPDM E/R connector.
3. Check continuity between IPDM E/R harness connector and front combination lamp harness connector.

IPDM E/R			Front combination lamp		Continuity
Connector		Terminal	Connector	Terminal	
RH	E15	49	E45	2	Yes
LH		50	E26		

Is the inspection result normal?

YES >> GO TO 5.
NO >> Repair or replace harness.

3. CHECK HEADLAMP (HI) FUSE

1. Turn power switch OFF.
2. Check that the following fuses are not blown:

Unit	Location	Fuse No.	Capacity
Headlamp HI (RH)	IPDM E/R	51	10 A
Headlamp HI (LH)		52	

Is the inspection result normal?

YES >> Replace IPDM E/R. Refer to PCS-30, "Removal and Installation".
NO >> GO TO 4.

4. CHECK HEADLAMP HIGH (HI) SHORT CIRCUIT

1. Disconnect IPDM E/R connector.
2. Check continuity between IPDM E/R harness connector and ground.

IPDM E/R			Ground	Continuity
Connector		Terminal		
RH	E15	49		No
LH		50		

Is the inspection result normal?

YES >> Replace fuse. (Replace IPDM E/R if the fuse is blown again.)
NO >> Replace the blown fuse after repairing the affected circuit.

5. CHECK HEADLAMP (HI) GROUND OPEN CIRCUIT

1. Disconnect front combination lamp connector.
2. Check continuity between front combination lamp harness connector and ground.

Front combination lamp			Ground	Continuity
Connector		Terminal		
RH	E45	4		Yes
LH	E26			

Is the inspection result normal?

YES >> Replace headlamp (HI) bulb.
NO >> Repair or replace harness.

WITH DAYTIME RUNNING LIGHT SYSTEM

WITH DAYTIME RUNNING LIGHT SYSTEM : Component Function Check

INFOID:0000000010634662

1. CHECK HEADLAMP (HI) OPERATION

CONSULT ACTIVE TEST
1. Select “EXTERNAL LAMPS” in “Active Test” of “IPDM E/R”.
2. While operating the test items, check that the headlamp (HI) is turned ON.

Hi : Headlamp (HI) ON
Off : Headlamp (HI) OFF

NOTE:
ON/OFF is repeated 1 second each.

Is the inspection result normal?

YES >> Headlamp (HI) circuit is normal.
NO >> Refer to EXL-227, "WITH DAYTIME RUNNING LIGHT SYSTEM : Diagnosis Procedure".

WITH DAYTIME RUNNING LIGHT SYSTEM : Diagnosis Procedure

INFOID:0000000010634663

1. CHECK HEADLAMP (HI) OUTPUT VOLTAGE

CONSULT ACTIVE TEST
1. Turn power switch OFF.
2. Disconnect headlamp high connector.
3. Turn power switch ON.
4. Select “EXTERNAL LAMPS” in “Active Test” of “IPDM E/R”.
5. While operating the test items, check voltage between IPDM E/R harness connector and ground.

(+)			(–)	Test item		Voltage (Approx.)
IPDM E/R						
Connector		Terminal				
RH	E15	49	Ground	EXTERNAL LAMPS	Hi	Battery voltage
					Off	0 V
LH		50			Hi	Battery voltage
					Off	0 V

Is the inspection result normal?

YES >> GO TO 2.
NO >> GO TO 3.

2. CHECK HEADLAMP (HI) OPEN CIRCUIT

1. Turn power switch OFF.
2. Disconnect IPDM E/R connector.
3. Check continuity between IPDM E/R harness connector and front combination lamp harness connector.

IPDM E/R			Front combination lamp		Continuity
Connector		Terminal	Connector	Terminal	
RH	E15	49	E45	2	Yes
LH		50	E26		

Is the inspection result normal?

YES >> GO TO 5.
NO >> Repair or replace harness.

3. CHECK HEADLAMP (HI) FUSE

1. Turn power switch OFF.
2. Check that the following fuses are not blown:

Unit	Location	Fuse No.	Capacity
Headlamp HI (RH)	IPDM E/R	51	10 A
Headlamp HI (LH)		52	

Is the inspection result normal?

YES >> Replace IPDM E/R.
NO >> GO TO 4.

4. CHECK HEADLAMP (HI) SHORT CIRCUIT

1. Disconnect IPDM E/R connector. Refer to PCS-30, "Removal and Installation".
2. Check continuity between IPDM E/R harness connector and ground.

IPDM E/R			Ground	Continuity
Connector		Terminal		
RH	E15	49		No
LH		50		

Is the inspection result normal?

YES >> Replace fuse. (Replace IPDM E/R if the fuse is blown again.)
NO >> Replace the blown fuse after repairing the affected circuit.

5. CHECK ILLUMINATION STATUS OF HEADLAMPS

Check illumination status of headlamps.

Which headlamp does not turn ON?

RH >> GO TO 6.
LH >> GO TO 9.

6. CHECK HEADLAMP HI (RH) GROUND OPEN CIRCUIT-1

1. Remove daytime running light relay.
2. Check continuity between daytime running light relay harness connector and front combination lamp RH harness connector.

Daytime running light relay		Front combination lamp RH		Continuity
Connector	Terminal	Connector	Terminal	
E76	3	E45	4	Yes

Is the inspection result normal?

YES >> GO TO 7.
NO >> Repair or replace harness.

7. CHECK HEADLAMP HI (RH) GROUND OPEN CIRCUIT-2

Check continuity between daytime running light relay harness connector and ground.

Daytime running light relay		Ground	Continuity
Connector	Terminal		
E76	4		Yes

Is the inspection result normal?

YES >> GO TO 8.
NO >> Repair or replace harness.

8. CHECK HEADLAMP HI (RH) DAYTIME RUNNING LIGHT RELAY CIRCUIT

Check continuity between terminal 3 - 4 of daytime running light relay.

Daytime running light relay	Continuity
Terminal	
3 - 4	Yes

Is the inspection result normal?

YES >> Replace headlamp (HI) bulb. (Bulb socket is abnormal.)
NO >> Replace daytime running light relay.

9. CHECK HEADLAMP HI (LH) GROUND OPEN CIRCUIT

Check continuity between front combination lamp LH harness connector and ground.

Front combination lamp LH		Ground	Continuity
Connector	Terminal		
E26	4		Yes

Is the inspection result normal?

YES >> Replace headlamp (HI) bulb. (Bulb socket is abnormal.)
NO >> Repair or replace harness.

HEADLAMP (LO) CIRCUIT

Component Function Check

INFOID:0000000010634664

1.CHECK HEADLAMP (LO) OPERATION

CONSULT ACTIVE TEST
1. Select “EXTERNAL LAMPS” in “Active Test” of “IPDM E/R”.
2. While operating the test items, check that the headlamp (LO) is turned ON.

Lo : Headlamp (LO) ON
Off : Headlamp (LO) OFF

Is the inspection result normal?

YES >> Headlamp (LO) circuit is normal.
NO >> Refer to EXL-230, "Diagnosis Procedure".

Diagnosis Procedure

INFOID:0000000010634665

Regarding Wiring Diagram information. Refer to EXL-31, "Wiring Diagram".

1.CHECK HEADLAMP (LO) OUTPUT VOLTAGE

CONSULT ACTIVE TEST
1. Turn power switch OFF.
2. Disconnect front combination lamp connector.
3. Turn power switch ON.
4. Select “EXTERNAL LAMPS” in “Active Test” of “IPDM E/R”.
5. While operating the test items, check voltage between IPDM E/R harness connector and ground.

(+)			(–)	Test item		Voltage (Approx.)
IPDM E/R						
Connector		Terminal				
RH	E15	52	Ground	EXTERNAL LAMPS	Lo	Battery voltage
					Off	0 V
LH		51			Lo	Battery voltage
					Off	0 V

Is the inspection result normal?

YES >> GO TO 2.
NO >> GO TO 3.

2.CHECK HEADLAMP (LO) OPEN CIRCUIT

1. Turn power switch OFF.
2. Disconnect IPDM E/R connector.
3. Check continuity between IPDM E/R harness connector and front combination lamp harness connector.

IPDM E/R			Front combination lamp		Continuity
Connector		Terminal	Connector	Terminal	
RH	E15	52	E45	6	Yes
LH		51	E26		

Is the inspection result normal?

YES >> Replace headlamp bulb.
NO >> Repair or replace harness.

3. CHECK HEADLAMP (LO) FUSE

1. Turn power switch OFF.
2. Check that the following fuses are not blown:

Unit	Location	Fuse No.	Capacity
Headlamp LO (RH)	IPDM E/R	54	15 A
Headlamp LO (LH)		53	

Is the inspection result normal?

YES >> Replace IPDM E/R. Refer to PCS-30, "Removal and Installation".
NO >> GO TO 4.

4. CHECK HEADLAMP (LO) SHORT CIRCUIT-1

1. Disconnect IPDM E/R connector.
2. Check continuity between IPDM E/R harness connector and ground.

IPDM E/R			Ground	Continuity
Connector		Terminal		
RH	E15	52		No
LH		51		

Is the inspection result normal?

YES >> GO TO 5.
NO >> Replace the blown fuse after repairing the affected circuit.

5. CHECK HEADLAMP (LO) SHORT CIRCUIT-2

CONSULT ACTIVE TEST

1. Replace fuse.
2. Connect IPDM E/R connector.
3. Turn power switch ON.
4. Select “EXTERNAL LAMPS” in “Active Test” of “IPDM E/R”.
5. Check that fuse is not blown when Lo button is operated.

Is the inspection result normal?

YES >> GO TO 6.
NO >> Replace IPDM E/R. Refer to PCS-30, "Removal and Installation".

6. CHECK HEADLAMP (LO) SHORT CIRCUIT-3

1. Turn power switch OFF.
2. Connect front combination lamp connector.
3. Check that headlamp turns ON when lighting switch is in the 2ND position.

Is the inspection result normal?

YES >> Refer to GI-53, "Intermittent Incident".
NO >> Replace headlamp bulb.

DAYTIME RUNNING LIGHT RELAY CIRCUIT

Component Function Check

INFOID:0000000010634666

1. CHECK DAYTIME RUNNING LIGHT OPERATION

CONSULT ACTIVE TEST
1. Select “External Lamps” in “Active Test” of “BCM (HEADLAMP)”.
2. While operating the test items, check that daytime running light operation.

On : Headlamp (HI) ON
Off : Headlamp (HI) OFF

Is the inspection result normal?

YES >> Daytime running light relay circuit is normal.
NO >> Refer to EXL-232, "Diagnosis Procedure".

Diagnosis Procedure

INFOID:0000000010634667

Regarding Wiring Diagram information. Refer to EXL-36, "Wiring Diagram".

1. CHECK DAYTIME RUNNING LIGHT RELAY 2 FUSE

1. Turn power switch OFF.
2. Check that the following fuse is not blown:

Unit	Fuse No.	Capacity
Daytime running light relay 2	37	10 A

Is the inspection result normal?

YES >> GO TO 2.
NO >> Replace the blown fuse after repairing the affected circuit.

2. CHECK DAYTIME RUNNING LIGHT RELAY 2 POWER SUPPLY

1. Remove daytime running light relay.
2. Check voltage between daytime running light relay 2 harness connector and ground.

(+)		(–)	Voltage (Approx.)
Daytime running light relay 2			
Connector	Terminal		
E76	2	Ground	Battery voltage
	5		

Is the inspection result normal?

YES >> GO TO 3.
NO >> Repair or replace harness.

3. CHECK DAYTIME RUNNING LIGHT RELAY 2

Check daytime running light relay 2. Refer to EXL-233, "Component Inspection".

Is the inspection result normal?

YES >> GO TO 4.
NO >> Replace daytime running light relay 2.

4. CHECK DAYTIME RUNNING LIGHT RELAY 2 CONTROL SIGNAL OUTPUT

CONSULT ACTIVE TEST
1. Install daytime running light relay 2.
2. Turn power switch ON.

3. Select “External Lamps” in “Active Test” of “BCM (HEADLAMP)”.
4. While operating the test item, check voltage between IPDM E/R harness connector and ground.

(+)		(–)	Test item		Voltage (Approx.)
IPDM E/R					
Connector	Terminal				
E13	28	Ground	External Lamps	On	0 V
				Off	Battery voltage

Is the inspection result normal?

YES >> Daytime running light relay 2 circuit is OK.
NO-1 (Fixed at 0 V)>>GO TO 5.
NO-2 (Fixed at battery voltage) >>Replace IPDM E/R. Refer to PCS-30, "Removal and Installation".

5. CHECK DAYTIME RUNNING LIGHT RELAY 2 CONTROL SIGNAL OPEN CIRCUIT

1. Turn power switch OFF.
2. Remove daytime running light relay 2.
3. Disconnect IPDM E/R harness connector.
4. Check continuity between IPDM E/R harness connector and daytime running light relay 2 harness connector.

IPDM E/R		Daytime running light relay 2		Continuity
Connector	Terminal	Connector	Terminal	
E13	28	E76	1	Yes

Is the inspection result normal?

YES >> GO TO 6.
NO >> Repair or replace harness.

6. CHECK DAYTIME RUNNING LIGHT RELAY 2 CONTROL SIGNAL SHORT CIRCUIT

Check continuity between IPDM E/R harness connector and ground.

IPDM E/R		Ground	Continuity
Connector	Terminal		
E13	28		No

Is the inspection result normal?

YES >> Replace IPDM E/R. Refer to PCS-30, "Removal and Installation".
NO >> Repair or replace harness.

Component Inspection

INFOID:0000000010634668

1. CHECK DAYTIME RUNNING LIGHT RELAY 2

1. Turn the power switch OFF.
2. Remove daytime running light relay 2.
3. Apply battery voltage to daytime running light relay- between terminals 1 and 2.
4. Check continuity between daytime running light relay 2 terminals.

Daytime running light relay-2			Condition		Continuity
Terminal					
E76	5	4	Voltage	Apply	Yes
				Not Apply	No
	3			Apply	No
				Not Apply	Yes

Is the inspection result normal?

YES >> Daytime running light relay 2 is normal.

NO >> Replace daytime running light relay 2.

PARKING LAMP CIRCUIT

Component Function Check

INFOID:0000000010634669

1.CHECK PARKING LAMP OPERATION

CONSULT ACTIVE TEST
1. Select “EXTERNAL LAMPS” in “Active Test” of “IPDM E/R”.
2. While operating the test items, check that the parking lamp is turned ON.

TAIL : Parking lamp ON
Off : Parking lamp OFF

Is the inspection result normal?

YES >> Parking lamp circuit is normal.
NO >> Refer to EXL-235, "Diagnosis Procedure".

Diagnosis Procedure

INFOID:0000000010634670

Regarding Wiring Diagram information. Refer to EXL-65, "Wiring Diagram".

1.CHECK PARKING LAMP FUSE

1. Turn power switch OFF.
2. Check that the following fuse is not blown:

Unit	Location	Fuse No.	Capacity
• Parking lamp • Front side marker lamp • Tail lamp (LH)	IPDM E/R	47	10 A

Is the inspection result normal?

YES >> GO TO 3.
NO >> GO TO 2.

2.CHECK PARKING LAMP SHORT CIRCUIT

1. Disconnect the following connectors:
- IPDM E/R
- Front combination lamps
- Front side marker lamps
- Rear combination lamp (LH)
2. Check continuity between IPDM E/R harness connector and ground.

IPDM E/R		Ground	Continuity
Connector	Terminal		
E14	43		No
	44		

Is the inspection result normal?

YES >> Replace fuse. (Replace IPDM E/R if blown fuse is found again.)
NO >> Replace the blown fuse after repairing the affected circuit.

3.CHECK PARKING LAMP BULB

Check applicable lamp bulb.

Is the inspection result normal?

YES >> GO TO 4.
NO >> Replace bulb.

4. CHECK PARKING LAMP OUTPUT VOLTAGE

CONSULT ACTIVE TEST
1. Disconnect front combination lamp connector.
2. Turn power switch ON.
3. Select “EXTERNAL LAMPS” in “Active Test” of “IPDM E/R”.
4. While operating the test items, check voltage between IPDM E/R harness connector and ground.

(+)		(–)	Test item		Voltage (Approx.)
IPDM E/R					
Connector	Terminal				
E14	43	Ground	EXTERNAL LAMPS	TAIL	Battery voltage
				Off	0 V

Is the inspection result normal?

YES >> GO TO 5.
NO >> Replace IPDM E/R. Refer to PCS-30, "Removal and Installation".

5. CHECK PARKING LAMP OPEN CIRCUIT

1. Turn power switch OFF.
2. Disconnect IPDM E/R connector.
3. Check continuity between IPDM E/R harness connector and front combination lamp harness connector.

IPDM E/R			Front combination lamp		Continuity
Connector		Terminal	Connector	Terminal	
RH	E14	43	E45	1	Yes
LH			E26		

Is the inspection result normal?

YES >> GO TO 6.
NO >> Repair or replace harness.

6. CHECK PARKING LAMP GROUND OPEN CIRCUIT

Check continuity between front combination lamp harness connector and ground.

Front combination lamp			Ground	Continuity
Connector		Terminal		
RH	E45	3		Yes
LH	E26			

Is the inspection result normal?

YES >> Check corresponding bulb socket and harness. Repair or replace if necessary.
NO >> Repair or replace harness.

FRONT SIDE MARKER LAMP CIRCUIT

Component Function Check

INFOID:0000000010634671

1. CHECK PARKING LAMP OPERATION

Check that the parking lamp is turned ON.

Is the inspection result normal?

YES >> GO TO 2.
NO >> Check parking lamp circuit. Refer to EXL-235, "Component Function Check".

2. CHECK FRONT SIDE MARKER LAMP OPERATION

CONSULT ACTIVE TEST

1. Select “EXTERNAL LAMPS” in “Active Test” of “IPDM E/R”.
2. While operating the test items, check that the front side marker lamp is turned ON.

TAIL : Front side marker lamp ON
Off : Front side marker lamp OFF

Is the inspection result normal?

YES >> Front side marker lamp circuit is normal.
NO >> Refer to EXL-237, "Diagnosis Procedure".

Diagnosis Procedure

INFOID:0000000010634672

Regarding Wiring Diagram information. Refer to EXL-65, "Wiring Diagram".

1. CHECK FRONT SIDE MARKER LAMP BULB

Check applicable lamp bulb.

Is the inspection result normal?

YES >> GO TO 2.
NO >> Replace bulb.

2. CHECK FRONT SIDE MARKER LAMP OPEN CIRCUIT

1. Turn power switch OFF.
2. Disconnect IPDM E/R connector and front side marker lamp connector.
3. Check continuity between IPDM E/R harness connector and front side marker lamp harness connector.

IPDM E/R			Front side marker lamp		Continuity
Connector		Terminal	Connector	Terminal	
RH	E14	43	E16	1	Yes
LH			E10		

Is the inspection result normal?

YES >> GO TO 3.
NO >> Repair or replace harness.

3. CHECK FRONT SIDE MARKER LAMP GROUND OPEN CIRCUIT

Check continuity between front side marker lamp harness connector and ground.

Front side marker lamp			Ground	Continuity
Connector		Terminal		
RH	E16	2		Yes
LH	E10			

Is the inspection result normal?

YES >> Check corresponding bulb socket and harness. Repair or replace if necessary.
NO >> Repair or replace harness.

TAIL LAMP CIRCUIT

Component Function Check

INFOID:0000000010634673

1. CHECK TAIL LAMP OPERATION

CONSULT ACTIVE TEST
1. Select “EXTERNAL LAMPS” in “Active Test” of “IPDM E/R”.
2. While operating the test items, check that the tail lamp is turned ON.

TAIL : Tail Lamp ON
Off : Tail lamp OFF

Is the inspection result normal?

YES >> Tail lamp circuit is normal.
NO >> Refer to EXL-239, "Diagnosis Procedure".

Diagnosis Procedure

INFOID:0000000010634674

Regarding Wiring Diagram information. Refer to EXL-65, "Wiring Diagram".

1. CHECK PARKING LAMP OPERATION

Check that the parking lamp is turned ON.

Is the inspection result normal?

YES-1 [When tail lamp (LH) does not turn ON.]>>GO TO 5.
YES-2 [When tail lamp (RH) does not turn ON.]>>GO TO 2.
NO >> Check parking lamp circuit. Refer to EXL-235, "Component Function Check".

2. CHECK TAIL LAMP (LH) FUSE

1. Turn power switch OFF.
2. Check that the following fuse is not blown:

Unit	Location	Fuse No.	Capacity
Tail lamp (RH)	IPDM E/R	46	10 A

Is the inspection result normal?

YES >> GO TO 3.
NO >> GO TO 4.

3. CHECK TAIL LAMP (RH) OUTPUT VOLTAGE

CONSULT ACTIVE TEST
1. Disconnect rear combination lamp (RH) connector.
2. Turn power switch ON.
3. Select “EXTERNAL LAMPS” in “Active Test” of “IPDM E/R”.
4. While operating the test items, check voltage between IPDM E/R harness connector and ground.

(+)		(–)	Test item		Voltage (Approx.)
IPDM E/R					
Connector	Terminal				
E14	38	Ground	EXTERNAL LAMPS	TAIL	Battery voltage
				Off	0 V

Is the inspection result normal?

YES >> GO TO 5.
NO >> Replace IPDM E/R. Refer to PCS-30, "Removal and Installation".

4. CHECK TAIL LAMP (RH) SHORT CIRCUIT

1. Disconnect IPDM E/R connector and rear combination lamp (RH) connector.
2. Check continuity between IPDM E/R harness connector and ground.

IPDM E/R		Ground	Continuity
Connector	Terminal		
E14	38		No

Is the inspection result normal?

YES >> Replace fuse. (Replace IPDM E/R if blown fuse is found again.)
NO >> Replace the blown fuse after repairing the affected circuit.

5. CHECK TAIL LAMP OPEN CIRCUIT

1. Turn power switch OFF.
2. Disconnect IPDM E/R connector and rear combination lamp connector.
3. Check continuity between IPDM E/R harness connector and rear combination lamp harness connector.

IPDM E/R			Rear combination lamp		Continuity
Connector		Terminal	Connector	Terminal	
RH	E14	38	B59	6	Yes
LH		44	B80		

Is the inspection result normal?

YES >> GO TO 6.
NO >> Repair or replace harness.

6. CHECK TAIL LAMP GROUND OPEN CIRCUIT

Check continuity between rear combination lamp harness connector and ground.

Rear combination lamp			Ground	Continuity
Connector		Terminal		
RH	B59	5		Yes
LH	B80			

Is the inspection result normal?

YES >> Replace rear combination lamp. Refer to EXL-275, "Removal and Installation".
NO >> Repair or replace harness.

LICENSE PLATE LAMP CIRCUIT

Component Function Check

INFOID:0000000010634675

1. CHECK TAIL LAMP (RH) OPERATION

Check that the tail lamp (RH) is turned ON.

Is the inspection result normal?

YES >> GO TO 2.
NO >> Check tail lamp circuit. Refer to EXL-239, "Component Function Check".

2. CHECK LICENSE PLATE LAMP OPERATION

CONSULT ACTIVE TEST

1. Select “EXTERNAL LAMPS” in “Active Test” of “IPDM E/R”.
2. While operating the lighting switch, check that the license plate lamp is turned ON.

TAIL : License plate lamp ON
Off : License plate lamp OFF

Is the inspection result normal?

YES >> License plate lamp circuit is normal.
NO >> Refer to EXL-241, "Diagnosis Procedure".

Diagnosis Procedure

INFOID:0000000010634676

Regarding Wiring Diagram information. Refer to EXL-65, "Wiring Diagram".

1. CHECK LICENSE PLATE LAMP BULB

Check the applicable lamp bulb.

Is the inspection result normal?

YES >> GO TO 2.
NO >> Replace bulb.

2. CHECK LICENSE PLATE LAMP OPEN CIRCUIT

1. Turn power switch OFF.
2. Disconnect IPDM E/R connector and license plate lamp connector.
3. Check continuity between IPDM E/R harness connector and license plate lamp harness connector.

IPDM E/R			License plate lamp		Continuity
Connector		Terminal	Connector	Terminal	
RH	E14	38	B58	1	Yes
LH			B57		

Is the inspection result normal?

YES >> GO TO 3.
NO >> Repair or replace harness.

3. CHECK LICENSE PLATE LAMP GROUND OPEN CIRCUIT

Check continuity between license plate lamp harness connector and ground.

License plate lamp			Ground	Continuity
Connector		Terminal		
RH	B58	2		Yes
LH	B57			

Is the inspection result normal?

YES >> Check corresponding bulb socket and harness. Repair or replace if necessary.
NO >> Repair or replace harness.

FRONT FOG LAMP CIRCUIT

Component Function Check

INFOID:0000000010634677

1. CHECK FRONT FOG LAMP OPERATION

CONSULT ACTIVE TEST
1. Select “EXTERNAL LAMPS” in “Active Test” of “IPDM E/R”.
2. While operating the test items, check that the front fog lamp is turned ON.

Fog : Front fog lamp ON
Off : Front fog lamp OFF

Is the measurement normal?

YES >> Front fog lamp circuit is normal.
NO >> Refer to EXL-243, "Diagnosis Procedure".

Diagnosis Procedure

INFOID:0000000010634678

Regarding Wiring Diagram information. Refer to EXL-55, "Wiring Diagram".

1. CHECK FRONT FOG LAMP FUSE

1. Turn power switch OFF.
2. Check that the following fuse is not blown:

Unit	Location	Fuse No.	Capacity
Front fog lamp	IPDM E/R	50	15 A

Is the inspection result normal?

YES >> GO TO 3.
NO >> GO TO 2.

2. CHECK FRONT FOG LAMP SHORT CIRCUIT

1. Disconnect front fog connector and IPDM E/R connector.
2. Check continuity between IPDM E/R harness connector and ground.

IPDM E/R			Ground	Continuity
Connector		Terminal		
RH	E12	19		No
LH		20		

Is the inspection result normal?

YES >> Replace fuse. (Replace IPDM E/R if the fuse is blown again.)
NO >> Replace the blown fuse after repairing the affected circuit.

3. CHECK FRONT FOG LAMP BULB

Check the applicable lamp bulb.

Is the inspection result normal?

YES >> GO TO 4.
NO >> Replace bulb.

4. CHECK FRONT FOG LAMP OUTPUT VOLTAGE

CONSULT ACTIVE TEST
1. Disconnect front fog lamp connector.
2. Turn power switch ON.
3. Select “EXTERNAL LAMPS” in “Active Test” of “IPDM E/R”.

4. While operating the test items, check the voltage between IPDM E/R harness connector and ground.

(+)			(–)	Test item		Voltage (Approx.)
IPDM E/R						
Connector		Terminal				
RH	E12	19	Ground	EXTERNAL LAMPS	Fog	Battery voltage
					Off	0 V
LH		20			Fog	Battery voltage
					Off	0 V

Is the inspection result normal?

YES >> GO TO 5.
NO >> Replace IPDM E/R. Refer to PCS-30, "Removal and Installation".

5. CHECK FRONT FOG LAMP OPEN CIRCUIT

1. Turn power switch OFF.
2. Disconnect IPDM E/R connector.
3. Check continuity between IPDM E/R harness connector and front fog lamp harness connector.

IPDM E/R			Front fog lamp		Continuity
Connector		Terminal	Connector	Terminal	
RH	E12	19	E48	1	Yes
LH		20	E30		

Is the inspection result normal?

YES >> GO TO 6.
NO >> Repair or replace harness.

6. CHECK FRONT FOG LAMP GROUND CIRCUIT OPEN CIRCUIT

Check continuity between front fog lamp harness connector and ground.

Front fog lamp			Ground	Continuity
Connector		Terminal		
RH	E48	2		Yes
LH	E30			

Is the inspection result normal?

YES >> Refer to GI-53, "Intermittent Incident".
NO >> Repair or replace harness.

TURN SIGNAL LAMP CIRCUIT

Component Function Check

INFOID:0000000010634679

1. CHECK TURN SIGNAL LAMP

CONSULT ACTIVE TEST
1. Select “FLASHER” in “Active Test” of “BCM (FLASHER)”.
2. While operating the test items, check that the turn signal lamps is turned ON.

LH : Turn signal lamps (LH) ON
RH : Turn signal lamps (RH) ON
Off : Turn signal lamps OFF

Is the inspection result normal?

YES >> Turn signal lamp circuit is normal.
NO >> Refer to EXL-245, "Diagnosis Procedure".

Diagnosis Procedure

INFOID:0000000010634680

Regarding Wiring Diagram information. Refer to EXL-60, "Wiring Diagram".

1. CHECK TURN SIGNAL LAMP BULB

Check the applicable lamp bulb.

Is the inspection result normal?

YES >> GO TO 2.
NO >> Replace bulb.

2. CHECK TURN SIGNAL LAMP OUTPUT VOLTAGE

1. Turn power switch OFF.
2. Disconnect front combination lamp connector and rear combination lamp connector.
3. Turn power switch ON.
4. While operating the turn signal switch, check voltage between BCM harness connector and ground.

(+) BCM Connector		(+) BCM Terminal	(–)	Condition		Voltage (Approx.)
LH	M25	60	Ground	Turn signal switch	LH	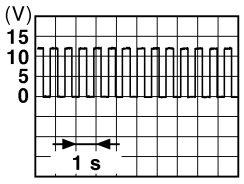
					OFF	0 V
RH		61			RH	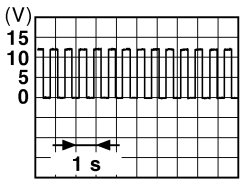
					OFF	0 V

Is the inspection result normal?

YES >> GO TO 3.
NO >> GO TO 4.

3. CHECK TURN SIGNAL LAMP OPEN CIRCUIT

1. Turn power switch OFF.
2. Disconnect BCM connector.
3. Check continuity between BCM harness connector and front combination lamp, side turn signal lamp or rear combination lamp harness connector.

Front turn signal lamp

BCM			Front combination lamp		Continuity
Connector		Terminal	Connector	Terminal	
RH	M25	61	E45	5	Yes
LH		60	E26		

Rear turn signal lamp

BCM			Rear combination lamp		Continuity
Connector		Terminal	Connector	Terminal	
RH	M25	61	B59	4	Yes
LH		60	B80		

Is the inspection result normal?

YES >> GO TO 5.
NO >> Repair or replace harness.

4. CHECK TURN SIGNAL LAMP SHORT CIRCUIT

Check continuity between BCM harness connector and ground.

BCM			Ground	Continuity
Connector		Terminal		
RH	M25	61		No
LH		60		

Is the inspection result normal?

YES >> Check each bulb socket for internal short circuit, and if check result is normal, replace BCM. Refer to BCS-72, "Removal and Installation".
NO >> Repair or replace harness.

5. CHECK TURN SIGNAL LAMP GROUND OPEN CIRCUIT

Check continuity between BCM harness connector and front combination lamp or rear combination lamp and ground.

Front turn signal lamp

Front combination lamp			Ground	Continuity
Connector		Terminal		
RH	E45	3		Yes
LH	E26			

Rear turn signal lamp

Rear combination lamp			Ground	Continuity
Connector		Terminal		
RH	B59	5		Yes
LH	B80			

Is the inspection result normal?

YES >> Check corresponding bulb socket and harness. Repair or replace if necessary.
NO >> Repair or replace harness.

OPTICAL SENSOR

Component Function Check

INFOID:0000000010634681

1. CHECK OPTICAL SENSOR SIGNAL BY CONSULT

CONSULT DATA MONITOR
1. Turn power switch ON.
2. Select “OPTISEN (DTCT)” in “Data Monitor” of “BCM (HEADLAMP)”.
3. Turn lighting switch AUTO.
4. With the optical sensor illuminating, check the monitor status.

Monitor item	Condition		Voltage (Approx.)
OPTISEN (DTCT)	Optical sensor	When illuminating	3.1 V or more *
		When shutting off light	0.6 V or less

*: Illuminates the optical sensor. The value may be less than the standard value if brightness is weak.

Is the inspection result normal?

YES >> Optical sensor is normal.
NO >> Refer to EXL-247, "Diagnosis Procedure".

Diagnosis Procedure

INFOID:0000000010634682

Regarding Wiring Diagram information. Refer to EXL-42, "Wiring Diagram".

1. CHECK OPTICAL SENSOR POWER SUPPLY INPUT

1. Turn power switch ON.
2. Turn lighting switch AUTO.
3. Check voltage between optical sensor harness connector and ground.

(+)		(–)	Voltage (Approx.)
Optical sensor			
Connector	Terminal		
M16	1	Ground	5 V

Is the inspection result normal?

YES >> GO TO 2.
NO >> GO TO 4.

2. CHECK OPTICAL SENSOR GROUND INPUT

Check voltage between optical sensor harness connector and ground.

(+)		(–)	Voltage (Approx.)
Optical sensor			
Connector	Terminal		
M16	3	Ground	0 V

Is the inspection result normal?

YES >> GO TO 3.
NO >> GO TO 6.

3. CHECK OPTICAL SENSOR SIGNAL OUTPUT

With illuminating the optical sensor, check voltage between optical sensor harness connector and ground.

(+)		(–)	Condition		Voltage (Approx.)
Optical sensor					
Connector	Terminal				
M16	2	Ground	Optical sensor	When illuminating	3.1 V or more *
				When shutting off light	0.6 V or less

*: Illuminate the optical sensor. The value may be less than the standard if brightness is weak.

Is the inspection result normal?

YES >> GO TO 7.
NO >> Replace the optical sensor. Refer to EXL-273, "Removal and Installation".

4. CHECK OPTICAL SENSOR OPEN CIRCUIT

1. Turn power switch OFF.
2. Disconnect optical sensor connector and BCM connector.
3. Check continuity between optical sensor harness connector and BCM harness connector.

Optical sensor		BCM		Continuity
Connector	Terminal	Connector	Terminal	
M16	1	M24	17	Yes

Is the inspection result normal?

YES >> GO TO 5.
NO >> Repair or replace harness.

5. CHECK OPTICAL SENSOR SHORT CIRCUIT

Check continuity between optical sensor harness connector and ground.

Optical sensor		Ground	Continuity
Connector	Terminal		
M16	1		No

Is the inspection result normal?

YES >> Replace BCM. Refer to BCS-72, "Removal and Installation".
NO >> Repair or replace harness.

6. CHECK OPTICAL SENSOR GROUND OPEN CIRCUIT

1. Turn power switch OFF.
2. Disconnect optical sensor connector and BCM connector.
3. Check continuity between optical sensor harness connector and BCM harness connector.

Optical sensor		BCM		Continuity
Connector	Terminal	Connector	Terminal	
M16	3	M24	18	Yes

Is the inspection result normal?

YES >> Replace BCM. Refer to BCS-72, "Removal and Installation".
NO >> Repair or replace harness.

7. CHECK OPTICAL SENSOR SIGNAL OPEN CIRCUIT

1. Turn power switch OFF.
2. Disconnect optical sensor connector and BCM connector.
3. Check continuity between optical sensor harness connector and BCM harness connector.

Optical sensor		BCM		Continuity
Connector	Terminal	Connector	Terminal	
M16	2	M24	14	Yes

Is the inspection result normal?

YES >> GO TO 8.
NO >> Repair or replace harness.

8. CHECK OPTICAL SENSOR SHORT CIRCUIT

Check continuity between optical sensor harness connector and ground.

Optical sensor		Ground	Continuity
Connector	Terminal		
M16	2		No

Is the inspection result normal?

YES >> Replace BCM. Refer to BCS-72, "Removal and Installation".
NO >> Repair or replace harness.

HAZARD SWITCH

Component Function Check

INFOID:0000000010634683

1. CHECK HAZARD SWITCH SIGNAL BY CONSULT

CONSULT DATA MONITOR
1. Turn power switch ON.
2. Select “HAZARD SW” in “Data Monitor” of “BCM (FLASHER)”.
3. While operating the hazard switch, check the monitor status.

Monitor item	Condition		Monitor status
HAZARD SW	Hazard switch	ON	On
		OFF	Off

Is the inspection result normal?

YES >> Hazard switch circuit is normal.
NO >> Refer to EXL-250, "Diagnosis Procedure".

Diagnosis Procedure

INFOID:0000000010634684

Regarding Wiring Diagram information. Refer to EXL-60, "Wiring Diagram".

1. CHECK HAZARD SWITCH SIGNAL INPUT

1. Turn power switch OFF.
2. Disconnect hazard switch connector.
3. Check voltage between hazard switch connector and ground.

(+)		(–)	Voltage (Approx.)
Hazard switch			
Connector	Terminal		
M45	2	Ground	Battery voltage

Is the inspection result normal?

YES >> GO TO 4.
NO >> GO TO 2.

2. CHECK HAZARD SWITCH SIGNAL OPEN CIRCUIT

1. Disconnect BCM connector.
2. Check continuity between hazard switch harness connector and BCM harness connector.

Hazard switch		BCM		Continuity
Connector	Terminal	Connector	Terminal	
M45	2	M24	29	Yes

Is the inspection result normal?

YES >> GO TO 3.
NO >> Repair or replace harness.

3. CHECK HAZARD SWITCH SIGNAL SHORT CIRCUIT

Check continuity between hazard switch harness connector and ground.

Hazard switch		Ground	Continuity
Connector	Terminal		
M45	2		No

Is the inspection result normal?

YES >> Replace BCM. Refer to BCS-72, "Removal and Installation".
NO >> Repair or replace harness.

4. CHECK HAZARD SWITCH GROUND OPEN CIRCUIT

Check continuity between hazard switch harness connector and ground.

Hazard switch		Ground	Continuity
Connector	Terminal		
M45	1		Yes

Is the inspection result normal?

YES >> Replace hazard switch. Refer to EXL-274, "Removal and Installation".
NO >> Repair or replace harness.

SYMPTOM DIAGNOSIS

EXTERIOR LIGHTING SYSTEM SYMPTOMS WITHOUT DAYTIME RUNNING LIGHT SYSTEM

WITHOUT DAYTIME RUNNING LIGHT SYSTEM : Symptom Table

INFOID:0000000010634685

CAUTION:
Perform the "Self Diagnostic Result" with CONSULT before the symptom diagnosis. Perform the trouble diagnosis if any DTC is detected.

Symptom		Possible cause	Inspection item
Headlamp (HI) is not turned ON.	One side	• Fuse • Halogen bulb (HI) • Harness between IPDM E/R and front combination lamp • Harness between front combination lamp and ground • IPDM E/R	Headlamp (HI) circuit Refer to EXL-225, "WITHOUT DAYTIME RUNNING LIGHT SYSTEM : Component Function Check".
	Both sides	**Symptom diagnosis** "BOTH SIDE HEADLAMPS (HI) ARE NOT TURNED ON" Refer to EXL-257, "WITHOUT DAYTIME RUNNING LIGHT SYSTEM : Diagnosis Procedure".	
High beam indicator lamp is not turned ON. [Headlamp (HI) is turned ON.]		Combination meter	• Combination meter Data monitor "HI-BEAM IND" • BCM (HEAD LAMP) Active test "HEADLAMP"
Headlamp (LO) is not turned ON. [Headlamp warning lamp is not turned ON.]	One side	• Fuse • Harness between IPDM E/R and front combination lamp • IPDM E/R	Headlamp (LO) circuit Refer to EXL-230, "Component Function Check".
	Both sides	**Symptom diagnosis** "BOTH SIDE HEADLAMPS (LO) ARE NOT TURNED ON" Refer to EXL-259, "Diagnosis Procedure".	
Each lamp is not turned ON/OFF using lighting switch AUTO.		• Combination switch • Harness between combination switch and BCM • BCM	Combination switch Refer to BCS-71, "Symptom Table".
		• Optical sensor • Harness between optical sensor and BCM • BCM	Optical sensor Refer to EXL-247, "Component Function Check".
Parking lamp is not turned ON.		• Fuse • Parking lamp bulb • Parking lamp bulb socket • Harness between IPDM E/R and front combination lamp • Harness between front combination lamp and ground • IPDM E/R	Parking lamp circuit Refer to EXL-235, "Component Function Check".
Front side marker lamp is not turned ON.		• Fuse • Front side marker lamp bulb • Front side marker lamp bulb socket • Harness between IPDM E/R and front side marker lamp • Harness between front side marker lamp and ground	Front side marker lamp circuit Refer to EXL-237, "Component Function Check".

Symptom		Possible cause	Inspection item
Tail lamp and rear side marker lamp are not turned ON.		• Fuse • Harness between IPDM E/R and rear combination lamp • Harness between rear combination lamp and ground • Rear combination lamp	Tail lamp circuit Refer to EXL-239, "Component Function Check".
License plate lamp is not turned ON.		• License plate lamp bulb • License plate lamp bulb socket • Harness between IPDM E/R and license plate lamp • Harness between license plate lamp and ground	License plate lamp circuit Refer to EXL-241, "Component Function Check".
Parking lamp, side marker lamp, tail lamp and license plate lamp are not turned OFF.		**Symptom diagnosis** "PARKING, LICENSE PLATE, SIDE MARKER AND TAIL LAMPS ARE NOT TURNED ON" Refer to EXL-260, "Diagnosis Procedure".	
Tail lamp indicator lamp is not turned ON. (Parking lamp, side marker lamp, tail lamp and license plate lamp are turned ON.)		Combination meter	• Combination meter Data monitor "LIGHT IND" • BCM (HEAD LAMP) Active test "TAIL LAMP"
Turn signal lamp does not blink.	Indicator lamp is normal. (Applicable side performs high flasher activation.)	• Turn signal lamp bulb • Turn signal lamp bulb socket • Harness between BCM and each turn signal lamp	Turn signal lamp circuit Refer to EXL-245, "Component Function Check".
	Indicator lamp is included.	• Combination switch • Harness between combination switch and BCM • BCM	Combination switch Refer to BCS-71, "Symptom Table".
Turn signal indicator lamp does not blink. (Turn signal lamp is normal.)	One side	Combination meter	—
	Both sides (Always)	• Turn signal indicator lamp signal • BCM • Combination meter	• Combination meter Data monitor "TURN IND" • BCM (FLASHER) Active test "FLASHER"
	Both sides (Only when activating hazard warning lamp with power switch OFF)	• Combination meter power supply and ground circuit • Combination meter	Combination meter Power supply and ground circuit Refer to MWI-85, "COMBINATION METER : Diagnosis Procedure".
• Hazard warning lamp does not activate. • Hazard warning lamp continues activating. (Turn signal is normal.)		• Hazard switch • Harness between hazard switch and BCM • BCM	Hazard switch Refer to EXL-250, "Component Function Check".
Front fog lamp is not turned ON.	One side	• Front fog lamp bulb • Harness between IPDM E/R and front fog lamp • IPDM E/R	Front fog lamp circuit Refer to EXL-243, "Component Function Check".
	Both sides	**Symptom diagnosis** "BOTH SIDE FRONT FOG LAMPS ARE NOT TURNED ON" Refer to EXL-261, "Diagnosis Procedure".	
Front fog lamp indicator is not turned ON. (Front fog lamp is turned ON.)		Combination meter	• Combination meter Data monitor "FR FOG IND" • BCM (HEAD LAMP) Active test "FR FOG LAMP"

WITH DAYTIME RUNNING LIGHT SYSTEM

WITH DAYTIME RUNNING LIGHT SYSTEM : Symptom Table

INFOID:0000000010634686

CAUTION:

Perform the "Self Diagnostic Result" with CONSULT before the symptom diagnosis. Perform the trouble diagnosis if any DTC is detected.

Symptom		Possible cause	Inspection item
Headlamp (HI) is not turned ON.	One side	• Fuse • Halogen bulb (HI) • Harness between IPDM E/R and headlamp (HI) • Harness between headlamp (HI) and ground • IPDM E/R	Headlamp (HI) circuit Refer to EXL-225, "WITHOUT DAYTIME RUNNING LIGHT SYSTEM : Component Function Check".
		• Harness between IPDM E/R and daytime running light relay • Daytime running light relay • IPDM E/R	Daytime running light relay circuit Refer to EXL-226, "WITH DAYTIME RUNNING LIGHT SYSTEM : Component Function Check".
	Both sides	**Symptom diagnosis** "BOTH SIDE HEADLAMPS (HI) ARE NOT TURNED ON" Refer to EXL-257, "WITH DAYTIME RUNNING LIGHT SYSTEM : Diagnosis Procedure".	
High beam indicator lamp is not turned ON. [Headlamp (HI) is turned ON.]		Combination meter	• Combination meter Data monitor "HI-BEAM IND" • BCM (HEAD LAMP) Active test "HEADLAMP"
Headlamp (LO) is not turned ON.	One side	• Fuse • halogen bulb (LO) • Harness between IPDM E/R and headlamp lamp (LO) • Harness between headlamp (LO) and ground • IPDM E/R	Headlamp (LO) circuit Refer to EXL-230, "Component Function Check".
	Both sides	**Symptom diagnosis** "BOTH SIDE HEADLAMPS (LO) ARE NOT TURNED ON" Refer to EXL-259, "Diagnosis Procedure".	
Each lamp is not turned ON/OFF with lighting switch AUTO.		• Combination switch • Harness between combination switch and BCM • BCM	Combination switch Refer to BCS-71, "Symptom Table".
		• Optical sensor • Harness between optical sensor and BCM • BCM	Optical sensor Refer to EXL-247, "Component Function Check".
Daytime running light is not turned ON. [Headlamp (HI) is turned ON.]		• Fuse • Harness between IPDM E/R and daytime running light relay • Daytime running light relay • IPDM E/R • BCM • ECM • Combination meter	• Daytime running light relay circuit Refer to EXL-226, "WITH DAYTIME RUNNING LIGHT SYSTEM : Component Function Check". • BCM (HEADLAMP) Data monitor "ENGINE STATE" • Combination meter Data monitor "PKB SW" • BCM (HEADLAMP) Active test "DAYTIME RUNNING LIGHT"
Parking lamp is not turned ON.		• Fuse • Parking lamp bulb • Harness between IPDM E/R and front combination lamp • IPDM E/R	Parking lamp circuit Refer to EXL-235, "Component Function Check".

Symptom		Possible cause	Inspection item
Front side marker lamp is not turned ON.		• Front side marker lamp bulb • Harness between IPDM E/R and front side marker lamp • Harness between front side marker lamp and ground • IPDM E/R	Front side marker lamp circuit Refer to EXL-237, "Component Function Check".
Tail lamp (Rear side marker lamp) is not turned ON.		• Fuse • Tail lamp bulb • Harness between IPDM E/R and rear combination lamp • Harness between and rear combination lamp and ground	Tail lamp circuit Refer to EXL-239, "Component Function Check".
License plate lamp is not turned ON.		• License plate lamp bulb • Harness between IPDM E/R and license plate lamp • Harness between license plate lamp and ground	License plate lamp circuit Refer to EXL-241, "Component Function Check".
Parking lamp, side marker lamp, tail lamp and license plate lamp are not turned ON.		**Symptom diagnosis** “PARKING, SIDE MARKER, LICENSE PLATE AND TAIL LAMPS ARE NOT TURNED ON” Refer to EXL-260, "Diagnosis Procedure".	
Tail lamp indicator is not turned ON. (Exterior lamps are turned ON.)		Combination meter	• Combination meter Data monitor “LIGHT IND” • BCM (HEADLAMP) Active test “TAIL LAMP”
Turn signal lamp does not blink.	Indicator lamp is normal. (Applicable side performs high flasher activation.)	• Turn signal lamp bulb • Door mirror • Harness between BCM and each turn signal lamp • Harness between each turn signal lamp and ground	Turn signal lamp circuit Refer to EXL-245, "Component Function Check".
	Indicator lamp is included.	• Combination switch • Harness between combination switch and BCM • BCM	Combination switch Refer to BCS-71, "Symptom Table".
Turn signal indicator lamp does not blink. (Turn signal lamp is normal.)	One side	Combination meter	—
	Both sides (Always)	• Turn signal indicator lamp signal • BCM • Combination meter	• Combination meter Data monitor “TURN IND” • BCM (FLASHER) Active test “FLASHER”
	Both sides (Only when activating hazard warning lamp with power switch OFF)	• Combination meter power supply and ground circuit • Combination meter	Combination meter Power supply and ground circuit Refer to MWI-85, "COMBINATION METER : Diagnosis Procedure".
• Hazard warning lamp does not activate. • Hazard warning lamp continues activating. (Turn signal is normal.)		• Hazard switch • Harness between hazard switch and BCM • Harness between hazard switch and ground • BCM	Hazard switch circuit Refer to EXL-250, "Component Function Check".
Front fog lamp is not turned ON.	One side	• Front fog lamp bulb • Harness between IPDM E/R and front fog lamp • Harness between front fog lamp and ground • IPDM E/R	Front fog lamp circuit Refer to EXL-243, "Component Function Check".
	Both sides	**Symptom diagnosis** “BOTH SIDE FRONT FOG LAMPS ARE NOT TURNED ON” Refer to EXL-261, "Diagnosis Procedure".	

NORMAL OPERATING CONDITION

Description

INFOID:0000000010634687

AUTO LIGHT SYSTEM

The headlamp may not be turned ON/OFF immediately after passing dark area or bright area (short tunnel, sky bridge, shadowed area, etc.) while using the auto light system. This is caused by the control difference. This is normal.

BOTH SIDE HEADLAMPS (HI) ARE NOT TURNED ON WITHOUT DAYTIME RUNNING LIGHT SYSTEM

WITHOUT DAYTIME RUNNING LIGHT SYSTEM : Description

INFOID:0000000010634688

Both side headlamps (HI) are not turned ON when setting to the lighting switch HI or PASS.

WITHOUT DAYTIME RUNNING LIGHT SYSTEM : Diagnosis Procedure

INFOID:0000000010634689

1. COMBINATION SWITCH INSPECTION

Check combination switch. Refer to BCS-71, "Symptom Table".

Is the inspection result normal?

YES >> GO TO 2.
NO >> Repair or replace the malfunctioning part.

2. CHECK HEADLAMP (HI) REQUEST SIGNAL INPUT

CONSULT DATA MONITOR

1. Select “HL HI REQ” in “Data Monitor” of “IPDM E/R”.
2. While operating the lighting switch, check the monitor status.

Monitor item	Condition		Monitor status
HL HI REQ	Lighting switch (2ND)	HI or PASS	On
		LO	Off

Is the inspection result normal?

YES >> GO TO 3.
NO >> Replace BCM. Refer to BCS-72, "Removal and Installation".

3. HEADLAMP (HI) CIRCUIT INSPECTION

Check headlamp (HI) circuit. Refer to EXL-225, "WITHOUT DAYTIME RUNNING LIGHT SYSTEM : Component Function Check".

Is the inspection result normal?

YES >> Refer to GI-53, "Intermittent Incident".
NO >> Repair or replace the malfunctioning part.

WITH DAYTIME RUNNING LIGHT SYSTEM

WITH DAYTIME RUNNING LIGHT SYSTEM : Description

INFOID:0000000010634690

Both side headlamps (HI) are not turned ON when setting to the lighting switch HI or PASS.

WITH DAYTIME RUNNING LIGHT SYSTEM : Diagnosis Procedure

INFOID:0000000010634691

1. COMBINATION SWITCH INSPECTION

Check combination switch. Refer to BCS-71, "Symptom Table".

Is the inspection result normal?

YES >> GO TO 2.
NO >> Repair or replace the malfunctioning part.

2. CHECK HEADLAMP (HI) REQUEST SIGNAL INPUT

CONSULT DATA MONITOR

1. Select “HL HI REQ” in “Data monitor” of “IPDM E/R”.
2. While operating the lighting switch, check the monitor status.

Monitor item	Condition		Monitor status
HL HI REQ	Lighting switch (2ND)	HI or PASS	On
		LO	Off

Is the inspection result normal?

YES >> GO TO 3.
NO >> Replace BCM. Refer to BCS-72, "Removal and Installation".

3. HEADLAMP (HI) CIRCUIT INSPECTION

Check headlamp (HI) circuit. Refer to EXL-226, "WITH DAYTIME RUNNING LIGHT SYSTEM : Component Function Check".

Is the inspection result normal?

YES >> Refer to GI-53, "Intermittent Incident".
NO >> Repair or replace the malfunctioning part.

BOTH SIDE HEADLAMPS (LO) ARE NOT TURNED ON

Description

INFOID:0000000010634692

Both side headlamps (LO) are not turned ON in any condition.

Diagnosis Procedure

INFOID:0000000010634693

1. CHECK COMBINATION SWITCH

Check combination switch. Refer to BCS-71, "Symptom Table".

Is the inspection result normal?

YES >> GO TO 2.
NO >> Repair or replace the malfunctioning part.

2. CHECK HEADLAMP (LO) REQUEST SIGNAL INPUT

CONSULT DATA MONITOR

1. Select “HL LO REQ” in “Data Monitor” of “IPDM E/R”.
2. While operating the lighting switch, check the monitor status.

Monitor item	Condition		Monitor status
HL LO REQ	Lighting switch	2ND	On
		OFF	Off

Is the inspection result normal?

YES >> GO TO 3.
NO >> Replace BCM. Refer to BCS-72, "Removal and Installation".

3. HEADLAMP (LO) CIRCUIT INSPECTION

Check headlamp (LO) circuit. Refer to EXL-230, "Component Function Check".

Is the inspection result normal?

YES >> Refer to GI-53, "Intermittent Incident".
NO >> Repair or replace the malfunctioning part.

PARKING, LICENSE PLATE, SIDE MARKER AND TAIL LAMPS ARE NOT TURNED ON

Description

INFOID:0000000010634694

The parking, license plate, side marker, tail lamps and each illumination are not turned ON in any condition.

Diagnosis Procedure

INFOID:0000000010634695

1. COMBINATION SWITCH INSPECTION

Check combination switch. Refer to BCS-71, "Symptom Table".

Is the combination switch normal?

YES >> GO TO 2.
NO >> Repair or replace the malfunctioning part.

2. CHECK TAIL LAMP RELAY REQUEST SIGNAL INPUT

CONSULT DATA MONITOR

1. Select “TAIL & CLR REQ” in “Data Monitor” of “IPDM E/R”.
2. While operating the lighting switch, check the monitor status.

Monitor item	Condition		Monitor status
TAIL & CLR REQ	Lighting switch	1ST	On
		OFF	Off

Is the inspection result normal?

YES >> Replace IPDM E/R. Refer to PCS-30, "Removal and Installation".
NO >> Replace BCM. Refer to BCS-72, "Removal and Installation".

BOTH SIDE FRONT FOG LAMPS ARE NOT TURNED ON

Description

INFOID:0000000010634696

The front fog lamps are not turned ON in any condition.

Diagnosis Procedure

INFOID:0000000010634697

Regarding Wiring Diagram information. Refer to EXL-31, "Wiring Diagram".

1. CHECK FUSE

Check that the following fuse is not blown:

Unit	Location	Fuse No.	Capacity
Front fog lamp	IPDM E/R	#50	15 A

Is the inspection result normal?

YES >> GO TO 2.
NO >> Replace the blown fuse after repairing the affected circuit.

2. COMBINATION SWITCH INSPECTION

Check combination switch. Refer to BCS-71, "Symptom Table".

Is the inspection result normal?

YES >> GO TO 3.
NO >> Repair or replace the malfunctioning part.

3. CHECK FRONT FOG LAMP REQUEST SIGNAL INPUT

CONSULT DATA MONITOR

1. Select “FR FOG REQ” in “Data Monitor” of “IPDM E/R”.
2. While operating the front fog lamp switch, check the monitor status.

Monitor item	Condition		Monitor status
FR FOG REQ	Front fog lamp switch (With lighting switch 2ND)	ON	On
		OFF	Off

Is the item status normal?

YES >> Replace IPDM E/R. Refer to PCS-30, "Removal and Installation".
NO >> Replace BCM. Refer to BCS-72, "Removal and Installation".

PERIODIC MAINTENANCE

HEADLAMP AIMING ADJUSTMENT

Description

INFOID:0000000010634698

PREPARATION BEFORE ADJUSTING

NOTE:

- For details, refer to the regulations in your own country.
- Perform aiming if the vehicle front body has been repaired and/or the headlamp assembly has been replaced.

Before performing aiming adjustment, check the following.

- Adjust the tire pressure to the specification.
- Coolant and engine oil filled to correct level, fuel tank full.
- Confirm spare tire, jack and tools are stowed properly.
- Maintain unloaded vehicle condition. (Remove luggage from the passenger compartment and the trunk room.)
- Carefully wipe any dirt from headlamp lens.

  CAUTION:

  Do not use organic solvent (thinner, gasoline etc.)
- Place a driver or equivalent weight of 68.5 kg (150 lb) on the driver seat.

AIMING ADJUSTMENT SCREW

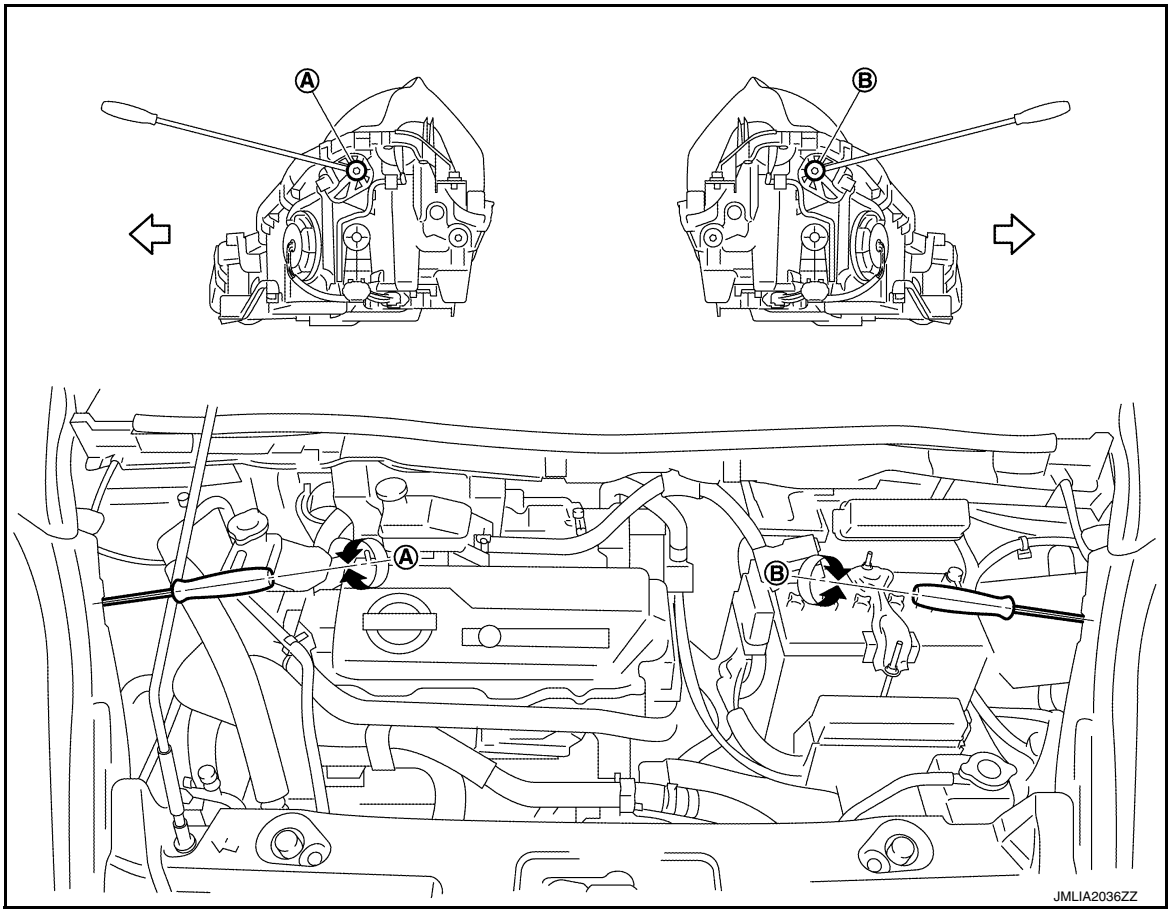

A Headlamp (RH) (UP/DOWN) adjustment screw

B. Headlamp (LH) (UP/DOWN) adjustment screw

⇦ Vehicle center

Adjustment screw		Rotation	Facing direction
A	Headlamp RH (UP/DOWN)	Clockwise	DOWN
		Counterclockwise	UP
B	Headlamp LH (UP/DOWN)	Clockwise	DOWN
		Counterclockwise	UP

Aiming Adjustment Procedure

INFOID:0000000010634699

1. Place the screen.
   NOTE:
   - Stop the vehicle facing the wall.
   - Place the aiming screen on the same level and flat surface as the vehicle.
2. Face the aiming screen with the vehicle. Maintain 10 m (33 ft) between the headlamp center and the aiming screen.
3. Start the engine. Turn the headlamp (LO) ON.
   NOTE:
   Block the opposite headlamp from projecting a beam pattern onto the aiming screen, using a suitable object. Aim each headlamp individually.
   CAUTION:
   Do not cover the lens surface with a tape etc. The lens is made of resin.
4. Measure the distance (X) between the horizontal center line of headlamp (H) and the cutoff line (A) within the light axis measurement range (R) from the vertical center line ahead of headlamp (V).

Light axis measurement range (R) : 350 ± 175 mm (13.78 ± 6.89 in)

Low beam distribution on the screen

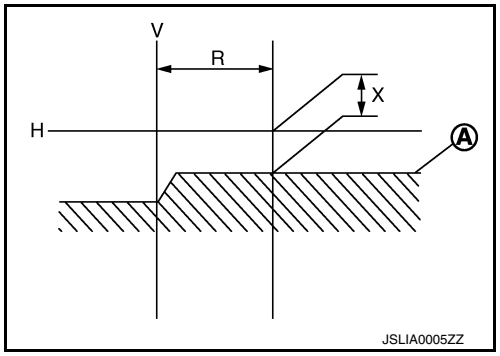

5. Adjust the cutoff line height (X) with the aiming adjustment screw so as to enter in the adjustment range (M–N) according to the horizontal center line of headlamp (H).

unit: mm (in)

Horizontal center line of headlamp (H)	Highest cutoff line height (M)	Lowest cutoff line height (N)
700 (27.56) or less	4 (0.16)	30 (1.18)
701(27.60) – 800 (31.50)	4 (0.16)	30 (1.18)
801 (31.54) or more	17 (0.67)	44 (1.73)

Side view

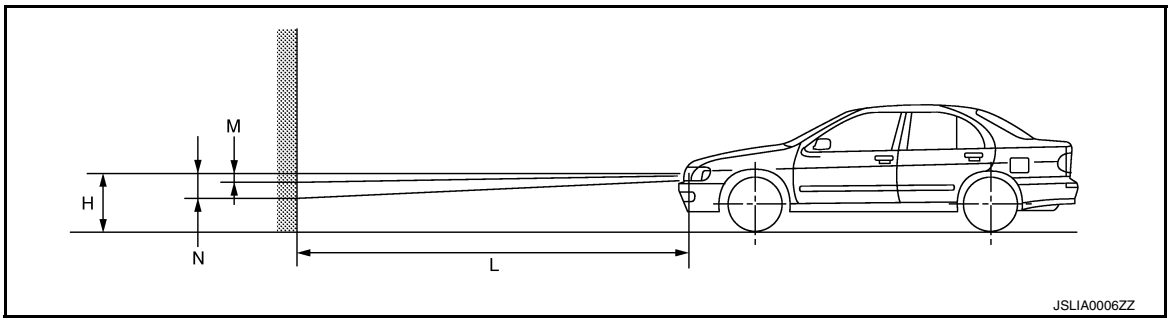

Distance between the headlamp center and the screen (L) : 10 m (33 ft)

FRONT FOG LAMP AIMING ADJUSTMENT

Description

INFOID:0000000010634700

PREPARATION BEFORE ADJUSTING

NOTE:
- For details, refer to the regulations in your own country.
- Perform aiming if the vehicle front body has been repaired and/or the fog lamp assembly has been replaced.

Before performing aiming adjustment, check the following.
- Adjust the tire pressure to the specification.
- Fill with coolant and each oil.
- Maintain the unloaded vehicle condition. (Remove luggage from the passenger compartment and the trunk room.)
  NOTE:
  Do not remove the temporary tire, jack and on-vehicle tool.
- Wipe out dirt on the fog lamp.
  CAUTION:
  Never use organic solvent (thinner, gasoline etc.)
- Ride alone on the driver seat.

AIMING ADJUSTMENT SCREW

- Turn the aiming adjusting screw for adjustment.

  A: DOWN

  B: UP

- For the position and direction of the adjusting screw, refer to the figure.
  NOTE:
  A screwdriver or hexagonal wrench [6 mm (0.24 in)] can be used for adjustment.

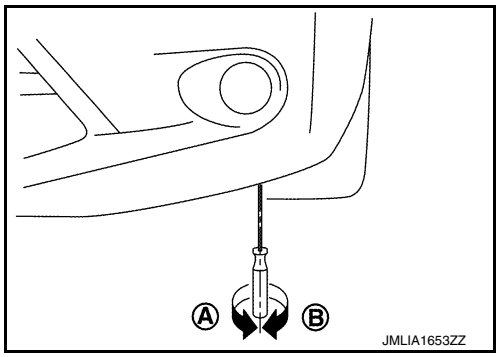

Aiming Adjustment Procedure

INFOID:0000000010634701

1. Place the screen.
   NOTE:
   - Stop the vehicle facing the wall.
   - Place the aiming screen on the same level and flat surface as the vehicle.
2. Face the aiming screen with the vehicle. Maintain 10 m (33 ft) between the front fog lamp center and the screen.
3. Start the motor. Turn the front fog lamp ON.
   NOTE:
   Block the headlamps from projecting a beam pattern onto the aiming screen, using a suitable object. Aim each headlamp individually.
   CAUTION:
   Do not cover the lens surface with a tape etc. The lens is made of resin.
4. Adjust the cutoff line height (A) with the aiming adjustment screw so that the distance (X) between the horizontal center line of front fog lamp (H) and (A) becomes 150 mm (5.906 in).

Front fog lamp light distribution on the screen

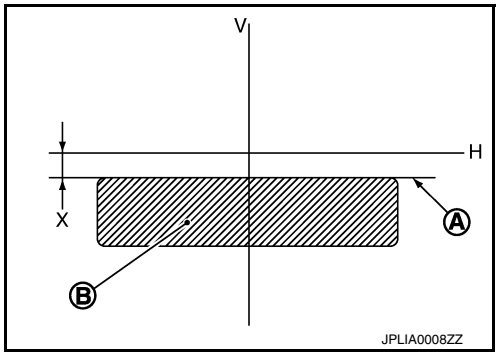

A : Cutoff line
B : High illuminance area
H : Horizontal center line of front fog lamp
V : Vertical center line of front fog lamp
X : Cutoff line height

REMOVAL AND INSTALLATION

FRONT COMBINATION LAMP

Exploded View

INFOID:0000000010634702

REMOVAL

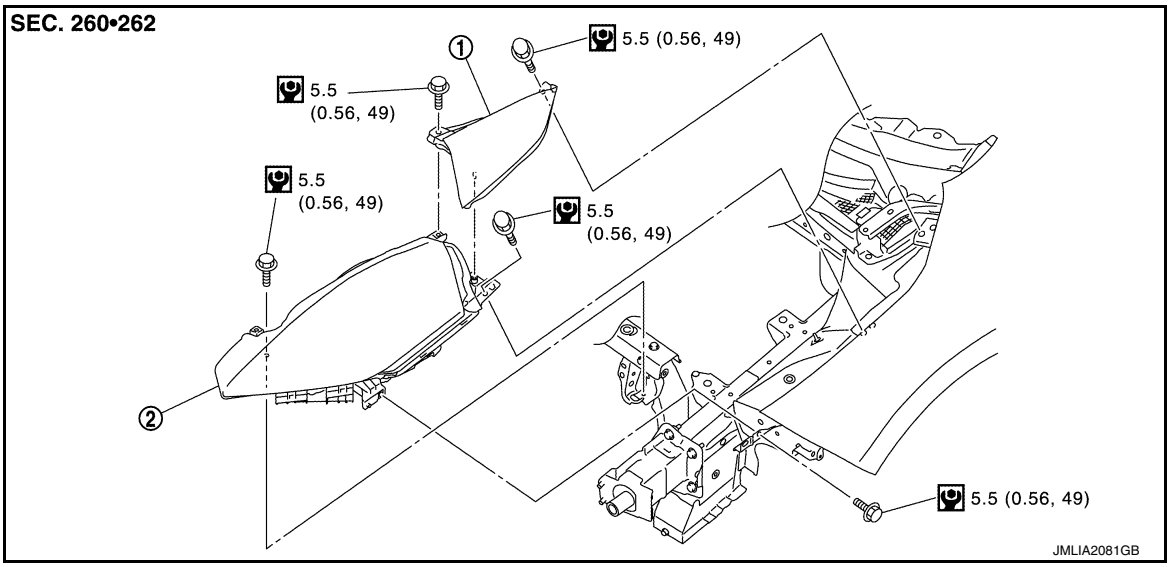

1. Front side marker lamp
2. Front combination lamp

: N·m (kg-m, in-lb)

DISASSEMBLY

Front combination lamp

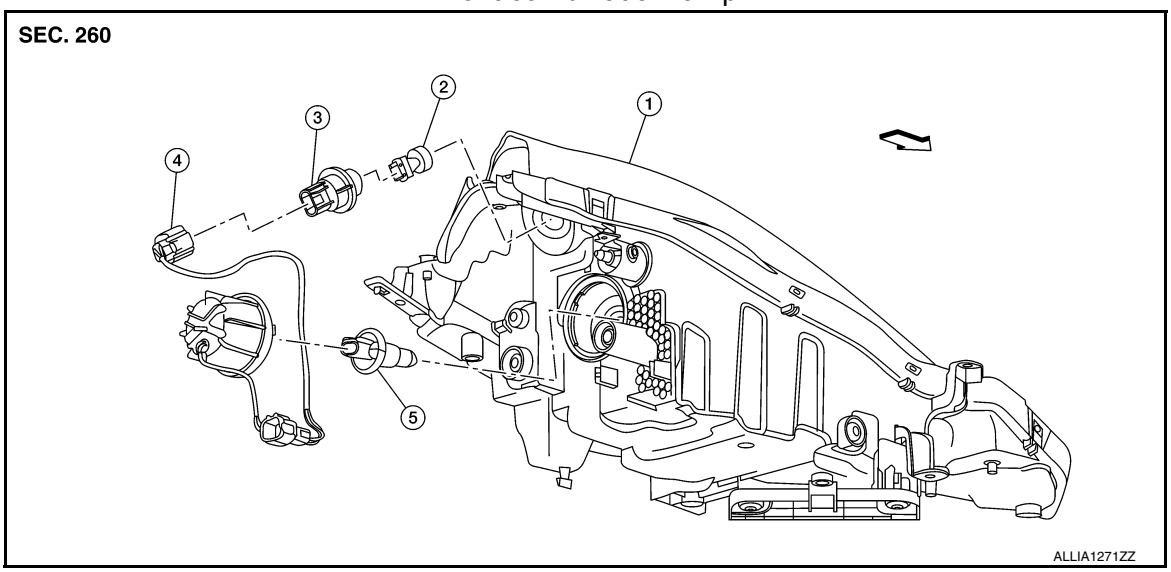

1. Housing assembly
2. Front turn signal lamp bulb
3. Front turn signal lamp bulb socket
4. Harness
5. Halogen bulb

: Vehicle front

Removal and Installation

INFOID:0000000010634703

CAUTION:

Disconnect the 12V battery negative terminal or remove the fuse to electric leakage. Refer to EXL-8, "Precaution for Removing 12V Battery".

REMOVAL

1. Remove front bumper fascia. Refer to EXT-13, "Removal and Installation".
2. Remove front side marker lamp mounting bolts.
3. Pull up front side marker lamp, disconnect the front side marker lamp harness connector and remove the front side marker lamp.
4. Remove front combination lamp mounting bolts.
5. Pull out front combination lamp forward the vehicle, and then disconnect the connector before removing front combination lamp.

INSTALLATION

Note the following item, and then install in the reverse order of removal.

NOTE:

After installation, perform aiming adjustment. Refer to EXL-262, "Description".

Bulb Replacement

INFOID:0000000010634704

CAUTION:

- **Disconnect the 12V battery negative terminal or remove the fuse to electric leakage. Refer to EXL-151, "Precaution for Removing 12V Battery".**
- **After installing the bulb, install the resin cap and the bulb socket securely for watertightness.**
- **Never touch the glass of bulb directly by hand. Keep grease and other oily matters away from it to prevent damage to the bulb.**
- **Never touch bulb by hand while it is lit or right after being turned off to prevent a burns.**
- **Never leave bulb out of lamp reflector for a long time because dust, moisture smoke, etc. may affect the performance of lamp. When replacing bulb, be sure to replace it with new one.**

HEADLAMP BULB

1. Rotate resin cap (1) counterclockwise and unlock it.

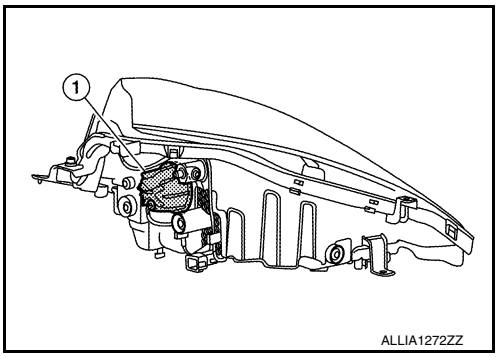

2. Rotate headlamp bulb (2) counterclockwise and unlock it.
3. Disconnect headlamp bulb from the harness connector (1) and remove.

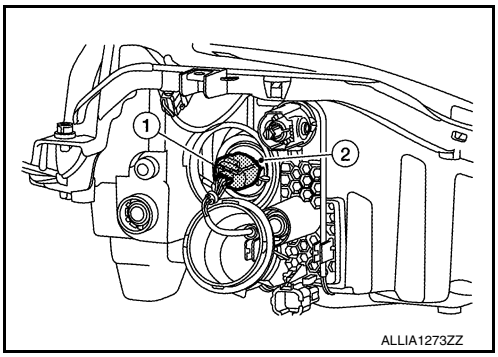

FRONT TURN SIGNAL LAMP BULB

1. Rotate bulb socket counterclockwise and unlock it.
2. Remove bulb from the bulb socket.

Disassembly and Assembly

INFOID:0000000010634705

DISASSEMBLY

1. Rotate resin cap counterclockwise and unlock it.
2. Rotate headlamp bulb counterclockwise and unlock it.
3. Disconnect headlamp bulb harness connector.
4. Rotate front turn signal lamp bulb socket counterclockwise and unlock it.
5. Remove front turn signal lamp bulb from bulb socket.
6. Remove combination lamp harness connector.

ASSEMBLY

Assembly is in the reverse order of disassembly.

FRONT SIDE MARKER LAMP

Exploded View

INFOID:0000000010634707

REMOVAL

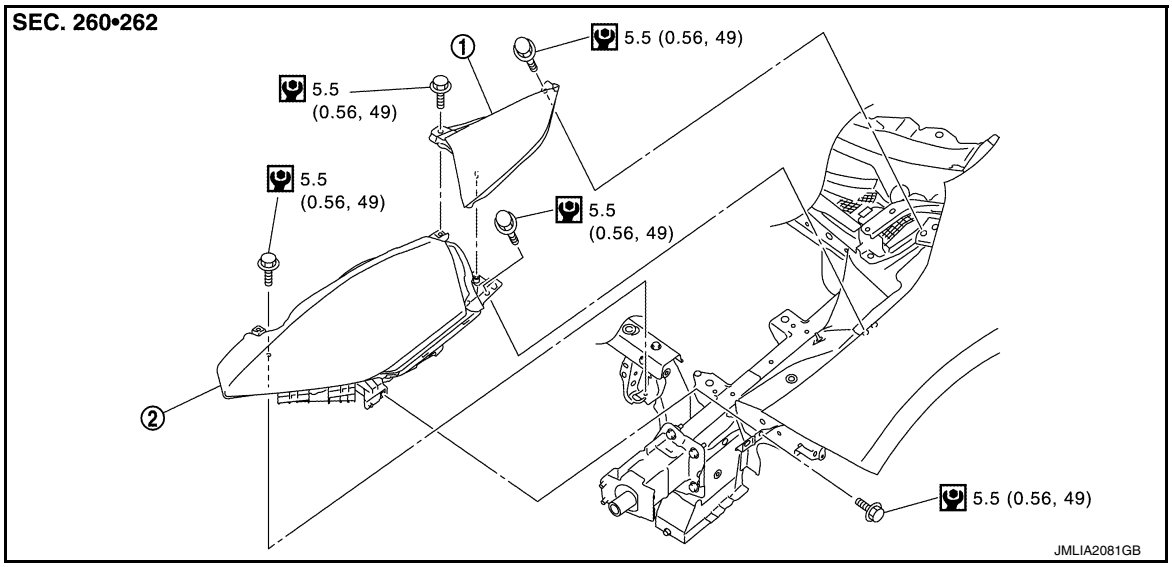

1. Front side marker lamp
2. Front combination lamp

DISASSEMBLY

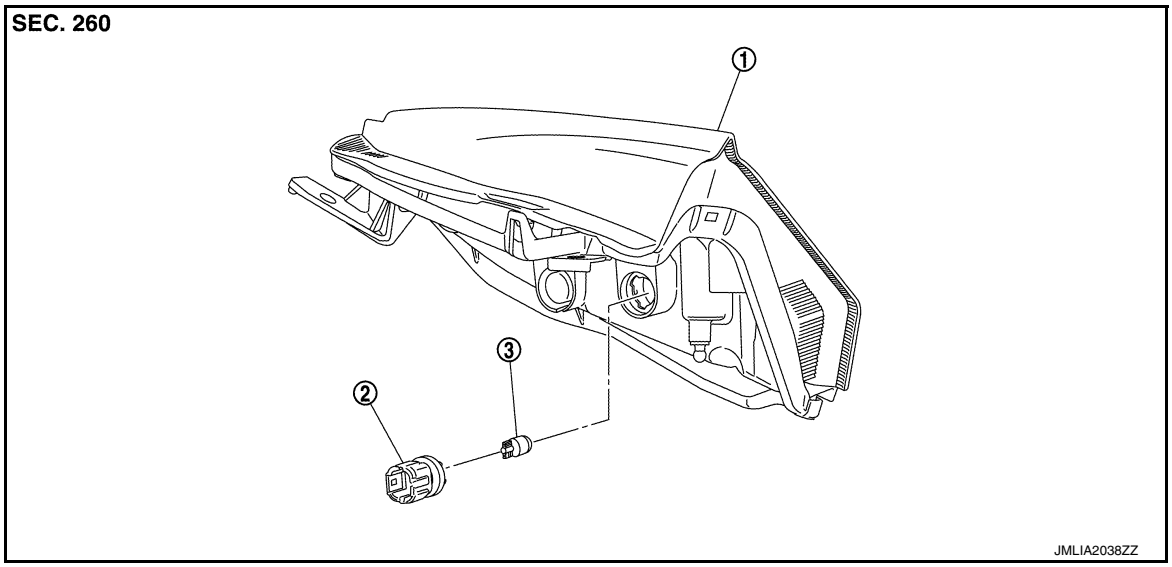

1. Front side marker lamp housing
2. Front side marker lamp bulb socket
3. Front side marker lamp bulb

REMOVAL

1. Remove front side marker lamp mounting bolts.
2. Pull up front side marker lamp and disconnect the harness connector.
3. Remove front side marker lamp.

Removal and Installation

INFOID:0000000010634708

Bulb Replacement

INFOID:0000000010634709

CAUTION:

- **After installing the bulb, install the resin cap and the bulb socket securely for watertightness.**
- **Never touch the glass of bulb directly by hand. Keep grease and other oily matters away from it to prevent damage to the bulb.**
- **Never touch bulb by hand while it is lit or right after being turned off to prevent a burns.**
- **Never leave bulb out of lamp reflector for a long time because dust, moisture smoke, etc. may affect the performance of lamp. When replacing bulb, be sure to replace it with new one.**

FRONT SIDE MARKER LAMP BULB

1. Rotate bulb socket counterclockwise and unlock it.
2. Remove bulb from the bulb socket.

LIGHTING & TURN SIGNAL SWITCH

Exploded View

INFOID:0000000010634710

The lighting & turn signal switch is integrated in the combination switch. Refer to BCS-73, "Removal and Installation".

OPTICAL SENSOR

Exploded View

INFOID:0000000010634711

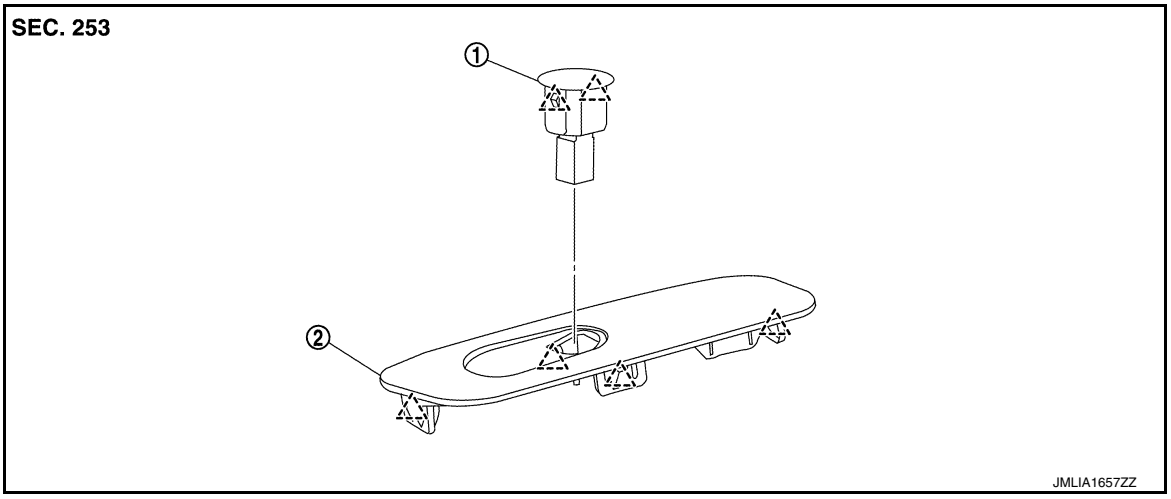

1. Optical sensor
2. Switch panel

: Pawl

Removal and Installation

INFOID:0000000010634712

REMOVAL

1. Insert suitable tool between the switch panel and the instrument upper panel and release switch panel pawls.
2. Disconnect the optical sensor connector.
3. Using a suitable tool release pawls and remove optical sensor from switch panel.

INSTALLATION

Installation is in the reverse order of removal.

HAZARD SWITCH

Exploded View

INFOID:0000000010634713

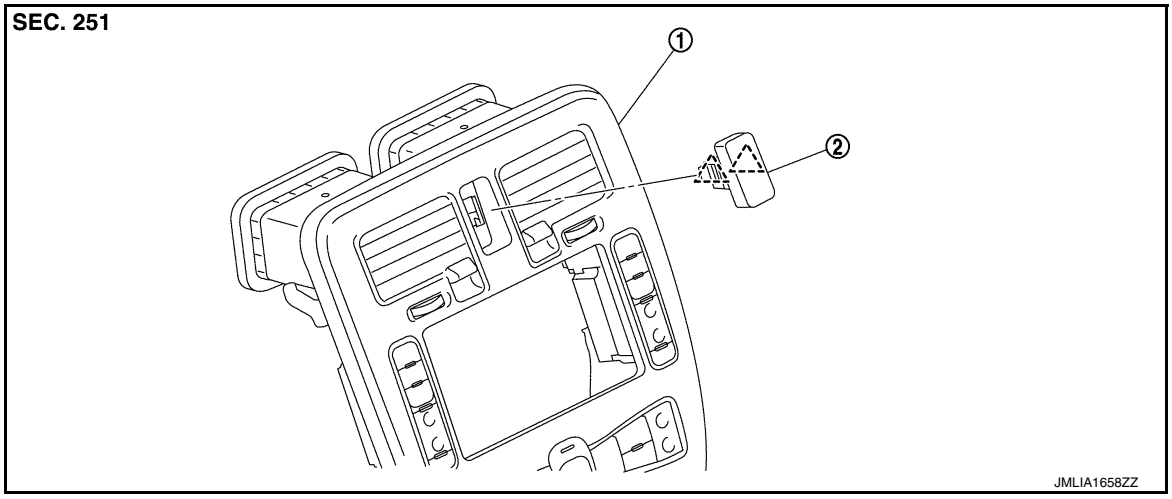

1. Cluster lid C
2. Hazard switch

: Pawl

Removal and Installation

INFOID:0000000010634714

REMOVAL

1. Remove cluster lid C. Refer to IP-17, "Removal and Installation".
2. Disengage hazard switch fixing pawls, and then remove hazard switch.

INSTALLATION

Install in the reverse order of removal.

REAR COMBINATION LAMP

Exploded View

INFOID:0000000010634715

REMOVAL

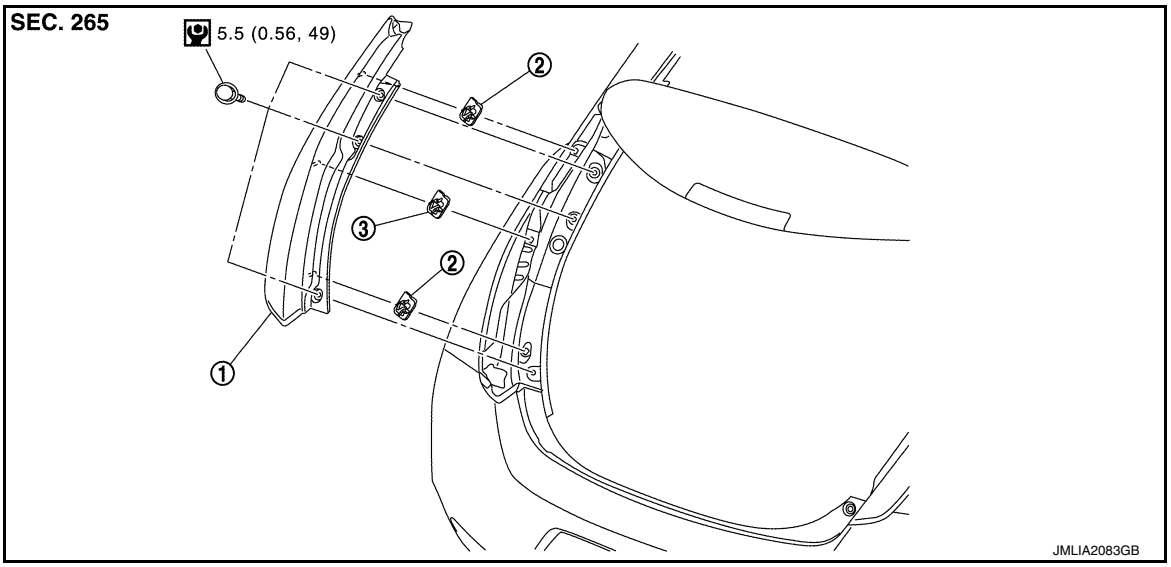

1. Rear combination lamp
2. Grommet A
3. Grommet B

: N·m (kg-m, in-lb)

DISASSEMBLY

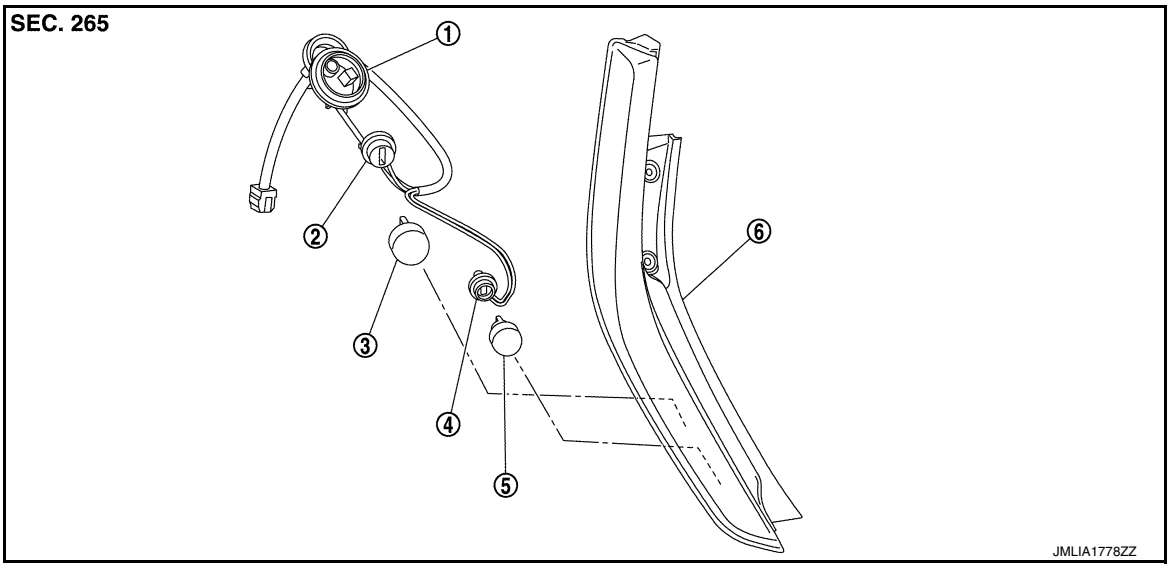

1. Rear combination lamp harness
2. Rear turn signal bulb socket
3. Rear turn signal bulb
4. Buck-up lamp bulb socket
5. Buck-up lamp bulb
6. Rear combination lamp housing assembly

Removal and Installation

INFOID:0000000010634716

CAUTION:

- **Fogging of rear combination lamp inside is not a malfunction. Never replace parts. Fogging is a symptom in which inner surface of lens becomes whitely clouded, without there being visible water drops or water spots, as if lens is made of frosted-glass.**

REMOVAL

1. Remove luggage side lower finisher. Refer to INT-42, "LUGGAGE SIDE LOWER FINISHER : Removal and Installation".
2. Disconnect rear combination lamp connector.
3. Remove rear combination lamp mounting bolts.
4. Insert a shop cloth (B) into clearance (A) between rear combination lamp (1) and rear fender panel (2), or apply protective tape.

   CAUTION:
   - **To prevent rear fender panel paint surface from being damaged, always apply protection using a shop cloth or protective tape.**
   - **When using protective tape, apply protective tape to both rear fender panel and rear combination lamp.**

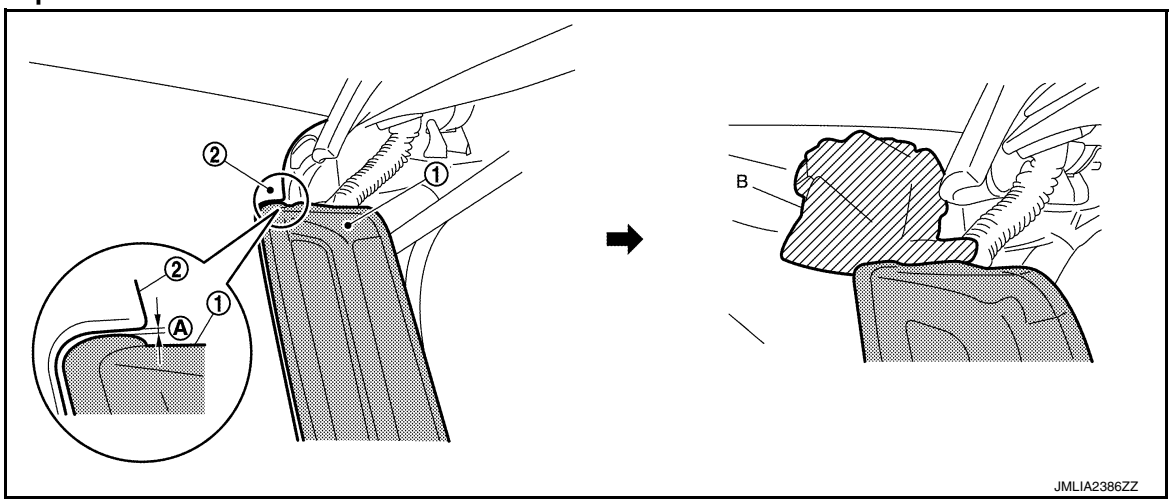

5. Pull rear combination lamp toward vehicle rear side, as shown by the arrow in the figure.

   : Clip

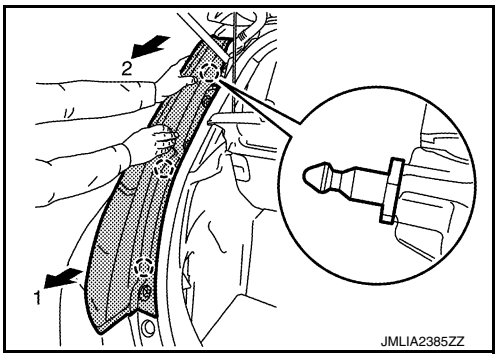

6. Remove rear combination lamp.

INSTALLATION

Note the following item, and then install in the reverse order of removal.

CAUTION:

When installing rear combination lamp, fix harness using harness fixing hook (A) on backside of rear combination lamp housing and place harness toward vehicle inside so that harness is not pinched by rear fender panel.

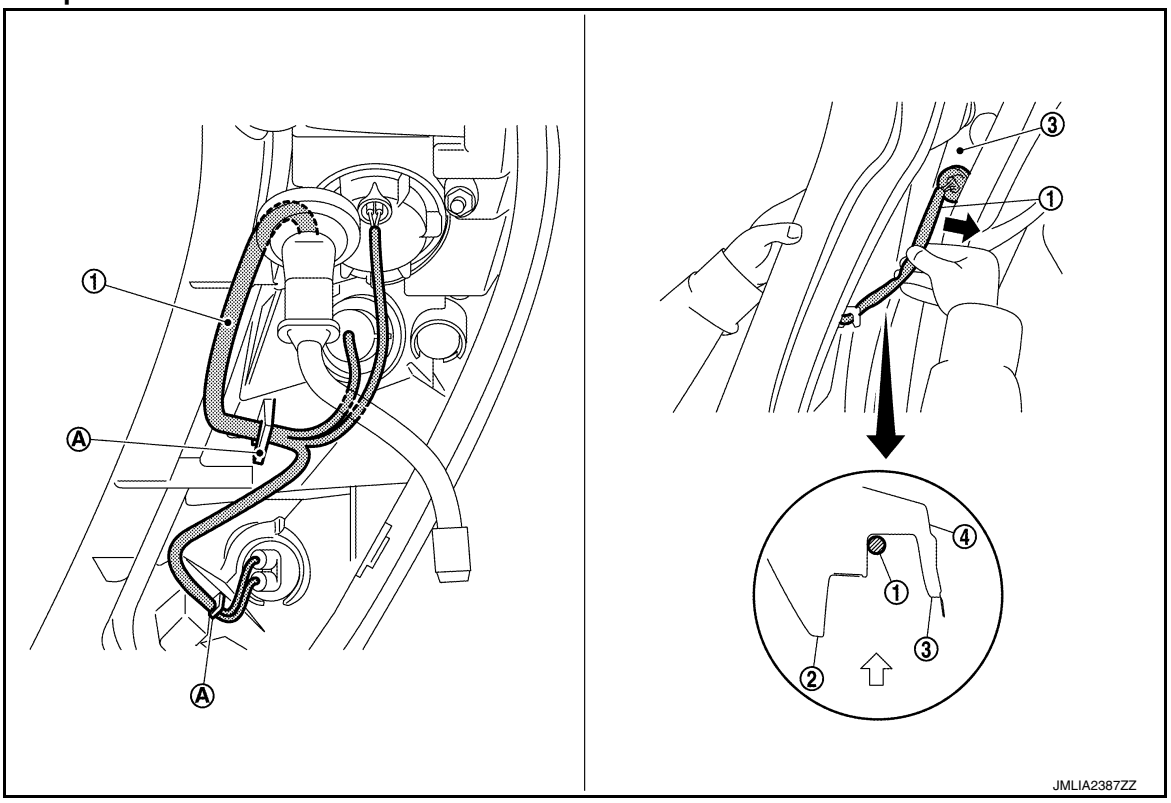

1. Harness
2. Rear fender panel
3. Rear fender extension
4. Rear inner panel

⇦ : Vehicle front

Replacement

INFOID:0000000010634717

CAUTION:

- **Never touch the glass of bulb directly by hand. Keep grease and other oily matters away from it. Never touch bulb by hand while it is lit or right after being turned off.**
- **Never leave bulb out of lamp reflector for a long time because dust, moisture smoke, etc. may affect the performance of lamp. When replacing bulb, be sure to replace it with new one.**

STOP/TAIL LAMP BULB

LED is used for stop/tail lamp bulb. Always replace rear combination lamp assembly as a unit, when bulb is to be replaced because of malfunction.

REAR TURN SIGNAL LAMP BULB

1. Remove rear combination lamp mounting bolts.
2. Insert a shop cloth (B) into clearance (A) between rear combination lamp (1) and rear fender panel (2), or apply protective tape.
   CAUTION:
   - **To prevent rear fender panel paint surface from being damaged, always apply protection using a shop cloth or protective tape.**

- **When using protective tape, apply protective tape to both rear fender panel and rear combination lamp.**

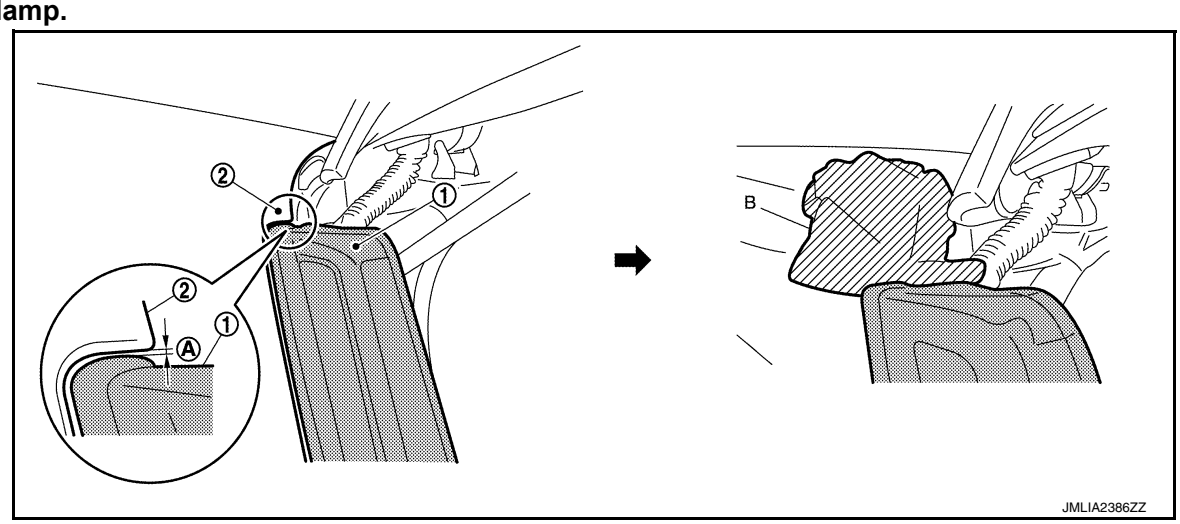

3. Pull rear combination lamp toward vehicle rear side, as shown by the arrow in the figure.

   : Clip

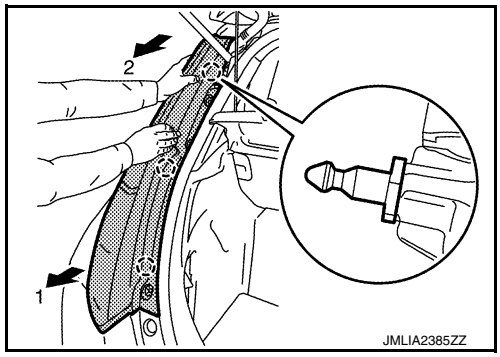

4. Rotate bulb socket counterclockwise and unlock it.
5. Remove bulb from the socket.

BACK-UP LAMP BULB

1. Remove rear combination lamp mounting bolts.
2. Insert a shop cloth (B) into clearance (A) between rear combination lamp (1) and rear fender panel (2), or apply protective tape.

   CAUTION:
   - **To prevent rear fender panel paint surface from being damaged, always apply protection using a shop cloth or protective tape.**
   - **When using protective tape, apply protective tape to both rear fender panel and rear combination lamp.**

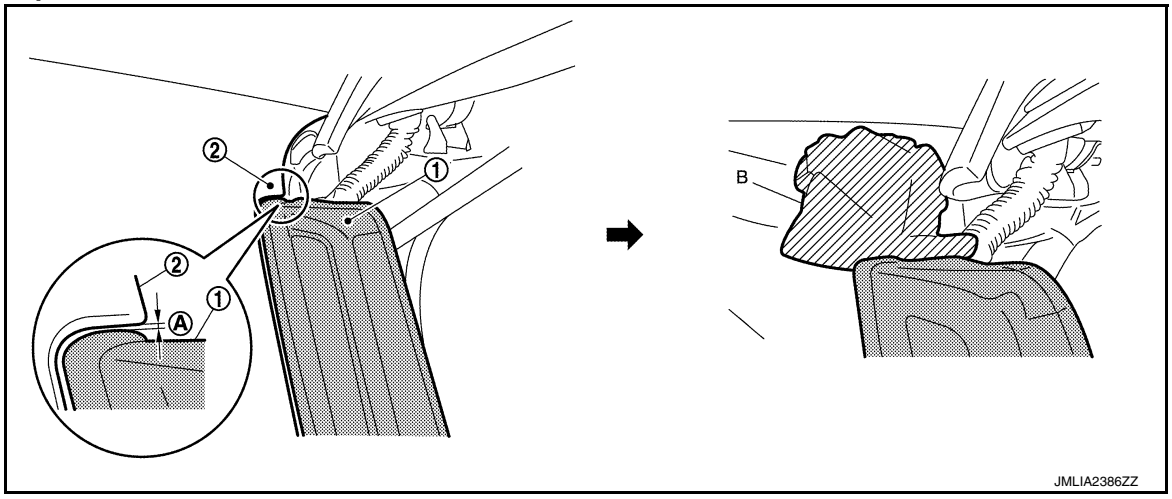

3. Pull rear combination lamp toward vehicle rear side, as shown by the arrow in the figure.

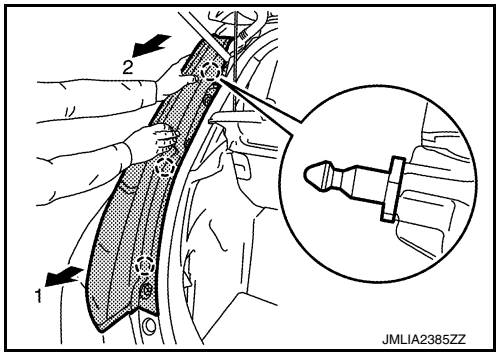

: Clip

4. Rotate bulb socket counterclockwise and unlock it.
5. Remove bulb from the socket.

HIGH-MOUNTED STOP LAMP

Exploded View

INFOID:0000000010634718

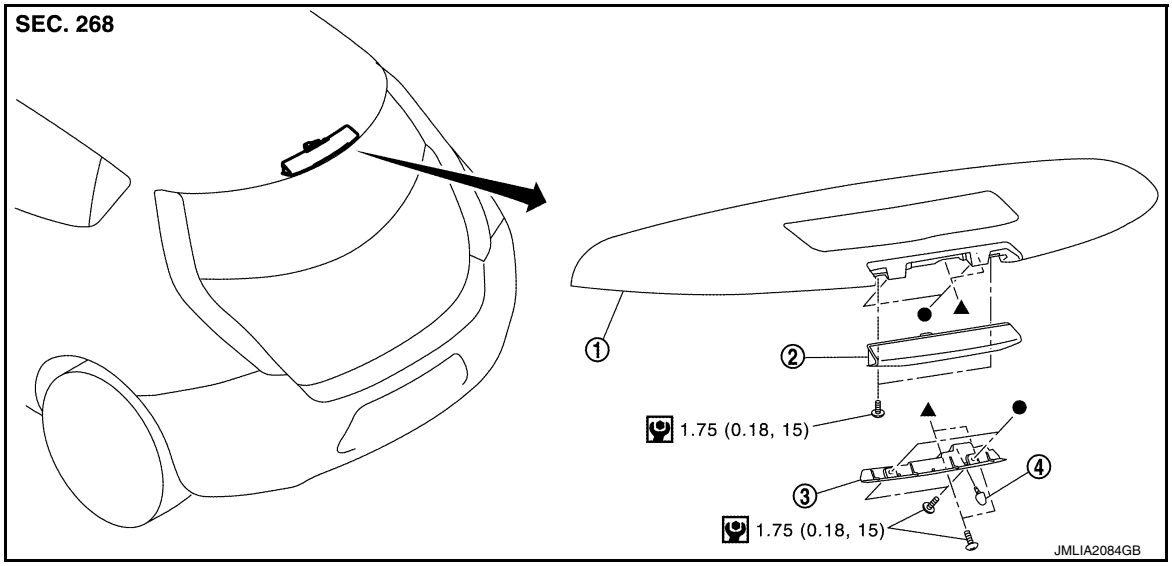

1. Rear spoiler
2. High-mounted stop lamp
3. High-mounted stop lamp cover
4. Rear washer nozzle

: N·m (kg-m, in-lb)

●,▲: Indicates that the part is connected at points with same symbol in actual vehicle.

Removal and Installation

INFOID:0000000010634719

REMOVAL

1. Remove rear spoiler. Refer to EXT-36, "Removal and Installation".
2. Remove high-mounted stop lamp cover mounting screws, and then remove high-mounted stop lamp cover.
3. Remove high-mounted stop lamp mounting screws.
4. Disconnect high-mounted stop lamp harness connector.
5. Remove high-mounted stop lamp.

INSTALLATION

Install in the reverse order of removal.

LICENSE PLATE LAMP

Exploded View

INFOID:0000000010634720

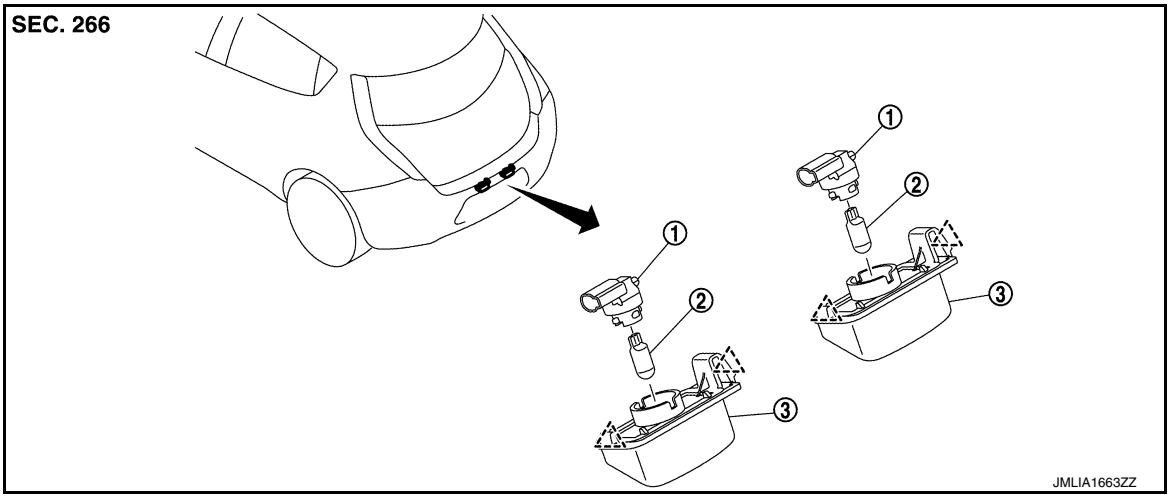

1. License plate lamp bulb socket
2. License plate lamp bulb
3. License plate lamp housing

: Pawl

Removal and Installation

INFOID:0000000010634721

REMOVAL

1. Remove license plate lamp in numerical order shown in the figure.

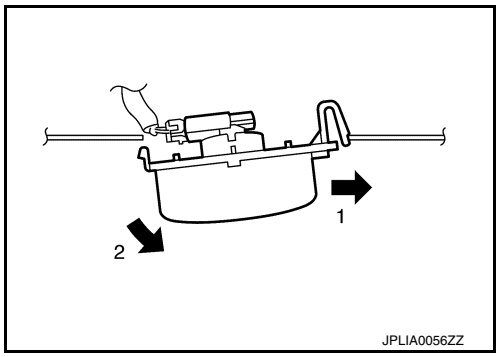

2. Disconnect license plate lamp connector, and then remove license plate lamp.

INSTALLATION

Install in the reverse order of removal.

Replacement

INFOID:0000000010634722

CAUTION:

- **Never touch the glass of bulb directly by hand. Keep grease and other oily matters away from it to prevent damage to the bulb.**
- **Never touch bulb by hand while it is lit or right after being turned off to prevent a burns.**
- **Never leave bulb out of lamp reflector for a long time because dust, moisture smoke, etc. may affect the performance of lamp. When replacing bulb, be sure to replace it with new one.**

LICENSE PLATE LAMP BULB

1. Remove license plate lamp.
2. Turn the bulb socket counterclockwise and unlock it.
3. Remove the bulb from the socket.

REAR REFLEX REFLECTOR

Exploded View

INFOID:0000000010634723

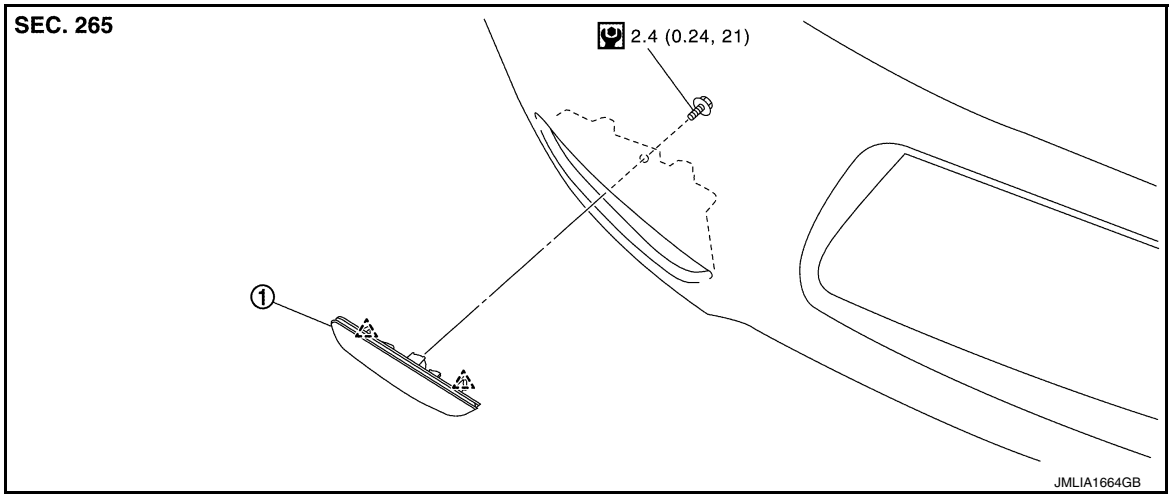

1. Reflex refractor

: Pawl

: N·m (kg-m, in-lb)

Removal and Installation

INFOID:0000000010634724

REMOVAL

1. Remove rear bumper fascia. Refer to EXT-17, "Removal and Installation".
2. Remove rear reflex reflector fixing screws and disengage fixing pawls, and then remove rear reflex reflector.

INSTALLATION

Install in the reverse order of removal.

SERVICE DATA AND SPECIFICATIONS (SDS)

SERVICE DATA AND SPECIFICATIONS (SDS)

Bulb Specifications

INFOID:0000000010634725

Item		Wattage (W)*
Front combination lamp	Headlamp (HI/LOW)	60/55
	Turn signal/Park lamp	27/7
Front side maker lamp		5
Front fog lamp (if equipped)		55
Rear combination lamp	Stop lamp/Tail lamp	—
	Rear turn signal lamp	21
	Back-up lamp	16
	Rear side maker lamp	—
License plate lamp		5
High-mounted stop lamp		—

*: Always check with the Parts Department for the latest parts info.