SECTION CCS
CRUISE CONTROL SYSTEM

CONTENTS

ICC

ASCD

PRECAUTION

PRECAUTIONS

Precaution for Supplemental Restraint System (SRS) "AIR BAG" and "SEAT BELT PRE-TENSIONER"

INFOID:0000000008131625

The Supplemental Restraint System such as “AIR BAG” and “SEAT BELT PRE-TENSIONER”, used along with a front seat belt, helps to reduce the risk or severity of injury to the driver and front passenger for certain types of collision. This system includes seat belt switch inputs and dual stage front air bag modules. The SRS system uses the seat belt switches to determine the front air bag deployment, and may only deploy one front air bag, depending on the severity of a collision and whether the front occupants are belted or unbelted.
Information necessary to service the system safely is included in the “SRS AIR BAG” and “SEAT BELT” of this Service Manual.

WARNING:
Always observe the following items for preventing accidental activation.
- **To avoid rendering the SRS inoperative, which could increase the risk of personal injury or death in the event of a collision that would result in air bag inflation, all maintenance must be performed by an authorized NISSAN/INFINITI dealer.**
- **Improper maintenance, including incorrect removal and installation of the SRS, can lead to personal injury caused by unintentional activation of the system. For removal of Spiral Cable and Air Bag Module, see “SRS AIR BAG”.**
- **Never use electrical test equipment on any circuit related to the SRS unless instructed to in this Service Manual. SRS wiring harnesses can be identified by yellow and/or orange harnesses or harness connectors.**

PRECAUTIONS WHEN USING POWER TOOLS (AIR OR ELECTRIC) AND HAMMERS

WARNING:
Always observe the following items for preventing accidental activation.
- **When working near the Air Bag Diagnosis Sensor Unit or other Air Bag System sensors with the ignition ON or engine running, never use air or electric power tools or strike near the sensor(s) with a hammer. Heavy vibration could activate the sensor(s) and deploy the air bag(s), possibly causing serious injury.**
- **When using air or electric power tools or hammers, always switch the ignition OFF, disconnect the battery, and wait at least 3 minutes before performing any service.**

Precautions For Harness Repair

INFOID:0000000008131626

ITS communication uses a twisted pair line. Be careful when repairing it.
- Solder the repaired area and wrap tape around the soldered area.
  NOTE:
  A fray of twisted lines must be within 110 mm (4.33 in).

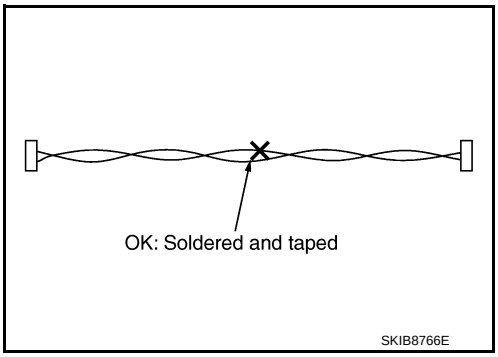

- Bypass connection is never allowed at the repaired area.
  NOTE:
  Bypass connection may cause ITS communication error. The spliced wire becomes separated and the characteristics of twisted line are lost.

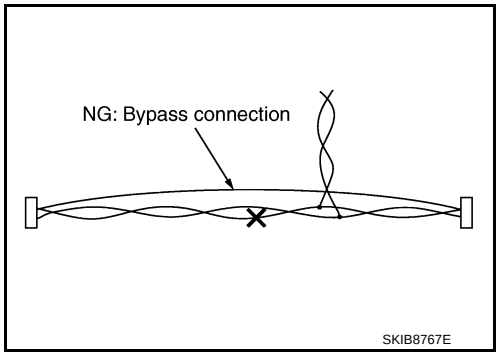

ICC System Service

INFOID:0000000008131627

CAUTION:
- **Never look straight into the laser beam discharger when adjusting laser beam aiming.**
- **Turn the MAIN switch OFF in conditions similar to driving, such as free rollers or a chassis dynamometer.**
- **Never use the ICC sensor removed from vehicle. Never disassemble or remodel.**
- **Erase DTC when replacing parts of ICC system, then check the operation of ICC system after adjusting laser beam aiming if necessary.**

PREPARATION

PREPARATION

Special Service Tools

INFOID:0000000008131628

The actual shapes of Kent-Moore tools may differ from those of special service tools illustrated here.

Tool number (Kent-Moore No.) Tool name	Description
KV99110100 (J-45718) ICC target board  PKIA0358J	Uses for laser beam aiming adjustment

SYSTEM DESCRIPTION

COMPONENT PARTS

Component Parts Location

INFOID:0000000008131629

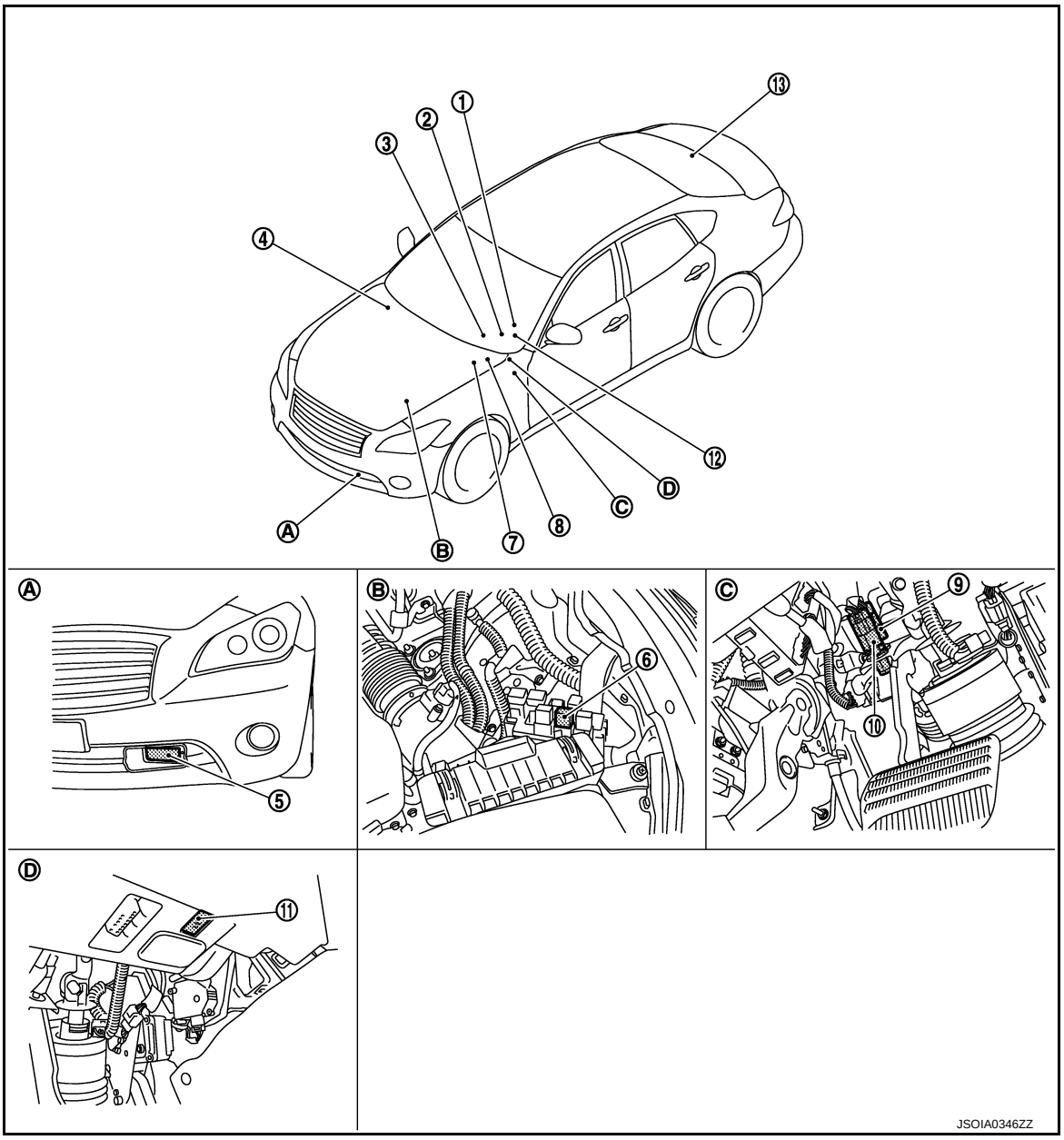

1. ICC steering switch
2. Information display, ICC system warning lamp, IBA OFF indicator lamp, buzzer (On the combination meter)
3. BCM Refer to BCS-4, "BODY CONTROL SYSTEM : Component Parts Location"
4. ECM Refer to the following
   - VQ37VHR: EC-37, "ENGINE CONTROL SYSTEM : Component Parts Location"
   - VK56VD (USA and Canada): EC-948, "ENGINE CONTROL SYSTEM : Component Parts Location"
   - VK56VD (Mexico): EC-1519, "ENGINE CONTROL SYSTEM : Component Parts Location"
5. ICC sensor
6. ICC brake hold relay
7. ABS actuator and electric unit (control unit) Refer to BRC-10, "Component Parts Location"
8. TCM Refer to TM-11, "A/T CONTROL SYSTEM : Component Parts Location"
9. Stop lamp switch
10. ICC brake switch
11. IBA OFF switch
12. Steering angle sensor Refer to BRC-10, "Component Parts Location"
13. ADAS control unit Refer to DAS-14, "Component Parts Location"

A. Front bumper (LH)
B. Engine room (LH)
C. Upper side of brake pedal
D. Instrument lower panel (LH)

Component Description

INFOID:0000000008131630

×: Applicable

Component	Function				Description
	Vehicle-to-vehicle distance control mode	Conventional (fixed speed) cruise control mode	Intelligent Brake Assist (IBA)	Brake Assist (with preview function)	
ADAS control unit	×	×	×	×	• ADAS control unit calculates a target distance between vehicles and a target speed, based on signals received from each sensor and switch to transmit an engine torque command value to ECM and a brake fluid pressure control signal to ABS actuator and electric unit (control unit) via CAN communication • ADAS control unit transmits buzzer output signal to combination meter via CAN communication
ICC sensor	×	×	×	×	• ICC sensor detects light reflected from a vehicle ahead by irradiating laser forward and calculates a distance from the vehicle ahead and a relative speed, based on the detected signal • ICC sensor transmits the presence/absence of vehicle ahead and the distance from the vehicle to ADAS control unit via ITS communication

Component	Function				Description
	Vehicle-to-vehicle distance control mode	Conventional (fixed speed) cruise control mode	Intelligent Brake Assist (IBA)	Brake Assist (with preview function)	
ECM	×	×	×	×	• ECM transmits the accelerator pedal position signal, ICC brake switch signal, stop lamp switch signal, ICC steering switch signal, etc. to ADAS control unit via CAN communication • ECM controls the electric throttle control actuator based on the engine torque demand received from the ADAS control unit via CAN communication
ABS actuator and electric unit (control unit)	×	×	×	×	• ABS actuator and electric unit (control unit) transmits the vehicle speed signal (wheel speed), stop lamp signal and VDC/TCS/ABS system operation condition to ADAS control unit via CAN communication • ABS actuator and electric unit (control unit) controls the brake, based on a brake fluid pressure control signal received from the ADAS control unit via CAN communication
BCM	×				Transmits the front wiper request signal to ADAS control unit via CAN communication
TCM	×	×			TCM transmits the signal related to A/T control to ADAS control unit via CAN communication
Combination meter	×	×	×	×	Performs the following operations using the signals received from the ADAS control unit via the CAN communication • Displays the ICC system operation status using the meter display signal • Illuminates the ICC system warning lamp using the ICC warning lamp signal • Illuminates the IBA OFF indicator lamp using the IBA OFF indicator lamp signal • Operates the buzzer (ICC warning chime) using the buzzer output signal
ICC steering switch	×	×			• ICC steering switch allows the ON/OFF of the intelligent cruise control and the settings of a vehicle speed and distance between vehicles • ICC steering switch signal is transmitted to ECM. ECM transmits the signal to the ADAS control unit via CAN communication
ICC brake switch	×	×	×	×	• ICC brake switch is turned OFF and stop lamp switch is turned ON, when depressing the brake pedal • ICC brake switch signal is input to ECM. These signals are transmitted from ECM to ADAS control unit via CAN communication • Stop lamp switch signal is input to ECM and ABS actuator and electric unit (control unit). These signals are transmitted from ECM and ABS actuator and electric unit (control unit) to ADAS control unit via CAN communication
Stop lamp switch	×	×	×	×	
ICC brake hold relay	×		×		ICC brake hold relay activates the stop lamp by ICC brake hold relay drive signal (stop lamp drive signal) outputted by the ADAS control unit

Component	Function				Description
	Vehicle-to-vehicle distance control mode	Conventional (fixed speed) cruise control mode	Intelligent Brake Assist (IBA)	Brake Assist (with preview function)	
IBA OFF switch			×Note		IBA OFF switch signal is input to the ADAS control unit
Steering angle sensor	×				Measures the rotation amount, rotation speed, and rotation direction of steering wheel, and then transmits them to ADAS control unit via CAN communication

NOTE:
Only IBA system uses

SYSTEM

System Description

INFOID:0000000008131631

SYSTEM DIAGRAM

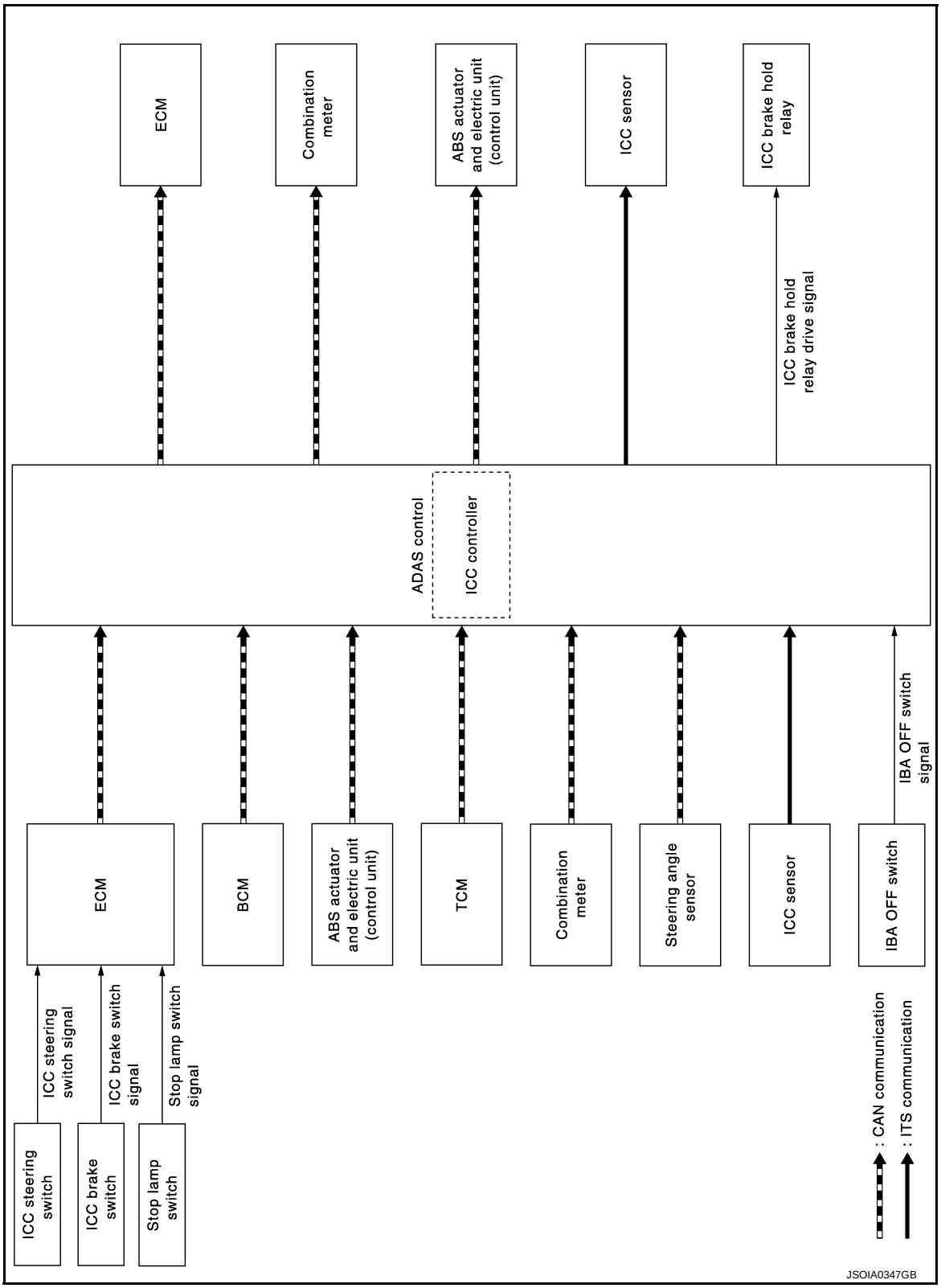

ADAS CONTROL UNIT INPUT/OUTPUT SIGNAL ITEM

Input Signal Item

Transmit unit	Signal name			Description
ECM	CAN communication	Closed throttle position signal		Receives idle position state (ON/OFF)
		Accelerator pedal position signal		Receives accelerator pedal position (angle)
		ICC prohibition signal		Receives an operable/inoperable state of the ICC system
		ICC steering switch signal	MAIN switch signal	Receives the operational state of the ICC steering switch
			SET/COAST switch signal	
			CANCEL switch signal	
			RESUME/ACCELERATE switch signal	
			DISTANCE switch signal	
		Engine speed signal		Receives engine speed
		Stop lamp switch signal		Receives an operational state of the brake pedal
		ICC brake switch signal		Receives an operational state of the brake pedal
		Snow mode switch signal		Receives an operational state of the snow mode
TCM	CAN communication	Input speed signal		Receives the number of revolutions of input shaft
		Current gear position signal		Receives a current gear position
		Shift position signal		Receives a selector lever position
		Output shaft revolution signal		Receives the number of revolutions of output shaft
ABS actuator and electric unit (control unit)	CAN communication	ABS malfunction signal		Receives a malfunction state of ABS
		ABS operation signal		Receives an operational state of ABS
		ABS warning lamp signal		Receives an ON/OFF state of ABS warning lamp
		TCS malfunction signal		Receives a malfunction state of TCS
		TCS operation signal		Receives an operational state of TCS
		VDC OFF switch signal		Receives an ON/OFF state of VDC
		VDC malfunction signal		Receives a malfunction state of VDC
		VDC operation signal		Receives an operational state of VDC
		Vehicle speed signal (ABS)		Receives wheel speeds of four wheels
		Stop lamp switch signal		Receives an operational state of the brake pedal
		Yaw rate signal		Receives yaw rate acting on the vehicle
Combination meter	CAN communication	Parking brake switch signal		Receives an operational state of the parking brake
BCM	CAN communication	Front wiper request signal		Receives an operational state of front wiper(s)
Steering angle sensor	CAN communication	Steering angle sensor malfunction signal		Receives a malfunction state of steering angle sensor
		Steering angle sensor signal		Receives the number of revolutions, turning direction of the steering wheel
		Steering angle speed signal		Receives the turning angle speed of the steering wheel
ICC sensor	ITS communication	ICC sensor signal		Receives detection results, such as the presence or absence of a leading vehicle and distance from the vehicle
IBA OFF switch	IBA OFF switch signal			Receives an ON/OFF state of the IBA OFF switch

Output Signal Item

Reception unit	Signal name			Description
ECM	CAN communication	ICC operation signal		Transmits an ICC operation signal necessary for intelligent cruise control
TCM	CAN communication	ICC operation signal		Transmits an ICC operation signal necessary for intelligent cruise control via ECM
ABS actuator and electric unit (control unit)	CAN communication	Brake fluid pressure control signal		Transmits a brake fluid pressure control signal to activates the brake
Combination meter	CAN communication	Meter display signal	Own vehicle indicator signal	Transmits a signal to display a state of the system on the information display
			Vehicle ahead detection indicator signal	
			Set vehicle speed indicator signal	
			Set distance indicator signal	
			SET switch indicator signal	
			MAIN switch indicator signal	
		ICC warning lamp signal		Transmits an ICC warning lamp signal to turn ON the ICC system warning lamp
		IBA OFF indicator lamp signal		• Transmits a signal to turn ON the IBA OFF indicator lamp • Transmits an ON/OFF state of the intelligent brake assist
		Buzzer output signal		Transmits a buzzer output signal to turn ON the buzzer of the following systems: • Intelligent Cruise Control (ICC) • Intelligent Brake Assist (IBA)
ICC sensor	ITS communication	Vehicle speed signal		Transmits a vehicle speed calculated by the ADAS control unit
ICC brake hold relay	ICC brake hold relay drive signal			Activates the brake hold relay and turns ON the stop lamp

DESCRIPTION

Intelligent Cruise Control

The Intelligent Cruise Control (ICC) system maintains a selected distance from the vehicle in front of own vehicle within the speed range of 0 to 144 km/h (0 to 90 MPH) up to the set speed.
The set speed can be selected by the driver between 32 to 144 km/h (20 to 90 MPH).
The vehicle travels at a set speed when the road ahead is clear.
The ICC system can be set to one of two cruise control modes:

CAUTION:

Never set the cruise speed exceeding the posted speed limit.

Vehicle-to-vehicle Distance Control Mode

For maintaining a selected distance between own vehicle and the vehicle in front of own vehicle up to the preset speed. Refer to CCS-17, "VEHICLE-TO-VEHICLE DISTANCE CONTROL MODE FUNCTION : System Description".

Conventional (Fixed Speed) Cruise Control Mode

For cruising at a preset speed. Refer to CCS-19, "CONVENTIONAL (FIXED SPEED) CRUISE CONTROL MODE FUNCTION : System Description".

NOTE:

In the Conventional (Fixed Speed) Cruise Control Mode, a warning chime will not sound to warn driver if own vehicle are too close to the vehicle ahead.

WARNING:
Always drive carefully and attentively when using either cruise control mode. To avoid serious injury or death, do not rely on the system to prevent accidents or to control the vehicle's speed in emergency situations. Do not use cruise control except in appropriate rode and traffic conditions.

Distance Control Assist (DCA) System
DCA share the systems and components with ICC system. Refer to DAS-60, "System Description".

Forward Collision Warning (FCW) System
FCW share the systems and components with ICC system. Refer to DAS-202, "System Description".

Intelligent Brake Assist (IBA) System
IBA system share the systems and components with ICC system. Refer to BRC-160, "INTELLIGENT BRAKE ASSIST : System Description".

Brake Assist (With Preview Function)
Brake Assist (With Preview Function) share the systems and components with ICC system. Refer to BRC-152, "BRAKE ASSIST (WITH PREVIEW FUNCTION) : System Description".

Fail-safe (ADAS Control Unit)

INFOID:0000000008131632

If a malfunction occurs in each system, ADAS control unit cancels each control, sounds a beep, and turns ON the warning lamp or indicator lamp.

System	Buzzer	Warning lamp/Indicator lamp	Description
Vehicle-to-vehicle distance control mode	High-pitched tone	ICC system warning lamp	Cancel
Conventional (fixed speed) cruise control mode	High-pitched tone	ICC system warning lamp	Cancel
Intelligent Brake Assist (IBA)	High-pitched tone	IBA OFF indicator lamp	Cancel
Forward Collision Warning (FCW)	High-pitched tone	IBA OFF indicator lamp	Cancel
Distance Control Assist (DCA)	High-pitched tone	ICC system warning lamp	Cancel
Lane Departure Warning (LDW)	—	Lane departure warning lamp	Cancel
Lane Departure Prevention (LDP)	Low-pitched tone	Lane departure warning lamp	Cancel
Blind Spot Warning (BSW)	—	BSW/BSI warning lamp	Cancel
Blind Spot Intervention (BSI)	Low-pitched tone	BSW/BSI warning lamp	Cancel
Active trace control function	—	IBA OFF indicator lamp	• Cancel • If a communication error occurs between the A/C auto amp. and CAN communication line, a mode at the instant of error occurrence is maintained until the mode is fixed to STANDARD after turning the ignition switch from OFF to ON

Fail-safe (ICC Sensor)

INFOID:0000000008131633

If a malfunction occurs in the ICC sensor, ADAS control unit cancels control, sounds a beep, and turns ON the ICC system warning lamp in the combination meter.

VEHICLE-TO-VEHICLE DISTANCE CONTROL MODE FUNCTION

VEHICLE-TO-VEHICLE DISTANCE CONTROL MODE FUNCTION : System Description

INFOID:0000000008131634

SYSTEM DIAGRAM

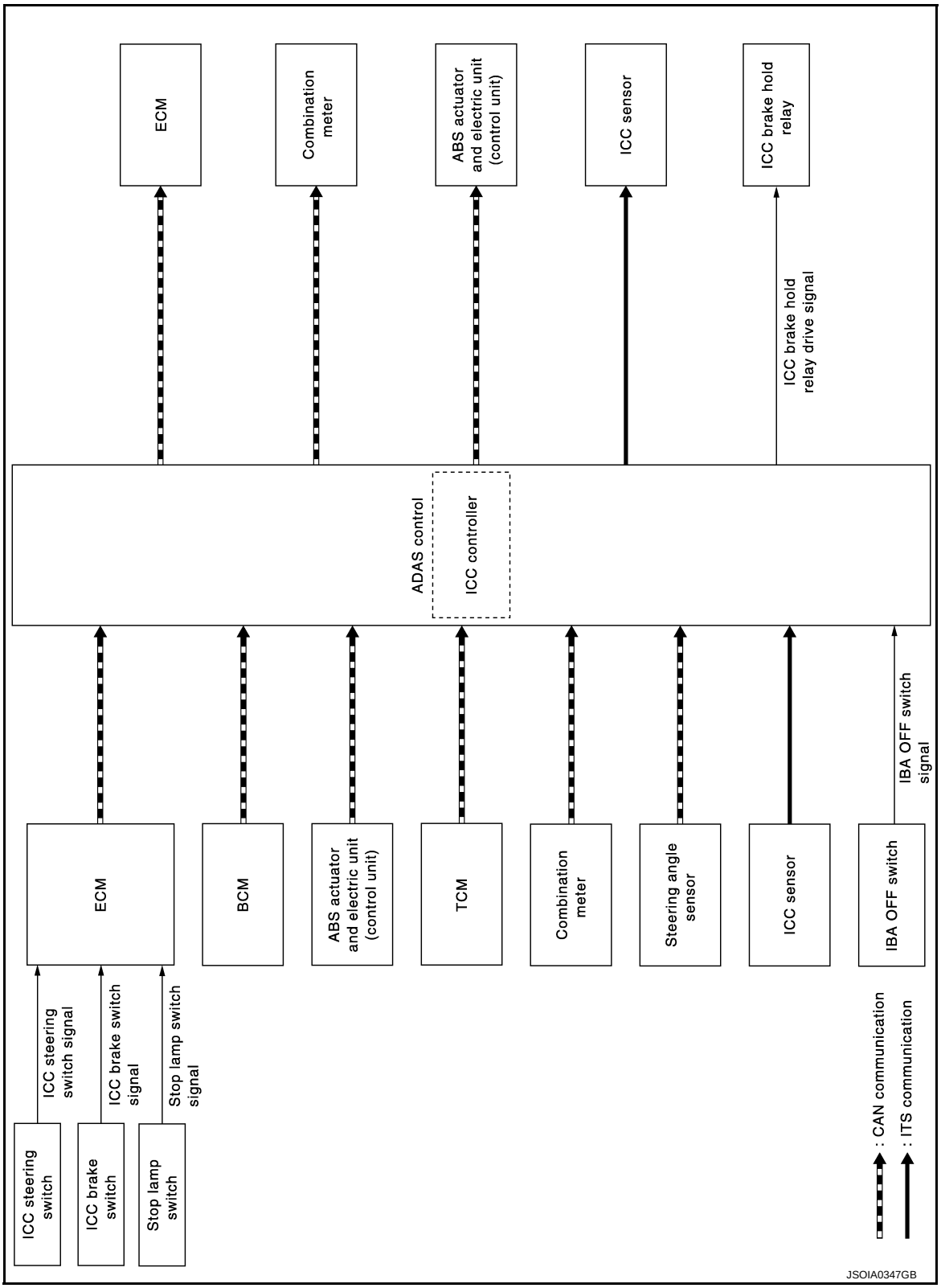

FUNCTION DESCRIPTION

In the vehicle-to-vehicle distance control mode, the Intelligent Cruise Control (ICC) system automatically maintains a selected distance from the vehicle traveling in front of own vehicle according to that vehicle's speed (up to the set speed), or at the set speed when the road ahead is clear.
With ICC system, the driver can maintain the same speed as other vehicles without the constant need to adjust the set speed as driver would with a normal cruise control system.
The following items are controlled in the vehicle-to-vehicle distance control mode

- When there are no vehicles traveling ahead, the vehicle-to-vehicle distance control mode maintains the speed set by the driver. The set speed range is between approximately 32 and 144 km/h (20 and 90 MPH).
- When there is a vehicle traveling ahead, the vehicle-to-vehicle distance control mode adjusts the speed to maintain the distance, selected by driver, from a vehicle ahead. The adjusting speed range is up to the set speed.
- When the vehicle traveling ahead has moved out from its lane of travel, the vehicle-to-vehicle distance control mode accelerates and maintains vehicle speed up to the set speed.

CAUTION:
If the vehicle ahead comes to stop, the vehicle decelerates to a standstill within the limitations of the system. The system will cancel once it judges that the vehicle has come to a standstill and sound a warning chime.
To prevent the vehicle from moving, the driver must depress the brake pedal.
NOTE:
When the accelerator pedal is depressed, the brake operation and the warning are not performed by the ICC system.

OPERATION DESCRIPTION

Quickly push (less than 1.5 seconds) and release the MAIN switch ON.
The MAIN switch indicator, set distance indicator, own vehicle indicator, and set vehicle speed indicator come on and ICC system is set to a standby state.
ADAS control unit performs the control as per the following:

Constant speed	Comparing the set vehicle speed with the current vehicle speed, transmit the command to ECM via CAN communication to reach the set vehicle speed, and controls the electric throttle control actuator.
Deceleration	When a vehicle ahead (slower than driver set vehicle speed) appears or when a vehicle ahead slows down, the system controls the electric throttle control actuator into the close direction and decelerates the vehicle. If greater deceleration is necessary, the system transmits the brake fluid pressure control signal to the ABS actuator and electric unit (control unit) via CAN communication and operates the brake.
Following	The system controls the electric throttle control actuator and the brake fluid pressure to keep the proper distance between the vehicles according to the vehicle speed change of the vehicle ahead.
Acceleration	When a vehicle ahead is not detected because of it changes lanes or own vehicle changes lanes during the following driving, the system controls the electric throttle control actuator in the open direction and accelerates the vehicle to the set vehicle speed slowly.

Set Condition
Under a standby state, pushing down the SET/COAST switch will start system control.

- When vehicle speed is between approximately 32 km/h and 144 km/h (20 MPH and 90 MPH).
- When vehicle speed is below approximately 32 km/h (20 MPH) if the vehicle ahead is detected. The set vehicle speed becomes 32 km/h (20 MPH).

If the system is canceled by conditions 1-6 below, the system will resume control at the last set cruising speed by pushing up the RESUME/ACCELERATE switch.
NOTE:

- When the SET/COAST switch is pushed under the following conditions, the system cannot be set and the set vehicle speed indicator will blink for approximately 2 seconds.
  - When traveling below 32 km/h (20 MPH) and the vehicle ahead is not detected.
  - When the selector lever is not in the “D” position or manual mode.
  - When the front wipers are operating at HI.
    (If the vehicle is equipped with a rain sensing auto-wiper, the system may cancel when the wipers are set to AUTO)
  - When the parking brakes are applied.
  - When the brakes are operated by the driver.

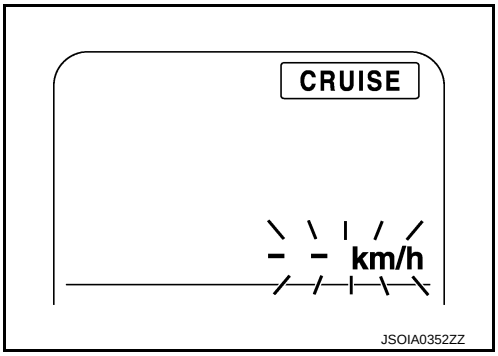

- When the SET/COAST switch is pushed under the following conditions, the system cannot be set. A warning chime will sound and the set speed indicator and own vehicle indicator will blink.
  - When the drive mode select switch is in SNOW position. (To use the ICC system, turn OFF the snow mode, push the MAIN switch to turn OFF the ICC system and reset the ICC system by pushing the MAIN switch again.)
  - When the VDC is OFF. (To use the ICC system, turn ON the VDC system, push the MAIN switch to turn OFF the ICC system and reset the ICC system by pushing the MAIN switch again.)
  - When ABS or VDC (including the TCS) operates.
  - When driving into a strong light (i.e., sunlight).
  - When the wheel is slipping. (To use the ICC system, make sure the wheels are no longer spinning, push the MAIN switch to turn OFF the ICC system and reset the ICC system by pushing the MAIN switch again.)

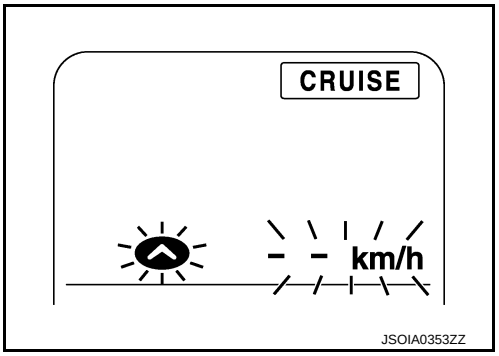

Cancel Conditions

1. When CANCEL switch is pressed.
2. When brake pedal is depressed.
3. When the vehicle ahead is not detected below the speed of 24 km/h (15 MPH).
4. When the selector lever is not in the “D” position or manual mode.
5. When the parking brakes are applied.
6. When the system judges the vehicle is at standstill.
7. When the front wipers are operating at HI.
   (If the vehicle is equipped with a rain sensing auto-wiper, the system may cancel when the wipers are set to AUTO.)
8. When the drive mode select switch is in SNOW position.
9. When ABS or VDC (including the TCS) operates.
10. When the MAIN switch is turned OFF.
11. When a wheel slips.
12. When driving into a strong light (i.e., sunlight).
13. When the VDC is turned OFF.
14. When the system malfunction occurs.

CONVENTIONAL (FIXED SPEED) CRUISE CONTROL MODE FUNCTION

CONVENTIONAL (FIXED SPEED) CRUISE CONTROL MODE FUNCTION : System

Description

INFOID:0000000008131635

SYSTEM DIAGRAM

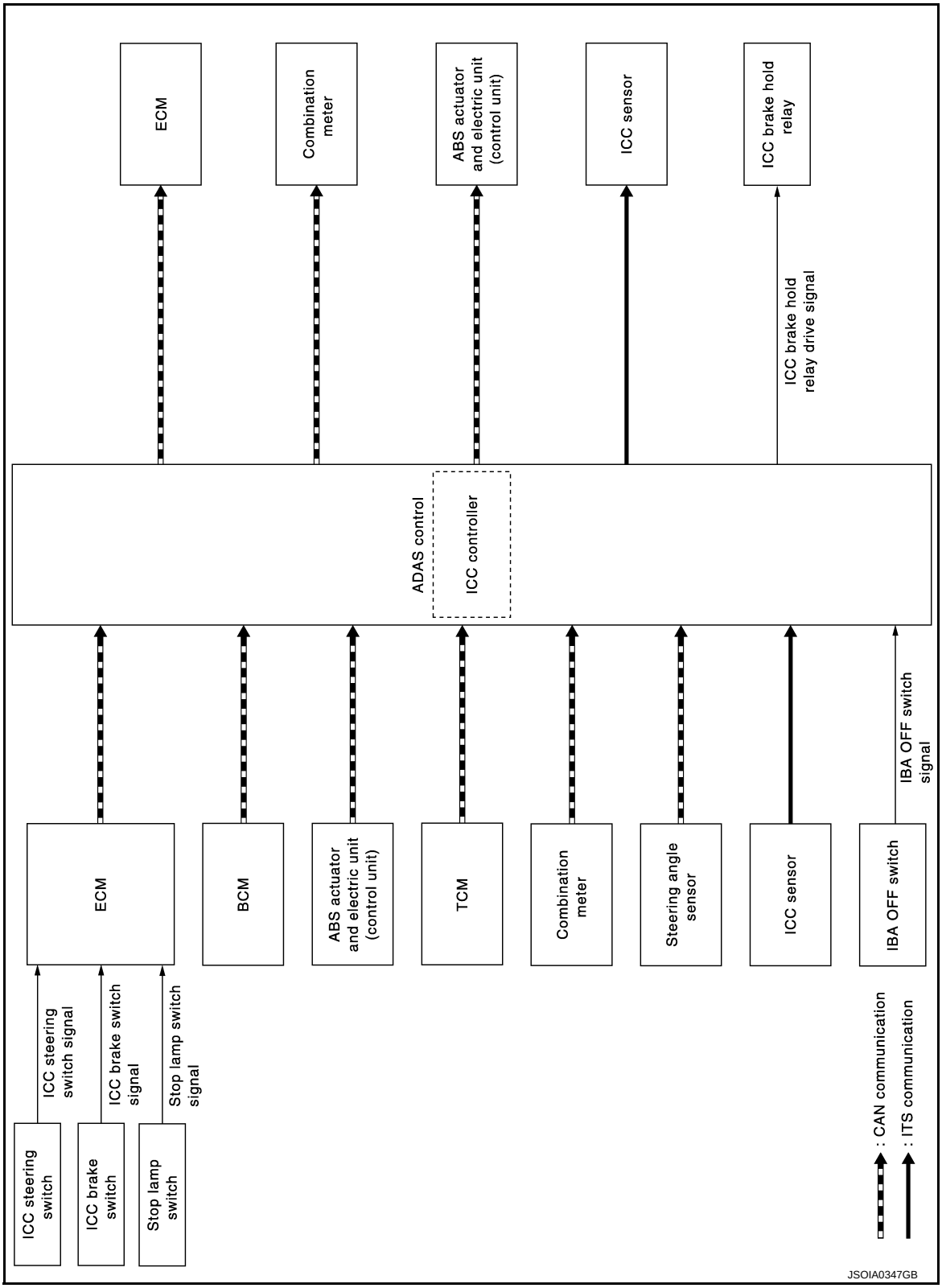

FUNCTION DESCRIPTION

This mode allows driving at a speed between 40 to 144 km/h (25 to 90 MPH) without keeping foot on the accelerator pedal.

NOTE:

In the conventional (fixed speed) cruise control mode, a warning chime does not sound to warn driver if own vehicle are too close to the vehicle ahead, as neither the presence of the vehicle ahead nor the vehicle-to-vehicle distance is detected.

OPERATION DESCRIPTION

To turn ON the conventional (fixed speed) cruise control mode, push and hold the MAIN switch for longer than approximately 1.5 seconds when ICC system is OFF.
When pushing the MAIN switch ON, the ICC system display and the MAIN switch indicator are displayed on the information display.
After hold the MAIN switch ON for longer than approximately 1.5 seconds, the ICC system display goes out.
The MAIN switch indicator stays lit and brings the system to standby state.

NOTE:

- To turn on the vehicle-to-vehicle distance control mode again, turn OFF the system and quickly push (less than 1.5 seconds) the MAIN switch.
- When the DCA system is ON, the conventional (fixed speed) cruise control mode cannot be turned on even though the MAIN switch is pushed and held.
- To turn ON the conventional (fixed speed) cruise control mode, turn OFF the DCA system. Refer to DAS-60, "System Description".

ADAS control unit performs the control as per the following:

Constant speed	Comparing the set vehicle speed with the current vehicle speed, transmits the command to ECM via CAN communication to reach the set vehicle speed, and controls the electronic throttle control actuator.

Set Condition

When the system is under a standby state and the vehicle speed is between approximately 40 km/h (25 MPH) and 144 km/h (90 MPH), pushing the SET/COAST switch will start system control.
If the system is canceled by conditions 1-6 below, the system will resume control at the last set cruising speed by pushing the RESUME/ACCELERATE switch.

Cancel conditions

1. When CANCEL switch is pressed.
2. When brake pedal depressed.
3. When the vehicle speed falls below approximately 32 km/h (20 MPH).
4. When the vehicle slows down more than 13 km/h (8 MPH) below the set speed.
5. When the selector lever is not in the “D” position or manual mode.
6. When the parking brakes are applied.
7. When the MAIN switch is turned OFF.
8. When VDC (including the TCS) operates.
9. When a wheel slips.
10. When the system malfunction occurs.

OPERATION

VEHICLE-TO-VEHICLE DISTANCE CONTROL MODE FUNCTION

VEHICLE-TO-VEHICLE DISTANCE CONTROL MODE FUNCTION : Switch Name and Function

INFOID:0000000008131636

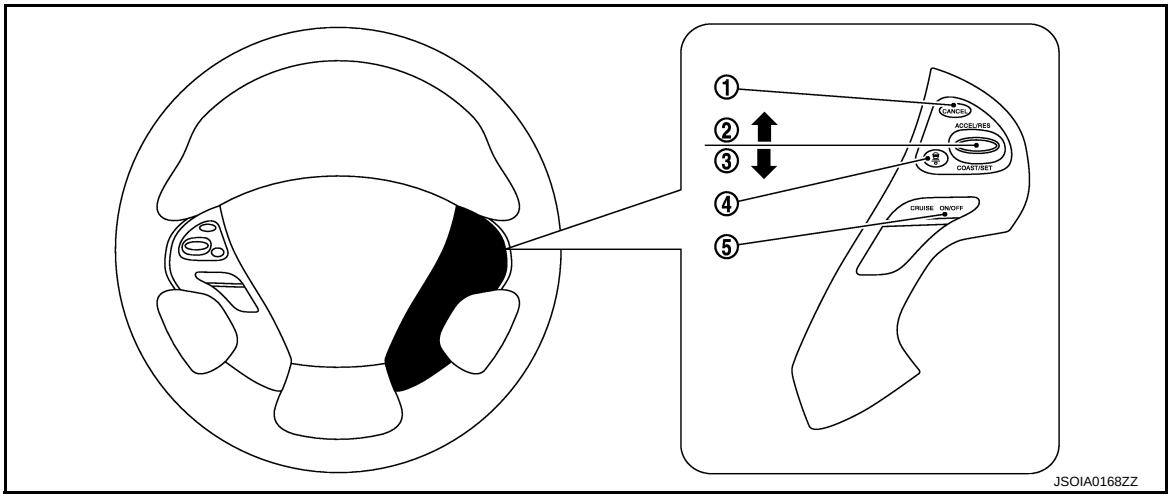

No.	Switch name	Description
1	CANCEL switch	Deactivates the system without erasing the set speed
2	RESUME/ACCELERATE switch	Resumes set speed or increases speed incrementally • Push and hold the switch to increase the set speed by 5 km/h (5 MPH) • Push then quickly release the switch to increase the set speed by 1 km/h (1 MPH)
3	SET/COAST switch	Sets desired cruise speed or reduces speed incrementally • Push and hold the switch to decrease the set speed by 5 km/h (5 MPH) • Push then quickly release the switch to decrease the set speed by 1 km/h (1 MPH) **NOTE:** The minimum set speed is 32 km/h (20 MPH)
4	DISTANCE switch	Changes the following distance from: Long, Middle, Short
5	MAIN switch	Master switch to activate the system (Press for less than 1.5 seconds)

VEHICLE-TO-VEHICLE DISTANCE CONTROL MODE FUNCTION : Menu Displayed by Pressing Each Switch

INFOID:0000000008131637

ICC SYSTEM DISPLAY (ON THE INFORMATION DISPLAY)

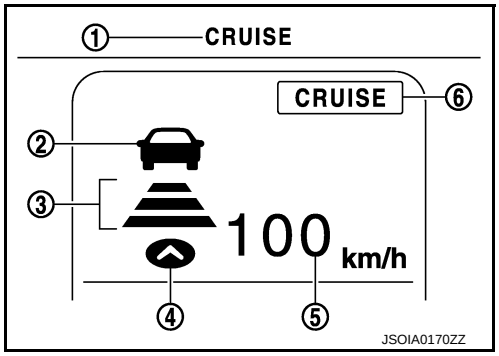

No.	Switch name	Description
1	ICC system warning lamp	Indicates that a malfunction occurs in the ICC system
2	Vehicle ahead detection indicator	Indicates whether it detects a vehicle ahead
3	Set distance indicator	Indicates the selected distance between vehicles set with the DISTANCE switch
4	Own vehicle indicator	Indicates the own vehicle

No.	Switch name	Description
5	Set vehicle speed indicator	• Indicates the set vehicle speed • Indicates 32 km/h (20 MPH) when setting less than 32 km/h (20 MPH)
6	MAIN switch indicator	Indicates that the MAIN switch is ON (ICC system ON)

SYSTEM CONTROL CONDITION DISPLAY

Quickly push (less than 1.5 seconds) and release the MAIN switch ON.
The MAIN switch indicator (cruise indicator), set distance indicator, own vehicle indicator, and set vehicle speed indicator come on and ICC system is set to a standby state.

Condition			Display on ICC system display
Standby mode			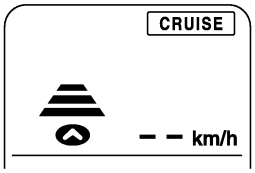 JSOIA0185ZZ
Control mode	Without a vehicle ahead	Set vehicle distance (Long)	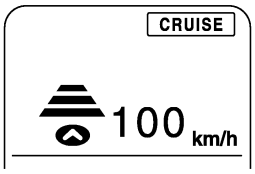 JSOIA0186ZZ
		Set vehicle distance (Middle)	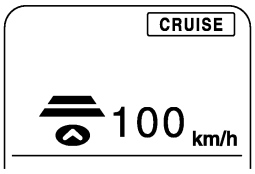 JSOIA0187ZZ
		Set vehicle distance (Short)	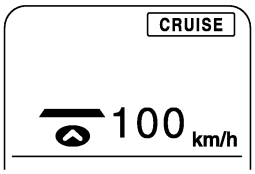 JSOIA0188ZZ
		When the vehicle speed exceeds the set speed	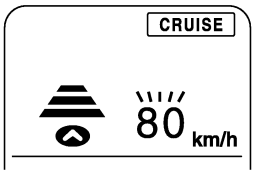 JSOIA0189ZZ

Condition			Display on ICC system display
Control mode	With a vehicle ahead	Set vehicle distance (Long)	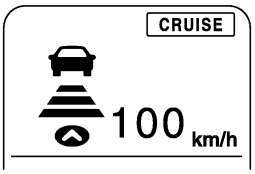 JSOIA0190ZZ
		Set vehicle distance (Middle)	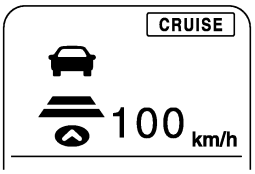 JSOIA0191ZZ
		Set vehicle distance (Short)	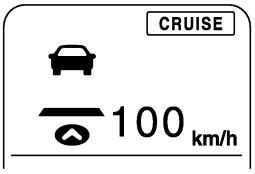 JSOIA0192ZZ
		When the vehicle speed exceeds the set speed	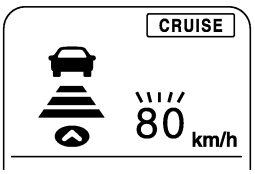 JSOIA0193ZZ

NOTE:
The display of the DCA system is given priority when the DCA system is ON in a standby mode. (The set vehicle speed indicator, set distance indicator, and own vehicle indicator are not displayed).

APPROACH WARNING DISPLAY

If own vehicle comes closer to a vehicle ahead due to rapid deceleration of that vehicle or if another vehicle cuts in, the system warns the driver with the chime and ICC system display. Decelerate by depressing the brake pedal to maintain a safe vehicle distance if:

- The chime sounds.
- The vehicle ahead detection indicator and set distance indicator blink.

The warning chime may not sound in some cases when there is a short distance between vehicles. Some examples are:

- When the vehicles are traveling at the same speed and the distance between vehicles is not changing.
- When the vehicle ahead is traveling faster and the distance between vehicles is increasing.
- When a vehicle cuts in at near own vehicle.

The warning chime will not sound when own vehicle approaches vehicles that are parked or moving slowly.
The warning chime will not sound when the accelerator pedal is depressed, overriding the system.
The approach warning chime may sound and the system display may blink when the ICC sensor detects some reflectors which are fitted on vehicles in other lanes or on the side of the road.
This may cause the ICC system to decelerate or accelerate the vehicle.
The ICC sensor may detect these reflectors when the vehicle is driven on winding roads, hilly roads or when entering or exiting a curve.
The ICC sensor may also detect reflectors on narrow roads or in road construction zones.
In these cases driver will have to manually control the proper distance ahead of own vehicle.
Also, the sensor sensitivity can be affected by vehicle operation (steering maneuver or driving position in the lane) or traffic or vehicle condition (for example, if a vehicle is being driven with some damage).

Condition	Display on ICC system display
When own vehicle comes closer to the vehicle ahead and it is judged that the distance between the vehicles is not sufficient	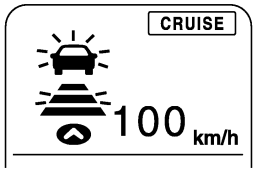 JSOIA0194ZZ

WARNING LAMP AND AUTOMATIC CANCELLATION DISPLAY

Condition		Description	Display on ICC system display
Warning display	• When the VDC is turned OFF • When the VDC or ABS (including the TCS) operates • When a wheel slips • When the drive mode select switch is in SNOW mode • When driving into a strong light (i.e., sunlight)	A chime sounds and the control is automatically canceled. **NOTE:** When the conditions listed above are no longer present, turn the system OFF using the MAIN switch. Turn the ICC system back on to use the system.	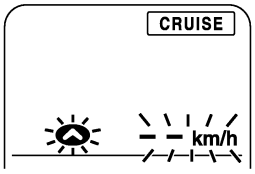 JSOIA0195ZZ
	When the sensor window is dirty, making it impossible to detect a vehicle ahead.	A chime sounds and the control is automatically canceled. **NOTE:** Park the vehicle in a safe place, turn the engine OFF. Clean the sensor window with a soft cloth and then perform the settings again.	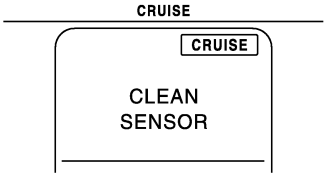 JSOIA0348ZZ
	When the ICC system is malfunctioning	A chime sounds and the control is automatically canceled. **NOTE:** Turn the engine OFF and restart engine. If there is no malfunction, it is possible to set the system.	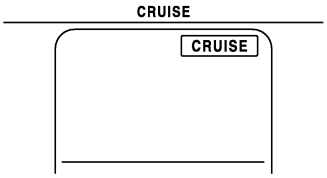 JSOIA0197ZZ
Automatic cancellation display	• When brake pedal is depressed • When CANCEL switch is pressed • When a vehicle ahead is not detected below the speed of 24 km/h (15 MPH) • When the system judges the vehicle is at standstill • When the selector lever is not in “D” position or manual mode • When the front wipers are operating at HI (If the vehicle is equipped with a rain sensing auto-wiper, the system may cancel when the wipers are set to AUTO) • When the parking brake are applied	A chime sounds and the control is automatically canceled. **NOTE:** • The system will be in a standby, after the control is automatically canceled. • A chime sounds when the control is automatically canceled, except when brake pedal is depressed or when CANCEL switch is pressed.	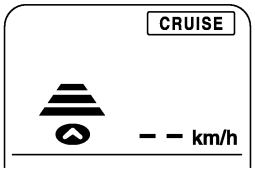 JSOIA0198ZZ

NOTE:

When the ICC system is automatically canceled, the cancellation condition can be displayed on “WORK SUPPORT” of CONSULT (ICC/ADAS).

CONVENTIONAL (FIXED SPEED) CRUISE CONTROL MODE FUNCTION

CONVENTIONAL (FIXED SPEED) CRUISE CONTROL MODE FUNCTION : Switch Name and Function

INFOID:0000000008131638

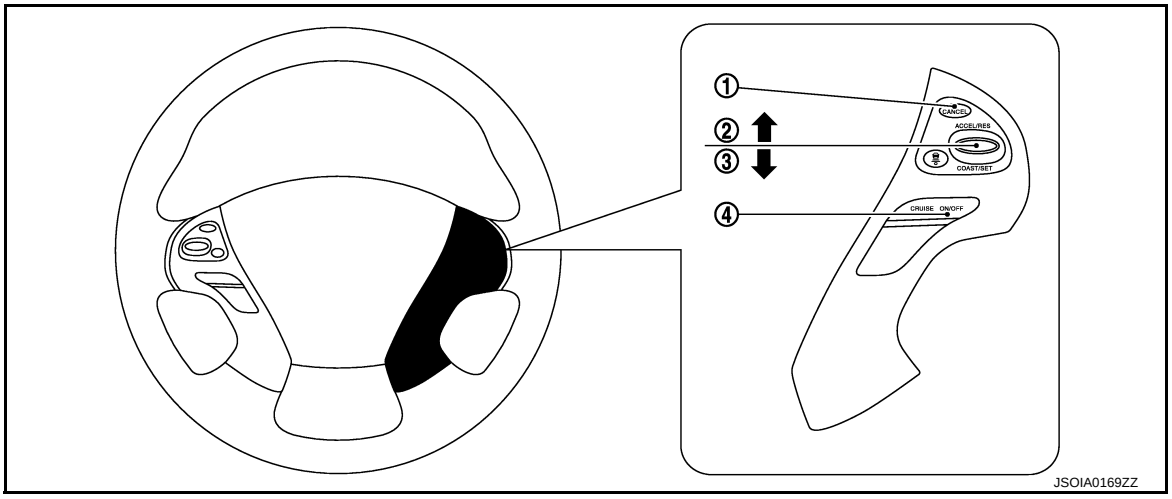

No.	Description	Function
1	CANCEL switch	Deactivates system without erasing set speed
2	RESUME/ACCELERATE switch	Resumes set speed or increases speed incrementally
3	SET/COAST switch	Sets desired cruise speed or reduces speed incrementally
4	MAIN switch	Master switch to activate the system (Press for more than 1.5 seconds)

CONVENTIONAL (FIXED SPEED) CRUISE CONTROL MODE FUNCTION : Menu Displayed by Pressing Each Switch

INFOID:0000000008131639

ICC SYSTEM DISPLAY (ON THE INFORMATION DISPLAY)

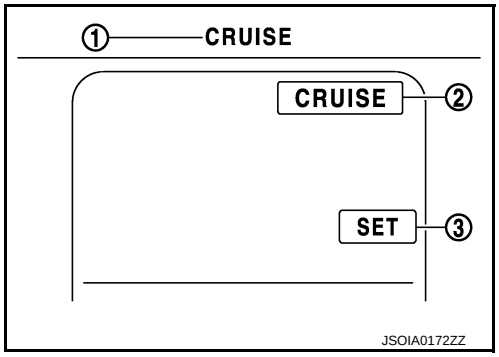

No.	Description	Function
1	ICC system warning lamp	Indicates that a malfunction occurs in the ICC system
2	MAIN switch indicator	Indicates that the MAIN switch is ON (ICC system ON)
3	SET switch indicator	Indicates that the set conventional (fixed speed) cruise control mode is controlled

SYSTEM CONTROL CONDITION DISPLAY

Push and hold the ICC MAIN switch for longer than approximately 1.5 seconds. This mode will be in a standby state for setting.

Condition	Display on ICC system display
Standby mode	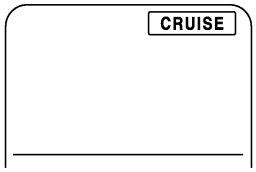 JSOIA0204ZZ
Control mode	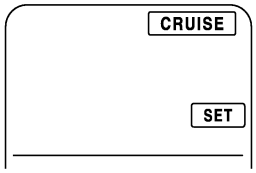 JSOIA0205ZZ

WARNING AND AUTOMATIC CANCELLATION DISPLAY

Condition		Description	Display on ICC system display
Warning display	When the ICC system is malfunctioning	A chime sounds and the control is automatically canceled **NOTE:** Turn the engine OFF and restart engine. If there is no malfunction, it is possible to set the system	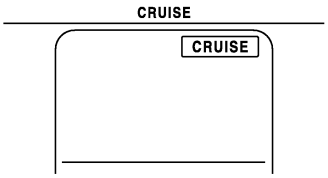 JSOIA0206ZZ
System cancel display	• When brake pedal is depressed • When pressing CANCEL switch • When the vehicle speed falls below approximately 32 km/h (20 MPH) • When the vehicle slows down more than 13 km/h (8 MPH) below the set speed • When the selector lever is not in the “D” position or manual mode • When the parking brakes are applied • When VDC (including the TCS) operates • When a wheel slips	A chime sounds and the control is automatically canceled **NOTE:** • The system will be in a standby, after the control is automatically canceled • A chime sounds when the control is automatically canceled, except when brake pedal is depressed or when CANCEL switch is pressed	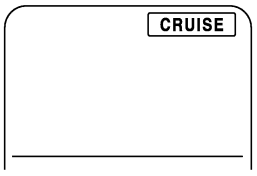 JSOIA0204ZZ

NOTE:
When the ICC system is automatically canceled, the cancellation condition can be displayed on “WORK SUPPORT” of CONSULT (ICC/ADAS).

HANDLING PRECAUTION

Precautions for Vehicle-to-Vehicle Distance Control Mode

INFOID:0000000008131640

- ICC system is only an aid to assist the driver and is not a collision warning or avoidance device. It is the driver's responsibility to stay alert, drive safely and be in control of the vehicle at all times.
- The system is primarily intended for use on straight, dry, open roads with light traffic. It is not advisable to use the system in city traffic or congested areas.
- This system will not adapt automatically to road conditions. This system should be used in evenly flowing traffic. Do not use the system on roads with sharp curves, or on icy roads, in heavy rain or in fog.
- The ICC sensor will not detect under most conditions.
- Stationary and slow moving vehicles.
- Pedestrians or objects in the roadway.
- Oncoming vehicles in the some lane.
- Motorcycles traveling offset in the travel lane.
- As there is a performance limit to the distance control function, never rely solely on the ICC system. This system does not correct careless, inattentive or absent-minded driving, or overcome poor visibility in rain, fog, or other bad weather. Decelerate the vehicle speed by depressing the brake pedal, depending on the distance to the vehicle ahead and the surrounding circumstances in order to maintain a safe distance between vehicles.
- If the vehicle ahead comes to a stop, the vehicle decelerates to a standstill within the limitations of the system. The system will cancel once it judges that the vehicle has come to a standstill and sound a warning chime. To prevent the vehicle from moving, the driver must depress the brake pedal.
- The system may not detect the vehicle in front of the driver in certain road or weather conditions. To avoid accidents, never use the ICC system under the following conditions:
- On roads where the traffic is heavy or there are sharp curves.
- On slippery road surfaces such as on ice or snow, etc.
- During bad weather (rain, fog, snow, etc.)
- When the front wiper is operated at the high speed (HI) position, the ICC system is automatically canceled. If the vehicle is equipped with a rain sensing auto wiper, the system may cancel when the wipers are set to the AUTO position.
- When strong light (for example, at sunrise or sunset) is directly shining on the front of the vehicle.
- When rain, snow or dirt adhere to the system sensor.
- On steep downhill roads (the vehicle may go beyond the set vehicle speed and frequent braking may result in overheating the brakes).
- On repeated uphill and downhill roads.
- When traffic conditions make it difficult to keep a proper distance between vehicles because of frequent acceleration or deceleration.
- Do not use the ICC system if own vehicle is towing a trailer. The system may not detect a vehicle ahead.
- In some road or traffic conditions, a vehicle or object can unexpectedly come into the sensor detection zone and cause automatic braking. The driver may need to control the distance from other vehicles using the accelerator pedal. Always stay alert and avoid using the ICC system when it is not recommended in this section.
- The vehicle-to-vehicle distance control mode uses a sensor located on the front of the vehicle to detect vehicles traveling ahead. The sensor generally detects the signals returned from the reflectors on a vehicle ahead. Therefore, if the sensor cannot detect the reflector on the vehicle ahead, the ICC system may not maintain the selected distance.
- The following are some conditions in which the sensor cannot detect the signals:
- When the reflector of the vehicle ahead is positioned high on the vehicle (trailer, etc.).
- When the reflector on the vehicle ahead is missing, damaged or covered.
- When the reflector of the vehicle ahead is covered with dirt, snow and road spray.
- When the snow or road spray from traveling vehicles reduces the sensor's visibility.
- When dense exhaust or other smoke (black smoke) from vehicles reduces the sensor's visibility.
- When excessively heavy baggage is loaded in the rear seat or the trunk room of own vehicle.
- The ICC system is designed to automatically check the sensor's operation within the limitation of the system. When the sensor is covered with dirt or is obstructed, the system will automatically be canceled. If the sensor is covered with ice, a transparent or translucent vinyl bag, etc., the ICC system may not detect them. In these instances, the vehicle-to-vehicle distance control mode may not cancel and may not be able to maintain the selected following distance from the vehicle ahead. Be sure to check and clean the sensor regularly.

- The ICC system does not control vehicle speed or warn the driver when own vehicle approaches stationary and slow moving vehicles. The driver must pay attention to vehicle operation to maintain proper distance from vehicles ahead when approaching toll gates or traffic congestion.
- The detection zone of the ICC sensor is limited. A vehicle ahead must be in the detection zone for the vehicle-to-vehicle distance detection mode to maintain the selected distance from the vehicle ahead. A vehicle ahead may move outside of the detection zone due to its position within the same lane of travel. Motorcycles may not be detected in the same lane ahead if they are traveling offset from the center line of the lane. A vehicle that is entering the lane ahead may not be detected until the vehicle has completely moved into the lane. If this occurs, the ICC system may warn the driver by blinking the system indicator and sounding the chime. The driver may have to manually control the proper distance away from vehicle traveling ahead.

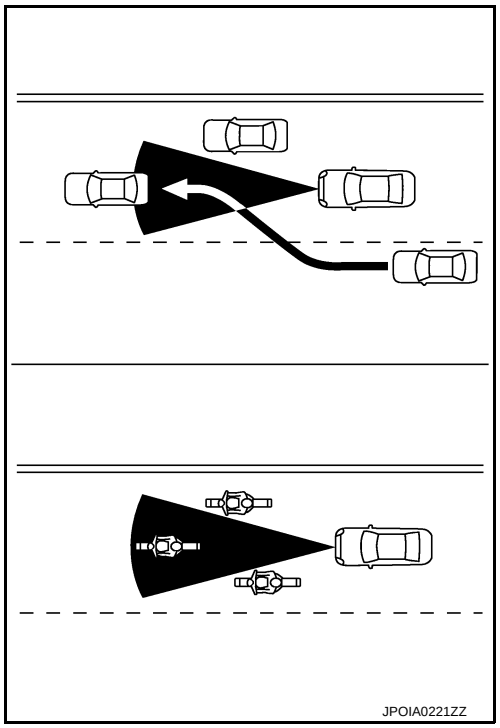

- When driving on some roads, such as winding, hilly, curved, narrow roads, or roads which are under construction, the ICC sensor may detect vehicles in a different lane, or may temporarily not detect a vehicle traveling ahead. This may cause the ICC system to decelerate or accelerate the vehicle. The detection of vehicles may also be affected by vehicle operation (steering maneuver or traveling position in the lane, etc.) or vehicle condition. If this occurs, the ICC system may warn the driver by blinking the system indicator and sounding the chime unexpectedly. The driver will have to manually control the proper distance away from the vehicle traveling ahead.

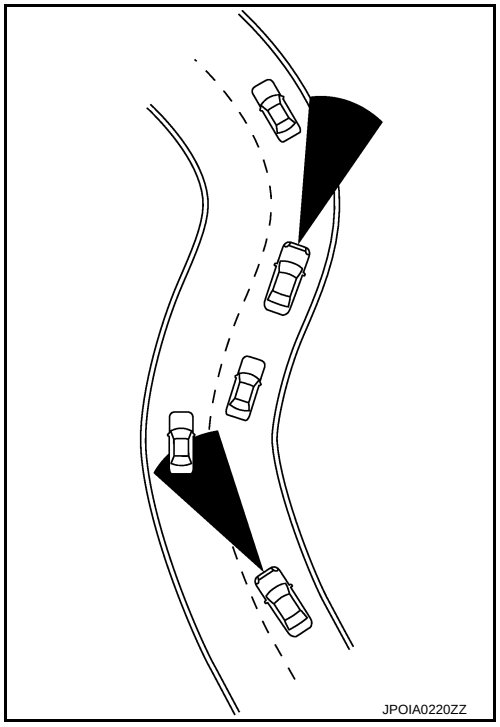

- When driving on the freeway at a set speed and approaching a slower traveling vehicle ahead, the ICC will adjust the speed to maintain the distance, selected by the driver, from the vehicle ahead. If the vehicle ahead changes lanes or exits the freeway, the ICC system will accelerate and maintain the speed up to the set speed. Pay attention to the driving operation to maintain control of the vehicle as it accelerates to the set speed. The vehicle may not maintain the set speed on winding or hilly roads. If this occurs, the driver will have to manually control the vehicle speed.

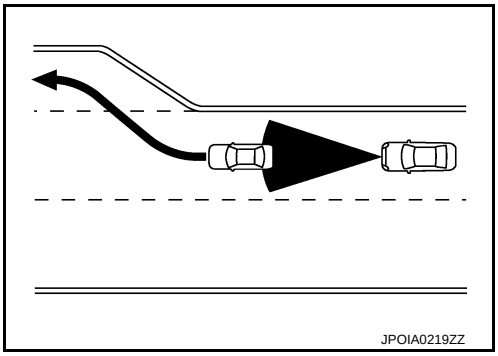

- The sensor sensitivity can be affected by vehicle operation (steering maneuver or driving position in the lane) or traffic or vehicle condition (for example, if a vehicle is being driven with some damage).
- Normally when controlling the distance to a vehicle ahead, this system automatically accelerates or decelerates own vehicle according to the speed of the vehicle ahead. Depress the accelerator to properly accelerate own vehicle when acceleration is required for a lane change. Depress the brake pedal when deceleration is required to maintain a safe distance to the vehicle ahead due to its sudden braking or if a vehicle cuts in. Always stay alert when using the ICC system.

Precautions for Conventional (Fixed Speed) Cruise Control Mode

INFOID:0000000008131641

- In the conventional (fixed speed) cruise control mode, a warning chime does not sound to warn the driver if own vehicle is too close to the vehicle ahead, as neither the presence of the vehicle ahead nor the vehicle-to-vehicle distance is detected.
- Pay special attention to the distance between own vehicle and the vehicle ahead or a collision could occur.
- Always confirm the setting in the ICC system display.
- Do not use the conventional (fixed speed) cruise control mode when driving under the following conditions:
- When it is not possible to keep the vehicle at a set speed.
- In heavy traffic or in traffic that varies in speed.
- On winding or hilly roads.
- On slippery roads (rain, snow, ice, etc.).
- In very windy areas.
- Doing so could cause a loss of vehicle control and result in an accident.
- To avoid accidentally engaging cruise control, make sure to the MAIN switch OFF when not using ICC system.

DIAGNOSIS SYSTEM (ADAS CONTROL UNIT)

On Board Diagnosis Function

INFOID:0000000008131642

DESCRIPTION

The DTC is displayed on the information display by operating the ICC steering switch.

On Board Self-diagnosis System Diagram

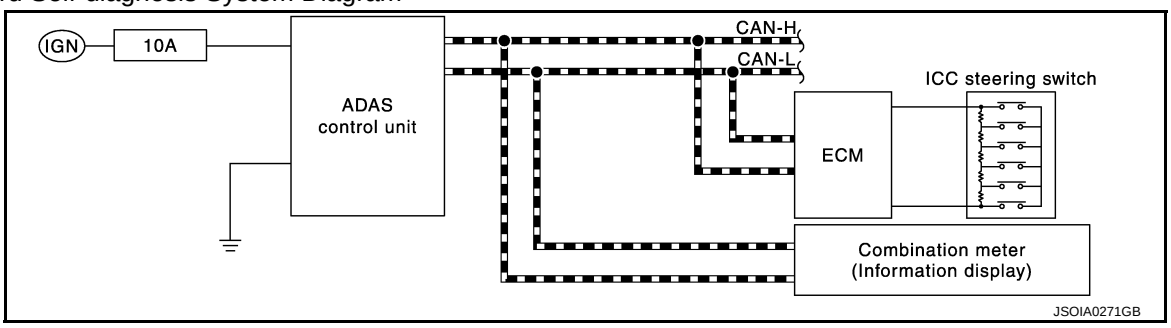

METHOD OF STARTING

CAUTION:

Start condition of on board self-diagnosis

- **ICC system OFF**
- **DCA system OFF**
- **Vehicle speed 0 km/h (0 MPH)**

1. Turn the ignition switch OFF.
2. Start the engine.
3. Wait for 5 seconds after starting the engine. Push up the RESUME/ACCELERATE switch 5 times and push down the SET/COAST switch 5 times within 10 seconds.
   NOTE:
   If the above operation cannot be performed within 10 seconds after waiting for 5 seconds after starting the engine, repeat the procedure from step 1.

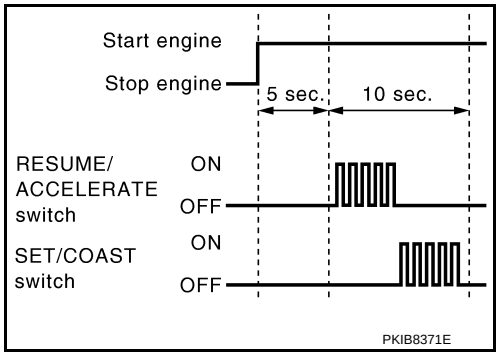

4. The DTC is displayed on the set vehicle speed indicator (1) on the ICC system display on the information display when the on board self-diagnosis starts. Refer to DAS-40, "DTC Index".

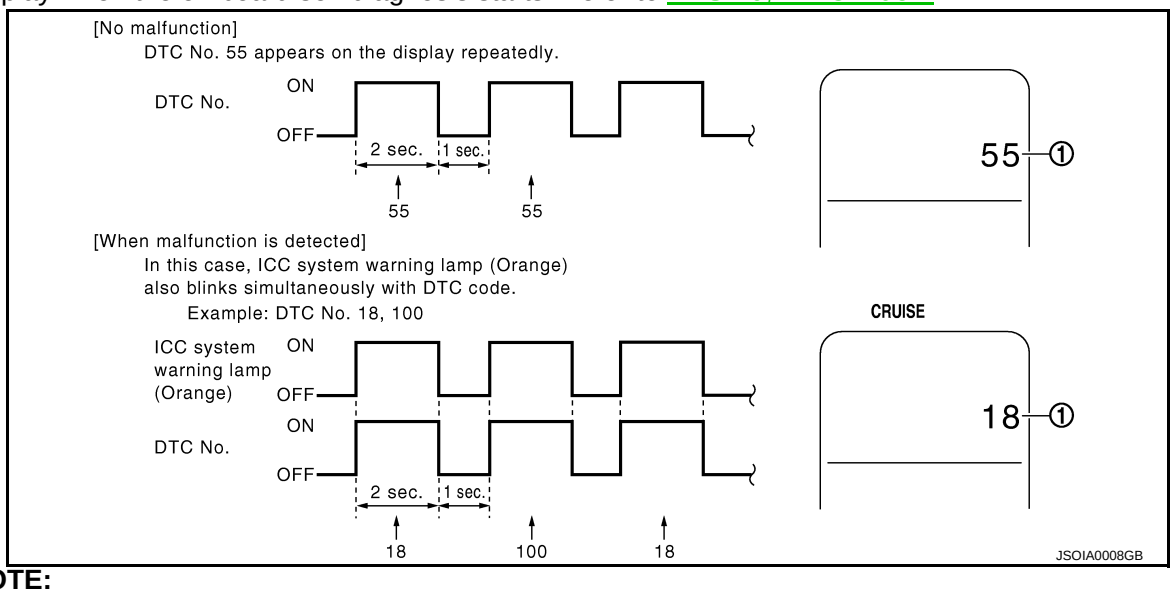

NOTE:

- It displays for up to 5 minutes and then stops.
- If multiple malfunctions exist, up to 6 DTCs can be stored in memory at the most, and the most recent one is displayed first.

WHEN THE ON BOARD SELF-DIAGNOSIS DOES NOT START

If the on board self-diagnosis does not start, check the following items.

Assumed abnormal part		Inspection item
Information display	Combination meter malfunction	Check that the self-diagnosis function of the combination meter operates. Refer to MWI-30, "On Board Diagnosis Function".
ICC steering switch malfunction		Perform the inspection for DTC “C1A06”. Refer to CCS-89, "DTC Logic".
Harness malfunction between ICC steering switch and ECM		
ECM malfunction		
ADAS control unit malfunction		• Check power supply and ground circuit of ADAS control unit. Refer to DAS-54, "Diagnosis Procedure". • Perform SELF-DIAGNOSIS for “ICC/ADAS”with CONSULT, and then check the malfunctioning parts. Refer to DAS-40, "DTC Index".

HOW TO ERASE ON BOARD SELF-DIAGNOSIS

1. Turn the ignition switch OFF.
2. Start the engine, and then start the on board self-diagnosis.
3. Press the CANCEL switch 5 times, and then press the DISTANCE switch 5 times under the condition that the on board self-diagnosis starts.
   NOTE:
   - Complete the operation within 10 seconds after pressing the CANCEL switch first.
   - If the operation is not completed within 10 seconds, repeat the procedure from step 1.
4. DTC 55 is displayed after erasing.
   NOTE:
   DTCs for existing malfunction can not be erased.
5. Turn ignition switch OFF, and finish the diagnosis.

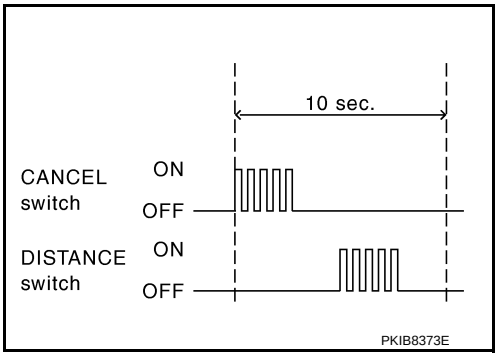

CONSULT Function (ICC/ADAS)

INFOID:0000000008131643

APPLICATION ITEMS

CONSULT performs the following functions via CAN communication using ADAS control unit.

Diagnosis mode	Description
Work Support	Displays causes of automatic system cancellation occurred during system control
Self Diagnostic Result	Displays the name of a malfunctioning system stored in the ADAS control unit
Data Monitor	Displays ADAS control unit input/output data in real time
Active Test	Enables an operational check of a load by transmitting a driving signal from the ADAS control unit to the load
Ecu Identification	Displays ADAS control unit part number
CAN Diag Support Monitor	Displays a reception/transmission state of CAN communication and ITS communication

WORK SUPPORT

Work support items	Description
CAUSE OF AUTO-CANCEL 1	Displays causes of automatic system cancellation occurred during control of the following systems • Vehicle-to-vehicle control mode • Conventional (fixed speed) control mode • Distance Control Assist (DCA)
CAUSE OF AUTO-CANCEL 2	Displays causes of automatic system cancellation occurred during control of the following systems • Lane Departure Prevention (LDP) • Blind Spot Intervention (BSI)

NOTE:
- Causes of the maximum five cancellations (system cancel) are displayed.
- The displayed cancellation causes display the number of the ignition switch ON/OFF up to 254. It is fixed to 254 if it is over 254. It returns to 0 when the same cancellation cause is detected again.

Display Items for The Cause of Automatic Cancellation 1

Cause of cancellation	Vehicle-to-vehicle distance control mode	Conventional (fixed speed) cruise control mode	Distance Control Assist	Description
OPERATING WIPER	×			The wiper operates at HI (it includes when the wiper is operated at HI with the wiper switch AUTO position)
OPERATING ABS	×		×	ABS function was operated
OPERATING TCS	×	×	×	TCS function was operated
OPERATING VDC	×	×	×	VDC function was operated
ECM CIRCUIT	×	×		ECM did not permit ICC operation
OPE SW VOLT CIRC	×	×	×	The ICC steering switch input voltage is not within standard range
LASER SUNBEAM	×		×	Intense light such as sunlight entered ICC sensor light sensing part
LASER TEMP	×		×	Temperature around ICC sensor became low
SNOW MODE SW	×		×	Shifting of the drive mode selector to SNOW position
OP SW DOUBLE TOUCH	×	×		ICC steering switches were pressed at the same time
VHCL SPD DOWN	×	×	×	Vehicle speed lower than the speed as follows • Vehicle-to-vehicle distance control mode is 24 km/h (15 MPH) • Conventional (fixed speed) cruise control mode is 32 km/h (20 MPH)
WHL SPD ELEC NOISE	×	×	×	Wheel speed sensor signal caught electromagnetic noise
VDC/TCS OFF SW	×		×	VDC OFF switch was pressed
VHCL SPD UNMATCH	×	×	×	Wheel speed became different from A/T vehicle speed
TIRE SLIP	×	×		Wheel slipped
IGN LOW VOLT	×	×	×	Decrease in ADAS control unit IGN voltage
PARKING BRAKE ON	×	×		The parking brake is operating

WHEEL SPD UNMATCH	×	×	×	The wheel speeds of 4 wheels are out of the specified values
INCHING LOST	×			A vehicle ahead is not detected during the following driving when the vehicle speed is approximately 24 km/h (15 MPH) or less
CAN COMM ERROR	×	×	×	ADAS control unit received an abnormal signal with CAN communication
ABS/TCS/VDC CIRC	×	×	×	An abnormal condition occurs in VDC/TCS/ABS system
ECD CIRCUIT	×	×	×	An abnormal condition occurs in ECD system
ASCD VHCL SPD DTAC		×		Vehicle speed is detached from set vehicle speed
ASCD DOUBLE COMD		×		Cancel switch and operation switch are detected simultaneously
APA HI TEMP			×	The accelerator pedal actuator integrated motor temperature is high
ICC SENSOR CAN COMM ERR	×		×	Communication error between ADAS control unit and the ICC sensor
ABS WARNING LAMP	×		×	ABS warning lamp ON
NO RECORD	×	×	×	—

Display Items for The Cause of Automatic Cancellation 2

Cause of cancellation	Lane departure prevention	Blind spot intervention	Description
OPE VDC/TCS/ABS 1	×		The activation of VDC, TCS, or ABS during LDP system control
Vehicle dynamics	×		Vehicle behavior exceeds specified value
Steering speed	×		Steering speed was more than the specified value in evasive direction
End by yaw angle	×		Yaw angle was the end of LDP control
Departure yaw large	×		Detected more than the specified value of yaw angle in departure direction
ICC WARNING	×		Target approach warning of ICC system, IBA system, or FCW system was activated
CURVATURE	×		Road curve was more than the specified value
Steering angle large	×		Steering angle was more than the specified value
Brake is operated	×		Brake pedal was operated
IGN LOW VOLT	×		Decrease in ADAS control unit IGN voltage
Lateral offset	×		Distance of vehicle and lane was detached in lateral direction more than the specified value
Lane marker lost	×		Lane camera unit lost the trace of lane marker
Lane marker unclear	×		Detected lane marker was unclear
Yaw acceleration	×		Detected yawing speed was more than the specified value
Deceleration large	×		Deceleration in a longitudinal direction was more than the specified value
Accel is operated	×		Accelerator pedal was depressed
Departure steering	×		Steering wheel was steered more than the specified value in departure direction
Evasive steering	×		Steering wheel was steered more than the specified value in the evasive direction
R range	×		Selector lever was operated to R range
Parking brake drift	×		Rear wheels lock was detected
Not operating condition	×		Did not meet the operating condition (vehicle speed, turn signal operation, etc.)
SNOW MODE SW	×		Shifting of the drive mode selector to SNOW position

Cause of cancellation	Lane departure prevention	Blind spot intervention	Description
VDC OFF SW	×		VDC OFF switch was pressed
OPE VDC/ABS 2	×		The activation of VDC or ABS during a standby time of LDP system control
BSI WARNING	×		Blind Spot Intervention system was activated
BSI) OPE VDC/TCS/ ABS 1		×	The activation of VDC, TCS, or ABS during Blind Spot Intervention system control
BSI) Vehicle dynamics		×	Vehicle behavior exceeds specified value
BSI) Steering speed		×	Steering speed was more than the specified value in evasive direction
BSI) End by yaw angle		×	Yaw angle was the end of Blind Spot Intervention control
BSI) Departure yaw large		×	Detected more than the specified value of yaw angle in departure direction
BSI) ICC WARNING		×	Target approach warning of ICC system, IBA system or FCW system was activated
BSI) CURVATURE		×	Road curve was more than the specified value
BSI) Steering angle large		×	Steering angle was more than the specified value
BSI) Brake is operated		×	Brake pedal was operated
BSI) IGN LOW VOLT		×	Decrease in ADAS control unit IGN voltage
BSI) Lateral offset		×	Distance of vehicle and lane was detached in lateral direction more than the specified
BSI) Lane marker lost		×	Lane camera unit lost the trace of lane marker
BSI) Lane marker un-clear		×	Detected lane marker was unclear
BSI) Yaw acceleration		×	Detected yawing speed was more than the specified value
BSI) Deceleration large		×	Deceleration in a longitudinal direction was more than the specified value
BSI) Accel is operated		×	Accelerator pedal was depressed
BSI) Departure steering		×	Steering wheel was steered more than the specified value in departure direction
BSI) Evasive steering		×	Steering wheel was steered more than the specified value in the evasive direction
BSI) R range		×	Selector lever was operated to R range
BSI) Parking brake drift		×	Rear wheels lock was detected
BSI) SNOW MODE SW		×	Shifting of the drive mode selector to SNOW position
BSI) VDC OFF SW		×	VDC OFF switch was pressed
BSI) OPE VDC/ABS 2		×	The activation of VDC or ABS during a standby time of Blind Spot Intervention sys-tem control
BSI) Not operating con-dition		×	Did not meet the operating condition (vehicle speed, turn signal operation, etc.)
Side Radar Lost		×	Unrecognized side radar LH or RH by the ADAS control unit
NO RECORD	×	×	—

SELF DIAGNOSTIC RESULT

Refer to DAS-40, "DTC Index".

DATA MONITOR

NOTE:

The following table includes information (items) inapplicable to this vehicle. For information (items) applicable to this vehicle, refer to CONSULT display items.

Monitored item [Unit]	ALL SIG (ICC)	MAIN SIG (ICC)	MAIN SIG (LDW/LDP)	MAIN SIG (BSW/BSI)	Description
MAIN SW [On/Off]	×	×	×	×	Indicates [On/Off] status as judged from ICC steering switch signal (ECM transmits ICC steering switch signal through CAN communication)
SET/COAST SW [On/Off]	×	×			Indicates [On/Off] status as judged from ICC steering switch signal (ECM transmits ICC steering switch signal through CAN communication)
CANCEL SW [On/Off]	×	×			Indicates [On/Off] status as judged from ICC steering switch signal (ECM transmits ICC steering switch signal through CAN communication)
RESUME/ACC SW [On/Off]	×	×			Indicates [On/Off] status as judged from ICC steering switch signal (ECM transmits ICC steering switch signal through CAN communication)
DISTANCE SW [On/Off]	×				Indicates [On/Off] status as judged from ICC steering switch signal (ECM transmits ICC steering switch signal through CAN communication)
CRUISE OPE [On/Off]	×	×			Indicates whether controlling or not (ON means “controlling”)
BRAKE SW [On/Off]	×	×	×	×	Indicates [On/Off] status as judged from ICC brake switch signal (ECM transmits ICC brake switch signal through CAN communication)
STOP LAMP SW [On/Off]	×	×	×	×	Indicates [On/Off] status as judged from stop lamp switch signal (ECM transmits stop lamp switch signal through CAN communication)
IDLE SW [On/Off]	×				Indicates [On/Off] status of idle switch read from ADAS control unit through CAN communication (ECM transmits On/Off status through CAN communication)
SET DISTANCE [Short/Mid/Long]	×	×			Indicates set distance memorized in ADAS control unit
CRUISE LAMP [On/Off]	×	×			Indicates [On/Off] status of MAIN switch indicator output
OWN VHCL [On/Off]	×				Indicates [On/Off] status of own vehicle indicator output
VHCL AHEAD [On/Off]	×				Indicates [On/Off] status of vehicle ahead detection indicator output
ICC WARNING [On/Off]	×				Indicates [On/Off] status of ICC system warning lamp output
VHCL SPEED SE [km/h] or [mph]	×	×	×	×	Indicates vehicle speed calculated from ADAS control unit through CAN communication [ABS actuator and electric unit (control unit) transmits vehicle speed signal (wheel speed) through CAN communication]
SET VHCL SPD [km/h] or [mph]	×	×			Indicates set vehicle speed memorized in ADAS control unit
BUZZER O/P [On/Off]	×				Indicates [On/Off] status of ICC warning chime output
THRTL SENSOR [deg]	×	×			**NOTE:** The item is displayed, but it is not monitored
ENGINE RPM [rpm]	×				Indicates engine speed read from ADAS control unit through CAN communication (ECM transmits engine speed signal through CAN communication)
WIPER SW [OFF/LOW/HIGH]	×				Indicates wiper [OFF/LOW/HIGH] status (BCM transmits front wiper request signal through CAN communication)
YAW RATE [deg/s]	×				**NOTE:** The item is displayed, but it is not monitored
BA WARNING [On/Off]	×				Indicates [On/Off] status of IBA OFF indicator lamp output
STP LMP DRIVE [On/Off]	×	×			Indicates [On/Off] status of ICC brake hold relay drive output
D RANGE SW [On/Off]	×				Indicates [On/Off] status of “D” or “M” positions read from ADAS control unit through CAN communication; ON when position “D” or “M” (TCM transmits shift position signal through CAN communication).

Monitored item [Unit]	ALL SIG (ICC)	MAIN SIG (ICC)	MAIN SIG (LDW/LDP)	MAIN SIG (BSW/BSI)	Description
NP RANGE SW [On/Off]	×				Indicates shift position signal read from ADAS control unit through CAN communication (TCM transmits shift position signal through CAN communication)
PKB SW [On/Off]	×				Parking brake switch status [On/Off] judged from the parking brake switch signal that ADAS control unit readout via CAN communication is displayed (combination meter transmits the parking brake switch signal via CAN communication)
PWR SUP MONI [V]	×	×			Indicates IGN voltage input by ADAS control unit
VHCL SPD AT [km/h] or [mph]	×				Indicates vehicle speed calculated from A/T vehicle speed sensor read from ADAS control unit through CAN communication (TCM transmits A/T vehicle speed sensor signal through CAN communication)
THRTL OPENING [%]	×	×			Indicates throttle position read from ADAS control unit through CAN communication (ECM transmits accelerator pedal position signal through CAN communication).
GEAR [1, 2, 3, 4, 5, 6, 7]	×				Indicates A/T gear position read from ADAS control unit through CAN communication (TCM transmits current gear position signal through CAN communication)
MODE SIG [OFF, ICC, ASCD]	×				Indicates the active mode from ICC or ASCD [conventional (fixed speed) cruise control mode]
SET DISP IND [On/Off]	×				Indicates [On/Off] status of SET switch indicator output
DISTANCE [m]	×				Indicates the distance from the vehicle ahead
RELATIVE SPD [m/s]	×				Indicates the relative speed of the vehicle ahead
DYNA ASIST SW [On/Off]	×	×		×	Indicates [On/Off] status as judged from ICC steering switch signal (ECM transmits ICC steering switch signal through CAN communication)
DCA ON IND [On/Off]	×				The status [ON/OFF] of DCA system switch indicator output is displayed
DCA VHL AHED [On/Off]	×				The status [ON/OFF] of vehicle ahead detection indicator output in DCA system is displayed
IBA SW [On/Off]	×	×			Indicates [On/Off] status of IBA OFF switch
FCW SYSTEM ON [On/Off]	×	×			Indicates [On/Off] status of FCW system
APA TEMP [°C]	×				Accelerator pedal actuator integrated motor temperature that the ADAS control unit readout via ITS communication is displayed (Accelerator pedal actuator transmits the integrated motor temperature via ITS communication)
APA PWR [V]	×				Accelerator pedal actuator power supply voltage that the ADAS control unit readout via ITS communication is displayed (Accelerator pedal actuator transmits the power supply voltage via ITS communication)
LDW SYSTEM ON [On/Off]			×		Indicates [On/Off] status of LDW system
LDW ON LAMP [On/Off]			×		Indicates [On/Off] status of waning systems ON indicator output
LDP ON IND [On/Off]			×		Indicates [On/Off] status of LDP ON indicator lamp (Green) output
LANE DPRT W/L [On/Off]			×		Indicates [On/Off] status of lane departure warning lamp (Yellow) output
LDW BUZER OUTPUT [On/Off]			×		Indicates [On/Off] status of warning buzzer output

Monitored item [Unit]	ALL SIG (ICC)	MAIN SIG (ICC)	MAIN SIG (LDW/LDP)	MAIN SIG (BSW/BSI)	Description
LDP SYSTEM ON [On/Off]			×		Indicates [On/Off] status of LDP system
WARN REQ [On/Off]			×		Indicates an ADAS control unit judged warning state (ON/OFF) of LDP system
READY signal [On/Off]			×		Indicates LDP system settings
Camera lost [Detect/Deviate/Both]			×	×	Indicates a lane marker detection state judged from a lane marker detection signal read by the ADAS control unit via ITS communication (Lane camera unit transmits a lane marker signal via ITS communication)
Shift position [Off, P, R, N, D, M/T1 - 7]			×	×	Indicates shift position read from ADAS control unit through CAN communication (TCM transmits shift position signal through CAN communication)
Turn signal [OFF/LH/RH/LH&RH]			×	×	Indicates turn signal operation status read from ADAS control unit through CAN communication (BCM transmits turn indicator signal through CAN communication)
SIDE G [G]			×	×	Indicates lateral G acting on the vehicle. This lateral G is judged from a side G sensor signal read by ADAS control unit via CAN communication (The ABS actuator and electric unit (control unit) transmits a side G sensor signal via CAN communication)
STATUS signal [Stnby/Warn/Cancl/ Off]			×		Indicates a control state of LDP system
Lane unclear [On/Off]			×	×	Indicates an ON/OFF state of the lane marker. The ON/OFF state is judged from a detected lane condition signal read by the ADAS control unit via ITS communication (The lane camera unit transmits a detected lane condition signal via ITS communication)
FUNC ITEM [FUNC3]	×	×	×	×	Indicates systems which can be set to ON/OFF by selecting “Driver Assistance” ⇒ “Dynamic Assistance Settings” of the navigation system FUNC3: Distance Control Assist (DCA), Lane Departure Prevention (LDP) and Blind Spot Intervention (BSI)
FUNC ITEM (NV-ICC) [Off]	×	×	×	×	**NOTE:** The item is displayed, but it is not monitored
FUNC ITEM (NV-DCA) [Off]	×	×	×	×	**NOTE:** The item is displayed, but it is not monitored
DCA SELECT [On/Off]	×	×	×	×	Indicates an ON/OFF state of the DCA system. The DCA system can be set to ON/OFF by selecting “Driver Assistance” ⇒ “Dynamic Assistance Settings” of the navigation system
LDP SELECT [On/Off]	×	×	×	×	Indicates an ON/OFF state of LDP system. LDP system can be set to ON/OFF by selecting “Driver Assistance” ⇒ “Dynamic Assistance Settings” of the navigation system
BSI SELECT [On/Off]	×	×	×	×	Indicates an ON/OFF state of BSI system. BSI system can be set to ON/OFF by selecting “Driver Assistance” ⇒ “Dynamic Assistance Settings” of the navigation system.
NAVI ICC SELECT [Off]	×	×	×	×	**NOTE:** The item is displayed, but it is not monitored
NAVI DCA SELECT [Off]	×	×	×	×	**NOTE:** The item is displayed, but it is not monitored
SYS SELECTABILITY [On/Off]	×	×	×	×	Indicates the availability of ON/OFF switching for “Driver Assistance” items received from the AV control unit via CAN communication

Monitored item [Unit]	ALL SIG (ICC)	MAIN SIG (ICC)	MAIN SIG (LDW/LDP)	MAIN SIG (BSW/BSI)	Description
DRIVE MODE STATS [STD/SPORT/ECO/ SNOW/MID/ERROR]	×	×	×	×	Indicates a drive mode selector select position judged from a drive mode select switch position signal read by the ADAS control unit via CAN communication (The A/C auto amp. transmits a switch position signal of the drive mode select switch signal via CAN communication)
WARN SYS SW [On/Off]	×	×	×	×	Indicates [On/Off] status of warning systems switch
BSW/BSI WARN LMP [On/Off]				×	Indicates [On/Off] status of BSW/BSI warning lamp output
BSI ON IND [On/Off]				×	Indicates [On/Off] status of BSI ON indicator output
BSW SYSTEM ON [On/Off]				×	Indicates [On/Off] status of BSW system
BSI SYSTEM ON [On/Off]				×	Indicates [On/Off] status of BSI system

ACTIVE TEST

CAUTION:

- **Never perform “Active Test” while driving the vehicle.**
- **The “Active Test” cannot be performed when the following systems warning lamp is illuminated.**
  - **ICC system warning lamp**
  - **Lane departure warning lamp**
  - **BSW/BSI warning lamp**
  - **IBA OFF indicator lamp (IBA system ON)**
- **Shift the selector lever to “P” position, and then perform the test.**

Test item	Description
METER LAMP	The ICC system warning lamp, MAIN switch indicator and IBA OFF indicator lamp can be illuminated by ON/OFF operations as necessary
STOP LAMP	The ICC brake hold relay can be operated by ON/OFF operations as necessary, and the stop lamp can be illuminated
ICC BUZZER	Sounds a buzzer used for following systems by arbitrarily operating ON/OFF • Intelligent Cruise Control (ICC) • Distance Control Assist (DCA) • Forward Collision Warning (FCW) • Intelligent Brake Assist (IBA)
BRAKE ACTUATOR	Activates the brake by an arbitrary operation
Active Pedal	The accelerator pedal actuator can be operated as necessary
DCA INDICATOR	The DCA system switch indicator can be illuminated by ON/OFF operations as necessary
LDP BUZZER	Sounds a buzzer used for following systems by arbitrarily operating ON/OFF • Lane Departure Warning (LDW) • Lane Departure Prevention (LDP) • Blind Spot Warning (BSW) • Blind Spot Intervention (BSI)
WARNING SYSTEM IND	The warning systems ON indicator (on warning systems switch) can be illuminated by ON/OFF operations as necessary
LDP ON IND	The LDP ON indicator lamp can be illuminated by ON/OFF operations as necessary
LANE DEPARTURE W/L	The Lane departure warning lamp can be illuminated by ON/OFF operations as necessary
BSW/BSI WARNING LAMP	The BSW/BSI warning lamp can be illuminated by ON/OFF operations as necessary
BSI ON INDICATOR	The BSI ON indicator can be illuminated by ON/OFF operations as necessary

METER LAMP

NOTE:

The test can be performed only when the engine is running.

Test item	Operation	Description	• MAIN switch indicator • ICC system warning lamp • IBA OFF indicator lamp
METER LAMP	Off	Stops sending the following signals to exit from the test • Meter display signal • ICC warning lamp signal • IBA OFF indicator lamp signal	OFF
	On	Transmits the following signals to the combination meter via CAN communication • Meter display signal • ICC warning lamp signal • IBA OFF indicator lamp signal	ON

STOP LAMP

Test item	Operation	Description	Stop lamp
STOP LAMP	Off	Stops transmitting the ICC brake hold relay drive signal below to end the test	OFF
	On	Transmits the ICC brake hold relay drive signal	ON

ICC BUZZER

Test item	Operation	Description	ICC warning chime operation sound
ICC BUZZER	MODE1	Transmits the buzzer output signals to the combination meter via CAN communication	Intermittent beep sound
	Test start	Starts the tests of “MODE1”	—
	Reset	Stops transmitting the buzzer output signal below to end the test	—
	End	Returns to the “SELECT TEST ITEM” screen	—

BRAKE ACTUATOR

NOTE:

The test can be performed only when the engine is running.

Test item	Operation	Description	“PRESS SENS” value
BRAKE ACTUATOR	MODE1	Transmits the brake fluid pressure control signal to the ABS actuator and electric unit (control unit) via CAN communication	10 bar
	MODE2		20 bar
	MODE3		30 bar
	Test start	Starts the tests of “MODE1”, “MODE2” and “MODE3”	—
	Reset	Stops transmitting the brake fluid pressure control signal below to end the test	—
	End	Returns to the “SELECT TEST ITEM” screen	—

NOTE:

The test is finished in 10 seconds after starting

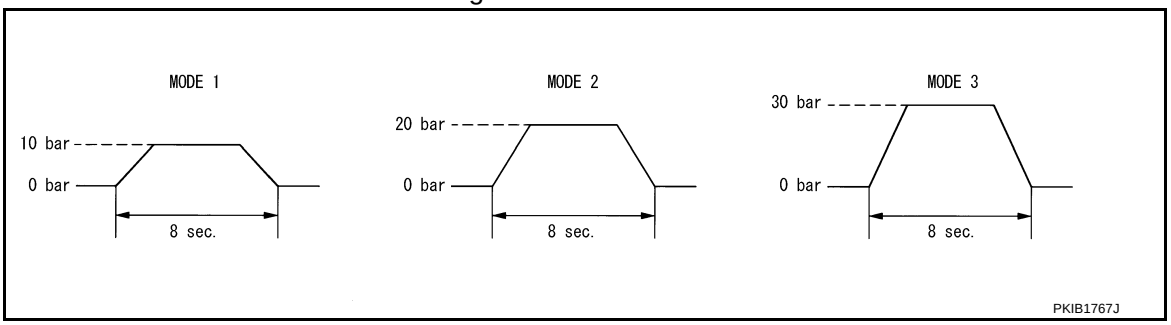

Active Pedal

CAUTION:

- **Shift the selector lever to "P" position, and then perform the test.**
- **Never depress the accelerator pedal excessively. (The engine speed may rise unexpectedly when finishing the test.)**

NOTE:

- Depress the accelerator pedal to check when performing the test.
- The test can be performed only when the engine is running.

Test item	Operation	Description	Accelerator pedal operation
Active Pedal	MODE1	Transmit the accelerator pedal feedback force control signal to the accelerator pedal actuator via ITS communication.	Constant with a force of 25 N for 8 seconds
	MODE2		Constant with a force of 15 N for 8 seconds
	MODE3		Change up to a force of 25 N for 8 seconds
	MODE4		Change up to a force of 15 N for 8 seconds
	Test start	Starts the tests of "MODE1", "MODE2", "MODE3" and "MODE4"	—
	Reset	Stops transmitting the accelerator pedal feedback force control signal below to end the test.	—
	End	Returns to the "SELECT TEST ITEM" screen	—

NOTE:

The test is finished in 10 seconds after starting

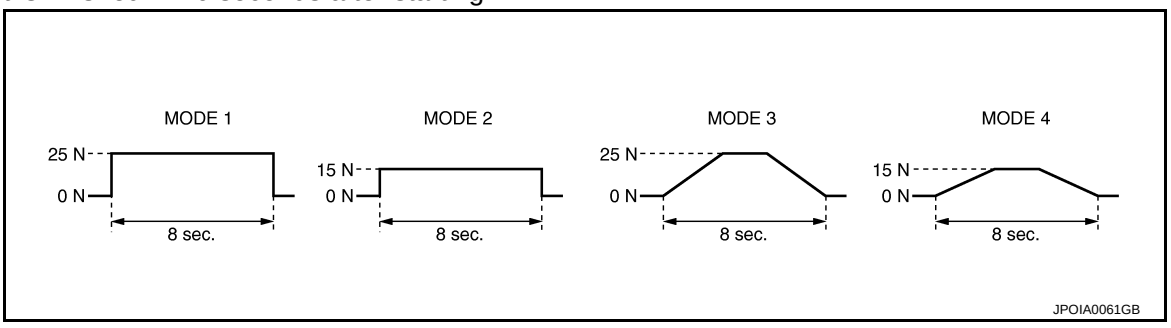

DCA INDICATOR

NOTE:

The test can be performed only when the engine is running.

Test item	Operation	Description	DCA system switch indicator
DCA INDICATOR	Off	Stops transmitting the DCA system switch indicator signal below to end the test	—
	On	Transmits the DCA system switch indicator signal to the combination meter via CAN communication	ON

LDP BUZZER

Test item	Operation	Description	Warning buzzer
LDP BUZZER	Off	Stops transmitting the warning buzzer signal below to end the test	—
	On	Transmits the warning buzzer signal to the warning buzzer	ON

WARNING SYSTEM IND

Test item	Operation	Description	Warning systems ON indicator
WARNING SYSTEM IND	Off	Stops transmitting the warning systems ON indicator signal below to end the test	—
	On	Transmits the warning systems ON indicator signal to the warning systems ON indicator.	ON

LDP ON IND

Test item	Operation	Description	LDP ON indicator lamp (Green)
LDP ON IND	Off	Stops transmitting the LDP ON indicator lamp signal below to end the test	—
	On	Transmits the LDP ON indicator lamp signal to the combination meter via CAN communication	ON

LANE DEPARTURE W/L

Test item	Operation	Description	Lane departure warning lamp (Yellow)
LANE DEPARTURE W/L	Off	Stops transmitting the lane departure warning lamp signal below to end the test	—
	On	Transmits the lane departure warning lamp signal to the combination meter via CAN communication	ON

BSW/BSI WARNING LAMP

Test item	Operation	Description	BSW/BSI warning lamp (Yellow)
BSW/BSI WARNING LAMP	Off	Stops transmitting the BSW/BSI warning lamp signal below to end the test	—
	On	Transmits the BSW/BSI warning lamp signal to the combination meter via CAN communication	ON

BSI ON INDICATOR

Test item	Operation	Description	BSI ON indicator lamp (Green)
BSI ON INDICATOR	Off	Stops transmitting the BSI ON indicator signal below to end the test	—
	On	Transmits the BSI ON indicator signal to the combination meter via CAN communication	ON

DIAGNOSIS SYSTEM (ICC SENSOR)

CONSULT Function (LASER)

INFOID:0000000008131644

APPLICATION ITEMS

CONSULT performs the following functions via CAN communication with ADAS control unit and the communication with ICC sensor.

Diagnosis mode	Description
Work Support	It can monitor the adjustment direction indication in order to perform the laser beam aiming operation smoothly
Self Diagnostic Result	Displays malfunctioning system memorized in ICC sensor
Data Monitor	Displays real-time input/output data of ICC sensor
Ecu Identification	Displays ICC sensor part number
CAN Diag Support Monitor	The results of transmit/receive diagnosis of ITS communication can be read

WORK SUPPORT

Work support items	Description
LASER BEAM ADJUST	Outputs laser beam, calculates dislocation of the beam, and indicates adjustment direction

Laser Beam Adjust

Refer to CCS-66, "Description".

SELF DIAGNOSTIC RESULT

Refer to CCS-58, "DTC Index".

DATA MONITOR

NOTE:

The following table includes information (items) inapplicable to this vehicle. For information (items) applicable to this vehicle, refer to CONSULT display items.

Monitored item [Unit]	Description
VHCL SPEED SE [km/h] or [mph]	Vehicle speed judged from a vehicle speed signal read by the ICC sensor via ITS communication is displayed [ADAS control unit receives a vehicle speed signal from ABS actuator and electric unit (control unit) via CAN communication and transmits the calculated vehicle speed to ICC sensor via ITS communication]
YAW RATE [deg/s]	Yaw rate judged from a yaw rate signal read by ICC sensor via ITS communication is displayed [ADAS control unit receives a yaw rate signal from ABS actuator and electric unit (control unit) via CAN communication and transmits the calculated yaw rate to ICC sensor via ITS communication]
PWR SUP MONI [V]	Indicates IGN voltage input by ICC sensor
DISTANCE [m]	Indicates the distance from the vehicle ahead
RELATIVE SPD [m/s]	Indicates the relative speed of the vehicle ahead
LASER OFFSET [m]	**NOTE:** The item is indicated, but not used
LASER HEIGHT [m]	**NOTE:** The item is indicated, but not used
STEERING ANGLE [deg]	The steering angle is displayed
STRG ANGLE SPEED [deg/s]	The steering angle speed is displayed

Monitored item [Unit]	Description
L/R ADJUST	The horizontal correction value of the laser beam is displayed
U/D ADJUST	The vertical correction value of the laser beam is displayed

ECU DIAGNOSIS INFORMATION

ADAS CONTROL UNIT

Reference Value

INFOID:0000000008131645

VALUES ON THE DIAGNOSIS TOOL

NOTE:

The following table includes information (items) inapplicable to this vehicle. For information (items) applicable to this vehicle, refer to CONSULT display items.

Monitor item	Condition		Value/Status
MAIN SW	Ignition switch ON	When MAIN switch is pressed	On
		When MAIN switch is not pressed	Off
SET/COAST SW	Ignition switch ON	When SET/COAST switch is pressed	On
		When SET/COAST switch is not pressed	Off
CANCEL SW	Ignition switch ON	When CANCEL switch is pressed	On
		When CANCEL switch is not pressed	Off
RESUME/ACC SW	Ignition switch ON	When RESUME/ACCELERATE switch is pressed	On
		When RESUME/ACCELERATE switch is not pressed	Off
DISTANCE SW	Ignition switch ON	When DISTANCE switch is pressed	On
		When DISTANCE switch is not pressed	Off
CRUISE OPE	Drive the vehicle and activate the vehicle-to-vehicle distance control mode	When ICC system is controlling	On
		When ICC system is not controlling	Off
BRAKE SW	Ignition switch ON	When brake pedal is depressed	Off
		When brake pedal is not depressed	On
STOP LAMP SW	Ignition switch ON	When brake pedal is depressed	On
		When brake pedal is not depressed	Off
IDLE SW	Engine running	Idling	On
		Except idling (depress accelerator pedal)	Off
SET DISTANCE	• Start the engine and turn the ICC system ON • Press the DISTANCE switch to change the vehicle-to-vehicle distance setting	When set to “long”	Long
		When set to “middle”	Mid
		When set to “short”	Short
CRUISE LAMP	Start the engine and press MAIN switch	ICC system ON (MAIN switch indicator ON)	On
		ICC system OFF (MAIN switch indicator OFF)	Off
OWN VHCL	Start the engine and press MAIN switch	ICC system ON (Own vehicle indicator ON)	On
		ICC system OFF (Own vehicle indicator OFF)	Off
VHCL AHEAD	Drive the vehicle and activate the vehicle-to-vehicle distance control mode	When a vehicle ahead is detected (vehicle ahead detection indicator ON)	On
		When a vehicle ahead is not detected (vehicle ahead detection indicator OFF)	Off
ICC WARNING	Start the engine and press MAIN switch	When ICC system is malfunctioning (ICC system warning lamp ON)	On
		When ICC system is normal (ICC system warning lamp OFF)	Off

Monitor item	Condition		Value/Status
VHCL SPEED SE	While driving		Displays the vehicle speed calculated by ADAS control unit
SET VHCL SPD	While driving	When vehicle speed is set	Displays the set vehicle speed
BUZZER O/P	Engine running	When the buzzer of the following system operates • Vehicle-to-vehicle distance control mode • DCA system • FCW system • IBA system	On
		When the buzzer of the following system not operates • Vehicle-to-vehicle distance control mode • DCA system • FCW system • IBA system	Off
THRTL SENSOR	**NOTE:** The item is indicated, but not monitored		0.0
ENGINE RPM	Engine running		Equivalent to tachometer reading
WIPER SW	Ignition switch ON	Wiper not operating	Off
		Wiper LO operation	Low
		Wiper HI operation	High
YAW RATE	**NOTE:** The item is indicated, but not monitored		0.0
BA WARNING	Engine running	IBA OFF indicator lamp ON • When IBA system is malfunctioning • When IBA system is turned to OFF	On
		IBA OFF indicator lamp OFF • When IBA system is normal • When IBA system is turned to ON	Off
STP LMP DRIVE	Drive the vehicle and activate the vehicle-to-vehicle distance control mode	When ICC brake hold relay is activated	On
		When ICC brake hold relay is not activated	Off
D RANGE SW	Engine running	When the selector lever is in “D” position or manual mode	On
		When the selector lever is in any position other than “D” or manual mode	Off
NP RANGE SW	Engine running	When the selector lever is in “N”, “P” position	On
		When the selector lever is in any position other than “N”, “P”	Off
PKB SW	Ignition switch ON	When the parking brake is applied	On
		When the parking brake is released	Off
PWR SUP MONI	Engine running		Power supply voltage value of ADAS control unit
VHCL SPD AT	While driving		Value of A/T vehicle speed sensor signal
THRTL OPENING	Engine running	Depress accelerator pedal	Displays the throttle position

Monitor item	Condition		Value/Status
GEAR	While driving		Displays the gear position
MODE SIG	Start the engine and press MAIN switch	When ICC system is deactivated	Off
		When vehicle-to-vehicle distance control mode is activated	ICC
		When conventional (fixed speed) cruise control mode is activated	ASCD
SET DISP IND	• Drive the vehicle and activate the conventional (fixed speed) cruise control mode • Press SET/COAST switch	SET switch indicator ON	On
		SET switch indicator OFF	Off
DISTANCE	Drive the vehicle and activate the vehicle-to-vehicle distance control mode	When a vehicle ahead is detected	Displays the distance from the preceding vehicle
		When a vehicle ahead is not detected	0.0
RELATIVE SPD	Drive the vehicle and activate the vehicle-to-vehicle distance control mode	When a vehicle ahead is detected	Displays the relative speed.
		When a vehicle ahead is not detected	0.0
DYNA ASIST SW	Ignition switch ON	When dynamic driver assistance switch is pressed	On
		When dynamic driver assistance switch is not pressed	Off
DCA ON IND	Start the engine and press dynamic driver assistance switch (When DCA setting is ON)	DCA system OFF (DCA system switch indicator OFF)	Off
		DCA system ON (DCA system switch indicator ON)	On
DCA VHL AHED	Drive the vehicle and activate the DCA system	When a vehicle ahead is not detected (vehicle ahead detection indicator OFF)	Off
		When a vehicle ahead is detected (vehicle ahead detection indicator ON)	On
IBA SW	Ignition switch ON	When the IBA OFF switch is pressed	On
		When the IBA OFF switch is not pressed	Off
FCW SYSTEM ON	Ignition switch ON	When the FCW system is ON (Warning systems ON indicator ON)	On
		When the FCW system is OFF (Warning systems ON indicator OFF)	Off
APA TEMP	Engine running		Display the accelerator pedal actuator integrated motor temperature
APA PWR	Ignition switch ON		Power supply voltage value of accelerator pedal actuator
LDW SYSTEM ON	Ignition switch ON	When the LDW system is ON (Warning systems ON indicator ON)	On
		When the LDW system is OFF (Warning systems ON indicator OFF)	Off
LDW ON LAMP	Ignition switch ON	Warning systems ON indicator ON	On
		Warning systems ON indicator OFF	Off

Monitor item	Condition		Value/Status
LDP ON IND	Start the engine and press dynamic driver assistance switch (When LDP system setting is ON)	LDP ON indicator lamp ON	On
		LDP ON indicator lamp OFF	Off
LANE DPRT W/L	Drive the vehicle and activate the LDW system or LDP system	Lane departure warning lamp ON	On
		Lane departure warning lamp OFF	Off
LDW BUZER OUTPUT	Drive the vehicle and activate the LDW/LDP system or BSW/BSI system	When the buzzer of the following system operates • LDW/LDP system • BSW/BSI system	On
		When the buzzer of the following system does not operate • LDW/LDP system • BSW/BSI system	Off
LDP SYSTEM ON	Start the engine and press dynamic driver assistance switch (When LDP system setting is ON)	When the LDP system is ON	On
		When the LDP system is OFF	Off
READY signal	Start the engine and press dynamic driver assistance switch (When LDP system setting is ON)	When the LDP system is ON	On
		When the LDP system is OFF	Off
Camera lost	Drive the vehicle and activate the LDW system, LDP system or BSI system	Both side lane markers are detected	Detect
		Deviate side lane marker is lost	Deviate
		Both side lane markers are lost	Both
Shift position	• Engine running • While driving		Displays the shift position
Turn signal	Turn signal lamps OFF		Off
	Turn signal lamp LH blinking		LH
	Turn signal lamp RH blinking		RH
	Turn signal lamp LH and RH blinking		LH&RH
SIDE G	While driving	Vehicle turning right	Negative value
		Vehicle turning left	Positive value
WARN REQ	Drive the vehicle and activate the LDP system	Lane departure warning is operating	On
		Lane departure warning is not operating	Off
STATUS signal	Drive the vehicle and activate the LDP system	When the LDP system is ON	Stnby
		When the LDP system is operating	Warn
		When the LDP system is canceled	Cancl
		When the LDP system is OFF	Off
Lane unclear	While driving	Lane marker is unclear	On
		Lane marker is clear	Off
FUNC ITEM	Ignition switch ON		FUNC3
FUNC ITEM (NV-ICC)	**NOTE:** The item is indicated, but not monitored		Off
FUNC ITEM (NV-DCA)	**NOTE:** The item is indicated, but not monitored		Off
DCA SELECT	Ignition switch ON	“Distance Control Assist” set with the navigation system is ON	On
		“Distance Control Assist” set with the navigation system is OFF	Off

Monitor item	Condition		Value/Status
LDP SELECT	Ignition switch ON	“Lane Departure Prevention” set with the navigation system is ON	On
		“Lane Departure Prevention” set with the navigation system is OFF	Off
BSI SELECT	Ignition switch ON	“Blind Spot Intervention” set with the navigation system is ON	On
		“Blind Spot Intervention” set with the navigation system is OFF	Off
NAVI ICC SELECT	**NOTE:** The item is indicated, but not monitored		Off
NAVI DCA SELECT	**NOTE:** The item is indicated, but not monitored		Off
SYS SELECTABILITY	Ignition switch ON	Items set with the navigation system can be switched normally	On
		Items set with the navigation system cannot be switched normally	Off
DRIVE MODE STATS	Ignition switch ON	When drive mode select switch position is STANDARD	STD
		When drive mode select switch position is in SPORT	SPORT
		When drive mode select switch position is in ECO	ECO
		When drive mode select switch position is in SNOW	SNOW
		When position of drive mode select switch is in following states • In the middle of SNOW-ECO • In the middle of ECO-STANDARD • In the middle of STANDARD-SPORTS	Mid
		A signal other than those above is input	ERROR
WARN SYS SW	Ignition switch ON	When warning systems switch is pressed	On
		When warning systems switch is not pressed	Off
BSW/BSI WARN LMP	Ignition switch ON	BSW/BSI warning lamp ON	On
		BSW/BSI warning lamp OFF	Off
BSI ON IND	Ignition switch ON	BSI ON indicator ON	On
		BSI ON indicator OFF	Off
BSW SYSTEM ON	Ignition switch ON	When the BSW system is ON (Warning systems ON indicator ON)	On
		When the BSW system is OFF (Warning systems ON indicator OFF)	Off
BSI SYSTEM ON	Start the engine and press dynamic driver assistance switch (When BSI system setting is ON)	When the BSI system is ON	On
		When the BSI system is OFF	Off

TERMINAL LAYOUT

PHYSICAL VALUES

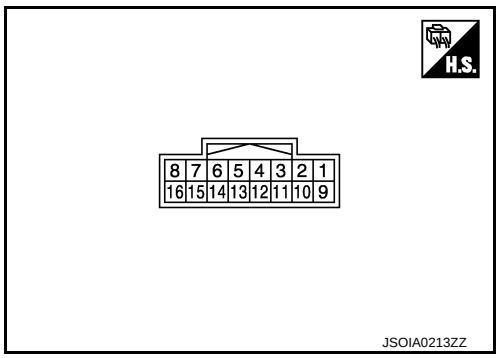

Terminal No. (Wire color)		Description		Condition		Value (Approx.)
+	–	Signal name	Input/ Output			
1 (Y)	Ground	Warning systems switch	Input	Ignition switch ON	When warning systems switch is not pressed	12 V
					When warning systems switch is pressed	0 V
3 (BR)		IBA OFF switch	Input	Ignition switch ON	When IBA OFF switch is not pressed	12 V
					When IBA OFF switch is pressed	0 V
4 (O)		Warning systems ON indicator	Output	Ignition switch ON	Warning systems ON indicator ON	0 V
					Warning systems ON indicator OFF	12 V
5 (SB)		ICC brake hold relay drive signal	Output	Ignition switch ON	—	12 V
					At “STOP LAMP” test of “Active test”	0 V
6 (B/R)		Ground	—	Ignition switch ON	—	0 V
7 (L)		ITS communication-H	—	—	—	—
8 (P)		ITS communication-L	—	—	—	—
12 (W)		Warning buzzer signal	Output	Ignition switch ON	Warning buzzer operation	0 V
					Warning buzzer not operating	12 V
14 (L)		CAN -H	—	—	—	—
15 (R)		CAN -L	—	—	—	—
16 (GR)		Ignition power supply	Input	Ignition switch ON		Battery voltage

Fail-safe

INFOID:0000000008131646

If a malfunction occurs in each system, ADAS control unit cancels each control, sounds a beep, and turns ON the warning lamp or indicator lamp.

System	Buzzer	Warning lamp/Indicator lamp	Description
Vehicle-to-vehicle distance control mode	High-pitched tone	ICC system warning lamp	Cancel
Conventional (fixed speed) cruise control mode	High-pitched tone	ICC system warning lamp	Cancel
Intelligent Brake Assist (IBA)	High-pitched tone	IBA OFF indicator lamp	Cancel
Forward Collision Warning (FCW)	High-pitched tone	IBA OFF indicator lamp	Cancel

System	Buzzer	Warning lamp/Indicator lamp	Description
Distance Control Assist (DCA)	High-pitched tone	ICC system warning lamp	Cancel
Lane Departure Warning (LDW)	—	Lane departure warning lamp	Cancel
Lane Departure Prevention (LDP)	Low-pitched tone	Lane departure warning lamp	Cancel
Blind Spot Warning (BSW)	—	BSW/BSI warning lamp	Cancel
Blind Spot Intervention (BSI)	Low-pitched tone	BSW/BSI warning lamp	Cancel
Active trace control function	—	IBA OFF indicator lamp	• Cancel • If a communication error occurs between the A/C auto amp. and CAN communication line, a mode at the instant of error occurrence is maintained until the mode is fixed to STANDARD after turning the ignition switch from OFF to ON

DTC Inspection Priority Chart

INFOID:0000000008131647

If multiple DTCs are detected simultaneously, check them one by one depending on the following DTC inspection priority chart.

Priority	Detected items (DTC)
1	• U1507: LOST COMM (SIDE RDR R) • U1508: LOST COMM (SIDE RDR L)
2	• U1000: CAN COMM CIRCUIT • U1010: CONTROL UNIT (CAN)
3	• C1B00: CAMERA UNIT MALF • C1F02: APA C/U MALF • C1A17: ICC SENSOR MALF • C1B53: SIDE RDR R MALF • C1B54: SIDE RDR L MALF

Priority	Detected items (DTC)
4	• C1A01: POWER SUPPLY CIR • C1A02: POWER SUPPLY CIR 2 • C1A04: ABS/TCS/VDC CIRC • C1A05: BRAKE SW/STOP L SW • C1A06: OPERATION SW CIRC • C1A12: LASER BEAM OFFCNTR • C1A13: STOP LAMP RLY FIX • C1A14: ECM CIRCUIT • C1A16: RADAR STAIN • C1A18: LASER AIMING INCMP • C1A2A: ICC SEN PWR SUP CIR • C1A21: ICC SENSOR HIGH TEMP • C1A24: NP RANGE • C1A26: ECD MODE MALF • C1A27: ECD PWR SUPLY CIR • C1A33: CAN TRANSMISSION ERR • C1A34: COMMAND ERROR • C1A35: APA CIR • C1A36: APA CAN COMM CIR • C1A37: APA CAN CIR 2 • C1A38: APA CAN CIR 1 • C1A39: STRG SEN CIR • C1A40: SYSTEM SW CIRC • C1B01: CAM AIMING INCMP • C1B03: CAM ABNRML TMP DETCT • C1F01: APA MOTOR MALF • C1F05: APA PWR SUPLY CIR • U0121: VDC CAN CIR 2 • U0126: STRG SEN CAN CIR 1 • U0235: ICC SENSOR CAN CIRC 1 • U0401: ECM CAN CIR 1 • U0402: TCM CAN CIR 1 • U0415: VDC CAN CIR 1 • U0424: HVAC CAN CIR 1 • U0428: STRG SEN CAN CIR 2 • U1500: CAM CAN CIR 2 • U1501: CAM CAN CIR 1 • U1502: ICC SEN CAN COMM CIR • U1503: SIDE RDR L CAN CIR 2 • U1504: SIDE RDR L CAN CIR 1 • U1505: SIDE RDR R CAN CIR 2 • U1506: SIDE RDR R CAN CIR 1 • U150B: ECM CAN CIRC 3 • U150C: VDC CAN CIRC 3 • U150D: TCM CAN CIRC 3 • U150E: BCM CAN CIRC 3 • U150F: AV CAN CIRC 3 • U1512: HVAC CAN CIRC3 • U1513: METER CAN CIRC 3 • U1514: STRG SEN CAN CIRC 3 • U1515: ICC SENSOR CAN CIRC 3 • U1516: CAM CAN CIRC 3 • U1517: APA CAN CIRC 3 • U1518: SIDE RDR L CAN CIRC 3 • U1519: SIDE RDR R CAN CIRC 3
5	• C1A03: VHCL SPEED SE CIRC
6	• C1A15: GEAR POSITION
7	• C1A00: CONTROL UNIT

DTC Index

INFOID:0000000008131648

NOTE:
- The details of time display are as per the following.

- CRNT: A malfunction is detected now
- PAST: A malfunction was detected in the past

• IGN counter is displayed on FFD (Freeze Frame Data).

- 0: The malfunctions that are detected now
  CAN communication system (U1000, U1010)
- 1 - 39: It increases like 0 → 1 → 2 ··· 38 → 39 after returning to the normal condition whenever the ignition switch OFF → ON. It returns to 0 when a malfunction is detected again in the process.
- If it is over 39, it is fixed to 39 until the self-diagnosis results are erased.
  Other than CAN communication system (Other than U1000, U1010)
- 1 - 49: It increases like 0 → 1 → 2 ··· 38 → 49 after returning to the normal condition whenever the ignition switch OFF → ON. It returns to 0 when a malfunction is detected again in the process.
- If it is over 49, it is fixed to 49 until the self-diagnosis results are erased.

Systems for fail-safe

- A: Vehicle-to-vehicle distance control mode
- B: Conventional (fixed speed) cruise control mode
- C: Intelligent Brake Assist (IBA)
- D: Forward Collision Warning (FCW)
- E: Distance Control Assist (DCA)
- F: Lane Departure Warning (LDW)/Lane Departure Prevention (LDP)
- G: Blind Spot Warning (BSW)/Blind Spot Intervention (BSI)
- H: Active trace control function

DTC		CONSULT display	Warning lamp				Fail-safe	Reference
CONSULT	On board display		ICC system warning lamp	IBA OFF indicator lamp	Lane departure warning lamp	BSW/BSI warning lamp	System	
C1A00	0	CONTROL UNIT	ON	ON	ON	ON	A, B, C, D, E, F, G, H	CCS-77
C1A01	1	POWER SUPPLY CIR	ON	ON	ON	ON	A, B, C, D, E, F, G, H	CCS-79
C1A02	2	POWER SUPPLY CIR 2	ON	ON	ON	ON	A, B, C, D, E, F, G, H	CCS-79
C1A03	3	VHCL SPEED SE CIRC	ON	ON	ON	ON	A, B, C, D, E, F, G, H	CCS-81
C1A04	4	ABS/TCS/VDC CIRC	ON	ON	ON	ON	A, B, C, D, E, F, G, H	CCS-83
C1A05	5	BRAKE SW/STOP L SW	ON	ON	ON	ON	A, B, C, D, E, F, G	CCS-84
C1A06	6	OPERATION SW CIRC	ON		ON	ON	A, B, E, F, G	CCS-89
C1A12	12	LASER BEAM OFFCN-TR	ON	ON			A, C, D, E	CCS-92
C1A13	13	STOP LAMP RLY FIX	ON	ON			A, B, C, D, E	CCS-93
C1A14	14	ECM CIRCUIT	ON		ON	ON	A, B, E, F, G	CCS-99
C1A15	15	GEAR POSITION	ON	ON	ON	ON	A, B, C, D, E, F, G	CCS-100
C1A16	16	RADAR STAIN	ON	ON			A, C, D, E	CCS-102
C1A17	17	ICC SENSOR MALF	ON	ON			A, B, C, D, E	CCS-104
C1A18	18	LASER AIMING INCMP	ON	ON			A, C, D, E	CCS-105
C1A21	21	ICC SENSOR HIGH TEMP	ON	ON			A, B, C, D, E	CCS-107
C1A24	24	NP RANGE	ON	ON	ON	ON	A, B, C, D, E, F, G	CCS-109

Systems for fail-safe

- A: Vehicle-to-vehicle distance control mode
- B: Conventional (fixed speed) cruise control mode
- C: Intelligent Brake Assist (IBA)
- D: Forward Collision Warning (FCW)
- E: Distance Control Assist (DCA)
- F: Lane Departure Warning (LDW)/Lane Departure Prevention (LDP)
- G: Blind Spot Warning (BSW)/Blind Spot Intervention (BSI)
- H: Active trace control function

DTC		CONSULT display	Warning lamp				Fail-safe	Reference
CONSULT	On board display		ICC system warning lamp	IBA OFF indicator lamp	Lane departure warning lamp	BSW/BSI warning lamp	System	
C1A26	26	ECD MODE MALF	ON	ON			A, B, C, D, E	CCS-111
C1A27	27	ECD PWR SUPLY CIR	ON	ON			A, B, C, D, E	CCS-112
C1A33	33	CAN TRANSMISSION ERR	ON				A, B, E, H	CCS-114
C1A34	34	COMMAND ERROR	ON				A, B, E, H	CCS-115
C1A35	35	APA CIR	ON				A, E	CCS-116
C1A36	36	APA CAN COMM CIR	ON				A, E	CCS-117
C1A37	133	APA CAN CIR 2	ON				A, B, E	CCS-118
C1A38	132	APA CAN CIR 1	ON				A, B, E	CCS-119
C1A39	39	STRG SEN CIR	ON	ON		ON	A, B, C, D, E, G, H	CCS-120
C1A40	40	SYSTEM SW CIRC		ON			C, D	CCS-122
C1A2A	80	ICC SEN PWR SUP CIR	ON	ON			A, C, D, E	CCS-113
C1B00	81	CAMERA UNIT MALF			ON	ON	F, G	DAS-332
C1B01	82	CAM AIMING INCMP			ON	ON	F, G	DAS-334
C1B03	83	CAM ABNRML TMP DE-TCT			BLINK	BLINK	F, G	DAS-336
C1B53	84	SIDE RDR R MALF				ON	G	DAS-475
C1B54	85	SIDE RDR L MALF				ON	G	DAS-476
C1F01	91	APA MOTOR MALF	ON				A, E	CCS-125
C1F02	92	APA C/U MALF	ON				A, E	CCS-126
C1F05	95	APA PWR SUPLY CIR	ON				A, E	CCS-127
NO DTC IS DETECTED. FURTHER TESTING MAY BE RE-QUIRED	55	NO DTC IS DETECTED. FURTHER TESTING MAY BE REQUIRED	—	—	—	—	—	—
U0121	127	VDC CAN CIR 2	ON	ON	ON	ON	A, B, C, D, E, F, G, H	CCS-129
U0126	130	STRG SEN CAN CIR 1	ON	ON		ON	A, B, C, D, E, G, H	CCS-131
U0235	144	ICC SENSOR CAN CIRC 1	ON	ON			A, B, C, D, E	CCS-133
U0401	120	ECM CAN CIR 1	ON		ON	ON	A, B, E, F, G	CCS-134

Systems for fail-safe

- A: Vehicle-to-vehicle distance control mode
- B: Conventional (fixed speed) cruise control mode
- C: Intelligent Brake Assist (IBA)
- D: Forward Collision Warning (FCW)
- E: Distance Control Assist (DCA)
- F: Lane Departure Warning (LDW)/Lane Departure Prevention (LDP)
- G: Blind Spot Warning (BSW)/Blind Spot Intervention (BSI)
- H: Active trace control function

DTC		CONSULT display	Warning lamp				Fail-safe	Reference
CONSULT	On board display		ICC system warning lamp	IBA OFF indicator lamp	Lane departure warning lamp	BSW/BSI warning lamp	System	
U0402	122	TCM CAN CIR 1	ON	ON	ON	ON	A, B, C, D, E, F, G	CCS-135
U0415	126	VDC CAN CIR 1	ON	ON	ON	ON	A, B, C, D, E, F, G, H	CCS-137
U0424	156	HVAC CAN CIR 1						BRC-119
U0428	131	STRG SEN CAN CIR 2	ON	ON		ON	A, B, C, D, E, G, H	CCS-139
U1000[NOTE]	100	CAN COMM CIRCUIT	ON	ON	ON	ON	A, B, C, D, E, F, G, H	CCS-141
U1010	110	CONTROL UNIT (CAN)	ON	ON	ON	ON	A, B, C, D, E, F, G, H	CCS-143
U1500	145	CAM CAN CIR 2			ON	ON	F, G	DAS-352
U1501	146	CAM CAN CIR 1			ON	ON	F, G	DAS-353
U1502	147	ICC SEN CAN COMM CIR	ON	ON			A, B, C, D, E	CCS-148
U1503	150	SIDE RDR L CAN CIR 2				ON	G	DAS-497
U1504	151	SIDE RDR L CAN CIR 1				ON	G	DAS-498
U1505	152	SIDE RDR R CAN CIR 2				ON	G	DAS-499
U1506	153	SIDE RDR R CAN CIR 1				ON	G	DAS-500
U1507	154	LOST COMM (SIDE RDR R)				ON	G	DAS-501
U1508	155	LOST COMM (SIDE RDR L)				ON	G	DAS-502
U150B	157	ECM CAN CIRC 3	ON		ON	ON	A, B, E, F, G	CCS-144
U150C	158	VDC CAN CIRC 3	ON	ON	ON	ON	A, B, C, D, E, F, G, H	CCS-145
U150D	159	TCM CAN CIRC 3	ON	ON	ON	ON	A, B, C, D, E, F, G	CCS-146
U150E	160	BCM CAN CIRC 3	ON		ON	ON	A, B, E, F, G	CCS-147
U150F	161	AV CAN CIRC 3						DAS-53
U1512	162	HVAC CAN CIRC3			ON	ON	F, G	DAS-354
U1513	163	METER CAN CIRC 3	ON	ON	ON	ON	A, B, C, D, E, F, G	CCS-149
U1514	164	STRG SEN CAN CIRC 3	ON	ON		ON	A, B, C, D, E, G, H	CCS-150
U1515	165	ICC SENSOR CAN CIRC 3	ON	ON			A, B, C, D, E	CCS-151
U1516	166	CAM CAN CIRC 3			ON	ON	F, G	DAS-356

Systems for fail-safe

- A: Vehicle-to-vehicle distance control mode
- B: Conventional (fixed speed) cruise control mode
- C: Intelligent Brake Assist (IBA)
- D: Forward Collision Warning (FCW)
- E: Distance Control Assist (DCA)
- F: Lane Departure Warning (LDW)/Lane Departure Prevention (LDP)
- G: Blind Spot Warning (BSW)/Blind Spot Intervention (BSI)
- H: Active trace control function

DTC		CONSULT display	Warning lamp				Fail-safe	Reference
CONSULT	On board display		ICC system warning lamp	IBA OFF indicator lamp	Lane departure warning lamp	BSW/BSI warning lamp	System	
U1517	167	APA CAN CIRC 3	ON				A, B, E	CCS-152
U1518	168	SIDE RDR L CAN CIRC 3				ON	G	DAS-507
U1519	169	SIDE RDR R CAN CIRC 3				ON	G	DAS-508

NOTE:
With the detection of “U1000” some systems do not perform the fail-safe operation.
A system controlling based on a signal received from the control unit performs fail-safe operation when the communication with the ADAS control unit becomes inoperable.

ICC SENSOR

Reference Value

INFOID:0000000008131649

VALUES ON THE DIAGNOSIS TOOL

NOTE:
The following table includes information (items) inapplicable to this vehicle. For information (items) applicable to this vehicle, refer to CONSULT display items.

Monitor item	Condition		Value/Status
VHCL SPEED SE	While driving		Value of vehicle speed signal (wheel speed)
YAW RATE	While driving	Vehicle stopped	0.0
		Vehicle turning right	Positive value
		Vehicle turning left	Negative value
PWR SUP MONI	Ignition switch ON		Power supply voltage value of ICC sensor
DISTANCE	Drive the vehicle and activate the vehicle-to-vehicle distance control mode	When a vehicle ahead is detected	Displays the distance from the preceding vehicle
		When a vehicle ahead is not detected	0.0
RELATIVE SPD	Drive the vehicle and activate the vehicle-to-vehicle distance control mode	When a vehicle ahead is detected	Displays the relative speed
		When a vehicle ahead is not detected	0.0
LASER OFFSET	**NOTE:** The item is indicated, but not used		—
LASER HEIGHT	**NOTE:** The item is indicated, but not used		—
STEERING ANGLE	Ignition switch ON	When setting the steering wheel in straight-ahead position	0.0
		When turning the steering wheel 90° rightward	+90
		When turning the steering wheel 90° leftward	-90
STRG ANGLE SPEED	Ignition switch ON	At the time of turning the steering wheel	Steering wheel turning speed is displayed
L/R ADJUST	Ignition switch ON	At the completion of laser beam adjustment	Horizontal correction value is displayed
U/D ADJUST	Ignition switch ON	At the completion of laser beam adjustment	Vertical correction value is displayed

TERMINAL LAYOUT

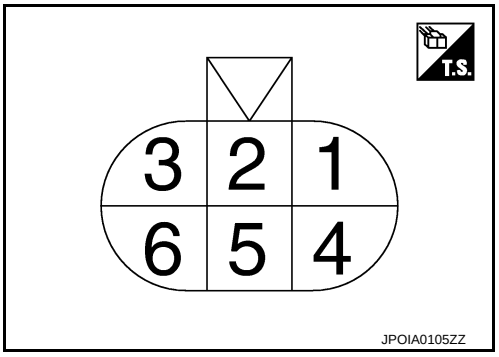

PHYSICAL VALUES

Terminal No. (Wire color)		Description		Condition	Value (Approx.)
+	–	Signal name	Input/ Output		
1 (LG)	Ground	Ignition power supply	Input	Ignition switch ON	Battery voltage
3 (L)		ITS communication-H	—	—	—
4 (B/Y)		Ground	—	Ignition switch ON	0 V
6 (Y)		ITS communication-L	—	—	—

Fail-safe

INFOID:0000000008131650

If a malfunction occurs in the ICC sensor, ADAS control unit cancels control, sounds a beep, and turns ON the ICC system warning lamp in the combination meter.

DTC Inspection Priority Chart

INFOID:0000000008131651

If multiple DTCs are detected simultaneously, check them one by one depending on the following DTC inspection priority chart.

Priority	Detected items (DTC)
1	• U1000: CAN COMM CIRCUIT • U1010: CONTROL UNIT (CAN)
2	• C1A50: ADAS MALFUNCTION
3	• C1A01: POWER SUPPLY CIR • C1A02: POWER SUPPLY CIR 2 • C1A12: LASER BEAM OFFCNTR • C1A16: RADAR STAIN • C1A18: LASER AIMING INCMP • C1A21: UNIT HIGH TEMP • C1A39: STRG SEN CIR • U0104: ADAS CAN CIR1 • U0121: VDC CAN CIR2 • U0126: STRG SEN CAN CIR1 • U0405: ADAS CAN CIR2 • U0415: VDC CAN CIR1 • U0428: STRG SEN CAN CIR2
4	• C1A00: CONTROL UNIT

DTC Index

INFOID:0000000008131652

NOTE:
- The details of time display are as per the following.
- 0: The malfunctions that are detected now
  CAN communication system (U1000, U1010)
- 1 - 39: It increases like 0 → 1 → 2 ··· 38 → 39 after returning to the normal condition whenever the ignition switch OFF → ON. It returns to 0 when a malfunction is detected again in the process.
- If it is over 39, it is fixed to 39 until the self-diagnosis results are erased.
  Other than CAN communication system (Other than U1000, U1010)
- 1 - 49: It increases like 0 → 1 → 2 ··· 38 → 49 after returning to the normal condition whenever the ignition switch OFF → ON. It returns to 0 when a malfunction is detected again in the process.
- If it is over 49, it is fixed to 49 until the self-diagnosis results are erased.

×: Applicable

DTC	CONSULT display	ICC system warning lamp	Fail-safe						Reference
CONSULT			Vehicle-to-vehicle distance control mode	Conventional (fixed speed) cruise control mode	Distance Control Assist (DCA)	Forward Collision Warning (FCW)	Intelligent Brake Assist (IBA)	Brake Assist (with Preview Function)	
C1A00	CONTROL UNIT	ON	×	×	×	×	×	×	CCS-77
C1A01	POWER SUPPLY CIR	ON	×	×	×	×	×	×	CCS-79
C1A02	POWER SUPPLY CIR2	ON	×	×	×	×	×	×	CCS-79
C1A12	LASER BEAM OFFCNTR	ON	×		×	×	×	×	CCS-92
C1A16	RADAR STAIN	ON	×		×	×	×	×	CCS-102
C1A18	LASER AIMING INCMP	ON	×		×	×	×	×	CCS-105
C1A21	UNIT HIGH TEMP	ON	×	×	×	×	×	×	CCS-107
C1A39	STRG SEN CIR	ON	×	×	×	×	×	×	CCS-120
C1A50	ADAS MALFUNCTION	ON	×	×	×	×	×	×	CCS-124
U0104	ADAS CAN CIR1	ON	×	×	×	×	×	×	CCS-128
U0121	VDC CAN CIR2	ON	×	×	×	×	×	×	CCS-129
U0126	STRG SEN CAN CIR1	ON	×	×	×	×	×	×	CCS-131
U0405	ADAS CAN CIR2	ON	×	×	×	×	×	×	CCS-136
U0415	VDC CAN CIR1	ON	×	×	×	×	×	×	CCS-137
U0428	STRG SEN CAN CIR2	ON	×	×	×	×	×	×	CCS-139
U1000	CAN COMM CIRCUIT	ON	×	×	×	×	×	×	CCS-141
U1010	CONTROL UNIT (CAN)	ON	×	×	×	×	×	×	CCS-143

WIRING DIAGRAM

INTELLIGENT CRUISE CONTROL

Wiring Diagram

INFOID:0000000008131653

For connector terminal arrangements, harness layouts, and alphabets in a ⬡ (option abbreviation; if not described in wiring diagram), refer to GI-12, "Connector Information".

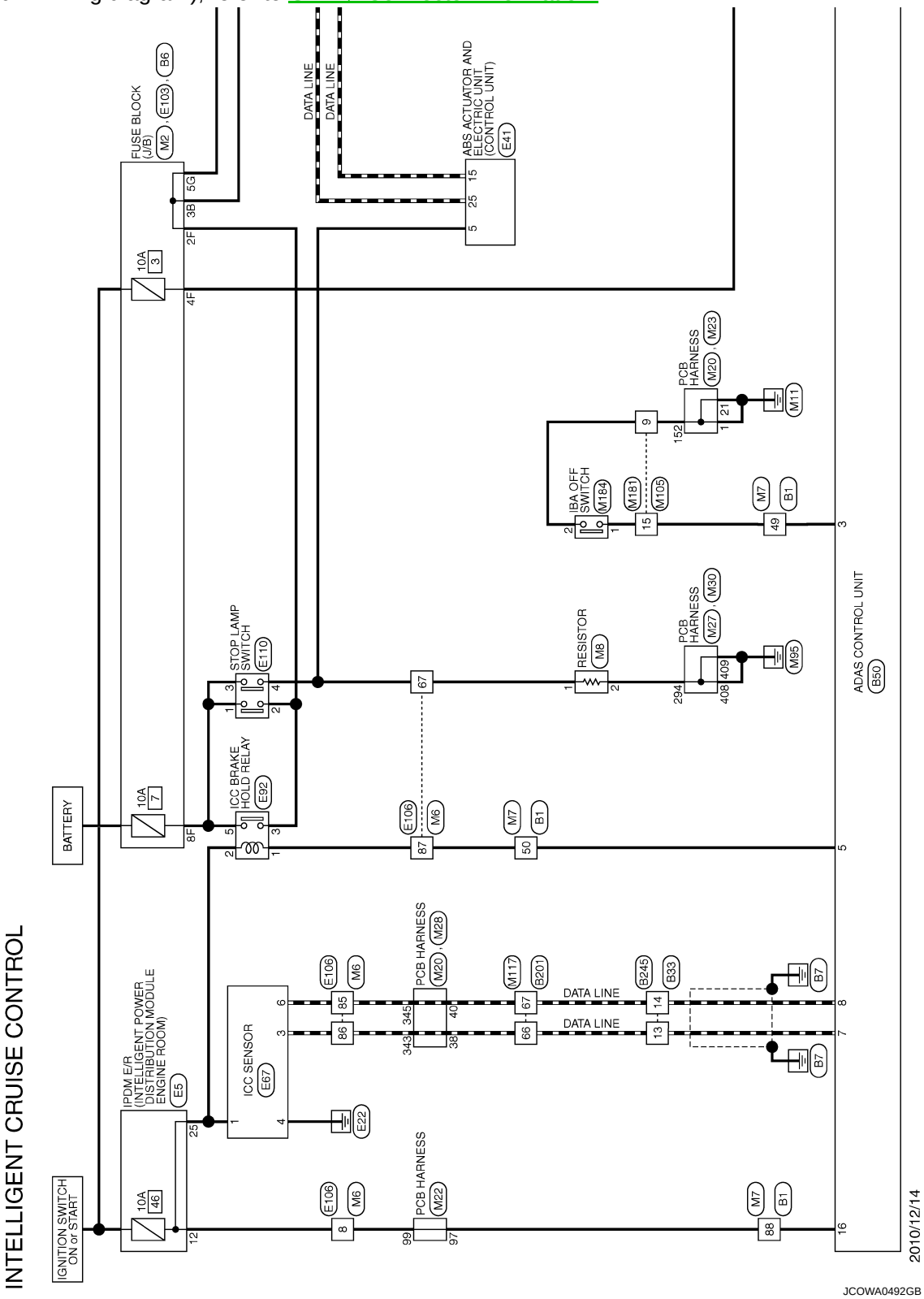

JCOWA0492GB

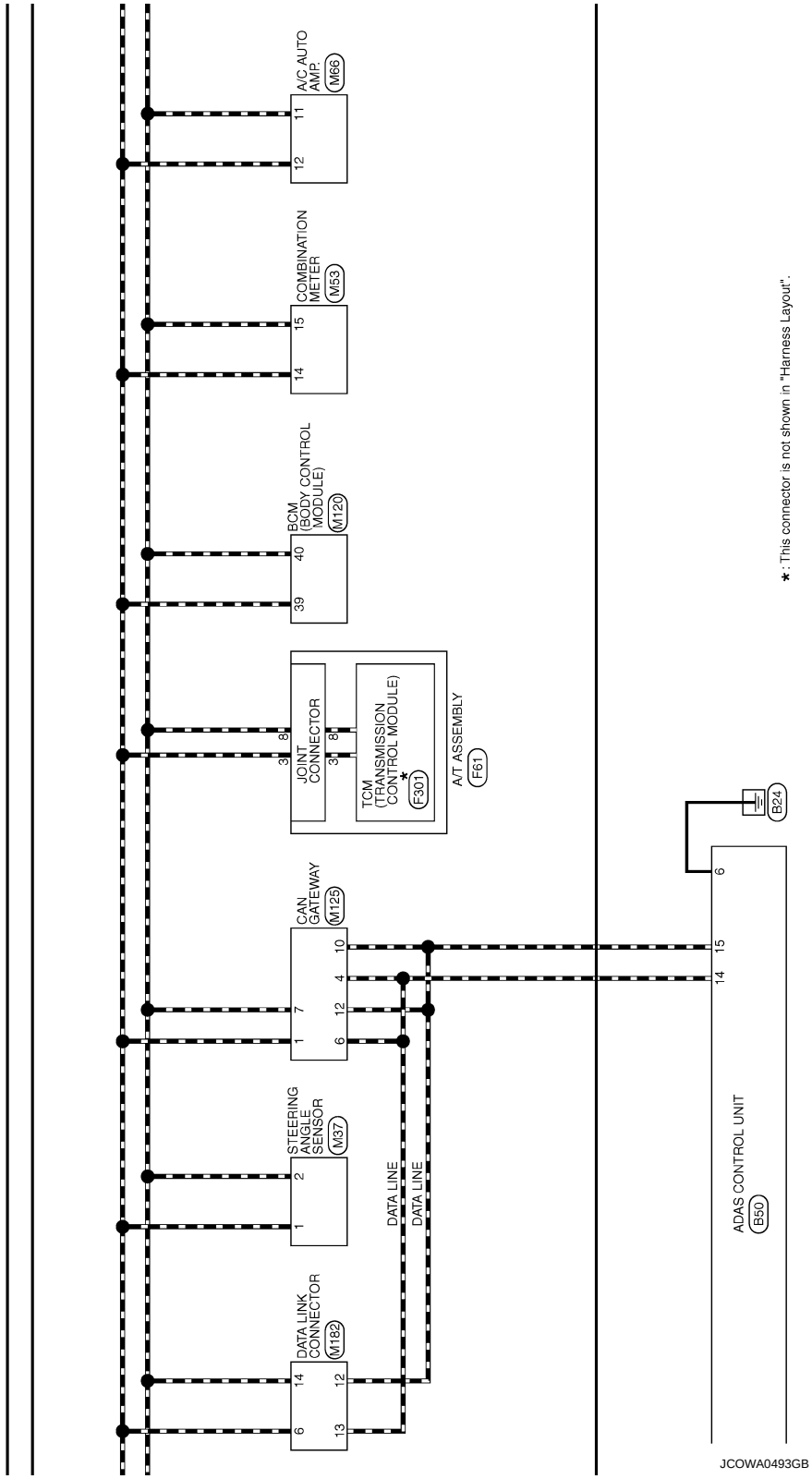
A/C AUTO AMP.
M66
11
12
COMBINATION METER
M53
15
14
BCM (BODY CONTROL MODULE)
M120
40
39
JOINT CONNECTOR
3
8
TCM (TRANSMISSION CONTROL MODULE)
F301
A/T ASSEMBLY
F61
CAN GATEWAY
M125
10
4
12
6
7
1
STEERING ANGLE SENSOR
M37
2
1
DATA LINK CONNECTOR
M182
14
12
6
13
DATA LINE
DATA LINE
B24
6
15
14
ADAS CONTROL UNIT
B50
✱: This connector is not shown in "Harness Layout".
JCOWA0493GB

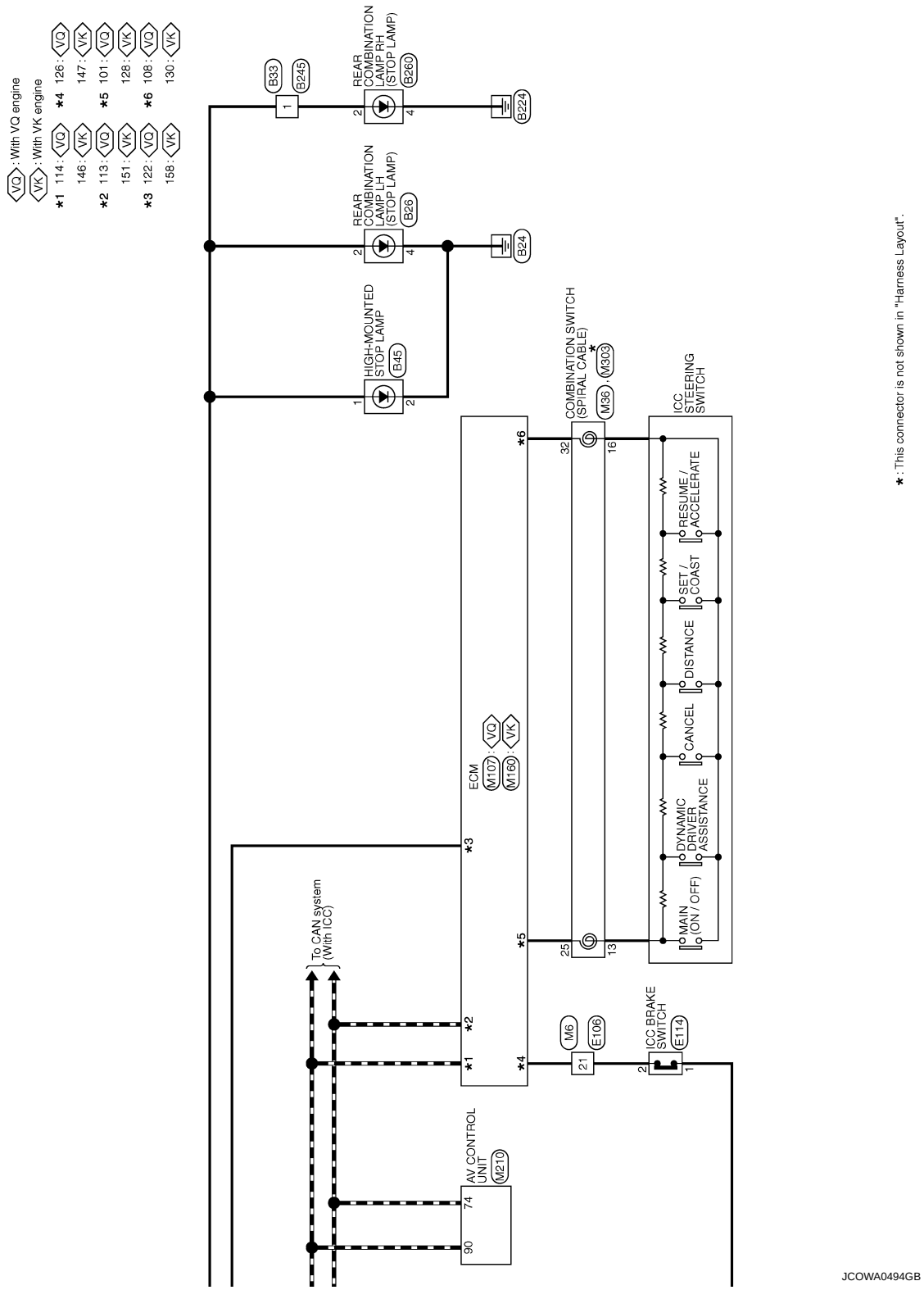
VQ : With VQ engine
VK : With VK engine
*1 114 : VQ
146 : VK
*2 113 : VQ
151 : VK
*3 122 : VQ
158 : VK
*4 126 : VQ
147 : VK
*5 101 : VQ
128 : VK
*6 108 : VQ
130 : VK
B33
B245
REAR COMBINATION LAMP RH (STOP LAMP)
B260
B224
REAR COMBINATION LAMP LH (STOP LAMP)
B26
B24
HIGH-MOUNTED STOP LAMP
B45
COMBINATION SWITCH (SPIRAL CABLE)
M36
M303
ICC STEERING SWITCH
ECM
M107
M160
VQ
VK
RESUME / ACCELERATE
SET / COAST
DISTANCE
CANCEL
DYNAMIC DRIVER ASSISTANCE
MAIN (ON / OFF)
To CAN system (With ICC)
M6
E106
ICC BRAKE SWITCH
E114
AV CONTROL UNIT
M210
*: This connector is not shown in "Harness Layout".
JCOWA0494GB

BASIC INSPECTION

DIAGNOSIS AND REPAIR WORK FLOW

Work Flow

INFOID:0000000008131654

OVERALL SEQUENCE

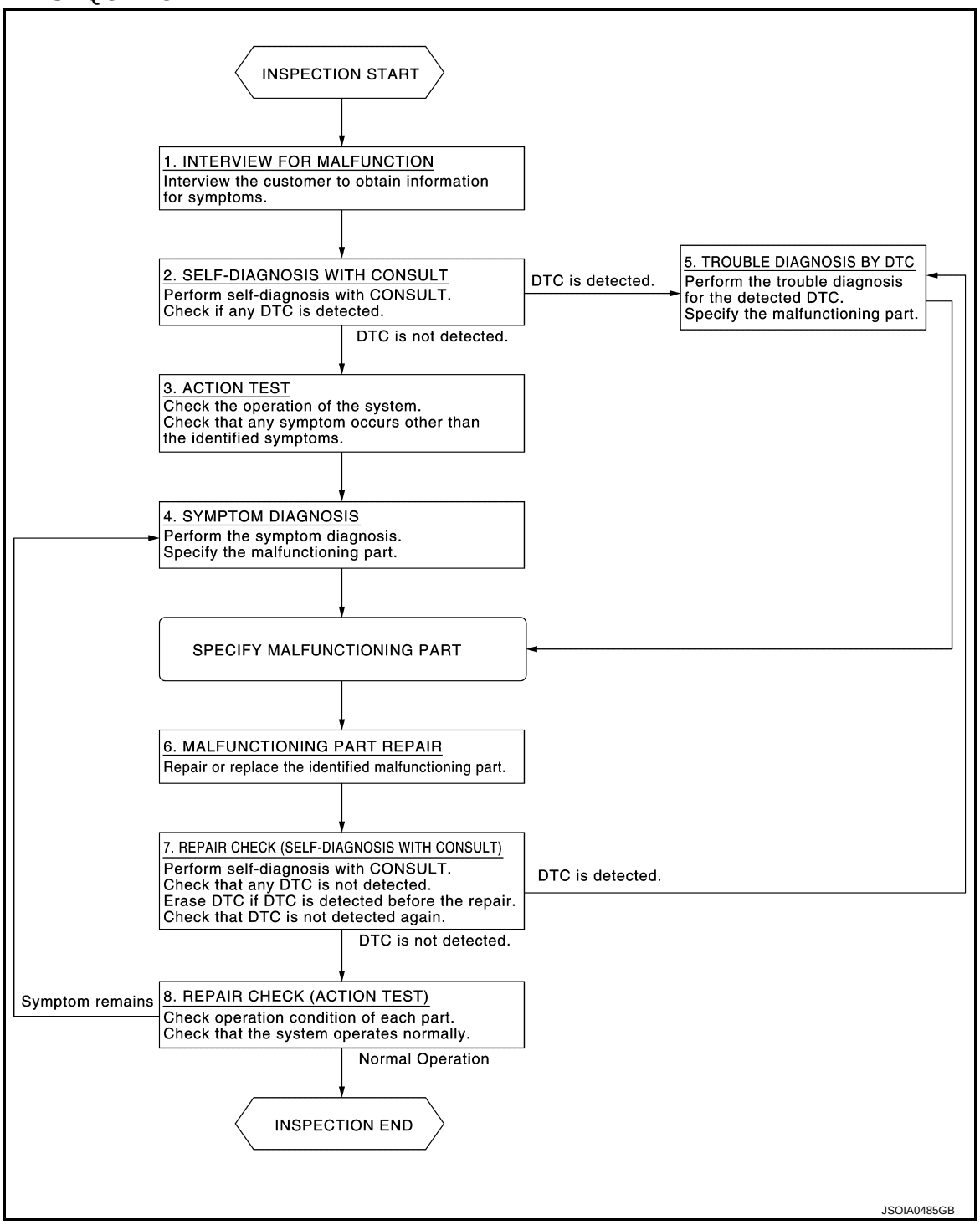

DETAILED FLOW

1. INTERVIEW FOR MALFUNCTION

It is also important to clarify the customer concerns before starting the inspection. Interview the customer about the concerns carefully and understand the symptoms fully.

NOTE:

The customers are not professionals. Never assume that “maybe the customer means···” or “maybe the customer mentioned this symptom”.

>> GO TO 2.

2. SELF-DIAGNOSIS WITH CONSULT

1. Perform “All DTC Reading” with CONSULT.
2. Check if any DTC is detected in self-diagnosis results of “ICC/ADAS” and “LASER”.

Is any DTC detected?

YES >> GO TO 5.
NO >> GO TO 3.

3. ACTION TEST

Perform the ICC system action test to check the operation status. Refer to CCS-71, "Description".
Check if any other malfunctions occur.

>> GO TO 4.

4. SYMPTOM DIAGNOSIS

Perform the applicable diagnosis according to the diagnosis chart by symptom. Refer to CCS-155, "Symptom Table".

>> GO TO 6.

5. TROUBLE DIAGNOSIS BY DTC

1. Check the DTC in the self-diagnosis results.
2. Perform trouble diagnosis for the detected DTC. Refer to CCS-52, "DTC Index" (ICC/ADAS) or CCS-58, "DTC Index" (LASER).

NOTE:
If “DTC: U1000” is detected, first diagnose the CAN communication system or ITS communication system.

>> GO TO 6.

6. MALFUNCTIONING PART REPAIR

Repair or replace the identified malfunctioning parts.

>> GO TO 7.

7. REPAIR CHECK (SELF-DIAGNOSIS WITH CONSULT)

1. Erases self-diagnosis results.
2. Perform “All DTC Reading” again after repairing or replacing the malfunctioning parts.
3. Check if any DTC is detected in self-diagnosis results of “ICC/ADAS” and “LASER”.

Is any DTC detected?

YES >> GO TO 5.
NO >> GO TO 8.

8. REPAIR CHECK (ACTION TEST)

Perform the ICC system action test. Check if the malfunction symptom is solved or no other symptoms occur.

Is there any malfunction symptom?

YES >> GO TO 4.
NO >> INSPECTION END

ADDITIONAL SERVICE WHEN REPLACING ICC SENSOR

Description

INFOID:0000000008131655

- Always perform the laser beam aiming adjustment after removing and installing or replacing the ICC sensor.
  CAUTION:
  The system does not operate normally unless the laser beam aiming adjustment is performed. Always perform it.
- Perform the ICC system action test to check that the ICC system operates normally.

Work Procedure

INFOID:0000000008131656

1. LASER BEAM AIMING ADJUSTMENT

Adjust the laser beam aiming. Refer to CCS-66, "Description".

>> GO TO 2.

2. ICC SYSTEM ACTION TEST

1. Perform the ICC system action test. Refer to CCS-71, "Description".
2. Check that the ICC system operates normally.

>> INSPECTION END

LASER BEAM AIMING ADJUSTMENT

Description

INFOID:0000000008131657

OUTLINE OF LASER BEAM AIMING ADJUSTMENT

Always adjust the laser beam aiming after removing and installing or replacing the ICC sensor.

CAUTION:

The system does not operate normally unless the laser beam aiming adjustment is performed. Always perform it.

1. Set the ICC target board [SST: KV99110100 (J-45718)] to the correct position in front of the vehicle.
2. Set the laser beam aiming mode (“LASER BEAM ADJUST” on “Work support”) with CONSULT, and then perform the adjustment according to the display. (Manually turn the up-down direction adjusting screw for vertical adjustment. ICC sensor adjusts the automatic aiming for the horizontal direction.)

CAUTIONARY POINT FOR LASER BEAM AIMING ADJUSTMENT

CAUTION:

- **For laser beam aiming adjustment, choose a level location where a view can be obtained without any obstruction as far as 12 m (39 ft) or more in the forward direction.**
- **Adjust laser beam aiming for 5 seconds or more after starting engine.**
- **Adjust the laser beam aiming with CONSULT. (The laser beam aiming cannot be adjusted without CONSULT.)**
- **Never enter the vehicle during laser beam aiming adjustment.**
- **Never look directly into the laser beam source (ICC sensor body window) during laser beam aiming adjustment.**
- **Laser beam aiming adjustment is performed at idle. At this time, turn the headlamps OFF.**

Work Procedure (Preparation)

INFOID:0000000008131658

1. ADVANCE PREPARATION FOR LASER BEAM AIMING ADJUSTMENT

1. Adjust all tire pressure to the specified value.
2. Empty the vehicle. (Remove any luggage from the passenger compartment, trunk room, etc.)
3. Shift the selector lever to “P” position, and release the parking brake.
4. Fully fill the fuel tank, and then check that the coolant and oils are filled up to correct level.
5. Clean off the ICC sensor body window with a soft cloth.

1 : ICC sensor

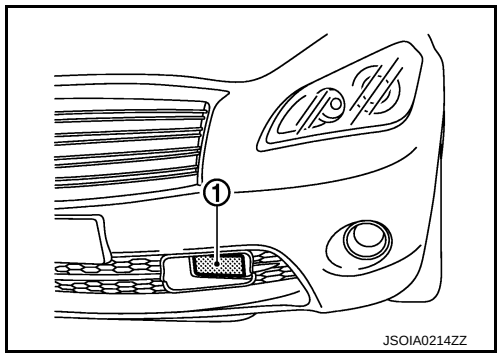

>> Go to CCS-66, "Work Procedure (Setting The ICC Target Board)".

Work Procedure (Setting The ICC Target Board)

INFOID:0000000008131659

DESCRIPTION

Accurate adjustment of the laser beam requires that the ICC target board be accurately positioned.

CAUTION:

If the laser beam is adjusted with the ICC target board in the incorrect position, the ICC system does not function normally.

1. ICC TARGET BOARD HEIGHT ADJUSTMENT

1. Attach the triangle scale (2) at 42 mm (1.65 in) (H) below the center (A) of the ICC target board (1).

   3 : Adjust nut
   b : 90°

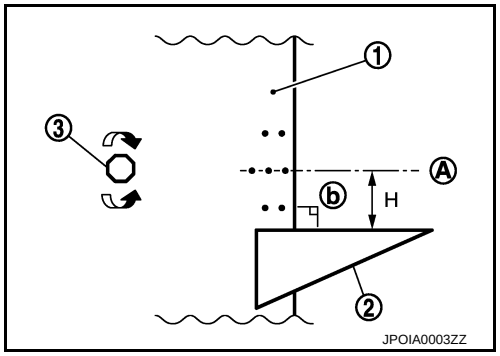

2. Adjust the ICC target board height to the position aligning the ruler (1) upper side tip with the center of laser beam axis (A).

   2 : ICC sensor

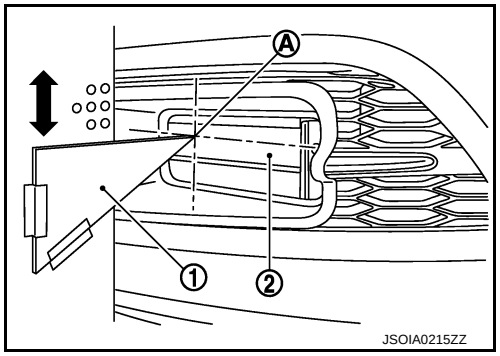

NOTE:

- The center of laser beam axis (A) is located at 38 mm (1.5 in) (W) from the left end of ICC sensor and 22 mm (H) (0.87 in) from above when viewed from the front of the vehicle.

  B : Up-down direction adjusting screw

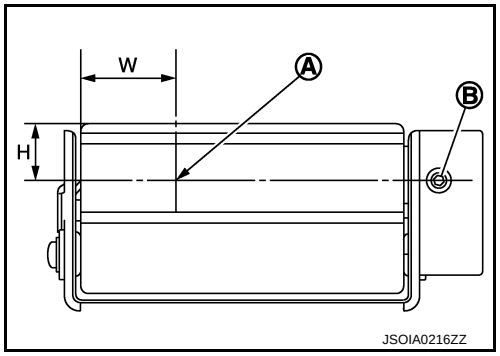

- To identify the laser beam axis center (A) easily, prepare a piece of paper (B) cut to the size of 38 mm (1.5 in) (W) × 22 mm (0.87 in) (H) and attach it on the upper left point of the ICC sensor (1).

  >> GO TO 2.

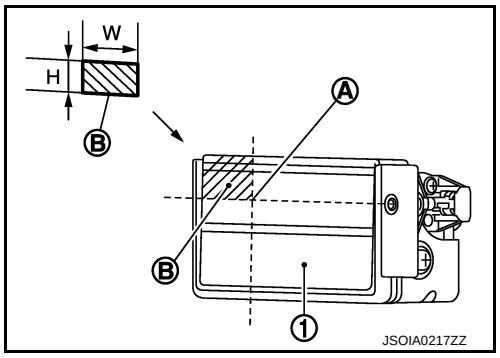

2. ADJUSTING SIDE POSITION OF ICC TARGET BOARD

1. On the back of the ICC target board, attach the ruler (1) [400 mm (15.75 in) or more] or a similar tool squarely from the ICC target board center (A) in the left direction.

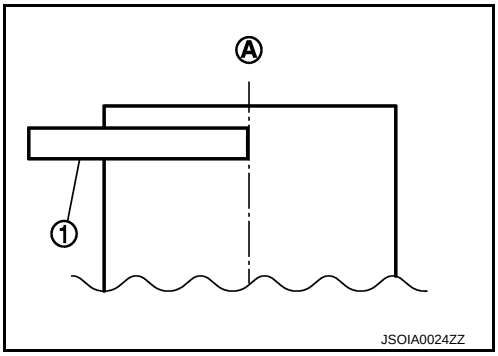

2. Suspend a weight from a string (1) attached to its end at the point (B) rightward from the ICC target board center (A).

   W [mm (in)] : 352 (13.86)

   >> GO TO 3.

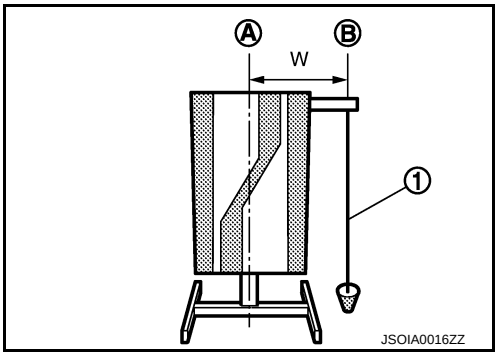

3. SETTING ICC TARGET BOARD

1. Suspend a thread with weight on tip from the center of the front and rear bumpers. Then, mark the center points on the ground as each weight point.
2. Link the front and rear bumpers center points marked on the ground and extend a straight line ahead. Then mark a point 3.9 m (12.8 ft) position ahead of the front bumper. Then, adjust the position of the ICC target board so that the weight comes on the top of the marked point [3.9 m (12.8 ft) position ahead of the front bumper] and face to the vehicle.
3. Adjust the position of the ICC target board (1) so that the extended line (A) that links the center of the rear window glass (the center of the rear window defogger pattern) (B) and the center of the windshield (the setting part of the room mirror) (C) align with the weight suspended (2) from the ICC target board.

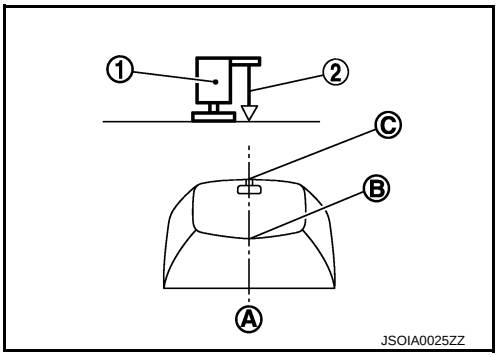

4. Remove the thread suspended to the right side of ICC target board and suspend a thread with weight on tip on the center of the ICC target board. Then mark the point of weight on the ground.
5. Pivot the edge of the ICC target board 25° (a) to either side.

   1 : ICC target board
   2 : String with a weight
   C : ICC target board center marking point

   NOTE:
   Approx. 90 mm (3.54 in) (b) shift rates the 25° (a) movement.

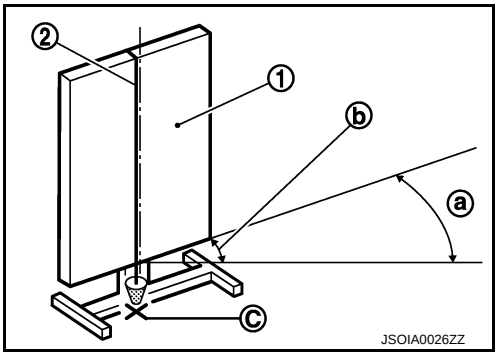

>> GO TO 4.

4. CHECK THE ICC TARGET BOARD INSTALLATION POSITION

Check that the ICC target board (1) is located as shown in the figure.

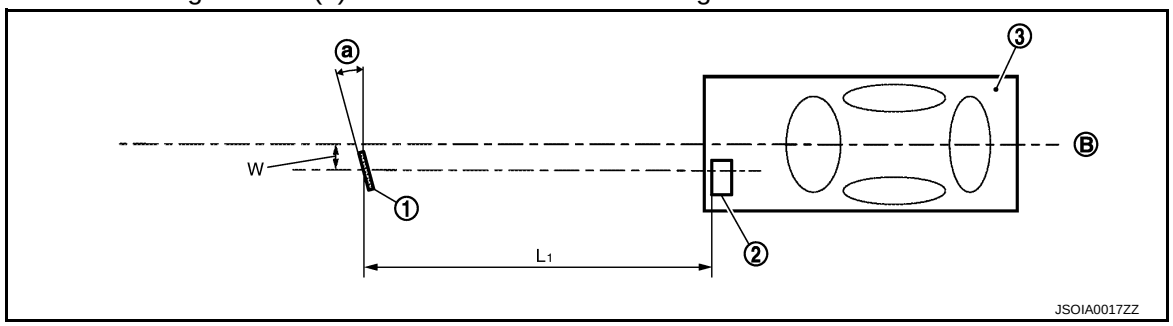

1. ICC target board	2. ICC sensor	3. Vehicle
B. Vehicle center	L1. 4.0 m (13.0 ft)	
W. 352 mm (13.86 in)		
a. 25°		

NOTE:
The distance between laser beam axis and ICC target board is 4.0 m (13.0 ft).

>> GO TO 5.

5. CHECK THE ICC TARGET BOARD INSTALLATION AREA

Do not place anything other than ICC target board in the space shown in the figure (view from top).

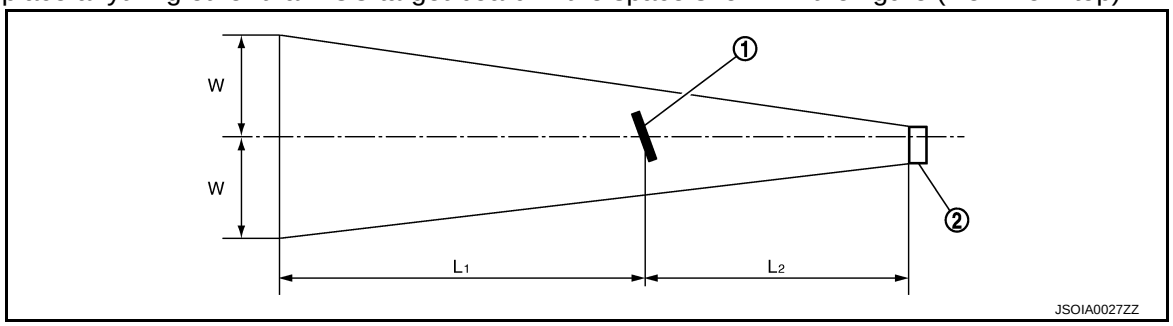

1. ICC target board	2. ICC sensor	
L1. 6.5 m (21.3 ft)	L2. 4.0 m (13.0 ft)	W. 3.5 m (11.5 ft)

NOTE:
In case the space shown in the figure is not available, cover the side of the ICC target board with a 1400 mm(4.6 ft)-size frosted black board or black cloth.

>> Go to CCS-69, "Work Procedure (Laser Beam Aiming Adjustment)".

Work Procedure (Laser Beam Aiming Adjustment)

INFOID:0000000008131660

DESCRIPTION

- Adjust the laser beam aiming in a vertical direction with CONSULT as per the following.
- The laser beam aiming adjustment in a horizontal direction is performed automatically with CONSULT.

CAUTION:

- **Never look directly into the laser beam source (ICC sensor body window) during laser beam aiming adjustment.**
- **Perform all necessary work for laser beam aiming adjustment until the adjustment completes as shown in the procedure. If the procedure does not complete, the ICC system is inoperable.**

1. SET CONSULT TO THE LASER BEAM AIMING ADJUSTMENT MODE

1. Start the engine.

2. Connect CONSULT and select “Work support” of “LASER”.
3. Select “LASER BEAM ADJUST” after the “Work support” screen is displayed.
4. Select “START” after the “LASER BEAM ADJUST” screen is displayed.
   NOTE:
   If the adjustment screen does not appear within approximately 10 seconds after “LASER BEAM ADJUST” is selected, the following causes are possible.
   - The ICC target board is not installed in the correct position.
   - Adequate space is not secured around the ICC target board.
   - The laser beam aiming adjustment exceeds its proper installation range.
   - Deformation of vehicle body.
   - Deformation of unit.
   - Deformation of bracket.
   - The area is not suitable for the adjustment work.
   - ICC sensor body window is not clean.
   - The ICC system warning lamp illuminates.

>> GO TO 2.

2. LASER BEAM AIMING ADJUSTMENT

After “ADJUST THE VERTICAL OF LASER BEAM AIMING” is displayed on CONSULT screen, adjust by turning the up-down direction adjusting screw until “U/D CORRECT” becomes ±4 or less.

NOTE:
- Turn the up-down direction adjusting screw slowly. The value change on display is slower than actual movement of the ICC sensor. Wait for 2 seconds every time the up-down direction adjusting screw is turned half a rotation.
- Turning the up-down direction adjusting screw (A) clockwise (C) directs the laser beam downward. The laser beam directs upward when turning up-down direction adjusting screw counterclockwise (B).

CAUTION:
Be careful not to cover the ICC sensor body window with a hand or the other part of body of worker during adjustment.

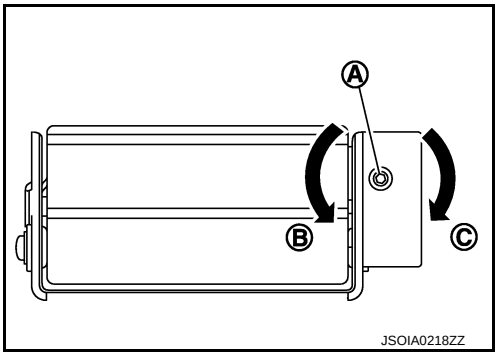

>> GO TO 3.

3. LASER BEAM AIMING CONFIRMATION

1. When the “U/D CORRECT” value becomes ±4 or less, check that no value greater than ±4 appears when the vehicle is left with no load on the ICC sensor (hand removed) for at least 2 seconds.
2. When “COMPLETED THE VERTICAL AIMING OF LASER BEAM” display appears, touch “END”.
   CAUTION:
   Always check that the value of “U/D CORRECT” remains ±4 or less when the ICC sensor is left alone for at least 2 seconds.
3. Check that “ADJUSTING AUTOMATIC HORIZONTAL LASER BEAM AIMING” is displayed and wait for a short period of time. (The maximum: Approx 10 seconds).
4. Check that “Normally Completed” is displayed, and select “End” to end “LASER BEAM ADJUST”.
   CAUTION:
   Once “LASER BEAM ADJUST” is started with CONSULT, always continue the work until the horizontal laser beam aiming adjustment is completed successfully. If the job is stopped midway, the laser beam aiming is not adjusted and the ICC system cannot operate.

>> LASER BEAM AIMING ADJUSTMENT END

ACTION TEST

Description

INFOID:0000000008131661

Always perform the ICC system action test to check that the ICC system operates normally after replacing the ICC sensor or repairing any ICC system malfunction.

CAUTION:
- **Always drive safely when performing the action test.**
- **Turn the DCA system to OFF when performing the action test.**

Work Procedure (Vehicle-To-Vehicle Distance Control Mode)

INFOID:0000000008131662

NOTE:
- When there is no vehicle ahead, drive at the set speed steadily.
- When there is a vehicle ahead, control to maintain distance from the vehicle ahead, watching its speed.
- The running speed can be set between 32 km/h (20 MPH) and 144 km/h (90 MPH).

CAUTION:
Never set the cruise speed exceeding the posted speed limit.

1. CHECK FOR MAIN SWITCH

1. Start the engine.
2. Press the MAIN switch (1) (less than 1.5 seconds).

Information display status		
MAIN switch indicator (2)	:	ON
Set distance indicator (3)	:	Long mode
Own vehicle indicator (4)	:	ON
Set vehicle speed indicator (5)	:	"— —" "km/h" ("MPH")

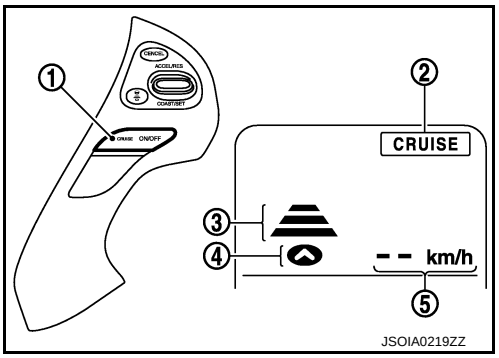

3. Check the ICC system display on the information display to check that the vehicle-to-vehicle distance control mode is ready for activation.
4. Press the MAIN switch, and check that the ICC system display on the information display turns OFF when the ICC system is deactivated.
5. Check that the ICC system display on the information display turns OFF after starting the engine again.

>> GO TO 2.

2. CHECK FOR DISTANCE SWITCH

1. Start the engine.
2. Press the MAIN switch (less than 1.5 seconds).
3. Press the DISTANCE switch.

4. Check that the set distance indicator changes display in order of: (Long)→(Middle)→(Short).

Distance	Display	Approximate distance at 100 km/h (60 MPH) [m (ft)]
Long	100 km/h	60 (200)
Middle	100 km/h	45 (150)
Short	100 km/h	30 (90)

JSOIA0520GB

NOTE:
When the MAIN switch is turned ON, initial setting set to (Long).

>> GO TO 3.

3. CHECK FOR RESUME/ACCELERATE, SET/COAST, AND CANCEL SWITCHES

1. Check that RESUME/ACCELERATE, SET/COAST, CANCEL switches are operated smoothly.
2. Check that switches come up as hand is released from the switches.

>> GO TO 4.

4. SET CHECKING (1)

1. Start the engine.
2. Press the MAIN switch (less than 1.5 seconds) and turn the vehicle-to-vehicle distance control mode ON.
3. Drive the vehicle at 32 km/h (20 MPH) or more.
4. Push down the SET/COAST switch.
5. Check that the desired speed is set and vehicle-to-vehicle distance control mode control starts when releasing SET/COAST switch.

NOTE:
The set vehicle speed is indicated on the set vehicle speed indicator in the ICC system display on the information display.

>> GO TO 5.

5. CHECK FOR INCREASE OF CRUISING SPEED (1)

1. Set the vehicle-to-vehicle distance control mode at desired speed.
2. Check that the set speed increases by 1 km/h (1 MPH) as RESUME/ACCELERATE switch is pushed up.

NOTE:
The maximum set speed of the vehicle-to-vehicle distance control mode is 144 km/h (90 MPH).
CAUTION:
Never set the cruise speed exceeding the posted speed limit.

>> GO TO 6.

6. CHECK FOR DECREASE OF CRUISING SPEED (1)

1. Set the vehicle-to-vehicle distance control mode at desired speed.
2. Check that the set speed decreases by 1 km/h (1 MPH) as SET/COAST switch is pushed down.

NOTE:
- The minimum set speed is approximately 32 km/h (20 MPH).

- Cancel the control automatically when the vehicle speed is less than approximately 24 km/h (15 MPH) and when the system does not detect any vehicle ahead.

>> GO TO 7.

7. SET CHECKING (2)

1. Stop the vehicle.
2. Drive the vehicle at less than approximately 32 km/h (20 MPH).
3. Push down the SET/COAST switch when the system detects a vehicle ahead.
4. Check that the vehicle-to-vehicle distance control mode is performed so that the vehicle maintains a proper distance according to the vehicle speed [maximum: approximately 32 km/h (20 MPH)] when releasing SET/COAST switch.

NOTE:
- The vehicle-to-vehicle distance control mode cannot be set when the vehicle speed is less than 32 km/h (20 MPH) and when a vehicle ahead is not detected.
- Cancel the control automatically when the vehicle speed is 24 km/h (15 MPH) or less during the control and when the system does not detect any vehicle ahead.
- The set vehicle speed indicator in the ICC system display on the information display is set to 32 km/h (20 MPH).

>> GO TO 8.

8. CHECK FOR INCREASE OF CRUISING SPEED (2)

1. Set the vehicle-to-vehicle distance control mode when the vehicle speed is less than approximately 32 km/h (20 MPH) and when a vehicle ahead is detected.
2. Check that the set speed increases by 1 km/h (1 MPH) as RESUME/ACCELERATE switch is pushed up.

NOTE:
The maximum set speed of the vehicle-to-vehicle distance control mode is 144 km/h (90 MPH).

CAUTION:
Never set the cruise speed exceeding the posted speed limit.

>> GO TO 9.

9. CHECK FOR DECREASE OF CRUISING SPEED INSPECTION (2)

1. Set the vehicle-to-vehicle distance control mode when the vehicle speed is less than approximately 32 km/h (20 MPH) and when a vehicle ahead is detected.
2. Set the set vehicle speed to the desired vehicle speed according to “check for increase of cruising speed”.
3. Check that the set speed decreases by 1 km/h (1 MPH) as SET/COAST switch is pushed down.

NOTE:
- The minimum the set speed is approximately 32 km/h (20 MPH).
- If the vehicle ahead comes to a stop, the vehicle decelerates to a standstill within the limitations of the system. The system will cancel once it judges a standstill with a warning chime.

CAUTION:
The creep occurs because the stop status is not maintained.

>> GO TO 10.

10. CHECK FOR CANCELLATION OF VEHICLE-TO-VEHICLE DISTANCE CONTROL MODE

Check that the vehicle-to-vehicle distance control mode is canceled when performing the following operations.
- When the brake pedal is depressed after vehicle-to-vehicle distance control mode is set and the vehicle is driven.
- When the selector lever is in the “N” position after vehicle-to-vehicle distance control mode is set and the vehicle is driven.
- When the MAIN switch is turned OFF after vehicle-to-vehicle distance control mode is set and the vehicle is driven.
- When the CANCEL switch is pressed after vehicle-to-vehicle distance control mode is set and the vehicle is driven.

>> GO TO 11.

11. CHECK FOR RESTORING SPEED THAT IS SET BY VEHICLE-TO-VEHICLE DISTANCE CONTROL MODE BEFORE CANCELLATION

Check that the vehicle restores the previous speed kept before the system deactivation when performing the following operations.

- Drive the vehicle when the vehicle-to-vehicle distance control mode is set and depress the brake pedal to cancel the control. Check that the vehicle restores the previous vehicle speed kept before the system deactivation when pushing up the RESUME/ACCELERATE switch.
- Drive the vehicle when the vehicle-to-vehicle distance control mode is set and shift the selector lever to the “N” position to cancel the control. Check that the vehicle restores the previous vehicle speed kept before the system deactivation when shifting the selector lever to the “D” position and pushing up the RESUME/ACCELERATE switch.
- Drive the vehicle when the vehicle-to-vehicle distance control mode is set and press the CANCEL switch to cancel the control. Check that the vehicle restores the previous vehicle speed kept before the system deactivation when pushing up the RESUME/ACCELERATE switch.

>> INSPECTION END

Work Procedure [Conventional (Fixed Speed) Cruise Control Mode]

INFOID:0000000008131663

NOTE:
The running speed can be set between 40 km/h (25 MPH) and 144 km/h (90 MPH).
CAUTION:
Never set the cruise speed exceeding the posted speed limit.

1. CHECK FOR MAIN SWITCH

1. Start the engine.
2. Press the MAIN switch (1) (1.5 seconds or more).

Information display status	
MAIN switch indicator (2)	: ON

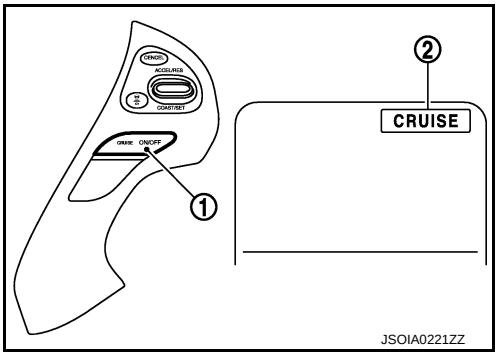

3. Check that the ICC system display on the information display turns on and the display is ready for activation.
4. Press the MAIN switch, and check that the ICC system display on the information display turns OFF when the ICC system is deactivated.
5. Check that the ICC system display on the information display turns OFF after starting the engine again.

>> GO TO 2.

2. CHECK FOR RESUME/ACCELERATE, SET/COAST, AND CANCEL SWITCHES

1. Check that RESUME/ACCELERATE, SET/COAST, CANCEL switches are operated smoothly.
2. Check that switches come up as hand is released from the switches.

>> GO TO 3.

3. SET CHECKING

1. Start the engine.
2. Press the MAIN switch (1.5 seconds or more) and turn the conventional (fixed speed) cruise control mode to ON.
3. Drive the vehicle at 40 km/h (25 MPH) or more.
4. Push down the SET/COAST switch.

5. Check that the desired speed is set and conventional (fixed speed) cruise control mode control starts when releasing SET/COAST switch.

NOTE:
- The set vehicle speed is not displayed in the ICC system display on the information display.
- Display the set status in the ICC system display on the information display.

>> GO TO 4.

4. CHECK FOR INCREASE OF CRUISING SPEED

1. Set the vehicle speed to any desired speed, and drive the vehicle.
2. Check that the set speed increases by 1.6 km/h (1 MPH) as RESUME/ACCELERATE switch is pushed up.

NOTE:
- The maximum set speed is 144 km/h (90 MPH).
- The set vehicle speed increases while pushing up the RESUME/ACCELERATE switch.

CAUTION:
Never set the cruise speed exceeding the posted speed limit.

>> GO TO 5.

5. CHECK FOR DECREASE OF CRUISING SPEED

1. Set the vehicle speed to any desired speed, and drive the vehicle.
2. Check that the set speed decreases by 1.6 km/h (1 MPH) as SET/COAST switch is pushed down.

NOTE:
- The minimum set speed is 40 km/h (25 MPH).
- The set vehicle speed decreases while pressing down the SET/COAST switch.
- Cancel the control automatically when the vehicle speed lowers to less than approximately 32 km/h (20 MPH).

>> GO TO 6.

6. CHECK FOR CANCELLATION OF CONVENTIONAL (FIXED SPEED) CRUISE CONTROL MODE

Check that the conventional (fixed speed) cruise control mode is canceled when performing the following operations.
- When the brake pedal is depressed after the conventional (fixed speed) cruise control mode is set and the vehicle is driven.
- When the selector lever is in the “N” position after the conventional (fixed speed) cruise control mode is set and the vehicle is driven.
- When the MAIN switch is turned OFF after the conventional (fixed speed) cruise control mode is set and the vehicle is driven.
- When the CANCEL switch is pressed after the conventional (fixed speed) cruise control mode is set and the vehicle is driven.

>> GO TO 7.

7. CHECK FOR RESTORING SPEED THAT IS SET BY CONVENTIONAL (FIXED SPEED) CRUISE CONTROL MODE BEFORE CANCELLATION

Check that the vehicle restores the previous speed kept before the system deactivation when performing the following operations.
- Drive the vehicle when the conventional (fixed speed) cruise control mode is set and depress the brake pedal to cancel the control. Check that the vehicle restores the previous vehicle speed kept before the system deactivation when pushing up the RESUME/ACCELERATE switch at the vehicle speed approximately 40 km/h (25 MPH) or more.
- Drive the vehicle when the conventional (fixed speed) cruise control mode is set and shift the selector lever is in the “N” position to cancel the control. Check that the vehicle restores the previous vehicle speed kept before the system deactivation when shifting the selector lever is in the “D” position and pushing up the RESUME/ACCELERATE switch at the vehicle speed of approximately 40 km/h (25 MPH) or more.
- Drive the vehicle when the conventional (fixed speed) cruise control mode is set and press the CANCEL switch to cancel the control. Check that the vehicle restores the previous vehicle speed kept before the sys-

tem deactivation when pushing up the RESUME/ACCELERATE switch at the vehicle speed of approximately 40 km/h (25 MPH) or more.

>> INSPECTION END

DTC/CIRCUIT DIAGNOSIS

C1A00 CONTROL UNIT

ADAS CONTROL UNIT

ADAS CONTROL UNIT : DTC Logic

INFOID:0000000008131664

DTC DETECTION LOGIC

DTC (On board display)	Trouble diagnosis name	DTC detecting condition	Possible causes
C1A00 (0)	CONTROL UNIT	ADAS control unit internal malfunction	ADAS control unit

DTC CONFIRMATION PROCEDURE

1. PERFORM DTC CONFIRMATION PROCEDURE

1. Start the engine.
2. Perform “All DTC Reading” with CONSULT.
3. Check if the “C1A00” is detected as the current malfunction in “Self Diagnostic Result” of “ICC/ADAS”.

Is “C1A00” detected as the current malfunction?

YES >> Refer to CCS-77, "ADAS CONTROL UNIT : Diagnosis Procedure".
NO >> INSPECTION END

ADAS CONTROL UNIT : Diagnosis Procedure

INFOID:0000000008131665

1. CHECK SELF-DIAGNOSIS RESULTS

Check if any DTC other than “C1A00” is detected in “Self Diagnostic Result” of “ICC/ADAS”.

Is any DTC detected?

YES >> Perform diagnosis on the detected DTC and repair or replace the malfunctioning parts. Refer to CCS-52, "DTC Index".
NO >> Replace the ADAS control unit. Refer to DAS-55, "Removal and Installation".

ICC SENSOR

ICC SENSOR : DTC Logic

INFOID:0000000008131666

DTC DETECTION LOGIC

DTC	Trouble diagnosis name	DTC detecting condition	Possible causes
C1A00	CONTROL UNIT	ICC sensor internal malfunction	ICC sensor

DTC CONFIRMATION PROCEDURE

1. PERFORM DTC CONFIRMATION PROCEDURE

1. Start the engine.
2. Perform “All DTC Reading” with CONSULT.
3. Check if the “C1A00” is detected as the current malfunction in “Self Diagnostic Result” of “LASER”.

Is “C1A00” detected as the current malfunction?

YES >> Refer to CCS-77, "ICC SENSOR : Diagnosis Procedure".
NO >> INSPECTION END

ICC SENSOR : Diagnosis Procedure

INFOID:0000000008131667

1. CHECK SELF-DIAGNOSIS RESULTS

Check if any DTC other than “C1A00” is detected in “Self Diagnostic Result” of “LASER”.

Is any DTC detected?

YES >> Perform diagnosis on the detected DTC and repair or replace the malfunctioning parts. Refer to CCS-58, "DTC Index".

NO >> Replace the ICC sensor. Refer to CCS-171, "Removal and Installation".

C1A01 POWER SUPPLY CIRCUIT 1, C1A02 POWER SUPPLY CIRCUIT 2

ADAS CONTROL UNIT

ADAS CONTROL UNIT : DTC Logic

INFOID:0000000008131668

DTC DETECTION LOGIC

DTC (On board display)	Trouble diagnosis name	DTC detecting condition	Possible causes
C1A01 (1)	POWER SUPPLY CIR	The battery voltage sent to ADAS control unit remains less than 7.9 V for 5 seconds	• Connector, harness, fuse • ADAS control unit
C1A02 (2)	POWER SUPPLY CIR 2	The battery voltage sent to ADAS control unit remains more than 19.3 V for 5 seconds	

DTC CONFIRMATION PROCEDURE

1. PERFORM DTC CONFIRMATION PROCEDURE

1. Start the engine.
2. Turn the MAIN switch of ICC system ON.
3. Perform “All DTC Reading” with CONSULT.
4. Check if the “C1A01” or “C1A02” is detected as the current malfunction in “Self Diagnostic Result” of “ICC/ADAS”.

Is “C1A01” or “C1A02” detected as the current malfunction?

YES >> Refer to CCS-79, "ADAS CONTROL UNIT : Diagnosis Procedure".
NO >> Refer to GI-43, "Intermittent Incident".

ADAS CONTROL UNIT : Diagnosis Procedure

INFOID:0000000008131669

1. CHECK ADAS CONTROL UNIT POWER SUPPLY AND GROUND CIRCUIT

Check power supply and ground circuit of ADAS control unit. Refer to CCS-153, "ADAS CONTROL UNIT : Diagnosis Procedure".

Is the inspection result normal?

YES >> Replace the ADAS control unit. Refer to DAS-55, "Removal and Installation".
NO >> Repair or replace the malfunctioning parts.

ICC SENSOR

ICC SENSOR : DTC Logic

INFOID:0000000008131670

DTC DETECTION LOGIC

DTC	Trouble diagnosis name	DTC detecting condition	Possible causes
C1A01	POWER SUPPLY CIR	The battery voltage sent to ICC sensor remains less than 7.9 V for 5 seconds	• Connector, harness, fuse • ICC sensor
C1A02	POWER SUPPLY CIR 2	The battery voltage sent to ICC sensor remains more than 19.3 V for 5 seconds	

DTC CONFIRMATION PROCEDURE

1. PERFORM DTC CONFIRMATION PROCEDURE

1. Start the engine.
2. Turn the MAIN switch of ICC system ON.
3. Perform “All DTC Reading” with CONSULT.
4. Check if the “C1A01” or “C1A02” is detected as the current malfunction in “Self Diagnostic Result” of “LASER”.

Is “C1A01” or “C1A02” detected as the current malfunction?

YES >> Refer to CCS-77, "ICC SENSOR : Diagnosis Procedure".
NO >> Refer to GI-43, "Intermittent Incident".

ICC SENSOR : Diagnosis Procedure

INFOID:0000000008131671

1. CHECK ICC SENSOR POWER SUPPLY AND GROUND CIRCUIT

Check power supply and ground circuit of ICC sensor. Refer to CCS-153, "ICC SENSOR : Diagnosis Procedure".

Is the inspection result normal?

YES >> Replace the ICC sensor. Refer to CCS-171, "Removal and Installation".
NO >> Repair or replace the malfunctioning parts.

C1A03 VEHICLE SPEED SENSOR

DTC Logic

INFOID:0000000008131672

DTC DETECTION LOGIC

DTC (On board display)	Trouble diagnosis name	DTC detecting condition	Possible causes
C1A03 (3)	VHCL SPEED SE CIRC	If the vehicle speed signal (wheel speed) from ABS actuator and electric unit (control unit) and the A/T vehicle speed sensor signal (output shaft revolution signal) from TCM, received by the ADAS control unit via CAN communication, are inconsistent	• Wheel speed sensor • ABS actuator and electric unit (control unit) • Vehicle speed sensor A/T (output speed sensor) • TCM • ADAS control unit

NOTE:
If DTC “C1A03” is detected along with DTC “U1000” or “C1A04”, first diagnose the DTC “U1000” or “C1A04”.
- Refer to CCS-141, "ADAS CONTROL UNIT : DTC Logic" for DTC “U1000”.
- Refer to CCS-83, "DTC Logic" for DTC “C1A04”.

DTC CONFIRMATION PROCEDURE

1. PERFORM DTC CONFIRMATION PROCEDURE

1. Start the engine.
2. Turn the MAIN switch of ICC system ON.
3. Drive the vehicle at 30 km/h (19 MPH) or more.
   CAUTION:
   Always drive safely.
4. Stop the vehicle.
5. Perform “All DTC Reading” with CONSULT.
6. Check if the “C1A03” is detected as the current malfunction in “Self Diagnostic Result” of “ICC/ADAS”.

Is “C1A03” detected as the current malfunction?

YES >> Refer to CCS-81, "Diagnosis Procedure".
NO >> Refer to GI-43, "Intermittent Incident".

Diagnosis Procedure

INFOID:0000000008131673

1. CHECK SELF-DIAGNOSIS RESULTS

Check if “C1A04” or “U1000” is detected other than “C1A03” in “Self Diagnostic Result” of “ICC/ADAS”.

Is any DTC detected?

YES >> Perform diagnosis on the detected DTC and repair or replace the malfunctioning parts. Refer to CCS-141, "ADAS CONTROL UNIT : DTC Logic".
NO >> GO TO 2.

2. CHECK DATA MONITOR

1. Start the engine.
2. Drive the vehicle.
3. Check that the value of “VHCL SPD AT” is almost the same as the value of “VHCL SPEED SE” in “DATA MONITOR” of “ICC/ADAS”.

CAUTION:
Be careful of the vehicle speed.

Is the inspection result normal?

YES >> Replace the ADAS control unit. Refer to DAS-55, "Removal and Installation".
NO >> GO TO 3.

3. CHECK TCM SELF-DIAGNOSIS RESULTS

1. Perform “All DTC Reading”.
2. Check if any DTC is detected in “Self Diagnostic Result” of “TRANSMISSION”.

Is any DTC detected?

YES >> Perform diagnosis on the detected DTC and repair or replace the malfunctioning parts. Refer to TM-79, "DTC Index".

NO >> GO TO 4.

4. CHECK ABS ACTUATOR AND ELECTRIC UNIT (CONTROL UNIT) SELF-DIAGNOSIS RESULTS

Check if any DTC is detected in “Self Diagnostic Result” of “ABS”.

Is any DTC detected?

YES >> Perform diagnosis on the detected DTC and repair or replace the malfunctioning parts. Refer to BRC-52, "DTC Index".

NO >> Replace the ADAS control unit. Refer to DAS-55, "Removal and Installation".

C1A04 ABS/TCS/VDC SYSTEM

DTC Logic

INFOID:0000000008131674

DTC DETECTION LOGIC

DTC (On board display)	Trouble diagnosis name	DTC detecting condition	Possible causes
C1A04 (4)	ABS/TCS/VDC CIRC	If a malfunction occurs in the VDC/TCS/ABS system	ABS actuator and electric unit (control unit)

NOTE:
If DTC “C1A04” is detected along with DTC “U1000”, first diagnose the DTC “U1000”. Refer to CCS-141, "ADAS CONTROL UNIT : DTC Logic".

Diagnosis Procedure

INFOID:0000000008131675

1. CHECK SELF-DIAGNOSIS RESULTS

1. Perform “All DTC Reading” with CONSULT.
2. Check if the “U1000” is detected other than “C1A04” in “Self Diagnostic Result” of “ICC/ADAS”.

Is “U1000” detected?

YES >> Perform the CAN communication system inspection. Repair or replace the malfunctioning parts. Refer to CCS-141, "ADAS CONTROL UNIT : DTC Logic".
NO >> GO TO 2.

2. CHECK ABS ACTUATOR AND ELECTRIC UNIT (CONTROL UNIT) SELF-DIAGNOSIS RESULTS

Check if any DTC is detected in “Self Diagnostic Result” of “ABS”.

Is any DTC detected?

YES >> Perform diagnosis on the detected DTC and repair or replace the malfunctioning parts. Refer to BRC-52, "DTC Index".
NO >> Replace the ADAS control unit. Refer to DAS-55, "Removal and Installation".

C1A05 BRAKE SW/STOP LAMP SW

DTC Logic

INFOID:0000000008131676

DTC DETECTION LOGIC

DTC (On board display)	Trouble diagnosis name	DTC detecting condition	Possible causes
C1A05 (5)	BRAKE SW/STOP L SW	A mismatch between a stop lamp switch signal and a ICC brake switch signal received from ECM and a stop lamp signal received from the ABS actuator and electric unit (control unit) continues for 10 seconds or more with vehicle speeds at approximately 40 km/h or more	• Stop lamp switch circuit • ICC brake switch circuit • Stop lamp switch • ICC brake switch • Incorrect stop lamp switch installation • Incorrect ICC brake switch installation • ECM • ABS actuator and electric unit (control unit)

NOTE:
If DTC “C1A05” is detected along with DTC “U1000”, first diagnose the DTC “U1000”. Refer to CCS-141, "ADAS CONTROL UNIT : DTC Logic".

Diagnosis Procedure

INFOID:0000000008131677

1. CHECK SELF-DIAGNOSIS RESULTS

1. Perform “All DTC Reading” with CONSULT.
2. Check if the “U1000” is detected other than “C1A05” in “Self Diagnostic Result” of “ICC/ADAS”.

Is “U1000” detected?

YES >> Perform the CAN communication system inspection. Repair or replace the malfunctioning parts. Refer to CCS-141, "ADAS CONTROL UNIT : DTC Logic".
NO >> GO TO 2.

2. CHECK STOP LAMP SWITCH AND ICC BRAKE SWITCH

Check that “STOP LAMP SW” and “BRAKE SW” operate normally in “DATA MONITOR” of “ICC/ADAS”.

Is the inspection result normal?

YES >> GO TO 3.
NO-1 >> When “BRAKE SW” operation is malfunctioning: GO TO 4.
NO-2 >> When “STOP LAMP SW” operation is malfunctioning: GO TO 9.

3. CHECK STOP LAMP SWITCH

Check that “STOP LAMP SW” operate normally in “DATA MONITOR” of “ABS”.

Is the inspection result normal?

YES >> GO TO 14.
NO >> GO TO 9.

4. CHECK ICC BRAKE SWITCH INSTALLATION

1. Turn ignition switch OFF.
2. Check ICC brake switch for correct installation. Refer to BR-7, "Inspection and Adjustment".

Is the inspection result normal?

YES >> GO TO 5.
NO >> Adjust ICC brake switch installation. Refer to BR-7, "Inspection and Adjustment".

5. ICC BRAKE SWITCH INSPECTION

1. Disconnect ICC brake switch connector.
2. Check ICC brake switch. Refer to CCS-87, "Component Inspection (ICC Brake Switch)".

Is the inspection result normal?

YES >> GO TO 6.
NO >> Replace ICC brake switch.

6. CHECK ICC BRAKE SWITCH POWER SUPPLY CIRCUIT

1. Turn the ignition switch ON.
2. Check voltage between ICC brake switch harness connector and ground.

Terminals			Voltage (Approx.)
(+)		(-)	
ICC brake switch		Ground	
Connector	Terminal		
E114	1		Battery voltage

Is the inspection result normal?

YES >> GO TO 7.
NO >> Repair the harnesses or connectors.

7. CHECK HARNESS BETWEEN ICC BRAKE SWITCH AND ECM

1. Turn ignition switch OFF
2. Disconnect ECM connector.
3. Check for continuity between ICC brake switch harness connector and ECM harness connector.

VQ37VHR

ICC brake switch		ECM		Continuity
Connector	Terminal	Connector	Terminal	
E114	2	M107	126	Existed

VK56VD

ICC brake switch		ECM		Continuity
Connector	Terminal	Connector	Terminal	
E114	2	M160	147	Existed

4. Check for continuity between ICC brake switch harness connector and ground.

ICC brake switch		Ground	Continuity
Connector	Terminal		
E114	2		Not existed

Is the inspection result normal?

YES >> GO TO 8.
NO >> Repair the harnesses or connectors.

8. PERFORM SELF-DIAGNOSIS OF ECM

1. Connect all connectors again if the connectors are disconnected.
2. Turn ignition switch ON.
3. Perform “All DTC Reading”.
4. Check if any DTC is detected in “Self Diagnostic Result” of “ENGINE”. Refer to EC-117, "DTC Index" (VQ37VHR) or EC-1040, "DTC Index" (VK56VD for USA and Canada) or EC-1605, "DTC Index" (VK56VD for Mexico).

Is any DTC detected?

YES >> Repair or replace the malfunctioning parts identified by the self-diagnosis result.
NO >> Replace the ADAS control unit. Refer to DAS-55, "Removal and Installation".

9. CHECK STOP LAMP SWITCH INSTALLATION

1. Turn ignition switch OFF.
2. Check stop lamp switch for correct installation. Refer to BR-7, "Inspection and Adjustment".

Is the inspection result normal?

YES >> GO TO 10.
NO >> Adjust stop lamp switch installation. Refer to BR-7, "Inspection and Adjustment".

10. STOP LAMP SWITCH INSPECTION

1. Disconnect stop lamp switch connector.
2. Check stop lamp switch. Refer to CCS-87, "Component Inspection (Stop Lamp Switch)".

Is the inspection result normal?

YES >> GO TO 11.
NO >> Replace stop lamp switch.

11. CHECK STOP LAMP SWITCH POWER SUPPLY CIRCUIT

1. Turn the ignition switch ON.
2. Check voltage between stop lamp switch harness connector and ground.

Terminals			Voltage (Approx.)
(+)		(-)	
Stop lamp switch		Ground	
Connector	Terminal		
E110	1		Battery voltage
	3		

Is the inspection result normal?

YES >> GO TO 12.
NO >> Repair the harnesses or connectors.

12. CHECK HARNESS BETWEEN STOP LAMP SWITCH AND ECM

1. Turn ignition switch OFF
2. Disconnect ECM, rear combination lamp and high-mounted stop lamp connectors.
3. Check for continuity between stop lamp switch harness connector and ECM harness connector.

VQ37VHR

Stop lamp switch		ECM		Continuity
Connector	Terminal	Connector	Terminal	
E110	2	M107	122	Existed

VK56VD

Stop lamp switch		ECM		Continuity
Connector	Terminal	Connector	Terminal	
E110	2	M160	158	Existed

4. Check for continuity between stop lamp switch harness connector and ground.

Stop lamp switch		Ground	Continuity
Connector	Terminal		
E110	2		Not existed

Is the inspection result normal?

YES >> GO TO 13.
NO >> Repair the harnesses or connectors.

13. CHECK HARNESS BETWEEN STOP LAMP SWITCH AND ABS ACTUATOR AND ELECTRIC UNIT (CONTROL UNIT)

1. Disconnect ABS actuator and electric unit (control unit) connector.
2. Check for continuity between stop lamp switch harness connector and ABS actuator and electric unit (control unit) harness connector.

Stop lamp switch		ABS actuator and electric unit (control unit)		Continuity
Connector	Terminal	Connector	Terminal	
E110	4	E41	5	Existed

3. Check for continuity between stop lamp switch harness connector and ground.

Stop lamp switch		Ground	Continuity
Connector	Terminal		
E110	4		Not existed

Is the inspection result normal?

YES >> GO TO 14.
NO >> Repair the harnesses or connectors.

14. PERFORM SELF-DIAGNOSIS OF ECM

1. Connect all connectors again if the connectors are disconnected.
2. Turn ignition switch ON.
3. Perform “All DTC Reading”.
4. Check if any DTC is detected in “Self Diagnostic Result” of “ENGINE”. Refer to EC-117, "DTC Index" (VQ37VHR) or EC-1040, "DTC Index" (VK56VD for USA and Canada) or EC-1605, "DTC Index" (VK56VD for Mexico).

Is any DTC detected?

YES >> Repair or replace the malfunctioning parts identified by the self-diagnosis result.
NO >> GO TO 15.

15. PERFORM SELF-DIAGNOSIS OF ABS ACTUATOR AND ELECTRIC UNIT (CONTROL UNIT)

Check if any DTC is detected in “Self Diagnostic Result” of “ABS”. Refer to BRC-52, "DTC Index".

Is any DTC detected?

YES >> Repair or replace the malfunctioning parts identified by the self-diagnosis result.
NO >> Replace the ADAS control unit. Refer to DAS-55, "Removal and Installation".

Component Inspection (ICC Brake Switch)

INFOID:0000000008131678

1. CHECK ICC BRAKE SWITCH

Check for continuity between ICC brake switch terminals.

Terminal		Condition	Continuity
1	2	When brake pedal is depressed	Not existed
		When brake pedal is released	Existed

Is the inspection result normal?

YES >> INSPECTION END
NO >> Replace ICC brake switch.

Component Inspection (Stop Lamp Switch)

INFOID:0000000008131679

1. CHECK STOP LAMP SWITCH

Check for continuity between stop lamp switch terminals.

Terminal		Condition	Continuity
1	2	When brake pedal is depressed	Existed
		When brake pedal is released	Not existed

Terminal		Condition	Continuity
3	4	When brake pedal is depressed	Existed
		When brake pedal is released	Not existed

Is the inspection result normal?

YES >> INSPECTION END
NO >> Replace stop lamp switch.

C1A06 OPERATION SW

DTC Logic

INFOID:0000000008131680

DTC DETECTION LOGIC

DTC (On board display)	Trouble diagnosis name	DTC detecting condition	Possible causes
C1A06 (6)	OPERATION SW CIRC	• Any switch of the ICC steering switch is detected as “ON” continuously for 60 seconds • An ON/OFF state judgment of the ICC differs between ECM and ADAS control unit, and the state continues for 2 seconds or more	• ICC steering switch circuit • ICC steering switch • ECM

NOTE:
If DTC “C1A06” is detected along with DTC “U1000”, first diagnose the DTC “U1000”. Refer to CCS-141, "ADAS CONTROL UNIT : DTC Logic".

DTC CONFIRMATION PROCEDURE

1. PERFORM DTC CONFIRMATION PROCEDURE

1. Start the engine.
2. Wait for approximately 5 minutes after turning the MAIN switch of ICC system ON.
3. Perform “All DTC Reading” with CONSULT.
4. Check if the “C1A06” is detected as the current malfunction in “Self Diagnostic Result” of “ICC/ADAS”.

Is “C1A06” detected as the current malfunction?

YES >> Refer to CCS-89, "Diagnosis Procedure".
NO >> Refer to GI-43, "Intermittent Incident".

Diagnosis Procedure

INFOID:0000000008131681

1. CHECK SELF-DIAGNOSIS RESULTS

Check if “U1000” is detected other than “C1A06” in “Self Diagnostic Result” of “ICC/ADAS”.

Is “U1000” detected?

YES >> Perform the CAN communication system inspection. Repair or replace the malfunctioning parts. Refer to DAS-51, "DTC Logic".
NO >> GO TO 2.

2. CHECK ICC STEERING SWITCH

1. Turn the ignition switch OFF.
2. Disconnect the ICC steering switch connector.
3. Check the ICC steering switch. Refer to CCS-90, "Component Inspection".

Is the inspection result normal?

YES >> GO TO 3.
NO >> Replace the ICC steering switch.

3. CHECK HARNESS BETWEEN SPIRAL CABLE AND ECM

1. Disconnect the ECM connector.
2. Check for continuity between the spiral cable harness connector and ECM harness connector.

VQ37VHR

Spiral cable		ECM		Continuity
Connector	Terminal	Connector	Terminal	
M36	25	M107	101	Existed
	32		108	

VK56VD

Spiral cable		ECM		Continuity
Connector	Terminal	Connector	Terminal	
M36	25	M160	128	Existed
	32		130	

3. Check for continuity between spiral cable harness connector and ground.

Spiral cable		Ground	Continuity
Connector	Terminal		
M36	25		Not existed
	32		

Is the inspection result normal?

YES >> GO TO 4.
NO >> Repair the harnesses or connectors.

4. CHECK SPIRAL CABLE

Check for continuity between spiral cable terminals.

Spiral cable		Continuity
Terminal		
13	25	Existed
16	32	

Is the inspection result normal?

YES >> GO TO 5.
NO >> Replace the spiral cable.

5. PERFORM SELF-DIAGNOSIS OF ECM

1. Connect the connectors of ICC steering switch and ECM connector.
2. Turn the ignition switch ON.
3. Perform “All DTC Reading”.
4. Check if any DTC is detected in “Self Diagnostic Result” of “ENGINE”.

Is any DTC detected?

YES >> Perform self-diagnosis on the detected DTC and repair or replace the malfunctioning parts. Refer to EC-117, "DTC Index" (VQ37VHR) or EC-1040, "DTC Index" (VK56VD for USA and Canada) or EC-1605, "DTC Index" (VK56VD for Mexico).
NO >> Replace the ADAS control unit. Refer to DAS-55, "Removal and Installation".

Component Inspection

INFOID:0000000008131682

1. CHECK ICC STEERING SWITCH

Check resistance between ICC steering switch terminals.

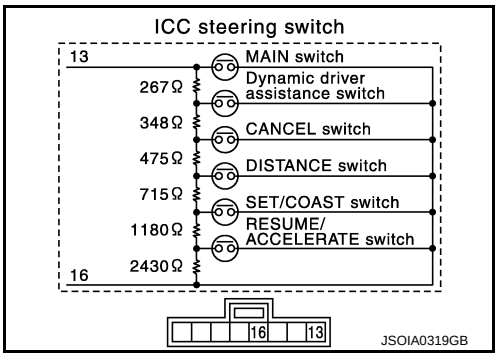

Terminal		Switch operation	Resistance [Ω]
13	16	When pressing MAIN switch	Approx. 0
		When pressing dynamic driver assistance switch	Approx. 267
		When pressing CANCEL switch	Approx. 615
		When pressing DISTANCE switch	Approx. 1090
		When pressing SET/COAST switch	Approx. 1805
		When pressing RESUME/ACCELERATE switch	Approx. 2985
		When all switches are not pressed	Approx. 5415

Is the inspection result normal?

YES >> INSPECTION END
NO >> Replace the ICC steering switch.

C1A12 LASER BEAM OFF CENTER

ADAS CONTROL UNIT

ADAS CONTROL UNIT : DTC Logic

INFOID:0000000008131683

DTC DETECTION LOGIC

DTC (On board display)	Trouble diagnosis name	DTC detecting condition	Possible causes
C1A12 (12)	LASER BEAM OFFCNTR	Laser beam of ICC sensor is off the aiming point	Laser beam is off the aiming point

ADAS CONTROL UNIT : Diagnosis Procedure

INFOID:0000000008131684

1. CHECK ICC SENSOR SELF-DIAGNOSIS RESULTS

1. Perform “All DTC Reading” with CONSULT.
2. Check if the “C1A12” is detected as the current malfunction in “Self Diagnostic Result” of “LASER”.

Is “C1A12” detected?

YES >> Refer to CCS-92, "ICC SENSOR : DTC Logic".
NO >> GO TO 2.

2. CHECK ADAS CONTROL UNIT SELF-DIAGNOSIS RESULTS

Check if the “C1A12” is detected as the current malfunction in “Self Diagnostic Result” of “ICC/ADAS”.

Is “C1A12” detected?

YES >> Replace ADAS control unit. Refer to DAS-55, "Removal and Installation".
NO >> INSPECTION END

ICC SENSOR

ICC SENSOR : DTC Logic

INFOID:0000000008131685

DTC DETECTION LOGIC

DTC	Trouble diagnosis name	DTC detecting condition	Possible causes
C1A12	LASER BEAM OFFCNTR	Laser beam of ICC sensor is off the aiming point	Laser beam is off the aiming point

ICC SENSOR : Diagnosis Procedure

INFOID:0000000008131686

1. ADJUST LASER BEAM AIMING

1. Adjust the laser beam aiming with CONSULT. Refer to CCS-66, "Description".
2. Perform “All DTC Reading”.
3. Check if the “C1A12” is detected in “Self Diagnostic Result” of “LASER”.

Is “C1A12” detected?

YES >> Replace the ICC sensor. Refer to CCS-171, "Removal and Installation".
NO >> INSPECTION END

C1A13 STOP LAMP RELAY

DTC Logic

INFOID:0000000008131687

DTC DETECTION LOGIC

DTC (On board display)	Trouble diagnosis name	DTC detecting condition	Possible causes
C1A13 (13)	STOP LAMP RLY FIX	• Stop lamp inactive state continues for 0.3 seconds or more despite the outputting of an ICC sensor ICC brake hold relay drive signal • The stop lamp remains ON for 60 seconds or more under the following conditions: - Driving at 40 km/h or more - No stop lamp drive signal output from ICC sensor - No brake operation	• Stop lamp switch circuit • ICC brake switch circuit • ICC brake hold relay circuit • Stop lamp switch • ICC brake switch • ICC brake hold relay • Incorrect stop lamp switch installation • Incorrect ICC brake switch installation • ECM • ABS actuator and electric unit (control unit)

NOTE:
If DTC “C1A13” is detected along with DTC “U1000”, first diagnose the DTC “U1000”. Refer to CCS-141, "ADAS CONTROL UNIT : DTC Logic".

DTC CONFIRMATION PROCEDURE

1. PERFORM DTC CONFIRMATION PROCEDURE (1)

1. Start the engine.
2. Perform the active test item “STOP LAMP” with CONSULT.
3. Perform “All DTC Reading”.
4. Check if the “C1A13” is detected as the current malfunction in the “Self Diagnostic Result” of “ICC/ADAS”.

Is “C1A13” detected as the current malfunction?

YES >> Refer to CCS-93, "Diagnosis Procedure".
NO >> GO TO 2.

2. PERFORM DTC CONFIRMATION PROCEDURE (2)

1. Drive at the vehicle speed of 40 km/h (25 MPH) or more for approximately 20 seconds or more without the brake pedal depressed.
   CAUTION:
   Always drive safely.
   NOTE:
   If it is outside the above condition, repeat step 1.
2. Perform “All DTC Reading”.
3. Check if the “C1A13” is detected as the current malfunction in the “Self Diagnostic Result” of “ICC/ADAS”.

Is “C1A13” detected as the current malfunction?

YES >> Refer to CCS-93, "Diagnosis Procedure".
NO >> Refer to GI-43, "Intermittent Incident".

Diagnosis Procedure

INFOID:0000000008131688

1. CHECK SELF-DIAGNOSIS RESULTS

Check if “U1000” is detected other than “C1A13” in “Self Diagnostic Result” of “ICC/ADAS”.

Is “U1000” detected?

YES >> Perform the CAN communication system inspection. Repair or replace the malfunctioning parts. Refer to CCS-141, "ADAS CONTROL UNIT : DTC Logic".
NO >> GO TO 2.

2. CHECK STOP LAMP SWITCH

Check that “STOP LAMP SW” operate normally in “DATA MONITOR” of “ICC/ADAS”.

Is the inspection result normal?

YES >> GO TO 10.
NO >> GO TO 3.

3. CHECK STOP LAMP SWITCH INSTALLATION

1. Turn ignition switch OFF.
2. Check stop lamp switch for correct installation. Refer to BR-7, "Inspection and Adjustment".

Is the inspection result normal?

YES >> GO TO 4.
NO >> Adjust stop lamp switch installation. Refer to BR-7, "Inspection and Adjustment".

4. CHECK STOP LAMP SWITCH

1. Disconnect stop lamp switch connector.
2. Check stop lamp switch. Refer to CCS-87, "Component Inspection (Stop Lamp Switch)".

Is the inspection result normal?

YES >> GO TO 5.
NO >> Replace stop lamp switch.

5. CHECK STOP LAMP FOR ILLUMINATION

1. Connect stop lamp switch connector.
2. Remove ICC brake hold relay.
3. Check that the stop lamp is illuminated by depressing the brake pedal to turn the stop lamp ON.

Is the inspection result normal?

YES >> GO TO6.
NO >> Check the stop lamp circuit, and repair or replace the malfunctioning parts.

6. CHECK HARNESS BETWEEN STOP LAMP SWITCH AND ECM

1. Turn the ignition switch OFF.
2. Disconnect stop lamp switch, ECM, rear combination lamp, and high-mounted stop lamp connectors.
3. Check for continuity between the stop lamp switch harness connector and the ECM harness connector.

VQ37VHR

Stop lamp switch		ECM		Continuity
Connector	Terminal	Connector	Terminal	
E110	2	M107	122	Existed

VK56VD

Stop lamp switch		ECM		Continuity
Connector	Terminal	Connector	Terminal	
E110	2	M160	158	Existed

4. Check for continuity between stop lamp switch harness connector and ground.

Stop lamp switch		Ground	Continuity
Connector	Terminal		
E110	2		Not existed

Is the inspection result normal?

YES >> GO TO 7.
NO >> Repair the harnesses or connectors.

7. CHECK ICC BRAKE HOLD RELAY CIRCUIT

1. Connect ICC brake hold relay, ECM, rear combination lamp, and high-mounted stop lamp connectors.
2. Check that the stop lamp does not illuminate when brake pedal is not depressed.

Is the inspection result normal?

YES >> GO TO 9.
NO >> GO TO 8.

8. CHECK ICC BRAKE HOLD RELAY

1. Remove ICC brake hold relay.
2. Check ICC brake hold relay. Refer to CCS-98, "Component Inspection".

Is the inspection result normal?

YES >> GO TO 9.
NO >> Replace ICC brake hold relay.

9. PERFORM SELF-DIAGNOSIS OF ECM

1. Connect all connectors again if the connectors are disconnected.
2. Turn ignition switch ON.
3. Perform “All DTC Reading”.
4. Check if any DTC is detected in “Self Diagnostic Result” of “ENGINE”. Refer to EC-117, "DTC Index" (VQ37VHR) or EC-1040, "DTC Index" (VK56VD for USA and Canada) or EC-1605, "DTC Index" (VK56VD for Mexico).

Is any DTC detected?

YES >> Repair or replace the malfunctioning parts identified by the self-diagnosis result.
NO >> Replace ADAS control unit. Refer to DAS-55, "Removal and Installation".

10. CHECK ICC BRAKE HOLD RELAY POWER SUPPLY CIRCUIT

1. Turn ignition switch OFF.
2. Remove ICC brake hold relay.
3. Check the voltage between ICC brake hold relay harness connector and ground.

Terminal			Voltage (Approx.)
(+)		(–)	
ICC brake hold relay		Ground	
Connector	Terminal		
E92	2		Battery voltage

Is the inspection result normal?

YES >> GO TO 11.
NO >> Repair or replace ICC brake hold relay power supply circuit.

11. CHECK HARNESS BETWEEN AND ICC BRAKE HOLD RELAY AND ADAS CONTROL UNIT

1. Disconnect ADAS control unit connectors.
2. Check for continuity between ICC brake hold relay harness connector and ADAS control unit harness connector.

ICC brake hold relay		ADAS control unit		Continuity
Connector	Terminal	Connector	Terminal	
E92	1	B50	5	Existed

3. Check for continuity between ADAS control unit harness connector and ground.

ICC brake hold relay		Ground	Continuity
Connector	Terminal		
E92	1		Not existed

Is the inspection result normal?

YES >> GO TO 12.
NO >> Repair the harnesses or connectors.

12. CHECK ADAS CONTROL UNIT STANDARD VOLTAGE

1. Connect all connectors again if the connectors are disconnected.
2. Turn ignition switch ON.

3. Perform “STOP LAMP” on “Active Test” of “ICC/ADAS”, and then check the voltage between ADAS control unit harness connector and ground.

Terminal			Condition	Voltage (Approx.)
(+)		(–)		
ADAS control unit		Ground	Active Test item “STOP LAMP”	
Connector	Terminal			
B50	5		Off	Battery voltage
			On	0 V

Is the inspection result normal?

YES >> GO TO 13.
NO >> Replace ADAS control unit. Refer to DAS-55, "Removal and Installation".

13. CHECK ICC BRAKE HOLD RELAY POWER SUPPLY CIRCUIT

1. Turn ignition switch OFF.
2. Check the voltage between ICC brake hold relay harness connector and ground.

Terminal			Voltage (Approx.)
(+)		(–)	
ICC brake hold relay		Ground	
Connector	Terminal		
E92	5		Battery voltage

Is the inspection result normal?

YES >> GO TO 14.
NO >> Repair or replace ICC brake hold relay power supply circuit.

14. CHECK HARNESS BETWEEN ICC BRAKE HOLD RELAY AND ECM

1. Disconnect ECM, rear combination lamp, and high-mounted stop lamp connectors and remove ICC brake hold relay.
2. Check for continuity between ICC brake hold relay harness connector and ECM harness connector.

VQ37VHR

ICC brake hold relay		ECM		Continuity
Connector	Terminal	Connector	Terminal	
E92	3	M107	122	Existed

VK56VD

ICC brake hold relay		ECM		Continuity
Connector	Terminal	Connector	Terminal	
E92	3	M160	158	Existed

3. Check for continuity between ICC brake hold relay harness connector and ground.

ICC brake hold relay		Ground	Continuity
Connector	Terminal		
E92	3		Not existed

Is the inspection result normal?

YES >> GO TO 15.
NO >> Repair the harnesses or connectors.

15. CHECK ICC BRAKE HOLD RELAY

1. Remove ICC brake hold relay.
2. Check ICC brake hold relay. Refer to CCS-98, "Component Inspection".

Is the inspection result normal?

YES >> GO TO 16.
NO >> Replace ICC brake hold relay.

16. CHECK STOP LAMP SWITCH

Check that “STOP LAMP SW” operate normally in “DATA MONITOR” of “ABS”.

Is the inspection result normal?

YES >> GO TO 21.
NO >> GO TO 17.

17. CHECK STOP LAMP SWITCH INSTALLATION

1. Turn ignition switch OFF.
2. Check stop lamp switch for correct installation. Refer to BR-7, "Inspection and Adjustment".

Is the inspection result normal?

YES >> GO TO 18.
NO >> Adjust stop lamp switch installation. Refer to BR-7, "Inspection and Adjustment".

18. CHECK STOP LAMP SWITCH

1. Disconnect stop lamp switch connector.
2. Check stop lamp switch. Refer to CCS-87, "Component Inspection (Stop Lamp Switch)".

Is the inspection result normal?

YES >> GO TO 19.
NO >> Replace stop lamp switch.

19. CHECK STOP LAMP SWITCH POWER SUPPLY CIRCUIT

1. Connect stop lamp switch connector.
2. Check the voltage between stop lamp switch harness connector and ground.

Terminal			Voltage (Approx.)
(+)		(–)	
Stop lamp switch		Ground	
Connector	Terminal		
E110	3		Battery voltage

Is the inspection result normal?

YES >> GO TO 20.
NO >> Repair or replace stop lamp switch power supply circuit.

20. CHECK HARNESS BETWEEN STOP LAMP SWITCH AND ABS ACTUATOR AND ELECTRIC UNIT (CONTROL UNIT)

1. Turn the ignition switch OFF.
2. Disconnect stop lamp switch, ABS actuator and electric unit (control unit) connectors.
3. Check for continuity between the stop lamp switch harness connector and the ABS actuator and electric unit (control unit) harness connector.

Stop lamp switch		ABS actuator and electric unit (control unit)		Continuity
Connector	Terminal	Connector	Terminal	
E110	4	E41	5	Existed

4. Check for continuity between stop lamp switch harness connector and ground.

Stop lamp switch		Ground	Continuity
Connector	Terminal		
E110	4		Not existed

Is the inspection result normal?

YES >> GO TO 21.
NO >> Repair the harnesses or connectors.

21. PERFORM SELF-DIAGNOSIS OF ECM

1. Connect all connectors again if the connectors are disconnected.
2. Turn ignition switch ON.
3. Perform “All DTC Reading”.
4. Check if any DTC is detected in “Self Diagnostic Result” of “ENGINE”. Refer to EC-117, "DTC Index" (VQ37VHR) or EC-1040, "DTC Index" (VK56VD for USA and Canada) or EC-1605, "DTC Index" (VK56VD for Mexico).

Is any DTC detected?

YES >> Repair or replace the malfunctioning parts identified by the self-diagnosis result.
NO >> GO TO 22.

22. PERFORM SELF-DIAGNOSIS OF ABS ACTUATOR AND ELECTRIC UNIT (CONTROL UNIT)

1. Connect all connectors again if the connectors are disconnected.
2. Turn ignition switch ON.
3. Perform “All DTC Reading”.
4. Check if any DTC is detected in “Self Diagnostic Result” of “ABS”. Refer to BRC-52, "DTC Index".

Is any DTC detected?

YES >> Repair or replace the malfunctioning parts identified by the self-diagnosis result.
NO >> Replace ADAS control unit. Refer to DAS-55, "Removal and Installation".

Component Inspection

INFOID:0000000008131689

1. CHECK ICC BRAKE HOLD RELAY

Apply battery voltage to ICC brake hold relay terminals 1 and 2, and then check for continuity under the following conditions.

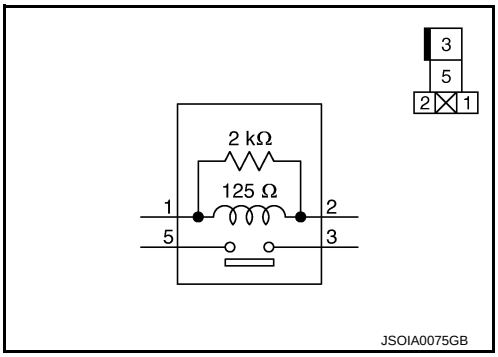

Terminal		Condition	Continuity
3	5	When the battery voltage is applied	Existed
		When the battery voltage is not applied	Not existed

Is the inspection result normal?

YES >> INSPECTION END
NO >> Replace ICC brake hold relay.

C1A14 ECM

DTC Logic

INFOID:0000000008131690

DTC DETECTION LOGIC

DTC (On board display)	Trouble diagnosis name	DTC detecting condition	Possible causes
C1A14 (14)	ECM CIRCUIT	If ECM is malfunctioning	• Accelerator pedal position sensor • ECM • ADAS control unit

NOTE:
If DTC “C1A14” is detected along with DTC “U1000”, first diagnose the DTC “U1000”. Refer to CCS-141, "ADAS CONTROL UNIT : DTC Logic".

1. PERFORM DTC CONFIRMATION PROCEDURE

1. Start the engine.
2. Operate the ICC system and drive.
   CAUTION:
   Always drive safely.
3. Stop the vehicle.
4. Perform “All DTC Reading” with CONSULT.
5. Check if the “C1A14” is detected as the current malfunction in “Self Diagnostic Result” of “ICC/ADAS”.

Is “C1A14” detected as the current malfunction?

YES >> Refer to CCS-99, "Diagnosis Procedure".
NO >> Refer to GI-43, "Intermittent Incident".

Diagnosis Procedure

INFOID:0000000008131691

1. CHECK SELF-DIAGNOSIS RESULTS

Check if “U1000” is detected other than “C1A14” in “Self Diagnostic Result” of “ICC/ADAS”.

Is “U1000” detected?

YES >> Perform the CAN communication system inspection. Repair or replace the malfunctioning parts. Refer to CCS-141, "ADAS CONTROL UNIT : DTC Logic".
NO >> GO TO 2.

2. PERFORM SELF-DIAGNOSIS OF ECM

Check if any DTC is detected in “Self Diagnostic Result” of “ENGINE”.

Is any DTC detected?

YES >> Perform diagnosis on the detected DTC and repair or replace the malfunctioning parts. Refer to EC-117, "DTC Index" (VQ37VHR) or EC-1040, "DTC Index" (VK56VD for USA and Canada) or EC-1605, "DTC Index" (VK56VD for Mexico).
NO >> Replace the ADAS control unit. Refer to DAS-55, "Removal and Installation".

C1A15 GEAR POSITION

Description

INFOID:0000000008131692

ADAS control unit judges the gear position based on the following signals.
- Current gear position signal transmitted from TCM via CAN communication.
- Value of gear ratio calculated from input speed signal transmitted from TCM via CAN communication.
- Value of gear ratio calculated from the vehicle speed signal transmitted from ABS actuator and electric unit (control unit) via CAN communication.

DTC Logic

INFOID:0000000008131693

DTC DETECTION LOGIC

DTC (On board display)	Trouble diagnosis name	DTC detecting condition	Possible causes
C1A15 (15)	GEAR POSITION	A mismatch between an current gear position signal transmitted from TCM via CAN communication and a gear position calculated by the ADAS control unit continues for approximately 11 minutes or more	• Input speed sensor • Vehicle speed sensor A/T (output speed sensor) • TCM

NOTE:
If DTC “C1A15” is detected along with DTC “U1000”, “C1A03”, or “C1A04”, first diagnose the DTC “U1000”, “C1A03”, or “C1A04”.
- Refer to CCS-141, "ADAS CONTROL UNIT : DTC Logic" for DTC “U1000”.
- Refer to CCS-81, "DTC Logic" for DTC “C1A03”.
- Refer to CCS-83, "DTC Logic" for DTC “C1A04”.

DTC CONFIRMATION PROCEDURE

1. PERFORM DTC CONFIRMATION PROCEDURE

1. Start the engine.
2. Turn the MAIN switch of ICC system ON.
3. Drive the vehicle at 10 km/h (6 MPH) or faster for approximately 15 minutes or more.
   CAUTION:
   Always drive safely.
4. Stop the vehicle.
5. Perform “All DTC Reading” with CONSULT.
6. Check if “C1A15” is detected as the current malfunction in the “Self Diagnostic Result” of “ICC/ADAS”.

Is “C1A15” detected as the current malfunction?

YES >> Refer to CCS-100, "Diagnosis Procedure".
NO >> Refer to GI-43, "Intermittent Incident".

Diagnosis Procedure

INFOID:0000000008131694

1. CHECK SELF-DIAGNOSIS RESULTS

Check if “C1A03”, “C1A04”, or “U1000” is detected other than “C1A15” in “Self Diagnostic Result” of “ICC/ADAS”.

Is any DTC detected?

YES >> Perform diagnosis on the detected DTC and repair or replace the malfunctioning parts. Refer to CCS-52, "DTC Index".
NO >> GO TO 2.

2. CHECK VEHICLE SPEED SIGNAL

Check that “VHCL SPEED SE” operates normally in “DATA MONITOR” of “ICC/ADAS”.
CAUTION:
Be careful of the vehicle speed.

Is the inspection result normal?

YES >> GO TO 3.
NO >> GO TO 7.

3. CHECK GEAR POSITION

Check that “GEAR” operates normally in “DATA MONITOR” of “ICC/ADAS”.

CAUTION:
Be careful of the vehicle speed.

Is the inspection result normal?

YES >> GO TO 5.
NO >> GO TO 4.

4. CHECK GEAR POSITION SIGNAL

Check that “GEAR” operates normally in “DATA MONITOR” of “TRANSMISSION”.

Is the inspection result normal?

YES >> GO TO 5.
NO >> GO TO 6.

5. CHECK INPUT SPEED SENSOR SIGNAL

Check that “INPUT SPEED” operates normally in “DATA MONITOR” of “TRANSMISSION”.

Is the inspection result normal?

YES >> Replace the ADAS control unit. Refer to DAS-55, "Removal and Installation".
NO >> GO TO 6.

6. CHECK TCM SELF-DIAGNOSIS RESULTS

1. Perform “All DTC Reading”.
2. Check if any DTC is detected in “Self Diagnostic Result” of “TRANSMISSION”.

Is any DTC detected?

YES >> Perform diagnosis on the detected DTC and repair or replace the malfunctioning parts. Refer to TM-79, "DTC Index".
NO >> Replace the ADAS control unit. Refer to DAS-55, "Removal and Installation".

7. CHECK ABS ACTUATOR AND ELECTRIC UNIT (CONTROL UNIT) SELF-DIAGNOSIS RESULTS

1. Perform “All DTC Reading”.
2. Check if any DTC is detected in “Self Diagnostic Result” of “ABS”.

Is any DTC detected?

YES >> Perform diagnosis on the detected DTC and repair or replace the malfunctioning parts. Refer to BRC-52, "DTC Index".
NO >> Replace the ADAS control unit. Refer to DAS-55, "Removal and Installation".

C1A16 RADAR STAIN

ADAS CONTROL UNIT

ADAS CONTROL UNIT : DTC Logic

INFOID:0000000008131695

DTC DETECTION LOGIC

DTC (On board display)	Trouble diagnosis name	DTC detecting condition	Possible causes
C1A16 (16)	RADAR STAIN	If any stain occurs to ICC sensor body window	• Stain or foreign materials is deposited • Cracks or scratches exist

NOTE:
DTC “C1A16” may be detected under the following conditions. (Explain to the customer about the difference between the contamination detection function and the indication when the malfunction is detected and tell them “This is not malfunction”.)
- When contamination or foreign materials adhere to the ICC sensor body window
- When driving while it is snowing or when frost forms on the ICC sensor body window
- When ICC sensor body window is temporarily fogged

ADAS CONTROL UNIT : Diagnosis Procedure

INFOID:0000000008131696

1. CHECK ICC SENSOR SELF-DIAGNOSIS RESULTS

1. Perform “All DTC Reading” with CONSULT.
2. Check if the “C1A16” is detected as the current malfunction in “Self Diagnostic Result” of “LASER”.

Is “C1A16”detected?

YES >> Refer to CCS-102, "ICC SENSOR : DTC Logic".
NO >> GO TO 2.

2. CHECK ADAS CONTROL UNIT SELF-DIAGNOSIS RESULTS

1. Erase All self-diagnosis results with CONSULT.
2. Perform “All DTC Reading”
3. Check if the “C1A16” is detected as the current malfunction in “Self Diagnostic Result” of “ICC/ADAS”.

Is “C1A16”detected?

YES >> Replace ADAS control unit. Refer to DAS-55, "Removal and Installation".
NO >> INSPECTION END

ICC SENSOR

ICC SENSOR : DTC Logic

INFOID:0000000008131697

DTC DETECTION LOGIC

DTC	Trouble diagnosis name	DTC detecting condition	Possible causes
C1A16	RADAR STAIN	If any stain occurs to ICC sensor body window	• Stain or foreign materials is deposited • Cracks or scratches exist

NOTE:
DTC “C1A16” may be detected under the following conditions. (Explain to the customer about the difference between the contamination detection function and the indication when the malfunction is detected and tell them “This is not malfunction”.)
- When contamination or foreign materials adhere to the ICC sensor body window
- When driving while it is snowing or when frost forms on the ICC sensor body window
- When ICC sensor body window is temporarily fogged

ICC SENSOR : Diagnosis Procedure

INFOID:0000000008131698

1. VISUAL CHECK 1

Check ICC sensor body window for contamination and foreign materials.

Does contamination or foreign materials adhere?

YES >> Wipe out the contamination and foreign materials from the ICC sensor body window.
NO >> GO TO 2.

2. VISUAL CHECK 2

Check ICC sensor body window for cracks and scratches.

Is it found?

YES >> Replace the ICC sensor. Refer to CCS-171, "Removal and Installation".
NO >> GO TO 3.

3. INTERVIEW

1. Ask if there is any trace of contamination or foreign materials adhering to the ICC sensor body window.
2. Ask if ICC sensor body window was frosted during driving or if vehicle was driven in snow.
3. Ask if ICC sensor body window was temporarily fogged. (Windshield glass may also tend to fog, etc.)

Is any of above conditions seen?

YES >> Explain to the customer about the difference between the contamination detection function and the indication when the malfunction is detected and tell them “This is not malfunction”.
NO >> Replace the ICC sensor. Refer to CCS-171, "Removal and Installation".

C1A17 ICC SENSOR

DTC Logic

INFOID:0000000008131699

DTC DETECTION LOGIC

DTC (On board display)	Trouble diagnosis name	DTC detecting condition	Possible causes
C1A17 (17)	ICC SENSOR MALF	If ICC sensor is malfunctioning	ICC sensor

NOTE:
If DTC “C1A17” is detected along with DTC “U1000”, first diagnose the DTC “U1000”. Refer to CCS-141, "ADAS CONTROL UNIT : DTC Logic".

Diagnosis Procedure

INFOID:0000000008131700

1. CHECK ADAS CONTROL UNIT SELF-DIAGNOSIS RESULTS

1. Perform “All DTC Reading” with CONSULT.
2. Check if “U1000” is detected other than “C1A17” in “Self Diagnostic Result” of “ICC/ADAS”.

Is “U1000”detected?

YES >> Perform the CAN communication system inspection. Repair or replace the malfunctioning parts. Refer to CCS-141, "ADAS CONTROL UNIT : DTC Logic".
NO >> GO TO 2.

2. CHECK ICC SENSOR SELF-DIAGNOSIS RESULTS

Check if any DTC is detected in “Self Diagnostic Result” of “LASER”.

Is any DTC detected?

YES >> Perform diagnosis on the detected DTC and repair or replace the malfunctioning parts. Refer to CCS-58, "DTC Index".
NO >> Replace ADAS control unit. Refer to DAS-55, "Removal and Installation".

C1A18 LASER AIMING INCMP

ADAS CONTROL UNIT

ADAS CONTROL UNIT : DTC Logic

INFOID:0000000008131701

DTC DETECTION LOGIC

DTC (On board display)	Trouble diagnosis name	DTC detecting condition	Possible causes
C1A18 (18)	LASER AIMING INCMP	Laser beam aiming of ICC sensor is not adjusted	• No laser beam aiming adjustment is performed • Laser beam aiming adjustment has been interrupted

DTC CONFIRMATION PROCEDURE

1. PERFORM DTC CONFIRMATION PROCEDURE

1. Start the engine.
2. Turn the MAIN switch of ICC system ON.
3. Perform “All DTC Reading” with CONSULT.
4. Check if the “C1A18” is detected as the current malfunction in “Self Diagnostic Result” of “ICC/ADAS”.

Is “C1A18” detected as the current malfunction?

YES >> Refer to CCS-105, "ADAS CONTROL UNIT : Diagnosis Procedure".
NO >> INSPECTION END

ADAS CONTROL UNIT : Diagnosis Procedure

INFOID:0000000008131702

1. ADJUST LASER BEAM AIMING

Check if the “C1A18” is detected in “Self Diagnostic Result” of “LASER”.

Is “C1A18” detected?

YES >> Refer to CCS-105, "ICC SENSOR : DTC Logic".
NO >> Replace the ADAS control unit. Refer to DAS-55, "Removal and Installation".

ICC SENSOR

ICC SENSOR : DTC Logic

INFOID:0000000008131703

DTC DETECTION LOGIC

DTC	Trouble diagnosis name	DTC detecting condition	Possible causes
C1A18	LASER AIMING INCMP	Laser beam aiming of ICC sensor is not adjusted	• No laser beam aiming adjustment is performed • Laser beam aiming adjustment has been interrupted

DTC CONFIRMATION PROCEDURE

1. PERFORM DTC CONFIRMATION PROCEDURE

1. Start the engine.
2. Turn the MAIN switch of ICC system ON.
3. Perform “All DTC Reading” with CONSULT.
4. Check if the “C1A18” is detected as the current malfunction in “Self Diagnostic Result” of “LASER”.

Is “C1A18” detected as the current malfunction?

YES >> Refer to CCS-106, "ICC SENSOR : Diagnosis Procedure".
NO >> INSPECTION END

ICC SENSOR : Diagnosis Procedure

INFOID:0000000008131704

1. ADJUST LASER BEAM AIMING

1. Adjust the laser beam aiming. Refer to CCS-66, "Description".
2. Erase All self-diagnosis results with CONSULT.
3. Perform “All DTC Reading”.
4. Check if the “C1A18” is detected in “Self Diagnostic Result” of “LASER”.

Is “C1A18” detected?

YES >> Replace the ICC sensor. Refer to CCS-171, "Removal and Installation".
NO >> INSPECTION END

C1A21 UNIT HIGH TEMP

ADAS CONTROL UNIT

ADAS CONTROL UNIT : DTC Logic

INFOID:0000000008131705

DTC DETECTION LOGIC

DTC (On board display)	Trouble diagnosis name	DTC detecting condition	Possible causes
C1A21 (21)	ICC SENSOR HIGH TEMP	ICC sensor judges high temperature abnormality	Temperature around the ICC sensor becomes high

1. PERFORM DTC CONFIRMATION PROCEDURE

1. Turn the ignition switch OFF.
2. Wait for 10 minutes or more to cool the ICC sensor.
3. Start the engine.
4. Turn the MAIN switch of ICC system ON.
5. Perform “All DTC Reading” with CONSULT.
6. Check if the “C1A21” is detected as the current malfunction in “Self Diagnostic Result” of “ICC/ADAS”.

Is “C1A21” detected as the current malfunction?

YES >> Refer to CCS-107, "ADAS CONTROL UNIT : Diagnosis Procedure".
NO >> Refer to GI-43, "Intermittent Incident".

ADAS CONTROL UNIT : Diagnosis Procedure

INFOID:0000000008131706

1. CHECK SELF-DIAGNOSIS RESULTS

Check if “C1A21” is detected in “Self Diagnostic Result” of “LASER”.

Is “C1A21” detected?

YES >> Perform diagnosis on the detected DTC and repair or replace the malfunctioning parts. Refer to CCS-107, "ICC SENSOR : DTC Logic".
NO >> Replace the ADAS control unit. Refer to DAS-55, "Removal and Installation".

ICC SENSOR

ICC SENSOR : DTC Logic

INFOID:0000000008131707

DTC DETECTION LOGIC

DTC	Trouble diagnosis name	DTC detecting condition	Possible causes
C1A21	UNIT HIGH TEMP	Temperature detected by the temperature sensor integrated in ICC sensor remains less than -45 °C (-49 °F) or more than 105 °C (221 °F) for 5 seconds or more	Temperature around the ICC sensor becomes extremely low or high

DTC CONFIRMATION PROCEDURE

1. PERFORM DTC CONFIRMATION PROCEDURE

1. Turn the ignition switch OFF.
2. Wait for 10 minutes or more.
3. Start the engine.
4. Turn the MAIN switch of ICC system ON.
5. Perform “All DTC Reading” with CONSULT.
6. Check if the “C1A21” is detected as the current malfunction in “Self Diagnostic Result” of “LASER”.

Is “C1A21” detected as the current malfunction?

YES >> Refer to CCS-108, "ICC SENSOR : Diagnosis Procedure".
NO >> Refer to GI-43, "Intermittent Incident".

ICC SENSOR : Diagnosis Procedure

INFOID:0000000008131708

1. CHECK ENGINE COOLING SYSTEM

Check for any malfunctions in engine cooling system.

Is engine cooling system normal?

YES >> Replace the ICC sensor. Refer to CCS-171, "Removal and Installation".
NO >> Repair engine cooling system.

C1A24 NP RANGE

DTC Logic

INFOID:0000000008131709

DTC DETECTION LOGIC

DTC (On board display)	Trouble diagnosis name	DTC detecting condition	Possible causes
C1A24 (24)	NP RANGE	A mismatch between a shift position signal transmitted from TCM via CAN communication and an current gear position signal continues for 60 seconds or more	• TCM • Transmission range switch

NOTE:
If DTC “C1A24” is detected along with DTC “U1000”, first diagnose the DTC “U1000”. Refer to CCS-141, "ADAS CONTROL UNIT : DTC Logic".

DTC CONFIRMATION PROCEDURE

1. CHECK DTC REPRODUCE (1)

1. Start the engine.
2. Turn the MAIN switch of ICC system ON.
3. Wait for approximately 5 minutes or more after shifting the selector lever to “P” position.
4. Perform “All DTC Reading” with CONSULT.
5. Check if the “C1A24” is detected as the current malfunction in “Self Diagnostic Result” of “ICC/ADAS”.

Is “C1A24” detected as the current malfunction?

YES >> Refer to CCS-109, "Diagnosis Procedure".
NO >> GO TO 2.

2. CHECK DTC REPRODUCE (2)

1. Wait for approximately 5 minutes or more after shifting the selector lever to “N” position.
2. Perform “All DTC Reading”.
3. Check if the “C1A24” is detected as the current malfunction in “Self Diagnostic Result” of “ICC/ADAS”.

Is “C1A24” detected as the current malfunction?

YES >> Refer to CCS-109, "Diagnosis Procedure".
NO >> Refer to GI-43, "Intermittent Incident".

Diagnosis Procedure

INFOID:0000000008131710

1. CHECK SELF-DIAGNOSIS RESULTS

Check if “U1000” is detected other than “C1A24” in “Self Diagnostic Result” of “ICC/ADAS”.

Is “U1000” detected?

YES >> Perform the CAN communication system inspection. Repair or replace the malfunctioning parts. Refer to CCS-141, "ADAS CONTROL UNIT : DTC Logic".
NO >> GO TO 2.

2. CHECK TCM DATA MONITOR

Check that “SLCT LVR POSI” operates normally in “DATA MONITOR” of “TRANSMISSION”.

Is the inspection result normal?

YES >> GO TO 3.
NO >> Perform diagnosis for transmission range switch circuit and repair or replace the malfunctioning parts. Refer to TM-104, "Diagnosis Procedure".

3. PERFORM TCM SELF-DIAGNOSIS

1. Perform “All DTC Reading”.
2. Check if any DTC is detected in “Self Diagnostic Result” of “TRANSMISSION”.

Is any DTC detected?

YES >> Perform diagnosis on the detected DTC and repair or replace the malfunctioning parts. Refer to TM-79, "DTC Index".

NO >> Replace the ADAS control unit. Refer to DAS-55, "Removal and Installation".

C1A26 ECD MODE MALFUNCTION

DTC Logic

INFOID:0000000008131711

DTC DETECTION LOGIC

DTC (On board display)	Trouble diagnosis name	DTC detecting condition	Possible cause
C1A26 (26)	ECD MODE MALF	If an abnormal condition occurs with ECD system	ABS actuator and electric unit (control unit)

NOTE:
If DTC “C1A26” is detected along with DTC “U1000”, “U0415” or “U0121” first diagnose the DTC “U1000”, “U0415”, or “U0121”.
- DTC “U1000”: Refer to CCS-141, "ADAS CONTROL UNIT : DTC Logic".
- DTC “U0415”: Refer to CCS-137, "ADAS CONTROL UNIT : DTC Logic".
- DTC “U0121”: Refer to CCS-129, "ADAS CONTROL UNIT : DTC Logic".

DTC CONFIRMATION PROCEDURE

1. PERFORM DTC CONFIRMATION PROCEDURE

1. Start the engine.
2. Wait for approximately 1 minute after turning the MAIN switch of ICC system ON.
3. Perform “All DTC Reading” with CONSULT.
4. Check if the “C1A26” is detected as the current malfunction in “Self Diagnostic Result” of “ICC/ADAS”.

Is “C1A26” detected as the current malfunction?

YES >> Refer to CCS-111, "Diagnosis Procedure".
NO >> Refer to GI-43, "Intermittent Incident".

Diagnosis Procedure

INFOID:0000000008131712

1. CHECK SELF-DIAGNOSIS RESULTS

Check if “U1000”, “U0415”, or “U0121” is detected other than “C1A26” in “Self Diagnostic Result” of “ICC/ADAS”.

Is any DTC detected?

YES >> Perform diagnosis on the detected DTC and repair or replace the malfunctioning parts. Refer to CCS-52, "DTC Index".
NO >> GO TO 2.

2. PERFORM SELF-DIAGNOSIS OF ABS ACTUATOR AND ELECTRIC UNIT (CONTROL UNIT)

Check if any DTC is detected in “Self Diagnostic Result” of “ABS”.

Is any DTC detected?

YES >> Perform diagnosis on the detected DTC and repair or replace the malfunctioning parts. Refer to BRC-52, "DTC Index".
NO >> Replace ADAS control unit. Refer to DAS-55, "Removal and Installation".

C1A27 ECD POWER SUPPLY CIRCUIT

DTC Logic

INFOID:0000000008131713

DTC DETECTION LOGIC

DTC (On board display)	Trouble diagnosis name	DTC detecting condition	Possible cause
C1A27 (27)	ECD PWR SUPLY CIR	ECD system power supply voltage is excessively low	• ABS actuator and electric unit (control unit) power supply circuit • ABS actuator and electric unit (control unit)

NOTE:
If DTC “C1A27” is detected along with DTC “U1000”, “U0415”, or “U0121” first diagnose the DTC “U1000”, “U0415”, or “U0121”.
- DTC “U1000”: Refer to CCS-141, "ADAS CONTROL UNIT : DTC Logic".
- DTC “U0415”: Refer to CCS-137, "ADAS CONTROL UNIT : DTC Logic".
- DTC “U0121”: Refer to CCS-129, "ADAS CONTROL UNIT : DTC Logic".

DTC CONFIRMATION PROCEDURE

1. PERFORM DTC CONFIRMATION PROCEDURE

1. Start the engine.
2. Wait for approximately 1 minute after turning the MAIN switch of ICC system ON.
3. Perform “All DTC Reading” with CONSULT.
4. Check if the “C1A27” is detected as the current malfunction in “Self Diagnostic Result” of “ICC/ADAS”.

Is “C1A27” detected as the current malfunction?

YES >> Refer to CCS-112, "Diagnosis Procedure".
NO >> Refer to GI-43, "Intermittent Incident".

Diagnosis Procedure

INFOID:0000000008131714

1. CHECK SELF-DIAGNOSIS RESULTS

Check if “U1000”, “U0415” or “U0121” is detected other than “C1A27” in “Self Diagnostic Result” of “ICC/ADAS”.

Is any DTC detected?

YES >> Perform diagnosis on the detected DTC and repair or replace the malfunctioning parts. Refer to CCS-52, "DTC Index".
NO >> GO TO 2.

2. CHECK POWER SUPPLY CIRCUIT OF ABS ACTUATOR AND ELECTRIC UNIT (CONTROL UNIT)

Check power supply circuit of ABS actuator and electric unit (control unit). Refer to BRC-120, "Diagnosis Procedure".

Is the inspection result normal?

YES >> Perform self-diagnosis of ABS actuator and electric unit (control unit). Refer to BRC-52, "DTC Index".
NO >> Repair the harnesses or connectors.

C1A2A ICC SENSOR POWER SUPPLY CIRCUIT

DTC Logic

INFOID:0000000008131715

DTC DETECTION LOGIC

DTC (On board display)	Trouble diagnosis name	DTC detecting condition	Possible cause
C1A2A (80)	ICC SEN PWR SUP CIR	ICC sensor power supply voltage is malfunction	• Harness, connector, fuse • ICC sensor

DTC CONFIRMATION PROCEDURE

1. PERFORM DTC CONFIRMATION PROCEDURE

1. Start the engine.
2. Turn the MAIN switch of ICC system ON.
3. Perform “All DTC Reading” with CONSULT.
4. Check if the “C1A2A” is detected as the current malfunction in “Self Diagnostic Result” of “ICC/ADAS”.

Is “C1A2A” detected as the current malfunction?

YES >> Refer to CCS-112, "Diagnosis Procedure".
NO >> Refer to GI-43, "Intermittent Incident".

Diagnosis Procedure

INFOID:0000000008131716

1. CHECK SELF-DIAGNOSIS RESULTS

Check if “U1000” is detected other than “C1A2A” in “Self Diagnostic Result” of “ICC/ADAS”.

Is any DTC detected?

YES >> Perform the CAN communication system inspection. Repair or replace the malfunctioning parts. Refer to CCS-141, "ADAS CONTROL UNIT : DTC Logic".
NO >> GO TO 2.

2. CHECK ICC SENSOR SELF-DIAGNOSIS

Check if any DTC is detected in “Self Diagnostic Result” of “LASER”.

Is any DTC detected?

YES >> Perform diagnosis on the detected DTC and repair or replace the malfunctioning parts. Refer to CCS-58, "DTC Index".
NO >> Replace ADAS control unit. Refer to DAS-55, "Removal and Installation".

C1A33 CAN TRANSMISSION ERROR

DTC Logic

INFOID:0000000008131717

DTC DETECTION LOGIC

DTC (On board display)	Trouble diagnosis name	DTC detecting condition	Possible causes
C1A33 (33)	CAN TRANSMISSION ERR	If an error occurs in the CAN communication signal that ADAS control unit transmits to ECM	ADAS control unit

NOTE:
If DTC “C1A33” is detected along with DTC “U1000”, first diagnose the DTC “U1000”. Refer to CCS-141, "ADAS CONTROL UNIT : DTC Logic".

DTC CONFIRMATION PROCEDURE

1. PERFORM DTC CONFIRMATION PROCEDURE

1. Start the engine.
2. Turn the MAIN switch of ICC system ON.
3. Perform “All DTC Reading” with CONSULT.
4. Check if the “C1A33” is detected as the current malfunction in “Self Diagnostic Result” of “ICC/ADAS”.

Is “C1A33” detected as the current malfunction?

YES >> Refer to CCS-114, "Diagnosis Procedure".
NO >> Refer to GI-43, "Intermittent Incident".

Diagnosis Procedure

INFOID:0000000008131718

1. CHECK SELF-DIAGNOSIS RESULTS

Check if “U1000” is detected other than “C1A33” in “Self Diagnostic Result” of “ICC/ADAS”.

Is “U1000” detected?

YES >> Perform the CAN communication system inspection. Repair or replace the malfunctioning parts. Refer to CCS-141, "ADAS CONTROL UNIT : DTC Logic".
NO >> Replace the ADAS control unit. Refer to DAS-55, "Removal and Installation".

C1A34 COMMAND ERROR

DTC Logic

INFOID:0000000008131719

DTC DETECTION LOGIC

DTC (On board display)	Trouble diagnosis name	DTC detecting condition	Possible causes
C1A34 (34)	COMMAND ERROR	If an error occurs in the command signal that ADAS control unit transmits to ECM via CAN communication	ADAS control unit

NOTE:
If DTC “C1A34” is detected along with DTC “U1000”, first diagnose the DTC “U1000”. Refer to CCS-141, "ADAS CONTROL UNIT : DTC Logic".

DTC CONFIRMATION PROCEDURE

1. PERFORM DTC CONFIRMATION PROCEDURE

1. Start the engine.
2. Operate the ICC system and drive.
   CAUTION:
   Always drive safely.
3. Stop the vehicle.
4. Perform “All DTC Reading” with CONSULT.
5. Check if the “C1A34” is detected as the current malfunction in “Self Diagnostic Result” of “ICC/ADAS”.

Is “C1A34” detected as the current malfunction?

YES >> Refer to CCS-115, "Diagnosis Procedure".
NO >> Refer to GI-43, "Intermittent Incident".

Diagnosis Procedure

INFOID:0000000008131720

1. CHECK SELF-DIAGNOSIS RESULTS

Check if “U1000” is detected other than “C1A34” in “Self Diagnostic Result” of “ICC/ADAS”.

Is “U1000” detected?

YES >> Perform the CAN communication system inspection. Repair or replace the malfunctioning parts. Refer to CCS-141, "ADAS CONTROL UNIT : DTC Logic".
NO >> Replace the ADAS control unit. Refer to DAS-55, "Removal and Installation".

C1A35 ACCELERATOR PEDAL ACTUATOR

DTC Logic

INFOID:0000000008131721

DTC DETECTION LOGIC

DTC (On board display)	Trouble diagnosis name	DTC detecting condition	Possible causes
C1A35 (35)	APA CIR	If the accelerator pedal actuator is malfunctioning	Accelerator pedal actuator

NOTE:
If DTC “C1A35” is detected along with DTC “U1000”, first diagnose the DTC “U1000”. Refer to CCS-141, "ADAS CONTROL UNIT : DTC Logic".

Diagnosis Procedure

INFOID:0000000008131722

1. PERFORM DTC CONFIRMATION PROCEDURE

1. Start the engine.
2. Turn the DCA system ON.
3. Perform “All DTC Reading” with CONSULT.
4. Check if the “C1A35” is detected as the current malfunction in self-diagnosis results of “ICC/ADAS”.

Is “C1A35” detected as the current malfunction?

YES >> GO TO 2.
NO >> INSPECTION END

2. CHECK SELF-DIAGNOSIS RESULTS

Check if “U1000” is detected other than “C1A35” in “Self Diagnostic Result” of “ICC/ADAS”.

Is “U1000” detected?

YES >> Perform the CAN communication system inspection. Repair or replace the malfunctioning parts. Refer to CCS-141, "ADAS CONTROL UNIT : DTC Logic".
NO >> GO TO 3.

3. CHECK ACCELERATOR PEDAL ACTUATOR SELF-DIAGNOSIS RESULTS

Check if the DTC is detected in “Self Diagnostic Result” of “ACCELE PEDAL ACT”.

Is any DTC detected?

YES >> Perform diagnosis on the detected DTC and repair or replace the malfunctioning parts. Refer to DAS-102, "DTC Index".
NO >> Replace the ADAS control unit. Refer to DAS-55, "Removal and Installation".

C1A36 ACCELERATOR PEDAL ACTUATOR CAN COMM

DTC Logic

INFOID:0000000008131723

DTC DETECTION LOGIC

DTC (On board display)	Trouble diagnosis name	DTC detecting condition	Possible causes
C1A36 (36)	APA CAN COMM CIR	If an error occurs in the signal that the accelerator pedal actuator transmits via ITS communication	• ADAS control unit • Accelerator pedal actuator • ITS communication system

NOTE:
If DTC “C1A36” is detected along with DTC “U1000”, first diagnose the DTC “U1000”. Refer to CCS-141, "ADAS CONTROL UNIT : DTC Logic".

DTC CONFIRMATION PROCEDURE

1. PERFORM DTC CONFIRMATION PROCEDURE

1. Start the engine.
2. Turn the DCA system ON.
3. Perform “All DTC Reading” with CONSULT.
4. Check if the “C1A36” is detected as the current malfunction in self-diagnosis results of “ICC/ADAS”.

Is “C1A36” detected as the current malfunction?

YES >> Refer to CCS-117, "Diagnosis Procedure".
NO >> Refer to GI-43, "Intermittent Incident".

Diagnosis Procedure

INFOID:0000000008131724

1. CHECK ADAS CONTROL UNIT SELF-DIAGNOSIS RESULTS

Check if “U1000” is detected other than “C1A36” in “Self Diagnostic Result” of “ICC/ADAS”.

Is “U1000” detected?

YES >> Perform the CAN communication system inspection. Repair or replace the malfunctioning parts. Refer to CCS-141, "ADAS CONTROL UNIT : DTC Logic".
NO >> GO TO 2.

2. CHECK ACCELERATOR PEDAL ACTUATOR SELF-DIAGNOSIS RESULTS

Check if the DTC is detected in “Self Diagnostic Result” of “ACCELE PEDAL ACT”.

Is any DTC detected?

YES >> Perform diagnosis on the detected DTC and repair or replace the malfunctioning parts. Refer to DAS-102, "DTC Index".
NO >> Replace the ADAS control unit. Refer to DAS-55, "Removal and Installation".

C1A37 ACCELERATOR PEDAL ACTUATOR CAN 2

DTC Logic

INFOID:0000000008131725

DTC DETECTION LOGIC

DTC (On board display)	Trouble diagnosis name	DTC detecting condition	Possible causes
C1A37 (133)	APA CAN CIR2	If ADAS control unit detects an error signal that is received from accelerator pedal actuator via ITS communication	Accelerator pedal actuator malfunction

NOTE:
If DTC “C1A37” is detected along with DTC “U1000”, first diagnose the DTC “U1000”. Refer to CCS-141, "ADAS CONTROL UNIT : DTC Logic".

DTC CONFIRMATION PROCEDURE

1. PERFORM DTC CONFIRMATION PROCEDURE

1. Start the engine.
2. Turn the DCA system ON.
3. Perform “All DTC Reading” with CONSULT.
4. Check if the “C1A37” is detected as the current malfunction in self-diagnosis results of “ICC/ADAS”.

Is “C1A37” detected as the current malfunction?

YES >> Refer to CCS-118, "Diagnosis Procedure".
NO >> Refer to GI-43, "Intermittent Incident".

Diagnosis Procedure

INFOID:0000000008131726

1. CHECK ADAS CONTROL UNIT SELF-DIAGNOSIS RESULTS

Check if “U1000” is detected other than “C1A37” in “Self Diagnostic Result” of “ICC/ADAS”.

Is “U1000” detected?

YES >> Perform the CAN communication system inspection. Repair or replace the malfunctioning parts. Refer to CCS-141, "ADAS CONTROL UNIT : DTC Logic".
NO >> GO TO 2.

2. REPLACE ACCELERATOR PEDAL ASSEMBLY

1. Turn the ignition switch OFF.
2. Replace the accelerator pedal assembly.
3. Turn the ignition switch ON.
4. Erases All self-diagnosis results.
5. Perform “All DTC Reading” again.
6. Check if the DTC “C1A37” is detected in self-diagnosis results of “ICC/ADAS”.

Is “C1A37” detected?

YES >> Replace the ADAS control unit. Refer to DAS-55, "Removal and Installation".
NO >> INSPECTION END

C1A38 ACCELERATOR PEDAL ACTUATOR CAN 1

DTC Logic

INFOID:0000000008131727

DTC DETECTION LOGIC

DTC (On board display)	Trouble diagnosis name	DTC detecting condition	Possible causes
C1A38 (132)	APA CAN CIR1	If ADAS control unit detects an error signal that is received from accelerator pedal actuator via ITS communication	Accelerator pedal actuator malfunction

NOTE:
If DTC “C1A38” is detected along with DTC “U1000”, first diagnose the DTC “U1000”. Refer to CCS-141, "ADAS CONTROL UNIT : DTC Logic".

DTC CONFIRMATION PROCEDURE

1. PERFORM DTC CONFIRMATION PROCEDURE

1. Start the engine.
2. Turn the DCA system ON.
3. Perform “All DTC Reading” with CONSULT.
4. Check if the “C1A38” is detected as the current malfunction in self-diagnosis results of “ICC/ADAS”.

Is “C1A38” detected as the current malfunction?

YES >> Refer to CCS-119, "Diagnosis Procedure".
NO >> Refer to GI-43, "Intermittent Incident".

Diagnosis Procedure

INFOID:0000000008131728

1. CHECK CONTROL UNIT SELF-DIAGNOSIS RESULTS

Check if “U1000” is detected other than “C1A38” in “Self Diagnostic Result” of “ICC/ADAS”.

Is “U1000” detected?

YES >> Perform the CAN communication system inspection. Repair or replace the malfunctioning parts. Refer to CCS-141, "ADAS CONTROL UNIT : DTC Logic".
NO >> GO TO 2.

2. REPLACE ACCELERATOR PEDAL ASSEMBLY

1. Turn the ignition switch OFF.
2. Replace the accelerator pedal assembly.
3. Erases All self-diagnosis results.
4. Perform “All DTC Reading” again.
5. Check if the “C1A38” is detected in self-diagnosis results of “ICC/ADAS”.

Is “C1A38” detected?

YES >> Replace the ADAS control unit. Refer to DAS-55, "Removal and Installation".
NO >> INSPECTION END

C1A39 STEERING ANGLE SENSOR

ADAS CONTROL UNIT

ADAS CONTROL UNIT : DTC Logic

INFOID:0000000008131729

DTC DETECTION LOGIC

DTC (On board display)	Trouble diagnosis name	DTC detecting condition	Possible causes
C1A39 (39)	STRG SEN CIR	If the steering angle sensor is malfunction	Steering angle sensor

NOTE:
If DTC “C1A39” is detected along with DTC “U1000”, first diagnose the DTC “U1000”. Refer to CCS-141, "ADAS CONTROL UNIT : DTC Logic".

DTC CONFIRMATION PROCEDURE

1. PERFORM DTC CONFIRMATION PROCEDURE

1. Start the engine.
2. Turn the MAIN switch of ICC system ON.
3. Perform “All DTC Reading” with CONSULT.
4. Check if the “C1A39” is detected as the current malfunction in self-diagnosis results of “ICC/ADAS”.

Is “C1A39” detected as the current malfunction?

YES >> Refer to CCS-120, "ADAS CONTROL UNIT : Diagnosis Procedure".
NO >> Refer to GI-43, "Intermittent Incident".

ADAS CONTROL UNIT : Diagnosis Procedure

INFOID:0000000008131730

1. CHECK SELF-DIAGNOSIS RESULTS

Check if “U1000” is detected other than “C1A39” in “Self Diagnostic Result” of “ICC/ADAS”.

Is “U1000” detected?

YES >> Perform the CAN communication system inspection. Repair or replace the malfunctioning parts. Refer to CCS-141, "ADAS CONTROL UNIT : DTC Logic".
NO >> GO TO 2.

2. CHECK ABS ACTUATOR AND ELECTRIC UNIT (CONTROL UNIT) SELF-DIAGNOSIS RESULTS

Check if any DTC is detected in “Self Diagnostic Result” of “ABS”.

Is any DTC detected?

YES >> Perform diagnosis on the detected DTC and repair or replace the malfunctioning parts. Refer to BRC-52, "DTC Index".
NO >> Replace the ADAS control unit. Refer to DAS-55, "Removal and Installation".

ICC SENSOR

ICC SENSOR : DTC Logic

INFOID:0000000008131731

DTC DETECTION LOGIC

DTC	Trouble diagnosis name	DTC detecting condition	Possible causes
C1A39	STRG SEN CIR	If the steering angle sensor is malfunction	Steering angle sensor

NOTE:
If DTC “C1A39” is detected along with DTC “U1000”, first diagnose the DTC “U1000”. Refer to CCS-141, "ADAS CONTROL UNIT : DTC Logic".

DTC CONFIRMATION PROCEDURE

1. PERFORM DTC CONFIRMATION PROCEDURE

1. Start the engine.
2. Turn the MAIN switch of ICC system ON.
3. Perform “All DTC Reading” with CONSULT.
4. Check if the “C1A39” is detected as the current malfunction in self-diagnosis results of “LASER”.

Is “C1A39” detected as the current malfunction?

YES >> Refer to CCS-121, "ICC SENSOR : Diagnosis Procedure".
NO >> Refer to GI-43, "Intermittent Incident".

ICC SENSOR : Diagnosis Procedure

INFOID:0000000008131732

1. CHECK ICC SENSOR SELF-DIAGNOSIS RESULTS

Check if “U1000” is detected other than “C1A39” in “Self Diagnostic Result” of “LASER”.

Is “U1000” detected?

YES >> Perform the CAN communication system inspection. Repair or replace the malfunctioning parts. Refer to CCS-141, "ADAS CONTROL UNIT : DTC Logic".
NO >> GO TO 2.

2. CHECK ADAS CONTROL UNIT SELF-DIAGNOSIS RESULTS

Check if any DTC is detected in “Self Diagnostic Result” of “ICC/ADAS”.

Is any DTC detected?

YES >> Perform diagnosis on the detected DTC and repair or replace the malfunctioning parts. Refer to CCS-52, "DTC Index".
NO >> Replace the ICC sensor. Refer to CCS-171, "Removal and Installation".

C1A40 SYSTEM SWITCH CIRCUIT

DTC Logic

INFOID:0000000008131733

DTC DETECTION LOGIC

DTC (On board display)	Trouble diagnosis name	DTC detecting condition	Possible causes
C1A40 (40)	SYSTEM SW CIRC	IBA OFF switch remains “ON” (short circuit) for 10 minutes or more	• IBA OFF switch circuit • IBA OFF switch • ADAS control unit

DTC CONFIRMATION PROCEDURE

1.PERFORM DTC CONFIRMATION PROCEDURE

1. Start the engine and wait for approximately 10 minutes or more.
2. Perform “All DTC Reading” with CONSULT.
3. Check if the “C1A40” is detected as the current malfunction in “Self Diagnostic Result” of “ICC/ADAS”.

Is “C1A40” detected as the current malfunction?

YES >> Refer to CCS-122, "Diagnosis Procedure".
NO >> Refer to GI-43, "Intermittent Incident".

Diagnosis Procedure

INFOID:0000000008131734

1.CHECK SELF-DIAGNOSIS RESULTS

Check if “U1000” is detected other than “C1A40” in “Self Diagnostic Result” of “ICC/ADAS”.

Is “U1000” detected?

YES >> Perform the CAN communication system inspection. Repair or replace the malfunctioning parts. Refer to CCS-141, "ADAS CONTROL UNIT : DTC Logic".
NO >> GO TO 2.

2.CHECK DATA MONITOR

Check that “IBA SW” operate normally in “DATA MONITOR” of “ICC/ADAS”.

Is the inspection result normal?

YES >> Refer to GI-43, "Intermittent Incident".
NO >> GO TO 3.

3.CHECK HARNESS BETWEEN ADAS CONTROL UNIT AND IBA OFF SWITCH

1. Disconnect ADAS control unit connector.
2. Check for continuity between the ADAS control unit harness connector and IBA OFF switch harness connector.

ADAS control unit		IBA OFF switch		Continuity
Connector	Terminal	Connector	Terminal	
B50	3	M184	1	Existed

3. Check for continuity between ADAS control unit and ground.

ADAS control unit		Ground	Continuity
Connector	Terminal		
B50	3		Not existed

Is the inspection result normal?

YES >> GO TO 4.
NO >> Repair the harnesses or connectors.

4. CHECK IBA OFF SWITCH GROUND CIRCUIT

Check for continuity between IBA OFF switch harness connector and ground.

IBA OFF switch		Ground	Continuity
Connector	Terminal		
M184	2		Existed

Is the inspection result normal?

YES >> GO TO 5.
NO >> Repair the harnesses or connectors.

5. CHECK IBA OFF SWITCH

1. Turn the ignition switch OFF.
2. Disconnect the IBA OFF switch connector.
3. Check the IBA OFF switch. Refer to CCS-123, "Component Inspection (IBA OFF Switch)".

Is the inspection result normal?

YES >> Replace the ADAS control unit. Refer to DAS-55, "Removal and Installation".
NO >> Replace the IBA OFF switch.

Component Inspection (IBA OFF Switch)

INFOID:0000000008131735

1. CHECK IBA OFF SWITCH

Check for continuity of IBA OFF switch.

Terminal		Condition	Continuity
1	2	When the IBA OFF switch is pressed	Existed
		When the IBA OFF switch is released	Not existed

Is the inspection result normal?

YES >> INSPECTION END
NO >> Replace the IBA OFF switch.

C1A50 ADAS CONTROL UNIT

DTC Logic

INFOID:0000000008131736

DTC DETECTION LOGIC

DTC	Trouble diagnosis name	DTC detecting condition	Possible cause
C1A50	ADAS MALFUNCTION	If ADAS control unit is malfunctioning	ADAS control unit

NOTE:
If DTC “C1A50” is detected along with DTC “U1000”, first diagnose the DTC “U1000”. Refer to CCS-141, "ADAS CONTROL UNIT : DTC Logic".

1. PERFORM DTC CONFIRMATION PROCEDURE

1. Start the engine.
2. Turn the MAIN switch of ICC system ON.
3. Perform “All DTC Reading” with CONSULT.
4. Check if the “C1A50” is detected as the current malfunction in “Self Diagnostic Result” of “LASER”.

Is “C1A50” detected as the current malfunction?

YES >> Refer to CCS-124, "Diagnosis Procedure".
NO >> Refer to GI-43, "Intermittent Incident".

Diagnosis Procedure

INFOID:0000000008131737

1. CHECK ICC SENSOR SELF-DIAGNOSIS RESULTS

Check if “U1000” is detected other than “C1A50” in “Self Diagnostic Result” of “LASER”.

Is “U1000” detected?

YES >> Perform the CAN communication system inspection. Repair or replace the malfunctioning parts. Refer to CCS-141, "ICC SENSOR : DTC Logic".
NO >> GO TO 2.

2. CHECK ADAS CONTROL UNIT SELF-DIAGNOSIS RESULTS

Check if any DTC is detected in “Self Diagnostic Result” of “ICC/ADAS”.

Is any DTC detected?

YES >> Perform diagnosis on the detected DTC and repair or replace the malfunctioning parts. Refer to DAS-40, "DTC Index".
NO >> Replace the ICC sensor. Refer to CCS-171, "Removal and Installation".

C1F01 ACCELERATOR PEDAL ACTUATOR

DTC Logic

INFOID:0000000008131738

DTC DETECTION LOGIC

DTC (On board display)	Trouble diagnosis name	DTC detecting condition	Possible causes
C1F01 (91)	APA MOTOR MALF	If the accelerator pedal actuator motor error is detected	Accelerator pedal actuator integrated motor malfunction

DTC CONFIRMATION PROCEDURE

1. PERFORM DTC CONFIRMATION PROCEDURE

1. Turn the ignition switch OFF.
2. Turn the ignition switch ON.
3. Slowly depress the accelerator pedal completely, and then release it.
4. Repeat step 3 several times.
5. Perform “All DTC Reading” with CONSULT.
6. Check if the DTC “C1F01” is detected as the current malfunction on the self-diagnosis results of “ICC/ADAS”.

Is “C1F01” detected as the current malfunction?

YES >> Refer to CCS-125, "Diagnosis Procedure".
NO >> Refer to GI-43, "Intermittent Incident".

Diagnosis Procedure

INFOID:0000000008131739

1. CHECK ADAS CONTROL UNIT SELF-DIAGNOSIS RESULTS

Check if “U1000” is detected other than “C1F01” in “Self Diagnostic Result” of “ICC/ADAS”.

Is “U1000” detected?

YES >> Perform the CAN communication system inspection. Repair or replace the malfunctioning parts. Refer to CCS-141, "ADAS CONTROL UNIT : DTC Logic".
NO >> GO TO 2.

2. CHECK ACCELERATOR PEDAL ACTUATOR SELF-DIAGNOSIS RESULTS

Check if “C1F01” is detected in “Self Diagnostic Result” of “ACCELE PEDAL ACT”.

Is “C1F01” detected?

YES >> Refer to DAS-102, "DTC Index".
NO >> Replace the ADAS control unit. Refer to DAS-55, "Removal and Installation".

C1F02 ACCELERATOR PEDAL ACTUATOR

DTC Logic

INFOID:0000000008131740

DTC DETECTION LOGIC

DTC (On board display)	Trouble diagnosis name	DTC detecting condition	Possible causes
C1F02 (92)	APA C/U MALF	If the accelerator pedal actuator integrated control unit error is detected	Accelerator pedal actuator integrated control unit malfunction

1. PERFORM DTC CONFIRMATION PROCEDURE

1. Start the engine.
2. Turn the DCA system ON.
3. Perform “All DTC Reading” with CONSULT.
4. Check if the “C1F02” is detected as the current malfunction on the self-diagnosis results of “ICC/ADAS”.

Is “C1F02” detected as the current malfunction?

YES >> Refer to CCS-126, "Diagnosis Procedure".
NO >> Refer to GI-43, "Intermittent Incident".

Diagnosis Procedure

INFOID:0000000008131741

1. CHECK ADAS CONTROL UNIT SELF-DIAGNOSIS RESULTS

Check if “U1000” is detected other than “C1F02” in “Self Diagnostic Result” of “ICC/ADAS”.

Is “U1000” detected?

YES >> Perform the CAN communication system inspection. Repair or replace the malfunctioning parts. Refer to CCS-141, "ADAS CONTROL UNIT : DTC Logic".
NO >> GO TO 2.

2. CHECK ACCELERATOR PEDAL ACTUATOR SELF-DIAGNOSIS RESULTS

Check if “C1F02” is detected in “Self Diagnostic Result” of “ACCELE PEDAL ACT”.

Is “C1F02” detected?

YES >> Refer to DAS-102, "DTC Index".
NO >> Replace the ADAS control unit. Refer to DAS-55, "Removal and Installation".

C1F05 ACCELERATOR PEDAL ACTUATOR POWER SUPPLY CIRCUIT

DTC Logic

INFOID:0000000008131742

DTC DETECTION LOGIC

DTC (On board display)	Trouble diagnosis name	DTC detecting condition	Possible causes
C1F05 (95)	APA PWR SUPLY CIR	The battery voltage sent to accelerator pedal actuator remains less than 7.9 V or more than 19.3 V for 5 seconds	• Harness, connector, or fuse • Accelerator pedal actuator

DTC CONFIRMATION PROCEDURE

1. PERFORM DTC CONFIRMATION PROCEDURE

1. Start the engine.
2. Turn the DCA system ON.
3. Perform “All DTC Reading” with CONSULT.
4. Check if the “C1F05” is detected as the current malfunction on the self-diagnosis results of “ICC/ADAS”.

Is “C1F05” detected as the current malfunction?

YES >> Refer to CCS-127, "Diagnosis Procedure".
NO >> Refer to GI-43, "Intermittent Incident".

Diagnosis Procedure

INFOID:0000000008131743

1. CHECK ADAS CONTROL UNIT SELF-DIAGNOSIS RESULTS

Check if “U1000” is detected other than “C1F05” in “Self Diagnostic Result” of “ICC/ADAS”.

Is “U1000” detected?

YES >> Perform the CAN communication system inspection. Repair or replace the malfunctioning parts. Refer to CCS-141, "ADAS CONTROL UNIT : DTC Logic".
NO >> GO TO 2.

2. CHECK ACCELERATOR PEDAL ACTUATOR SELF-DIAGNOSIS RESULTS

Check if “C1F05” is detected in “Self Diagnostic Result” of “ACCELE PEDAL ACT”.

Is “C1F05” detected?

YES >> Refer to DAS-102, "DTC Index".
NO >> Replace the ADAS control unit. Refer to DAS-55, "Removal and Installation".

U0104 ADAS CAN 1

DTC Logic

INFOID:0000000008131744

DTC DETECTION LOGIC

DTC	Trouble diagnosis name	DTC detecting condition	Possible causes
U0104	ADAS CAN CIR 1	If ICC sensor detects an error signal that is received from ADAS control unit via ITS communication	ADAS control unit

NOTE:
If DTC “U0104” is detected along with DTC “U1000”, first diagnose the DTC “U1000”. Refer to CCS-141, "ICC SENSOR : DTC Logic".

DTC CONFIRMATION PROCEDURE

1. PERFORM DTC CONFIRMATION PROCEDURE

1. Start the engine.
2. Turn the MAIN switch of ICC system ON.
3. Perform “All DTC Reading” with CONSULT.
4. Check if the “U0104” is detected as the current malfunction in “Self Diagnostic Result” of “LASER”.

Is “U0104” detected as the current malfunction?

YES >> Refer to CCS-128, "Diagnosis Procedure".
NO >> Refer to GI-43, "Intermittent Incident".

Diagnosis Procedure

INFOID:0000000008131745

1. CHECK ICC SENSOR SELF-DIAGNOSIS RESULTS

Check if “U1000” is detected other than “U0104” in “Self Diagnostic Result” of “LASER”.

Is “U1000” detected?

YES >> Perform the CAN communication system inspection. Repair or replace the malfunctioning parts. Refer to CCS-141, "ICC SENSOR : DTC Logic".
NO >> GO TO 2.

2. CHECK ADAS CONTROL UNIT SELF-DIAGNOSIS RESULTS

Check if any DTC is detected in “Self Diagnostic Result” of “ICC/ADAS”.

Is any DTC detected?

YES >> Perform diagnosis on the detected DTC and repair or replace the malfunctioning parts. Refer to DAS-40, "DTC Index".
NO >> Replace the ICC sensor. Refer to CCS-171, "Removal and Installation".

U0121 VDC CAN 2
ADAS CONTROL UNIT

ADAS CONTROL UNIT : DTC Logic

INFOID:0000000008131746

DTC DETECTION LOGIC

DTC (On board display)	Trouble diagnosis name	DTC detecting condition	Possible causes
U0121 (127)	VDC CAN CIR2	If ADAS control unit detects an error signal that is received from ABS actuator and electric unit (control unit) via CAN communication	ABS actuator and electric unit (control unit)

NOTE:
If DTC “U0121” is detected along with DTC “U1000”, first diagnose the DTC “U1000”. Refer to DAS-51, "DTC Logic".

DTC CONFIRMATION PROCEDURE

1. PERFORM DTC CONFIRMATION PROCEDURE

1. Start the engine.
2. Turn the MAIN switch of ICC system ON.
3. Perform “All DTC Reading” with CONSULT.
4. Check if the “U0121” is detected as the current malfunction in “Self Diagnostic Result” of “ICC/ADAS”.

Is “U0121” detected as the current malfunction?

YES >> Refer to CCS-129, "ADAS CONTROL UNIT : Diagnosis Procedure".
NO >> Refer to GI-43, "Intermittent Incident".

ADAS CONTROL UNIT : Diagnosis Procedure

INFOID:0000000008131747

1. CHECK SELF-DIAGNOSIS RESULTS

Check if “U1000” is detected other than “U0121” in “Self Diagnostic Result” of “ICC/ADAS”.

Is “U1000” detected?

YES >> Perform the CAN communication system inspection. Repair or replace the malfunctioning parts. Refer to CCS-141, "ADAS CONTROL UNIT : DTC Logic".
NO >> GO TO 2.

2. CHECK ABS ACTUATOR AND ELECTRIC UNIT (CONTROL UNIT) SELF-DIAGNOSIS RESULTS

Check if any DTC is detected in “Self Diagnostic Result” of “ABS”.

Is any DTC detected?

YES >> Perform diagnosis on the detected DTC and repair or replace the malfunctioning parts. Refer to BRC-52, "DTC Index".
NO >> Replace the ADAS control unit. Refer to DAS-55, "Removal and Installation".

ICC SENSOR

ICC SENSOR : DTC Logic

INFOID:0000000008131748

DTC DETECTION LOGIC

DTC	Trouble diagnosis name	DTC detecting condition	Possible causes
U0121	VDC CAN CIR2	If ICC sensor detects an error signal that is received from ABS actuator and electric unit (control unit) via ADAS control unit	ABS actuator and electric unit (control unit)

NOTE:
If DTC “U0121” is detected along with DTC “U1000”, first diagnose the DTC “U1000”. Refer to CCS-141, "ICC SENSOR : DTC Logic".

DTC CONFIRMATION PROCEDURE

1. PERFORM DTC CONFIRMATION PROCEDURE

1. Start the engine.
2. Turn the MAIN switch of ICC system ON.
3. Perform “All DTC Reading” with CONSULT.
4. Check if the “U0121” is detected as the current malfunction in “Self Diagnostic Result” of “LASER”.

Is “U0121” detected as the current malfunction?

YES >> Refer to CCS-130, "ICC SENSOR : Diagnosis Procedure".
NO >> Refer to GI-43, "Intermittent Incident".

ICC SENSOR : Diagnosis Procedure

INFOID:0000000008131749

1. CHECK ICC SENSOR SELF-DIAGNOSIS RESULTS

Check if “U1000” is detected other than “U0121” in “Self Diagnostic Result” of “LASER”.

Is “U1000” detected?

YES >> Perform the CAN communication system inspection. Repair or replace the malfunctioning parts. Refer to CCS-141, "ICC SENSOR : DTC Logic".
NO >> GO TO 2.

2. CHECK ADAS CONTROL UNIT SELF-DIAGNOSIS RESULTS

Check if any DTC is detected in “Self Diagnostic Result” of “ICC/ADAS”.

Is any DTC detected?

YES >> Perform diagnosis on the detected DTC and repair or replace the malfunctioning parts. Refer to DAS-40, "DTC Index".
NO >> Replace the ICC sensor. Refer to CCS-171, "Removal and Installation".

U0126 STRG SEN CAN 1

ADAS CONTROL UNIT

ADAS CONTROL UNIT : DTC Logic

INFOID:0000000008131750

DTC DETECTION LOGIC

DTC (On board display)	Trouble diagnosis name	DTC detecting condition	Possible causes
U0126 (130)	STRG SEN CAN CIR1	If ADAS control unit detects an error signal that is received from steering angle sensor via CAN communication	Steering angle sensor

NOTE:
If DTC “U0126” is detected along with DTC “U1000”, first diagnose the DTC “U1000”. Refer to DAS-51, "DTC Logic".

DTC CONFIRMATION PROCEDURE

1. PERFORM DTC CONFIRMATION PROCEDURE

1. Start the engine.
2. Turn the MAIN switch of ICC system ON.
3. Perform “All DTC Reading” with CONSULT.
4. Check if the “U0126” is detected as the current malfunction in “Self Diagnostic Result” of “ICC/ADAS”.

Is “U0126” detected as the current malfunction?

YES >> Refer to CCS-131, "ADAS CONTROL UNIT : Diagnosis Procedure".
NO >> Refer to GI-43, "Intermittent Incident".

ADAS CONTROL UNIT : Diagnosis Procedure

INFOID:0000000008131751

1. CHECK SELF-DIAGNOSIS RESULTS

Check if “U1000” is detected other than “U0126” in “Self Diagnostic Result” of “ICC/ADAS”.

Is “U1000” detected?

YES >> Perform the CAN communication system inspection. Repair or replace the malfunctioning parts. Refer to CCS-141, "ADAS CONTROL UNIT : DTC Logic".
NO >> GO TO 2.

2. CHECK ABS ACTUATOR AND ELECTRIC UNIT (CONTROL UNIT) SELF-DIAGNOSIS RESULTS

Check if any DTC is detected in “Self Diagnostic Result” of “ABS”.

Is any DTC detected?

YES >> Perform diagnosis on the detected DTC and repair or replace the malfunctioning parts. Refer to BRC-52, "DTC Index".
NO >> Replace the ADAS control unit. Refer to DAS-55, "Removal and Installation".

ICC SENSOR

ICC SENSOR : DTC Logic

INFOID:0000000008131752

DTC DETECTION LOGIC

DTC	Trouble diagnosis name	DTC detecting condition	Possible causes
U0126	STRG SEN CAN CIR1	If ICC sensor detects an error signal that is received from steering angle sensor via ADAS control unit	Steering angle sensor error

NOTE:
If DTC “U0126” is detected along with DTC “U1000”, first diagnose the DTC “U1000”. Refer to CCS-141, "ICC SENSOR : DTC Logic".

DTC CONFIRMATION PROCEDURE

1. PERFORM DTC CONFIRMATION PROCEDURE

1. Start the engine.
2. Turn the MAIN switch of ICC system ON.
3. Perform “All DTC Reading” with CONSULT.
4. Check if the “U0126” is detected as the current malfunction in “Self Diagnostic Result” of “LASER”.

Is “U0126” detected as the current malfunction?

YES >> Refer to CCS-132, "ICC SENSOR : Diagnosis Procedure".
NO >> Refer to GI-43, "Intermittent Incident".

ICC SENSOR : Diagnosis Procedure

INFOID:0000000008131753

1. CHECK ICC SENSOR SELF-DIAGNOSIS RESULTS

Check if “U1000” is detected other than “U0126” in “Self Diagnostic Result” of “LASER”.

Is “U1000” detected?

YES >> Perform the CAN communication system inspection. Repair or replace the malfunctioning parts. Refer to CCS-141, "ICC SENSOR : DTC Logic".
NO >> GO TO 2.

2. CHECK ADAS CONTROL UNIT SELF-DIAGNOSIS RESULTS

Check if any DTC is detected in “Self Diagnostic Result” of “ICC/ADAS”.

Is any DTC detected?

YES >> Perform diagnosis on the detected DTC and repair or replace the malfunctioning parts. Refer to DAS-40, "DTC Index".
NO >> Replace the ICC sensor. Refer to CCS-171, "Removal and Installation".

U0235 ICC SENSOR CAN 1

DTC Logic

INFOID:0000000008131754

DTC DETECTION LOGIC

DTC (On board display)	Trouble diagnosis name	DTC detecting condition	Possible causes
U0235 (144)	ICC SENSOR CAN CIR1	If ADAS control unit detects an error signal that is received from ICC sensor via ITS communication	ICC sensor

NOTE:
If DTC “U0235” is detected along with DTC “U1000”, first diagnose the DTC “U1000”. Refer to DAS-51, "DTC Logic".

DTC CONFIRMATION PROCEDURE

1. PERFORM DTC CONFIRMATION PROCEDURE

1. Start the engine.
2. Turn the MAIN switch of ICC system ON.
3. Perform “All DTC Reading” with CONSULT.
4. Check if the “U0235” is detected as the current malfunction in “Self Diagnostic Result” of “ICC/ADAS”.

Is “U0235” detected as the current malfunction?

YES >> Refer to CCS-133, "Diagnosis Procedure".
NO >> Refer to GI-43, "Intermittent Incident".

Diagnosis Procedure

INFOID:0000000008131755

1. CHECK ADAS CONTROL UNIT SELF-DIAGNOSIS RESULTS

Check if “U1000” is detected other than “U0235” in “Self Diagnostic Result” of “ICC/ADAS”.

Is “U1000” detected?

YES >> Perform the CAN communication system inspection. Repair or replace the malfunctioning parts. Refer to CCS-141, "ADAS CONTROL UNIT : DTC Logic".
NO >> GO TO 2.

2. CHECK ICC SENSOR SELF-DIAGNOSIS RESULTS

Check if any DTC is detected in “Self Diagnostic Result” of “LASER”.

Is any DTC detected?

YES >> Perform diagnosis on the detected DTC and repair or replace the malfunctioning parts. Refer to CCS-58, "DTC Index".
NO >> Replace the ADAS control unit. Refer to DAS-55, "Removal and Installation".

U0401 ECM CAN 1

DTC Logic

INFOID:0000000008131756

DTC DETECTION LOGIC

DTC (On board display)	Trouble diagnosis name	DTC detecting condition	Possible causes
U0401 (120)	ECM CAN CIR1	If ADAS control unit detects an error signal that is received from ECM via CAN communication	ECM

NOTE:
If DTC “U0401” is detected along with DTC “U1000”, first diagnose the DTC “U1000”. Refer to DAS-51, "DTC Logic".

DTC CONFIRMATION PROCEDURE

1. PERFORM DTC CONFIRMATION PROCEDURE

1. Start the engine.
2. Turn the MAIN switch of ICC system ON.
3. Perform “All DTC Reading” with CONSULT.
4. Check if the “U0401” is detected as the current malfunction in “Self Diagnostic Result” of “ICC/ADAS”.

Is “U0401” detected as the current malfunction?

YES >> Refer to CCS-134, "Diagnosis Procedure".
NO >> Refer to GI-43, "Intermittent Incident".

Diagnosis Procedure

INFOID:0000000008131757

1. CHECK SELF-DIAGNOSIS RESULTS

Check if “U1000” is detected other than “U0401” in “Self Diagnostic Result” of “ICC/ADAS”.

Is “U1000” detected?

YES >> Perform the CAN communication system inspection. Repair or replace the malfunctioning parts. Refer to CCS-141, "ADAS CONTROL UNIT : DTC Logic".
NO >> GO TO 2.

2. CHECK ECM SELF-DIAGNOSIS RESULTS

Check if any DTC is detected in “Self Diagnostic Result” of “ENGINE”.

Is any DTC detected?

YES >> Perform diagnosis on the detected DTC and repair or replace the malfunctioning parts. Refer to EC-117, "DTC Index" (VQ37VHR) or EC-1040, "DTC Index" (VK56VD for USA and Canada) or EC-1605, "DTC Index" (VK56VD for Mexico).
NO >> Replace the ADAS control unit. Refer to DAS-55, "Removal and Installation".

U0402 TCM CAN 1

DTC Logic

INFOID:0000000008131758

DTC DETECTION LOGIC

DTC (On board display)	Trouble diagnosis name	DTC detecting condition	Possible causes
U0402 (122)	TCM CAN CIRC1	If ADAS control unit detects an error signal that is received from TCM via CAN communication	TCM

NOTE:
If DTC “U0402” is detected along with DTC “U1000”, first diagnose the DTC “U1000”. Refer to CCS-141, "ADAS CONTROL UNIT : DTC Logic".

DTC CONFIRMATION PROCEDURE

1. PERFORM DTC CONFIRMATION PROCEDURE

1. Start the engine.
2. Turn the MAIN switch of ICC system ON.
3. Perform “All DTC Reading” with CONSULT.
4. Check if the “U0402” is detected as the current malfunction in “Self Diagnostic Result” of “ICC/ADAS”.

Is “U0402” detected as the current malfunction?

YES >> Refer to CCS-135, "Diagnosis Procedure".
NO >> Refer to GI-43, "Intermittent Incident".

Diagnosis Procedure

INFOID:0000000008131759

1. CHECK SELF-DIAGNOSIS RESULTS

Check if “U1000” is detected other than “U0402” in “Self Diagnostic Result” of “ICC/ADAS”.

Is “U1000” detected?

YES >> Perform the CAN communication system inspection. Repair or replace the malfunctioning parts. Refer to CCS-141, "ADAS CONTROL UNIT : DTC Logic".
NO >> GO TO 2.

2. CHECK TCM SELF-DIAGNOSIS RESULTS

Check if any DTC is detected in “Self Diagnostic Result” of “TRANSMISSION”.

Is any DTC detected?

YES >> Perform diagnosis on the detected DTC and repair or replace the malfunctioning parts. Refer to TM-79, "DTC Index".
NO >> Replace the ADAS control unit. Refer to DAS-55, "Removal and Installation".

U0405 ADAS CAN 2

DTC Logic

INFOID:0000000008131760

DTC DETECTION LOGIC

DTC	Trouble diagnosis name	DTC detecting condition	Possible causes
U0405	ADAS CAN CIR 2	If ICC sensor detects an error signal that is received from ADAS control unit via ITS communication	ADAS control unit

NOTE:
If DTC “U0405” is detected along with DTC “U1000”, first diagnose the DTC “U1000”. Refer to CCS-141, "ADAS CONTROL UNIT : DTC Logic".

DTC CONFIRMATION PROCEDURE

1. PERFORM DTC CONFIRMATION PROCEDURE

1. Start the engine.
2. Turn the MAIN switch of ICC system ON.
3. Perform “All DTC Reading” with CONSULT.
4. Check if the “U0405” is detected as the current malfunction in “Self Diagnostic Result” of “LASER”.

Is “U0405” detected as the current malfunction?

YES >> Refer to CCS-136, "Diagnosis Procedure".
NO >> Refer to GI-43, "Intermittent Incident".

Diagnosis Procedure

INFOID:0000000008131761

1. CHECK ICC SENSOR SELF-DIAGNOSIS RESULTS

Check if “U1000” is detected other than “U0405” in “Self Diagnostic Result” of “LASER”.

Is “U1000” detected?

YES >> Perform the CAN communication system inspection. Repair or replace the malfunctioning parts. Refer to CCS-141, "ICC SENSOR : DTC Logic".
NO >> GO TO 2.

2. CHECK ADAS CONTROL UNIT SELF-DIAGNOSIS RESULTS

Check if any DTC is detected in “Self Diagnostic Result” of “ICC/ADAS”.

Is any DTC detected?

YES >> Perform diagnosis on the detected DTC and repair or replace the malfunctioning parts. Refer to DAS-40, "DTC Index".
NO >> Replace the ICC sensor. Refer to CCS-171, "Removal and Installation".

U0415 VDC CAN 1

ADAS CONTROL UNIT

ADAS CONTROL UNIT : DTC Logic

INFOID:0000000008131762

DTC DETECTION LOGIC

DTC (On board display)	Trouble diagnosis name	DTC detecting condition	Possible causes
U0415 (126)	VDC CAN CIR1	If ADAS control unit detects an error signal that is received from ABS actuator and electric unit (control unit) via CAN communication	ABS actuator and electric unit (control unit)

NOTE:
If DTC “U0415” is detected along with DTC “U1000”, first diagnose the DTC “U1000”. Refer to CCS-141, "ADAS CONTROL UNIT : DTC Logic".

DTC CONFIRMATION PROCEDURE

1. PERFORM DTC CONFIRMATION PROCEDURE

1. Start the engine.
2. Turn the MAIN switch of ICC system ON.
3. Perform “All DTC Reading” with CONSULT.
4. Check if the “U0415” is detected as the current malfunction in “Self Diagnostic Result” of “ICC/ADAS”.

Is “U0415” detected as the current malfunction?

YES >> Refer to CCS-137, "ADAS CONTROL UNIT : Diagnosis Procedure".
NO >> Refer to GI-43, "Intermittent Incident".

ADAS CONTROL UNIT : Diagnosis Procedure

INFOID:0000000008131763

1. CHECK SELF-DIAGNOSIS RESULTS

Check if “U1000” is detected other than “U0415” in “Self Diagnostic Result” of “ICC/ADAS”.

Is “U1000” detected?

YES >> Perform the CAN communication system inspection. Repair or replace the malfunctioning parts. Refer to CCS-141, "ADAS CONTROL UNIT : DTC Logic".
NO >> GO TO 2.

2. CHECK ABS ACTUATOR AND ELECTRIC UNIT (CONTROL UNIT) SELF-DIAGNOSIS RESULTS

Check if any DTC is detected in “Self Diagnostic Result” of “ABS”.

Is any DTC detected?

YES >> Perform diagnosis on the detected DTC and repair or replace the malfunctioning parts. Refer to BRC-52, "DTC Index".
NO >> Replace the ADAS control unit. Refer to DAS-55, "Removal and Installation".

ICC SENSOR

ICC SENSOR : DTC Logic

INFOID:0000000008131764

DTC DETECTION LOGIC

DTC	Trouble diagnosis name	DTC detecting condition	Possible causes
U0415	VDC CAN CIR1	If ICC sensor detects an error signal that is received from ABS actuator and electric unit (control unit) via ADAS control unit	ABS actuator and electric unit (control unit)

NOTE:
If DTC “U0415” is detected along with DTC “U1000”, first diagnose the DTC “U1000”. Refer to CCS-141, "ICC SENSOR : DTC Logic".

DTC CONFIRMATION PROCEDURE

1. PERFORM DTC CONFIRMATION PROCEDURE

1. Start the engine.
2. Turn the MAIN switch of ICC system ON.
3. Perform “All DTC Reading” with CONSULT.
4. Check if the “U0415” is detected as the current malfunction in “Self Diagnostic Result” of “LASER”.

Is “U0415” detected as the current malfunction?

YES >> Refer to CCS-138, "ICC SENSOR : Diagnosis Procedure".
NO >> Refer to GI-43, "Intermittent Incident".

ICC SENSOR : Diagnosis Procedure

INFOID:0000000008131765

1. CHECK ICC SENSOR SELF-DIAGNOSIS RESULTS

Check if “U1000” is detected other than “U0415” in “Self Diagnostic Result” of “LASER”.

Is “U1000” detected?

YES >> Perform the CAN communication system inspection. Repair or replace the malfunctioning parts. Refer to CCS-141, "ICC SENSOR : DTC Logic".
NO >> GO TO 2.

2. CHECK ADAS CONTROL UNIT SELF-DIAGNOSIS RESULTS

Check if any DTC is detected in “Self Diagnostic Result” of “ICC/ADAS”.

Is any DTC detected?

YES >> Perform diagnosis on the detected DTC and repair or replace the malfunctioning parts. Refer to DAS-40, "DTC Index".
NO >> Replace the ICC sensor. Refer to CCS-171, "Removal and Installation".

U0428 STRG SEN CAN 2

ADAS CONTROL UNIT

ADAS CONTROL UNIT : DTC Logic

INFOID:0000000008131766

DTC DETECTION LOGIC

DTC (On board display)	Trouble diagnosis name	DTC detecting condition	Possible causes
U0428 (131)	STRG SEN CAN CIR2	If ADAS control unit detects an error signal that is received from steering angle sensor via CAN communication	Steering angle sensor

NOTE:
If DTC “U0428” is detected along with DTC “U1000”, first diagnose the DTC “U1000”. Refer to CCS-141, "ADAS CONTROL UNIT : DTC Logic".

DTC CONFIRMATION PROCEDURE

1. PERFORM DTC CONFIRMATION PROCEDURE

1. Start the engine.
2. Turn the MAIN switch of ICC system ON.
3. Perform “All DTC Reading” with CONSULT.
4. Check if the “U0428” is detected as the current malfunction in “Self Diagnostic Result” of “ICC/ADAS”.

Is “U0428” detected as the current malfunction?

YES >> Refer to CCS-139, "ADAS CONTROL UNIT : Diagnosis Procedure".
NO >> Refer to GI-43, "Intermittent Incident".

ADAS CONTROL UNIT : Diagnosis Procedure

INFOID:0000000008131767

1. CHECK SELF-DIAGNOSIS RESULTS

Check if “U1000” is detected other than “U0428” in “Self Diagnostic Result” of “ICC/ADAS”.

Is “U1000” detected?

YES >> Perform the CAN communication system inspection. Repair or replace the malfunctioning parts. Refer to CCS-141, "ADAS CONTROL UNIT : DTC Logic".
NO >> GO TO 2.

2. CHECK ABS ACTUATOR AND ELECTRIC UNIT (CONTROL UNIT) SELF-DIAGNOSIS RESULTS

Check if any DTC is detected in “Self Diagnostic Result” of “ABS”.

Is any DTC detected?

YES >> Perform diagnosis on the detected DTC and repair or replace the malfunctioning parts. Refer to BRC-52, "DTC Index".
NO >> Replace the ADAS control unit. Refer to DAS-55, "Removal and Installation".

ICC SENSOR

ICC SENSOR : DTC Logic

INFOID:0000000008131768

DTC DETECTION LOGIC

DTC	Trouble diagnosis name	DTC detecting condition	Possible causes
U0428	STRG SEN CAN CIR2	If ICC sensor detects an error signal that is received from steering angle sensor via ADAS control unit	Steering angle sensor

NOTE:
If DTC “U0428” is detected along with DTC “U1000”, first diagnose the DTC “U1000”. Refer to CCS-141, "ICC SENSOR : DTC Logic".

DTC CONFIRMATION PROCEDURE

1. PERFORM DTC CONFIRMATION PROCEDURE

1. Start the engine.
2. Turn the MAIN switch of ICC system ON.
3. Perform “All DTC Reading” with CONSULT.
4. Check if the “U0428” is detected as the current malfunction in “Self Diagnostic Result” of “LASER”.

Is “U0428” detected as the current malfunction?

YES >> Refer to CCS-140, "ICC SENSOR : Diagnosis Procedure".
NO >> Refer to GI-43, "Intermittent Incident".

ICC SENSOR : Diagnosis Procedure

INFOID:0000000008131769

1. CHECK ICC SENSOR SELF-DIAGNOSIS RESULTS

Check if “U1000” is detected other than “U0428” in “Self Diagnostic Result” of “LASER”.

Is “U1000” detected?

YES >> Perform the CAN communication system inspection. Repair or replace the malfunctioning parts. Refer to CCS-141, "ICC SENSOR : DTC Logic".
NO >> GO TO 2.

2. CHECK ADAS CONTROL UNIT SELF-DIAGNOSIS RESULTS

Check if any DTC is detected in “Self Diagnostic Result” of “ICC/ADAS”.

Is any DTC detected?

YES >> Perform diagnosis on the detected DTC and repair or replace the malfunctioning parts. Refer to DAS-40, "DTC Index".
NO >> Replace the ICC sensor. Refer to CCS-171, "Removal and Installation".

U1000 CAN COMM CIRCUIT

ADAS CONTROL UNIT

ADAS CONTROL UNIT : Description

INFOID:0000000008131770

CAN COMMUNICATION

CAN (Controller Area Network) is a serial communication line for real time applications. It is an on-vehicle multiplex communication line with high data communication speed and excellent error detection ability. Modern vehicle is equipped with many electronic control units, and each control unit shares information and links with other control units during operation (not independent). In CAN communication, control units are connected with 2 communication lines (CAN-H, CAN-L) allowing a high rate of information transmission with less wiring. Each control unit transmits/receives data but selectively reads the required data only.
CAN communication signal chart. Refer to LAN-37, "CAN COMMUNICATION SYSTEM : CAN Communication Signal Chart".

ITS COMMUNICATION

- ITS communication is a multiplex communication system. This enables the system to transmit and receive large quantities of data at high speed by connecting control units with 2 communication lines.
- ITS communication lines adopt twisted-pair line style (two lines twisted) for noise immunity.

ADAS CONTROL UNIT : DTC Logic

INFOID:0000000008131771

DTC DETECTION LOGIC

DTC (On board display)	Trouble diagnosis name	DTC detecting condition	Possible causes
U1000 (100)	CAN COMM CIRCUIT	If ADAS control unit is not transmitting or receiving CAN communication signal or ITS communication signal for 2 seconds or more	• CAN communication system • ITS communication system

NOTE:
If “U1000” is detected, first diagnose the CAN communication system.

ADAS CONTROL UNIT : Diagnosis Procedure

INFOID:0000000008131772

1. PERFORM THE SELF-DIAGNOSIS

1. Turn the ignition switch ON.
2. Turn the MAIN switch of ICC system ON, and then wait for 30 seconds or more.
3. Perform “All DTC Reading” with CONSULT.
4. Check if the “U1000” is detected as the current malfunction in “Self Diagnostic Result” of “ICC/ADAS”.

Is “U1000” detected as the current malfunction?

YES >> Refer to LAN-27, "Trouble Diagnosis Flow Chart".
NO >> Refer to GI-43, "Intermittent Incident".

ICC SENSOR

ICC SENSOR : Description

INFOID:0000000008131773

ITS COMMUNICATION

- ITS communication is a multiplex communication system. This enables the system to transmit and receive large quantities of data at high speed by connecting control units with 2 communication lines.
- ITS communication lines adopt twisted-pair line style (two lines twisted) for noise immunity.

ICC SENSOR : DTC Logic

INFOID:0000000008131774

DTC DETECTION LOGIC

DTC	Trouble diagnosis name	DTC detecting condition	Possible causes
U1000	CAN COMM CIRCUIT	If ICC sensor is not transmitting or receiving ITS communication signal for 2 seconds or more	ITS communication system

ICC SENSOR : Diagnosis Procedure

INFOID:0000000008131775

1. PERFORM THE SELF-DIAGNOSIS

1. Turn the ignition switch ON.
2. Turn the MAIN switch of ICC system ON, and then wait for 2 seconds or more.
3. Perform “All DTC Reading” with CONSULT.
4. Check if the “U1000” is detected as the current malfunction in “Self Diagnostic Result” of “LASER”.

Is “U1000” detected as the current malfunction?

YES >> Refer to LAN-27, "Trouble Diagnosis Flow Chart".
NO >> Refer to GI-43, "Intermittent Incident".

U1010 CONTROL UNIT (CAN)

ADAS CONTROL UNIT

ADAS CONTROL UNIT : Description

INFOID:0000000008131776

CAN controller controls the communication of CAN communication signal and ITS communication signal, and the error detection.

ADAS CONTROL UNIT : DTC Logic

INFOID:0000000008131777

DTC DETECTION LOGIC

DTC (On board display)	Trouble diagnosis name	DTC detecting condition	Possible causes
U1010 (110)	CONTROL UNIT (CAN)	If ADAS control unit detects malfunction by CAN controller initial diagnosis	ADAS control unit

ADAS CONTROL UNIT : Diagnosis Procedure

INFOID:0000000008131778

1. PERFORM DTC CONFIRMATION PROCEDURE

1. Turn the MAIN switch of ICC system ON.
2. Perform “All DTC Reading” with CONSULT.
3. Check if the “U1010” is detected as the current malfunction in “Self Diagnostic Result” of “ICC/ADAS”.

Is “U1010” detected as the current malfunction?

YES >> Replace the ADAS control unit. Refer to DAS-55, "Removal and Installation".
NO >> INSPECTION END

ICC SENSOR

ICC SENSOR : Description

INFOID:0000000008131779

CAN controller controls the communication of ITS communication signal and the error detection.

ICC SENSOR : DTC Logic

INFOID:0000000008131780

DTC DETECTION LOGIC

DTC	Trouble diagnosis name	DTC detecting condition	Possible causes
U1010	CONTROL UNIT (CAN)	If ICC sensor detects malfunction by ITS controller initial diagnosis	ICC sensor

ICC SENSOR : Diagnosis Procedure

INFOID:0000000008131781

1. PERFORM DTC CONFIRMATION PROCEDURE

1. Turn the MAIN switch of ICC system ON.
2. Perform “All DTC Reading” with CONSULT.
3. Check if the “U1010” is detected as the current malfunction in “Self Diagnostic Result” of “LASER”.

Is “U1010” detected as the current malfunction?

YES >> Replace the ICC sensor. Refer to CCS-171, "Removal and Installation".
NO >> INSPECTION END

U150B ECM CAN 3

DTC Logic

INFOID:0000000008131782

DTC DETECTION LOGIC

DTC (On board display)	Trouble diagnosis name	DTC detecting condition	Possible causes
U150B (157)	ECM CAN CIRC 3	ADAS control unit detects an error signal that is received from ECM via CAN communication	ECM

NOTE:
If DTC “U150B” is detected along with DTC “U1000”, first diagnose the DTC “U1000”. Refer to CCS-141, "ADAS CONTROL UNIT : DTC Logic".

DTC CONFIRMATION PROCEDURE

1.PERFORM DTC CONFIRMATION PROCEDURE

1. Start the engine.
2. Turn the MAIN switch of ICC system ON.
3. Perform “All DTC Reading” with CONSULT.
4. Check if the “U150B” is detected as the current malfunction in “Self Diagnostic Result” of “ICC/ADAS”.

Is “U150B” detected as the current malfunction?

YES >> Refer to CCS-144, "Diagnosis Procedure".
NO >> Refer to GI-43, "Intermittent Incident".

Diagnosis Procedure

INFOID:0000000008131783

1.CHECK SELF-DIAGNOSIS RESULTS

Check if “U1000” is detected other than “U150B” in “Self Diagnostic Result” of “ICC/ADAS”.

Is “U1000” detected?

YES >> Perform the CAN communication system inspection. Repair or replace the malfunctioning parts. Refer to CCS-141, "ADAS CONTROL UNIT : DTC Logic".
NO >> GO TO 2.

2.CHECK ECM SELF-DIAGNOSIS RESULTS

Check if any DTC is detected in “Self Diagnostic Result” of “ENGINE”.

Is any DTC detected?

YES >> Perform diagnosis on the detected DTC and repair or replace the malfunctioning parts. Refer to EC-117, "DTC Index" (VQ37VHR) or EC-1040, "DTC Index" (VK56VD for USA and Canada) or EC-1605, "DTC Index" (VK56VD for Mexico).
NO >> Replace the ADAS control unit. Refer to DAS-55, "Removal and Installation".

U150C VDC CAN 3

DTC Logic

INFOID:0000000008131784

DTC DETECTION LOGIC

DTC (On board display)	Trouble diagnosis name	DTC detecting condition	Possible causes
U150C (158)	VDC CAN CIRC 3	ADAS control unit detects an error signal that is received from ABS actuator and electric unit (control unit) via CAN communication	ABS actuator and electric unit (control unit)

NOTE:
If DTC “U150C” is detected along with DTC “U1000”, first diagnose the DTC “U1000”. Refer to CCS-141, "ADAS CONTROL UNIT : DTC Logic".

DTC CONFIRMATION PROCEDURE

1. PERFORM DTC CONFIRMATION PROCEDURE

1. Start the engine.
2. Turn the MAIN switch of ICC system ON.
3. Perform “All DTC Reading” with CONSULT.
4. Check if the “U150C” is detected as the current malfunction in “Self Diagnostic Result” of “ICC/ADAS”.

Is “U150C” detected as the current malfunction?

YES >> Refer to CCS-145, "Diagnosis Procedure".
NO >> Refer to GI-43, "Intermittent Incident".

Diagnosis Procedure

INFOID:0000000008131785

1. CHECK SELF-DIAGNOSIS RESULTS

Check if “U1000” is detected other than “U150C” in “Self Diagnostic Result” of “ICC/ADAS”.

Is “U1000” detected?

YES >> Perform the CAN communication system inspection. Repair or replace the malfunctioning parts. Refer to CCS-141, "ADAS CONTROL UNIT : DTC Logic".
NO >> GO TO 2.

2. CHECK ABS ACTUATOR AND ELECTRIC UNIT (CONTROL UNIT) SELF-DIAGNOSIS RESULTS

Check if any DTC is detected in “Self Diagnostic Result” of “ABS”.

Is any DTC detected?

YES >> Perform diagnosis on the detected DTC and repair or replace the malfunctioning parts. Refer to BRC-52, "DTC Index".
NO >> Replace the ADAS control unit. Refer to DAS-55, "Removal and Installation".

U150D TCM CAN 3

DTC Logic

INFOID:0000000008131786

DTC DETECTION LOGIC

DTC (On board display)	Trouble diagnosis name	DTC detecting condition	Possible causes
U150D (159)	TCM CAN CIRC 3	ADAS control unit detects an error signal that is received from TCM via CAN communication	TCM

NOTE:
If DTC “U150D” is detected along with DTC “U1000”, first diagnose the DTC “U1000”. Refer to CCS-141, "ADAS CONTROL UNIT : DTC Logic".

DTC CONFIRMATION PROCEDURE

1.PERFORM DTC CONFIRMATION PROCEDURE

1. Start the engine.
2. Turn the MAIN switch of ICC system ON.
3. Perform “All DTC Reading” with CONSULT.
4. Check if the “U150D” is detected as the current malfunction in “Self Diagnostic Result” of “ICC/ADAS”.

Is “U150D” detected as the current malfunction?

YES >> Refer to CCS-146, "Diagnosis Procedure".
NO >> Refer to GI-43, "Intermittent Incident".

Diagnosis Procedure

INFOID:0000000008131787

1.CHECK SELF-DIAGNOSIS RESULTS

Check if “U1000” is detected other than “U150D” in “Self Diagnostic Result” of “ICC/ADAS”.

Is “U1000” detected?

YES >> Perform the CAN communication system inspection. Repair or replace the malfunctioning parts. Refer to CCS-141, "ADAS CONTROL UNIT : DTC Logic".
NO >> GO TO 2.

2.CHECK TCM SELF-DIAGNOSIS RESULTS

Check if any DTC is detected in “Self Diagnostic Result” of “TRANSMISSION”.

Is any DTC detected?

YES >> Perform diagnosis on the detected DTC and repair or replace the malfunctioning parts. Refer to TM-79, "DTC Index".
NO >> Replace the ADAS control unit. Refer to DAS-55, "Removal and Installation".

U150E BCM CAN 3

DTC Logic

INFOID:0000000008131788

DTC DETECTION LOGIC

DTC (On board display)	Trouble diagnosis name	DTC detecting condition	Possible causes
U150E (160)	BCM CAN CIRC 3	ADAS control unit detects an error signal that is received from BCM via CAN communication	BCM

NOTE:
If DTC “U150E” is detected along with DTC “U1000”, first diagnose the DTC “U1000”. Refer to CCS-141, "ADAS CONTROL UNIT : DTC Logic".

DTC CONFIRMATION PROCEDURE

1. PERFORM DTC CONFIRMATION PROCEDURE

1. Start the engine.
2. Turn the MAIN switch of ICC system ON.
3. Perform “All DTC Reading” with CONSULT.
4. Check if the “U150E” is detected as the current malfunction in “Self Diagnostic Result” of “ICC/ADAS”.

Is “U150E” detected as the current malfunction?

YES >> Refer to CCS-147, "Diagnosis Procedure".
NO >> Refer to GI-43, "Intermittent Incident".

Diagnosis Procedure

INFOID:0000000008131789

1. CHECK SELF-DIAGNOSIS RESULTS

Check if “U1000” is detected other than “U150E” in “Self Diagnostic Result” of “ICC/ADAS”.

Is “U1000” detected?

YES >> Perform the CAN communication system inspection. Repair or replace the malfunctioning parts. Refer to CCS-141, "ADAS CONTROL UNIT : DTC Logic".
NO >> GO TO 2.

2. CHECK BCM SELF-DIAGNOSIS RESULTS

Check if any DTC is detected in “Self Diagnostic Result” of “BCM”.

Is any DTC detected?

YES >> Perform diagnosis on the detected DTC and repair or replace the malfunctioning parts. Refer to BCS-54, "DTC Index".
NO >> Replace the ADAS control unit. Refer to DAS-55, "Removal and Installation".

U1502 ICC SENSOR CAN COMM CIRC

DTC Logic

INFOID:0000000008131790

DTC DETECTION LOGIC

DTC (On board display)	Trouble diagnosis name	DTC detecting condition	Possible causes
U1502 (147)	ICC SEN CAN COMM CIR	ADAS control unit detects an error signal that is received from ICC sensor via ITS communication	ICC sensor

NOTE:
If DTC “U1502” is detected along with DTC “U1000”, first diagnose the DTC “U1000”. Refer to CCS-141, "ADAS CONTROL UNIT : DTC Logic".

DTC CONFIRMATION PROCEDURE

1.PERFORM DTC CONFIRMATION PROCEDURE

1. Start the engine.
2. Turn the MAIN switch of ICC system ON.
3. Perform “All DTC Reading” with CONSULT.
4. Check if the “U1502” is detected as the current malfunction in “Self Diagnostic Result” of “ICC/ADAS”.

Is “U1502” detected as the current malfunction?

YES >> Refer to CCS-148, "Diagnosis Procedure".
NO >> Refer to GI-43, "Intermittent Incident".

Diagnosis Procedure

INFOID:0000000008131791

1.CHECK SELF-DIAGNOSIS RESULTS

Check if “U1000” is detected other than “U1502” in “Self Diagnostic Result” of “ICC/ADAS”.

Is “U1000” detected?

YES >> Perform the CAN communication system inspection. Repair or replace the malfunctioning parts. Refer to CCS-141, "ADAS CONTROL UNIT : DTC Logic".
NO >> GO TO 2.

2.CHECK ICC SENSOR SELF-DIAGNOSIS RESULTS

Check if any DTC is detected in “Self Diagnostic Result” of “LASER”.

Is any DTC detected?

YES >> Perform diagnosis on the detected DTC and repair or replace the malfunctioning parts. Refer to CCS-58, "DTC Index".
NO >> Replace the ADAS control unit. Refer to DAS-55, "Removal and Installation".

U1513 METER CAN 3

DTC Logic

INFOID:0000000008131792

DTC DETECTION LOGIC

DTC (On board display)	Trouble diagnosis name	DTC detecting condition	Possible causes
U1513 (163)	METER CAN CIRC 3	ADAS control unit detects an error signal that is received from combination meter via CAN communication	Combination meter

NOTE:
If DTC “U1513” is detected along with DTC “U1000”, first diagnose the DTC “U1000”. Refer to CCS-141, "ADAS CONTROL UNIT : DTC Logic".

DTC CONFIRMATION PROCEDURE

1. PERFORM DTC CONFIRMATION PROCEDURE

1. Start the engine.
2. Turn the MAIN switch of ICC system ON.
3. Perform “All DTC Reading” with CONSULT.
4. Check if the “U1513” is detected as the current malfunction in “Self Diagnostic Result” of “ICC/ADAS”.

Is “U1513” detected as the current malfunction?

YES >> Refer to CCS-149, "Diagnosis Procedure".
NO >> Refer to GI-43, "Intermittent Incident".

Diagnosis Procedure

INFOID:0000000008131793

1. CHECK SELF-DIAGNOSIS RESULTS

Check if “U1000” is detected other than “U1513” in “Self Diagnostic Result” of “ICC/ADAS”.

Is “U1000” detected?

YES >> Perform the CAN communication system inspection. Repair or replace the malfunctioning parts. Refer to CCS-141, "ADAS CONTROL UNIT : DTC Logic".
NO >> GO TO 2.

2. CHECK COMBINATION METER SELF-DIAGNOSIS RESULTS

Check if any DTC is detected in “Self Diagnostic Result” of “METER/M&A”.

Is any DTC detected?

YES >> Perform diagnosis on the detected DTC and repair or replace the malfunctioning parts. Refer to MWI-44, "DTC Index".
NO >> Replace the ADAS control unit. Refer to DAS-55, "Removal and Installation".

U1514 STRG SEN CAN 3

DTC Logic

INFOID:0000000008131794

DTC DETECTION LOGIC

DTC (On board display)	Trouble diagnosis name	DTC detecting condition	Possible causes
U1514 (164)	STRG SEN CAN CIRC 3	ADAS control unit detects an error signal that is received from steering angle sensor via CAN communication	Steering angle sensor

NOTE:
If DTC “U1514” is detected along with DTC “U1000”, first diagnose the DTC “U1000”. Refer to CCS-141, "ADAS CONTROL UNIT : DTC Logic".

DTC CONFIRMATION PROCEDURE

1.PERFORM DTC CONFIRMATION PROCEDURE

1. Start the engine.
2. Turn the MAIN switch of ICC system ON.
3. Perform “All DTC Reading” with CONSULT.
4. Check if the “U1514” is detected as the current malfunction in “Self Diagnostic Result” of “ICC/ADAS”.

Is “U1514” detected as the current malfunction?

YES >> Refer to CCS-150, "Diagnosis Procedure".
NO >> Refer to GI-43, "Intermittent Incident".

Diagnosis Procedure

INFOID:0000000008131795

1.CHECK SELF-DIAGNOSIS RESULTS

Check if “U1000” is detected other than “U1514” in “Self Diagnostic Result” of “ICC/ADAS”.

Is “U1000” detected?

YES >> Perform the CAN communication system inspection. Repair or replace the malfunctioning parts. Refer to CCS-141, "ADAS CONTROL UNIT : DTC Logic".
NO >> GO TO 2.

2.CHECK ABS ACTUATOR AND ELECTRIC UNIT (CONTROL UNIT) SELF-DIAGNOSIS RESULTS

Check if any DTC is detected in “Self Diagnostic Result” of “ABS”.

Is any DTC detected?

YES >> Perform diagnosis on the detected DTC and repair or replace the malfunctioning parts. Refer to BRC-52, "DTC Index".
NO >> Replace the ADAS control unit. Refer to DAS-55, "Removal and Installation".

U1515 ICC SENSOR CAN 3

DTC Logic

INFOID:0000000008131796

DTC DETECTION LOGIC

DTC (On board display)	Trouble diagnosis name	DTC detecting condition	Possible causes
U1515 (165)	ICC SENSOR CAN CIRC 3	ADAS control unit detects an error signal that is received from ICC sensor via ITS communication	ICC sensor

NOTE:
If DTC “U1515” is detected along with DTC “U1000”, first diagnose the DTC “U1000”. Refer to CCS-141, "ADAS CONTROL UNIT : DTC Logic".

DTC CONFIRMATION PROCEDURE

1.PERFORM DTC CONFIRMATION PROCEDURE

1. Start the engine.
2. Turn the MAIN switch of ICC system ON.
3. Perform “All DTC Reading” with CONSULT.
4. Check if the “U1515” is detected as the current malfunction in “Self Diagnostic Result” of “ICC/ADAS”.

Is “U1515” detected as the current malfunction?

YES >> Refer to CCS-151, "Diagnosis Procedure".
NO >> Refer to GI-43, "Intermittent Incident".

Diagnosis Procedure

INFOID:0000000008131797

1.CHECK SELF-DIAGNOSIS RESULTS

Check if “U1000” is detected other than “U1515” in “Self Diagnostic Result” of “ICC/ADAS”.

Is “U1000” detected?

YES >> Perform the CAN communication system inspection. Repair or replace the malfunctioning parts. Refer to CCS-141, "ADAS CONTROL UNIT : DTC Logic".
NO >> GO TO 2.

2.CHECK ICC SENSOR SELF-DIAGNOSIS RESULTS

Check if any DTC is detected in “Self Diagnostic Result” of “LASER”.

Is any DTC detected?

YES >> Perform diagnosis on the detected DTC and repair or replace the malfunctioning parts. Refer to CCS-58, "DTC Index".
NO >> Replace the ADAS control unit. Refer to DAS-55, "Removal and Installation".

U1517 ACCELERATOR PEDAL ACTUATOR CAN 3

DTC Logic

INFOID:0000000008131798

DTC DETECTION LOGIC

DTC (On board display)	Trouble diagnosis name	DTC detecting condition	Possible causes
U1517 (167)	APA CAN CIRC 3	ADAS control unit detects an error signal that is received from accelerator pedal actuator via ITS communication	Accelerator pedal actuator

NOTE:
If DTC “U1517” is detected along with DTC “U1000”, first diagnose the DTC “U1000”. Refer to CCS-141, "ADAS CONTROL UNIT : DTC Logic".

DTC CONFIRMATION PROCEDURE

1. PERFORM DTC CONFIRMATION PROCEDURE

1. Start the engine.
2. Turn the MAIN switch of ICC system ON.
3. Perform “All DTC Reading” with CONSULT.
4. Check if the “U1517” is detected as the current malfunction in “Self Diagnostic Result” of “ICC/ADAS”.

Is “U1517” detected as the current malfunction?

YES >> Refer to CCS-152, "Diagnosis Procedure".
NO >> Refer to GI-43, "Intermittent Incident".

Diagnosis Procedure

INFOID:0000000008131799

1. CHECK SELF-DIAGNOSIS RESULTS

Check if “U1000” is detected other than “U1517” in “Self Diagnostic Result” of “ICC/ADAS”.

Is “U1000” detected?

YES >> Perform the CAN communication system inspection. Repair or replace the malfunctioning parts. Refer to CCS-141, "ADAS CONTROL UNIT : DTC Logic".
NO >> GO TO 2.

2. CHECK ACCELERATOR PEDAL ACTUATOR SELF-DIAGNOSIS RESULTS

Check if any DTC is detected in “Self Diagnostic Result” of “ACCELE PEDAL ACT”.

Is any DTC detected?

YES >> Perform diagnosis on the detected DTC and repair or replace the malfunctioning parts. Refer to DAS-102, "DTC Index".
NO >> Replace the ADAS control unit. Refer to DAS-55, "Removal and Installation".

POWER SUPPLY AND GROUND CIRCUIT

ADAS CONTROL UNIT

ADAS CONTROL UNIT : Diagnosis Procedure

INFOID:0000000008131800

1. CHECK FUSES

Check if any of the following fuses are blown:

Signal name	Fuse No.
Ignition power supply	46

Is the inspection result normal?

YES >> GO TO 2.
NO >> Replace the blown fuse after repairing the affected circuit if a fuse is blown.

2. CHECK ADAS CONTROL UNIT POWER SUPPLY CIRCUIT

Check voltage between ADAS control unit harness connector and ground.

Terminal			Condition	Voltage (Approx.)
(+)		(–)		
ADAS control unit		Ground	Ignition switch	
Connector	Terminal			
B50	16		OFF	0 V
			ON	Battery voltage

Is the inspection result normal?

YES >> GO TO 3.
NO >> Repair the ADAS control unit power supply circuit.

3. CHECK ADAS CONTROL UNIT GROUND CIRCUIT

1. Turn the ignition switch OFF.
2. Disconnect the ADAS control unit connector.
3. Check for continuity between ADAS control unit harness connector and ground.

ADAS control unit		Ground	Continuity
Connector	Terminal		
B50	6		Existed

Is the inspection result normal?

YES >> INSPECTION END
NO >> Repair the ADAS control unit ground circuit.

ICC SENSOR

ICC SENSOR : Diagnosis Procedure

INFOID:0000000008131801

1. CHECK ICC SENSOR POWER SUPPLY CIRCUIT

Check voltage between ICC sensor harness connector and ground.

Terminal			Condition	Voltage (Approx.)
(+)		(–)		
ICC sensor		Ground	Ignition switch	
Connector	Terminal			
E67	1		OFF	0 V
			ON	Battery voltage

Is the inspection result normal?

YES >> GO TO 2.
NO >> Repair the ICC sensor power supply circuit.

2. CHECK ICC SENSOR GROUND CIRCUIT

1. Turn the ignition switch OFF.
2. Disconnect the ICC sensor connector.
3. Check for continuity between ICC sensor harness connector and ground.

ICC sensor		Ground	Continuity
Connector	Terminal		
E67	4		Existed

Is the inspection result normal?

YES >> INSPECTION END
NO >> Repair the ICC sensor ground circuit.

SYMPTOM DIAGNOSIS

INTELLIGENT CRUISE CONTROL SYSTEM SYMPTOMS

Symptom Table

INFOID:0000000008131802

Symptoms		Reference page
Operation	MAIN switch does not turn ON	Refer to CCS-156, "Description"
	MAIN switch does not turn OFF	
	ICC system cannot be set (MAIN switch turns ON/OFF)	Refer to CCS-157, "Description"
	CANCEL switch does not function	Refer to CCS-159, "Description"
	Resume does not function	
	Set speed does not increase	
	Set distance to a vehicle ahead cannot be changed	
	ICC is not canceled when the A/T selector lever is “N” position	Refer to CCS-160, "Description"
Display/Chime	ICC system display not appear	Refer to MWI-30, "On Board Diagnosis Function"
	Chime does not sound	Refer to CCS-161, "Description"
Control	Driving force is hunting	Refer to CCS-163, "Description"
Function to detect a vehicle ahead	System frequently cannot detect a vehicle ahead	Refer to CCS-164, "Description"
	Distance to detect a vehicle ahead is short	
	System misidentifies a vehicle even though there is no vehicle ahead	• Adjust laser beam aiming: Refer to CCS-66, "Description" • Perform ICC system action test. Refer to CCS-71, "Description"
	System misidentifies a vehicle in the next lane	
	System does not detect a vehicle at all	Refer to CCS-166, "Description"

MAIN SWITCH DOES NOT TURN ON, MAIN SWITCH DOES NOT TURN OFF

Description

INFOID:0000000008131803

MAIN switch does not turn ON
- ICC system display does not appear even when MAIN switch is pressed.

MAIN switch does not turn OFF
- When ICC system display is ON, display does not turn OFF even if MAIN switch is pressed.

NOTE:
When ICC system warning lamp illuminates, perform the self-diagnosis of ICC system, and then repair or replace the malfunctioning parts.

Diagnosis Procedure

INFOID:0000000008131804

1. MAIN SWITCH INSPECTION

1. Start the engine.
2. Check that “MAIN SW” and “CRUISE LAMP” operate normally in “DATA MONITOR” of “ICC/ADAS” with CONSULT.

Is the inspection result normal?

YES >> GO TO 2.
NO >> GO TO 4.

2. CHECK COMBINATION METER

Check that “CRUISE IND” operates normally in “DATA MONITOR” of “METER/M&A”.

Is the inspection result normal?

YES >> GO TO 3.
NO >> GO TO 4.

3. PERFORM SELF-DIAGNOSIS OF COMBINATION METER

1. Perform “Self Diagnostic Result” of “METER/M&A”.
2. Check if DTC is detected. Refer to MWI-44, "DTC Index".

Is any DTC detected?

YES >> Repair or replace malfunctioning parts.
NO >> GO TO 4.

4. PERFORM SELF-DIAGNOSIS RESULTS OF ICC SYSTEM

1. Perform “All DTC Reading”.
2. Check if the “U1000” is detected in self-diagnosis results of “ICC/ADAS”.

Is “U1000” detected?

YES >> GO TO 5.
NO >> GO TO 6.

5. CAN COMMUNICATIONS INSPECTION

Check the CAN communication and repair or replace malfunctioning parts. Refer to CCS-141, "ADAS CONTROL UNIT : DTC Logic".

>> INSPECTION END

6. CHECK ICC STEERING SWITCH

Check the ICC steering switch. Refer to CCS-89, "Diagnosis Procedure".

>> INSPECTION END

ICC SYSTEM CANNOT BE SET (MAIN SWITCH TURNS ON/OFF)

Description

INFOID:0000000008131805

The MAIN switch can be turned ON/OFF, but the ICC system cannot be set even if the SET/COAST switch is pressed.

NOTE:

The system cannot be set in the following case.

- When the vehicle ahead is not detected below the speed of 32 km/h (20 MPH).
- When the selector lever is not in the “D” position or manual mode.
- When the front wipers are operating at HI.
  (If the vehicle is equipped with a rain sensing auto-wiper, the system may cancel when the wipers are set to AUTO)
- When the brake pedal is depressed.
- When driving into a strong light (i.e., sunlight).
- When the VDC is turned OFF.
- When ABS or VDC (including the TCS) operates.
- When a wheel slips.
- When ABS warning lamp is ON.
- When drive mode select switch is in SNOW position.

Diagnosis Procedure

INFOID:0000000008131806

1. CHECK CAUSE OF AUTOMATIC CANCELLATION

Check if there is the cancellation cause in the “CAUSE OF AUTO-CANCEL” on “WORK SUPPORT” of “ICC/ADAS” with CONSULT.

Is it displayed?

Not displayed>>GO TO 2.
“OPE SW VOLT CIRC”>>Refer to CCS-89, "DTC Logic".
“VHCL SPD UNMATCH”>>Refer to CCS-81, "DTC Logic".
“IGN LOW VOLT”>>Refer to CCS-79, "ADAS CONTROL UNIT : DTC Logic".
“ECM CIRCUIT”>>Refer to CCS-99, "DTC Logic".
“CAN COMM ERROR”>>Refer to CCS-133, "DTC Logic".
“ICC SENSOR CAN COMM ERR”>>Refer to CCS-133, "DTC Logic".
“ABS/TCS/VDC CIRC”>>Refer to CCS-83, "DTC Logic".
“ECD CIRCUIT”>>Refer to CCS-111, "DTC Logic".

2. PERFORM THE SELF-DIAGNOSIS

1. Perform “All DTC Reading”.
2. Check if any DTC is detected in “Self Diagnostic Result” of “ICC/ADAS” or “LASER”. Refer to CCS-52, "DTC Index" (ICC/ADAS) or CCS-58, "DTC Index" (LASER).

Is any DTC detected?

YES >> GO TO 3.
NO >> GO TO 4.

3. REPAIR OR REPLACE MALFUNCTIONING PARTS

Repair or replace malfunctioning parts identified by the self-diagnosis result.

>> GO TO 6.

4. CHECK EACH SWITCH AND VEHICLE SPEED SIGNAL

1. Start the engine.
2. Check that the following items operate normally in “DATA MONITOR” of “ICC/ADAS”.

- “VHCL SPEED SE”
- “D RANGE SW”
- “SET/COAST SW”
- “BRAKE SW”
- “WIPER SW”
- “PKB SW”

Is there a malfunctioning item?

All items are normal>>GO TO 5.
“VHCL SPEED SE”>>Refer to CCS-81, "DTC Logic".
“D RANGE SW”>>Refer to CCS-160, "Diagnosis Procedure".
“SET/COAST SW”>>Refer to CCS-89, "DTC Logic".
“BRAKE SW”>>Refer to CCS-84, "DTC Logic".
“WIPER SW” (When the front wiper operation is normal)>>GO TO 5.
“WIPER SW” (When the front wiper operation is malfunctioning)>>Performs the diagnosis of the front wiper. Refer to WW-36, "Symptom Table".
“PKB SW”>>Refer to WCS-40, "Diagnosis Procedure".

5. REPLACE ADAS CONTROL UNIT

Replace the ADAS control unit. Refer to DAS-55, "Removal and Installation".

>> GO TO 6.

6. CHECK ICC SYSTEM

1. Erase the self-diagnosis results, and then perform “All DTC Reading” again after performing the action test. (Refer to CCS-71, "Description" for action test.)
2. Check that the ICC system is normal.

>> INSPECTION END

ICC STEERING SWITCH (OTHER THAN MAIN SWITCH) DOES NOT FUNCTION

Description

INFOID:0000000008131807

MAIN switch can be turned ON/OFF, but the operation of RESUME/ACCELERATE switch, CANCEL switch, and DISTANCE switch cannot be performed during ICC system operation.

NOTE:

Resume is not accepted when the following condition is met.

- When the MAIN switch is turned OFF once.

The set distance change is not accepted when any of the following condition is met.

- When the DCA system is turned ON.

Diagnosis Procedure

INFOID:0000000008131808

1. CHECK EACH SWITCH

1. Start the engine.
2. Check that each switch operates normally on “DATA MONITOR” of “ICC/ADAS” with CONSULT.

- “RESUME/ACC SW”
- “CANCEL SW”
- “DISTANCE SW”

Is the inspection result normal?

YES >> GO TO 5.
NO >> GO TO 2.

2. PERFORM ALL OF THE SELF-DIAGNOSIS ITEMS

1. Perform “All DTC Reading”.
2. Check if the “U1000” is detected in “Self Diagnostic Result” of “ICC/ADAS”.

Is “U1000” detected?

YES >> GO TO 3.
NO >> GO TO 4.

3. CAN COMMUNICATIONS INSPECTION

Check the CAN communication and repair or replace malfunctioning parts. Refer to DAS-51, "DTC Logic".

>> INSPECTION END

4. CHECK ICC STEERING SWITCH

Check the ICC steering switch. Refer to CCS-90, "Component Inspection".

>> GO TO 6.

5. REPLACE ADAS CONTROL UNIT

Replace the ADAS control unit. Refer to DAS-55, "Removal and Installation".

>> GO TO 6.

6. CHECK ICC SYSTEM

1. Erase the self-diagnosis results, and then perform “All DTC Reading” again after performing the action test. (Refer to CCS-71, "Description" for action test.)
2. Check that the ICC system is normal.

>> INSPECTION END

ICC SYSTEM DOES NOT CANCEL WHEN A/T SELECTOR LEVER SETS ON "N"

Description

INFOID:0000000008131809

The ICC system is not canceled even when the A/T selector lever is shifted to the N position while the ICC system is active.

Diagnosis Procedure

INFOID:0000000008131810

1. CHECK D RANGE SWITCH

Check if “D RANGE SW” operates normally in “DATA MONITOR” of “ICC/ADAS” with CONSULT.

Is the inspection result normal?

YES >> GO TO 6.
NO >> GO TO 2.

2. PERFORM ALL SELF-DIAGNOSIS ITEMS

1. Perform “All DTC Reading”.
2. Check if the “U1000” is detected in “self-diagnosis results” of “ICC/ADAS”.

Is “U1000” detected?

YES >> GO TO 3.
NO >> GO TO 4.

3. CAN COMMUNICATIONS INSPECTION

Check the CAN communication and repair or replace malfunctioning parts. Refer to DAS-51, "DTC Logic".

>> INSPECTION END

4. CHECK POSITION SWITCH

Check if “SLCT LVR POSI” operates normally in “DATA MONITOR” of “TRANSMISSION”.

Is the inspection result normal?

YES >> GO TO 6.
NO >> GO TO 5.

5. PERFORM TCM SELF-DIAGNOSIS

1. Perform the “Self Diagnostic Result” of “TRANSMISSION”.
2. Repair or replace malfunctioning parts. Refer to TM-79, "DTC Index".

>> GO TO 7.

6. REPLACE ADAS CONTROL UNIT

Replace the ADAS control unit. Refer to DAS-55, "Removal and Installation".

>> GO TO 7.

7. CHECK ICC SYSTEM

1. Erase the self-diagnosis results, and then perform “All DTC Reading” again after performing the action test. (Refer to CCS-71, "Description" for action test.)
2. Check that the ICC system is normal.

>> INSPECTION END

CHIME DOES NOT SOUND

Description

INFOID:0000000008131811

Symptom check: In the following conditions, the warning chime may not sound even if the vehicle distance is short.

- When the vehicles are traveling at the same speed and the distance between vehicles is not changing.
- When the vehicle ahead is traveling faster and the distance between vehicles is increasing.
- The warning chime will not sound when the accelerator pedal is depressed, overriding the system.
- The warning chime will not sound when own vehicle approaches vehicles that are parked or moving slowly.
- The warning chime does not sound when the system does not detect any vehicle ahead. (Diagnose the conditions under which the system is detecting the vehicle ahead and when the system is malfunctioning. If there is any malfunction in detecting the vehicle ahead, check the system following the CCS-164, "Description".)

Diagnosis Procedure

INFOID:0000000008131812

1. PERFORM ACTIVE TEST

Check if the warning chime sounds on the active test item “ICC BUZZER” of “ICC” with CONSULT.

Does the warning chime sound?

YES >> GO TO 2.
NO >> GO TO 3.

2. CHECK THE MALFUNCTION SYMPTOM DURING WARNING CHIME OPERATION

Understand the vehicle ahead detecting condition when the malfunction occurred. If the warning chime should have sounded, replace the ADAS control unit. Refer to DAS-55, "Removal and Installation".

>> GO TO 8.

3. CHECK ICC WARNING CHIME CIRCUIT

Check the meter buzzer circuit. Refer to WCS-37, "Component Function Check".

Is the inspection result normal?

YES >> GO TO 4.
NO >> GO TO 6.

4. PERFORM THE SELF-DIAGNOSIS

1. Perform “All DTC Reading” with CONSULT.
2. Check if the “U1000” is detected in self-diagnosis results of “ICC/ADAS”.

Is “U1000” detected?

YES >> GO TO 5.
NO >> GO TO 7.

5. CAN COMMUNICATIONS SYSTEM INSPECTION

Check the CAN communication system and repair or replace malfunctioning parts. Refer to DAS-51, "DTC Logic".

>> INSPECTION END

6. REPAIR OR REPLACE MALFUNCTIONING PARTS

Repair or replace malfunctioning parts.

>> GO TO 8.

7. REPLACE ADAS CONTROL UNIT

Replace the ADAS control unit. Refer to DAS-55, "Removal and Installation".

>> GO TO 8.

8. CHECK ICC SYSTEM

1. Erase the self-diagnosis results, and then perform “All DTC Reading” again after performing the action test. (Refer to CCS-71, "Description" for action test.)
2. Check that the ICC system is normal.

>> INSPECTION END

DRIVING FORCE IS HUNTING

Description

INFOID:0000000008131813

The vehicle causes hunting when the ICC system is active.

Diagnosis Procedure

INFOID:0000000008131814

1. PERFORM SELF-DIAGNOSIS OF ECM

1. Perform “All DTC Reading” with CONSULT.
2. Check if the DTC is detected in self-diagnosis results of “ENGINE”. Refer to EC-117, "DTC Index" (VQ37VHR) or EC-1040, "DTC Index" (VK56VD for USA and Canada) or EC-1605, "DTC Index" (VK56VD for Mexico).

Is any DTC detected?

YES >> GO TO 3.
NO >> GO TO 2.

2. CHECK ICC SENSOR BODY WINDOW

1. Check the vehicle driving conditions. Refer to CCS-164, "Description".
2. Check the ICC sensor body window for contamination, foreign materials, or cracks. Refer to CCS-164, "Diagnosis Procedure".

>> INSPECTION END

3. REPAIR OR REPLACE MALFUNCTIONING PARTS

Repair or replace malfunctioning parts identified by the self-diagnosis result.

>> GO TO 4.

4. CHECK ICC SYSTEM

1. Erase the self-diagnosis results, and then perform “All DTC Reading” again after performing the action test. (Refer to CCS-71, "Description" for action test.)
2. Check that the ICC system is normal.

>> INSPECTION END

FREQUENTLY CANNOT DETECT THE VEHICLE AHEAD / DETECTION ZONE IS SHORT

Description

INFOID:0000000008131815

The detection function may become unstable in the following cases.
- When the reflector of the vehicle ahead is deficient/ not clean enough to reflect the ICC sensor.
- When driving a road with extremely sharp corners.
- When the sensor cannot detect the reflector of the vehicle ahead as the vehicle ahead is passing a hill or passing the peak.

Diagnosis Procedure

INFOID:0000000008131816

1. VISUAL CHECK (1)

Check ICC sensor body window for contamination and/or foreign materials.

Do foreign materials adhere?

YES >> GO TO 2.
NO >> GO TO 3.

2. WIPE OUT DIRT AND FOREIGN MATERIALS

Wipe out the contamination and/or foreign materials from the ICC sensor body window.

>> GO TO 7.

3. VISUAL CHECK (2)

Check ICC sensor body window for cracks and scratches.

Are there any cracks or scratches?

YES >> GO TO 5.
NO >> GO TO 4.

4. ADJUST LASER BEAM AIMING

1. Adjust the laser beam aiming. Refer to CCS-66, "Description".
2. Perform ICC system action test. Refer to CCS-71, "Description".
3. Check that the vehicle ahead detection performance improves.

Does it improve?

YES >> INSPECTION END
NO >> GO TO 5.

5. REPLACE ICC SENSOR

1. Replace the ICC sensor. Refer to CCS-171, "Removal and Installation".
2. Adjust the laser beam aiming. Refer to CCS-66, "Description".
3. Perform ICC system action test. Refer to CCS-71, "Description".
4. Check that the vehicle ahead detection performance improves.

Does it improve?

YES >> INSPECTION END
NO >> GO TO 6.

6. REPLACE ICC SENSOR

Replace ADAS control unit. Refer to DAS-55, "Removal and Installation".

>> GO TO 7.

7. CHECK ICC SYSTEM

1. Erase the self-diagnosis results, and then perform “All DTC Reading” again after performing the action test. (Refer to CCS-71, "Description" for action test.)
2. Check that the ICC system is normal.

>> INSPECTION END

THE SYSTEM DOES NOT DETECT THE VEHICLE AHEAD AT ALL

Description

INFOID:0000000008131817

When ICC system is active, the ICC system does not perform any control even through there is a vehicle ahead.

Diagnosis Procedure

INFOID:0000000008131818

1. CHECK ICC SYSTEM DISPLAY ON MULTI INFORMATION DISPLAY

1. Start the self-diagnosis mode of combination meter. Refer to MWI-30, "On Board Diagnosis Function".
2. Check that the multi information display turns on normally.

Is the inspection result normal?

YES >> GO TO 2.
NO >> Replace the combination meter.

2. VISUAL CHECK (1)

Check ICC sensor body window for contamination and/or foreign materials.

Do foreign materials adhere?

YES >> GO TO 3.
NO >> GO TO 4.

3. WIPE OUT DIRT AND FOREIGN MATERIALS

Wipe out the contamination and/or foreign materials from the ICC sensor body window.

>> GO TO 8.

4. VISUAL CHECK (2)

Check ICC sensor body window for cracks and/or scratches.

Are there cracks?

YES >> GO TO 6.
NO >> GO TO 5.

5. LASER BEAM AIMING ADJUSTMENT

1. Adjust the laser beam aiming. Refer to CCS-66, "Description".
2. Perform ICC system action test. Refer to CCS-71, "Description".
3. Check that the vehicle ahead detection performance improves.

Does it improve?

YES >> INSPECTION END
NO >> GO TO 6.

6. REPLACE ICC SENSOR

1. Replace the ICC sensor. Refer to CCS-171, "Removal and Installation".
2. Adjust the laser beam aiming. Refer to CCS-66, "Description".
3. Perform ICC system action test. Refer to CCS-71, "Description".
4. Check that the vehicle ahead detection performance improves.

Does it improve?

YES >> INSPECTION END
NO >> GO TO 7.

7. REPLACE ADAS CONTROL UNIT

Replace ADAS control unit. Refer to DAS-55, "Removal and Installation".

>> GO TO 8.

8. CHECK ICC SYSTEM

1. Erase the self-diagnosis results, and then perform “All DTC Reading” again after performing the action test. (Refer to CCS-71, "Description" for action test.)
2. Check that the ICC system is normal.

>> INSPECTION END

NORMAL OPERATING CONDITION

Description

INFOID:0000000008131819

PRECAUTIONS FOR VEHICLE-TO-VEHICLE DISTANCE CONTROL MODE

- ICC system is only an aid to assist the driver and is not a collision warning or avoidance device. It is the driver's responsibility to stay alert, drive safely and be in control of the vehicle at all times.
- The system is primarily intended for use on straight, dry, open roads with light traffic. It is not advisable to use the system in city traffic or congested areas.
- This system will not adapt automatically to road conditions. This system should be used in evenly flowing traffic. Do not use the system on roads with sharp curves, or on icy roads, in heavy rain or in fog.
- The ICC sensor will not detect under most conditions.
- Stationary and slow moving vehicles.
- Pedestrians or objects in the roadway.
- Oncoming vehicles in the some lane.
- Motorcycles traveling offset in the travel lane.
- As there is a performance limit to the distance control function, never rely solely on the ICC system. This system does not correct careless, inattentive or absent-minded driving, or overcome poor visibility in rain, fog, or other bad weather. Decelerate the vehicle speed by depressing the brake pedal, depending on the distance to the vehicle ahead and the surrounding circumstances in order to maintain a safe distance between vehicles.
- If the vehicle ahead comes to a stop, the vehicle decelerates to a standstill within the limitations of the system. The system will cancel once it judges that the vehicle has come to a standstill and sound a warning chime. To prevent the vehicle from moving, the driver must depress the brake pedal.
- The system may not detect the vehicle in front of the driver in certain road or weather conditions. To avoid accidents, never use the ICC system under the following conditions:
- On roads where the traffic is heavy or there are sharp curves.
- On slippery road surfaces such as on ice or snow, etc.
- During bad weather (rain, fog, snow, etc.)
- When the front wiper is operated at the high speed (HI) position, the ICC system is automatically canceled. If the vehicle is equipped with a rain sensing auto wiper, the system may cancel when the wipers are set to the AUTO position.
- When strong light (for example, at sunrise or sunset) is directly shining on the front of the vehicle.
- When rain, snow or dirt adhere to the system sensor.
- On steep downhill roads (the vehicle may go beyond the set vehicle speed and frequent braking may result in overheating the brakes).
- On repeated uphill and downhill roads.
- When traffic conditions make it difficult to keep a proper distance between vehicles because of frequent acceleration or deceleration.
- Do not use the ICC system if own vehicle is towing a trailer. The system may not detect a vehicle ahead.
- In some road or traffic conditions, a vehicle or object can unexpectedly come into the sensor detection zone and cause automatic braking. The driver may need to control the distance from other vehicles using the accelerator pedal. Always stay alert and avoid using the ICC system when it is not recommended in this section.
- The vehicle-to-vehicle distance control mode uses a sensor located on the front of the vehicle to detect vehicles traveling ahead. The sensor generally detects the signals returned from the reflectors on a vehicle ahead. Therefore, if the sensor cannot detect the reflector on the vehicle ahead, the ICC system may not maintain the selected distance.
- The following are some conditions in which the sensor cannot detect the signals:
- When the reflector of the vehicle ahead is positioned high on the vehicle (trailer, etc.).
- When the reflector on the vehicle ahead is missing, damaged or covered.
- When the reflector of the vehicle ahead is covered with dirt, snow and road spray.
- When the snow or road spray from traveling vehicles reduces the sensor's visibility.
- When dense exhaust or other smoke (black smoke) from vehicles reduces the sensor's visibility.
- When excessively heavy baggage is loaded in the rear seat or the trunk room of own vehicle.
- The ICC system is designed to automatically check the sensor's operation within the limitation of the system. When the sensor is covered with dirt or is obstructed, the system will automatically be canceled. If the sensor is covered with ice, a transparent or translucent vinyl bag, etc., the ICC system may not detect them. In these instances, the vehicle-to-vehicle distance control mode may not cancel and may not be able to maintain the selected following distance from the vehicle ahead. Be sure to check and clean the sensor regularly.

- The ICC system does not control vehicle speed or warn the driver when own vehicle approaches stationary and slow moving vehicles. The driver must pay attention to vehicle operation to maintain proper distance from vehicles ahead when approaching toll gates or traffic congestion.
- The detection zone of the ICC sensor is limited. A vehicle ahead must be in the detection zone for the vehicle-to-vehicle distance detection mode to maintain the selected distance from the vehicle ahead. A vehicle ahead may move outside of the detection zone due to its position within the same lane of travel. Motorcycles may not be detected in the same lane ahead if they are traveling offset from the center line of the lane. A vehicle that is entering the lane ahead may not be detected until the vehicle has completely moved into the lane. If this occurs, the ICC system may warn the driver by blinking the system indicator and sounding the chime. The driver may have to manually control the proper distance away from vehicle traveling ahead.

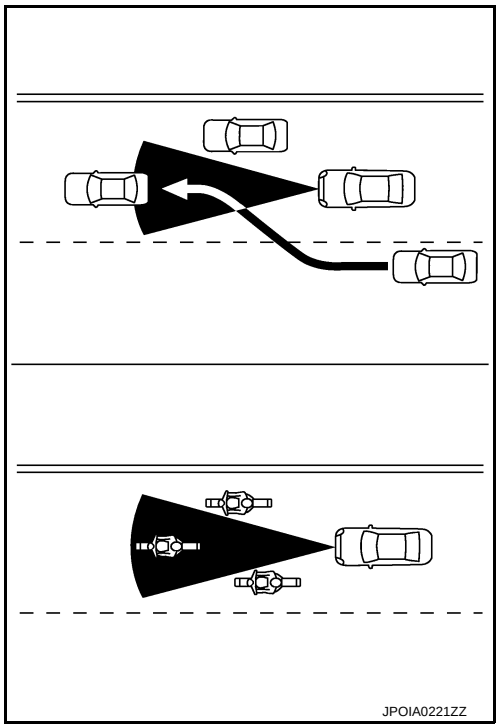

- When driving on some roads, such as winding, hilly, curved, narrow roads, or roads which are under construction, the ICC sensor may detect vehicles in a different lane, or may temporarily not detect a vehicle traveling ahead. This may cause the ICC system to decelerate or accelerate the vehicle. The detection of vehicles may also be affected by vehicle operation (steering maneuver or traveling position in the lane, etc.) or vehicle condition. If this occurs, the ICC system may warn the driver by blinking the system indicator and sounding the chime unexpectedly. The driver will have to manually control the proper distance away from the vehicle traveling ahead.

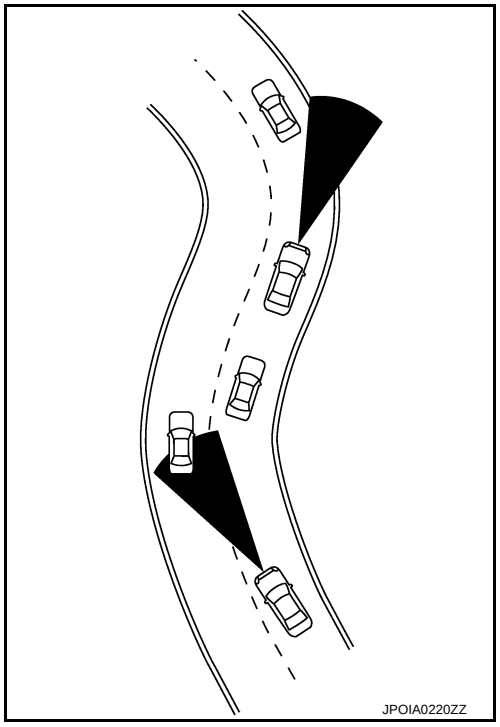

- When driving on the freeway at a set speed and approaching a slower traveling vehicle ahead, the ICC will adjust the speed to maintain the distance, selected by the driver, from the vehicle ahead. If the vehicle ahead changes lanes or exits the freeway, the ICC system will accelerate and maintain the speed up to the set speed. Pay attention to the driving operation to maintain control of the vehicle as it accelerates to the set speed. The vehicle may not maintain the set speed on winding or hilly roads. If this occurs, the driver will have to manually control the vehicle speed.

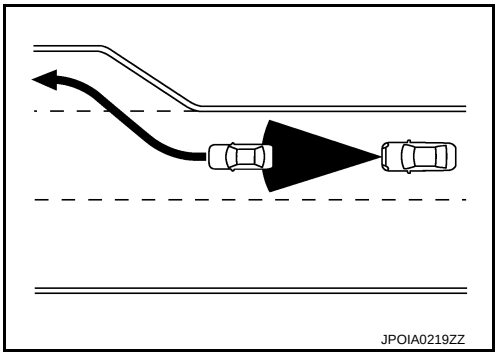

- The sensor sensitivity can be affected by vehicle operation (steering maneuver or driving position in the lane) or traffic or vehicle condition (for example, if a vehicle is being driven with some damage).
- Normally when controlling the distance to a vehicle ahead, this system automatically accelerates or decelerates own vehicle according to the speed of the vehicle ahead. Depress the accelerator to properly accelerate own vehicle when acceleration is required for a lane change. Depress the brake pedal when deceleration is required to maintain a safe distance to the vehicle ahead due to its sudden braking or if a vehicle cuts in. Always stay alert when using the ICC system.

PRECAUTIONS FOR CONVENTIONAL (FIXED SPEED) CRUISE CONTROL MODE

- In the conventional (fixed speed) cruise control mode, a warning chime does not sound to warn the driver if own vehicle is too close to the vehicle ahead, as neither the presence of the vehicle ahead nor the vehicle-to-vehicle distance is detected.
- Pay special attention to the distance between own vehicle and the vehicle ahead or a collision could occur.
- Always confirm the setting in the ICC system display.
- Do not use the conventional (fixed speed) cruise control mode when driving under the following conditions:
- When it is not possible to keep the vehicle at a set speed.
- In heavy traffic or in traffic that varies in speed.
- On winding or hilly roads.
- On slippery roads (rain, snow, ice, etc.).
- In very windy areas.
- Doing so could cause a loss of vehicle control and result in an accident.
- To avoid accidentally engaging cruise control, make sure to the MAIN switch OFF when not using ICC system.

REMOVAL AND INSTALLATION

ICC SENSOR

Exploded View

INFOID:0000000008131820

CAUTION:
Always perform the laser beam aiming adjustment and check the operation after the replacement, removal and installation of ICC sensor.

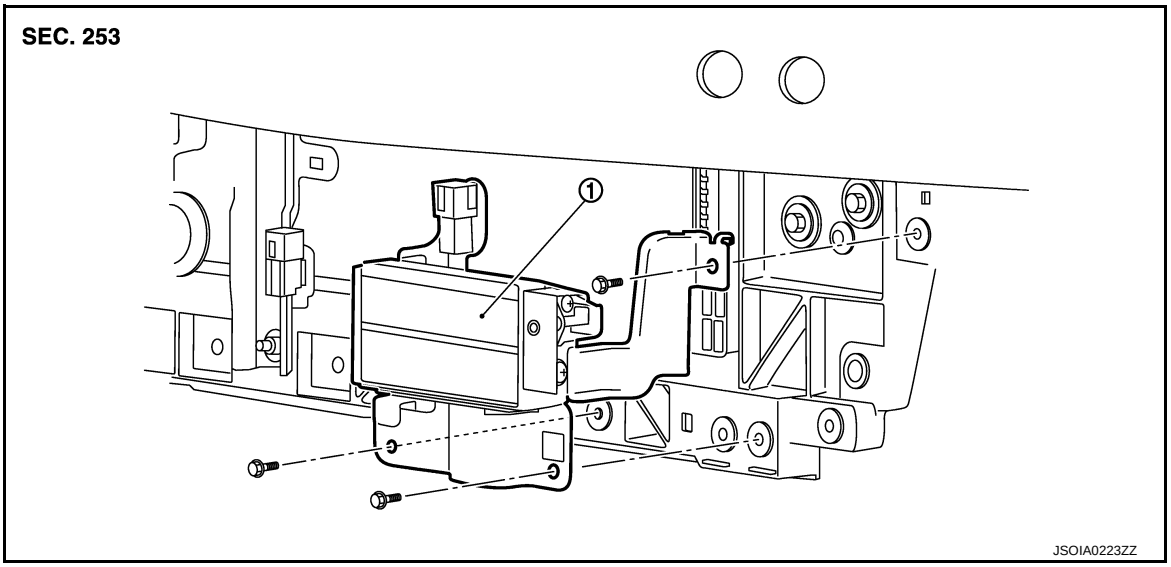

1. ICC sensor

Removal and Installation

INFOID:0000000008131821

REMOVAL

1. Remove engine under cover. Refer to EXT-28, "ENGINE UNDER COVER : Removal and Installation".
2. Remove bolts of the left fender protector (front) front side. Refer to EXT-24, "FENDER PROTECTOR : Removal and Installation".
3. Remove bolts of condenser side seal lower (LH) lower side to obtain space for work. Refer to DLK-142, "Removal and Installation".
4. Disconnect ICC sensor connector.
5. Remove mounting bolts from ICC sensor.
6. Remove ICC sensor.

INSTALLATION

Install in the reverse order of removal.

CAUTION:
Always perform the laser beam aiming adjustment and check the operation after the replacement, removal, and installation of ICC sensor. Refer to CCS-65, "Description".

ICC STEERING SWITCH

Exploded View

INFOID:0000000008131822

Refer to ST-32, "Exploded View".

SYSTEM DESCRIPTION

AUTOMATIC SPEED CONTROL DEVICE (ASCD)

Information

INFOID:0000000008131823

Automatic Speed Control Device (ASCD) system is controlled by ECM.
Regarding the information for ASCD system, refer to following;

- VQ37VHR: EC-62, "AUTOMATIC SPEED CONTROL DEVICE (ASCD) : System Description"
- VK56VD: EC-983, "AUTOMATIC SPEED CONTROL DEVICE (ASCD) : System Description"