SECTION SE

SEAT

CONTENTS

BASIC INSPECTION

DIAGNOSIS AND REPAIR WORK FLOW

Work Flow

INFOID:0000000004040222

DETAILED FLOW

1. OBTAIN INFORMATION ABOUT SYMPTOM

Interview the customer to obtain as much information as possible about the malfunction (conditions and environment when the malfunction occurred) when the customer brings the vehicle in.

>> GO TO 2.

2. REPRODUCE THE MALFUNCTION INFORMATION

Check the malfunction on the vehicle that the customer describes.
Inspect the relation of the symptoms and the condition when the symptoms occur.

>> GO TO 3.

3. IDENTIFY THE MALFUNCTIONING SYSTEM WITH “SYMPTOM DIAGNOSIS”

Use “Symptom diagnosis” from the symptom inspection result in step 2 and then identify where to start performing the diagnosis based on possible causes and symptoms.

>> GO TO 4.

4. IDENTIFY THE MALFUNCTIONING PARTS WITH “COMPONENT DIAGNOSIS”

Perform the diagnosis with “Component diagnosis” of the applicable system.

>> GO TO 5.

5. REPAIR OR REPLACE THE MALFUNCTIONING PARTS

Repair or replace the specified malfunctioning parts.

>> GO TO 6.

6. FINAL CHECK

Check that malfunctions are not reproduced when obtaining the malfunction information from the customer, referring to the symptom inspection result in step 2.

Are the malfunctions corrected?

YES >> Inspection End.
NO >> GO TO 3.

FUNCTION DIAGNOSIS

CLIMATE CONTROLLED SEAT SYSTEM

System Diagram

INFOID:0000000004040230

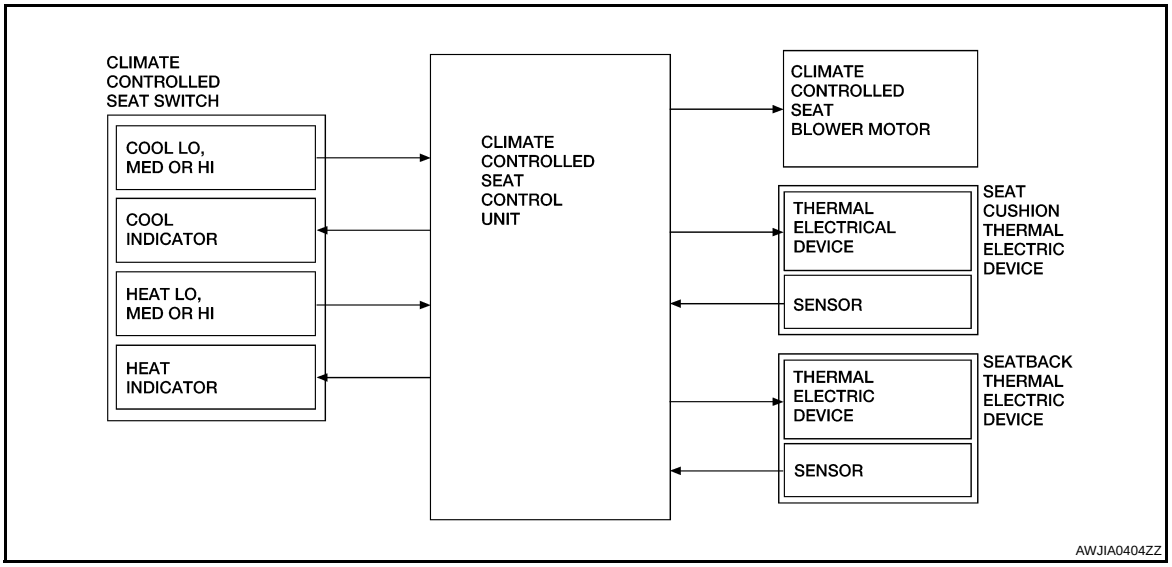

System Description

INFOID:0000000004040231

- The climate controlled seat system is controlled by the climate controlled seat control unit.
- Operation of the climate controlled seat switch sends heated or cooled airflow and adjusts the seat temperature.

SEAT CUSHION AND SEATBACK TEMPERATURE ADJUSTMENT FUNCTION

- A thermal electric device (TED) unit is installed in the seat cushion and seatback. The device heats or cools, sends airflow to the seat surface, and adjusts the seat temperature.
- The thermal electric device (TED) is a heat exchanger that has a function to heat or cool the airflow from the climate controlled seat blower motor. By changing the direction of the current from the power supply, the device takes or gives heat, and adjusts the heat exchange process depending on voltage.

NOTE:
The climate controlled seat blower motor maintains low speed for approximately 60 seconds after turning the climate controlled seat switch off.

CAUTION:
- **The thermal electric device has a dual-climate function that allows one side to operate at a high temperature and the other to operate at a low temperature simultaneously.**
- **Before starting work, always turn OFF the switch and check that the thermal electric device is cold.**

FAIL-SAFE

The fail-safe function is adopted for the climate controlled seat control unit. Refer to SE-48, "Fail-safe".

Component Parts Location

INFOID:0000000004040232

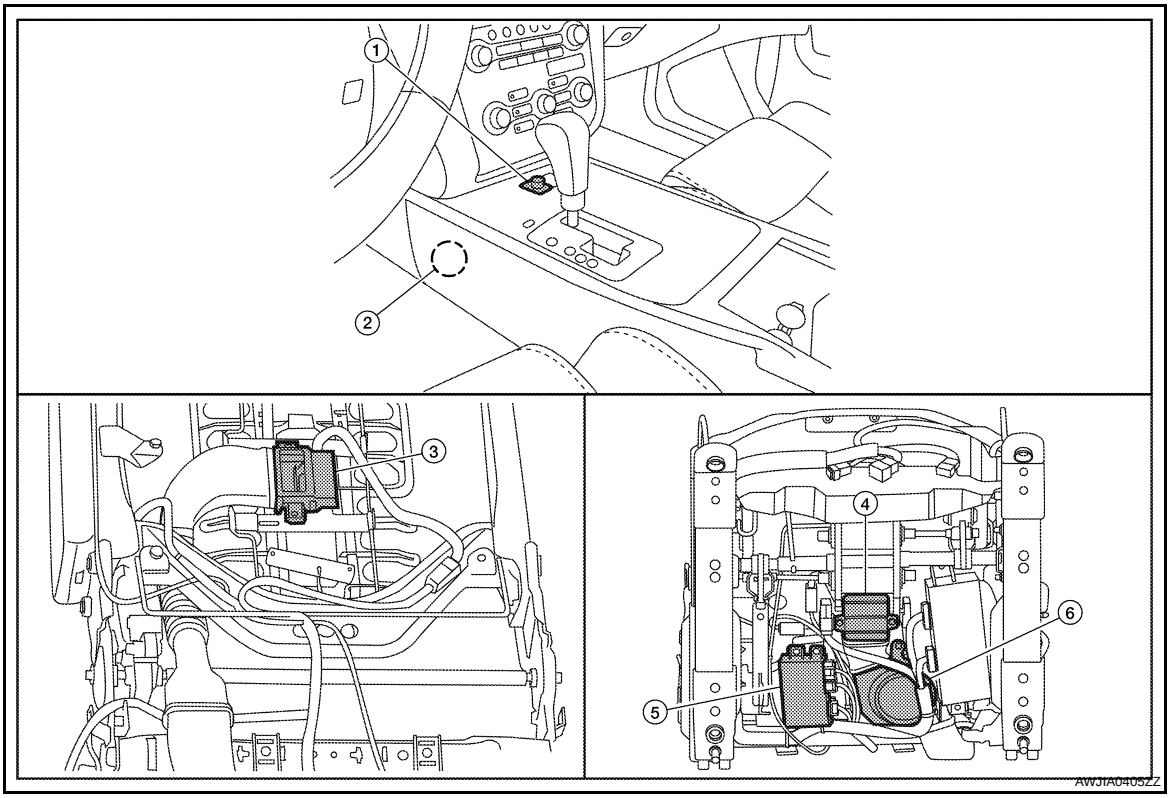

1. Climate controlled seat switch M302
2. Climate controlled seat relay M58
3. Seatback thermal electric device B218
4. Seat cushion thermal electric device B219
5. Climate controlled seat control unit B212, B216, B217
6. Climate controlled seat blower motor B220

Component Description

INFOID:0000000004289496

Item	Function
Climate controlled seat relay	Supplies power to the climate controlled seat control unit in accordance with the key switch position that is ON or OFF
Climate controlled seat control unit	Installed in the seat cushion backside and controls the climate controlled seat blower motor, seatback thermal electric device, and seat cushion thermal electric device in accordance with the input signal
Climate controlled seat switch	Installed in the center console and transmits signals to climate controlled seat control unit in accordance with the HEAT (heated airflow) or COOL (cooled airflow) switch operation and the temperature switch operation
Climate controlled seat blower motor	Installed in the seat cushion backside and sends the airflow to the seatback thermal electric device and seat cushion thermal electric device in accordance with the control from the climate controlled seat control unit
Seatback thermal electric device	Installed in the seatback backside and heats or cools the airflow from the climate controlled seat blower motor in accordance with the control from the climate controlled seat control unit
Seat cushion thermal electric device	Installed in the seat cushion backside and heats or cools the airflow from the climate controlled seat blower motor in accordance with the control from the climate controlled seat control unit

COMPONENT DIAGNOSIS

POWER SUPPLY AND GROUND CIRCUIT

CLIMATE CONTROLLED SEAT CONTROL UNIT

CLIMATE CONTROLLED SEAT CONTROL UNIT : Diagnosis Procedure

INFOID:0000000004040234

1. CHECK FUSES

Check for blown fuses.

System component	Power Source	Fuse or Fusible Link	Location
Climate controlled seat control unit	Ignition switch ON or START	3 (10A)	Fuse block (J/B)
	Battery	28 (15A)	Fuse and fusible link box
	Battery	H (40A)	Fuse and fusible link box

Is the inspection result normal?

YES >> GO TO 2.
NO >> If fuse or fusible link is blown, be sure to eliminate cause of malfunction before installing new fuse or fusible link.

2. CHECK BATTERY POWER SUPPLY CIRCUIT

1. Turn ignition switch OFF.
2. Disconnect climate controlled seat control unit connector B217.
3. Check voltage between climate controlled seat control unit connector B217 terminal 29 and ground.

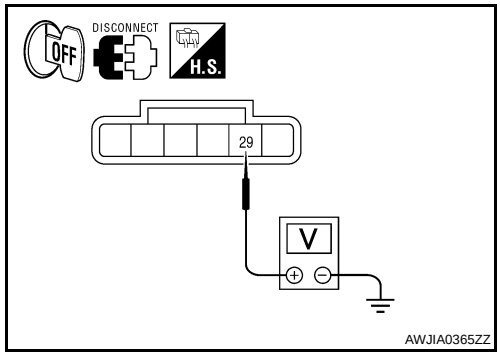

Connector	Terminal	Ground	Voltage (Approx.)
B217	29	—	Battery voltage

Is the inspection result normal?

YES >> GO TO 3.
NO >> GO TO 6.

3. CHECK IGNITION POWER SUPPLY CIRCUIT

1. Disconnect climate controlled seat control unit connector B216.
2. Check voltage between climate controlled seat control unit connector B216 terminal 21 and ground.

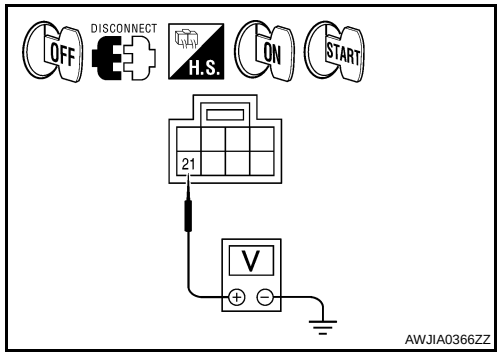

Connector	Terminal	Ground	IgnitIon switch	Voltage (Approx.)
B216	21	—	OFF	0V
			ON	Battery voltage
			START	Battery voltage

Is the inspection result normal?

YES >> GO TO 4.
NO >> GO TO 5.

4. CHECK GROUND CIRCUIT

1. Turn ignition switch OFF.
2. Check continuity between climate controlled seat control unit connector B217 terminal 30 and ground.

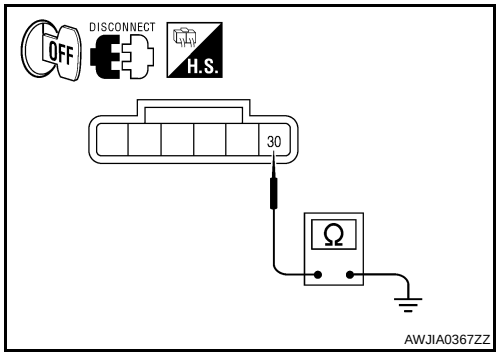

Connector	Terminal	Ground	Continuity
B217	30	—	Yes

Is the inspection result normal?

YES >> Inspection End.
NO >> Repair the harness or connectors.

5. CHECK CLIMATE CONTROLLED SEAT RELAY

Perform the climate controlled seat relay component inspection. Refer to SE-8, "CLIMATE CONTROLLED SEAT CONTROL UNIT : Component Inspection (Climate Controlled Seat Relay)".

Is the inspection result normal?

YES >> GO TO 8.
NO >> Replace the climate controlled seat relay.

6. CHECK CIRCUIT BREAKER POWER SUPPLY CIRCUIT

1. Disconnect the circuit breaker connector M84.
2. Check voltage between circuit breaker connector M84 terminal 1 and ground.

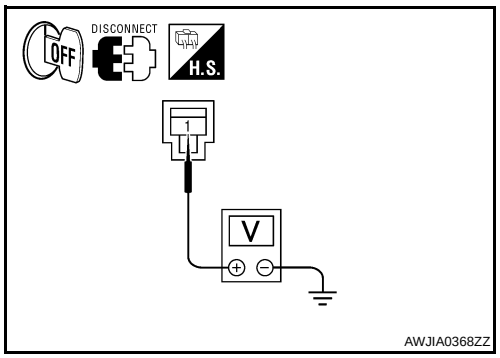

Connector	Terminal	Ground	Voltage (Approx.)
M84	1	—	Battery voltage

Is the inspection result normal?

YES >> GO TO 7.
NO >> Repair the harness or connectors.

7. CHECK BATTERY POWER SUPPLY CIRCUIT FOR OPEN

Check continuity between circuit breaker connector M84 (A) terminal 2 and climate controlled seat control unit connector B217 (B) terminal 29.

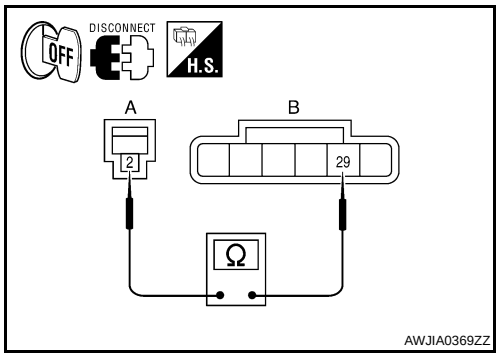

Circuit Breaker		Climate Controlled Seat Control Unit		Continuity
Connector	Terminal	Connector	Terminal	
M84 (A)	2	B217 (B)	29	Yes

Is the inspection result normal?

YES >> Replace the circuit breaker.
NO >> Repair the harness or connectors.

8. CHECK CLIMATE CONTROLLED SEAT RELAY BATTERY POWER SUPPLY CIRCUIT

1. Disconnect climate controlled seat relay connector.
2. Check voltage between climate controlled seat relay connector M58 terminal 3 and ground.

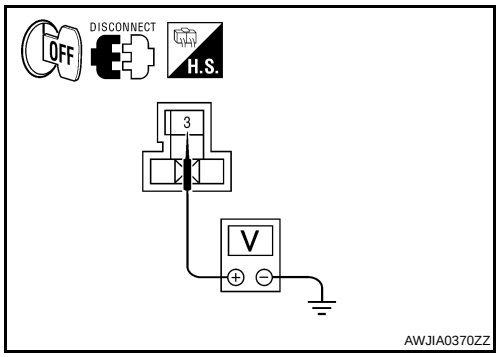

Connector	Terminal	Ground	Voltage (Approx.)
M58	3	—	Battery voltage

Is the inspection result normal?

YES >> GO TO 9.
NO >> Repair the harness or connectors.

9. CHECK CLIMATE CONTROLLED SEAT RELAY IGNITION POWER SUPPLY CIRCUIT

Check voltage between climate controlled seat relay connector M58 terminal 2 and ground.

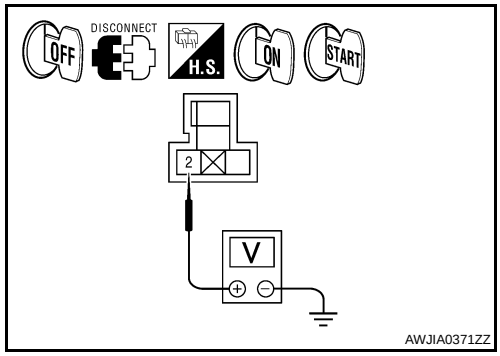

Connector	Terminal	Ground	Ignition switch	Voltage (Approx.)
M58	2	—	OFF	0V
			ON	Battery voltage
			START	Battery voltage

Is the inspection result normal?

YES >> GO TO 10.
NO >> Repair the harness or connectors.

10. CHECK IGNITION POWER SUPPLY CIRCUIT FOR OPEN

Check continuity between climate controlled seat relay connector M58 (A) terminal 5 and climate controlled seat control unit connector B216 (B) terminal 21.

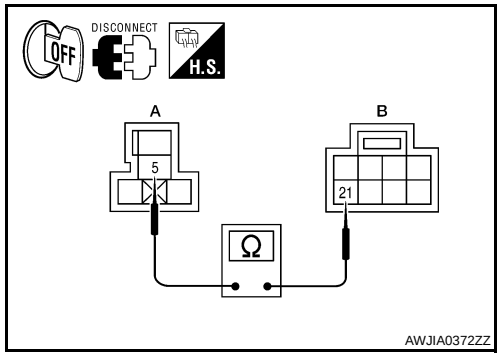

Climate Controlled Seat Relay		Climate Controlled Seat Control Unit		Continuity
Connector	Terminal	Connector	Terminal	
M58 (A)	5	B216 (B)	21	Yes

Is the inspection result normal?

YES >> GO TO 11.
NO >> Repair the harness or connectors.

11. CHECK CLIMATE CONTROLLED SEAT RELAY GROUND CIRCUIT

Check continuity between climate controlled seat relay connector M58 terminal 1 and ground.

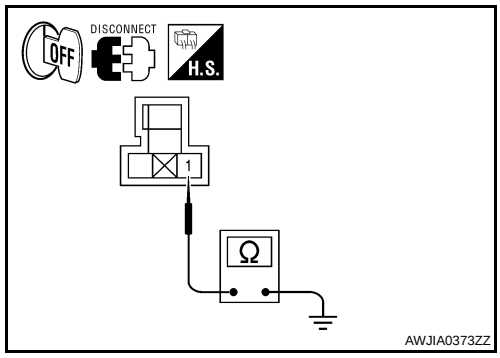

Connector	Terminal	Ground	Continuity
M58	1	—	Yes

Is the inspection result normal?

YES >> Check intermittent incident. Refer to GI-39, "Intermittent Incident".
NO >> Repair the harness or connectors.

CLIMATE CONTROLLED SEAT CONTROL UNIT : Component Inspection (Climate Controlled Seat Relay)

INFOID:0000000004215464

1. CHECK CLIMATE CONTROLLED SEAT RELAY

1. Apply battery voltage between terminals 2 and 1 of the climate controlled seat relay.
   CAUTION:
   Connect a fuse between the terminals when applying battery voltage.
2. Check continuity between climate controlled seat relay terminals 5 and 3.

Climate Controlled Seat Relay Terminals	Condition	Continuity
5 and 3	Battery voltage applied between terminals 2 and 1.	Yes

Is the inspection result normal?

YES >> Inspection End.
NO >> Replace climate controlled seat relay.

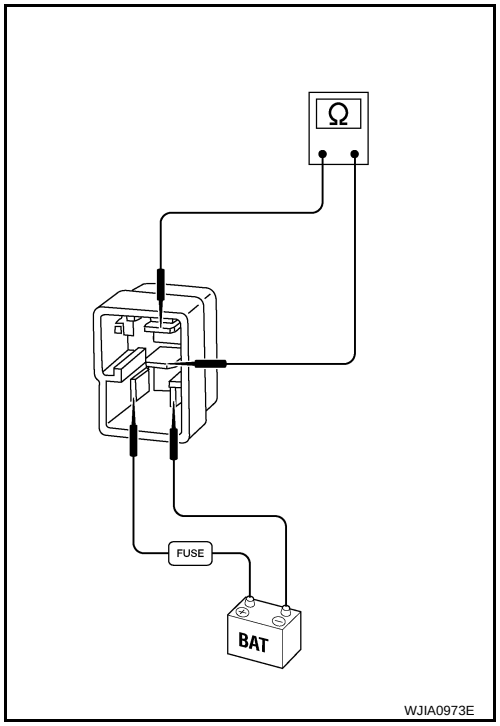

CLIMATE CONTROLLED SEAT BLOWER MOTOR

Description

INFOID:0000000004040251

Sends airflow to the seat cushion and seatback.

Component Function Check

INFOID:0000000004040252

1. CHECK CLIMATE CONTROLLED SEAT BLOWER MOTOR FUNCTION

Turn the climate controlled seat switch to the H (Heat) LO, MED, and HI positions and the C (Cool) LO, MED, and HI positions. Check that the climate controlled seat blower motor operates at low, medium and high speed.

Is the inspection result normal?

YES >> Climate controlled seat blower motor function is OK.
NO >> Refer to SE-10, "Diagnosis Procedure".

Diagnosis Procedure

INFOID:0000000004040253

1. CHECK CLIMATE CONTROLLED SEAT BLOWER MOTOR

Perform climate controlled seat blower motor component inspection. Refer to SE-12, "Component Inspection (Climate Controlled Seat Blower Motor)".

Is the inspection result normal?

YES >> GO TO 2.
NO >> Replace climate controlled seat blower motor.

2. CHECK CLIMATE CONTROLLED SEAT BLOWER MOTOR POWER SUPPLY

1. Turn ignition switch ON.
2. Check voltage between climate controlled seat blower motor connector B220 terminal 2 and ground.

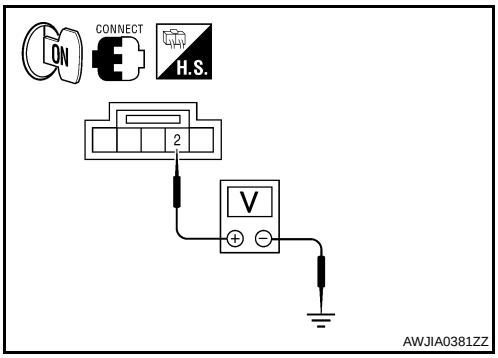

Climate controlled seat blower motor		Ground	Voltage (Approx.)
Connector	Terminal		
B220	2	—	Battery voltage

Is the inspection result normal?

YES >> GO TO 4.
NO >> GO TO 3.

3. CHECK CLIMATE CONTROLLED SEAT BLOWER MOTOR POWER SUPPLY CIRCUIT

1. Turn ignition switch OFF.
2. Disconnect climate controlled seat blower motor connector and climate controlled seat control unit connector B212.
3. Check continuity between climate controlled seat blower motor connector B220 (A) terminal 2 and climate controlled seat control unit connector B212 (B) terminal 7.

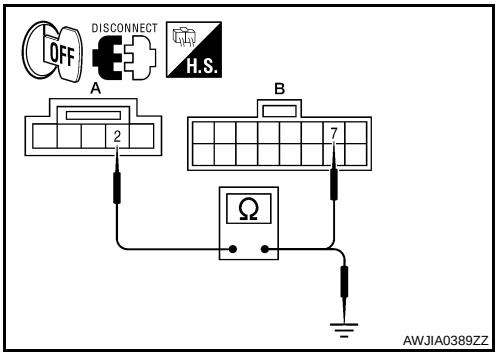

Climate controlled seat blower motor		Climate controlled seat control unit		Continuity
Connector	Terminal	Connector	Terminal	
B220 (A)	2	B212 (B)	7	Yes

4. Check continuity between climate controlled seat blower motor connector B220 (A) terminal 2 and ground.

Climate controlled seat blower motor		Ground	Continuity
Connector	Terminal		
B220 (A)	2	—	No

Is the inspection result normal?

YES >> Replace climate controlled seat control unit.
NO >> Repair harness or connectors.

4. CHECK CLIMATE CONTROLLED SEAT BLOWER MOTOR SPEED CONTROL SIGNAL

Check voltage between climate controlled seat blower motor connector B220 terminal 3 and ground.

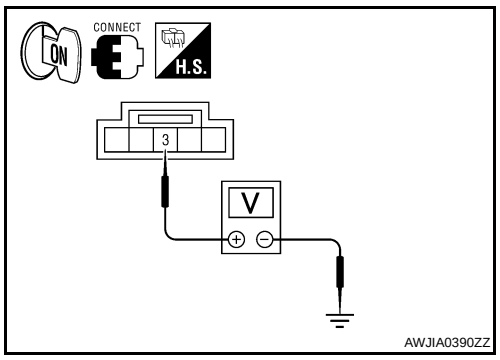

Climate controlled seat blower motor		Ground	Condition	Voltage (Approx.)
Connector	Terminal		Climate controlled seat switch	
B220	3	—	HEAT or COOL	4.5V – 8.0V

Is the inspection result normal?

YES >> GO TO 6.
NO >> GO TO 5.

5. CHECK CLIMATE CONTROLLED SEAT BLOWER MOTOR SPEED CONTROL SIGNAL CIRCUIT

1. Turn ignition switch OFF.
2. Disconnect climate controlled seat blower motor connector and climate controlled seat control unit connector B212.
3. Check continuity between climate controlled seat blower motor connector B220 (A) terminal 3 and climate controlled seat control unit connector B212 (B) terminal 4.

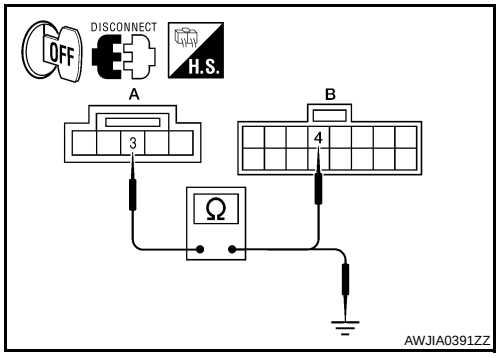

Climate controlled seat blower motor		Climate controlled seat control unit		Continuity
Connector	Terminal	Connector	Terminal	
B220 (A)	3	B212 (B)	4	Yes

4. Check continuity between climate controlled seat blower motor connector B220 (A) terminal 3 and ground.

Climate controlled seat blower motor		Ground	Continuity
Connector	Terminal		
B220 (A)	3	—	No

Is the inspection result normal?

YES >> Replace climate controlled seat control unit.
NO >> Repair harness or connectors.

6. CHECK CLIMATE CONTROLLED SEAT BLOWER MOTOR GROUND CIRCUIT

1. Disconnect climate controlled seat blower motor connector and climate controlled seat control unit connector B212.
2. Check continuity between climate controlled seat blower motor connector B220 (A) terminal 4 and climate controlled seat control unit connector B212 (B) terminal 6.

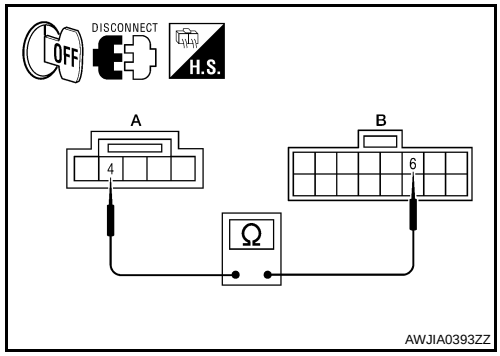

Climate controlled seat blower motor		Climate controlled seat control unit		Continuity
Connector	Terminal	Connector	Terminal	
B220 (A)	4	B212 (B)	6	Yes

Is the inspection result normal?

YES >> Replace climate controlled seat control unit.
NO >> Repair harness or connectors.

Component Inspection (Climate Controlled Seat Blower Motor)

INFOID:0000000004199489

1. CHECK CLIMATE CONTROLLED SEAT BLOWER MOTOR PART 1

1. Turn ignition switch OFF.
2. Disconnect climate controlled seat blower motor connector.
3. Measure the resistance of the climate controlled seat blower motor between terminals 2 and 4.

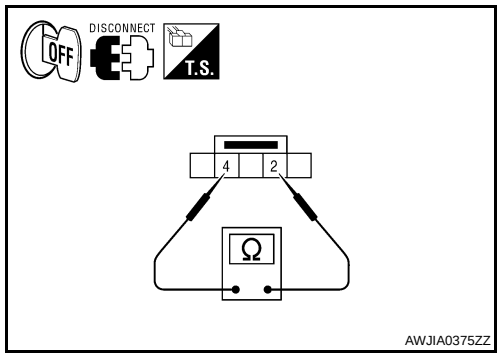

Climate Controlled Seat Blower Motor Terminals		Resistance
2	4	600 – 800 Ω

Is the inspection result normal?

YES >> GO TO 2.
NO >> Replace climate controlled seat blower motor. Refer to SE-61, "Exploded View".

2. CHECK CLIMATE CONTROLLED SEAT BLOWER MOTOR PART 2

Measure the resistance of the climate controlled seat blower motor between terminals 3 and 4.

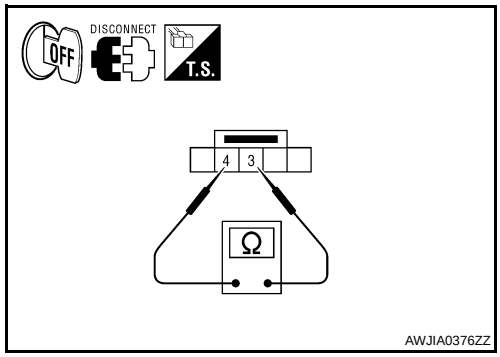

Climate Controlled Seat Blower Motor Terminals		Resistance
3	4	2500 – 2800 Ω

Is the inspection result normal?

YES >> Inspection End.
NO >> Replace climate controlled seat blower motor. Refer to SE-61, "Exploded View".

SEAT CUSHION THERMAL ELECTRIC DEVICE

Description

INFOID:0000000004269452

Provides cooling and heat for the seat cushion.

Component Function Check

INFOID:0000000004269453

1. CHECK SEAT CUSHION THERMAL ELECTRIC DEVICE FUNCTION

1. Turn the climate controlled seat switch to the H (Heat) HI position and check that the seat cushion thermal electric device operates correctly.
2. Turn the climate controlled seat switch to the C (Cool) HI position and check that the seat cushion thermal electric device operates correctly.

Is the inspection result normal?

YES >> Seat cushion thermal electric device is OK.
NO >> Refer to SE-13, "Diagnosis Procedure".

Diagnosis Procedure

INFOID:0000000004269454

1. CHECK SEAT CUSHION THERMAL ELECTRIC DEVICE

Perform thermal electric device component inspection for the seat cushion. Refer to SE-14, "Component Inspection (Thermal Electric Device)".

Is the inspection result normal?

YES >> GO TO 2.
NO >> Replace seat cushion thermal electric device.

2. CHECK SEAT CUSHION THERMAL ELECTRIC DEVICE CIRCUITS

1. Turn ignition switch OFF.
2. Disconnect seat cushion thermal electric device connector and climate controlled seat control unit connector B217.
3. Check continuity between seat cushion thermal electric device connector B219 (A) terminals 1, 2 and climate controlled seat control unit connector B217 (B) terminals 26, 27.

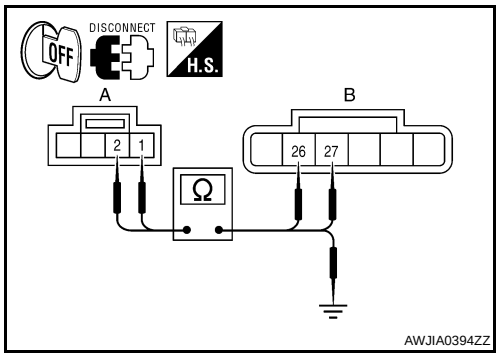

Seat cushion thermal electric device		Climate controlled seat control unit		Continuity
Connector	Terminal	Connector	Terminal	
B219 (A)	1	B217 (B)	27	Yes
	2		26	

4. Check continuity between seat cushion thermal electric device connector B219 (A) terminals 1, 2 and ground.

Seat cushion thermal electric device		Ground	Continuity
Connector	Terminal		
B219 (A)	1		No
	2		

Is the inspection result normal?

YES >> GO TO 3.
NO >> Repair harness or connectors.

3. CHECK SEAT CUSHION THERMAL ELECTRIC DEVICE SENSOR CIRCUITS

1. Disconnect climate controlled seat control unit connector B212.
2. Check continuity between seat cushion thermal electric device connector B219 (A) terminals 3, 4 and climate controlled seat control unit connector B212 (B) terminals 13, 14.

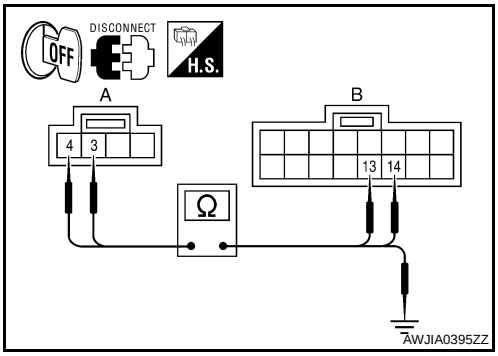

Seat cushion thermal electric device		Climate controlled seat control unit		Continuity
Connector	Terminal	Connector	Terminal	
B219 (A)	3	B212 (B)	14	Yes
	4		13	

3. Check continuity between seat cushion thermal electric device connector B219 (A) terminals 3, 4 and ground.

Seat cushion thermal electric device		Ground	Continuity
Connector	Terminal		
B219 (A)	3		No
	4		

Is the inspection result normal?

YES >> Replace climate controlled seat control unit.
NO >> Repair harness or connectors.

Component Inspection (Thermal Electric Device)

INFOID:0000000004199490

1. CHECK THERMAL ELECTRIC DEVICE

1. Turn ignition switch OFF.
2. Disconnect thermal electric device connector.
3. Measure the resistance of the thermal electric device between terminals 1 and 2.

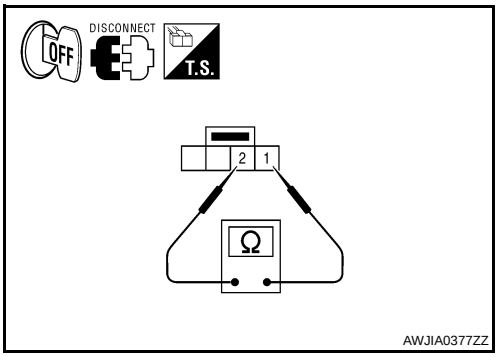

NOTE:
The resistance value in the table below will change under any of the following conditions:
- air blowing across the thermal electric device
- changing the surrounding temperature of the thermal electric device
- measuring at other than 23°C (73°F)

Thermal electric device terminals		Temperature	Resistance
1	2	23°C (73°F)	0.9 – 10 Ω

Is the inspection result normal?

YES >> GO TO 2.
NO >> Replace thermal electric device. Refer to SE-61, "Exploded View".

2. CHECK THERMAL ELECTRIC DEVICE SENSOR

Measure the resistance of the thermal electric device sensor between terminals 3 and 4.

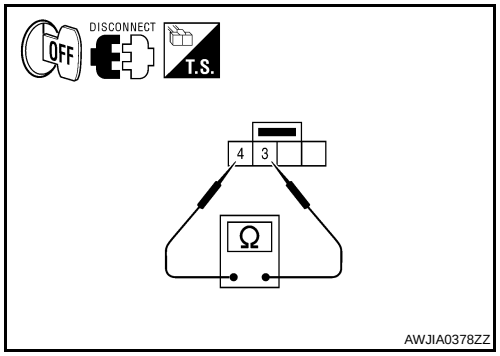

Thermal electric device terminals		Temperature	Resistance
3	4	0 – 10° C (32 – 50° F)	2785– 1660 Ω
		10 – 20° C (50 – 68° F)	1840 – 1135 Ω
		20 – 30° C (68 – 86° F)	1265 – 800 Ω
		30 – 40° C (86 – 104° F)	895 – 565 Ω
		40 – 50° C (104 – 122° F)	635 – 425 Ω

Is the inspection result normal?

YES >> Inspection End.
NO >> Replace thermal electric device. Refer to SE-61, "Exploded View".

SEATBACK THERMAL ELECTRIC DEVICE

Description

INFOID:0000000004199486

Provides cooling and heat for the seatback.

Component Function Check

INFOID:0000000004199487

1. CHECK SEAT BACK THERMAL ELECTRIC DEVICE FUNCTION

1. Turn the climate controlled seat switch to the H (Heat) HI position and check that the seatback thermal electric device operates correctly.
2. Turn the climate controlled seat switch to the C (Cool) HI position and check that the seatback thermal electric device operates correctly.

Is the inspection result normal?

YES >> Seatback thermal electric device is OK.
NO >> Refer to SE-16, "Diagnosis Procedure".

Diagnosis Procedure

INFOID:0000000004199488

1. CHECK SEATBACK THERMAL ELECTRIC DEVICE

Perform thermal electric device component inspection for the seatback. Refer to SE-17, "Component Inspection (Thermal Electric Device)".

Is the inspection result normal?

YES >> GO TO 2.
NO >> Replace seatback thermal electric device.

2. CHECK SEATBACK THERMAL ELECTRIC DEVICE CIRCUITS

1. Turn ignition switch OFF.
2. Disconnect seatback thermal electric device connector and climate controlled seat control unit connector B217.
3. Check continuity between seatback thermal electric device connector B218 (A) terminals 1, 2 and climate controlled seat control unit connector B217 (B) terminals 25, 28.

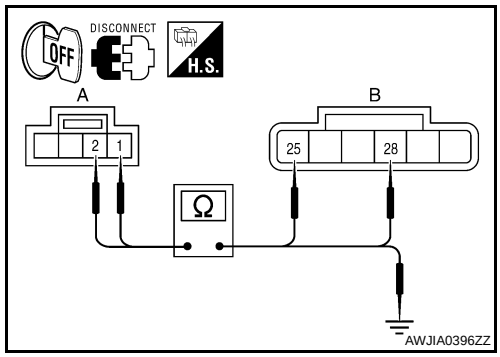

Seatback thermal electric device		Climate controlled seat control unit		Continuity
Connector	Terminal	Connector	Terminal	
B218 (A)	1	B217 (B)	28	Yes
	2		25	

4. Check continuity between seatback thermal electric device connector B218 (A) terminals 1, 2 and ground.

Seatback thermal electric device		Ground	Continuity
Connector	Terminal		
B218 (A)	1		No
	2		

Is the inspection result normal?

YES >> GO TO 3.
NO >> Repair harness or connectors.

3. CHECK SEAT CUSHION THERMAL ELECTRIC DEVICE SENSOR CIRCUITS

1. Disconnect climate controlled seat control unit connector B212.
2. Check continuity between seatback thermal electric device connector B218 (A) terminals 3, 4 and climate controlled seat control unit connector B212 (B) terminals 15, 16.

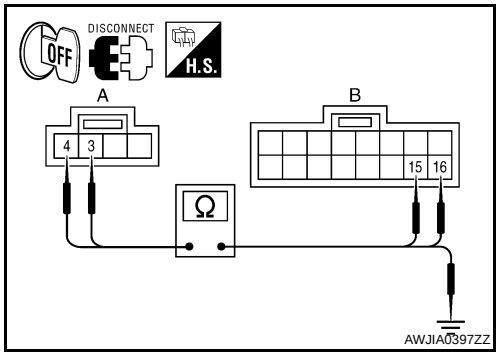

Seatback thermal electric device		Climate controlled seat control unit		Continuity
Connector	Terminal	Connector	Terminal	
B218 (A)	3	B212 (B)	16	Yes
	4		15	

3. Check continuity between seatback thermal electric device connector B218 (A) terminals 3, 4 and ground.

Seatback thermal electric device		Ground	Continuity
Connector	Terminal		
B218 (A)	3		No
	4		

Is the inspection result normal?

YES >> Replace climate controlled seat control unit.
NO >> Repair harness or connectors.

Component Inspection (Thermal Electric Device)

INFOID:0000000004218941

1. CHECK THERMAL ELECTRIC DEVICE

1. Turn ignition switch OFF.
2. Disconnect thermal electric device connector.
3. Measure the resistance of the thermal electric device between terminals 1 and 2.

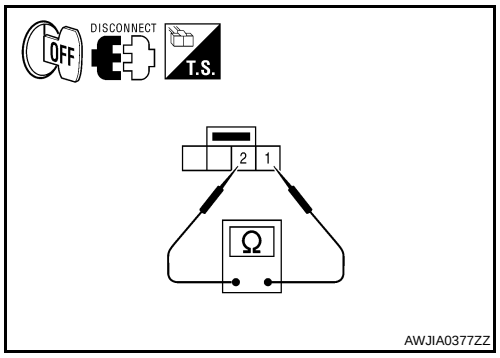

NOTE:
The resistance value in the table below will change under any of the following conditions:
- air blowing across the thermal electric device
- changing the surrounding temperature of the thermal electric device
- measuring at other than 23°C (73°F)

Thermal electric device terminals		Temperature	Resistance
1	2	23°C (73°F)	0.9 – 10 Ω

Is the inspection result normal?

YES >> GO TO 2.
NO >> Replace thermal electric device. Refer to SE-61, "Exploded View".

2. CHECK THERMAL ELECTRIC DEVICE SENSOR

Measure the resistance of the thermal electric device sensor between terminals 3 and 4.

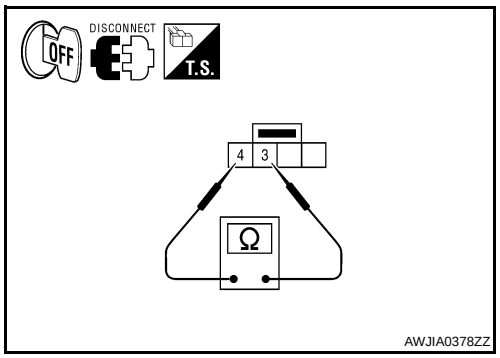

Thermal electric device terminals		Temperature	Resistance
3	4	0 – 10° C (32 – 50° F)	2785– 1660 Ω
		10 – 20° C (50 – 68° F)	1840 – 1135 Ω
		20 – 30° C (68 – 86° F)	1265 – 800 Ω
		30 – 40° C (86 – 104° F)	895 – 565 Ω
		40 – 50° C (104 – 122° F)	635 – 425 Ω

Is the inspection result normal?

YES >> Inspection End.
NO >> Replace thermal electric device. Refer to SE-61, "Exploded View".

CLIMATE CONTROLLED SEAT SWITCH

Description

INFOID:0000000004269455

Provides inputs to the climate controlled seat control unit for climate controlled seat operation.

Component Function Check

INFOID:0000000004269456

1. CHECK CLIMATE CONTROLLED SEAT SWITCH FUNCTION

Turn the climate controlled seat switch to the H (Heat) LO, MED, and HI positions and the C (Cool) LO, MED, and HI positions. Check that the climate controlled seat operates at low, medium and high heat, and low, medium and high cool.

Is the inspection result normal?

YES >> Climate controlled seat switch function is OK.
NO >> Refer to SE-19, "Diagnosis Procedure".

Diagnosis Procedure

INFOID:0000000004269457

1. CHECK CLIMATE CONTROLLED SEAT SWITCH

Perform climate controlled seat switch component inspection. Refer to SE-20, "Component Inspection (Climate Controlled Seat Switch)".

Is the inspection result normal?

YES >> GO TO 2.
NO >> Replace climate controlled seat switch.

2. CHECK CLIMATE CONTROLLED SEAT SWITCH POWER SUPPLY CIRCUIT

1. Turn ignition switch OFF.
2. Disconnect climate controlled seat switch connector and climate controlled seat control unit connector B216.
3. Check continuity between climate controlled seat switch connector M302 (A) terminal 1 and climate controlled seat control unit connector B216 (B) terminal 24.

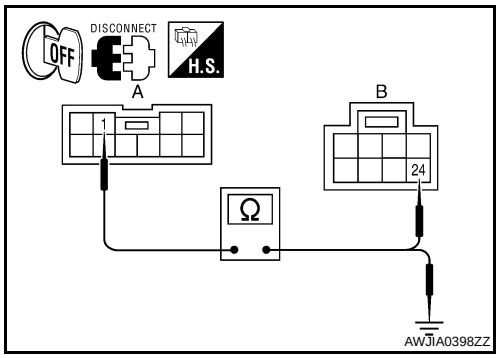

Climate controlled seat switch		Climate controlled seat control unit		Continuity
Connector	Terminal	Connector	Terminal	
M302 (A)	1	B216 (B)	24	Yes

4. Check continuity between climate controlled seat switch connector M302 (A) terminal 1 and ground.

Climate controlled seat switch		Ground	Continuity
Connector	Terminal		
M302 (A)	1		No

Is the inspection result normal?

YES >> GO TO 3.
NO >> Repair harness or connectors.

3. CHECK CLIMATE CONTROLLED SEAT SWITCH COOL CIRCUIT

1. Disconnect climate controlled seat control unit connector B212.
2. Check continuity between climate controlled seat switch connector M302 (A) terminal 2 and climate controlled seat control unit connector B212 (B) terminal 9.

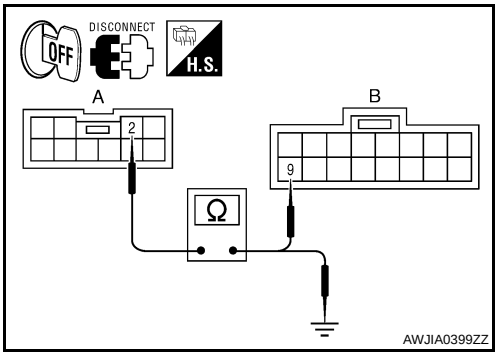

Climate controlled seat switch		Climate controlled seat control unit		Continuity
Connector	Terminal	Connector	Terminal	
M302 (A)	2	B212 (B)	9	Yes

3. Check continuity between climate controlled seat switch connector M302 (A) terminal 2 and ground.

Climate controlled seat switch		Ground	Continuity
Connector	Terminal		
M302 (A)	2		No

Is the inspection result normal?

YES >> GO TO 4.
NO >> Repair harness or connectors.

4. CHECK CLIMATE CONTROLLED SEAT SWITCH HEAT CIRCUIT

1. Check continuity between climate controlled seat switch connector M302 (A) terminal 3 and climate controlled seat control unit connector B212 (B) terminal 1.

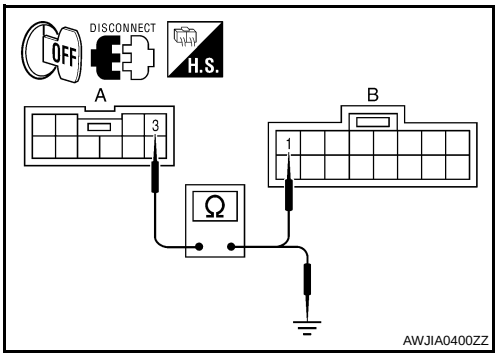

Climate controlled seat switch		Climate controlled seat control unit		Continuity
Connector	Terminal	Connector	Terminal	
M302 (A)	3	B212 (B)	1	Yes

2. Check continuity between climate controlled seat switch connector M302 (A) terminal 3 and ground.

Climate controlled seat switch		Ground	Continuity
Connector	Terminal		
M302 (A)	3		No

Is the inspection result normal?

YES >> Replace climate controlled seat control unit.
NO >> Repair harness or connectors.

Component Inspection (Climate Controlled Seat Switch)

INFOID:0000000004040246

1. CHECK CLIMATE CONTROLLED SEAT SWITCH

1. Disconnect climate controlled seat switch connector.
2. Check continuity between climate controlled seat switch terminals.

Terminals		Condition	Continuity
1	3	Climate controlled seat switch HEAT	Yes
		Other than above	No
	2	Climate controlled seat switch COOL	Yes
		Other than above	No

Is the inspection result normal?

YES >> Inspection End.
NO >> Replace climate controlled seat switch. Refer to SE-61, "Exploded View".

CLIMATE CONTROLLED SEAT SWITCH INDICATOR

Description

INFOID:0000000004040283

Illuminates the climate controlled seat switch to indicate operating status.

Component Function Check

INFOID:0000000004040284

1. CHECK CLIMATE CONTROLLED SEAT SWITCH INDICATOR FUNCTION

Check that the indicators for the climate controlled seat switch operate in both COOL and HEAT modes.

Is the inspection result normal?

YES >> Climate controlled seat switch indicator function is OK.
NO >> Refer to SE-22, "Diagnosis Procedure".

Diagnosis Procedure

INFOID:0000000004040285

1. CHECK CLIMATE CONTROLLED SEAT SWITCH INDICATOR

Perform climate controlled seat switch indicator component inspection. Refer to SE-23, "Component Inspection (Climate Controlled Seat Switch Indicator)".

Is the inspection result normal?

YES >> GO TO 2.
NO >> Replace climate controlled seat switch.

2. CHECK CLIMATE CONTROLLED SEAT SWITCH COOL INDICATOR CIRCUIT

1. Turn ignition switch OFF.
2. Disconnect climate controlled seat switch connector and climate controlled seat control unit connector B216.
3. Check continuity between climate controlled seat switch connector M302 (A) terminal 4 and climate controlled seat control unit connector B216 (B) terminal 19.

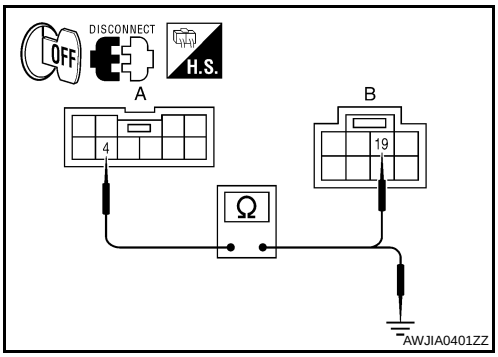

Climate controlled seat switch		Climate controlled seat control unit		Continuity
Connector	Terminal	Connector	Terminal	
M302 (A)	4	B216 (B)	19	Yes

4. Check continuity between climate controlled seat switch connector M302 (A) terminal 4 and ground.

Climate controlled seat switch		Ground	Continuity
Connector	Terminal		
M302 (A)	4		No

Is the inspection result normal?

YES >> GO TO 3.
NO >> Repair harness or connectors.

3. CHECK CLIMATE CONTROLLED SEAT SWITCH HEAT INDICATOR CIRCUIT

1. Check continuity between climate controlled seat switch connector M302 (A) terminal 5 and climate controlled seat control unit connector B216 (B) terminal 20.

Climate controlled seat switch		Climate controlled seat control unit		Continuity
Connector	Terminal	Connector	Terminal	
M302 (A)	5	B216 (B)	20	Yes

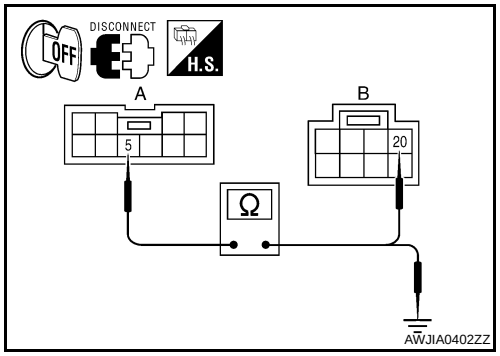

2. Check continuity between climate controlled seat switch connector M302 (A) terminal 5 and ground.

Climate controlled seat switch		Ground	Continuity
Connector	Terminal		
M302 (A)	5		No

Is the inspection result normal?

YES >> GO TO 4.
NO >> Repair harness or connectors.

4. CHECK CLIMATE CONTROLLED SEAT SWITCH INDICATOR GROUND CIRCUIT

Check continuity between climate controlled seat switch connector M302 terminal 6 and ground.

Climate controlled seat switch		Ground	Continuity
Connector	Terminal		
M302	6		Yes

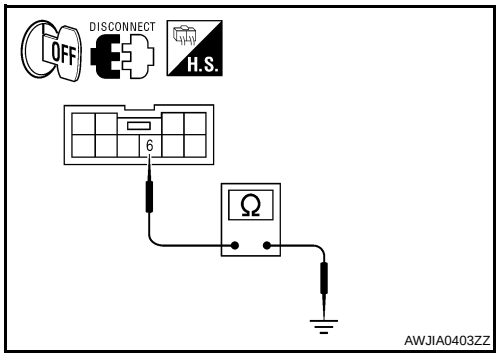

Is the inspection result normal?

YES >> Replace climate controlled seat control unit.
NO >> Repair harness or connectors.

Component Inspection (Climate Controlled Seat Switch Indicator)

INFOID:0000000004218942

1. CHECK CLIMATE CONTROLLED SEAT SWITCH

1. Disconnect climate controlled seat switch connector.
2. Check continuity between climate controlled seat switch terminals.

Terminals		Continuity
4	6	Yes
5		

Is the inspection result normal?

YES >> Inspection End.
NO >> Replace climate controlled seat switch. Refer to SE-61, "Exploded View".

POWER SEAT

Wiring Diagram - POWER SEAT FOR DRIVER SIDE -

INFOID:0000000004195933

POWER SEAT FOR DRIVER SIDE - WITHOUT AUTOMATIC DRIVE POSITIONER

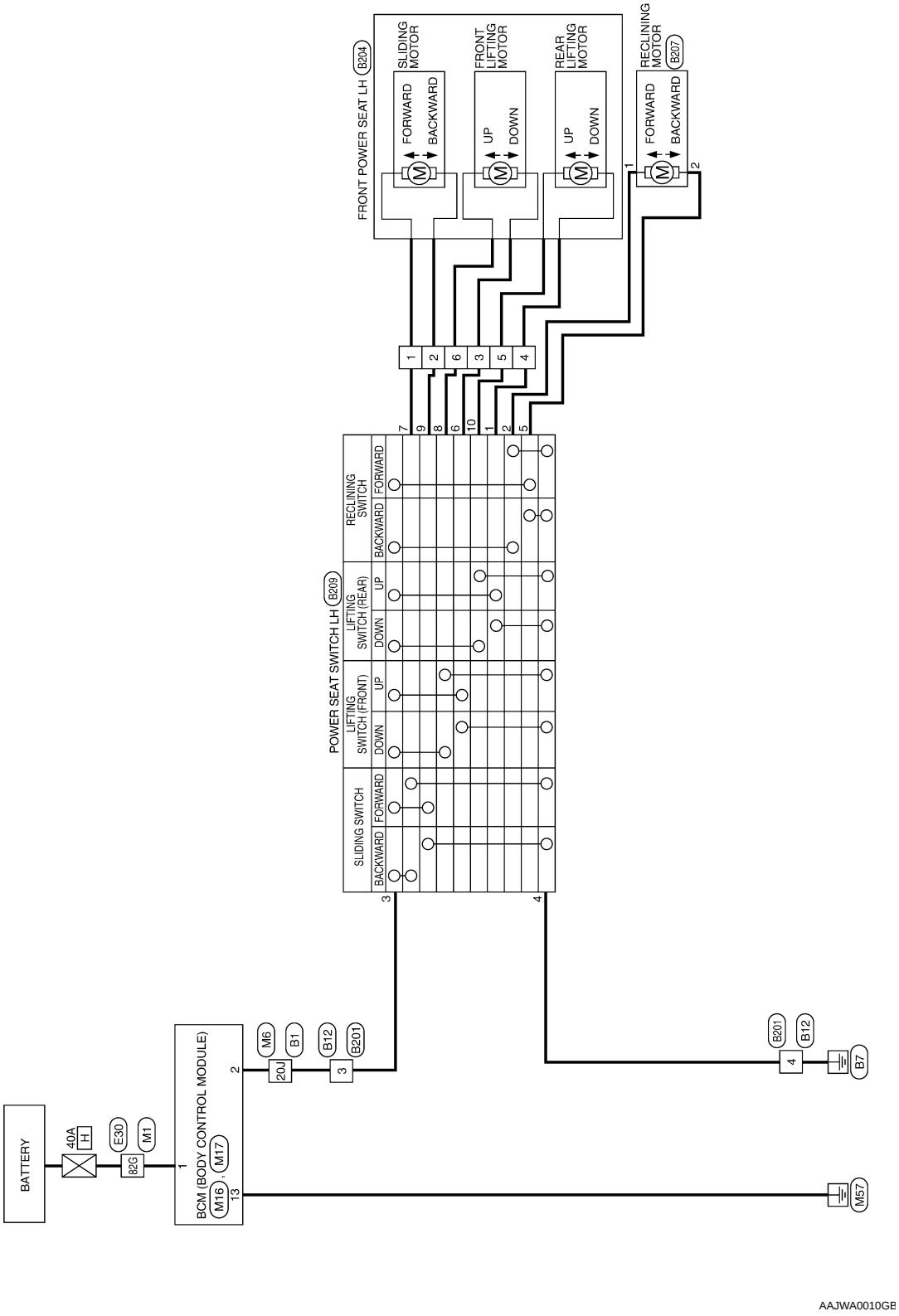

POWER SEAT FOR DRIVER SIDE CONNECTORS - WITH AUTOMATIC DRIVE POSITIONER

Connector No.	M1
Connector Name	WIRE TO WIRE
Connector Color	WHITE

H.S.

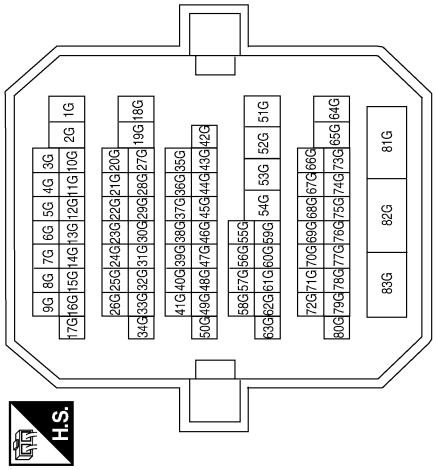

Terminal No.	Color of Wire	Signal Name
82G	W/B	–

Connector No.	M6
Connector Name	WIRE TO WIRE
Connector Color	WHITE

H.S.

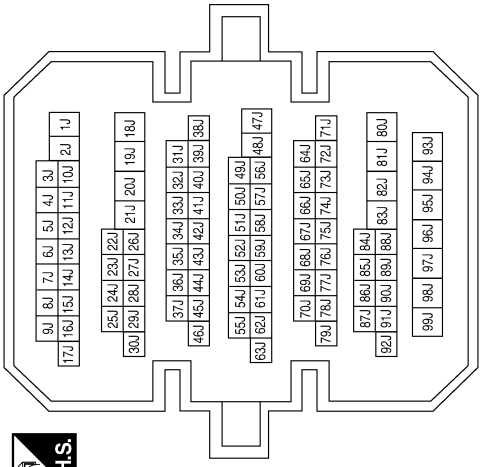

Terminal No.	Color of Wire	Signal Name
20J	R/Y	–

Connector No.	M16
Connector Name	BCM (BODY CONTROL MODULE)
Connector Color	BLACK

H.S.

Terminal No.	Color of Wire	Signal Name
1	W/B	BAT POWER F/L
2	R/Y	P/W POWER SUPPLY PERM

Connector No.	M17
Connector Name	BCM (BODY CONTROL MODULE)
Connector Color	WHITE

H.S.

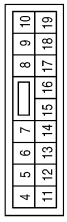

Terminal No.	Color of Wire	Signal Name
13	B	GND1

AAJIA0018GB

Connector No.	E30
Connector Name	WIRE TO WIRE
Connector Color	WHITE

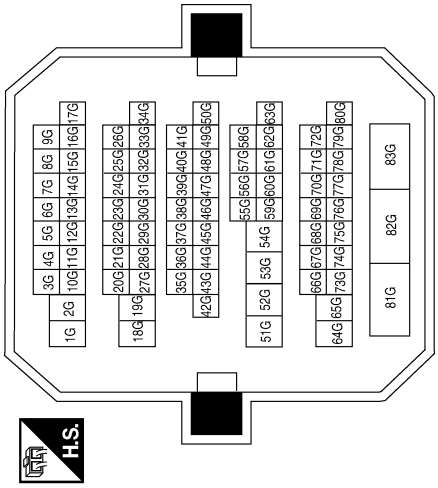

Terminal No.	Color of Wire	Signal Name
82G	LG	–

Connector No.	B1
Connector Name	WIRE TO WIRE
Connector Color	WHITE

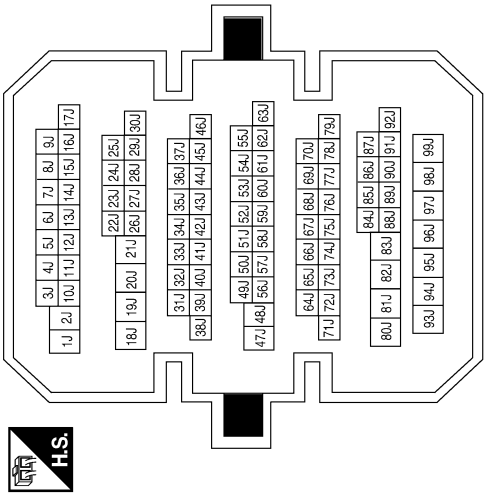

Terminal No.	Color of Wire	Signal Name
20J	BR	–

Connector No.	B12
Connector Name	WIRE TO WIRE
Connector Color	WHITE

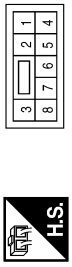

Terminal No.	Color of Wire	Signal Name
3	BR	–
4	B/R	–

Connector No.	B201
Connector Name	WIRE TO WIRE
Connector Color	WHITE

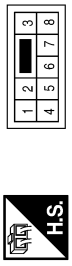

Terminal No.	Color of Wire	Signal Name
3	R/Y	–
4	B	–

Connector No.	B204
Connector Name	FRONT POWER SEAT LH
Connector Color	WHITE

Terminal No.	Color of Wire	Signal Name
1	Y	SLIDER MOTOR
2	R	REAR LIFTER MOTOR
3	V	SLIDER MOTOR
4	GR	FRONT LIFTER MOTOR
5	O	FRONT LIFTER MOTOR
6	B/W	REAR LIFTER MOTOR

AAJIA0019GB

Connector No.	B207
Connector Name	RECLINING MOTOR
Connector Color	BLACK

H.S.

Terminal No.	Color of Wire	Signal Name
1	O	–
2	GR	–

Connector No.	B209
Connector Name	POWER SEAT SWITCH LH
Connector Color	WHITE

H.S.

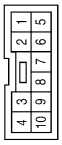

Terminal No.	Color of Wire	Signal Name
1	G	–
2	O	–
3	R/Y	–
4	B	–
5	GR	–
6	V	–
7	Y	–
8	B	–
9	R	–
10	V	–

AAJIA0020GB

Wiring Diagram - POWER SEAT FOR PASSENGER SIDE -

INFOID:0000000004195934

POWER SEAT FOR PASSENGER SIDE

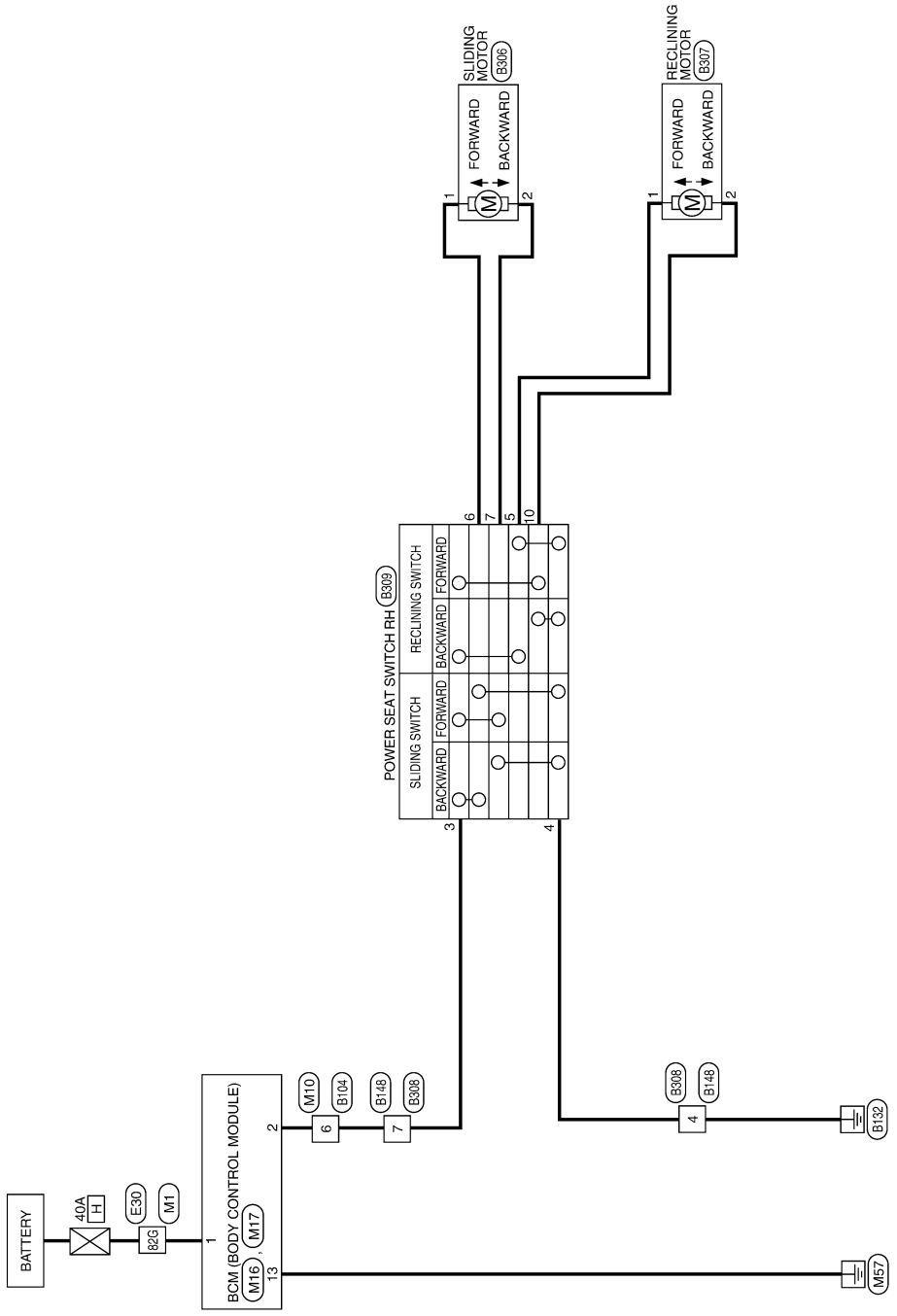

AAJWA0011GB

POWER SEAT FOR PASSENGER SIDE CONNECTORS

Connector No.	M1
Connector Name	WIRE TO WIRE
Connector Color	WHITE

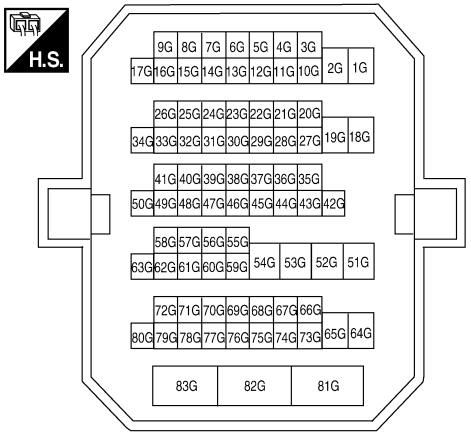

Terminal No.	Color of Wire	Signal Name
82G	W/B	–

Connector No.	M10
Connector Name	WIRE TO WIRE
Connector Color	WHITE

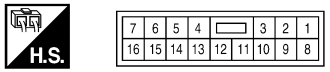

Terminal No.	Color of Wire	Signal Name
6	R/Y	–

Connector No.	M16
Connector Name	BCM (BODY CONTROL MODULE)
Connector Color	BLACK

Terminal No.	Color of Wire	Signal Name
1	W/B	BAT POWER F/L
2	R/Y	P/W POWER SUPPLY PERM

Connector No.	M17
Connector Name	BCM (BODY CONTROL MODULE)
Connector Color	WHITE

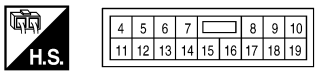

Terminal No.	Color of Wire	Signal Name
13	B	GND1

AAJIA0022GB

Connector No.	E30
Connector Name	WIRE TO WIRE
Connector Color	WHITE

H.S.

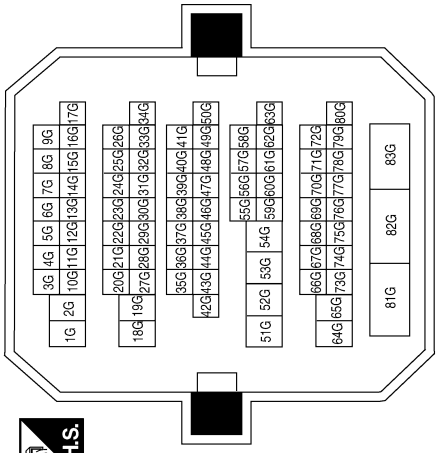

Terminal No.	Color of Wire	Signal Name
82G	LG	–

Connector No.	B104
Connector Name	WIRE TO WIRE
Connector Color	WHITE

H.S.

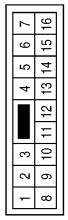

Terminal No.	Color of Wire	Signal Name
6	SB	–

Connector No.	B148
Connector Name	WIRE TO WIRE
Connector Color	WHITE

H.S.

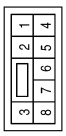

Terminal No.	Color of Wire	Signal Name
4	B	–
7	SB	–

Connector No.	B306
Connector Name	SLIDING MOTOR
Connector Color	GRAY

H.S.

Terminal No.	Color of Wire	Signal Name
1	V	–
2	Y	–

Connector No.	B307
Connector Name	RECLINING MOTOR
Connector Color	BLACK

H.S.

Terminal No.	Color of Wire	Signal Name
1	W	–
2	GR	–

AAJIA0023GB

Connector No.	B309
Connector Name	POWER SEAT SWITCH RH
Connector Color	WHITE

Terminal No.	Color of Wire	Signal Name
1	–	–
2	–	–
3	R/Y	–
4	B	–
5	W	–
6	V	–
7	Y	–
8	–	–
9	–	–
10	GR	–

Connector No.	B308
Connector Name	WIRE TO WIRE
Connector Color	WHITE

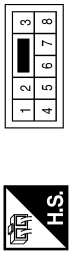

Terminal No.	Color of Wire	Signal Name
4	B	–
7	R/Y	–

AAJIA0024GB

HEATED SEAT

Wiring Diagram - HEATED SEAT -

INFOID:0000000004040292

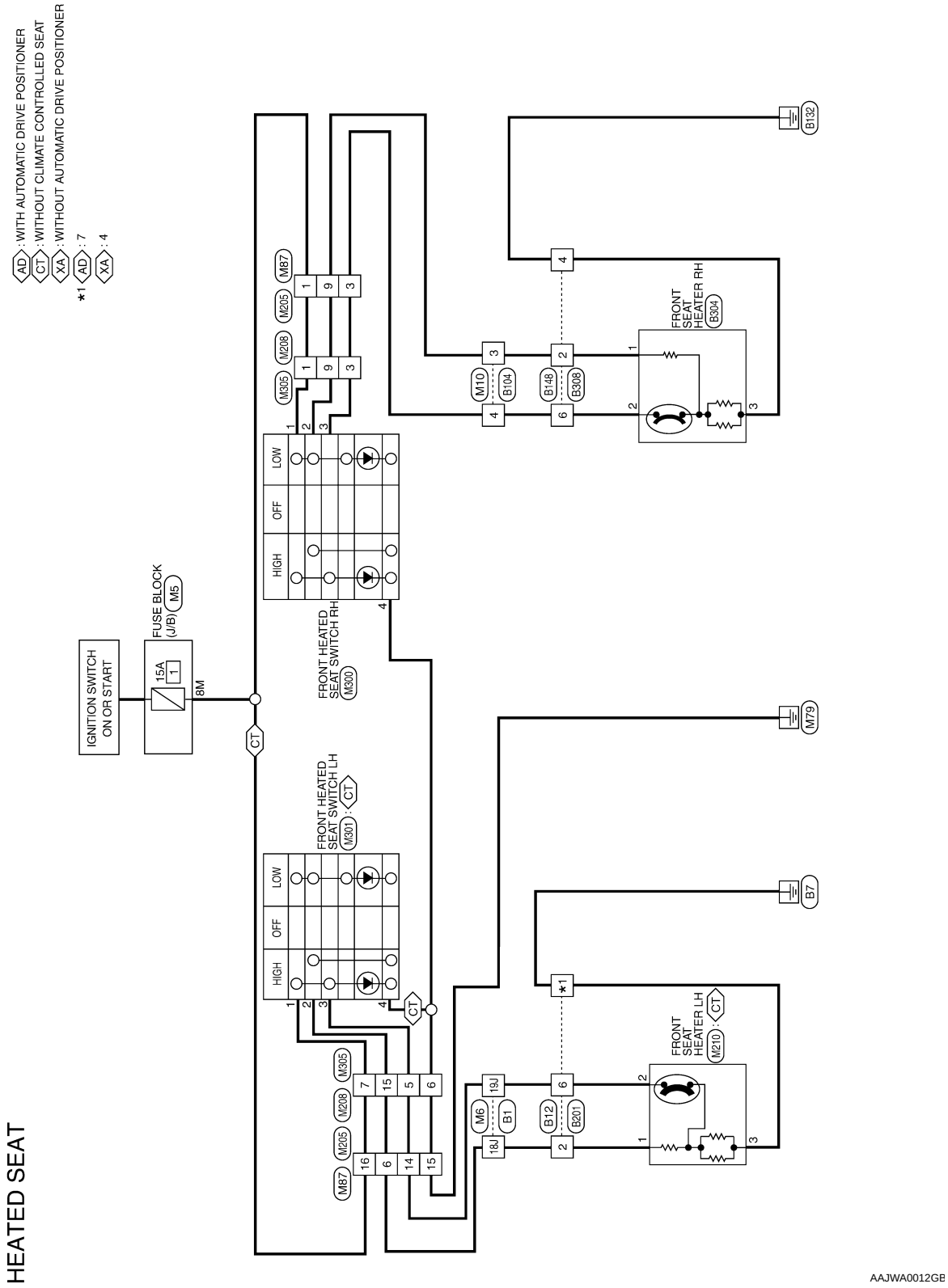

AAJWA0012GB

HEATED SEAT CONNECTORS

Connector No.	M5
Connector Name	FUSE BLOCK (J/B)
Connector Color	WHITE

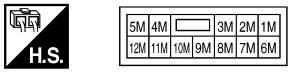

Terminal No.	Color of Wire	Signal Name
8M	G/R	–

Connector No.	M6
Connector Name	WIRE TO WIRE
Connector Color	WHITE

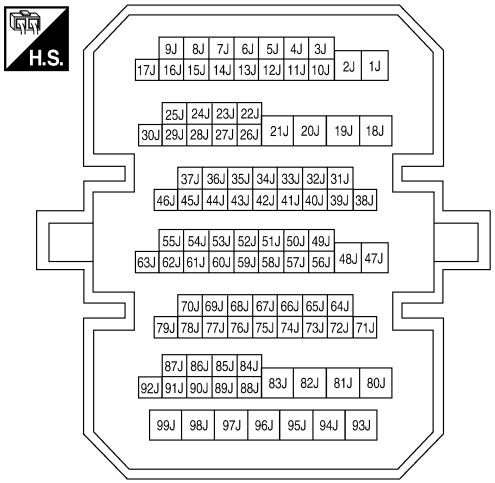

Terminal No.	Color of Wire	Signal Name
18J	GR	–
19J	GR/R	–

Connector No.	M10
Connector Name	WIRE TO WIRE
Connector Color	WHITE

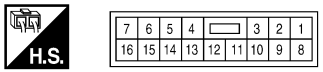

Terminal No.	Color of Wire	Signal Name
3	GR/L	–
4	GR/B	–

Connector No.	M87
Connector Name	WIRE TO WIRE
Connector Color	BROWN

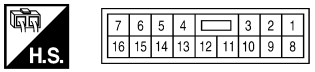

Terminal No.	Color of Wire	Signal Name
1	G/R	–
3	GR/B	–
6	GR	–
9	GR/L	–
14	GR/R	–
15	B	–
16	G/R	–

Connector No.	M205
Connector Name	WIRE TO WIRE
Connector Color	BROWN

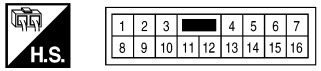

Terminal No.	Color of Wire	Signal Name
1	G/R	–
3	GR/B	–
6	GR	–
9	GR/L	–
14	GR/R	–
15	B	–
16	G/R	–

AAJIA0025GB

Connector No.	M208
Connector Name	WIRE TO WIRE
Connector Color	WHITE

H.S.

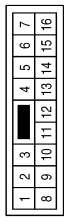

Terminal No.	Color of Wire	Signal Name
1	G/R	–
3	GR/B	–
5	GR/R	–
6	B	–
7	G/R	–
9	GR/L	–
15	GR	–

Connector No.	M300
Connector Name	FRONT HEATED SEAT SWITCH RH
Connector Color	BROWN

H.S.

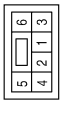

Terminal No.	Color of Wire	Signal Name
1	SB	–
2	G	–
3	GR	–
4	B	–

Connector No.	M301
Connector Name	FRONT HEATED SEAT SWITCH LH
Connector Color	WHITE

H.S.

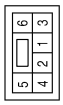

Terminal No.	Color of Wire	Signal Name
1	P	–
2	W	–
3	O	–
4	B	–

Connector No.	M305
Connector Name	WIRE TO WIRE
Connector Color	WHITE

H.S.

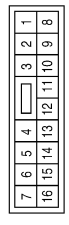

Terminal No.	Color of Wire	Signal Name
1	SB	–
3	GR	–
5	O	–
6	B	–
7	P	–
9	G	–
15	W	–

Connector No.	B1
Connector Name	WIRE TO WIRE
Connector Color	WHITE

H.S.

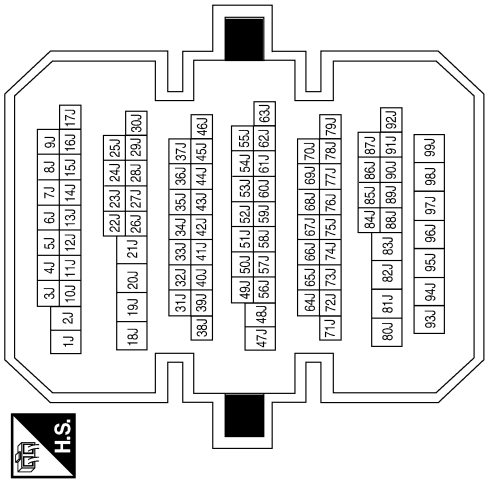

Terminal No.	Color of Wire	Signal Name
18J	W	–
19J	O	–

AAJIA0026GB

Connector No.	B12
Connector Name	WIRE TO WIRE
Connector Color	WHITE

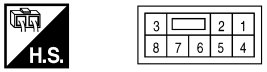

Terminal No.	Color of Wire	Signal Name
2	W	–
4	B	– (WITHOUT AUTOMATIC DRIVE POSITIONER)
6	O	–
7	B/W	– (WITH AUTOMATIC DRIVE POSITIONER)

Connector No.	B104
Connector Name	WIRE TO WIRE
Connector Color	WHITE

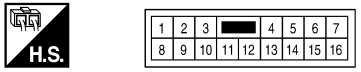

Terminal No.	Color of Wire	Signal Name
3	G	–
4	GR	–

Connector No.	B148
Connector Name	WIRE TO WIRE
Connector Color	WHITE

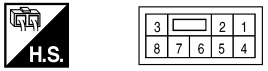

Terminal No.	Color of Wire	Signal Name
2	G	–
4	B	–
6	GR	–

Connector No.	B201
Connector Name	WIRE TO WIRE
Connector Color	WHITE

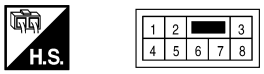

Terminal No.	Color of Wire	Signal Name
2	GR	–
4	B	– (WITHOUT AUTOMATIC DRIVE POSITIONER)
6	GR/W	–
7	GR/B	– (WITH AUTOMATIC DRIVE POSITIONER)

Connector No.	B210
Connector Name	FRONT SEAT HEATER LH
Connector Color	WHITE

Terminal No.	Color of Wire	Signal Name
1	GR	–
2	GR/W	–
3	W/B	–

Connector No.	B304
Connector Name	FRONT SEAT HEATER RH
Connector Color	WHITE

Terminal No.	Color of Wire	Signal Name
1	GR/G	–
2	GR/R	–
3	B	–

AAJIA0027GB

Connector No.	B308
Connector Name	WIRE TO WIRE
Connector Color	WHITE

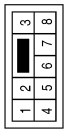

Terminal No.	Color of Wire	Signal Name
2	GR/G	–
4	B	–
6	GR/R	–

AAJIA0028GB

LUMBAR SUPPORT

Wiring Diagram - LUMBAR SUPPORT SYSTEM -

INFOID:0000000004263830

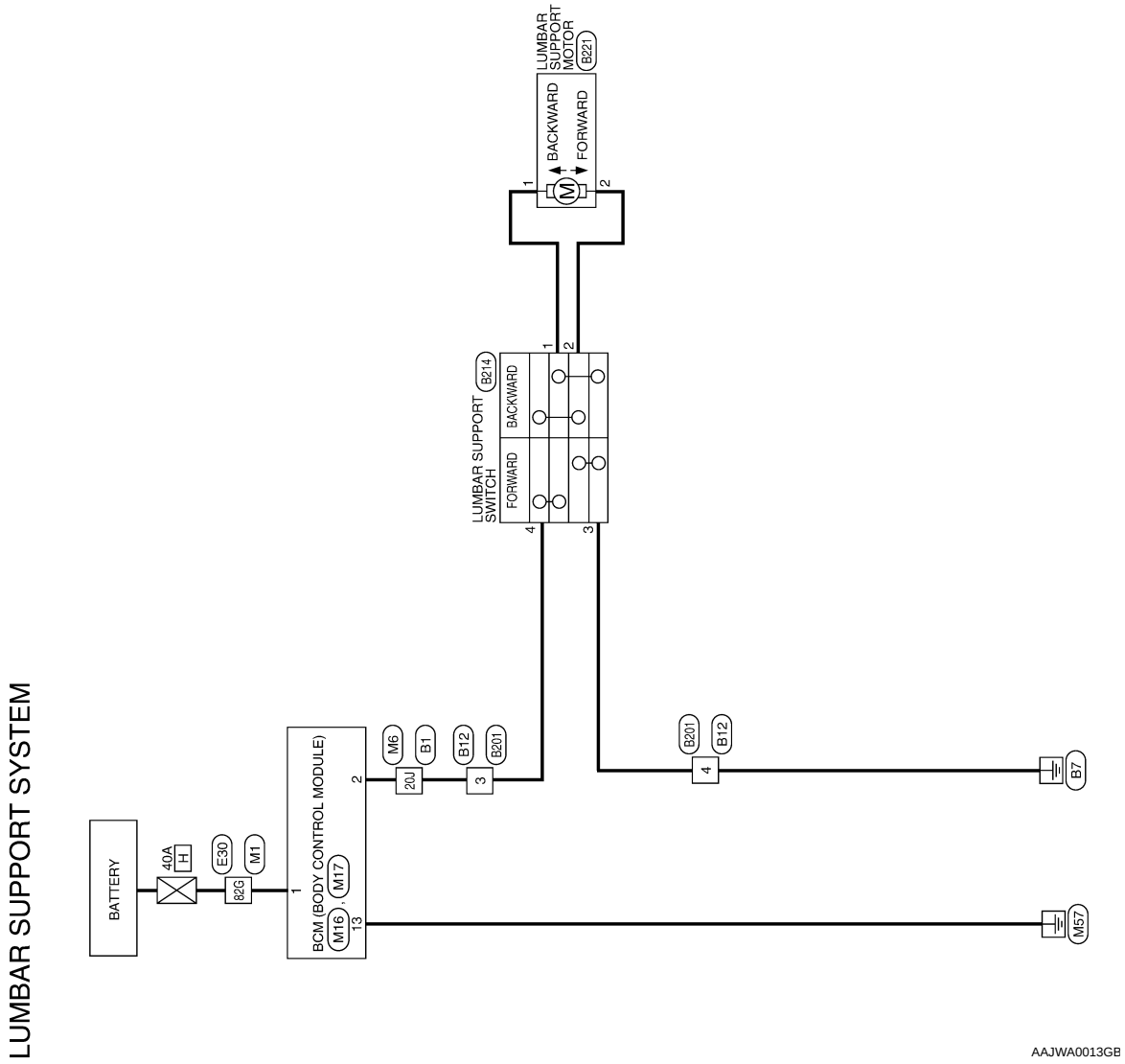

LUMBAR SUPPORT SYSTEM CONNECTORS

Connector No.	M1
Connector Name	WIRE TO WIRE
Connector Color	WHITE

H.S.

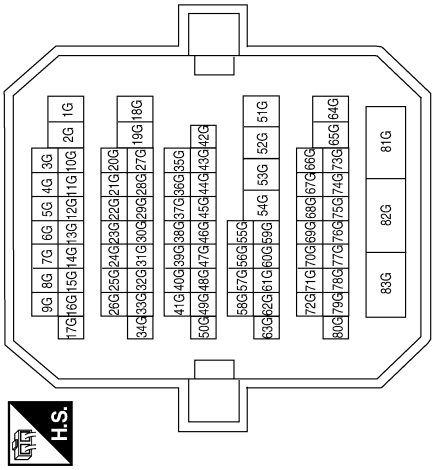

Terminal No.	Color of Wire	Signal Name
82G	W/B	–

Connector No.	M6
Connector Name	WIRE TO WIRE
Connector Color	WHITE

H.S.

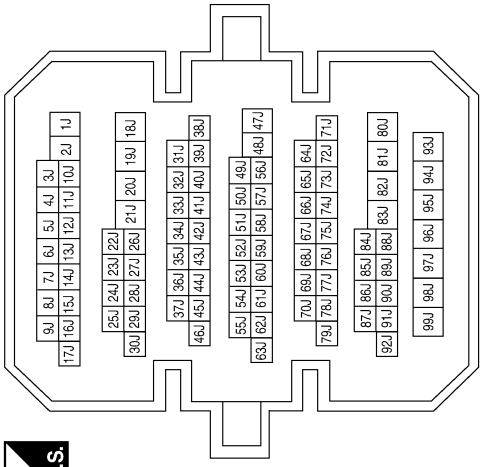

Terminal No.	Color of Wire	Signal Name
20J	R/Y	–

Connector No.	M16
Connector Name	BCM (BODY CONTROL MODULE)
Connector Color	BLACK

H.S.

Terminal No.	Color of Wire	Signal Name
1	W/B	BAT POWER F/L
2	R/Y	P/W POWER SUPPLY PERM

Connector No.	M17
Connector Name	BCM (BODY CONTROL MODULE)
Connector Color	WHITE

H.S.

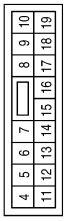

Terminal No.	Color of Wire	Signal Name
13	B	GND1

AAJIA0034GB

Connector No.	E30
Connector Name	WIRE TO WIRE
Connector Color	WHITE

H.S.

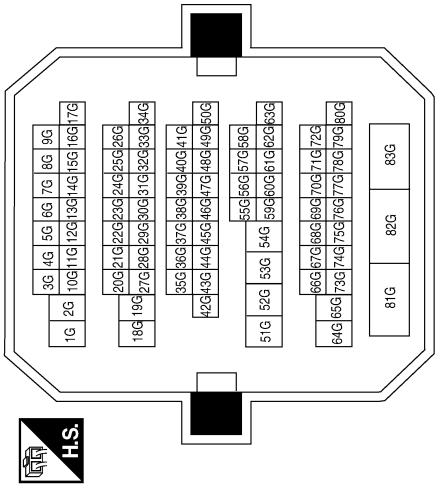

Terminal No.	Color of Wire	Signal Name
82G	LG	–

Connector No.	B1
Connector Name	WIRE TO WIRE
Connector Color	WHITE

H.S.

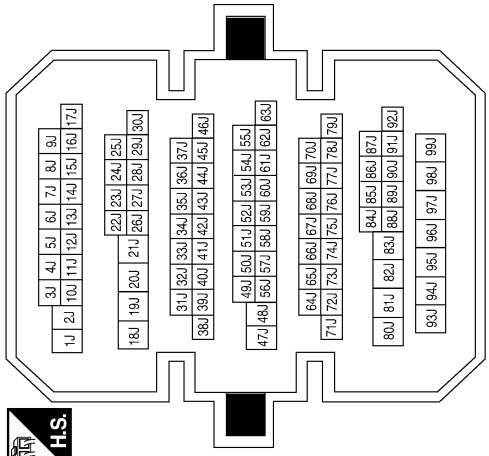

Terminal No.	Color of Wire	Signal Name
20J	BR	–

Connector No.	B12
Connector Name	WIRE TO WIRE
Connector Color	WHITE

H.S.

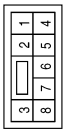

Terminal No.	Color of Wire	Signal Name
3	BR	–
4	B/R	–

Connector No.	B201
Connector Name	WIRE TO WIRE
Connector Color	WHITE

H.S.

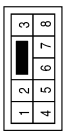

Terminal No.	Color of Wire	Signal Name
3	R/Y	–
4	B	–

Connector No.	B214
Connector Name	LUMBAR SUPPORT SWITCH
Connector Color	WHITE

H.S.

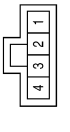

Terminal No.	Color of Wire	Signal Name
1	R/L	–
2	R/W	–
3	B	–
4	R/Y	–

Connector No.	B221
Connector Name	LUMBAR SUPPORT MOTOR
Connector Color	BLACK

H.S.

Terminal No.	Color of Wire	Signal Name
1	R/L	–
2	R/W	–

AAJIA0035GB

ECU DIAGNOSIS

CLIMATE CONTROLLED SEAT CONTROL UNIT

Reference Value

INFOID:0000000004040293

TERMINAL LAYOUT

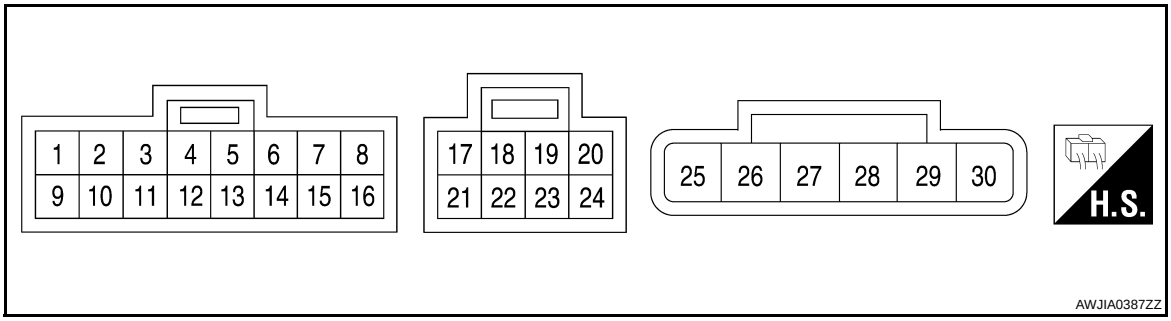

PHYSICAL VALUES

Terminal	Wire color	Item	Signal Input/ Output	Condition			Voltage (Approx.)
1	O	HEAT switch signal	Input	Ignition switch ON or START	Climate controlled seat switch select	HI HEAT	2.6V – 3.5V
						MED HEAT	1.6V – 2.5V
						LO HEAT	0.5V – 1.5V
						OFF	0V
4	V	Blower motor speed control signal	Input	Ignition switch ON or START	Climate controlled seat switch select	HEAT or COOL	4.5V – 8.0V
						OFF	0V
6	B	Blower motor ground	—	—			0V
7	R	Blower motor power supply	Input	Ignition switch ON or START			Battery voltage
9	L	COOL switch signal	Input	Ignition switch ON or START	Climate controlled seat switch select	HI COOL	2.6V – 3.5V
						MED COOL	1.6V – 2.5V
						LO COOL	0.5V – 1.5V
						OFF	0V
13	G/Y	Seat cushion thermal electric device sensor ground	—	Ignition switch ON			0V
14	G	Seat cushion thermal electric device sensor signal	Input	Blower motor operated			0.5V – 4.0V
				Ignition switch OFF			0V
15	G/Y	Seatback thermal electric device sensor ground	—	Ignition switch ON			0V
16	G	Seatback thermal electric device sensor signal	Input	Blower motor operated			0.5V – 4.0V
				Ignition switch OFF			0V
19	V	COOL switch indicator signal	Output	Ignition switch ON or START	Climate controlled seat switch select	COOL	Battery voltage
						OFF	0V
20	BR	HEAT switch indicator signal	Output	Ignition switch ON or START	Climate controlled seat switch select	HEAT	Battery voltage
						OFF	0V
21	GR/W	Ignition switch power supply	Input	Ignition switch ON or START			Battery voltage
24	GR	Climate controlled seat switch power supply	Input	Ignition switch ON or START			Battery voltage

Terminal	Wire color	Item	Signal Input/ Output	Condition			Voltage (Approx.)
25	Y	Seatback thermal electric device power supply (COOL)	Output	Ignition switch ON or START	Climate controlled seat switch select	COOL	Battery voltage
						HEAT	0V
						OFF	0V
26	Y	Seat cushion thermal electric device power supply (COOL)	Output	Ignition switch ON or START	Climate controlled seat switch select	COOL	Battery voltage
						HEAT	0V
						OFF	0V
27	L	Seat cushion thermal electric device power supply (HEAT)	Output	Ignition switch ON or START	Climate controlled seat switch select	HEAT	Battery voltage
						COOL	0V
						OFF	0V
28	L	Seatback thermal electric device power supply (HEAT)	Output	Ignition switch ON or START	Climate controlled seat switch select	HEAT	Battery voltage
						COOL	0V
						OFF	0V
29	R/Y	Battery power supply	Input	Ignition switch ON or OFF			Battery voltage
30	GR/B	Ground	—	—			0V

Wiring Diagram - CLIMATE CONTROLLED SEAT -

INFOID:0000000004040294

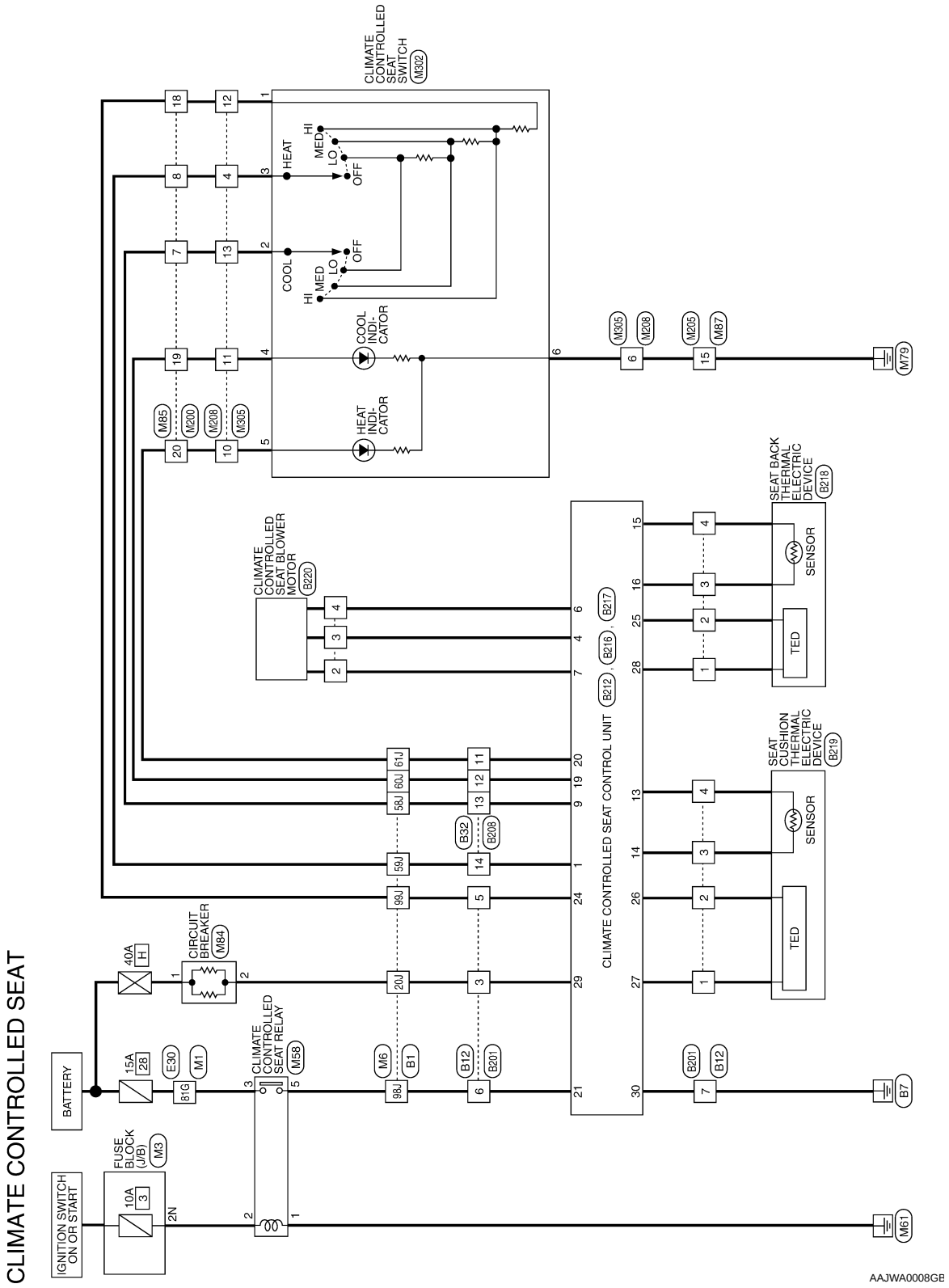

CLIMATE CONTROLLED SEAT CONNECTORS

Connector No.	M1
Connector Name	WIRE TO WIRE
Connector Color	WHITE

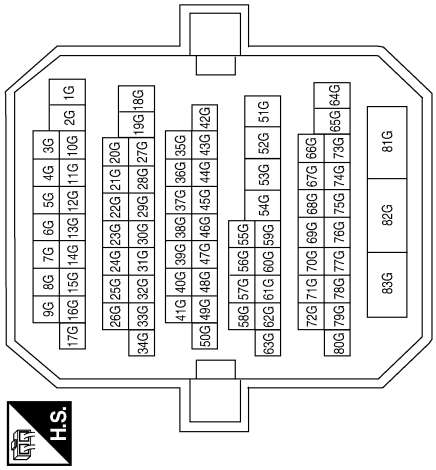

Terminal No.	Color of Wire	Signal Name
81G	R/W	–

Connector No.	M3
Connector Name	FUSE BLOCK (J/B)
Connector Color	WHITE

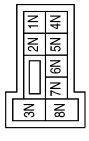

Terminal No.	Color of Wire	Signal Name
2N	G	–

Connector No.	M6
Connector Name	WIRE TO WIRE
Connector Color	WHITE

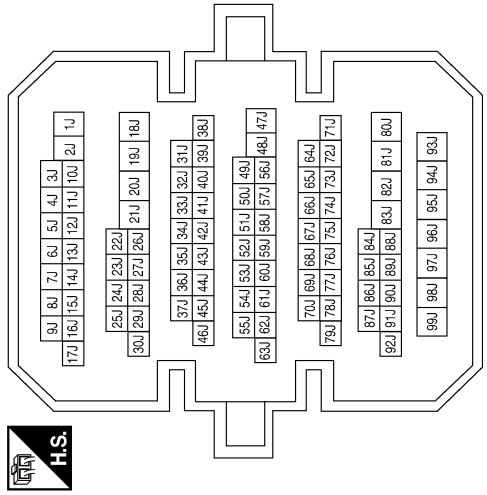

Terminal No.	Color of Wire	Signal Name
20J	R/Y	–
58J	G	–
59J	R/G	–
60J	BR/Y	–
61J	G/R	–
98J	W	–
99J	GR	–

AAJIA0013GB

Connector No.	M58
Connector Name	CLIMATE CONTROLLED SEAT RELAY
Connector Color	BLUE

Terminal No.	Color of Wire	Signal Name
1	B	–
2	G	–
3	R/W	–
5	W	–

Connector No.	M84
Connector Name	CIRCUIT BREAKER
Connector Color	WHITE

Terminal No.	Color of Wire	Signal Name
1	W/B	–
2	R/Y	–

Connector No.	M85
Connector Name	WIRE TO WIRE
Connector Color	WHITE

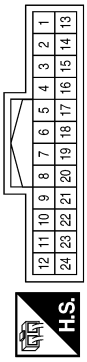

Terminal No.	Color of Wire	Signal Name
7	G	–
8	R/G	–
18	GR	–
19	BR/Y	–
20	G/R	–

Connector No.	M87
Connector Name	WIRE TO WIRE
Connector Color	BROWN

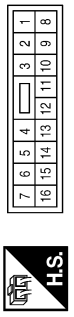

Terminal No.	Color of Wire	Signal Name
15	B	–

Connector No.	M200
Connector Name	WIRE TO WIRE
Connector Color	WHITE

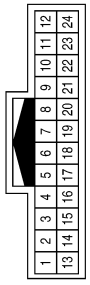

Terminal No.	Color of Wire	Signal Name
7	G	–
8	R/G	–
18	GR	–
19	BR/Y	–
20	G/R	–

Connector No.	M205
Connector Name	WIRE TO WIRE
Connector Color	BROWN

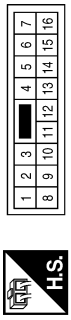

Terminal No.	Color of Wire	Signal Name
15	B	–

ABJIA0164GB

Connector No.	M208
Connector Name	WIRE TO WIRE
Connector Color	WHITE

H.S.

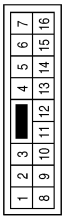

Terminal No.	Color of Wire	Signal Name
4	R/G	–
6	B	–
10	G/R	–
11	BR/Y	–
12	GR	–
13	G	–

Connector No.	M302
Connector Name	CLIMATE CONTROLLED SEAT SWITCH
Connector Color	WHITE

H.S.

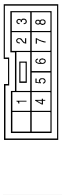

Terminal No.	Color of Wire	Signal Name
1	W	–
2	LG	–
3	V	–
4	BR	–
5	O	–
6	B	–
7	L	–
8	Y	–
9	–	–
10	–	–

Connector No.	M305
Connector Name	WIRE TO WIRE
Connector Color	WHITE

H.S.

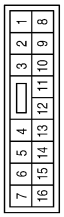

Terminal No.	Color of Wire	Signal Name
4	V	–
6	B	–
10	O	–
11	BR	–
12	W	–
13	LG	–

Connector No.	E30
Connector Name	WIRE TO WIRE
Connector Color	WHITE

H.S.

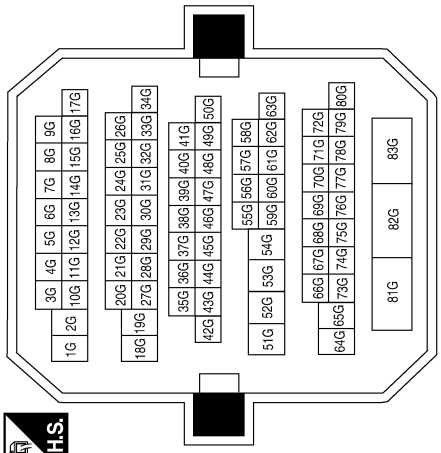

Terminal No.	Color of Wire	Signal Name
81G	P	–

AAJIA0014GB

Connector No.	B1
Connector Name	WIRE TO WIRE
Connector Color	WHITE

H.S.

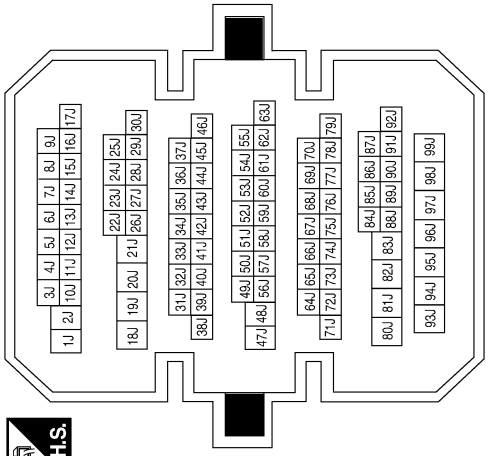

Terminal No.	Color of Wire	Signal Name
20J	BR	–
58J	GR	–
59J	L	–
60J	G	–
61J	O	–
98J	O	–
99J	W	–

Connector No.	B12
Connector Name	WIRE TO WIRE
Connector Color	WHITE

H.S.

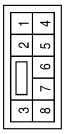

Terminal No.	Color of Wire	Signal Name
3	BR	–
5	W	–
6	O	–
7	B/Y	–

Connector No.	B32
Connector Name	WIRE TO WIRE
Connector Color	WHITE

H.S.

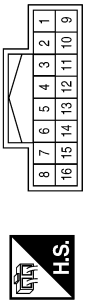

Terminal No.	Color of Wire	Signal Name
11	GR	–
12	L	–
13	G	–
14	O	–

Connector No.	B201
Connector Name	WIRE TO WIRE
Connector Color	WHITE

H.S.

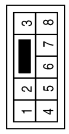

Terminal No.	Color of Wire	Signal Name
3	R/Y	–
5	GR	–
6	GR/W	–
7	GR/B	–

Connector No.	B208
Connector Name	WIRE TO WIRE
Connector Color	WHITE

H.S.

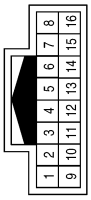

Terminal No.	Color of Wire	Signal Name
11	BR	–
12	V	–
13	L	–
14	O	–

AAJIA0015GB

Connector No.	B212
Connector Name	CLIMATE CONTROLLED SEAT CONTROL UNIT
Connector Color	BLACK

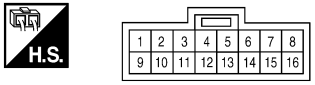

Terminal No.	Color of Wire	Signal Name
1	O	HEAT SWITCH INPUT
2	–	–
3	–	–
4	V	BLOWER MOTOR SPEED CONTROL
5	–	–
6	B	BLOWER GND
7	R	BLOWER POWER
8	–	–
9	L	COOL SWITCH INPUT
10	–	–
11	–	–
12	–	–
13	G/Y	CUSHION SENSOR GND
14	G	CUSHION SENSOR SIGNAL
15	G/Y	BACK SENSOR GND
16	G	BACK SENSOR SIGNAL

Connector No.	B216
Connector Name	CLIMATE CONTROLLED SEAT CONTROL UNIT
Connector Color	BLACK

Terminal No.	Color of Wire	Signal Name
17	–	–
18	–	–
19	V	COOL ON INDICATOR
20	BR	HEAT ON IDICATOR
21	GR/W	IGN
22	–	–
23	–	–
24	GR	HEAT/COOL SW RESISTOR PWR

Connector No.	B217
Connector Name	CLIMATE CONTROLLED SEAT CONTROL UNIT
Connector Color	BLACK

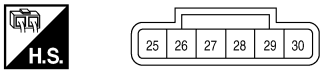

Terminal No.	Color of Wire	Signal Name
25	Y	BACK TED 1
26	Y	CUSHION TED 1
27	L	CUSHION TED 2
28	L	BACK TED 2
29	R/Y	BAT (PTC)
30	GR/B	GND

AAJIA0016GB

Connector No.	B218
Connector Name	SEAT BACK THERMAL ELECTRIC DEVICE
Connector Color	WHITE

Terminal No.	Color of Wire	Signal Name
1	L	TED + HEAT (-COOL)
2	Y	TED - HEAT (+COOL)
3	G	SENSOR SIGNAL
4	G/Y	SENSOR RETURN

Connector No.	B219
Connector Name	SEAT CUSHION THERMAL ELECTRIC DEVICE
Connector Color	WHITE

Terminal No.	Color of Wire	Signal Name
1	L	TED + HEAT (-COOL)
2	Y	TED - HEAT (+COOL)
3	G	SENSOR SIGNAL
4	G/Y	SENSOR RETURN

Connector No.	B220
Connector Name	CLIMATE CONTROLLED SEAT BLOWER MOTOR
Connector Color	WHITE

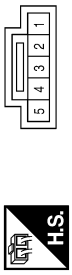

Terminal No.	Color of Wire	Signal Name
1	–	–
2	R	POWER
3	V	RPM CONTROL PWM
4	B	GROUND
5	–	–

AAJIA0017GB

Fail-safe

INFOID:0000000004289497

- Climate controlled seat control unit equips fail-safe function.
- When a malfunction occurs in the systems shown as per the following, climate controlled seat control unit stops output.

Malfunction	Malfunctioning condition
The temperature difference between the seatback thermal electric device and seat cushion thermal electric device is 30°C or more	• When it detects for 4 seconds that the temperature difference between the seatback thermal electric device and seat cushion thermal electric device is 30°C or more, stops the output to the thermal electric device, activates the climate controlled seat blower motor in the maximum position, and sends the external airflow for 30 seconds • If the temperature difference is still 30°C or more after 30 seconds pass, it stops all output and enters the system OFF condition • When the temperature difference between seatback thermal electric device and seat cushion thermal electric device becomes 20°C or less, the system recovers automatically • If it detects that the temperature difference is 30°C or more after the automatic system recovery, it immediately stops all output and enters the system OFF condition **NOTE:** When the switch operation is performed before entering the system OFF condition, the fail-safe mode is reset.
The temperature of thermal electric device is 110°C or more in the HEAT mode (any thermal electric device in the seatback or seat cushion)	• When it detects for 4 seconds that the temperature of the thermal electric device is 110°C or more, stops the output to the thermal electric device, activates the climate controlled seat blower motor in the maximum position, and sends the external airflow for 30 seconds • If the temperature does not become 105°C or less after 30 seconds pass, it stops all output and enters the system OFF condition • When the temperature of the thermal electric device becomes 105°C or less, the system recovers automatically • If it detects that the temperature of the thermal electric device is 110°C or more after the automatic system recovery, it immediately stops all output and enters the system OFF condition
The temperature of the thermal electric device is 45°C or more in the COOL mode (any thermal electric device in the seatback or seat cushion)	• When it detects for 4 seconds that the temperature of the thermal electric device is between 45°C and 70°C, it starts the temperature monitoring of the thermal electric device at 3 second intervals • While monitoring, if it detects that the temperature raises 2°C or more 4 times continuously or reaches 70°C or more, it stops all output and enters the system OFF condition • If it detects other results of monitoring, it continues activating in the COOL mode
Thermal electric device sensor system open circuit	• When it detects for 4 seconds that the thermal electric device sensor system is an open circuit
Climate controlled seat blower motor system open circuit	• When it detects for 2 seconds that climate controlled seat blower motor system is an open circuit while the climate controlled seat is being activated, it stops output to the thermal electric device • When it detects for 10 seconds that the climate controlled seat blower motor system is an open circuit while the climate controlled seat is being activated, it stops all output and enters the system OFF condition **NOTE:** After detecting the climate seat blower motor system open circuit for 2 seconds, the system recovers automatically if the activation of the climate controlled seat blower motor is detected for 1 second or more.
Switch input out of the specified range	• When it detects for 4 seconds that the rotary switch input is 30% or less of the vehicle battery voltage, it stops all output and enters the system OFF condition • When the switch input returns to a value within the specified range, the system recovers automatically
HEAT or COOL switch input out of the specified range	• When it detects for 4 seconds that rotary switch input is 6% or less of the vehicle battery voltage, it stops all output and enters the system OFF condition • When the switch input returns to a value within the specified range, the system recovers automatically
System voltage out of range	• System voltage* of the climate controlled seat control unit is out of the operation range (8.5 V – 16.5 V)

*: System voltage is the voltage between climate controlled seat control unit power source and the ground.

NOTE:

When the system enters in the fail-safe mode again after performing resetting procedure, perform diagnosis.

SYMPTOM DIAGNOSIS

CLIMATE CONTROLLED SEAT SYSTEM

Symptom Table

INFOID:0000000004221415

Symptom	Inspection item
Climate controlled seat inoperative.	Power supply and ground circuit Refer to SE-6, "CLIMATE CONTROLLED SEAT CONTROL UNIT : Diagnosis Procedure".
Climate controlled seat blower motor inoperative.	Climate controlled seat blower motor Refer to SE-10, "Diagnosis Procedure".
Seat cushion thermal electric device inoperative.	Seat cushion thermal electric device Refer to SE-13, "Diagnosis Procedure".
Seatback thermal electric device inoperative.	Seatback thermal electric device Refer to SE-16, "Diagnosis Procedure".
Climate controlled seat switch LO, MED or HI inoperative.	Climate controlled seat switch Refer to SE-19, "Diagnosis Procedure".
Climate controlled seat switch indicator inoperative.	Climate controlled seat switch indicator Refer to SE-22, "Diagnosis Procedure".

SQUEAK AND RATTLE TROUBLE DIAGNOSES

Work Flow

INFOID:0000000004040324

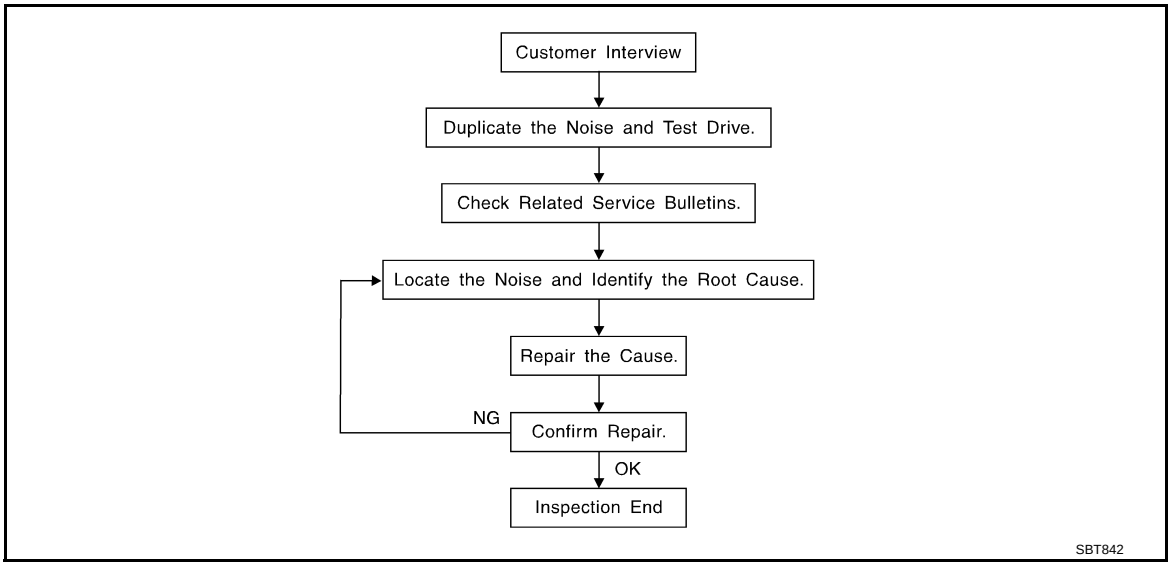

CUSTOMER INTERVIEW

Interview the customer if possible, to determine the conditions that exist when the noise occurs. Use the Diagnostic Worksheet during the interview to document the facts and conditions when the noise occurs and any of the customer's comments; refer to SE-56, "Diagnostic Worksheet". This information is necessary to duplicate the conditions that exist when the noise occurs.

- The customer may not be able to provide a detailed description or the location of the noise. Attempt to obtain all the facts and conditions that exist when the noise occurs (or does not occur).
- If there is more than one noise in the vehicle, be sure to diagnose and repair the noise that the customer is concerned about. This can be accomplished by a test drive with the customer.
- After identifying the type of noise, isolate the noise in terms of its characteristics. The noise characteristics are provided so the customer, service adviser and technician are all speaking the same language when defining the noise.
- Squeak – (Like tennis shoes on a clean floor)
  Squeak characteristics include the light contact/fast movement/brought on by road conditions/hard surfaces = higher pitch noise/softer surfaces = lower pitch noises/edge to surface = chirping
- Creak – (Like walking on an old wooden floor)
  Creak characteristics include firm contact/slow movement/twisting with a rotational movement/pitch dependent on materials/often brought on by activity.
- Rattle – (Like shaking a baby rattle)
  Rattle characteristics include the fast repeated contact/vibration or similar movement/loose parts/missing clip or fastener/incorrect clearance.
- Knock – (Like a knock on a door)
  Knock characteristics include hollow sounding/sometimes repeating/often brought on by driver action.
- Tick – (Like a clock second hand)
  Tick characteristics include gentle contacting of light materials/loose components/can be caused by driver action or road conditions.
- Thump – (Heavy, muffled knock noise)
  Thump characteristics include softer knock/dead sound often brought on by activity.
- Buzz – (Like a bumble bee)
  Buzz characteristics include high frequency rattle/firm contact.
- Often the degree of acceptable noise level will vary depending upon the person. A noise that a technician may judge as acceptable may be very irritating to the customer.
- Weather conditions, especially humidity and temperature, may have a great effect on noise level.

DUPLICATE THE NOISE AND TEST DRIVE

If possible, drive the vehicle with the customer until the noise is duplicated. Note any additional information on the Diagnostic Worksheet regarding the conditions or location of the noise. This information can be used to duplicate the same conditions when the repair is reconfirmed.

If the noise can be duplicated easily during the test drive, to help identify the source of the noise, try to duplicate the noise with the vehicle stopped by doing one or all of the following:

1) Close a door.
2) Tap or push/pull around the area where the noise appears to be coming from.
3) Rev the engine.
4) Use a floor jack to recreate vehicle “twist”.
5) At idle, apply engine load (electrical load, half-clutch on M/T model, drive position on A/T model).
6) Raise the vehicle on a hoist and hit a tire with a rubber hammer.

- Drive the vehicle and attempt to duplicate the conditions the customer states exist when the noise occurs.
- If it is difficult to duplicate the noise, drive the vehicle slowly on an undulating or rough road to stress the vehicle body.

LOCATE THE NOISE AND IDENTIFY THE ROOT CAUSE

1. Narrow down the noise to a general area. To help pinpoint the source of the noise, use a listening tool (Engine Ear or mechanics stethoscope).
2. Narrow down the noise to a more specific area and identify the cause of the noise by:

- Removing the components in the area that is are suspected to be the cause of the noise.
  Do not use too much force when removing clips and fasteners, otherwise clips and fastener can be broken or lost during the repair, resulting in the creation of new noise.
- Tapping or pushing/pulling the component that is are suspected to be the cause of the noise.
  Do not tap or push/pull the component with excessive force, otherwise the noise will be eliminated only temporarily.
- Feeling for a vibration by hand by touching the component(s) that is are suspected to be the cause of the noise.
- Placing a piece of paper between components that is are suspected to be the cause of the noise.
- Looking for loose components and contact marks.
  Refer to SE-54, "Inspection Procedure".

REPAIR THE CAUSE

- If the cause is a loose component, tighten the component securely.
- If the cause is insufficient clearance between components:
- Separate components by repositioning or loosening and retightening the component, if possible.
- Insulate components with a suitable insulator such as urethane pads, foam blocks, felt cloth tape or urethane tape. These insulators are available through the authorized Nissan Parts Department.

CAUTION:
Never use excessive force as many components are constructed of plastic and may be damaged.
NOTE:

- URETHANE PADS
  Insulates connectors, harness, etc.
- INSULATOR (Foam blocks)
  Insulates components from contact. Can be used to fill space behind a panel.
- INSULATOR (Light foam block)
- FELT CLOTH TAPE
  Used to insulate where movement does not occur. Ideal for instrument panel applications.
  The following materials, not available through NISSAN Parts Department, can also be used to repair squeaks and rattles.
- UHMW (TEFLON) TAPE
  Insulates where slight movement is present. Ideal for instrument panel applications.
- SILICONE GREASE
  Used in place of UHMW tape that is be visible or does not fit.
  Note: Will only last a few months.
- SILICONE SPRAY
  Used when grease cannot be applied.
- DUCT TAPE
  Used to eliminate movement.

CONFIRM THE REPAIR

Confirm that the cause of a noise is repaired by test driving the vehicle. Operate the vehicle under the same conditions as when the noise originally occurred. Refer to the notes on the Diagnostic Worksheet.

Inspection Procedure

INFOID:0000000004040325

Refer to Table of Contents for specific component removal and installation information.

INSTRUMENT PANEL

Most incidents are caused by contact and movement between:

1. Cluster lid A and instrument panel
2. Acrylic lens and combination meter housing
3. Instrument panel to front pillar garnish
4. Instrument panel to windshield
5. Instrument panel mounting pins
6. Wiring harnesses behind the combination meter
7. A/C defroster duct and duct joint

These incidents can usually be located by tapping or moving the components to duplicate the noise or by pressing on the components while driving to stop the noise. Most of these incidents can be repaired by applying felt cloth tape or silicon spray (in hard to reach areas). Urethane pads can be used to insulate wiring harness.

CAUTION:

Never use silicone spray to isolate a squeak or rattle. If the area is saturated with silicone, the recheck of repair becomes impossible.

CENTER CONSOLE

Components to pay attention to include:

1. Shifter assembly cover to finisher
2. A/C control unit and cluster lid C
3. Wiring harnesses behind audio and A/C control unit

The instrument panel repair and isolation procedures also apply to the center console.

DOORS

Pay attention to the following:

1. Finisher and inner panel making a slapping noise
2. Inside handle escutcheon to door finisher
3. Wiring harnesses tapping
4. Door striker out of alignment causing a popping noise on starts and stops

Tapping or moving the components or pressing on them while driving to duplicate the conditions can isolate many of these incidents. The areas can usually be insulated with felt cloth tape or insulator foam blocks to repair the noise.

TRUNK

Trunk noises are often caused by a loose jack or loose items put into the trunk by the customer.
In addition look for the following:

1. Trunk lid bumpers out of adjustment
2. Trunk lid striker out of adjustment
3. Trunk lid torsion bars knocking together
4. A loose license plate or bracket

Most of these incidents can be repaired by adjusting, securing or insulating the item(s) or component(s) causing the noise.

SUNROOF/HEADLINING

Noises in the sunroof/headlining area can often be traced to one of the following:

1. Sunroof lid, rail, linkage or seals making a rattle or light knocking noise
2. Sunvisor shaft shaking in the holder
3. Front or rear windshield touching headlining and squeaking

Again, pressing on the components to stop the noise while duplicating the conditions can isolate most of these incidents. Repairs usually consist of insulating with felt cloth tape.

SEATS

When isolating seat noise it is important to note the position the seat is in and the load placed on the seat when the noise occurs. These conditions should be duplicated when verifying and isolating the cause of the noise.

Cause of seat noise include:

1. Headrest rods and holder
2. A squeak between the seat pad cushion and frame
3. Rear seatback lock and bracket

These noises can be isolated by moving or pressing on the suspected components while duplicating the conditions under which the noise occurs. Most of these incidents can be repaired by repositioning the component or applying urethane tape to the contact area.

UNDERHOOD

Some interior noise may be caused by components under the hood or on the engine wall. The noise is then transmitted into the passenger compartment.

Causes of transmitted underhood noise include:

1. Any component mounted to the engine wall
2. Components that pass through the engine wall
3. Engine wall mounts and connectors
4. Loose radiator mounting pins
5. Hood bumpers out of adjustment
6. Hood striker out of adjustment

These noises can be difficult to isolate since they cannot be reached from the interior of the vehicle. The best method is to secure, move or insulate one component at a time and test drive the vehicle. Also, engine RPM or load can be changed to isolate the noise. Repairs can usually be made by moving, adjusting, securing, or insulating the component causing the noise.

Diagnostic Worksheet

INFOID:0000000004040326

Dear Customer:
We are concerned about your satisfaction with your vehicle. Repairing a squeak or rattle sometimes can be very difficult. To help us fix your vehicle right the first time, please take a moment to note the area of the vehicle where the squeak or rattle occurs and under what conditions. You may be asked to take a test drive with a service advisor or technician to ensure we confirm the noise you are hearing.

SQUEAK & RATTLE DIAGNOSTIC WORKSHEET

I. WHERE DOES THE NOISE COME FROM? (circle the area of the vehicle)
The illustrations are for reference only, and may not reflect the actual configuration of your vehicle.

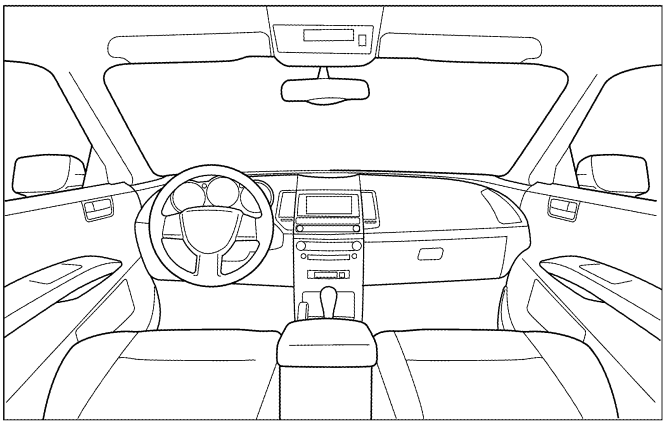

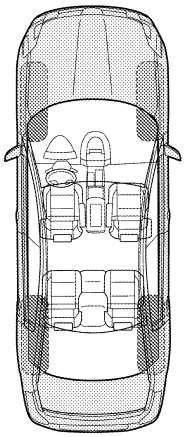

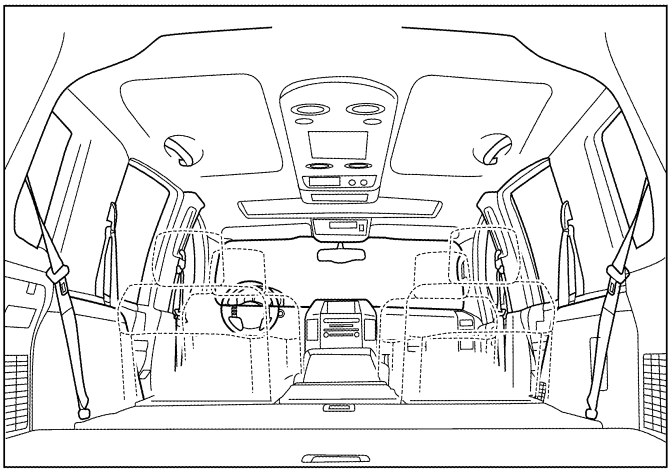

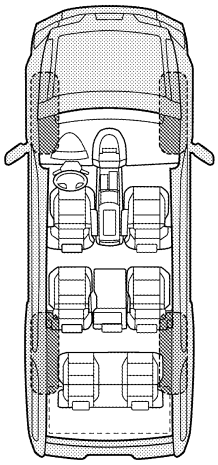

Continue to page 2 of the worksheet and briefly describe the location of the noise or rattle. In addition, please indicate the conditions which are present when the noise occurs.

-1-

LAIA0072E

SQUEAK & RATTLE DIAGNOSTIC WORKSHEET - page 2

Briefly describe the location where the noise occurs:

_____

_____

II. WHEN DOES IT OCCUR? (please check the boxes that apply)

- ☐ Anytime
- ☐ 1st time in the morning
- ☐ Only when it is cold outside
- ☐ Only when it is hot outside
- ☐ After sitting out in the rain
- ☐ When it is raining or wet
- ☐ Dry or dusty conditions
- ☐ Other:

III. WHEN DRIVING:

- ☐ Through driveways
- ☐ Over rough roads
- ☐ Over speed bumps
- ☐ Only about ____ mph
- ☐ On acceleration
- ☐ Coming to a stop
- ☐ On turns: left, right or either (circle)
- ☐ With passengers or cargo
- ☐ Other: _____
- ☐ After driving _____ miles or _____ minutes

IV. WHAT TYPE OF NOISE

- ☐ Squeak (like tennis shoes on a clean floor)
- ☐ Creak (like walking on an old wooden floor)
- ☐ Rattle (like shaking a baby rattle)
- ☐ Knock (like a knock at the door)
- ☐ Tick (like a clock second hand)
- ☐ Thump (heavy muffled knock noise)
- ☐ Buzz (like a bumble bee)

TO BE COMPLETED BY DEALERSHIP PERSONNEL

Test Drive Notes:

_____

_____

_____

	YES	NO	Initials of person performing
Vehicle test driven with customer	☐	☐	_____
- Noise verified on test drive	☐	☐	_____
- Noise source located and repaired	☐	☐	_____
- Follow up test drive performed to confirm repair	☐	☐	_____

VIN: _____ Customer Name _____

W.O.# _____ Date: _____

This form must be attached to Work Order

LAIA0071E

PRECAUTION

PRECAUTIONS

Supplemental Restraint System (SRS) AIR BAG and SEAT BELT PRE-TENSIONER

INFOID:0000000004252384

The Supplemental Restraint System such as “AIR BAG” and “SEAT BELT PRE-TENSIONER”, used along with a front seat belt, helps to reduce the risk or severity of injury to the driver and front passenger for certain types of collision. This system includes seat belt switch inputs and dual stage front air bag modules. The SRS system uses the seat belt switches to determine the front air bag deployment, and may only deploy one front air bag, depending on the severity of a collision and whether the front occupants are belted or unbelted.
Information necessary to service the system safely is included in the SR and SB section of this Service Manual.

WARNING:
- **To avoid rendering the SRS inoperative, which could increase the risk of personal injury or death in the event of a collision which would result in air bag inflation, all maintenance must be performed by an authorized NISSAN/INFINITI dealer.**
- **Improper maintenance, including incorrect removal and installation of the SRS, can lead to personal injury caused by unintentional activation of the system. For removal of Spiral Cable and Air Bag Module, see the SR section.**
- **Do not use electrical test equipment on any circuit related to the SRS unless instructed to in this Service Manual. SRS wiring harnesses can be identified by yellow and/or orange harnesses or harness connectors.**

Precautions Necessary for Steering Wheel Rotation after Battery Disconnect

INFOID:0000000004394047

NOTE:
- Before removing and installing any control units, first turn the push-button ignition switch to the LOCK position, then disconnect both battery cables.
- After finishing work, confirm that all control unit connectors are connected properly, then re-connect both battery cables.
- Always use CONSULT-III to perform self-diagnosis as a part of each function inspection after finishing work. If a DTC is detected, perform trouble diagnosis according to self-diagnosis results.

This vehicle is equipped with a push-button ignition switch and a steering lock unit.
If the battery is disconnected or discharged, the steering wheel will lock and cannot be turned.
If turning the steering wheel is required with the battery disconnected or discharged, follow the procedure below before starting the repair operation.

OPERATION PROCEDURE

1. Connect both battery cables.
   NOTE:
   Supply power using jumper cables if battery is discharged.
2. Carry the Intelligent Key or insert it to the key slot and turn the push-button ignition switch to ACC position. (At this time, the steering lock will be released.)
3. Disconnect both battery cables. The steering lock will remain released with both battery cables disconnected and the steering wheel can be turned.
4. Perform the necessary repair operation.
5. When the repair work is completed, re-connect both battery cables. With the brake pedal released, turn the push-button ignition switch from ACC position to ON position, then to LOCK position. (The steering wheel will lock when the push-button ignition switch is turned to LOCK position.)
6. Perform self-diagnosis check of all control units using CONSULT-III.

Service Notice

INFOID:0000000004040329

- When removing or installing various parts, place a cloth or padding onto the vehicle body to prevent scratches.
- Handle trim, molding, instruments, grille, etc. carefully during removing or installing. Be careful not to oil or damage them.

- Apply sealing compound where necessary when installing parts.
- When applying sealing compound, be careful that the sealing compound does not protrude from parts.
- When replacing any metal parts (for example body outer panel, members, etc.), be sure to take rust prevention measures.

Precaution for Work

INFOID:0000000004040330

- When removing or disassembling each component, be careful not to damage or deform it. If a component may be subject to interference, be sure to protect it with a shop cloth.
- When removing (disengaging) components with a screwdriver or similar tool, be sure to wrap the component with a shop cloth or vinyl tape to protect it.
- Protect the removed parts with a shop cloth and keep them.
- Replace a deformed or damaged clip.
- If a part is specified as a non-reusable part, always replace it with new one.
- Be sure to tighten bolts and nuts securely to the specified torque.
- After re-installation is completed, be sure to check that each part works normally.
- Follow the steps below to clean components.
- Water soluble foul: Dip a soft cloth into lukewarm water, and wring the water out of the cloth to wipe the fouled area.
  Then rub with a soft and dry cloth.
- Oily foul: Dip a soft cloth into lukewarm water with mild detergent (concentration: within 2 to 3%), and wipe the fouled area.
  Then dip a cloth into fresh water, and wring the water out of the cloth to wipe the detergent off. Then rub with a soft and dry cloth.
- Never use organic solvent such as thinner, benzene, alcohol, and gasoline.
- For genuine leather seats, use a genuine leather seat cleaner.

PREPARATION

PREPARATION

Commercial Service Tools

INFOID:0000000004040331

Tool name		Description
Engine ear	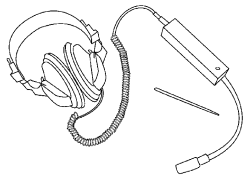 SIIA0995E	Locating the noise
Remover tool	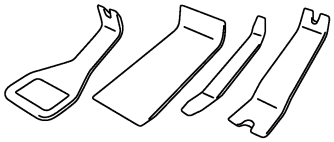 PIIB7923J	Removes clips, pawls, metal clips
Hook and pick tool	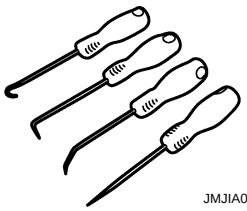 JMJIA0490ZZ	Removes the snap pins

ON-VEHICLE REPAIR

FRONT SEAT

Exploded View

INFOID:0000000004040332

DRIVER'S POWER SEAT

SEC. 870

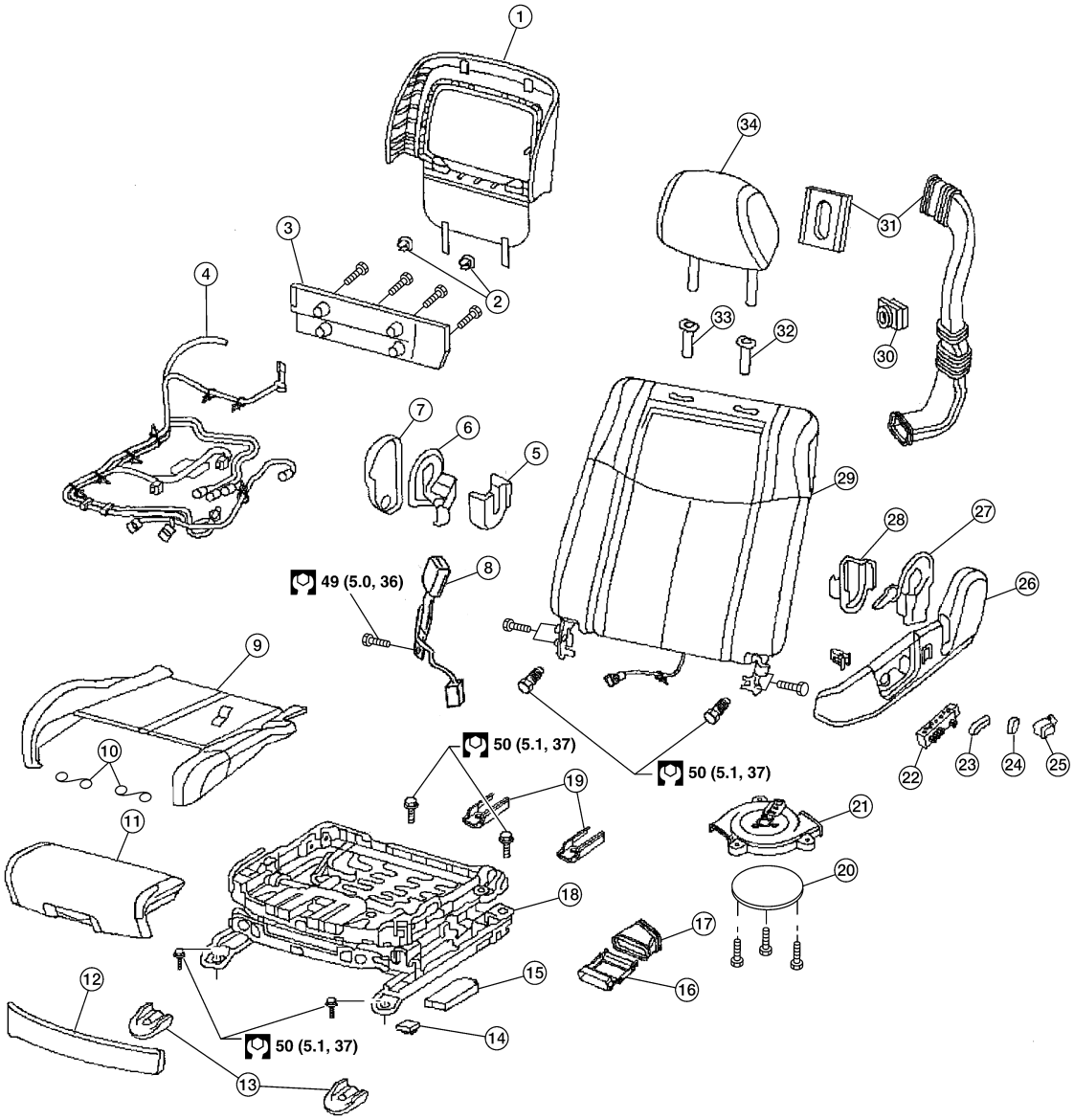

ALIIA0320GB

1. Seatback board
2. Seatback board clips
3. Seat cushion rear finisher
4. Driver seat wiring harness
5. Seat cushion inner finisher inside
6. Reclining device inner cover
7. Seat cushion inner finisher
8. Seat belt buckle
9. Seat cushion trim and cushion
10. Thigh extension tethers
11. Thigh extension assembly
12. Seat cushion front finisher
13. Front slide cover
14. Climate controlled seat control unit
15. Driver seat control unit
16. Seat cushion thermal electric device (TED)
17. Lower seat duct
18. Seat frame
19. Rear slide cover
20. Climate controlled seat blower motor filter
21. Climate controlled seat blower motor
22. Seat control switch
23. Seat slide and lifter switch knob
24. Reclining switch knob
25. Seat lumbar switch
26. Seat cushion outer finisher
27. Reclining device outer cover
28. Seat cushion outer finisher inside
29. Seatback assembly
30. Seatback thermal electric device (TED)
31. Upper seat duct
32. Headrest holder (locked)
33. Headrest holder (free)
34. Headrest

PASSENGER'S POWER SEAT

SEC. 870

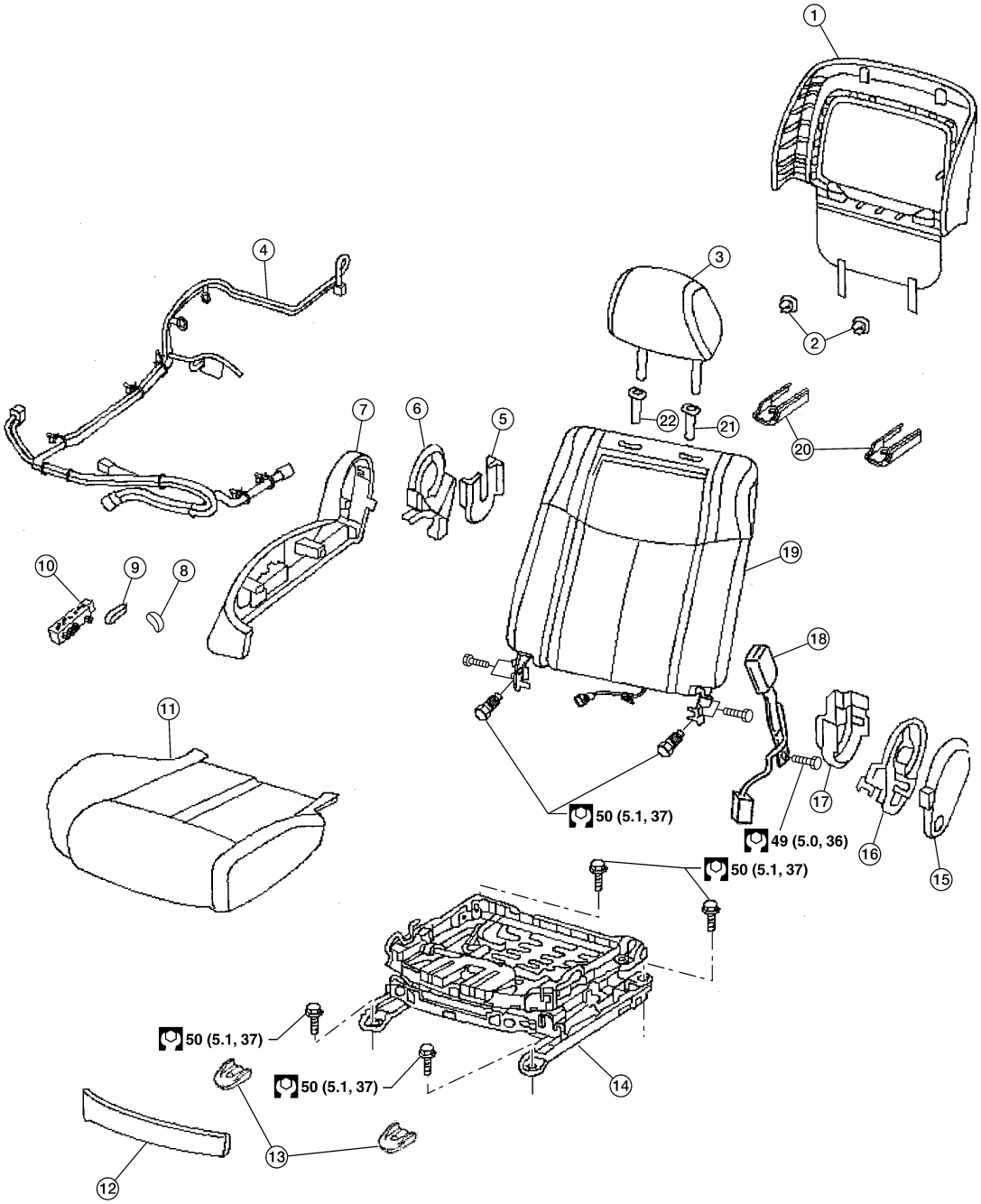

1.	Seatback board	2.	Seatback board clips	3.	Headrest
4.	Passenger seat wiring harness	5.	Seat cushion outer finisher inside	6.	Reclining device inner cover
7.	Seat cushion outer finisher	8.	Reclining switch knob	9.	Seat slide and lifter switch knob
10.	Seat control switch	11.	Seat cushion assembly	12.	Seat cushion front finisher
13.	Front slide cover	14.	Seat frame	15.	Seat cushion inner finisher
16.	Reclining device inner cover	17.	Seat cushion inner finisher inside	18.	Seat belt buckle

19. Seatback assembly
20. Rear slide cover
21. Headrest holder (locked)
22. Headrest holder (free)

Removal and Installation

INFOID:0000000004040333

CAUTION:
- **When removing and installing, use shop cloths to protect parts from damage.**

REMOVAL

NOTE:
Confirm the position of connector before starting work.

1. Slide the seat to the front most position.
2. Remove the side fixing points (A).

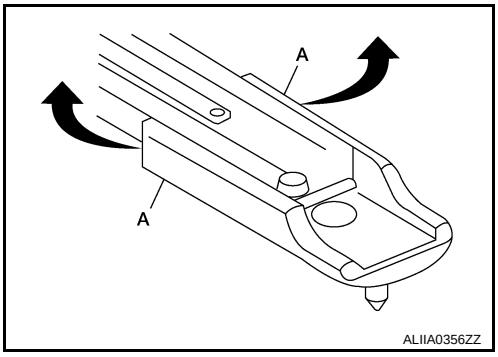

3. Remove the rear slide covers.
4. Remove the rear mount bolts.

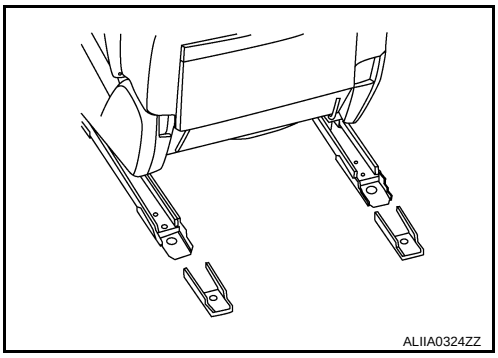

5. Slide the seat to the rear most position.
6. Remove the front slide covers.
7. Remove the front mount bolts.

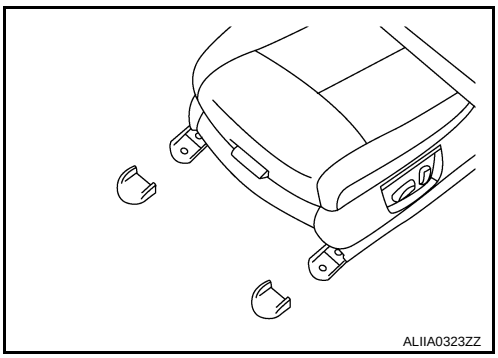

8. Disconnect battery negative and positive terminals.

CAUTION:
- **Disconnect battery negative and positive terminals then wait for at least 3 minutes.**

9. Disconnect harness connector under the seat and remove harness clamps.
10. Remove seat from the vehicle.

INSTALLATION

Installation is in the reverse order of removal.

CAUTION:

Clamp the harness in position.

NOTE:

When installing the front seats tighten the drivers seat bolts as shown.

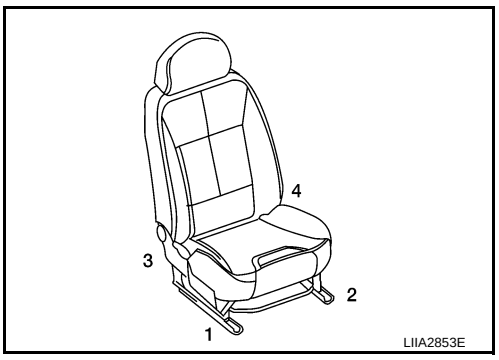

When installing the front seats tighten the passenger seat bolts as shown.

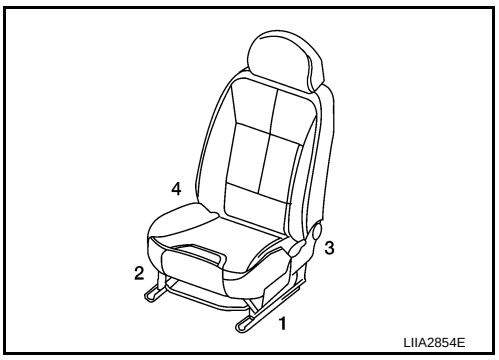

REAR SEAT

Exploded View - Bucket Seat

INFOID:0000000004040335

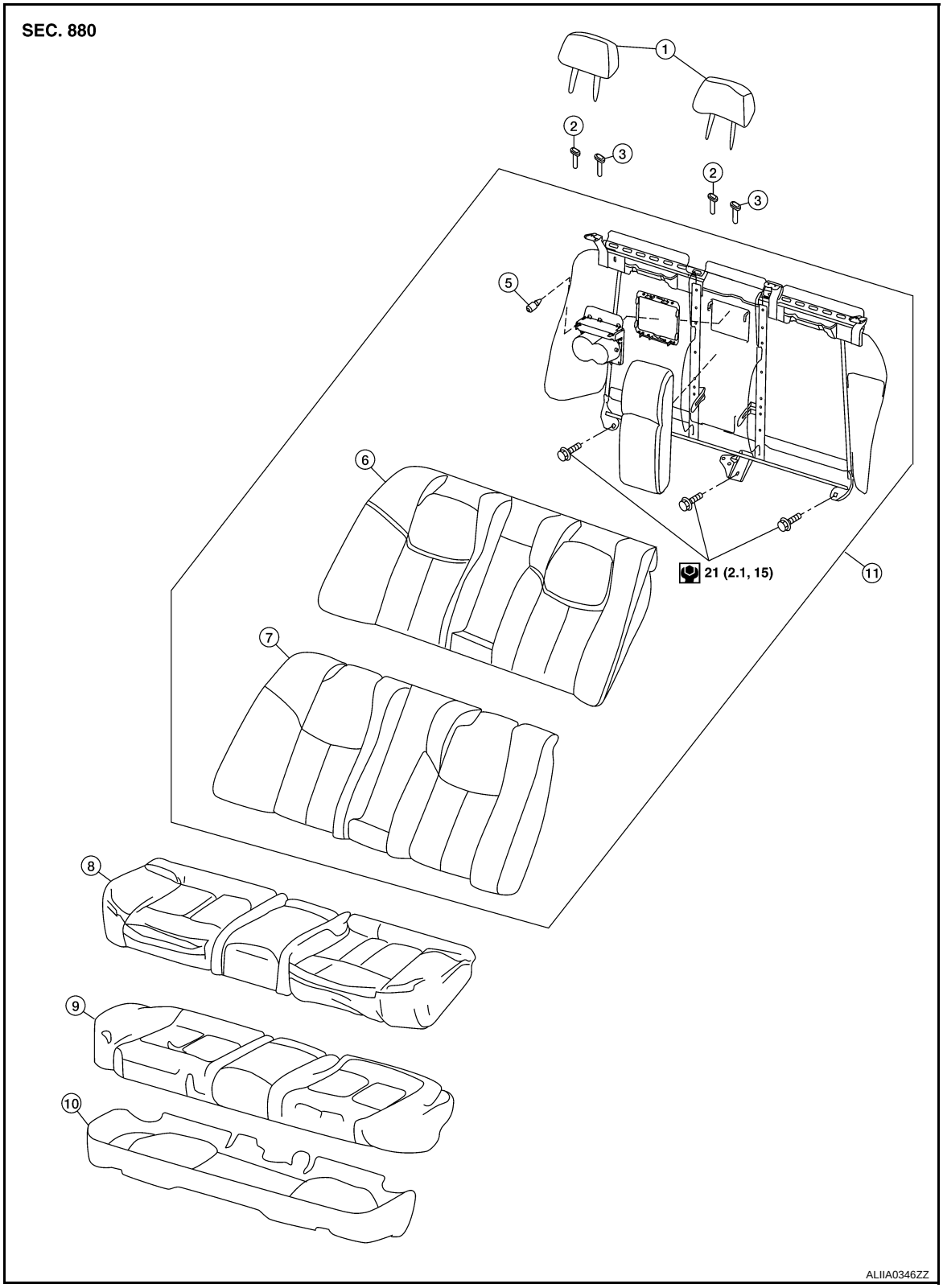

1. Headrest
2. Headrest holder (free)
3. Headrest holder (locked)
4. Seatback frame
5. Bumper
6. Seatback pad

7. Seatback trim
8. Seat cushion trim
9. Seat cushion pad
10. Seat cushion frame
11. Seatback assembly

Removal and Installation

INFOID:0000000004040336

CAUTION:
When removing and installing, use shop cloths to protect parts from damage.

Seat Cushion Removal

1. Pull the lock lever (1) at the front bottom of the seat cushion forward (one for each side), and pull the seat cushion upward to release the wire (2) from the seat cushion hook. Then pull the seat cushion forward to remove.
2. Remove the seat cushion from the vehicle.

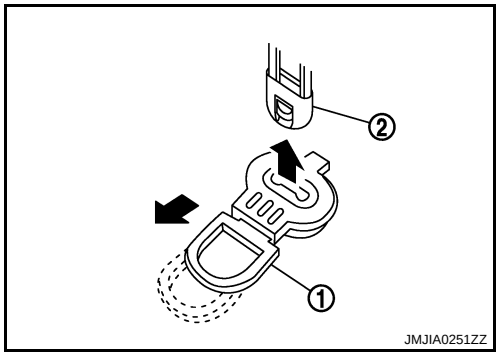

Installation

Installation is in the reverse order of removal.

Seatback Removal

1. Remove the seat cushion.
2. Remove the headrest assemblies.
3. Remove the seatback frame bolts and nut.

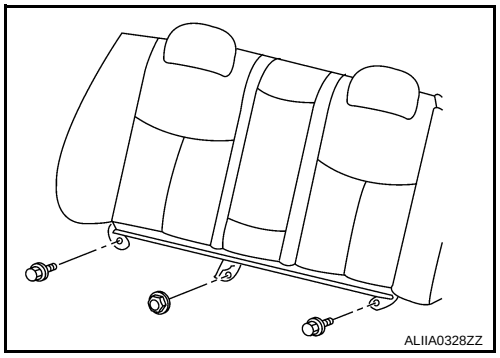

4. Disconnect the harness connectors.
5. Lift the seatback to disengage seat hook wires from the hangers.

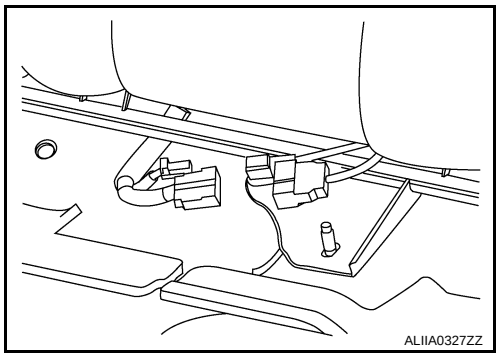

INSTALLATION

Installation is in the reverse order of removal.

DISASSEMBLY AND ASSEMBLY

FRONT SEAT

DRIVER SIDE

DRIVER SIDE : Exploded View

INFOID:0000000004264397

DRIVER'S POWER SEAT

SEC. 870

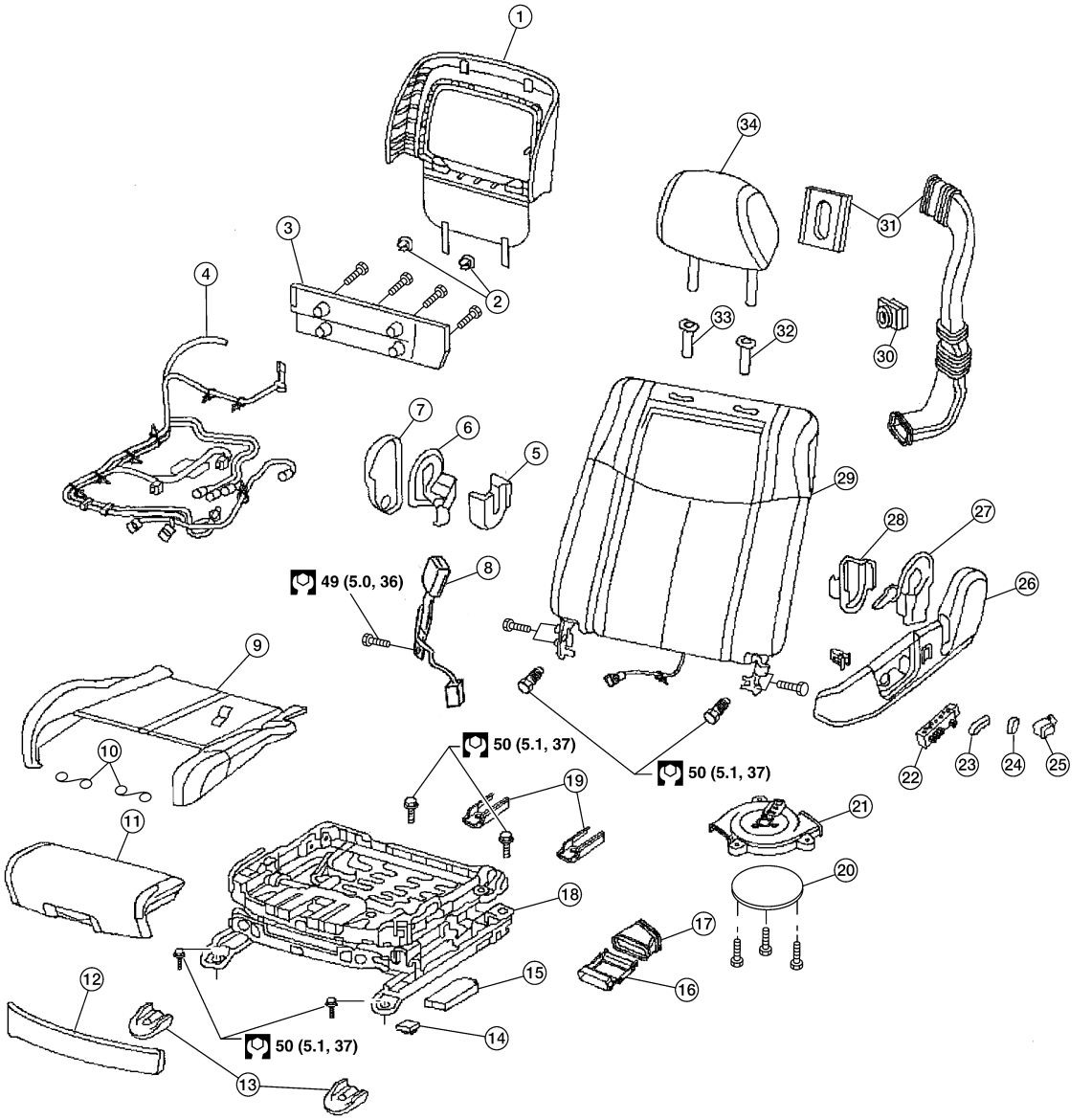

1. Seatback board	2. Seatback board clips	3. Seat cushion rear finisher
4. Driver seat wiring harness	5. Seat cushion inner finisher inside	6. Reclining device inner cover
7. Seat cushion inner finisher	8. Seat belt buckle	9. Seat cushion trim and cushion
10. Thigh extension tethers	11. Thigh extension assembly	12. Seat cushion front finisher
13. Front slide cover	14. Climate controlled seat control unit	15. Driver seat control unit

16. Seat cushion thermal electric device (TED)	17. Lower seat duct	18. Seat frame
19. Rear slide cover	20. Climate controlled seat blower motor filter	21. Climate controlled seat blower motor
22. Seat control switch	23. Seat slide and lifter switch knob	24. Reclining switch knob
25. Seat lumbar switch	26. Seat cushion outer finisher	27. Reclining device outer cover
28. Seat cushion outer finisher inside	29. Seatback assembly	30. Seatback thermal electric device (TED)
31. Upper seat duct	32. Headrest holder (locked)	33. Headrest holder (free)
34. Headrest		

DRIVER SIDE : Disassembly and Assembly

INFOID:0000000004171215

SEATBACK BOARD

Disassembly

1. Remove the seat from the vehicle. Refer to SE-64, "Removal and Installation"
2. Release the clips (D) from the seat cushion springs.
3. Pull the bottom of the backboard upward enough to release the inner clips (C).
4. Insert the proper tool to release the pawls (B).
5. Pull the backboard downward to disengage the hooks (A) and remove the backboard.

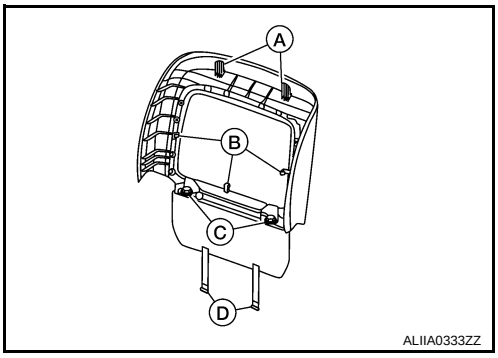

Assembly
Assembly is in the reverse order of disassembly.

SEATBACK THERMAL ELECTRIC DEVICE AND UPPER SEAT DUCT

Disassembly

1. Remove the seat from the vehicle. Refer to SE-64, "Removal and Installation"
2. Remove seatback board.
3. Remove seat cushion finisher.
4. Disconnect wiring harness (A) from the heater control unit (B).
5. Remove thermal electric device mounting bolts (C).
6. Disconnect the thermal electric device from upper seat duct (D) and remove from seat.
7. Disconnect upper seat duct (E) from lower seat duct and remove upper seat duct from seat.

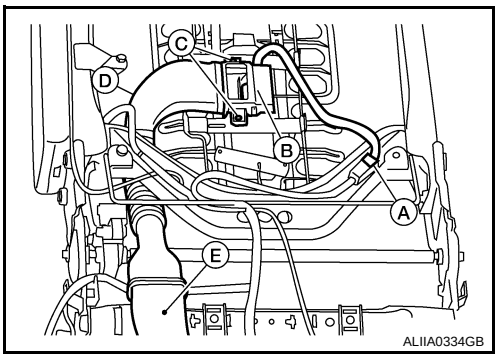

Assembly
Assembly is in the reverse order of disassembly.

SEAT CUSHION THERMAL ELECTRIC DEVICE AND LOWER SEAT DUCT

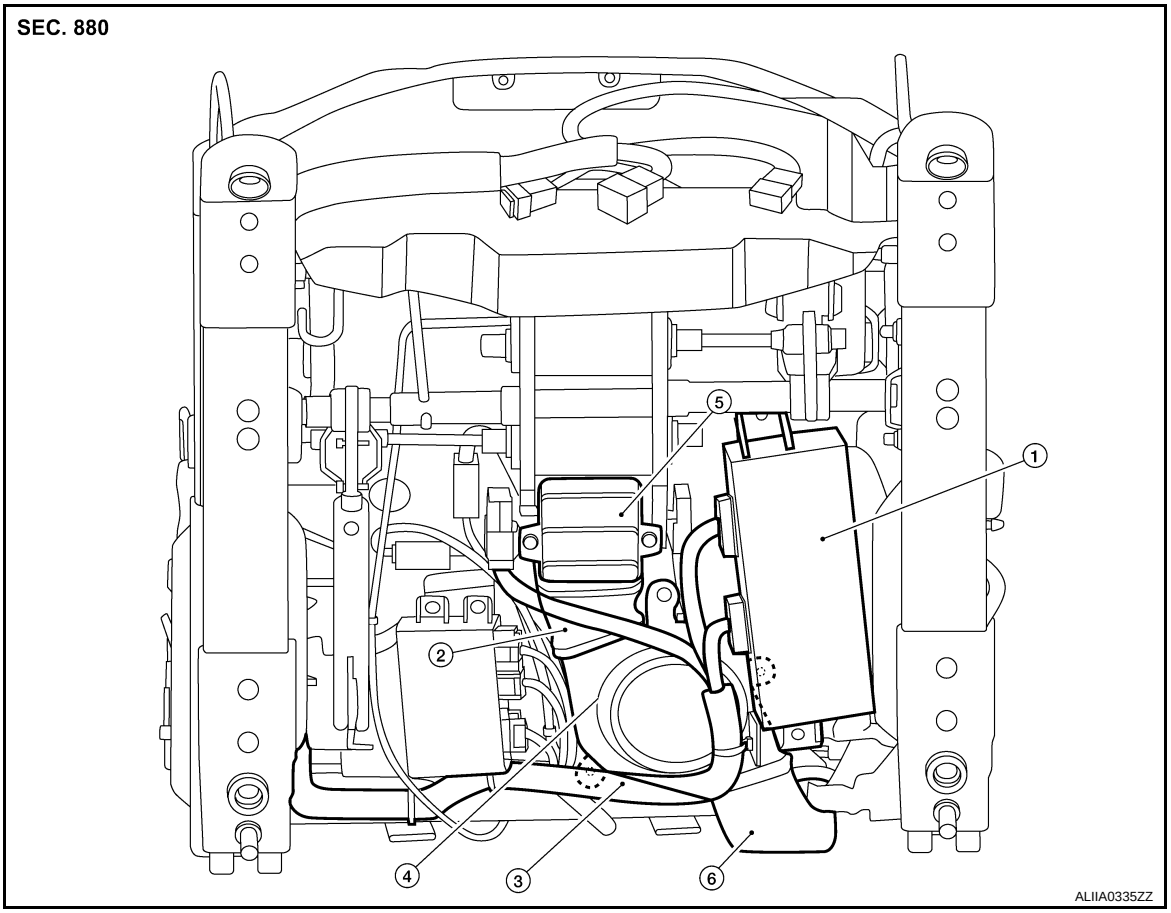

1.	Driver seat control unit	2.	Lower seat duct	3.	Seat wire harness
4.	Climate controlled seat blower motor	5.	Seat cushion thermal electric device	6.	Upper seat duct

Disassembly

1. Remove the seat from the vehicle. Refer to SE-64, "Removal and Installation"
2. Remove seatback board.
3. Remove seat cushion finisher.
4. Disconnect wire harness connectors from driver seat control unit.
5. Remove driver seat control unit from seat.
6. Remove seat cushion thermal electric device bolts.
7. Remove climate controlled seat blower motor bolts.
8. Disconnect climate controlled seat blower motor from upper seat duct.
9. Remove climate controlled seat blower motor, lower seat duct and seat cushion thermal electric device from seat.

Assembly

Assembly is in the reverse order of disassembly.

THIGH EXTENSION ASSEMBLY

Disassembly

1. Move the thigh extension to the front most position and release the trim cover clips (A).
2. Remove the trim cover and foam (B).

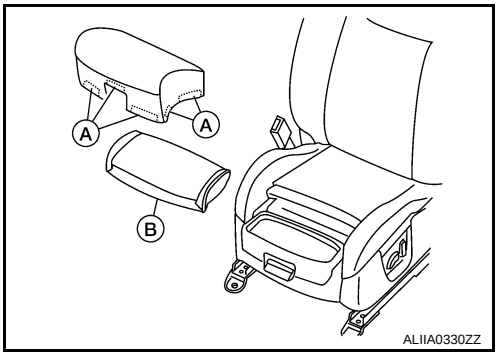

3. Cut the thigh extension tethers and drill out the upper rivets (A) that connect the thigh extension tethers (B) to the thigh extension assembly (C).

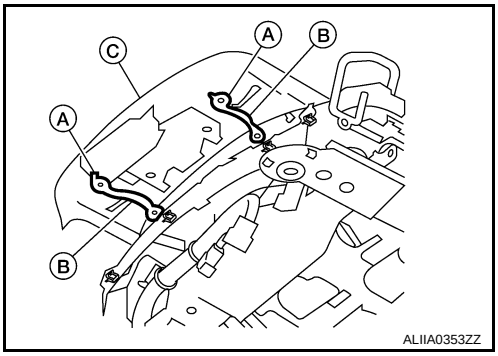

4. Insert suitable tool into the thigh extension top panel and release the clip (A).
5. Pull the thigh extension handle and remove the thigh extension assembly.

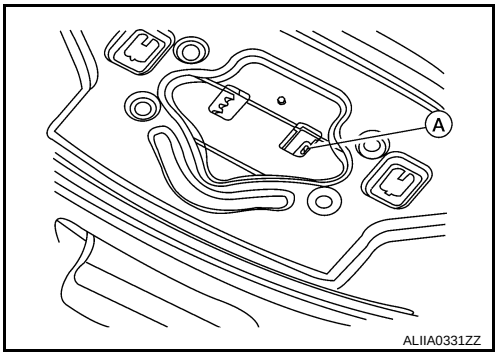

6. Drill out the lower rivets that connect the thigh extension tethers to the seat frame assembly.

Assembly

1. Replace the trim cover and clips and foam to the thigh extension assembly.
2. Rivet the thigh extension tethers to the seat frame assembly mounting hole (A).

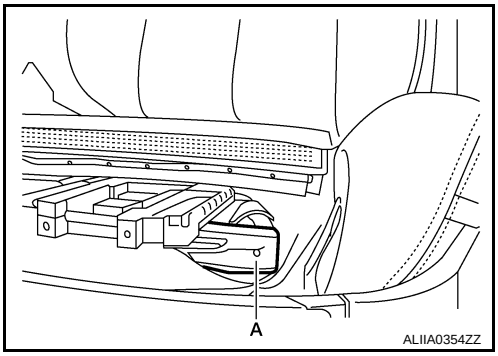

3. Align the thigh extension assembly on the top rail.
4. Lift the thigh extension handle and slide the thigh extension assembly onto the seat.

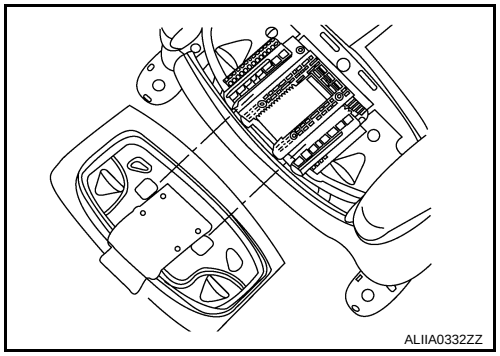

5. Rivet the thigh extension tethers to the thigh extension assembly mounting hole (A).

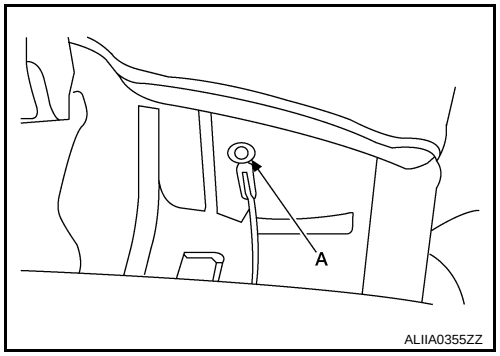

PASSENGER SIDE

PASSENGER SIDE : Exploded View

INFOID:0000000004267736

PASSENGER'S POWER SEAT

SEC. 870

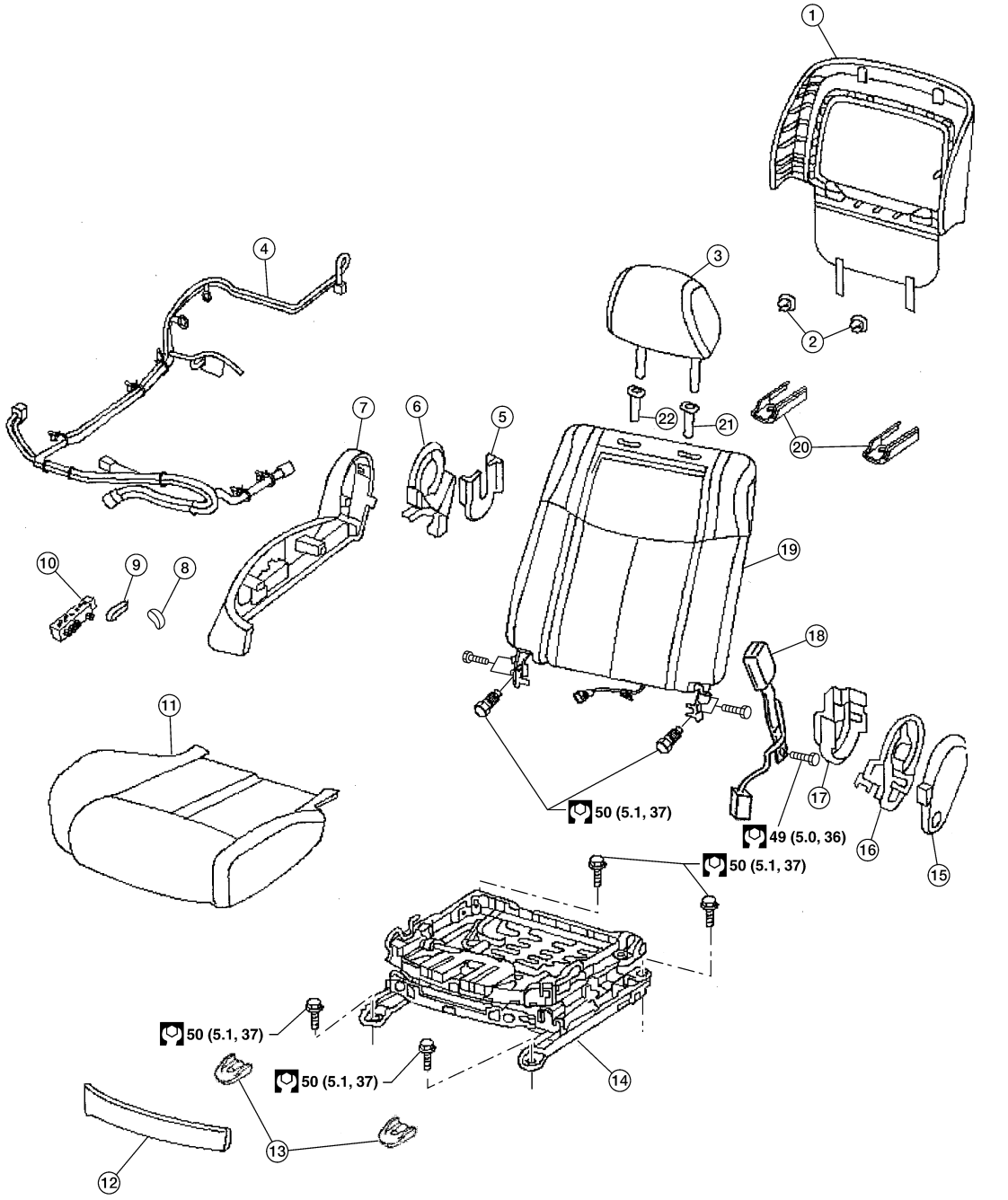

1.	Seatback board	2.	Seatback board clips	3.	Headrest
4.	Passenger seat wiring harness	5.	Seat cushion outer finisher inside	6.	Reclining device inner cover
7.	Seat cushion outer finisher	8.	Reclining switch knob	9.	Seat slide and lifter switch knob
10.	Seat control switch	11.	Seat cushion assembly	12.	Seat cushion front finisher
13.	Front slide cover	14.	Seat frame	15.	Seat cushion inner finisher
16.	Reclining device inner cover	17.	Seat cushion inner finisher inside	18.	Seat belt buckle

19. Seatback assembly
20. Rear slide cover
21. Headrest holder (locked)
22. Headrest holder (free)

PASSENGER SIDE : Disassembly

INFOID:0000000004171217

NOTE:
If the vehicle has been involved in a collision, the seat must be inspected for damage. Refer to SR-20, "For Frontal Collision".

SEATBACK BOARD

Disassembly

1. Remove the seat from the vehicle. Refer to SE-64, "Removal and Installation"
2. Release the clips (D) from the seat cushion springs.
3. Pull the bottom of the backboard upward enough to release the inner clips (C).
4. Insert the proper tool to release the pawls (B).
5. Pull the backboard downward to disengage the hooks (A) and remove the backboard.

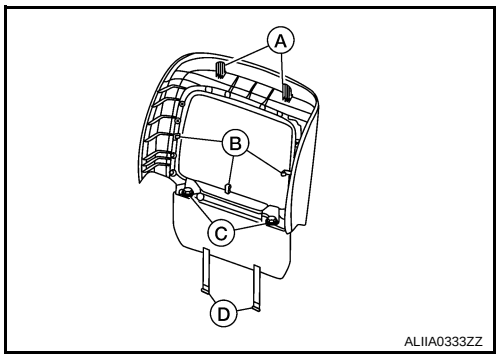

Assembly
Assembly is in the reverse order of disassembly.

REAR SEAT

Exploded View - Bucket Seat

INFOID:0000000004291563

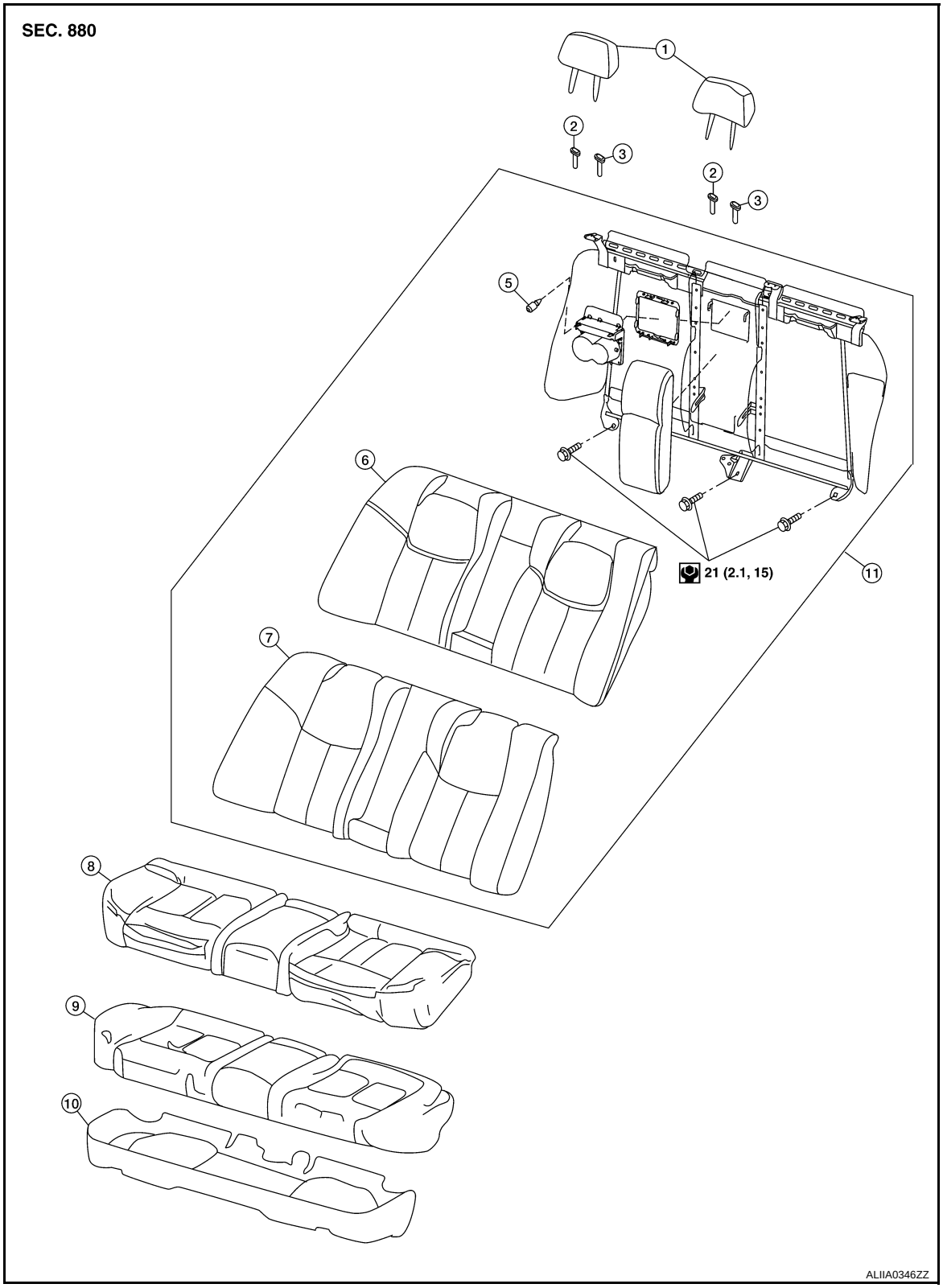

1. Headrest
2. Headrest holder (free)
3. Headrest holder (locked)
4. Seatback frame
5. Bumper
6. Seatback pad

7. Seatback trim
8. Seat cushion trim
9. Seat cushion pad
10. Seat cushion frame
11. Seatback assembly

ARMREST

ARMREST : Disassembly and Assembly

INFOID:0000000004171219

Disassembly

1. Remove the seat cushion and rear seatback. Refer to SE-67, "Removal and Installation"
2. Remove armrest bolts (A) and remove the armrest assembly.

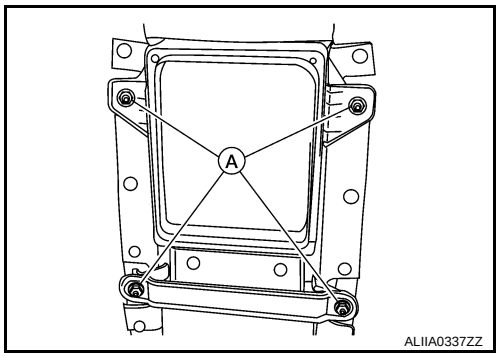

Assembly

Assembly is in the reverse order of disassembly.

COMPONENT DIAGNOSIS

POWER SEAT

Wiring Diagram - POWER SEAT FOR DRIVER SIDE -

INFOID:0000000004263841

POWER SEAT FOR DRIVER SIDE - WITHOUT AUTOMATIC DRIVE POSITIONER

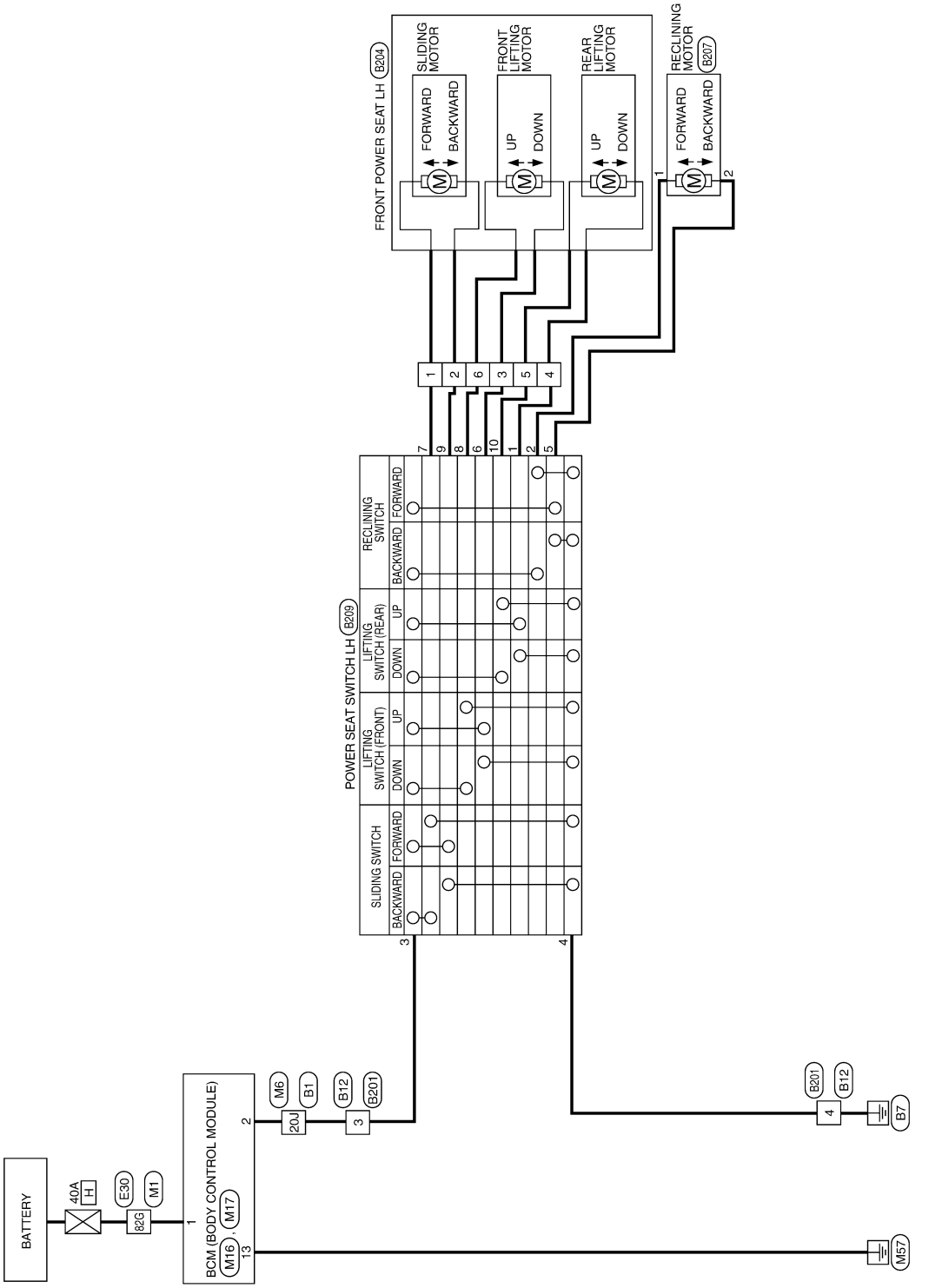

AAJWA0010GB

POWER SEAT FOR DRIVER SIDE CONNECTORS - WITH AUTOMATIC DRIVE POSITIONER

Connector No.	M1
Connector Name	WIRE TO WIRE
Connector Color	WHITE

H.S.

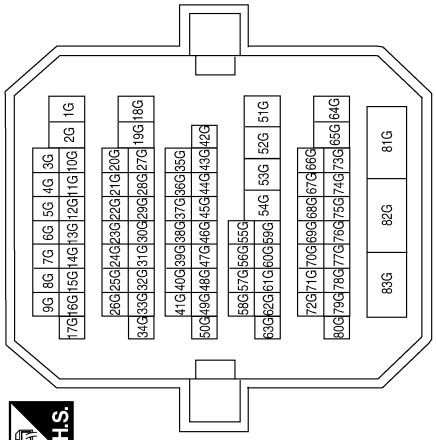

Terminal No.	Color of Wire	Signal Name
82G	W/B	–

Connector No.	M6
Connector Name	WIRE TO WIRE
Connector Color	WHITE

H.S.

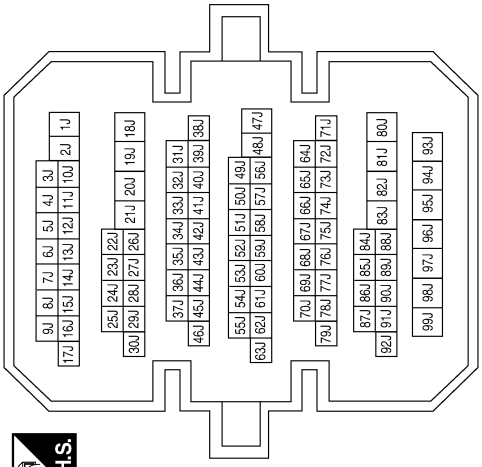

Terminal No.	Color of Wire	Signal Name
20J	R/Y	–

Connector No.	M16
Connector Name	BCM (BODY CONTROL MODULE)
Connector Color	BLACK

H.S.

Terminal No.	Color of Wire	Signal Name
1	W/B	BAT POWER F/L
2	R/Y	P/W POWER SUPPLY PERM

Connector No.	M17
Connector Name	BCM (BODY CONTROL MODULE)
Connector Color	WHITE

H.S.

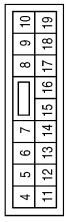

Terminal No.	Color of Wire	Signal Name
13	B	GND1

AAJIA0018GB

Connector No.	E30
Connector Name	WIRE TO WIRE
Connector Color	WHITE

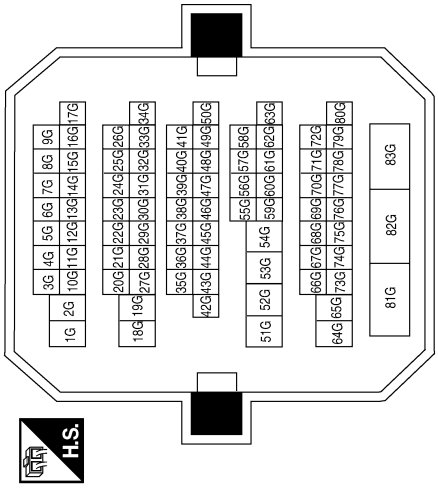

Terminal No.	Color of Wire	Signal Name
82G	LG	–

Connector No.	B1
Connector Name	WIRE TO WIRE
Connector Color	WHITE

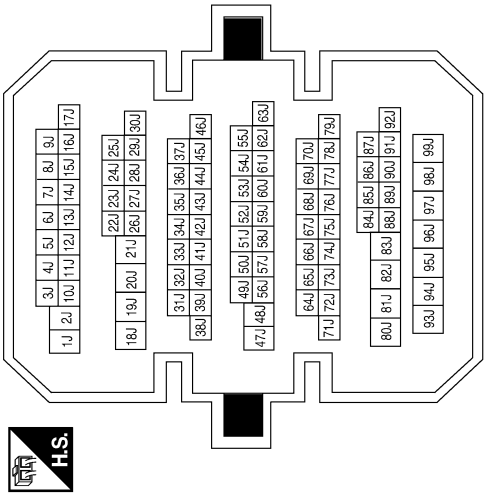

Terminal No.	Color of Wire	Signal Name
20J	BR	–

Connector No.	B12
Connector Name	WIRE TO WIRE
Connector Color	WHITE

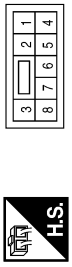

Terminal No.	Color of Wire	Signal Name
3	BR	–
4	B/R	–

Connector No.	B201
Connector Name	WIRE TO WIRE
Connector Color	WHITE

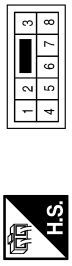

Terminal No.	Color of Wire	Signal Name
3	R/Y	–
4	B	–

Connector No.	B204
Connector Name	FRONT POWER SEAT LH
Connector Color	WHITE

Terminal No.	Color of Wire	Signal Name
1	Y	SLIDER MOTOR
2	R	REAR LIFTER MOTOR
3	V	SLIDER MOTOR
4	GR	FRONT LIFTER MOTOR
5	O	FRONT LIFTER MOTOR
6	B/W	REAR LIFTER MOTOR

AAJIA0019GB

Connector No.	B207
Connector Name	RECLINING MOTOR
Connector Color	BLACK

H.S.

Terminal No.	Color of Wire	Signal Name
1	O	–
2	GR	–

Connector No.	B209
Connector Name	POWER SEAT SWITCH LH
Connector Color	WHITE

H.S.

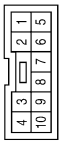

Terminal No.	Color of Wire	Signal Name
1	G	–
2	O	–
3	R/Y	–
4	B	–
5	GR	–
6	V	–
7	Y	–
8	B	–
9	R	–
10	V	–

AAJIA0020GB

Wiring Diagram - POWER SEAT FOR PASSENGER SIDE -

INFOID:0000000004263842

POWER SEAT FOR PASSENGER SIDE

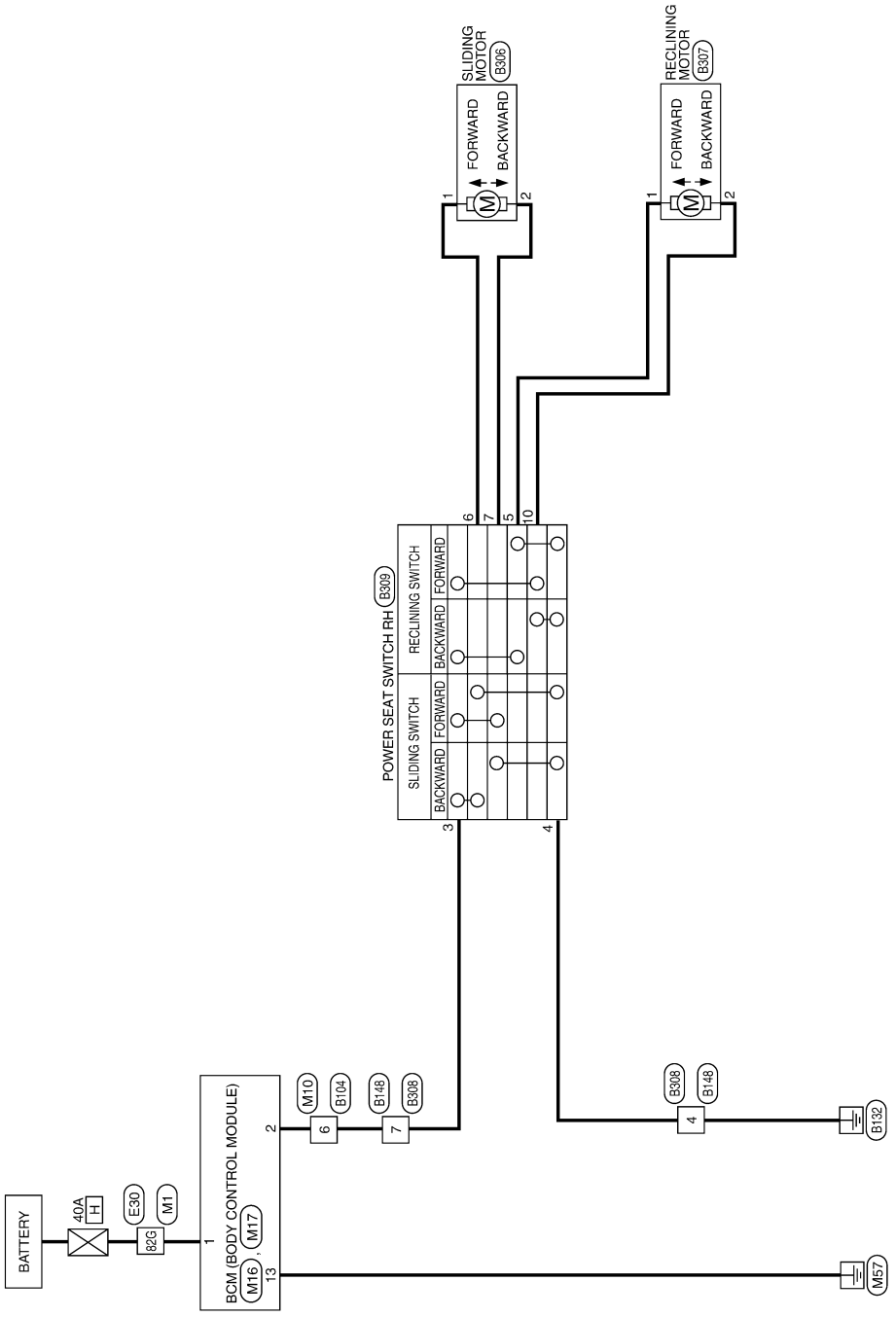

POWER SEAT FOR PASSENGER SIDE CONNECTORS

Connector No.	M1
Connector Name	WIRE TO WIRE
Connector Color	WHITE

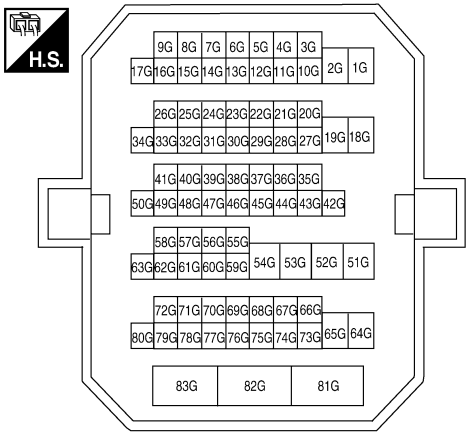

Terminal No.	Color of Wire	Signal Name
82G	W/B	–

Connector No.	M10
Connector Name	WIRE TO WIRE
Connector Color	WHITE

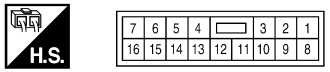

Terminal No.	Color of Wire	Signal Name
6	R/Y	–

Connector No.	M16
Connector Name	BCM (BODY CONTROL MODULE)
Connector Color	BLACK

Terminal No.	Color of Wire	Signal Name
1	W/B	BAT POWER F/L
2	R/Y	P/W POWER SUPPLY PERM

Connector No.	M17
Connector Name	BCM (BODY CONTROL MODULE)
Connector Color	WHITE

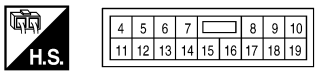

Terminal No.	Color of Wire	Signal Name
13	B	GND1

AAJIA0022GB

Connector No.	E30
Connector Name	WIRE TO WIRE
Connector Color	WHITE

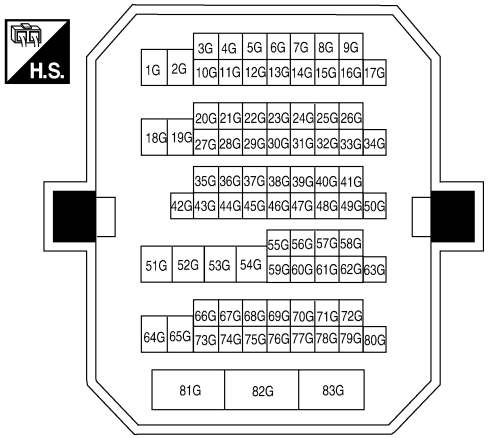

Terminal No.	Color of Wire	Signal Name
82G	LG	–

Connector No.	B104
Connector Name	WIRE TO WIRE
Connector Color	WHITE

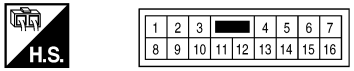

Terminal No.	Color of Wire	Signal Name
6	SB	–

Connector No.	B148
Connector Name	WIRE TO WIRE
Connector Color	WHITE

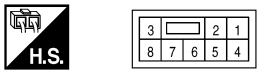

Terminal No.	Color of Wire	Signal Name
4	B	–
7	SB	–

Connector No.	B306
Connector Name	SLIDING MOTOR
Connector Color	GRAY

Terminal No.	Color of Wire	Signal Name
1	V	–
2	Y	–

Connector No.	B307
Connector Name	RECLINING MOTOR
Connector Color	BLACK

Terminal No.	Color of Wire	Signal Name
1	W	–
2	GR	–

AAJIA0023GB

Connector No.	B308
Connector Name	WIRE TO WIRE
Connector Color	WHITE

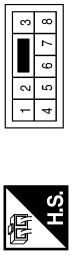

Terminal No.	Color of Wire	Signal Name
4	B	–
7	R/Y	–

Connector No.	B309
Connector Name	POWER SEAT SWITCH RH
Connector Color	WHITE

Terminal No.	Color of Wire	Signal Name
1	–	–
2	–	–
3	R/Y	–
4	B	–
5	W	–
6	V	–
7	Y	–
8	–	–
9	–	–
10	GR	–

AAJIA0024GB

HEATED SEAT

Wiring Diagram - HEATED SEAT -

INFOID:0000000004263844

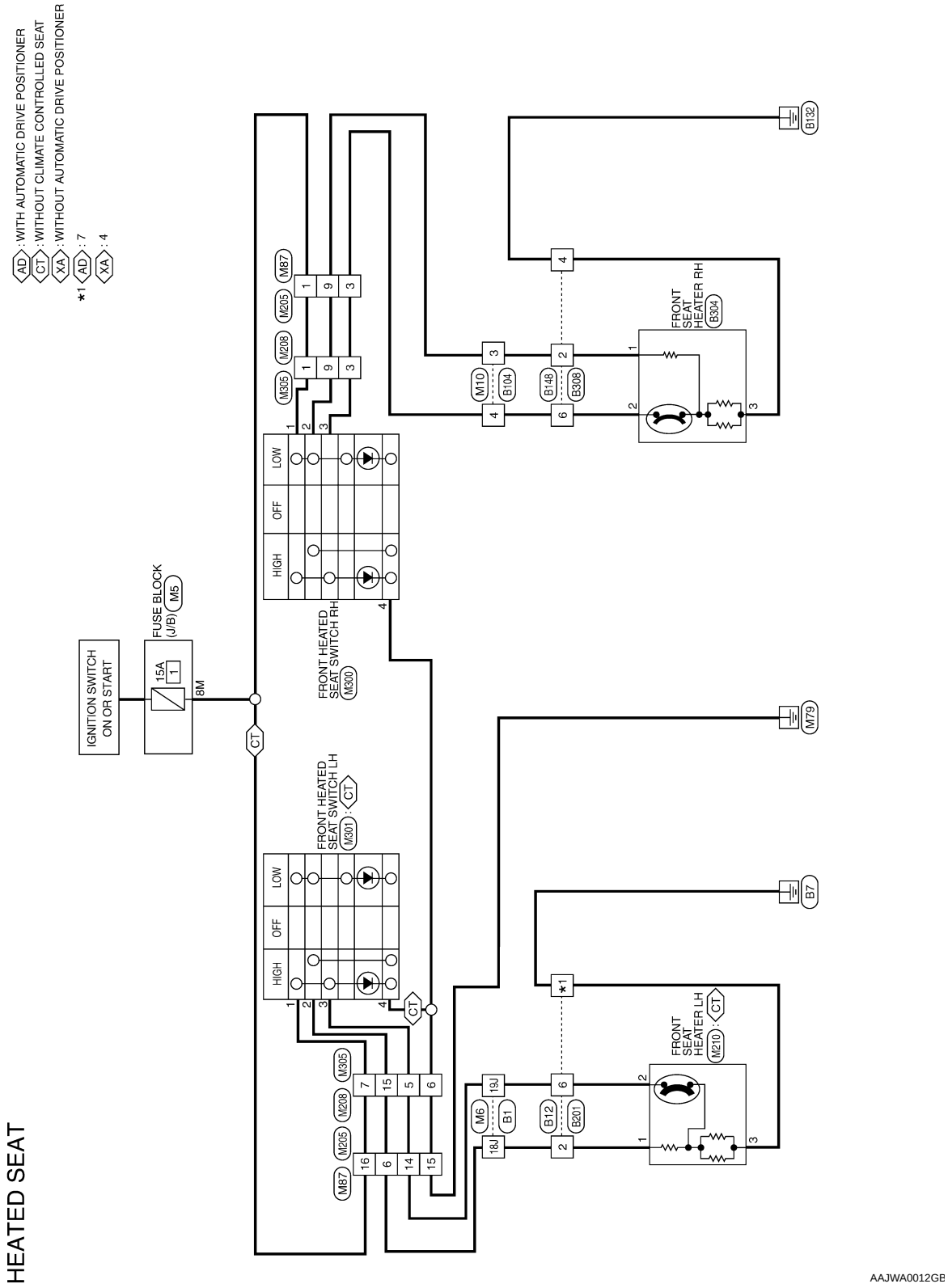

HEATED SEAT CONNECTORS

Connector No.	M5
Connector Name	FUSE BLOCK (J/B)
Connector Color	WHITE

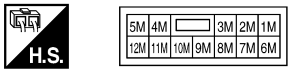

Terminal No.	Color of Wire	Signal Name
8M	G/R	–

Connector No.	M6
Connector Name	WIRE TO WIRE
Connector Color	WHITE

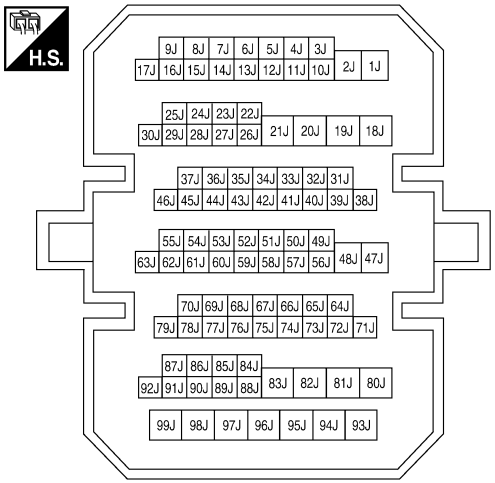

Terminal No.	Color of Wire	Signal Name
18J	GR	–
19J	GR/R	–

Connector No.	M10
Connector Name	WIRE TO WIRE
Connector Color	WHITE

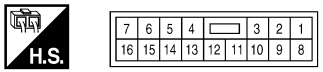

Terminal No.	Color of Wire	Signal Name
3	GR/L	–
4	GR/B	–

Connector No.	M87
Connector Name	WIRE TO WIRE
Connector Color	BROWN

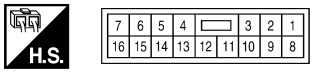

Terminal No.	Color of Wire	Signal Name
1	G/R	–
3	GR/B	–
6	GR	–
9	GR/L	–
14	GR/R	–
15	B	–
16	G/R	–

Connector No.	M205
Connector Name	WIRE TO WIRE
Connector Color	BROWN

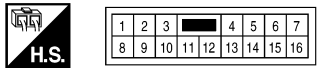

Terminal No.	Color of Wire	Signal Name
1	G/R	–
3	GR/B	–
6	GR	–
9	GR/L	–
14	GR/R	–
15	B	–
16	G/R	–

AAJIA0025GB

Connector No.	M208
Connector Name	WIRE TO WIRE
Connector Color	WHITE

H.S.

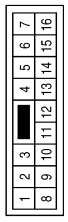

Terminal No.	Color of Wire	Signal Name
1	G/R	–
3	GR/B	–
5	GR/R	–
6	B	–
7	G/R	–
9	GR/L	–
15	GR	–

Connector No.	M300
Connector Name	FRONT HEATED SEAT SWITCH RH
Connector Color	BROWN

H.S.

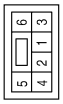

Terminal No.	Color of Wire	Signal Name
1	SB	–
2	G	–
3	GR	–
4	B	–

Connector No.	M301
Connector Name	FRONT HEATED SEAT SWITCH LH
Connector Color	WHITE

H.S.

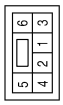

Terminal No.	Color of Wire	Signal Name
1	P	–
2	W	–
3	O	–
4	B	–

Connector No.	M305
Connector Name	WIRE TO WIRE
Connector Color	WHITE

H.S.

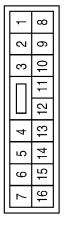

Terminal No.	Color of Wire	Signal Name
1	SB	–
3	GR	–
5	O	–
6	B	–
7	P	–
9	G	–
15	W	–

Connector No.	B1
Connector Name	WIRE TO WIRE
Connector Color	WHITE

H.S.

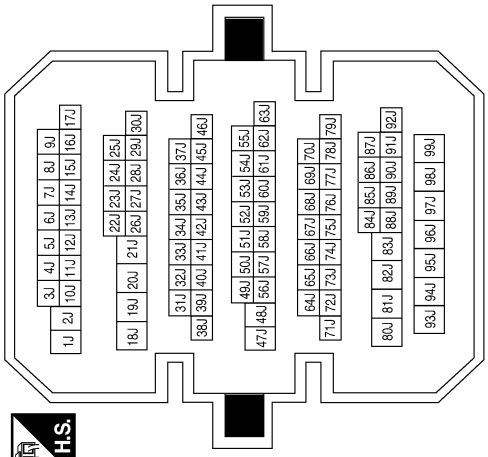

Terminal No.	Color of Wire	Signal Name
18J	W	–
19J	O	–

AAJIA0026GB

Connector No.	B12
Connector Name	WIRE TO WIRE
Connector Color	WHITE

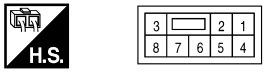

Terminal No.	Color of Wire	Signal Name
2	W	–
4	B	– (WITHOUT AUTOMATIC DRIVE POSITIONER)
6	O	–
7	B/W	– (WITH AUTOMATIC DRIVE POSITIONER)

Connector No.	B104
Connector Name	WIRE TO WIRE
Connector Color	WHITE

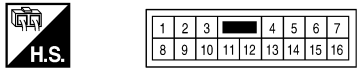

Terminal No.	Color of Wire	Signal Name
3	G	–
4	GR	–

Connector No.	B148
Connector Name	WIRE TO WIRE
Connector Color	WHITE

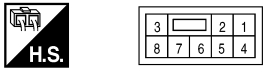

Terminal No.	Color of Wire	Signal Name
2	G	–
4	B	–
6	GR	–

Connector No.	B201
Connector Name	WIRE TO WIRE
Connector Color	WHITE

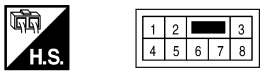

Terminal No.	Color of Wire	Signal Name
2	GR	–
4	B	– (WITHOUT AUTOMATIC DRIVE POSITIONER)
6	GR/W	–
7	GR/B	– (WITH AUTOMATIC DRIVE POSITIONER)

Connector No.	B210
Connector Name	FRONT SEAT HEATER LH
Connector Color	WHITE

Terminal No.	Color of Wire	Signal Name
1	GR	–
2	GR/W	–
3	W/B	–

Connector No.	B304
Connector Name	FRONT SEAT HEATER RH
Connector Color	WHITE

Terminal No.	Color of Wire	Signal Name
1	GR/G	–
2	GR/R	–
3	B	–

AAJIA0027GB

Connector No.	B308
Connector Name	WIRE TO WIRE
Connector Color	WHITE

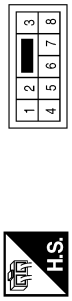

Terminal No.	Color of Wire	Signal Name
2	GR/G	–
4	B	–
6	GR/R	–

AAJIA0028GB

LUMBAR SUPPORT

Wiring Diagram - LUMBAR SUPPORT SYSTEM -

INFOID:0000000004263845

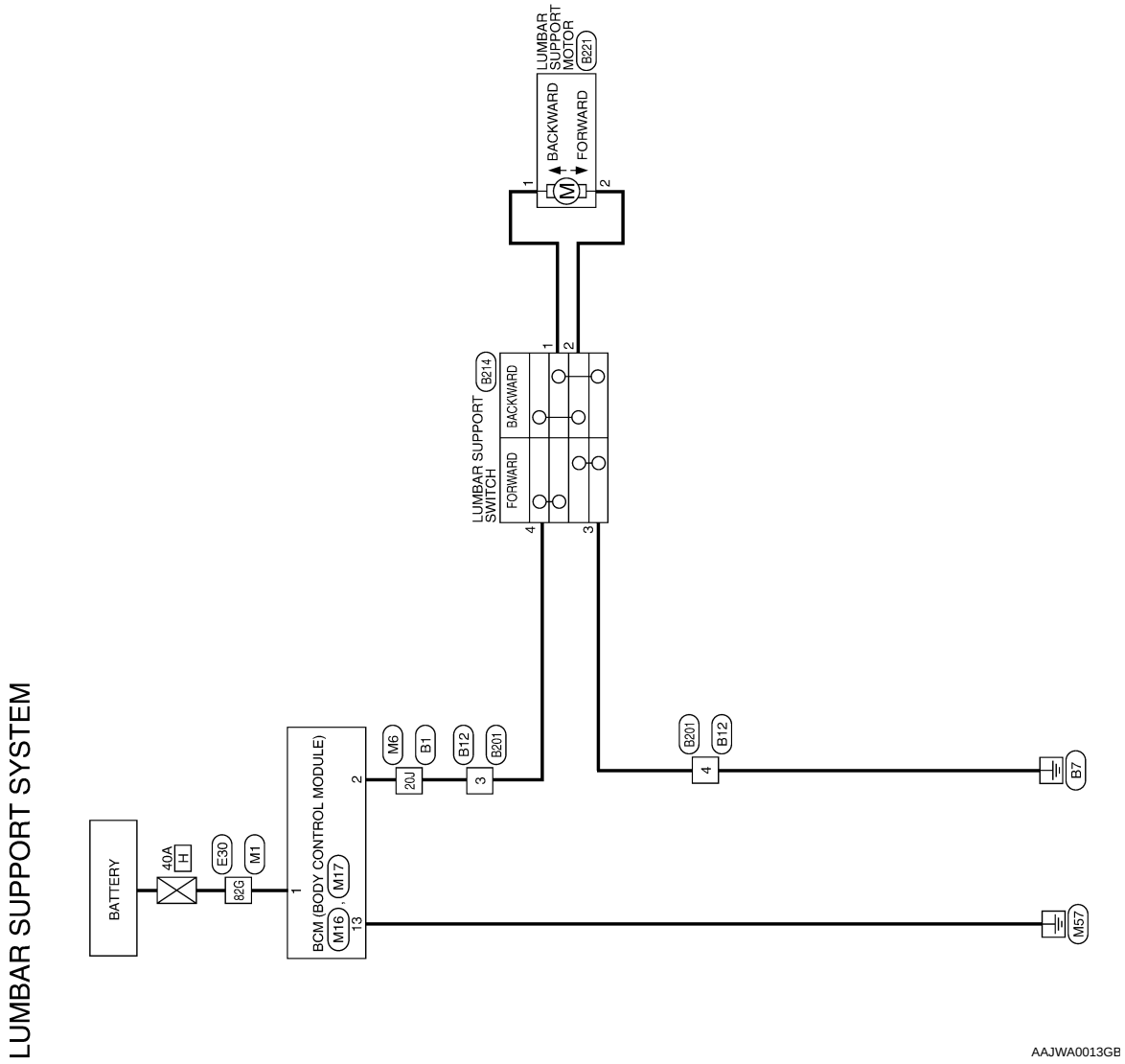

LUMBAR SUPPORT SYSTEM CONNECTORS

Connector No.	M1
Connector Name	WIRE TO WIRE
Connector Color	WHITE

H.S.

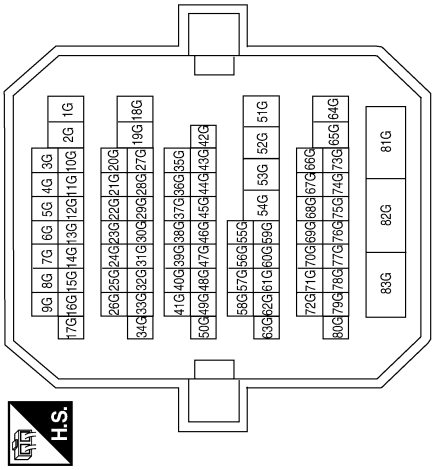

Terminal No.	Color of Wire	Signal Name
82G	W/B	–

Connector No.	M6
Connector Name	WIRE TO WIRE
Connector Color	WHITE

H.S.

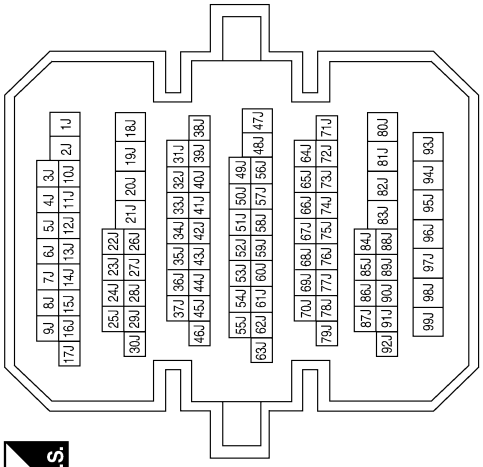

Terminal No.	Color of Wire	Signal Name
20J	R/Y	–

Connector No.	M16
Connector Name	BCM (BODY CONTROL MODULE)
Connector Color	BLACK

H.S.

Terminal No.	Color of Wire	Signal Name
1	W/B	BAT POWER F/L
2	R/Y	P/W POWER SUPPLY PERM

Connector No.	M17
Connector Name	BCM (BODY CONTROL MODULE)
Connector Color	WHITE

H.S.

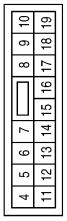

Terminal No.	Color of Wire	Signal Name
13	B	GND1

AAJIA0034GB

Connector No.	E30
Connector Name	WIRE TO WIRE
Connector Color	WHITE

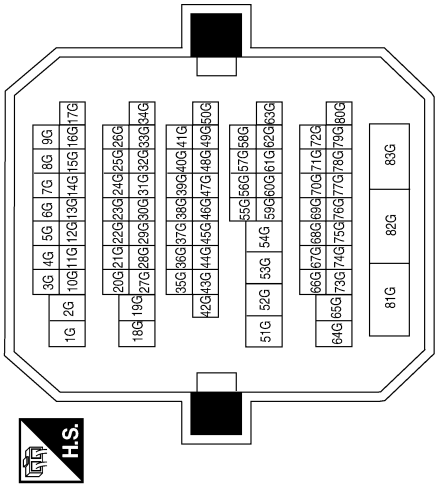

Terminal No.	Color of Wire	Signal Name
82G	LG	–

Connector No.	B1
Connector Name	WIRE TO WIRE
Connector Color	WHITE

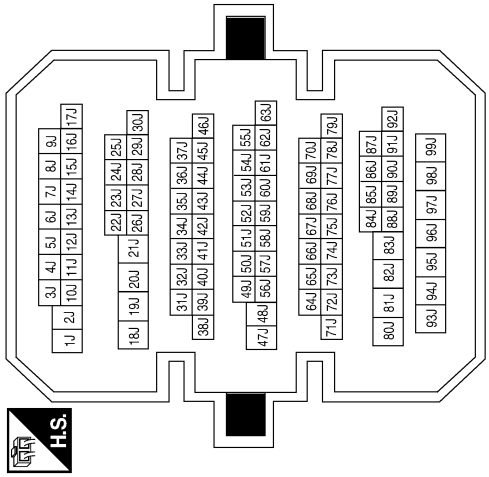

Terminal No.	Color of Wire	Signal Name
20J	BR	–

Connector No.	B12
Connector Name	WIRE TO WIRE
Connector Color	WHITE

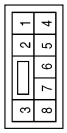

Terminal No.	Color of Wire	Signal Name
3	BR	–
4	B/R	–

Connector No.	B201
Connector Name	WIRE TO WIRE
Connector Color	WHITE

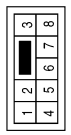

Terminal No.	Color of Wire	Signal Name
3	R/Y	–
4	B	–

Connector No.	B214
Connector Name	LUMBAR SUPPORT SWITCH
Connector Color	WHITE

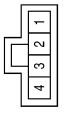

Terminal No.	Color of Wire	Signal Name
1	R/L	–
2	R/W	–
3	B	–
4	R/Y	–

Connector No.	B221
Connector Name	LUMBAR SUPPORT MOTOR
Connector Color	BLACK

Terminal No.	Color of Wire	Signal Name
1	R/L	–
2	R/W	–

AAJIA0035GB

SYMPTOM DIAGNOSIS

SQUEAK AND RATTLE TROUBLE DIAGNOSES

Work Flow

INFOID:0000000003897569

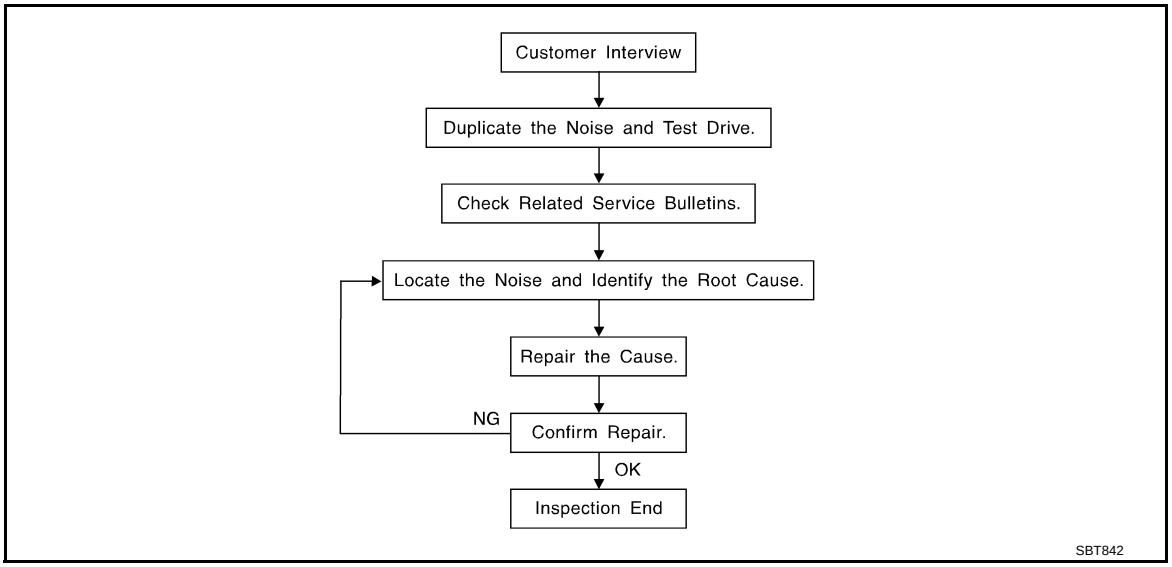

CUSTOMER INTERVIEW

Interview the customer if possible, to determine the conditions that exist when the noise occurs. Use the Diagnostic Worksheet during the interview to document the facts and conditions when the noise occurs and any customer's comments; refer to SE-98, "Diagnostic Worksheet". This information is necessary to duplicate the conditions that exist when the noise occurs.

- The customer may not be able to provide a detailed description or the location of the noise. Attempt to obtain all the facts and conditions that exist when the noise occurs (or does not occur).
- If there is more than one noise in the vehicle, be sure to diagnose and repair the noise that the customer is concerned about. This can be accomplished by test driving the vehicle with the customer.
- After identifying the type of noise, isolate the noise in terms of its characteristics. The noise characteristics are provided so the customer, service adviser and technician are all speaking the same language when defining the noise.
- Squeak —(Like tennis shoes on a clean floor)
  Squeak characteristics include the light contact/fast movement/brought on by road conditions/hard surfaces = higher pitch noise/softer surfaces = lowerpitch noises/edge to surface = chirping
- Creak—(Like walking on an old wooden floor)
  Creak characteristics include firm contact/slow movement/twisting with a rotational movement/pitch dependent on materials/often brought on by activity.
- Rattle—(Like shaking a baby rattle)
  Rattle characteristics include the fast repeated contact/vibration or similar movement/loose parts/missing clip or fastener/incorrect clearance.
- Knock —(Like a knock on a door)
  Knock characteristics include hollow sounding/sometimes repeating/often brought on by driver action.
- Tick—(Like a clock second hand)
  Tick characteristics include gentle contacting of light materials/loose components/can be caused by driver action or road conditions.
- Thump—(Heavy, muffled knock noise)
  Thump characteristics include softer knock/dead sound often brought on by activity.
- Buzz—(Like a bumble bee)
  Buzz characteristics include high frequency rattle/firm contact.
- Often the degree of acceptable noise level will vary depending upon the person. A noise that you may judge as acceptable may be very irritating to the customer.
- Weather conditions, especially humidity and temperature, may have a great effect on noise level.

DUPLICATE THE NOISE AND TEST DRIVE

If possible, drive the vehicle with the customer until the noise is duplicated. Note any additional information on the Diagnostic Worksheet regarding the conditions or location of the noise. This information can be used to duplicate the same conditions when you confirm the repair.
If the noise can be duplicated easily during the test drive, to help identify the source of the noise, try to duplicate the noise with the vehicle stopped by doing one or all of the following:
1) Close a door.
2) Tap or push/pull around the area where the noise appears to be coming from.
3) Rev the engine.
4) Use a floor jack to recreate vehicle “twist”.
5) At idle, apply engine load (electrical load, half-clutch on M/T models, drive position on A/T models).
6) Raise the vehicle on a hoist and hit a tire with a rubber hammer.
- Drive the vehicle and attempt to duplicate the conditions the customer states exist when the noise occurs.
- If it is difficult to duplicate the noise, drive the vehicle slowly on an undulating or rough road to stress the vehicle body.

CHECK RELATED SERVICE BULLETINS

After verifying the customer concern or symptom, check ASIST for Technical Service Bulletins (TSBs) related to that concern or symptom.
If a TSB relates to the symptom, follow the procedure to repair the noise.

LOCATE THE NOISE AND IDENTIFY THE ROOT CAUSE

1. Narrow down the noise to a general area. To help pinpoint the source of the noise, use a listening tool (Chassis Ear: J-39570, Engine Ear and mechanics stethoscope).
2. Narrow down the noise to a more specific area and identify the cause of the noise by:

- removing the components in the area that you suspect the noise is coming from.
  Do not use too much force when removing clips and fasteners, otherwise clips and fastener can be broken or lost during the repair, resulting in the creation of new noise.
- tapping or pushing/pulling the component that you suspect is causing the noise.
  Do not tap or push/pull the component with excessive force, otherwise the noise will be eliminated only temporarily.
- feeling for a vibration with your hand by touching the component(s) that you suspect is (are) causing the noise.
- placing a piece of paper between components that you suspect are causing the noise.
- looking for loose components and contact marks.
  Refer to SE-96, "Generic Squeak and Rattle Troubleshooting".

REPAIR THE CAUSE

- If the cause is a loose component, tighten the component securely.
- If the cause is insufficient clearance between components:
- separate components by repositioning or loosening and retightening the component, if possible.
- insulate components with a suitable insulator such as urethane pads, foam blocks, felt cloth tape or urethane tape. A Nissan Squeak and Rattle Kit (J-43980) is available through your authorized Nissan Parts Department.

CAUTION:
Do not use excessive force as many components are constructed of plastic and may be damaged.
NOTE:
Always check with the Parts Department for the latest parts information.
The following materials are contained in the Nissan Squeak and Rattle Kit (J-43980). Each item can be ordered separately as needed.
URETHANE PADS [1.5 mm (0.059 in) thick]
Insulates connectors, harness, etc.
76268-9E005: 100 × 135 mm (3.94 × 5.31 in)/76884-71L01: 60 × 85 mm (2.36 × 3.35 in)/76884-71L02:15 × 25 mm (0.59 × 0.98 in)
INSULATOR (Foam blocks)
Insulates components from contact. Can be used to fill space behind a panel.
73982-9E000: 45 mm (1.77 in) thick, 50 × 50 mm (1.97 × 1.97 in)/73982-50Y00: 10 mm (0.39 in) thick, 50 × 50 mm (1.97 × 1.97 in)
INSULATOR (Light foam block)
80845-71L00: 30 mm (1.18 in) thick, 30 × 50 mm (1.18 × 1.97in)
FELT CLOTHTAPE
Used to insulate where movement does not occur. Ideal for instrument panel applications.

68370-4B000: 15 × 25 mm (0.59 × 0.98 in) pad/68239-13E00: 5 mm (0.20 in) wide tape roll
The following materials, not found in the kit, can also be used to repair squeaks and rattles.
UHMW (TEFLON) TAPE
Insulates where slight movement is present. Ideal for instrument panel applications.
SILICONE GREASE
Used in place of UHMW tape that will be visible or not fit. Will only last a few months.
SILICONE SPRAY
Use when grease cannot be applied.
DUCT TAPE
Use to eliminate movement.

CONFIRM THE REPAIR

Confirm that the cause of a noise is repaired by test driving the vehicle.Operate the vehicle under the same conditions as when the noise originally occurred. Refer to the notes on the Diagnostic Worksheet.

Generic Squeak and Rattle Troubleshooting

INFOID:0000000003897570

Refer to Table of Contents for specific component removal and installation information.

INSTRUMENT PANEL

Most incidents are caused by contact and movement between:

1. Acrylic lens and combination meter housing
2. Instrument panel to front pillar finishers
3. Instrument panel to windshield
4. Instrument panel mounting pins
5. Wiring harnesses behind the combination meter
6. A/C defroster duct and duct joint
   These incidents can usually be located by tapping or moving the components to duplicate the noise or by pressing on the components while driving to stop the noise. Most of these incidents can be repaired by applying felt cloth tape or silicon spray (in hard to reach areas). Urethane pads can be used to insulate wiring harness.
   CAUTION:
   Do not use silicone spray to isolate a squeak or rattle. If you saturate the area with silicone, you will not be able to recheck the repair.

CENTER CONSOLE

Components to pay attention to include:

1. Shifter assembly cover to finisher
2. A/C control unit and cluster lid C
3. Wiring harnesses behind audio and A/C control unit

The instrument panel repair and isolation procedures also apply to the center console.

DOORS

Pay attention to the:

1. Finisher and inner panel making a slapping noise
2. Inside handle escutcheon to door finisher
3. Wiring harnesses tapping
4. Door striker out of alignment causing a popping noise on starts and stops

Tapping or moving the components or pressing on them while driving to duplicate the conditions can isolate many of these incidents. You can usually insulate the areas with felt cloth tape or insulator foam blocks from the Nissan Squeak and Rattle Kit (J-43980) to repair the noise.

TRUNK

Trunk noises are often caused by a loose jack or loose items put into the trunk by the owner.
In addition look for:

1. Trunk lid bumpers out of adjustment
2. Trunk lid striker out of adjustment
3. The trunk lid torsion bars knocking together

4. A loose license plate or bracket

Most of these incidents can be repaired by adjusting, securing or insulating the item(s) or component(s) causing the noise.

SUNROOF/HEADLINING

Noises in the sunroof/headlining area can often be traced to one of the following:

1. Sunroof lid, rail, linkage or seals making a rattle or light knocking noise
2. Sunvisor shaft shaking in the holder
3. Front or rear windshield touching headlining and squeaking

Again, pressing on the components to stop the noise while duplicating the conditions can isolate most of these incidents. Repairs usually consist of insulating with felt cloth tape.

OVERHEAD CONSOLE (FRONT AND REAR)

Overhead console noises are often caused by the console panel clips not being engaged correctly. Most of these incidents are repaired by pushing up on the console at the clip locations until the clips engage.
In addition, look for:

1. Loose harness or harness connectors.
2. Front console map/reading lamp lens loose.
3. Loose screws at console attachment points.

SEATS

When isolating seat noise it's important to note the position the seat is in and the load placed on the seat when the noise is present. These conditions should be duplicated when verifying and isolating the cause of the noise.
Cause of seat noise include:

1. Headrest rods and holder
2. A squeak between the seat pad cushion and frame
3. The rear seatback lock and bracket

These noises can be isolated by moving or pressing on the suspected components while duplicating the conditions under which the noise occurs.Most of these incidents can be repaired by repositioning the component or applying urethane tape to the contact area.

UNDERHOOD

Some interior noise may be caused by components under the hood or on the engine wall. The noise is then transmitted into the passenger compartment.
Causes of transmitted underhood noise include:

1. Any component mounted to the engine wall
2. Components that pass through the engine wall
3. Engine wall mounts and connectors
4. Loose radiator mounting pins
5. Hood bumpers out of adjustment
6. Hood striker out of adjustment

These noises can be difficult to isolate since they cannot be reached from the interior of the vehicle. The best method is to secure, move or insulate one component at a time and test drive the vehicle. Also, engine RPM or load can be changed to isolate the noise. Repairs can usually be made by moving, adjusting, securing, or insulating the component causing the noise.

Diagnostic Worksheet

INFOID:0000000003897571

Dear Customer:
We are concerned about your satisfaction with your vehicle. Repairing a squeak or rattle sometimes can be very difficult. To help us fix your vehicle right the first time, please take a moment to note the area of the vehicle where the squeak or rattle occurs and under what conditions. You may be asked to take a test drive with a service advisor or technician to ensure we confirm the noise you are hearing.

SQUEAK & RATTLE DIAGNOSTIC WORKSHEET

I. WHERE DOES THE NOISE COME FROM? (circle the area of the vehicle)
The illustrations are for reference only, and may not reflect the actual configuration of your vehicle.

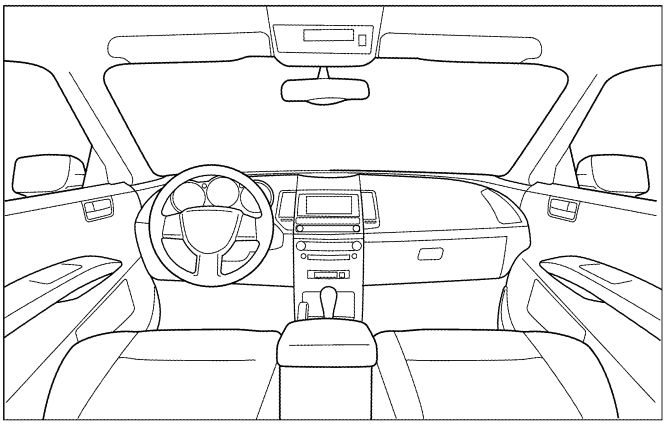

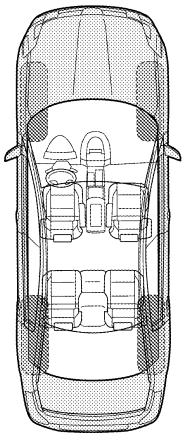

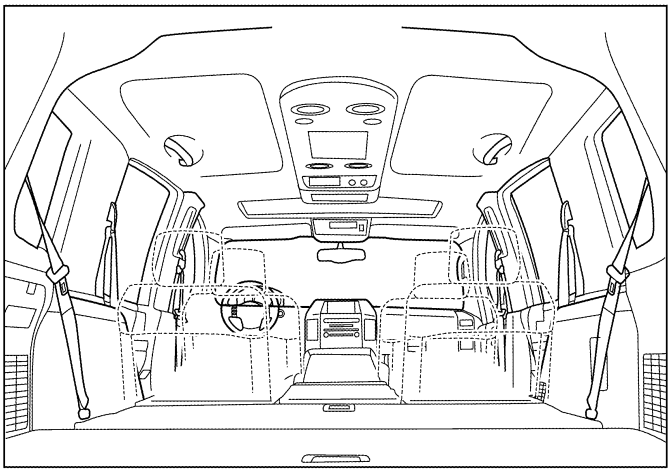

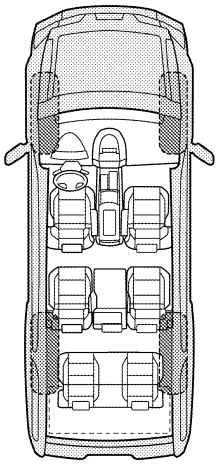

Continue to page 2 of the worksheet and briefly describe the location of the noise or rattle. In addition, please indicate the conditions which are present when the noise occurs.

-1-

LAIA0072E

SQUEAK & RATTLE DIAGNOSTIC WORKSHEET - page 2

Briefly describe the location where the noise occurs:

_____

_____

II. WHEN DOES IT OCCUR? (please check the boxes that apply)

- ☐ Anytime
- ☐ 1st time in the morning
- ☐ Only when it is cold outside
- ☐ Only when it is hot outside
- ☐ After sitting out in the rain
- ☐ When it is raining or wet
- ☐ Dry or dusty conditions
- ☐ Other:

III. WHEN DRIVING:

- ☐ Through driveways
- ☐ Over rough roads
- ☐ Over speed bumps
- ☐ Only about ____ mph
- ☐ On acceleration
- ☐ Coming to a stop
- ☐ On turns: left, right or either (circle)
- ☐ With passengers or cargo
- ☐ Other: _____
- ☐ After driving _____ miles or _____ minutes

IV. WHAT TYPE OF NOISE

- ☐ Squeak (like tennis shoes on a clean floor)
- ☐ Creak (like walking on an old wooden floor)
- ☐ Rattle (like shaking a baby rattle)
- ☐ Knock (like a knock at the door)
- ☐ Tick (like a clock second hand)
- ☐ Thump (heavy muffled knock noise)
- ☐ Buzz (like a bumble bee)

TO BE COMPLETED BY DEALERSHIP PERSONNEL

Test Drive Notes:

_____

_____

_____

	YES	NO	Initials of person performing
Vehicle test driven with customer	☐	☐	_____
- Noise verified on test drive	☐	☐	_____
- Noise source located and repaired	☐	☐	_____
- Follow up test drive performed to confirm repair	☐	☐	_____

VIN: _____ Customer Name _____

W.O.# _____ Date: _____

This form must be attached to Work Order

LAIA0071E

PRECAUTION

PRECAUTIONS

Precaution for Supplemental Restraint System (SRS) "AIR BAG" and "SEAT BELT PRE-TENSIONER"

INFOID:0000000003897572

The Supplemental Restraint System such as “AIR BAG” and “SEAT BELT PRE-TENSIONER”, used along with a front seat belt, helps to reduce the risk or severity of injury to the driver and front passenger for certain types of collision. This system includes seat belt switch inputs and dual stage front air bag modules. The SRS system uses the seat belt switches to determine the front air bag deployment, and may only deploy one front air bag, depending on the severity of a collision and whether the front occupants are belted or unbelted.
Information necessary to service the system safely is included in the SR and SB section of this Service Manual.

WARNING:
- **To avoid rendering the SRS inoperative, which could increase the risk of personal injury or death in the event of a collision which would result in air bag inflation, all maintenance must be performed by an authorized NISSAN/INFINITI dealer.**
- **Improper maintenance, including incorrect removal and installation of the SRS, can lead to personal injury caused by unintentional activation of the system. For removal of Spiral Cable and Air Bag Module, see the SR section.**
- **Do not use electrical test equipment on any circuit related to the SRS unless instructed to in this Service Manual. SRS wiring harnesses can be identified by yellow and/or orange harnesses or harness connectors.**

Precautions Necessary for Steering Wheel Rotation after Battery Disconnect

INFOID:0000000004394050

NOTE:
- Before removing and installing any control units, first turn the push-button ignition switch to the LOCK position, then disconnect both battery cables.
- After finishing work, confirm that all control unit connectors are connected properly, then re-connect both battery cables.
- Always use CONSULT-III to perform self-diagnosis as a part of each function inspection after finishing work. If a DTC is detected, perform trouble diagnosis according to self-diagnosis results.

This vehicle is equipped with a push-button ignition switch and a steering lock unit.
If the battery is disconnected or discharged, the steering wheel will lock and cannot be turned.
If turning the steering wheel is required with the battery disconnected or discharged, follow the procedure below before starting the repair operation.

OPERATION PROCEDURE

1. Connect both battery cables.
   NOTE:
   Supply power using jumper cables if battery is discharged.
2. Carry the Intelligent Key or insert it to the key slot and turn the push-button ignition switch to ACC position. (At this time, the steering lock will be released.)
3. Disconnect both battery cables. The steering lock will remain released with both battery cables disconnected and the steering wheel can be turned.
4. Perform the necessary repair operation.
5. When the repair work is completed, re-connect both battery cables. With the brake pedal released, turn the push-button ignition switch from ACC position to ON position, then to LOCK position. (The steering wheel will lock when the push-button ignition switch is turned to LOCK position.)
6. Perform self-diagnosis check of all control units using CONSULT-III.

Service Notice

INFOID:0000000003897573

- When removing or installing various parts, place a cloth or padding onto the vehicle body to prevent scratches.
- Handle trim, molding, instruments, grille, etc. carefully during removing or installing. Be careful not to oil or damage them.

- Apply sealing compound where necessary when installing parts.
- When applying sealing compound, be careful that the sealing compound does not protrude from parts.
- When replacing any metal parts (for example body outer panel, members, etc.), be sure to take rust prevention measures.

Precaution for Work

INFOID:0000000003897574

- When removing or disassembling each component, be careful not to damage or deform it. If a component may be subject to interference, be sure to protect it with a shop cloth.
- When removing (disengaging) components with a screwdriver or similar tool, be sure to wrap the component with a shop cloth or vinyl tape to protect it.
- Protect the removed parts with a shop cloth and keep them.
- Replace a deformed or damaged clip.
- If a part is specified as a non-reusable part, always replace it with new one.
- Be sure to tighten bolts and nuts securely to the specified torque.
- After re-installation is completed, be sure to check that each part works normally.
- Follow the steps below to clean components.
- Water soluble foul: Dip a soft cloth into lukewarm water, and wring the water out of the cloth to wipe the fouled area.
  Then rub with a soft and dry cloth.
- Oily foul: Dip a soft cloth into lukewarm water with mild detergent (concentration: within 2 to 3%), and wipe the fouled area.
  Then dip a cloth into fresh water, and wring the water out of the cloth to wipe the detergent off. Then rub with a soft and dry cloth.
- Do not use organic solvent such as thinner, benzene, alcohol, and gasoline.
- For genuine leather seats, use a genuine leather seat cleaner.

PREPARATION

PREPARATION

Special Service Tool

INFOID:0000000003897575

The actual shapes of Kent-Moore tools may differ from those of special service tools illustrated here.

Tool number (Kent-Moore No.) Tool name	Description
— (J-39570) Chassis ear 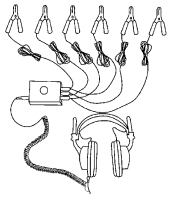 SIIA0993E	Locating the noise
— (J-43980) NISSAN Squeak and Rattle Kit 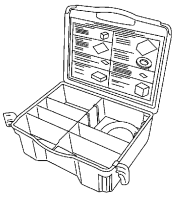 SIIA0994E	Repairing the cause of noise

Commercial Service Tool

INFOID:0000000003897576

(Kent-Moore No.) Tool name	Description
(J-39565) Engine ear 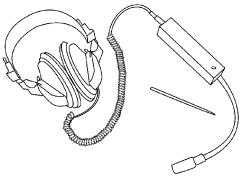 SIIA0995E	Locating the noise

ON-VEHICLE REPAIR

FRONT SEAT

Exploded View

INFOID:0000000004184697

DRIVER'S POWER SEAT

SEC. 870

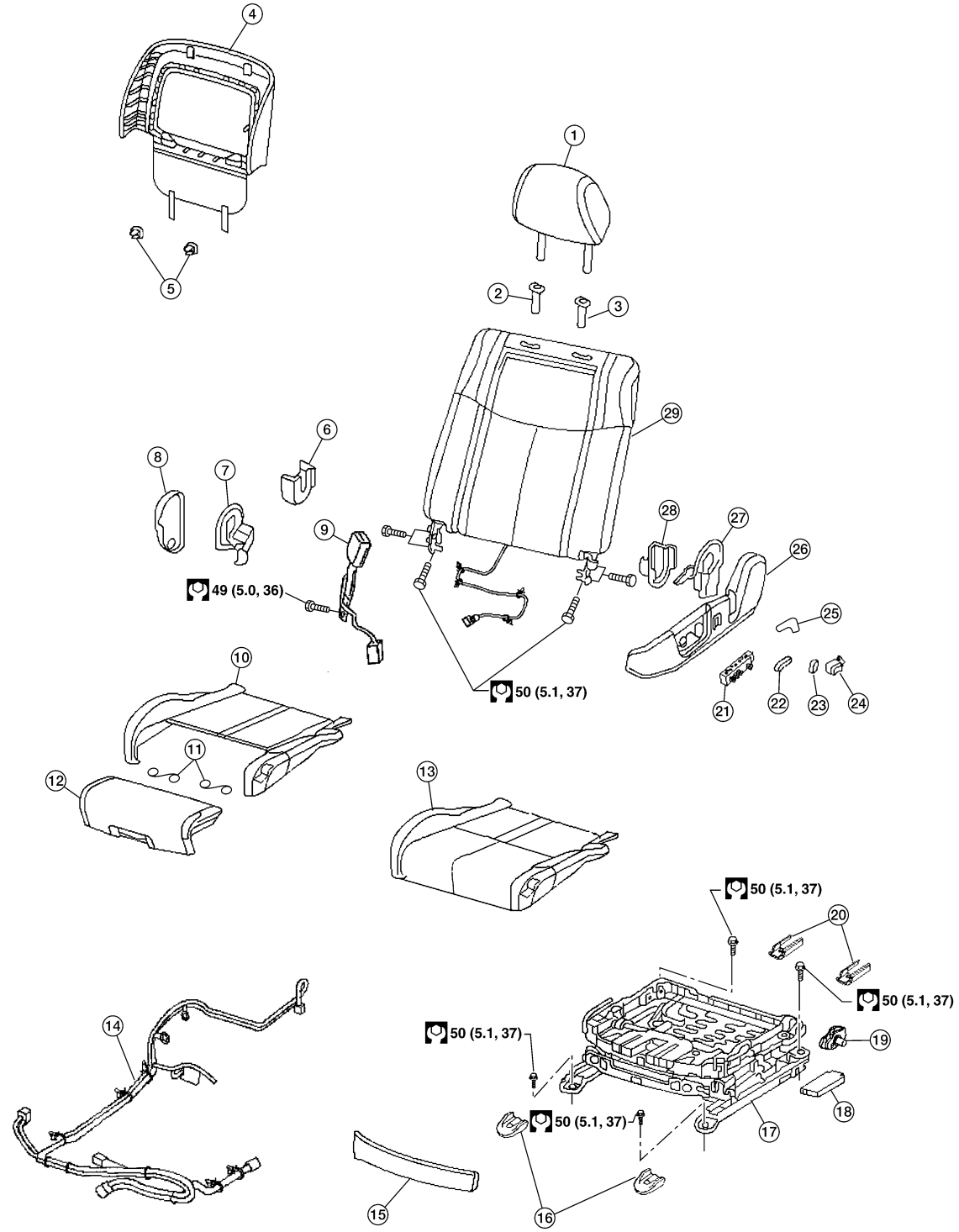

ALIIA0339ZZ

1. Headrest
2. Headrest holder (free)
3. Headrest holder (locked)
4. Seatback board
5. Seatback board clips
6. Seat cushion rear finisher
7. Seat cushion
8. Seat cushion inner finisher
9. Seat belt buckle
10. Seat cushion trim and pad (with thigh extension)
11. Thigh extension tethers
12. Thigh extension assembly (if equipped)
13. Seat cushion trim and pad (w/o thigh extension)
14. Driver seat wiring harness
15. Seat cushion front finisher
16. Front slide cover
17. Seat frame
18. Driver seat control unit
19. Actuator bracket
20. Rear slide cover
21. Seat control switch
22. Seat slide and lifter switch knob
23. Reclining switch knob
24. Lumbar switch (power)
25. Lumbar lever (manual)
26. Seat cushion outer finisher
27. Reclining device outer cover
28. Seat cushion outer finisher inside
29. Seatback assembly

PASSENGER'S POWER SEAT

SEC. 870

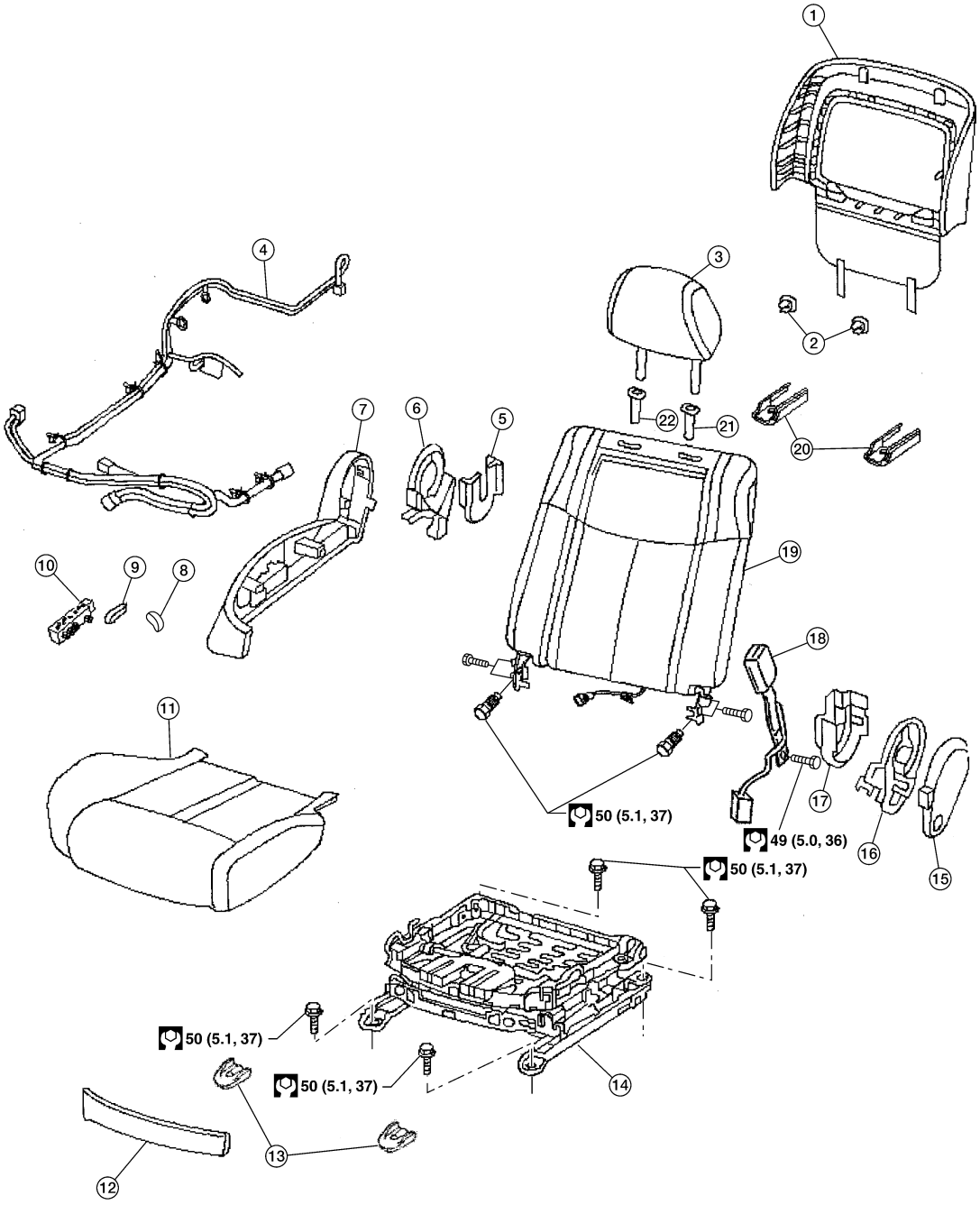

1. Seatback board	2. Seatback board clips	3. Headrest
4. Passenger seat wiring harness	5. Seat cushion outer finisher inside	6. Reclining device inner cover
7. Seat cushion outer finisher	8. Reclining switch knob	9. Seat slide and lifter switch knob
10. Seat control switch	11. Seat cushion assembly	12. Seat cushion front finisher
13. Front slide cover	14. Seat frame	15. Seat cushion inner finisher
16. Reclining device inner cover	17. Seat cushion inner finisher inside	18. Seat belt buckle

19. Seatback assembly
20. Rear slide cover
21. Headrest holder (locked)
22. Headrest holder (free)

Removal and Installation

INFOID:0000000004184698

CAUTION:
- **When removing and installing, use shop cloths to protect parts from damage.**

REMOVAL

NOTE:
Confirm the position of connector before starting work.

1. Slide the seat to the front most position.
2. Remove the side fixing points (A).

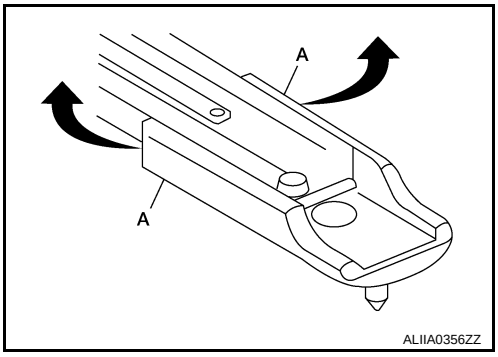

3. Move the cover backward and remove the rear slide covers.
4. Remove the rear mount bolts.

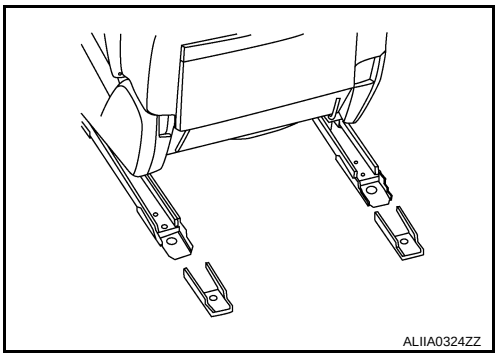

5. Slide the seat to the rear most position.
6. Remove the front slide covers.
7. Remove the front mount bolts.

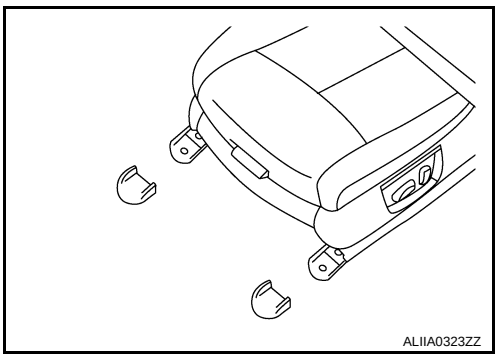

8. Disconnect battery negative and positive terminals.

CAUTION:
- **Disconnect battery negative and positive terminals then wait for at least 3 minutes.**

9. Disconnect harness connector under the seat and remove harness clamps.
10. Remove seat from the vehicle.

INSTALLATION

Installation is in the reverse order of removal.

CAUTION:

Clamp the harness in position.

NOTE:

When installing the front seats tighten the drivers seat bolts as shown.

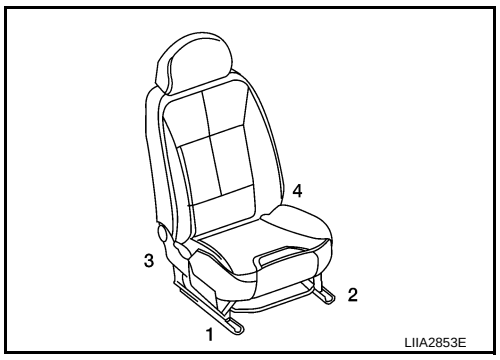

When installing the front seats tighten the passenger seat bolts as shown.

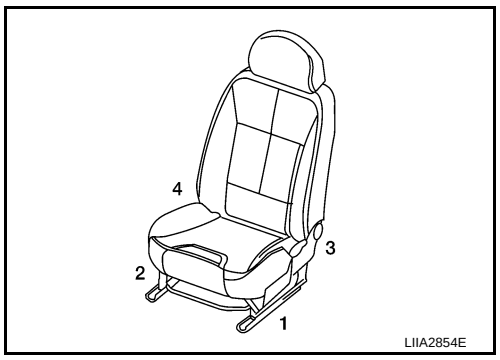

REAR SEAT

Exploded View - Bucket Seat

INFOID:0000000004184699

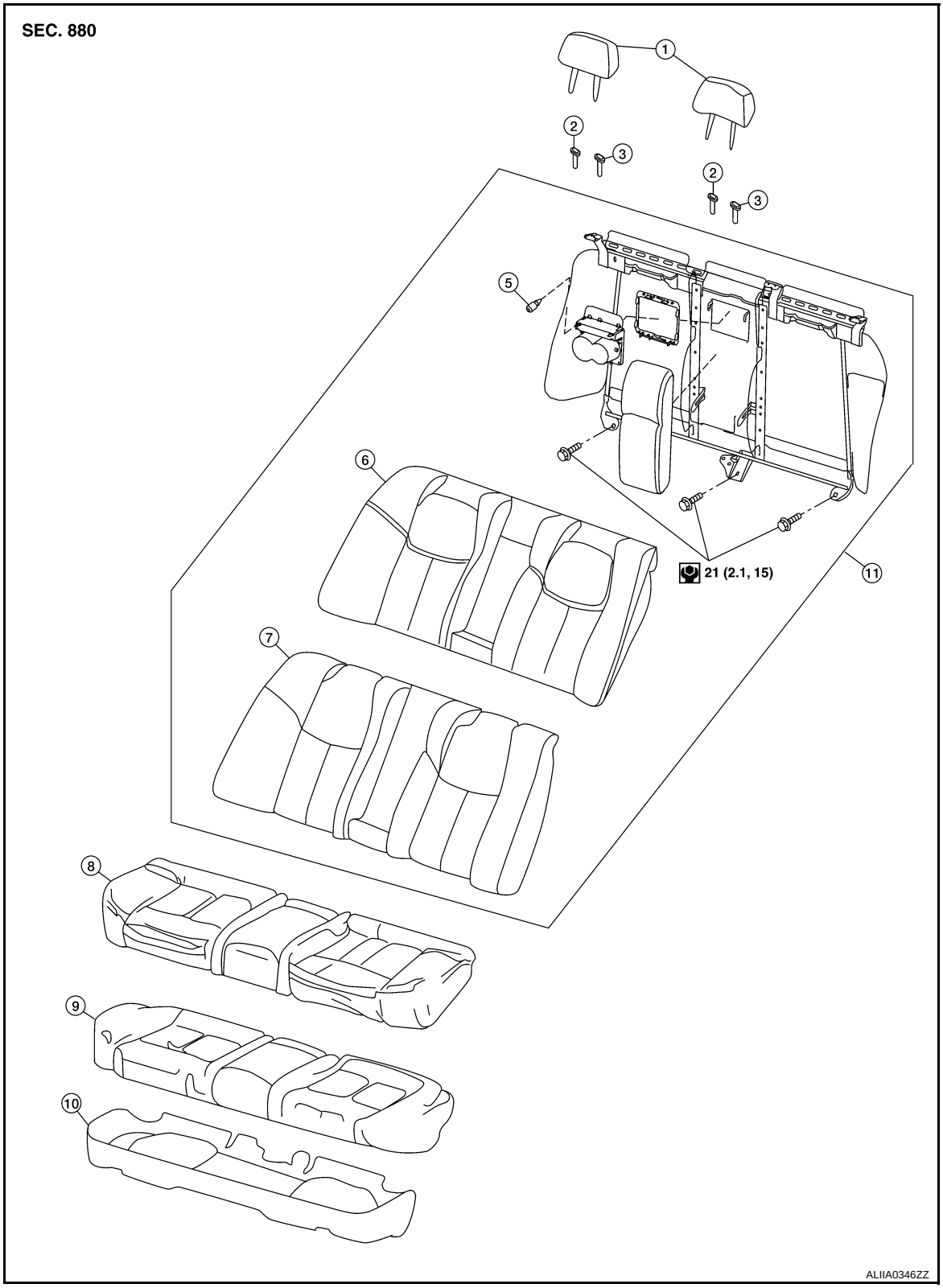

1. Headrest
2. Headrest holder (free)
3. Headrest holder (locked)
4. Seatback frame
5. Bumper
6. Seatback pad

7. Seatback trim
8. Seat cushion trim
9. Seat cushion pad
10. Seat cushion frame
11. Seatback assembly

Removal and Installation

INFOID:0000000004184700

CAUTION:
When removing and installing, use shop cloths to protect parts from damage.

Seat Cushion Removal

1. Pull the lock lever (1) at the front bottom of the seat cushion forward (one for each side), and pull the seat cushion upward to release the wire (2) from the seat cushion hook. Then pull the seat cushion forward to remove.
2. Remove the seat cushion from the vehicle.

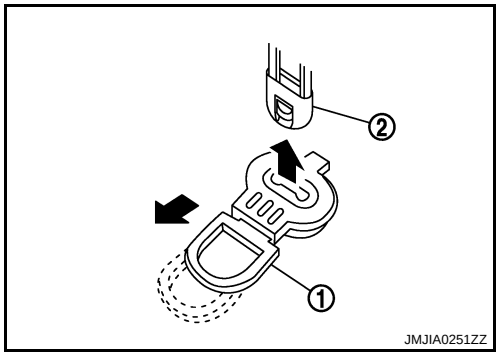

Installation

Installation is in the reverse order of removal.

Seatback Removal

1. Remove the seat cushion.
2. Remove the headrest assemblies.
3. Remove the seatback frame bolts and nut.

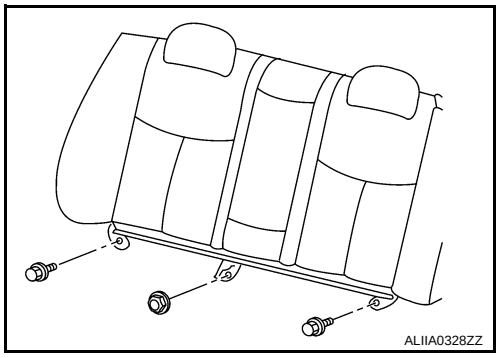

4. Disconnect the harness connectors.
5. Lift the seatback to disengage seat hook wires from the hangers.

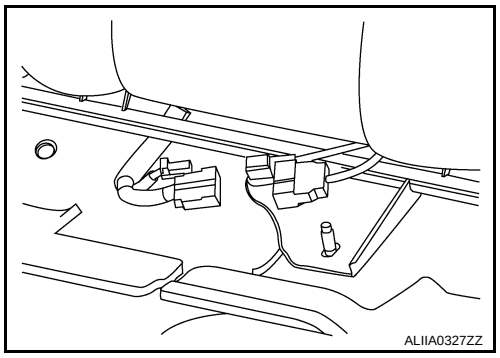

INSTALLATION

Installation is in the reverse order of removal.

Exploded View - Bench Seat

INFOID:0000000004184701

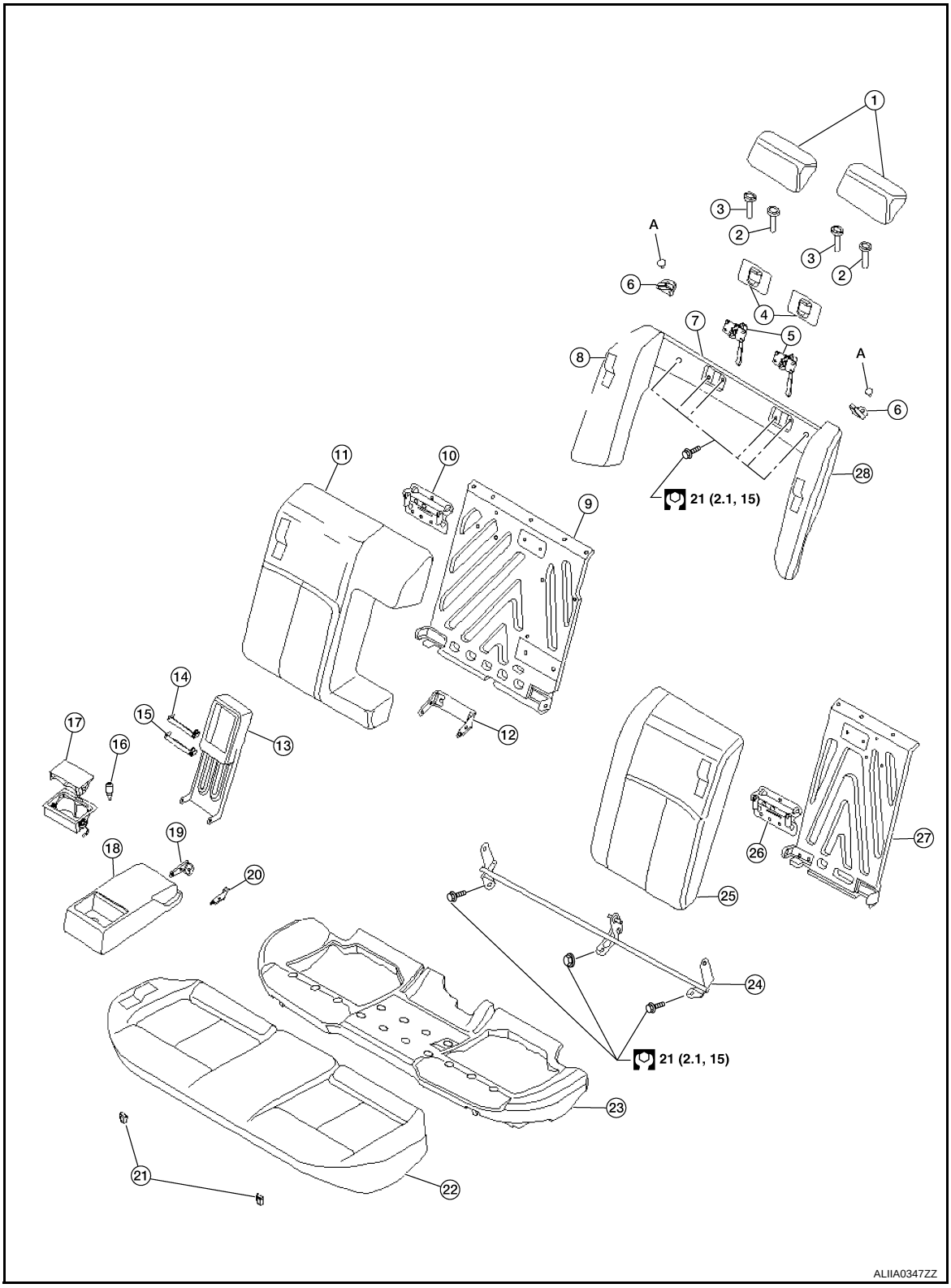

1. Headrest
2. Headrest holder (locked)
3. Headrest holder (free)
4. Seat lock covers
5. Seat lock assemblies
6. Seat belt hooks
7. Halo upper frame assembly
8. RH booster trim and pad
9. RH seatback frame
10. Seatback latch striker
11. RH seatback pad and trim
12. Armrest outer bracket
13. Armrest frame
14. Back inner armrest bracket
15. Front inner armrest bracket

16. Bumper
17. Armrest cupholder assembly
18. Armrest assembly
19. Right inner armrest bracket
20. Left inner armrest bracket
21. Seat cushion hook
22. Seat cushion and trim
23. Seat cushion frame
24. Halo lower frame assembly
25. LH seatback pad and trim
26. Seatback latch striker
27. LH seatback frame
28. LH booster trim and pad

A. Mounting screw

Removal and Installation

INFOID:0000000004184702

CAUTION:
When removing and installing, use shop cloths to protect parts from damage.

BENCH SEAT CUSHION

Removal

1. Pull the lock lever (1) at the front bottom of the seat cushion forward (one for each side), and pull the seat cushion upward to release the wire (2) from the seat cushion hook. Then pull the seat cushion forward to remove.
2. Remove the seat cushion from the vehicle.

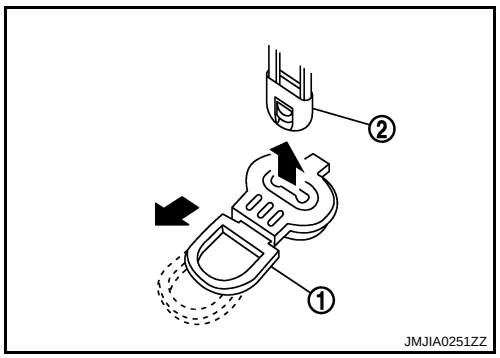

Installation
Installation is in the reverse order of removal.

BENCH SEATBACK

Removal

1. Lock seatbacks in upright position.
2. Remove the lower frame halo anchor bolts and nut.
3. Fold seatbacks forward.

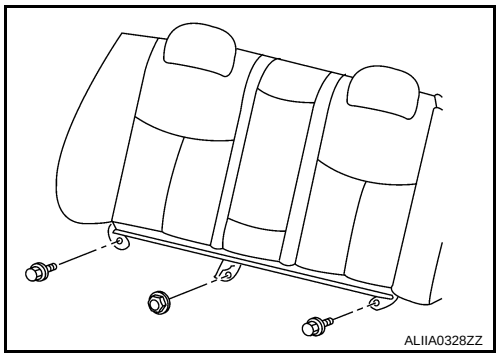

4. Remove latch covers (A).
5. Remove upper frame halo bolts (B).
6. Remove the seatback assembly.

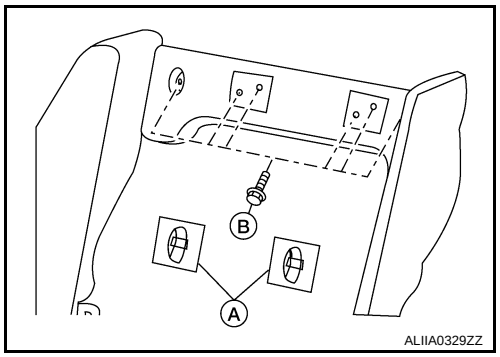

Installation
Installation is in the reverse order of removal.

DISASSEMBLY AND ASSEMBLY

FRONT SEAT

DRIVER SIDE

DRIVER SIDE : Exploded View

INFOID:0000000004184703

SEC. 870

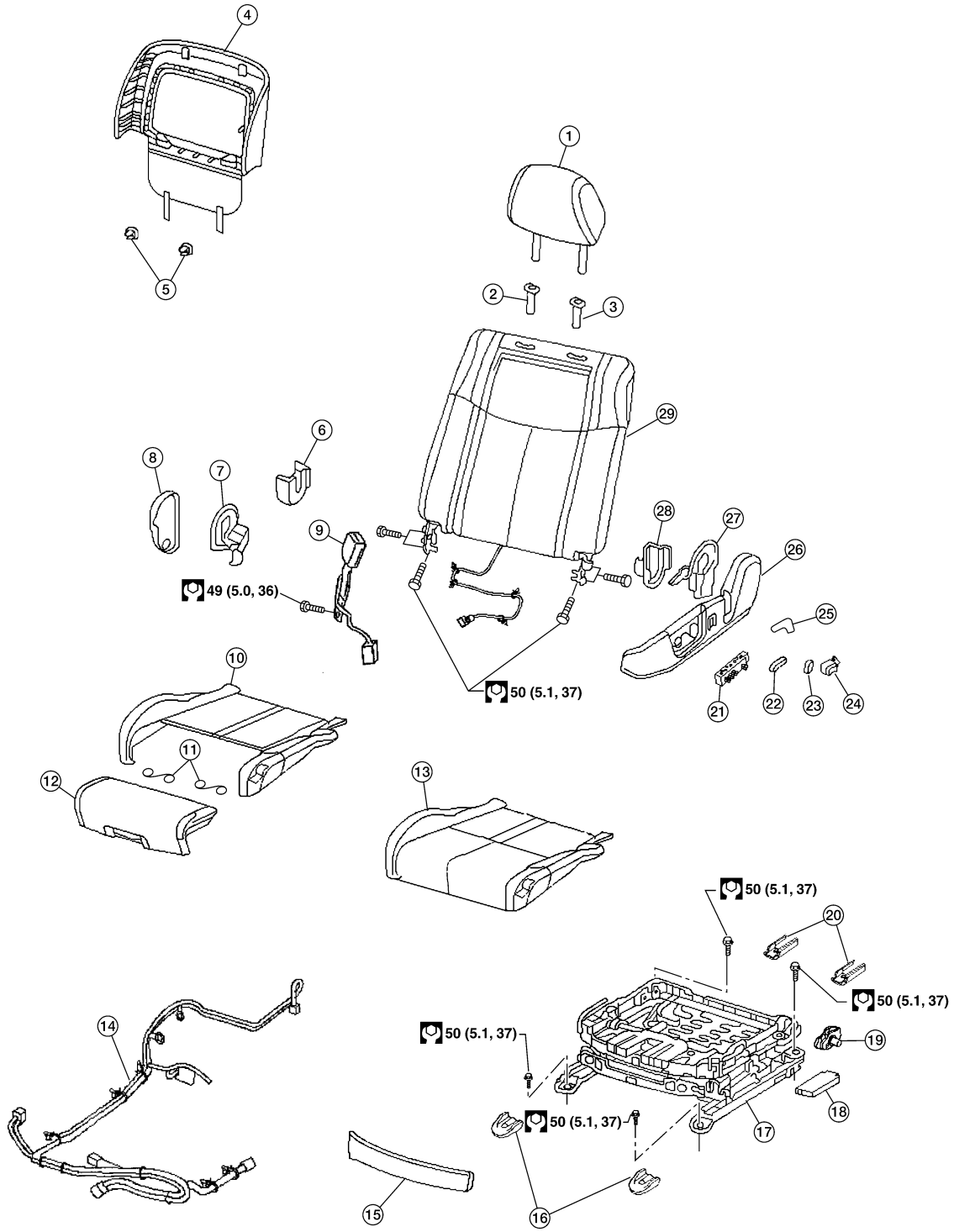

ALIIA0339ZZ

1. Headrest	2. Headrest holder (free)	3. Headrest holder (locked)
4. Seatback board	5. Seatback board clips	6. Reclining device inner cover
7. Seat cushion rear finisher	8. Seat cushion	9. Seat cushion inner finisher
10. Seat belt buckle	11. Seat cushion trim and pad (with thigh extension)	12. Thigh extension assembly (if equipped)
13. Seat cushion trim and pad (w/o thigh extension)	14. Driver seat wiring harness	15. Seat cushion front finisher
16. Front slide cover	17. Seat frame	18. Driver seat control unit
19. Actuator bracket	20. Rear slide cover	21. Seat control switch
22. Seat slide and lifter switch knob	23. Reclining switch knob	24. Lumbar switch (power)
25. Lumbar lever (manual)	26. Seat cushion outer finisher	27. Reclining device outer cover
28. Seat cushion outer finisher inside	29. Seatback assembly	

DRIVER SIDE : Disassembly and Assembly

INFOID:0000000004184704

SEATBACK BOARD

Disassembly

1. Remove the seat from the vehicle. Refer to SE-106, "Removal and Installation"
2. Release the clips (D) from the seat cushion springs.
3. Pull the bottom of the backboard upward enough to release the inner clips (C).
4. Insert the proper tool to release the pawls (B).
5. Pull the backboard downward to disengage the hooks (A) and remove the backboard.

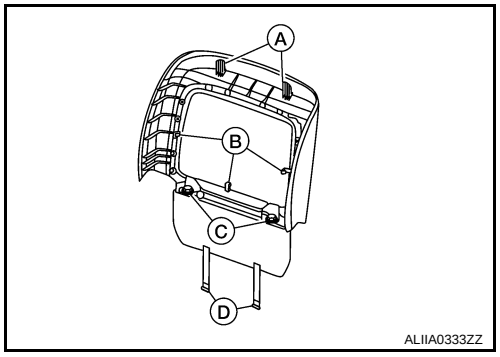

Assembly

Assembly is in the reverse order of disassembly.

THIGH EXTENSION ASSEMBLY

Disassembly

1. Move the thigh extension to the front most position and release the trim cover clips (A).
2. Remove the trim cover and foam (B).

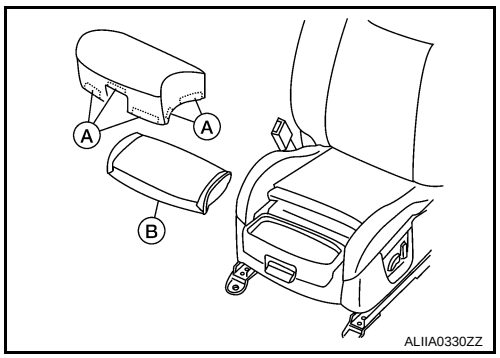

3. Cut the thigh extension tethers and drill out the upper rivets (A) that connect the thigh extension tethers (B) to the thigh extension assembly (C).

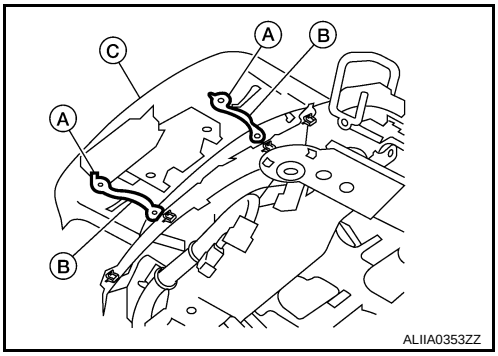

4. Insert suitable tool into the thigh extension top panel and release the clip (A).
5. Pull the thigh extension handle and remove the thigh extension assembly.

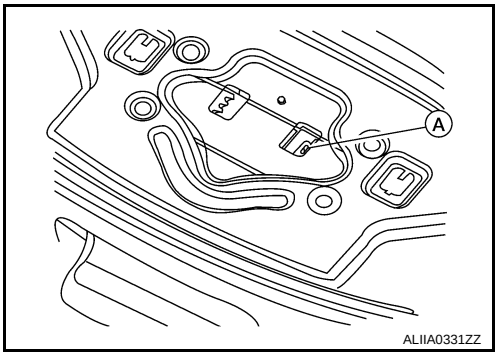

6. Drill out the lower rivets that connect the thigh extension tethers to the seat frame assembly.

Assembly

1. Replace the trim cover and clips and foam to the thigh extension assembly.
2. Rivet the thigh extension tethers to the seat frame assembly mounting hole (A).

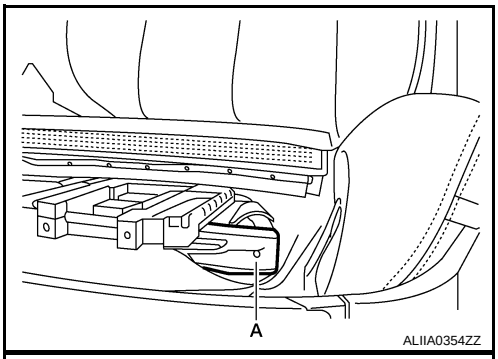

3. Align the thigh extension assembly on the top rail.
4. Lift the thigh extension handle and slide the thigh extension assembly onto the seat.

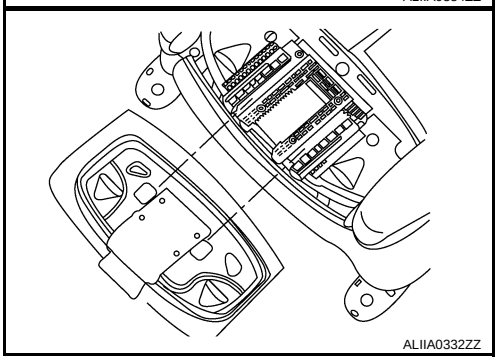

5. Rivet the thigh extension tethers to the thigh extension assembly mounting hole (A).

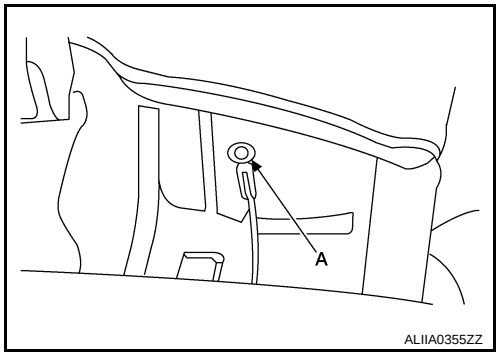

PASSENGER SIDE

PASSENGER SIDE : Exploded View

INFOID:0000000004184705

SEC. 870

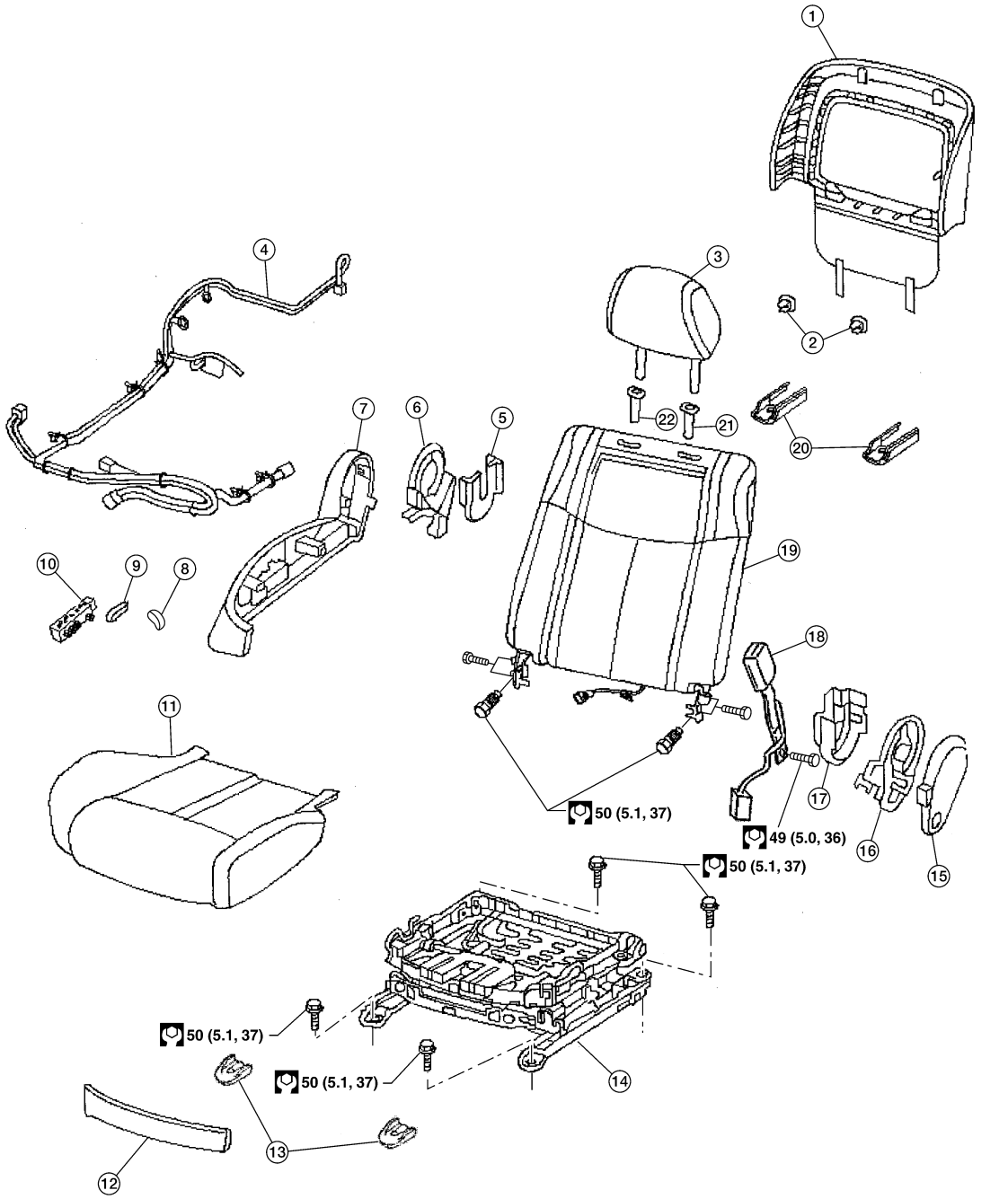

ALIIA0321GB

1.	Seatback board	2.	Seatback board clips	3.	Headrest
4.	Passenger seat wiring harness	5.	Seat cushion outer finisher inside	6.	Reclining device inner cover
7.	Seat cushion outer finisher	8.	Reclining switch knob	9.	Seat slide and lifter switch knob
10.	Seat control switch	11.	Seat cushion assembly	12.	Seat cushion front finisher

13. Front slide cover
14. Seat frame
15. Seat cushion inner finisher
16. Reclining device inner cover
17. Seat cushion inner finisher inside
18. Seat belt buckle
19. Seatback assembly
20. Rear slide cover
21. Headrest holder (locked)
22. Headrest holder (free)

PASSENGER SIDE : Disassembly

INFOID:0000000004184706

NOTE:
If the vehicle has been involved in a collision, the seat must be inspected for damage. Refer to SR-20, "For Frontal Collision".

SEATBACK BOARD

Disassembly

1. Remove the seat from the vehicle. Refer to SE-106, "Removal and Installation"
2. Release the clips (D) from the seat cushion springs.
3. Pull the bottom of the backboard upward enough to release the inner clips (C).
4. Insert the proper tool to release the pawls (B).
5. Pull the backboard downward to disengage the hooks (A) and remove the backboard.

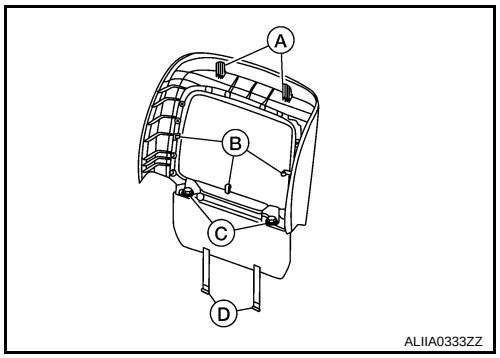

Assembly
Assembly is in the reverse order of disassembly.

REAR SEAT

Bucket Seat

INFOID:0000000004269446

Exploded View - Bucket Seat

INFOID:0000000004269444

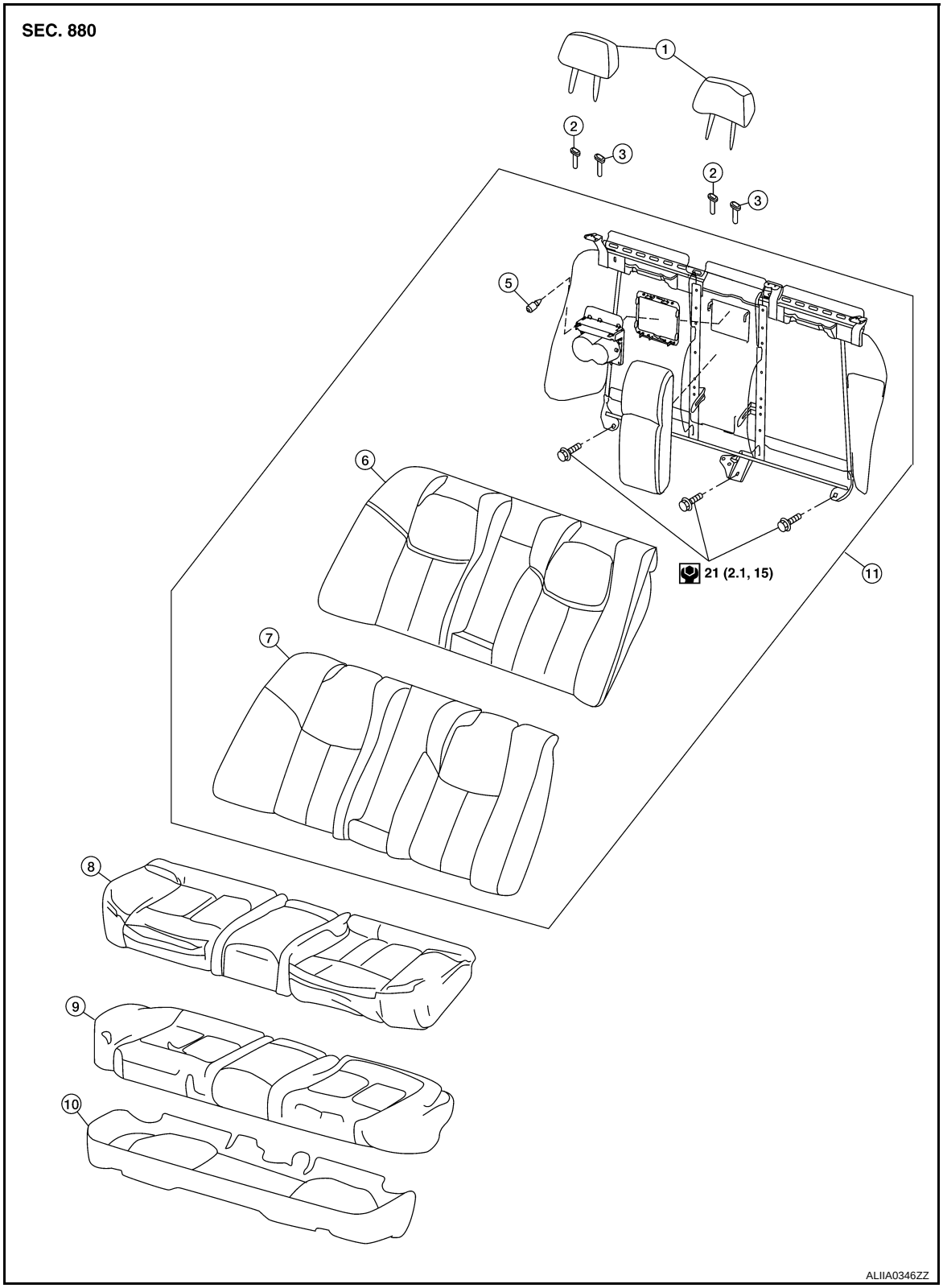

1. Headrest
2. Headrest holder (free)
3. Headrest holder (locked)
4. Seatback frame
5. Bumper
6. Seatback pad
7. Seatback trim
8. Seat cushion trim
9. Seat cushion pad
10. Seat cushion frame
11. Seatback assembly

ARMREST

ARMREST : Disassembly and Assembly

INFOID:0000000004291568

Disassembly

1. Remove the seat cushion and rear seatback. Refer to SE-67, "Removal and Installation"
2. Remove armrest bolts (A) and remove the armrest assembly.

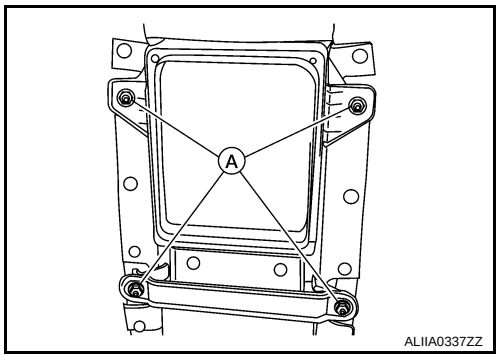

Assembly

Assembly is in the reverse order of disassembly.

Bench Seat

INFOID:0000000004269447

Exploded View - Bench Seat

INFOID:0000000004269445

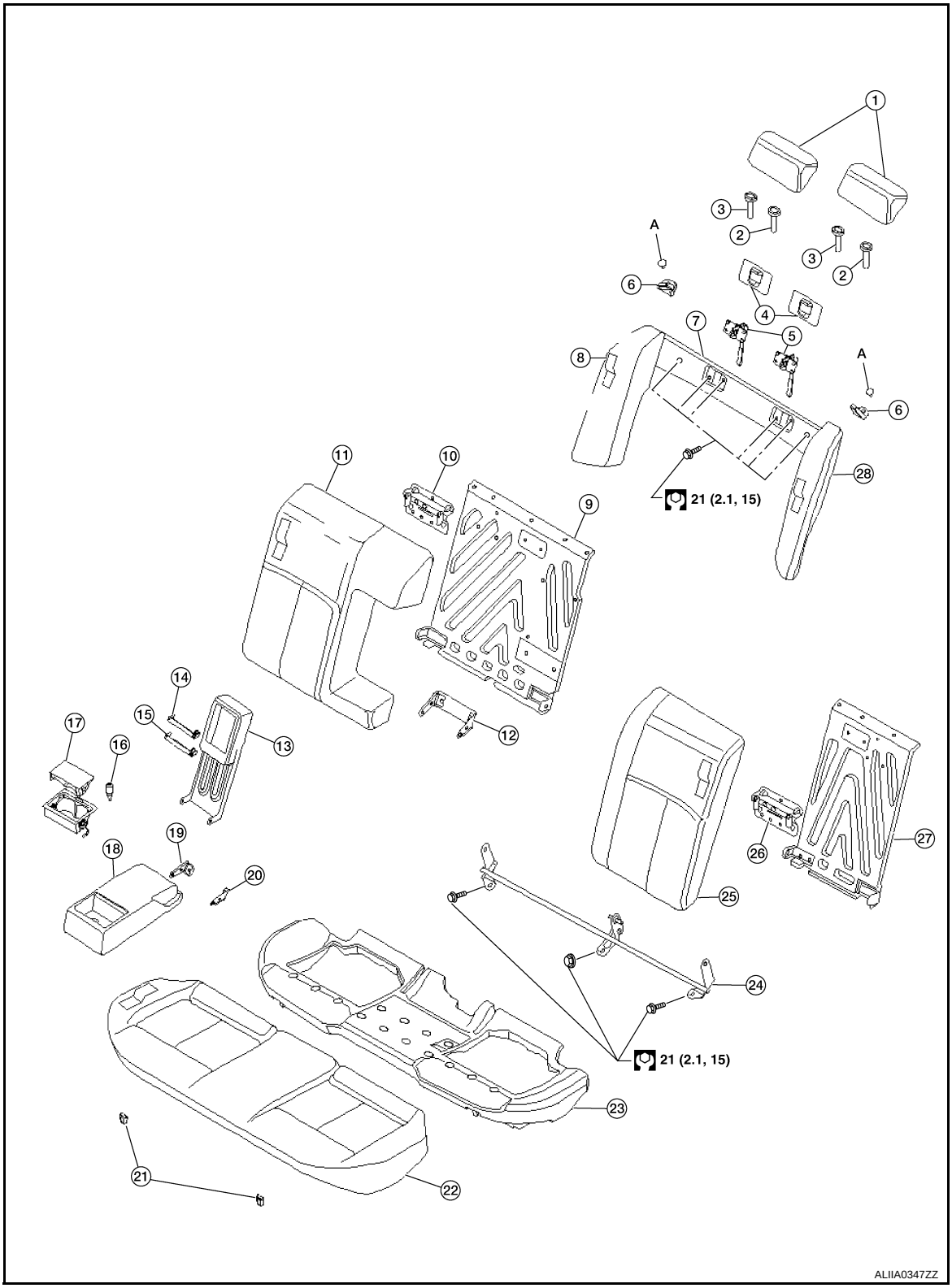

1. Headrest
2. Headrest holder (locked)
3. Headrest holder (free)
4. Seat lock covers
5. Seat lock assemblies
6. Seat belt hooks
7. Halo upper frame assembly
8. RH booster trim and pad
9. RH seatback frame

10. Seatback latch striker
11. RH seatback pad and trim
12. Armrest outer bracket
13. Armrest frame
14. Back inner armrest bracket
15. Front inner armrest bracket
16. Bumper
17. Armrest cupholder assembly
18. Armrest assembly
19. Right inner armrest bracket
20. Left inner armrest bracket
21. Seat cushion hook
22. Seat cushion and trim
23. Seat cushion frame
24. Halo lower frame assembly
25. LH seatback pad and trim
26. Seatback latch striker
27. LH seatback frame
28. LH booster trim and pad

A. Mounting screw