STARTING & CHARGING SYSTEM

SECTION SC

CONTENTS

Supplemental Restraint System (SRS) “AIR BAG” and “SEAT BELT PRE-TENSIONER”

NFSC0001

The Supplemental Restraint System such as “AIR BAG” and “SEAT BELT PRE-TENSIONER” used along with a seat belt, helps to reduce the risk or severity of injury to the driver and front passenger for certain types of collision. The SRS system composition which is available to NISSAN MODEL A33 is as follows:

- For a frontal collision
  The Supplemental Restraint System consists of driver air bag module (located in the center of the steering wheel), front passenger air bag module (located on the instrument panel on passenger side), seat belt pre-tensioners, a diagnosis sensor unit, crash zone sensor, warning lamp, wiring harness and spiral cable.
- For a side collision
  The Supplemental Restraint System consists of front side air bag module (located in the outer side of front seat), satellite sensor, diagnosis sensor unit (one of components of air bags for a frontal collision), wiring harness, warning lamp (one of components of air bags for a frontal collision).

Information necessary to service the system safely is included in the **RS section** of this Service Manual.

WARNING:

- **To avoid rendering the SRS inoperative, which could increase the risk of personal injury or death in the event of a collision which would result in air bag inflation, all maintenance should be performed by an authorized NISSAN dealer.**
- **Improper maintenance, including incorrect removal and installation of the SRS, can lead to personal injury caused by unintentional activation of the system. For removal of Spiral Cable and Air Bag Module, see the RS section.**
- **Do not use electrical test equipment on any circuit related to the SRS unless instructed to in this Service Manual. SRS wiring harnesses can be identified with yellow harness connector (and with yellow harness protector or yellow insulation tape before the harness connectors).**

Wiring Diagrams and Trouble Diagnosis

NFSC0002

When you read wiring diagrams, refer to the following:

- GI-9, “HOW TO READ WIRING DIAGRAMS”
- EL-9, “POWER SUPPLY ROUTING” for power distribution circuit

When you perform trouble diagnosis, refer to the following:

- GI-35, “HOW TO FOLLOW TEST GROUPS IN TROUBLE DIAGNOSES”
- GI-24, “HOW TO PERFORM EFFICIENT DIAGNOSES FOR AN ELECTRICAL INCIDENT”

Special Service Tool

NFSC0017

Tool number Tool name	Description
J-44373 Model 620 Battery/Starting/Charging system tester	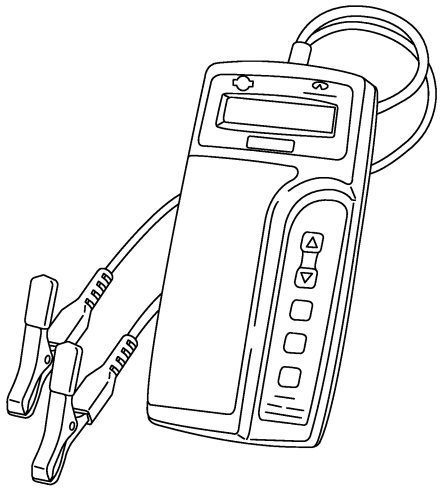 SEL403X

How to Handle Battery

NFSC0003

CAUTION:

- **If it becomes necessary to start the engine with a booster battery and jumper cables, use a 12-volt booster battery.**
- **After connecting battery cables, ensure that they are tightly clamped to battery terminals for good contact.**
- **Never add distilled water through the hole used to check specific gravity.**

METHODS OF PREVENTING OVER-DISCHARGE

NFSC0003S01

The following precautions must be taken to prevent over-discharging a battery.

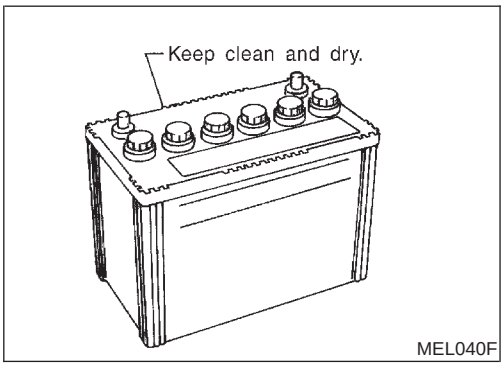

MEL040F

- The battery surface (particularly its top) should always be kept clean and dry.
- The terminal connections should be clean and tight.
- At every routine maintenance, check the electrolyte level. This also applies to batteries designated as “low maintenance” and “maintenance-free”.

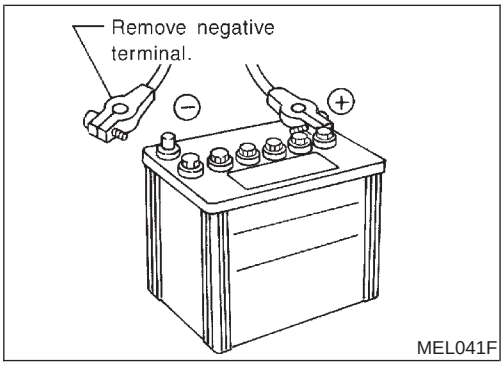

MEL041F

- When the vehicle is not going to be used over a long period of time, disconnect the negative battery terminal. (If the vehicle has an extended storage switch, turn it off.)

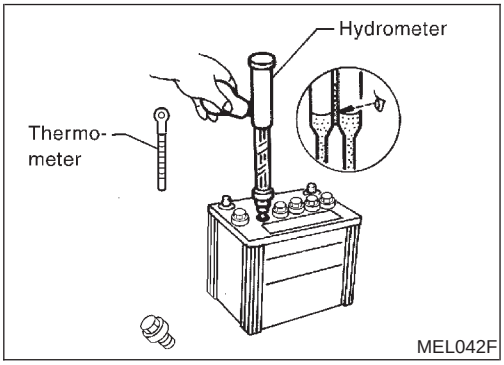

MEL042F

- Check the charge condition of the battery. Periodically check the specific gravity of the electrolyte. Keep a close check on charge condition to prevent over-discharge.

CHECKING ELECTROLYTE LEVEL

NFSC0003S02

WARNING:

Do not allow battery fluid to come in contact with skin, eyes, fabrics, or painted surfaces. After touching a battery, do not touch or rub your eyes until you have thoroughly washed your hands. If acid contacts eyes, skin or clothing, immediately flush with water for 15 minutes and seek medical attention.

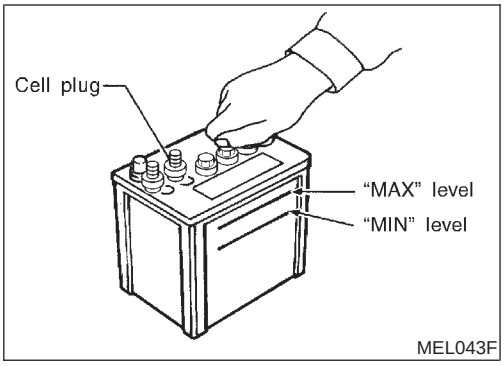

- Remove the cell plug using a suitable tool.
- Add distilled water up to the MAX level.

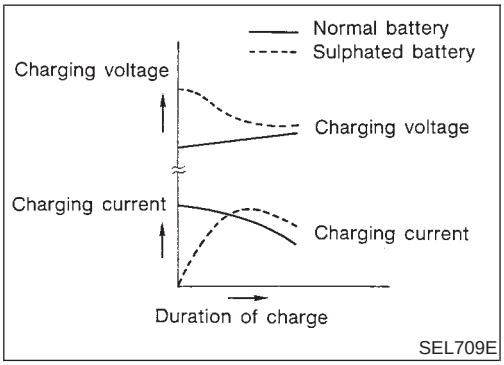

Sulphation

NFSC0003S0201

A battery will be completely discharged if it is left unattended for a long time and the specific gravity will become less than 1.100. This may result in sulphation on the cell plates.
To determine if a battery has been "sulphated", note its voltage and current when charging it. As shown in the figure, less current and higher voltage are observed in the initial stage of charging sulphated batteries.
A sulphated battery may sometimes be brought back into service by means of a long, slow charge, 12 hours or more, followed by a battery capacity test.

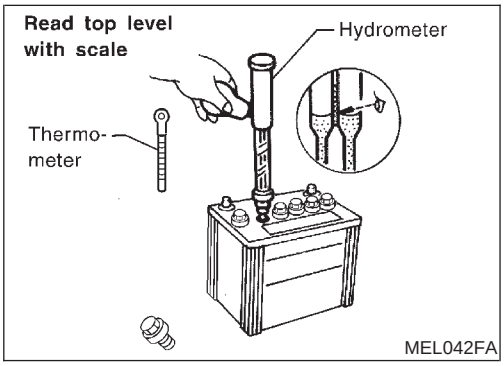

SPECIFIC GRAVITY CHECK

NFSC0003S03

1. Read hydrometer and thermometer indications at eye level.

2. Use the chart below to correct your hydrometer reading according to electrolyte temperature.

Hydrometer Temperature Correction

NFSC0003S0301

Battery electrolyte temperature °C (°F)	Add to specific gravity reading
71 (160)	0.032
66 (150)	0.028
60 (140)	0.024
54 (130)	0.020
49 (120)	0.016
43 (110)	0.012
38 (100)	0.008
32 (90)	0.004
27 (80)	0
21 (70)	−0.004
16 (60)	−0.008
10 (50)	−0.012

Battery electrolyte temperature °C (°F)	Add to specific gravity reading
4 (40)	−0.016
−1 (30)	−0.020
−7 (20)	−0.024
−12 (10)	−0.028
−18 (0)	−0.032

Corrected specific gravity	Approximate charge condition
1.260 - 1.280	Fully charged
1.230 - 1.250	3/4 charged
1.200 - 1.220	1/2 charged
1.170 - 1.190	1/4 charged
1.140 - 1.160	Almost discharged
1.110 - 1.130	Completely discharged

CHARGING THE BATTERY

NFSC0003S04

CAUTION:

- **Do not "quick charge" a fully discharged battery.**
- **Keep the battery away from open flame while it is being charged.**
- **When connecting the charger, connect the leads first, then turn on the charger. Do not turn on the charger first, as this may cause a spark.**
- **If battery electrolyte temperature rises above 60°C (140°F), stop charging. Always charge battery at a temperature below 60°C (140°F).**

Charging Rates

NFSC0003S0401

Amps	Time
50	1 hour
25	2 hours
10	5 hours
5	10 hours

Do not charge at more than 50 ampere rate.

NOTE:

The ammeter reading on your battery charger will automatically decrease as the battery charges. This indicates that the voltage of the battery is increasing normally as the state of charge improves. The charging amps indicated above refer to initial charge rate.

- If, after charging, the specific gravity of any two cells varies more than .050, the battery should be replaced.

Trouble Diagnoses with Battery/Starting/Charging System Tester

NFSC0018

CAUTION:

When working with batteries, always wear appropriate eye protection.

NOTE:

- To ensure a complete and thorough diagnosis, the battery, starter and alternator test segments must be done as a set from start to finish.
- If battery surface charge is detected while testing, the tester will prompt you to turn on the headlights to remove the surface charge.
- If necessary, the tester will prompt you to determine if the battery temperature is above or below 0°C (32°F). Choose the appropriate selection by pressing the up or down arrow button, then press “ENTER” to make the selection.

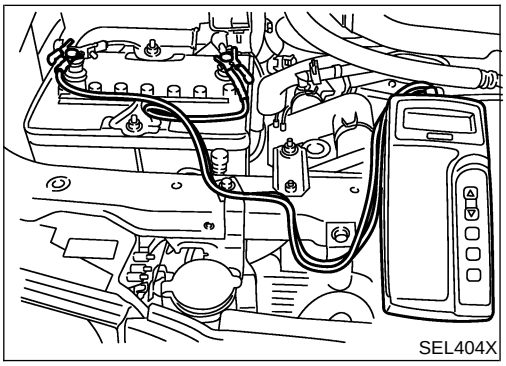
SEL404X

1. Turn off all loads on the vehicle electrical system. Clean or repair as necessary.
2. Visually inspect the battery, battery terminals and cable ends with ignition switch in “OFF” position.

NOTE:

The contact surface between the battery terminals, cable ends and tester leads must be clean for a valid test. A poor connection will prevent testing and a “CHECK CONNECTION” message will appear during the test procedures. If this occurs, clean the battery post and terminals, reconnect them and restart the test.

3. Connect the red tester lead clamp to the positive battery terminal, and the black to the negative terminal.

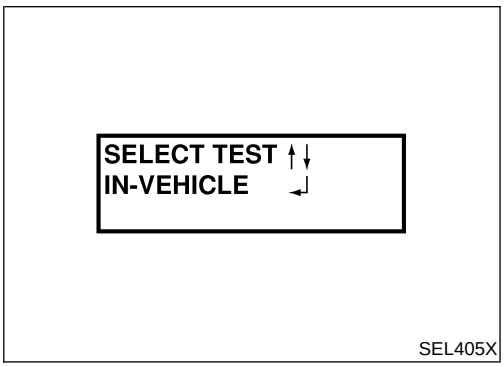

SEL405X

4. The tester will turn on automatically. Using the arrow keys, select “IN VEHICLE” on the tester and then press the “ENTER” key.

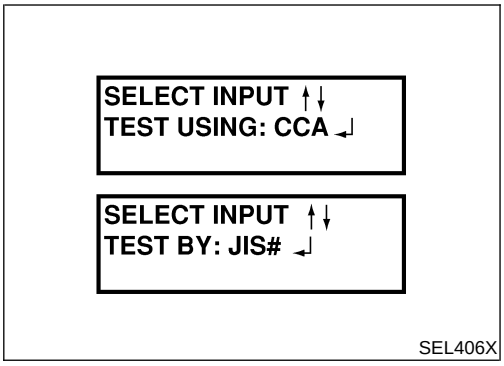

5. Locate the battery type and rating stamped or written on the top case of the battery to be tested.

NOTE:
The battery type and rating will have either of the following.

CCA: Cold Cranking Amps (490 CCA, 550 CCA, etc.)
JIS: Japanese Industrial Standard.
Battery is stamped with a number such as:
80D26L: 80 (rank of output), D (physical size-depth), 26 (width in cm). The last character L (post configuration) is not input into the tester.
The tester requires the rating for the battery be entered exactly as it is written or stamped on the battery. Do not attempt a CCA conversion for JIS stamped batteries. JIS must be input directly.

6. Using the arrow and "ENTER" keys alternately, select the battery type and rating.

NOTE:
The tester lists five choices; CCA, JIS, IEC, DIN, and EN. Only use CCA or JIS.

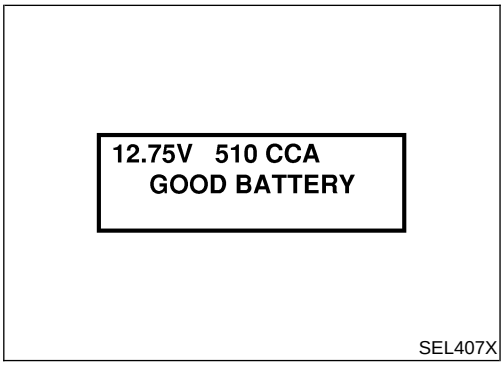

7. Press "ENTER" to begin the test. Diagnosis results are displayed on the tester. Refer to "DIAGNOSTIC RESULT ITEM CHART" SC-9.

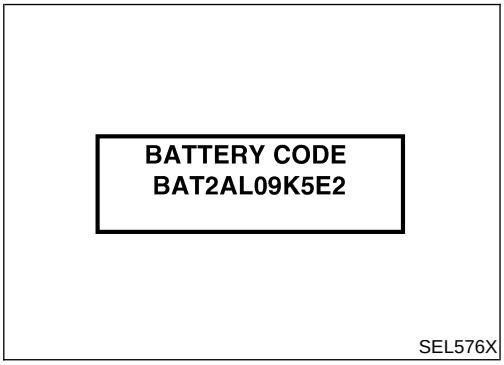

8. Press "ENTER", then test output code is displayed. Record the test output code on the repair order.
9. Toggle back to the "DIAGNOSTIC SCREEN" for test results.

NOTE:

- If necessary, the tester will ask the user to determine if the battery has just been charged. Choose the appropriate selection by pressing the up or down arrow button and then press the "ENTER" button to make the selection.
- When testing a battery installed in a vehicle that has recently been driven, select "BEFORE CHANGE".
- If the battery has just been slow charged due to a "CHARGE & RETEST" decision by the tester, and the tester asks the user "BEFORE CHARGE/AFTER CHARGE", select "AFTER CHARGE".

DIAGNOSTIC RESULT ITEM CHART

NFSC0018S01

Diagnostic item	Service procedure
GOOD BATTERY	Battery is OK, go to "Trouble Diagnoses", "STARTING SYSTEM". Refer to SC-13.
REPLACE BATTERY	Replace battery. Before replacing battery, clean the battery cable clamps and battery posts. Perform battery test again with Battery/Starting/Charging system tester. If second test result is "Replace Battery", then do so. Perform battery test again to confirm repair.
BAD CELL-REPLACE	Replace the battery. Perform battery test again with Battery/Starting/Charging system tester to confirm repair.
GOOD-RECHARGE	Perform the slow battery charging procedure. (Initial rate of charge is 10A for 12 hours.) Perform battery test again with Battery/Starting/Charging system tester.
CHARGE & RETEST	Perform the slow battery charging. (Initial rate of charge is 10A for 12 hours.) Perform battery test again with Battery/Starting/Charging system tester to confirm repair. **NOTE:** **If the tester asks the user "BEFORE CHARGE/AFTER CHARGE", select "AFTER CHARGE".**

System Description

NFSC0021

M/T MODELS

NFSC0021S01

Power is supplied at all times

- through 40A fusible link (letter **C**, located in the fuse and fusible link box)
- to ignition switch terminal 1.

With the ignition switch in the START position, power is supplied

- through terminal 5 of the ignition switch
- to clutch interlock relay terminal 5.

With the ignition switch in the START position, power is supplied

- through 10A fuse [No. 21, located in the fuse block (J/B)]
- to clutch interlock relay terminal 1.

When the clutch pedal is depressed, ground is supplied to clutch interlock relay terminal 2 through the clutch interlock switch and body grounds E11, E22 and E53.
The clutch interlock relay is energized and power is supplied

- from terminal 3 of the clutch interlock relay
- to terminal 2 of the starter motor windings.

The starter motor plunger closes and provides a closed circuit between the battery and the starter motor. The starter motor is grounded to the cylinder block. With power and ground supplied, the starter motor operates.

A/T MODELS

NFSC0021S02

Power is supplied at all times

- through 40A fusible link (letter **C**, located in the fuse and fusible link box)
- to ignition switch terminal 1.

With the ignition switch in the ON or START position, power is supplied

- through 15A fuse [No. 20, located in the fuse block (J/B)]
- to park/neutral position relay terminal 1.

Also, with the ignition switch in the START position, power is supplied

- from ignition switch terminal 5
- to park/neutral position relay terminal 6.

Ground is supplied, with the selector lever in the P or N position

- to park/neutral position relay terminal 2
- through park/neutral position switch.

The park/neutral position relay is energized and power is supplied

- from ignition switch terminal 5
- through park/neutral position relay terminals 6 and 7
- to terminal 2 of the starter motor windings.

The starter motor plunger closes and provides a closed circuit between the battery and the starter motor. The starter motor is grounded to the cylinder block. With power and ground supplied, the starter motor operates.

Wiring Diagram — START —

NFSC0005

M/T MODELS

NFSC0005S03

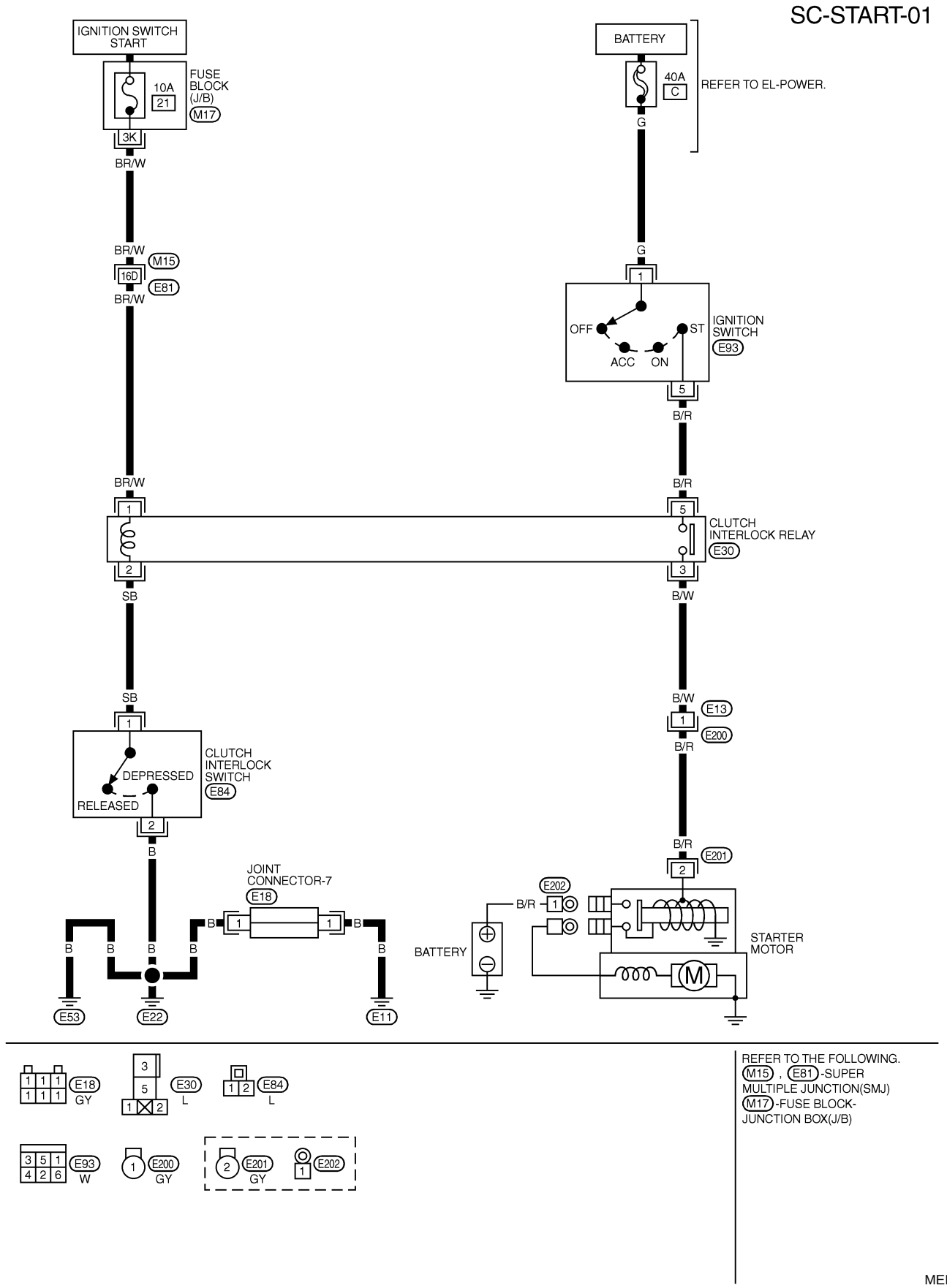

A/T MODELS

NFSC0005S04

SC-START-02

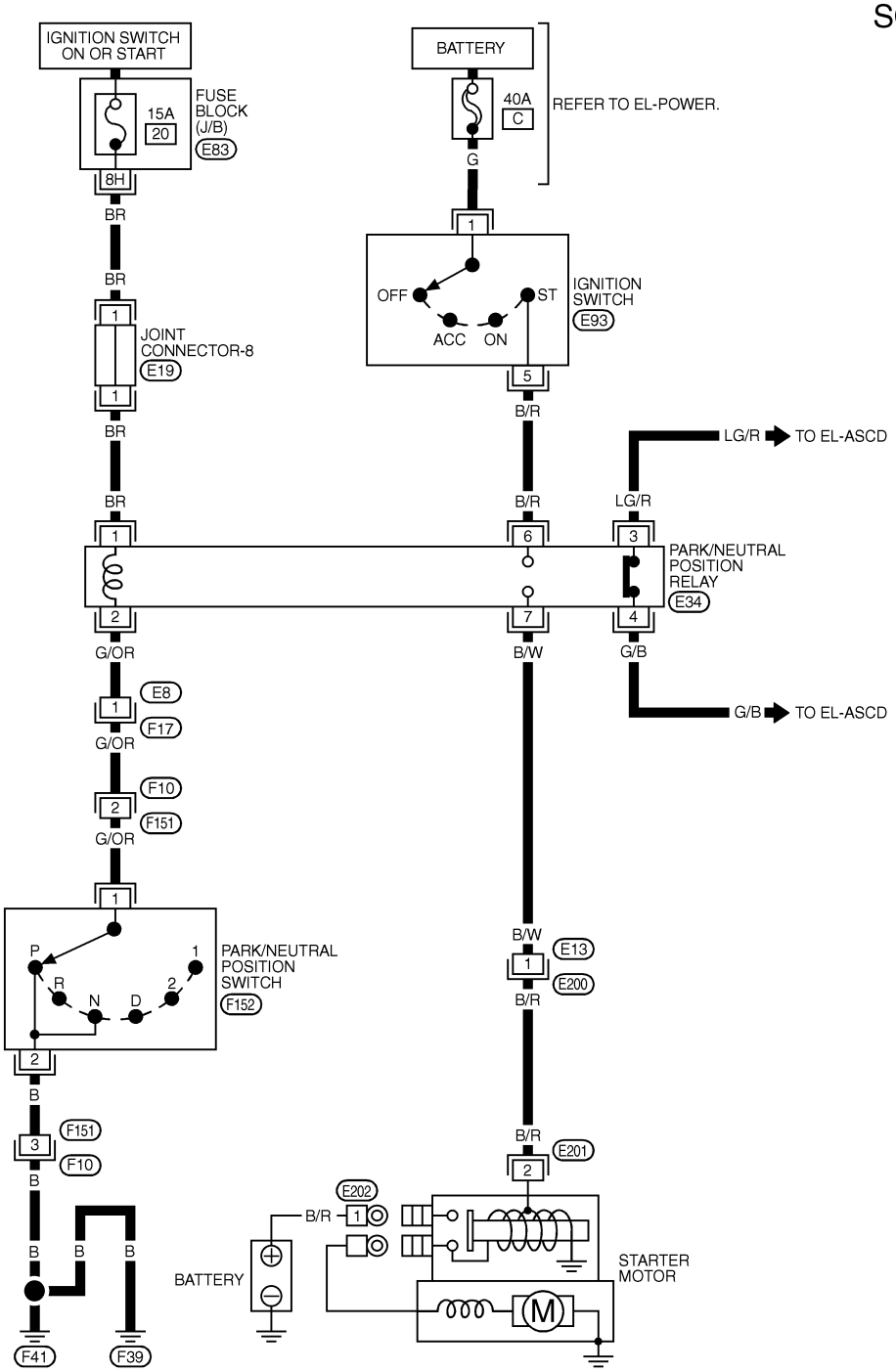

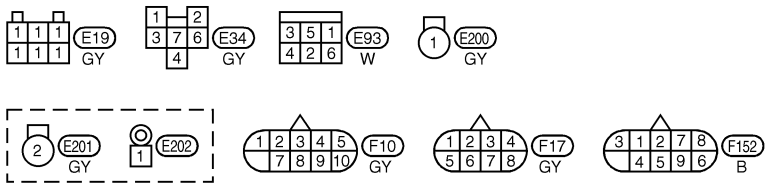

REFER TO THE FOLLOWING.
E83 -FUSE BLOCK-JUNCTION BOX(J/B)

MEL209K

Trouble Diagnoses with Battery/Starting/Charging System Tester

NFSC0019

NOTE:
To ensure a complete and thorough diagnosis, the battery, starter and alternator test segments must be done as a set from start to finish.

1. Turn off all loads on the vehicle electrical system.
2. Perform battery test with Battery/Starting/Charging system tester. Refer to SC-7.
3. Press “ENTER” to begin the starting system test.

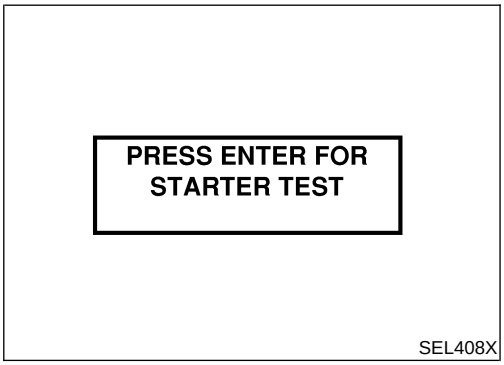

4. Start the engine.

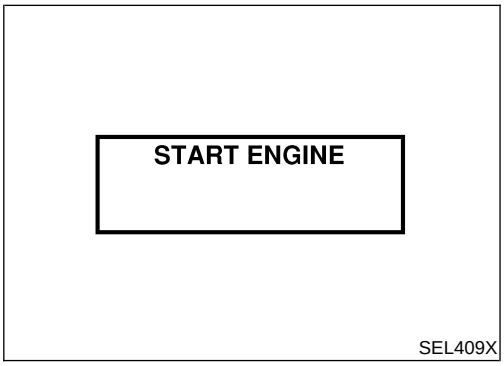

5. Diagnosis result is displayed on the tester. Refer to “DIAGNOSTIC RESULT ITEM CHART”, SC-14.

NOTE:
- If the starter performs normally but the engine does not start, perform engine diagnosis.
- For intermittent “NO CRANK” or “NO STARTER OPERATION” incidents, go to DIAGNOSTIC PROCEDURE 2.

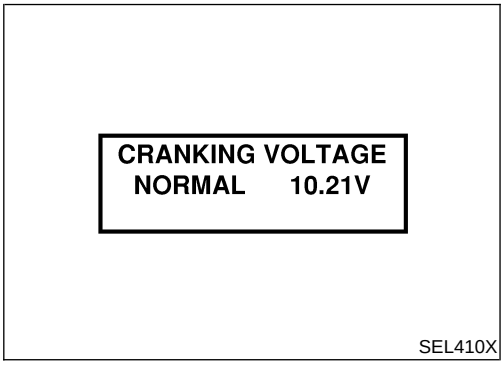

DIAGNOSTIC RESULT ITEM CHART

NFSC0019S01

Diagnostic item	Service procedure
CRANKING VOLTAGE NORMAL	Go to "WORK FLOW", SC-15.
CRANKING VOLTAGE LOW	Go to "WORK FLOW", SC-15.
CHARGE BATTERY	Perform the slow battery charging procedure. (Initial rate of charge is 10A for 12 hours.) Perform battery test again with Battery/Starting/Charging system tester. Refer to SC-7.
REPLACE BATTERY	Before replacing battery, clean the battery cable clamps and battery posts. Perform battery test again with Battery/Starting/Charging system tester. Refer to SC-7. If second test result is "REPLACE BATTERY", then do so. Perform battery test again to confirm repair.

WORK FLOW

NFSC0019S02

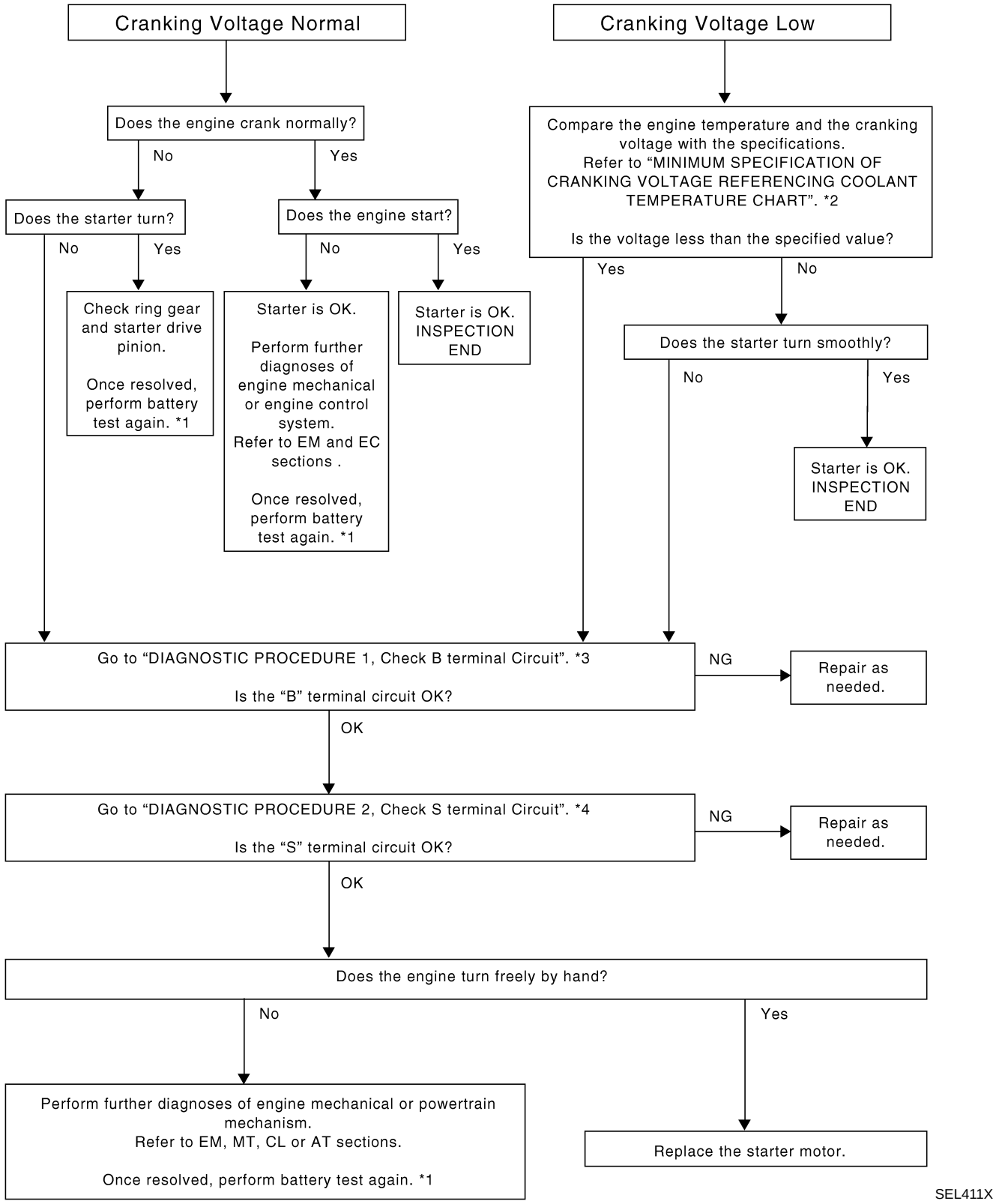

*1 SC-7 *3 SC-16 *4 SC-18
*2 SC-19

DIAGNOSTIC PROCEDURE 1
Check "B" Terminal Circuit

NFSC0019S03

NFSC0019S0301

1	CHECK POWER SUPPLY FOR STARTER MOTOR "B" TERMINAL

1. Remove the fuel pump fuse.
2. Crank or start the engine (where possible) until the fuel pressure is released.
3. Turn the ignition OFF.
4. Check that the starter motor connector E202 terminal 1 (B/R) connection is clean and tight.
5. Check voltage between starter motor connector E202 terminal 1 (B/R) and ground using a digital circuit tester.

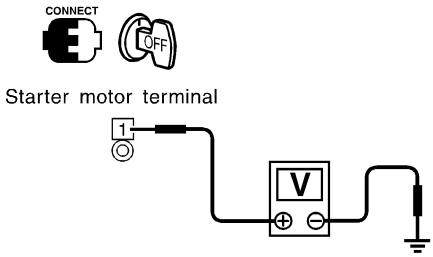

Battery voltage should exist.

SEL961X

OK or NG

OK	▶	GO TO 2.
NG	▶	Check harness between the battery and the starter motor for open circuit.

2	CHECK BATTERY CABLE CONNECTION QUALITY (VOLTAGE DROP TEST)

1. Check voltage between starter motor connector E202 terminal 1 (B/R) and battery positive terminal using a digital circuit tester.

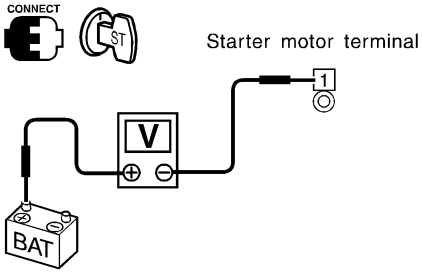

When the ignition switch is in START position,
Voltage: Less than 0.5V

SEL962X

OK or NG

OK	▶	GO TO 3.
NG	▶	Check harness between the battery and the starter motor for poor continuity.

3	CHECK STARTER MOTOR GROUND CIRCUIT (VOLTAGE DROP TEST)

1. Check voltage between starter motor case and battery negative terminal using a digital circuit tester.

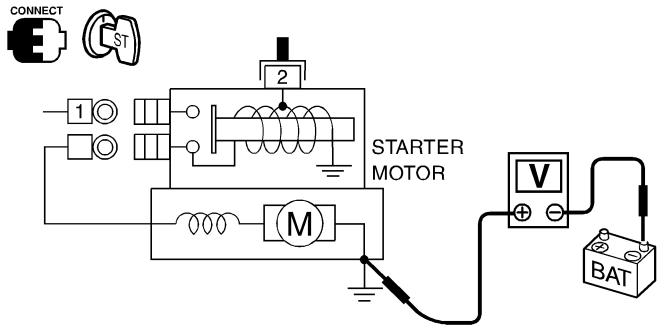

When the ignition switch is in START position,
Voltage: Less than 0.2V

SEL963X

OK or NG

OK	▶	Starter motor "B" terminal circuit is OK. Further inspection necessary. Refer to "WORK FLOW", SC-15.
NG	▶	Check the starter motor case and ground for poor continuity.

DIAGNOSTIC PROCEDURE 2
Check "S" Terminal Circuit

=NFSC0019S04

NFSC0019S0401

1	CHECK POWER SUPPLY FOR STARTER MOTOR "S" TERMINAL

1. Remove the fuel pump fuse.
2. Crank or start the engine (where possible) until the fuel pressure is released.
3. Turn the ignition OFF.
4. Disconnect starter motor connector.
5. Check voltage between starter motor connector E201 terminal 2 (B/R) and ground using a digital circuit tester.

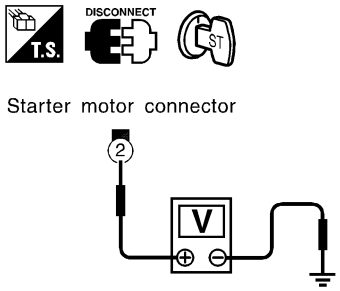

When the ignition switch is in START position,
Battery voltage should exist.

SEL964X

OK or NG

OK	▶	GO TO 2.
NG	▶	**Check the following.** ● 40A fusible link (letter **C**, located in fuse and fusible link box) ● Park/neutral position relay ● Harness for open or short

2	CHECK "S" TERMINAL CONNECTION QUALITY (VOLTAGE DROP TEST)

1. Connect starter motor connector.
2. Check voltage between starter motor connector E201 terminal 2 (B/R) and battery positive terminal using a digital tester.

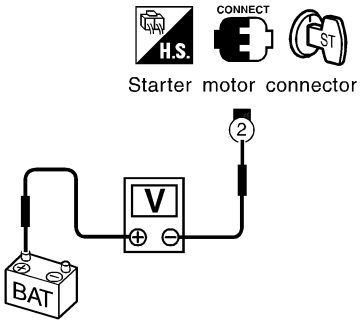

When the ignition switch is in START position,
Voltage: Less than 1V

SEL965X

OK or NG

OK	▶	Starter motor "S" terminal circuit is OK. Further inspection necessary. Refer to "WORK FLOW", SC-15.
NG	▶	Check harness between the battery and the starter motor "S" terminal for poor continuity.

MINIMUM SPECIFICATION OF CRANKING VOLTAGE REFERENCING COOLANT TEMPERATURE

NFSC0019S05

Engine coolant temperature	Voltage V
−30°C to −20°C (−22°F to −4°F)	8.2
−19°C to −10°C (−2°F to 14°F)	8.7
−9°C to 0°C (16°F to 32°F)	9.1
More than 1°C (More than 34°F)	9.4

Construction

NFSC0006

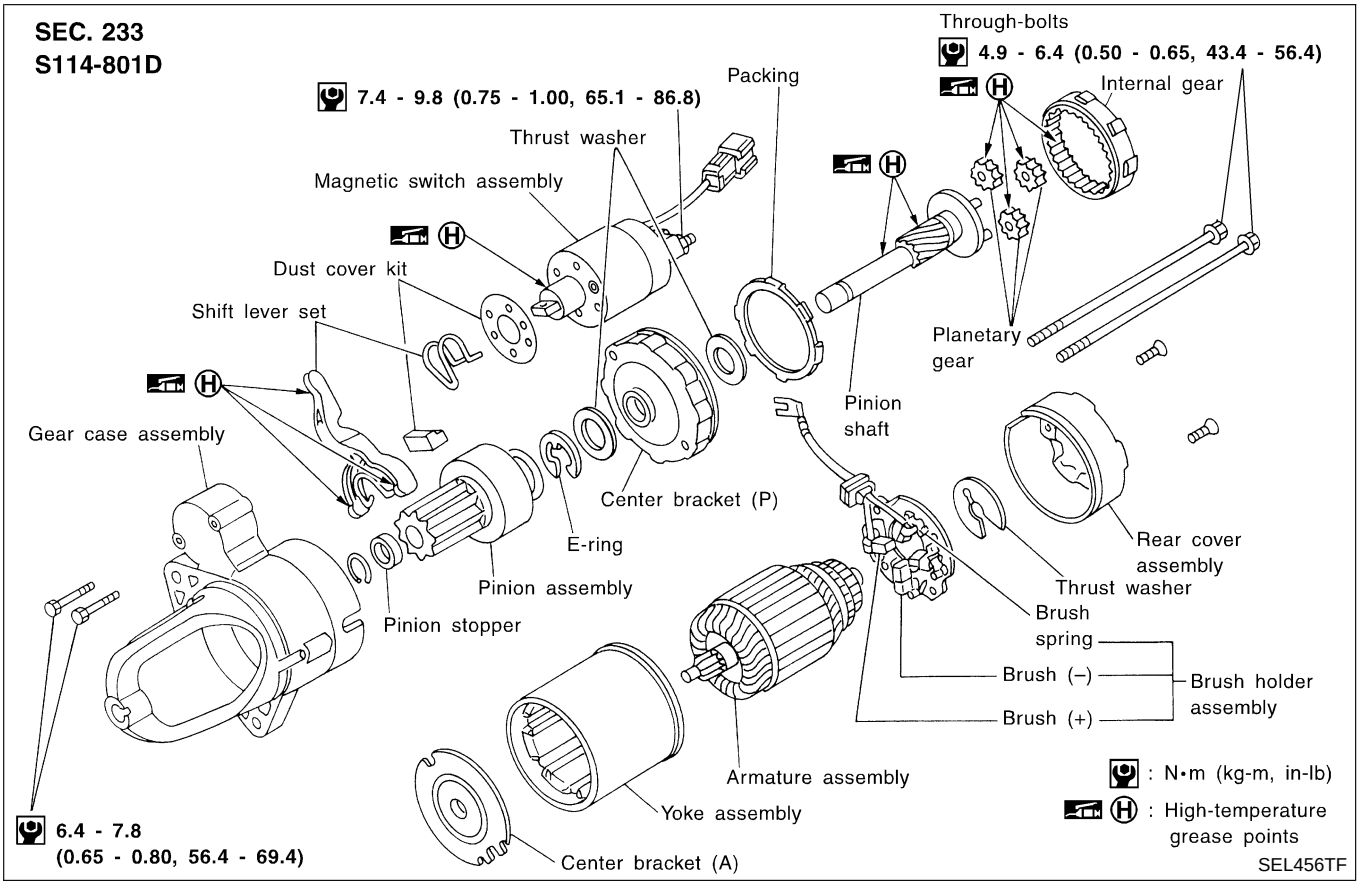

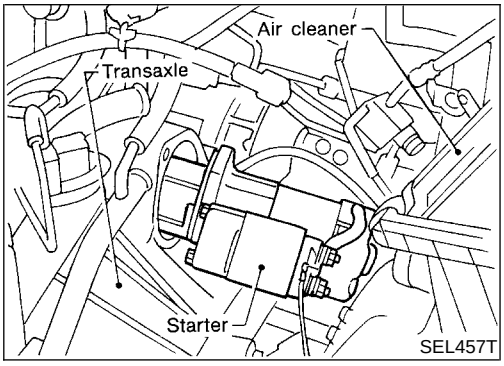

Removal and Installation

NFSC0007

REMOVAL

NFSC0007S01

1. Remove air duct assembly.
2. Remove harness protector from engine room harness.
3. Disconnect starter harness.
4. Remove starter bolts (two).
5. Remove starter.

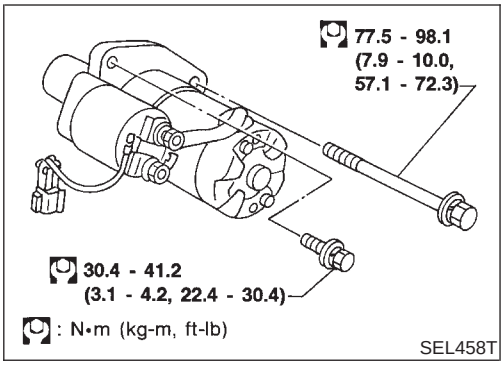

INSTALLATION

NFSC0007S02

To install, reverse the removal procedure.

Pinion/Clutch Check

NFSC0008

1. Inspect pinion teeth.
- Replace pinion if teeth are worn or damaged. (Also check condition of ring gear teeth.)
2. Inspect reduction gear teeth.
- Replace reduction gear if teeth are worn or damaged. (Also check condition of armature shaft gear teeth.)
3. Check to see if pinion locks in one direction and rotates smoothly in the opposite direction.
- If it locks or rotates in both directions, or unusual resistance is evident, replace.

System Description

NFSC0009

The alternator provides DC voltage to operate the vehicle's electrical system and to keep the battery charged. The voltage output is controlled by the IC regulator.
Power is supplied at all times to alternator terminal 3 (S) through:

- 120A fusible link (letter **A**, located in the fuse and fusible link box), and
- 10A fuse (No. 70, located in the fuse and fusible link box).

Terminal B supplies power to charge the battery and operate the vehicle's electrical system. Output voltage is controlled by the IC regulator at terminal 3 (S) detecting the input voltage. The charging circuit is protected by the 120A fusible link.
The alternator is grounded to the engine block.
With the ignition switch in the ON or START position, power is supplied

- through 10A fuse [No. 30, located in the fuse block (J/B)]
- to combination meter terminal 66 for the charge warning lamp.

Ground is supplied to terminal 68 of the combination meter through terminal 2 (L) of the alternator. With power and ground supplied, the charge warning lamp will illuminate. When the alternator is providing sufficient voltage with the engine running, the ground is opened and the charge warning lamp will go off.
If the charge warning lamp illuminates with the engine running, a fault is indicated.

Wiring Diagram — CHARGE —

NFSC0010

SC-CHARGE-01

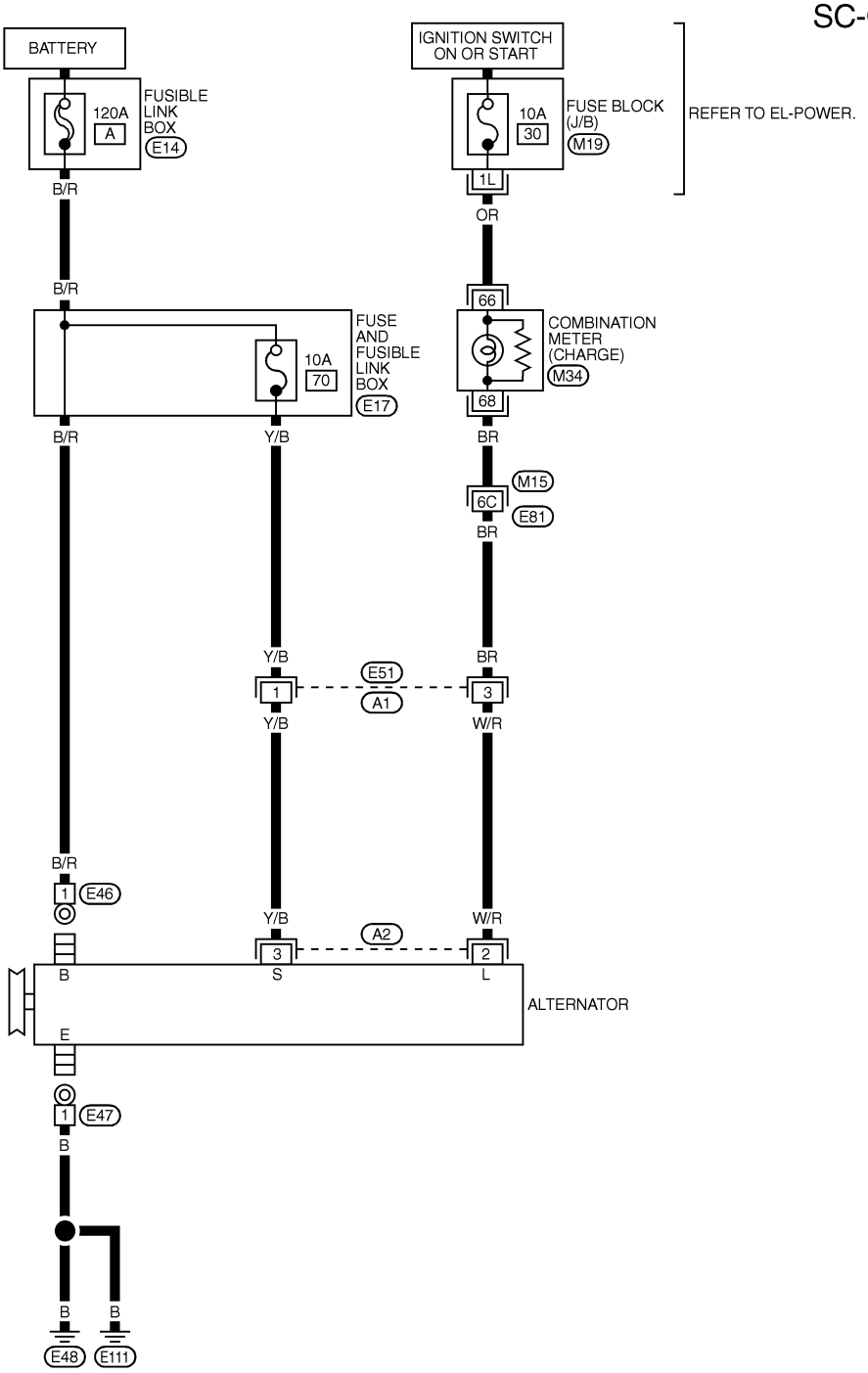

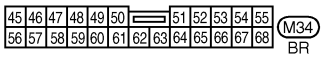

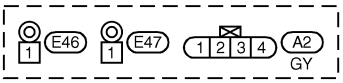

REFER TO THE FOLLOWING.
M15 -SUPER MULTIPLE JUNCTION(SMJ)
M19 -FUSE BLOCK-JUNCTION BOX(J/B)
E14 -FUSIBLE LINK BOX
E17 -FUSE AND FUSIBLE LINK BOX

MEL758M

Trouble Diagnoses with Battery/Starting/Charging System Tester

NFSC0020

NOTE:
To ensure a complete and thorough diagnosis, the battery, starter and alternator test segments must be done as a set from start to finish.

PRESS ENTER FOR
CHARGING TEST

SEL417X

1. Turn off all loads on the vehicle electrical system.
2. Perform battery and starting system test with Battery/Starting/Charging system tester.
3. Press “ENTER” to begin the charging system test.
4. Start engine.

LOADS OFF
REV ENGINE 5 SEC

SEL418X

5. Press “ENTER” until “LOADS OFF REV ENGINE 5 SEC” is displayed.
6. Raise and hold the engine speed at 1,500 to 2,000 rpm for about 5 seconds, then return to the engine to idle.
   Once the increase in engine rpm is detected, press “ENTER” to continue.

NOTE:
- If after 30 seconds an increase in engine idle speed is not detected, “RPM NOT DETECTED” will display.
- Some engines may have a higher idle initially after starting, particularly when the engine is cold. The tester may detect this without any other action being taken. If this occurs, continue on with the testing process. The final results will not be affected.

*** TESTING ***
ENGINE AT IDLE

*** TESTING ***
DIODE/RIPPLE

SEL419X

7. The tester now checks the engine at idle and performs the DIODE/RIPPLE check.
8. When complete, the tester will prompt you to turn on the following electrical loads.

- Heater fun set to highest. Do not run the A/C or windshield defroster.
- Headlamp high beam
- Rear window defogger

NOTE:
Do not run the windshield wipers or any other cyclical loads.

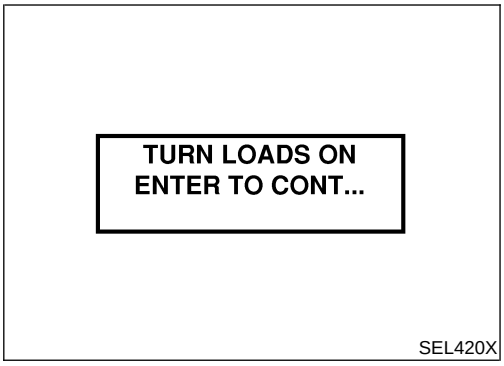

9. Press "ENTER" to continue.

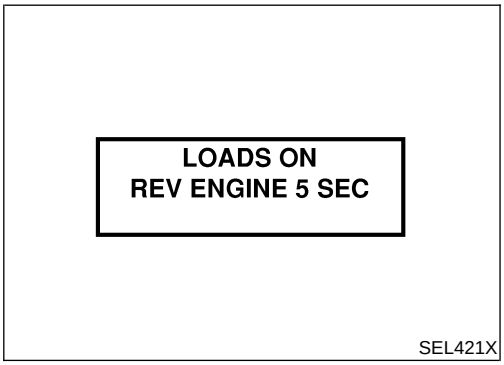

10. Raise and hold the engine speed at 1,500 to 2,000 rpm for about 5 seconds, then return the engine to idle. Once the increase in engine rpm is detected, press "ENTER" to continue.

NOTE:
If after 30 seconds an increase in engine idle speed is not detected, "RPM NOT DETECTED" will be displayed. Press "ENTER" to restart the test.

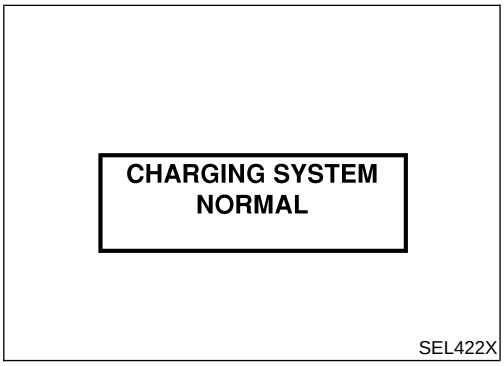

11. Diagnostic result is displayed on the tester. Refer to "DIAGNOSTIC RESULT ITEM CHART", SC-25.

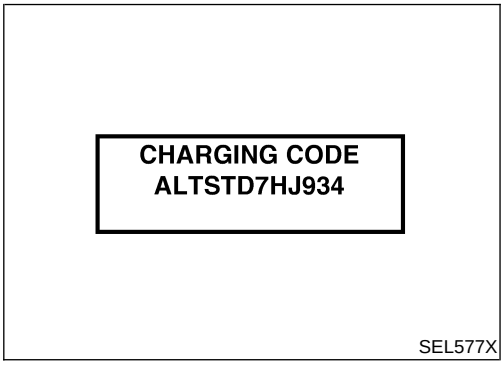

12. Press "ENTER" then test output code is displayed. Record the test output code on the repair order.
13. Toggle back to the "DIAGNOSTIC SCREEN" for test results.

DIAGNOSTIC RESULT ITEM CHART

NFSC0020S01

Diagnostic item	Service procedure
CHARGING SYSTEM NORMAL	Charging system is normal and will also show DIODE RIPPLE test result.
NO CHARGING VOLTAGE	Go to "WORK FLOW", SC-26.
LOW CHARGING VOLTAGE	Go to "WORK FLOW", SC-26.
HIGH CHARGING VOLTAGE	Go to "WORK FLOW", SC-26.
DIODE RIPPLE NORMAL	Diode ripple is OK and will also show CHARGING VOLTAGE test result.
EXCESS RIPPLE DETECTED	Replace the alternator. Perform "DIODE RIPPLE" test again using Battery/Starting/Charging system tester to confirm repair.
DIODE RIPPLE NOT DETECTED	Go to "WORK FLOW", SC-26.

WORK FLOW

NFSC0020S02

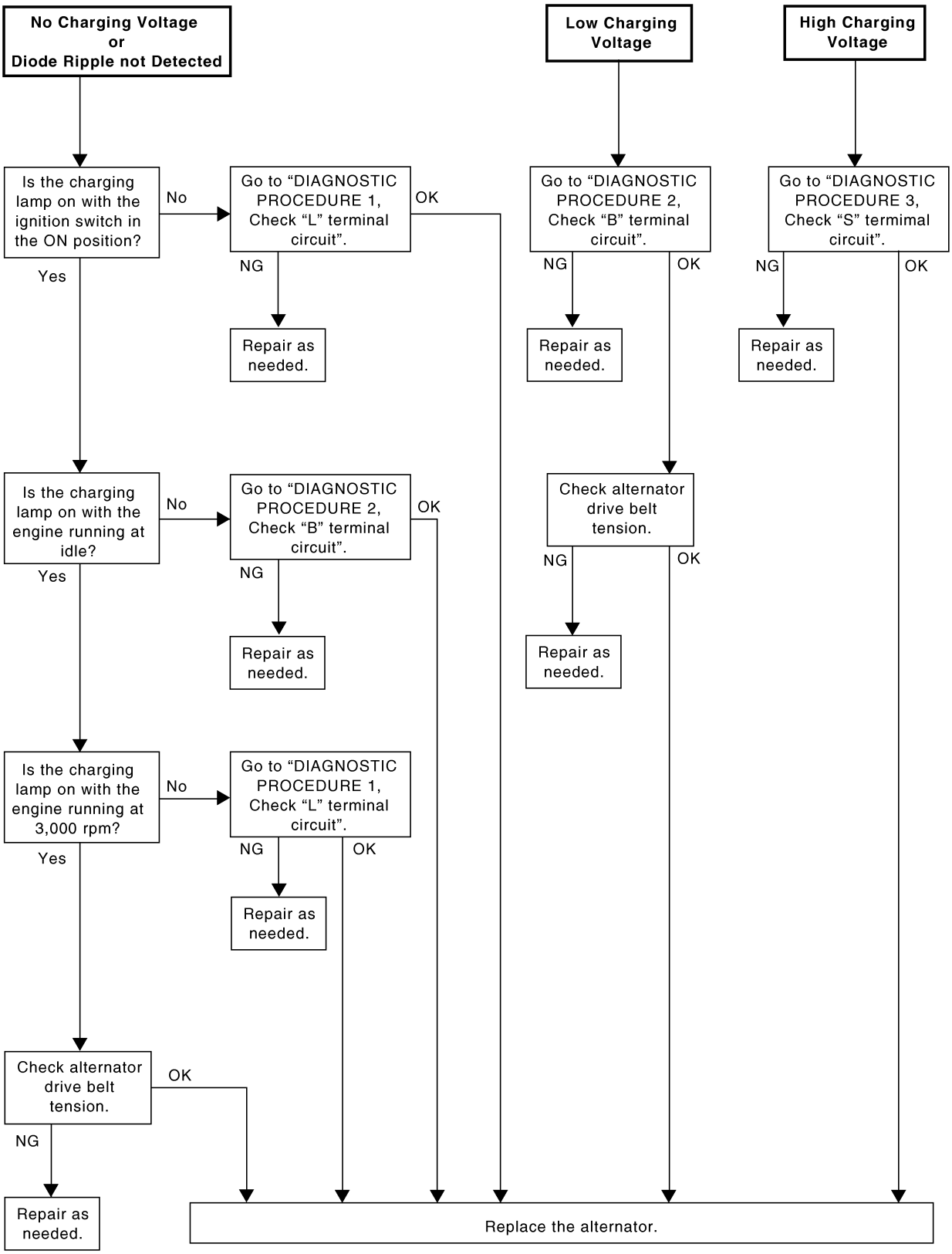

SEL423X

DIAGNOSTIC PROCEDURE 1
Check "L" Terminal Circuit

NFSC0020S03

NFSC0020S0301

1	CHECK "L" TERMINAL CONNECTION	
Check to see if "L" terminal is clean and tight.		
OK or NG		
OK	▶	GO TO 2.
NG	▶	Repair "L" terminal connection. Confirm repair by performing complete Battery/Starting/Charging system test.

2	CHECK "L" TERMINAL CIRCUIT	
1. Disconnect alternator connector. 2. Apply ground to alternator connector A2 terminal 2 (W/R) with the ignition switch in the ON position.		
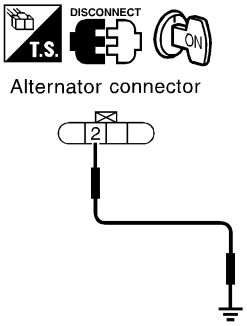 **CHARGE lamp should light up.** SEL966X		
OK or NG		
OK	▶	Replace the alternator. Confirm repair by performing complete Battery/Starting/Charging system test.
NG	▶	**Check the following.** ● 10A fuse [No. 30, located in fuse block (J/B)] ● CHARGE lamp ● Harness for open or short between combination meter and fuse ● Harness for open or short between combination meter and alternator

DIAGNOSTIC PROCEDURE 2
Check "B" Terminal Circuit

=NFSC0020S04

NFSC0020S0401

1	CHECK "B" TERMINAL CONNECTION	
Check to see if "B" terminal is clean and tight.		
	OK or NG	
OK	▶	GO TO 2. Confirm repair by performing complete Battery/Starting/Charging system test.
NG	▶	Repair "B" terminal connection.

2	CHECK ALTERNATOR "B" TERMINAL CIRCUIT	
Check voltage between alternator connector E46 terminal B (B/R) and ground using a digital circuit tester.		
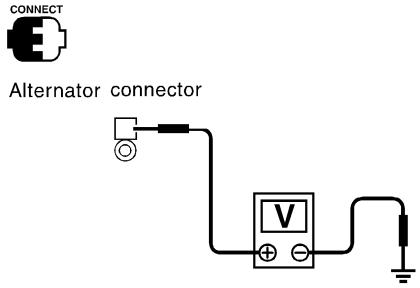 **Battery voltage should exist.** SEL967X		
	OK or NG	
OK	▶	GO TO 3.
NG	▶	**Check the following.** ● 120A fusible link (letter **A**, located in fuse and fusible link box) ● Harness for open or short between alternator and fusible link

3	CHECK "B" TERMINAL CONNECTION QUALITY (VOLTAGE DROP TEST)	
Check voltage between alternator connector E46 terminal B (B/R) and battery positive terminal using a digital tester.		
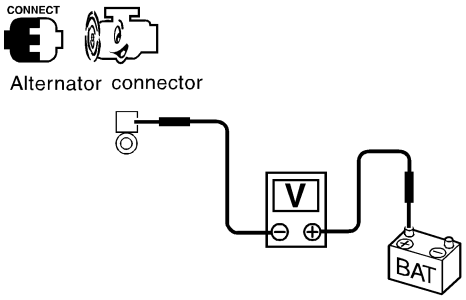 When the engine running at idle and warm, **Voltage: Less than 0.2V** SEL968X		
	OK or NG	
OK	▶	Replace the alternator. Confirm repair by performing complete Battery/Starting/Charging system test.
NG	▶	Check harness between the battery and the alternator for poor continuity.

DIAGNOSTIC PROCEDURE 3
Check "S" Terminal Circuit

=NFSC0020S05

NFSC0020S0501

1	CHECK "S" TERMINAL CONNECTION	
Check to see if "S" terminal is clean and tight.		
	OK or NG	
OK	▶	GO TO 2.
NG	▶	Repair "S" terminal connection. Confirm repair by performing complete Battery/Starting/Charging system test.

2	CHECK ALTERNATOR "S" TERMINAL CIRCUIT	
Check voltage between alternator connector A2 terminal 3 (Y/B) and ground using a digital circuit tester.		
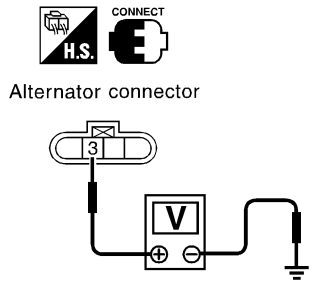	**Battery voltage should exist.**	
SEL969X		
	OK or NG	
OK	▶	GO TO 3.
NG	▶	**Check the following.** ● 10A fuse (No. 70, located in fuse and fusible link box) ● Harness for open or short between alternator and fuse

3	CHECK "S" TERMINAL CONNECTION QUALITY (VOLTAGE DROP TEST)	
Check voltage between alternator connector A2 terminal 3 (Y/B) and battery positive terminal using a digital tester.		
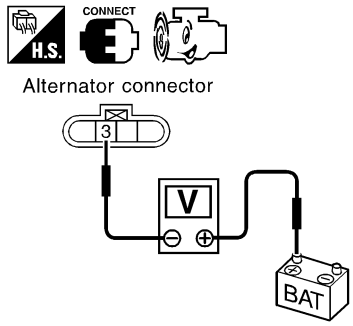	When the engine running at idle and warm, **Voltage: Less than 0.2V**	
SEL970X		
	OK or NG	
OK	▶	Replace the alternator. Confirm repair by performing complete Battery/Starting/Charging system test.
NG	▶	Check harness between the battery and the alternator for poor continuity.

MALFUNCTION INDICATOR

NFSC0020S06

The IC regulator warning function activates to illuminate "CHARGE" warning lamp, if any of the following symptoms occur while alternator is operating:

- Excessive voltage is produced.
- No voltage is produced.

Construction

NFSC0012

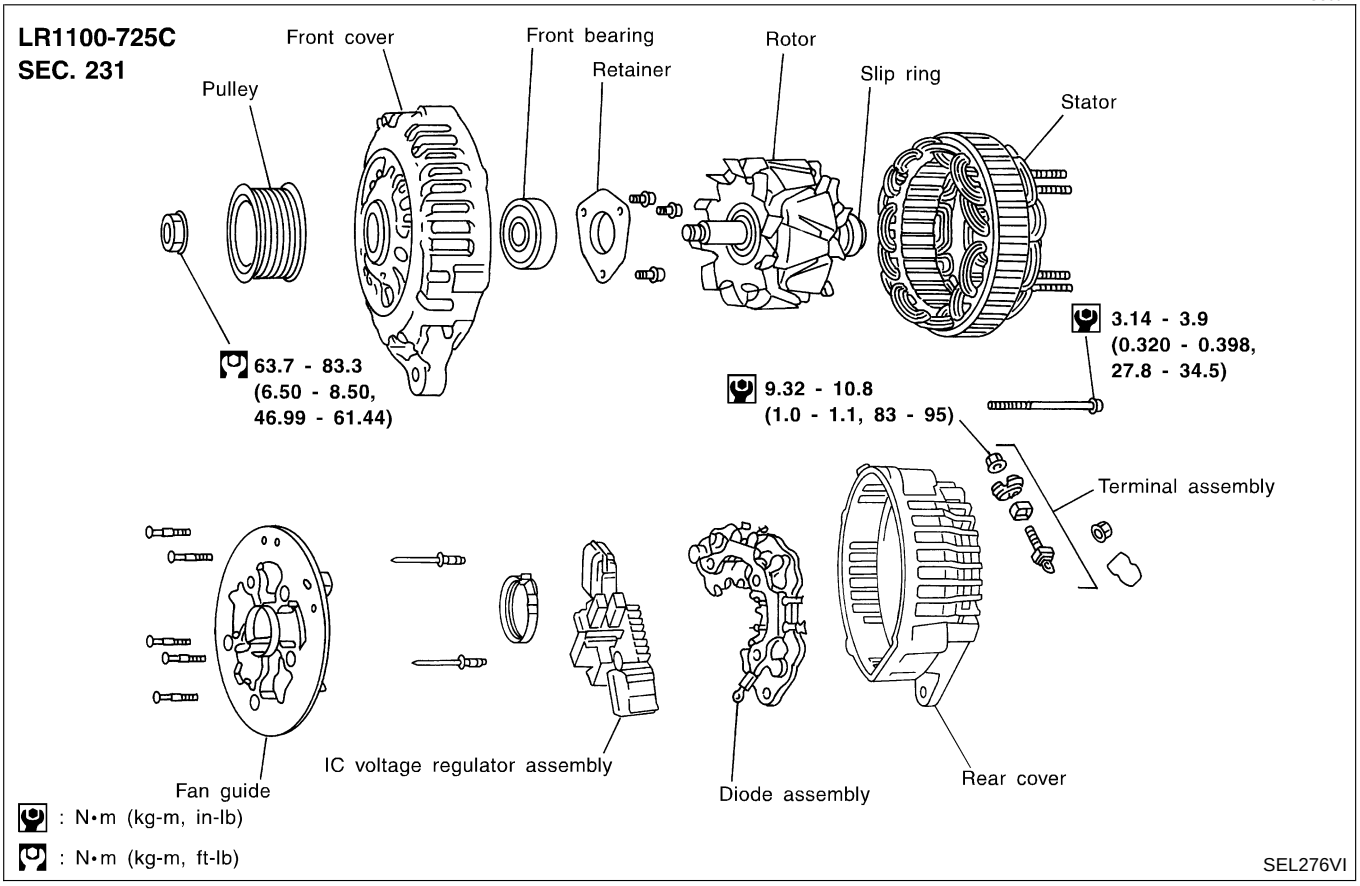

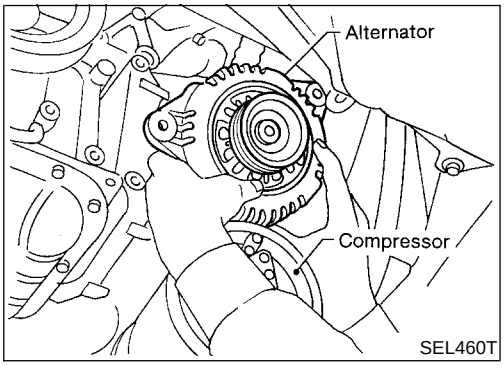

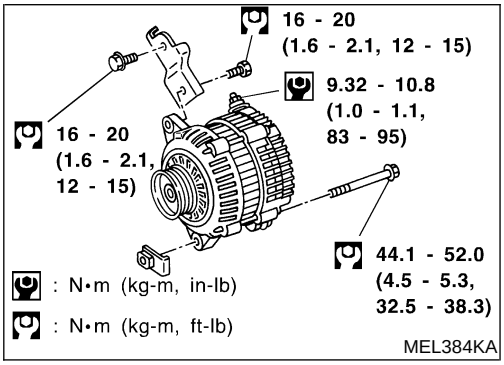

Removal and Installation

NFSC0013

REMOVAL

NFSC0013S01

1. Remove engine undercover RH.
2. Remove side inspection cover RH.
3. Loosen belt idler pulley.
4. Remove drive belt.
5. Remove A/C compressor mounting bolts (four).
6. Slide A/C compressor forward.
7. Disconnect alternator harness connector.
8. Remove alternator upper bolt and lower bolt.

INSTALLATION

NFSC0013S02

To install, reverse the removal procedure.

Battery

NFSC0014

Type	80D26L
Capacity V-AH	12-55
Cold cranking current A (For reference value)	582

Starter

NFSC0015

Type		S114-801D
		HITACHI make
		Reduction gear type
System voltage		12V
No-load	Terminal voltage	11.0V
	Current	Less than 90A
	Revolution	More than 2,700 rpm
Minimum diameter of commutator		28.0 mm (1.102 in)
Minimum length of brush		10.5 mm (0.413 in)
Brush spring tension		12.7 - 17.7 N (1.3 - 1.8 kg, 2.9 - 4.0 lb)
Clearance between pinion front edge and pinion stopper		0.3 - 2.5 mm (0.012 - 0.098 in)

Alternator

NFSC0016

Type	LR1100-725C
	HITACHI make
Nominal rating	12V-110A
Ground polarity	Negative
Minimum revolution under no-load (When 13.5 volts is applied)	Less than 950 rpm
Hot output current (When 13.5 volts is applied)	More than 33A/1,300 rpm More than 81A/2,500 rpm More than 93A/5,000 rpm
Regulated output voltage	14.1 - 14.7V
Minimum length of brush	More than 6.00 mm (0.2362 in)
Brush spring pressure	1.000 - 3.432 N (102 - 350 g, 3.60 - 12.34 oz)
Slip ring minimum outer diameter	More than 26.0 mm (1.024 in)
Rotor (Field coil) resistance	2.31Ω

NOTES