SECTION FSU
FRONT SUSPENSION

CONTENTS

PRECAUTIONS

PFP:00001

Caution

AES000G7

- When installing rubber bushings, final tightening must be carried out under unladen conditions with tires on ground. Oil will shorten the life of rubber bushings. Be sure to wipe off any spilled oil.
- Unladen conditions mean that fuel, engine coolant and lubricant are full. Spare tire, jack, hand tools and mats are in designated positions.
- After servicing suspension parts, be sure to check wheel alignment.
- Caulking nuts are not reusable. Always use new ones when installing. Since new caulking nuts are pre-oiled, tighten as they are.

PREPARATION

PFP:00002

Special Service Tools (SST)

AES000G8

The actual shapes of Kent-Moore tools may differ from those of special service tools illustrated here.

Tool number (Kent-Moore No.) Tool name		Description
KV991040S0 (—) CCK gauge attachment 1. Plate 2. Guide bolts 3. Nuts 4. Springs 5. Center plate 6. KV99104020 Adapter A a: 72 mm (2.83 in) dia. 7. KV99104030 Adapter B b: 65 mm (2.56 in) dia. 8. KV99104040 Adapter C c: 57 mm (2.24 in) dia. 9. KV99104050 Adapter D d: 53.4 mm (2.102 in) dia.	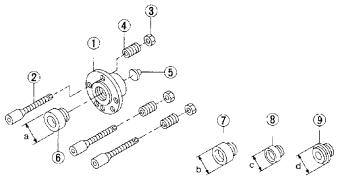	Measuring wheel alignment
ST35652000 (—) Strut attachment	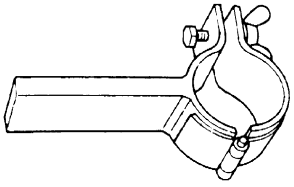	Disassembling and assembling strut
ST3127S000 (See J25742-1) Preload gauge 1. GC91030000 Torque wrench (J25765) 2. HT62940000 (—) Socket adapter (1/2″) 3. HT62900000 (—) Socket adapter (3/8″)	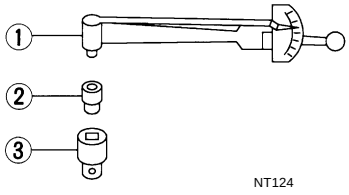	Measuring sliding torque of ball joint

Commercial Service Tools

AES000G9

Tool name		Description
Spring compressor	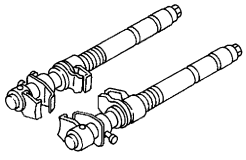	Removing coil spring
Power tool	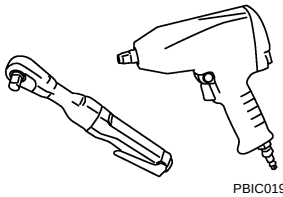	● Removing wheel nuts ● Removing undercover ● Removing front suspension components parts

NOISE, VIBRATION AND HARSHNESS (NVH) TROUBLESHOOTING

PFP:00003

NVH Troubleshooting Chart

AES000GA

Use chart below to help you find the cause of the symptom. If necessary, repair or replace these parts.

Reference page			FSU-7	FSU-10	—	—	—	FSU-10	FSU-5	FSU-14	NVH in PR section	NVH in RFD section	NVH in RAX and RSU section	NVH in WT section	NVH in WT section	NVH in RAX section	NVH in BR section	NVH in PS section
Possible cause and SUSPECTED PARTS			Improper installation, looseness	Strut deformation, damage or deflection	Bushing or mounting deterioration	Parts interference	Spring fatigue	Suspension looseness	Incorrect wheel alignment	Stabilizer bar fatigue	PROPELLER SHAFT	DIFFERENTIAL	REAR AXLE AND REAR SUSPENSION	TIRES	ROAD WHEEL	DRIVE SHAFT	BRAKES	STEERING
Symptom	FRONT SUSPENSION	Noise	×	×	×	×	×	×			×	×	×	×	×	×	×	×
		Shake	×	×	×	×		×			×		×	×	×	×	×	×
		Vibration	×	×	×	×	×				×		×	×		×		×
		Shimmy	×	×	×	×			×				×	×	×		×	×
		Judder	×	×	×								×	×	×		×	×
		Poor quality ride or handling	×	×	×	×	×		×	×			×	×	×			

×: Applicable

FRONT SUSPENSION ASSEMBLY

PFP:54010

On-Vehicle Inspection and Service

AES000GB

Make sure the mounting conditions (looseness, back lash) of each component and component statues (wear, damage) are normal.

INSPECTION OF TRANSVERSE LINK END PLAY

1. Set front wheels in a straight-ahead position. Do not depress brake pedal.
2. Measure axial end play of transverse link ball joint by prying between suspension arm and front axle with a iron bar or something similar.

   Axial end play : 0 mm (0 in)

   CAUTION:
   Be careful not to damage ball joint boot.

STRUT INSPECTION

Check strut for oil leakage, damage and replace if necessary.

Wheel Alignment Inspection

AES000GC

DESCRIPTION

- Measure wheel alignment under unladen conditions. “Unladen conditions” means that fuel, engine coolant, and lubricant are full. Spare tire, jack, hand tools and mats are in designated positions.

PRELIMINARY CHECK

1. Check tires for improper air pressure and wear.
2. Check road wheels for runout.
3. Check wheel bearing axial end play.
4. Check transverse link ball joint axial end play.
5. Check strut operation.
6. Check each mounting point of axle and suspension for looseness and deformation.
7. Check each link, rod, and member for cracks, deformation and other damage.
8. Check vehicle posture.

INSPECTION OF CAMBER, CASTER AND KINGPIN INCLINATION ANGLES

- Camber, caster, kingpin inclination angles cannot be adjusted.
- Before inspection, mount front wheels onto turning radius gauge. Mount rear wheels onto a stand that has same height so vehicle will remain horizontal.

Using a CCK Gauge

1. Remove wheel nuts (3), and install a guide bolt (SST) to hub bolt.
2. Screw adapter (SST) into plate body (SST) until it contacts body tightly.
3. Screw center plate (SST) into plate body (SST).
4. Insert plate (SST) on guide bolt (SST). Put spring in, and then evenly screw in guide bolt nut (SST). When fastening guide bolt nut, do not completely compress spring.

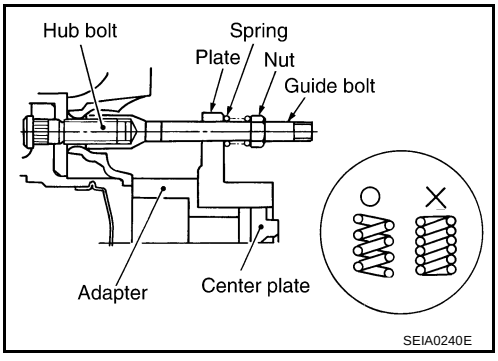

5. Place the dent of alignment gauge onto the projection of center plate (SST) and tightly contact them to measure.

Camber, caster, kingpin inclination angles:

Refer to FSU-16, "SERVICE DATA AND SPECIFICATIONS (SDS)" .

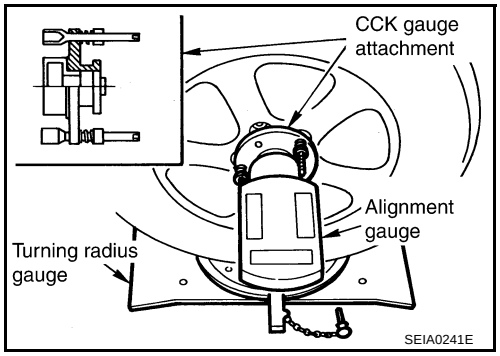

CAUTION:

- **If camber, caster, or kingpin inclination angle is outside the standard, check front suspension parts for wear and damage, and replace suspect parts if necessary.**
- **Kingpin inclination angle is reference value, no inspection is required. (Due to the type of suspension, the kingpin inclination angle cannot be measured correctly using a normal alignment tester.)**

Toe-In Inspection

Measure toe-in using the following procedure.

WARNING:

- **Always perform the following procedure on a flat surface.**
- **Make sure that no person is in front of vehicle before pushing it.**

1. Bounce front of vehicle up and down to stabilize the posture.
2. Push vehicle straight ahead about 5 m (16 ft).
3. Put a mark on base line of the tread (rear side) of both tires at the same height of hub center. These are measuring points.

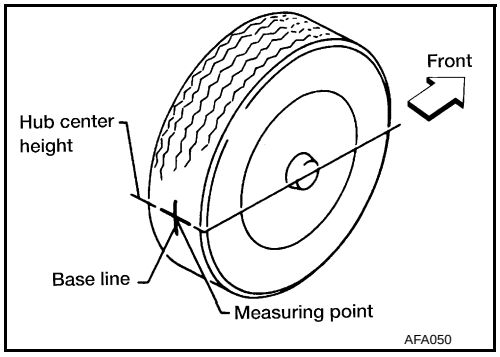

4. Measure distance “A” (rear side).
5. Push vehicle slowly ahead to rotate wheels 180 degrees (1/2 turn).

If wheels have rotated more than 180 degrees (1/2 turn), try the above procedure again from the beginning. Never push vehicle backward.

6. Measure distance “B” (front side).

Total toe-in : Refer to FSU-16, "SERVICE DATA AND SPECIFICATIONS (SDS)" .

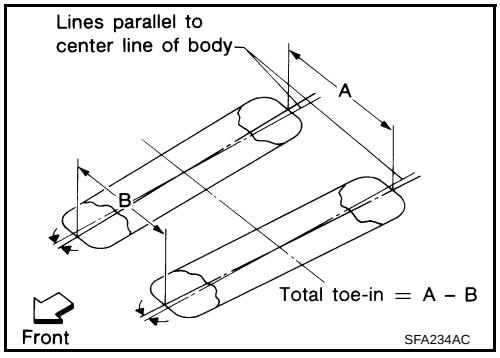

Components

AES000GD

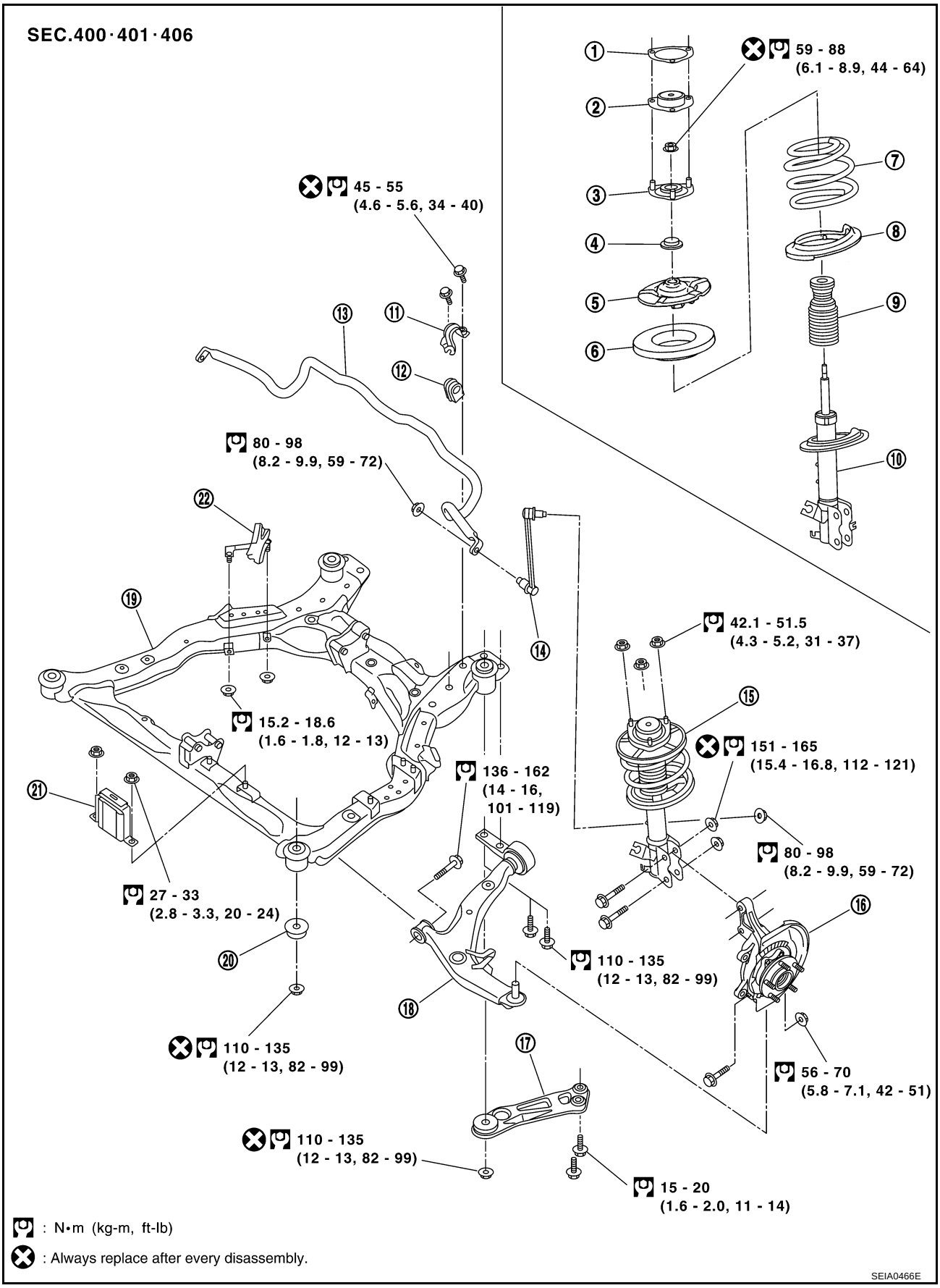

1. Upper mounting plate
2. Mounting insulator
3. Mounting insulator bracket
4. Mounting bearing
5. Spring upper seat
6. Spring upper rubber seat
7. Coil spring
8. Spring lower rubber seat
9. Bound bumper
10. Strut
11. Stabilizer clamp
12. Stabilizer bushing
13. Stabilizer bar
14. Connecting rod
15. Strut assembly
16. Front axle
17. Member stay
18. Transverse link
19. Front suspension member
20. Rebound stopper
21. Damper assembly
22. Air guide

Removal and Installation

AES000GE

Remove suspension assembly with engine assembly from vehicle. Refer to “ENGINE MECHANICAL” section EM-105, "ENGINE ASSEMBLY" .

COIL SPRING AND STRUT

PFP:55302

Removal and Installation

AES000NM

REMOVAL

1. Remove tire with power tool.
2. Remove cowl top grille. Refer to EI-21, "COWL TOP" .
3. Remove brake caliper with power tool. Hang it in a place where it will not interfere with work. Refer to BR-28, "Removal and Installation of Brake Caliper Assembly" .
4. Remove lock plate of brake hose from strut assembly.
5. Remove harness of wheel sensor from strut assembly. Refer to BRC-42, "WHEEL SENSORS" .

   NOTE:
   Do not pull on wheel sensor harness.
6. Remove mounting nut between strut assembly and connecting rod.
7. Remove mounting bolt and nut between strut assembly and steering knuckle with power tool.
8. Remove mounting nuts on mounting insulator bracket with power tool, then remove strut assembly from vehicle.

INSTALLATION

- Refer to FSU-7, "Components" for tightening torque. Install in the reverse order of removal.

  NOTE:
  Refer to component parts location and do not reuse non-reusable parts.
- Perform final tightening of strut assembly lower side (rubber bushing) under unladen conditions with tires on level ground. Check wheel alignment. Refer to FSU-16, "SERVICE DATA AND SPECIFICATIONS (SDS)" .

Disassembly and Assembly

AES000NN

DISASSEMBLY

NOTE:
Make sure piston rod on strut is not damaged when removing components from strut assembly.

1. Install strut attachment (SST) to strut and fix it in a vise.

   CAUTION:
   When installing strut attachment (SST) to strut, wrap a shop cloth around strut to protect it from damage.

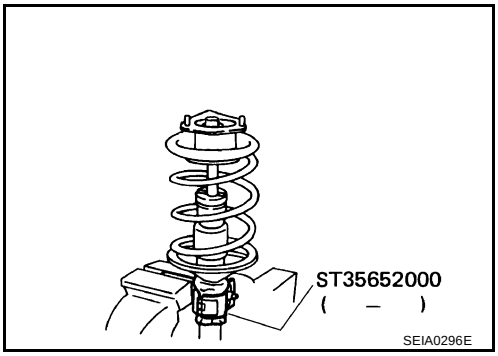

2. Using a spring compressor (commercial service tool), compress coil spring between spring upper seat and spring lower seat (on strut) until coil spring is free.

   CAUTION:
   Be sure spring compressor (commercial service tool) is securely attached to coil spring. Compress coil spring.

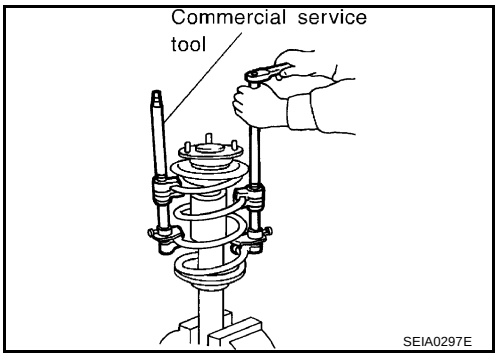

3. Make sure coil spring between spring upper seat and spring lower seat is free and then secure piston rod tip so that piston rod does not turn, and remove piston rod lock nut.

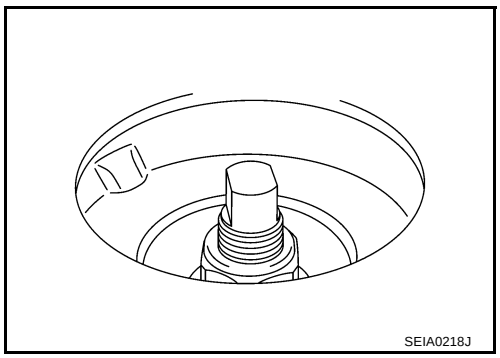

4. Remove upper mounting plate, mounting insulator, mounting insulator bracket, mounting bearing, spring upper rubber seat coil spring, spring lower rubber seat from strut.
5. Gradually release spring compressor (commercial service tool), and remove coil spring.

   CAUTION:
   Loosen while making sure coil spring attachment position does not move.
6. Remove bound bumper from spring upper seat.
7. Remove strut attachment (SST) from strut.

INSPECTION AFTER DISASSEMBLY

Strut Inspection

- Check strut for deformation, cracks or damage, and replace if necessary.
- Check piston rod for damage, uneven wear or distortion, and replace if necessary.
- Check welded and sealed areas for oil leakage, and replace if necessary.

Mounting Insulator and Rubber Parts Inspection

Check mounting insulator for cracks and rubber parts for wear. Replace them if necessary.

Coil Spring Inspection

Check coil spring for cracks, wear or damage, and replace if necessary.

ASSEMBLY

NOTE:
Make sure piston rod on strut is not damaged when attaching components to strut.

1. Install strut attachment (SST) to strut and fix it in a vise.

   CAUTION:
   When installing strut attachment (SST) to strut, wrap a shop cloth around strut to protect it from damage.
2. Install spring lower seat to strut.
3. Compress coil spring using a spring compressor (commercial service tool), and install it onto strut.

   CAUTION:
   - **Face tube side of coil spring downward. Align lower end to spring rubber seat as shown in the figure.**
   - **Be sure spring compressor (commercial service tool) is securely attached to coil spring. Compress coil spring.**

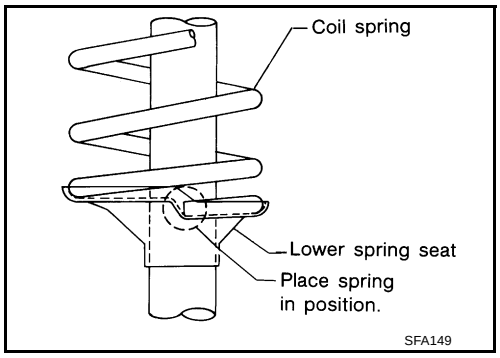

4. Install bound bumper to spring upper seat.

5. Install spring upper rubber seat, spring upper seat, mounting bearing, mounting insulator bracket, mounting insulator, upper mounting plate.
   - Installation position of spring upper seat is as shown in the figure.

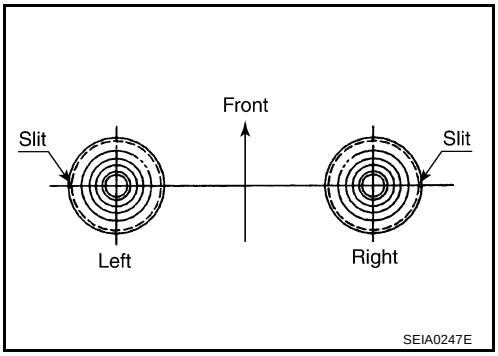

6. Fix strut mounting insulator, then tighten piston rod lock nut with specified torque.

   CAUTION:
   Be careful not do deform mounting insulator bracket.

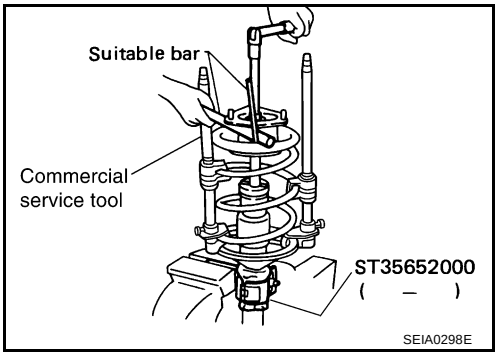

7. Gradually release spring compressor (commercial service tool), and remove coil spring.

   CAUTION:
   Loosen while making sure coil spring attachment position does not move.
8. Remove strut attachment (SST) from strut.

TRANSVERSE LINK

PFP:54500

Removal and Installation

AES000GH

REMOVAL

1. Remove tire with power tool.
2. Remove mounting bolt between transverse link and front suspension member with power tool.
3. Remove transverse link from steering knuckle. Refer to FAX-5, "FRONT WHEEL HUB AND KNUCKLE"
4. Remove transverse link from vehicle.

INSPECTION AFTER REMOVAL

Visual Inspection

- Check transverse link and bushing for deformation, cracks, or damage. If any non-standard condition is found, replace it.
- Check boot of ball joint for cracks or other damage, and also for grease leakage. If any non-standard condition is found, replace it.

Ball Joint Inspection

- Manually move ball stud to confirm it moves smoothly with no binding.

Swing Torque Inspection

NOTE:
Before measurement, move ball joint at least ten times by hand to check for smooth movement.

- Hook spring scale at ball stud. Confirm spring scale measurement value is within specifications when ball stud begins moving.

  Swing torque:

  0.5 - 3.4 N·m (0.06 - 0.34 kg-m, 5 - 30 in-lb)

  Measure value of spring scale:

  13.5 - 91.9 N (1.4 - 9.3 kg, 3.08 - 20.5 lb)

- If it is outside the specified range, replace suspension arm assembly.

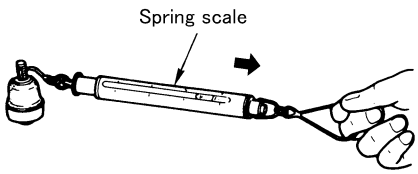

SDIA1143E

Rotating Torque Inspection

- Attach mounting nut to ball stud. Check that sliding torque is within specifications with a preload gauge (SST).

  Rotating torque:

  0.5 - 3.4 N·m (0.06 - 0.34 kg-m, 5 - 30 in-lb)

- If it is outside the specified range, replace suspension arm assembly.

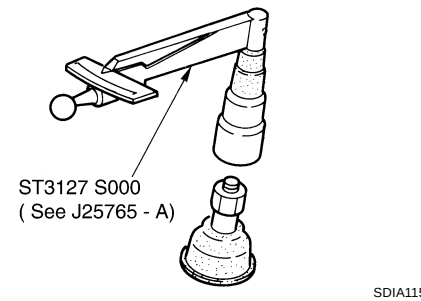

SDIA1150E

Axial End Play Inspection

- Move tip of ball joint in axial direction to check for looseness.

  Axial end play : 0 mm (0 in)

- If it is outside the specified range, replace suspension arm assembly.

INSTALLATION

- Refer to FSU-7, "Components" for tightening torque. Install in the reverse order of removal.

  NOTE:
  Refer to component parts location and do not reuse non-reusable parts.

- Perform final tightening of front suspension member installation position and strut assembly lower side (rubber bushing) under unladen conditions with tires on level ground. Check wheel alignment. Refer to FSU-5, "Wheel Alignment Inspection" .

STABILIZER BAR

PFP:54611

Removal and Installation

AES000GK

REMOVAL

2WD

1. Remove tire with power tool.
2. Remove steering gear assembly from vehicle. Refer to PS-14, "POWER STEERING GEAR AND LINKAGE" .
3. Remove stabilizer connecting rod lower nut, separate stabilizer bar and stabilizer connecting rod with power tool.
4. Remove stabilizer clamp mounting bolts with power tool.
5. Remove stabilizer bar from vehicle.

AWD

1. Remove steering gear assembly. Refer to PS-14, "REMOVAL" .
2. Remove stabilizer bar from vehicle.

INSPECTION AFTER REMOVAL

Check stabilizer bar, stabilizer connecting rod, stabilizer bushing and stabilizer clamp for deformation, cracks or damage, and replace if necessary.

INSTALLATION

- Refer to FSU-7, "Components" for tightening torque. Install in the reverse order of removal.

  NOTE:
  Refer to component parts location and do not reuse non-reusable parts.
- Tighten bolts for tightening stabilizer clamp. Tightening order is front LH, rear RH, front RH, rear LH.
- Stabilizer bar uses pillow ball type connecting rod. Position ball joint with case on pillow ball head parallel to stabilizer bar.

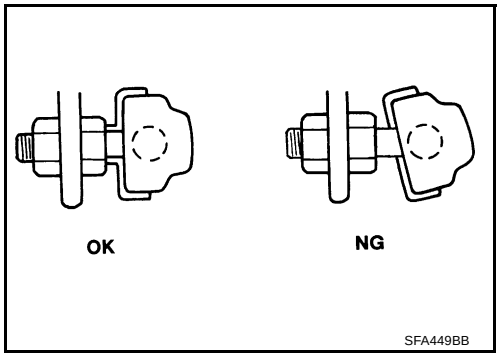

FRONT SUSPENSION MEMBER

PFP:54401

Removal and Installation

AES000GL

REMOVAL

Remove suspension member with engine assembly from vehicle. Refer to “ENGINE MECHANICAL” section EM-105, "ENGINE ASSEMBLY" .

INSPECTION AFTER REMOVAL

Check front suspension member for deformation, cracks, or any other damage. Replace if necessary.

INSTALLATION

- Install in the reverse order of removal.
- Perform final tightening of installation position between front suspension member and transverse link (rubber bushing) under unladen conditions with tires on level ground. Check wheel alignment. Refer to FSU-5, "Wheel Alignment Inspection" .

SERVICE DATA AND SPECIFICATIONS (SDS)

PFP:00030

Wheel Alignment (Unladen)

AES000NG

Camber Degree minute (Decimal degree)		Minimum	– 1° 05′ (– 1.08°)
		Nominal	– 0° 20′ (– 0.33°)
		Maximum	0° 25′ (0.41°)
		Left and right difference	45′ (0.75°) or less
Caster Degree minute (Decimal degree)		Minimum	1° 50′ (1.83°)
		Nominal	2° 35′ (2.58°)
		Maximum	3° 20′ (3.33°)
		Left and right difference	45′ (0.75°) or less
Kingpin inclination Degree minute (Decimal degree)		Minimum	13° 35′ (13.58°)
		Nominal	14° 20′ (14.33°)
		Maximum	15° 05′ (15.08°)
Total toe-in	Distance (A - B)	Minimum	– 0.5 mm (– 0.02 in)
		Nominal	0.5 mm (0.02 in)
		Maximum	1.5 mm (0.06 in)
	Angle (left plus right) Degree minute (Degree)	Minimum	– 1′ (– 0.02°)
		Nominal	1′ (0.02°)
		Maximum	3′ (0.05°)

Ball Joint

AES000NH

Axial end play	0 mm (0 in)
Swing torque	0.5 - 3.4 N·m (0.06 - 0.34 kg-m, 5 - 30 in-lb)
Measurement on spring balance	13.5 - 91.9 N (1.4 - 9.3 kg-m, 3.08 - 20.5 lb)
Rotating torque	0.5 - 3.4 N·m (0.06 - 0.34 kg-m, 5 - 30 in-lb)

Wheelarch Height (Unladen*)

AES000NI

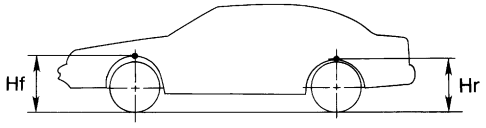

SFA818A

Applied model	235/65R18	
Grade	Except SE	SE
Front (Hf)	840 mm (33.07 in)	840 mm (33.07 in) (with 2WD models) 839 mm (33.03 in) (with AWD models)
Rear (Hr)	858 mm (33.78 in)	857 mm (33.74 in)

*: Fuel, radiator coolant and engine oil full. Spare tire, jack, hand tools and mats are in designated positions.