# SECTION MWI

# METER, WARNING LAMP & INDICATOR

## CONTENTS

# BASIC INSPECTION

## DIAGNOSIS AND REPAIR WORKFLOW

### Work flow

INFOID:0000000008459029

OVERALL SEQUENCE

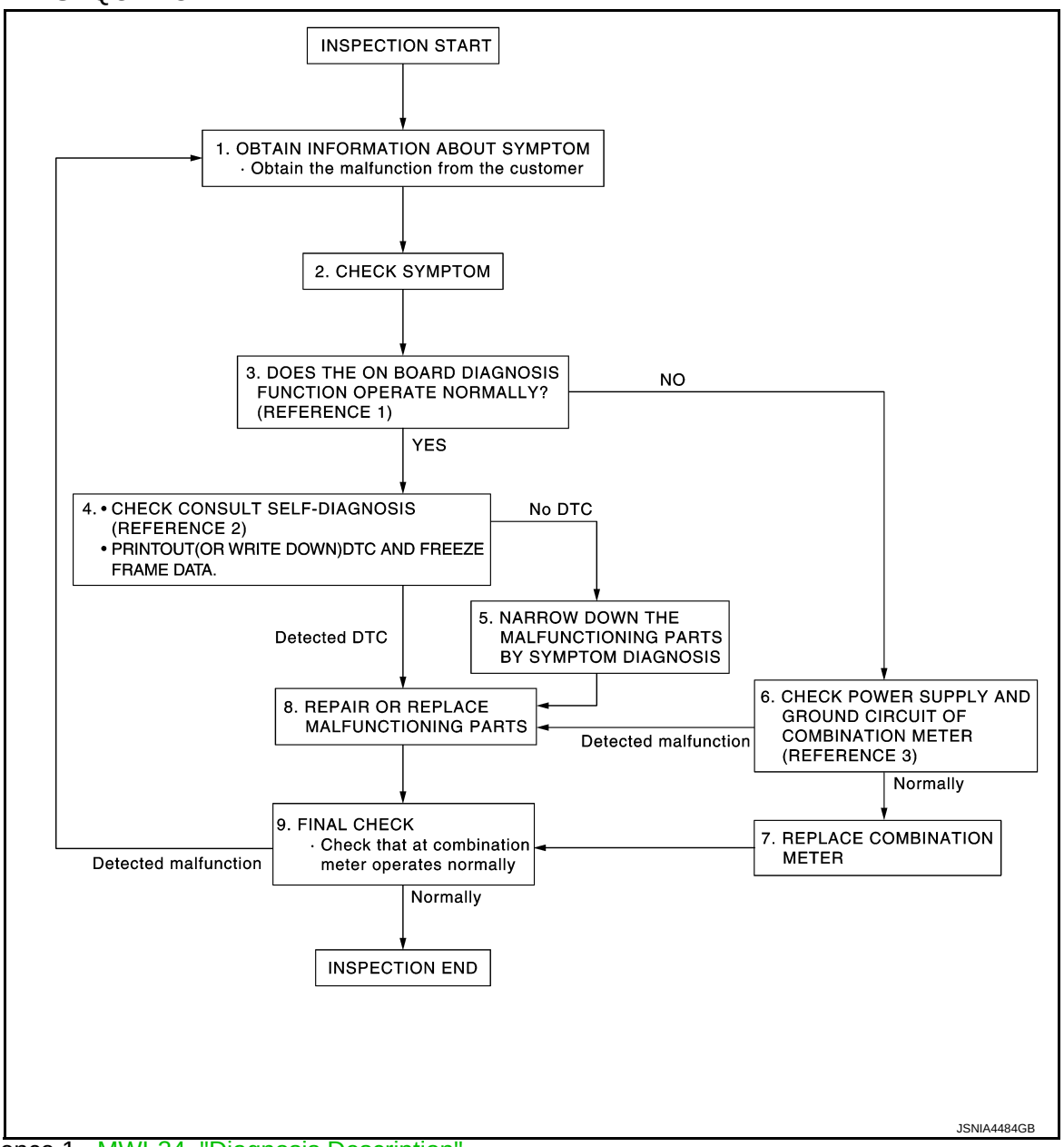


- Reference 1···MWI-34, "Diagnosis Description".
- Reference 2···MWI-67, "DTC Index".
- Reference 3···MWI-44, "COMBINATION METER : Diagnosis Procedure".

### DETAILED FLOW

#### 1.OBTAIN INFORMATION ABOUT SYMPTOM

Interview the customer to obtain as much information as possible about the conditions and environment under which the malfunction occurred.

>> GO TO 2.

#### 2.CHECK SYMPTOM

- Check the symptom based on the information obtained from the customer.
- Check that any other malfunctions are present.

>> GO TO 3.

## 3. CHECK ON BOARD DIAGNOSIS OPERATION

Check that the on board diagnosis function operates. Refer to MWI-34, "Diagnosis Description".

Does the on board diagnosis function operate normally?

YES >> GO TO 4.
NO >> GO TO 6.

## 4. CHECK CONSULT SELF-DIAGNOSIS RESULTS

1. Connect CONSULT and perform self-diagnosis. Refer to MWI-67, "DTC Index".
2. When DTC is detected, follow the instructions below:
- Record DTC and Freeze Frame Data.

Are self-diagnosis results normal?

YES >> GO TO 5.
NO >> GO TO 8.

## 5. NARROW DOWN THE MALFUNCTIONING PARTS BY SYMPTOM DIAGNOSIS

Perform symptom diagnosis and narrow down the malfunctioning parts.

>> GO TO 8.

## 6. CHECK COMBINATION METER POWER SUPPLY AND GROUND CIRCUITS

Inspect combination meter power supply and ground circuits. Refer to MWI-44, "COMBINATION METER : Diagnosis Procedure".

Is inspection result OK?

YES >> GO TO 7.
NO >> GO TO 8.

## 7. REPLACE COMBINATION METER

Replace combination meter.

>> GO TO 9.

## 8. REPAIR OR REPLACE MALFUNCTIONING PARTS

Repair or replace the malfunctioning parts.

**NOTE:**
If DTC is displayed, erase DTC after repair or replace malfunctioning parts.

>> GO TO 9.

## 9. FINAL CHECK

Check that the combination meter operates normally.

Do they operate normally?

YES >> INSPECTION END
NO >> GO TO 1.

# SYSTEM DESCRIPTION

## METER SYSTEM

## METER SYSTEM

### METER SYSTEM : System Diagram

INFOID:0000000008459030

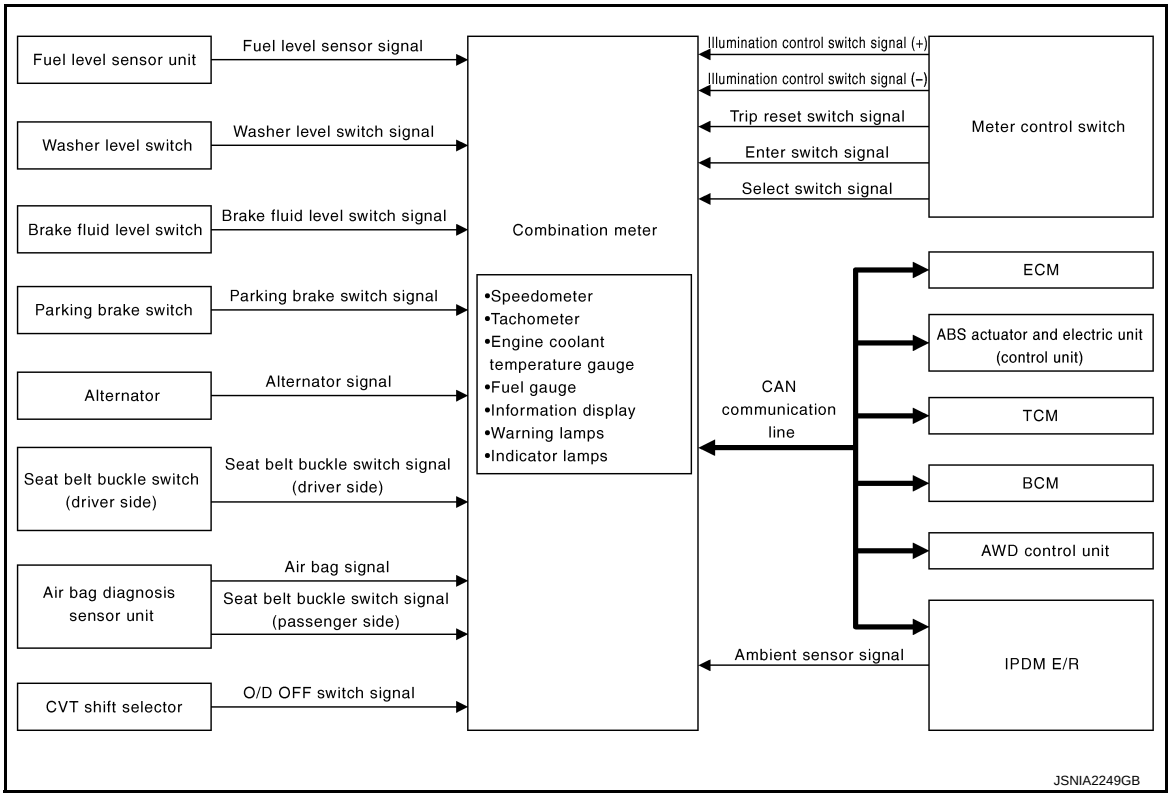


### METER SYSTEM : System Description

INFOID:0000000008459031

#### COMBINATION METER

- The combination meter receives the information required to control the operation of each gauge, indicator/warning lamp, and information display via CAN communication from each unit, each switch, and sensor.
- The combination meter incorporates a trip computer that displays warnings and messages on the information display according to the information received from various units.
- The combination meter incorporates a buzzer function that sounds an audible alarm with the integrated buzzer device. Refer to WCS-5, "WARNING CHIME SYSTEM : System Description" for further details.
- The combination meter integrates the meter circuit check function and the segment check function that checks the information display operation.

#### IPDM E/R

- IPDM E/R reads the ON/OFF signals of the oil pressure switch and transmits the oil pressure switch signal to the combination meter via BCM with the CAN communication line.
- IPDM E/R is equipped with the diagnosis function. It can perform the operation check of oil pressure warning lamp with the auto active test and the diagnosis with CONSULT.

#### METER CONTROL FUNCTION LIST

| System | | Description | Signal source |
|---|---|---|---|
| Meter/gauge | Speedometer | Receives vehicle speed signal and indicates vehicle speed. | ABS actuator and electric unit (control unit) |
| | Tachometer | Receives engine speed signal and indicates engine speed. | ECM |
| | Fuel gauge | Receives fuel level sensor signal and indicates fuel level. | Fuel level sensor unit |
| | Engine coolant temperature gauge | Receives engine coolant temperature signal and indicates coolant temperature. | ECM |
| Warning lamp/ indicator lamp | Oil pressure warning lamp | Receives oil pressure warning lamp signal and illuminates warning lamp. | IPDM E/R |
| | Master warning | Illuminates according to warning output on information display. | — |
| Information display | Door open warning | Receives door switch signals and displays warning. | BCM |
| | Parking brake release warning | Receives parking brake switch signal and vehicle speed signal and displays warnings. | Parking brake switch<br>ABS actuator and electric unit (control unit) |
| | Low fuel warning | Receives fuel gauge signal and displays warning if fuel level decreases to 11 ℓ (2-7/8 US gal, 2-3/8 Imp gal) or less. | Fuel level sensor unit |
| | Low washer fluid warning | Receives washer level switch signal and displays warning. | Washer level switch |
| | Low outside temperature warning | Monitors ambient sensor signal and displays warning if ambient temperature decreases to 3°C (37°F) or less. (If enabled) | Ambient sensor |
| | Low tire pressure warning | Receives low tire pressure warning lamp signal and displays warning. | BCM |
| | Fuel filler cap warning | Receives fuel filler cap warning display signals and displays warning. | ECM |
| | Instantaneous fuel consumption | Calculates instantaneous fuel consumption based on received vehicle speed signals and fuel consumption monitor signal and displays it. | ECM<br>ABS actuator and electric unit (control unit) |
| | Average fuel consumption | Calculates average fuel consumption in a reset-to-reset interval based on received vehicle speed signals and fuel consumption monitor signal and displays it. | ECM<br>ABS actuator and electric unit (control unit) |
| | Average vehicle speed | Calculates average vehicle speed in a reset-to-reset interval based on received vehicle speed signals and displays it. | ABS actuator and electric unit (control unit) |
| | Travel time | Displays accumulated key switch ON time from reset to reset. | — |
| | Travel distance | Calculates accumulated travel distance in a reset-to-reset interval based on received vehicle speed signals and displays it. | ABS actuator and electric unit (control unit) |
| | Possible driving distance | Calculates possible driving distance based on received fuel consumption monitor signal, vehicle speed signals and fuel level sensor signal and displays it. | ABS actuator and electric unit (control unit)<br>ECM<br>Fuel level sensor unit |
| | Ambient air temperature | Corrects ambient air temperature value based on received ambient sensor signals and displays it. | Ambient sensor |

## ARRANGEMENT OF COMBINATION METER

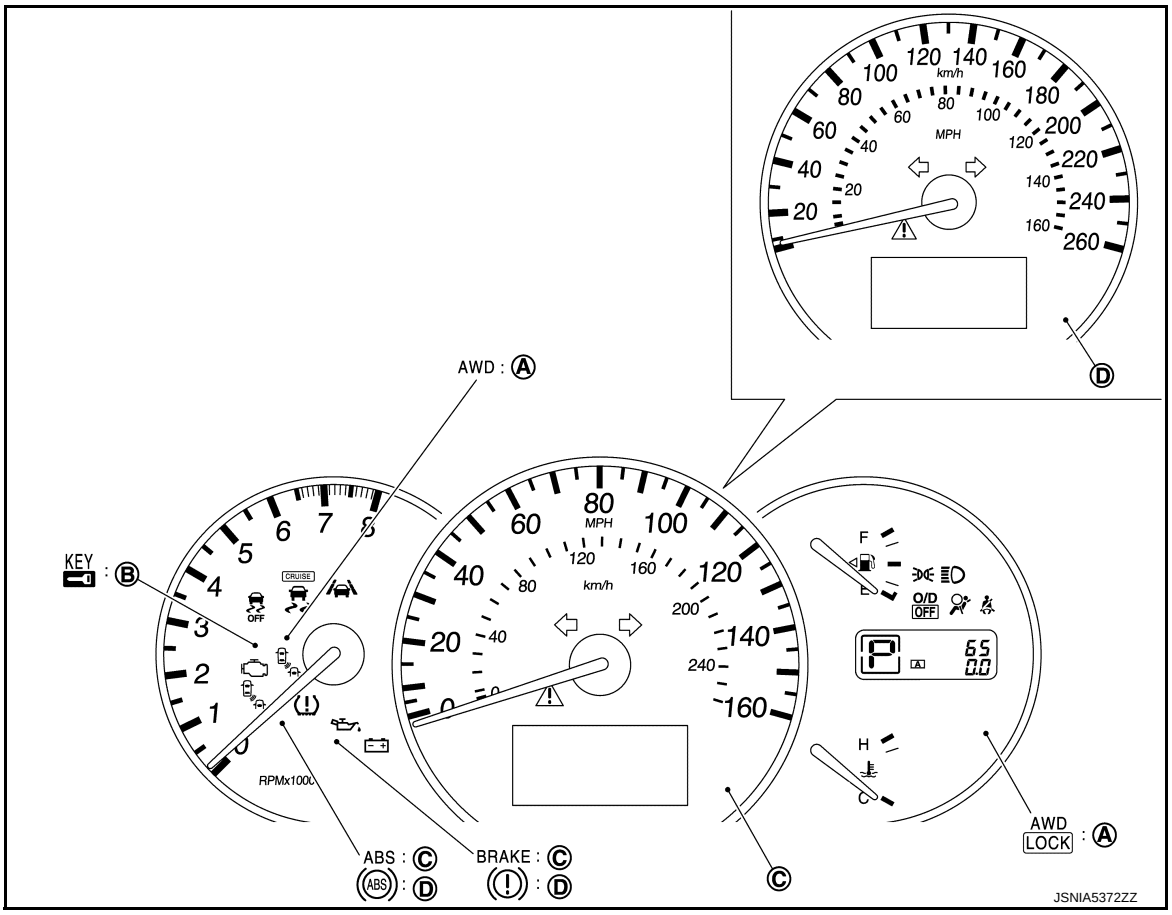


A. With AWD models
B. With Intelligent Key models
C. For U.S.A.
D. Except for U.S.A.

## METER SYSTEM : Component Parts Location

INFOID:0000000008459032

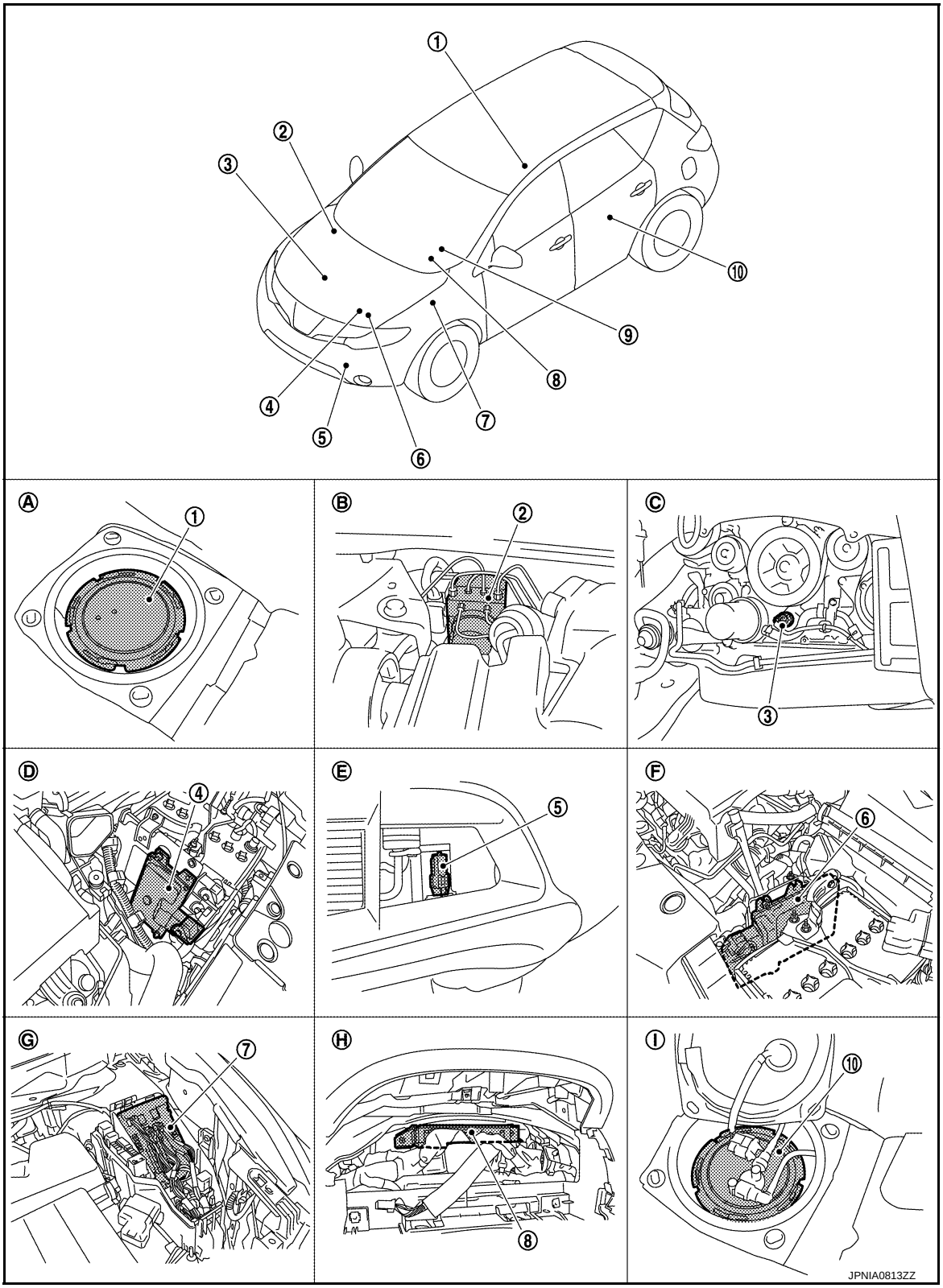


| | | | | | |
|---|---|---|---|---|---|
| 1. | Fuel level sensor unit (sub) | 2. | ABS actuator and electric unit (control unit) | 3. | Oil pressure switch |
| 4. | TCM | 5. | Ambient sensor | 6. | ECM |
| 7. | IPDM E/R | 8. | BCM | 9. | Combination meter |
| 10. | Fuel level sensor unit and fuel pump (main) | | | | |

| | | |
|---|---|---|
| A. Lower right side of rear seat | B. Engine room (RH) | C. Engine front side |
| D. Engine room (LH) | E. Front bumper (left back) | F. Engine room (LH) |
| G. Engine room (LH) | H. Behind the combination meter | I. Lower left side of rear seat |

## METER SYSTEM : Component Description

INFOID:0000000008459033

| Unit | Description |
|---|---|
| Combination meter | Controls the following with the signals received from each unit via CAN communication and the signals from switches and sensors.<br>• Speedometer<br>• Tachometer<br>• Engine coolant temperature gauge<br>• Fuel gauge<br>• Warning lamps<br>• Indicator lamps<br>• Information display |
| IPDM E/R | IPDM E/R reads the ON/OFF signals of the oil pressure switch and transmits the oil pressure switch signal to the combination meter via BCM with CAN communication line. |
| Fuel level sensor unit | Refer to MWI-46, "Description". |
| Oil pressure switch | Refer to MWI-52, "Description". |
| ECM | Transmits the following signals to the combination meter with CAN communication line.<br>• Engine speed signal<br>• Engine coolant temperature signal<br>• Fuel consumption monitor signal<br>• Fuel filler cap warning display signal |
| ABS actuator and electric unit (control unit) | Transmits the vehicle speed signal to the combination meter with CAN communication line. |
| BCM | Transmits signals provided by various units to the combination meter with CAN communication line. |
| CVT shift selector | Transmits the O/D OFF switch signal to the combination meter. |
| TCM | Transmits the shift position signal to the combination meter with CAN communication line. |
| Meter control switch | Refer to MWI-49, "Description". |
| Washer level switch | Transmits the washer level signal to the combination meter. |
| Brake fluid level switch | Transmits the brake fluid level switch signal to the combination meter. |
| Parking brake switch | Refer to MWI-54, "Description". |

# SPEEDOMETER

## SPEEDOMETER : System Diagram

INFOID:0000000008459034

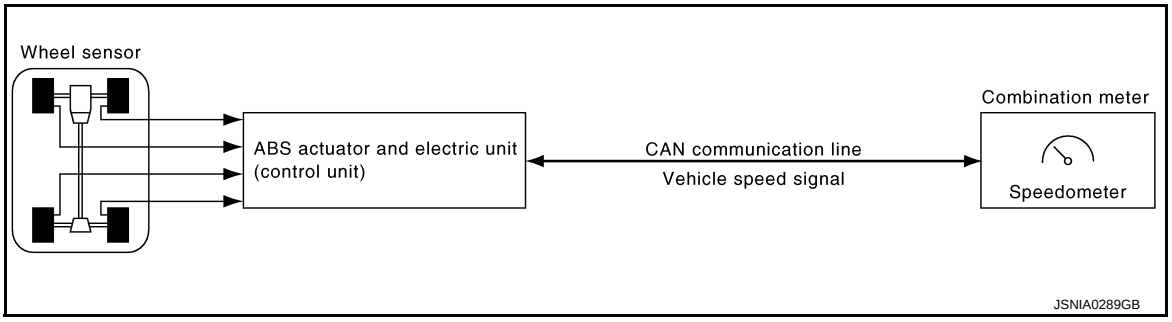


## SPEEDOMETER : System Description

INFOID:0000000008459035

- The ABS actuator and electric unit (control unit) converts the rectangular wave signal provided by the wheel sensor to a vehicle speed signal and transmits it to the combination meter via CAN communication.
- The combination meter indicates the vehicle speed to the speedometer according to the vehicle speed signal received via CAN communication.

## SPEEDOMETER : Component Parts Location

INFOID:0000000008459036

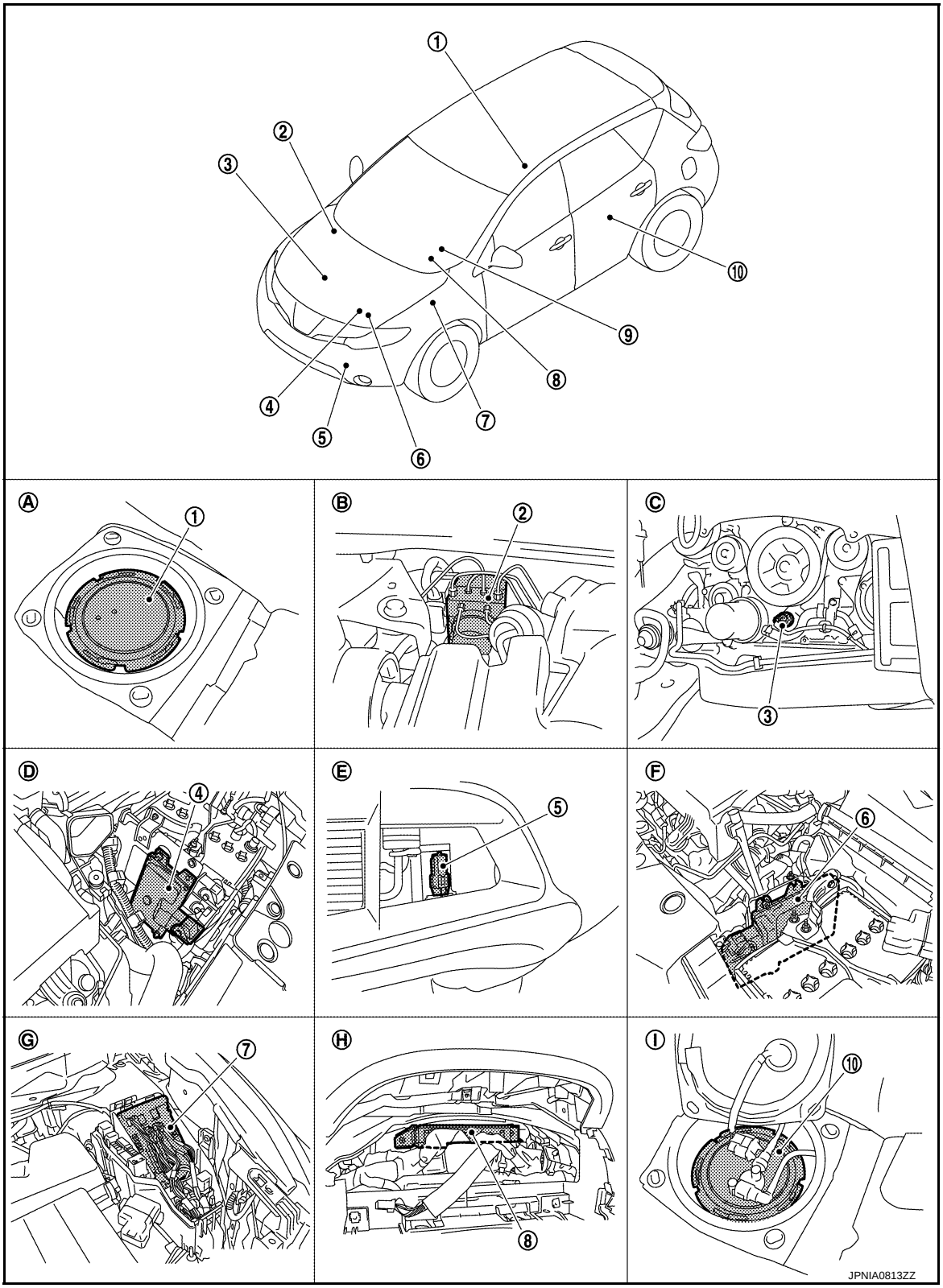


| | | | | | |
|---|---|---|---|---|---|
| 1. | Fuel level sensor unit (sub) | 2. | ABS actuator and electric unit (control unit) | 3. | Oil pressure switch |
| 4. | TCM | 5. | Ambient sensor | 6. | ECM |
| 7. | IPDM E/R | 8. | BCM | 9. | Combination meter |
| 10. | Fuel level sensor unit and fuel pump (main) | | | | |

| | | |
|---|---|---|
| A. Lower right side of rear seat | B. Engine room (RH) | C. Engine front side |
| D. Engine room (LH) | E. Front bumper (left back) | F. Engine room (LH) |
| G. Engine room (LH) | H. Behind the combination meter | I. Lower left side of rear seat |

## SPEEDOMETER : Component Description

INFOID:0000000008459037

| Unit | Description |
|---|---|
| Combination meter | Indicates the vehicle speed to the speedometer according to the vehicle speed signal received from ABS actuator and electric unit (control unit) via CAN communication. |
| ABS actuator and electric unit (control unit) | Transmits the vehicle speed signal to the combination meter with CAN communication line. |

# TACHOMETER

## TACHOMETER : System Diagram

INFOID:0000000008459038

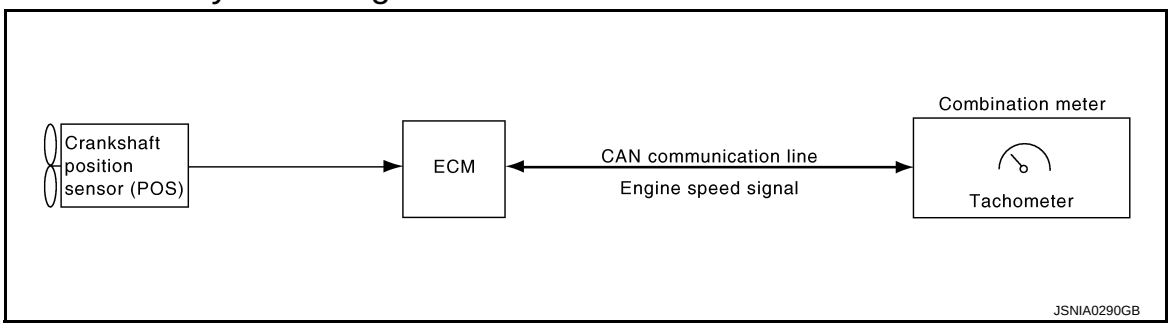


## TACHOMETER : System Description

INFOID:0000000008459039

- ECM converts the pulse signal provided by the crankshaft position sensor to an engine speed signal and transmits it to the combination meter with CAN communication line.
- The combination meter indicates the engine speed to the tachometer according to the engine speed signal received via CAN communication.

## TACHOMETER : Component Parts Location

INFOID:0000000008459040

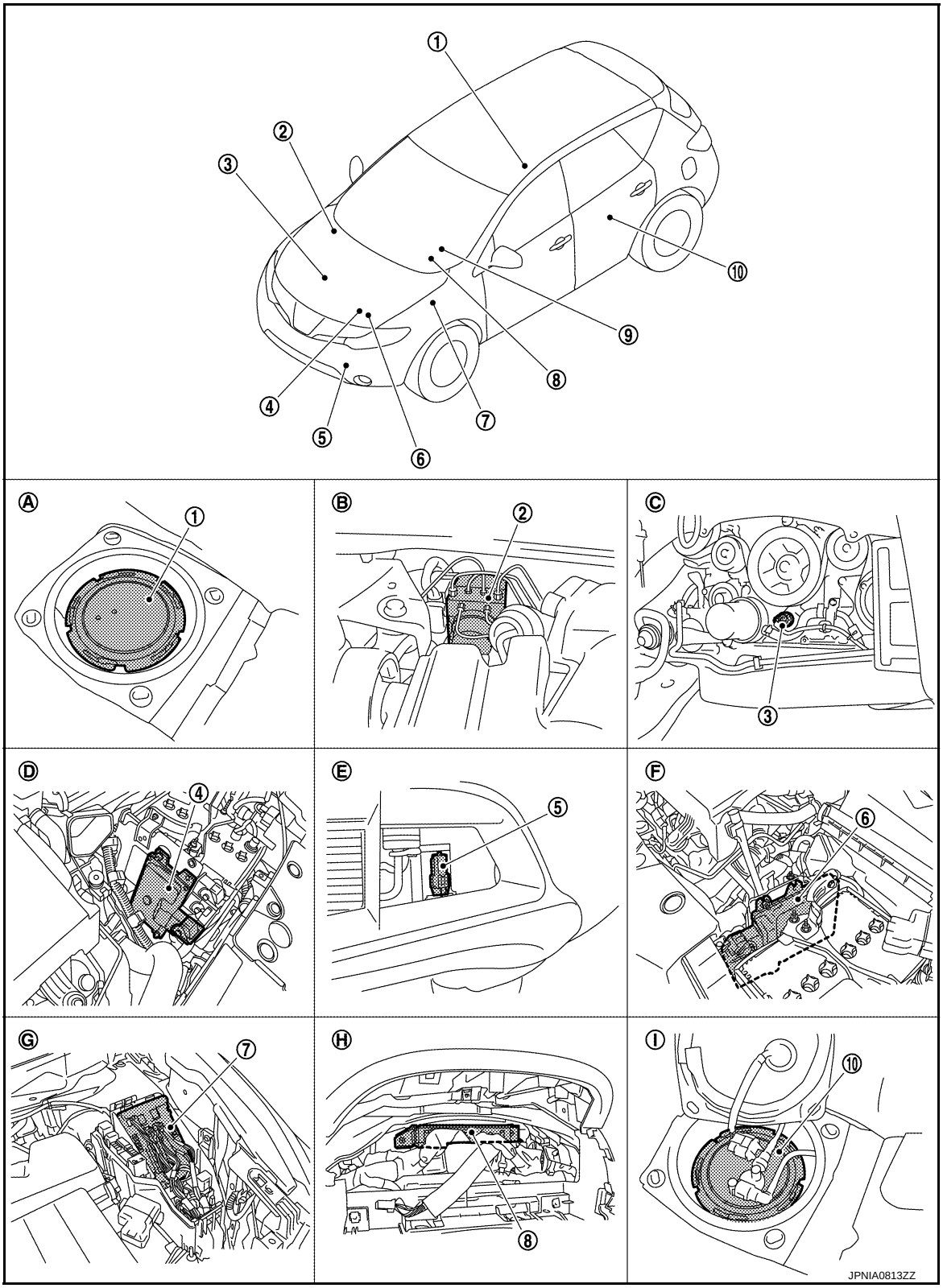


| | | | | | |
|---|---|---|---|---|---|
| 1. | Fuel level sensor unit (sub) | 2. | ABS actuator and electric unit (control unit) | 3. | Oil pressure switch |
| 4. | TCM | 5. | Ambient sensor | 6. | ECM |
| 7. | IPDM E/R | 8. | BCM | 9. | Combination meter |
| 10. | Fuel level sensor unit and fuel pump (main) | | | | |

| | | |
|---|---|---|
| A. Lower right side of rear seat | B. Engine room (RH) | C. Engine front side |
| D. Engine room (LH) | E. Front bumper (left back) | F. Engine room (LH) |
| G. Engine room (LH) | H. Behind the combination meter | I. Lower left side of rear seat |

## TACHOMETER : Component Description

INFOID:0000000008459041

| Unit | Description |
|---|---|
| Combination meter | Indicates the engine speed to the tachometer according to the engine speed signal received from ECM via CAN communication. |
| ECM | Transmits the engine speed signal to the combination meter with CAN communication line. |

# ENGINE COOLANT TEMPERATURE GAUGE

## ENGINE COOLANT TEMPERATURE GAUGE : System Diagram

INFOID:0000000008459042

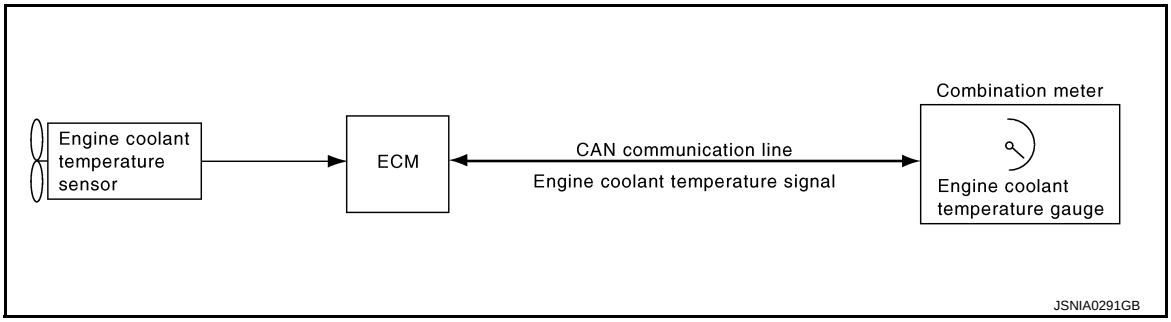


## ENGINE COOLANT TEMPERATURE GAUGE : System Description

INFOID:0000000008459043

- ECM reads the engine coolant temperature signal from the engine coolant temperature sensor and transmits the signal to the combination meter via CAN communication.
- The combination meter indicates the engine coolant temperature to the engine coolant temperature gauge according to the engine coolant temperature signal received via CAN communication.

## ENGINE COOLANT TEMPERATURE GAUGE : Component Parts Location

INFOID:0000000008459044

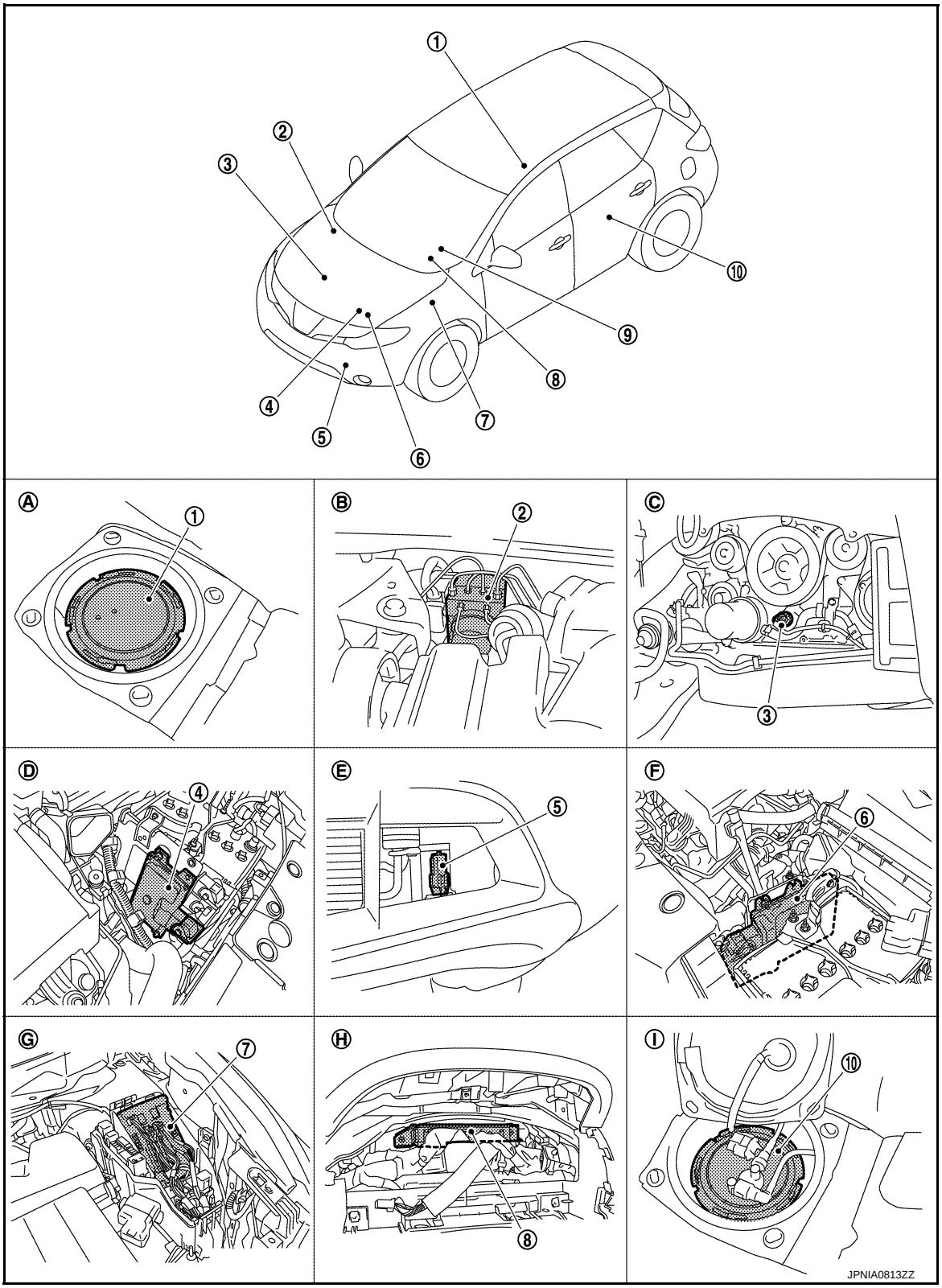


| | | | | | |
|---|---|---|---|---|---|
| 1. | Fuel level sensor unit (sub) | 2. | ABS actuator and electric unit (control unit) | 3. | Oil pressure switch |
| 4. | TCM | 5. | Ambient sensor | 6. | ECM |
| 7. | IPDM E/R | 8. | BCM | 9. | Combination meter |
| 10. | Fuel level sensor unit and fuel pump (main) | | | | |

| | | |
|---|---|---|
| A. Lower right side of rear seat | B. Engine room (RH) | C. Engine front side |
| D. Engine room (LH) | E. Front bumper (left back) | F. Engine room (LH) |
| G. Engine room (LH) | H. Behind the combination meter | I. Lower left side of rear seat |

## ENGINE COOLANT TEMPERATURE GAUGE : Component Description

INFOID:0000000008459045

| Unit | Description |
|---|---|
| Combination meter | Indicates the engine coolant temperature to the engine coolant temperature gauge according to the engine coolant temperature signal received from ECM via CAN communication. |
| ECM | Transmits the engine coolant temperature signal to the combination meter via CAN communication. |

# FUEL GAUGE

## FUEL GAUGE : System Diagram

INFOID:0000000008459046

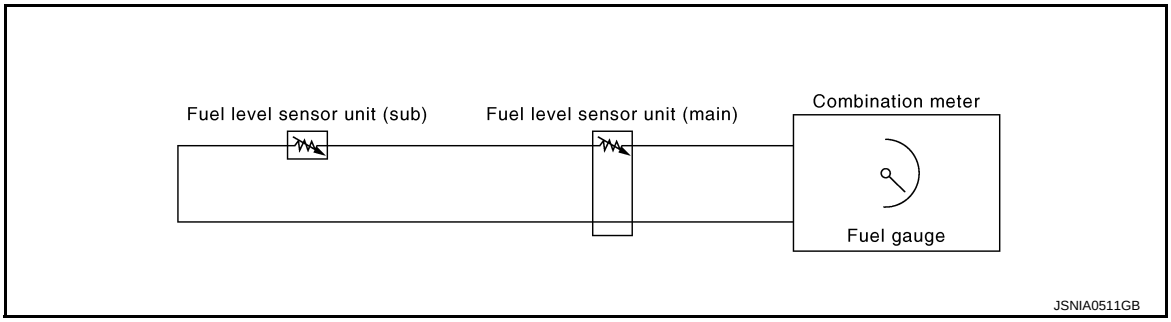


## FUEL GAUGE : System Description

INFOID:0000000008459047

### CONTROL OUTLINE

The combination meter reads the fuel level sensor signal from the fuel level sensor unit and indicates the fuel level to the fuel gauge.

### REFUEL CONTROL

The combination meter accelerates the fuel gauge segment if the all conditions listed below are met, or the ignition switch is ON from OFF.

- Ignition switch is ON position.
- The vehicle is not moving.
- The fuel level change by 15 ℓ (4 US gal, 3-1/4 Imp gal) or more.

## FUEL GAUGE : Component Parts Location

INFOID:0000000008459048

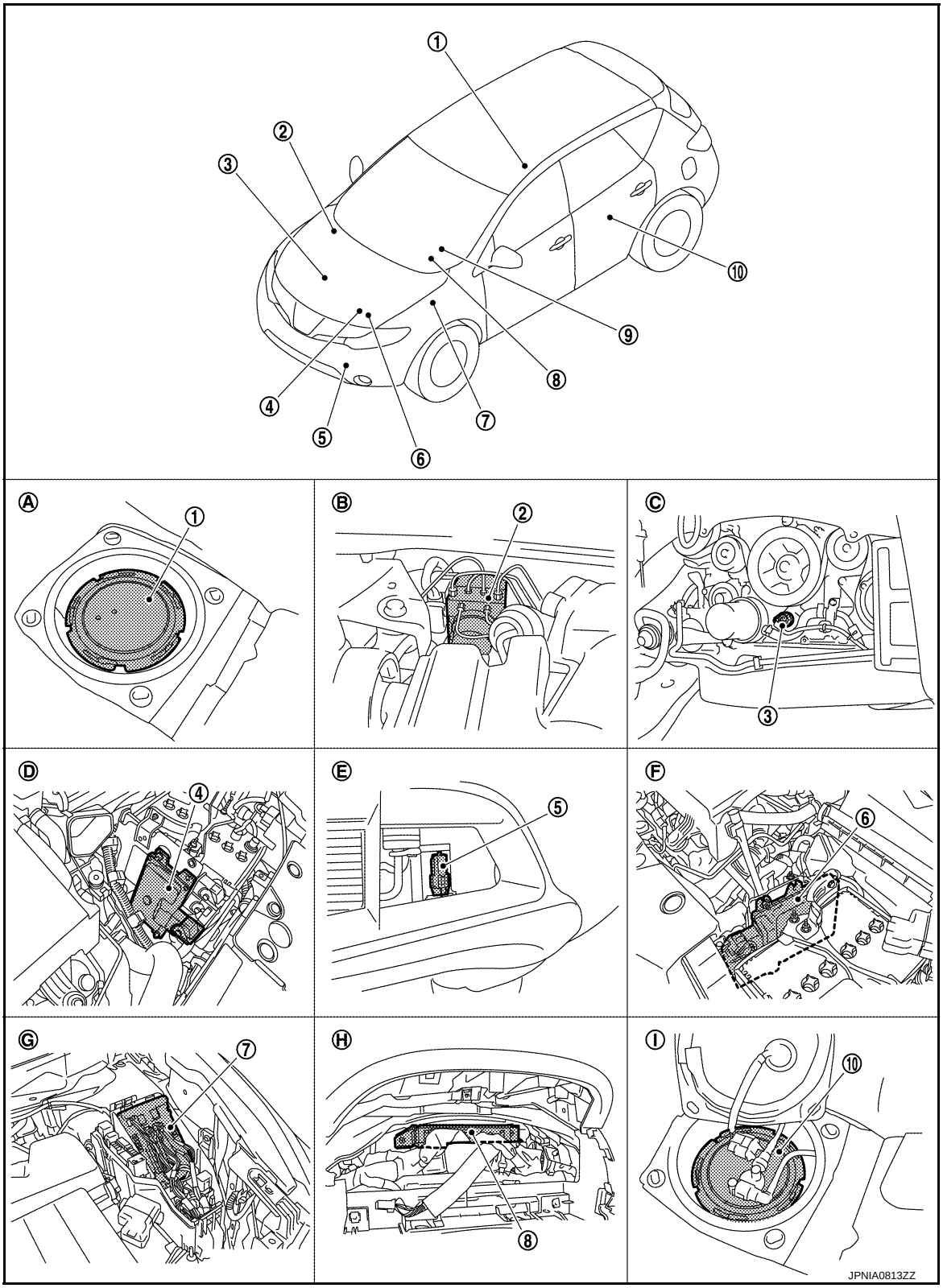


| | | | | | |
|---|---|---|---|---|---|
| 1. | Fuel level sensor unit (sub) | 2. | ABS actuator and electric unit (control unit) | 3. | Oil pressure switch |
| 4. | TCM | 5. | Ambient sensor | 6. | ECM |
| 7. | IPDM E/R | 8. | BCM | 9. | Combination meter |
| 10. | Fuel level sensor unit and fuel pump (main) | | | | |

| | | |
|---|---|---|
| A. Lower right side of rear seat | B. Engine room (RH) | C. Engine front side |
| D. Engine room (LH) | E. Front bumper (left back) | F. Engine room (LH) |
| G. Engine room (LH) | H. Behind the combination meter | I. Lower left side of rear seat |

## FUEL GAUGE : Component Description

INFOID:0000000008459049

| Unit | Description |
|---|---|
| Combination meter | Indicates the fuel gauge according to the fuel level sensor signal received from the fuel level sensor unit. |
| Fuel level sensor unit | Refer to MWI-46, "Description". |

# ODO/TRIP METER

## ODO/TRIP METER : System Diagram

INFOID:0000000008459050

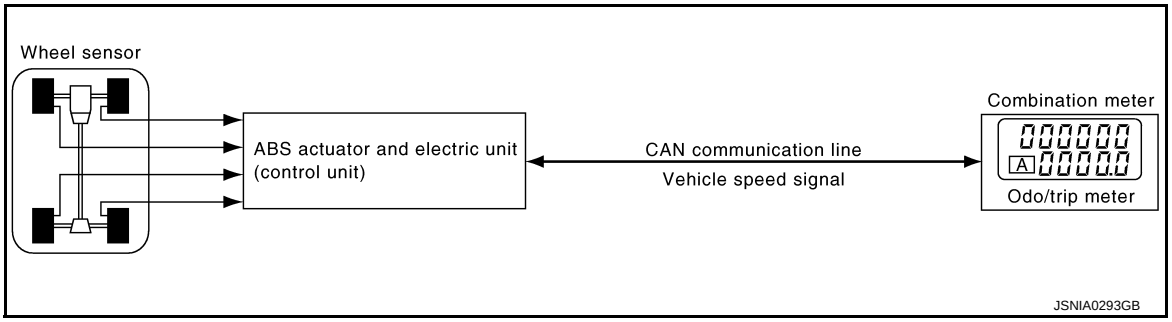


## ODO/TRIP METER : System Description

INFOID:0000000008459051

- The ABS actuator and electric unit (control unit) reads the rectangular wave signal provided by the wheel sensor and transmits the vehicle speed signal to the combination meter via CAN communication.
- The combination meter converts the vehicle speed signal received via CAN communication to mileage, and it displays the accumulated mileage to the odo/trip meter.

## ODO/TRIP METER : Component Parts Location

INFOID:0000000008459052

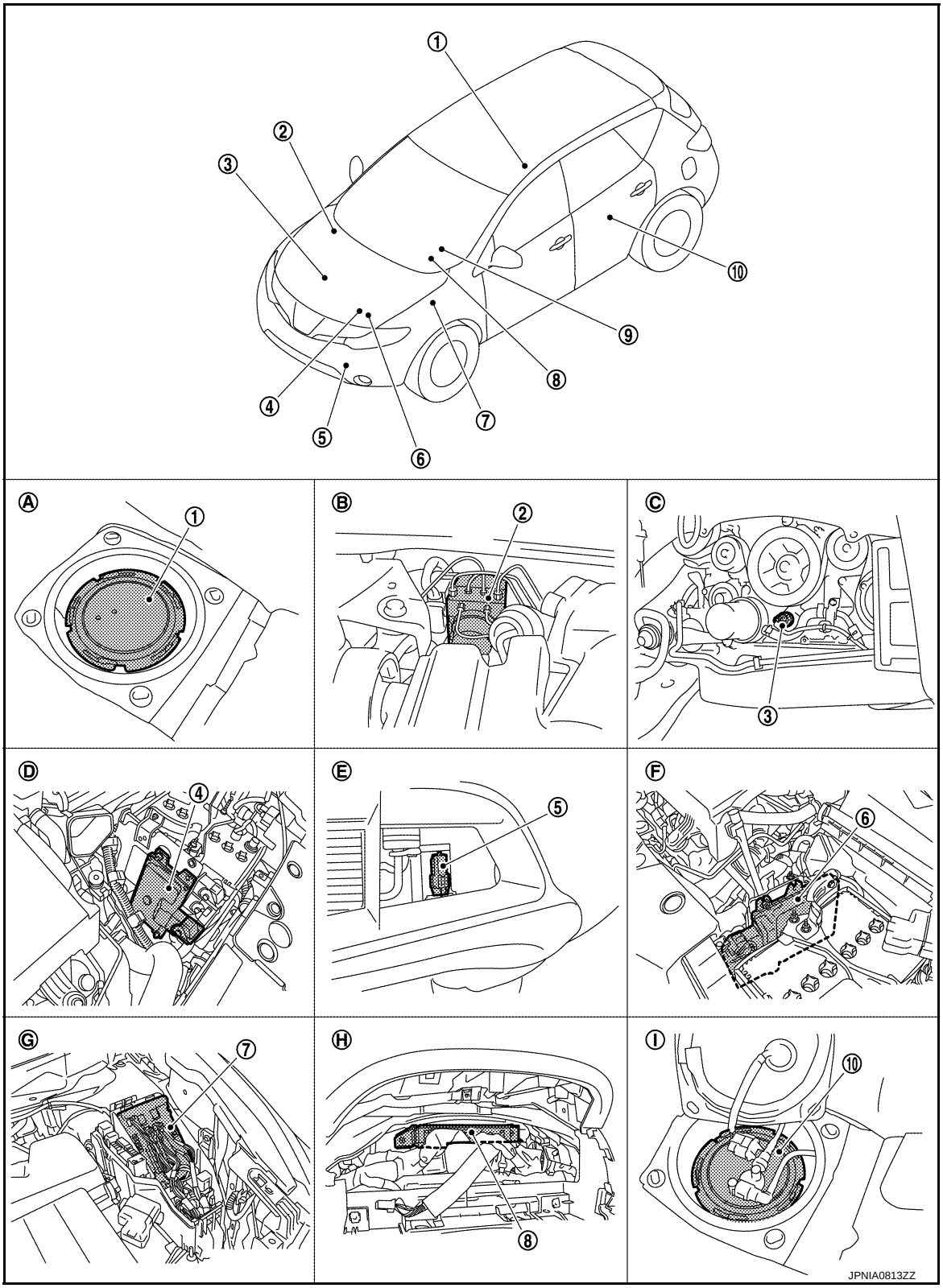


| | | | | | |
|---|---|---|---|---|---|
| 1. | Fuel level sensor unit (sub) | 2. | ABS actuator and electric unit (control unit) | 3. | Oil pressure switch |
| 4. | TCM | 5. | Ambient sensor | 6. | ECM |
| 7. | IPDM E/R | 8. | BCM | 9. | Combination meter |
| 10. | Fuel level sensor unit and fuel pump (main) | | | | |

| | | |
|---|---|---|
| A. Lower right side of rear seat | B. Engine room (RH) | C. Engine front side |
| D. Engine room (LH) | E. Front bumper (left back) | F. Engine room (LH) |
| G. Engine room (LH) | H. Behind the combination meter | I. Lower left side of rear seat |

## ODO/TRIP METER : Component Description

INFOID:0000000008459053

| Unit | Description |
|---|---|
| Combination meter | Converts the vehicle speed signal received from the ABS actuator and electric unit (control unit) via CAN communication to mileage, and it displays the accumulated mileage to the odo/trip meter. |
| ABS actuator and electric unit (control unit) | Transmits the vehicle speed signal to the combination meter via CAN communication. |

# SHIFT POSITION INDICATOR

## SHIFT POSITION INDICATOR : System Diagram

INFOID:0000000008459054

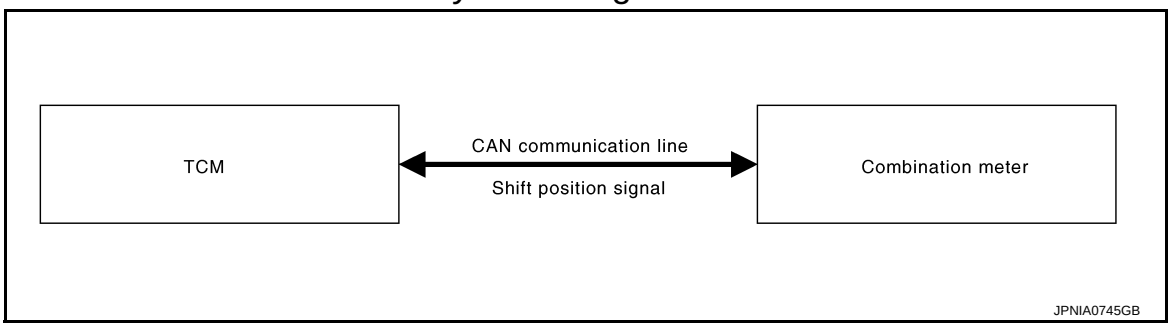


## SHIFT POSITION INDICATOR : System Description

INFOID:0000000008459055

- Shift position is displayed in the shift position indicator in the combination meter.
- TCM transmits the shift position signal to the combination meter via CAN communication.
- The combination meter indicates shift position according to the shift position signal received via CAN communication.

## SHIFT POSITION INDICATOR : Component Parts Location

INFOID:0000000008459056

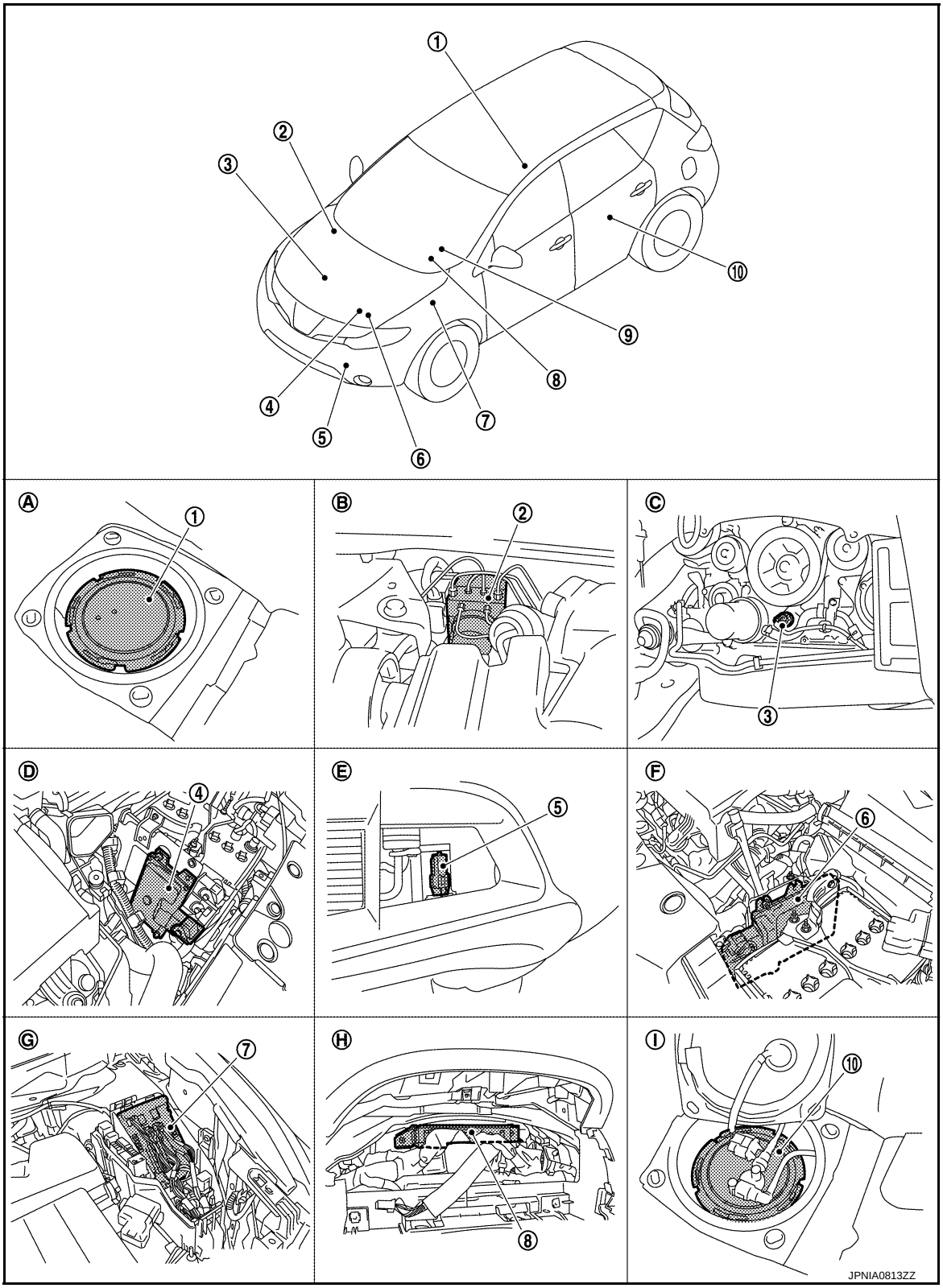


| | | | | | |
|---|---|---|---|---|---|
| 1. | Fuel level sensor unit (sub) | 2. | ABS actuator and electric unit (control unit) | 3. | Oil pressure switch |
| 4. | TCM | 5. | Ambient sensor | 6. | ECM |
| 7. | IPDM E/R | 8. | BCM | 9. | Combination meter |
| 10. | Fuel level sensor unit and fuel pump (main) | | | | |

| | | |
|---|---|---|
| A. Lower right side of rear seat | B. Engine room (RH) | C. Engine front side |
| D. Engine room (LH) | E. Front bumper (left back) | F. Engine room (LH) |
| G. Engine room (LH) | H. Behind the combination meter | I. Lower left side of rear seat |

## SHIFT POSITION INDICATOR : Component Description

INFOID:0000000008459057

| Unit | Description |
|---|---|
| Combination meter | Displays the shift position on the shift position indicator with shift position signal received from TCM via CAN communication. |
| TCM | Transmits shift position signal to the combination meter with CAN communication. |

# WARNING LAMPS/INDICATOR LAMPS

## WARNING LAMPS/INDICATOR LAMPS : System Diagram

INFOID:0000000008459058

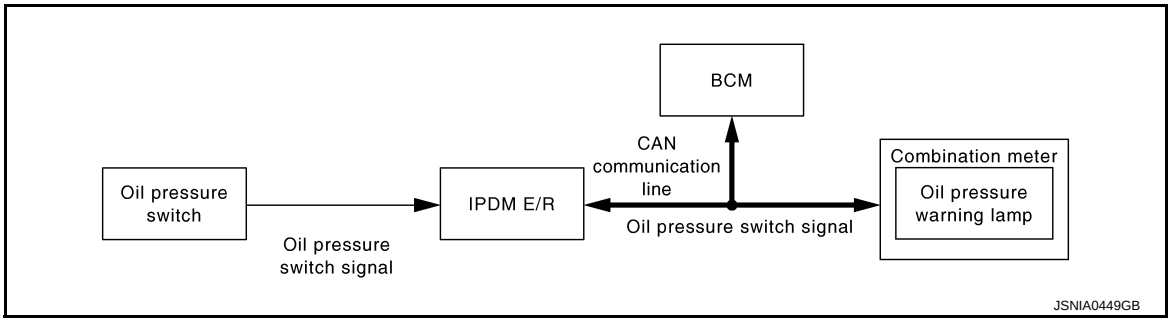


## WARNING LAMPS/INDICATOR LAMPS : System Description

INFOID:0000000008459059

### OIL PRESSURE WARNING LAMP

- IPDM E/R reads the ON/OFF signals from the oil pressure switch and transmits the oil pressure switch signal to the combination meter via BCM with the CAN communication line.
- The combination meter turns the oil pressure warning lamp ON/OFF according to the oil pressure switch signal received via CAN communication.

## WARNING LAMPS/INDICATOR LAMPS : Component Parts Location

INFOID:0000000008459060

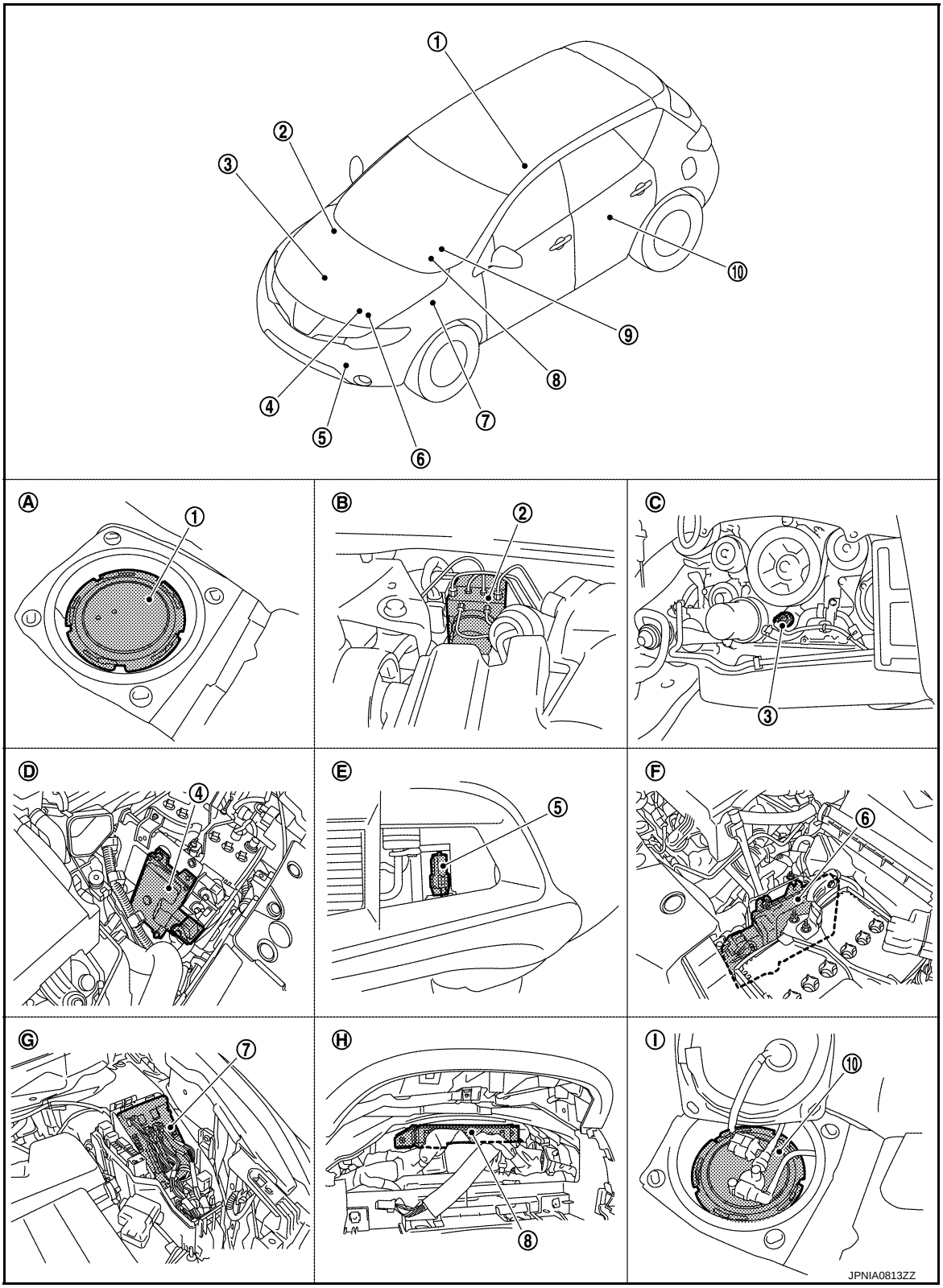


| | | | | | |
|---|---|---|---|---|---|
| 1. | Fuel level sensor unit (sub) | 2. | ABS actuator and electric unit (control unit) | 3. | Oil pressure switch |
| 4. | TCM | 5. | Ambient sensor | 6. | ECM |
| 7. | IPDM E/R | 8. | BCM | 9. | Combination meter |
| 10. | Fuel level sensor unit and fuel pump (main) | | | | |

| | | |
|---|---|---|
| A. Lower right side of rear seat | B. Engine room (RH) | C. Engine front side |
| D. Engine room (LH) | E. Front bumper (left back) | F. Engine room (LH) |
| G. Engine room (LH) | H. Behind the combination meter | I. Lower left side of rear seat |

## WARNING LAMPS/INDICATOR LAMPS : Component Description

INFOID:0000000008459061

| Unit | Description |
|---|---|
| Combination meter | Turns the oil pressure warning lamp ON/OFF according to the oil pressure switch signal received from BCM via CAN communication. |
| IPDM E/R | Reads the ON/OFF signals from the oil pressure switch and transmits the oil pressure switch signal to the combination meter via BCM and CAN communication. |
| Oil pressure switch | Refer to MWI-52, "Description". |
| BCM | Transmits the oil pressure switch signal received from IPDM E/R via CAN communication to the combination meter via CAN communication. |

# METER ILLUMINATION CONTROL

## METER ILLUMINATION CONTROL : System Diagram

INFOID:0000000008459062

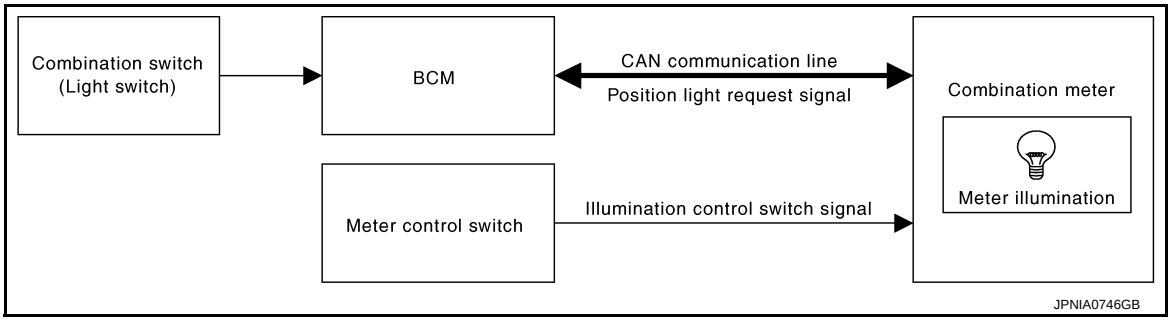


## METER ILLUMINATION CONTROL : System Description

INFOID:0000000008459063

### SYSTEM DESCRIPTION

The combination meter controls the meter illumination by the illumination control switch signal from the meter control switch and the position light request signal transmitted by the BCM via CAN communication.

Daytime Mode

Meter illumination level can be adjusted in 22 steps using the illumination control switch (1) in daytime mode.

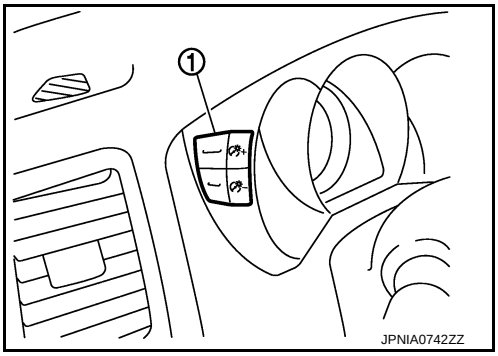


Nighttime Mode

- Combination meter changes the meter illumination to the nighttime mode by the position light request signal from BCM via CAN communication.
- Meter illumination can be adjusted in 22 steps using the illumination control switch in nighttime mode.

Driver Welcome Function

Ring illumination gradually turns ON when a driver gets in the vehicle with intelligent key and closes the driver side door.

**NOTE:**

Ring illumination gradually turns OFF when not turning the ignition switch ON at a certain period of time.

Dial Effects Function

Combination meter detects the engine start when input engine speed signal at first. Pointers of speed meter and tachometer sweep and ring illumination gradually turns ON when combination meter detects the engine start. Then, combination meter starts the normal control.

**NOTE:**

- Engine coolant temperature gauge and fuel gauge do not function.
- Dial Effects Function can be turned ON/OFF from “SETTING” on the information display.

## METER ILLUMINATION CONTROL : Component Parts Location

INFOID:0000000008459064

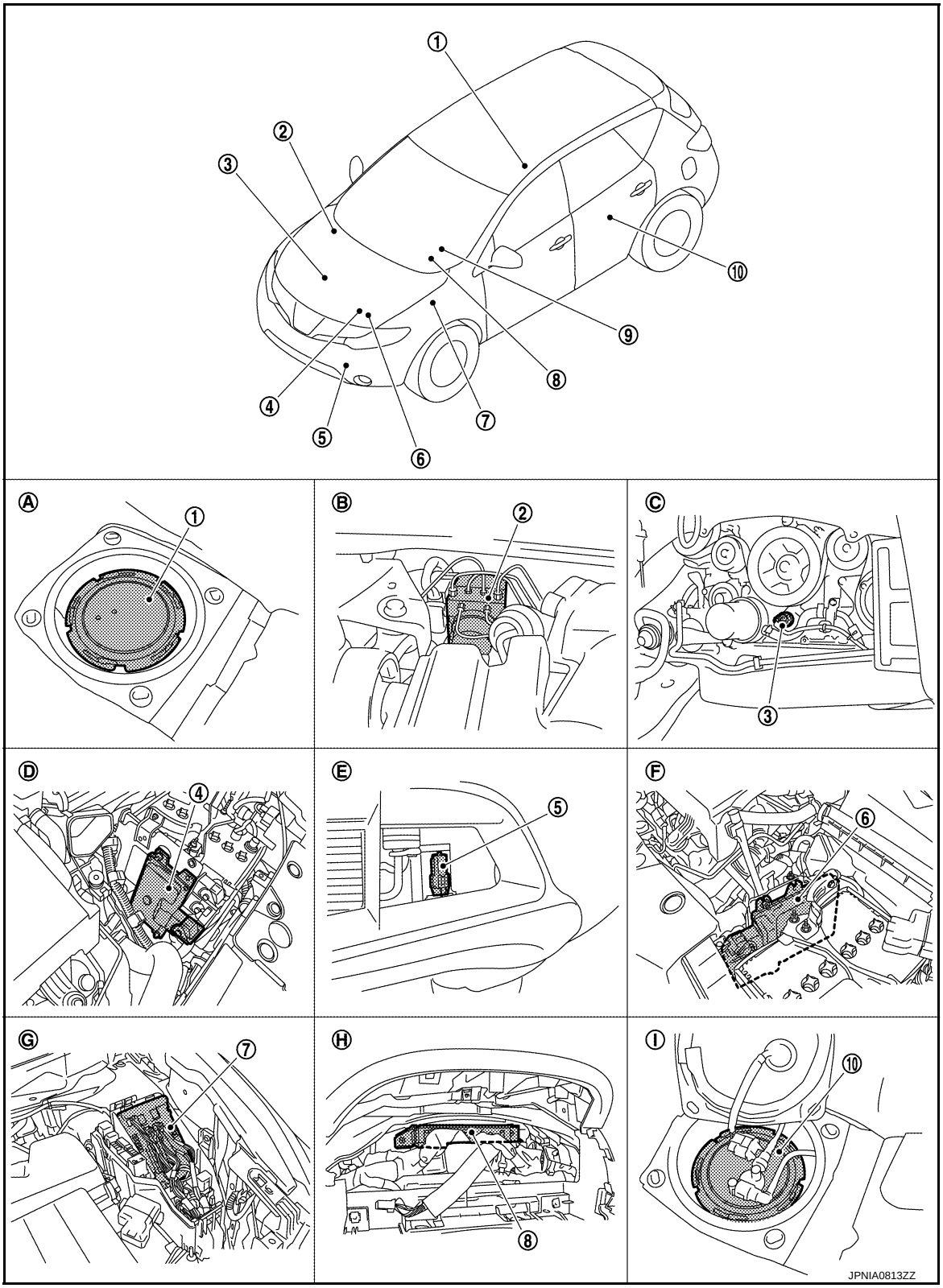

| | | | | | |
|---|---|---|---|---|---|
| 1. | Fuel level sensor unit (sub) | 2. | ABS actuator and electric unit (control unit) | 3. | Oil pressure switch |
| 4. | TCM | 5. | Ambient sensor | 6. | ECM |
| 7. | IPDM E/R | 8. | BCM | 9. | Combination meter |
| 10. | Fuel level sensor unit and fuel pump (main) | | | | |
| A. | Lower right side of rear seat | B. | Engine room (RH) | C. | Engine front side |
| D. | Engine room (LH) | E. | Front bumper (left back) | F. | Engine room (LH) |
| G. | Engine room (LH) | H. | Behind the combination meter | I. | Lower left side of rear seat |

## METER ILLUMINATION CONTROL : Component Description

INFOID:0000000008459065

| Unit | Description |
|---|---|
| Combination meter | Controls the meter illumination with the illumination control switch signal from the meter control switch and the position light request signal from BCM via CAN communication. |
| BCM | Transmits the position light request signal to the combination meter via CAN communication. |
| Meter control switch | Transmits the following signals to the combination meter.<br>• Illumination control switch signal (+) • Illumination control switch signal (–) |

# INFORMATION DISPLAY

## INFORMATION DISPLAY : System Diagram

INFOID:0000000008459066

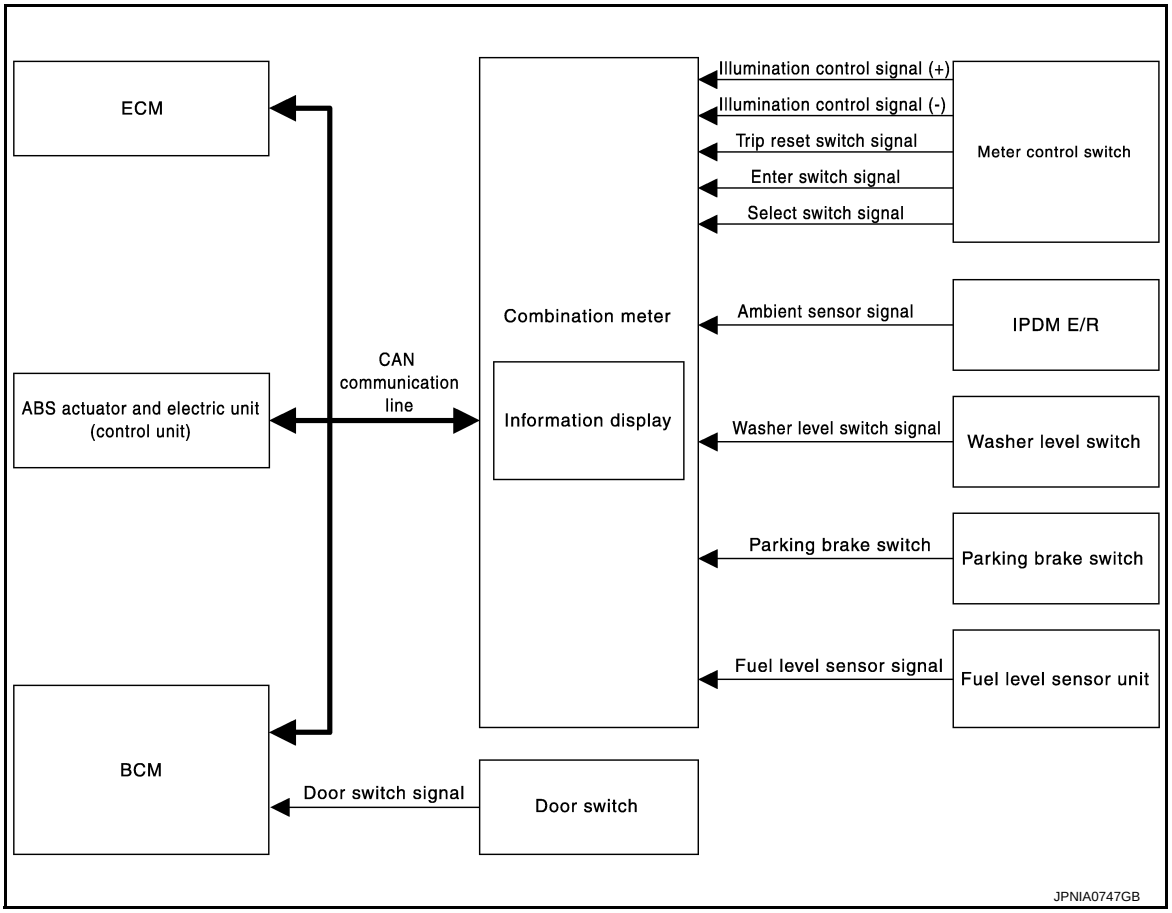


## INFORMATION DISPLAY : System Description

INFOID:0000000008459067

### DESCRIPTION

- The combination meter receives the information required for controlling the operations of the information display from the BCM via CAN communication.
- The combination meter incorporates a trip computer that displays the warning / information according to the information received from various units.

## PARKING BRAKE RELEASE WARNING

The combination meter indicates the parking brake release warning judged by the vehicle speed signal received from the ABS actuator and electric unit (control unit) via CAN communication and the parking brake switch signal from the parking brake switch.

Warning Operation Condition

Parking brake release warning is judged if all of the following conditions are fulfilled.

- Vehicle speed is 7 km/h (4.3 MPH) or higher
- Parking brake switch ON

## LOW FUEL WARNING

The combination meter indicates the low fuel warning judged by the fuel level sensor signal received from the fuel level sensor unit.

Warning Operation Condition

- Fuel level: Approx. 9.8 ℓ (2-5/8 US gal, 2-1/8 Imp gal) or less

## LOW WASHER FLUID WARNING

The combination meter indicates the low washer fluid warning judged by the signal from the washer level switch.

Warning Operation Condition

- Indicates the warning when the washer level switch is ON for 180 seconds or more. Stops indicating the warning when the washer level switch is OFF for 30 seconds or more.

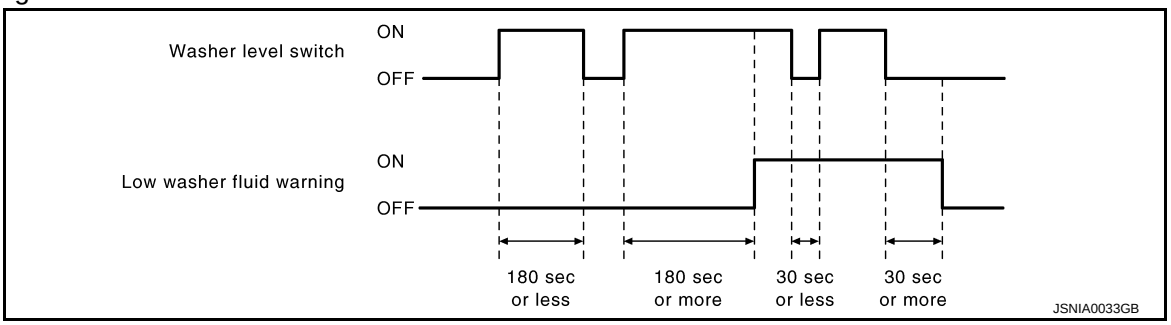


## LOW TIRE PRESSURE WARNING

- The combination meter receives remaining low tire pressure warning lamp signal from the BCM with CAN communication line.
- The combination meter indicates low tire pressure warning when receiving remaining low tire pressure warning lamp signal.
- The combination meter indicates low tire pressure warning judged with the low tire pressure warning lamp signal received from the BCM.

For details, refer to WT-7, "System Description".

## FUEL FILLER CAP WARNING

- The combination meter receives remaining fuel filler cap warning display signal from the ECM with CAN communication line.
- The combination meter indicates fuel filler cap warning when receiving remaining fuel filler cap warning display signal.
- The combination meter indicates fuel filler cap warning judged with the fuel filler cap warning display signal received from the ECM.

For details, refer to EC-107, "System Description".

## DOOR OPEN WARNING

- The combination meter indicates the door open warning judged by each door switch signal received from the BCM via CAN communication line.

## INSTANTANEOUS FUEL CONSUMPTION

- The combination meter receives the fuel consumption monitor signal from the ECM and the vehicle speed signal from the ABS actuator and electric unit (control unit) via CAN communication.
- The combination meter calculates instantaneous fuel consumption according to the fuel consumption monitor signal and the vehicle speed signal received via CAN communication.

### AVERAGE FUEL CONSUMPTION

- The combination meter receives the fuel consumption monitor signal from the ECM and the vehicle speed signal from the ABS actuator and electric unit (control unit) via CAN communication.
- The combination meter calculates the average fuel consumption according to the fuel consumption monitor signal and the vehicle speed signal received via CAN communication.
- The average fuel consumption displayed on the information display is uploaded in approximately 30-second intervals.

**NOTE:**
When turning ON the ignition switch after triggering a reset or removing/installing the battery, "––––" is indicated until 30-seconds/500 m (0.31 miles) of driving.

### AVERAGE VEHICLE SPEED

- The combination meter receives the vehicle speed signal from the ABS actuator and electric unit (control unit) via CAN communication.
- Measures the time while the ignition switch is ON through the combination meter.
- The combination meter the average vehicle speed according to the above signals.
- The average vehicle speed displayed on the information display is uploaded in approximately 30-second intervals.

**NOTE:**
When turning ON the ignition switch after triggering a reset or removing/installing the battery, "––––" is indicated until 30 seconds.

### TRAVEL TIME

Measures the time while the ignition switch is ON through the combination meter.

### TRAVEL DISTANCE

- The combination meter receives the vehicle speed signal from the ABS actuator and electric unit (control unit) via CAN communication.
- The combination meter calculates the vehicle distance according to the vehicle speed signal. The vehicle distance is displayed.

### POSSIBLE DRIVING DISTANCE

The combination meter calculates possible driving distance according to the vehicle speed signal and fuel consumption monitor signal transmitted via CAN communication and the fuel level sensor signal transmitted from the fuel level sensor.

**NOTE:**
- When turning ON the ignition switch after removing/installing the battery, "––––" is indicated until 30 seconds.
- The indicated values may not match each other when refueling with the ignition switch ON. Refer to MWI-90, "INFORMATION DISPLAY : Description".

### AMBIENT AIR TEMPERATURE

- The combination meter receives the ambient sensor signal from the ambient sensor.
- The combination meter calculates the ambient temperature according to the ambient sensor signal.
- The indicated temperature does not increase if the vehicle speed is less than 20 km/h (12 MPH).

**NOTE:**
- The ambient sensor input value that is displayed on "Data Monitor" of CONSULT is the value before the correction. It may not match the indicated temperature on the information display.
- The ambient temperature may be indicated higher than the actual temperature, depending on heat in the engine, the road surface temperature, and so on.

### SETTING

Setting item list

| Items | | Setting range | Setting unit | Description |
|---|---|---|---|---|
| ALERT | TIME TO REST | No setting - 6 hours | 30 minutes, [60 minutes]* | Time to rest is displayed on the information display if the vehicle reached the set travel distance. |
| | ICY | ON/OFF | — | Low outside temp is displayed on the information display if the ambient temperature is 3°C (37°F) or less. |
| MAINTENANCE | ENGINE OIL | No setting - 18,500 miles, (No setting - 30,000 km) | 250 miles (500 km), [500 miles (1,000 km)]* | The engine oil replacement interval is displayed on the information display if the vehicle reached the set distance. |
| | OIL FILTER | No setting - 18,500 miles, (No setting - 30,000 km) | 250 miles (500 km), [500 miles (1,000 km)]* | The oil filter replacement interval is displayed on the information display if the vehicle reached the set distance. |
| | TIRE | No setting - 18,500 miles, (No setting - 30,000 km) | 250 miles (500 km), [500 miles (1,000 km)]* | The tire replacement interval is displayed on the information display if the vehicle reached the set distance. |
| | OTHER | No setting - 18,500 miles, (No setting - 30,000 km) | 250 miles (500 km), [500 miles (1,000 km)]* | The other replacement interval is displayed on the information display if the vehicle reached the set distance. |
| DISPLAY | LANGUAGE | ENGLISH/FRANCAIS | — | The language setting can be changed. |
| | UNIT | US/METRIC | — | The unit setting can be changed. |
| | DIAL EFFECTS | ON/OFF | — | The dial effects setting can be changed. |

* : Press and hold the switch (1 second or more).

## INFORMATION DISPLAY : Component Parts Location

INFOID:0000000008459068

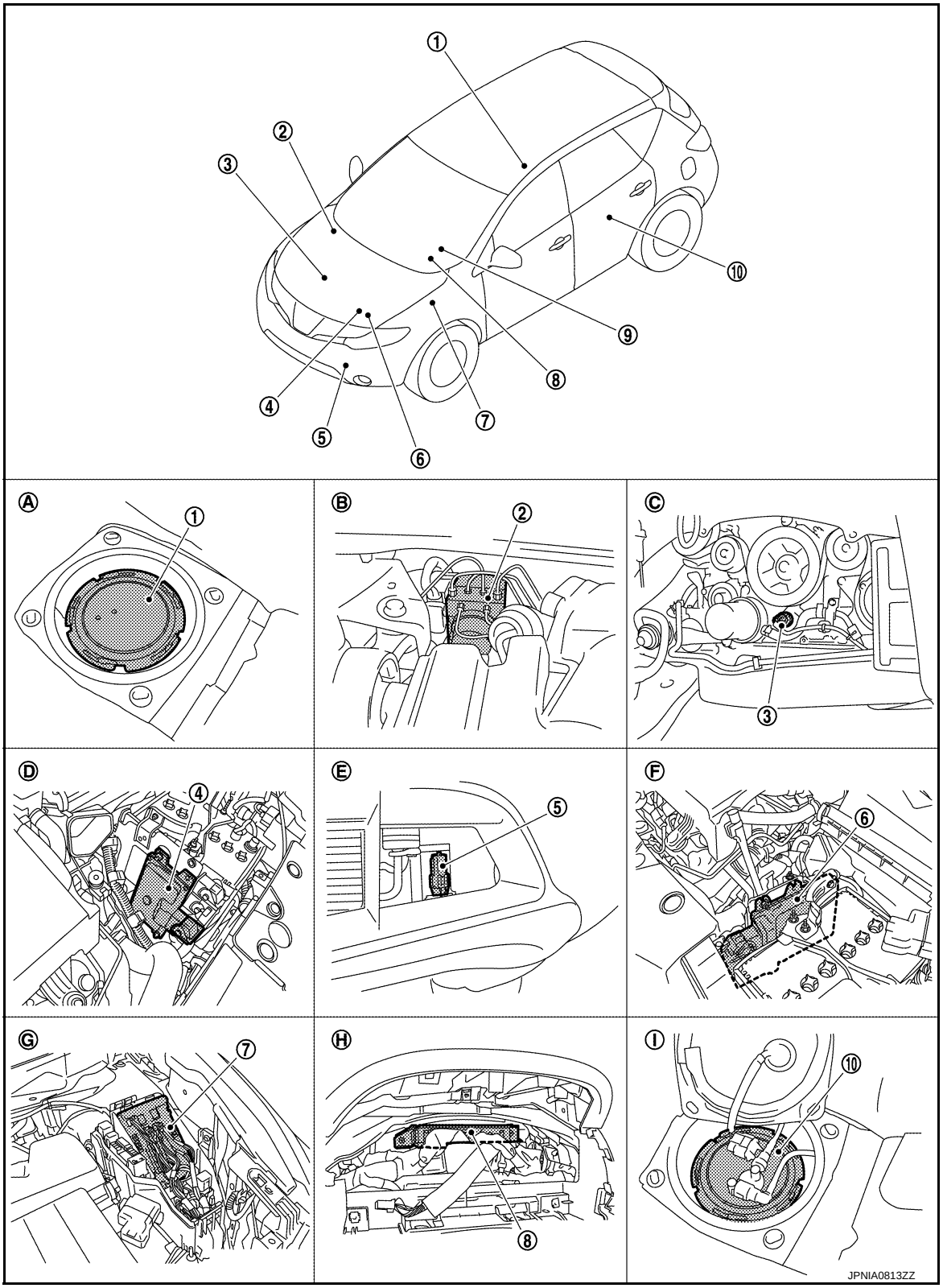


| | | | | | |
|---|---|---|---|---|---|
| 1. | Fuel level sensor unit (sub) | 2. | ABS actuator and electric unit (control unit) | 3. | Oil pressure switch |
| 4. | TCM | 5. | Ambient sensor | 6. | ECM |
| 7. | IPDM E/R | 8. | BCM | 9. | Combination meter |
| 10. | Fuel level sensor unit and fuel pump (main) | | | | |

A. Lower right side of rear seat
B. Engine room (RH)
C. Engine front side
D. Engine room (LH)
E. Front bumper (left back)
F. Engine room (LH)
G. Engine room (LH)
H. Behind the combination meter
I. Lower left side of rear seat

## INFORMATION DISPLAY : Component Description

INFOID:0000000008459069

| Unit | Description |
|---|---|
| Combination meter | Controls the information display according to the signal received from each unit. |
| Fuel level sensor unit | Refer to MWI-46, "Description". |
| ECM | Transmits the following signals to the combination meter via CAN communication.<br>• Engine speed signal<br>• Fuel filler cap warning display signal<br>• Fuel consumption monitor signal |
| ABS actuator and electric unit (control unit) | Transmits the vehicle speed signal to the combination meter via CAN communication. |
| BCM | Transmits signals provided by various units to the combination meter via CAN communication. |
| Meter control switch | Transmits the following signals to the combination meter.<br>• Enter switch signal<br>• Select switch signal |
| Washer level switch | Transmits the washer level signal to the combination meter. |
| Parking brake switch | Refer to MWI-54, "Description". |
| Door switch | Transmits the door switch signals to BCM. |
| IPDM E/R | Transmits the ambient sensor signal to the combination meter. |
| Ambient sensor | Detects the ambient air temperature and transmits the ambient sensor signal to the IPDM E/R. |

# COMPASS

## Description

INFOID:0000000008459070

### DESCRIPTION

- This electronic compass is able to display 8 primary directions: N, NE, E, SE, S, SW, W, NW.
- The compass switch (1) is used to operate the compass.

Switch Operation

| | |
|---|---|
| Press | Compass is turned ON/OFF |
| Press and hold (for 3- 9 sec.) | Compass display (2) turns to zone variation change mode |
| Press and hold (for more than 9 sec.) | Compass display turns to calibration mode |

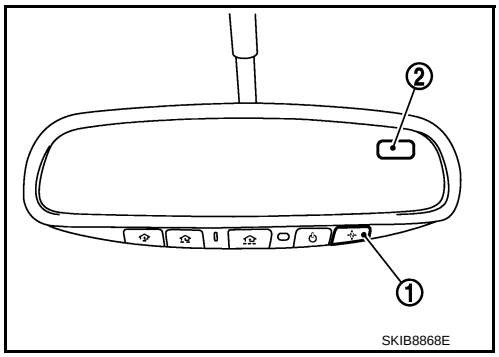


- All standard compasses determine direction relative to magnetic north, however, this electronic compass is designed to display direction relative to true north.
- The difference between magnetic north and true north varies from place to place across the surface of the earth.
- This electronic compass must be “told” approximately where it is on the earth’s surface so that the magnetic north reading can be properly converted into a true north display.
- To tell the electronic compass where it’s at, the earth is separated into numbered “Zone Variances”. The zone variance number in which the compass is to function must be entered into this electronic compass.
- Each zone is magnetically about 4.2° wide. Typically, anything under a 22.5° total zone change is not noticed on the electronic compass display. However, if a change over 22.5° occurs, a reading may be off by one or more primary directions.
- On long trips, the vehicle may leave its original zone and enter one or more new zones. Generally, you do not need to reset the compass zone if you travel between 3 or 4 zones, such as business travel or vacation. The typical driver will not notice any difference on the display within 3 or 4 zones. However, if the vehicle is “permanently” moved to a new location, it is recommended that the compass zone be reset.

### ZONE VARIATION SETTING PROCEDURE

1. Press and hold the compass switch for 3 – 9 seconds.
2. The current zone setting appears on the compass display.
3. Find the current geographical location number in the zone variation chart.
4. Select the new zone number. (Press the compass switch until the new zone number appears on the compass display.)
5. After select the new zone number, the compass display will automatically shows a direction within a few seconds.
6. Perform the following calibration procedure for more accurate indications.

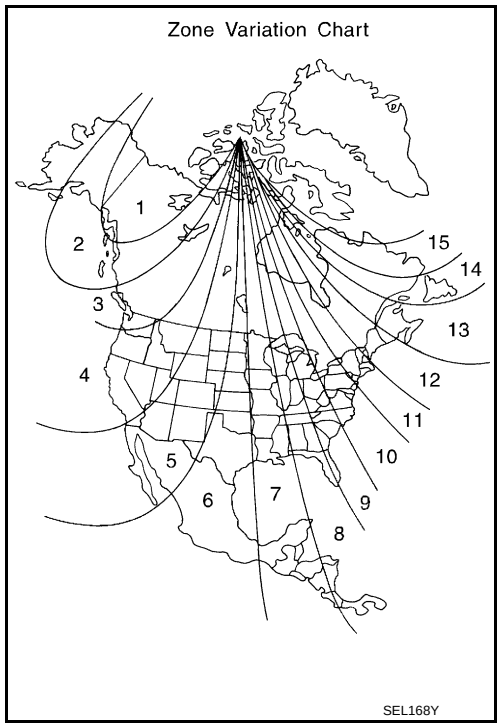

## CALIBRATION PROCEDURE

**NOTE:**
The compass calibrates itself under normal driving conditions. However, occasional circumstances may cause the compass to operate inaccurately. Example: Driving from rural (wide open) areas to crowded city areas, or if an aftermarket (i.e., non original equipment) antenna with a magnetic base is attached to the vehicle. Calibrate the mirror compass if the display shows only one direction or a limited number of directions.

**NOTE:**
- If “magnetic hats” are used in the dealership for vehicle identification, remove the hat from the vehicle before performing the following steps. Do not put the hat back on the vehicle after the procedure is completed.
- Drive the vehicle to an open level area; away from large metallic objects, structures, and overhead power lines.
- Turn off “non-essential” electrical accessories (rear window defrost, heater/air conditioning, wipers) and close the doors.

1. Verify the correct compass zone setting for the geographical location.
2. Press and hold the compass switch for more than 9 seconds.
3. “C” is displayed on the compass display when calibration starts.
4. Drive slowly [less than 8 km/h (5 MPH)] in a circle until the “C / CAL” is replaced with primary headings (N, NE, E, SE, S, SW, W, or NW).
   **NOTE:**
   This will require driving at least 2 complete 360 degree circles, 3 complete circles may be required.
5. The compass calibration procedure is now complete. The compass should operate normally.
   **NOTE:**
   If at any time the compass continually displays the incorrect direction or the reading is erratic or locked, repeat the calibration procedure.

## Component Parts Location

INFOID:0000000008459071

1 : Compass switch
2 : Compass display

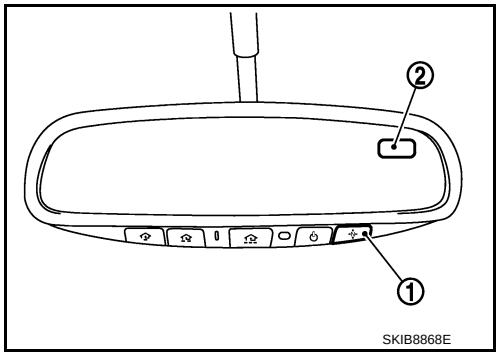


## Special Repair Requirement

INFOID:0000000008459072

### 1. PERFORM ZONE VARIATION SETTING

Perform the zone variation setting. Refer to MWI-32, "Description".

>> GO TO 2.

### 2. PERFORM CALIBRATION

Perform the calibration. Refer to MWI-32, "Description".

>> Setting completion

# DIAGNOSIS SYSTEM (METER)

## Diagnosis Description

INFOID:0000000008459073

### SELF-DIAGNOSIS MODE

- Information display LCD segment operation can be checked in self-diagnosis mode.
- Meters/gauges can be checked in self-diagnosis mode.

### OPERATION PROCEDURE

1. Turn ignition switch OFF.
2. While pressing the trip reset switch (1), turn ignition switch ON.
   **NOTE:**
   If the diagnosis function is activated with “trip A” displayed, the mileage on “trip A” is reset to “0000.0”. (The same way for “trip B”.)
3. Make sure that the trip meter displays “0000.0”.
4. Press the trip reset switch at least 3 times. (Within 7 seconds after the ignition switch is turned ON.)

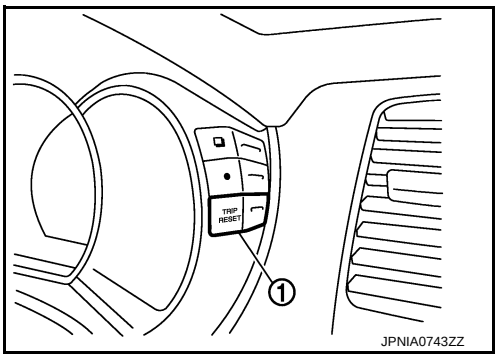


5. The unified meter control unit is turned to self-diagnosis mode.
   - All the segments on the odo/trip meter and shift position indicator illuminate.
   - The segment dots of the information display LCD (1) blink alternately.
   - Engine coolant temperature gauge and fuel gauge return to zero, simultaneously.

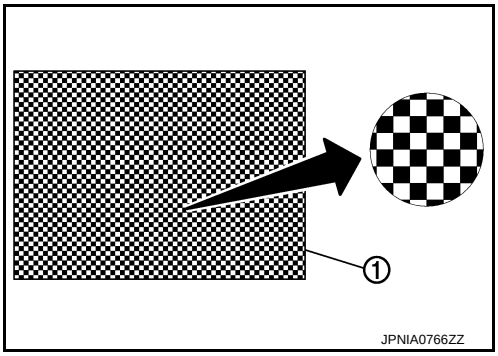


   **NOTE:**
   - Check combination meter power supply and ground circuit when the self-diagnosis mode of the combination meter does not start. Replace combination meter if abnormal.
   - If any of the segments are not displayed, replace combination meter.
6. Each meter activates by pressing the trip reset switch.

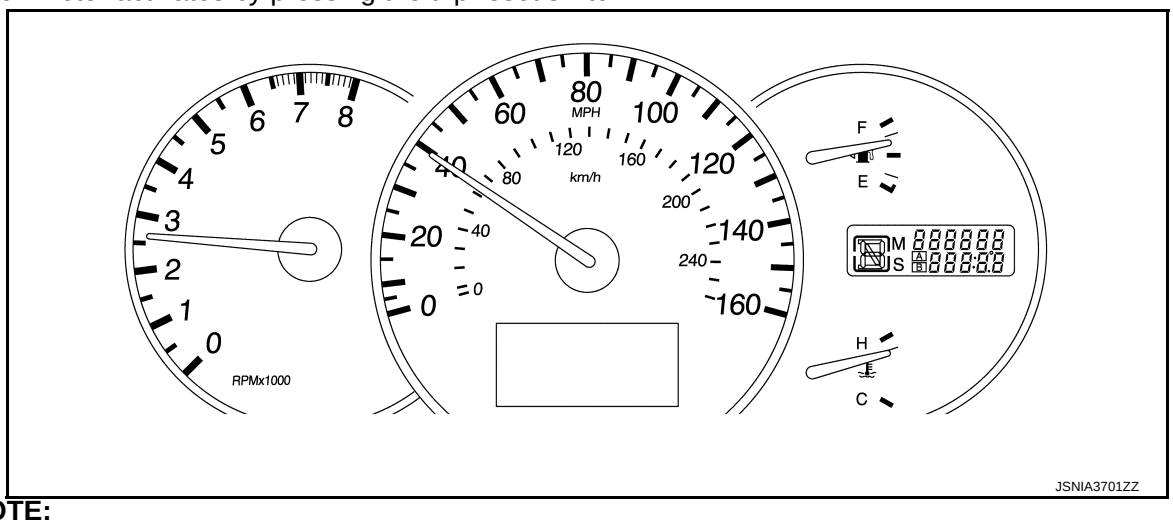


   **NOTE:**

- If any of the meters or gauges are not activated, replace combination meter.
- The figure is reference.

## CONSULT Function (METER/M&A)

INFOID:0000000008459074

### CONSULT APPLICATION ITEMS

CONSULT can perform the following diagnosis modes via CAN communication and the combination meter.

| System | Diagnosis mode | Description |
|---|---|---|
| METER/M&A | Self Diagnostic Result | The combination meter checks the conditions and displays memorized errors. |
| | Data Monitor | Displays the combination meter input/output data in real time. |
| | W/L ON History | Lighting history of the warning lamp and indicator lamp can be checked. |

### SELF DIAG RESULT

Refer to MWI-67, "DTC Index".

### DATA MONITOR

**NOTE:**
The following table includes information (items) inapplicable to this vehicle. For information (items) applicable to this vehicle, refer to CONSULT display items.

Display Item List

X: Applicable

| Display item [Unit] | MAIN SIGNALS | Description |
|---|---|---|
| SPEED METER [km/h] | X | Value of vehicle speed signal received from ABS actuator and electric unit (control unit) via CAN communication.<br>**NOTE:**<br>655.35 is displayed when the malfunction signal is received. |
| SPEED OUTPUT [km/h] | X | Vehicle speed signal value transmitted to other units via CAN communication.<br>**NOTE:**<br>655.35 is displayed when the malfunction signal is received. |
| ODO OUTPUT [km/h or mph] | | Odometer signal value transmitted to other units via CAN communication. |
| TACHO METER [rpm] | X | Value of the engine speed signal received from ECM via CAN communication.<br>**NOTE:**<br>8191.875 is displayed when the malfunction signal is received. |
| FUEL METER [L] | X | Fuel level indicated on combination meter. |
| W TEMP METER [°C] | X | Value of engine coolant temperature signal is received from ECM via CAN communication.<br>**NOTE:**<br>215 is displayed when the malfunction signal is input. |
| FUEL CAP W/L [On/Off] | | Status of fuel filler cap warning display detected from fuel filler cap warning display signal received from ECM via CAN communication. |
| ABS W/L [On/Off] | | Status of ABS warning lamp detected from ABS warning lamp signal is received from ABS actuator and electric unit (control unit) via CAN communication. |
| VDC/TCS IND [On/Off] | | Status of VDC OFF indicator lamp detected from VDC OFF indicator lamp signal is received from ABS actuator and electric unit (control unit) via CAN communication. |
| SLIP IND [On/Off] | | Status of VDC warning lamp detected from VDC warning lamp signal received from ABS actuator and electric unit (control unit) via CAN communication. |
| BRAKE W/L [On/Off] | | Status of brake warning lamp detected from brake warning lamp signal is received from ABS actuator and electric unit (control unit) via CAN communication.<br>**NOTE:**<br>Displays “Off” if the brake warning lamp is illuminated when the valve check starts, the parking brake switch is turned ON or the brake fluid level switch is turned ON. |

| Display item [Unit] | MAIN SIGNALS | Description |
|---|---|---|
| DOOR W/L<br>[On/Off] | | Status of door warning detected from door switch signal received from BCM via CAN communication. |
| HI-BEAM IND<br>[On/Off] | | Status of high beam indicator lamp detected from high beam request signal is received from BCM via CAN communication. |
| TURN IND<br>[On/Off] | | Status of turn indicator lamp detected from turn indicator signal is received from BCM via CAN communication. |
| LIGHT IND<br>[On/Off] | | Status of light indicator lamp detected from position light request signal is received from BCM via CAN communication. |
| OIL W/L<br>[On/Off] | | Status of oil pressure warning lamp detected from oil pressure switch signal is received from BCM via CAN communication. |
| MIL<br>[On/Off] | | Status of malfunction indicator lamp detected from malfunctioning indicator lamp signal is received from ECM via CAN communication. |
| CRUISE IND<br>[On/Off] | | Status of CRUISE indicator detected from ASCD status signal is received from ECM via CAN communication. |
| O/D OFF IND<br>[On/Off] | | Status of O/D OFF indicator detected from O/D OFF indicator signal is received from CVT shift selector. |
| 4WD W/L<br>[On/Off] | | Status of AWD warning lamp detected from AWD warning lamp signal is received from AWD control unit via CAN communication. |
| 4WD LOCK IND<br>[On/Off] | | Status of AWD LOCK warning lamp detected from AWD LOCK warning lamp signal is received from AWD control unit via CAN communication. |
| FUEL W/L<br>[On/Off] | | Low-fuel warning lamp status detected by the identified fuel level. |
| WASHER W/L<br>[On/Off] | | Status of washer warning lamp judged from washer level switch input to combination meter. |
| AIR PRES W/L<br>[On/Off] | | Status of low tire pressure warning lamp detected from TPMS malfunction warning lamp signal is received from BCM via CAN communication. |
| KEY G/W W/L<br>[On/Off] | | Status of key warning lamp (G/Y) detected from key warning signal is received from BCM via CAN communication. |
| LCD<br>[B&P N, B&P I, ID NG, ROTAT, SFT P, INSRT, BATT, NO KY, OUTKY, LK WN] | | Displays status of Intelligent Key system warning detected from meter display signal is received from BCM via CAN communication. |
| SHIFT IND<br>[P, R, N, D, L] | | Status of shift position indicator detected from shift position signal is received from TCM via CAN communication. |
| O/D OFF SW<br>[On/Off] | | Status of O/D OFF switch. |
| M RANGE SW<br>[Off] | | This item is displayed, but cannot be monitored. |
| NM RANGE SW<br>[Off] | | This item is displayed, but cannot be monitored. |
| AT SFT UP SW<br>[Off] | | This item is displayed, but cannot be monitored. |
| AT SFT DWN SW<br>[Off] | | This item is displayed, but cannot be monitored. |
| ST SFT UP SW<br>[Off] | | This item is displayed, but cannot be monitored. |
| ST SFT DWN SW<br>[Off] | | This item is displayed, but cannot be monitored. |
| PKB SW<br>[On/Off] | | Status of parking brake switch. |
| BUCKLE SW<br>[On/Off] | | Status of seat belt buckle switch (driver side). |

| Display item [Unit] | MAIN SIGNALS | Description |
|---|---|---|
| BRAKE OIL SW [On/Off] | | Status of brake fluid level switch. |
| DISTANCE [km] | | Value of possible driving distance calculated by combination meter. |
| A/C AMP CONN [On/Off] | | Status of A/C auto amp. connection recognition signal. |
| ENTER SW [On/Off] | | Status of ❑ (ENTER) switch. |
| SELECT SW [On/Off] | | Status of ● (SELECT) switch. |
| OUTSIDE TEMP [°C or °F] | | Ambient air temperature value converted from ambient sensor signal received from ambient sensor.<br>**NOTE:**<br>This may not match with the temperature value indicated on the information display. (Because the information display value is a corrected value from the ambient sensor input value.) |
| FUEL LOW SIG [On/Off] | | Status of fuel level low warning signal to output to AV control unit via CAN communication. |
| BUZZER [On/Off] | X | Buzzer status (in the combination meter) is detected from the buzzer output signal received from each unit via CAN communication and the warning output condition of the combination meter. |
| BSW IND [On/Off] | | Status of Blind Spot Intervention ON indicator (green) judged from Blind Spot Intervention ON indicator signal received from camera control unit with CAN communication line. |
| BSW W/L [On/Off] | | Status of BSW/Blind Spot Intervention warning lamp (yellow) judged from BSW/Blind Spot Intervention warning lamp signal received from camera control unit with CAN communication line. |
| LDW IND [On/Off] | | • Status of lane departure warning lamp (yellow) judged from lane departure warning lamp signal received from camera control unit with CAN communication line.<br>• Status of LDW ON indicator lamp (green) judged from LDW ON indicator lamp signal received from camera control unit with CAN communication line. |

**NOTE:**

Some items are not available according to vehicle specification.

## W/L ON HISTORY

- Stores histories when warning/indicator lamp is turned on.
- “W/L ON HISTORY” indicates the “TIME” when the warning/indicator lamp is turned on.
- The “TIME” above is:
- 0: The condition that the warning/indicator lamp has been turned on 1 or more times after starting the engine and waiting for 30 seconds.
- 1 - 39: The number of times the engine was restarted after the 0 condition.
- NO W/L ON HISTORY: Stores NO (0) turning on history of warning/indicator lamp.

**NOTE:**

- W/L ON HISTORY is not stored for approximately 30 seconds after the engine starts.
- Brake warning lamp does not store any history when parking the brake is applied or the brake fluid level gets low.

### Display Item

| Display item | Description |
|---|---|
| ABS W/L | Lighting history of ABS warning lamp. |
| VDC/TCS IND | Lighting history of VDC OFF indicator lamp. |
| SLIP IND | Lighting history of VDC warning lamp. |
| BRAKE W/L | Lighting history of brake warning lamp. |

| Display item | Description |
|---|---|
| DOOR W/L | Lighting history of door warning. |
| OIL W/L | Lighting history of oil pressure warning lamp. |
| C-ENG W/L | Lighting history of malfunction indicator lamp. |
| CRUISE IND | Lighting history of CRUISE indicator lamp. |
| SET IND | Lighting history of SET indicator. |
| O/D OFF IND | Lighting history of O/D OFF indicator lamp. |
| 4WD W/L | Lighting history of AWD warning lamp. |
| FUEL W/L | Lighting history of low fuel level warning. |
| WASHER W/L | Lighting history of low washer fluid warning |
| AIR PRES W/L | Lighting history of low tire pressure warning lamp. |
| KEY G/Y W/L | Lighting history of key warning lamp (green/yellow). |
| KEY R W/L | Lighting history of key warning lamp (red). |
| CHAGE W/L | Lighting history of charge warning lamp. |
| BSW W/L | Lighting history of BSW/Blind Spot Intervention warning lamp (yellow). |
| LDW IND | Lighting history of lane departure warning lamp (yellow) or LDW ON indicator lamp (green). |

**NOTE:**
In items displayed on the CONSULT screen, only those listed in the above table are used.

# DTC/CIRCUIT DIAGNOSIS

## U1000 CAN COMM CIRCUIT

### Description

INFOID:0000000008459075

CAN (Controller Area Network) is a serial communication system for real time application. It is an on-vehicle multiplex communication system with high data communication speed and excellent error detectability. Many electronic control units are equipped onto vehicles, and each control unit shares information and links with other control units during operation (not independent). In CAN communication, control units are connected with two communication lines (CAN-H line, CAN-L line) allowing a high rate of information transmission with less wiring. Each control unit transmits/receives data but selectively reads required data only.
CAN Communication Signal Chart. Refer to LAN-29, "CAN Communication Signal Chart".

### DTC Logic

INFOID:0000000008459076

#### DTC DETECTION LOGIC

| DTC | Display contents of CONSULT | Diagnostic item is detected when ... | Probable malfunction location |
|---|---|---|---|
| U1000 | CAN COMM CIRCUIT | When combination meter is not transmitting or receiving CAN communication signal for 2 seconds or more. | CAN communication system |

### Diagnosis Procedure

INFOID:0000000008459077

#### 1. PERFORM SELF DIAGNOSTIC

1. Turn ignition switch ON and wait for 2 seconds or more.
2. Check “Self Diagnostic Result” of “METER/M&A”.

Is “CAN COMM CIRCUIT” displayed?

YES >> Refer to LAN-18, "Trouble Diagnosis Flow Chart".
NO >> Refer to GI-45, "Intermittent Incident".

# U1010 CONTROL UNIT (CAN)

## Description

INFOID:0000000008459078

Initial diagnosis of combination meter.

## DTC Logic

INFOID:0000000008459079

### DTC DETECTION LOGIC

| DTC | Display contents of CONSULT | Diagnostic item is detected when ... | Probable malfunction location |
|---|---|---|---|
| U1010 | CONTROL UNIT (CAN) | If any malfunction is detected during initial diagnosis of combination meter CAN controller | Combination meter |

## Diagnosis Procedure

INFOID:0000000008459080

### 1. REPLACE COMBINATION METER

When DTC “U1010” is detected, replace combination meter.

>> INSPECTION END

# B2205 VEHICLE SPEED

## Description

INFOID:0000000008459081

Vehicle speed signal is transmitted from ABS actuator and electric unit (control unit) via CAN communication to combination meter.

## DTC Logic

INFOID:0000000008459082

### DTC DETECTION LOGIC

| DTC | Display contents of CONSULT | Diagnostic item is detected when ... | Probable malfunction location |
|---|---|---|---|
| B2205 | VEHICLE SPEED | An abnormal vehicle speed signal is input from ABS actuator and electric unit (control unit) for 2 seconds or more | • Wheel sensor<br>• ABS actuator and electric unit (control unit) |

## Diagnosis Procedure

INFOID:0000000008459083

### 1. PERFORM SELF-DIAGNOSIS OF ABS ACTUATOR AND ELECTRIC UNIT (CONTROL UNIT)

Perform “Self Diagnostic Result” of ABS actuator and electric unit (control unit), and repair or replace malfunctioning parts.

>> Refer to BRC-28, "CONSULT Function".

# B2267 ENGINE SPEED

## Description

INFOID:0000000008459084

The engine speed signal is transmitted from ECM to the combination meter via CAN communication.

## DTC Logic

INFOID:0000000008459085

### DTC DETECTION LOGIC

| DTC | Display contents of CONSULT | Diagnostic item is detected when ... | Probable malfunction location |
|---|---|---|---|
| B2267 | ENGINE SPEED | ECM continuously transmits abnormal engine speed signals for 2 seconds or more | • Crankshaft position sensor (POS)<br>• ECM |

## Diagnosis Procedure

INFOID:0000000008459086

### 1. PERFORM SELF-DIAGNOSIS OF ECM

Perform “Self Diagnostic Result” of ECM, and repair or replace malfunctioning parts.

>> Refer to EC-128, "CONSULT Function".

# B2268 WATER TEMP

## Description

INFOID:0000000008459087

The engine coolant temperature signal is transmitted from ECM to the combination meter via CAN communication.

## DTC Logic

INFOID:0000000008459088

### DTC DETECTION LOGIC

| DTC | Display contents of CONSULT | Diagnostic item is detected when ... | Probable malfunction location |
|---|---|---|---|
| B2268 | WATER TEMP | ECM continuously transmits abnormal engine coolant temperature signals for 60 seconds or more | • Engine coolant temperature sensor<br>• ECM |

## Diagnosis Procedure

INFOID:0000000008459089

### 1. PERFORM SELF-DIAGNOSIS OF ECM

Perform “Self Diagnosis Result” of ECM, and repair or replace malfunctioning parts.

>> Refer to EC-128, "CONSULT Function".

# POWER SUPPLY AND GROUND CIRCUIT

## COMBINATION METER

### COMBINATION METER : Diagnosis Procedure

INFOID:0000000008459090

#### 1.CHECK FUSE

Check for blown fuses.

| Power source | Fuse No. |
|---|---|
| Battery | 11 |
| Ignition switch ON or START | 4 |

Is the inspection result normal?

YES >> GO TO 2.
NO >> Be sure to eliminate cause of malfunction before installing new fuse.

#### 2.CHECK POWER SUPPLY CIRCUIT

Check voltage between combination meter harness connector terminals and ground.

| Terminals | | | Ignition switch position | Voltage (Approx.) |
|---|---|---|---|---|
| (+) | | (-) | | |
| Combination meter | | Ground | | |
| Connector | Terminal | | | |
| M34 | 1 | | OFF | Battery voltage |
| | 2 | | ON | |

Is the inspection result normal?

YES >> GO TO 3.
NO >> Check harness between combination meter and fuse.

#### 3.CHECK GROUND CIRCUIT

1. Turn ignition switch OFF.
2. Disconnect combination meter connector.
3. Check continuity between combination meter harness connector terminals and ground.

| Terminals | | | Continuity |
|---|---|---|---|
| (+) | | (-) | |
| Combination meter | | Ground | |
| Connector | Terminal | | |
| M34 | 3 | | Existed |
| | 23 | | |

Is the inspection result normal?

YES >> INSPECTION END
NO >> Repair harness or connector.

## IPDM E/R (INTELLIGENT POWER DISTRIBUTION MODULE ENGINE ROOM)

### IPDM E/R (INTELLIGENT POWER DISTRIBUTION MODULE ENGINE ROOM) : Diagnosis Procedure

INFOID:0000000008459091

#### 1.CHECK FUSES AND FUSIBLE LINK

Check that the following IPDM E/R fuses or fusible links are not blown.

| Signal name | Fuses and fusible link No. |
|---|---|
| Battery power supply | E |
| | 50 |
| | 51 |

Is the fuse fusing?

YES >> Replace the blown fuse or fusible link after repairing the affected circuit if a fuse or fusible link is blown.
NO >> GO TO 2.

## 2. CHECK POWER SUPPLY CIRCUIT

1. Turn the ignition switch OFF.
2. Disconnect IPDM E/R connector.
3. Check voltage between IPDM E/R harness connector and the ground.

| Terminals | | | Voltage (Approx.) |
|---|---|---|---|
| (+) | | (–) | |
| IPDM E/R | | | |
| Connector | Terminal | Ground | |
| E9 | 1 | | Battery voltage |

Is the measurement value normal?

YES >> GO TO 3.
NO >> Repair the harness or connector.

## 3. CHECK GROUND CIRCUIT

Check continuity between IPDM E/R harness connectors and the ground.

| IPDM E/R | | Ground | Continuity |
|---|---|---|---|
| Connector | Terminal | | |
| E10 | 12 | | Existed |
| E11 | 41 | | |

Does continuity exist?

YES >> INSPECTION END
NO >> Repair the harness or connector.

# FUEL LEVEL SENSOR SIGNAL CIRCUIT

## Description

INFOID:0000000008459092

The fuel level sensor unit and fuel pump (main) and the fuel level sensor unit (sub) detect the fuel level in the fuel tank and transmit the fuel gauge signal to the combination meter.

## Component Function Check

INFOID:0000000008459093

### 1.CHECK COMBINATION METER OUTPUT SIGNAL

Select the “Data Monitor” for the “METER/M&A” and compare the “FUEL METER” monitor value with the fuel gauge reading on the combination meter.

| Fuel gauge pointer | Reference value of data monitor [lit.] |
|---|---|
| Full | Approx. 77.8 |
| Three quarters | Approx. 63.0 |
| Half | Approx. 42.5 |
| A quarter | Approx. 22.0 |
| Empty | Approx. 7.1 |

Does monitor value match fuel gauge reading?

YES >> INSPECTION END
NO >> Replace combination meter.

## Diagnosis Procedure

INFOID:0000000008459094

### 1.CHECK COMBINATION METER INPUT SIGNAL

1. Turn ignition switch ON.
2. Check voltage between combination meter harness connector terminal and ground.

| Terminals | | | Voltage (Approx.) |
|---|---|---|---|
| (+) | | (-) | |
| Combination meter | | | |
| Terminal | Connector | | |
| M34 | 34 | Ground | 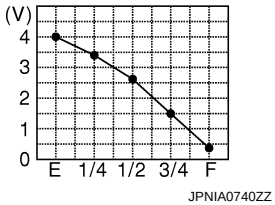  |

Does it match fuel gauge reading?

YES >> GO TO 2.
NO >> Replace the combination meter.

### 2.CHECK FUEL LEVEL SENSOR CIRCUIT

1. Turn ignition switch OFF.
2. Disconnect combination meter connector and fuel level sensor unit (main) connector.
3. Check continuity between combination meter harness connector terminal and fuel level sensor unit (main) harness connector terminal.

| Terminals | | | | Continuity |
|---|---|---|---|---|
| (+) | | (-) | | |
| Combination meter | | Fuel level sensor unit (main) | | |
| Connector | Terminal | Connector | Terminal | |
| M34 | 34 | B40 | 2 | Existed |

4. Check continuity between combination meter harness connector terminal and ground.

| Terminals | | | Continuity |
|---|---|---|---|
| (+) | | (-) | |
| Combination meter | | Ground | |
| Connector | Terminal | | |
| M34 | 34 | | Not existed |

Is the inspection result normal?

YES >> GO TO 3.
NO >> Repair harness or connector.

## 3. CHECK FUEL LEVEL SENSOR GROUND CIRCUIT

Check continuity between fuel level sensor unit (main) harness connector terminal and combination meter harness connector terminal.

| Terminals | | | | Continuity |
|---|---|---|---|---|
| (+) | | (-) | | |
| Fuel level sensor unit (main) | | Combination meter | | |
| Connector | Terminal | Connector | Terminal | |
| B40 | 5 | M34 | 24 | Existed |

Is the inspection result normal?

YES >> INSPECTION END
NO >> Repair harness or connector.

# Component Inspection

INFOID:0000000008459095

## 1. REMOVE FUEL LEVEL SENSOR UNIT

Remove the fuel level sensor unit. Refer to FL-6, "Removal and Installation".

>> GO TO 2.

## 2. CHECK FUEL LEVEL SENSOR UNIT AND FUEL PUMP (MAIN)

Check the resistance between fuel level sensor unit and fuel pump (main).

| Terminals | | Condition | Resistance (Ω) (Approx.) | Height [mm (in)] (Approx.) |
|---|---|---|---|---|
| Fuel level sensor unit (main) | | | | |
| 5 | 6 | Full (A) | 2.4 | 189.7 (7.47) |
| | | Empty (B) | 79 | 16.8 (0.661) |
| 2 | 7 | — | 0 | — |

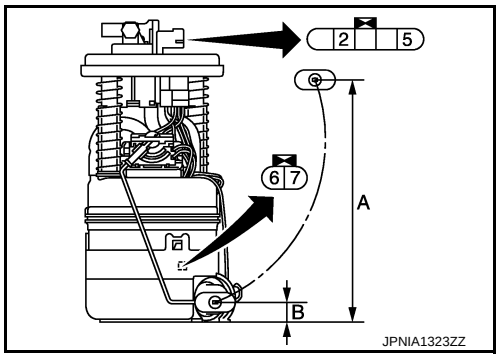


Is the inspection result normal?

YES >> GO TO 3.
NO >> Replace fuel level sensor unit and fuel pump (main).

## 3. CHECK FUEL LEVEL SENSOR UNIT (SUB)

Inspect the resistance of fuel level sensor unit (sub).

| Terminals | | Condition | Resistance (Ω) (Approx.) | Height [mm (in)] (Approx.) |
|---|---|---|---|---|
| Fuel level sensor unit (sub) | | | | |
| (+) | (-) | | | |
| 6 | 7 | Full (A) | 2.4 | 200.3 (7.89) |
| | | Empty (B) | 45.2 | 22.6 (0.890) |

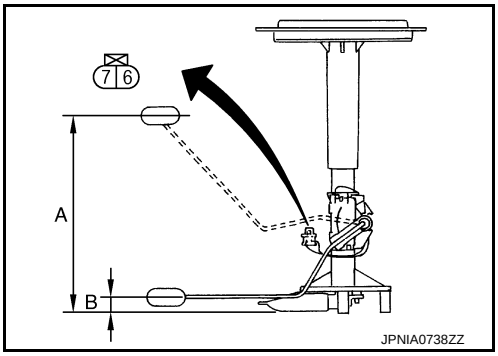


Is the inspection result normal?

YES >> INSPECTION END
NO >> Replace fuel level sensor unit (sub).

# METER CONTROL SWITCH SIGNAL CIRCUIT

## Description

INFOID:0000000008459096

Transmits the following signals to the combination meter.

- (Illumination control) switch signal (+)
- (Illumination control) switch signal (–)
- Trip reset switch signal
- (select) switch signal
- (enter) switch is pressed

## Diagnosis Procedure

INFOID:0000000008459097

### 1. CHECK METER CONTROL SWITCH INPUT SIGNAL

1. Turn the ignition switch ON.
2. Check voltage between the following terminals of the combination meter.

| Terminals | | | | Condition | Voltage (Approx.) |
|---|---|---|---|---|---|
| Combination meter | | | | | |
| (+) | | (-) | | | |
| Connector | Terminal | Connector | Terminal | | |
| M34 | 12 | M34 | 10 | When (select) switch is pressed | 0 V |
| | | | | Other than the above | 5 V |
| | 11 | | | When (enter) switch is pressed | 0 V |
| | | | | Other than the above | 5 V |
| | 8 | | | When trip reset switch is pressed | 0 V |
| | | | | Other than the above | 5 V |
| | 14 | | | When (illumination control) switch is pressed | 0 V |
| | | | | Other than the above | 5 V |
| | 13 | | | When (illumination control) switch is pressed | 0 V |
| | | | | Other than the above | 5 V |

Is the inspection result normal?

YES >> INSPECTION END
NO >> GO TO 2.

### 2. CHECK METER CONTROL SWITCH SIGNAL CIRCUIT

1. Turn the ignition switch OFF.
2. Disconnect the combination meter and meter control switch connectors.
3. Check continuity between combination meter harness connector terminals and meter control switch harness connector terminals.

| Terminals | | | | Continuity |
|---|---|---|---|---|
| Combination meter | | Meter control switch | | |
| (+) | | (-) | | |
| Connector | Terminal | Connector | Terminal | |
| M34 | 8 | M83 | 11 | Existed |
| | 10 | | 5 | |
| | 11 | | 12 | |
| | 12 | | 1 | |
| | 13 | | 6 | |
| | 14 | | 4 | |

4. Check continuity between combination meter harness connector terminals and ground.

| Terminals | | | Continuity |
|---|---|---|---|
| (+) | | (-) | |
| Combination meter | | Ground | |
| Connector | Terminal | | |
| M34 | 8 | | Not existed |
| | 10 | | |
| | 11 | | |
| | 12 | | |
| | 13 | | |
| | 14 | | |

Is the inspection result normal?

YES >> INSPECTION END
NO >> Repair harness or connector.

## Component Inspection

INFOID:0000000008459098

### 1. CHECK METER CONTROL SWITCH

1. Turn the ignition switch OFF.
2. Disconnect the meter control switch connector.
3. Check continuity between the following terminals of the meter control switch.

| Terminal No. | | Operation and status | Continuity |
|---|---|---|---|
| 1 | 5 | Press the ● (select) switch | Existed |
| | | Other than the above | Not existed |
| 12 | 5 | Press the ❑ (enter) switch | Existed |
| | | Other than the above | Not existed |
| 11 | 5 | Press the trip reset switch. | Existed |
| | | Other than the above | Not existed |
| 4 | 5 | Press the (illumination control) switch | Existed |
| | | Other than the above | Not existed |
| 6 | 5 | Press the (illumination control) switch | Existed |
| | | Other than the above | Not existed |

Is the inspection result normal?

YES >> INSPECTION END

NO >> Replace the meter control switch.

# OIL PRESSURE SWITCH SIGNAL CIRCUIT

## Description

INFOID:0000000008459099

Detects the engine oil pressure and transmits the oil pressure switch signal to IPDM E/R.

## Component Function Check

INFOID:0000000008459100

### 1.CHECK COMBINATION METER INPUT SIGNAL

Select the “Data Monitor” for the “METER/M&A” and check the “OIL W/L” monitor value.

| “OIL W/L” | |
|---|---|
| Ignition switch ON | : On |
| Engine running | : Off |

>> INSPECTION END

## Diagnosis Procedure

INFOID:0000000008459101

### 1.CHECK OIL PRESSURE SWITCH CIRCUIT

1. Turn ignition switch OFF.
2. Disconnect IPDM E/R connector and oil pressure switch connector.
3. Check continuity between IPDM E/R harness connector terminal and oil pressure switch harness connector terminal.

| Terminals | | | | Continuity |
|---|---|---|---|---|
| (+) | | (–) | | |
| IPDM E/R | | Oil pressure switch | | |
| Connector | Terminal | Connector | Terminal | |
| F12 | 75 | F63 | 1 | Existed |

4. Check continuity between IPDM E/R harness connector terminal and ground.

| Terminals | | | Continuity |
|---|---|---|---|
| (+) | | (–) | |
| IPDM E/R | | Ground | |
| Connector | Terminal | | |
| F12 | 75 | | Not existed |

Is the inspection result normal?

YES >> INSPECTION END
NO >> Repair harness or connector.

## Component Inspection

INFOID:0000000008459102

### 1.CHECK OIL PRESSURE SWITCH

Check continuity between oil pressure switch and ground.

| Condition | Continuity |
|---|---|
| Engine stopped | Existed |
| Engine running | Not existed |

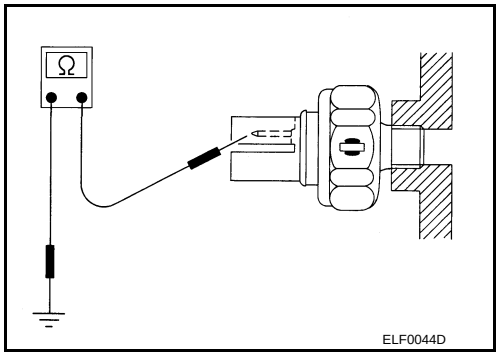


Is the inspection result normal?

YES >> INSPECTION END
NO >> Replace oil pressure switch. Refer to EM-42, "Removal and Installation".

# PARKING BRAKE SWITCH SIGNAL CIRCUIT

## Description

INFOID:0000000008459103

Transmits the parking brake switch signal to the combination meter.

## Diagnosis Procedure

INFOID:0000000008459104

### 1. CHECK COMBINATION METER INPUT SIGNAL

1. Turn ignition switch ON.
2. Check the voltage between combination meter harness connector terminal and ground.

| Terminals | | | Condition | Voltage (Approx.) |
|---|---|---|---|---|
| (+) | | (-) | | |
| Combination meter | | Ground | | |
| Connector | Terminal | | | |
| M34 | 26 | | When parking brake is applied | 0 V |
| | | | When parking brake is released | 5 V |

Is the inspection result normal?

YES >> INSPECTION END
NO >> GO TO 2.

### 2. CHECK PARKING BRAKE SWITCH SIGNAL CIRCUIT

1. Turn ignition switch OFF.
2. Disconnect combination meter connector and parking brake switch connector.
3. Check continuity between combination meter harness connector terminal and parking brake switch harness connector terminal.

| Terminals | | | | Continuity |
|---|---|---|---|---|
| (+) | | (-) | | |
| Combination meter | | Parking brake switch | | |
| Connector | Terminal | Connector | Terminal | |
| M34 | 26 | E27 | 1 | Existed |

4. Check continuity between combination meter harness connector terminal and ground.

| Terminals | | | Continuity |
|---|---|---|---|
| (+) | | (-) | |
| Combination meter | | Ground | |
| Connector | Terminal | | |
| M34 | 26 | | Not existed |

Is the inspection result normal?

YES >> INSPECTION END
NO >> Repair harness or connector.

## Component Inspection

INFOID:0000000008459105

### 1. CHECK PARKING BRAKE SWITCH

Check parking brake switch. Refer to BRC-92, "Component Inspection".

Is the inspection result normal?

YES >> INSPECTION END
NO >> Replace parking brake switch.

# WASHER LEVEL SWITCH SIGNAL CIRCUIT

## Description

INFOID:0000000008459106

Transmits the washer level switch signal to the combination meter.

## Diagnosis Procedure

INFOID:0000000008459107

### 1. CHECK WASHER LEVEL SWITCH SIGNAL CIRCUIT

1. Turn ignition switch OFF.
2. Disconnect combination meter connector and washer level switch connector.
3. Check continuity between combination meter harness connector terminal and washer level switch harness connector terminal.

| Terminals | | | | Continuity |
|---|---|---|---|---|
| Combination meter | | Washer level switch | | |
| (+) | | (-) | | |
| Connector | Terminal | Connector | Terminal | |
| M34 | 29 | E338 | 1 | Existed |

4. Check continuity between combination meter harness connector terminal and ground.

| Terminals | | | Continuity |
|---|---|---|---|
| (+) | | (-) | |
| Combination meter | | Ground | |
| Connector | Terminal | | |
| M34 | 29 | | Not existed |

Is the inspection result normal?

YES >> INSPECTION END
NO >> Repair harness or connector.

## Component Inspection

INFOID:0000000008459108

### 1. CHECK WASHER LEVEL SWITCH

1. Turn ignition switch OFF.
2. Disconnect washer level switch connector.
3. Check washer level switch.

| Terminals | | Condition | Continuity |
|---|---|---|---|
| Washer level switch | | | |
| 1 | 2 | Washer level switch ON | Existed |
| | | Washer level switch OFF | Not existed |

Is the inspection result normal?

YES >> INSPECTION END
NO >> Replace washer level switch. Refer to WW-104, "Removal and Installation".

# A/C AUTO AMP. CONNECTION RECOGNITION SIGNAL CIRCUIT

## Description

INFOID:0000000008459109

A/C auto amp. transmit the A/C auto amp. connection recognition signal to the combination meter.

## Diagnosis Procedure

INFOID:0000000008459110

### 1. CHECK A/C AUTO AMP. CONNECTION RECOGNITION SIGNAL

1. Turn ignition switch ON.
2. Check voltage between combination meter harness connector terminal and ground.

| Terminals | | | Voltage (Approx.) |
|---|---|---|---|
| (+) | | (-) | |
| Combination meter | | Ground | |
| Connector | Terminal | | |
| M34 | 19 | | 5 V |

Is the inspection result normal?

YES >> INSPECTION END
NO >> GO TO 2.

### 2. CHECK A/C AUTO AMP. CONNECTION RECOGNITION SIGNAL CIRCUIT

1. Turn ignition switch OFF.
2. Disconnect combination meter connector and A/C auto amp. connector.
3. Check continuity between combination meter harness connector terminal and A/C auto amp. harness connector terminal.

| Combination meter | | A/C auto amp. | | Continuity |
|---|---|---|---|---|
| Connector | Terminal | Connector | terminal | |
| M34 | 19 | M50 | 34 | Existed |

4. Check continuity between combination meter harness connector and ground.

| Combination meter | | Ground | Continuity |
|---|---|---|---|
| Connector | Terminal | | |
| M34 | 19 | | Not existed |

Is the inspection result normal?

YES >> INSPECTION END
NO >> Repair harness or connector.

# COMPASS

## Wiring Diagram - COMPASS -

INFOID:0000000008459111

For connector terminal arrangements, harness layouts, and alphabets in a ⬡ (option abbreviation; if not described in wiring diagram), refer to GI-12, "Connector Information".

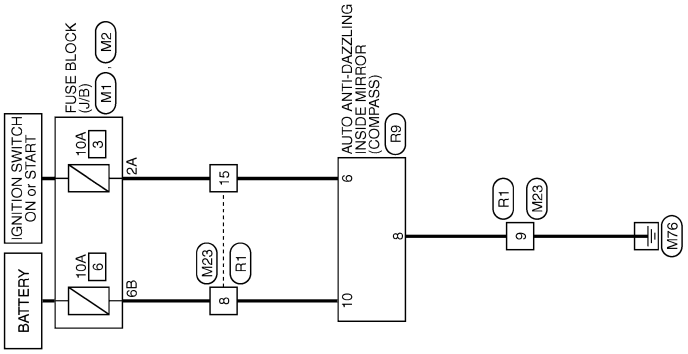


COMPASS

2010/09/06

JCNWM5352GB

# ECU DIAGNOSIS INFORMATION

## COMBINATION METER

### Reference Value

INFOID:0000000008459112

VALUES ON THE DIAGNOSIS TOOL

**NOTE:**
The following table includes information (items) inapplicable to this vehicle. For information (items) applicable to this vehicle, refer to CONSULT display items.

| Monitor Item | Condition | | Value/Status |
|---|---|---|---|
| SPEED METER [km/h] | Ignition switch ON | While driving | Equivalent to speedometer reading **NOTE:** 655.35 is displayed when the malfunction signal is received |
| SPEED OUTPUT [km/h] | Ignition switch ON | While driving | Equivalent to speedometer reading **NOTE:** 655.35 is displayed when the malfunction signal is received |
| ODO OUTPUT [km/h or mph] | Ignition switch ON | — | Equivalent to odometer reading in combination meter |
| TACHO METER [rpm] | Ignition switch ON | While driving | Equivalent to tachometer reading **NOTE:** 8191.875 is displayed when the malfunction signal is received |
| FUEL METER [L] | Ignition switch ON | — | Values according to fuel level |
| W TEMP METER [°C] | Ignition switch ON | — | Values according to engine coolant temperature **NOTE:** 215 is displayed when the malfunction signal is input |
| FUEL CAP W/L | Ignition switch ON | Fuel filler cap warning display ON | On |
| | | Fuel filler cap warning display OFF | Off |
| ABS W/L | Ignition switch ON | ABS warning lamp ON | On |
| | | ABS warning lamp OFF | Off |
| VDC/TCS IND | Ignition switch ON | VDC OFF indicator lamp ON | On |
| | | VDC OFF indicator lamp OFF | Off |
| SLIP IND | Ignition switch ON | VDC warning lamp ON | On |
| | | VDC waning lamp OFF | Off |
| BRAKE W/L | Ignition switch ON | Brake warning lamp ON | On |
| | | Brake warning lamp OFF | Off |
| DOOR W/L | Ignition switch ON | Door warning lamp ON | On |
| | | Door warning lamp OFF | Off |
| HI-BEAM IND | Ignition switch ON | High-beam indicator lamp ON | On |
| | | High-beam indicator lamp OFF | Off |
| TURN IND | Ignition switch ON | Turn signal indicator lamp ON | On |
| | | Turn signal indicator lamp OFF | Off |
| LIGHT IND | Ignition switch ON | Light indicator lamp ON | On |
| | | Light indicator lamp OFF | Off |
| OIL W/L | Ignition switch ON | Oil pressure warning lamp ON | On |
| | | Oil pressure warning lamp OFF | Off |

| Monitor Item | Condition | | Value/Status |
|---|---|---|---|
| MIL | Ignition switch ON | Malfunction indicator lamp ON | On |
| | | Malfunction indicator lamp OFF | Off |
| CRUISE IND | Ignition switch ON | CRUISE indicator lamp ON | On |
| | | CRUISE indicator lamp OFF | Off |
| O/D OFF IND | Ignition switch ON | O/D OFF indicator lamp ON | On |
| | | O/D OFF indicator lamp OFF | Off |
| 4WD W/L | Ignition switch ON | AWD warning lamp ON | On |
| | | AWD warning lamp OFF | Off |
| 4WD LOCK IND | Ignition switch ON | AWD LOCK indicator lamp ON | On |
| | | AWD LOCK indicator lamp OFF | Off |
| FUEL W/L | Ignition switch ON | Low-fuel warning lamp ON | On |
| | | Low-fuel warning lamp OFF | Off |
| WASHER W/L | Ignition switch ON | Washer warning displayed | On |
| | | Washer warning not displayed | Off |
| AIR PRES W/L | Ignition switch ON | Low tire pressure lamp ON | On |
| | | Low tire pressure lamp OFF | Off |
| KEY G/Y W/L | Ignition switch ON | Key warning lamp (green/yellow) ON | On |
| | | Key warning lamp (green/yellow) OFF | Off |
| LCD | Ignition switch ON | Engine start information display | B&P I |
| | Ignition switch ACC | Engine start information display | B&P N |
| | Ignition switch LOCK | Key ID warning display | ID NG |
| | Ignition switch LOCK | Steering lock information display | ROTAT |
| | Ignition switch LOCK | P position warning display | SFT P |
| | Ignition switch LOCK | Intelligent Key insert information display | INSRT |
| | Ignition switch LOCK | Intelligent Key low battery warning display | BATT |
| | Ignition switch ON | Take away warning display | NO KY |
| | Ignition switch LOCK | Key warning display | OUTKY |
| | Ignition switch ON | ACC warning display | LK WN |
| SHIFT IND | Ignition switch ON | Shift position indicator P display | P |
| | | Shift position indicator R display | R |
| | | Shift position indicator N display | N |
| | | Shift position indicator D display | D |
| | | Shift position indicator L display | L |
| O/D OFF SW | Ignition switch ON | Overdrive control switch ON | On |
| | | Overdrive control switch OFF | Off |
| M RANGE SW | Ignition switch ON | **NOTE:**<br>This item is displayed, but cannot be monitored. | Off |

| Monitor Item | Condition | | Value/Status |
|---|---|---|---|
| NM RANGE SW | Ignition switch ON | **NOTE:**<br>This item is displayed, but cannot be monitored. | Off |
| AT SFT UP SW | Ignition switch ON | **NOTE:**<br>This item is displayed, but cannot be monitored. | Off |
| AT SFT DWN SW | Ignition switch ON | **NOTE:**<br>This item is displayed, but cannot be monitored. | Off |
| ST SFT UP SW | Ignition switch ON | **NOTE:**<br>This item is displayed, but cannot be monitored. | Off |
| ST SFT DWN SW | Ignition switch ON | **NOTE:**<br>This item is displayed, but cannot be monitored. | Off |
| PKB SW | Ignition switch ON | Parking brake switch ON | On |
| | | Parking brake switch OFF | Off |
| BUCKLE SW | Ignition switch ON | Seat belt (driver side) not fastened | On |
| | | Seat belt (driver side) fastened | Off |
| BRAKE OIL SW | Ignition switch ON | Brake fluid level switch ON | On |
| | | Brake fluid level switch OFF | Off |
| DISTANCE<br>[km] | Ignition switch ON | — | Possible driving distance calculated by combination meter |
| A/C AMP CONN | Ignition switch ON | Other than the following | On |
| | | Receives ambient sensor power signal | Off |
| ENTER SW | Ignition switch ON | When ❑ is pressed | On |
| | | Other than the above | Off |
| SELECT SW | Ignition switch ON | When ● is pressed | On |
| | | Other than the above | Off |
| OUTSIDE TEMP<br>[°C] or [°F] | Ignition switch ON | — | Equivalent to ambient temperature<br>**NOTE:**<br>This may not match the indicated value on the information display. |
| FUEL LOW SIG | Ignition switch ON | Low fuel warning displayed | On |
| | | Low fuel warning not displayed | Off |
| BUZZER | Ignition switch ON | Buzzer ON | On |
| | | Buzzer OFF | Off |
| BSW IND | Ignition switch ON | Blind Spot Intervention ON indicator (green) ON | On |
| | | Blind Spot Intervention ON indicator (green) OFF | Off |
| BSW W/L | Ignition switch ON | BSW/Blind Spot Intervention warning lamp (yellow) ON | On |
| | | BSW/Blind Spot Intervention warning lamp (yellow) OFF | Off |
| LDW IND | Ignition switch ON | Lane departure warning lamp (yellow) or LDW ON indicator lamp (green) ON | On |
| | | Lane departure warning lamp (yellow) and LDW ON indicator lamp (green) OFF | Off |

**NOTE:**
Some items are not available according to vehicle specification.

## TERMINAL LAYOUT

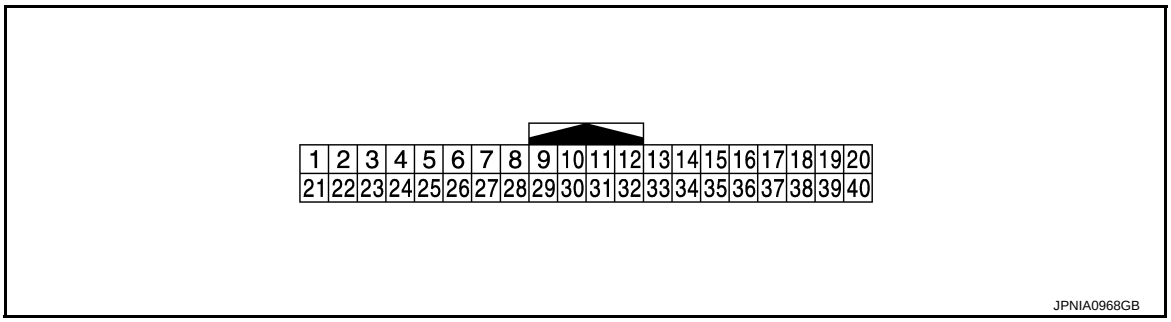


## PHYSICAL VALUES

| Terminal No. (Wire color) | | Description | | Condition | | Value (Approx.) |
|---|---|---|---|---|---|---|
| + | – | Signal name | Input/ Output | | | |
| 1 (Y) | Ground | Battery power supply | Input | Ignition switch OFF | — | Battery voltage |
| 2 (LG) | Ground | IGN signal | Input | Ignition switch ON | — | Battery voltage |
| 3 (B) | Ground | Ground | — | Ignition switch ON | — | 0 V |
| 5 (SB) | Ground | Illumination control signal | Output | Ignition switch ON | • Lighting switch 1ST<br>• When meter illumination is maximum | 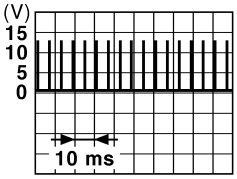 JPNIA0828GB |
| | | | | | • Lighting switch 1ST<br>• When meter illumination is minimum | 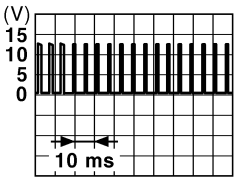 JPNIA0827GB |
| 8 (SB) | 10 (LG) | Trip reset signal | Input | Ignition switch ON | When trip reset switch is pressed. | 0 V |
| | | | | | Other than the above | 5 V |
| 10 (LG) | Ground | Meter control switch ground | — | Ignition switch ON | — | 0 V |
| 11 (L) | 10 (LG) | Enter switch signal | Input | Ignition switch ON | When ❑ is pressed. | 0 V |
| | | | | | Other than the above | 5 V |
| 12 (R) | 10 (LG) | Select switch signal | Input | Ignition switch ON | When ● is pressed. | 0 V |
| | | | | | Other than the above | 5 V |
| 13 (Y*1 or V*2) | 10 (LG) | Illumination control switch signal (+) | Input | Ignition switch ON | When is pressed. | 0 V |
| | | | | | Other than the above | 5 V |

| Terminal No. (Wire color) | | Description | | Condition | | Value (Approx.) |
|---|---|---|---|---|---|---|
| + | – | Signal name | Input/ Output | | | |
| 14 (GR) | 10 (LG) | Illumination control switch signal (-) | Input | Ignition switch ON | When is pressed. | 0 V |
| | | | | | Other than the above | 5 V |
| 15 (BR) | Ground | Air bag signal | Input | Ignition switch ON | Air bag warning lamp ON | 4 V |
| | | | | | Air bag warning lamp OFF | 0 V |
| 18 (L) | Ground | Ambient sensor signal | Input | Ignition switch ON | Changes depending to ambient temperature. | 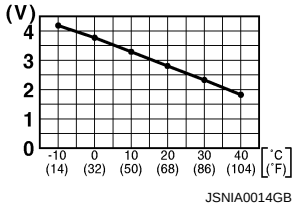  |
| 19 (P) | Ground | Ambient sensor power | Input | Ignition switch ON | — | 5 V |
| 20 (Y) | Ground | Ambient sensor ground | Input | Ignition switch ON | — | 0 V |
| 21 (L) | — | CAN-H | — | — | — | — |
| 22 (P) | — | CAN-L | — | — | — | — |
| 23 (B) | Ground | Ground | — | Ignition switch ON | — | 0 V |
| 24 (W) | Ground | Fuel level sensor ground | — | Ignition switch ON | — | 0 V |
| 25 (BR) | Ground | Alternator signal | Input | Ignition switch ON | Charge warning lamp ON | 2 V |
| | | | | | Charge warning lamp OFF | 12 V |
| 26 (G) | Ground | Parking brake switch signal | Input | Ignition switch ON | Parking brake ON | 0 V |
| | | | | | Parking brake OFF | 5 V |
| 27 (V) | Ground | Brake fluid level switch signal | Input | Ignition switch ON | Brake fluid level is normal | 12 V |
| | | | | | Brake fluid level is less than LOW level | 0 V |
| 29 (R) | Ground | Washer level switch signal | Input | Ignition switch ON | Washer level switch ON | 0 V |
| | | | | | Washer level switch OFF | 5 V |

| Terminal No. (Wire color) | | Description | | Condition | | Value (Approx.) |
|---|---|---|---|---|---|---|
| + | – | Signal name | Input/ Output | | | |
| 30 (P) | Ground | Vehicle speed signal (2-pulse) | Output | Ignition switch ON | Speedometer operated [When vehicle speed is approx. 40 km/h (25 MPH)] | **NOTE:** The maximum voltage varies depending on the specification (destination unit). 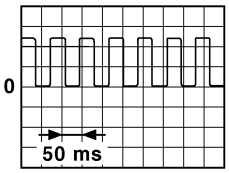  JSNIA0015GB |
| 31 (V) | Ground | Vehicle speed signal (8-pulse) | Output | Ignition switch ON | Speedometer operated [When vehicle speed is approx. 40 km/h (25 MPH)] | **NOTE:** The maximum voltage varies depending on the specification (destination unit). 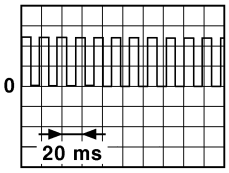  JSNIA0012GB |
| 32 (LG) | Ground | Overdrive control switch signal | Input | Ignition switch ON | Overdrive control switch pressed. | 0 V |
| | | | | | Overdrive control switch not pressed. | 12 V |
| 34 (G) | Ground | Fuel level sensor signal | Input | Ignition switch ON | — | 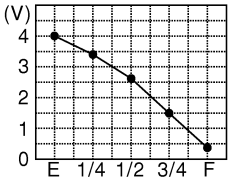  JPNIA0740ZZ |
| 35 (SB) | Ground | Seat belt buckle switch signal (driver side) | Input | Ignition switch ON | When driver seat belt is fastened. | 12 V |
| | | | | | When driver seat belt is unfastened. | 0 V |
| 36 (R) | Ground | Seat belt buckle switch signal (passenger side) | Input | Ignition switch ON | • When getting in the passenger seat.<br>• When passenger seat belt is fastened. | 12 V |
| | | | | | • When getting in the passenger seat.<br>• When passenger seat belt is unfastened. | 0 V |

*1: Without automatic drive positioner

*2: With automatic drive positioner

## Wiring Diagram - METER -

INFOID:0000000008459113

For connector terminal arrangements, harness layouts, and alphabets in a ⬡ (option abbreviation; if not described in wiring diagram), refer to GI-12, "Connector Information".

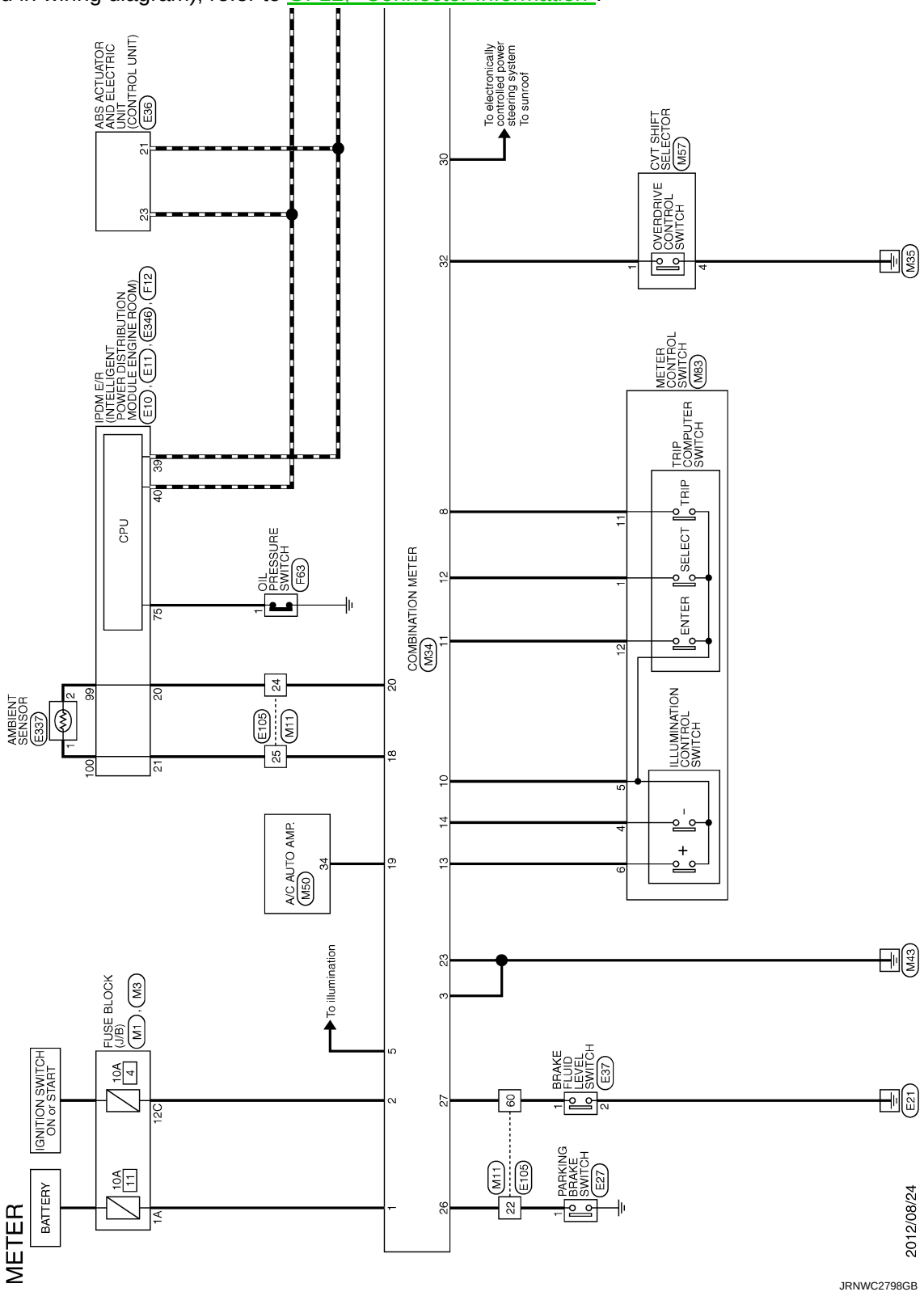

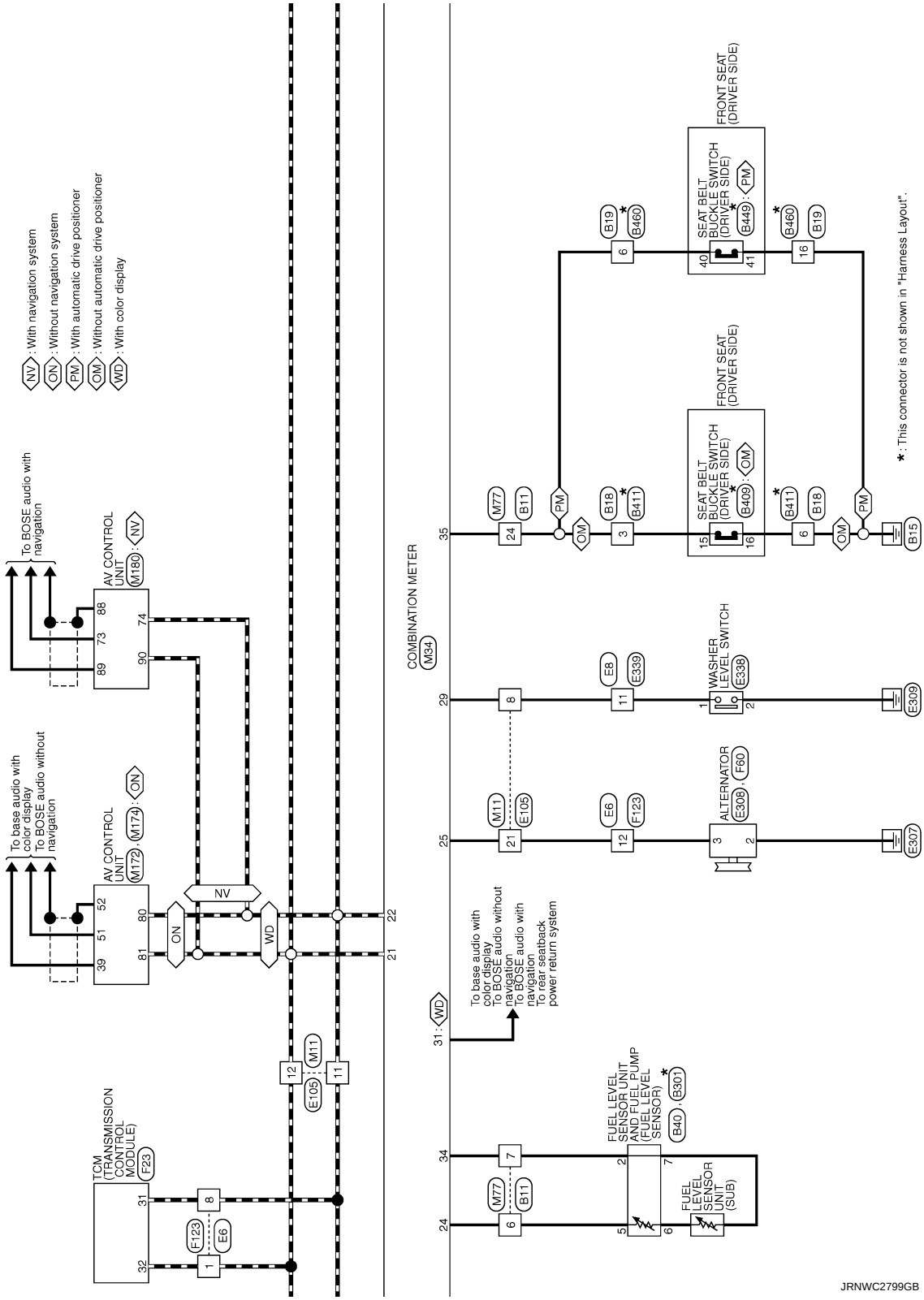
NV : With navigation system
ON : Without navigation system
PM : With automatic drive positioner
OM : Without automatic drive positioner
WD : With color display
To BOSE audio with navigation
To base audio with color display
To BOSE audio without navigation
AV CONTROL UNIT
M180
M174
M172
TCM (TRANSMISSION CONTROL MODULE)
F23
COMBINATION METER
M34
FRONT SEAT (DRIVER SIDE)
SEAT BELT BUCKLE SWITCH (DRIVER SIDE)
B449
B409
WASHER LEVEL SWITCH
E338
ALTERNATOR
E308, F60
FUEL LEVEL SENSOR UNIT AND FUEL PUMP (FUEL LEVEL SENSOR)
B301
B40
FUEL LEVEL SENSOR UNIT (SUB)
To base audio with color display
To BOSE audio without navigation
To BOSE audio with navigation
To rear seatback power return system
* : This connector is not shown in "Harness Layout".
JRNWC2799GB

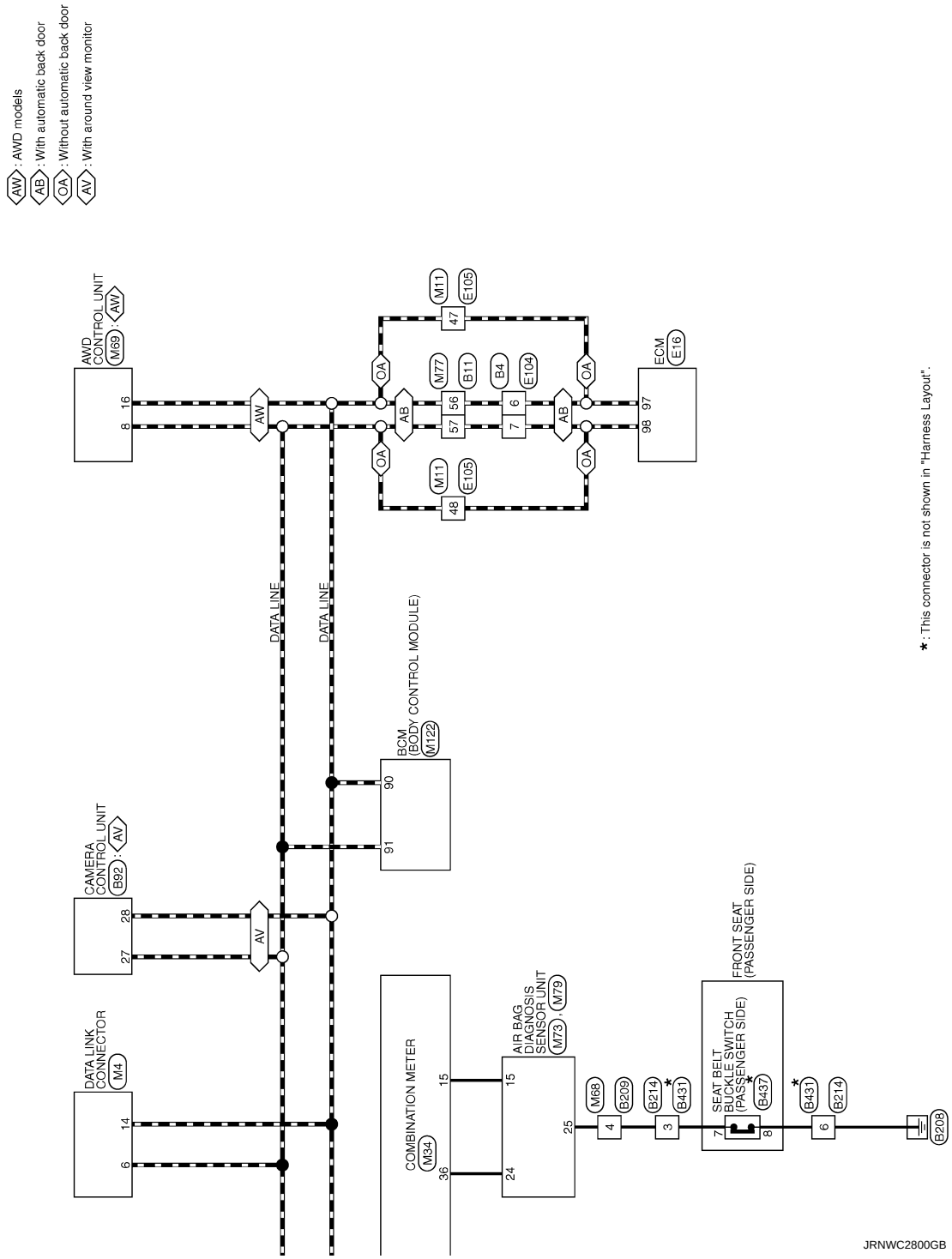


## Fail-Safe

INFOID:0000000008459114

### FAIL-SAFE

The combination meter activates the fail-safe control if CAN communication with each unit is malfunctioning.

| Function | | Specifications |
|---|---|---|
| Speedometer | | Reset to zero by suspending communication. |
| Tachometer | | |
| Engine coolant temperature gauge | | |
| Illumination control | | When suspending communication, changes to nighttime mode. |
| Information display | Door open warning | The display turns off by suspending communication. |
| | Parking brake release warning | |
| | Low tire pressure warning | |
| | Fuel filler cap warning | |
| | Instantaneous fuel warning | • When reception time of an abnormal signal is 2 seconds or less, the last received datum is used for calculation to indicate the result.<br>• When reception time of an abnormal signal is more than two seconds, the last result calculated during normal condition is indicated. |
| | Average fuel consumption | |
| | Average vehicle speed | |
| | Travel distance | |
| Buzzer | | The buzzer turns off by suspending communication. |
| Warning lamp/indicator lamp | ABS warning lamp | The lamp turns on by suspending communication. |
| | Brake warning lamp | |
| | AWD warning lamp | |
| | Malfunction indicator lamp | |
| | Low tire pressure warning lamp | The lamp turns ON after flashing for 1 minute. |
| | High beam indicator lamp | The lamp turns off by suspending communication. |
| | Turn signal indicator lamp | |
| | Light indicator lamp | |
| | Oil pressure warning lamp | |
| | CRUISE indicator lamp | |
| | O/D OFF indicator lamp | |
| | VDC warning lamp | |
| | VDC OFF indicator lamp | |
| | AWD LOCK indicator lamp | |
| | Key warning lamp | |
| | Blind Spot Intervention ON indicator | |
| | BSW/Blind Spot Intervention warning lamp | |
| | Lane departure warning lamp | |
| | LDW ON indicator lamp | |

## DTC Index

INFOID:0000000008459115

| Display contents of CONSULT | Diagnostic item is detected when ... | Refer to |
|---|---|---|
| CAN COMM CIRCUIT [U1000] | When combination meter is not transmitting or receiving CAN communication signal for 2 seconds or more. | MWI-39, "Diagnosis Procedure" |
| CONTROL UNIT (CAN) [U1010] | When detecting error during the initial diagnosis of the CAN controller of combination meter. | MWI-40, "Diagnosis Procedure" |

| Display contents of CONSULT | Diagnostic item is detected when ... | Refer to |
|---|---|---|
| VEHICLE SPEED [B2205] | The abnormal vehicle speed signal is input from the ABS actuator and electric unit (control unit) for 2 seconds or more. | MWI-41, "Diagnosis Procedure" |
| ENGINE SPEED [B2267] | If ECM continuously transmits abnormal engine speed signals for 2 seconds or more. | MWI-42, "Diagnosis Procedure" |
| WATER TEMP [B2268] | If ECM continuously transmits abnormal engine coolant temperature signals for 60 seconds or more. | MWI-43, "Diagnosis Procedure" |

# IPDM E/R (INTELLIGENT POWER DISTRIBUTION MODULE ENGINE ROOM)

## Reference Value

INFOID:0000000008946097

### VALUES ON THE DIAGNOSIS TOOL

**NOTE:**
The following table includes information (items) inapplicable to this vehicle. For information (items) applicable to this vehicle, refer to CONSULT display items.

| Monitor Item | Condition | | Value/Status |
|---|---|---|---|
| MOTOR FAN REQ | Engine idle speed | Changes depending on engine coolant temperature, air conditioner operation status, vehicle speed, etc. | 1/2/3/4 |
| AC COMP REQ | Engine running | A/C switch OFF | Off |
| | | A/C switch ON (Compressor is operating) | On |
| TAIL&CLR REQ | Lighting switch OFF | | Off |
| | Lighting switch 1ST, 2ND, HI or AUTO (Light is illuminated) | | On |
| HL LO REQ | Lighting switch OFF | | Off |
| | Lighting switch 2ND HI or AUTO (Light is illuminated) | | On |
| HL HI REQ | Lighting switch OFF | | Off |
| | Lighting switch HI | | On |
| FR FOG REQ | Lighting switch 2ND or AUTO (Light is illuminated) | Front fog lamp switch OFF | Off |
| | | • Front fog lamp switch ON<br>• Daytime running light activated (Only for Canada) | On |
| FR WIP REQ | Ignition switch ON | Front wiper switch OFF | Stop |
| | | Front wiper switch INT | 1LOW |
| | | Front wiper switch LO | Low |
| | | Front wiper switch HI | Hi |
| WIP AUTO STOP | Ignition switch ON | Front wiper stop position | STOP P |
| | | Any position other than front wiper stop position | ACT P |
| WIP PROT | Ignition switch ON | Front wiper operates normally | Off |
| | | Front wiper stops at fail-safe operation | BLOCK |
| IGN RLY1 -REQ | Ignition switch OFF or ACC | | Off |
| | Ignition switch ON | | On |
| IGN RLY | Ignition switch OFF or ACC | | Off |
| | Ignition switch ON | | On |
| PUSH SW | Release the push-button ignition switch | | Off |
| | Press the push-button ignition switch | | On |
| INTER/NP SW | Ignition switch ON | Selector lever in any position other than P or N | Off |
| | | Selector lever in P or N position | On |
| ST RLY CONT | Ignition switch ON | | Off |
| | At engine cranking | | On |

| Monitor Item | Condition | | Value/Status |
|---|---|---|---|
| IHBT RLY -REQ | Ignition switch ON | | Off |
| | At engine cranking | | On |
| ST/INHI RLY | Ignition switch ON | | Off |
| | At engine cranking | | INHI ON → ST ON |
| | The status of starter relay or starter control relay cannot be recognized by the battery voltage malfunction, etc. when the starter relay is ON and the starter control relay is OFF | | UNKWN |
| DETENT SW | Ignition switch ON | • Press the selector button with selector lever in P position<br>• Selector lever in any position other than P | Off |
| | Release the selector button with selector lever in P position | | On |
| S/L RLY -REQ | **NOTE:**<br>The item is indicated, but not monitored. | | Off |
| S/L STATE | **NOTE:**<br>The item is indicated, but not monitored. | | UNLOCK |
| DTRL REQ | **NOTE:**<br>The item is indicated, but not monitored. | | Off |
| OIL P SW | Ignition switch OFF, ACC or engine running | | Open |
| | Ignition switch ON | | Close |
| HOOD SW | **NOTE:**<br>The item is indicated, but not monitored. | | Off |
| HL WASHER REQ | **NOTE:**<br>The item is indicated, but not monitored. | | Off |
| THFT HRN REQ | Not operating | | Off |
| | • Panic alarm is activated<br>• Horn is activated with VEHICLE SECURITY (THEFT WARNING) SYSTEM | | On |
| HORN CHIRP | Not operating | | Off |
| | Door locking with Intelligent Key (horn chirp mode) | | On |
| CRNRNG LMP REQ | **NOTE:**<br>The item is indicated, but not monitored. | | Off |

## TERMINAL LAYOUT

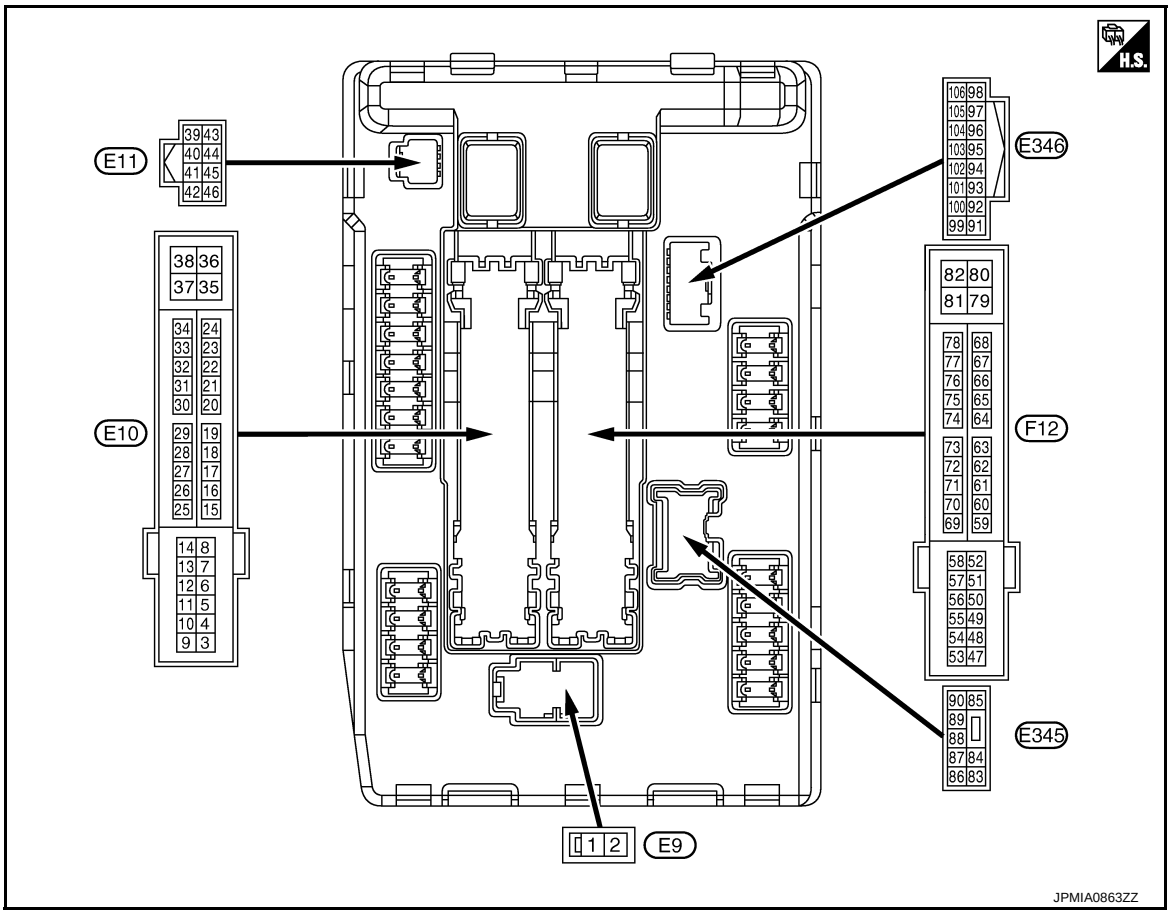


## PHYSICAL VALUES

| Terminal No. (Wire color) | | Description | | Condition | | Value (Approx.) |
|---|---|---|---|---|---|---|
| + | – | Signal name | Input/ Output | | | |
| 1 (R) | Ground | Battery power supply | Input | Ignition switch OFF | | Battery voltage |
| 2 (L) | Ground | Battery power supply | Input | Ignition switch OFF | | Battery voltage |
| 4 (LG) | Ground | Front wiper LO | Output | Ignition switch ON | Front wiper switch OFF | 0 V |
| | | | | | Front wiper switch LO | Battery voltage |
| 5 (Y) | Ground | Front wiper HI | Output | Ignition switch ON | Front wiper switch OFF | 0 V |
| | | | | | Front wiper switch HI | Battery voltage |
| 7 (GR) | Ground | Tail, license plate lamps & illuminations | Output | Ignition switch ON | Lighting switch OFF | 0 V |
| | | | | | Lighting switch 1ST | Battery voltage |
| 10 (BR) | Ground | ECM relay power supply | Output | Ignition switch OFF (More than a few seconds after turning ignition switch OFF) | | 0 V |
| | | | | • Ignition switch ON<br>• Ignition switch OFF (For a few seconds after turning ignition switch OFF) | | Battery voltage |
| 12 (B) | Ground | Ground | — | Ignition switch ON | | 0 V |

| Terminal No. (Wire color) | | Description | | Condition | | Value (Approx.) |
|---|---|---|---|---|---|---|
| + | – | Signal name | Input/ Output | | | |
| 13 (SB) | Ground | Fuel pump power supply | Output | Approximately 1 second or more after turning the ignition switch ON | | 0 V |
| | | | | • Approximately 1 second after turning the ignition switch ON<br>• Engine running | | Battery voltage |
| 15 (W) | Ground | Ignition relay power supply | Output | Ignition switch OFF | | 0 V |
| | | | | Ignition switch ON | | Battery voltage |
| 16 (R) | Ground | Front wiper auto stop | Input | Ignition switch ON | Front wiper stop position | 0 V |
| | | | | | Any position other than front wiper stop position | Battery voltage |
| 19 (Y) | Ground | Ignition relay power supply | Output | Ignition switch OFF | | 0 V |
| | | | | Ignition switch ON | | Battery voltage |
| 20 (L) | Ground | Ambient sensor ground | Output | Ignition switch ON | | 0 V |
| 21 (O) | Ground | Ambient sensor | Input | Ignition switch ON<br>**NOTE:**<br>Changes depending to ambient temperature | | 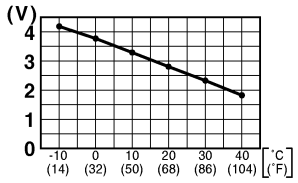 <br>JSNIA0014GB |
| 22 (SB) | Ground | Refrigerant pressure sensor ground | Output | Engine running | • Warm-up condition<br>• Idle speed | 0 V |
| 23 (GR) | Ground | Refrigerant pressure sensor | Output | Engine running | • Warm-up condition<br>• Both A/C switch and blower fan motor switch ON<br>(Compressor operates) | 1.0 - 4.0 V |
| 24 (G) | Ground | Refrigerant pressure sensor power supply | Input | Ignition switch OFF | | 0 V |
| | | | | Ignition switch ON | | 5.0 V |
| 25 (GR) | Ground | Ignition relay power supply | Output | Ignition switch OFF | | 0 V |
| | | | | Ignition switch ON | | Battery voltage |
| 26*1 (Y) | Ground | Ignition relay power supply | Output | Ignition switch OFF | | 0 V |
| | | | | Ignition switch ON | | Battery voltage |
| 27 (W) | Ground | Ignition relay monitor | Input | Ignition switch OFF or ACC | | Battery voltage |
| | | | | Ignition switch ON | | 0 V |
| 28 (SB) | Ground | Push-button ignition switch | Input | Press the push-button ignition switch | | 0 V |
| | | | | Release the push-button ignition switch | | Battery voltage |
| 30 (BR) | Ground | Starter relay control | Input | Ignition switch ON | Selector lever in any position other than P or N | 0 V |
| | | | | | Selector lever P or N | Battery voltage |
| 34 (O) | Ground | Cooling fan relay-3 control | Input | Cooling fan stopped | | Battery voltage |
| | | | | Cooling fan at HI operation | | 0 V |
| 35 (P) | Ground | Cooling fan relay-1 power supply | Input | Cooling fan stopped | | Battery voltage |
| | | | | Cooling fan at LO operation | | 6.0 V |
| 36 (G) | Ground | Battery power supply | Input | Ignition switch OFF | | Battery voltage |

| Terminal No. (Wire color) | | Description | | Condition | | Value (Approx.) |
|---|---|---|---|---|---|---|
| + | – | Signal name | Input/ Output | | | |
| 38 (GR) | Ground | Cooling fan relay-1 power supply | Output | Cooling fan not operating | | 0 V |
| | | | | Cooling fan at LO operation | | 6.0 V |
| 39 (P) | — | CAN-L | Input/ Output | — | | — |
| 40 (L) | — | CAN-H | Input/ Output | — | | — |
| 41 (B) | Ground | Ground | — | Ignition switch ON | | 0 V |
| 42 (SB) | Ground | Cooling fan relay-2 control | Input | Cooling fan stopped | | Battery voltage |
| | | | | • Cooling fan MID operating<br>• Cooling fan HI operating | | 0 V |
| 43 (Y) | Ground | CVT shift selector (Detention switch) | Input | Ignition switch ON | Press the selector button (selector lever P) | Battery voltage |
| | | | | | • Selector lever in any position other than P<br>• Release the selector button (selector lever P) | 0 V |
| 44 (W) | Ground | Horn relay control | Input | The horn is deactivated | | Battery voltage |
| | | | | The horn is activated | | 0 V |
| 45 (G) | Ground | Horn switch | Input | The horn is deactivated | | Battery voltage |
| | | | | The horn is activated | | 0 V |
| 46 (BR) | Ground | Starter relay control | Input | Ignition switch ON | Selector lever in any position other than P or N | 0 V |
| | | | | | Selector lever P or N | Battery voltage |
| 48 (W) | Ground | A/C relay power supply | Output | Engine running | A/C switch OFF | 0 V |
| | | | | | A/C switch ON (A/C compressor is operating) | Battery voltage |
| 49 (R/B) | Ground | ECM relay power supply | Output | Ignition switch OFF (More than a few seconds after turning ignition switch OFF) | | 0 V |
| | | | | • Ignition switch ON<br>• Ignition switch OFF (For a few seconds after turning ignition switch OFF) | | Battery voltage |
| 51 (LG) | Ground | Ignition relay power supply | Output | Ignition switch OFF | | 0 V |
| | | | | Ignition switch ON | | Battery voltage |
| 52 (Y/G) | Ground | Ignition relay power supply | Output | Ignition switch OFF | | 0 V |
| | | | | Ignition switch ON | | Battery voltage |
| 53 (R/W) | Ground | ECM relay power supply | Output | Ignition switch OFF (More than a few seconds after turning ignition switch OFF) | | 0 V |
| | | | | • Ignition switch ON<br>• Ignition switch OFF (For a few seconds after turning ignition switch OFF) | | Battery voltage |

| Terminal No. (Wire color) | | Description | | Condition | | Value (Approx.) |
|---|---|---|---|---|---|---|
| + | – | Signal name | Input/ Output | | | |
| 54 (G/W) | Ground | Throttle control motor relay power supply | Output | Ignition switch OFF (More than a few seconds after turning ignition switch OFF) | | 0 V |
| | | | | • Ignition switch ON<br>• Ignition switch OFF (For a few seconds after turning ignition switch OFF) | | Battery voltage |
| 55 (W/L) | Ground | ECM power supply | Output | Ignition switch OFF | | Battery voltage |
| 56 (R/Y) | Ground | Ignition relay power supply | Output | Ignition switch OFF | | 0 V |
| | | | | Ignition switch ON | | Battery voltage |
| 57 (O) | Ground | Ignition relay power supply | Output | Ignition switch OFF | | 0 V |
| | | | | Ignition switch ON | | Battery voltage |
| 58 (Y) | Ground | Ignition relay power supply | Output | Ignition switch OFF | | 0 V |
| | | | | Ignition switch ON | | Battery voltage |
| 69 (W/B) | Ground | ECM relay control | Output | Ignition switch OFF (More than a few seconds after turning ignition switch OFF) | | Battery voltage |
| | | | | • Ignition switch ON<br>• Ignition switch OFF (For a few seconds after turning ignition switch OFF) | | 0 - 1.5 V |
| 70 (O) | Ground | Throttle control motor relay control | Output | Ignition switch ON → OFF | | 0 -1.0 V<br>↓<br>Battery voltage<br>↓<br>0 V |
| | | | | Ignition switch ON | | 0 - 1.0 V |
| 72 (R/B) | Ground | Starter relay control | Input | Ignition switch ON | Selector lever in any position other than P or N | 0 V |
| | | | | | Selector lever P or N | Battery voltage |
| 75 (LG) | Ground | Oil pressure switch | Input | Ignition switch ON | Engine stopped | 0 V |
| | | | | | Engine running | Battery voltage |

| Terminal No. (Wire color) | | Description | | Condition | | Value (Approx.) |
|---|---|---|---|---|---|---|
| + | – | Signal name | Input/ Output | | | |
| 76 (SB) | Ground | Power generation command signal | Output | Ignition switch ON | | 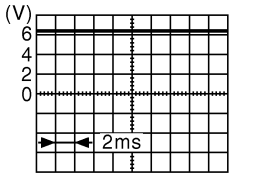  6.3 V |
| | | | | 40% is set on “ACTIVE TEST”, “ALTERNATOR DUTY” of “ENGINE” | | 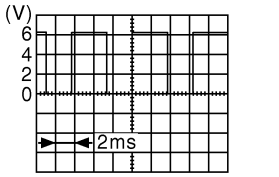  3.8 V |
| | | | | 80% is set on “ACTIVE TEST”, “ALTERNATOR DUTY” of “ENGINE” | | 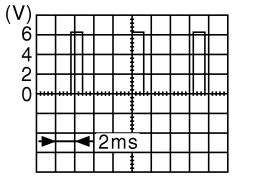  1.4 V |
| 77 (GR) | Ground | Fuel pump relay control | Output | • Approximately 1 second after turning the ignition switch ON<br>• Engine running | | 0 - 1.5 V |
| | | | | Approximately 1 second or more after turning the ignition switch ON | | Battery voltage |
| 80 (B) | Ground | Starter motor | Output | At engine cranking | | Battery voltage |
| 83 (Y) | Ground | Headlamp LO (RH) | Output | Ignition switch ON | Lighting switch OFF | 0 V |
| | | | | | Lighting switch 2ND | Battery voltage |
| 84 (L) | Ground | Headlamp LO (LH) | Output | Ignition switch ON | Lighting switch OFF | 0 V |
| | | | | | Lighting switch 2ND | Battery voltage |
| 86 (SB) | Ground | Front fog lamp (RH) | Output | Lighting switch 2ND | Front fog lamp switch OFF | 0 V |
| | | | | | • Front fog lamp switch ON<br>• Daytime running light activated (Only for Canada) | Battery voltage |
| 87 (GR) | Ground | Front fog lamp (LH) | Output | Lighting switch 2ND | Front fog lamp switch OFF | 0 V |
| | | | | | • Front fog lamp switch ON<br>• Daytime running light activated (Only for Canada) | Battery voltage |
| 88 (W) | Ground | Washer pump power supply | Output | Ignition switch ON | | Battery voltage |

| Terminal No. (Wire color) | | Description | | Condition | | Value (Approx.) |
|---|---|---|---|---|---|---|
| + | – | Signal name | Input/ Output | | | |
| 89 (L) | Ground | Headlamp HI (RH) | Output | Ignition switch ON | Lighting switch OFF | 0 V |
| | | | | | • Lighting switch HI<br>• Lighting switch PASS | Battery voltage |
| 90 (G) | Ground | Headlamp HI (LH) | Output | Ignition switch ON | Lighting switch OFF | 0 V |
| | | | | | • Lighting switch HI<br>• Lighting switch PASS | Battery voltage |
| 91 (R) | Ground | Parking lamp (RH) | Output | Ignition switch ON | Lighting switch OFF | 0 V |
| | | | | | Lighting switch 1ST | Battery voltage |
| 92 (LG) | Ground | Parking lamp (LH) | Output | Ignition switch ON | Lighting switch OFF | 0 V |
| | | | | | Lighting switch 1ST | Battery voltage |
| 99 (BR) | Ground | Ambient sensor ground | Input | Ignition switch ON | | 0 V |
| 100 (SB) | Ground | Ambient sensor | Output | Ignition switch ON<br>**NOTE:**<br>Changes depending to ambient temperature | | 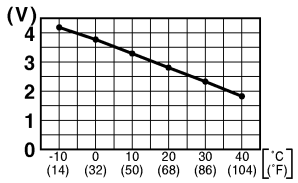 <br>JSNIA0014GB |
| 101 (L) | Ground | Refrigerant pressure sensor ground | Input | Engine running | • Warm-up condition<br>• Idle speed | 0 V |
| 102 (B) | Ground | Refrigerant pressure sensor | Input | Engine running | • Warm-up condition<br>• Both A/C switch and blower fan motor switch ON<br>(Compressor operates) | 1.0 - 4.0 V |
| 103 (P) | Ground | Refrigerant pressure sensor power supply | Output | Ignition switch OFF | | 0 V |
| | | | | Ignition switch ON | | 5.0 V |

*1: AWD models only

## Wiring Diagram - IPDM E/R -

INFOID:0000000008946098

For connector terminal arrangements, harness layouts, and alphabets in a ⬡ (option abbreviation; if not described in wiring diagram), refer to GI-12, "Connector Information".

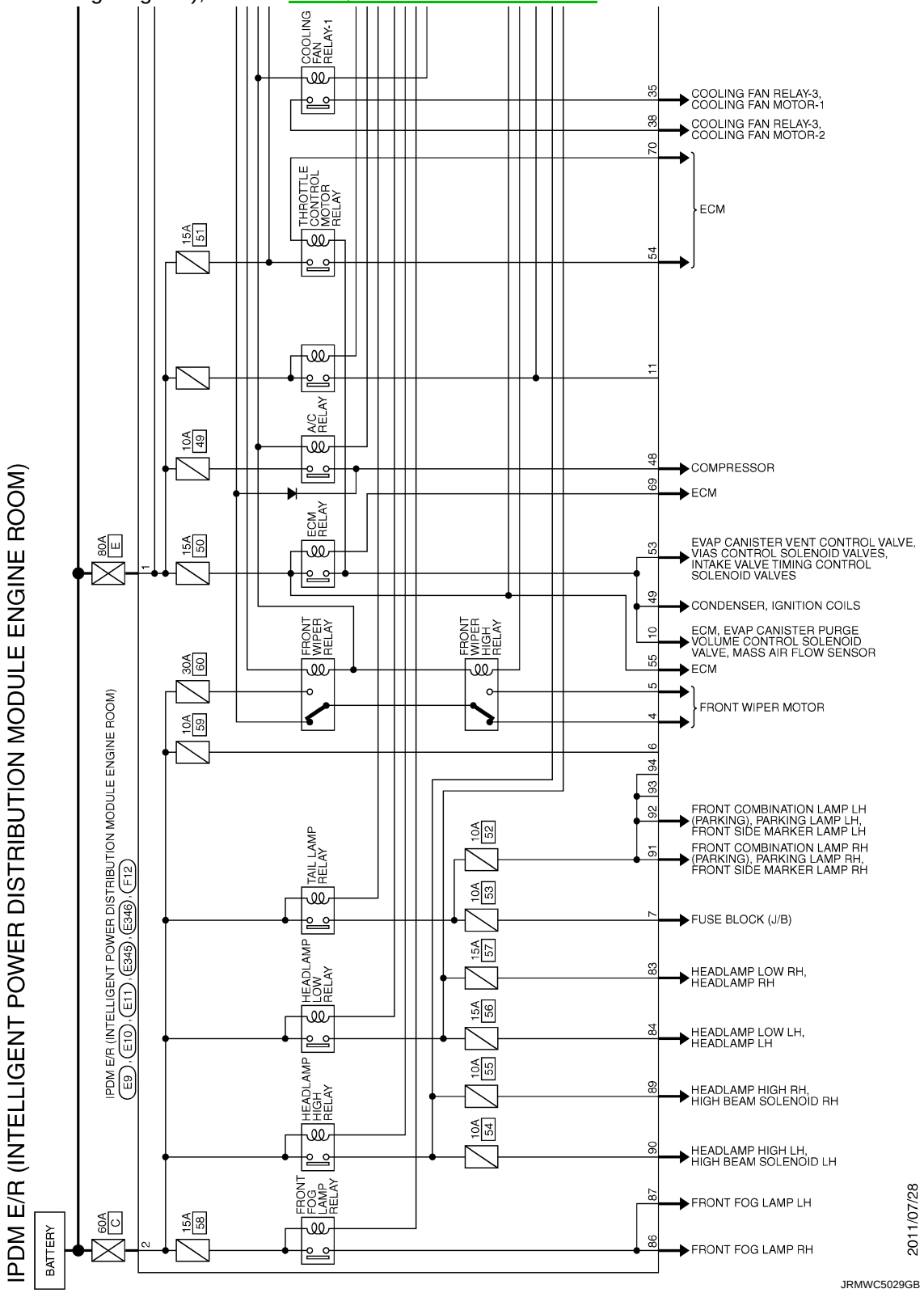

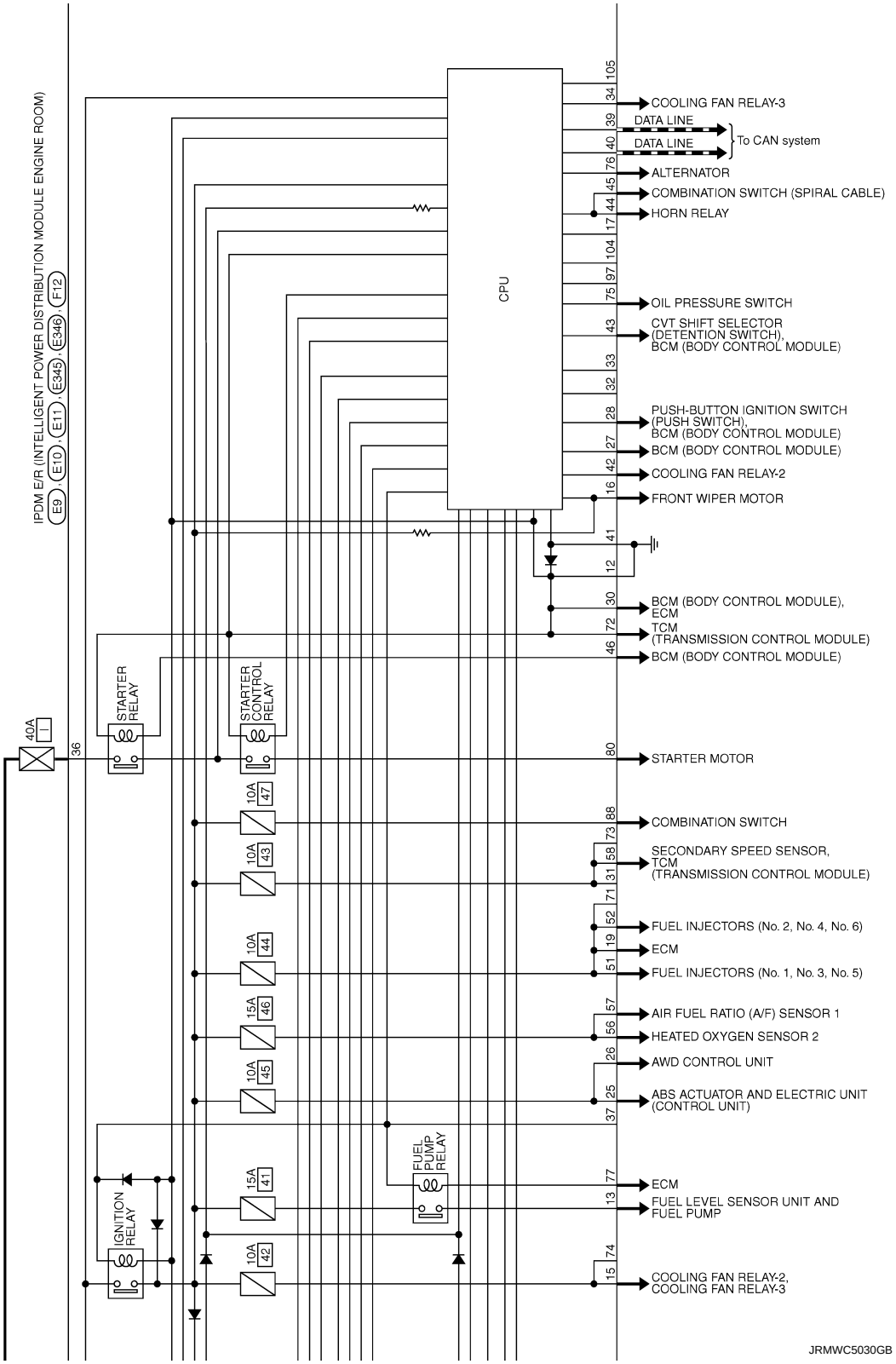
IPDM E/R (INTELLIGENT POWER DISTRIBUTION MODULE ENGINE ROOM)
E9, E10, E11, E345, E346, F12
40A
36
STARTER RELAY
STARTER CONTROL RELAY
IGNITION RELAY
FUEL PUMP RELAY
10A 47
10A 43
10A 44
15A 46
10A 45
15A 41
10A 42
CPU
105
34
39
40
76
45
44
17
104
97
75
43
33
32
28
27
42
16
41
12
30
72
46
80
88
73
58
31
71
52
19
51
57
56
26
25
37
77
13
74
15
COOLING FAN RELAY-3
DATA LINE
DATA LINE
To CAN system
ALTERNATOR
COMBINATION SWITCH (SPIRAL CABLE)
HORN RELAY
OIL PRESSURE SWITCH
CVT SHIFT SELECTOR (DETENTION SWITCH), BCM (BODY CONTROL MODULE)
PUSH-BUTTON IGNITION SWITCH (PUSH SWITCH), BCM (BODY CONTROL MODULE)
BCM (BODY CONTROL MODULE)
COOLING FAN RELAY-2
FRONT WIPER MOTOR
BCM (BODY CONTROL MODULE), ECM
TCM (TRANSMISSION CONTROL MODULE)
BCM (BODY CONTROL MODULE)
STARTER MOTOR
COMBINATION SWITCH
SECONDARY SPEED SENSOR, TCM (TRANSMISSION CONTROL MODULE)
FUEL INJECTORS (No. 2, No. 4, No. 6)
ECM
FUEL INJECTORS (No. 1, No. 3, No. 5)
AIR FUEL RATIO (A/F) SENSOR 1
HEATED OXYGEN SENSOR 2
AWD CONTROL UNIT
ABS ACTUATOR AND ELECTRIC UNIT (CONTROL UNIT)
ECM
FUEL LEVEL SENSOR UNIT AND FUEL PUMP
COOLING FAN RELAY-2, COOLING FAN RELAY-3
JRMWC5030GB

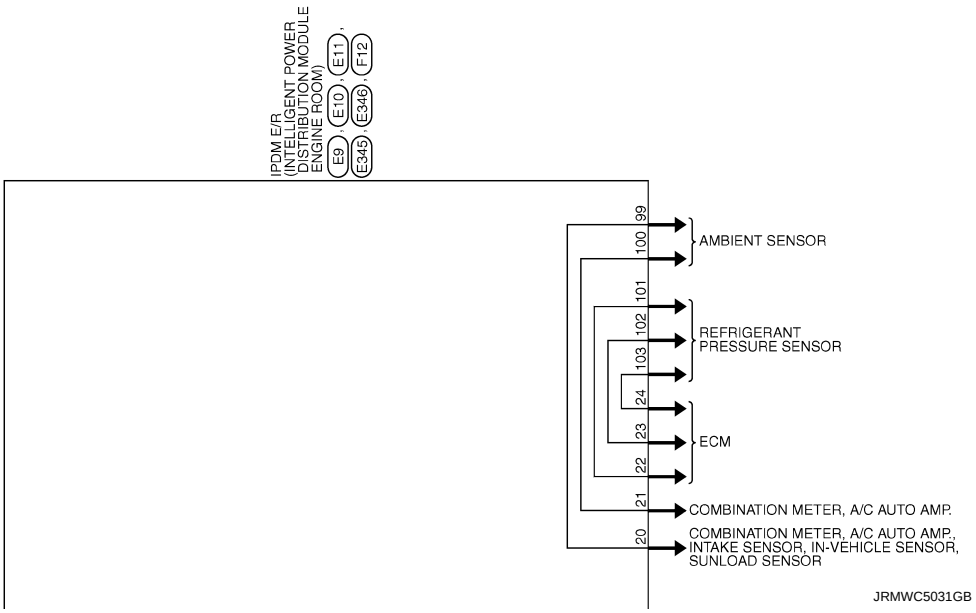


## Fail-safe

*INFOID:0000000008946099*

### CAN COMMUNICATION CONTROL

When CAN communication with ECM and BCM is impossible, IPDM E/R performs fail-safe control. After CAN communication recovers normally, it also returns to normal control.

If No CAN Communication Is Available With ECM

| Control part | Fail-safe operation |
|---|---|
| Cooling fan | • Turns ON the cooling fan relay-2 and the cooling fan relay-3 when ignition switch is turned ON (Cooling fan operates at HI)<br>• Turns OFF the cooling fan relay-1, the cooling fan relay-2 and the cooling fan relay-3 when the ignition switch is turned OFF (Cooling fan does not operate) |
| A/C compressor | A/C relay OFF |
| Alternator | Outputs the power generation command signal (PWM signal) 0% |

If No CAN Communication Is Available With BCM

| Control part | Fail-safe operation |
|---|---|
| Headlamp | • Turns ON the headlamp low relay when the ignition switch is turned ON<br>• Turns OFF the headlamp low relay when the ignition switch is turned OFF<br>• Headlamp high relay OFF |
| • Parking lamps<br>• License plate lamps<br>• Side maker lamps<br>• Illuminations<br>• Tail lamps | • Turns ON the tail lamp relay when the ignition switch is turned ON<br>• Turns OFF the tail lamp relay when the ignition switch is turned OFF |
| Front wiper | • The status just before activation of fail-safe control is maintained until the ignition switch is turned OFF while the front wiper is operating at LO or HI speed.<br>• The wiper is operated at LO speed until the ignition switch is turned OFF if the fail-safe control is activated while the front wiper is set in the INT/AUTO mode and the front wiper motor is operating. |
| Front fog lamps | Front fog lamp relay OFF |
| Horn | Horn OFF |
| Ignition relay | The status just before activation of fail-safe is maintained. |
| Starter motor | Starter control relay OFF |

## IGNITION RELAY MALFUNCTION DETECTION FUNCTION

- IPDM E/R monitors the voltage at the contact circuit and excitation coil circuit of the ignition relay inside it.
- IPDM E/R judges the ignition relay error if the voltage differs between the contact circuit and the excitation coil circuit.
- If the ignition relay cannot turn OFF due to contact seizure, it activates the tail lamp relay for 10 minutes to alert the user to the ignition relay malfunction when the ignition switch is turned OFF.

| Voltage judgment | | IPDM E/R judgment | Operation |
|---|---|---|---|
| Ignition relay contact side | Ignition relay excitation coil side | | |
| ON | ON | Ignition relay ON normal | — |
| OFF | OFF | Ignition relay OFF normal | — |
| ON | OFF | Ignition relay ON stuck | • Detects DTC “B2098: IGN RELAY ON”<br>• Turns ON the tail lamp relay for 10 minutes |
| OFF | ON | Ignition relay OFF stuck | Detects DTC “B2099: IGN RELAY OFF” |

## FRONT WIPER CONTROL

IPDM E/R detects front wiper stop position by a front wiper auto stop signal.
When a front wiper stop position signal is in the conditions listed below, IPDM E/R stops power supply to wiper after repeating a front wiper 10 seconds activation and 20 seconds stop five times.

| Ignition switch | Front wiper switch | Front wiper stop position signal |
|---|---|---|
| ON | OFF | The front wiper stop position signal (stop position) cannot be input for 10 seconds. |
| | ON | The front wiper auto stop signal does not change for 10 seconds. |

**NOTE:**
This operation status can be confirmed on the IPDM E/R “Data Monitor” that displays “BLOCK” for the item “WIP PROT” while the wiper is stopped.

### STARTER MOTOR PROTECTION FUNCTION

IPDM E/R turns OFF the starter control relay to protect the starter motor when the starter control relay remains active for 90 seconds.

## DTC Index

INFOID:0000000008946100

**NOTE:**
- The details of time display are as follows.
- CRNT: A malfunction is detected now.
- PAST: A malfunction was detected in the past.
- IGN counter is displayed on FFD (Freeze Frame data).
- The number is 0 when is detected now.
- The number increases like 1 → 2 ··· 38 → 39 after returning to the normal condition whenever IGN OFF → ON.
- The number is fixed to 39 until the self-diagnosis results are erased if it is over 39.

×: Applicable

| CONSULT display | Fail-safe | Refer to |
|---|---|---|
| No DTC is detected.<br>further testing<br>may be required. | — | — |
| U1000: CAN COMM CIRCUIT | × | PCS-15 |
| B2098: IGN RELAY ON | × | PCS-16 |
| B2099: IGN RELAY OFF | — | PCS-17 |
| B210B: START CONT RLY ON | — | SEC-79 |
| B210C: START CONT RLY OFF | — | SEC-80 |
| B210D: STARTER RELAY ON | — | SEC-81 |
| B210E: STARTER RELAY OFF | — | SEC-82 |
| B210F: INTRLCK/PNP SW ON | — | SEC-84 |
| B2110: INTRLCK/PNP SW OFF | — | SEC-86 |

# SYMPTOM DIAGNOSIS

## THE FUEL GAUGE POINTER DOES NOT MOVE

### Description

INFOID:0000000008459120

Fuel gauge needle will not move from a certain position.

### Diagnosis Procedure

INFOID:0000000008459121

#### 1. CHECK FOR THE COMBINATION METER IN SELF-DIAGNOSIS MODE

Check that the fuel gauge needle moves normally by using self-diagnosis function of the combination meter.

Is the inspection result normal?

YES >> GO TO 2.
NO >> Replace combination meter. Refer to MWI-94, "Removal and Installation".

#### 2. CHECK COMBINATION METER OUTPUT SIGNAL

1. Connect CONSULT.
2. Select the “Data Monitor” for the “METER/M&A” and compare the “FUEL METER” monitor value with the fuel gauge reading on the combination meter. Refer to MWI-46, "Component Function Check".

Does monitor value match fuel gauge reading?

YES >> GO TO 3.
NO >> Replace combination meter.

#### 3. CHECK FUEL LEVEL SENSOR SIGNAL CIRCUIT

Check the fuel level sensor signal circuit. Refer to MWI-46, "Diagnosis Procedure".

Is the inspection result normal?

YES >> GO TO 4.
NO >> Repair harness or connector.

#### 4. CHECK FUEL LEVEL SENSOR UNIT

Perform a unit check for the fuel level sensor unit. Refer to MWI-47, "Component Inspection".

Is the inspection result normal?

YES >> GO TO 5.
NO >> Replace fuel level sensor unit. Refer to FL-6, "Removal and Installation".

#### 5. CHECK FLOAT INTERFERENCE

Check that the float arm interferes with or binds to other components in the fuel tank.

Is the inspection result normal?

YES >> Replace combination meter.
NO >> Repair or replace malfunctioning parts.

# THE METER CONTROL SWITCH IS INOPERATIVE

## Description

INFOID:0000000008459122

If any of the following malfunctions is found for the meter control switch operation.
- All switches are inoperative.
- The specified switch cannot be operated.

## Diagnosis Procedure

INFOID:0000000008459123

### 1. CHECK METER CONTROL SWITCH SIGNAL CIRCUIT

Check the meter control switch signal circuit. Refer to MWI-49, "Diagnosis Procedure".

Is the inspection result normal?

YES >> GO TO 2.
NO >> Repair harness or connector.

### 2. CHECK METER CONTROL SWITCH

Perform a unit check for the meter control switch. Refer to MWI-50, "Component Inspection".

Is the inspection result normal?

YES >> Replace combination meter.
NG >> Replace meter control switch.

# THE OIL PRESSURE WARNING LAMP DOES NOT TURN ON

## Description

INFOID:0000000008459124

The oil pressure warning lamp stays off when the ignition switch is turned ON.

## Diagnosis Procedure

INFOID:0000000008459125

### 1. CHECK OIL PRESSURE WARNING LAMP

Perform auto active test. Refer to PCS-10, "Diagnosis Description".

Is oil pressure warning lamp blinking?

YES >> GO TO 2.
NO >> GO TO 4.

### 2. CHECK OIL PRESSURE SWITCH SIGNAL CIRCUIT

Check the oil pressure switch signal circuit. Refer to MWI-52, "Diagnosis Procedure".

Is the inspection result normal?

YES >> GO TO 3.
NO >> Repair harness or connector.

### 3. CHECK OIL PRESSURE SWITCH

Perform a unit check for the oil pressure switch. Refer to MWI-52, "Component Inspection".

Is the inspection result normal?

YES >> Replace IPDM E/R.
NO >> Replace oil pressure switch.

### 4. CHECK COMBINATION METER INPUT SIGNAL

Connect CONSULT and perform an input signal check for the combination meter. Refer to MWI-52, "Component Function Check".

Is the inspection result normal?

YES >> Replace combination meter.
NO >> Replace IPDM E/R. Refer to PCS-34, "Removal and Installation".

# THE OIL PRESSURE WARNING LAMP DOES NOT TURN OFF

## Description

INFOID:0000000008459126

The oil pressure warning lamp remains illuminated while the engine is running (normal oil pressure).

## Diagnosis Procedure

INFOID:0000000008459127

### 1. CHECK OIL PRESSURE WARNING LAMP

Perform auto active test. Refer to PCS-10, "Diagnosis Description".

Is oil pressure warning lamp blinking?

YES >> GO TO 2.
NO >> GO TO 5.

### 2. CHECK IPDM E/R OUTPUT VOLTAGE

1. Turn ignition switch OFF.
2. Disconnect the oil pressure switch connector.
3. Turn ignition switch ON.
4. Check voltage between the oil pressure switch harness connector terminal and ground.

| Terminals | | | Voltage (Approx.) |
|---|---|---|---|
| (+) | | (–) | |
| Oil pressure switch | | Ground | |
| Connector | Terminal | | |
| F63 | 1 | | 12 V |

Is the inspection result normal?

YES >> GO TO 3.
NO >> GO TO 4.

### 3. CHECK OIL PRESSURE SWITCH

Perform a unit check for the oil pressure switch. Refer to MWI-52, "Component Inspection".

Is the inspection result normal?

YES >> Replace IPDM E/R. Refer to PCS-34, "Removal and Installation".
NO >> Replace oil pressure switch.

### 4. CHECK OIL PRESSURE SWITCH SIGNAL CIRCUIT

Check the oil pressure switch signal circuit. Refer to MWI-52, "Diagnosis Procedure".

Is the inspection result normal?

YES >> GO TO 5.
NO >> Repair harness or connector.

### 5. CHECK COMBINATION METER INPUT SIGNAL

Connect CONSULT and perform an input signal check for the combination meter. Refer to MWI-52, "Component Function Check".

Is the inspection result normal?

YES >> Replace combination meter.
NO >> Replace IPDM E/R. Refer to PCS-34, "Removal and Installation".

# THE PARKING BRAKE RELEASE WARNING CONTINUES DISPLAYING, OR DOES NOT DISPLAY

## Description

INFOID:0000000008459128

- The parking brake warning is displayed during vehicle travel even though the parking brake is released.
- The parking brake warning is not displayed even though driving the vehicle with the parking brake applied.

## Diagnosis Procedure

INFOID:0000000008459129

### 1. CHECK PARKING BRAKE WARNING LAMP OPERATION

1. Start engine.
2. Check the operation of the parking brake warning lamp when operating the parking brake.

| Condition | Warning lamp status |
|---|---|
| When parking brake is applied | ON |
| When parking brake is released | OFF |

Is the inspection result normal?

YES >> Replace combination meter.
NO >> GO TO 2.

### 2. CHECK PARKING BRAKE SWITCH SIGNAL CIRCUIT

1. Turn ignition switch OFF.
2. Check the parking brake switch signal circuit. Refer to MWI-54, "Diagnosis Procedure".

Is the inspection result normal?

YES >> GO TO 3.
NG >> Repair harness or connector.

### 3. CHECK PARKING BRAKE SWITCH

Perform a unit check for the parking brake switch. Refer to MWI-54, "Component Inspection".

Is the inspection result normal?

YES >> Replace combination meter.
NO >> Replace parking brake switch.

# THE LOW WASHER FLUID WARNING CONTINUES DISPLAYING, OR DOES NOT DISPLAY

## Description

INFOID:0000000008459130

- The warning is still displayed even after washer fluid is added.
- The warning is not displayed even though the washer tank is empty.

## Diagnosis Procedure

INFOID:0000000008459131

### 1. CHECK WASHER LEVEL SWITCH SIGNAL CIRCUIT

Check the washer level switch signal circuit. Refer to MWI-55, "Diagnosis Procedure".

Is the inspection result normal?

YES >> GO TO 2.
NO >> Repair harness or connector.

### 2. CHECK WASHER LEVEL SWITCH

Perform a unit check for the washer level switch. Refer to MWI-55, "Component Inspection".

Is the inspection result normal?

YES >> Replace combination meter.
NO >> Replace washer level switch. Refer to WW-104, "Removal and Installation".

# THE DOOR OPEN WARNING CONTINUES DISPLAYING, OR DOES NOT DISPLAY

## Description

INFOID:0000000008459132

- The door ajar warning is displayed even though all of the doors are closed.
- The door ajar warning is not displayed even though a door is ajar.

## Diagnosis Procedure

INFOID:0000000008459133

### 1. CHECK BCM INPUT/OUTPUT SIGNAL

Connect CONSULT and check the BCM input signals. Refer to DLK-97, "WITH AUTOMATIC BACK DOOR : Component Function Check" (with automatic back door) or DLK-99, "WITHOUT AUTOMATIC BACK DOOR : Component Function Check" (without automatic back door).

Is the inspection result normal?

YES >> GO TO 2.
NO >> GO TO 3.

### 2. CHECK COMBINATION METER INPUT SIGNAL

Select the “Data Monitor” for the “METER/M&A” and check the “DOOR W/L” monitor value.

| “DOOR W/L” | |
|---|---|
| Door open | : On |
| Door closed | : Off |

Is the inspection result normal?

YES >> Replace combination meter.
NO >> Replace BCM. Refer to BCS-84, "Removal and Installation".

### 3. CHECK DOOR SWITCH SIGNAL CIRCUIT

Check the door switch signal circuit. Refer to DLK-97, "WITH AUTOMATIC BACK DOOR : Diagnosis Procedure" (with automatic back door) or DLK-99, "WITHOUT AUTOMATIC BACK DOOR : Diagnosis Procedure" (without automatic back door).

Is the inspection result normal?

YES >> GO TO 4.
NO >> Repair harness or connector.

### 4. CHECK DOOR SWITCH

Perform a unit check for the door switch. Refer to DLK-98, "WITH AUTOMATIC BACK DOOR : Component Inspection" (with automatic back door) or DLK-101, "WITHOUT AUTOMATIC BACK DOOR : Component Inspection" (without automatic back door).

Is the inspection result normal?

YES >> Replace combination meter.
NO >> Replace applicable door switch. Refer toDLK-313, "Removal and Installation".

# THE AMBIENT TEMPERATURE DISPLAY IS INCORRECT

## Description

INFOID:0000000008459134

- The displayed ambient air temperature is higher than the actual temperature.
- The displayed ambient air temperature is lower than the actual temperature.

## Diagnosis Procedure

INFOID:0000000008459135

**NOTE:**
Check that the symptom is not applicable to the normal operating condition before starting diagnosis. Refer to MWI-90, "INFORMATION DISPLAY : Description".

### 1. CHECK AMBIENT SENSOR SIGNAL CIRCUIT

Check the ambient sensor signal circuit. Refer to HAC-47, "Diagnosis Procedure" (without 7 inch display) or HAC-167, "Diagnosis Procedure" (with 7 inch display).

Is the inspection result normal?

YES >> GO TO 2.
NO >> Repair harness or connector.

### 2. CHECK A/C AUTO AMP. CONNECTION RECOGNITION SIGNAL CIRCUIT

Check the A/C auto amp. connection recognition signal circuit. Refer to MWI-56, "Diagnosis Procedure".

Is the inspection result normal?

YES >> GO TO 3.
NO >> Repair harness or connector.

### 3. CHECK AMBIENT SENSOR

Perform a unit check for the ambient sensor. Refer to HAC-48, "Component Inspection" (without 7 inch display) or HAC-168, "Component Inspection" (with 7 inch display).

Is the inspection result normal?

YES >> Replace combination meter.
NO >> Replace ambient sensor. Refer to VTL-25, "Removal and Installation" (without 7 inch display) or VTL-88, "Removal and Installation" (with 7 inch display).

# NORMAL OPERATING CONDITION

## COMPASS

### COMPASS : Description

INFOID:0000000008459136

#### COMPASS

- The electronic compass is highly protected from changes in most magnetic fields. However, some large changes in magnetic fields can affect it. Some examples are (but not limited to): high tension power lines, large steel buildings, subways, steel bridges, automatic car washes, large piles of scrap metal, etc. While this does not happen very often, it is possible.
- During normal operation, the compass mirror will continuously update the compass calibration to adjust for gradual changes in the vehicle's magnetic “remnant” field. If the vehicle is subjected to high magnetic influences, the compass may appear to indicate false headings, become locked, or appear that it is unable to be calibrated. If this occurs, perform the calibration procedure.
- If at any time the compass continually displays an incorrect direction or the reading is erratic or locked, verify the correct zone variance.

Symptom Chart

| Symptom | Cause | Solution / Reference |
|---|---|---|
| The compass display reads “C”. | • Compass is not calibrated.<br>• Incorrect zone variance setting.<br>• Large change in magnetic field (Steel bridges, subways, concentrations of metal, carwashes, etc.)<br>• Compass was calibrated incorrectly or in the presence of a strong magnetic field. | Perform Calibration. Refer to MWI-32, "Description". |
| Compass shows the wrong direction. | | |
| Compass does not change direction appears “Locked”. | | |
| Compass does not show all the directions, one or more is missing. | | |
| The compass was calibrated but it “loses” calibration. | | |
| On long trips the compass shows the wrong direction. | | Perform zone variation setting if correct reading is desired in that location. Refer toMWI-32, "Description". |

## INFORMATION DISPLAY

### INFORMATION DISPLAY : Description

INFOID:0000000008459137

#### AMBIENT AIR TEMPERATURE

The displayed ambient air temperature on the information display may differ from the actual temperature because it is a corrected value calculated from the ambient sensor signal by the combination meter. Refer to MWI-26, "INFORMATION DISPLAY : System Description" for details on the correction process.

#### POSSIBLE DRIVING DISTANCE

The calculated possible driving distance may differ from the actual distance to empty if the refueling amount is approximately 15 ℓ (4 US gal, 3-1/4 Imp gal) or less. This is because the refuel control (moves the fuel gauge needle quicker than normal judging that the driver is refueling the vehicle) is not performing.

# PRECAUTION

## PRECAUTIONS

## FOR USA AND CANADA

### FOR USA AND CANADA : Precaution for Supplemental Restraint System (SRS) "AIR BAG" and "SEAT BELT PRE-TENSIONER"

INFOID:0000000008459138

The Supplemental Restraint System such as “AIR BAG” and “SEAT BELT PRE-TENSIONER”, used along with a front seat belt, helps to reduce the risk or severity of injury to the driver and front passenger for certain types of collision. This system includes seat belt switch inputs and dual stage front air bag modules. The SRS system uses the seat belt switches to determine the front air bag deployment, and may only deploy one front air bag, depending on the severity of a collision and whether the front occupants are belted or unbelted.
Information necessary to service the system safely is included in the “SRS AIR BAG” and “SEAT BELT” of this Service Manual.

**WARNING:**
**Always observe the following items for preventing accidental activation.**
- **To avoid rendering the SRS inoperative, which could increase the risk of personal injury or death in the event of a collision that would result in air bag inflation, all maintenance must be performed by an authorized NISSAN/INFINITI dealer.**
- **Improper maintenance, including incorrect removal and installation of the SRS, can lead to personal injury caused by unintentional activation of the system. For removal of Spiral Cable and Air Bag Module, see “SRS AIR BAG”.**
- **Never use electrical test equipment on any circuit related to the SRS unless instructed to in this Service Manual. SRS wiring harnesses can be identified by yellow and/or orange harnesses or harness connectors.**

PRECAUTIONS WHEN USING POWER TOOLS (AIR OR ELECTRIC) AND HAMMERS

**WARNING:**
**Always observe the following items for preventing accidental activation.**
- **When working near the Air Bag Diagnosis Sensor Unit or other Air Bag System sensors with the ignition ON or engine running, never use air or electric power tools or strike near the sensor(s) with a hammer. Heavy vibration could activate the sensor(s) and deploy the air bag(s), possibly causing serious injury.**
- **When using air or electric power tools or hammers, always switch the ignition OFF, disconnect the battery, and wait at least 3 minutes before performing any service.**

## FOR MEXICO

### FOR MEXICO : Precaution for Supplemental Restraint System (SRS) "AIR BAG" and "SEAT BELT PRE-TENSIONER"

INFOID:0000000008459139

The Supplemental Restraint System such as “AIR BAG” and “SEAT BELT PRE-TENSIONER”, used along with a front seat belt, helps to reduce the risk or severity of injury to the driver and front passenger for certain types of collision. Information necessary to service the system safely is included in the “SRS AIR BAG” and “SEAT BELT” of this Service Manual.

**WARNING:**
**Always observe the following items for preventing accidental activation.**
- **To avoid rendering the SRS inoperative, which could increase the risk of personal injury or death in the event of a collision that would result in air bag inflation, all maintenance must be performed by an authorized NISSAN/INFINITI dealer.**
- **Improper maintenance, including incorrect removal and installation of the SRS, can lead to personal injury caused by unintentional activation of the system. For removal of Spiral Cable and Air Bag Module, see “SRS AIR BAG”.**
- **Never use electrical test equipment on any circuit related to the SRS unless instructed to in this Service Manual. SRS wiring harnesses can be identified by yellow and/or orange harnesses or harness connectors.**

PRECAUTIONS WHEN USING POWER TOOLS (AIR OR ELECTRIC) AND HAMMERS

**WARNING:**

**Always observe the following items for preventing accidental activation.**

- **When working near the Air Bag Diagnosis Sensor Unit or other Air Bag System sensors with the ignition ON or engine running, never use air or electric power tools or strike near the sensor(s) with a hammer. Heavy vibration could activate the sensor(s) and deploy the air bag(s), possibly causing serious injury.**
- **When using air or electric power tools or hammers, always switch the ignition OFF, disconnect the battery, and wait at least 3 minutes before performing any service.**

# PREPARATION

## PREPARATION

### Commercial Service Tools

INFOID:0000000008459140

| Tool name | Description |
|---|---|
| Power tool 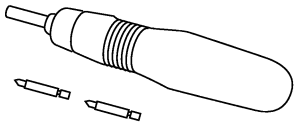 PBIC0191E | Loosening screws |

# REMOVAL AND INSTALLATION

## COMBINATION METER

### Exploded View

INFOID:0000000008459141

Refer to IP-12, "Exploded View".

DISASSEMBLY

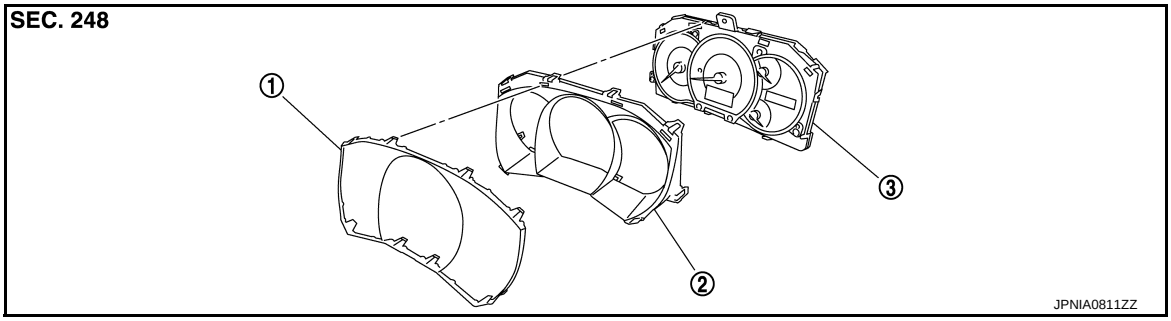


1. Front cover
2. Upper housing
3. Unified meter control unit

### Removal and Installation

INFOID:0000000008459142

REMOVAL

Removal

1. Remove the cluster lid A. Refer to IP-13, "Removal and Installation".
2. Remove screws (A) and connector, and remove combination meter (1).

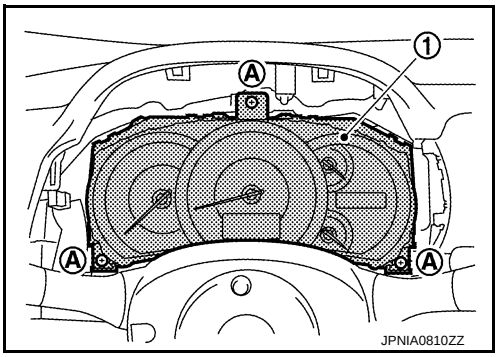


INSTALLATION

Install in the reverse order of removal.

### Disassembly and Assembly

INFOID:0000000008459143

DISASSEMBLY

1. Disengage the tabs to separate upper housing.
2. Disengage the tabs to separate front cover.

ASSEMBLY

Assemble in the reverse order of disassembly.

# METER CONTROL SWITCH

## Exploded View

INFOID:0000000008459144

### REMOVAL

Refer to IP-12, "Exploded View".

### DISASSEMBLY

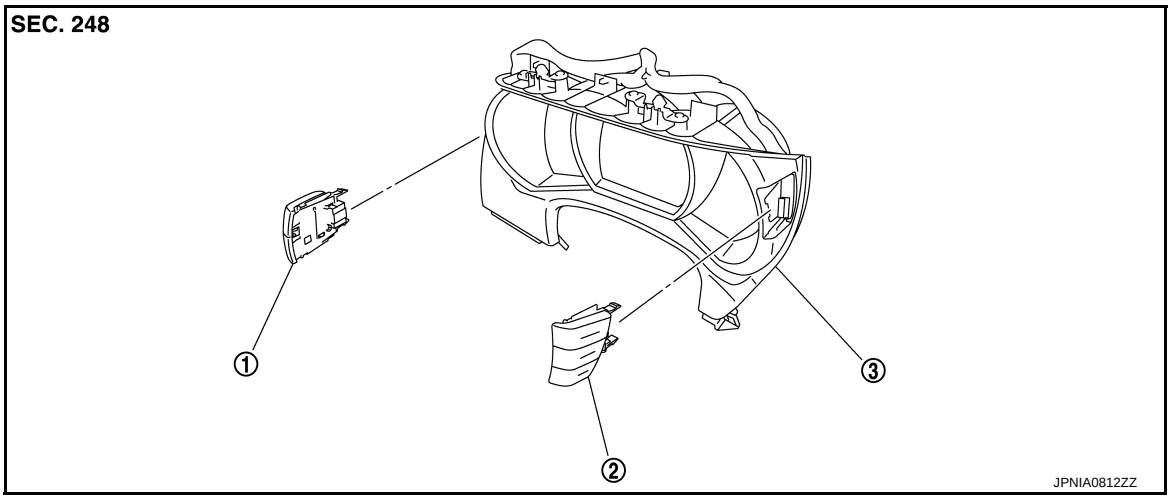


1. Meter control switch (LH)
2. Meter control switch (RH)
3. Cluster lid A

## Removal and Installation

INFOID:0000000008459145

### REMOVAL

1. Remove cluster lid A. Refer to IP-12, "Exploded View".
2. Remove meter control switch connectors and remove meter control switches.

### INSTALLATION

Install in the reverse order of removal.

# COMPASS

## Exploded View

INFOID:0000000008459146

Refer to MIR-44, "Exploded View" (with ADP) or MIR-63, "Exploded View" (without ADP).

## Removal and Installation

INFOID:0000000008459147

Refer to MIR-44, "Removal and Installation" (with ADP) or MIR-63, "Removal and Installation" (without ADP).