SECTION DLN
DRIVELINE

CONTENTS

TRANSFER: ATX14B

BASIC INSPECTION 9

DIAGNOSIS AND REPAIR WORKFLOW 9
Work Flow 9
Preliminary Check 10

FUNCTION DIAGNOSIS 13

4WD SYSTEM 13
System Diagram 13
System Description 14
Component Parts Location 19
CAN Communication 20
Cross-Sectional View 20
Power Transfer 20

DIAGNOSIS SYSTEM (TRANSFER CONTROL UNIT) 23
CONSULT-III Function (ALL MODE AWD/4WD) 23

NOISE, VIBRATION AND HARSHNESS (NVH) TROUBLESHOOTING 27
NVH Troubleshooting Chart 27

COMPONENT DIAGNOSIS 28

P1811 POWER SUPPLY CIRCUIT FOR TRANSFER CONTROL UNIT 28
Description 28
DTC Logic 28
Diagnosis Procedure 28
Component Inspection 29

P1802 – P1804, P1809 TRANSFER CONTROL UNIT 31
Description 31
DTC Logic 31
Diagnosis Procedure 31

P1807 VEHICLE SPEED SENSOR (A/T) 33
Description 33
DTC Logic 33
Diagnosis Procedure 33

P1808 VEHICLE SPEED SENSOR (ABS) 34
Description 34
DTC Logic 34
Diagnosis Procedure 34

P1810 NEUTRAL-4LO SWITCH 35
Description 35
DTC Logic 35
Diagnosis Procedure 35
Component Inspection 37

P1813 4WD SHIFT SWITCH 38
Description 38
DTC Logic 38
Diagnosis Procedure 38
Component Inspection 40

P1814 WAIT DETECTION SWITCH 42
Description 42
DTC Logic 42
Diagnosis Procedure 42
Component Inspection 44

P1816 TRANSMISSION RANGE SWITCH 45
Description 45
DTC Logic 45
Diagnosis Procedure 45

P1817 ACTUATOR MOTOR 46
Description 46
DTC Logic 46
Diagnosis Procedure 46
Component Inspection 50

P1818 ACTUATOR POSITION SWITCH 52
Description 52
DTC Logic 52
Diagnosis Procedure 52

Component Inspection 54

P1819 TRANSFER CONTROL DEVICE 55
Description 55
DTC Logic 55
Diagnosis Procedure 55

P1820 ENGINE SPEED SIGNAL 59
Description 59
DTC Logic 59
Diagnosis Procedure 59

P1822 CLUTCH PRESSURE SOLENOID 60
Description 60
DTC Logic 60
Diagnosis Procedure 60
Component Inspection 63

P1823 2-4 SOLENOID 64
Description 64
DTC Logic 64
Diagnosis Procedure 64
Component Inspection 67

P1824 TRANSFER MOTOR 68
Description 68
DTC Logic 68
Diagnosis Procedure 68
Component Inspection 72

P1826 TRANSFER FLUID TEMPERATURE ... 74
Description 74
DTC Logic 74
Diagnosis Procedure 74
Component Inspection 75

P1827 CLUTCH PRESSURE SWITCH 77
Description 77
DTC Logic 77
Diagnosis Procedure 77
Component Inspection 79

P1828 LINE PRESSURE SWITCH 80
Description 80
DTC Logic 80
Diagnosis Procedure 80
Component Inspection 82

P1829 THROTTLE POSITION SIGNAL (ECM) ... 83
Description 83
DTC Logic 83
Diagnosis Procedure 83

P1830 ABS OPERATION SIGNAL (ABS) 84
Description 84
DTC Logic 84
Diagnosis Procedure 84

P1831 VDC OPERATION SIGNAL (ABS) 85
Description 85
DTC Logic 85
Diagnosis Procedure 85

P1832 TCS OPERATION SIGNAL (ABS) 86
Description 86
DTC Logic 86
Diagnosis Procedure 86

ECU DIAGNOSIS 87

TRANSFER CONTROL UNIT 87
Reference Value 87
Wiring Diagram - ALL-MODE 4WD SYSTEM - 95
DTC Index 104

SYMPTOM DIAGNOSIS 109

4WD SYSTEM SYMPTOMS 109
Symptom Table 109

4WD SHIFT INDICATOR LAMP AND 4LO INDICATOR LAMP DO NOT TURN ON 110
Description 110
Diagnosis Procedure 110

4WD WARNING LAMP DOES NOT TURN ON. 113
Description 113
Diagnosis Procedure 113

4WD SHIFT INDICATOR LAMP OR 4LO INDICATOR LAMP DO NOT CHANGE 116
Description 116
Diagnosis Procedure 116

ATP WARNING LAMP DOES NOT TURN ON. 118
Description 118
Diagnosis Procedure 118

4WD SHIFT INDICATOR LAMP KEEPS FLASHING 120
Description 120
Diagnosis Procedure 120

4WD WARNING LAMP FLASHES RAPIDLY .. 121
Description 121
Diagnosis Procedure 121

4WD WARNING LAMP FLASHES SLOWLY .. 122
Description 122
Diagnosis Procedure 122

HEAVY TIGHT-CORNER BRAKING SYMPTOM OCCURS 123
Description 123
Diagnosis Procedure 123

ATP SWITCH 125
Description 125
Diagnosis Procedure 125

4WD SYSTEM DOES NOT OPERATE 127
Description 127

Diagnosis Procedure 127

PRECAUTION 128

PRECAUTIONS 128
Precaution for Supplemental Restraint System (SRS) "AIR BAG" and "SEAT BELT PRE-TENSIONER" 128
Precaution Necessary for Steering Wheel Rotation After Battery Disconnect 128
Precaution for Transfer Assembly and Transfer Control Unit Replacement 129
Precaution 129
Service Notice 130

PREPARATION 131

PREPARATION 131
Special Service Tool 131
Commercial Service Tool 133

ON-VEHICLE MAINTENANCE 135

TRANSFER FLUID 135
Replacement 135
Inspection 135

TRANSFER OIL FILTER 136
Removal and Installation 136

ON-VEHICLE REPAIR 138

TRANSFER CONTROL UNIT 138
Removal and Installation 138

FRONT OIL SEAL 139
Removal and Installation 139

REAR OIL SEAL 141
Removal and Installation 141

SIDE OIL SEAL 143
Removal and Installation 143

TRANSFER CONTROL DEVICE 144
Removal and Installation 144

AIR BREATHER HOSE 145
Removal and Installation 145

TRANSFER MOTOR 150
Removal and Installation 150

REMOVAL AND INSTALLATION 151

TRANSFER ASSEMBLY 151
Removal and Installation 151

DISASSEMBLY AND ASSEMBLY 152

TRANSFER ASSEMBLY 152
Component Parts Location 152
Disassembly and Assembly 154

SERVICE DATA AND SPECIFICATIONS (SDS) 189

SERVICE DATA AND SPECIFICATIONS (SDS) 189
General Specification 189
Inspection and Adjustment 189

TRANSFER: TX15B

BASIC INSPECTION 191

DIAGNOSIS AND REPAIR WORKFLOW 191
Work Flow 191

FUNCTION DIAGNOSIS 193

4WD SYSTEM 193
System Diagram 193
System Description 194
Component Parts Location 196
CAN Communication 197
Cross-Sectional View 197
Power Transfer 198

DIAGNOSIS SYSTEM (TRANSFER CONTROL UNIT) 200
CONSULT-III Function (ALL MODE AWD/4WD) 200

NOISE, VIBRATION AND HARSHNESS (NVH) TROUBLESHOOTING 203
NVH Troubleshooting Chart 203

COMPONENT DIAGNOSIS 204

P1801, P1811 POWER SUPPLY CIRCUIT FOR TRANSFER CONTROL UNIT 204
Description 204
DTC Logic 204
Diagnosis Procedure 204
Component Inspection 206

P1802 – P1804, P1809 TRANSFER CONTROL UNIT 207
Description 207
DTC Logic 207
Diagnosis Procedure 207

P1807 VEHICLE SPEED SENSOR (A/T) 209
Description 209
DTC Logic 209
Diagnosis Procedure 209

P1808 VEHICLE SPEED SENSOR (ABS) 210
Description 210
DTC Logic 210
Diagnosis Procedure 210

P1810 4 LO SWITCH 211
Description 211
DTC Logic 211
Diagnosis Procedure 211

Component Inspection 213

P1813 4WD SHIFT SWITCH 214
Description 214
DTC Logic 214
Diagnosis Procedure 214
Component Inspection 216

P1814 WAIT DETECTION SWITCH 217
Description 217
DTC Logic 217
Diagnosis Procedure 217
Component Inspection 219

P1816 TRANSMISSION RANGE SWITCH 220
Description 220
DTC Logic 220
Diagnosis Procedure 220

P1817 ACTUATOR MOTOR 221
Description 221
DTC Logic 221
Diagnosis Procedure 221
Component Inspection 226

P1818 ACTUATOR POSITION SWITCH 228
Description 228
DTC Logic 228
Diagnosis Procedure 228

P1819 TRANSFER CONTROL DEVICE 231
Description 231
DTC Logic 231
Diagnosis Procedure 231

P1820 ENGINE SPEED SIGNAL 234
Description 234
DTC Logic 234
Diagnosis Procedure 234

ECU DIAGNOSIS 235

TRANSFER CONTROL UNIT 235
Reference Value 235
Wiring Diagram - PART TIME 4WD SYSTEM - 240
DTC Index 247

SYMPTOM DIAGNOSIS 250

4WD SYSTEM SYMPTOMS 250
Symptom Table 250

4WD WARNING LAMP DOES NOT TURN ON. 251
Description 251
Diagnosis Procedure 251

4WD SHIFT INDICATOR LAMP AND 4LO INDICATOR LAMP DO NOT TURN ON 253
Description 253
Diagnosis Procedure 253

4WD SHIFT INDICATOR LAMP OR 4LO INDICATOR LAMP DO NOT CHANGE 255
Description 255
Diagnosis Procedure 255

ATP WARNING LAMP DOES NOT TURN ON. 257
Description 257
Diagnosis Procedure 257

4WD SHIFT INDICATOR LAMP KEEPS FLASHING 259
Description 259
Diagnosis Procedure 259

4WD WARNING LAMP FLASHES SLOWLY .. 260
Description 260
Diagnosis Procedure 260

ATP SWITCH 261
Description 261
Diagnosis Procedure 261
Component Inspection 263

PRECAUTION 264

PRECAUTIONS 264
Precaution for Supplemental Restraint System (SRS) "AIR BAG" and "SEAT BELT PRE-TENSIONER" 264
Precaution Necessary for Steering Wheel Rotation After Battery Disconnect 264
Precaution for Transfer Assembly and Transfer Control Unit Replacement 265
Precaution 266
Service Notice 267

PREPARATION 268

PREPARATION 268
Special Service Tool 268
Commercial Service Tool 270

ON-VEHICLE MAINTENANCE 271

TRANSFER FLUID 271
Replacement 271
Inspection 271

ON-VEHICLE REPAIR 272

TRANSFER CONTROL UNIT 272
Removal and Installation 272

FRONT OIL SEAL 273
Removal and Installation 273

REAR OIL SEAL 275
Removal and Installation 275

TRANSFER CONTROL DEVICE 277
Removal and Installation 277

AIR BREATHER HOSE 279
Removal and Installation 279

REMOVAL AND INSTALLATION 281

TRANSFER ASSEMBLY 281
Removal and Installation 281

DISASSEMBLY AND ASSEMBLY 282

TRANSFER ASSEMBLY 282
Component Parts Location 282
Disassembly and Assembly 283

PLANETARY CARRIER 301
Disassembly and Assembly 301

FRONT DRIVE SHAFT 305
Disassembly and Assembly 305

SHIFT CONTROL 307
Disassembly and Assembly 307

SERVICE DATA AND SPECIFICATIONS (SDS) 309

SERVICE DATA AND SPECIFICATIONS (SDS) 309
General Specification 309
Inspection and Adjustment 309

PROPELLER SHAFT: 2F1310

PRECAUTION 310

PRECAUTIONS 310
Precaution for Supplemental Restraint System (SRS) "AIR BAG" and "SEAT BELT PRE-TENSIONER" 310
Precaution Necessary for Steering Wheel Rotation After Battery Disconnect 310

PREPARATION 312

PREPARATION 312
Commercial Service Tool 312

FUNCTION DIAGNOSIS 313

NOISE, VIBRATION, AND HARSHNESS (NVH) TROUBLESHOOTING 313
NVH Troubleshooting Chart 313

ON-VEHICLE REPAIR 314

PROPELLER SHAFT 314
On-Vehicle Service 314

REMOVAL AND INSTALLATION 315

PROPELLER SHAFT 315
Removal and Installation 315

DISASSEMBLY AND ASSEMBLY 317

PROPELLER SHAFT 317
Disassembly and Assembly 317

SERVICE DATA AND SPECIFICATIONS (SDS) 319

SERVICE DATA AND SPECIFICATIONS (SDS) 319
General Specification 319
Snap Ring 319

PROPELLER SHAFT: 2S1330

PRECAUTION 320

PRECAUTIONS 320
Precaution for Supplemental Restraint System (SRS) "AIR BAG" and "SEAT BELT PRE-TENSIONER" 320
Precaution Necessary for Steering Wheel Rotation After Battery Disconnect 320

PREPARATION 322

PREPARATION 322
Commercial Service Tool 322

FUNCTION DIAGNOSIS 323

NOISE, VIBRATION, AND HARSHNESS (NVH) TROUBLESHOOTING 323
NVH Troubleshooting Chart 323

ON-VEHICLE REPAIR 324

PROPELLER SHAFT 324
On-Vehicle Service 324

REMOVAL AND INSTALLATION 325

PROPELLER SHAFT 325
Removal and Installation 325

DISASSEMBLY AND ASSEMBLY 327

PROPELLER SHAFT 327
Disassembly and Assembly 327

SERVICE DATA AND SPECIFICATIONS (SDS) 329

SERVICE DATA AND SPECIFICATIONS (SDS) 329
General Specification 329
Snap Ring 330

PROPELLER SHAFT: 2S1350

PRECAUTION 331

PRECAUTIONS 331

Precaution for Supplemental Restraint System (SRS) "AIR BAG" and "SEAT BELT PRE-TENSIONER" 331
Precaution Necessary for Steering Wheel Rotation After Battery Disconnect 331

PREPARATION 333

PREPARATION 333
Commercial Service Tool 333

FUNCTION DIAGNOSIS 334

NOISE, VIBRATION, AND HARSHNESS (NVH) TROUBLESHOOTING 334
NVH Troubleshooting Chart 334

ON-VEHICLE REPAIR 335

PROPELLER SHAFT 335
On-Vehicle Service 335

REMOVAL AND INSTALLATION 336

PROPELLER SHAFT 336
Removal and Installation 336

DISASSEMBLY AND ASSEMBLY 338

PROPELLER SHAFT 338
Disassembly and Assembly 338

SERVICE DATA AND SPECIFICATIONS (SDS) 340

SERVICE DATA AND SPECIFICATIONS (SDS) 340
General Specification 340
Snap Ring 340

FRONT FINAL DRIVE: R180A

PRECAUTION 341

PRECAUTIONS 341
Precaution for Supplemental Restraint System (SRS) "AIR BAG" and "SEAT BELT PRE-TENSIONER" 341
Precaution Necessary for Steering Wheel Rotation After Battery Disconnect 341
Precaution for Servicing Front Final Drive 342

PREPARATION 343

PREPARATION 343
Special Service Tool 343
Commercial Service Tool 345

FUNCTION DIAGNOSIS 346

NOISE, VIBRATION AND HARSHNESS (NVH) TROUBLESHOOTING 346
NVH Troubleshooting Chart 346

DESCRIPTION 347
Cross-Sectional View 347

ON-VEHICLE MAINTENANCE 348

DIFFERENTIAL GEAR OIL 348
Changing Differential Gear Oil 348
Checking Differential Gear Oil 348

ON-VEHICLE REPAIR 349

FRONT OIL SEAL 349
Removal and Installation 349

SIDE OIL SEAL 351
Removal and Installation 351

CARRIER COVER 352
Removal and Installation 352

REMOVAL AND INSTALLATION 353

FRONT FINAL DRIVE ASSEMBLY 353
Removal and Installation 353

DISASSEMBLY AND ASSEMBLY 355

FRONT FINAL DRIVE 355
Exploded View 355
Disassembly and Assembly 356

SERVICE DATA AND SPECIFICATIONS (SDS) 374

SERVICE DATA AND SPECIFICATIONS (SDS) 374
General Specification 374
Inspection and Adjustment 374

FRONT FINAL DRIVE: M205

PRECAUTION 376

PRECAUTIONS 376
Precaution for Supplemental Restraint System (SRS) "AIR BAG" and "SEAT BELT PRE-TENSIONER" 376
Precaution Necessary for Steering Wheel Rotation After Battery Disconnect 376
Precaution for Servicing Front Final Drive 377

PREPARATION 378

PREPARATION 378
Special Service Tool 378
Commercial Service Tool 380

FUNCTION DIAGNOSIS 381

NOISE, VIBRATION AND HARSHNESS (NVH) TROUBLESHOOTING 381
NVH Troubleshooting Chart 381

ON-VEHICLE MAINTENANCE 382

DIFFERENTIAL GEAR OIL 382
Changing Differential Gear Oil 382
Checking Differential Gear Oil 382

ON-VEHICLE REPAIR 383

SIDE OIL SEAL 383
Removal and Installation 383

FRONT OIL SEAL 384
Removal and Installation 384

CARRIER COVER 386
Removal and Installation 386

REMOVAL AND INSTALLATION 387

FRONT FINAL DRIVE 387
Removal and Installation 387

DISASSEMBLY AND ASSEMBLY 389

FRONT FINAL DRIVE 389
Exploded View 389
Disassembly and Assembly 390

SERVICE DATA AND SPECIFICATIONS (SDS) 406

SERVICE DATA AND SPECIFICATIONS (SDS) 406
General Specification 406
Inspection and Adjustment 406

REAR FINAL DRIVE: R200

PRECAUTION 408

PRECAUTIONS 408
Precaution for Supplemental Restraint System (SRS) "AIR BAG" and "SEAT BELT PRE-TENSIONER" 408
Precaution Necessary for Steering Wheel Rotation After Battery Disconnect 408
Precaution for Servicing Rear Final Drive 409

PREPARATION 410

PREPARATION 410
Special Service Tool 410
Commercial Service Tool 413

FUNCTION DIAGNOSIS 414

NOISE, VIBRATION AND HARSHNESS (NVH) TROUBLESHOOTING 414
NVH Troubleshooting Chart 414

DESCRIPTION 415
Cross-Sectional View 415

ON-VEHICLE MAINTENANCE 416

DIFFERENTIAL GEAR OIL 416
Changing Differential Gear Oil 416
Checking Differential Gear Oil 416

ON-VEHICLE REPAIR 417

FRONT OIL SEAL 417
Removal and Installation 417

SIDE OIL SEAL 419
Removal and Installation 419

CARRIER COVER 421
Removal and Installation 421

REMOVAL AND INSTALLATION 422

REAR FINAL DRIVE 422
Removal and Installation 422

DISASSEMBLY AND ASSEMBLY 425

REAR FINAL DRIVE 425
Exploded View 425
Disassembly and Assembly 426

SERVICE DATA AND SPECIFICATIONS (SDS) 444

SERVICE DATA AND SPECIFICATIONS (SDS) 444
General Specification 444
Inspection and Adjustment 444

REAR FINAL DRIVE: R230

PRECAUTION 446

PRECAUTIONS 446
Precaution for Supplemental Restraint System (SRS) "AIR BAG" and "SEAT BELT PRE-TENSIONER" 446
Precaution Necessary for Steering Wheel Rotation After Battery Disconnect 446
Precaution for Servicing Rear Final Drive 447

PREPARATION 448

PREPARATION 448
Special Service Tool 448
Commercial Service Tool 451

FUNCTION DIAGNOSIS 452

NOISE, VIBRATION AND HARSHNESS (NVH) TROUBLESHOOTING 452
NVH Troubleshooting Chart 452

DESCRIPTION 453
Cross-Sectional View 453

ON-VEHICLE MAINTENANCE 454

DIFFERENTIAL GEAR OIL 454
Changing Differential Gear Oil 454
Checking Differential Gear Oil 454

ON-VEHICLE REPAIR 455

FRONT OIL SEAL 455
Removal and Installation 455

SIDE OIL SEAL 457
Removal and Installation 457

CARRIER COVER 459
Removal and Installation 459

REMOVAL AND INSTALLATION 460

REAR FINAL DRIVE 460
Removal and Installation 460

DISASSEMBLY AND ASSEMBLY 463

REAR FINAL DRIVE 463
Exploded View 463
Disassembly and Assembly 464

SERVICE DATA AND SPECIFICATIONS (SDS) 480

SERVICE DATA AND SPECIFICATIONS (SDS) 480
General Specification 480
Inspection and Adjustment 480

BASIC INSPECTION

DIAGNOSIS AND REPAIR WORKFLOW

Work Flow

INFOID:0000000005258226

WORK FLOW

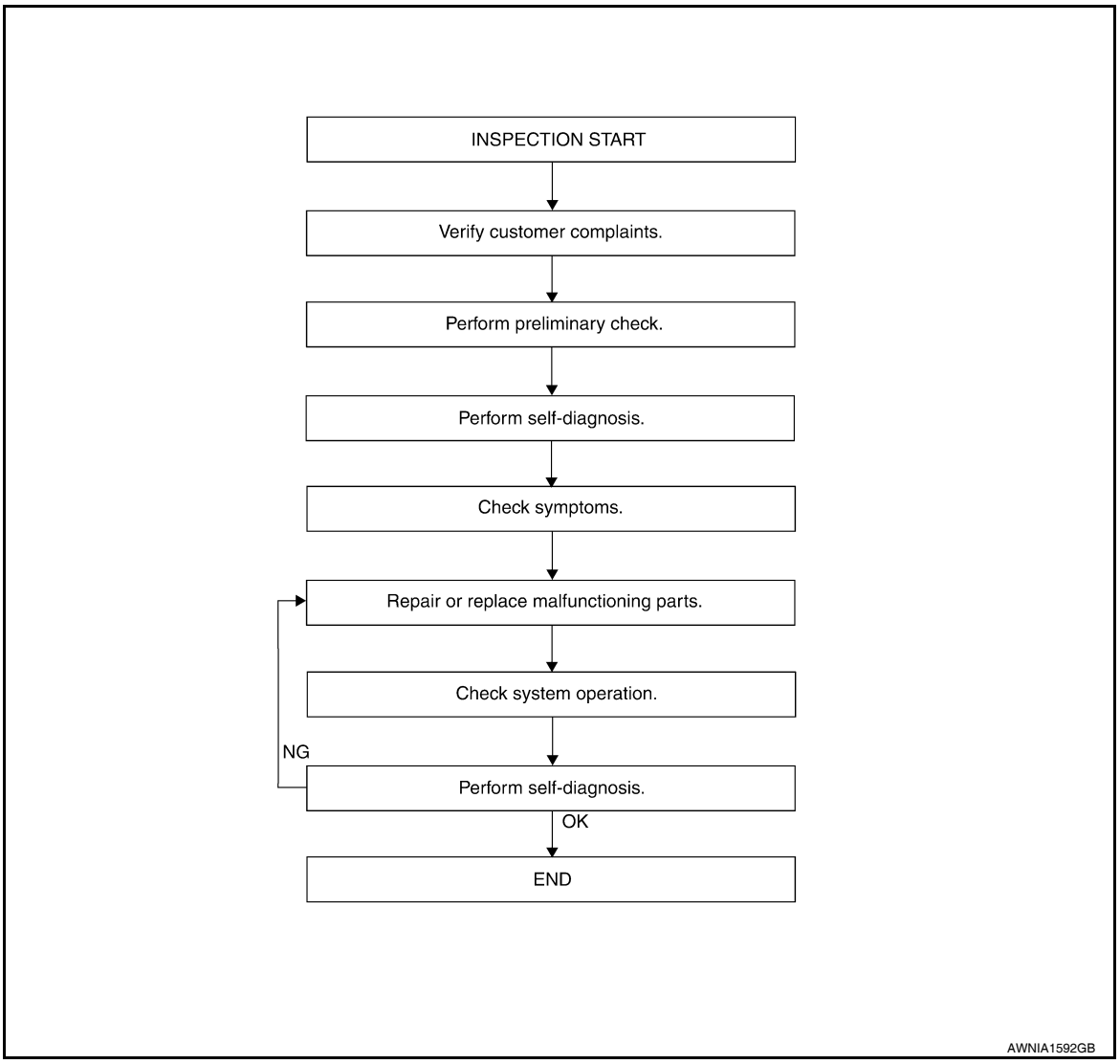

DETAILED FLOW

1. CUSTOMER INFORMATION

Interview the customer to obtain detailed information about the symptom.

>> GO TO 2

2. PRELIMINARY CHECK

Perform preliminary check. Refer to DLN-10, "Preliminary Check".

>> GO TO 3

3. SELF-DIAGNOSIS

Perform self-diagnosis. Refer to DLN-23, "CONSULT-III Function (ALL MODE AWD/4WD)".

>> GO TO 4

4. SYMPTOM

Check for symptoms. Refer to DLN-109, "Symptom Table".

>> GO TO 5

5. MALFUNCTIONING PARTS

Repair or replace the applicable parts.

>> GO TO 6

6. SYSTEM OPERATION

Check system operation.

>> GO TO 7

7. SELF-DIAGNOSIS

Perform self-diagnosis.

Are any DTC's displayed?

YES >> GO TO 5
NO >> Inspection End

Preliminary Check

INFOID:0000000005258227

TRANSFER FLUID CHECK

Check for leaks and fluid level. Refer to DLN-135, "Inspection".

PREPARATION FOR ROAD TEST

The purpose of the test is to determine overall performance of transfer case and analyze causes of malfunctions.
When a malfunction is found in any part of transfer, perform the road test to locate the malfunction area and repair the malfunction parts.
The road test consists of the following three parts.

1. CHECK BEFORE ENGINE IS STARTED
2. CHECK AT IDLE
3. CRUISE TEST

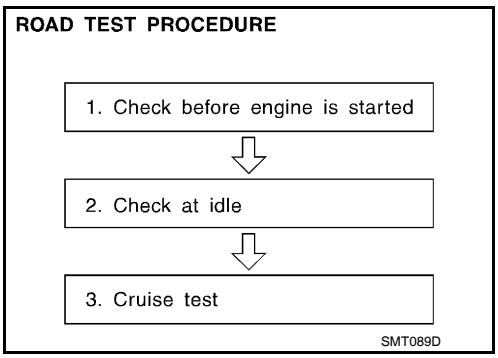

CHECK BEFORE ENGINE IS STARTED

1. CHECK 4WD SHIFT INDICATOR LAMP

1. Park vehicle on flat surface.
2. Turn ignition switch to OFF position.
3. Move A/T selector lever to P position.
4. Set 4WD shift switch to 2WD position.
5. Turn ignition switch to ON position. (Do not start engine.)

Does 4WD shift indicator lamp turn ON for approximately 1 second?

YES >> GO TO 2.
NO >> GO TO DLN-110, "Diagnosis Procedure".

2. CHECK 4WD WARNING LAMP

1. Turn ignition switch to OFF position.
2. Move A/T selector lever to P position.
3. Set 4WD shift switch to 2WD position.
4. Turn ignition switch to ON position. (Do not start engine.)

Does 4WD warning lamp turn ON?

YES >> GO TO CHECK AT IDLE.
NO >> GO TO DLN-113, "Diagnosis Procedure".

CHECK AT IDLE

1. CHECK 4WD SHIFT INDICATOR LAMP

1. Park vehicle on flat surface and engage the parking brake.
2. Turn ignition switch to OFF position.
3. Move A/T selector lever to P position.
4. Set 4WD shift switch to 2WD position.
5. Start engine.

Does 4WD shift indicator lamp turn ON?

YES >> GO TO 3.
NO >> GO TO 2.

2. CHECK 4WD WARNING LAMP

Check 4WD warning lamp state.

Is 4WD warning lamp turned ON?

YES >> Perform the self-diagnosis. Refer to DLN-23, "CONSULT-III Function (ALL MODE AWD/4WD)".
NO >> Refer to DLN-116, "Diagnosis Procedure".

3. CHECK 4WD SHIFT INDICATOR AND 4LO INDICATOR OPERATION

1. Brake pedal depressed.
2. Move A/T selector lever to N position.
3. Set 4WD shift switch to 2WD, AUTO, 4H, 4LO, 4H, AUTO and 2WD in order. (Stay at each switch position for at least 1 second.)

Do 4WD shift indicator and 4LO indicator lamps change properly? Does buzzer sound?

YES >> GO TO CRUISE TEST.
NO >> GO TO DLN-116, "Diagnosis Procedure".

4WD shift switch	4WD shift indicator lamp	4LO indicator lamp	Buzzer sound
2WD		4LO OFF	
			"Pip"
AUTO		4LO OFF	
			"Pip"
4H		4LO OFF	
		Lamp flasher	"Pip"
4LO		4LO ON	
		Lamp flasher	"Pip"
4H		4LO OFF	
			"Pip"
AUTO		4LO OFF	
			"Pip"
2WD		4LO OFF	

WDIA0136E

CRUISE TEST

1. CHECK INPUT SIGNAL

1. Warm up engine to normal operating temperature.
2. Park vehicle on flat surface.
3. Move A/T selector lever to P position.
4. Set 4WD shift switch to AUTO position.
5. Start engine.
6. Drive vehicle for at least 30 seconds at a speed higher than 20 km/h (12 MPH).

Is 4WD warning lamp turned ON?

On steady>>Perform the self-diagnosis. Refer to DLN-23, "CONSULT-III Function (ALL MODE AWD/4WD)".

Flash rapidly>>Refer to DLN-121, "Diagnosis Procedure".
Flash slowly>>Refer to DLN-122, "Diagnosis Procedure".
NO >> GO TO 2.

2. CHECK TIGHT CORNER BRAKING SYMPTOM (1)

1. Set 4WD shift switch to AUTO position.
2. Drive vehicle at speed lower than 20 km/h (12 MPH) with steering wheel fully turned.

Does tight corner braking symptom occur?

YES >> GO TO DLN-123, "Diagnosis Procedure".
NO >> GO TO 3.

3. CHECK TIGHT CORNER BRAKING SYMPTOM (2)

1. Set 4WD shift switch to 4HI position.
2. Drive vehicle at speed lower than 20 km/h (12 MPH) with steering wheel fully turned.

Does tight corner braking symptom occur?

YES >> Inspection End.
NO >> GO TO DLN-127, "Diagnosis Procedure".

FUNCTION DIAGNOSIS

4WD SYSTEM

System Diagram

INFOID:0000000005258228

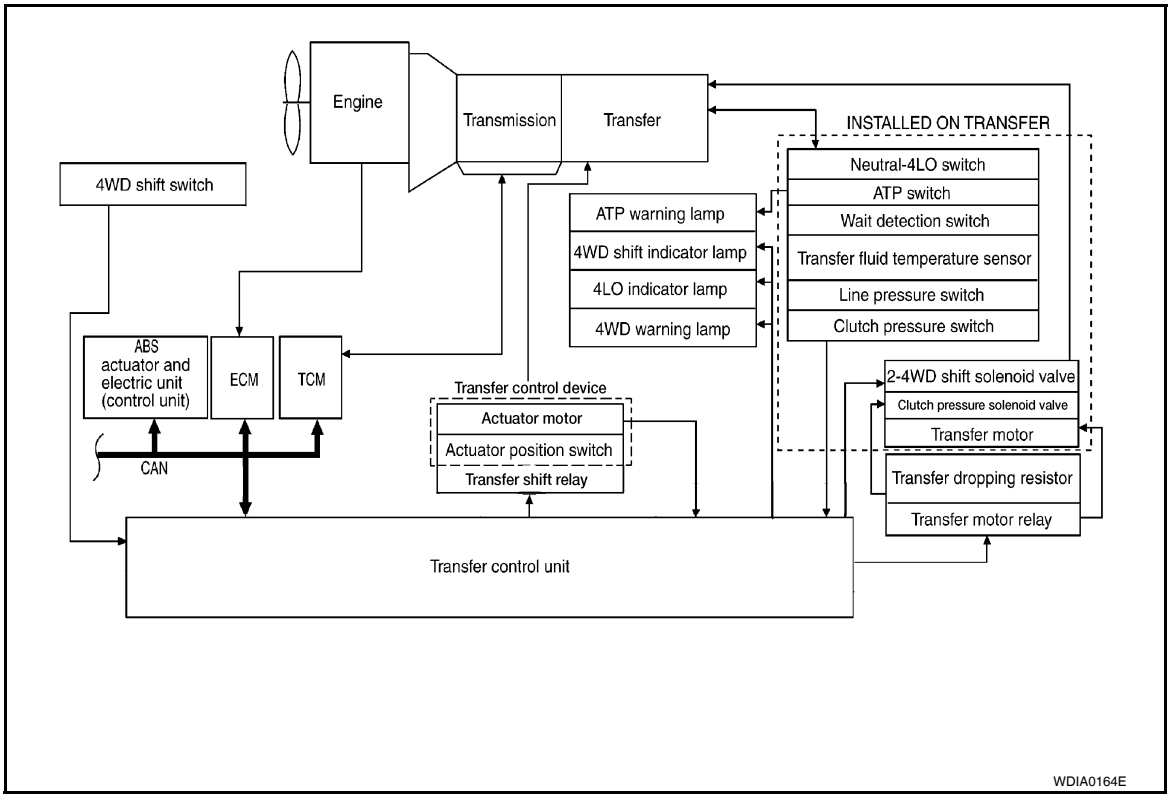

COMPONENT DESCRIPTION

Components	Function
Transfer control unit	Controls transfer control device, control valves and shifts between 2WD/4WD and 4H/4LO.
Transfer control device	Integrates actuator motor and actuator position switch.
2-4WD shift solenoid valve	Controls oil pressure and allows shifting between 2WD and 4WD.
Clutch pressure solenoid valve	Controls oil pressure and distributes torque between front and rear tires.
Line pressure switch	Detects line pressure.
Clutch pressure switch	Detects clutch pressure.
Transfer fluid temperature sensor	Detects transfer fluid temperature.
Actuator motor	Moves shift rods when signaled by transfer control unit.
Actuator position switch	Detects actuator motor position.
Wait detection switch	Detects whether or not 4WD lock gear is locked.
4LO switch	Detects if transfer case is in 4LO.
ATP switch	Detects if transfer case is in neutral.
4WD shift switch	Allows driver to select from 2WD/4WD, 4H/4LO and AUTO.
4WD warning lamp	• Illuminates if malfunction is detected in 4WD system. • Flashes (1 flash / 2 seconds) if large difference in diameter of front and rear tires. • Flashes (2 flashes / 1 second) if high transfer fluid temperature is detected.
ATP warning lamp	Indicates that A/T parking mechanism does not operate when A/T selector lever is in P position because transfer case is in neutral.
4WD shift indicator lamp	Displays driving range selected by 4WD shift switch.
4LO indicator lamp	Displays 4LO range.

Components	Function
ABS actuator and electric unit (control unit)	Transmits vehicle speed signal via CAN communication to transfer control unit.
TCM	Transmits the following signal via CAN communication to transfer control unit. • Output shaft revolution signal • A/T position indicator signal (transmission range switch signal)
ECM	Transmits the following signals via CAN communication to transfer control unit. • Engine speed signal • Accelerator pedal position signal

System Description

INFOID:0000000005258229

CONTROL SYSTEM

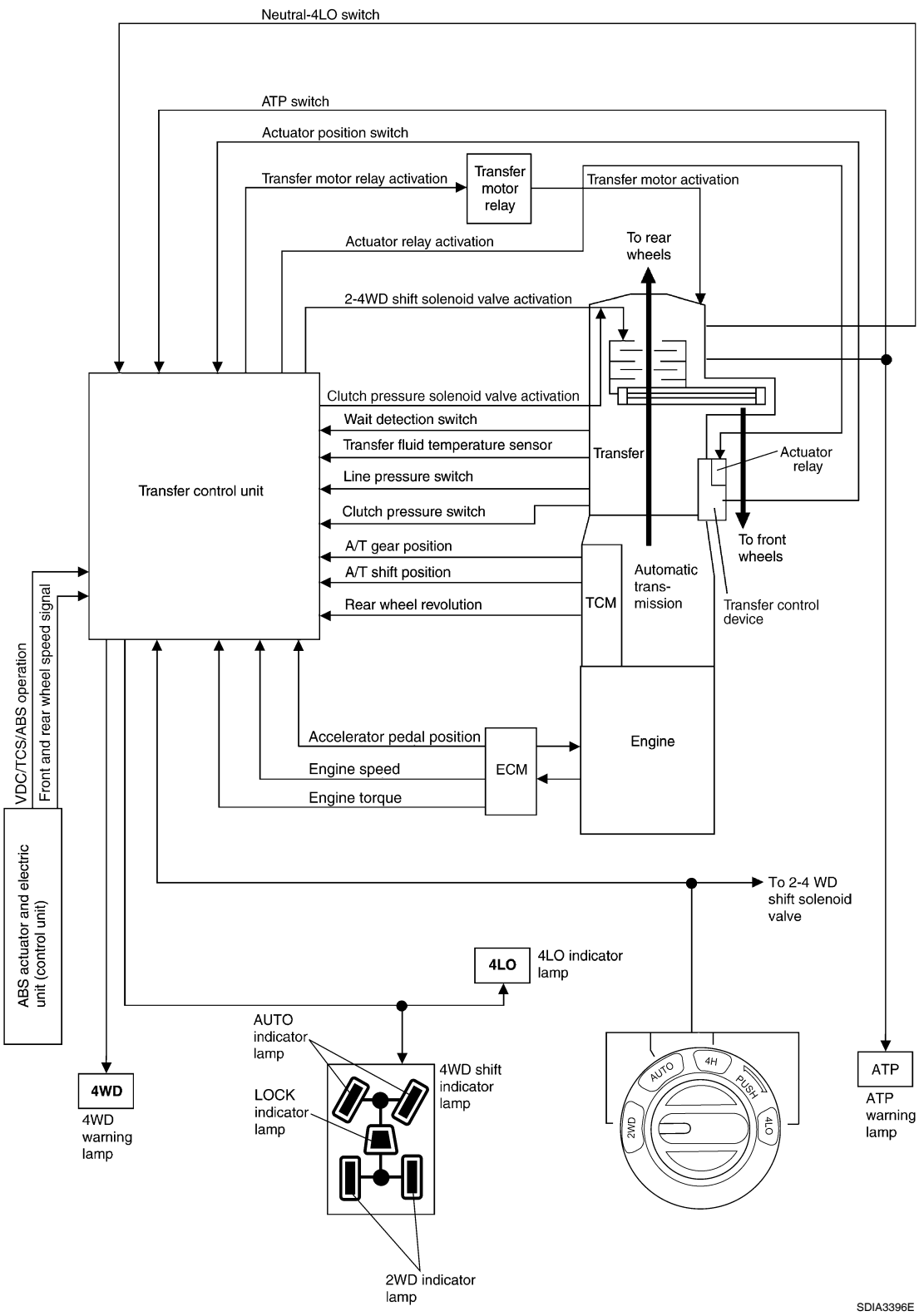

ALL-MODE 4WD Transfer Basic Control

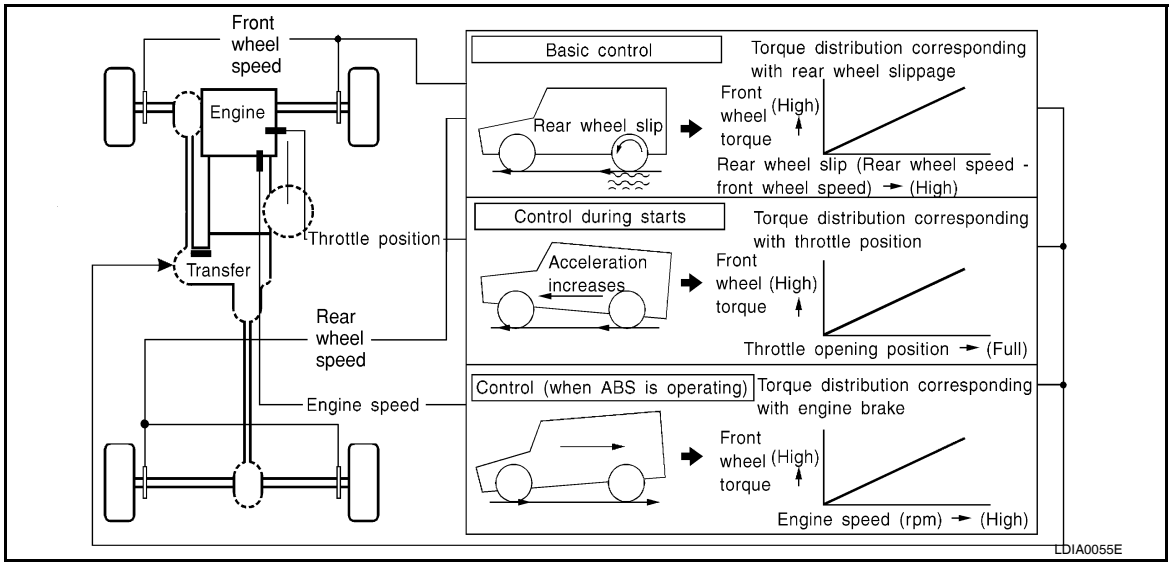

Hydraulic Control Circuits

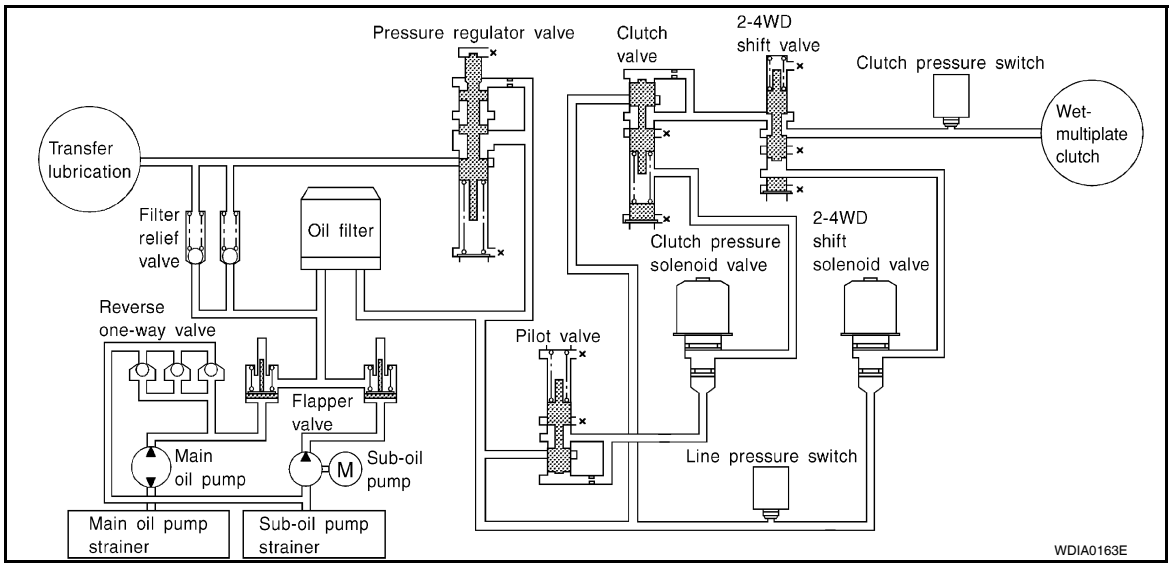

TRANSFER CONTROL UNIT

- Transfer control unit controls transfer control device and it directs shifts from 4H-4LO and 2WD-4WD.
- Self-diagnosis can be done.

TRANSFER SHIFT HIGH AND LOW RELAYS

Transfer shift high and low relays apply power supply to transfer control device (actuator motor).

TRANSFER SHUT OFF RELAY

Transfer shut off relay applies power supply to transfer motor relay.

4WD SHIFT SWITCH AND INDICATOR LAMPS

4WD Shift Switch

Able to select from 2WD, AUTO, 4H or 4LO.

4WD Shift Indicator Lamp

- Displays driving conditions selected by 4WD shift switch with 2WD, AUTO and 4H indicators while engine is running. (When 4WD warning lamp is turned on, all 4WD shift indicator lamps are turned off.)
- Turns ON for approximately 1 second when ignition switch is turned ON, for purpose of lamp check.

4LO Indicator Lamp

- Displays 4LO condition while engine is running. 4LO indicator lamp flashes if transfer gear does not shift completely under 2WD, AUTO, 4H⇔4LO. (When 4WD warning lamp is turned on, 4LO indicator lamp is turned off.)
- Turns ON for approximately 1 second when ignition switch is turned ON, for purpose of lamp check.

4WD WARNING LAMP

Turns on or flashes when there is a malfunction in 4WD system.
Also turns on when ignition switch is turned ON, for purpose of lamp check. Turns OFF approximately 1 second after the engine starts if system is normal.

4WD Warning Lamp Indication

Condition	4WD warning lamp
System normal	OFF
Lamp check	Turns ON when ignition switch is turned ON. Turns OFF after engine start.
4WD system malfunction	ON
During self-diagnosis	Flashes malfunction mode.
Large difference in diameter of front/ rear tires	Flashes slow (1 flash / 2 seconds) (Continues to flash until the ignition switch is turned OFF)
High fluid temperature in transfer case	Flashes rapidly (2 flashes / 1 second) (Continues to flash until fluid temperature returns to normal)

ATP WARNING LAMP

When the A/T selector lever is in P position, the vehicle may move if the transfer case is in neutral. ATP warning lamp is turned on to indicate this condition to the driver.

LINE PRESSURE SWITCH

- With the transfer system design, control of the oil pressure provides the transmission of drive torque to the front wheels. The main pressure to control the oil pressure is referred to as the line pressure.
- The line pressure switch determines whether or not adequate line pressure has built up under different operating conditions.
- The line pressure switch closes when line pressure is produced.
- The line pressure switch senses line pressure abnormalities and turns the 4WD warning lamp ON.

CLUTCH PRESSURE SWITCH

- The clutch pressure switch determines whether or not adequate clutch pressure has built up under different operating conditions.
- The clutch pressure switch closes when clutch pressure is produced.
- The clutch pressure switch senses clutch pressure abnormalities and turns the 4WD warning lamp ON.

WAIT DETECTION SWITCH

- The wait detection switch operates when there is circulating torque produced in the propeller shaft (L→H) or when there is a phase difference between 2-4 sleeve and clutch drum (H→L). After the release of the circulating torque, the wait detection switch helps provide the 4WD lock gear (clutch drum) shifts. A difference may occur between the operation of the 4WD shift switch and actual drive mode. At this point, the wait detection switch senses an actual drive mode.
- The wait detection switch operates as follows.
- 4WD lock gear (clutch drum) locked: ON
- 4WD lock gear (clutch drum) released: OFF
- The wait detection switch senses an actual drive mode and the 4WD shift indicator lamp indicates the vehicle drive mode.

ATP SWITCH

ATP switch detects if transfer case is in neutral by the position of the L-H shift fork.
NOTE:
Transfer case may be in neutral when shifting between 4H-4LO.

NEUTRAL-4LO SWITCH

The neutral-4LO switch detects that transfer gear is in neutral or 4LO (or shifting from neutral to 4LO) condition by L-H shift fork position.

TRANSFER FLUID TEMPERATURE SENSOR

The transfer fluid temperature sensor detects the transfer fluid temperature and sends a signal to the transfer control unit.

TRANSFER MOTOR

- The transfer motor drives the sub-oil pump to provide proper lubrication and oil pressure control when the vehicle is at standstill, during low-speed operations or is being driven in reverse.
- The main oil pump is operated by the driving force of the mainshaft. In other words, sufficient oil pressure buildup does not occur when the vehicle is at standstill or during low-speed operations. While the vehicle is being driven in reverse, the main oil pump rotates in the reverse direction. Therefore the main oil pump does not discharge oil pressure. During any of the above vehicle operations, the transfer motor drives the sub-oil pump to compensate for insufficient oil pressure.
- The transfer motor operates as follows:
- The motor relay turns OFF in the 2WD mode.
- The motor relay operates as described in the table below in modes other than the 2WD mode.
- 4WD shift switch, transmission range switch, Neutral-4LO switch, vehicle speed sensor and throttle position sensor are used in conjunction with the transfer motor.

Transfer Motor Relay Operation

4WD shift switch	A/T selector lever position	Vehicle speed (VSS)	Accelerator pedal position	Motor relay drive command
2WD	—	—	—	OFF
4H (LOCK) and 4LO	N position	0	—	ON
	P position	0	0 - 0.07/8	OFF*
			0.07/8 - 1/8	HOLD
			1/8 - MAX	ON
	Other than R position	0 < VSS ≤ 50 km/h (31 MPH)	—	ON
		50 km/h (31 MPH) < VSS < 55 km/h (34 MPH)		HOLD
		55 km/h (34 MPH) ≤ VSS		OFF
	R position	—	—	ON
AUTO	R position	—	—	ON
	P or N position	0	0 - 0.07/8	OFF*
			0.07/8 - 1/8	HOLD
			1/8 - MAX	ON
		0 < VSS ≤ 50 km/h (31 MPH)	—	ON
		50 km/h (31 MPH) < VSS < 55 km/h (34 MPH)		HOLD
		55 km/h (34 MPH) ≤ VSS		OFF
	Other than R, P and N position	0 < VSS ≤ 50 km/h (31 MPH)	—	ON
		50 km/h (31 MPH) < VSS < 55 km/h (34 MPH)		HOLD
		55 km/h (34 MPH) ≤ VSS		OFF

*: After 2.5 seconds have elapsed.

CLUTCH PRESSURE SOLENOID VALVE

The clutch pressure solenoid valve distributes front and rear torque in AUTO mode.

2-4WD SHIFT SOLENOID VALVE

The 2-4WD shift solenoid valve operates to apply oil pressure to the wet-multiplate clutch, depending on the drive mode. The driving force is transmitted to the front wheels through the clutch so the vehicle is set in the 4WD mode. Setting the vehicle in the 2WD mode requires no pressure buildup. In other words, pressure force applied to the wet-multiplate clutch becomes zero.

TRANSFER CONTROL DEVICE

Integrates actuator motor and actuator position switch.

Actuator Motor
Moves shift rods when signaled by transfer control unit.

Actuator Position Switch
Detects actuator motor position and then sends signal to transfer control unit.

Component Parts Location

INFOID:0000000005258230

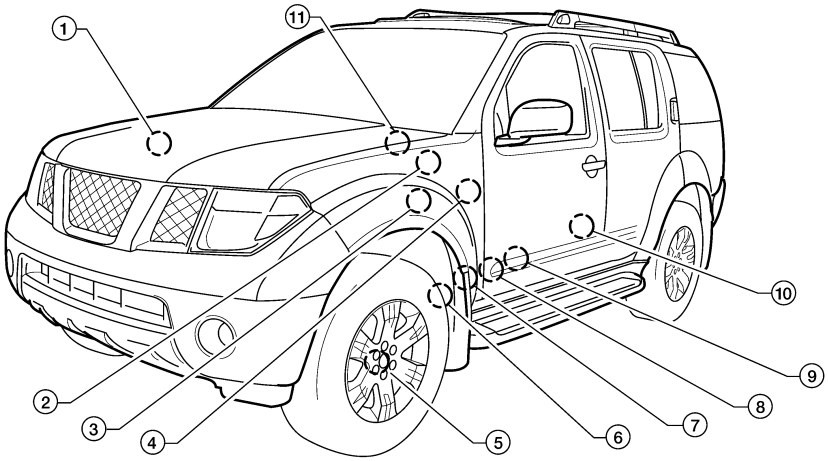

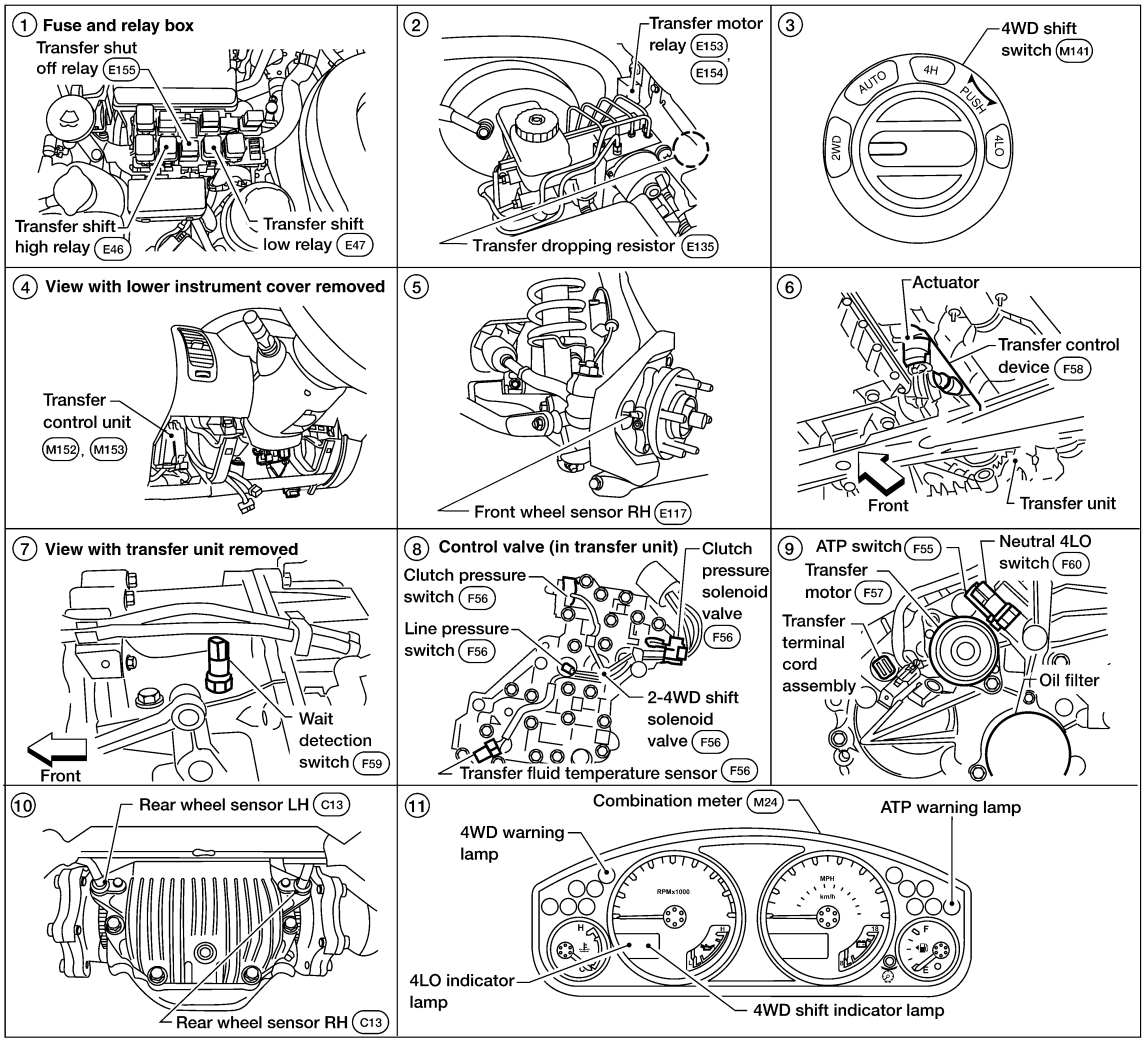

WDIA0124E

CAN Communication

INFOID:0000000005258231

Refer to LAN-52, "CAN System Specification Chart".

Cross-Sectional View

INFOID:0000000005258232

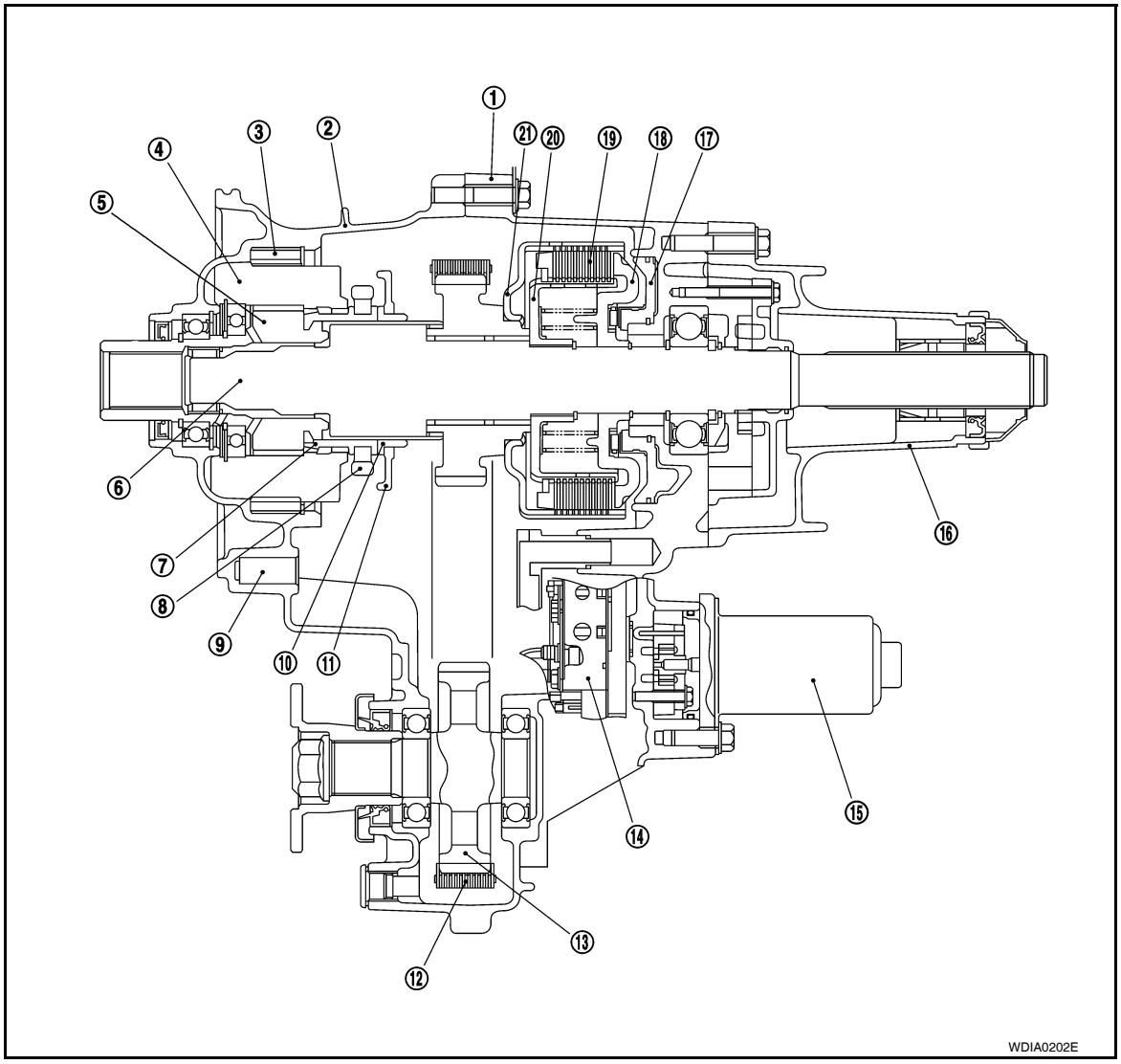

1. Center case	2. Front case	3. Internal gear
4. Planetary carrier assembly	5. Sun gear assembly	6. Main shaft
7. L-H sleeve	8. L-H fork	9. Shift rod
10. 2-4 sleeve	11. 2-4 fork	12. Drive chain
13. Front drive shaft	14. Control valve assembly	15. Transfer motor
16. Rear case	17. Clutch piston	18. Press flange
19. Multiple disc clutch	20. Clutch hub assembly	21. Clutch drum assembly

Power Transfer

INFOID:0000000005258233

POWER TRANSFER DIAGRAM

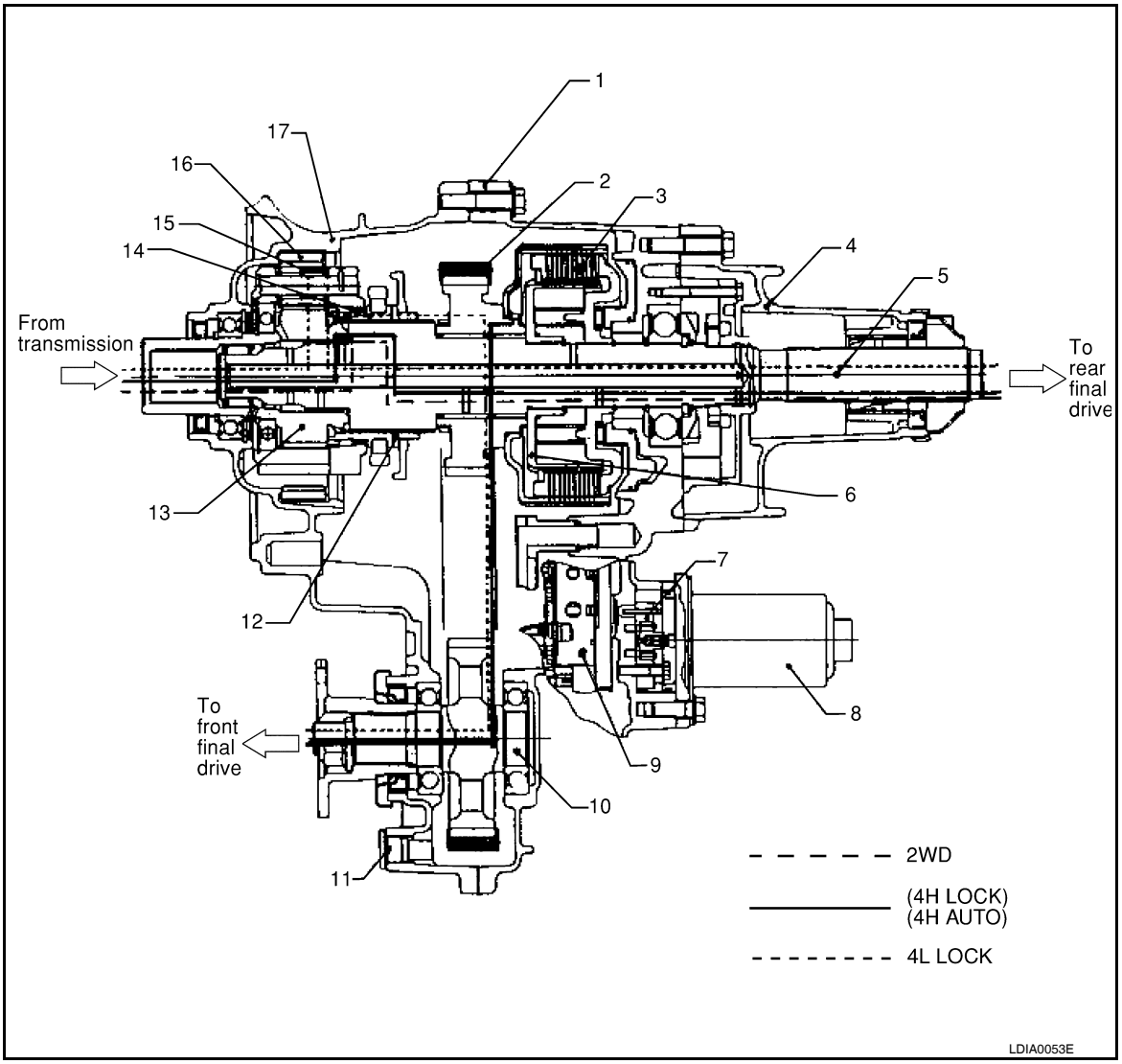

1. Center case
2. Chain
3. Multiple disc clutch
4. Rear case
5. Mainshaft
6. Clutch hub assembly
7. Sub oil pump
8. Transfer motor
9. Control valve
10. Front drive shaft
11. Drain plug
12. 2-4 sleeve
13. Sun gear assembly
14. L-H sleeve
15. Planetary carrier assembly
16. Internal gear
17. Front case

POWER TRANSFER FLOW

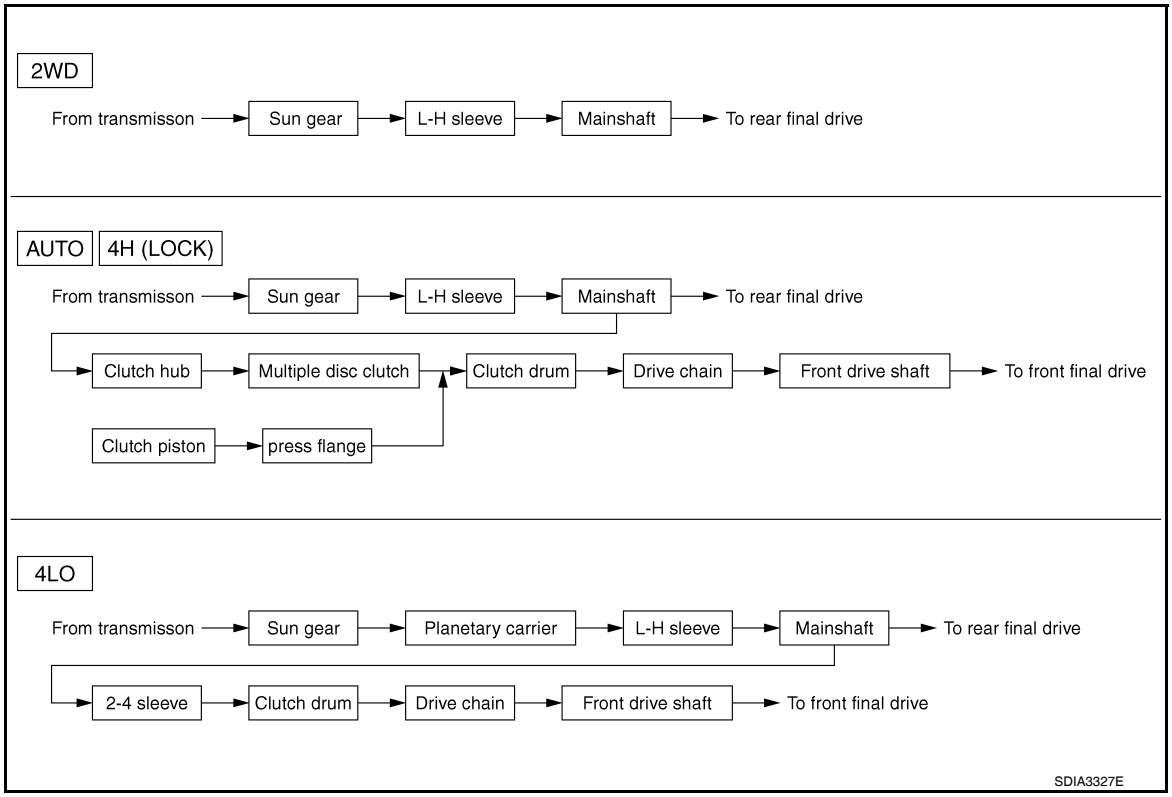
2WD
From transmisson
Sun gear
L-H sleeve
Mainshaft
To rear final drive
AUTO
4H (LOCK)
From transmisson
Sun gear
L-H sleeve
Mainshaft
To rear final drive
Clutch hub
Multiple disc clutch
Clutch drum
Drive chain
Front drive shaft
To front final drive
Clutch piston
press flange
4LO
From transmisson
Sun gear
Planetary carrier
L-H sleeve
Mainshaft
To rear final drive
2-4 sleeve
Clutch drum
Drive chain
Front drive shaft
To front final drive
SDIA3327E

DIAGNOSIS SYSTEM (TRANSFER CONTROL UNIT)

CONSULT-III Function (ALL MODE AWD/4WD)

INFOID:0000000005258234

FUNCTION

CONSULT-III can display each diagnostic item using the diagnostic test modes shown following.

Diagnostic Mode	Description
Self Diagnostic Result	Displays transfer control unit self-diagnosis results.
Data Monitor	Displays transfer control unit input/output data in real time.
Work support	Supports inspections and adjustments. Commands are transmitted to the transfer control unit for setting the status suitable for required operation, input/output signals are received from the transfer control unit and received data is displayed.
CAN Diag Support Monitor	The results of transmit/receive diagnosis of CAN communication can be read.
ECU Identification	Transfer control unit part number can be read.

SELF DIAGNOSTIC RESULT MODE

Operation Procedure

1. Connect CONSULT-III.
2. With engine at idle, touch SELF-DIAG RESULTS.
   Display shows malfunction experienced since the last erasing operation.

NOTE:
The details for TIME are as follows:
- 0: Error currently detected with transfer control unit.
- Except for 0: Error detected in the past and memorized with transfer control unit.
  Detects frequency of driving after DTC occurs (frequency of turning ignition switch ON/OFF).

How to Erase Self-diagnostic Results

1. Perform applicable inspection of malfunctioning item and then repair or replace.
2. Start engine and select SELF-DIAG RESULTS mode for ALL MODE AWD/4WD with CONSULT-III.
3. Touch ERASE on CONSULT-III screen to erase DTC memory.
   CAUTION:
   If memory cannot be erased, perform applicable diagnosis.

SELF-DIAGNOSTIC PROCEDURE (WITHOUT CONSULT-III)

Description

If the engine starts when there is a malfunction in the 4WD system, the 4WD warning lamp turns ON or flickers in the combination meter. When the system functions properly, the warning lamp turns ON when the ignition switch is turned to ON, and it turns OFF after engine starts. To locate the cause of a malfunction, start the self-diagnosis function. The 4WD warning lamp in the combination meter will indicate the malfunction area by flashing according to the self-diagnostic results. Refer to DLN-104, "DTC Index".

Diagnostic Procedure

1. Warn up engine.
2. Move A/T selector lever to P position.
3. Turn 4WD shift switch to 2WD position.
4. Turn ignition switch ON and OFF at least twice, and then turn ignition switch OFF.
5. Turn 4WD shift switch to AUTO position.
6. Turn ignition switch ON. (Do not start engine.)
7. 4WD warning lamp ON.
8. Move A/T selector lever to R position.
9. Turn 4WD shift switch to 2WD, AUTO and 2WD in order.
10. Move A/T selector lever to D position.
11. Turn 4WD shift switch to 4H, AUTO and 4H in order.

12. Move A/T selector lever to N position.
13. Turn 4WD shift switch to AUTO position.
14. Move A/T selector lever to P position.
15. Read the flickering of 4WD warning lamp.

Self-diagnosis example

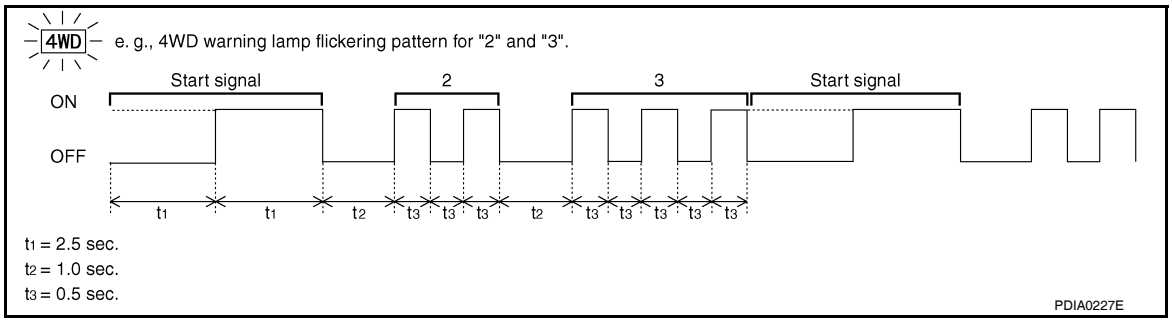

ERASE SELF-DIAGNOSIS

- In order to make it easier to find the cause of hard-to-duplicate malfunctions, malfunction information is stored into the control unit as necessary during use by the user. This memory is not erased no matter how many times the ignition switch is turned ON and OFF.
- However, this information is erased by turning ignition switch OFF after performing self-diagnostics or by erasing the memory using the CONSULT-III.

DATA MONITOR MODE

Operation Procedure

1. Connect CONSULT-III.
2. Touch DATA MONITOR.
3. Select from SELECT MONITOR ITEM, screen of data monitor mode is displayed.
   NOTE:
   When malfunction is detected, CONSULT-III performs REAL-TIME DIAGNOSIS.
   Also, any malfunction detected while in this mode will be displayed at real time.

Display Item List

×: Standard –: Not applicable

Monitored item (Unit)	Monitor item selection			Remarks
	ECU INPUT SIGNALS	MAIN SIGNALS	SELECTION FROM MENU	
VHCL/S SEN·FR [km/h] or [mph]	×	–	×	Wheel speed calculated by ABS actuator and electric unit (control unit). Signal input with CAN communication line.
VHCL/S SEN·RR [km/h] or [mph]	×	–	×	Wheel speed calculated by TCM. Signal input with CAN communication line.
ENGINE SPEED [rpm]	×	–	×	Engine speed calculated by ECM. Signal input with CAN communication line.
THRTL POS SEN [0.0/8]	×	–	×	Accelerator pedal position (APP) sensor status is displayed. Signal input with CAN communication line.
FLUID TEMP SE [V]	×	–	×	Transfer fluid temperature sensor signal voltage is displayed.
BATTERY VOLT [V]	×	–	×	Power supply voltage for transfer control unit.
2WD SWITCH [On/Off]	×	–	×	4WD shift switch status is displayed.
AUTO SWITCH [On/Off]	×	–	×	4WD shift switch status is displayed.
LOCK SWITCH [On/Off]	×	–	×	4WD shift switch status is displayed. (LOCK means 4H of 4WD shift switch.)

Monitored item (Unit)	Monitor item selection			Remarks
	ECU INPUT SIGNALS	MAIN SIGNALS	SELECTION FROM MENU	
4L SWITCH [On/Off]	×	–	×	4WD shift switch status is displayed. (4L means 4LO of 4WD shift switch.)
N POSI SW TF [On/Off]	×	–	×	Neutral-4LO switch signal status is displayed.
ATP SWITCH [On/Off]	×	–	×	ATP switch signal status is displayed.
WAIT DETCT SW [On/Off]	×	–	×	Wait detection switch status is displayed.
LINE PRES SW [On/Off]	×	–	×	Line pressure switch status is displayed.
CL PRES SW [On/Off]	×	–	×	Clutch pressure switch status is displayed.
N POSI SW AT [On/Off]	×	–	×	N position signal of transmission range switch status is displayed. Signal input with CAN communication line.
R POSI SW AT [On/Off]	×	–	×	R position signal of transmission range switch status is displayed. Signal input with CAN communication line.
P POSI SW AT [On/Off]	×	–	×	P position signal of transmission range switch status is displayed. Signal input with CAN communication line.
ABS OPER SW [On/Off]	×	–	×	ABS operation signal status is displayed. Signal input with CAN communication line.
VDC OPER SW [On/Off]	×	–	×	VDC operation signal status is displayed. Signal input with CAN communication line.
TCS OPER SW [On/Off]	×	–	×	TCS operation signal status is displayed. Signal input with CAN communication line.
THROTTLE POSI [0.0/8]	–	×	×	Throttle position status is displayed. Signal input with CAN communication line.
4WD MODE [AUTO/LOCK/2WD/4L]	–	×	×	Control status of 4WD recognized by transfer control unit. (AUTO, 4H, 2WD or 4LO)
VHCL/S COMP [km/h] or [mph]	–	×	×	Vehicle speed recognized by transfer control unit.
COMP CL TORQ [kgm]	–	×	×	Calculated torque recognized by transfer control unit.
DUTY SOLENOID [%]	–	×	×	Control value of clutch pressure solenoid.
2-4WD SOL [On/Off]	–	×	×	Output condition to 2-4WD solenoid.
2-4WD SOL MON [On/Off]	–	–	×	Check signal for transfer control unit signal output.
MOTOR RELAY [On/Off]	–	×	×	Transfer motor relay signal status is displayed.
MOTOR RLY MON [On/Off]	–	–	×	Check signal for transfer control unit signal output.
4WD FAIL LAMP [On/Off]	–	×	×	Control status of 4WD warning lamp is displayed.
2WD IND [On/Off]	–	–	×	Control status of 4WD shift indicator lamp (2WD indicator lamp) is displayed.
AUTO IND [On/Off]	–	–	×	Control status of 4WD shift indicator lamp (2WD and AUTO indicator lamp) is displayed.
LOCK IND [On/Off]	–	–	×	Control status of 4WD shift indicator lamp (2WD, AUTO and Lock indicator) is displayed.
4L IND [On/Off]	–	–	×	Control status of 4LO indicator lamp is displayed.

Monitored item (Unit)	Monitor item selection			Remarks
	ECU INPUT SIGNALS	MAIN SIGNALS	SELECTION FROM MENU	
ATP IND [On/Off]	–	–	×	Control status of ATP warning lamp is displayed.
SHIFT POS SW1 [On/Off]	×	–	×	Actuator position switch 1 (Low) signal status is displayed.
SHIFT POS SW2 [On/Off]	×	–	×	Actuator position switch 2 (high) signal status is displayed.
SHIFT ACT 1 [On/Off]	–	×	×	Output condition to actuator motor (clockwise)
SHIFT AC MON1 [On/Off]	×	–	×	Check signal for transfer control unit signal output
SHIFT ACT 2 [On/Off]	–	×	×	Output condition to actuator motor (counter-clockwise)
SHIFT AC MON2 [On/Off]	×	–	×	Check signal for transfer control unit signal output
T/F F SPEED [km/h] or [mph]	×	–	×	Displayed, but do not use.
A/T R SPEED [km/h] or [mph]	×	–	×	Output shaft revolution signal (output speed sensor) calculated by TCM. Signal input with CAN communication line.
AT GEAR POSI [1/2/3/4/5]	×	–	×	A/T actual gear position is displayed.

WORK SUPPORT

When there is no malfunction with transfer and 4WD system, the following symptoms in AUTO mode may be claimed by a customer: vibration when accelerating on a low μ road (snow-covered or icy road) or a slight shock is felt at a few hertz as if it were being pushed lightly from behind.
It is possible to deal with these symptoms by changing the CLUTCH FORCE RELEASE LIMIT VALUE. However, be careful when changing the value because it may adversely affect driving performance.

Operation Procedure

1. Connect CONSULT-III.
2. Touch WORK SUPPORT.
3. Select from CLUTCH/F RLS LIM ADJ, screen of data monitor mode is displayed.

Clutch Force Release Limit Adjustment

1. Initial CLUTCH FORCE RELEASE LIMIT value 0.3 kgm appears under CONDITION SETTING on CONSULT-III display.

   1.2 kg-m : Tight corner braking symptom is alleviated. However, vibration may occur when accelerating on a low μ road (icy road, etc.).

   0.3 kg-m : Initial set value.

   0.2 kg-m : Do not set to this value because the tight corner braking symptom will get worse.

2. Touch 1.2 on the display.
3. Display changes to NOW ADJUSTING in a short time.
4. When clutch force release limit value is set to 1.2 kgm, current value 0.3 kgm shown on display will be replaced by 1.2 kgm and ADJUSTMENT COMPLETE will appear at the same time. Clutch force release limit value setting is now complete.

NOISE, VIBRATION AND HARSHNESS (NVH) TROUBLESHOOTING

NVH Troubleshooting Chart

INFOID:0000000005258235

Use the chart below to help you find the cause of the symptom. The numbers indicate the order of the inspection. If necessary, repair or replace these parts.

Reference page		DLN-135			DLN-154			DLN-154	DLN-154	DLN-154
SUSPECTED PARTS (Possible cause)		TRANSFER FLUID (Level low)	TRANSFER FLUID (Wrong)	TRANSFER FLUID (Level too high)	LIQUID GASKET (Damaged)	O-RING (Worn or damaged)	OIL SEAL (Worn or damaged)	SHIFT FORK (Worn or damaged)	GEAR (Worn or damaged)	BEARING (Worn or damaged)
Symptom	Noise	1	2						3	3
	Transfer fluid leakage		3	1	2	2	2			
	Hard to shift or will not shift		1	1				2		

COMPONENT DIAGNOSIS

P1811 POWER SUPPLY CIRCUIT FOR TRANSFER CONTROL UNIT

Description

INFOID:0000000005258236

Power supply to transfer control unit is abnormally low while driving.

DTC Logic

INFOID:0000000005258237

DTC DETECTION LOGIC

DTC	CONSULT-III	Diagnostic item is detected when...	Reference
[P1811]	BATTERY VOLTAGE	Power supply voltage for transfer control unit is abnormally low while driving.	Refer to DLN-28.

DTC CONFIRMATION PROCEDURE

1.DTC CONFIRMATION PROCEDURE

1. Turn ignition switch ON.
2. Perform self-diagnosis.

Is DTC P1811 detected?

YES >> Perform diagnosis procedure. Refer to DLN-28, "Diagnosis Procedure".
NO >> Inspection End.

Diagnosis Procedure

INFOID:0000000005258238

Regarding Wiring Diagram information, refer to DLN-95, "Wiring Diagram - ALL-MODE 4WD SYSTEM -".

1.CHECK POWER SUPPLY

1. Turn ignition switch “OFF”. (Stay for at least 5 seconds.)
2. Connect transfer control unit harness connector.
3. Check voltage between transfer control unit harness connector terminals and ground.

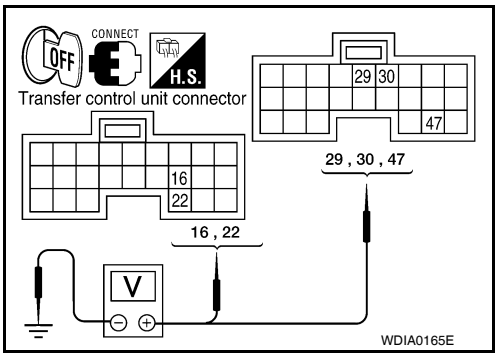

Connector	Terminal	Voltage (Approx.)
M152	16 - Ground	0V
	22 - Ground	
M153	29 - Ground	
	30 - Ground	Battery voltage
	47 - Ground	

4. Turn ignition switch “ON”. (Do not start engine.)
5. Check voltage between transfer control unit harness connector terminals and ground.

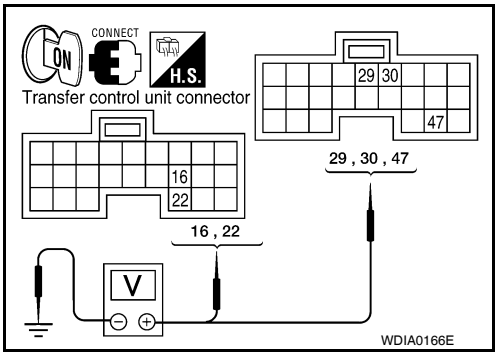

Connector	Terminal	Voltage (Approx.)
M152	16 - Ground	Battery voltage
	22 - Ground	
M153	29 - Ground	
	30 - Ground	0V
	47 - Ground	Battery voltage

OK or NG

OK >> GO TO 2.
NG >> Check the following. If any items are damaged, repair or replace damaged parts.
- 40A fusible link (No. j, located in the fuse and fusible link box).
- 10A fuses [No. 21 located in fuse block (J/B)] and No. 59 (located in the fuse and relay box).
- Harness for short or open between battery and transfer control unit harness connector M153 terminals 47.
- Harness for short or open between ignition switch and transfer control unit harness connector M153 terminal 29.
- Harness for short or open between battery and transfer shut off relay harness connector E155 terminal 1 and 3.
- Harness for short or open between transfer shut off relay harness connector E155 terminal 2 and transfer control unit harness connector M153 terminal 30.
- Harness for short or open between transfer shut off relay harness connector E155 terminal 5 and transfer control unit harness connector M152 terminals 16 and 22.
- Battery and ignition switch.
- Transfer shut off relay. Refer to DLN-29, "Component Inspection".

2. CHECK GROUND CIRCUIT

1. Turn ignition switch “OFF”. (Stay for at least 5 seconds.)
2. Disconnect transfer control unit harness connector.
3. Check continuity between transfer control unit harness connector M152 terminals 3, 6, M153 terminal 45 and ground.

Continuity should exist.

Also check harness for short to power.

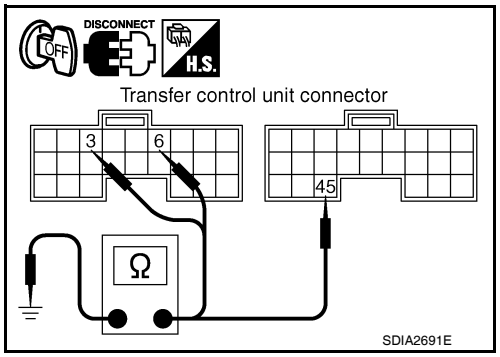

OK or NG

OK >> GO TO 3.
NG >> Repair open circuit or short to power in harness or connectors.

3. CHECK TRANSFER CONTROL UNIT

Check transfer control unit input/output signal. Refer to DLN-87, "Reference Value".

OK or NG

OK >> GO TO 4.
NG >> Check transfer control unit pin terminals for damage or loose connection with harness connector. If any items are damaged, repair or replace damaged parts.

4. CHECK DTC

Perform the self-diagnosis, after driving a vehicle for a while.

OK or NG

OK >> Inspection End.
NG >> Replace transfer control unit. Refer to DLN-138, "Removal and Installation".

Component Inspection

INFOID:0000000005258239

1. Turn ignition switch OFF. (Stay for at least 5 seconds.)
2. Remove transfer shut off relay. Refer to DLN-19, "Component Parts Location".

3. Apply 12V direct current between transfer shut off relay terminals 1 and 2.
4. Check continuity between relay terminals 3 and 5.

Condition	Continuity
12V direct current supply between terminals 1 and 2	Yes
OFF	No

5. If inspection results are abnormal replace the transfer shut off relay.

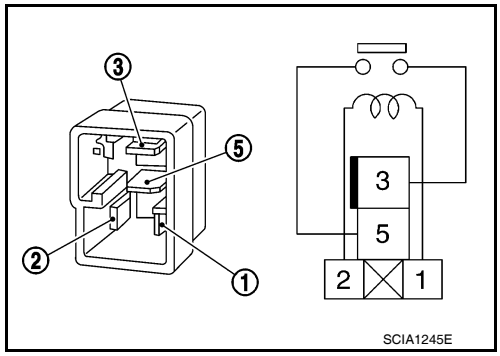

P1802 – P1804, P1809 TRANSFER CONTROL UNIT

Description

INFOID:0000000005258240

The transfer control unit controls the transfer control device which controls shifts between AUTO, 4H and 4LO and between 2WD and 4WD. A DTC may set when any of the following occur:
- Malfunction is detected in the memory (RAM) system of transfer control unit.
- Malfunction is detected in the memory (ROM) system of transfer control unit.
- Malfunction is detected in the memory (EEPROM) system of transfer control unit.
- AD converter system of transfer control unit is malfunctioning.

DTC Logic

INFOID:0000000005258241

DTC DETECTION LOGIC

DTC	CONSULT-III	Diagnostic item is detected when...	Reference
[P1802]	CONTROL UNIT 1	Malfunction is detected in the memory (RAM) system of transfer control unit.	Refer to DLN-31.
[P1803]	CONTROL UNIT 2	Malfunction is detected in the memory (ROM) system of transfer control unit.	
[P1804]	CONTROL UNIT 3	Malfunction is detected in the memory (EEPROM) system of transfer control unit.	
[P1809]	CONTROL UNIT 4	AD converter system of transfer control unit is malfunctioning.	

DTC CONFIRMATION PROCEDURE

1. DTC CONFIRMATION PROCEDURE

1. Turn ignition switch ON.
2. Perform self-diagnosis.

Are DTC's P1802 - P1804 or P1809 detected?

YES >> Perform diagnosis procedure. Refer to DLN-31, "Diagnosis Procedure".
NO >> Inspection End.

Diagnosis Procedure

INFOID:0000000005258242

1. INSPECTION START

Do you have CONSULT-III?

YES or NO

YES >> GO TO 2.
NO >> GO TO 3.

2. PERFORM SELF-DIAGNOSIS (WITH CONSULT-III)

With CONSULT-III

1. Turn ignition switch ON. (Do not start engine.)
2. Select SELF-DIAG RESULTS mode for ALL MODE AWD/4WD with CONSULT-III.
3. Touch ERASE.
4. Turn ignition switch OFF and wait at least 10 seconds.
5. Perform the self-diagnosis again.

Is the CONTROL UNIT 1 [P1802], CONTROL UNIT 2 [P1803], CONTROL UNIT 3 [P1804] or CONTROL UNIT 4 [P1809] displayed?

YES >> Replace transfer control unit. Refer to DLN-138, "Removal and Installation".
NO >> Inspection End.

3. PERFORM SELF-DIAGNOSIS (WITHOUT CONSULT-III)

Without CONSULT-III

1. Perform the self-diagnosis and then erase self-diagnostic results. Refer to DLN-23, "CONSULT-III Function (ALL MODE AWD/4WD)".
2. Perform the self-diagnosis again.

Do the self-diagnostic results indicate AD converter?

YES >> Replace transfer control unit.
NO >> Inspection End.

P1807 VEHICLE SPEED SENSOR (A/T)

Description

INFOID:0000000005258243

The transmission control module (TCM) transmits the output shaft revolution signal via CAN communication to Transfer control unit. DTC P1807 will set when a malfunction is detected in the output shaft revolution signal or an improper signal is input while driving.

DTC Logic

INFOID:0000000005258244

DTC DETECTION LOGIC

DTC	CONSULT-III	Diagnostic item is detected when...	Reference
[P1807]	VHCL SPEED SEN·AT	• Malfunction is detected in output shaft revolution signal that is output from TCM through CAN communication. • Improper signal is input while driving.	Refer to DLN-33.

DTC CONFIRMATION PROCEDURE

1. DTC CONFIRMATION PROCEDURE

1. Turn ignition switch ON.
2. Perform self-diagnosis.

Is DTC P1807 detected?

YES >> Perform diagnosis procedure. Refer to DLN-33, "Diagnosis Procedure".
NO >> Inspection End.

Diagnosis Procedure

INFOID:0000000005258245

1. CHECK DTC WITH TCM

Perform self-diagnosis with TCM. Refer to TM-36, "CONSULT-III Function (TRANSMISSION)".

Is any malfunction detected by self-diagnosis?

YES >> Check the malfunctioning system.
NO >> GO TO 2.

2. CHECK TRANSFER CONTROL UNIT

Check transfer control unit input/output signal. Refer to DLN-87, "Reference Value".

Are the inspection results normal?

YES >> GO TO 3.
NO >> Check transfer control unit pin terminals for damage or loose connection with harness connector. If any items are damaged, repair or replace damaged parts.

3. CHECK DTC

Drive the vehicle and then perform self-diagnosis.

Are the inspection results normal?

YES >> Inspection End.
NO >> Perform self-diagnosis with TCM again.

P1808 VEHICLE SPEED SENSOR (ABS)

Description

INFOID:0000000005258246

The ABS actuator and electric unit (control unit) transmits a vehicle speed signal via CAN communication to the transfer control unit. DTC P1808 sets when a malfunction is detected in the vehicle speed signal that is output from the ABS actuator and electric unit (control unit) or an improper signal is input while driving.

DTC Logic

INFOID:0000000005258247

DTC DETECTION LOGIC

DTC	CONSULT-III	Diagnostic item is detected when...	Reference
[P1808]	VHCL SPEED SEN·ABS	• Malfunction is detected in vehicle speed signal that is output from ABS actuator and electric unit (control unit) through CAN communication. • Improper signal is input while driving.	Refer to DLN-34.

DTC CONFIRMATION PROCEDURE

1. DTC CONFIRMATION PROCEDURE

1. Turn ignition switch ON.
2. Perform self-diagnosis.

Is DTC P1808 displayed?

YES >> Perform diagnosis procedure. Refer to DLN-34, "Diagnosis Procedure".
NO >> Inspection End.

Diagnosis Procedure

INFOID:0000000005258248

1. CHECK DTC WITH ABS ACTUATOR AND ELECTRIC UNIT (CONTROL UNIT)

Perform self-diagnosis with ABS actuator and electric unit (control unit). Refer to BRC-22, "CONSULT-III Function (ABS)".

Is any malfunction detected by self-diagnosis?

YES >> Check the malfunctioning system.
NO >> GO TO 2.

2. CHECK TRANSFER CONTROL UNIT

Check transfer control unit input/output signal. Refer to DLN-87, "Reference Value".

Are the inspection results normal?

YES >> GO TO 3.
NO >> Check transfer control unit pin terminals for damage or loose connection with harness connector. If any items are damaged, repair or replace damaged parts.

3. CHECK DTC

Perform the self-diagnosis, after driving a vehicle for a while.

Are the inspection results normal?

YES >> Inspection End.
NO >> Perform self-diagnosis with ABS actuator and electric unit (control unit) again.

P1810 NEUTRAL-4LO SWITCH

Description

INFOID:0000000005258249

The neutral-4LO switch detects that the transfer case is in neutral or 4LO range. DTC P1810 will set when an improper signal from the neutral-4LO switch is input due to an open or short circuit.

DTC Logic

INFOID:0000000005258250

DTC DETECTION LOGIC

DTC	CONSULT-III	Diagnostic item is detected when...	Reference
[P1810]	4L POSI SW TF	Improper signal from neutral-4LO switch is input due to open or short circuit.	Refer to DLN-35.

DTC CONFIRMATION PROCEDURE

1. DTC CONFIRMATION PROCEDURE

1. Turn ignition switch ON.
2. Perform self-diagnosis.

Is DTC P1810 displayed?

YES >> Perform diagnosis procedure. Refer to DLN-35, "Diagnosis Procedure".
NO >> Inspection End.

Diagnosis Procedure

INFOID:0000000005258251

Regarding Wiring Diagram information, refer to DLN-95, "Wiring Diagram - ALL-MODE 4WD SYSTEM -".

1. CHECK 4LO POSITION SWITCH SIGNAL

With CONSULT-III

1. Start engine.
2. Select DATA MONITOR mode for ALL MODE AWD/4WD with CONSULT-III.
3. Read out the value of N POSI SW TF.

Condition		Display value
• Vehicle stopped • Engine running • A/T selector lever N position • Brake pedal depressed	4WD shift switch: 2WD, AUTO or 4H	OFF
	4WD shift switch: 4H to 4LO (While actuator motor is operating.)	OFF → ON
	4WD shift switch: 4LO to 4H (While actuator motor is operating.)	ON → OFF
	4WD shift switch: 4LO	ON

Without CONSULT-III

1. Start engine.

2. Check voltage between transfer control unit harness connector terminal and ground.

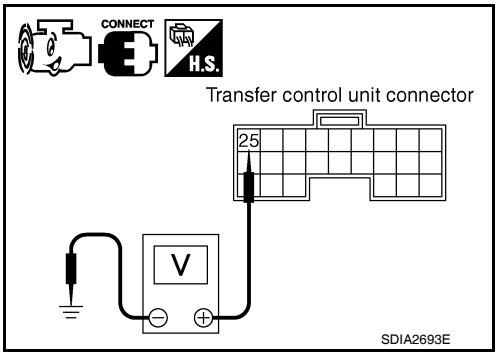

Connector	Terminal (Wire color)	Condition		Voltage (Approx.)
M153	25 - Ground	• Vehicle stopped • Engine running • A/T selector lever N position • Brake pedal depressed	4WD shift switch: 2WD, AUTO or 4H	Battery voltage
			4WD shift switch: 4H to 4LO (While actuator motor is operating.)	Battery voltage → 0V
			4WD shift switch: 4LO to 4H (While actuator motor is operating.)	0V → Battery voltage
			4WD shift switch: 4LO	0V

Are inspection results normal?

YES >> GO TO 5.
NO >> GO TO 2.

2. CHECK HARNESS BETWEEN TRANSFER CONTROL UNIT AND NEUTRAL-4LO SWITCH

1. Turn ignition switch OFF. (Stay for at least 5 seconds.)
2. Disconnect transfer control unit harness connector and the neutral-4LO switch harness connector.
3. Check continuity between transfer control unit harness connector M153 terminal 25 and neutral-4LO switch harness connector F60 terminal 13.

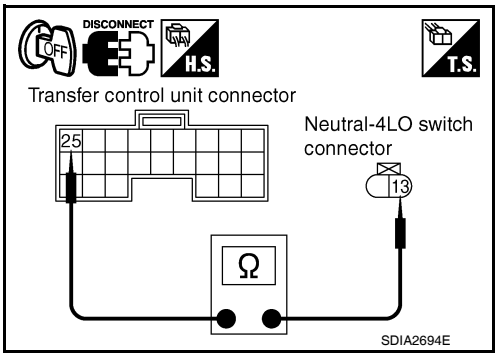

Continuity should exist.

Also check harness for short to ground and short to power.

Are inspection results normal?

YES >> GO TO 3.
NO >> Repair or replace damaged parts.

3. CHECK GROUND CIRCUIT

1. Turn ignition switch OFF. (Stay for at least 5 seconds.)
2. Disconnect neutral-4LO switch harness connector.
3. Check continuity between neutral-4LO switch harness connector F60 terminal 12 and ground.

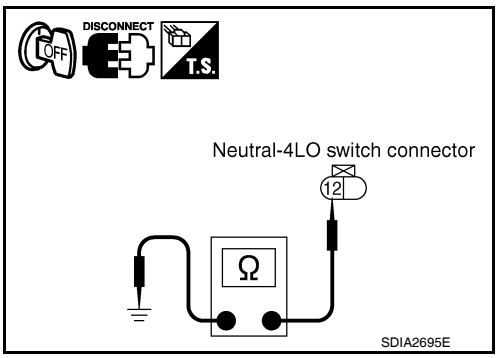

Continuity should exist.

Also check harness for short to ground and short to power.

Are inspection results normal?

YES >> GO TO 4.
NO >> Repair open circuit or short to ground or short to power in harness or connectors.

4. CHECK 4LO SWITCH

1. Turn ignition switch OFF.
2. Disconnect neutral-4LO switch harness connector.
3. Remove neutral-4LO switch.

4. Push and release neutral-4LO switch and check continuity between neutral-4LO switch terminals 12 and 13.

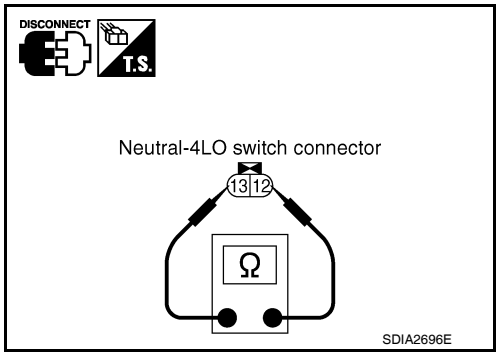

Terminal	Condition	Continuity
12 - 13	Push neutral-4LO switch	Yes
	Release neutral-4LO switch	No

Are inspection results normal?

YES >> GO TO 5.
NO >> Replace neutral-4LO switch. Refer to DLN-19, "Component Parts Location".

5. CHECK TRANSFER CONTROL UNIT

Check transfer control unit input/output signal. Refer to DLN-87, "Reference Value".

Are inspection results normal?

YES >> GO TO 6.
NO >> Check transfer control unit pin terminals for damage or loose connection with harness connector. If any items are damaged, repair or replace damaged parts.

6. CHECK DTC

Drive the vehicle and then perform self-diagnosis.

Are inspection results normal?

YES >> Inspection End.
NO >> Replace transfer control unit. Refer to DLN-138, "Removal and Installation".

Component Inspection

INFOID:0000000005258252

1. Turn ignition switch OFF. (Stay for at least 5 seconds.)
2. Disconnect neutral-4LO switch harness connector.
3. Remove neutral-4LO switch. Refer to DLN-19, "Component Parts Location".
4. Push and release neutral-4LO switch and check continuity between neutral-4LO switch terminals 12 and 13.

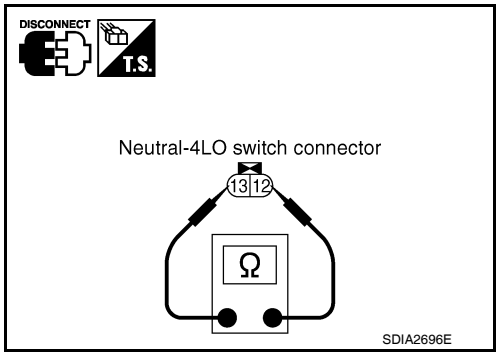

Terminal	Condition	Continuity
12 - 13	Push neutral-4LO switch	Yes
	Release neutral-4LO switch	No

5. If the inspection results are abnormal replace the neutral-4LO switch.

P1813 4WD SHIFT SWITCH

Description

INFOID:0000000005258253

The 4WD shift switch allows the driver to select AUTO, 2WD or 4WD and 4H or 4LO. DTC P1813 will set if more than two switch inputs are simultaneously detected by the transfer control unit due to a short circuit in the 4WD shift switch.

DTC Logic

INFOID:0000000005258254

DTC DETECTION LOGIC

DTC	CONSULT-III	Diagnostic item is detected when...	Reference
[P1813]	4WD MODE SW	More than two switch inputs are simultaneously detected due to short circuit of 4WD shift switch.	Refer to DLN-38.

DTC CONFIRMATION PROCEDURE

1. DTC CONFIRMATION PROCEDURE

1. Turn ignition switch ON.
2. Perform self-diagnosis.

Is DTC P1813 displayed?

YES >> Perform diagnosis procedure. Refer to DLN-38, "Diagnosis Procedure".
NO >> Inspection End.

Diagnosis Procedure

INFOID:0000000005258255

Regarding Wiring Diagram information, refer to DLN-95, "Wiring Diagram - ALL-MODE 4WD SYSTEM -".

1. CHECK 4WD SHIFT SWITCH SIGNAL

With CONSULT-III

1. Turn ignition switch “ON”. (Do not start engine.)
2. Select “DATA MONITOR” mode for “ALL MODE AWD/4WD” with CONSULT-III.
3. Read out ON/OFF switching action of the “2WD SWITCH”, “AUTO SWITCH”, “LOCK SWITCH” and “4L SWITCH” while operating 4WD shift switch.

Without CONSULT-III

1. Turn ignition switch “ON”. (Do not start engine.)
2. Check voltage between transfer control unit harness connector terminals and ground.

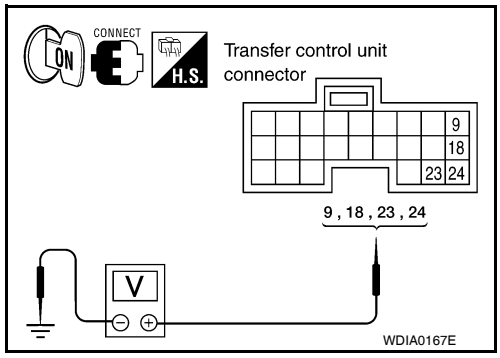

Connector	Terminal	Condition	Voltage (Approx.)
M152	9 - ground	4WD shift switch: 2WD	Battery voltage
		4WD shift switch: AUTO, 4H or 4LO	0V
	18 - ground	4WD shift switch: 4H	Battery voltage
		4WD shift switch: 2WD, AUTO or 4LO	0V
	23 - ground	4WD shift switch: 4LO	Battery voltage
		4WD shift switch: 2WD, AUTO or 4H	0V
	24 - ground	4WD shift switch: AUTO	Battery voltage
		4WD shift switch: 2WD, 4H or 4LO	0V

OK or NG

OK >> GO TO 5.
NG >> GO TO 2.

2. CHECK 4WD SHIFT SWITCH POWER SUPPLY CIRCUIT

1. Turn ignition switch “OFF”. (Stay for at least 5 seconds.)
2. Disconnect 4WD shift switch harness connector.
3. Check voltage between 4WD shift switch harness connector terminal 1 and ground.

Connector	Terminal	Voltage (Approx.)
M141	1 - Ground	0V

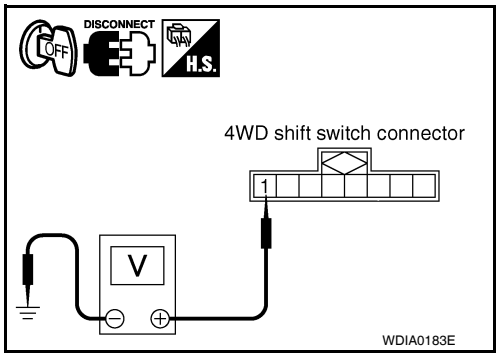

4. Turn ignition switch “ON”. (Do not start engine.)
5. Check voltage between 4WD shift switch harness connector terminal 1 and ground.

Connector	Terminal	Voltage (Approx.)
M141	1 - Ground	Battery voltage

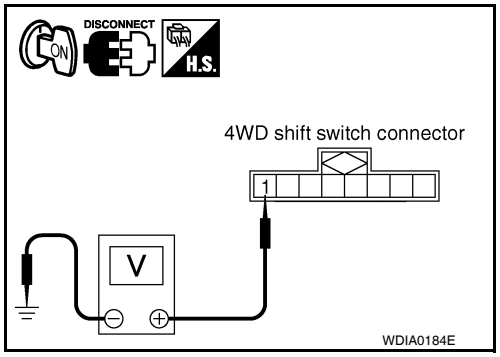

OK or NG

OK >> GO TO 3.
NG >> Check the following. If any items are damaged, repair or replace damaged parts.
- Harness for short or open between transfer shut off relay harness connector E155 terminal 5.
- Power supply circuit for transfer control unit. Refer to DLN-28, "Diagnosis Procedure".

3. CHECK HARNESS BETWEEN 4WD SHIFT SWITCH AND TRANSFER CONTROL UNIT

1. Turn ignition switch “OFF”. (Stay for at least 5 seconds.)
2. Disconnect transfer control unit harness connector and the 4WD shift switch harness connector.
3. Check continuity between the following terminals.

- Transfer control unit harness connector M152 terminal 9 and 4WD shift switch harness connector M141 terminal 2.
- Transfer control unit harness connector M152 terminal 18 and 4WD shift switch harness connector M141 terminal 5.
- Transfer control unit harness connector M152 terminal 23 and 4WD shift switch harness connector M141 terminal 6.
- Transfer control unit harness connector M152 terminal 24 and 4WD shift switch harness connector M141 terminal 3.

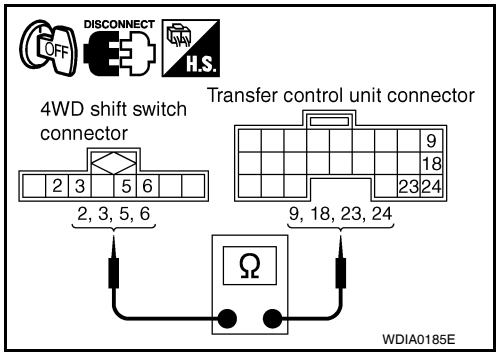

Continuity should exist.

Also check harness for short to ground and short to power.

OK or NG

OK >> GO TO 4.
NG >> Repair or replace damaged parts.

4. CHECK 4WD SHIFT SWITCH

1. Turn ignition switch “OFF”. (Stay for at least 5 seconds.)
2. Disconnect 4WD shift switch harness connector.

3. Operate 4WD shift switch and check continuity between 4WD shift switch terminals.

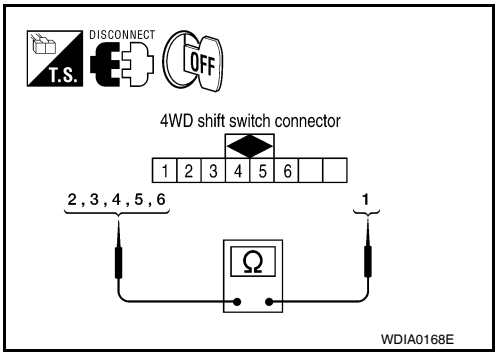

Connector	Terminal	Condition	Continuity
M141	1 - 2	4WD shift switch: 2WD	Yes
		4WD shift switch: AUTO, 4H and 4LO	No
	1 - 3	4WD shift switch: AUTO	Yes
		4WD shift switch: 2WD, 4H and 4LO	No
	1 - 4	4WD shift switch: 2WD	No
		4WD shift switch: AUTO, 4H and 4LO	Yes
	1 - 5	4WD shift switch: 4H	Yes
		4WD shift switch: 2WD, AUTO, and 4LO	No
	1 - 6	4WD shift switch: 4LO	Yes
		4WD shift switch: 2WD, AUTO and 4H	No

OK or NG

OK >> GO TO 5.
NG >> Replace 4WD shift switch.

5. CHECK TRANSFER CONTROL UNIT

Check transfer control unit input/output signal. Refer to DLN-87, "Reference Value".

OK or NG

OK >> GO TO 6.
NG >> Check transfer control unit pin terminals for damage or loose connection with harness connector. If any items are damaged, repair or replace damaged parts.

6. CHECK DTC

Perform the self-diagnosis, after driving a vehicle for a while.

OK or NG

OK >> Inspection End.
NG >> Replace transfer control unit. Refer to DLN-138, "Removal and Installation".

Component Inspection

INFOID:0000000005258256

4WD SHIFT SWITCH

1. Turn ignition switch “OFF”. (Stay for at least 5 seconds.)
2. Disconnect 4WD shift switch harness connector.
3. Operate 4WD shift switch and check continuity between 4WD shift switch terminals.

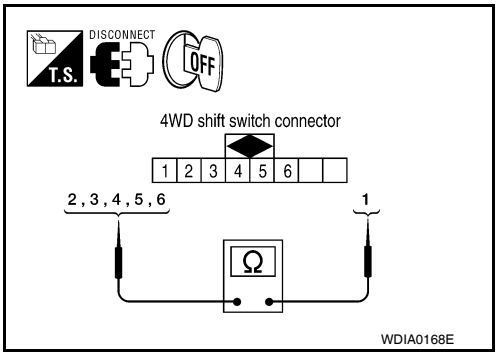

Connector	Terminal	Condition	Continuity
M141	1 - 2	4WD shift switch: 2WD	Yes
		4WD shift switch: AUTO, 4H and 4LO	No
	1 - 3	4WD shift switch: AUTO	Yes
		4WD shift switch: 2WD, 4H and 4LO	No
	1 - 4	4WD shift switch: 2WD	No
		4WD shift switch: AUTO, 4H and 4LO	Yes
	1 - 5	4WD shift switch: 4H	Yes
		4WD shift switch: 2WD, AUTO, and 4LO	No
	1 - 6	4WD shift switch: 4LO	Yes
		4WD shift switch: 2WD, AUTO and 4H	No

4. If NG, replace the 4WD shift switch.

P1814 WAIT DETECTION SWITCH

Description

INFOID:0000000005258257

The wait detection switch detects if the transfer case is in 4WD. DTC P1814 will set if an improper signal from the wait detection switch is input due to open or short circuit.

DTC Logic

INFOID:0000000005258258

DTC DETECTION LOGIC

DTC	CONSULT-III	Diagnostic item is detected when...	Reference
[P1814]	4WD DETECT SWITCH	Improper signal from wait detection switch is input due to open or short circuit.	Refer to DLN-42.

DTC CONFIRMATION PROCEDURE

1. DTC CONFIRMATION PROCEDURE

1. Turn ignition switch ON.
2. Perform self-diagnosis.

Is DTC P1814 detected?

YES >> Perform diagnosis procedure. Refer to DLN-42, "Diagnosis Procedure".
NO >> Inspection End.

Diagnosis Procedure

INFOID:0000000005258259

Regarding Wiring Diagram information, refer to DLN-95, "Wiring Diagram - ALL-MODE 4WD SYSTEM -".

1. CHECK WAIT DETECTION SWITCH SIGNAL

With CONSULT-III

1. Start engine.
2. Select “DATA MONITOR” mode for “ALL MODE AWD/4WD” with CONSULT-III.
3. Read out the value of “WAIT DETCT SW”.

Condition		Display value
• Vehicle stopped • Engine running • A/T selector lever “N” position • Brake pedal depressed	4WD shift switch: 2WD, AUTO or 4H	OFF
	4WD shift switch: 4H to 4LO (While actuator motor is operating.)	OFF → ON
	4WD shift switch: 4LO to 4H (While actuator motor is operating.)	ON → OFF
	4WD shift switch: 4LO	ON

Without CONSULT-III

1. Start engine.

2. Check voltage between transfer control unit harness connector terminal and ground.

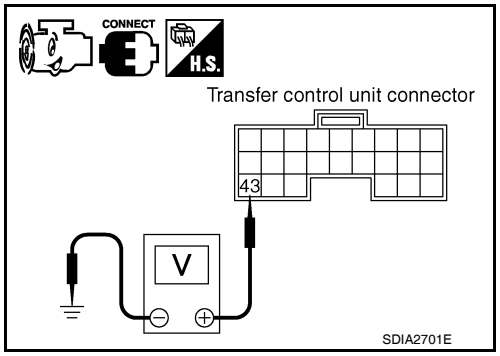

Connector	Terminal	Condition		Voltage (Approx.)
M153	43 - Ground	• Vehicle stopped • Engine running • A/T selector lever "N" position • Brake pedal depressed	4WD shift switch: 2WD, AUTO or 4H	Battery voltage
			4WD shift switch: 4H to 4LO (While actuator motor is operating.)	Battery voltage → 0V
			4WD shift switch: 4LO to 4H (While actuator motor is operating.)	0V → Battery voltage
			4WD shift switch: 4LO	0V

OK or NG

OK >> GO TO 5.
NG >> GO TO 2.

2. CHECK HARNESS BETWEEN TRANSFER CONTROL UNIT AND WAIT DETECTION SWITCH

1. Turn ignition switch "OFF". (Stay for at least 5 seconds.)
2. Disconnect transfer control unit harness connector and the wait detection switch harness connector.
3. Check continuity between transfer control unit harness connector M153 terminal 43 and wait detection switch harness connector F59 terminal 10.

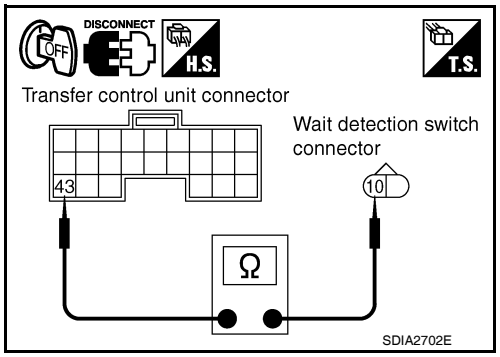

Continuity should exist.

Also check harness for short to ground and short to power.

OK or NG

OK >> GO TO 3.
NG >> Repair or replace damaged parts.

3. CHECK GROUND CIRCUIT

1. Turn ignition switch "OFF". (Stay for at least 5 seconds.)
2. Disconnect wait detection switch harness connector.
3. Check continuity between wait detection switch harness connector F59 terminal 11 and ground.

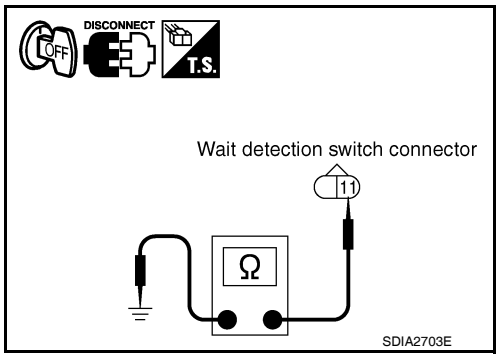

Continuity should exist.

Also check harness for short to power.

OK or NG

OK >> GO TO 4.
NG >> Repair open circuit or short to power in harness or connectors.

4. CHECK WAIT DETECTION SWITCH

1. Turn ignition switch "OFF". (Stay for at least 5 seconds.)
2. Disconnect wait detection switch harness connector.
3. Remove wait detection switch. Refer to DLN-19, "Component Parts Location".

4. Push and release wait detection switch and check continuity between wait detection switch terminals 10 and 11.

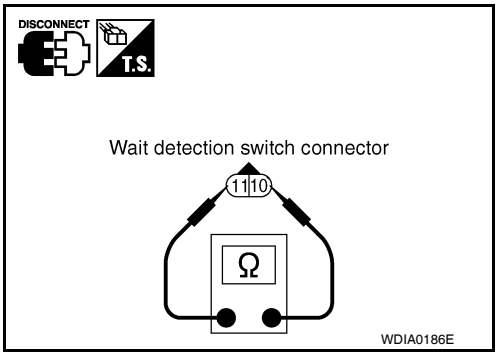

Terminal	Condition	Continuity
10 - 11	Push wait detection switch	Yes
	Release wait detection switch	No

OK or NG

OK >> GO TO 5.
NG >> Replace wait detection switch.

5. CHECK TRANSFER CONTROL UNIT

Check transfer control unit input/output signal. Refer to DLN-87, "Reference Value".

OK or NG

OK >> GO TO 6.
NG >> Check transfer control unit pin terminals for damage or loose connection with harness connector. If any items are damaged, repair or replace damaged parts.

6. CHECK DTC

Perform the self-diagnosis, after driving a vehicle for a while.

OK or NG

OK >> Inspection End.
NG >> Replace transfer control unit. Refer to DLN-138, "Removal and Installation".

Component Inspection

INFOID:0000000005258260

1. Turn ignition switch OFF. (Stay for at least 5 seconds.)
2. Disconnect wait detection switch harness connector.
3. Remove wait detection switch. Refer to DLN-19, "Component Parts Location".
4. Push and release wait detection switch and check continuity between wait detection switch terminals 10 and 11.

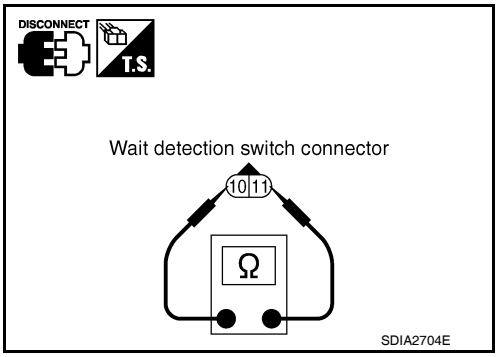

Terminal	Condition	Continuity
10 - 11	Push wait detection switch	Yes
	Release wait detection switch	No

5. If the inspection results are abnormal replace the wait detection switch.

P1816 TRANSMISSION RANGE SWITCH

Description

INFOID:0000000005258261

The transmission range switch transmits the A/T position indicator signal (transmission range switch signal) via CAN communication to the transfer control unit. DTC P1816 will set when the transmission range switch signal is malfunctioning or there is a communication error.

DTC Logic

INFOID:0000000005258262

DTC DETECTION LOGIC

DTC	CONSULT-III	Diagnostic item is detected when...	Reference
[P1816]	PNP SW/CIRC	When transmission range switch signal is malfunction or communication error between the control units.	Refer to DLN-45.

DTC CONFIRMATION PROCEDURE

1. DTC CONFIRMATION PROCEDURE

1. Turn ignition switch ON.
2. Perform self-diagnosis.

Is DTC P1816 displayed?

YES >> Perform diagnosis procedure. Refer to DLN-45, "Diagnosis Procedure".
NO >> Inspection End.

Diagnosis Procedure

INFOID:0000000005258263

1. CHECK DTC WITH TCM

Perform self-diagnosis with TCM. Refer to TM-36, "CONSULT-III Function (TRANSMISSION)".

Is any malfunction detected by self-diagnosis?

YES >> Check the malfunctioning system.
NO >> GO TO 2.

2. CHECK TRANSFER CONTROL UNIT

Check transfer control unit input/output signal. Refer to DLN-87, "Reference Value".

Are inspection results normal?

YES >> GO TO 3.
NO >> Check transfer control unit pin terminals for damage or loose connection with harness connector. If any items are damaged, repair or replace damaged parts.

3. CHECK DTC

Drive the vehicle and then perform self-diagnosis.

Are inspection results normal?

YES >> Inspection End.
NO >> Perform self-diagnosis with TCM again.

P1817 ACTUATOR MOTOR

Description

INFOID:0000000005258264

The actuator motor receives signals from the transfer control unit and controls shift rods which shift the transfer case. DTC P1817 will set when any of the following occur:
- Motor does not operate properly due to open or short circuit in actuator motor.
- Malfunction is detected in the actuator motor. (When 4WD shift switch is operated and actuator motor does not operate)
- Malfunction is detected in transfer shift high relay or transfer shift low relay.

DTC Logic

INFOID:0000000005258265

DTC DETECTION LOGIC

DTC	CONSULT-III	Diagnostic item is detected when...	Reference
[P1817]	SHIFT ACTUATOR	• Motor does not operate properly due to open or short circuit in actuator motor. • Malfunction is detected in the actuator motor. (When 4WD shift switch is operated and actuator motor is not operated) • Malfunction is detected in transfer shift high relay and transfer shift low relay.	Refer to DLN-46.

DTC CONFIRMATION PROCEDURE

1. DTC CONFIRMATION PROCEDURE

1. Turn ignition switch ON.
2. Perform self-diagnosis.

Is DTC P1817 detected?

YES >> Perform diagnosis procedure. Refer to DLN-46, "Diagnosis Procedure".
NO >> Inspection End.

Diagnosis Procedure

INFOID:0000000005258266

Regarding Wiring Diagram information, refer to DLN-95, "Wiring Diagram - ALL-MODE 4WD SYSTEM -".

1. CHECK ACTUATOR MOTOR SIGNAL

With CONSULT-III
1. Start engine.
2. Select “DATA MONITOR” mode for “ALL MODE AWD/4WD” with CONSULT-III.
3. Read out the value of “SHIFT ACT1”, “SHIFT AC MON1”, “SHIFT ACT2” and “SHIFT AC MON2”.

Monitored item	Condition		Display value
SHIFT ACT1	• Vehicle stopped • Engine running • A/T selector lever “N” position • Brake pedal depressed	4WD shift switch: 4H to 4LO (“Wait” function is operating.)	ON
		Except the above	OFF

Monitored item	Condition		Display value
SHIFT AC MON1	• Vehicle stopped • Engine running • A/T selector lever “N” position • Brake pedal depressed	4WD shift switch: 4H to 4LO (“Wait” function is operating.)	ON
		Except the above	OFF
SHIFT ACT2	• Vehicle stopped • Engine running • A/T selector lever “N” position • Brake pedal depressed	4WD shift switch: 4LO to 4H (“Wait” function is operating.)	ON
		Except the above	OFF
SHIFT AC MON2	• Vehicle stopped • Engine running • A/T selector lever “N” position • Brake pedal depressed	4WD shift switch: 4LO to 4H (“Wait” function is operating.)	ON
		Except the above	OFF

Without CONSULT-III

1. Start engine.
2. Check voltage between transfer control unit harness connector terminal and ground.

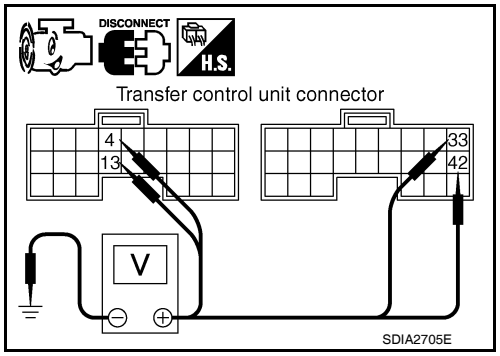

Connector	Terminal	Condition		Voltage (Approx.)
M152	4 - Ground	• Vehicle stopped • Engine running • A/T selector lever “N” position • Brake pedal depressed	4WD shift switch: 4H to 4LO (“Wait” function is operating.)	Battery voltage
			Except the above	0V
	13 - Ground	• Vehicle stopped • Engine running • A/T selector lever “N” position • Brake pedal depressed	4WD shift switch: 4LO to 4H (“Wait” function is operating.)	Battery voltage
			Except the above	0V
M153	33 - Ground	• Vehicle stopped • Engine running • A/T selector lever “N” position • Brake pedal depressed	4WD shift switch: 4H to 4LO (“Wait” function is operating.)	Battery voltage
			Except the above	0V
	42 - Ground	• Vehicle stopped • Engine running • A/T selector lever “N” position • Brake pedal depressed	4WD shift switch: 4LO to 4H (“Wait” function is operating.)	Battery voltage
			Except the above	0V

OK or NG

OK >> GO TO 7.
NG >> GO TO 2.

2. CHECK ACTUATOR MOTOR POWER SUPPLY CIRCUIT

1. Turn ignition switch “OFF”. (Stay for at least 5 seconds.)
2. Remove transfer shift high relay and transfer shift low relay.

3. Check voltage between transfer shift high relay harness connector E46 terminal 5, transfer shift low relay harness connector E47 terminal 5 and ground.

Connector	Terminal	Voltage (Approx.)
E46	5 - Ground	Battery voltage
E47	5 - Ground	

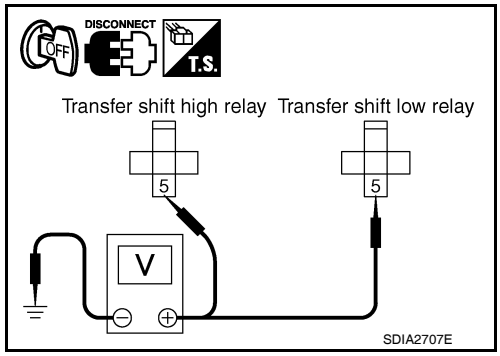

4. Turn ignition switch “ON”. (Do not start engine.)
5. Check voltage between transfer shift high relay harness connector E46 terminal 5, transfer shift low relay harness connector E47 terminal 5 and ground.

Connector	Terminal	Voltage (Approx.)
E46	5 - Ground	Battery voltage
E47	5 - Ground	

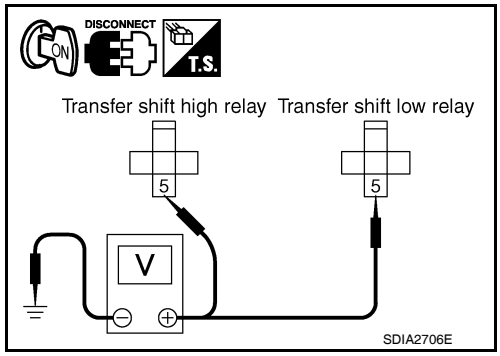

OK or NG

OK >> GO TO 3.
NG >> Check the following. If any items are damaged, repair or replace damaged parts.
- 20A fuse (No. 58, located in the fuse and relay box).
- Harness for short or open between battery, transfer shift high harness connector terminal 5 and transfer shift low harness connector terminal 5.

3. CHECK ACTUATOR MOTOR GROUND CIRCUIT

1. Turn ignition switch “OFF”. (Stay for at least 5 seconds.)
2. Remove transfer shift high relay and transfer shift low relay. Refer to DLN-19, "Component Parts Location".
3. Check continuity between transfer shift high relay harness connector E46 terminals 1 and 4, and transfer shift low relay harness connector E47 terminals 1 and 4 and ground.

Continuity should exist.

Also check harness for short to power.

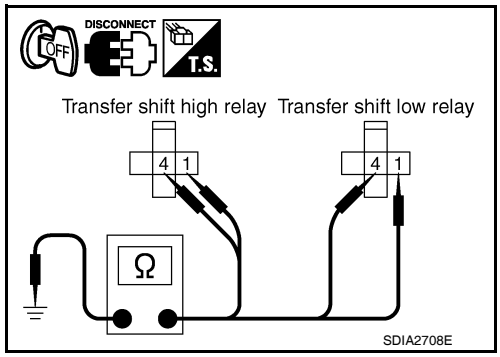

OK or NG

OK >> GO TO 4.
NG >> Repair open circuit or short to power in harness or connectors.

4. CHECK TRANSFER SHIFT RELAYS

1. Turn ignition switch “OFF”.
2. Remove transfer shift high relay and transfer shift low relay.
3. Apply 12V direct current between transfer shift relay terminals 1 and 2.
4. Check continuity between relay terminals 3 and 4, 3 and 5.

Terminal	Condition	Continuity
3 - 4	12V direct current supply between terminals 1 and 2	No
	OFF	Yes
3 - 5	12V direct current supply between terminals 1 and 2	Yes
	OFF	No

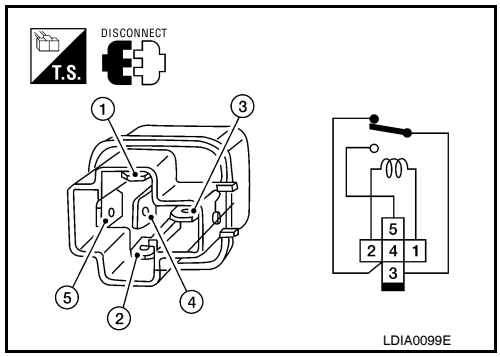

OK or NG

OK >> GO TO 5.
NG >> Replace the transfer shift relay.

5. CHECK HARNESS BETWEEN TRANSFER CONTROL UNIT AND TRANSFER SHIFT RELAY

1. Turn ignition switch “OFF”. (Stay for at least 5 seconds.)
2. Disconnect transfer control unit harness connector and the transfer control device (actuator motor) harness connector.
3. Remove transfer shift high relay and transfer shift low relay.
4. Check continuity between the following terminals.

- Transfer control unit harness connector M152 terminal 4 and transfer shift high relay harness connector E46 terminal 2.
- Transfer control unit harness connector M152 terminal 13 and transfer shift low relay harness connector E47 terminal 2.

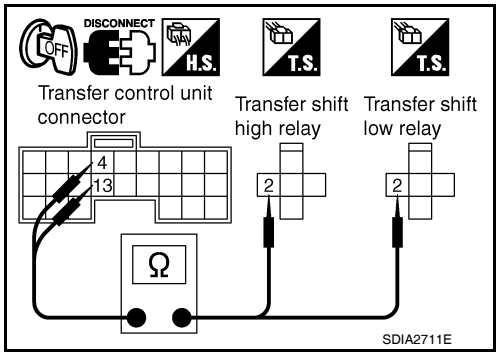

- Transfer control unit harness connector M153 terminal 33 and transfer shift high relay harness connector E46 terminal 3.
- Transfer control unit harness connector M153 terminal 42 and transfer shift low relay harness connector E47 terminal 3.

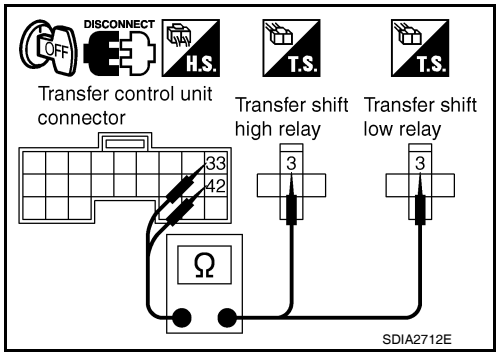

Continuity should exist.

Also check harness for short to ground and short to power.

OK or NG

OK >> GO TO 6.
NG >> Repair or replace damaged parts.

6. CHECK HARNESS BETWEEN TRANSFER CONTROL UNIT AND ACTUATOR MOTOR

1. Turn ignition switch “OFF”. (Stay for at least 5 seconds.)
2. Disconnect transfer control unit harness connector and the transfer control device (actuator motor) harness connector.
3. Check continuity between the following terminals.

- Transfer control unit harness connector M153 terminal 33 and transfer control device (actuator motor) harness connector F58 terminal 21.
- Transfer control unit harness connector M153 terminal 42 and transfer control device (actuator motor) harness connector F58 terminal 24.

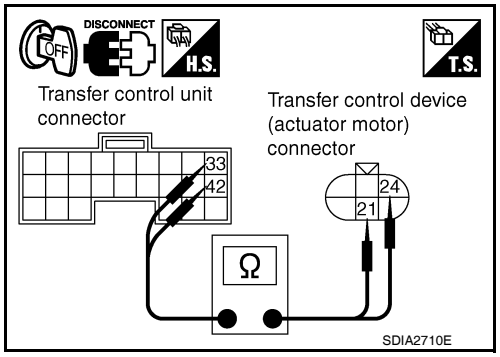

Continuity should exist.

Also check harness for short to ground and short to power.

OK or NG

OK >> GO TO 7.
NG >> Repair or replace damaged parts.

7. CHECK ACTUATOR MOTOR

1. Remove transfer control device. Refer to DLN-144, "Removal and Installation".

2. Check operation by applying battery voltage to transfer control device (actuator motor) terminals 21 and 24.
   CAUTION:
   - **Do not operate actuator motor for more than 1 second.**
   - **Change the actuator motor position to "HIGH" when installing.**
   - **Be careful not to overheat the harness.**

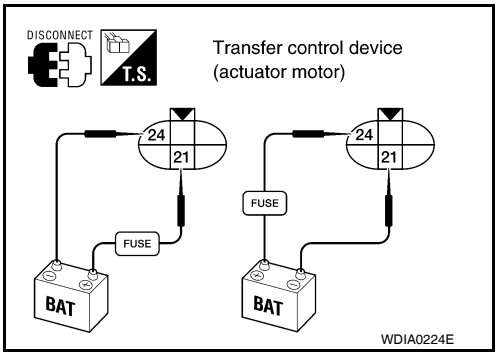

Terminal	Actuator motor
21 (Battery voltage) - 24 (Ground)	Clockwise rotate
24 (Battery voltage) - 21 (Ground)	Counterclockwise rotate

3. Check resistance between transfer control device (actuator motor) terminals 21 and 24.

   21 - 24 : Approx. 0.2 Ω

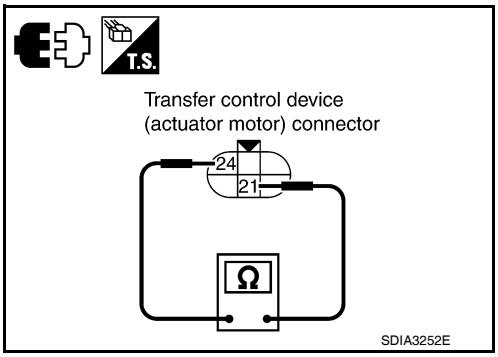

OK or NG

OK >> GO TO 8.
NG >> Replace transfer control device (actuator motor).

8. CHECK TRANSFER CONTROL UNIT

Check transfer control unit input/output signal. Refer to DLN-87, "Reference Value".

OK or NG

OK >> GO TO 9.
NG >> Check transfer control unit pin terminals for damage or loose connection with harness connector. If any items are damaged, repair or replace damaged parts.

9. CHECK DTC

Perform the self-diagnosis, after driving a vehicle for a while.

OK or NG

OK >> Inspection End.
NG >> Replace transfer control unit. Refer to DLN-138, "Removal and Installation".

Component Inspection

INFOID:0000000005258267

TRANSFER SHIFT RELAY

1. Turn ignition switch "OFF". (Stay for at least 5 seconds.)
2. Remove transfer shift high relay and transfer shift low relay. Refer to DLN-19, "Component Parts Location".
3. Apply 12V direct current between transfer shift relay terminals 1 and 2.
4. Check continuity between relay terminals 3 and 4, 3 and 5.

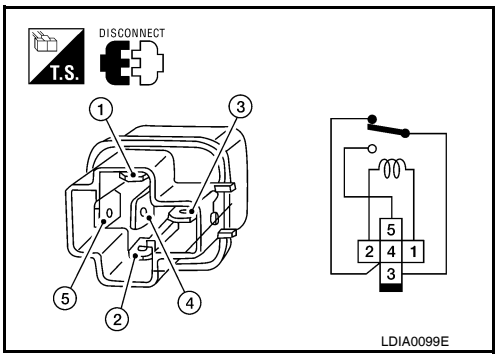

Terminal	Condition	Continuity
3 - 4	12V direct current supply between terminals 1 and 2	Yes
	OFF	No
3 - 5	12V direct current supply between terminals 1 and 2	Yes
	OFF	No

5. If NG, replace transfer shift relay.

TRANSFER CONTROL DEVICE

1. Remove transfer control device. Refer to DLN-144, "Removal and Installation".

2. Check operation by applying battery voltage to transfer control device (actuator motor) terminals 21 and 24.

CAUTION:
- **Do not operate actuator motor for more than 1 second.**
- **Change the actuator motor position to "HIGH" when installing.**
- **Be careful not to overheat the harness.**

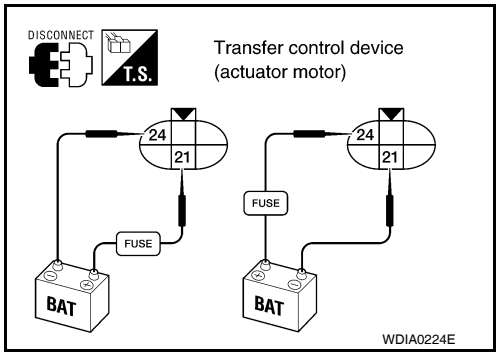

Terminal	Actuator motor
21 (Battery voltage) - 24 (Ground)	Clockwise rotate
24 (Battery voltage) - 21 (Ground)	Counterclockwise rotate

3. Check resistance between transfer control device (actuator motor) terminals 21 and 24.

21 - 24 : Approx. 0.2 Ω

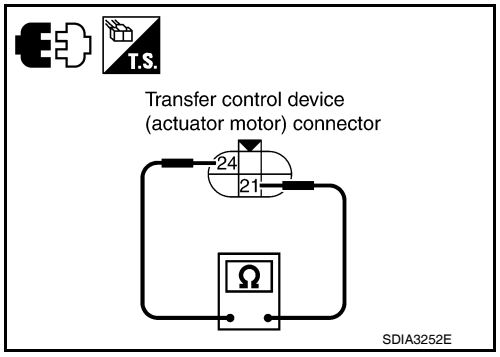

4. If NG, replace transfer control device (actuator motor).

P1818 ACTUATOR POSITION SWITCH

Description

INFOID:0000000005258268

The actuator position switch detects the current actuator motor range. DTC P1818 will set if either of the following occur:
- Improper signal from actuator position switch is input due to open or short circuit.
- Malfunction is detected in actuator position switch.

DTC Logic

INFOID:0000000005258269

DTC DETECTION LOGIC

DTC	CONSULT-III	Diagnostic item is detected when...	Reference
[P1818]	SHIFT ACT POSI SW	• Improper signal from actuator position switch is input due to open or short circuit. • Malfunction is detected in the actuator position switch.	Refer to DLN-52.

DTC CONFIRMATION PROCEDURE

1. DTC CONFIRMATION PROCEDURE

1. Turn ignition switch ON.
2. Perform self-diagnosis.

Is DTC P1818 detected?

YES >> Perform diagnosis procedure. Refer to DLN-52, "Diagnosis Procedure".
NO >> Inspection End.

Diagnosis Procedure

INFOID:0000000005258270

Regarding Wiring Diagram information, refer to DLN-95, "Wiring Diagram - ALL-MODE 4WD SYSTEM -".

1. CHECK ACTUATOR POSITION SWITCH SIGNAL

With CONSULT-III
1. Start engine.
2. Select “DATA MONITOR” mode for “ALL MODE AWD/4WD” with CONSULT-III.
3. Read out the value of “SHIFT POS SW1” and “SHIFT POS SW2”.

Monitored item	Condition		Display value
SHIFT POS SW1	• Vehicle stopped • Engine running • A/T selector lever “N” position • Brake pedal depressed	4WD shift switch: 4LO	ON
		4WD shift switch: 2WD, AUTO or 4H	OFF
SHIFT POS SW2	• Vehicle stopped • Engine running • A/T selector lever “N” position • Brake pedal depressed	4WD shift switch: 4H, AUTO or 2WD	ON
		4WD shift switch: 4LO	OFF

Without CONSULT-III
1. Start engine.

2. Check voltage between transfer control unit harness connector terminal and ground.

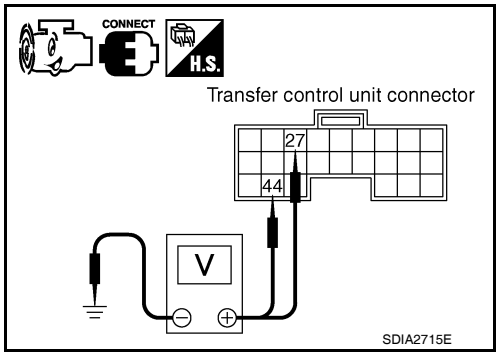

Connector	Terminal	Condition		Voltage (Approx.)
M153	27 - Ground	• Vehicle stopped • Engine running • A/T selector lever "N" position • Brake pedal depressed	4WD shift switch: 4H, AUTO or 2WD	0V
			4WD shift switch: 4LO	Battery voltage
	44 - Ground	• Vehicle stopped • Engine running • A/T selector lever "N" position • Brake pedal depressed	4WD shift switch: 4LO	0V
			4WD shift switch: 2WD, AUTO or 4H	Battery voltage

OK or NG

OK >> GO TO 5.
NG >> GO TO 2.

2. CHECK HARNESS BETWEEN TRANSFER CONTROL UNIT AND ACTUATOR POSITION SWITCH

1. Turn ignition switch "OFF". (Stay for at least 5 seconds.)
2. Disconnect transfer control unit harness connector and the transfer control device (actuator position switch) harness connector.
3. Check continuity between the following terminals.

- Transfer control unit harness connector M153 terminal 27 and transfer control device (actuator position switch) harness connector F58 terminal 23.
- Transfer control unit harness connector M153 terminal 44 and transfer control device (actuator position switch) harness connector F58 terminal 20.

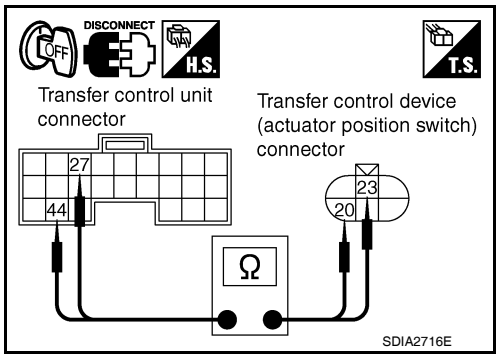

Continuity should exist.

Also check harness for short to ground and short to power.

OK or NG

OK >> GO TO 3.
NG >> Repair or replace damaged parts.

3. CHECK GROUND CIRCUIT

1. Turn ignition switch "OFF". (Stay for at least 5 seconds.)
2. Disconnect transfer control device (actuator position switch) harness connector.
3. Check continuity between transfer control device (actuator position switch) harness connector F58 terminal 22 and ground.

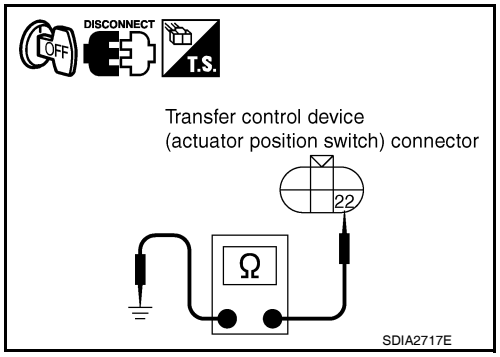

Continuity should exist.

Also check harness for short to power.

OK or NG

OK >> GO TO 4.
NG >> Repair open circuit or short to power in harness or connectors.

4. CHECK ACTUATOR POSITION SWITCH

1. Remove transfer control device. Refer to DLN-144, "Removal and Installation".

2. Check operation by applying battery voltage to transfer control device (actuator motor) terminals 21 and 24.
   CAUTION:
   - **Do not operate actuator motor for more than 1 second.**
   - **Change the actuator motor position to "HIGH" when installing.**
   - **Be careful not to overheat the harness.**

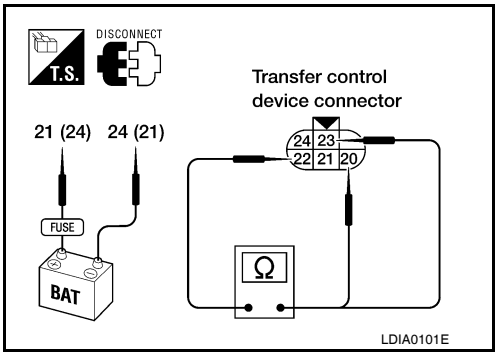

Terminal	Continuity	Continuity
24 (Battery voltage) - 21 (Ground)	20 - 22	YES
	22 - 23	NO
21 (Battery voltage) - 24 (Ground)	22 - 23	YES
	20 - 22	NO

OK or NG

YES >> GO TO 5.
NO >> Replace transfer control device.

5. CHECK TRANSFER CONTROL UNIT

Check transfer control unit input/output signal. Refer to DLN-87, "Reference Value".

OK or NG

OK >> GO TO 6.
NG >> Check transfer control unit pin terminals for damage or loose connection with harness connector. If any items are damaged, repair or replace damaged parts.

6. CHECK DTC

Perform the self-diagnosis, after driving a vehicle for a while.

OK or NG

OK >> Inspection End.
NG >> Replace transfer control device.

Component Inspection

INFOID:0000000005258271

1. Remove transfer control device. Refer to DLN-144, "Removal and Installation".
2. Check operation by applying battery voltage to transfer control device (actuator motor) terminals 21 and 24.
   CAUTION:
   - **Do not operate actuator motor for more than 1 second.**
   - **Change the actuator motor position to HIGH when installing.**
   - **Be careful not to overheat the harness.**

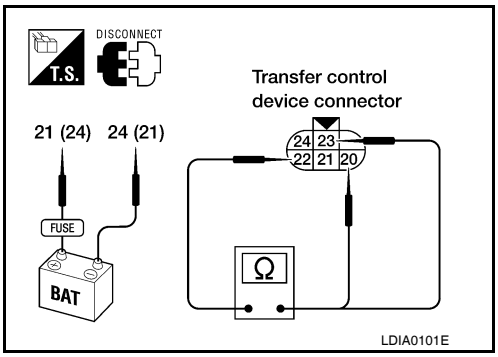

Terminal	Continuity	Continuity
24 (Battery voltage) - 21 (Ground)	20 - 22	Yes
	22 - 23	No
21 (Battery voltage) - 24 (Ground)	22 - 23	Yes
	20 - 22	No

3. If the inspection results are abnormal replace transfer control device (actuator motor).

P1819 TRANSFER CONTROL DEVICE

Description

INFOID:0000000005258272

The transfer control device integrates the actuator motor and actuator position switch. DTC P1819 will set if either of the following conditions exist:
- Malfunction occurs in transfer control device actuator circuit.
- Malfunction is detected in the transfer shut off relay.

DTC Logic

INFOID:0000000005258273

DTC DETECTION LOGIC

DTC	CONSULT-III	Diagnostic item is detected when...	Reference
[P1819]	SHIFT ACT CIR	• Transfer control device actuator circuit is shorted or open. (Malfunctions are detected when transfer shift relay circuit is open/shorted or relay monitor circuit is open/shorted.) • Malfunction occurs in transfer control device drive circuit. • Malfunction is detected in transfer shut off relay.	Refer to DLN-55.

DTC CONFIRMATION PROCEDURE

1. DTC CONFIRMATION PROCEDURE

1. Turn ignition switch ON.
2. Perform self-diagnosis.

Is DTC P1819 detected?

YES >> Perform diagnosis procedure. Refer to DLN-55, "Diagnosis Procedure".
NO >> Inspection End.

Diagnosis Procedure

INFOID:0000000005258274

Regarding Wiring Diagram information, refer to DLN-95, "Wiring Diagram - ALL-MODE 4WD SYSTEM -".

1. CHECK POWER SUPPLY

1. Turn ignition switch “OFF”. (Stay for at least 5 seconds.)
2. Connect transfer control unit harness connector.
3. Check voltage between transfer control unit harness connector terminal and ground.

Connector	Terminal	Voltage (Approx.)
M152	16 - Ground	0V
	22 - Ground	
M153	30 - Ground	Battery voltage

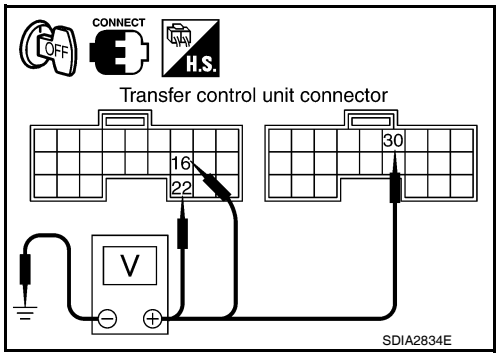

4. Turn ignition switch “ON”. (Do not start engine.)
5. Check voltage between transfer control unit harness connector terminals and ground.

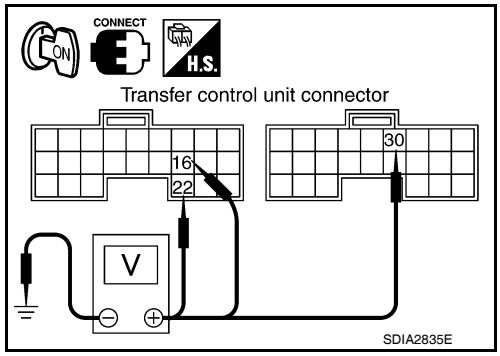

Connector	Terminal	Voltage (Approx.)
M152	16 - Ground	Battery voltage
	22 - Ground	
M153	30 - Ground	0V

OK or NG

OK >> GO TO 2.
NG >> Check the following. If any items are damaged, repair or replace damaged parts.
- 10A fuse (No. 59, located in the fuse and relay box).
- Harness for short or open between battery and transfer shut off relay harness connector E155 terminal 1.
- Harness for short or open between transfer shut off relay harness connector E155 terminal 2 and transfer control unit harness connector terminal 30.
- Harness for short or open between battery and transfer shut off relay harness connector E155 terminal 3.
- Harness for short or open between transfer shut off relay harness connector E155 terminal 5 and transfer control unit harness connector 22.
- Transfer shut off relay. Refer to DLN-29, "Component Inspection".

2. CHECK GROUND CIRCUIT

1. Turn ignition switch “OFF”. (Stay for at least 5 seconds.)
2. Disconnect transfer control unit harness connector.
3. Check continuity between transfer control unit harness connector M152 terminals 3, 6 and M153 terminal 45 and ground.

Continuity should exist.

Also check harness for short to power.

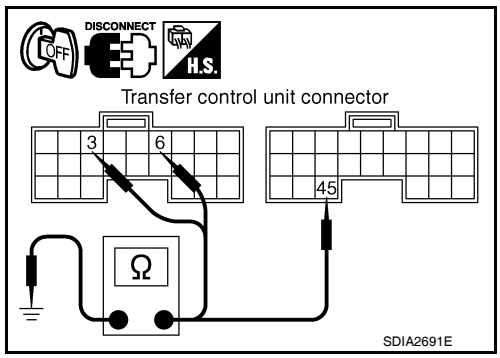

OK or NG

OK >> GO TO 3.
NG >> Repair open circuit or short to power in harness or connectors.

3. CHECK ACTUATOR MOTOR POWER SUPPLY CIRCUIT

1. Turn ignition switch “OFF”. (Stay for at least 5 seconds.)
2. Remove transfer shift high relay and transfer shift low relay. Refer to DLN-19, "Component Parts Location".
3. Check voltage between transfer shift high relay harness connector E46 terminal 5, transfer shift low relay harness connector E47 terminal 5 and ground.

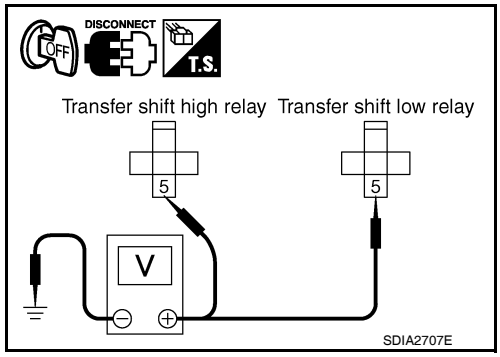

Connector	Terminal	Voltage (Approx.)
E46	5 - Ground	Battery voltage
E47	5 - Ground	

4. Turn ignition switch “ON”. (Do not start engine.)
5. Check voltage between transfer shift high relay harness connector E46 terminal 5, transfer shift low relay harness connector E47 terminal 5 and ground.

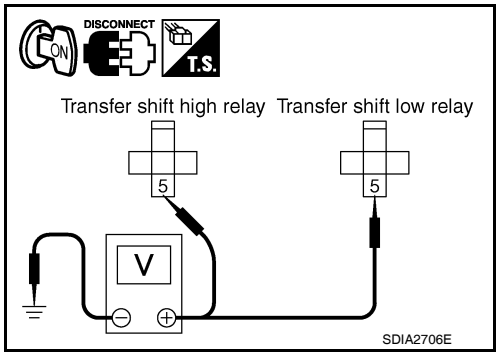

Connector	Terminal	Voltage (Approx.)
E46	5 - Ground	Battery voltage
E47	5 - Ground	

OK or NG

OK >> GO TO 4.
NG >> Check the following. If any items are damaged, repair or replace damaged parts.
- 20A fuse [No. 58, located in the fuse and relay box].
- Harness for short or open between battery, transfer shift high harness connector E46 terminal 5 and transfer shift low harness connector E47 terminal 5.

4. CHECK HARNESS BETWEEN TRANSFER CONTROL UNIT AND TRANSFER SHIFT RELAY

1. Turn ignition switch “OFF”. (Stay for at least 5 seconds.)
2. Disconnect transfer control unit harness connector and transfer control device (actuator motor) harness connector.
3. Remove transfer shift high relay and transfer shift low relay.
4. Check continuity between the following terminals.

- Transfer control unit harness connector M153 terminal 33 and transfer shift high relay harness connector E46 terminal 3.
- Transfer control unit harness connector M153 terminal 42 and transfer shift low relay harness connector E47 terminal 3.

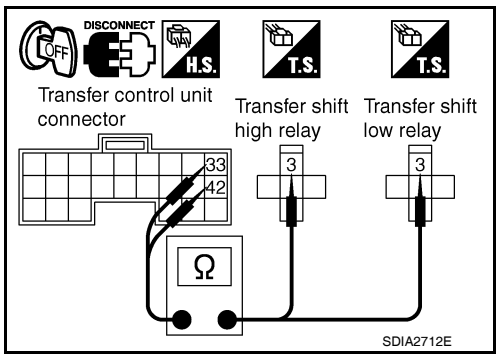

Continuity should exist.

Also check harness for short to ground and short to power.

OK or NG

OK >> GO TO 5.
NG >> Repair or replace damaged parts.

5. CHECK TRANSFER SHIFT RELAY GROUND CIRCUIT

1. Turn ignition switch “OFF”. (Stay for at least 5 seconds.)
2. Remove transfer shift high relay and transfer shift low relay.
3. Check continuity between transfer shift high relay harness connector E46 (A) terminals 1 and 4 and transfer shift low relay harness connector E47 (B) terminals 1 and 4 and ground.

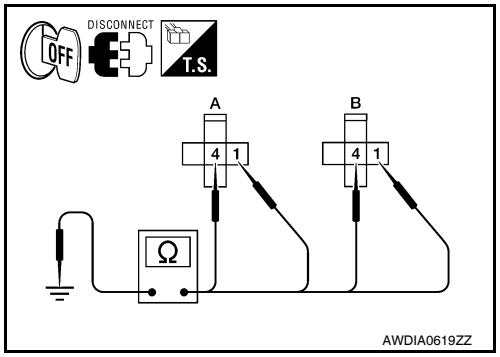

Continuity should exist.

Also check harness for short to power.

OK or NG

OK >> GO TO 6.
NG >> Repair open circuit or short to power in harness or connectors.

6. CHECK TRANSFER CONTROL UNIT

Check transfer control unit input/output signal. Refer to DLN-87, "Reference Value".

OK or NG

OK-1 >> With CONSULT-III: GO TO 7.
OK-2 >> Without CONSULT-III: GO TO 8.
NG >> Check transfer control unit pin terminals for damage or loose connection with harness connector. If any items are damaged, repair or replace damaged parts.

7. PERFORM SELF-DIAGNOSIS (WITH CONSULT-III)

With CONSULT-III

1. Turn ignition switch “ON”. (Do not start engine.)
2. Select “SELF-DIAG RESULTS” mode for “ALL MODE AWD/4WD” with CONSULT-III.
3. Touch “ERASE”.
4. Turn ignition switch “OFF” and wait at least 10 seconds.
5. Perform the self-diagnosis again.

Is the “SHIFT ACT CIR [P1819]” displayed?

YES >> Replace transfer control unit. Refer to DLN-138, "Removal and Installation".
NO >> Inspection End.

8. PERFORM SELF-DIAGNOSIS (WITHOUT CONSULT-III)

Without CONSULT-III

1. Perform the self-diagnosis and then erase self-diagnostic results. Refer to DLN-23, "CONSULT-III Function (ALL MODE AWD/4WD)".
2. Perform the self-diagnosis again.

Do the self-diagnostic results indicate transfer control device?

YES >> Replace transfer control unit.
NO >> Inspection End.

P1820 ENGINE SPEED SIGNAL

Description

INFOID:0000000005258275

The ECM transmits the engine speed signal via CAN communication to the transfer control unit. DTC P1820 will set when either of the following occur:
- Malfunction is detected in engine speed signal that is output from the ECM.
- Improper signal is input while driving.

DTC Logic

INFOID:0000000005258276

DTC DETECTION LOGIC

DTC	CONSULT-III	Diagnostic item is detected when...	Reference
[P1820]	ENGINE SPEED SIG	• Malfunction is detected in engine speed signal that is output from ECM through CAN communication. • Improper signal is input while driving.	Refer to DLN-59.

DTC CONFIRMATION PROCEDURE

1. DTC CONFIRMATION PROCEDURE

1. Turn ignition switch ON.
2. Perform self-diagnosis.

Is DTC P1820 detected?

YES >> Perform diagnosis procedure. Refer to DLN-59, "Diagnosis Procedure".
NO >> Inspection End.

Diagnosis Procedure

INFOID:0000000005258277

1. CHECK DTC WITH ECM

Perform self-diagnosis with ECM. Refer to EC-557, "CONSULT-III Function (ENGINE)".

Is any malfunction detected by self-diagnosis?

YES >> Check the malfunctioning system.
NO >> GO TO 2.

2. CHECK TRANSFER CONTROL UNIT

Check transfer control unit input/output signal. Refer to DLN-87, "Reference Value".

Are the inspection results normal?

YES >> GO TO 3.
NO >> Check transfer control unit pin terminals for damage or loose connection with harness connector. If any items are damaged, repair or replace damaged parts.

3. CHECK DTC

Drive the vehicle and then perform self-diagnosis.

Are the inspection results normal?

YES >> Inspection End.
NO >> Perform self-diagnosis with ECM again.

P1822 CLUTCH PRESSURE SOLENOID

Description

INFOID:0000000005258278

Proper voltage is not applied to the clutch pressure solenoid valve due to open or short circuit.

DTC Logic

INFOID:0000000005258279

DTC DETECTION LOGIC

DTC	CONSULT-III	Diagnostic item is detected when...	Reference
[P1822]	DUTY SOLENOID	Proper voltage is not applied to clutch pressure solenoid valve due to open or short circuit.	Refer to DLN-60.

DTC CONFIRMATION PROCEDURE

1. DTC CONFIRMATION PROCEDURE

1. Turn ignition switch ON.
2. Perform self-diagnosis.

Is DTC P1822 displayed?

YES >> Perform diagnosis procedure. Refer to DLN-60, "Diagnosis Procedure".
NO >> Inspection End.

Diagnosis Procedure

INFOID:0000000005258280

Regarding Wiring Diagram information, refer to DLN-95, "Wiring Diagram - ALL-MODE 4WD SYSTEM -".

1. CHECK CLUTCH PRESSURE SIGNAL

With CONSULT-III

1. Start engine.
2. Select DATA MONITOR mode for ALL MODE AWD/4WD with CONSULT-III.
3. Read out the value of DUTY SOLENOID.

Condition		Display value
• Vehicle stopped • Engine running • A/T selector lever N position • Brake pedal depressed	4WD shift switch: 2WD	4%
	4WD shift switch: AUTO	96 - 4%
	4WD shift switch: 4H or 4LO	4%

Without CONSULT-III

1. Start engine.
2. Check voltage between transfer control unit harness connector terminal and ground.

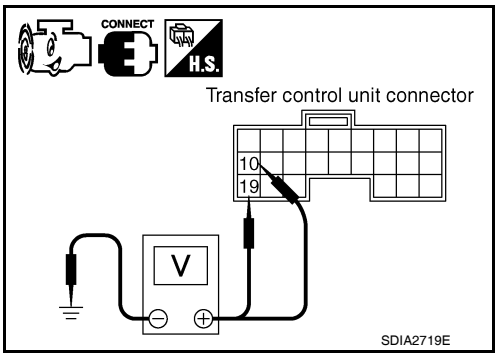

Connector	Terminal	Condition		Voltage (Approx.)
M152	10 - Ground	• Vehicle stopped • Engine running • A/T selector lever N position • Brake pedal depressed	4WD shift switch: AUTO	4 - 14V
			4WD shift switch: 2WD, 4H or 4LO	Less than 1V
	19 - Ground	• Vehicle stopped • Engine running • A/T selector lever N position • Brake pedal depressed	4WD shift switch: AUTO	1.5 - 3V
			4WD shift switch: 2WD, 4H or 4LO	Less than 1V

Are the inspection results normal?

YES >> GO TO 7.
NO >> GO TO 2.

2. CHECK HARNESS BETWEEN TRANSFER CONTROL UNIT AND CLUTCH PRESSURE SOLENOID VALVE

1. Turn ignition switch OFF. (Stay for at least 5 seconds.)
2. Disconnect transfer control unit harness connector, transfer terminal cord assembly harness connector and transfer dropping resistor.
3. Check continuity between transfer control unit harness connector M152 terminal 19 and transfer terminal cord assembly harness connector F56 terminal 6.

Continuity should exist.

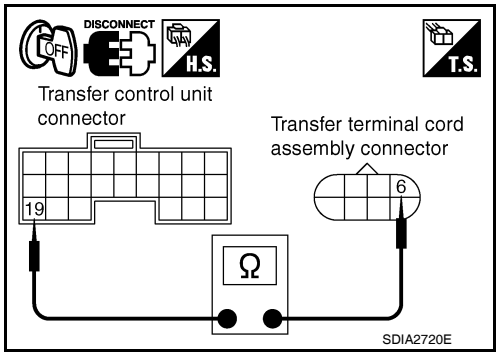

4. Check continuity between transfer dropping resistor harness connector E135 terminal 2 and transfer terminal cord assembly harness connector F56 terminal 6.

Continuity should exist.

Also check harness for short to ground and short to power.

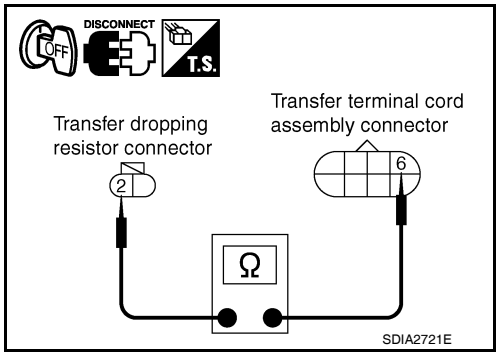

Are the inspection results normal?

YES >> GO TO 3.
NO >> Repair or replace damaged parts.

3. CHECK HARNESS BETWEEN TRANSFER CONTROL UNIT AND TRANSFER DROPPING RESISTOR

1. Turn ignition switch OFF. (Stay for at least 5 seconds.)
2. Disconnect transfer control unit harness connector and transfer dropping resistor harness connector.

3. Check continuity between transfer control unit harness connector M152 terminal 10 and transfer dropping resistor harness connector E135 terminal 1.

Continuity should exist.

Also check harness for short to ground and short to power.

Are the inspection results normal?

YES >> GO TO 4.
NO >> Repair or replace damaged parts.

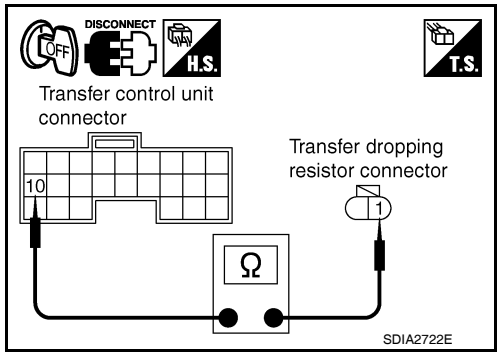

4. CHECK GROUND CIRCUIT

1. Turn ignition switch OFF. (Stay for at least 5 seconds.)
2. Disconnect transfer terminal cord assembly harness connector.
3. Check continuity between transfer terminal cord assembly harness connector F56 terminal 19 and ground.

Continuity should exist.

Also check harness for short to ground and short to power.

Are the inspection results normal?

YES >> GO TO 5.
NO >> Repair open circuit or short to ground or short to power in harness or connectors.

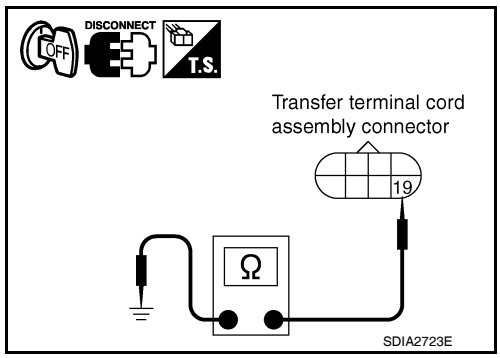

5. CHECK CLUTCH PRESSURE SOLENOID

1. Turn ignition switch OFF. (Stay for at least 5 seconds.)
2. Disconnect transfer terminal cord assembly harness connector.
3. Check resistance between transfer terminal cord assembly harness connector F56 terminals 6 and 19.

6 - 19 : Approx. 3.0 - 3.4 Ω

Are the inspection results normal?

YES >> GO TO 6.
NO >> Replace clutch pressure solenoid. Refer to DLN-19, "Component Parts Location".

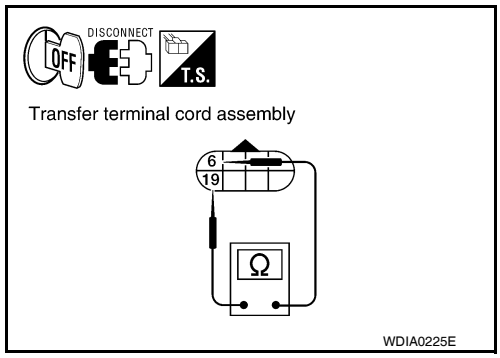

6. CHECK TRANSFER DROPPING RESISTOR

1. Turn ignition switch OFF. (Stay for at least 5 seconds.)
2. Disconnect transfer dropping resistor harness connector.
3. Check resistance between transfer dropping resistor terminals 1 and 2.

1 - 2 : Approx. 11.2 - 12.8 Ω

Are the inspection results normal?

YES >> GO TO 7.
NO >> Replace transfer dropping resistor.

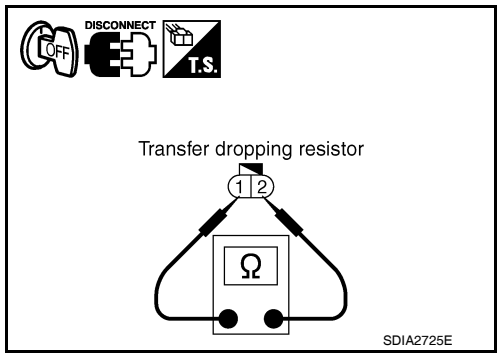

7. CHECK TRANSFER CONTROL UNIT

Check transfer control unit input/output signal. Refer to DLN-87, "Reference Value".

Are the inspection results normal?

YES >> GO TO 8.
NO >> Check transfer control unit pin terminals for damage or loose connection with harness connector. If any items are damaged, repair or replace damaged parts.

8. CHECK DTC

Drive the vehicle and then perform self-diagnosis.

Are the inspection results normal?

YES >> Inspection End.
NO >> Replace transfer control unit. Refer to DLN-138, "Removal and Installation".

Component Inspection

INFOID:0000000005258281

CLUTCH PRESSURE SOLENOID

1. Turn ignition switch OFF. (Stay for at least 5 seconds.)
2. Disconnect transfer terminal cord assembly harness connector.
3. Check resistance between transfer terminal cord assembly terminals 6 and 19.

6 - 19 : Approx. 3.0 - 3.4 Ω

4. If the inspection results are abnormal replace clutch pressure solenoid. Refer to DLN-19, "Component Parts Location".

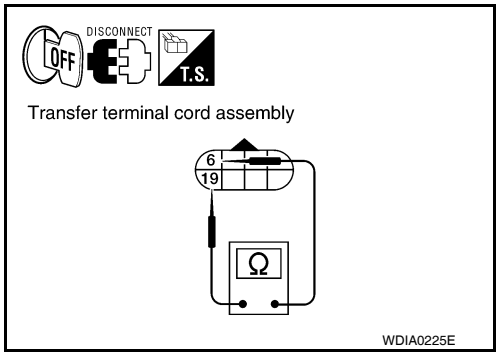

TRANSFER DROPPING RESISTOR

1. Turn ignition switch OFF. (Stay for at least 5 seconds.)
2. Disconnect transfer dropping resistor harness connector.
3. Check resistance between transfer dropping resistor terminals 1 and 2.

1 - 2 : Approx. 11.2 - 12.8 Ω

4. If the inspection results are abnormal replace transfer dropping resistor. Refer to DLN-19, "Component Parts Location".

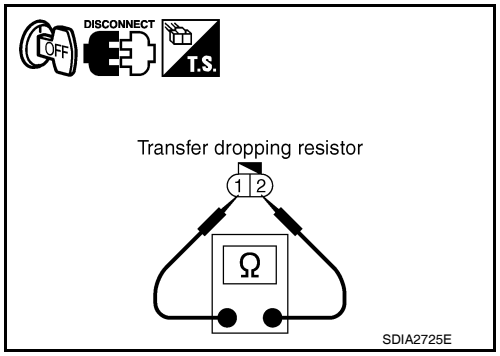

P1823 2-4 SOLENOID

Description

INFOID:0000000005258282

Proper voltage is not applied to the 2-4WD solenoid valve due to an open or short circuit.

DTC Logic

INFOID:0000000005258283

DTC DETECTION LOGIC

DTC	CONSULT-III	Diagnostic item is detected when...	Reference
[P1823]	2-4WD SOLENOID	Proper voltage is not applied to 2-4WD solenoid valve due to open or short circuit.	Refer to DLN-64.

DTC CONFIRMATION PROCEDURE

1. DTC CONFIRMATION PROCEDURE

1. Turn ignition switch ON.
2. Perform self-diagnosis.

Is DTC P1823 displayed?

YES >> Perform diagnosis procedure. Refer to DLN-64, "Diagnosis Procedure".
NO >> Inspection End.

Diagnosis Procedure

INFOID:0000000005258284

Regarding Wiring Diagram information, refer to DLN-95, "Wiring Diagram - ALL-MODE 4WD SYSTEM -".

1. CHECK 4WD SHIFT SWITCH SYSTEM

Perform self-diagnosis. Refer to DLN-23, "CONSULT-III Function (ALL MODE AWD/4WD)".

Is the "4WD MOD SW [P1814]" (with CONSULT-III) or "Flickering pattern:16" (without CONSULT-III) detected?

YES >> Perform trouble diagnosis for 4WD shift switch. Refer to DLN-38, "Diagnosis Procedure".
NO >> GO TO 2

2. CHECK 2-4WD SHIFT SOLENOID SIGNAL

With CONSULT-III

1. Start engine.
2. Select “DATA MONITOR” mode for “ALL MODE AWD/4WD” with CONSULT-III.
3. Read out the value of “2-4WD SOL” and “2-4WD SOL MON”.

Monitored item	Condition		Display value
2-4WD SOL	• Vehicle stopped • Engine running • A/T selector lever “N” position • Brake pedal depressed	4WD shift switch: 2WD	OFF
		4WD shift switch: AUTO	ON
		4WD shift switch: 4H	
		4WD shift switch: 4LO	
		4WD shift switch: AUTO (“Wait” function is operating.)	OFF
		4WD shift switch: 4H (“Wait” function is operating.)	OFF

Monitored item	Condition		Display value
2-4WD SOL MON	• Vehicle stopped • Engine running • A/T selector lever “N” position • Brake pedal depressed	4WD shift switch: 2WD	OFF
		4WD shift switch: AUTO	ON
		4WD shift switch: 4H	
		4WD shift switch: 4LO	
		4WD shift switch: AUTO (“Wait” function is operating.)	OFF
		4WD shift switch: 4H (“Wait” function is operating.)	OFF

Without CONSULT-III

1. Start engine.
2. Check voltage between transfer control unit harness connector terminal and ground.

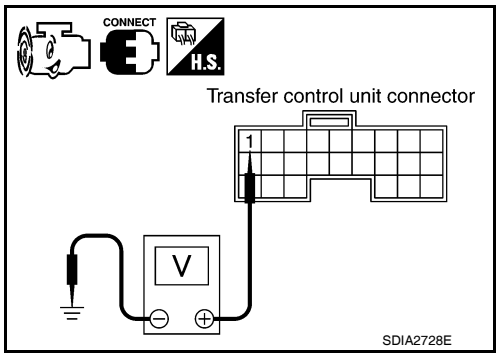

Connector	Terminal	Condition		Voltage (Approx.)
M152	1 - Ground	• Vehicle stopped • Engine running • A/T selector lever “N” position • Brake pedal depressed	4WD shift switch: 2WD	0V
			4WD shift switch: AUTO, 4H or 4LO	Battery voltage

OK or NG

OK >> GO TO 7.
NG >> GO TO 3.

3. CHECK 4WD SHIFT SWITCH SIGNAL

1. Turn ignition switch “ON”. (Do not start engine.)
2. Check voltage between transfer control unit harness connector terminals and ground.

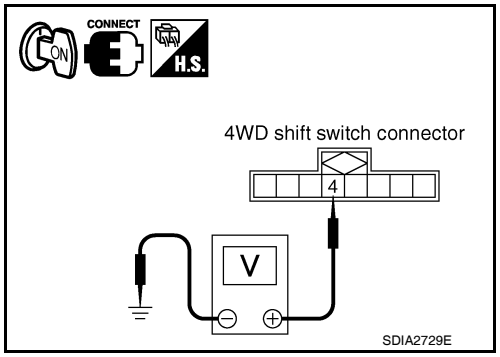

Connector	Terminal	Condition	Voltage (Approx.)
M141	4 - ground	4WD shift switch: AUTO, 4H or 4LO	Battery voltage
		4WD shift switch: 2WD	0V

OK or NG

OK >> GO TO 4.
NG >> Check 4WD shift switch. Refer to DLN-40, "Component Inspection".

4. CHECK HARNESS BETWEEN 4WD SHIFT SWITCH AND TRANSFER TERMINAL CORD ASSEMBLY

1. Turn ignition switch “OFF”. (Stay for at least 5 seconds.)
2. Disconnect 4WD shift switch harness connector and transfer terminal cord assembly harness connector.

3. Check continuity between 4WD shift switch harness connector M141 terminal 4 and transfer terminal cord assembly harness connector F56 terminal 5.

Continuity should exist.

Also check harness for short to ground and short to power.

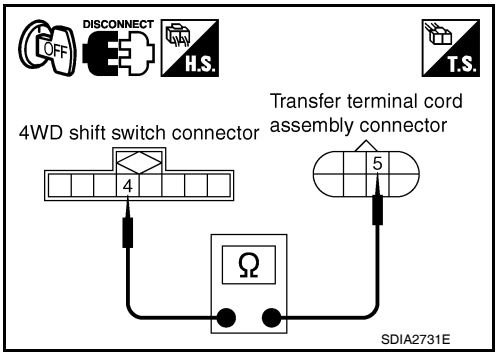

OK or NG

OK >> GO TO 5.
NG >> Repair or replace damaged parts.

5. CHECK HARNESS BETWEEN TRANSFER CONTROL UNIT AND TRANSFER TERMINAL CORD ASSEMBLY

1. Turn ignition switch “OFF”. (Stay for at least 5 seconds.)
2. Disconnect transfer control unit harness connector and transfer terminal cord assembly harness connector.
3. Check continuity between transfer control unit harness connector M152 terminal 1 and transfer terminal cord assembly harness connector F56 terminal 4.

Continuity should exist.

Also check harness for short to ground and short to power.

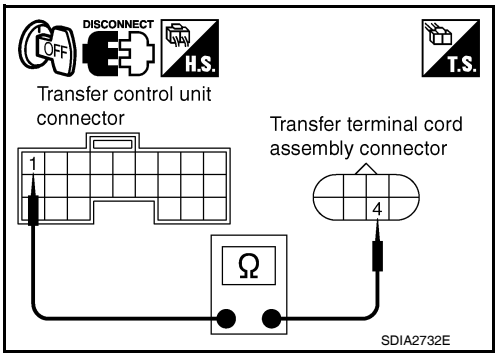

OK or NG

OK >> GO TO 6.
NG >> Repair or replace damaged parts.

6. CHECK 2-4WD SOLENOID

1. Turn ignition switch “OFF”. (Stay for at least 5 seconds.)
2. Disconnect transfer terminal cord assembly harness connector.
3. Check resistance between transfer terminal cord assembly terminals 4 and 5.

4 - 5 : Approx. 22.8 - 25.2 Ω

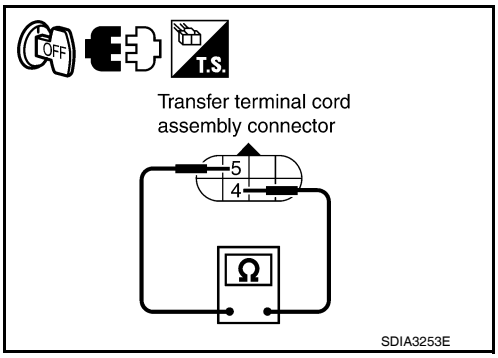

OK or NG

OK >> GO TO 7.
NG >> 2-4WD solenoid is malfunctioning. Refer to DLN-19, "Component Parts Location".

7. CHECK TRANSFER CONTROL UNIT

Check transfer control unit input/output signal. Refer to DLN-87, "Reference Value".

OK or NG

OK >> GO TO 8.
NG >> Check transfer control unit pin terminals for damage or loose connection with harness connector. If any items are damaged, repair or replace damaged parts.

8. CHECK DTC

Perform the self-diagnosis, after driving a vehicle for a while.

OK or NG

OK >> Inspection End.
NG >> Replace transfer control unit. Refer to DLN-138, "Removal and Installation".

Component Inspection

INFOID:0000000005258285

1. Turn ignition switch “OFF”. (Stay for at least 5 seconds.)
2. Disconnect transfer terminal cord assembly harness connector.
3. Check resistance between transfer terminal cord assembly terminals 4 and 5.

4 - 5 : Approx. 22.8 - 25.2 Ω

4. If NG, replace the 2-4WD solenoid. Refer to DLN-19, "Component Parts Location".

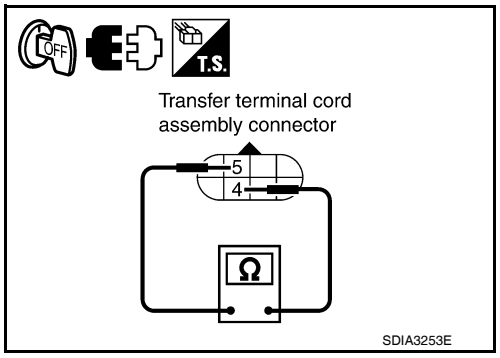

P1824 TRANSFER MOTOR

Description

INFOID:0000000005258286

Motor does not operate properly due to open or short circuit in transfer motor or transfer motor relay.

DTC Logic

INFOID:0000000005258287

DTC DETECTION LOGIC

DTC	CONSULT-III	Diagnostic item is detected when...	Reference
[P1824]	MOTOR RELAY	Motor does not operate properly due to open or short circuit in transfer motor or transfer motor relay.	Refer to DLN-68.

DTC CONFIRMATION PROCEDURE

1.DTC CONFIRMATION PROCEDURE

1. Turn ignition switch ON.
2. Perform self-diagnosis.

Is DTC P1824 displayed?

YES >> Perform diagnosis procedure. Refer to DLN-68, "Diagnosis Procedure".
NO >> Inspection End.

Diagnosis Procedure

INFOID:0000000005258288

Regarding Wiring Diagram information, refer to DLN-95, "Wiring Diagram - ALL-MODE 4WD SYSTEM -".

1.CHECK TRANSFER MOTOR RELAY SIGNAL

With CONSULT-III

1. Start engine.
2. Select “DATA MONITOR” mode for “ALL MODE AWD/4WD” with CONSULT-III.
3. Read out the value of “MOTOR RELAY” and “MOTOR RELAY MON”.

Monitored item	Condition		Display value (Approx.)
MOTOR RELAY	• Accelerator pedal depressed • Vehicle stopped • Engine running • Brake pedal depressed	4WD shift switch: 2WD	OFF
		4WD shift switch: AUTO or 4LO (A/T selector lever “P” or “N” position)	OFF ("ON" for approx. 2 sec. after shifting to “P” and “N”.)
		4WD shift switch: AUTO or 4LO (Except for A/T selector lever “P” or “N” position)	ON
		4WD shift switch: 4H (A/T selector lever “P” position)	OFF ("ON" for approx. 2 sec. after shifting to “P”.)
		4WD shift switch: 4H (Except for A/T selector lever “P” position)	ON

Monitored item	Condition		Display value (Approx.)
MOTOR RELAY MON	• Accelerator pedal depressed • Vehicle stopped • Engine running • Brake pedal depressed	4WD shift switch: 2WD	OFF
		4WD shift switch: AUTO or 4LO (A/T selector lever “P” or “N” position)	OFF ("ON" for approx. 2 sec. after shifting to “P” and “N”.)
		4WD shift switch: AUTO or 4LO (Except for A/T selector lever “P” or “N” position)	ON
		4WD shift switch: 4H (A/T selector lever “P” position)	OFF ("ON" for approx. 2 sec. after shifting to “P”.)
		4WD shift switch: 4H (Except for A/T selector lever “P” position)	ON

Without CONSULT-III

1. Start engine.
2. Check voltage between transfer control unit harness connector terminal and ground.

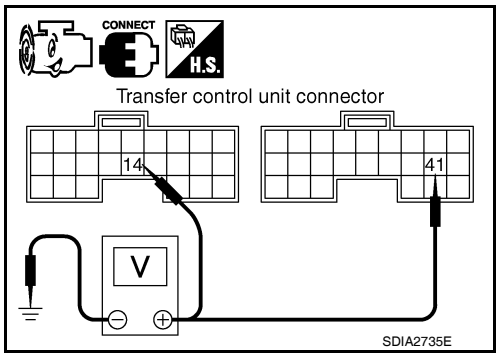

Connector	Terminal	Condition		Voltage (Approx.)
M152	14 - Ground	• Accelerator pedal depressed • Vehicle stopped • Engine running • Brake pedal depressed	4WD shift switch: 2WD	Battery voltage
			4WD shift switch: AUTO or 4LO (A/T selector lever “P” or “N” position)	Battery voltage (0V for approx. 2 sec. after shifting to “P” and “N”.)
			4WD shift switch: AUTO or 4LO (Except for A/T selector lever “P” or “N” position)	0V
			4WD shift switch: 4H (A/T selector lever “P” position)	Battery voltage (0V for approx. 2 sec. after shifting to “P”.)
			4WD shift switch: 4H (Except for A/T selector lever “P” position)	0V

Connector	Terminal	Condition		Voltage (Approx.)
M153	41 - Ground	• Accelerator pedal depressed • Vehicle stopped • Engine running • Brake pedal depressed	4WD shift switch: 2WD	0V
			4WD shift switch: AUTO or 4LO (A/T selector lever “P” or “N” position)	0V (Battery voltage for approx. 2 sec. after shifting to “P” and “N”.)
			4WD shift switch: AUTO or 4LO (Except for A/T selector lever “P” or “N” position)	Battery voltage
			4WD shift switch: 4H (A/T selector lever “P” position)	0V (Battery voltage for approx. 2 sec. after shifting to “P”.)
			4WD shift switch: 4H (Except for A/T selector lever “P” position)	Battery voltage

OK or NG

OK >> GO TO 8.
NG >> GO TO 2.

2. CHECK TRANSFER MOTOR RELAY POWER SUPPLY CIRCUIT

1. Turn ignition switch “OFF”. (Stay for at least 5 seconds.)
2. Connect transfer control unit harness connector.
3. Disconnect transfer motor relay.
4. Check voltage between transfer motor relay harness connector terminals and ground.

Connector	Terminal	Voltage (Approx.)
E153	2 - Ground	0V
E154	5 - Ground	Battery voltage

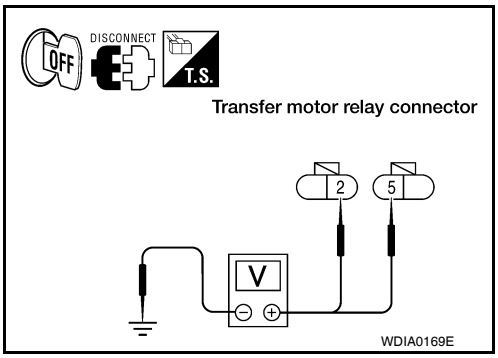

5. Turn ignition switch “ON”. (Do not start engine.)
6. Check voltage between transfer motor relay harness connector terminals and ground.

Connector	Terminal	Voltage (Approx.)
E153	2 - Ground	Battery voltage
E154	5 - Ground	Battery voltage

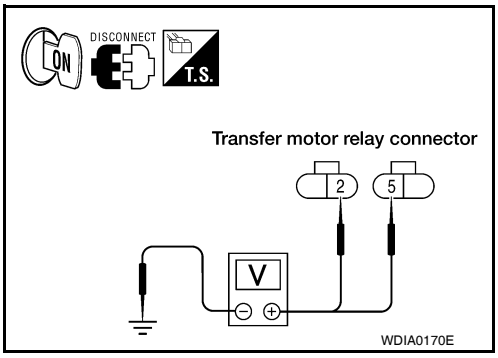

OK or NG

OK >> GO TO 3.
NG >> Check the following. If any items are damaged, repair or replace damaged parts.
- 20A fuse (No. 57, located in the fuse and relay box).
- 10A fuse (No. 59, located in the fuse and relay box).
- Harness for short or open between battery and transfer motor relay harness connector E154 terminals 5.

- Harness for short or open between transfer shut off relay harness connector E155 terminal 5 and transfer motor relay harness connector E153 terminal 2.
- Battery and ignition switch.

3. CHECK TRANSFER MOTOR RELAY

1. Turn ignition switch “OFF”. (Stay for at least 5 seconds.)
2. Remove transfer motor relay. Refer to DLN-19, "Component Parts Location".
3. Apply 12V direct current between transfer motor relay terminals 1 and 2.
4. Check continuity between relay terminals 3 and 5.

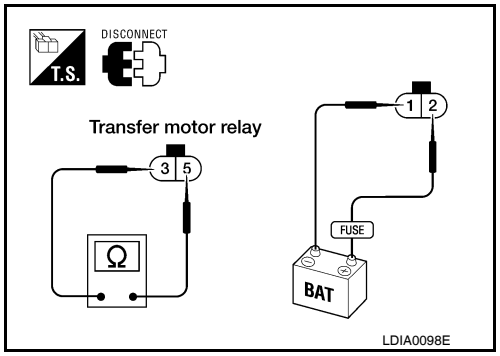

Condition	Continuity
12V direct current supply between terminals 1 and 2	Yes
OFF	No

OK or NG

OK >> GO TO 4.
NG >> Replace the transfer motor relay.

4. CHECK HARNESS BETWEEN TRANSFER CONTROL UNIT AND TRANSFER MOTOR RELAY

1. Turn ignition switch “OFF”. (Stay for at least 5 seconds.)
2. Disconnect transfer control unit harness connector.
3. Remove transfer motor relay.
4. Check continuity between the following terminals.

- Transfer control unit harness connector M152 terminal 14 and transfer motor relay harness connector E154 terminal 1.

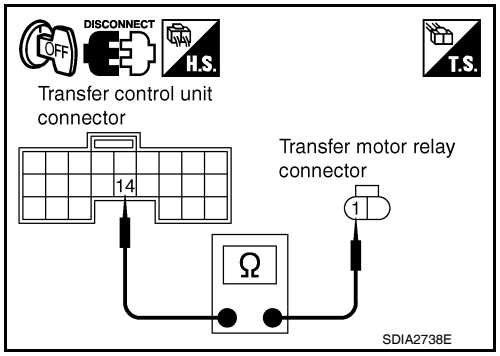

Continuity should exist.

Also check harness for short to ground and short to power.

OK or NG

OK >> GO TO 5.
NG >> Repair or replace damaged parts.

5. CHECK TRANSFER MOTOR POWER SUPPLY CIRCUIT

1. Turn ignition switch “OFF”. (Stay for at least 5 seconds.)
2. Disconnect transfer control unit harness connector and transfer motor harness connector.
3. Remove transfer motor relay.
4. Check continuity between the following terminals.

- Transfer control unit harness connector M153 terminal 41 and transfer motor relay harness connector E154 terminal 3.
- Transfer control unit harness connector M153 terminal 41 and transfer motor harness connector F57 terminal 14.

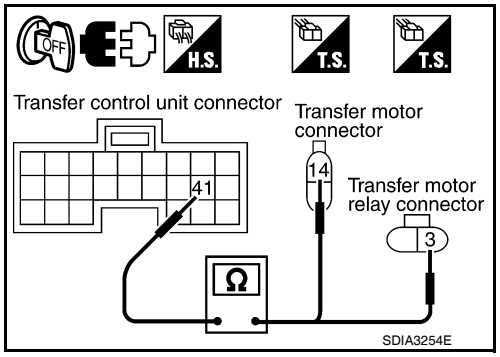

Continuity should exist.

Also check harness for short to ground and short to power.

OK or NG

OK >> GO TO 6.
NG >> Repair or replace damaged parts.

6. CHECK TRANSFER MOTOR GROUND CIRCUIT

1. Turn ignition switch “OFF”. (Stay for at least 5 seconds.)
2. Disconnect transfer motor harness connector.

3. Check continuity between transfer motor harness connector F57 terminal 15 and ground.

Continuity should exist.

Also check harness for short to power.

OK or NG

OK >> GO TO 7.
NG >> Repair open circuit or short to power in harness or connectors.

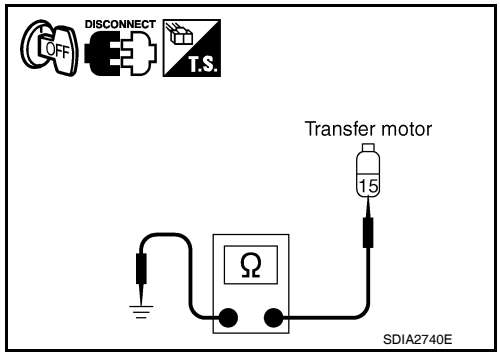

7. CHECK TRANSFER MOTOR

1. Turn ignition switch “OFF”. (Stay for at least 5 seconds.)
2. Disconnect transfer motor harness connector.
3. Apply 12V direct current between transfer motor terminals 14 and 15.

Does transfer motor operate?

YES >> GO TO 8.
NO >> Replace transfer motor. Refer to DLN-150, "Removal and Installation".

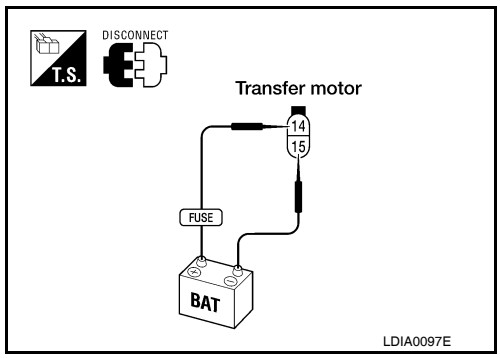

8. CHECK TRANSFER CONTROL UNIT

Check transfer control unit input/output signal. Refer to DLN-87, "Reference Value".

OK or NG

OK >> GO TO 9.
NG >> Check transfer control unit pin terminals for damage or loose connection with harness connector. If any items are damaged, repair or replace damaged parts.

9. CHECK DTC

Perform the self-diagnosis, after driving a vehicle for a while.

OK or NG

OK >> Inspection End.
NG >> Replace transfer control unit. Refer to DLN-138, "Removal and Installation".

Component Inspection

INFOID:0000000005258289

TRANSFER MOTOR RELAY

1. Turn ignition switch OFF. (Stay for at least 5 seconds.)
2. Remove transfer motor relay. Refer to DLN-19, "Component Parts Location".
3. Apply 12V direct current between transfer motor relay terminals 1 and 2.
4. Check continuity between relay terminals 3 and 5.

Condition	Continuity
12V direct current supply between terminals 1 and 2	Yes
OFF	No

5. If inspection results are abnormal replace transfer motor relay.

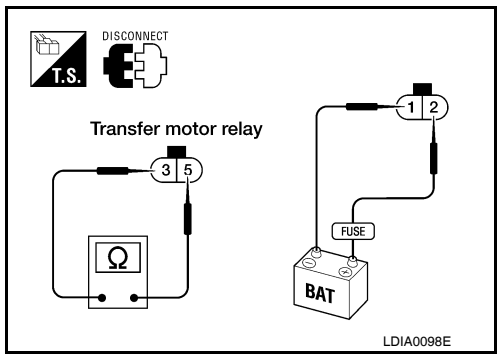

TRANSFER MOTOR

1. Turn ignition switch OFF. (Stay for at least 5 seconds.)
2. Remove transfer motor. Refer to DLN-150, "Removal and Installation".
3. Apply 12V direct current between transfer motor terminals 14 and 15.
4. If transfer motor does not operate, replace transfer motor.

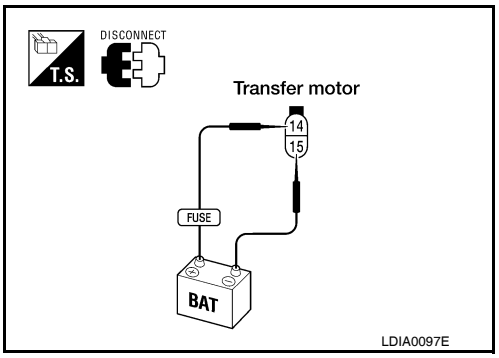

P1826 TRANSFER FLUID TEMPERATURE

Description

INFOID:0000000005258290

Signal voltage from the transfer fluid temperature sensor is abnormally high (Transfer fluid temperature is abnormally low) while driving.

DTC Logic

INFOID:0000000005258291

DTC DETECTION LOGIC

DTC	CONSULT-III	Diagnostic item is detected when...	Reference
[P1826]	OIL TEMP SEN	Signal voltage from transfer fluid temperature sensor is abnormally high (Transfer fluid temperature is abnormally low) while driving.	Refer to DLN-74.

DTC CONFIRMATION PROCEDURE

1. DTC CONFIRMATION PROCEDURE

1. Turn ignition switch ON.
2. Perform self-diagnosis.

Is DTC P1826 displayed?

YES >> Perform diagnosis procedure. Refer to DLN-74, "Diagnosis Procedure".
NO >> Inspection End.

Diagnosis Procedure

INFOID:0000000005258292

Regarding Wiring Diagram information, refer to DLN-95, "Wiring Diagram - ALL-MODE 4WD SYSTEM -".

1. CHECK TRANSFER FLUID TEMPERATURE SENSOR SIGNAL

With CONSULT-III

1. Start engine.
2. Select DATA MONITOR mode for ALL MODE AWD/4WD with CONSULT-III.
3. Read out the value of FLUID TEMP SE.

Condition	Display value (Approx.)
Transfer fluid temperature approx. 20 - 80°C (68 - 176°F)	1.1 - 0.3V

Without CONSULT-III

1. Start engine.
2. Check voltage between transfer control unit harness connector terminals and ground.

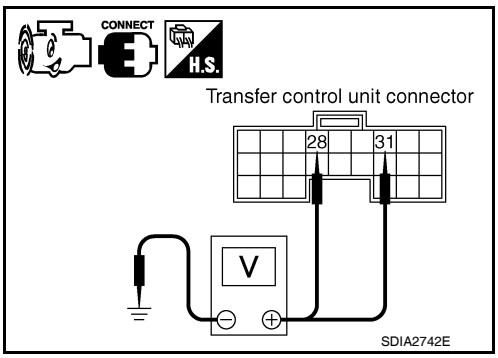

Connector	Terminal	Condition		Data (Approx.)
M153	28 - Ground	Always		0V
	31 - Ground	Ignition switch: ON	Transfer fluid temperature approx. 20°C (68°F)	1.1V
			Transfer fluid temperature approx. 80°C (176°F)	0.3V

Are inspection results normal?

YES >> GO TO 4.
NO >> GO TO 2.

2. CHECK HARNESS BETWEEN TRANSFER CONTROL UNIT AND TRANSFER TERMINAL CORD ASSEMBLY

1. Turn ignition switch OFF. (Stay for at least 5 seconds.)
2. Disconnect transfer control unit harness connector and transfer terminal cord assembly harness connector.
3. Check continuity between the following terminals.

- Transfer control unit harness connector M153 terminal 28 and transfer terminal cord assembly harness connector F56 terminal 3 .
- Transfer control unit harness connector M153 terminal 31 and transfer terminal cord assembly harness connector F56 terminal 2.

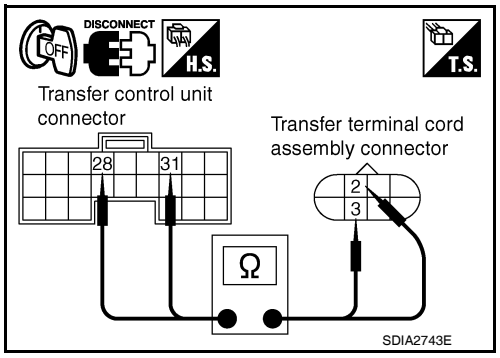

Continuity should exist.

Also check harness for short to ground and short to power.

Are inspection results normal?

YES >> GO TO 3.
NO >> Repair or replace damaged parts.

3. CHECK TRANSFER FLUID TEMPERATURE SENSOR

1. Turn ignition switch OFF. (Stay for at least 5 seconds.)
2. Disconnect transfer terminal cord assembly harness connector.
3. Check resistance between transfer terminal cord assembly terminals 2 and 3.

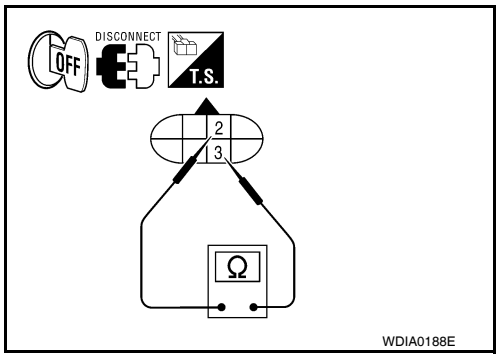

Temperature °C (°F)	Resistance (Approx.)
20 (68)	2.5 kΩ
80 (176)	0.3 kΩ

Are inspection results normal?

YES >> GO TO 4.
NO >> Replace transfer fluid temperature sensor. Refer to DLN-19, "Component Parts Location".

4. CHECK TRANSFER CONTROL UNIT

Check transfer control unit input/output signal. Refer to DLN-87, "Reference Value".

Are inspection results normal?

YES >> GO TO 5.
NO >> Check transfer control unit pin terminals for damage or loose connection with harness connector. If any items are damaged, repair or replace damaged parts.

5. CHECK DTC

Drive the vehicle and then perform self-diagnosis.

Are inspection results normal?

YES >> Inspection End.
NO >> Replace transfer control unit. Refer to DLN-138, "Removal and Installation".

Component Inspection

INFOID:0000000005258293

1. Turn ignition switch OFF. (Stay for at least 5 seconds.)
2. Disconnect transfer terminal cord assembly harness connector.

3. Check resistance between transfer terminal cord assembly terminals 2 and 3.

Temperature °C (°F)	Resistance (Approx.)
20 (68)	2.5 kΩ
80 (176)	0.3 kΩ

4. If the inspection results are abnormal replace the transfer fluid temperature sensor. Refer to DLN-19, "Component Parts Location".

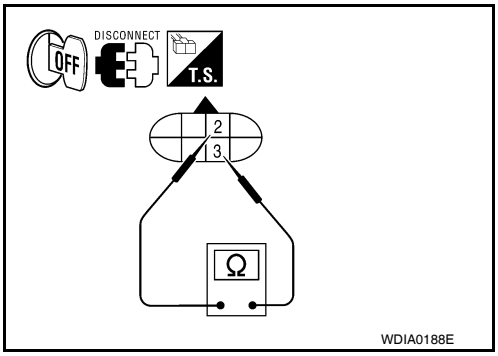

P1827 CLUTCH PRESSURE SWITCH

Description

INFOID:0000000005258294

Improper signal from the clutch pressure switch is input due to open or short circuit. Also, a malfunction may have occurred in clutch pressure switch or hydraulic circuit.

DTC Logic

INFOID:0000000005258295

DTC DETECTION LOGIC

DTC	CONSULT-III	Diagnostic item is detected when...	Reference
[P1827]	CLUTCH PRES SW	• Improper signal from clutch pressure switch is input due to open or short circuit. • Malfunction occurs in clutch pressure switch or hydraulic circuit.	Refer to DLN-77.

DTC CONFIRMATION PROCEDURE

1. DTC CONFIRMATION PROCEDURE

1. Turn ignition switch ON.
2. Perform self-diagnosis.

Is DTC P1827 displayed?

YES >> Perform diagnosis procedure. Refer to DLN-77, "Diagnosis Procedure".
NO >> Inspection End.

Diagnosis Procedure

INFOID:0000000005258296

Regarding Wiring Diagram information, refer to DLN-95, "Wiring Diagram - ALL-MODE 4WD SYSTEM -".

1. CHECK CLUTCH PRESSURE SWITCH SIGNAL

With CONSULT-III

1. Start engine.
2. Select DATA MONITOR mode for ALL MODE AWD/4WD with CONSULT-III.
3. Read out ON/OFF switching action of the CL PRES SW while operating 4WD shift switch.

Condition		Display value
• Ignition switch: ON • A/T selector lever D position	4WD shift switch: AUTO or 4H (Wait function is not operating.)	ON
Ignition switch: ON	4WD shift switch: 2WD (Wait function is not operating.)	OFF

Without CONSULT-III

1. Start engine.
2. Check voltage between transfer control unit harness connector terminals and ground.

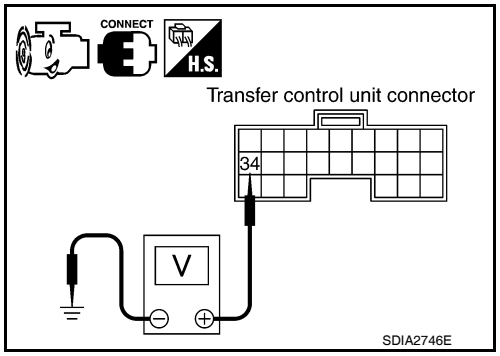

Connector	Terminal	Condition		Voltage (Approx.)
M153	34 - Ground	• Ignition switch: ON • A/T selector lever D position	4WD shift switch: AUTO or 4H (Wait function is not operating.)	0V
		Ignition switch: ON	4WD shift switch: 2WD (Wait function is not operating.)	Battery voltage

Are inspection results normal?

YES >> GO TO 5.
NO >> GO TO 2.

2. CHECK HARNESS BETWEEN TRANSFER CONTROL UNIT AND CLUTCH PRESSURE SWITCH

1. Turn ignition switch OFF. (Stay for at least 5 seconds.)
2. Disconnect transfer control unit harness connector and the transfer terminal cord assembly harness connector.
3. Check continuity between transfer control unit harness connector M153 terminal 34 and transfer terminal cord assembly harness connector F56 terminal 7

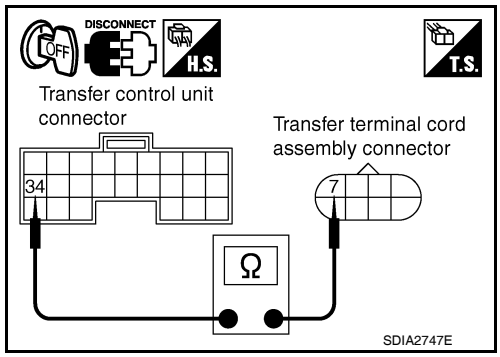

Continuity should exist.

Also check harness for short to ground and short to power.

Are inspection results normal?

YES >> GO TO 3.
NO >> Repair or replace damaged parts.

3. CHECK TRANSFER CONTROL UNIT

Check transfer control unit input/output signal. Refer to DLN-87, "Reference Value".

Are inspection results normal?

YES >> GO TO 4.
NO >> Check transfer control unit pin terminals for damage or loose connection with the harness connector. If any items are damaged, repair or replace damaged parts.

4. CHECK CLUTCH PRESSURE SWITCH

1. Turn ignition switch OFF. (Stay for at least 5 seconds.)
2. Remove clutch pressure switch. Refer to DLN-19, "Component Parts Location".
3. Push and release clutch pressure switch and check continuity between terminal 7 and ground.

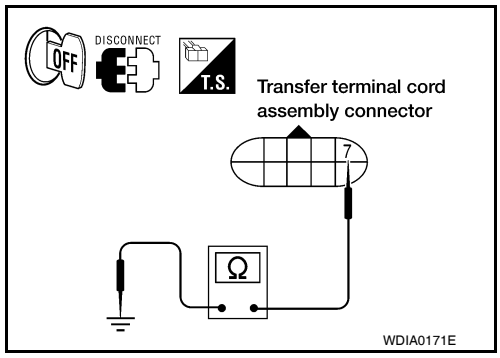

Terminal	Condition	Continuity
7 - Ground	Push clutch pressure switch	Yes
	Release clutch pressure switch	No

Are inspection results normal?

YES >> GO TO 5.
NO >> Replace clutch pressure switch.

5. CHECK DTC

Perform the self-diagnosis, after driving a vehicle for a while.

Are inspection results normal?

YES >> GO TO 6.
NO >> Replace transfer control unit. Refer to DLN-138, "Removal and Installation".

6. CRUISE TEST

Perform cruise test. Refer to DLN-10, "Preliminary Check".

Are inspection results normal?

YES >> Inspection End.
NO >> Perform the applicable trouble diagnosis.

Component Inspection

INFOID:0000000005258297

1. Turn ignition switch OFF. (Stay for at least 5 seconds.)
2. Remove clutch pressure switch. Refer to DLN-19, "Component Parts Location".
3. Push and release clutch pressure switch and check continuity between terminal 7 and ground.

Terminal	Condition	Continuity
7 - Ground	Push clutch pressure switch	Yes
	Release clutch pressure switch	No

4. If the inspection results are abnormal replace the clutch pressure switch.

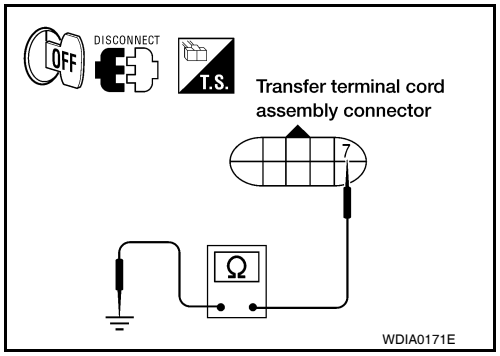

P1828 LINE PRESSURE SWITCH

Description

INFOID:0000000005258298

Improper signal from line pressure switch is input due to open or short circuit. Also, a malfunction may have occurred in the line pressure switch or hydraulic circuit.

DTC Logic

INFOID:0000000005258299

DTC DETECTION LOGIC

DTC	CONSULT-III	Diagnostic item is detected when...	Reference
[P1828]	LINE PRES SW	• Improper signal from line pressure switch is input due to open or short circuit. • Malfunction occurs in line pressure switch or hydraulic circuit.	Refer to DLN-80.

DTC CONFIRMATION PROCEDURE

1. DTC CONFIRMATION PROCEDURE

1. Turn ignition switch ON.
2. Perform self-diagnosis.

Is DTC P1828 displayed?

YES >> Perform diagnosis procedure. Refer to DLN-80, "Diagnosis Procedure".
NO >> Inspection End.

Diagnosis Procedure

INFOID:0000000005258300

Regarding Wiring Diagram information, refer to DLN-95, "Wiring Diagram - ALL-MODE 4WD SYSTEM -".

1. CHECK LINE PRESSURE SWITCH SIGNAL

With CONSULT-III

1. Start engine.
2. Select DATA MONITOR mode for ALL MODE AWD/4WD with CONSULT-III.
3. Read out ON/OFF switching action of LINE PRES SW while operating 4WD shift switch.

Condition		Display value
• A/T selector lever D position • 4WD shift switch: AUTO		ON
• Except the above • The vehicle has been left at room temperature for 5 minutes and more with ignition switch in OFF position.	• Ignition switch: ON • A/T selector lever: P or N position • 4WD shift switch: other than AUTO	OFF

Without CONSULT-III

1. Start engine.

2. Check voltage between transfer control unit harness connector terminals and ground.

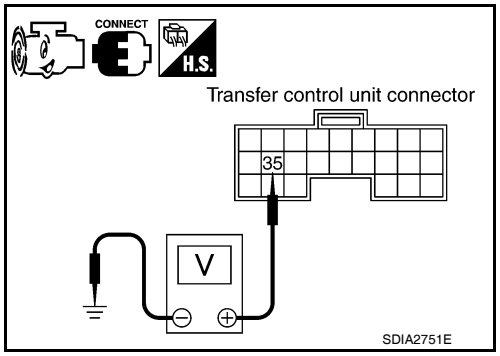

Connector	Terminal	Condition		Voltage (Approx.)
M153	35 - Ground	• A/T selector lever D position	4WD shift switch: AUTO	0V
		• Except the above • The vehicle has been left at room temperature for 5 minutes and more with ignition switch in OFF position.	• Ignition switch: ON • A/T selector lever: P or N position • 4WD shift switch: other than AUTO	Battery voltage

Are inspection results normal?

YES >> GO TO 5.
NO >> GO TO 2.

2. CHECK HARNESS BETWEEN TRANSFER CONTROL UNIT AND LINE PRESSURE SWITCH

1. Turn ignition switch OFF. (Stay for at least 5 seconds.)
2. Disconnect transfer control unit harness connector and the transfer terminal cord assembly harness connector.
3. Check continuity between transfer control unit harness connector M153 terminal 35 and transfer terminal cord assembly harness connector F56 terminal 1.

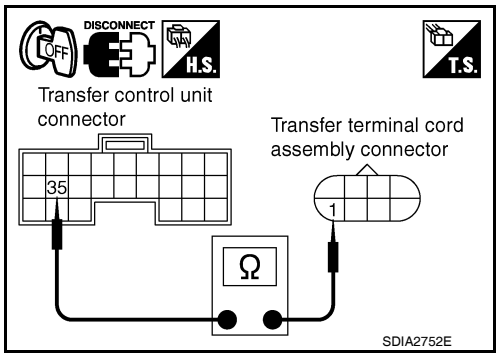

Continuity should exist.

Also check harness for short to ground and short to power.

Are inspection results normal?

YES >> GO TO 3.
NO >> Repair or replace damaged parts.

3. CHECK TRANSFER CONTROL UNIT

Check transfer control unit input/output signal. Refer to DLN-87, "Reference Value".

Are inspection results normal?

YES >> GO TO 4.
NO >> Check the following. If any items are damaged, repair or replace damaged parts.
- Transfer control unit pin terminals for damage or loose connection with harness connector.
- Transfer control unit. Refer to DLN-138, "Removal and Installation".

4. CHECK LINE PRESSURE SWITCH

1. Turn ignition switch OFF. (Stay for at least 5 seconds.)
2. Remove line pressure switch. Refer to DLN-19, "Component Parts Location".
3. Push and release line pressure switch and check continuity between terminal 1 and ground.

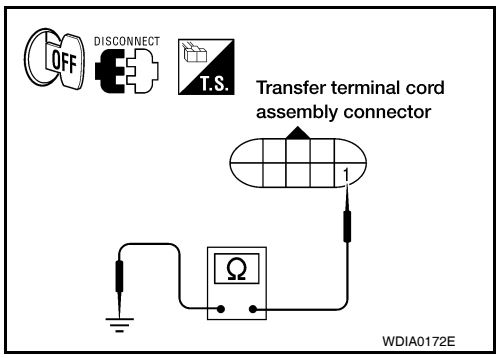

Terminal	Condition	Continuity
1 - Ground	Push line pressure switch	Yes
	Release line pressure switch	No

Are inspection results normal?

YES >> GO TO 5.
NO >> Replace line pressure switch.

5. CHECK DTC

Perform the self-diagnosis, after driving a vehicle for a while.

Are inspection results normal?

YES >> GO TO 6.
NO >> Replace transfer control unit.

6. CRUISE TEST

Perform cruise test. Refer to DLN-10, "Preliminary Check".

Are inspection results normal?

YES >> Inspection End.
NO >> Perform the applicable trouble diagnosis.

Component Inspection

INFOID:0000000005258301

1. Turn ignition switch OFF. (Stay for at least 5 seconds.)
2. Remove line pressure switch. Refer to DLN-19, "Component Parts Location".
3. Push and release line pressure switch and check continuity between terminal 1 and ground.

Terminal	Condition	Continuity
1 - Ground	Push line pressure switch	Yes
	Release line pressure switch	No

4. If the inspection results are abnormal, replace the line pressure switch.

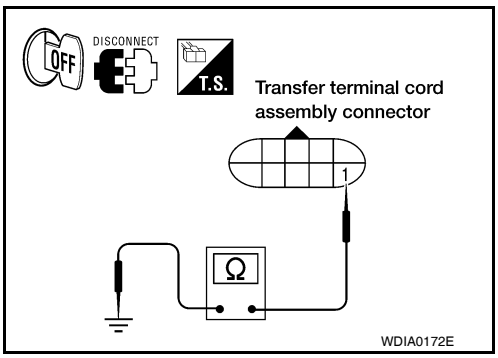

P1829 THROTTLE POSITION SIGNAL (ECM)

Description

INFOID:0000000005258302

Malfunction is detected in accelerator pedal position signal that is output from ECM through CAN communication. Also, the signal voltage from accelerator pedal position sensor may be abnormally high or low.

DTC Logic

INFOID:0000000005258303

DTC DETECTION LOGIC

DTC	CONSULT-III	Diagnostic item is detected when...	Reference
[P1829]	THROTTLE POSI SEN	• Malfunction is detected in accelerator pedal position signal that is output from ECM through CAN communication. • Signal voltage from accelerator pedal position sensor is abnormally high or low.	Refer to DLN-83.

DTC CONFIRMATION PROCEDURE

1. DTC CONFIRMATION PROCEDURE

1. Turn ignition switch ON.
2. Perform self-diagnosis.

Is DTC P1829 displayed?

YES >> Perform diagnosis procedure. Refer to DLN-83, "Diagnosis Procedure".
NO >> Inspection End.

Diagnosis Procedure

INFOID:0000000005258304

1. CHECK DTC WITH ECM

Perform self-diagnosis with ECM. Refer to EC-557, "CONSULT-III Function (ENGINE)".

Is any malfunction detected by self-diagnosis?

YES >> Check the malfunctioning system.
NO >> GO TO 2.

2. CHECK TRANSFER CONTROL UNIT

Check transfer control unit input/output signal. Refer to DLN-87, "Reference Value".

Are inspection results normal?

YES >> GO TO 3.
NO >> Check transfer control unit pin terminals for damage or loose connection with harness connector. If any items are damaged, repair or replace damaged parts.

3. CHECK DTC

Perform the self-diagnosis, after driving a vehicle for a while.

Are inspection results normal?

YES >> Inspection End.
NO >> Perform self-diagnosis with ECM again.

P1830 ABS OPERATION SIGNAL (ABS)

Description

INFOID:0000000005258305

Malfunction is detected in ABS operation signal that is output from ABS actuator and electric unit (control unit) through CAN communication.

DTC Logic

INFOID:0000000005258306

DTC DETECTION LOGIC

DTC	CONSULT-III	Diagnostic item is detected when...	Reference
[P1830]	ABS OP SIG	Malfunction is detected in ABS operation signal that is output from ABS actuator and electric unit (control unit) through CAN communication.	Refer to DLN-84.

DTC CONFIRMATION PROCEDURE

1. DTC CONFIRMATION PROCEDURE

1. Turn ignition switch ON.
2. Perform self-diagnosis.

Is DTC P1830 displayed?

YES >> Perform diagnosis procedure. Refer to DLN-84, "Diagnosis Procedure".
NO >> Inspection End.

Diagnosis Procedure

INFOID:0000000005258307

1. CHECK DTC WITH ABS ACTUATOR AND ELECTRIC UNIT (CONTROL UNIT)

Perform self-diagnosis with ABS actuator and electric unit (control unit). Refer to BRC-22, "CONSULT-III Function (ABS)".

Is any malfunction detected by self-diagnosis?

YES >> Check the malfunctioning system.
NO >> GO TO 2.

2. CHECK TRANSFER CONTROL UNIT

Check transfer control unit input/output signal. Refer to DLN-87, "Reference Value".

Are the inspection results normal?

YES >> GO TO 3.
NO >> Check transfer control unit pin terminals for damage or loose connection with harness connector. If any items are damaged, repair or replace damaged parts.

3. CHECK DTC

Perform the self-diagnosis, after driving a vehicle for a while.

Are the inspection results normal?

YES >> Inspection End.
NO >> Perform self-diagnosis with ABS actuator and electric unit (control unit) again.

P1831 VDC OPERATION SIGNAL (ABS)

Description

INFOID:0000000005258308

Malfunction is detected in the VDC operation signal that is output from ABS actuator and electric unit (control unit) through CAN communication.

DTC Logic

INFOID:0000000005258309

DTC DETECTION LOGIC

DTC	CONSULT-III	Diagnostic item is detected when...	Reference
[P1831]	VDC OP SIG	Malfunction is detected in VDC operation signal that is output from ABS actuator and electric unit (control unit) through CAN communication.	Refer to DLN-85.

DTC CONFIRMATION PROCEDURE

1. DTC CONFIRMATION PROCEDURE

1. Turn ignition switch ON.
2. Perform self-diagnosis.

Is DTC P1831 displayed?

YES >> Perform diagnosis procedure. Refer to DLN-85, "Diagnosis Procedure".
NO >> Inspection End.

Diagnosis Procedure

INFOID:0000000005258310

1. CHECK DTC WITH ABS ACTUATOR AND ELECTRIC UNIT

Perform self-diagnosis with ABS actuator and electric unit (control unit). Refer to BRC-22, "CONSULT-III Function (ABS)".

Is any malfunction detected by self-diagnosis?

YES >> Check the malfunctioning system.
NO >> GO TO 2.

2. CHECK TRANSFER CONTROL UNIT

Check transfer control unit input/output signal. Refer to DLN-87, "Reference Value".

Are the inspection results normal?

YES >> GO TO 3.
NO >> Check transfer control unit pin terminals for damage or loose connection with harness connector. If any items are damaged, repair or replace damaged parts.

3. CHECK DTC

Perform the self-diagnosis, after driving a vehicle for a while.

Are the inspection results normal?

YES >> Inspection End.
NO >> Perform self-diagnosis with ABS actuator electric unit (control unit) again.

P1832 TCS OPERATION SIGNAL (ABS)

Description

INFOID:0000000005258311

Malfunction is detected in TCS operation signal that is output from ABS actuator and electric unit (control unit) through CAN communication.

DTC Logic

INFOID:0000000005258312

DTC DETECTION LOGIC

DTC	CONSULT-III	Diagnostic item is detected when...	Reference
[P1832]	TCS OP SIG	Malfunction is detected in TCS operation signal that is output from ABS actuator and electric unit (control unit) through CAN communication.	Refer to DLN-86.

DTC CONFIRMATION PROCEDURE

1. DTC CONFIRMATION PROCEDURE

1. Turn ignition switch ON.
2. Perform self-diagnosis.

Is DTC P1832 displayed?

YES >> Perform diagnosis procedure. Refer to DLN-86, "Diagnosis Procedure".
NO >> Inspection End.

Diagnosis Procedure

INFOID:0000000005258313

1. CHECK DTC WITH ABS ACTUATOR AND ELECTRIC UNIT

Perform self-diagnosis with ABS actuator and electric unit (control unit). Refer to BRC-22, "CONSULT-III Function (ABS)".

Is any malfunction detected by self-diagnosis?

YES >> Check the malfunctioning system.
NO >> GO TO 2.

2. CHECK TRANSFER CONTROL UNIT

Check transfer control unit input/output signal. Refer to DLN-87, "Reference Value".

Are the inspection results normal?

YES >> GO TO 3.
NO >> Check transfer control unit pin terminals for damage or loose connection with harness connector. If any items are damaged, repair or replace damaged parts.

3. CHECK DTC

Perform the self-diagnosis, after driving a vehicle for a while.

Are the inspection results normal?

YES >> Inspection End.
NO >> Perform self-diagnosis with ABS actuator electric unit (control unit) again.

ECU DIAGNOSIS

TRANSFER CONTROL UNIT

Reference Value

INFOID:0000000005258314

VALUE ON THE DIAGNOSIS TOOL

CONSULT-III data monitor item

Monitored item [Unit]	Content	Condition		Display value
VHCL/S SEN·FR [km/h] or [mph]	Wheel speed (Front wheel)	Vehicle stopped		0 km/h (0 mph)
		Vehicle running **CAUTION:** **Check air pressure of tire under standard condition.**		Approximately equal to the indication on speedometer (Inside of ±10%)
VHCL/S SEN·RR [km/h] or [mph]	Wheel speed (Rear wheel)	Vehicle stopped		0 km/h (0 mph)
		Vehicle running **CAUTION:** **Check air pressure of tire under standard condition.**		Approximately equal to the indication on speedometer (Inside of ±10%)
ENGINE SPEED [rpm]	Engine speed	Engine stopped (Engine speed: Less than 400 rpm)		0 rpm
		Engine running (Engine speed: 400 rpm or more)		Approximately equal to the indication on tachometer
THRTL POS SEN [0.0/8]	Accelerator pedal position (APP) sensor condition of throttle opening	When depressing accelerator pedal (Value rises gradually in response to throttle position.)		0.0/8 - 8.0/8
FLUID TEMP SE [V]	Transfer fluid temperature signal voltage	Transfer fluid temperature approx. 20 - 80°C (68 - 176°F)		Approx. 1.1 - 0.3V
BATTERY VOLT [V]	Power supply voltage for transfer control unit	Ignition switch: ON		Battery voltage
2WD SWITCH [On/Off]	Input condition from 4WD shift switch	4WD shift switch: 2WD		On
		4WD shift switch: AUTO, 4H or 4LO		Off
AUTO SWITCH [On/Off]	Input condition from 4WD shift switch	4WD shift switch: AUTO		On
		4WD shift switch: 2WD, 4H or 4LO		Off
LOCK SWITCH [On/Off]	Input condition from 4WD shift switch	4WD shift switch: 4H		On
		4WD shift switch: 2WD, AUTO or 4LO		Off
4L SWITCH [On/Off]	Input condition from 4WD shift switch	4WD shift switch: 4LO		On
		4WD shift switch: 2WD, AUTO or 4H		Off
N POSI SW TF [On/Off]	Condition of neutral-4LO switch	• Vehicle stopped • Engine running • A/T selector lever N position • Brake pedal depressed	4WD shift switch: 2WD, AUTO or 4H	Off
			4WD shift switch: 4H to 4LO (While actuator motor is operating.)	Off→On
			4WD shift switch: 4LO to 4H (While actuator motor is operating.)	On→Off
			4WD shift switch: 4LO	On

Monitored item [Unit]	Content	Condition		Display value
ATP SWITCH [On/Off]	Condition of ATP switch	• Vehicle stopped • Engine running • A/T selector lever N position • Brake pedal depressed	4WD shift switch : 4H to 4LO or 4LO to 4H (While actuator motor is operating.)	On
			Except the above	Off
WAIT DETCT SW [On/Off]	Condition of wait detection switch	• Vehicle stopped • Engine running • A/T selector lever N position • Brake pedal depressed	4WD shift switch: 2WD, AUTO or 4H	Off
			4WD shift switch: 4H to 4LO (While actuator motor is operating.)	Off→On
			4WD shift switch: 4LO to 4H (While actuator motor is operating.)	On→Off
			4WD shift switch: 4LO	On
LINE PRES SW [On/Off]	Condition of line pressure switch	• A/T selector lever D position • 4WD shift switch: AUTO		On
		• Except the above • The vehicle has been left at room temperature for 5 minutes and more with ignition switch in OFF position.	• Ignition switch: ON • A/T selector lever: P or N position • 4WD shift switch: other than AUTO	Off
CL PRES SW [On/Off]	Condition of clutch pressure switch	• Vehicle stopped • Engine running • A/T selector lever D position • 4WD shift switch: AUTO or 4H (Wait function is not operating.)		On
		• Vehicle stopped • Engine running • 4WD shift switch: 2WD (Wait function is not operating.)		Off
N POSI SW AT [On/Off]	Input condition from transmission range switch	• Vehicle stopped • Engine running • Brake pedal depressed	A/T selector lever position: N	On
			Except the above	Off
R POSI SW AT [On/Off]	Input condition from transmission range switch	• Vehicle stopped • Engine running • Brake pedal depressed	A/T selector lever position: R	On
			Except the above	Off
P POSI SW AT [On/Off]	Input condition from transmission range switch	• Vehicle stopped • Engine running • Brake pedal depressed	A/T selector lever position: P	On
			Except the above	Off
ABS OPER SW [On/Off]	Condition of ABS operating	ABS is operating.		On
		ABS is not operating.		Off
VDC OPER SW [On/Off]	Condition of VDC operating	VDC is operating.		On
		VDC is not operating.		Off
TCS OPER SW [On/Off]	Condition of TCS operating	TCS is operating.		On
		TCS is not operating.		Off
THROTTLE POSI [0.0/8]	Condition of throttle opening	When depressing accelerator pedal (Value rises gradually in response to throttle position.)		0.0/8 - 8.0/8
4WD MODE [AUTO/LOCK/2WD/4L]	Control status of 4WD (Output condition of 4WD shift indicator lamp and 4LO indicator lamp)	• Vehicle stopped • Engine running • A/T selector lever N position • Brake pedal depressed	4WD shift switch: 2WD	2WD
			4WD shift switch: AUTO	AUTO
			4WD shift switch: 4H	LOCK
			4WD shift switch: 4LO	4L

Monitored item [Unit]	Content	Condition		Display value
VHCL/S COMP [km/h] or [mph]	Vehicle speed	Vehicle stopped		0 km/h (0 mph)
		Vehicle running **CAUTION:** **Check air pressure of tire under standard condition.**		Approximately equal to the indication on speedometer (Inside of ±10%)
COMP CL TORQ [kgm]	Condition of control torque	• Vehicle stopped • Engine running • A/T selector lever N position • Brake pedal depressed	4WD shift switch: 2WD	0 kg-m
			4WD shift switch: AUTO	39 - 1,353 N·m (4 - 138 kg-m, 29 - 998 ft-lb)
			4WD shift switch: 4H or 4LO	1,353 N·m (138 kg-m, 998 ft-lb)
DUTY SOLENOID [%]	Condition of clutch pressure solenoid	• Vehicle stopped • Engine running • A/T selector lever N position • Brake pedal depressed	4WD shift switch: 2WD	4%
			4WD shift switch: AUTO	96 - 4%
			4WD shift switch: 4H or 4LO	4%
2-4WD SOL [On/Off]	Condition of 2-4WD shift solenoid valve	• Vehicle stopped • Engine running • A/T selector lever N position • Brake pedal depressed	4WD shift switch: 2WD	Off
			4WD shift switch: AUTO	On
			4WD shift switch: 4H	
			4WD shift switch: 4LO	
			4WD shift switch: AUTO (Wait function is operating.)	Off
			4WD shift switch: 4H (Wait function is operating.)	Off
2-4WD SOL MON [On/Off]	Check signal for transfer control unit signal output	• Vehicle stopped • Engine running • A/T selector lever N position • Brake pedal depressed	4WD shift switch: 2WD	Off
			4WD shift switch: AUTO	On
			4WD shift switch: 4H	
			4WD shift switch: 4LO	
			4WD shift switch: AUTO (Wait function is operating.)	Off
			4WD shift switch: 4H (Wait function is operating.)	Off
MOTOR RELAY [On/Off]	Condition of transfer motor relay	• Accelerator pedal depressed • Vehicle stopped • Engine running • Brake pedal depressed	4WD shift switch: 2WD	Off
			4WD shift switch: AUTO or 4LO (A/T selector lever P or N position)	Off (On for approx. 2 sec. after shifting to P and N.)
			4WD shift switch: AUTO or 4LO (Except for A/T selector lever P or N position)	On
			4WD shift switch: 4H (A/T selector lever P position)	Off (On for approx. 2 sec. after shifting to P.)
			4WD shift switch: 4H (Except for A/T selector lever P position)	On

Monitored item [Unit]	Content	Condition		Display value
MOTOR RLY MON [On/Off]	Check signal for transfer control unit signal output	• Accelerator pedal depressed • Vehicle stopped • Engine running • Brake pedal depressed	4WD shift switch: 2WD	Off
			4WD shift switch: AUTO or 4LO (A/T selector lever P or N position)	Off (On for approx. 2 sec. after shifting to P and N.)
			4WD shift switch: AUTO or 4LO (Except for A/T selector lever P or N position)	On
			4WD shift switch: 4H (A/T selector lever P position)	Off (On for approx. 2 sec. after shifting to P.)
			4WD shift switch: 4H (Except for A/T selector lever P position)	On
4WD FAIL LAMP [On/Off]	Condition of 4WD warning lamp	4WD warning lamp: ON		On
		4WD warning lamp: OFF		Off
2WD IND [On/Off]	Condition of 4WD shift indicator lamp (2WD indicator lamp)	2WD indicator lamp of 4WD shift indicator lamp: OFF		Off
		2WD indicator lamp of 4WD shift indicator lamp: ON		On
AUTO IND [On/Off]	Condition of 4WD shift indicator lamp (AUTO indicator lamp)	AUTO indicator lamp of 4WD shift indicator lamp: OFF		Off
		AUTO indicator lamp of 4WD shift indicator lamp: ON		On
LOCK IND [On/Off]	Condition of 4WD shift indicator lamp (Lock indicator lamp)	Lock indicator lamp of 4WD shift indicator lamp: OFF		Off
		Lock indicator lamp of 4WD shift indicator lamp: ON		On
4L IND [On/Off]	Condition of 4LO indicator lamp condition	4LO indicator lamp: OFF		Off
		4LO indicator lamp: ON		On
ATP IND [On/Off]	Condition of ATP indicator lamp	ATP indicator lamp: ON		On
		ATP indicator lamp: OFF		Off
SHIFT POS SW1 [On/Off]	Condition of actuator position switch 1 (Low)	• Vehicle stopped • Engine running • A/T selector lever N position • Brake pedal depressed	4WD shift switch: 4LO	On
			4WD shift switch: 2WD, AUTO or 4H	Off
SHIFT POS SW2 [On/Off]	Condition of actuator position switch 2 (High)	• Vehicle stopped • Engine running • A/T selector lever N position • Brake pedal depressed	4WD shift switch: 4H, AUTO or 2WD	On
			4WD shift switch: 4LO	Off
SHIFT ACT 1 [On/Off]	Output condition to actuator motor (High)	• Vehicle stopped • Engine running • A/T selector lever N position • Brake pedal depressed	4WD shift switch: 4H to 4LO (Wait function is operating.)	On
			Except the above	Off
SHIFT AC MON1 [On/Off]	Check signal for transfer control unit signal output	• Vehicle stopped • Engine running • A/T selector lever N position • Brake pedal depressed	4WD shift switch: 4H to 4LO (Wait function is operating.)	On
			Except the above	Off
SHIFT ACT 2 [On/Off]	Output condition to actuator motor (Low)	• Vehicle stopped • Engine running • A/T selector lever N position • Brake pedal depressed	4WD shift switch: 4LO to 4H (Wait function is operating.)	On
			Except the above	Off

Monitored item [Unit]	Content	Condition		Display value
SHIFT AC MON2 [On/Off]	Check signal for transfer control unit signal output	• Vehicle stopped • Engine running • A/T selector lever N position • Brake pedal depressed	4WD shift switch: 4LO to 4H (Wait function is operating.)	On
			Except the above	Off
T/F F SPEED [km/h] or [mph]	Displayed, but do not use.			
A/T R SPEED [km/h] or [mph]	Condition of vehicle speed sensor A/T (output speed sensor)	During driving		Approximately matches the output shaft speed.
AT GEAR POSI [1/2/3/4/5]	Condition of A/T selector lever position	Displays actual A/T gear position.		1 2 3 4 5

PHYSICAL VALUES

Terminal Layout

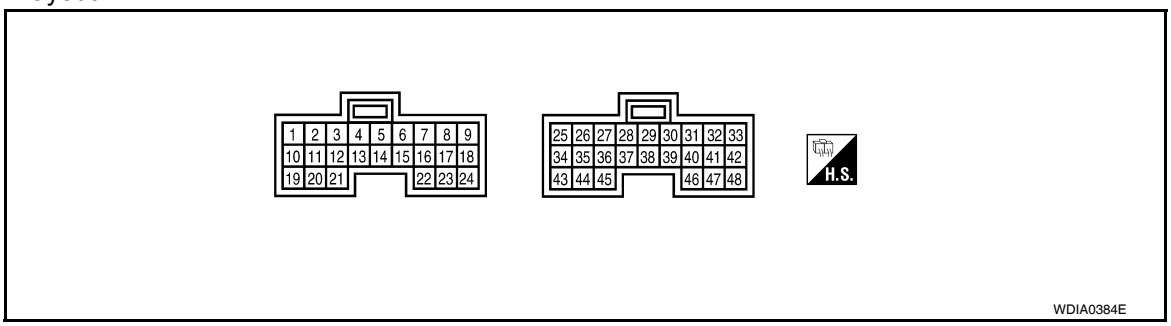

Terminal	Wire color	Item	Condition		Data (Approx.)
1	GR	2-4WD shift solenoid valve	• Vehicle stopped • Engine running • A/T selector lever “N” position • Brake pedal depressed	4WD shift switch: 2WD	0V
				4WD shift switch: AUTO, 4H or 4LO	Battery voltage
2	V	4WD shift indicator lamp (2WD indicator lamp)	2WD indicator lamp: OFF		Battery voltage
			2WD indicator lamp: ON		0V
3	B	Ground	Always		0V
4	SB	Transfer shift high relay	• Vehicle stopped • Engine running • A/T selector lever “N” position • Brake pedal depressed	4WD shift switch: 4H to 4LO (“Wait” function is operating.)	Battery voltage
				Except the above	0V
5	GR	4WD warning lamp	4WD warning lamp: ON		0V
			4WD warning lamp: OFF		Battery voltage
6	B	Ground	Always		0V
7	L	CAN-H	—		—
8	P	CAN-L	—		—
9	G	4WD shift switch (2WD)	Ignition switch: ON	4WD shift switch: 2WD	Battery voltage
				4WD shift switch: AUTO, 4H or 4LO	0V

Terminal	Wire color	Item	Condition		Data (Approx.)
10	P	Transfer dropping resistor	• Vehicle stopped • Engine running • A/T selector lever "N" position • Brake pedal depressed	4WD shift switch: AUTO	4 - 14V
				4WD shift switch: 2WD, 4H or 4LO	Less than 1V
11	BR	4WD shift indicator lamp (Lock indicator lamp)	Lock indicator lamp of 4WD shift indicator lamp: OFF		Battery voltage
			Lock indicator lamp of 4WD shift indicator lamp: ON		0V
12	O	4LO indicator lamp	4LO indicator lamp: OFF		Battery voltage
			4LO indicator lamp: ON		0V
13	G	Transfer shift low relay	• Vehicle stopped • Engine running • A/T selector lever "N" position • Brake pedal depressed	4WD shift switch: 4LO to 4H ("Wait" function is operating.)	Battery voltage
				Except the above	0V
14	V	Transfer motor relay	• Accelerator pedal depressed • Vehicle stopped • Engine running • Brake pedal depressed	4WD shift switch: 2WD	Battery voltage
				4WD shift switch: AUTO or 4LO (A/T selector lever "P" or "N" position)	Battery voltage (0V for approx. 2 sec. after shifting to "P" and "N".)
				4WD shift switch: AUTO or 4LO (Except for A/T selector lever "P" or "N" position)	0V
				4WD shift switch: 4H (A/T selector lever "P" position)	Battery voltage (0V for approx. 2 sec. after shifting to "P".)
				4WD shift switch: 4H (Except for A/T selector lever "P" position)	0V
15	LG	ATP warning lamp	ATP indicator lamp: ON		0V
			ATP indicator lamp: OFF		Battery voltage
16	Y	Power supply	Ignition switch: ON		Battery voltage
			Ignition switch: OFF (5 seconds after ignition switch is turned OFF)		0V
18	O	4WD shift switch (4H)	Ignition switch: ON	4WD shift switch: 4H	Battery voltage
				4WD shift switch: 2WD, AUTO or 4LO	0V
19	R	Clutch pressure solenoid valve	• Vehicle stopped • Engine running • A/T selector lever "N" position • Brake pedal depressed	4WD shift switch: AUTO	1.5 - 3V
				4WD shift switch: 2WD, 4H or 4LO	Less than 1V
21	B	4WD shift indicator lamp (AUTO indicator lamp)	AUTO indicator lamp of 4WD shift indicator lamp: OFF		Battery voltage
			AUTO indicator lamp of 4WD shift indicator lamp: ON		0V
22	GR	Power supply	Ignition switch: ON		Battery voltage
			Ignition switch: OFF (5 seconds after ignition switch is turned OFF)		0V
23	W	4WD shift switch (4LO)	Ignition switch: ON	4WD shift switch: 4LO	Battery voltage
				4WD shift switch: 2WD, AUTO or 4H	0V
24	LG	4WD shift switch (AUTO)	Ignition switch: ON	4WD shift switch: AUTO	Battery voltage
				4WD shift switch: 2WD, 4H or 4LO	0V

Terminal	Wire color	Item	Condition		Data (Approx.)
25	Y	Neutral-4LO switch	• Vehicle stopped • Engine running • A/T selector lever “N” position • Brake pedal depressed	4WD shift switch: 2WD, AUTO or 4H	Battery voltage
				4WD shift switch: 4H to 4LO (While actuator motor is operating.)	Battery voltage → 0V
				4WD shift switch: 4LO to 4H (While actuator motor is operating.)	0V → Battery voltage
				4WD shift switch: 4LO	0V
27	W	Actuator position switch 2 (High)	• Vehicle stopped • Engine running • A/T selector lever “N” position • Brake pedal depressed	4WD shift switch: 4H, AUTO or 2WD	0V
				4WD shift switch: 4LO	Battery voltage
28	P	Sensor ground	Always		0V
29	W/G	Ignition switch monitor	Ignition switch: ON		Battery voltage
			Ignition switch: OFF		0V
30	V	Shut off relay	Ignition switch: ON		0V
			Ignition switch: OFF (5 seconds after ignition switch is turned OFF)		Battery voltage
31	G	Transfer fluid temperature sensor	Ignition switch: ON	Transfer fluid temperature approx. 20°C (68°F)	1.1V
				Transfer fluid temperature approx. 80°C (176°F)	0.3V
33	GR	Transfer shift high relay monitor	• Vehicle stopped • Engine running • A/T selector lever “N” position • Brake pedal depressed	4WD shift switch: 4H to 4LO (“Wait” function is operating.)	Battery voltage
				Except the above	0V
34	BR	Clutch pressure switch	• Vehicle stopped • Engine running • A/T selector lever “D” position	4WD shift switch: AUTO or 4H (“Wait” function is not operating.)	0V
			• Vehicle stopped • Engine running	4WD shift switch: 2WD (“Wait” function is not operating.)	Battery voltage
35	L	Line pressure switch	• Ignition switch: ON • A/T selector lever “D” position • 4WD shift switch: AUTO		0V
			• After the vehicle has been left at room temperature for 5 minutes and more with ignition switch in “OFF” position.	• Ignition switch: ON • A/T selector lever: “P” or "N" position • 4WD shift switch: other than AUTO	Battery voltage
40	R	ATP switch	• Vehicle stopped • Engine running • A/T selector lever “N” • Brake pedal depressed	4WD shift switch: 4H to 4LO or 4LO to 4H (While actuator motor is operating.)	0V
				Except the above	Battery voltage

Terminal	Wire color	Item	Condition		Data (Approx.)
41	SB	Transfer motor relay monitor	• Accelerator pedal depressed • Vehicle stopped • Engine running • Brake pedal depressed	4WD shift switch: 2WD	0V
				4WD shift switch: AUTO or 4LO (A/T selector lever “P” or “N” position)	0V (Battery voltage for approx. 2 sec. after shifting to “P” and “N”.)
				4WD shift switch: AUTO or 4LO (Except for A/T selector lever “P” or “N” position)	Battery voltage
				4WD shift switch: 4H (A/T selector lever “P” position)	0V (Battery voltage for approx. 2 sec. after shifting to “P”.)
				4WD shift switch: 4H (Except for A/T selector lever “P” position)	Battery voltage
42	Y	Transfer shift low relay monitor	• Vehicle stopped • Engine running • A/T selector lever “N” position • Brake pedal depressed	4WD shift switch: 4LO to 4H (“Wait” function is operating.)	Battery voltage
				Except the above	0V
43	O	Wait detection switch	• Vehicle stopped • Engine running • A/T selector lever “N” position • Brake pedal depressed	4WD shift switch: 2WD, AUTO or 4H	Battery voltage
				4WD shift switch: 4H to 4LO (While actuator motor is operating.)	Battery voltage → 0V
				4WD shift switch: 4LO to 4H (While actuator motor is operating.)	0V → Battery voltage
				4WD shift switch: 4LO	0V
44	LG	Actuator position switch 1 (Low)	• Vehicle stopped • Engine running • A/T selector lever “N” position • Brake pedal depressed	4WD shift switch: 4LO	0V
				4WD shift switch: 2WD, AUTO or 4H	Battery voltage
45	B	Ground	Always		0V
47	B	Power supply (Memory back-up)	Ignition switch: ON		Battery voltage
			Ignition switch: OFF		Battery voltage

CAUTION:

When using a circuit tester to measure voltage for inspection, be sure not to extend forcibly any connector terminals.

NOTE:

Data are reference value and are measured between each terminal and ground.

Wiring Diagram - ALL-MODE 4WD SYSTEM -

INFOID:0000000005258315

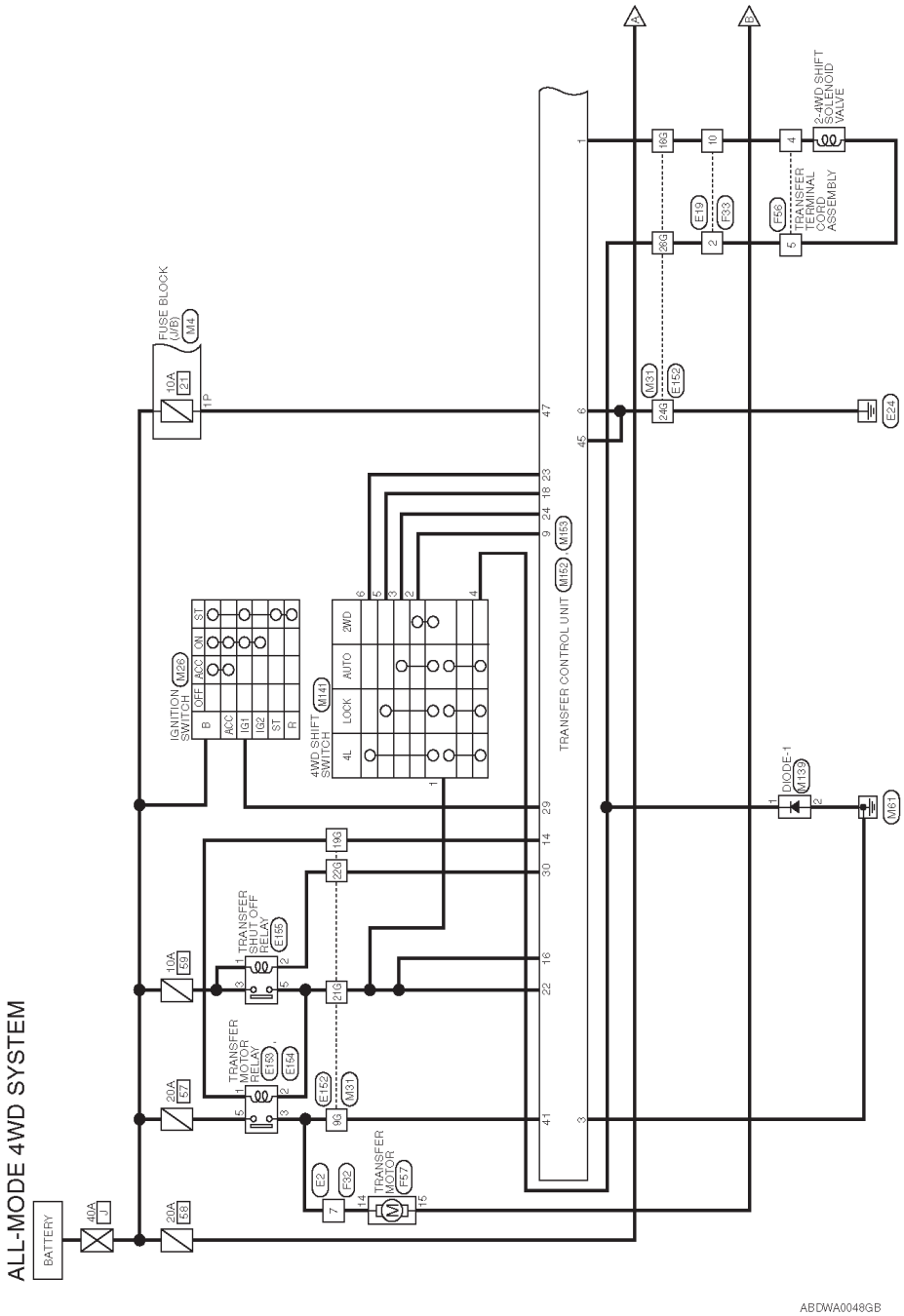

ABDWA0048GB

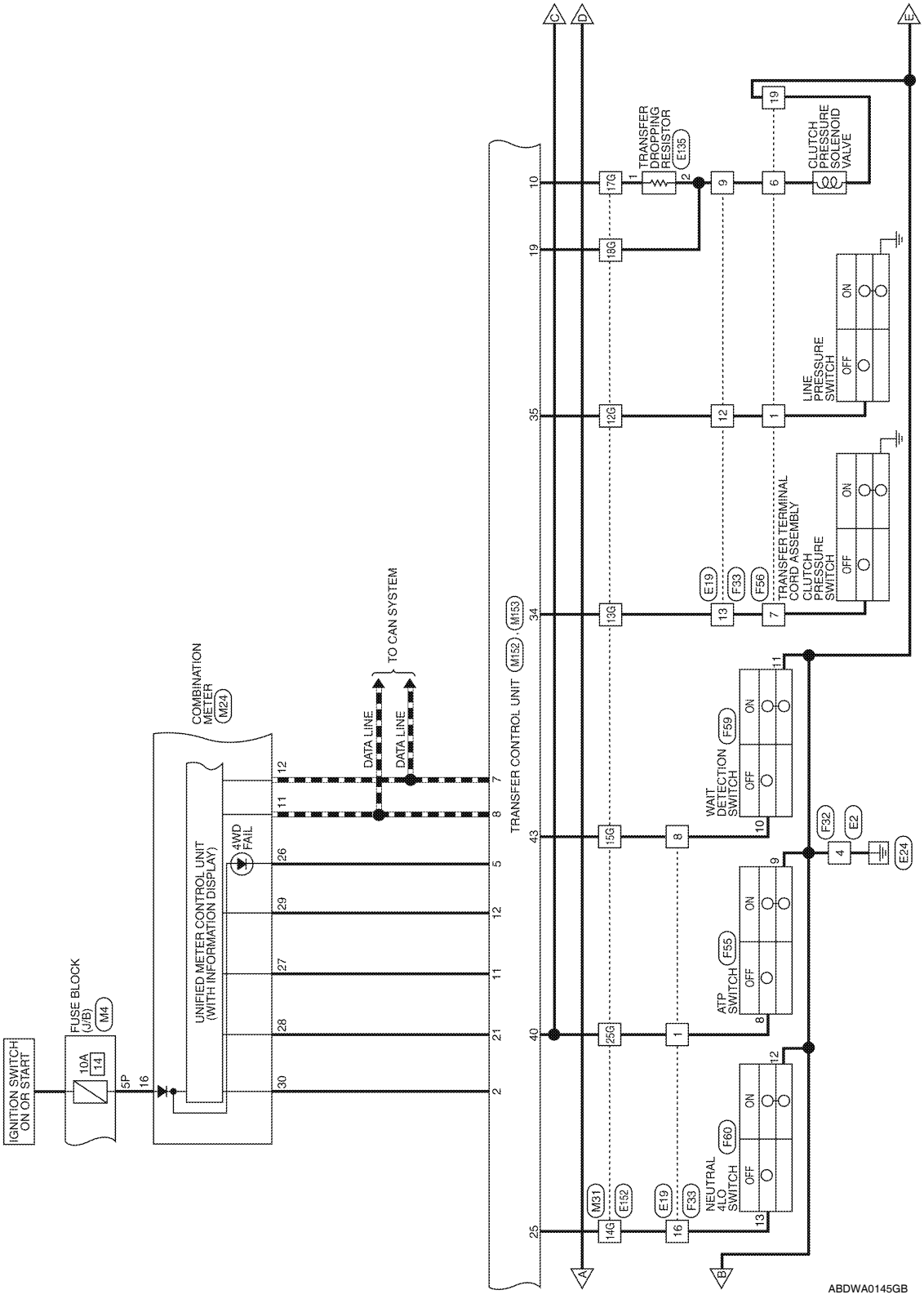
IGNITION SWITCH ON OR START
FUSE BLOCK (J/B)
M4
10A
14
5P
16
COMBINATION METER
M24
UNIFIED METER CONTROL UNIT (WITH INFORMATION DISPLAY)
4WD FAIL
DATA LINE
DATA LINE
TO CAN SYSTEM
TRANSFER CONTROL UNIT
M152, M153
TRANSFER DROPPING RESISTOR
E135
CLUTCH PRESSURE SOLENOID VALVE
LINE PRESSURE SWITCH
CLUTCH PRESSURE SWITCH
TRANSFER TERMINAL CORD ASSEMBLY
E19
F33
F56
WAIT DETECTION SWITCH
F59
ATP SWITCH
F55
NEUTRAL 4LO SWITCH
F60
M31
E152
F32
E2
E24
ON
OFF
ABDWA0145GB

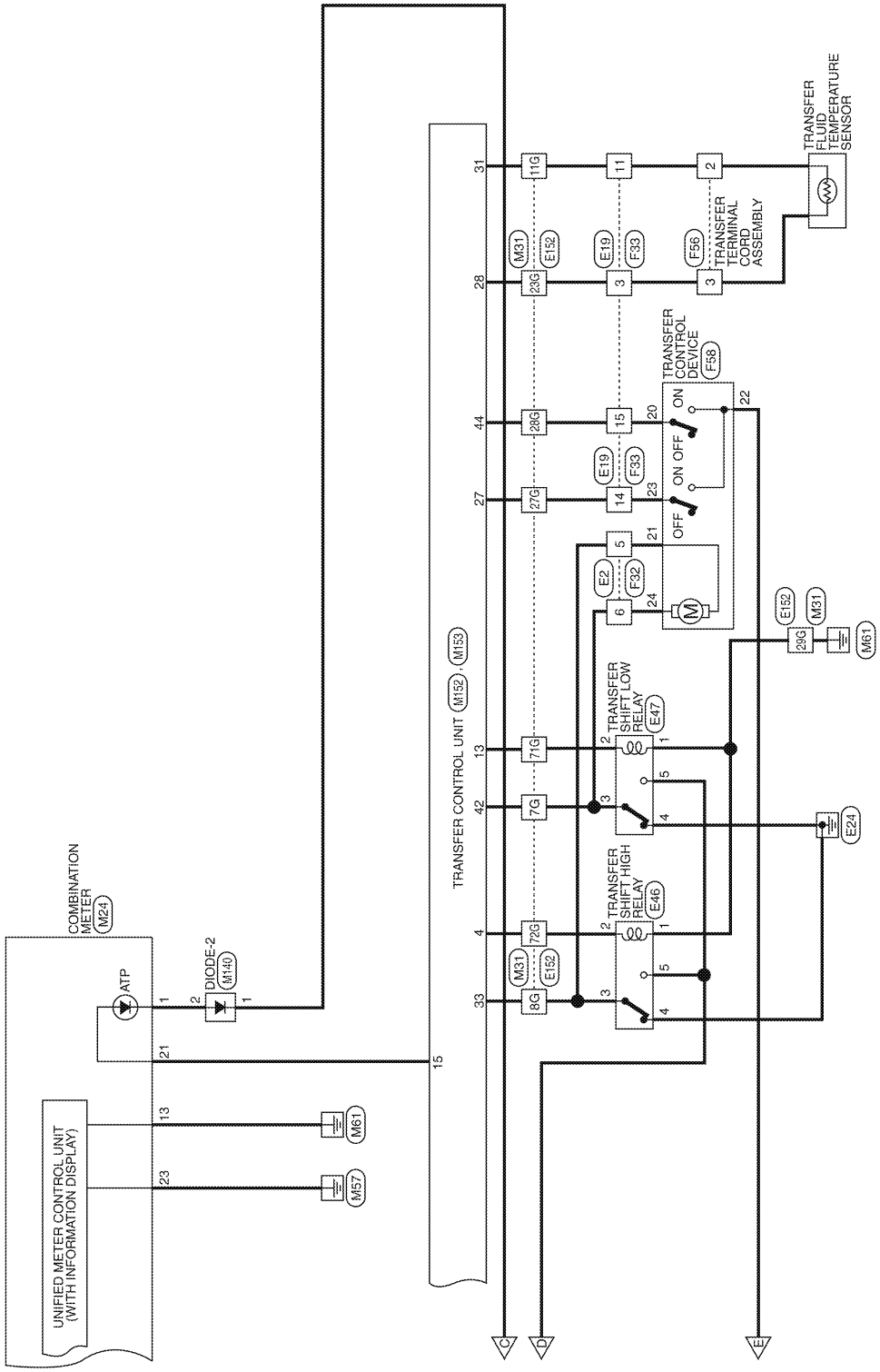

ABDWA0146GB

ALL-MODE 4WD SYSTEM CONNECTORS

Connector No.	M4
Connector Name	FUSE BLOCK (J/B)
Connector Color	WHITE

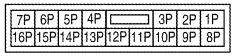

Terminal No.	Color of Wire	Signal Name
1P	R/B	–
5P	W/G	–

Connector No.	M24
Connector Name	COMBINATION METER
Connector Color	WHITE

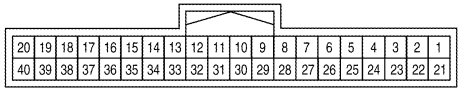

Terminal No.	Color of Wire	Signal Name
1	R	ATP-
11	P	CAN-L
12	L	CAN-H
13	GR	GROUND
16	W/G	RUN START
21	LG	ATP+
23	B	POWER GND
26	GR	4WD FAIL
27	BR	LOCK/4H
28	B	AUTO
29	O	4LO
30	V	2WD

Connector No.	M26
Connector Name	IGNITION SWITCH
Connector Color	WHITE

Terminal No.	Color of Wire	Signal Name
B	G	–
IG1	W/G	–

ABDIA0373GB

Connector No.	M31
Connector Name	WIRE TO WIRE
Connector Color	WHITE

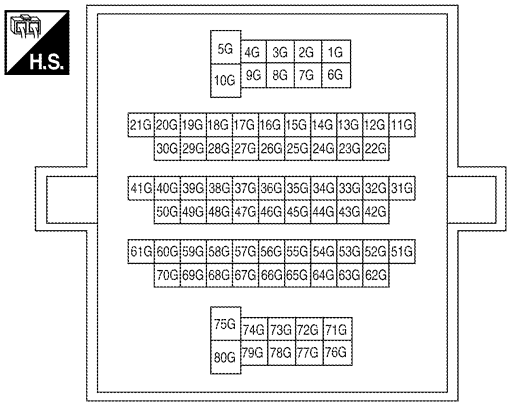

Terminal No.	Color of Wire	Signal Name
7G	Y	–
8G	GR	–
9G	SB	–
11G	G	–
12G	L	–
13G	BR	–
14G	Y	–
15G	O	–
16G	GR	–
17G	P	–
18G	R	–
19G	V	–
21G	GR	–
22G	V	–

Terminal No.	Color of Wire	Signal Name
23G	P	–
24G	B	–
25G	V	–
26G	SB	–
27G	W	–
28G	LG	–
29G	BR	–
71G	G	–
72G	SB	–

Connector No.	M139
Connector Name	DIODE-1
Connector Color	BLACK

Terminal No.	Color of Wire	Signal Name
1	G	–
2	B	–

Connector No.	M140
Connector Name	DIODE-2
Connector Color	BLACK

Terminal No.	Color of Wire	Signal Name
1	V	–
2	R	–

Connector No.	M141
Connector Name	4WD SHIFT SWITCH (ALL-MODE 4WD SYSTEM)
Connector Color	GRAY

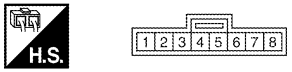

Terminal No.	Color of Wire	Signal Name
1	Y	–
2	G	–
3	LG	–
4	SB	–
5	O	–
6	W	–

ABDIA0374GB

Connector No.	M152
Connector Name	TRANSFER CONTROL UNIT (ALL-MODE 4WD SYSTEM)
Connector Color	WHITE

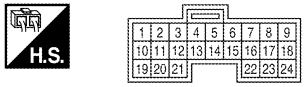

Terminal No.	Color of Wire	Signal Name
1	GR	2-4WD SOL
2	V	2WD IND
3	B	GND
4	SB	RLY CONT1
5	GR	ETS FAIL
6	B	GND
7	L	CAN-H
8	P	CAN-L
9	G	2WD SW
10	P	CLUTCH PRESSURE SOLD/R
11	BR	LOCK IND
12	O	4LO IND
13	G	RLY CONT2

Terminal No.	Color of Wire	Signal Name
14	V	ETS MTR RLY
15	LG	ATP-IND
16	Y	VIGN
17	–	–
18	O	LOCK SW
19	R	CLUTCH PRESSURE SOL
20	–	–
21	B	AUTO IND
22	GR	VIGN
23	W	4L SW
24	LG	AUTO SW

Connector No.	M153
Connector Name	TRANSFER CONTROL UNIT (ALL-MODE 4WD SYSTEM)
Connector Color	WHITE

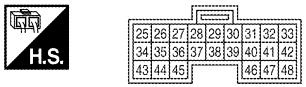

Terminal No.	Color of Wire	Signal Name
25	Y	ON-OFF NSW
26	–	–
27	W	ACTR SW2
28	P	ETS-SENS-GND
29	W/G	IGN-SW
30	V	SSOF
31	G	ETS
32	–	–
33	GR	R/CONTMON 1
34	BR	CLUTCH PRESS SW
35	L	LINE PRESS SW
36	–	–
37	–	–
38	–	–
39	–	–

Terminal No.	Color of Wire	Signal Name
40	R	ATP-SW
41	SB	ETS MTR MON
42	Y	R/CONTMON 2
43	O	WAIT DETECTION SW
44	LG	ACTR SW1
45	B	GND
46	–	–
47	B	MEMORY B/U
48	–	–

ABDIA0375GB

Connector No.	E2
Connector Name	WIRE TO WIRE
Connector Color	WHITE

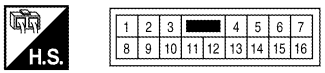

Terminal No.	Color of Wire	Signal Name
4	B	–
5	V	–
6	P	–
7	SB	–

Connector No.	E19
Connector Name	WIRE TO WIRE
Connector Color	WHITE

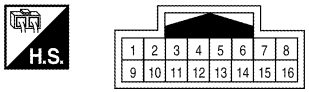

Terminal No.	Color of Wire	Signal Name
1	V	–
2	SB	–
3	P	–
8	O	–
9	R	–
10	GR	–
11	G	–
12	L	–
13	BR	–
14	W	–
15	LG	–
16	Y	–

Connector No.	E46
Connector Name	TRANSFER SHIFT HIGH RELAY (ALL-MODE 4WD SYSTEM)
Connector Color	BLACK

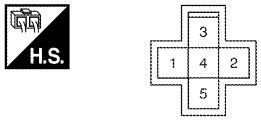

Terminal No.	Color of Wire	Signal Name
1	BR	–
2	SB	–
3	V	–
4	B	–
5	P	–

Connector No.	E47
Connector Name	TRANSFER SHIFT LOW RELAY (ALL-MODE 4WD SYSTEM)
Connector Color	BLACK

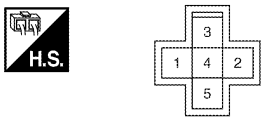

Terminal No.	Color of Wire	Signal Name
1	BR	–
2	G	–
3	P	–
4	B	–
5	R	–

Connector No.	E135
Connector Name	TRANSFER DROPPING RESISTOR
Connector Color	GRAY

Terminal No.	Color of Wire	Signal Name
1	P	–
2	L	–

ABDIA0376GB

Connector No.	E152
Connector Name	WIRE TO WIRE
Connector Color	WHITE

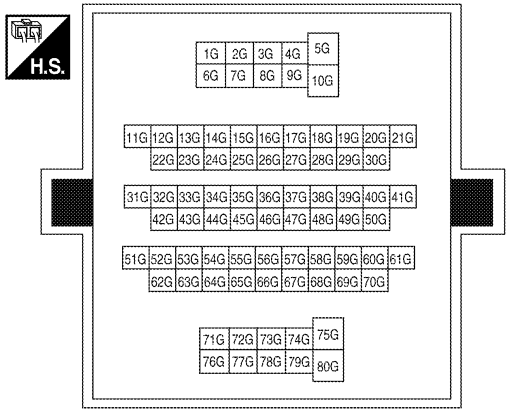

Terminal No.	Color of Wire	Signal Name
7G	Y	–
8G	GR	–
9G	SB	–
11G	G	–
12G	L	–
13G	BR	–
14G	Y	–
15G	O	–
16G	GR	–
17G	P	–
18G	R	–
19G	V	–

Terminal No.	Color of Wire	Signal Name
21G	GR	–
22G	V	–
23G	P	–
24G	B	–
25G	V	–
26G	SB	–
27G	W	–
28G	LG	–
29G	BR	–
71G	G	–
72G	SB	–

Connector No.	E153
Connector Name	TRANSFER MOTOR RELAY
Connector Color	WHITE

Terminal No.	Color of Wire	Signal Name
1	V	–
2	Y	–

Connector No.	E154
Connector Name	TRANSFER MOTOR RELAY
Connector Color	WHITE

Terminal No.	Color of Wire	Signal Name
3	SB	–
5	L	–

Connector No.	E155
Connector Name	TRANSFER SHUT OFF RELAY
Connector Color	BLUE

Terminal No.	Color of Wire	Signal Name
1	G	–
2	V	–
3	G	–
5	GR	–

ABDIA0377GB

Connector No.	F32
Connector Name	WIRE TO WIRE
Connector Color	WHITE

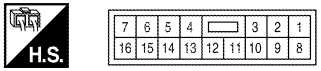

Terminal No.	Color of Wire	Signal Name
4	B	–
5	V	–
6	P	–
7	SB	–

Connector No.	F33
Connector Name	WIRE TO WIRE
Connector Color	WHITE

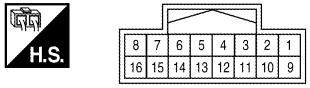

Terminal No.	Color of Wire	Signal Name
1	V	–
2	SB	–

Terminal No.	Color of Wire	Signal Name
3	P	–
8	O	–
9	R	–
10	GR	–
11	G	–
12	L	–
13	BR	–
14	W	–
15	LG	–
16	Y	–

Connector No.	F55
Connector Name	ATP SWITCH (ALL-MODE 4WD SYSTEM)
Connector Color	BLACK

Terminal No.	Color of Wire	Signal Name
8	V	–
9	B	–

Connector No.	F56
Connector Name	TRANSFER TERMINAL CORD ASSEMBLY
Connector Color	BLACK

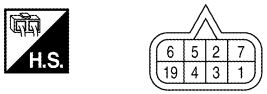

Terminal No.	Color of Wire	Signal Name
1	L	–
2	G	–
3	P	–
4	GR	–
5	SB	–
6	R	–
7	BR	–
19	B	–

Connector No.	F57
Connector Name	TRANSFER MOTOR
Connector Color	BLACK

Terminal No.	Color of Wire	Signal Name
14	SB	–
15	B	–

ABDIA0378GB

Connector No.	F58
Connector Name	TRANSFER CONTROL DEVICE (ALL-MODE 4WD SYSTEM)
Connector Color	GRAY

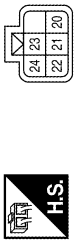

Terminal No.	Color of Wire	Signal Name
20	LG	–
21	V	–
22	B	–
23	W	–
24	P	–

Connector No.	F59
Connector Name	WAIT DETECTION SWITCH (ALL-MODE 4WD SYSTEM)
Connector Color	BLACK

Terminal No.	Color of Wire	Signal Name
10	O	–
11	B	–

Connector No.	F60
Connector Name	NEUTRAL 4LO SWITCH (ALL-MODE 4WD SYSTEM)
Connector Color	GRAY

Terminal No.	Color of Wire	Signal Name
12	B	–
13	Y	–

ABDIA0379GB

DTC Index

INFOID:0000000005258316

DTC CHART

DTC	CONSULT-III	Diagnostic item is detected when...	Reference
[P1802]	CONTROL UNIT 1	Malfunction is detected in the memory (RAM) system of transfer control unit.	Refer to DLN-31.
[P1803]	CONTROL UNIT 2	Malfunction is detected in the memory (ROM) system of transfer control unit.	
[P1804]	CONTROL UNIT 3	Malfunction is detected in the memory (EEPROM) system of transfer control unit.	
[P1807]	VHCL SPEED SEN·AT	• Malfunction is detected in output shaft revolution signal that is output from TCM through CAN communication. • Improper signal is input while driving.	Refer to DLN-33.
[P1808]	VHCL SPEED SEN·ABS	• Malfunction is detected in vehicle speed signal that is output from ABS actuator and electric unit (control unit) through CAN communication. • Improper signal is input while driving.	Refer to DLN-34.
[P1809]	CONTROL UNIT 4	AD converter system of transfer control unit is malfunctioning.	Refer to DLN-31.
[P1810]	4L POSI SW TF	Improper signal from neutral-4LO switch is input due to open or short circuit.	Refer to DLN-35.
[P1811]	BATTERY VOLTAGE	Power supply voltage for transfer control unit is abnormally low while driving.	Refer to DLN-28.
[P1813]	4WD MODE SW	More than two switch inputs are simultaneously detected due to short circuit of 4WD shift switch.	Refer to DLN-38.
[P1814]	4WD DETECT SWITCH	Improper signal from wait detection switch is input due to open or short circuit.	Refer to DLN-42.
[P1816]	PNP SW/CIRC	When transmission range switch signal is malfunction or communication error between the control units.	Refer to DLN-45.
[P1817]	SHIFT ACTUATOR	• Motor does not operate properly due to open or short circuit in actuator motor. • Malfunction is detected in the actuator motor. (When 4WD shift switch is operated and actuator motor is not operated) • Malfunction is detected in transfer shift high relay and transfer shift low relay.	Refer to DLN-46.
[P1818]	SHIFT ACT POSI SW	• Improper signal from actuator position switch is input due to open or short circuit. • Malfunction is detected in the actuator position switch.	Refer to DLN-52.
[P1819]	SHIFT ACT CIR	• Transfer control device actuator circuit is shorted or open. (Malfunctions are detected when transfer shift relay circuit is open/shorted or relay monitor circuit is open/shorted.) • Malfunction occurs in transfer control device drive circuit. • Malfunction is detected in transfer shut off relay.	Refer to DLN-55.
[P1820]	ENGINE SPEED SIG	• Malfunction is detected in engine speed signal that is output from ECM through CAN communication. • Improper signal is input while driving.	Refer to DLN-59.
[P1822]	DUTY SOLENOID	Proper voltage is not applied to clutch pressure solenoid valve due to open or short circuit.	Refer to DLN-60.
[P1823]	2-4WD SOLENOID	Proper voltage is not applied to 2-4WD solenoid valve due to open or short circuit.	Refer to DLN-64.
[P1824]	MOTOR RELAY	Motor does not operate properly due to open or short circuit in transfer motor or transfer motor relay.	Refer to DLN-68.

DTC	CONSULT-III	Diagnostic item is detected when...	Reference
[P1826]	OIL TEMP SEN	Signal voltage from transfer fluid temperature sensor is abnormally high (Transfer fluid temperature is abnormally low) while driving.	Refer to DLN-74.
[P1827]	CLUTCH PRES SW	• Improper signal from clutch pressure switch is input due to open or short circuit. • Malfunction occurs in clutch pressure switch or hydraulic circuit.	Refer to DLN-77.
[P1828]	LINE PRES SW	• Improper signal from line pressure switch is input due to open or short circuit. • Malfunction occurs in line pressure switch or hydraulic circuit.	Refer to DLN-80.
[P1829]	THROTTLE POSI SEN	• Malfunction is detected in accelerator pedal position signal that is output from ECM through CAN communication. • Signal voltage from accelerator pedal position sensor is abnormally high or low.	Refer to DLN-83.
[P1830]	ABS OP SIG	Malfunction is detected in ABS operation signal that is output from ABS actuator and electric unit (control unit) through CAN communication.	Refer to DLN-84.
[P1831]	VDC OP SIG	Malfunction is detected in VDC operation signal that is output from ABS actuator and electric unit (control unit) through CAN communication.	Refer to DLN-85.
[P1832]	TCS OP SIG	Malfunction is detected in TCS operation signal that is output from ABS actuator and electric unit (control unit) through CAN communication.	Refer to DLN-86.

CAUTION:

- **If CAN COMM CIRCUIT [U1000] or CONTROL UNIT (CAN) [U1010] are displayed with other DTCs, first perform the trouble diagnosis for CAN communication line.**
- **If ABS OP SIG [P1830], VDC OP SIG [P1831] or TCS OP SIG [P1832] is displayed, first perform the trouble diagnosis for ABS system.**
- **If VHCL SPEED SEN·AT [P1807] is displayed, first perform the trouble diagnosis for A/T system.**

NOTE:

- If SHIFT ACT POSI SW [P1818] or SHIFT ACT CIR [P1819] is displayed, first erase self-diagnostic results. (SHIFT ACT POSI SW [P1818] or SHIFT ACT CIR [P1819] may be displayed after installing transfer control unit or transfer assembly.)
- If CL PRES SW [P1827] or LINE PRES SW [P1828] is displayed only while driving in reverse, check the continuity of R position on transmission range switch. When there is no malfunction found in the electrical system, check the hydraulic system.

FLASH CODE CHART

Flashing pattern	Item	Diagnostic item is detected when...	Reference
2	Vehicle speed signal (from A/T)	• Malfunction is detected in output shaft revolution signal that is output from TCM through CAN communication. • Improper signal is input while driving.	Refer to DLN-33.
3	Clutch pressure solenoid signal	Proper voltage is not applied to clutch pressure solenoid valve due to open or short circuit.	Refer to DLN-60.
4	2-4WD solenoid signal	Proper voltage is not applied to 2-4WD solenoid valve due to open or short circuit.	Refer to DLN-64.
5	Transfer motor	Transfer motor does not operate properly due to open or short circuit in transfer motor or transfer motor relay.	Refer to DLN-68.
6	Vehicle speed signal (from ABS)	• Malfunction is detected in vehicle speed signal that is output from ABS actuator and electric unit (control unit) through CAN communication. • Improper signal is input while driving.	Refer to DLN-34.
7	CAN communication	Malfunction has been detected from CAN communication line.	Refer to DLN-20
8	AD converter	AD converter system of transfer control unit is malfunctioning.	Refer to DLN-31.

Flashing pattern	Item	Diagnostic item is detected when...	Reference
9	Transfer fluid temperature	Signal voltage from transfer fluid temperature sensor is abnormally high (Transfer fluid temperature is abnormally low) while driving.	Refer to DLN-74.
10	Neutral-4LO switch	Improper signal from neutral-4LO switch is input due to open or short circuit.	Refer to DLN-35.
11	Clutch pressure switch	• Improper signal is input due to open or short circuit. • Malfunction occurs in clutch pressure switch or hydraulic circuit.	Refer to DLN-77.
12	Line pressure switch	• Improper signal is input due to open or short circuit. • Malfunction occurs in line pressure switch or hydraulic circuit.	Refer to DLN-80.
13	Engine speed signal (from ECM)	• Malfunction is detected in engine speed signal that is output from ECM through CAN communication. • Improper signal is input while driving.	Refer to DLN-59.
14	Accelerator pedal position sensor (from ECM)	• Malfunction is detected in accelerator pedal position signal that is output from ECM through CAN communication. • Signal voltage from accelerator pedal position sensor is abnormally high or low.	Refer to DLN-83.
15	Power supply	Power supply voltage for transfer control unit is abnormally low while driving.	Refer to DLN-28.
16	4WD shift switch	More than two switch inputs are simultaneously detected due to short circuit of 4WD shift switch.	Refer to DLN-38.
17	ABS operation signal (from ABS)	Malfunction is detected in ABS operation signal that is output from ABS actuator and electric unit (control unit) through CAN communication.	Refer to DLN-84.
18	Wait detection switch	Improper signal from wait detection switch is input due to open or short circuit.	Refer to DLN-42.
19	Actuator motor	• Motor does not operate properly due to open or short circuit in actuator motor. • Malfunction is detected in the actuator motor. (When 4WD shift switch is operated and actuator motor is not operated) • Malfunction is detected in transfer shift high relay and transfer shift low relay.	Refer to DLN-46.
20	Actuator position switch	• Improper signal from actuator position switch is input due to open or short circuit. • Malfunction is detected in the actuator position switch.	Refer to DLN-52.
21	Actuator circuit	• Transfer control device actuator circuit is shorted or open. (Malfunctions are detected when motor relay circuit is open/shorted or relay transfer shift circuit is open/shorted.) • Malfunction occurs in transfer control device drive circuit.	Refer to DLN-55.
22	VDC operation signal (from VDC)	Malfunction is detected in VDC operation signal that is output from ABS actuator and electric unit (control unit) through CAN communication.	Refer to DLN-85.
23	TCS operation signal (from TCS)	Malfunction is detected in TCS operation signal that is output from ABS actuator and electric unit (control unit) through CAN communication.	Refer to DLN-86.
24	Transmission range switch signal (from TCM)	Transmission range switch signal is malfunction or communication error between the control units.	Refer to DLN-45.
Repeats flickering every 2 to 5 sec.	—	System normal.	—

Flashing pattern	Item	Diagnostic item is detected when...	Reference
Repeats flickering every 0.25 sec.	Data erase display	• Power supply failure of memory back-up. • Battery performance is poor.	Refer to DLN-28.
No flickering	Transmission range switch or 4WD shift switch	Transmission range switch or 4WD shift switch circuit is shorted or open.	Refer to DLN-45 or DLN-38.

CAUTION:

- **If CAN communication is displayed with other DTCs, first perform the trouble diagnosis for CAN communication line.**
- **If ABS operation signal, VDC operation signal or TCS operation signal is displayed, first perform the trouble diagnosis for ABS system.**
- **If Output shaft revolution signal is displayed, first perform the trouble diagnosis for A/T system.**

NOTE:

- If actuator position switch or actuator circuit is displayed, first erase self-diagnostic results. (Actuator position switch or actuator circuit may be displayed after installing transfer control unit or transfer assembly.)
- If clutch pressure switch or line pressure switch is displayed only while driving in reverse, check the continuity of R position on transmission range switch. When there is no malfunction found in the electrical system, check the hydraulic system.

SYMPTOM DIAGNOSIS

4WD SYSTEM SYMPTOMS

Symptom Table

INFOID:0000000005258317

If 4WD warning lamp turns ON, perform self-diagnosis. Refer to DLN-23, "CONSULT-III Function (ALL MODE AWD/4WD)".

Symptom	Condition	Reference page
4WD shift indicator lamp and 4LO indicator lamp do not turn ON (4WD shift indicator lamp and 4LO indicator lamp check)	Ignition switch: ON	DLN-110
4WD warning lamp does not turn ON (4WD warning lamp check)	Ignition switch: ON	DLN-113
4WD shift indicator lamp or 4LO indicator lamp does not change	Engine running	DLN-116
ATP warning lamp does not turn ON	Engine running	DLN-118
4WD shift indicator lamp keeps flashing	Engine running	DLN-120
4WD warning lamp flashes rapidly (2 times/second)	While driving	DLN-121
4WD warning lamp flashes slowly (1 time/2 seconds)	While driving	DLN-122
Heavy tight-corner braking symptom occurs (See NOTE.)	• While driving • AUTO mode • Steering wheel is turned fully to either side	DLN-123
ATP switch does not operate	Engine running	DLN-125
4WD system does not operate	While driving	DLN-127

NOTE:
- Light tight-corner braking symptom may occur depending on driving conditions in AUTO mode. This is not a malfunction.
- Heavy tight-corner braking symptom occurs when vehicle is driven in the following conditions: 4WD shift switch is 4H or 4LO, steering wheel is turned fully to either side.

4WD SHIFT INDICATOR LAMP AND 4LO INDICATOR LAMP DO NOT TURN ON

Description

INFOID:0000000005258318

4WD shift indicator lamp and 4LO indicator lamp do not turn ON for approx. 1 second when turning ignition switch to ON.

Diagnosis Procedure

INFOID:0000000005258319

Regarding Wiring Diagram information, refer to DLN-95, "Wiring Diagram - ALL-MODE 4WD SYSTEM -".

1. CHECK TRANSFER CONTROL UNIT POWER SUPPLY CIRCUIT

1. Turn ignition switch “OFF”. (Stay for at least 5 seconds.)
2. Connect transfer control unit harness connector.
3. Check voltage between transfer control unit harness connector terminals and ground.

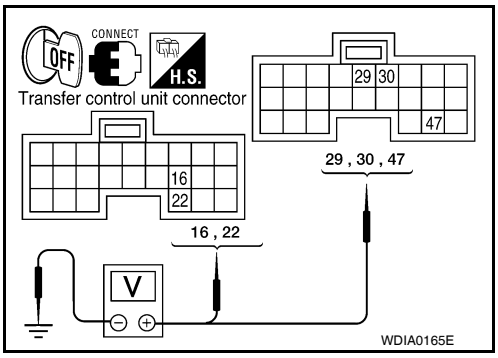

Connector	Terminal	Voltage (Approx.)
M152	16 - Ground	0V
	22 - Ground	
M153	29 - Ground	
	30 - Ground	Battery voltage
	47 - Ground	

4. Turn ignition switch “ON”. (Do not start engine.)
5. Check voltage between transfer control unit harness connector terminals and ground.

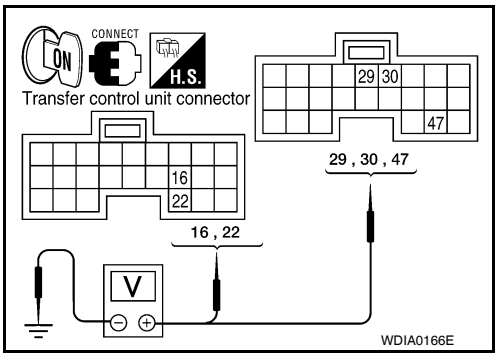

Connector	Terminal	Voltage (Approx.)
M152	16 - Ground	Battery voltage
	22 - Ground	
M153	29 - Ground	
	30 - Ground	0V
	47 - Ground	Battery voltage

OK or NG

OK >> GO TO 2.

NG >> Check the following. If any items are damaged, repair or replace damaged parts.
- 10A fuses [No. 21 located in fuse block (J/B) and No. 59 (located in the fuse and relay box)].
- Harness for short or open between battery and transfer control unit harness connector M153 terminals 47.
- Harness for short or open between ignition switch and transfer control unit harness connector M153 terminal 29.
- Harness for short or open between battery and transfer shut off relay harness connector E155 terminal 1 and 3.
- Harness for short or open between transfer shut off relay harness connector E155 terminal 2 and transfer control unit harness connector M153 terminal 30.
- Harness for short or open between transfer shut off relay harness connector E155 terminal 5 and transfer control unit harness connector M152 terminals 16 and 22.
- Battery and ignition switch.
- Transfer shut off relay. Refer to DLN-28, "Diagnosis Procedure".

2. CHECK TRANSFER CONTROL UNIT GROUND CIRCUIT

1. Turn ignition switch “OFF”. (Stay for at least 5 seconds.)
2. Disconnect transfer control unit harness connector.
3. Check continuity between transfer control unit harness connector M152 terminals 3 and 6, and M153 terminal 45 and ground.

Continuity should exist.

Also check harness for short to power.

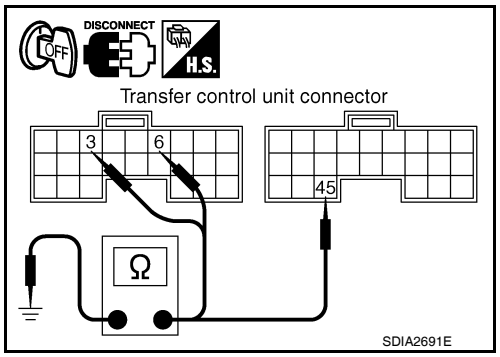

OK or NG

OK >> GO TO 3.
NG >> Repair open circuit or short to power in harness or connectors.

3. CHECK COMBINATION METER POWER SUPPLY CIRCUIT

1. Turn ignition switch “OFF”. (Stay for at least 5 seconds.)
2. Disconnect transfer control unit harness connector.
3. Check voltage between combination meter harness connector terminal and ground.

Connector	Terminal	Voltage (Approx.)
M24	16 - Ground	0V

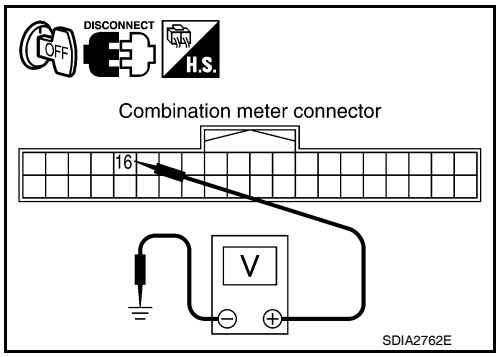

4. Turn ignition switch “ON”. (Do not start engine.)
5. Check voltage between combination meter harness connector terminal and ground.

Connector	Terminal	Voltage (Approx.)
M24	16 - Ground	Battery voltage

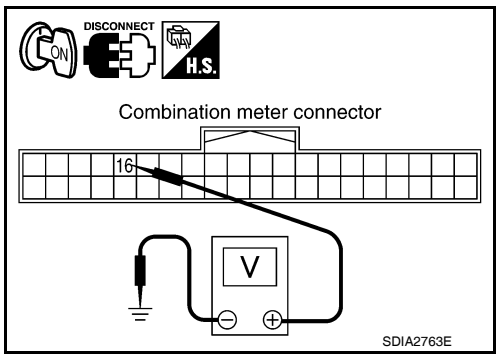

OK or NG

OK >> GO TO 4.
NG >> Check the following. If any items are damaged, repair or replace damaged parts.
- 10A fuse [No. 14, located in the fuse block (J/B)].
- Harness for short or open between ignition switch and combination meter harness connector M24 terminal 16.
- Ignition switch.

4. CHECK HARNESS BETWEEN TRANSFER CONTROL UNIT AND COMBINATION METER

1. Turn ignition switch “OFF”. (Stay for at least 5 seconds.)
2. Disconnect transfer control unit harness connector and combination meter harness connector.

3. Check continuity between the following terminals.
- Transfer control unit harness connector M152 terminal 2 and combination meter harness connector M24 terminal 30.
- Transfer control unit harness connector M152 terminal 11 and combination meter harness connector M24 terminal 27.
- Transfer control unit harness connector M152 terminal 12 and combination meter harness connector M24 terminal 29.
- Transfer control unit harness connector M152 terminal 21 and combination meter harness connector M24 terminal 28.

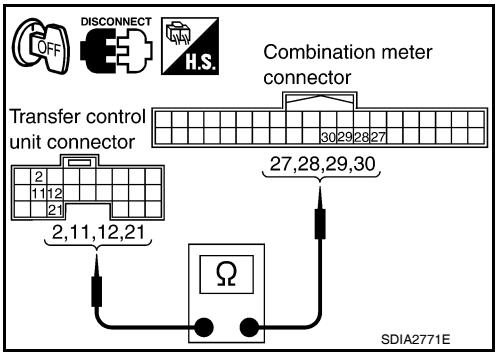

Continuity should exist.

Also check harness for short to ground and short to power.

OK or NG

OK >> GO TO 5.
NG >> Repair or replace damaged parts.

5. CHECK INDICATOR LAMP CIRCUIT

1. Connect combination meter harness connector.
2. Disconnect transfer control unit harness connector.
3. Turn ignition switch “ON”.
4. Ground the following terminals using suitable wiring.
- Transfer control unit harness connector M152 terminal 2 and ground.
- Transfer control unit harness connector M152 terminal 11 and ground.
- Transfer control unit harness connector M152 terminal 12 and ground.
- Transfer control unit harness connector M152 terminal 21 and ground.

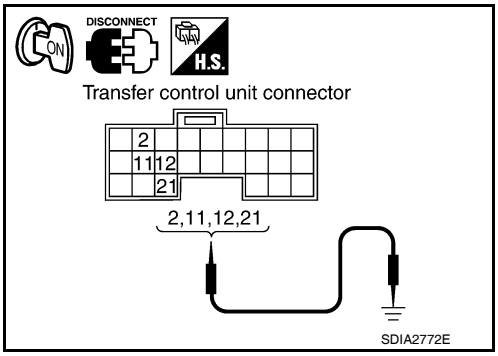

Do indicator lamps turn on?

OK >> GO TO 6.
NG >> Replace combination meter. Refer to MWI-96, "Removal and Installation".

6. SYMPTOM CHECK

Check again.

OK or NG

OK >> Inspection End.
NG >> GO TO 7.

7. CHECK TRANSFER CONTROL UNIT

Check transfer control unit input/output signal. Refer to DLN-87, "Reference Value".

OK or NG

OK >> Inspection End.
NG >> Check transfer control unit pin terminals for damage or loose connection with harness connector. If any items are damaged, repair or replace damaged parts.

4WD WARNING LAMP DOES NOT TURN ON

Description

INFOID:0000000005258320

4WD warning lamp does not turn ON when turning ignition switch to ON.

Diagnosis Procedure

INFOID:0000000005258321

Regarding Wiring Diagram information, refer to DLN-95, "Wiring Diagram - ALL-MODE 4WD SYSTEM -".

1. CHECK TRANSFER CONTROL UNIT POWER SUPPLY CIRCUIT

1. Turn ignition switch “OFF”. (Stay for at least 5 seconds.)
2. Connect transfer control unit harness connector.
3. Check voltage between transfer control unit harness connector terminals and ground.

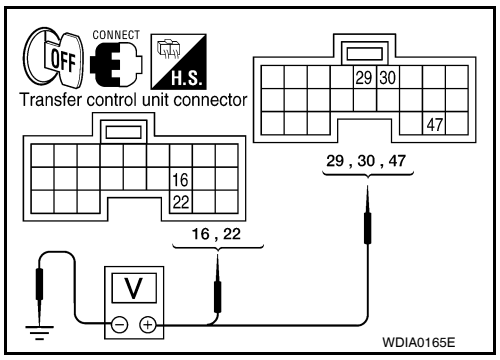

Connector	Terminal	Voltage (Approx.)
M152	16 - Ground	0V
	22 - Ground	
M153	29 - Ground	
	30 - Ground	Battery voltage
	47 - Ground	

4. Turn ignition switch “ON”. (Do not start engine.)
5. Check voltage between transfer control unit harness connector terminals and ground.

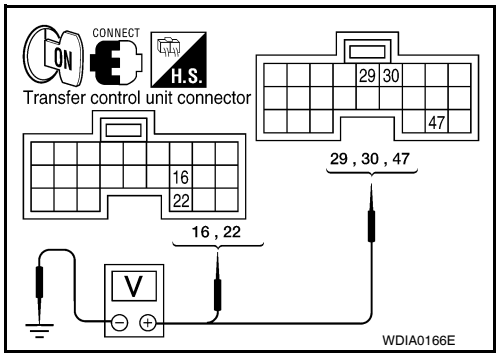

Connector	Terminal	Voltage (Approx.)
M152	16 - Ground	Battery voltage
	22 - Ground	
M153	29 - Ground	
	30 - Ground	0V
	47 - Ground	Battery voltage

OK or NG

OK >> GO TO 2.

NG >> Check the following. If any items are damaged, repair or replace damaged parts.
- 10A fuses [No. 21 located in fuse block (J/B) and No. 59 (located in the fuse and relay box)].
- Harness for short or open between battery and transfer control unit harness connector M153 terminals 47.
- Harness for short or open between ignition switch and transfer control unit harness connector M153 terminal 29.
- Harness for short or open between battery and transfer shut off relay harness connector E155 terminal 1 and 3.
- Harness for short or open between transfer shut off relay harness connector E155 terminal 2 and transfer control unit harness connector M153 terminal 30.
- Harness for short or open between transfer shut off relay harness connector E155 terminal 5 and transfer control unit harness connector M152 terminals 16 and 22.
- Battery and ignition switch.
- Transfer shut off relay. Refer to DLN-28, "Diagnosis Procedure" .

2. CHECK TRANSFER CONTROL UNIT GROUND CIRCUIT

1. Turn ignition switch “OFF”. (Stay for at least 5 seconds.)
2. Disconnect transfer control unit harness connector.

3. Check continuity between transfer control unit harness connector M152 terminals 3 and 6, and M153 terminal 45 and ground.

Continuity should exist.

Also check harness for short to power.

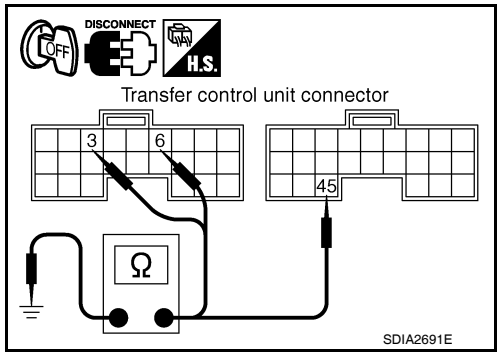

OK or NG

OK >> GO TO 3.
NG >> Repair open circuit or short to power in harness or connectors.

3. CHECK COMBINATION METER POWER SUPPLY CIRCUIT

1. Turn ignition switch “OFF”. (Stay for at least 5 seconds.)
2. Disconnect transfer control unit harness connector.
3. Check voltage between combination meter harness connector terminal and ground.

Connector	Terminal	Voltage (Approx.)
M24	16 - Ground	0V

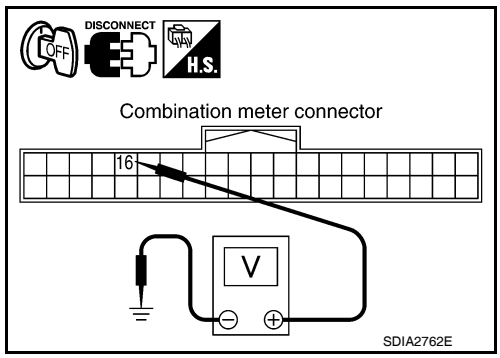

4. Turn ignition switch “ON”. (Do not start engine.)
5. Check voltage between combination meter harness connector terminal and ground.

Connector	Terminal	Voltage (Approx.)
M24	16 - Ground	Battery voltage

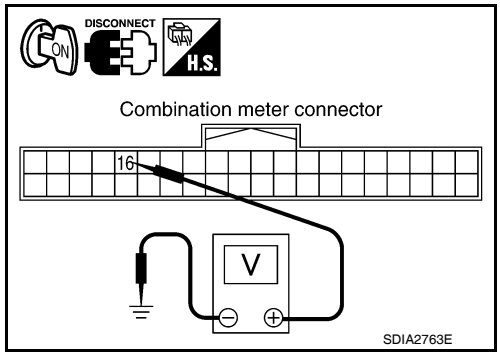

OK or NG

OK >> GO TO 4.
NG >> Check the following. If any items are damaged, repair or replace damaged parts.
- 10A fuse [No. 14, located in the fuse block (J/B)].
- Harness for short or open between ignition switch and combination meter harness connector M24 terminal 16.
- Ignition switch.

4. CHECK HARNESS BETWEEN TRANSFER CONTROL UNIT AND COMBINATION METER

1. Turn ignition switch “OFF”. (Stay for at least 5 seconds.)
2. Disconnect transfer control unit harness connector and combination meter harness connector.
3. Check continuity between transfer control unit and combination meter.

A		B		Continuity
Connector	Terminal	Connector	Terminal	
Transfer control unit: M152	5	Combination meter: M24	26	Yes

- Also check harness for short to ground and short to power.

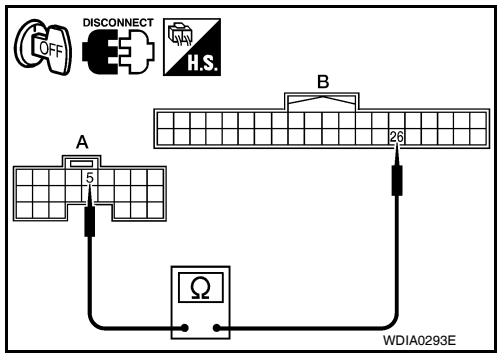

OK or NG

OK >> GO TO 5.
NG >> Repair or replace damaged parts.

5. CHECK INDICATOR LAMP CIRCUIT

1. Connect combination meter harness connector.
2. Disconnect transfer control unit harness connector.
3. Turn ignition switch “ON”. (Do not start engine.)
4. Ground the following terminal using suitable wiring.

- Transfer control unit harness connector M152 terminal 5 and ground.

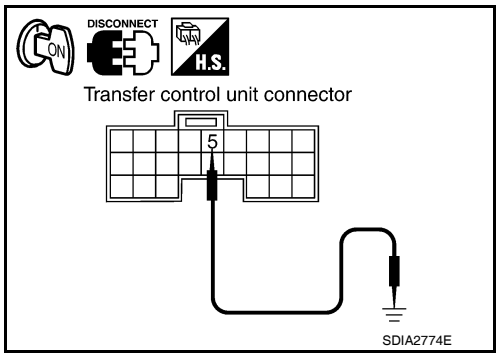

Does 4WD warning lamp turn on?

OK >> GO TO 6.
NG >> Replace combination meter. Refer to MWI-96, "Removal and Installation".

6. SYMPTOM CHECK

Check again.

OK or NG

OK >> Inspection End
NG >> GO TO 7.

7. CHECK TRANSFER CONTROL UNIT

Check transfer control unit input/output signal. Refer to DLN-87, "Reference Value".

OK or NG

OK >> Inspection End.
NG >> Check transfer control unit pin terminals for damage or loose connection with harness connector. If any items are damaged, repair or replace damaged parts.

4WD SHIFT INDICATOR LAMP OR 4LO INDICATOR LAMP DO NOT CHANGE

Description

INFOID:0000000005258322

4WD shift indicator lamp or 4LO indicator lamp do not change when switching the 4WD shift switch.

Diagnosis Procedure

INFOID:0000000005258323

1. CONFIRM THE SYMPTOM

Confirm 4WD shift indicator lamp and 4LO indicator lamp turn on when ignition switch is turned to ON.

Do 4WD shift indicator lamp and 4LO indicator lamp turn on?

YES >> GO TO 2.
NO >> Refer to DLN-110, "Diagnosis Procedure".

2. CHECK SYSTEM FOR 4WD SHIFT SWITCH

Perform trouble diagnosis for 4WD shift switch system. Refer to DLN-38, "Diagnosis Procedure".

Are the inspection results normal?

YES >> GO TO 3.
NO >> Repair or replace damaged parts.

3. CHECK SYSTEM FOR WAIT DETECTION SWITCH

Perform trouble diagnosis for wait detection switch system. Refer to DLN-42, "Diagnosis Procedure".

Are the inspection results normal?

YES >> GO TO 4.
NO >> Repair or replace damaged parts.

4. CHECK SYSTEM FOR NEUTRAL-4LO SWITCH

Perform trouble diagnosis for neutral-4LO switch system. Refer to DLN-35, "Diagnosis Procedure".

Are the inspection results normal?

YES >> GO TO 5.
NO >> Repair or replace damaged parts.

5. CHECK SYSTEM FOR ATP SWITCH

Perform trouble diagnosis for ATP switch system. Refer to DLN-125, "Diagnosis Procedure".

Are the inspection results normal?

YES >> GO TO 6.
NO >> Repair or replace damaged parts.

6. CHECK SYSTEM FOR 2-4WD SOLENOID

Perform trouble diagnosis for 2-4WD solenoid system. Refer to DLN-64, "Diagnosis Procedure".

Are the inspection results normal?

YES >> GO TO 7.
NO >> Repair or replace damaged parts.

7. CHECK SYSTEM FOR TRANSFER CONTROL DEVICE

Perform trouble diagnosis for transfer control device system. Refer to DLN-55, "Diagnosis Procedure".

Are the inspection results normal?

YES >> GO TO 8.
NO >> Repair or replace damaged parts.

8. CHECK SYSTEM FOR ACTUATOR MOTOR

Perform trouble diagnosis for actuator motor system. Refer to DLN-46, "Diagnosis Procedure".

Are the inspection results normal?

YES >> GO TO 9.
NO >> Repair or replace damaged parts.

9. CHECK SYSTEM FOR ACTUATOR POSITION SWITCH

Perform trouble diagnosis for actuator position switch system. Refer to DLN-52, "Diagnosis Procedure".

Are the inspection results normal?

YES >> GO TO 10.
NO >> Repair or replace damaged parts.

10. SYMPTOM CHECK

Check again.

Are the inspection results normal?

YES >> Inspection End.
NO >> GO TO 11.

11. CHECK TRANSFER CONTROL UNIT

Check transfer control unit input/output signal. Refer to DLN-87, "Reference Value".

Are the inspection results normal?

YES >> GO TO 12.
NO >> Check transfer control unit pin terminals for damage or loose connection with harness connector. If any items are damaged, repair or replace damaged parts.

12. CHECK TRANSFER INNER PARTS

1. Disassemble transfer assembly. Refer to DLN-154, "Disassembly and Assembly".
2. Check transfer inner parts.

Are the inspection results normal?

YES >> Inspection End.
NO >> Repair or replace damaged parts.

ATP WARNING LAMP DOES NOT TURN ON

Description

INFOID:0000000005258324

ATP warning lamp does not turn ON when the transfer case is switched in or out of 4LO with the A/T selector lever in N position.

Diagnosis Procedure

INFOID:0000000005258325

Regarding Wiring Diagram information, refer to DLN-95, "Wiring Diagram - ALL-MODE 4WD SYSTEM -".

1. CHECK SYSTEM FOR CAN COMMUNICATION LINE

Perform self-diagnosis. Refer to DLN-23, "CONSULT-III Function (ALL MODE AWD/4WD)".

Do the self-diagnostic results indicate CAN communication?

YES >> Perform trouble diagnosis for CAN communication line.
NO >> GO TO 2.

2. CHECK SYSTEM FOR 4WD SHIFT SWITCH

Perform trouble diagnosis for 4WD shift switch system. Refer to DLN-38, "Diagnosis Procedure".

OK or NG

OK >> GO TO 3.
NG >> Repair or replace damaged parts.

3. CHECK SYSTEM FOR TRANSMISSION RANGE SWITCH SIGNAL

Perform trouble diagnosis for transmission range switch signal system. Refer to DLN-45, "Diagnosis Procedure".

OK or NG

OK >> GO TO 4.
NG >> Repair or replace damaged parts.

4. CHECK SYSTEM FOR ATP SWITCH

Perform trouble diagnosis for ATP switch system. Refer to DLN-125, "Diagnosis Procedure".

OK or NG

OK >> GO TO 5.
NG >> Repair or replace damaged parts.

5. CHECK HARNESS BETWEEN TRANSFER CONTROL UNIT AND COMBINATION METER

1. Turn ignition switch “OFF”. (Stay for at least 5 seconds.)
2. Disconnect transfer control unit harness connector and combination meter harness connector.
3. Check continuity between the following terminals.

- Transfer control unit harness connector M152 terminal 15 and combination meter harness connector M24 terminal 21.

Continuity should exist.

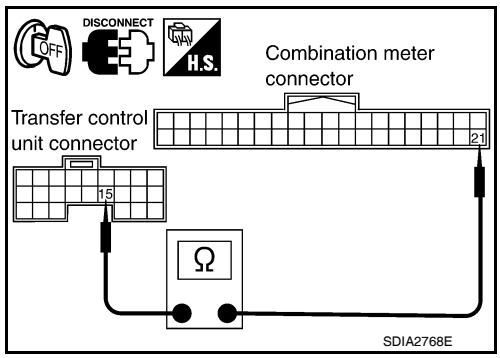

- Transfer control unit harness connector M153 terminal 40 and combination meter harness connector M24 terminal 1.

40 TO 1: Continuity should not exist.

1 to 40: Continuity should exist.

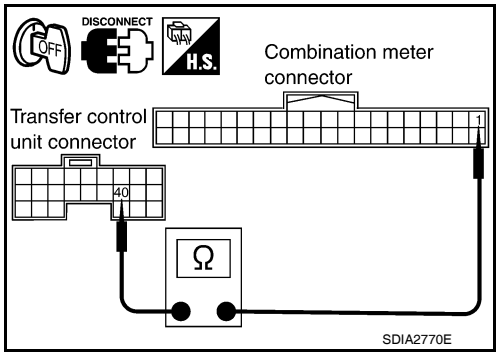

Also check harness for short to ground and short to power.

OK or NG

OK >> GO TO 6.
NG >> Repair or replace damaged parts.

6. CHECK ATP WARNING LAMP CIRCUIT

1. A/T selector lever "P" position.
2. Connect combination meter harness connector and transfer control unit harness connector.
3. Disconnect ATP switch harness connector.
4. Ground the following terminal using suitable wiring.
5. Turn ignition switch “ON”. (Do not start engine.)

- ATP switch harness connector F55 terminal 8 and ground.

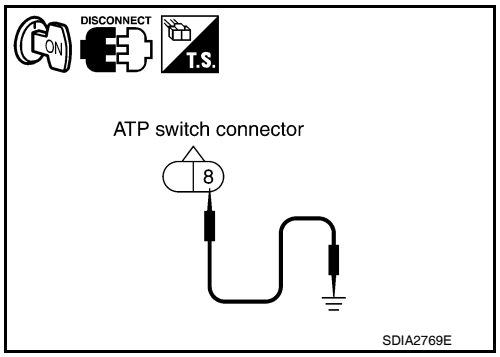

Does indicator lamp turn on?

OK >> GO TO 7.
NG >> Replace combination meter. Refer to MWI-96, "Removal and Installation".

7. SYMPTOM CHECK

Check again.

OK or NG

OK >> Inspection End.
NG >> GO TO 8.

8. CHECK TRANSFER CONTROL UNIT

Check transfer control unit input/output signal. Refer to DLN-87, "Reference Value".

OK or NG

OK >> GO TO 9.
NG >> Check transfer control unit pin terminals for damage or loose connection with harness connector. If any items are damaged, repair or replace damaged parts.

9. CHECK TRANSFER INNER PARTS

1. Disassemble transfer assembly. Refer to DLN-154, "Disassembly and Assembly".
2. Check transfer inner parts.

OK or NG

OK >> Inspection End.
NG >> Repair or replace damaged parts.

4WD SHIFT INDICATOR LAMP KEEPS FLASHING

Description

INFOID:0000000005258326

The 4WD shift indicator lamp keeps flashing.

Diagnosis Procedure

INFOID:0000000005258327

1. CONFIRM THE SYMPTOM

1. Set 4WD shift switch to 2WD.
2. Move vehicle forward and backward, or drive straight increasing or decreasing under 20 km/h (12 MPH).

Dose 4WD shift indicator lamp keep flashing?

YES >> GO TO 2.
NO >> Inspection End.

2. CHECK SYSTEM FOR WAIT DETECTION SWITCH

Perform trouble diagnosis for wait detection switch system. Refer to DLN-42, "Diagnosis Procedure".

Are the inspection results normal?

YES >> GO TO 3.
NO >> Repair or replace damaged parts.

3. CHECK SYSTEM FOR NEUTRAL-4LO SWITCH

Perform trouble diagnosis for neutral-4LO switch system. Refer to DLN-35, "Diagnosis Procedure".

Are the inspection results normal?

YES >> GO TO 4.
NO >> Repair or replace damaged parts.

4. SYMPTOM CHECK

Check again.

Are the inspection results normal?

YES >> Inspection End.
NO >> GO TO 5.

5. CHECK TRANSFER CONTROL UNIT

Check transfer control unit input/output signal. Refer to DLN-87, "Reference Value".

Are the inspection results normal?

YES >> GO TO 6.
NO >> Check transfer control unit pin terminals for damage or loose connection with harness connector. If any items are damaged, repair or replace damaged parts.

6. CHECK TRANSFER INNER PARTS

1. Disassemble transfer assembly. Refer to DLN-154, "Disassembly and Assembly".
2. Check transfer inner parts.

Are the inspection results normal?

YES >> Inspection End.
NO >> Repair or replace damaged parts.

4WD WARNING LAMP FLASHES RAPIDLY

Description

INFOID:0000000005258328

The 4WD warning lamp flashes quickly while driving (2 times / second). The lamp continues to flash until the ignition switch is turned OFF.

Diagnosis Procedure

INFOID:0000000005258329

1. CHECK TIRE

Check the following.
- Tire pressure
- Wear condition
- Longitudinal tire size (There is no difference between longitudinal tires.)

Are the inspection results normal?

YES >> GO TO 2.
NO >> Repair or replace damaged parts.

2. CHECK 4WD WARNING LAMP

Stop the vehicle and allow it to idle for a short period of time.

Does flashing stop?

YES >> Inspection End.
NO >> GO TO 3.

3. CHECK TRANSFER FLUID TEMPERATURE

Perform trouble diagnosis for transfer fluid temperature system. Refer to DLN-74, "Diagnosis Procedure".

Are the inspection results normal?

YES >> GO TO 4.
NO >> Repair or replace damaged parts.

4. SYMPTOM CHECK

Check again.

Are the inspection results normal?

YES >> Inspection End.
NO >> GO TO 5.

5. CHECK TRANSFER CONTROL UNIT

Check transfer control unit input/output signal. Refer to DLN-87, "Reference Value".

Are the inspection results normal?

YES >> Inspection End.
NO >> Check transfer control unit pin terminals for damage or loose connection with harness connector. If any items are damaged, repair or replace damaged parts.

4WD WARNING LAMP FLASHES SLOWLY

Description

INFOID:0000000005258330

The 4WD warning lamp flashes slowly while driving (1 time / 2 seconds). The lamp continues to flash until the ignition switch is turned OFF.

Diagnosis Procedure

INFOID:0000000005258331

1. CHECK TIRE

Check the following.
- Tire pressure
- Wear condition
- Longitudinal tire size (There is no difference between longitudinal tires.)

OK or NG

OK >> GO TO 2.
NG >> Repair or replace damaged parts.

2. CHECK TRANSFER FLUID TEMPERATURE

Perform trouble diagnosis for transfer fluid temperature system. Refer to DLN-74, "Diagnosis Procedure".

Are the inspection results normal?

YES >> GO TO 3.
NO >> Repair or replace damaged parts.

3. CHECK CLUTCH PRESSURE SWITCH

Perform trouble diagnosis for clutch pressure switch system. Refer to DLN-77, "Diagnosis Procedure".

Are the inspection results normal?

YES >> GO TO 4.
NO >> Repair or replace damaged parts.

4. SYMPTOM CHECK

Check again.

Are the inspection results normal?

YES >> Inspection End.
NO >> GO TO 5.

5. CHECK TRANSFER CONTROL UNIT

Check transfer control unit input/output signal. Refer to DLN-87, "Reference Value".

Are the inspection results normal?

YES >> Inspection End.
NO >> Check transfer control unit pin terminals for damage or loose connection with harness connector. If any items are damaged, repair or replace damaged parts.

HEAVY TIGHT-CORNER BRAKING SYMPTOM OCCURS

Description

INFOID:0000000005258332

This symptom occurs when the vehicle is accelerating in 4WD and the steering wheel is turned fully either direction. It may feel like a bump or being pushed from behind. A small amount of this bumping feeling is acceptable under certain road conditions. The transfer case may be adjusted using the CONSULT-III to compensate for this condition.

Diagnosis Procedure

INFOID:0000000005258333

DIAGNOSTIC PROCEDURE

NOTE:
- Light tight-corner braking symptom may occur depending on driving conditions in AUTO mode. This is not a malfunction.
- Heavy tight-corner braking symptom occurs when vehicle is driven in the following conditions: 4WD shift switch is 4H or 4LO, steering wheel is turned fully to either side.

1. CHECK SYSTEM FOR CAN COMMUNICATION LINE

Perform self-diagnosis. Refer to DLN-23, "CONSULT-III Function (ALL MODE AWD/4WD)".

Is CAN COMM CIRCUIT [U1000] displayed?

YES >> Perform trouble diagnosis for CAN communication line.
NO >> GO TO 2.

2. CHECK SYSTEM FOR 4WD SHIFT SWITCH

Perform trouble diagnosis for 4WD shift switch system. Refer to DLN-38, "Diagnosis Procedure".

Are the inspection results normal?

YES >> GO TO 3.
NO >> Repair or replace damaged parts.

3. CHECK ACCELERATOR PEDAL POSITION SIGNAL CIRCUIT

Perform self diagnosis for ECM. Refer to EC-557, "CONSULT-III Function (ENGINE)".

Is any malfunction detected by self-diagnosis?

YES >> Check the malfunctioning system.
NO >> GO TO 4.

4. CHECK SYSTEM FOR CLUTCH PRESSURE SOLENOID

Perform trouble diagnosis for clutch pressure solenoid system. Refer to DLN-60, "Diagnosis Procedure".

Are the inspection results normal?

YES >> GO TO 5.
NO >> Repair or replace damaged parts.

5. SYMPTOM CHECK

Check again.

Are the inspection results normal?

YES >> Inspection End.
NO >> GO TO 6.

6. CHECK TRANSFER CONTROL UNIT

Check transfer control unit input/output signal. Refer to DLN-87, "Reference Value".

Are the inspection results normal?

YES >> GO TO 7.
NO >> Check transfer control unit pin terminals for damage or loose connection with harness connector. If any items are damaged, repair or replace damaged parts.

7. CHECK TRANSFER INNER PARTS

1. Disassemble transfer assembly. Refer to DLN-154, "Disassembly and Assembly".
2. Check transfer inner parts.

Are the inspection results normal?

YES >> Inspection End.
NO >> Repair or replace damaged parts.

ATP SWITCH

Description

INFOID:0000000005258334

The ATP indicator is ON when the transfer case is not in neutral.

Diagnosis Procedure

INFOID:0000000005258335

Regarding Wiring Diagram information, refer to DLN-95, "Wiring Diagram - ALL-MODE 4WD SYSTEM -".

1. CHECK ATP SWITCH SIGNAL

With CONSULT-III

1. Start engine.
2. Select DATA MONITOR mode for ALL MODE AWD/4WD with CONSULT-III.
3. Read out the value of ATP SWITCH.

Condition		Display value
• Vehicle stopped • Engine running • A/T selector lever N • Brake pedal depressed	4WD shift switch : 4H to 4LO or 4LO to 4H (While actuator motor is operating.)	ON
	Except the above	OFF

Without CONSULT-III

1. Start engine.
2. Check voltage between transfer control unit harness connector terminal and ground.

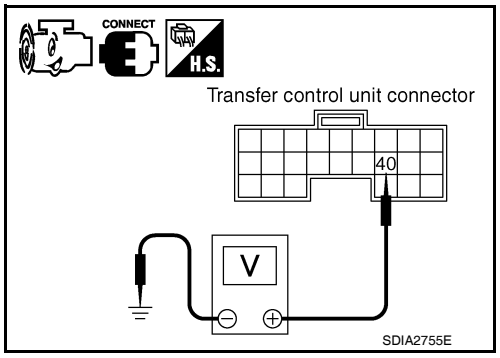

Connector	Terminal	Condition		Voltage (Approx.)
M153	40 - Ground	• Vehicle stopped • Engine running • A/T selector lever N • Brake pedal depressed	4WD shift switch: 4H to 4LO or 4LO to 4H (While actuator motor is operating.)	0V
			Except the above	Battery voltage

Are inspection results normal?

YES >> GO TO 5.
NO >> GO TO 2.

2. CHECK HARNESS BETWEEN TRANSFER CONTROL UNIT AND ATP SWITCH

1. Turn ignition switch OFF. (Stay for at least 5 seconds.)
2. Disconnect transfer control unit harness connector and the ATP switch harness connector.
3. Check continuity between transfer control unit harness connector M153 terminal 40 and ATP switch harness connector F55 terminal 8.

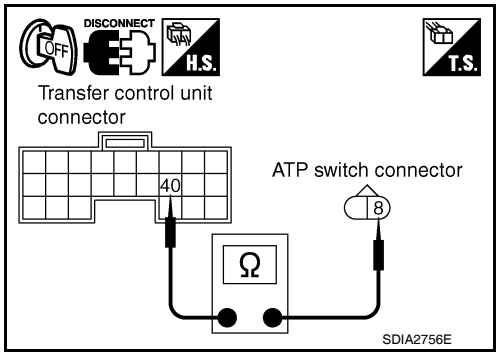

Continuity should exist.

Also check harness for short to ground and short to power.

Are inspection results normal?

YES >> GO TO 3.
NO >> Repair or replace damaged parts.

3. CHECK GROUND CIRCUIT

1. Turn ignition switch OFF. (Stay for at least 5 seconds.)
2. Disconnect ATP switch harness connector.
3. Check continuity between ATP switch harness connector F55 terminal 9 and ground.

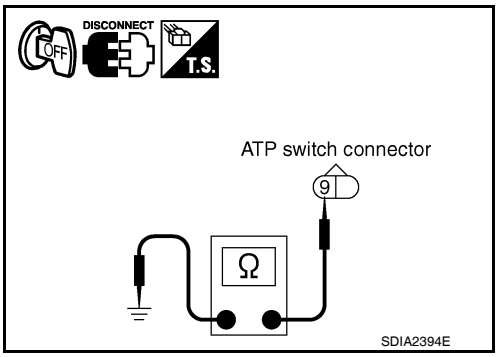

Continuity should exist.

Also check harness for short to ground and short to power.

Are inspection results normal?

YES >> GO TO 4.
NO >> Repair open circuit or short to ground or short to power in harness or connectors.

4. CHECK ATP SWITCH

1. Turn ignition switch OFF. (Stay for at least 5 seconds.)
2. Disconnect ATP switch harness connector.
3. Remove ATP switch. Refer to DLN-19, "Component Parts Location".
4. Push and release ATP switch and check continuity between ATP switch terminals 8 and 9.

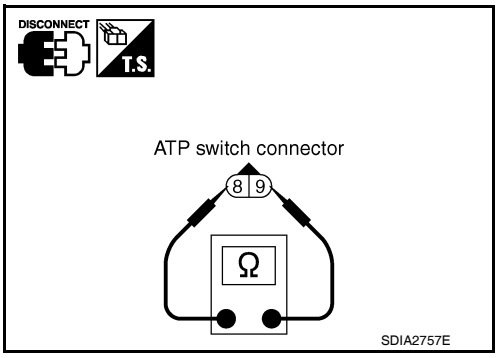

Terminal	Condition	Continuity
8 - 9	Push ATP switch	Yes
	Release ATP switch	No

Are inspection results normal?

YES >> GO TO 5.
NO >> Replace ATP switch.

5. CHECK TRANSFER CONTROL UNIT

Check transfer control unit input/output signal. Refer to DLN-87, "Reference Value".

Are inspection results normal?

YES >> GO TO 6.
NO >> Check transfer control unit pin terminals for damage or loose connection with harness connector. If any items are damaged, repair or replace damaged parts.

6. CHECK ATP WARNING LAMP

1. Turn ignition switch ON. (Do not start engine.)
2. Move A/T selector lever to P position.
3. Set 4WD shift switch from 4H to 4LO or 4LO to 4H.

Does ATP warning lamp turn ON while switching?

YES >> Inspection End.
NO >> GO TO DLN-118, "Diagnosis Procedure".

4WD SYSTEM DOES NOT OPERATE

Description

INFOID:0000000005258336

The vehicle can not be put into 4WD mode. (Possible hydraulic malfunction)

Diagnosis Procedure

INFOID:0000000005258337

1. CHECK SYSTEM FOR 4WD SHIFT SWITCH

Perform trouble diagnosis for 4WD shift switch system. Refer to DLN-38, "Diagnosis Procedure".

Are the inspection results normal?

YES >> GO TO 2.
NO >> Repair or replace damaged parts.

2. CHECK SYSTEM FOR CLUTCH PRESSURE SWITCH

Perform trouble diagnosis for clutch pressure switch system. Refer to DLN-77, "Diagnosis Procedure".

Are the inspection results normal?

YES >> GO TO 3.
NO >> Repair or replace damaged parts.

3. SYMPTOM CHECK

Check again.

Are the inspection results normal?

YES >> Inspection End.
NO >> GO TO 4.

4. CHECK TRANSFER CONTROL UNIT

Check transfer control unit input/output signal. Refer to DLN-87, "Reference Value".

Are the inspection results normal?

YES >> GO TO 5.
NO >> Check transfer control unit pin terminals for damage or loose connection with harness connector. If any items are damaged, repair or replace damaged parts.

5. CHECK TRANSFER INNER PARTS

1. Disassemble transfer assembly. Refer to DLN-154, "Disassembly and Assembly".
2. Check transfer inner parts.

Are the inspection results normal?

YES >> Inspection End.
NO >> Repair or replace damaged parts.

PRECAUTION

PRECAUTIONS

Precaution for Supplemental Restraint System (SRS) "AIR BAG" and "SEAT BELT PRE-TENSIONER"

INFOID:0000000005550196

The Supplemental Restraint System such as “AIR BAG” and “SEAT BELT PRE-TENSIONER”, used along with a front seat belt, helps to reduce the risk or severity of injury to the driver and front passenger for certain types of collision. This system includes seat belt switch inputs and dual stage front air bag modules. The SRS system uses the seat belt switches to determine the front air bag deployment, and may only deploy one front air bag, depending on the severity of a collision and whether the front occupants are belted or unbelted.
Information necessary to service the system safely is included in the SR and SB section of this Service Manual.

WARNING:
- **To avoid rendering the SRS inoperative, which could increase the risk of personal injury or death in the event of a collision which would result in air bag inflation, all maintenance must be performed by an authorized NISSAN/INFINITI dealer.**
- **Improper maintenance, including incorrect removal and installation of the SRS, can lead to personal injury caused by unintentional activation of the system. For removal of Spiral Cable and Air Bag Module, see the SR section.**
- **Do not use electrical test equipment on any circuit related to the SRS unless instructed to in this Service Manual. SRS wiring harnesses can be identified by yellow and/or orange harnesses or harness connectors.**

PRECAUTIONS WHEN USING POWER TOOLS (AIR OR ELECTRIC) AND HAMMERS

WARNING:
- **When working near the Airbag Diagnosis Sensor Unit or other Airbag System sensors with the Ignition ON or engine running, DO NOT use air or electric power tools or strike near the sensor(s) with a hammer. Heavy vibration could activate the sensor(s) and deploy the air bag(s), possibly causing serious injury.**
- **When using air or electric power tools or hammers, always switch the Ignition OFF, disconnect the battery, and wait at least 3 minutes before performing any service.**

Precaution Necessary for Steering Wheel Rotation After Battery Disconnect

INFOID:0000000005550197

NOTE:
- This Procedure is applied only to models with Intelligent Key system and NATS (NISSAN ANTI-THEFT SYSTEM).
- Remove and install all control units after disconnecting both battery cables with the ignition knob in the ″LOCK″ position.
- Always use CONSULT-III to perform self-diagnosis as a part of each function inspection after finishing work. If DTC is detected, perform trouble diagnosis according to self-diagnostic results.

For models equipped with the Intelligent Key system and NATS, an electrically controlled steering lock mechanism is adopted on the key cylinder.
For this reason, if the battery is disconnected or if the battery is discharged, the steering wheel will lock and steering wheel rotation will become impossible.
If steering wheel rotation is required when battery power is interrupted, follow the procedure below before starting the repair operation.

OPERATION PROCEDURE

1. Connect both battery cables.
   NOTE:
   Supply power using jumper cables if battery is discharged.
2. Use the Intelligent Key or mechanical key to turn the ignition switch to the ″ACC″ position. At this time, the steering lock will be released.
3. Disconnect both battery cables. The steering lock will remain released and the steering wheel can be rotated.
4. Perform the necessary repair operation.

5. When the repair work is completed, return the ignition switch to the ″LOCK″ position before connecting the battery cables. (At this time, the steering lock mechanism will engage.)
6. Perform a self-diagnosis check of all control units using CONSULT-III.

Precaution for Transfer Assembly and Transfer Control Unit Replacement

INFOID:0000000005258339

When replacing transfer assembly or transfer control unit, check the 4WD shift indicator lamp as follows.

1. Turn ignition switch ON.
2. Check 4WD shift indicator lamp is turned ON for approximately 1 second.

- If OK, the position between transfer assembly and transfer control unit is correct.
- If NG, the position is different between transfer assembly and transfer control unit.
  Adjust the position between transfer assembly and transfer control unit. See METHOD FOR POSITION ADJUSTMENT that follows.

METHOD FOR POSITION ADJUSTMENT

1. Start engine. Run the engine for at least 10 seconds.
2. Stop vehicle and move A/T selector lever to N position with brake pedal depressed. Stay in N for at least 2 seconds.
3. Turn 4WD shift switch to 2WD position. Stay in 2WD for at least 2 seconds.
4. Turn ignition switch OFF.
5. Start engine.
6. Erase self-diagnosis. Refer to DLN-23, "CONSULT-III Function (ALL MODE AWD/4WD)".
7. Check 4WD shift indicator lamp. Refer to DLN-10, "Preliminary Check".
   If 4WD shift indicator lamp does not indicate 2WD, install new transfer control unit and retry the above check.

Precaution

INFOID:0000000005258341

- **Before connecting or disconnecting the transfer control unit harness connector, turn ignition switch “OFF” and disconnect battery cables. Failure to do so may damage the transfer control unit. Battery voltage is applied to transfer control unit even if ignition switch is turned “OFF”.**

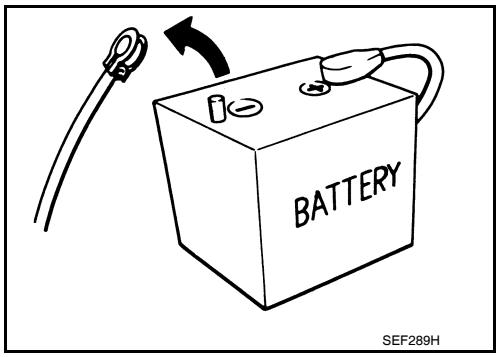

- **When connecting or disconnecting pin connectors into or from transfer control unit, take care not to damage pin terminals (bend or break).**
  When connecting pin connectors make sure that there are not any bends or breaks on transfer control unit pin terminals.

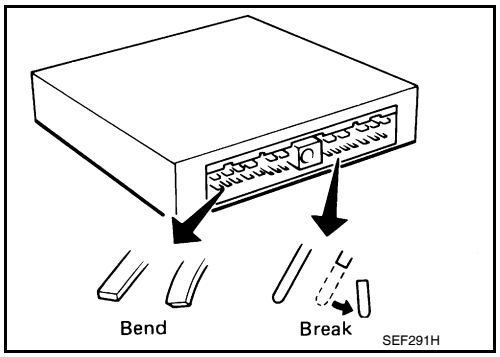

- **Before replacing transfer control unit, perform transfer control unit input/output signal inspection and make sure transfer control unit functions properly. Refer to DLN-87, "Reference Value".**

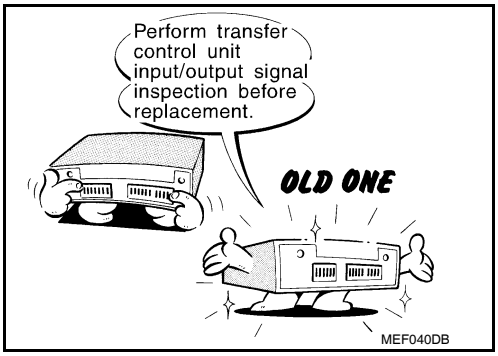

Service Notice

INFOID:0000000005258342

- After overhaul refill the transfer with new transfer fluid.
- Check the fluid level or replace the fluid only with the vehicle parked on level ground.
- During removal or installation, keep inside of transfer clear of dust or dirt.
- Disassembly should be done in a clean work area.
- Before proceeding with disassembly, thoroughly clean the transfer. It is important to prevent the internal parts from becoming contaminated by dirt or other foreign matter.
- Check for the correct installation status prior to removal or disassembly. If matchmarks are required, be certain they do not interfere with the function of the parts when applied.
- All parts should be carefully cleaned with a general purpose, non-flammable solvent before inspection or reassembly.
- Check appearance of the disassembled parts for damage, deformation, and unusual wear. Replace them with new ones if necessary.
- Gaskets, seals and O-rings should be replaced any time the transfer is disassembled.
- In principle, tighten bolts or nuts gradually in several steps working diagonally from inside to outside. If tightening sequence is specified, use it.
- Observe the specified torque when assembling.
- Clean and flush the parts sufficiently and blow-dry them.
- Be careful not to damage sliding surfaces and mating surfaces.
- Use lint-free cloth or towels for wiping parts clean. Common shop rags can leave fibers that could interfere with the operation of the transfer.

PREPARATION

PREPARATION

Special Service Tool

INFOID:0000000005258343

The actual shapes of Kent-Moore tools may differ from those of special service tools illustrated here.

Tool number (Kent-Moore No.) Tool name	Description
KV31103300 (—) Drift 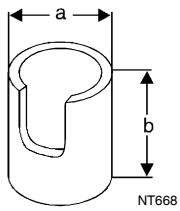	• Removing press flange snap ring • Installing press flange snap ring • Installing carrier bearing **a: 76.3 mm (3.004 in) dia.** **b: 130 mm (5.12 in)**
KV38100300 (J-25523) Drift 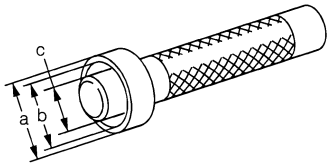	• Removing mainshaft rear bearing **a: 54 mm (2.13 in) dia.** **b: 46 mm (1.81 in) dia.** **c: 32 mm (1.26 in) dia.**
KV38100500 (—) Drift 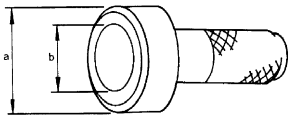	• Installing front oil seal **a: 80 mm (3.15 in) dia.** **b: 60 mm (2.36 in) dia.**
KV40100621 (J-25273) Drift 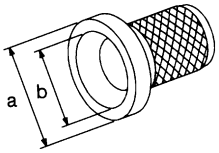	• Installing front drive shaft front bearing • Installing front drive shaft rear bearing **a: 76 mm (2.99 in) dia.** **b: 69 mm (2.72 in) dia.**
KV40105310 (—) Drift 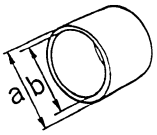	• Installing dust cover **a: 89 mm (3.50 in) dia.** **b: 80.7 mm (3.17 in) dia.**
ST15310000 (J-25640-B) Drift 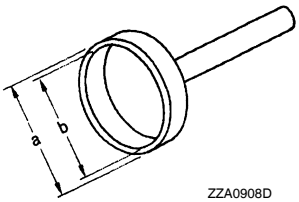	• Installing mainshaft rear bearing **a: 96 mm (3.78 in) dia.** **b: 84 mm (3.31 in) dia.**

Tool number (Kent-Moore No.) Tool name	Description
ST22360002 (J-25679-01) Drift 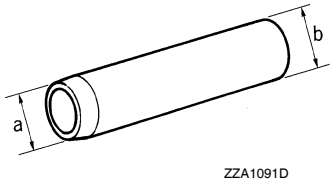 	• Installing side oil seal **a: 23 mm (0.91 in) dia.** **b: 32 mm (1.26 in) dia.**
ST22452000 (J-34335) Drift 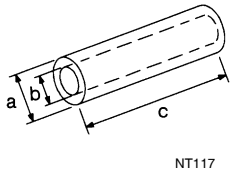 	• Removing press flange snap ring • Installing press flange snap ring **a: 45 mm (1.77 in) dia.** **b: 36 mm (1.42 in) dia.** **c: 400 mm (15.76 in) dia.**
ST30031000 (—) Puller 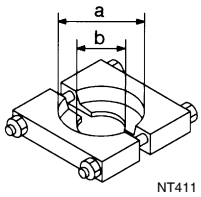 	• Removing carrier bearing • Removing front drive shaft front bearing • Removing front drive shaft rear bearing **a: 90 mm (3.54 in) dia.** **b: 50 mm (1.97 in) dia.**
ST30032000 (J-26010-01) Base 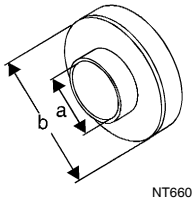 	• Installing front drive shaft front bearing • Installing front drive shaft rear bearing **a: 38 mm (1.50 in) dia.** **b: 80 mm (3.15 in) dia.**
ST30720000 (J-25405) Drift 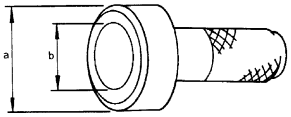 	• Installing rear oil seal • Installing input bearing • Installing input oil seal **a: 77 mm (3.03 in) dia.** **b: 55.5 mm (2.185 in) dia.**
ST30911000 (—) Puller 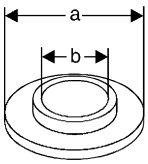 	• Removing press flange snap ring • Installing press flange snap ring • Installing mainshaft • Installing carrier bearing **a: 98 mm (3.86 in) dia.** **b: 40.5 mm (1.594 in) dia.**
ST33052000 (—) Adapter 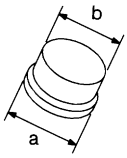 	• Removing front drive shaft front bearing • Removing front drive shaft rear bearing • Installing mainshaft **a: 28 mm (1.10 in) dia.** **b: 22 mm (0.87 in) dia.**

Tool number (Kent-Moore No.) Tool name	Description
ST33200000 (J-26082) Drift 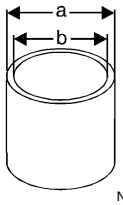	• Removing input bearing • Installing sun gear assembly and planetary carrier assembly • Installing input oil seal **a: 74.5 mm (2.933 in) dia.** **b: 62.5 mm (2.461 in) dia.**
ST33290001 (J-34286) Puller 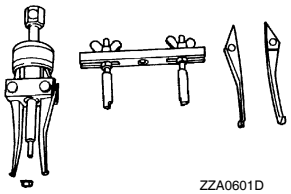	• Removing front oil seal • Removing rear oil seal • Removing metal bushing
ST33710000 (—) Drift 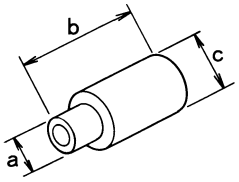	• Removing needle bearing • Removing metal bushing **a: 24 mm (0.94 in) dia.** **b: 89 mm (3.5 in)** **c: 30 mm (1.18 in) dia.**
ST35300000 (—) Drift 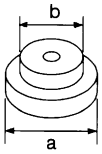	• Removing sun gear assembly and planetary carrier assembly • Removing carrier bearing • Installing metal bushing **a: 59 mm (2.32 in) dia.** **b: 45 mm (1.77 in) dia.**
ST35325000 (—) Drift bar 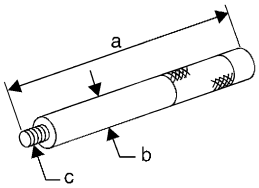	• Removing metal bushing **a: 215 mm (8.46 in)** **b: 25 mm (0.98 in) dia.** **c: M12 × 1.5P**
ST3322000 (—) Drift 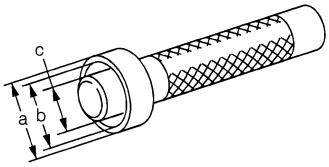	• Installing needle bearing **a: 37 mm (1.46 in) dia.** **b: 31 mm (1.22 in) dia.** **c: 22 mm (0.87 in) dia.**

Commercial Service Tool

INFOID:0000000005258344

Tool name	Description
Puller 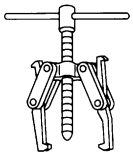 NT077	• Removing companion flange
Pin punch 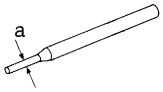 NT410	• Removing retainer pin • Installing retainer pin **a: 6 mm (0.24 in) dia.**
Power tool 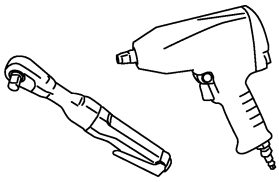 PBIC0190E	• Removing transfer case assembly

ON-VEHICLE MAINTENANCE

TRANSFER FLUID

Replacement

INFOID:0000000005258345

CAUTION:
If using the vehicle for towing, the transfer fluid must be replaced as specified. Refer to MA-9, "For North America".

DRAINING

1. Stop engine.
2. Remove the drain plug and gasket and drain the fluid.
3. Install the drain plug with a new gasket to the transfer. Tighten to the specified torque. Refer to DLN-154, "Disassembly and Assembly".
   CAUTION:
   Do not reuse gasket.

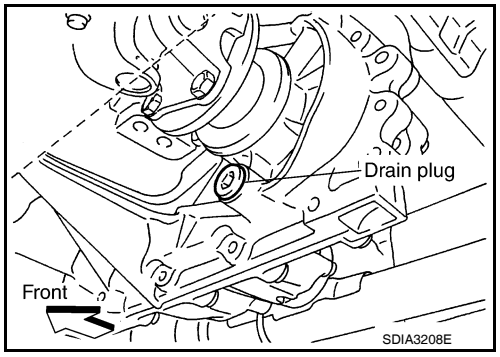

FILLING

1. Remove the filler plug and gasket.
2. Fill the transfer with new fluid until the fluid level reaches the specified limit near the filler plug hole.

   Fluid grade and capacity : Refer to MA-16, "For North America".

   CAUTION:
   Carefully fill fluid. (Fill up for approx. 3 minutes.)
3. Leave the vehicle for 3 minutes, and check fluid level again.
4. Install the filler plug with a new gasket to the transfer. Tighten to the specified torque. Refer to DLN-154, "Disassembly and Assembly".
   CAUTION:
   Do not reuse gasket.

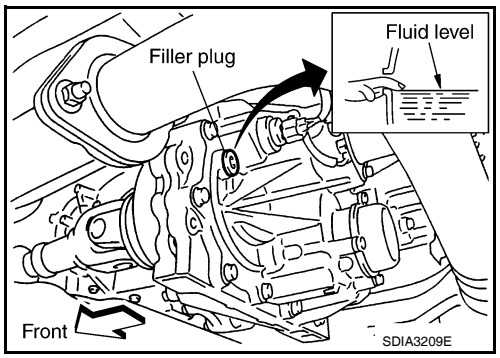

Inspection

INFOID:0000000005258346

CAUTION:
If using the vehicle for towing, the transfer fluid must be replaced as specified. Refer to MA-9, "For North America".

FLUID LEAKAGE AND FLUID LEVEL

1. Make sure that fluid is not leaking from the transfer assembly or around it.
2. Check fluid level from the filler plug hole as shown.
   CAUTION:
   Do not start engine while checking fluid level.
3. Install the filler plug with a new gasket to the transfer. Tighten to the specified torque. Refer to DLN-154, "Disassembly and Assembly".
   CAUTION:
   Do not reuse gasket.

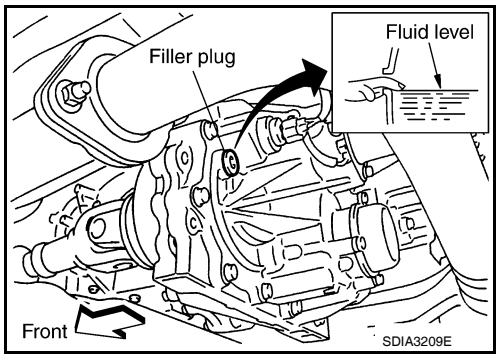

TRANSFER OIL FILTER

Removal and Installation

INFOID:0000000005258347

REMOVAL

1. Remove the oil filter bolts and oil filter.
   CAUTION:
   - **Do not damage center case or oil filter.**
   - **Loosen bolts and detach oil filter evenly.**

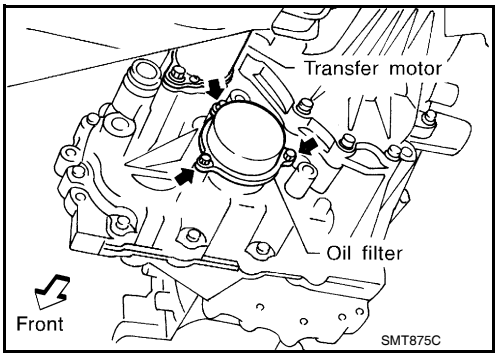

2. Remove the O-rings (1) from the oil filter (2).

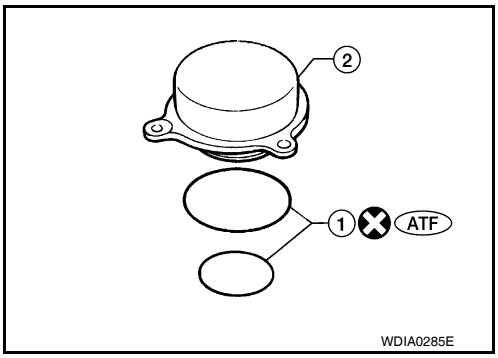

3. Remove the oil filter stud from the oil filter.
4. Remove the O-ring from the oil filter stud.

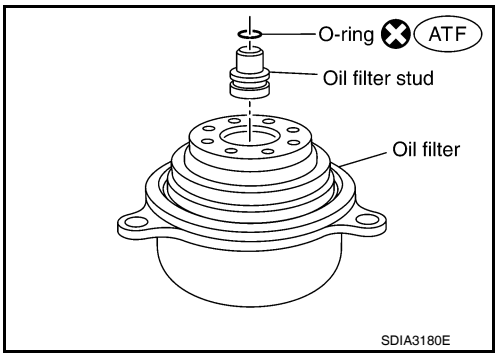

INSTALLATION

1. Apply ATF to the new O-ring, and install it on the oil filter stud.
   CAUTION:
   Do not reuse O-ring.
2. Install the oil filter stud to the oil filter.

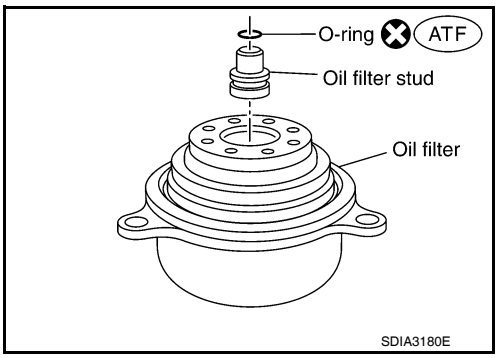

3. Apply ATF to the two new O-rings (1), and install them on the oil filter (2).
CAUTION:
Do not reuse O-rings.

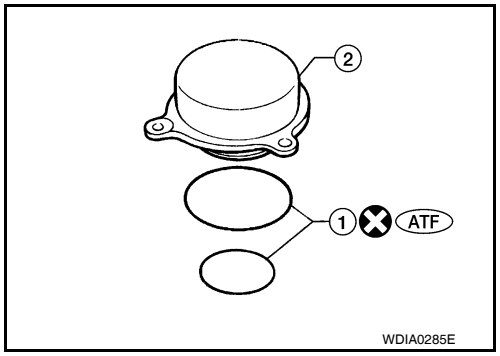

4. Install the oil filter to the transfer assembly. Tighten the bolts to the specified torque. Refer to DLN-154, "Disassembly and Assembly".
CAUTION:
- **Do not damage oil filter.**
- **Attach oil filter and tighten bolts evenly.**
5. Check the transfer fluid. Refer to DLN-135, "Inspection".
6. Start the engine for one minute. Then stop the engine and recheck the transfer fluid. Refer to DLN-135, "Inspection".

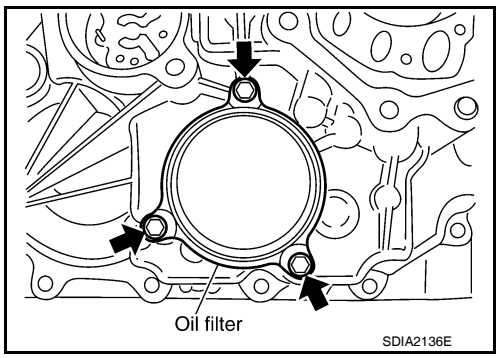

ON-VEHICLE REPAIR

TRANSFER CONTROL UNIT

Removal and Installation

INFOID:0000000005258348

REMOVAL

1. Set transfer state as 2WD when 4WD shift switch is at 2WD, or as AUTO when 4WD shift switch is at AUTO.
   CAUTION:
   When removing transfer control unit, transfer state must be at 2WD or AUTO.
2. Turn the ignition switch OFF and disconnect negative battery terminal.
3. Remove the lower instrument panel LH. Refer to IP-11, "Exploded View".
4. Disconnect the two transfer control unit connectors.
5. Remove the transfer control unit bolts.
6. Remove the transfer control unit.

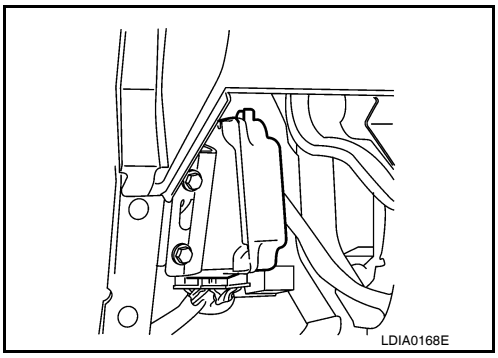

INSTALLATION

Installation is in the reverse order of removal.

- When installing the transfer control unit, tighten bolts to the specified torque.

Transfer control unit bolts : 3.4 N·m (0.35 kg-m, 30 in-lb)

CAUTION:
Do not connect harness connector to transfer control unit when 4WD shift switch is at 4LO.

- After the installation, check perform self-diagnosis. Refer to DLN-23, "CONSULT-III Function (ALL MODE AWD/4WD)". If NG, adjust position between transfer assembly and transfer control unit. Refer to DLN-129, "Precaution for Transfer Assembly and Transfer Control Unit Replacement".

FRONT OIL SEAL

Removal and Installation

INFOID:0000000005258349

REMOVAL

1. Partially drain the transfer fluid. Refer to DLN-135.
2. Remove the front propeller shaft. Refer to DLN-315, "Removal and Installation".
3. Remove the companion flange self-lock nut using suitable tool.

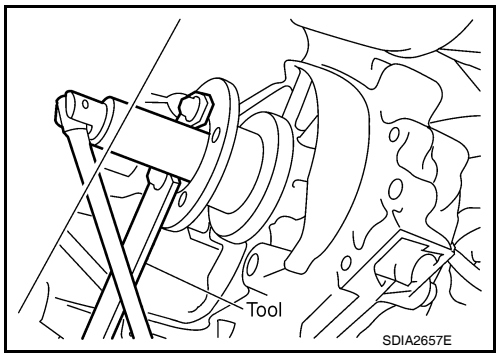

4. Put a matching mark on top of the front drive shaft in line with the mark on the companion flange.
   CAUTION:
   Use paint to make the matching mark on the front drive shaft. Do not damage the front drive shaft.

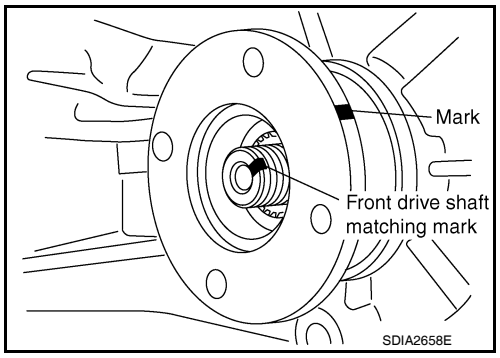

5. Remove the companion flange using suitable tool.

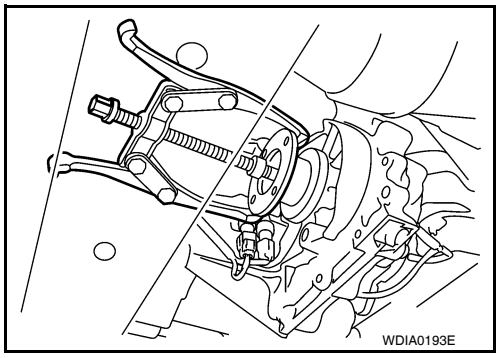

6. Remove the front oil seal from the front case using Tool.

   Tool number : ST33290001 (J-34286)

   CAUTION:
   Do not damage front case.

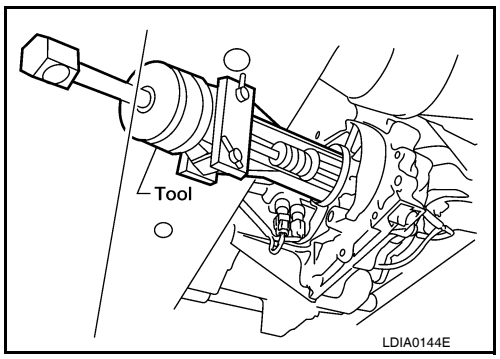

INSTALLATION

1. Install the new front oil seal until it is flush with the end face of the front case using Tool.

   Tool number : KV38100500 (—)

   CAUTION:
   - **Do not reuse oil seal.**
   - **Apply petroleum jelly to oil seal.**

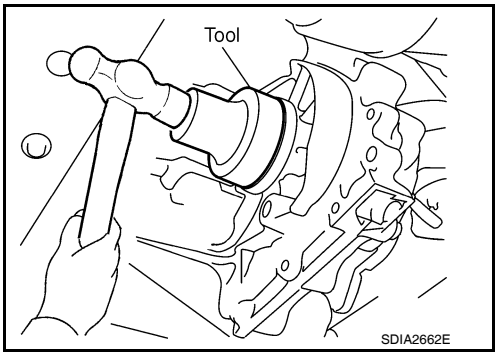

2. Align the matching mark of the front drive shaft with the matching mark of the companion flange, then install the companion flange.

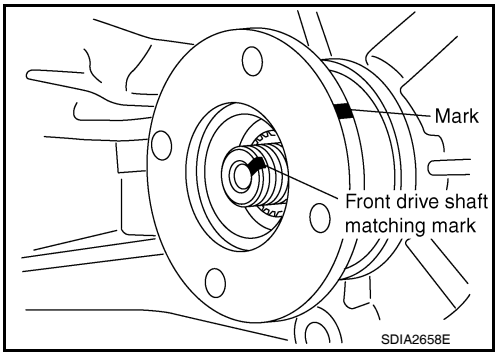

3. Install the new self-lock nut. Tighten to the specified torque using suitable tool. Refer to DLN-154, "Disassembly and Assembly".
   CAUTION:
   Do not reuse self-lock nut.
4. Install the front propeller shaft. Refer to DLN-315, "Removal and Installation".
5. Refill the transfer with fluid and check for fluid leakage and fluid level. Refer to DLN-135.

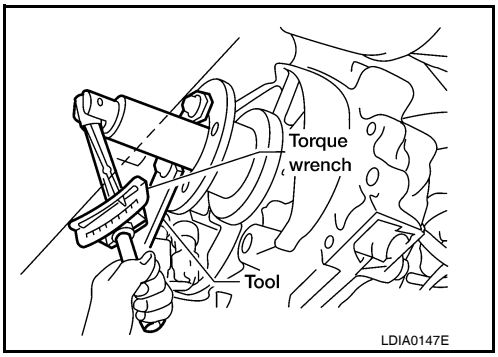

REAR OIL SEAL

Removal and Installation

INFOID:0000000005258350

REMOVAL

1. Partially drain the transfer fluid. Refer to DLN-135.
2. Remove the rear propeller shaft. Refer to DLN-325, "Removal and Installation" (2S1330), DLN-336, "Removal and Installation" (2S1350).
3. Remove the dust cover from the rear case.
   CAUTION:
   Do not damage the rear case.

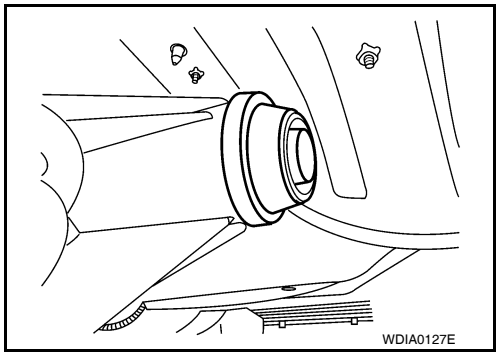

4. Remove the rear oil seal from the rear case using Tool.

   Tool number : ST33290001 (J-34286)

   CAUTION:
   Do not damage the rear case.

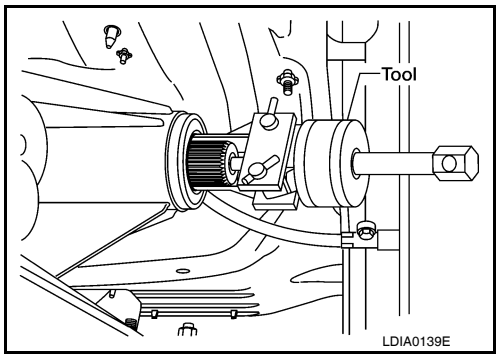

INSTALLATION

1. Install the new rear oil seal until it is flush with the end face of the rear case using Tool.

   Tool number : ST30720000 (J-25405)

   CAUTION:
   - **Do not reuse oil seal.**
   - **Apply petroleum jelly to oil seal.**

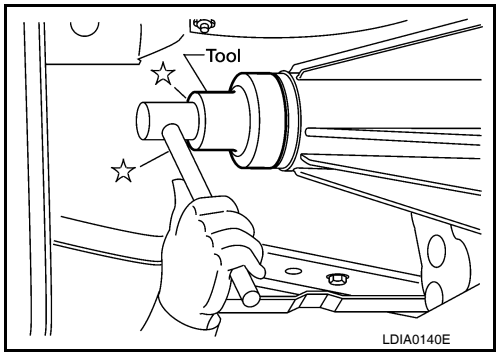

2. Apply petroleum jelly to the circumference of the new dust cover. Position the new dust cover as shown.
   CAUTION:
   - **Do not reuse dust cover.**
   - **Position the protursion at the position shown.**
   - **1: Dust cover**
   - **2: Rear case assembly**
   - **A: Protrusions**

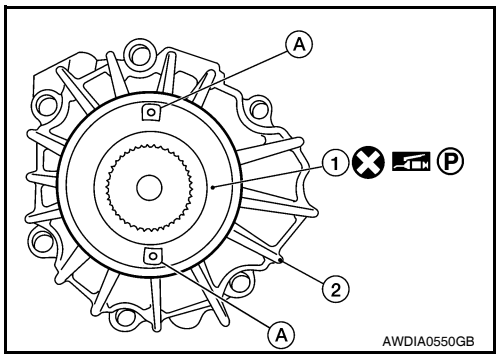

3. Install the new dust cover to the rear case using Tool.

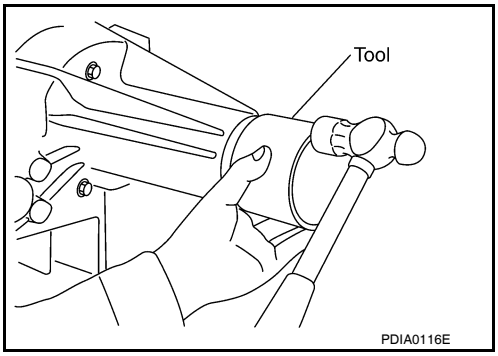

Tool number : KV40105310 (—)

CAUTION:
- **Do not reuse dust cover.**
- **Apply petroleum jelly to dust cover.**

4. Install the rear propeller shaft. Refer to DLN-325, "Removal and Installation" (2S1330), DLN-336, "Removal and Installation" (2S1350).
5. Refill the transfer with fluid and check for fluid leakage and fluid level. Refer to DLN-135.

SIDE OIL SEAL

Removal and Installation

INFOID:0000000005258351

REMOVAL

1. Remove the front propeller shaft. Refer to DLN-315, "Removal and Installation".
2. Remove the companion flange. Refer to DLN-283, "Disassembly and Assembly".
3. Remove the transfer control device from the transfer assembly. Refer to DLN-277, "Removal and Installation".
4. Remove the side oil seal using suitable tool.
   CAUTION:
   Do not damage shift cross.

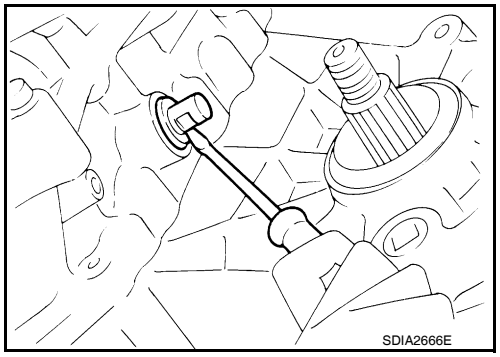

INSTALLATION

1. Install the new side oil seal until it is flush with the end face of case using Tool.

   Tool number : ST22360002 (J-25679-01)

   CAUTION:
   - **Do not reuse oil seal.**
   - **Apply petroleum jelly to oil seal.**
2. Install the transfer control device to the transfer assembly. Refer to DLN-277, "Removal and Installation".
3. Install the companion flange. Refer to DLN-283, "Disassembly and Assembly".
4. Install the front propeller shaft. Refer to DLN-315, "Removal and Installation".

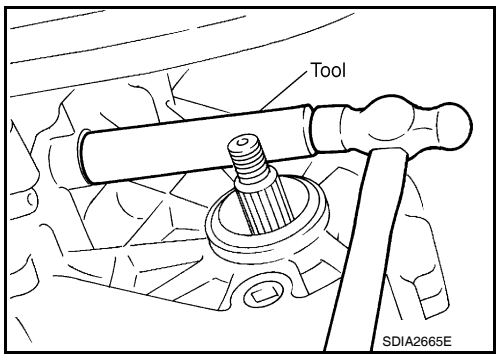

TRANSFER CONTROL DEVICE

Removal and Installation

INFOID:0000000005258352

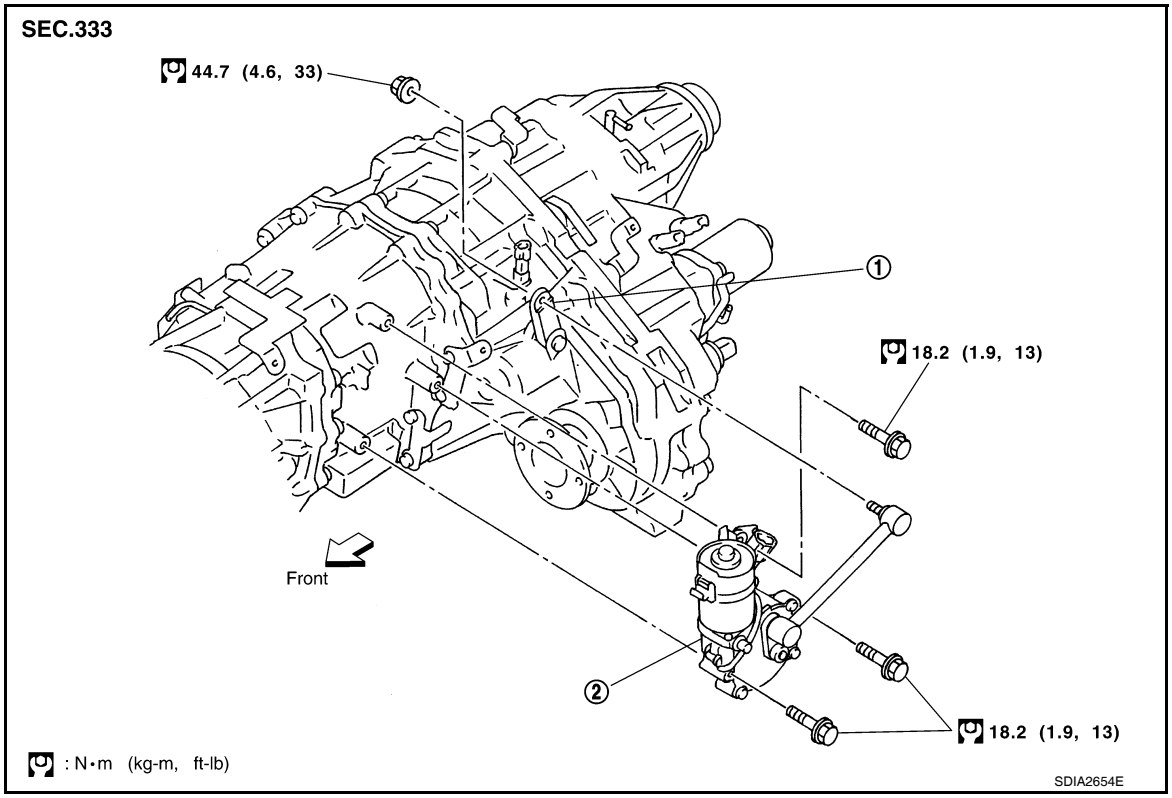

1. Shift lever
2. Actuator

REMOVAL

CAUTION:

Change vehicle state to 2WD, and then remove and install transfer control device.

1. Remove front propeller shaft. Refer to DLN-315, "Removal and Installation".
2. Disconnect transfer control device connector.
3. Remove transfer control lever.
4. Disconnect vacuum line.
5. Remove transfer control device.

INTSTALLATION

CAUTION:

Check 4WD shift indicator after installation. Refer to DLN-129, "Precaution for Transfer Assembly and Transfer Control Unit Replacement".

Installation is in the reverse order of removal.

AIR BREATHER HOSE

Removal and Installation

INFOID:0000000005258353

VQ40DE

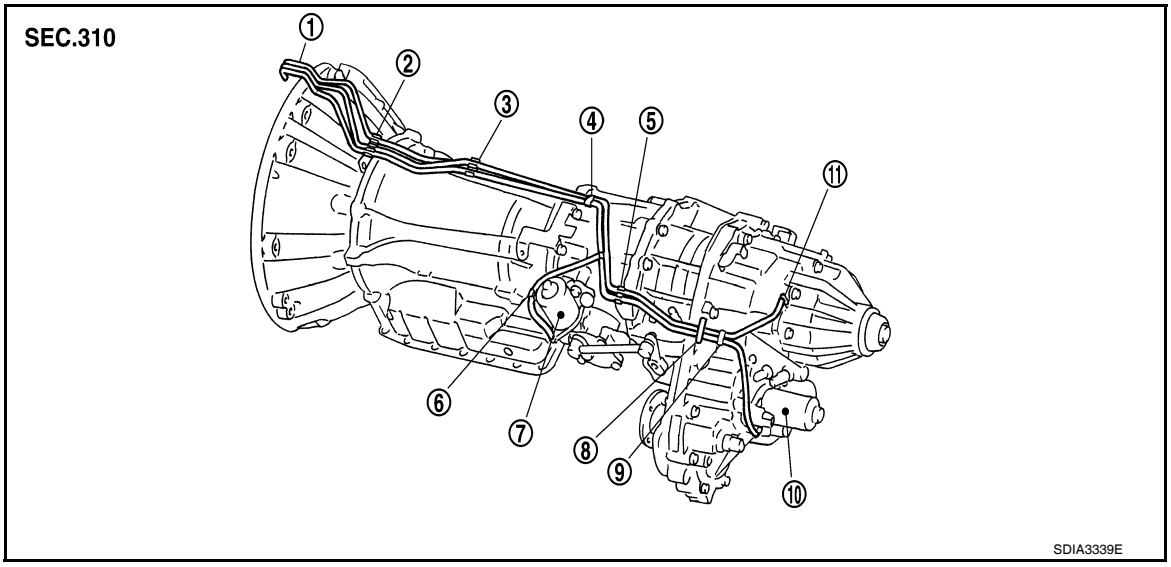

1.	Breather tube	2.	Clip A	3.	Clip B
4.	Clip C	5.	Clip D	6.	Clip E
7.	Actuator	8.	Air breather hose clamp	9.	Clip F
10.	Transfer motor	11.	Breather tube (transfer)		

CAUTION:

- **Make sure there are no pinched or restricted areas on each air breather hose caused by folding or bending when installing it.**
- **Install each air breather hose into the breather tube (metal connector) until the hose end reaches the end of the curve section. Set each air breather hose with paint mark facing upward.**

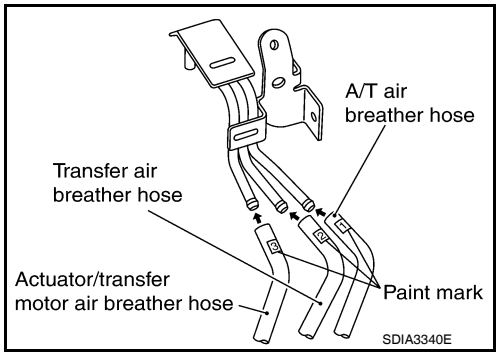

- **Install actuator/transfer motor air breather hose and transfer air breather hose on clip A with the paint mark facing upward.**

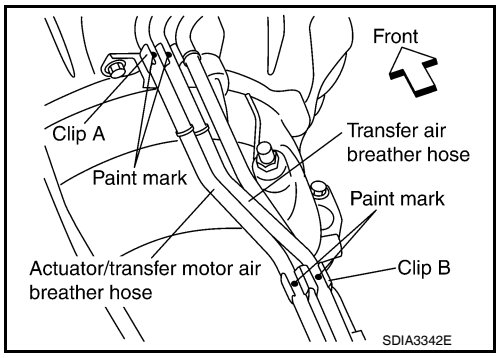

- **Install clip C on actuator/transfer motor air breather hose and transfer air breather hose with the paint mark matched.**

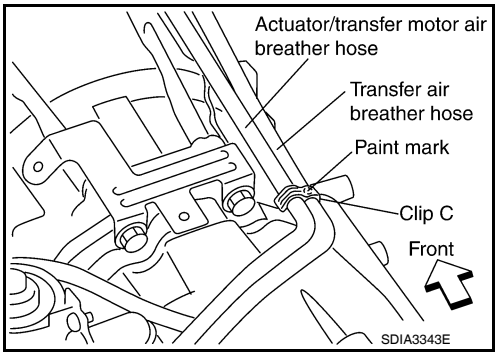

- **Install actuator/transfer motor air breather hose and transfer air breather hose on clip D and clip E with the paint mark facing upward.**

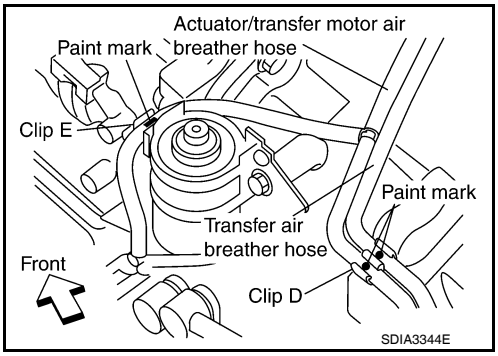

- **Install the actuator air breather hose into the actuator (case connector) until the hose end reaches the base of the tube. Set actuator air breather hose with paint mark facing leftward.**

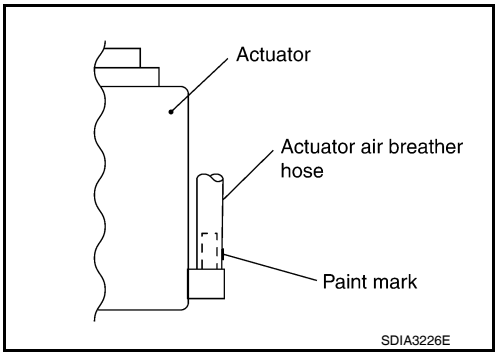

- **Install clip F on transfer motor air (control device) breather hose and transfer air breather hose with the paint mark matched.**

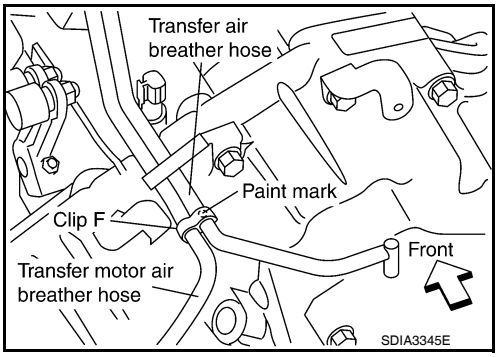

- **Install the transfer air breather hose into the breather tube (transfer, metal connector) until the hose end reaches the base of the tube. Set transfer air breather hose with paint mark facing upwards.**

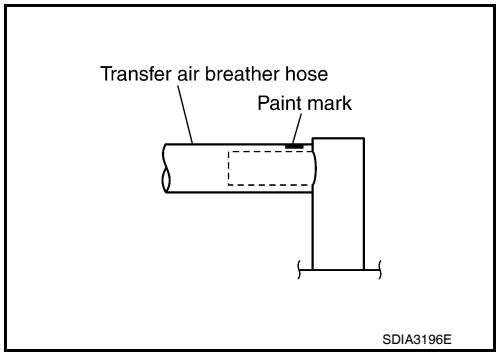

- **Install the transfer motor air breather hose into the transfer motor (case connector) until the hose end reaches the end of the curved section. Set transfer motor air breather hose with paint mark facing leftward.**

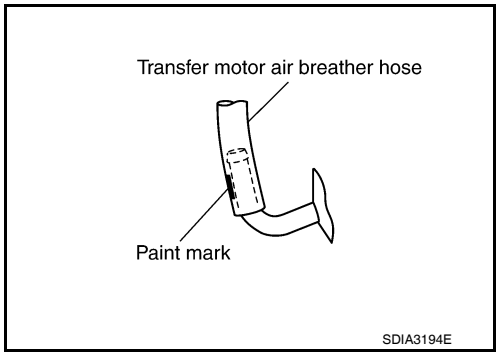

REMOVAL AND INSTALLATION

VK56DE

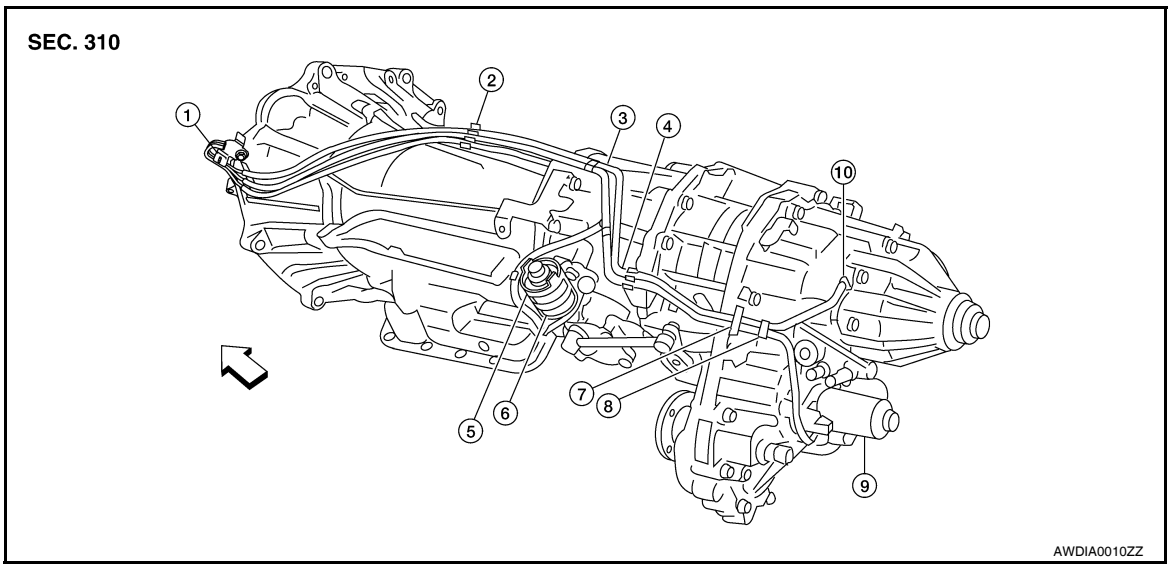

1.	Breather tube	2.	Clip A	3.	Clip B
4.	Clip C	5.	Clip D	6.	Actuator
7.	Air breather hose clamp	8.	Clip E	9.	Transfer motor
10.	Breather tube (transfer)	⇨	Vehicle front		

CAUTION:

- **Make sure there are no pinched or restricted areas on each air breather hose caused by folding or bending when installing it.**

- **Install each air breather hose into the breather tube (4). Set each air breather hose with paint mark facing upward.**
- **A: Paint marks**
- **1: A/T breather hose**
- **2: Transfer air breather hose**
- **3: Actuator/transfer motor air breather hose**

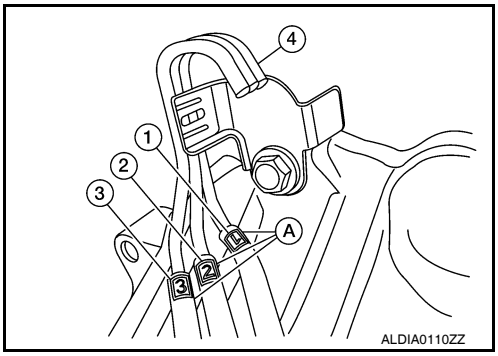

- **Install actuator/transfer motor air breather hose (1) and transfer air breather hose (2) on clip (A) with the paint mark (B) facing upward.**
  ⇦: Front

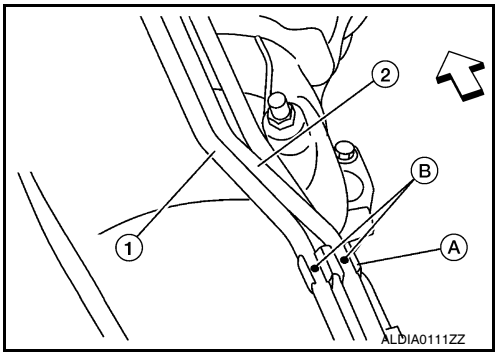

- **Install clip (A) on actuator/transfer motor air breather hose (1) and transfer air breather hose (2) with the paint mark (B) matched.**
  ⇦: Front

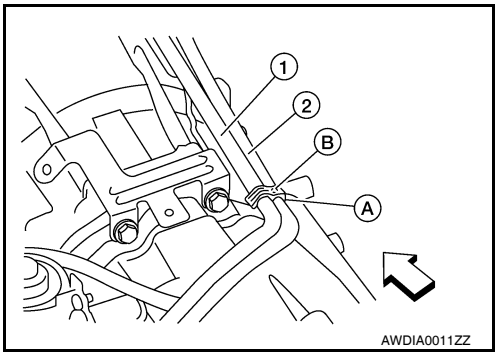

- **Install actuator/transfer motor air breather hose (1) and transfer air breather hose (2) on clip (C) and clip (B) with the paint mark (A) and (D) facing upward.**
  ⇦: Front

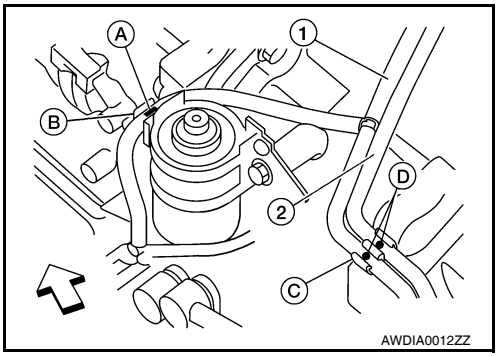

- **Install the actuator air breather hose into the actuator (case connector) until the hose end reaches the base of the tube. Set actuator air breather hose with paint mark facing leftward.**

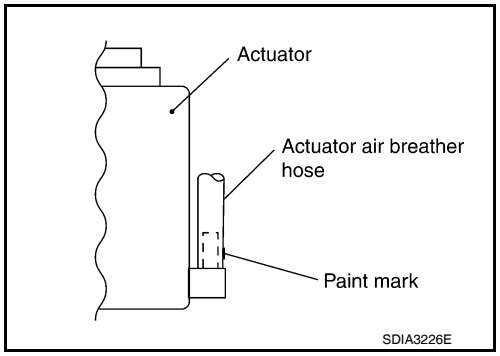

- **Install clip (A) on transfer motor air breather hose (2) and transfer air breather hose (1) with the paint mark (B) matched.**
  ⇦: Front

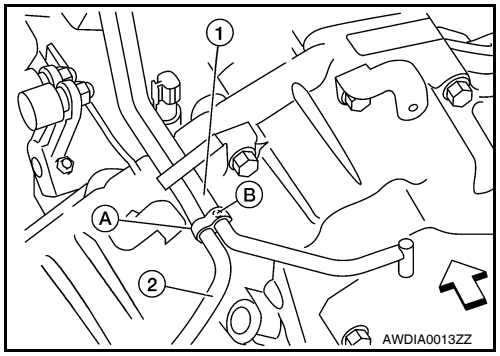

- **Install the transfer air breather hose into the breather tube (transfer, metal connector) until the hose end reaches the base of the tube. Set transfer air breather hose with paint mark facing upwards.**

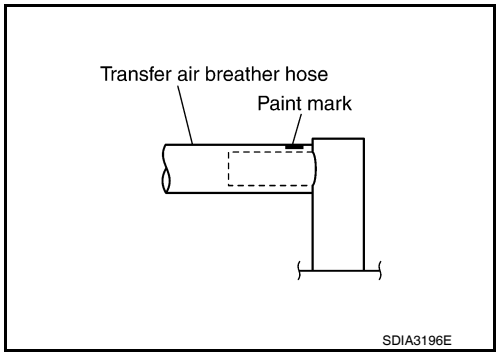

- **Install the transfer motor air breather hose into the transfer motor (case connector) until the hose end reaches the end of the curved section. Set transfer motor air breather hose with paint mark facing leftward.**

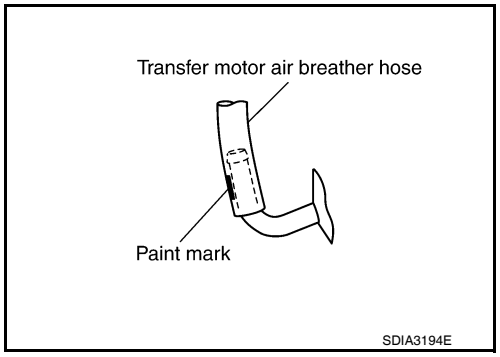

TRANSFER MOTOR

Removal and Installation

INFOID:0000000005258354

REMOVAL

1. Disconnect the transfer motor connector.
2. Remove the transfer motor air breather hose from the transfer motor. Refer to DLN-145, "Removal and Installation".
3. Remove the transfer motor bolts.
4. Remove the transfer motor.

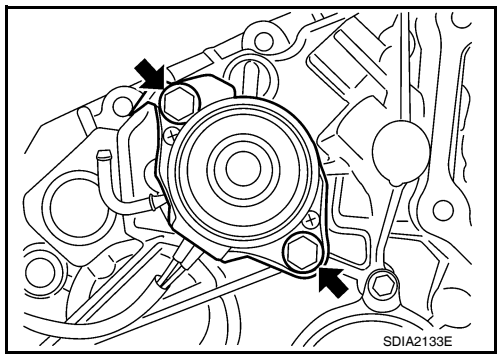

INSTALLATION

1. Apply ATF to the new O-ring and install it to the transfer motor.
   CAUTION:
   Do not reuse O-rings.
2. Fit the double-flat end of the transfer motor shaft into the slot of the sub-oil pump assembly. Then tighten to the specified torque. Refer to DLN-154, "Disassembly and Assembly".
   CAUTION:
   Be sure to install connector bracket.
3. Install the transfer motor air breather hose to the transfer motor. Refer to DLN-145, "Removal and Installation".
4. Connect the transfer motor connector.
5. Check the transfer fluid. Refer to DLN-135, "Inspection".
6. Start the engine for one minute. Then stop the engine and recheck the transfer fluid. Refer to DLN-135, "Inspection".

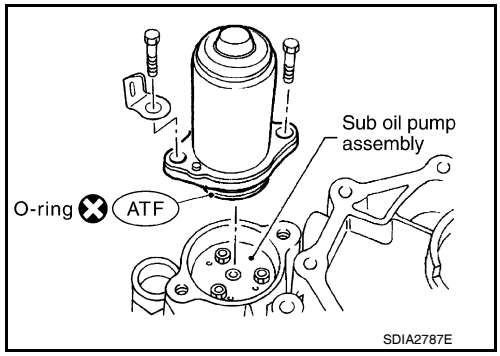

REMOVAL AND INSTALLATION

TRANSFER ASSEMBLY

Removal and Installation

INFOID:0000000005258355

REMOVAL

1. Set transfer state as 2WD when 4WD shift switch is at 2WD.
2. Remove the undercovers using power tool.
3. Drain the transfer fluid. Refer to DLN-135, "Replacement".
4. Remove the center exhaust tube and main muffler. Refer to EX-7, "Removal and Installation".
5. Remove the front and rear propeller shafts. Refer to DLN-315, "Removal and Installation" (front), DLN-325, "Removal and Installation" or DLN-336, "Removal and Installation" (rear).
   CAUTION:
   Do not damage spline, sleeve yoke and rear oil seal when removing rear propeller shaft.
   NOTE:
   Insert a plug into the rear oil seal after removing the rear propeller shaft.
6. Remove the A/T nuts from the A/T crossmember. Refer to TM-194, "4WD : Exploded View".
7. Position two suitable jacks under the A/T and transfer assembly.
8. Remove the crossmember. Refer to TM-194, "4WD : Exploded View".
   WARNING:
   Support A/T and transfer assembly using two suitable jacks while removing crossmember.
9. Disconnect the electrical connectors from the following:
   - ATP switch
   - Neutral 4LO switch
   - Wait detection switch
   - Transfer motor
   - Transfer control device
   - Transfer terminal cord assembly
10. Remove transfer wiring harness.
11. Disconnect each air breather hose from the following. Refer to DLN-145, "Removal and Installation".
    - Actuator
    - Breather tube (transfer)
    - Transfer motor
12. Remove the transfer control device from the extension housing.
13. Remove the transfer to A/T and A/T to transfer bolts.
14. Remove the transfer assembly.
    WARNING:
    Support transfer assembly with suitable jack while removing it.
    CAUTION:
    Do not damage rear oil seal (A/T).

INSTALLATION

Installation is in the reverse order of removal.

- Tighten the bolts to specification.

Transfer bolt torque : 36 N·m (3.7 kg-m, 27 ft-lb)

- Fill the transfer with new fluid and check for fluid leakage and fluid level. Refer to DLN-135.
- Start the engine for one minute. Then stop the engine and recheck the transfer fluid. Refer to DLN-135, "Inspection".

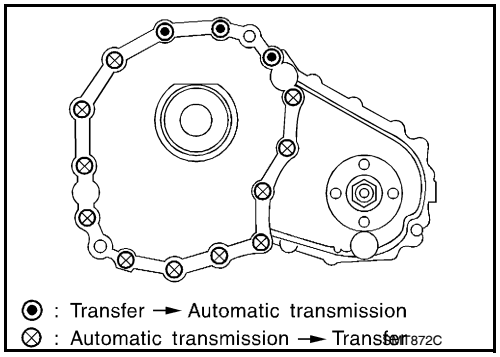

DISASSEMBLY AND ASSEMBLY

TRANSFER ASSEMBLY

Component Parts Location

INFOID:0000000005576260

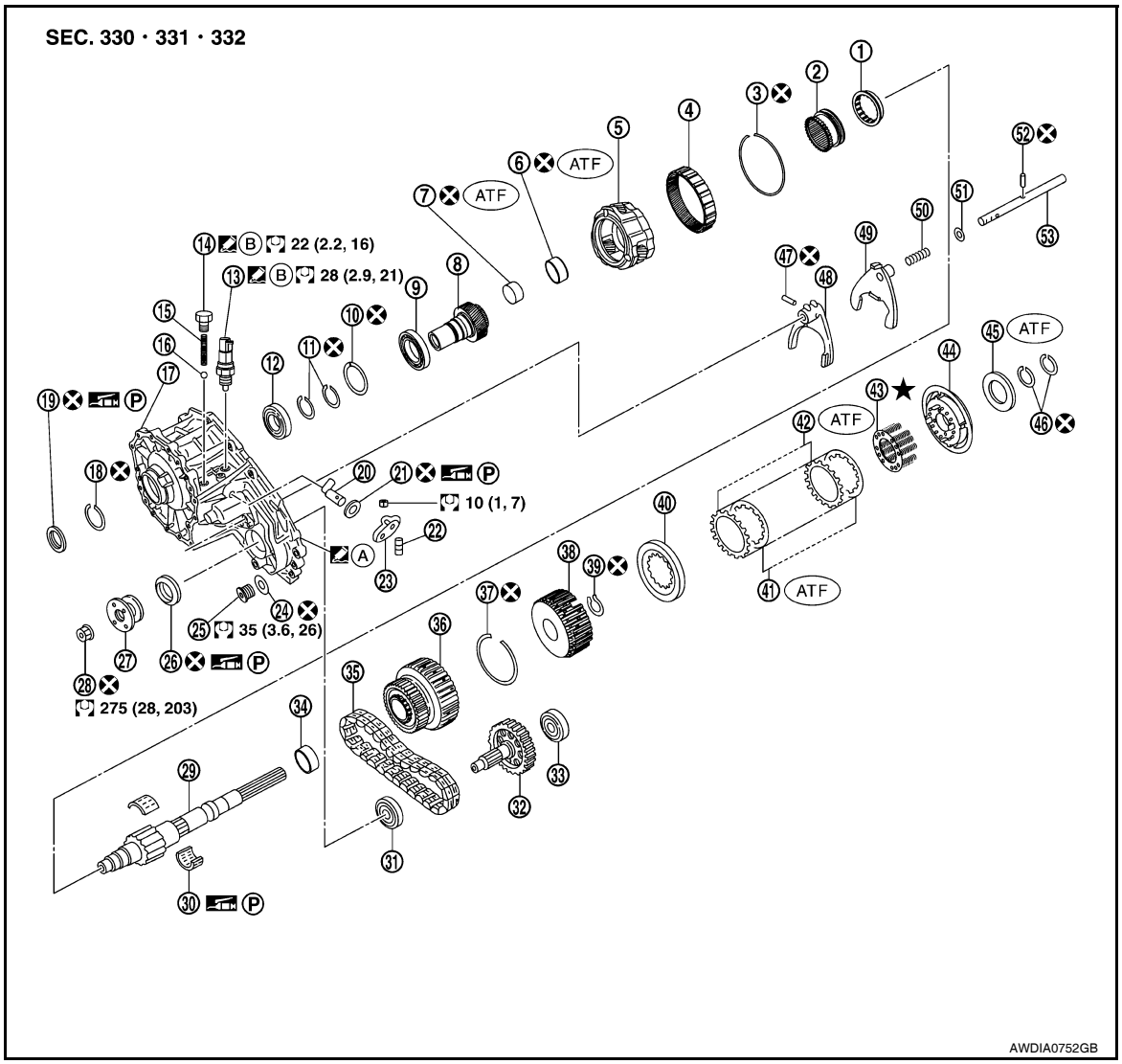

1.	2-4 sleeve	2.	L-H sleeve	3.	Snap ring
4.	Internal gear	5.	Planetary carrier assembly	6.	Metal bushing
7.	Needle bearing	8.	Sun gear	9.	Carrier bearing
10.	Snap ring	11.	Snap ring	12.	Input bearing
13.	Wait detection switch	14.	Check plug	15.	Check spring
16.	Check ball	17.	Front case	18.	Snap ring
19.	Input oil seal	20.	Shift cross	21.	Side oil seal
22.	Lock pin	23.	Shift lever	24.	Gasket
25.	Drain plug	26.	Front oil seal	27.	Companion flange
28.	Self-lock nut	29.	Mainshaft	30.	Needle bearing
31.	Front bearing	32.	Front drive shaft	33.	Rear bearing
34.	Spacer	35.	Drive chain	36.	Clutch drum
37.	Snap ring	38.	Clutch hub	39.	Snap ring
40.	Retaining plate	41.	Driven plate (10 sheet)	42.	Drive plate (10 sheet)
43.	Return spring assembly	44.	Press flange	45.	Thrust needle bearing

46.	Snap ring	47.	Retaining pin	48.	L-H fork
49.	2-4 fork	50.	Shift fork spring	51.	Fork guide
52.	Retainer pin	53.	Shift rod	A.	Apply Genuine Anaerobic Liquid Gasket, Three Bond TB1133c or equivalent
B.	Apply Genuine Liquid Gasket, Three Bond TB1215 or equivalent				

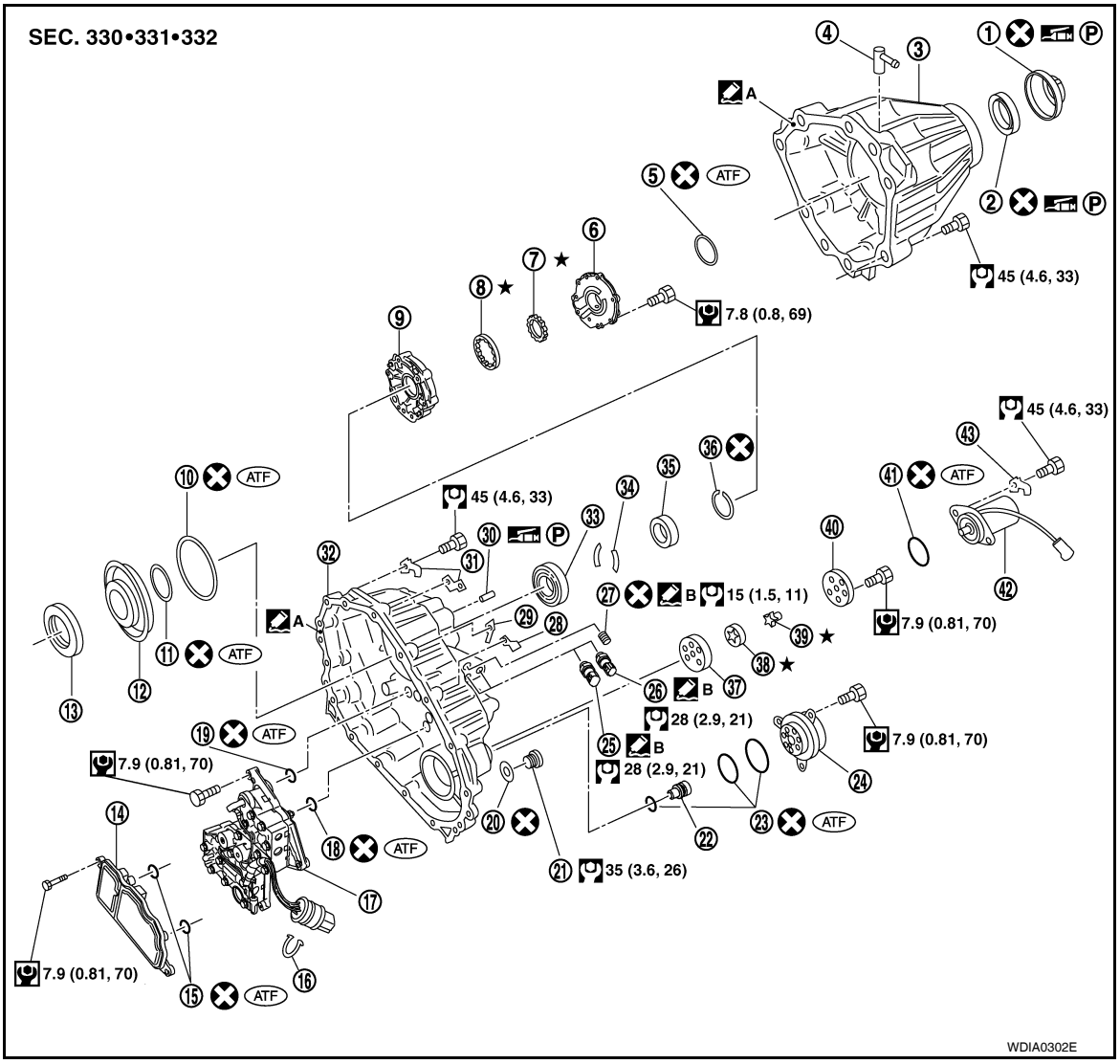

1.	Dust cover	2.	Rear oil seal	3.	Rear case
4.	Breather tube	5.	Seal ring	6.	Main oil pump cover
7.	Inner gear	8.	Outer gear	9.	Main oil pump housing
10.	D-ring	11.	D-ring	12.	Clutch piston
13.	Thrust needle bearing race	14.	Oil strainer	15.	O-ring
16.	Snap ring	17.	Control valve assembly	18.	Lip seal (large 5 pieces)
19.	Lip seal (small 2 pieces)	20.	Gasket	21.	Filler plug
22.	Oil filter stud	23.	O-ring	24.	Oil filter
25	ATP switch	26.	Neutral-4LO switch	27.	Oil pressure check plug
28.	Harness bracket	29.	Air breather hose clamp	30.	Stem bleeder
31.	Harness bracket	32.	Center case	33.	Mainshaft rear bearing
34.	C-ring	35.	Washer holder	36.	Snap ring

37. Sub oil pump housing	38. Outer gear	39. Inner gear
40. Sub oil pump cover	41. O-ring	42. Transfer motor
43. Connector bracket	A. Apply Genuine Anaerobic Liquid Gasket, Three Bond TB1133C or equivalent.	B. Apply Genuine Liquid Gasket, Three Bond TB1215 or equivalent.

Disassembly and Assembly

INFOID:0000000005258356

DISASSEMBLY

Rear Case

1. Remove the rear case bolts.

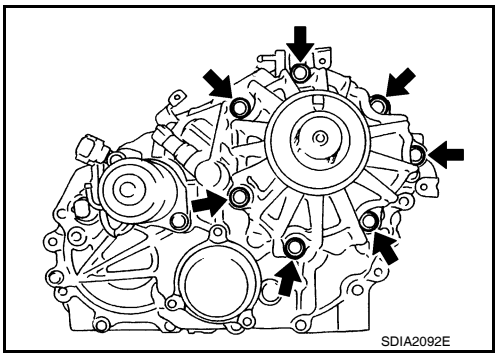

2. Remove the rear case from the center case.

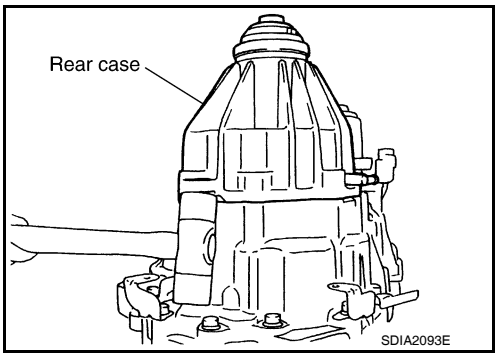

3. Remove the dust cover using suitable tool.

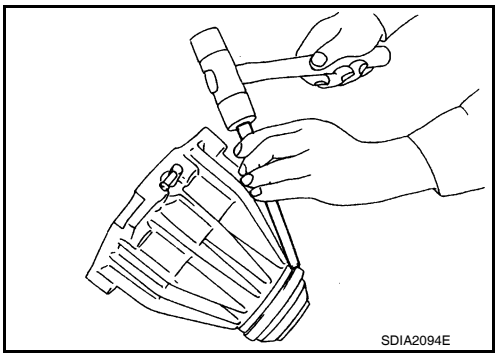

4. Remove the rear oil seal using suitable tool.
   CAUTION:
   Do not damage rear case.
5. Remove the breather tube.

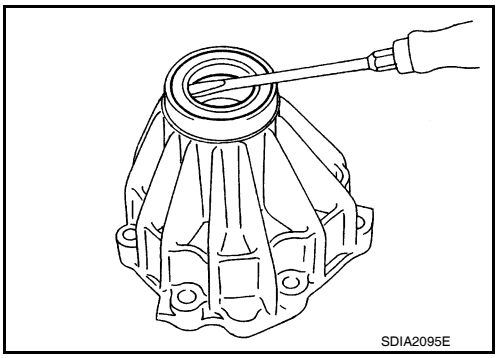

Front Case

1. Remove the rear case assembly. Refer to DLN-154, "Disassembly and Assembly".
2. Remove the lock pin nut.
3. Remove the lock pin using suitable tool.
4. Remove the shift lever.

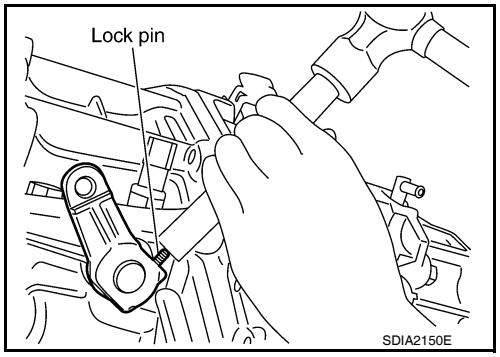

5. Remove the side oil seal from the front case using suitable tool.
   CAUTION:
   Do not damage front case or shift cross.

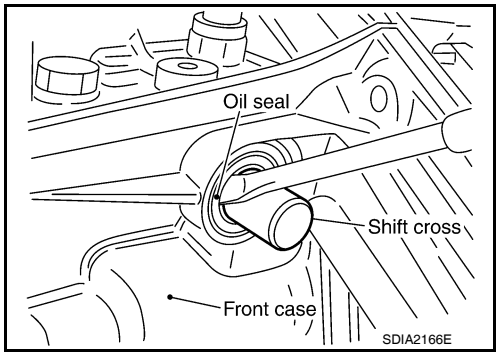

6. Remove the check plug, check spring and check ball.
7. Remove the wait detection switch.

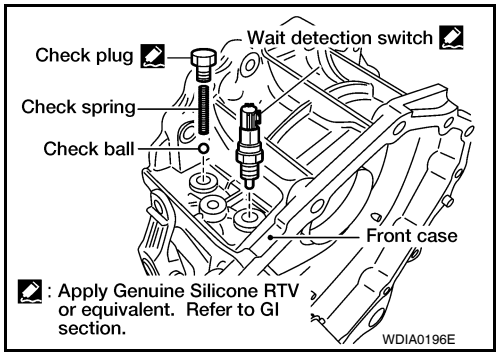

8. Remove the self-lock nut from the companion flange using suitable tool.

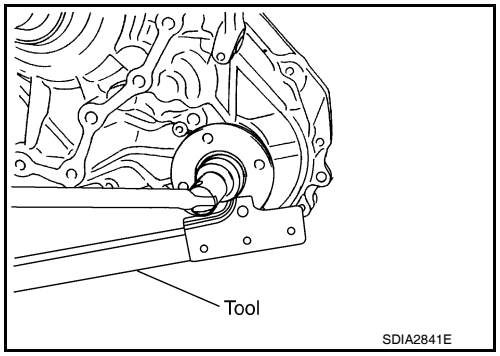

9. Put a matching mark on top of the front drive shaft thread in line with the mark on the companion flange.
   CAUTION:
   Use paint to make the matching mark on the front drive shaft thread. Never damage the front drive shaft.

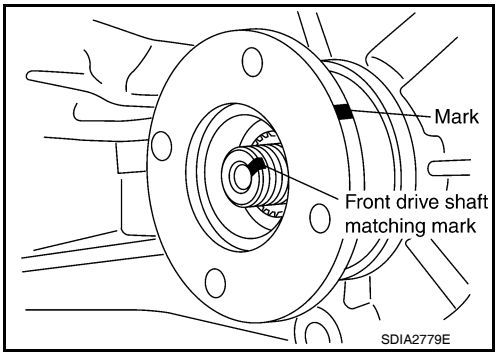

10. Remove the companion flange using suitable tool.

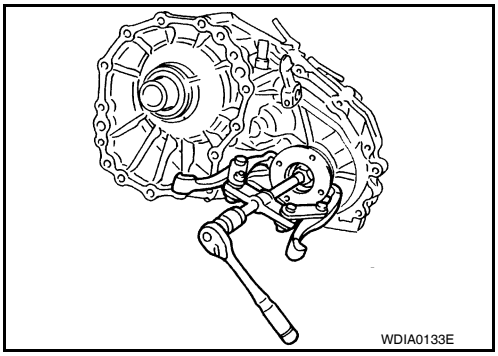

11. Remove the center case bolts, harness bracket and air breather.
12. Remove the filler plug and gasket.

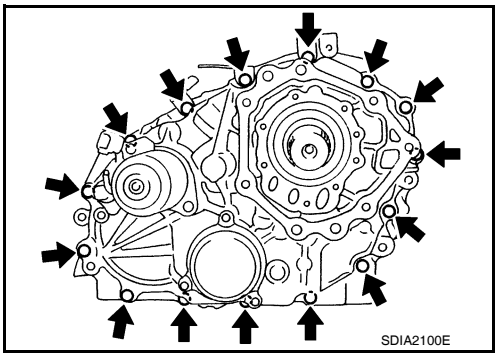

13. Separate the center case from the front case. Then remove the center case from the front case by prying it up using suitable tool.
    CAUTION:
    Do not damage the mating surfaces.

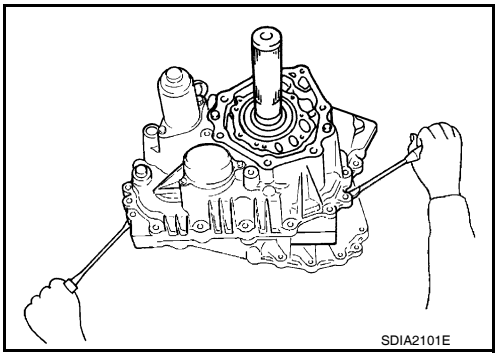

14. Remove the shift rod components together with the 2-4 sleeve and L-H sleeve.
15. Remove the shift cross from the front case, using shift rod (A).

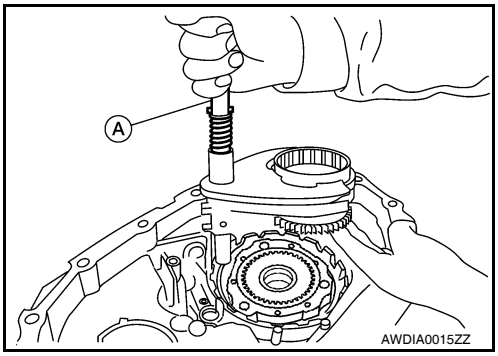

16. Remove the 2-4 sleeve and L-H sleeve from the 2-4 fork and L-H fork respectively.

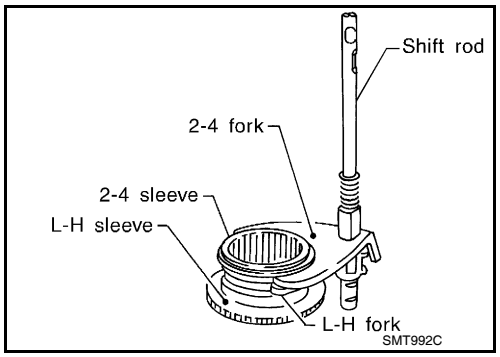

17. Drive out the retaining pin from the shift rod using suitable tool.

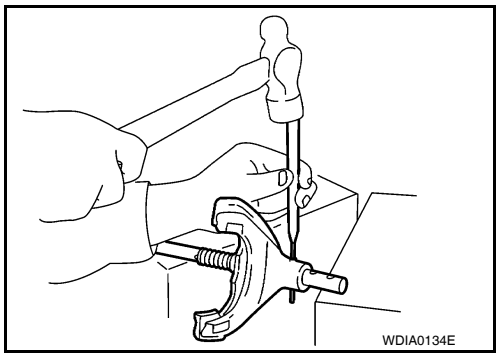

18. Remove the L-H fork, 2-4 fork, shift fork spring and fork guide from the shift rod.

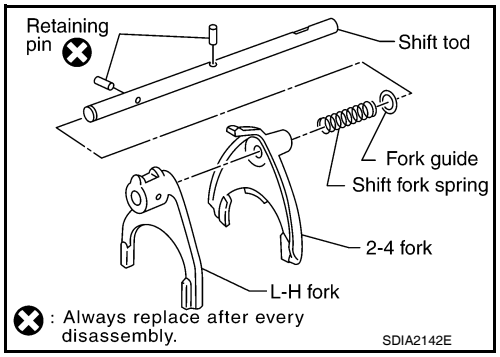

19. Remove the input oil seal from the front case using suitable tool.
CAUTION:
Do not damage front case or sun gear.

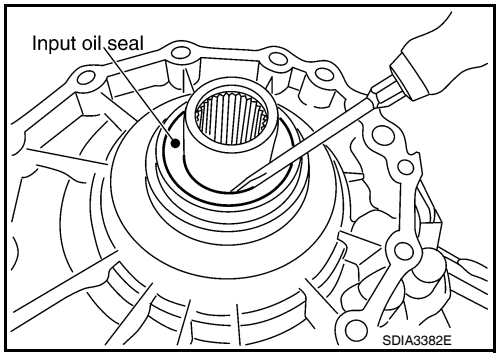

20. Remove the snap ring from the sun gear.
CAUTION:
Do not damage front case or sun gear.

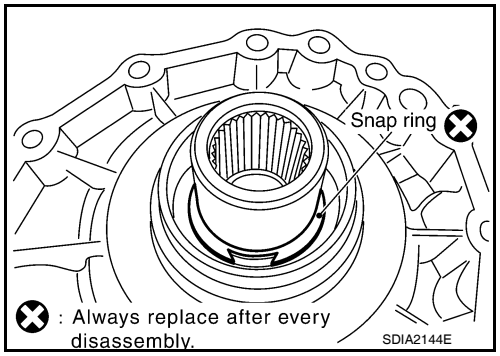

21. Remove the sun gear assembly and planetary carrier assembly from the front case using Tool.

Tool number : ST35300000 (—)

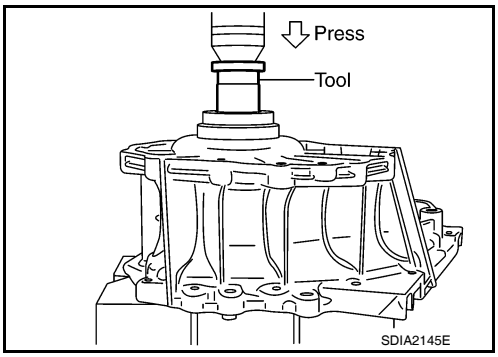

22. Remove the snap ring and internal gear using suitable tool.

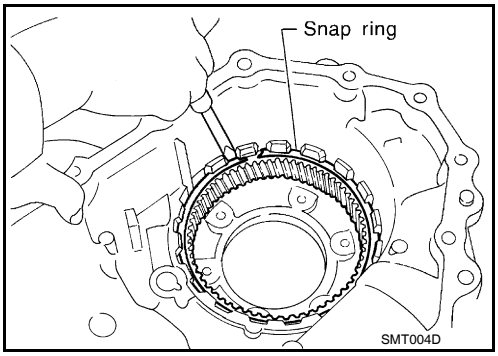

23. Remove the front oil seal using suitable tool.
CAUTION:
Do not damage front case.

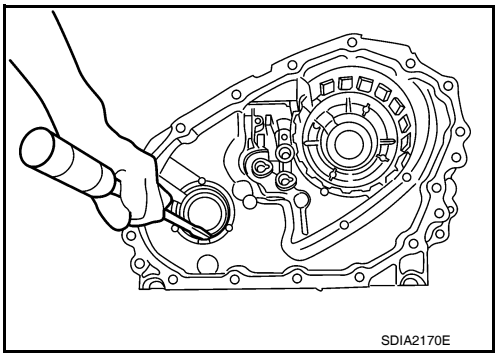

24. Remove the snap ring from the front case.

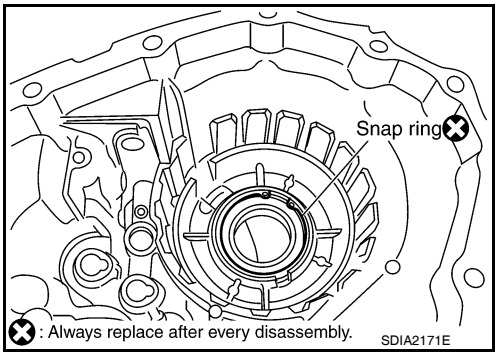

25. Remove the input bearing from the front case using Tool.

Tool number : ST33200000 (J-26082)

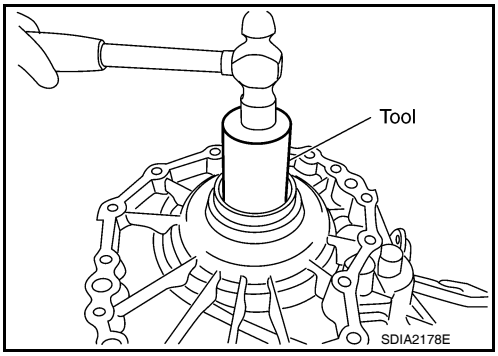

26. Remove the snap ring from the planetary carrier assembly using suitable tool.

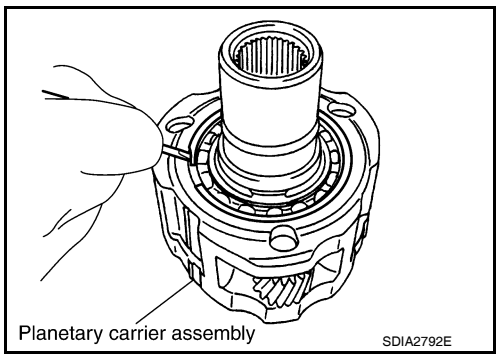

27. Remove the sun gear assembly from the planetary carrier assembly.

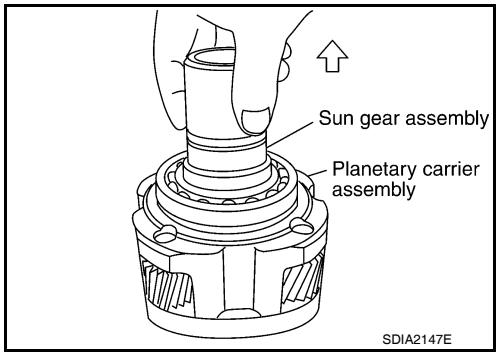

28. Remove the snap ring from the sun gear assembly using suitable tool.

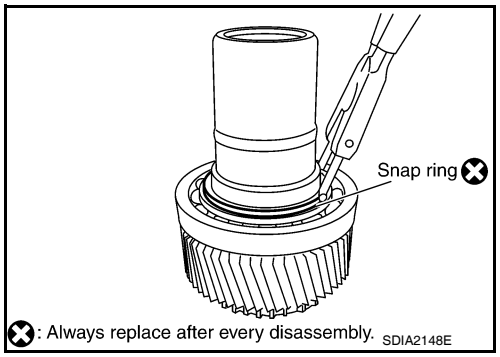

29. Remove the carrier bearing from the sun gear using Tools.

Tool number **A: ST35300000 (—)**
B: ST30031000 (—)

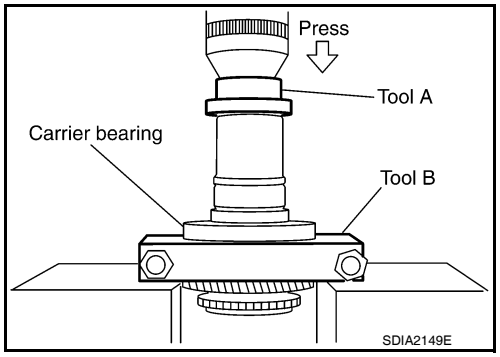

30. Remove the needle bearing from the sun gear using Tool.

Tool number **: ST33710000 (—)**

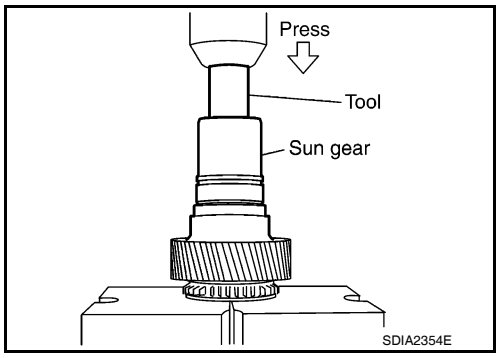

31. Remove the metal bushing from the sun gear using Tools.

Tool number **A: ST33710000 (—)**
B: ST35325000 (—)
C: ST3329000 (J-34286)

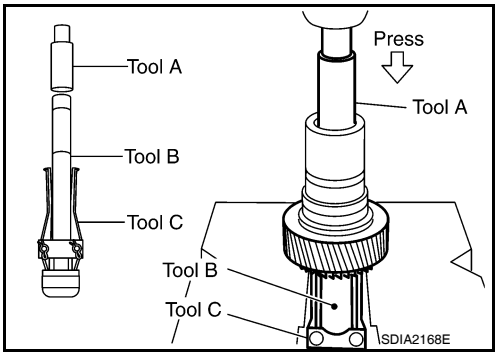

Center Case

1. Remove the rear case assembly. Refer to DLN-154, "Disassembly and Assembly".
2. Remove the front case assembly. Refer to DLN-154, "Disassembly and Assembly".
3. Hold the front drive shaft with one hand and tap to remove the front drive shaft with the drive chain.
   CAUTION:
   Do not tap drive chain.

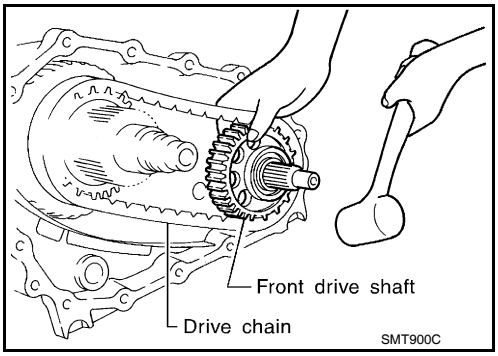

4. Remove the front drive shaft front bearing using Tools.

Tool number **A: ST33052000 (—)**
B: ST30031000 (—)

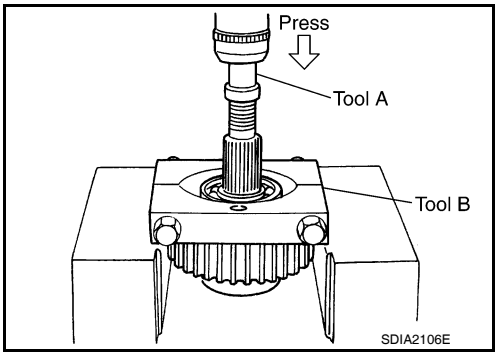

5. Remove the front drive shaft rear bearing using suitable tools.

Tool number **A: ST33052000 (—)**
B: ST30031000 (—)

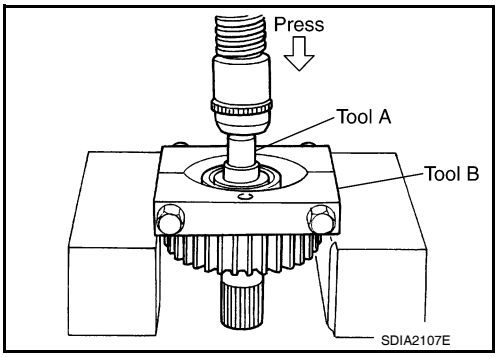

6. Remove the neutral-4LO and ATP switches.

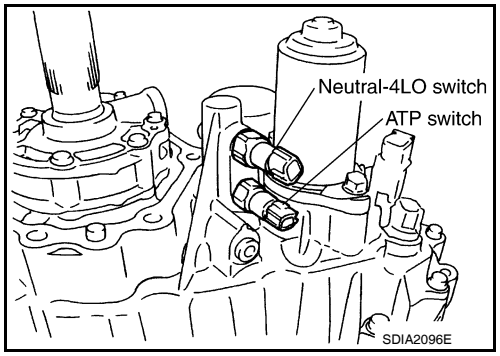

7. Remove the bolts and main oil pump cover.

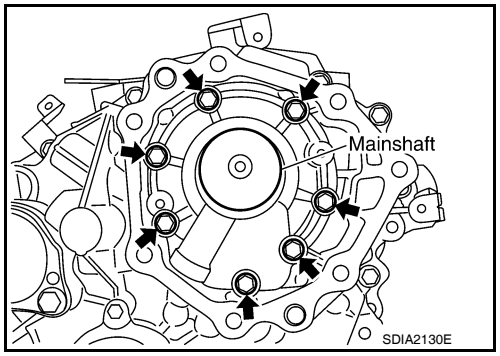

8. Remove the outer gear, inner gear and main oil pump housing from the center case.

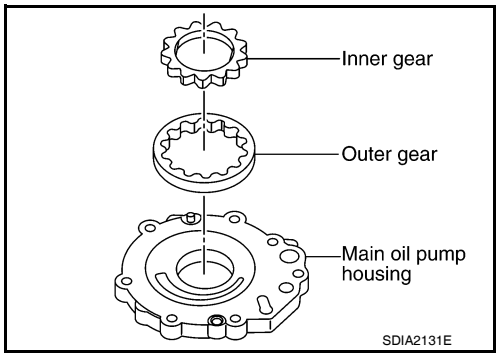

9. Remove the seal ring from the main oil pump cover.

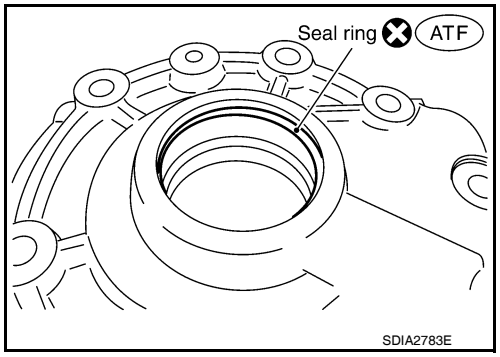

10. Remove the stem bleeder from the bleed hole.

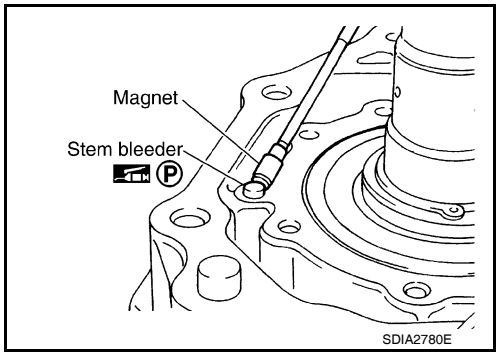

11. Remove the snap ring and washer holder from the mainshaft.

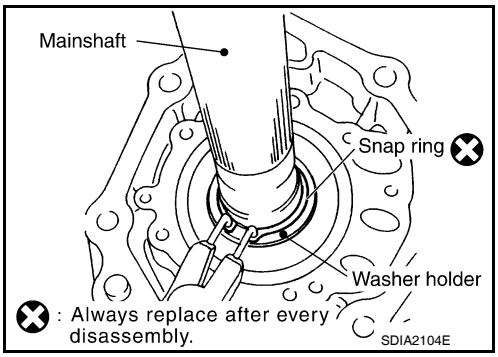

12. Remove the C-rings from the mainshaft using suitable tool.

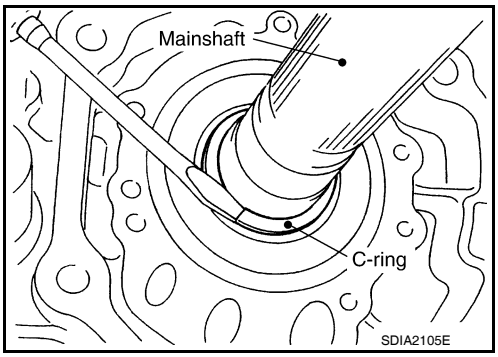

13. Set the center case on the press stand. Remove the mainshaft from the center case.

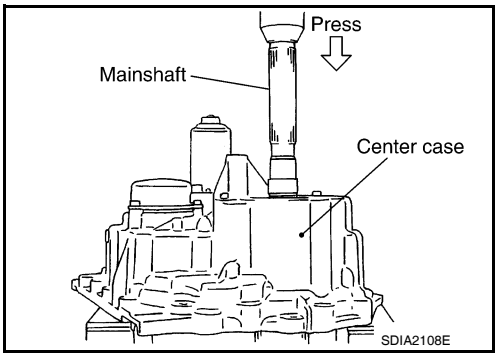

14. Remove the snap ring from the mainshaft using suitable tool.

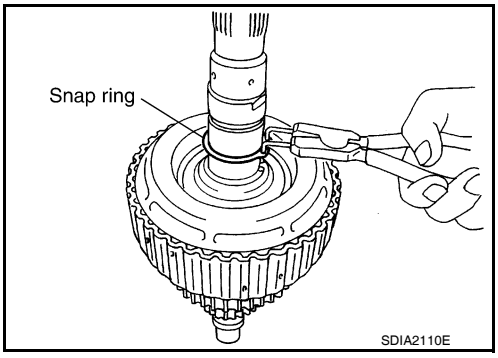

15. Remove the thrust needle bearing from the press flange.

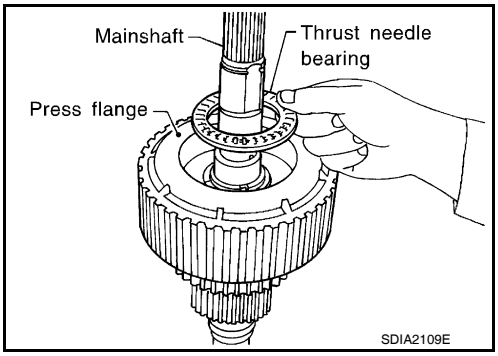

16. Press the press flange until the snap ring is out of place using Tools.

Tool number **A: ST22452000 (J-34335)**
B: ST30911000 (—)
C: KV31103300 (—)

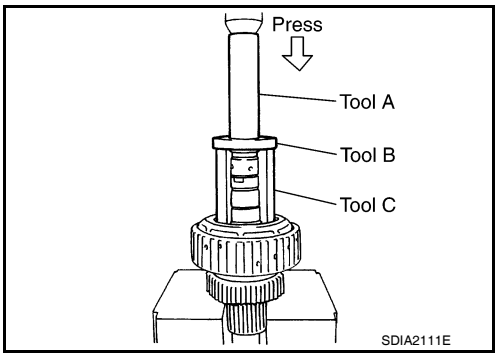

17. Remove the snap ring from the mainshaft using suitable tool.

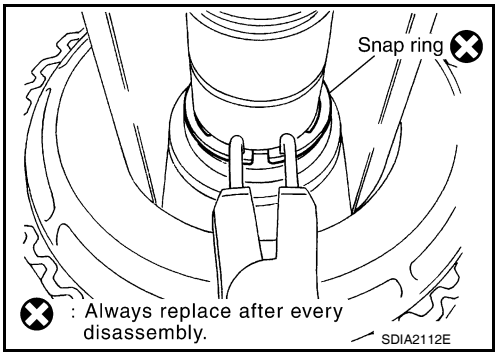

18. Remove the press flange from the mainshaft.

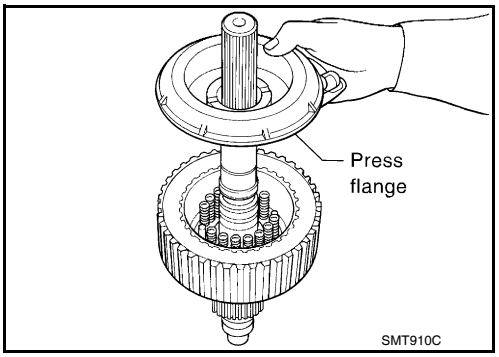

19. Remove the return spring assembly from the clutch hub.

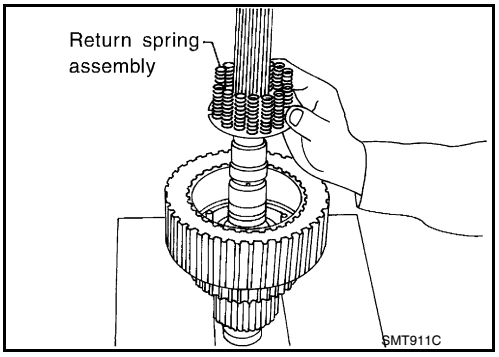

20. Remove each plate from the clutch drum.

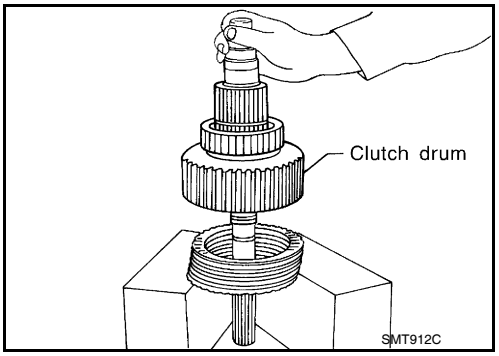

21. Remove the snap ring from the mainshaft.

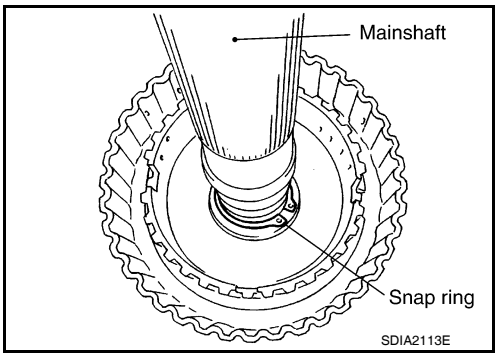

22. Remove the mainshaft from the clutch drum and clutch hub using suitable tool.
23. Remove the needle bearing and spacer from the mainshaft.

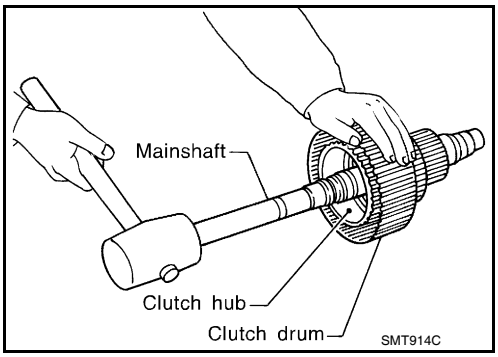

24. Remove the snap ring from the clutch hub using suitable tool.

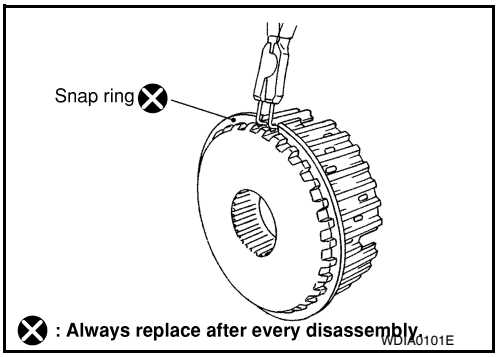

25. Remove the oil pressure check plug from the oil pressure check port.

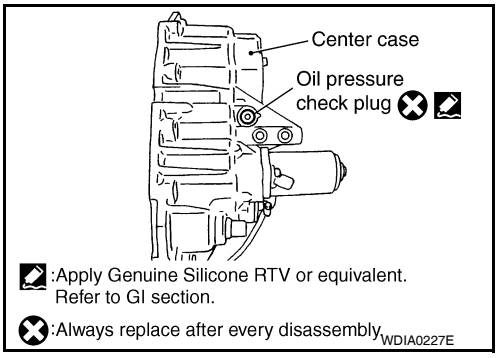

26. Apply air gradually from the oil pressure check port, and remove the clutch piston assembly from the center case.

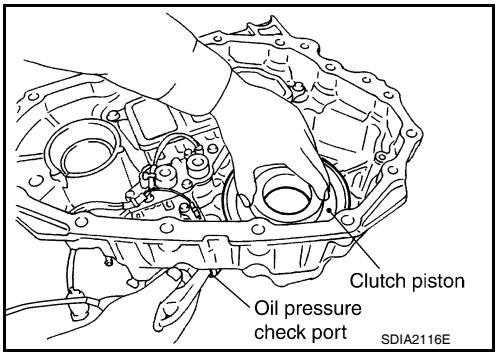

27. Remove the thrust needle bearing race from the clutch piston by hooking a edge into 3 notches of the thrust needle bearing race using suitable tool.
CAUTION:
Do not damage clutch piston or thrust needle bearing race.

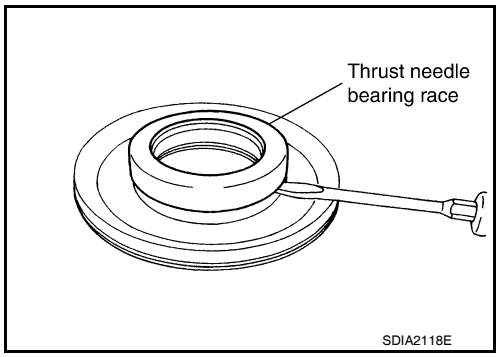

28. Remove the two D-rings from the clutch piston.

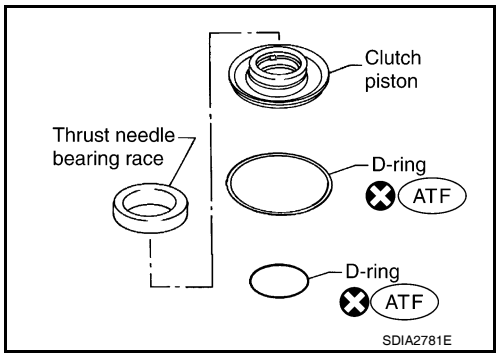

29. Remove the mainshaft rear bearing from the center case using Tool.

Tool number : KV38100300 (J-25523)

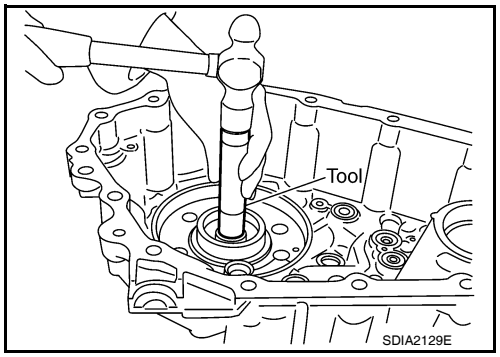

30. Remove the two bolts and oil strainer.

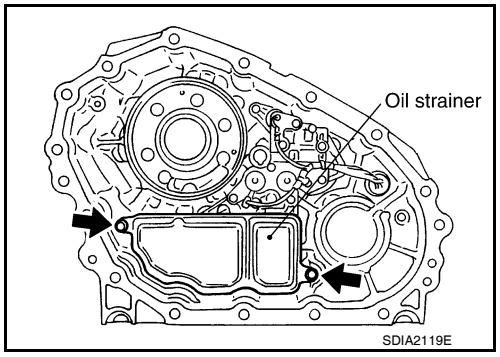

31. Remove the two O-rings from the oil strainer.

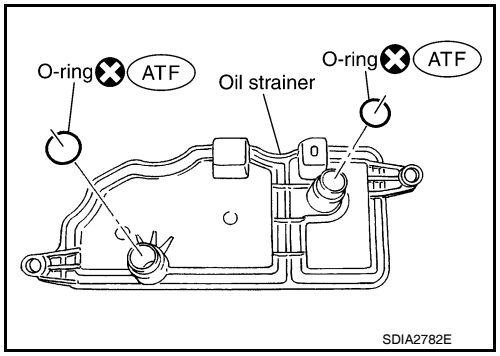

32. Remove the snap ring. Then push the connector assembly into the center case to remove the control valve assembly.

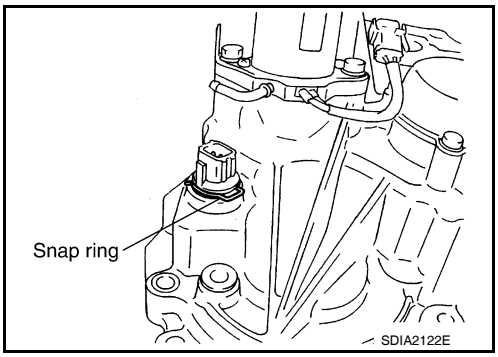

33. Remove the control valve assembly bolts.
34. Remove the control valve assembly.

CAUTION:
- **Do not reuse any part that has been dropped or damaged.**
- **Make sure valve is assembled in the proper direction.**
- **Do not use a magnet because residual magnetism stays during disassembly.**

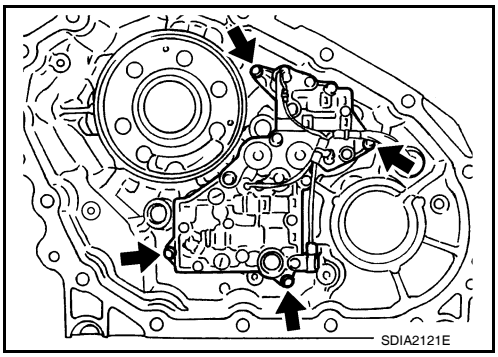

35. Remove the lip seals from the center case.

CAUTION:
There are two kinds of lip seals (lip seal of large inner diameter: 5 pieces, lip seal of small inner diameter: 2 pieces). Confirm the position before disassembly.

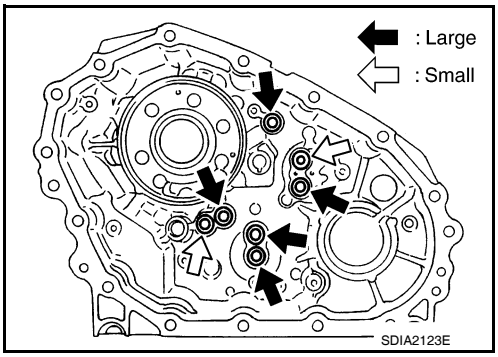

36. Remove the transfer motor bolts and motor from the center case. Then remove the O-ring from the transfer motor.

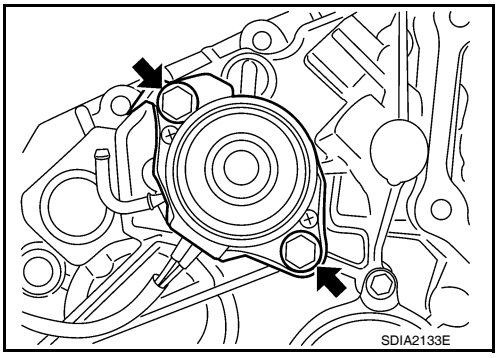

37. Remove the sub oil pump cover bolts.

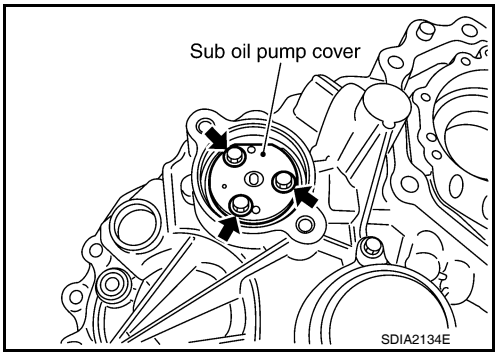

38. Thread two bolts (M4 x 0.8) into the holes of sub oil pump cover as shown, and pull out to remove the sub oil pump assembly.

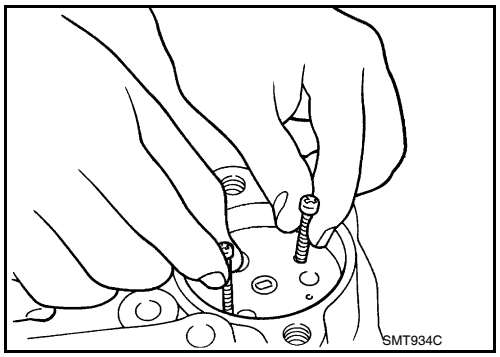

39. Remove the outer gear and inner gear from the sub oil pump housing.

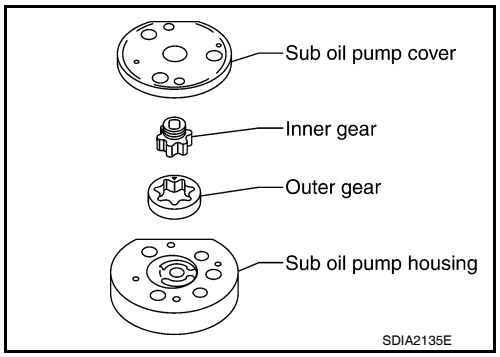

40. Remove the oil filter bolts and oil filter.
CAUTION:
- **Do not damage center case and oil filter.**
- **Loosen bolts and detach oil filter evenly.**

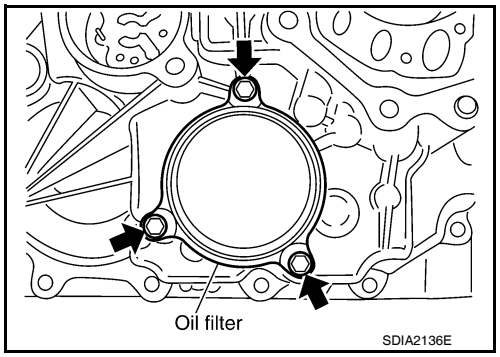

41. Remove the O-rings (1) from the oil filter (2).

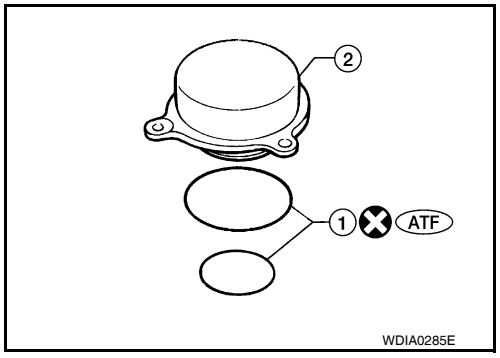

42. Remove the oil filter stud from the oil filter.
43. Remove the O-ring from the oil filter stud.

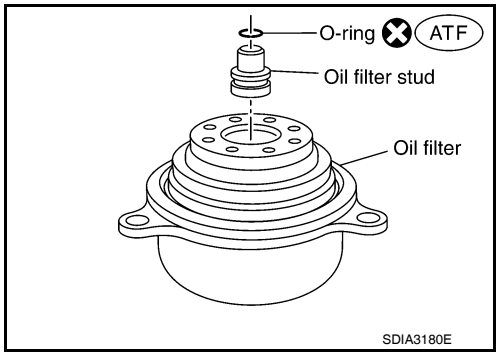

Control Valve Assembly

1. Disassemble the control valve assembly with the following procedure.
   CAUTION:
   - **Do not reuse any part that has been dropped or damaged.**
   - **Make sure valve is assembled in the proper direction.**
   - **Do not use a magnet because residual magnetism stays during disassembly.**

a. Remove all the bolts except for the two shown.

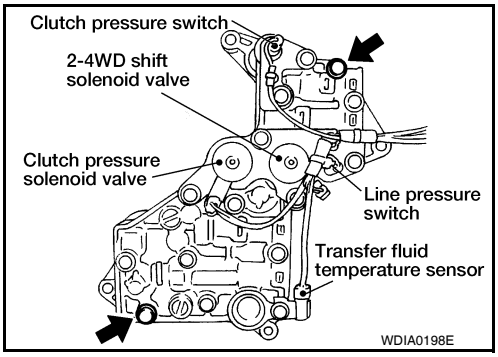

b. Remove the following from the control valve assembly:
   - Clutch pressure solenoid valve
   - Clutch pressure switch
   - 2-4WD shift solenoid valve
   - Line pressure switch
   - Transfer fluid temperature sensor

c. Remove the O-rings from each solenoid valve, switch and terminal body.

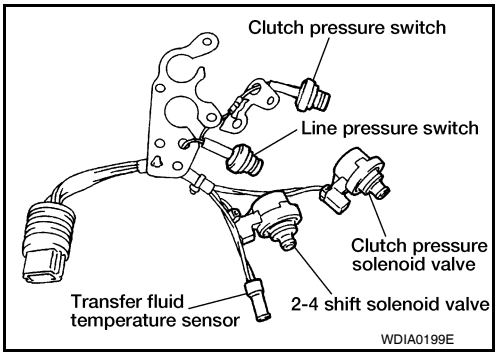

d. Place the control valve with the lower body facing up. Remove the two bolts, and then remove the lower body and separator plate from the upper body.
   CAUTION:
   Do not drop relief balls. Detach lower body carefully.

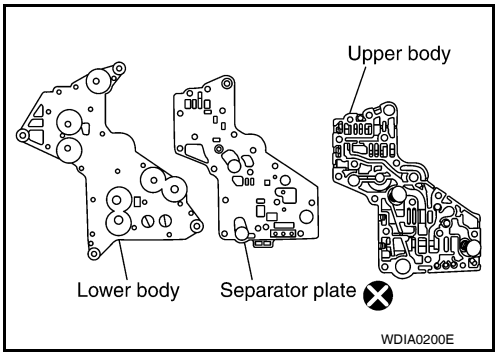

e. Make sure the reverse balls, relief balls, relief springs, accumulator pistons and valve springs are securely installed as shown, and remove them.

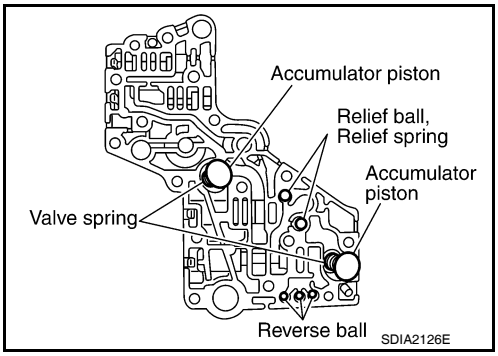

f. Remove the retainer plates.

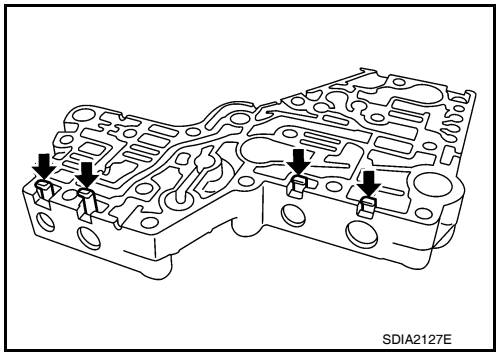

g. Remove each retainer plate (1), plug (2), control valve (3) and spring (4) from the upper body (5).

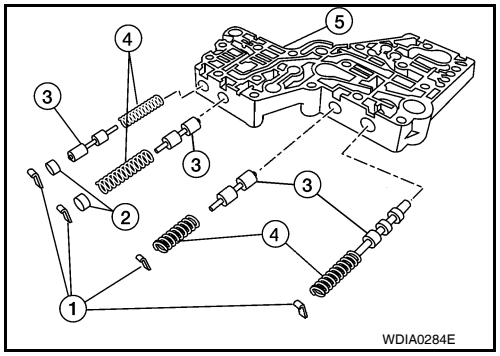

INSPECTION AFTER DISASSEMBLY

Shift Rod Components

- Check the working face of the shift rod and fork for wear, partial wear, bending and other abnormality. If any is found, replace with a new one.

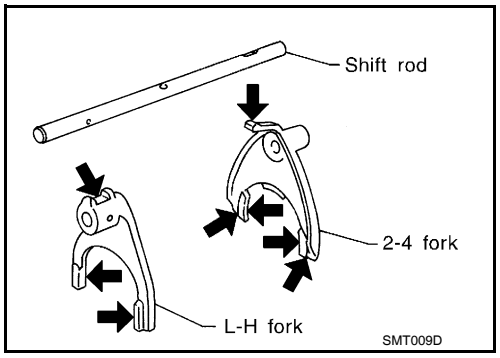

- Measure the clearance between the shift fork and sleeve. If it is out of specification, replace it with a new one.

Specification **Refer to DLN-189, "Inspection and Adjustment"**

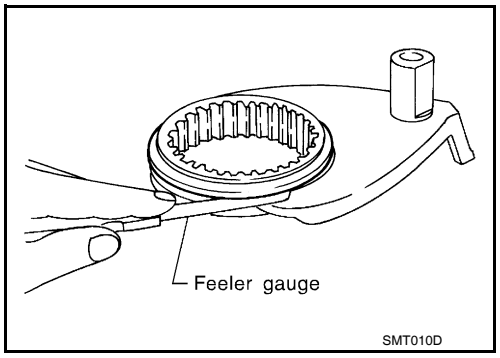

Planetary Carrier

- Measure the end play of each pinion gear. If it is out of specification, replace the planetary carrier assembly with a new one.

Pinion gear end play **Refer to DLN-189, "Inspection and Adjustment"**

- Check the working face of each gear and bearing for damage, burrs, partial wear, dents and other abnormality. If any is found, replace the planetary carrier assembly with a new one.

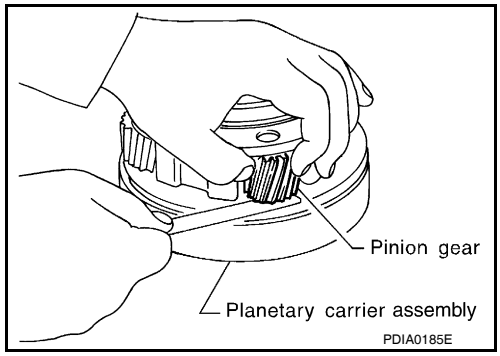

Sun Gear

- Check if the oil passage of the sun gear assembly is clogged. For this, try to pass a 3.6 mm (0.142 in) dia. pin through the oil passage as shown.
- Check the sliding and contact surface of each gear and bearing for damage, burrs, partial wear, dents, and other abnormality. If any is found, replace the sun gear assembly with a new one.

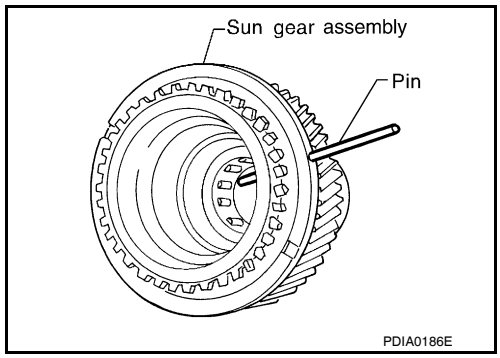

Internal Gear

- Check the internal gear teeth for damage, partial wear, dents and other abnormality. If any is found, replace the internal gear with a new one.

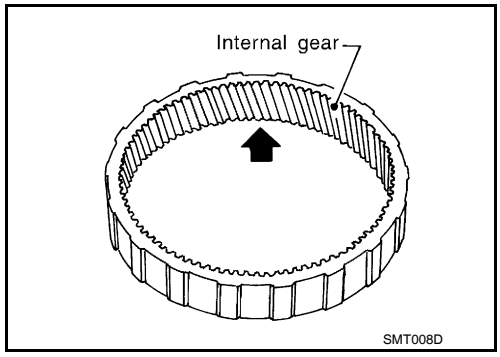

Gears and Drive Chain

- Check the gear faces and shaft for wear, cracks, damage, and seizure.
- Check the surfaces which contact the sun gear, clutch drum, clutch hub, press flange, clutch piston and each bearing for damage, peel, partial wear, dents, bending, or other abnormal damage. If any is found, replace with a new one.

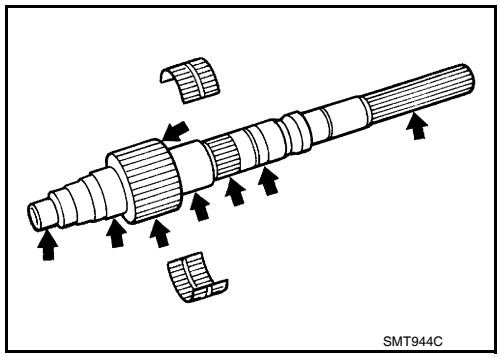

Bearing

- Make sure the bearings roll freely and are free from noise, pitting and cracks.

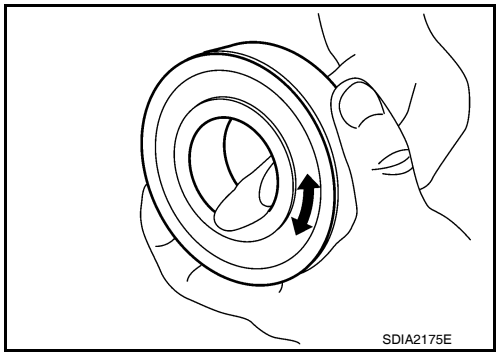

Main Oil Pump

1. Check the inner and outer circumference, tooth face, and side-face of the inner and outer gears for damage or abnormal wear.
2. Measure the side clearance between the main oil pump housing edge and the inner and outer gears.
3. Make sure the side clearance is within specification. If the measurement is out of specification, replace the inner and outer gears with new ones as a set. Refer to DLN-189, "Inspection and Adjustment".

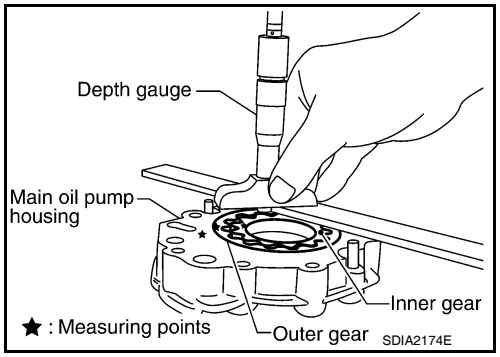

Specification **Refer to DLN-189, "Inspection and Adjustment"**

Sub-oil Pump

1. Check the inner and outer circumference, tooth face, and side-face of the inner and outer gears for damage or abnormal wear.
2. Measure the side clearance between the sub oil pump housing edge and the inner and outer gears.
3. Make sure the side clearance is within specification. If the measurement is out of specification, replace the inner and outer gears with new ones as a set. Refer to DLN-189, "Inspection and Adjustment".

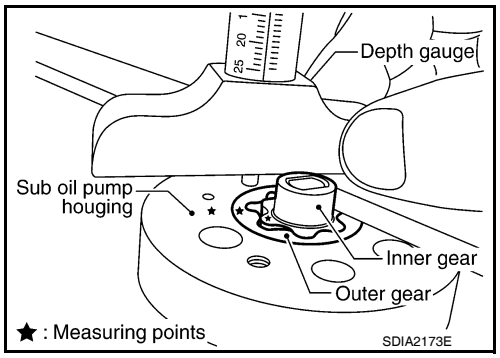

Specification **Refer to DLN-189, "Inspection and Adjustment"**

Control Valve

- Check resistance between the terminals of the clutch pressure solenoid valve, 2-4WD shift solenoid valve, clutch pressure switch, line pressure switch and the transfer fluid temperature sensor. Refer to DLN-63, "Component Inspection" (clutch pressure solenoid valve), DLN-67, "Component Inspection" (2-4WD solenoid valve), DLN-79, "Component Inspection" (clutch pressure switch), DLN-82, "Component Inspection" (line pressure switch) and DLN-75, "Component Inspection" (transfer fluid temperature sensor).

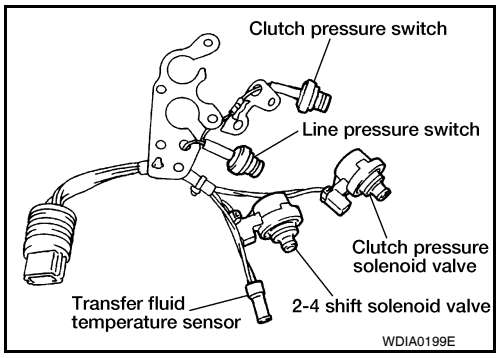

- Check the sliding faces of the control valves and plugs for abnormality. If any is found, replace the control valve assembly with a new one. Refer to DLN-189, "Inspection and Adjustment".
  CAUTION:
  Replace control valve body together with clutch return spring as a set.

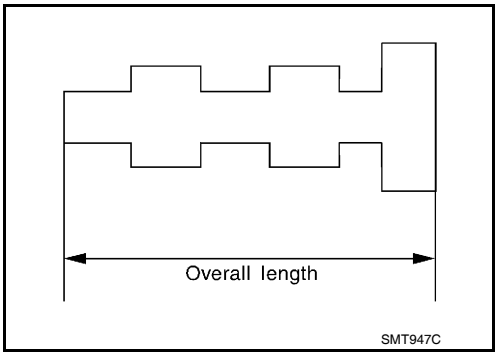

- Check each control valve spring for damage or distortion. Also check its free length, outer diameter and wire diameter. If any damage or fatigue is found, replace the control valve body with a new one. Refer to DLN-189, "Inspection and Adjustment".
  CAUTION:
  Replace control valve body together with clutch return spring as a set.

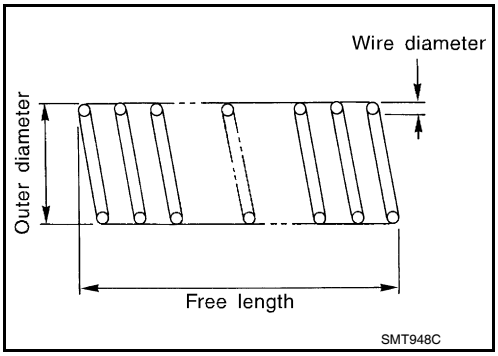

Clutch

- Check the drive plate facings and driven plate for damage, cracks or other abnormality. If any abnormalities are found, replace with a new one.
- Check the thickness of the drive plate facings and driven plate. Refer to DLN-189, "Inspection and Adjustment".
  CAUTION:
  - **Measure facing thickness at 3 points to take an average.**
  - **Check all drive and driven plates.**
  - **Check return spring for damage or deformation.**
  - **Do not remove spring from plate.**

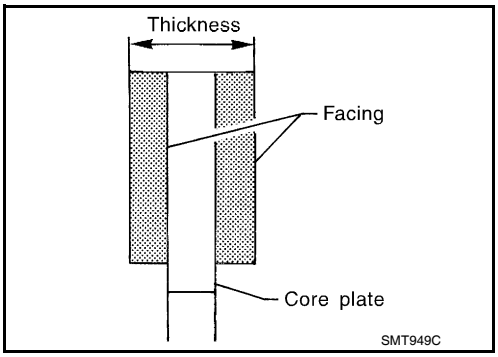

Return Spring

- Check the stamped mark shown. Then, check that the free lengths, (include thickness of plate) are within specifications. If any abnormality is found, replace with a new return spring assembly of the same stamped number. Refer to DLN-189, "Inspection and Adjustment".

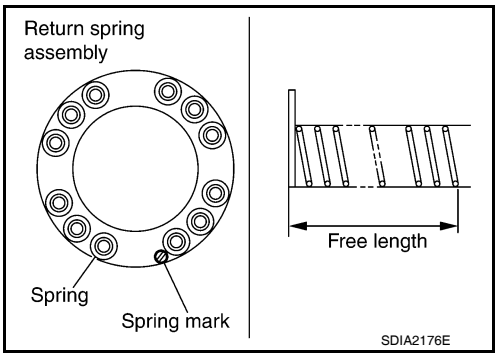

ASSEMBLY

Control Valve Assembly

1. Assemble the control valve assembly with the following procedure.
   CAUTION:
   - **Do not reuse any part that has been dropped or damaged.**
   - **Make sure valve is assembled in the proper direction.**
   - **Do not use a magnet because residual magnetism stays during assembly.**

a. Clean the upper body (5), control valves (3) and springs (4) with cleaning agent, and dry with compressed air.

b. Dip the control valves in ATF, and apply ATF to the valve-mounting area of the upper body.

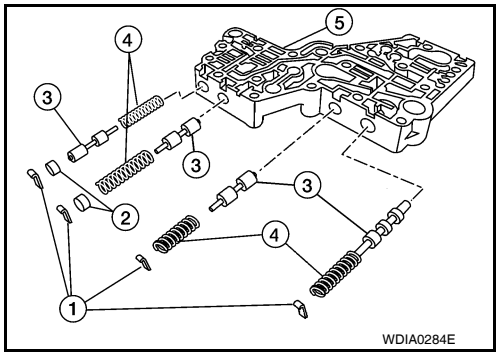

c. Install each control valve (3), springs (4), and plugs (2) to the upper body (5), and install retainer plates (1) to hold them in place.

CAUTION:
- **To insert control valves into upper body, place upper body on a level surface in order to prevent flaw or damage.**
- **Make sure each control valve is smoothly inserted.**

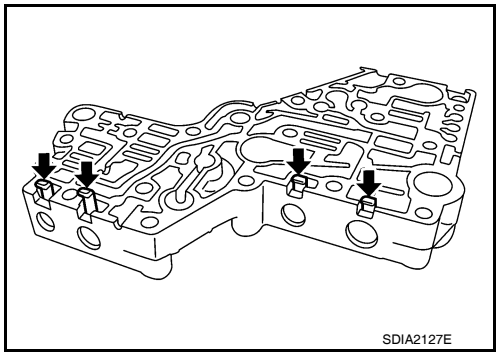

d. Install the reverse balls, relief balls and relief springs, accumulator pistons and valve springs to the upper body.

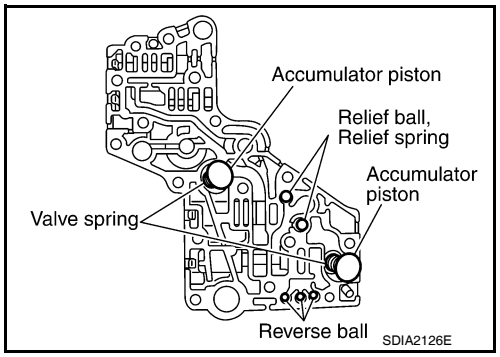

e. Install the lower body and separator plate to the upper body.

CAUTION:
Do not reuse separator plates.

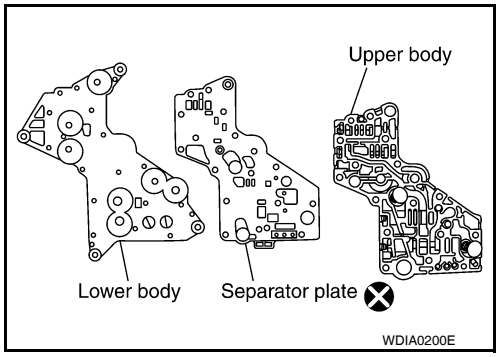

f. With the lower body down, tighten the two bolts shown.

g. Apply ATF to the new O-rings, and install them to each solenoid valve, switch and terminal body.

CAUTION:
Do not reuse O-rings.

h. Install the following to the control valve assembly:
- Clutch pressure solenoid valve
- Clutch pressure switch
- 2-4WD shift solenoid valve
- Line pressure switch
- Transfer fluid temperature sensor

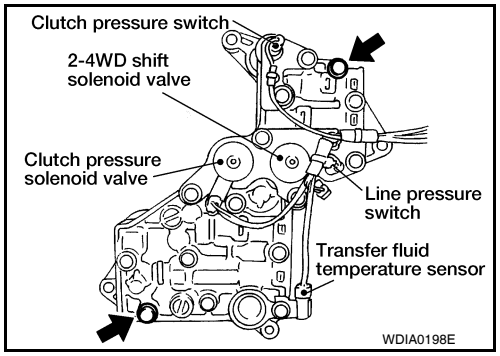

Center Case

1. Apply ATF to the new O-ring, and install it on the oil filter stud.
   CAUTION:
   Do not reuse O-rings.
2. Install the oil filter stud to the oil filter.

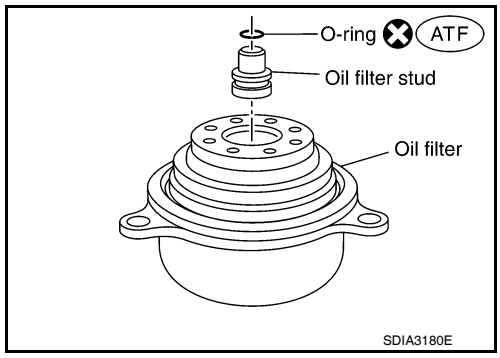

3. Apply ATF to the two new O-rings (1), and install them on the oil filter (2).
   CAUTION:
   Do not reuse O-rings.

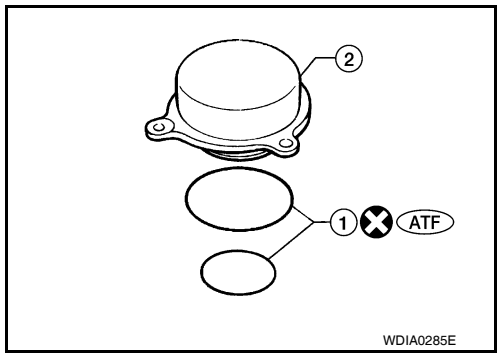

4. Install the oil filter to the center case. Tighten the bolts to the specified torque. Refer to DLN-152, "Component Parts Location".
   CAUTION:
   - **Do not damage oil filter.**
   - **Attach oil filter and tighten bolts evenly.**

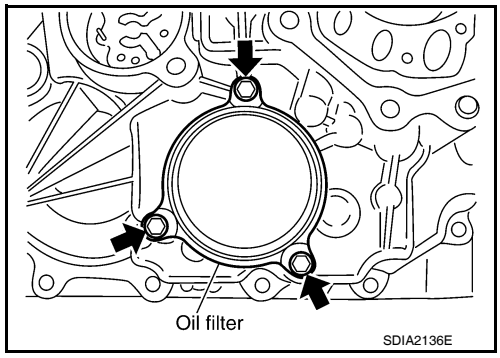

5. Install the outer gear and inner gear into the sub oil pump housing, and measure the side clearance. Refer toDLN-189, "Inspection and Adjustment".

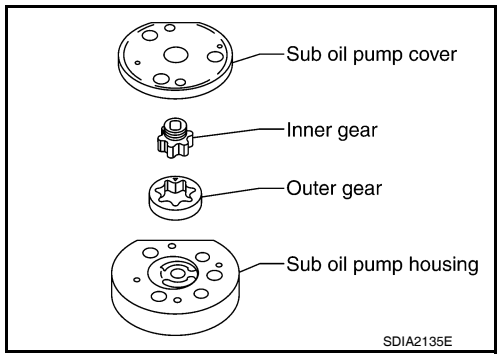

6. Align the dowel pin hole and bolt hole of the sub oil pump assembly with the center case. Install the sub oil pump cover. Then tighten to the specified torque. Refer to DLN-152, "Component Parts Location".

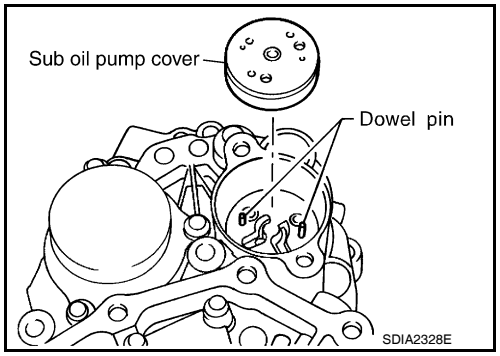

7. Apply ATF to the new O-ring and install it to the transfer motor.
CAUTION:
Do not reuse O-rings.
8. Fit the double-flat end of the transfer motor shaft into the slot of the sub-oil pump assembly. Then tighten to the specified torque. Refer to DLN-152, "Component Parts Location".
CAUTION:
Be sure to install connector bracket.

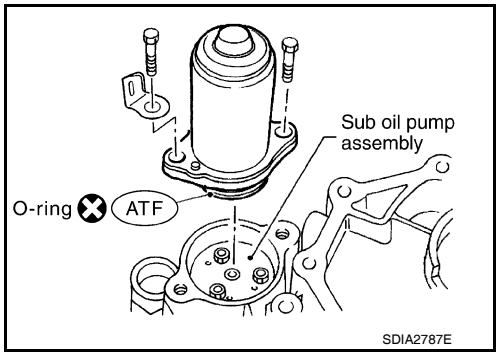

9. Apply ATF to the new lip seals, and install them to the center case.
CAUTION:
- **Do not reuse lip seals.**
- **There are 2 kinds of lip seals (lip seal of large inner diameter: 5 pieces, lip seal of small inner diameter: 2 pieces). Confirm their position for installation.**

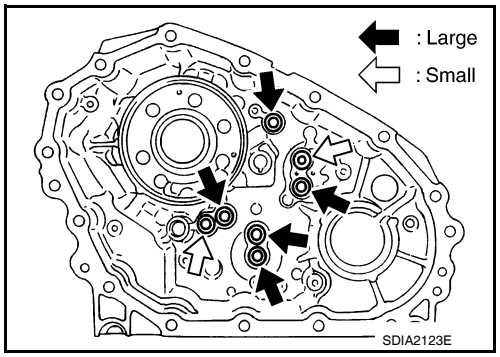

10. Install the control valve assembly to the center case, and tighten to the specified torque. Refer to DLN-152, "Component Parts Location".
CAUTION:
- **Do not reuse any part that has been dropped or damaged.**
- **Make sure valve is assembled in the proper direction.**
- **Do not use a magnet because residual magnetism stays during assembly.**

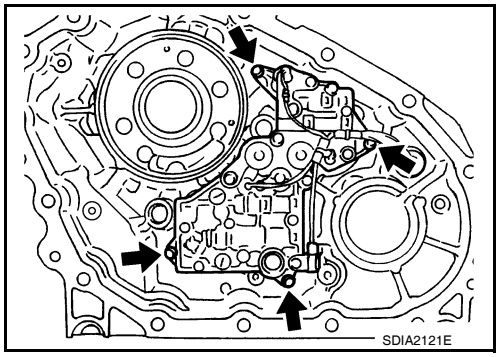

11. Install the connector assembly into the center case, and secure with a snap ring.

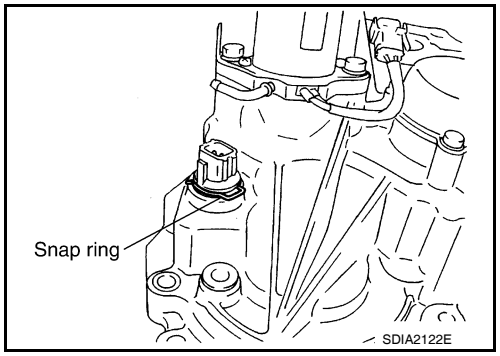

12. Apply ATF to the new O-rings, and install them on the oil strainer.
    CAUTION:
    Do not reuse O-rings.
13. Install the oil strainer to the control valve assembly.

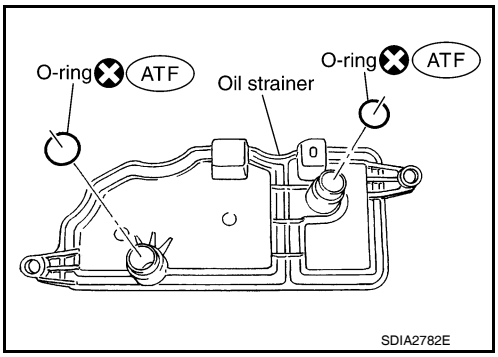

14. Tighten the bolts to the specified torque. Refer to DLN-152, "Component Parts Location".

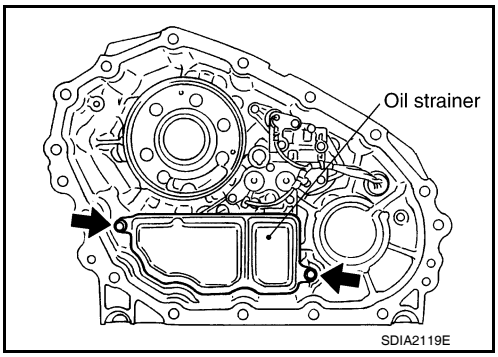

15. Apply ATF to the new D-rings, and install them to the clutch piston.
    CAUTION:
    Do not reuse D-rings.

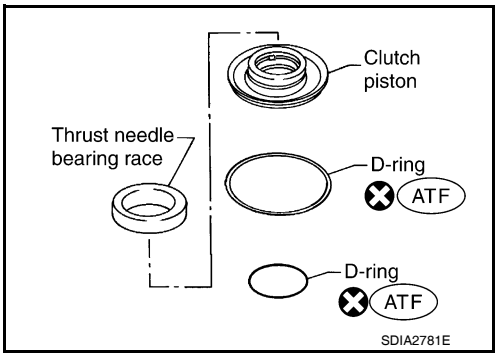

16. Install the thrust needle bearing race to the clutch piston.

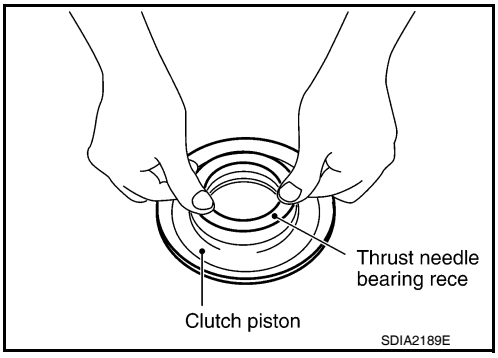

17. Install the clutch piston to the center case as shown.
    CAUTION:
    Install so the fitting protrusion of clutch piston aligns with the dent of center case.

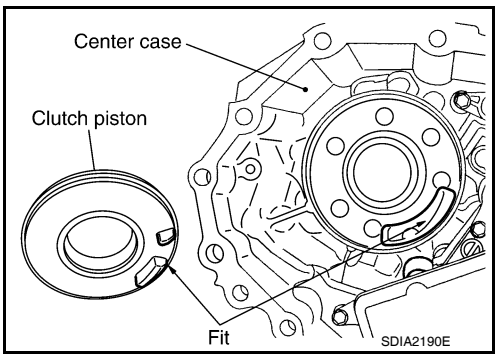

18. Remove all the sealant from the oil pressure check port and inside the center case.
CAUTION:
Remove old sealant adhering to mating surfaces. Also remove any moisture, oil, or foreign material adhering to application and mating surfaces.

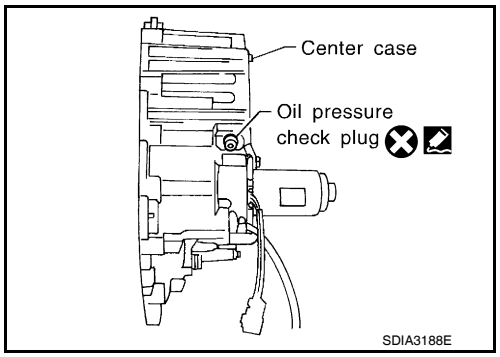

19. Thread the new oil pressure check plug in 1 or 2 pitches and apply sealant to the oil pressure check plug threads. Tighten to the specified torque. Refer to DLN-152, "Component Parts Location".
- **Use Genuine Silicone RTV or equivalent. Refer to GI-14, "Recommended Chemical Products and Sealants".**

CAUTION:
Do not reuse oil pressure check plug.

20. Install the new snap ring to the clutch hub using suitable tool.
CAUTION:
Do not reuse snap ring.

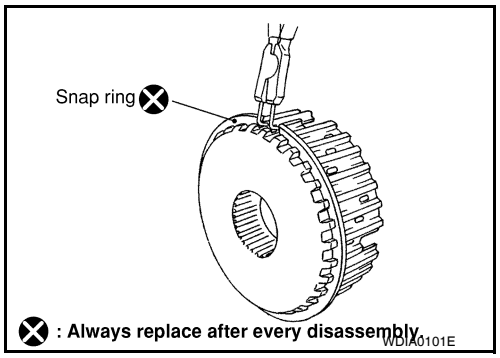

21. Apply petroleum jelly to the needle bearing, and install the needle bearing, spacer, clutch drum and clutch hub to the mainshaft.

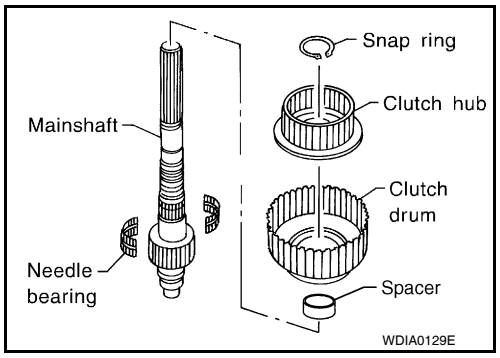

22. Install the new snap ring to the mainshaft.
CAUTION:
Do not reuse snap rings.

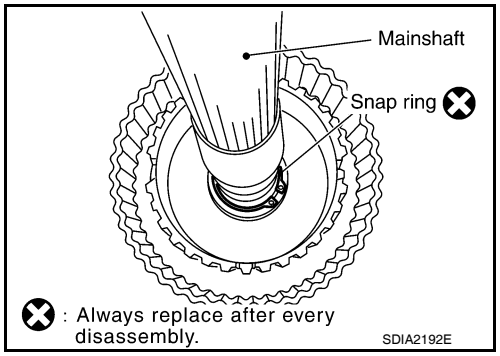

23. Apply ATF each plate, then install them into the clutch drum as shown.

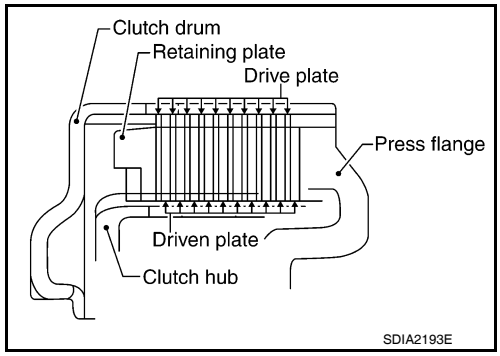

24. Install the return spring assembly into the clutch hub.

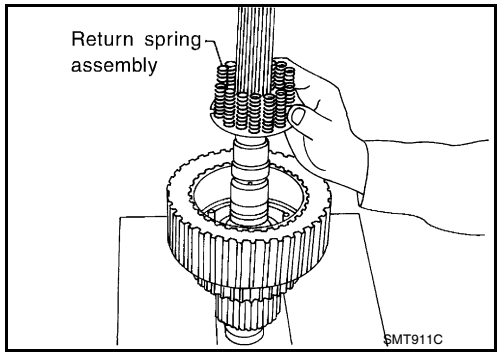

25. Install the press flange by aligning the notches to the clutch hub as shown.

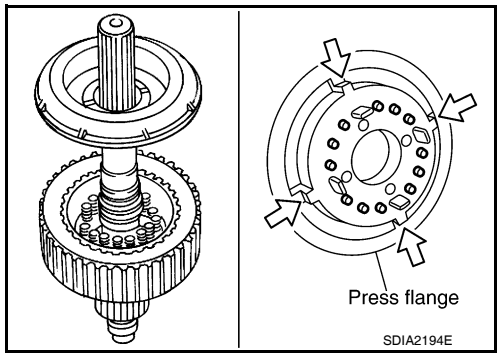

26. Press the press flange to install the new snap ring into snap ring groove on mainshaft using Tools.

Tool number	**A: ST22452000 (J-34335)**
	B: ST30911000 (—)
	C: KV31103300 (—)

CAUTION:
Do not reuse snap ring.

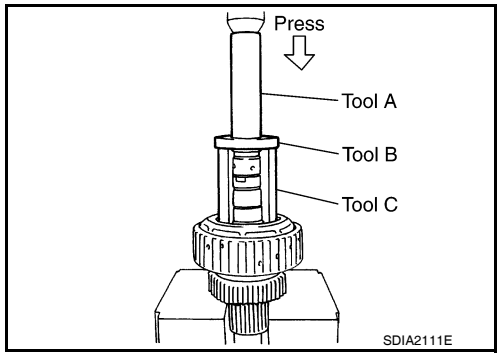

27. Install the new snap ring to the mainshaft using suitable tool.
CAUTION:
Do not reuse snap ring.

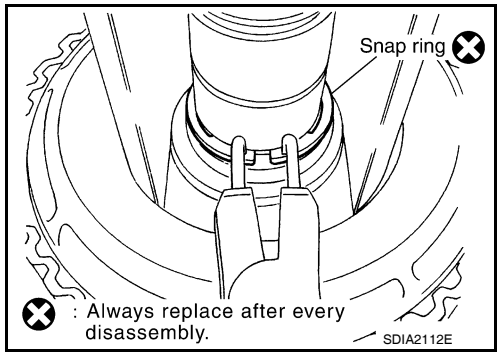

28. Apply ATF to the thrust needle bearing and install it on the press flange.

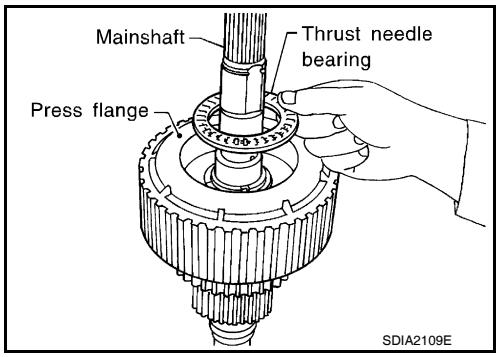

29. Install the new snap ring to the main shaft.
CAUTION:
Do not reuse snap ring.

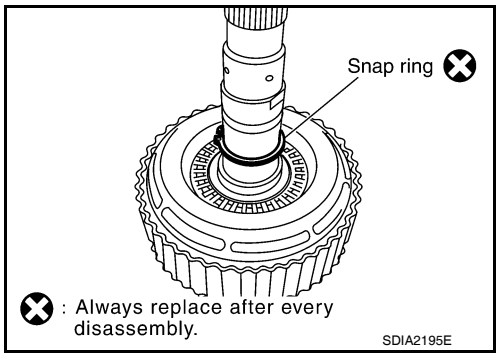

30. Install the mainshaft rear bearing to the center case using Tool.

Tool number : ST15310000 (J-25640-B)

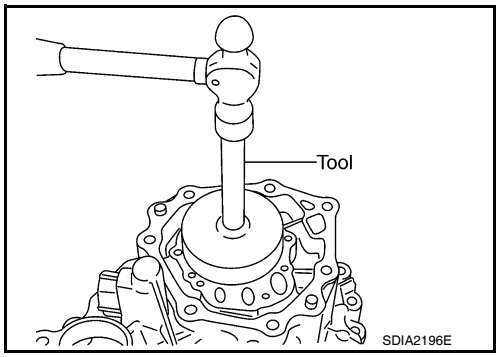

31. Install the mainshaft assembly using a press.
• Press the mainshaft into the center case using Tools.

Tool number A: ST30911000 (—)
B: ST35300000 (—)

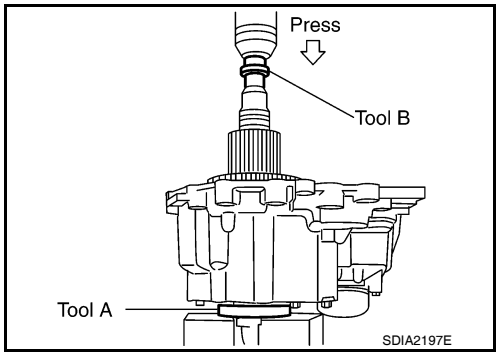

32. Install the C-rings to the mainshaft.

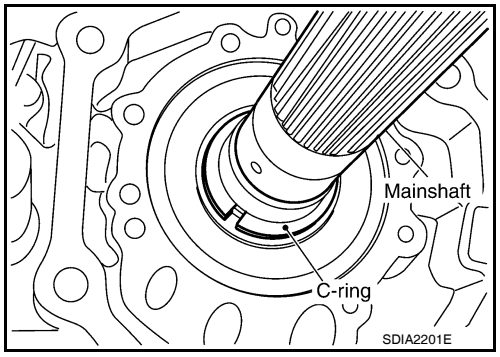

33. Set the washer holder on the mainshaft, and secure it with a new snap ring.
CAUTION:
Do not reuse snap ring.

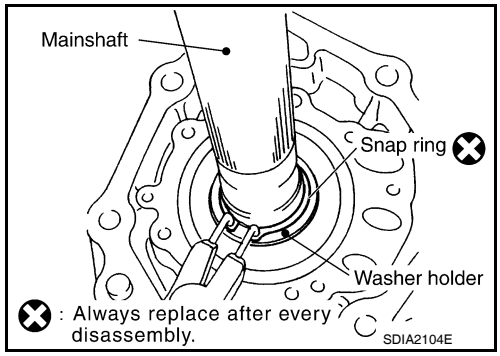

34. Apply petroleum jelly to the stem bleeder and install it to the center case.

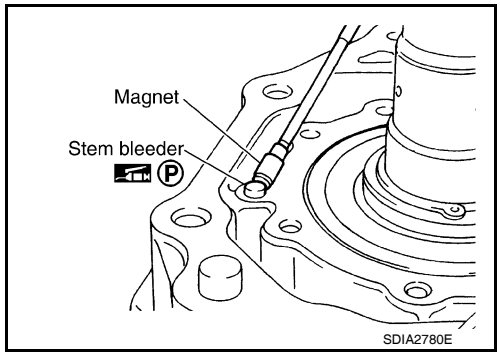

35. Apply ATF to the new seal ring and install it to the main oil pump cover.
CAUTION:
Do not reuse seal ring.

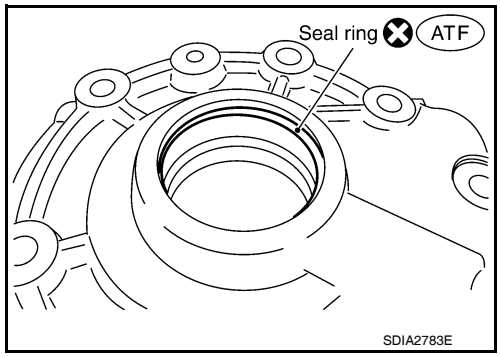

36. Install the inner gear and outer gear in the main oil pump housing. Then, measure the side clearance. Refer to DLN-189, "Inspection and Adjustment".

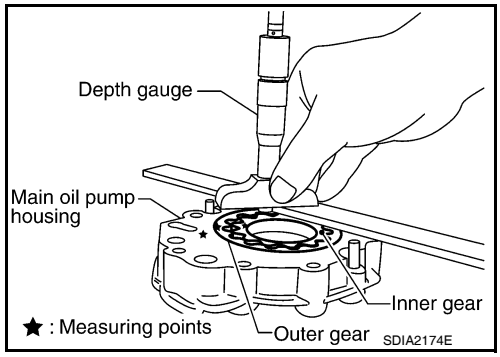

37. Install the main oil pump housing, outer gear and inner gear to the center case.

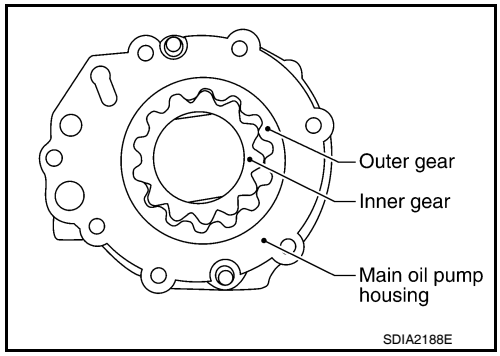

38. Install the main oil pump cover to the center case, and tighten to the specified torque. Refer to DLN-152, "Component Parts Location".

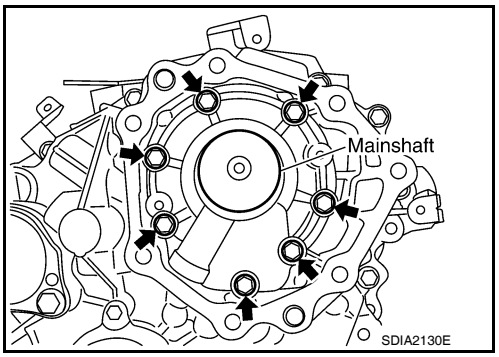

39. Remove all the sealant from the switch location area and inside the center case.
CAUTION:
Remove old sealant adhering to mounting surfaces. Also remove any moisture, oil, or foreign material adhering to application and mounting surfaces.
40. Thread the ATP switch and neutral-4LO switch in one to two pitches and apply sealant to the threads of the switches. Tighten to the specified torque. Refer to DLN-152, "Component Parts Location".
    - **Use Genuine Silicone RTV or equivalent. Refer to GI-14, "Recommended Chemical Products and Sealants".**

NOTE:
- Neutral-4LO switch harness connector is gray.
- ATP switch harness connector is black.

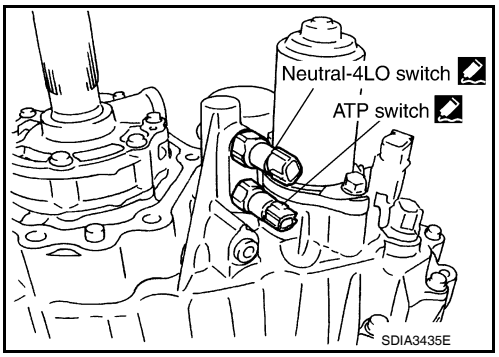

41. Install the front drive shaft rear bearing using Tools.

Tool number	**A: KV40100621 (J-25273)**
	B: ST30032000 (J-26010-01)

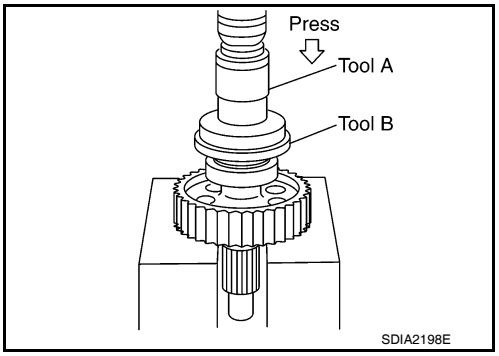

42. Install the front drive shaft to the front bearing using Tools.

Tool number	**A: KV40100621 (J-25273)**
	B: ST30032000 (J-26010-01)

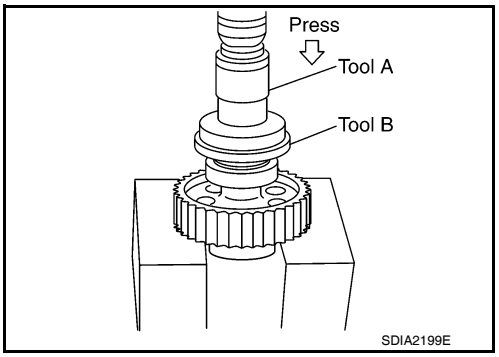

43. Install the drive chain to the front drive shaft and clutch drum.
    CAUTION:
    Install drive chain by aligning identification marks to the rear as shown.

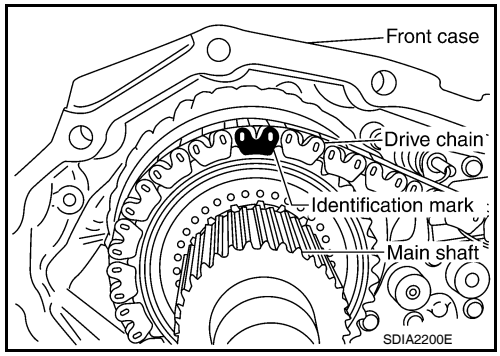

44. Tap the front drive shaft while keeping it upright and press-fit the front drive shaft rear bearing.
    CAUTION:
    Do not tap drive chain.
45. Install the front case assembly.
46. Install the rear case assembly.

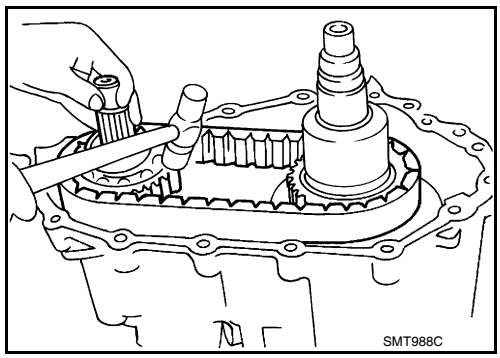

Front Case

1. Install the carrier bearing to the sun gear using Tools.

Tool number	**A: ST30911000 (—)**
	B: KV31103300 (—)

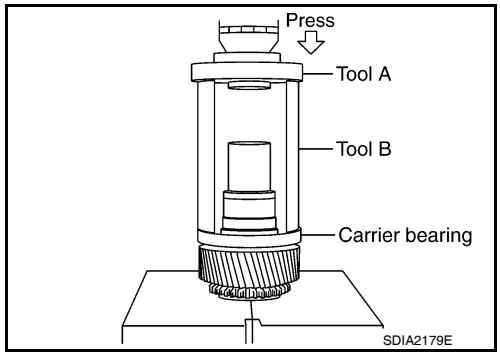

2. Install the new snap ring to the sun gear assembly using suitable tool.
    CAUTION:
    Do not reuse snap ring.

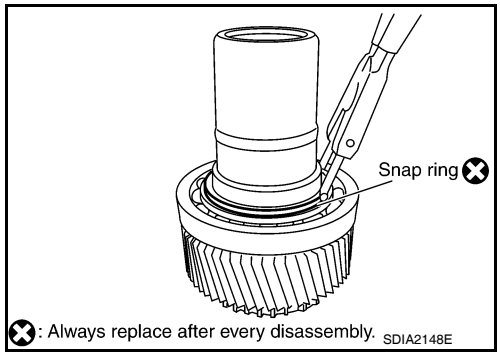

3. Apply ATF to the circumference of the new metal bushing and install it to the sun gear assembly using suitable tool.

Dimension A	**: 7.7 - 8.3 mm (0.303 - 0.327 in)**

CAUTION:
- **Do not reuse metal bushing.**
- **Apply ATF to metal bushing before installing.**

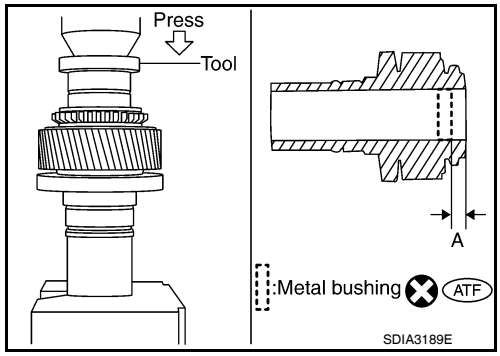

4. Apply ATF to the new needle bearing and install it to the sun gear assembly using Tool.

Tool number : ST33220000 (—)

Dimension B : 62.5 - 63.1 mm (2.461 - 2.484 in)

CAUTION:
- **Do not reuse needle bearing.**
- **Apply ATF to needle bearing before installing.**

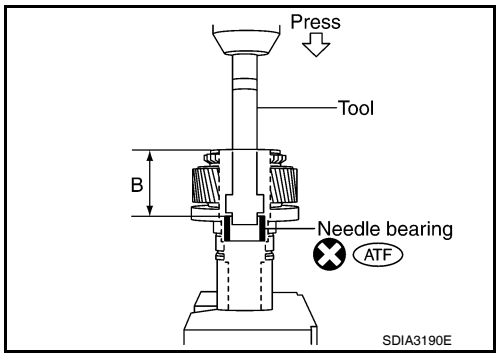

5. Install the sun gear assembly to the planetary carrier assembly.

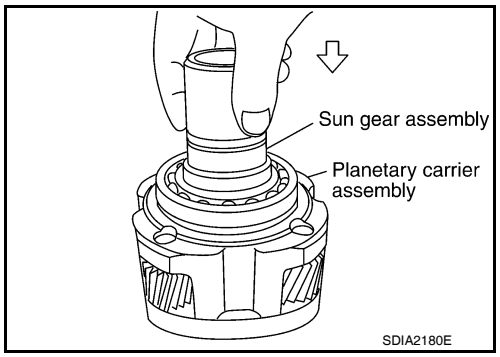

6. Install the new snap ring to the planetary carrier assembly.
CAUTION:
Do not reuse snap ring.

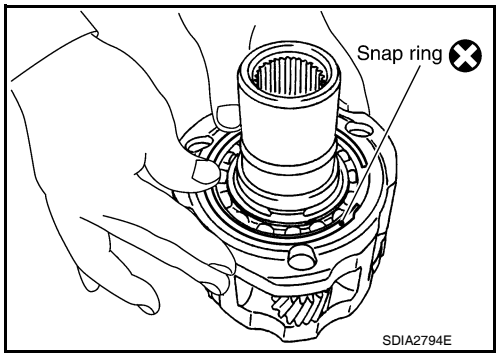

7. Set the input bearing into the front case and install using Tool.

Tool number : ST30720000 (J-25405)

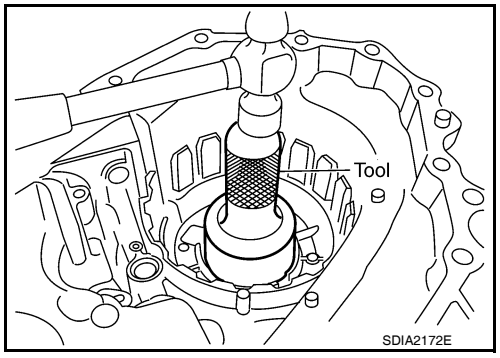

8. Install the new snap ring into the front case.
CAUTION:
Do not reuse snap ring.

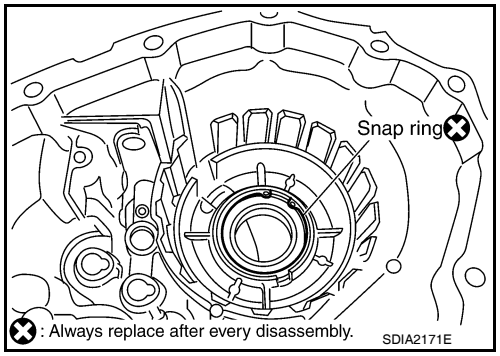

9. Install the internal gear with its groove facing the snap ring into the front case. Then secure it with the new snap ring.
CAUTION:
Do not reuse snap ring.

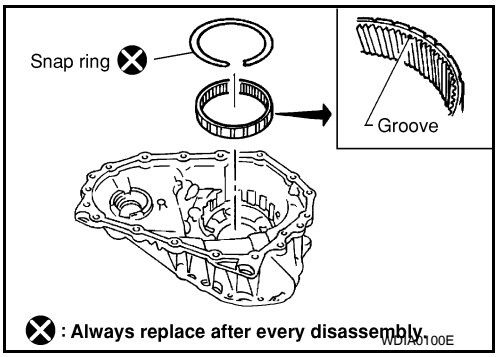

10. Install the new front oil seal until it is seated flush with the end face of the front case using Tool.

Tool number : KV38100500 (—)

CAUTION:
- **Do not reuse oil seal.**
- **Apply petroleum jelly to oil seal lip before installing.**

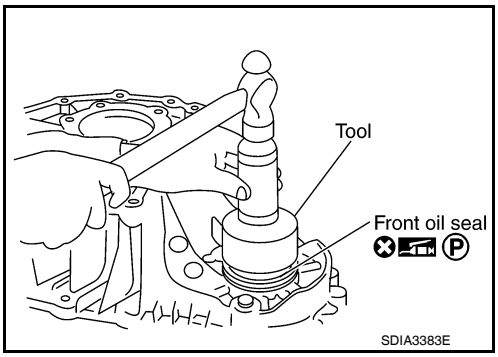

11. Install the planetary carrier assembly and sun gear assembly to the front case using Tool.

Tool number : ST33200000 (J-26082)

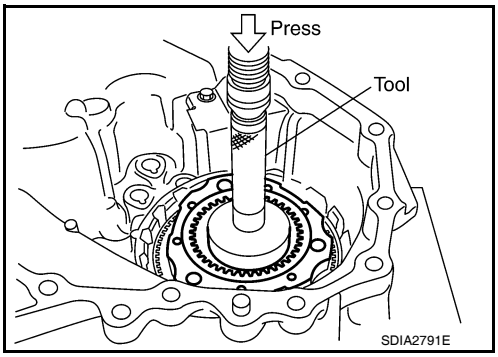

12. Install the new snap ring to the sun gear.
CAUTION:
Do not reuse snap ring.

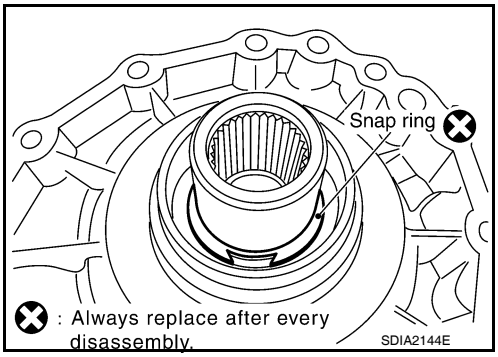

13. Apply petroleum jelly to the circumference of the new oil seal, and install it to the front case using Tools.

Tool numbers A: ST30720000 (J-25405)
B: ST33200000 (J-26802)

Dimension (A) : 4.0 - 4.6 mm (0.157 - 0.181 in)

CAUTION:
- **Do not reuse oil seal.**
- **Apply petroleum jelly to oil seal.**

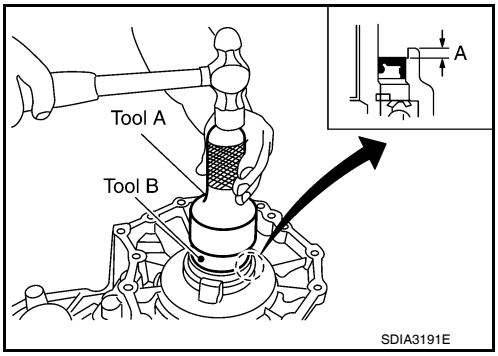

14. Install the fork guide, shift fork spring, 2-4 fork, and L-H fork to the shift rod, and secure them with new retaining pins.
CAUTION:
Do not reuse retaining pins.

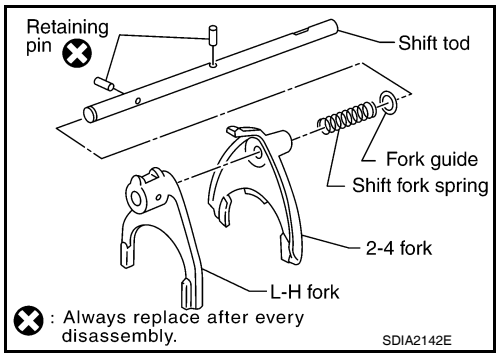

15. Install the 2-4 sleeve and L-H sleeve to each fork.
16. Install the shift cross to the front case.

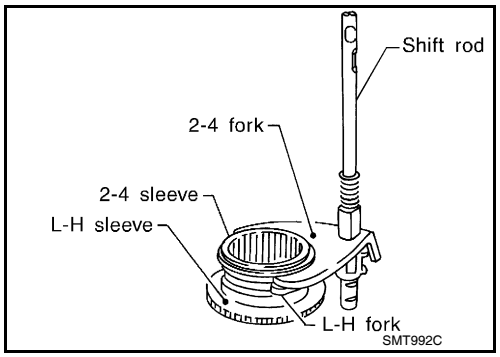

17. While aligning the L-H sleeve with the planetary carrier, install the shift rod assembly (A) to the front case.

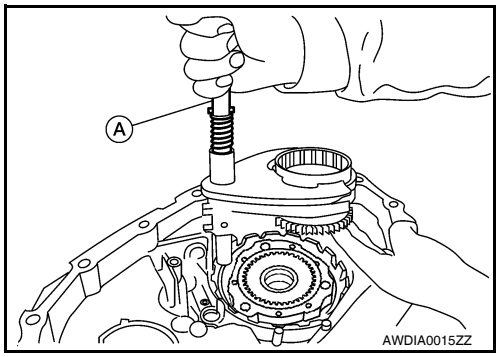

18. Apply liquid gasket to the entire center case mating surface of the front case assembly as shown.
- **Use Genuine Anaerobic Liquid Gasket or equivalent. Refer to GI-14, "Recommended Chemical Products and Sealants".**

CAUTION:
Remove all foreign materials such as water, oil and grease from center case and front case mating surfaces.

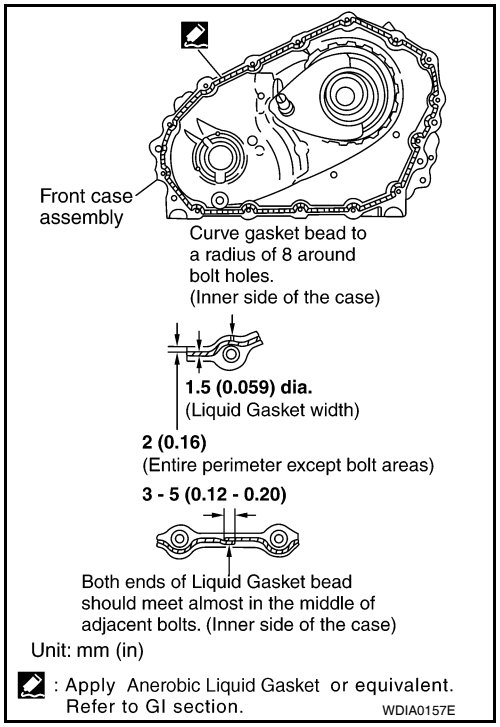

19. Install the center case assembly to the front case assembly.
CAUTION:
Do not damage mainshaft end.
20. Tap the center case lightly and press-fit the front drive shaft bearing into the front case.

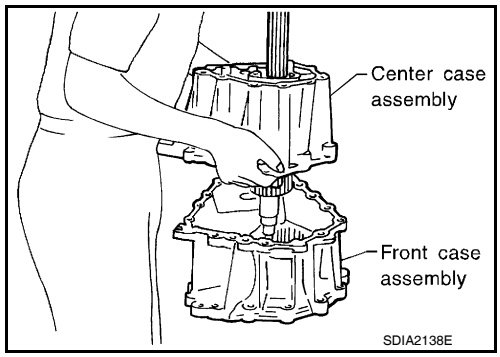

21. Tighten the front case bolts to the specified torque. Refer to DLN-152, "Component Parts Location".
CAUTION:
Be sure to install air breather hose clamp, connector bracket and harness clip.
22. Install the drain plug with a new gasket.
CAUTION:
Do not reuse gasket.

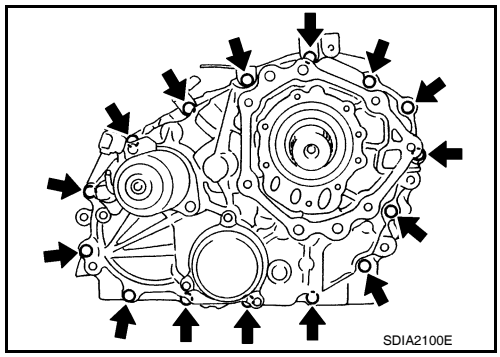

23. Align the matching mark on the front drive shaft with the mark on the companion flange, then install the companion flange.

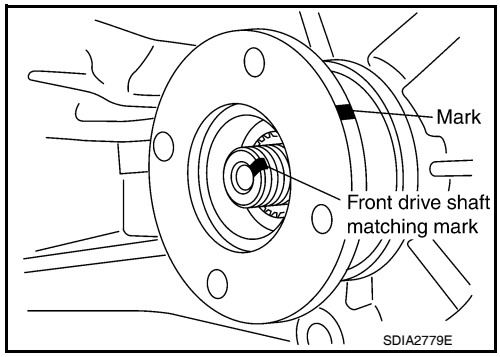

24. Install a new companion flange self-lock nut. Tighten to the specified torque using suitable tool. Refer to DLN-152, "Component Parts Location".
CAUTION:
Do not reuse self-lock nut.

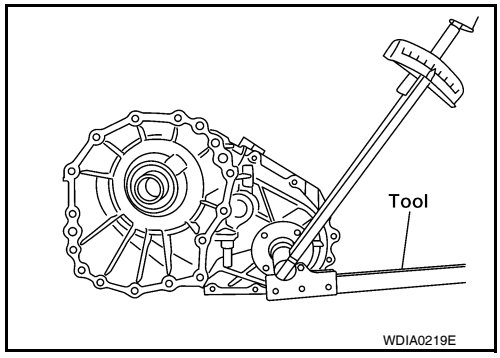

25. Remove all the sealant from the check plug, switch and front case.
CAUTION:
Remove old sealant adhering to mating surfaces. Also remove any moisture, oil, or foreign material adhering to application and mounting surfaces.
26. Install the check ball and check spring to the front case. Apply sealant to the check plug and wait detection switch and install them to the front case. Tighten to the specified torque. Refer to DLN-152, "Component Parts Location".

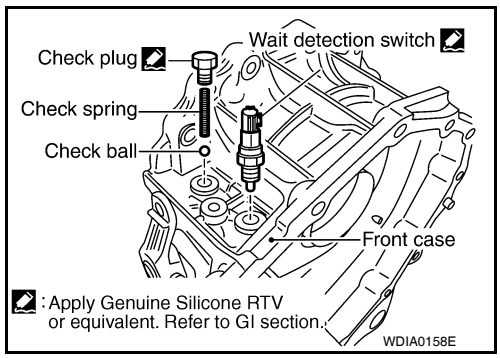

- **Use Genuine Silicone RTV or equivalent. Refer to GI-14, "Recommended Chemical Products and Sealants".**

NOTE:
Wait detection switch harness connector is black.

27. Install the new oil seal in the front case using Tool.

Tool number : ST22360002 (J-25679-01)

CAUTION:
- **Do not reuse oil seal.**
- **Apply petroleum jelly to seal lip before installing.**

28. Install the shift lever to the shift cross.
29. Install the lock pin and lock pin nut. Tighten to the specified torque. Refer to DLN-152, "Component Parts Location".

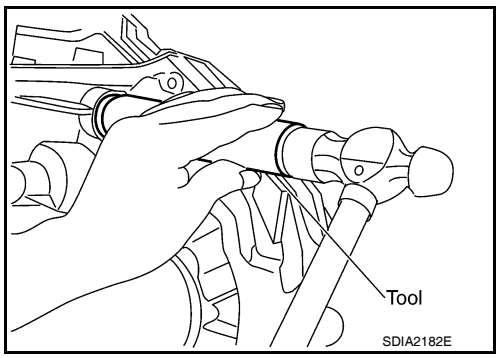

Rear Case

1. Apply petroleum jelly to the circumference of the new rear oil seal. Install the new rear oil seal so that it is flush with the case tip face using Tool.

Tool number : ST30720000 (J-25405)

CAUTION:
- **Do not reuse oil seal.**
- **Apply petroleum jelly to seal lip before installing.**

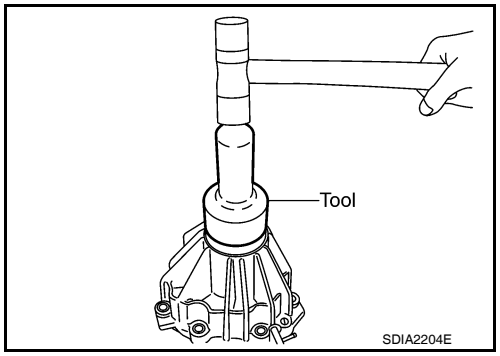

2. Apply petroleum jelly to the circumference of the new dust cover. Position the new dust cover as shown.

CAUTION:
- **Do not reuse dust cover.**
- **Position the protrusion at the position shown.**
- 1: Dust cover
- 2: Rear case assembly
- A: Protrusions

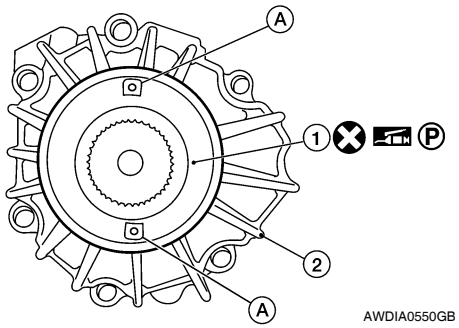

3. Install the new dust cover using Tool.

Tool number : KV40105310 (—)

4. Install the air breather into the rear case.
5. Remove all the sealant from the rear case to center case mating surfaces.

CAUTION:
Remove all foreign materials such as water, oil, and grease from center case and rear case mating surfaces.

6. Apply liquid gasket to the entire rear case mating surface of the center case.
   - **Use Genuine Anaerobic Liquid Gasket or equivalent. Refer to GI-14, "Recommended Chemical Products and Sealants".**

CAUTION:
Do not to allow Liquid Gasket to enter stem bleeder hole.

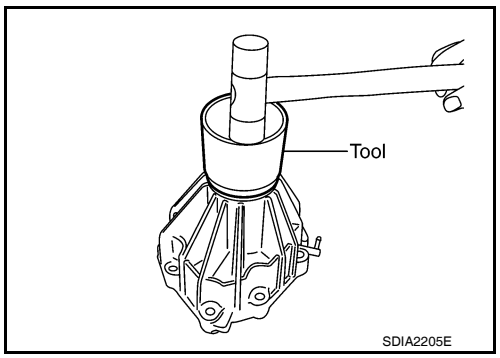

7. Install the rear case to the center case. Tighten the bolts to the specified torque. Refer to DLN-152, "Component Parts Location".

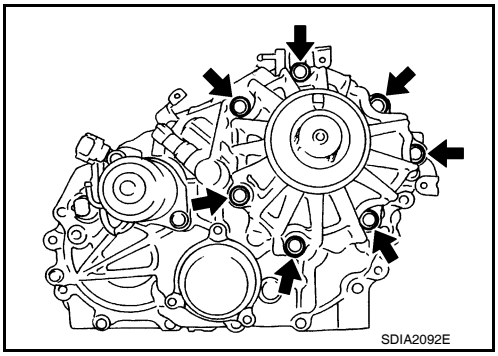

SERVICE DATA AND SPECIFICATIONS (SDS)

SERVICE DATA AND SPECIFICATIONS (SDS)

General Specification

INFOID:0000000005258357

Applied model			VQ40DE	VK56DE
Transfer model			ATX14B	
Fluid capacity (Approx.)		ℓ (US qt, Imp qt)	3.0 (3-1/8, 2-5/8)	
Gear ratio	High		1.000	
	Low		2.596	2.625
Number of teeth	Planetary gear	Sun gear	57	56
		Internal gear	91	
	Front drive sprocket		38	
	Front drive shaft		38	

Inspection and Adjustment

INFOID:0000000005258358

CLEARANCE BETWEEN INNER GEAR AND OUTER GEAR

Unit: mm (in)

Item	Specification
Sub-oil pump	0.015 - 0.035 (0.0006 - 0.0014)
Main oil pump	0.015 - 0.035 (0.0006 - 0.0014)

CLUTCH

Unit: mm (in)

Item	Limit value
Drive plate	1.4 (0.055)

PINION GEAR END PLAY

Unit: mm (in)

Item	Standard
Pinion gear end play	0.1 - 0.7 (0.004 - 0.028)

CLEARANCE BETWEEN SHIFT FORK AND SLEEVE

Unit: mm (in)

Item	Standard
Shift fork and sleeve	Less than 0.36 (0.0142)

SELECTIVE PARTS

Sub-oil Pump

Unit: mm (in)

Gear thickness	Part number*	
	Inner gear	Outer gear
9.27 - 9.28 (0.3650 - 0.3654)	31346 0W462	31347 0W462
9.28 - 9.29 (0.3654 - 0.3657)	31346 0W461	31347 0W461
9.29 - 9.30 (0.3657 - 0.3661)	31346 0W460	31347 0W460

*: Always check with the Parts Department for the latest parts information.

Main Oil Pump

Unit: mm (in)

Gear thickness	Part number*	
	Inner gear	Outer gear
8.27 - 8.28 (0.3256 - 0.3260)	31346 7S112	31347 7S112
8.28 - 8.29 (0.3260 - 0.3264)	31346 7S111	31347 7S111
8.29 - 8.30 (0.3264 - 0.3268)	31346 7S110	31347 7S110

*: Always check with the Parts Department for the latest parts information.

Control Valve

Unit: mm (in)

Mounting position (Part name)	Part number*	Outer dia.	Overall length
L1 (2-4 shift valve)	31772 21X00	8.0 (0.315)	38.5 (1.516)
L2 (Clutch valve)	31772 80X11	10.0 (0.394)	40.0 (1.575)
L4 (Pilot valve)	31772 80X11	10.0 (0.394)	40.0 (1.575)
L5 (Regulator valve)	31741 0W410	12.0 (0.472)	68.0 (2.677)

*: Always check with the Parts Department for the latest parts information.

Control Valve Spring

Unit: mm (in)

Mounting position (Part name)	Part number*	Free length	Outer dia.	Overall length
L1 (2-4 shift valve spring)	31742 2W500	31.85 (1.2539)	7.0 (0.276)	0.6 (0.024)
L2 (Clutch valve spring)	31742 2W505	40.6 (1.598)	8.9 (0.350)	0.7 (0.028)
L4 (Pilot valve spring)	31742 0W410	28.1 (1.106)	9.0 (0.354)	1.2 (0.047)
L5 (Regulator valve spring)	31742 2W515	39.7 (1.563)	11.0 (0.433)	1.3 (0.051)

*: Always check with the Parts Department for the latest parts information.

Return Spring

Unit: mm (in)

Stamped mark	Part number*	Free length
1	31521 7S111	42.7 (1.168)
2	31521 7S112	43.1 (1.697)
3	31521 7S113	43.6 (1.717)
4	31521 7S114	44.0 (1.731)

*: Always check with the Parts Department for the latest parts information.

BASIC INSPECTION

DIAGNOSIS AND REPAIR WORKFLOW

Work Flow

INFOID:0000000005258359

WORK FLOW

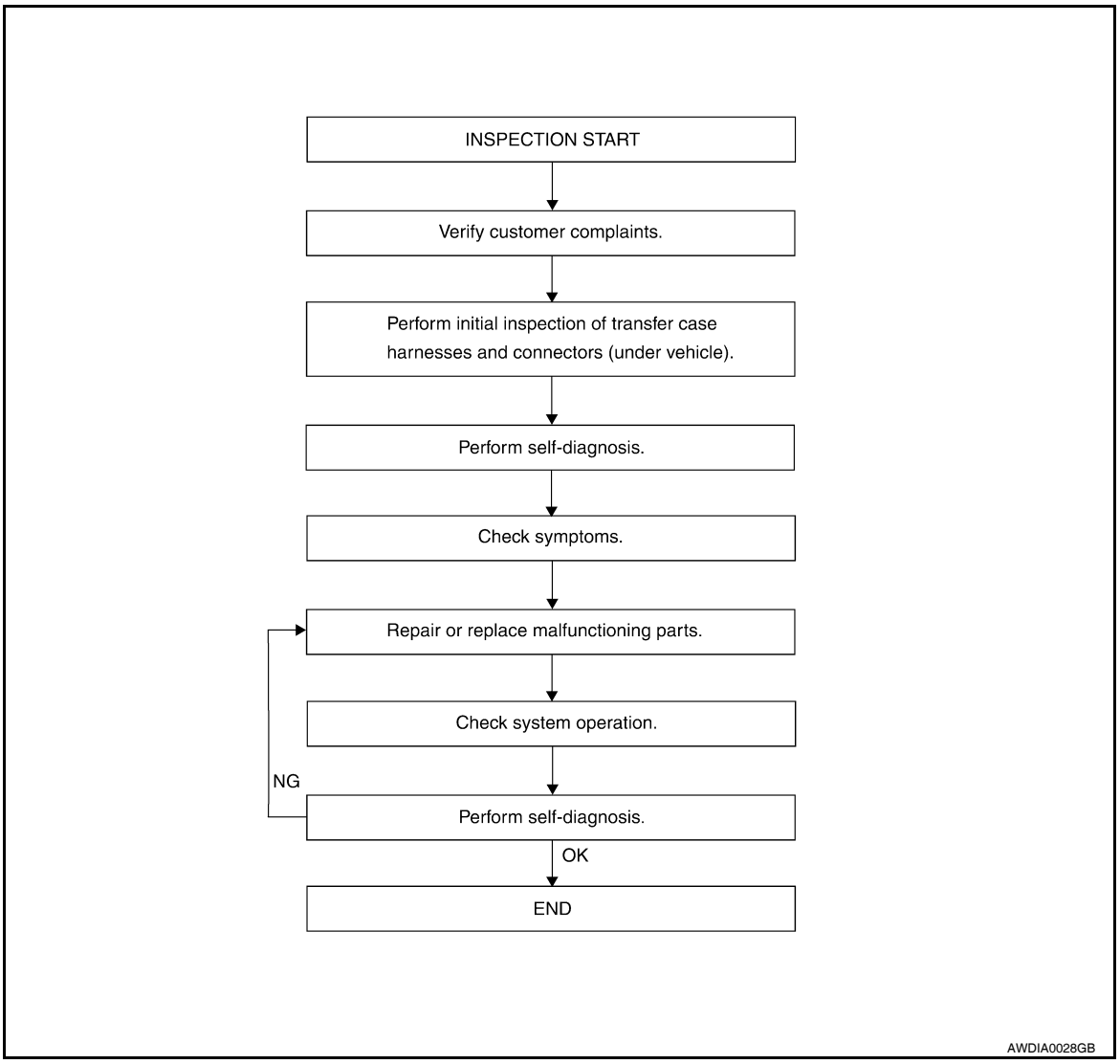

DETAILED FLOW

1. CUSTOMER INFORMATION

Interview the customer to obtain detailed information about the symptom.

>> GO TO 2

2. INITIAL INSPECTION

Perform an initial inspection of all accessible transfer case harnesses and connectors under the vehicle.

>> GO TO 3

3. SELF-DIAGNOSIS

Perform self-diagnosis. Refer to DLN-200, "CONSULT-III Function (ALL MODE AWD/4WD)".

>> GO TO 4

4. SYMPTOM

Check for symptoms. Refer to DLN-250, "Symptom Table".

>> GO TO 5

5. MALFUNCTIONING PARTS

Repair or replace the applicable parts.

>> GO TO 6

6. SYSTEM OPERATION

Check system operation.

>> GO TO 7

7. SELF-DIAGNOSIS

Perform self-diagnosis.

Are any DTC's displayed?

YES >> GO TO 5
NO >> Inspection End

FUNCTION DIAGNOSIS

4WD SYSTEM

System Diagram

INFOID:0000000005258360

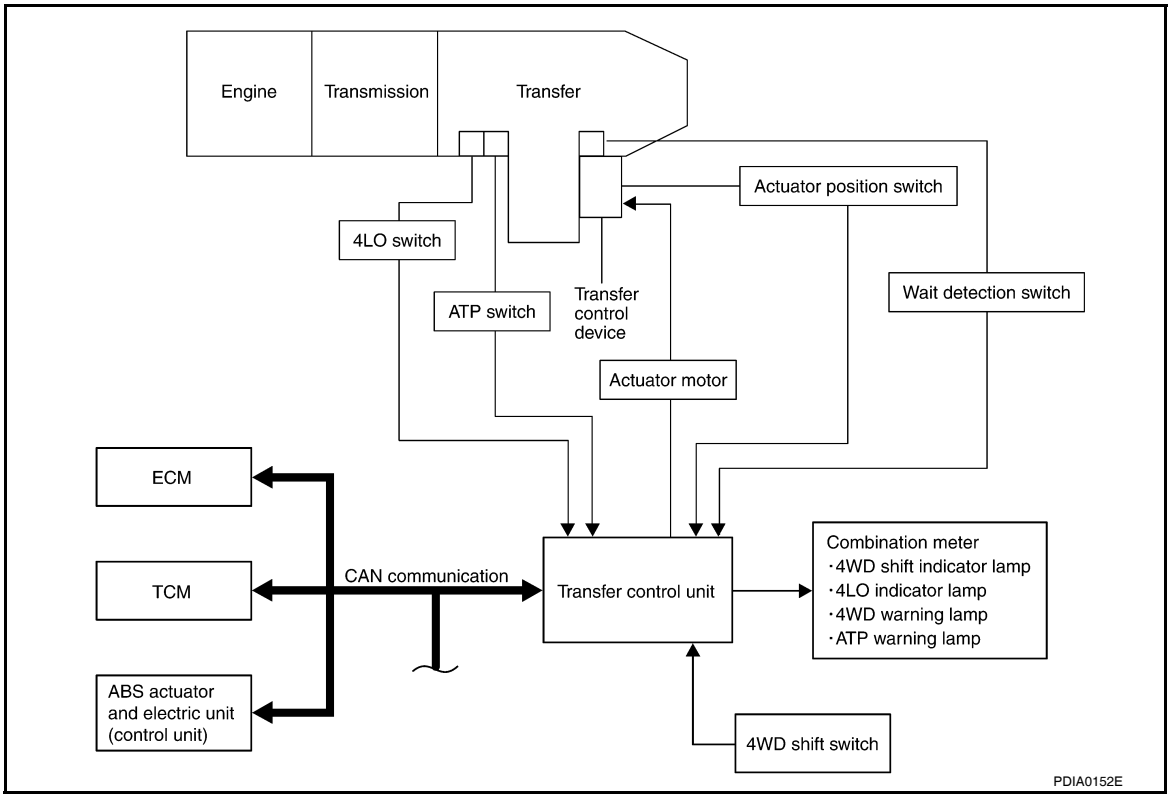

COMPONENT DESCRIPTION

Components	Function
Transfer control unit	Controls transfer control device and controls shifts between 2WD/4WD and 4H/4LO.
Transfer control device	Integrates actuator motor and actuator position switch.
Actuator motor	Moves shift rods when signaled by transfer control unit.
Actuator position switch	Detects actuator motor position.
Wait detection switch	Detects if transfer case is in 4WD.
4LO switch	Detects if transfer case is in 4LO.
ATP switch	Detects if transfer case is in neutral.
4WD shift switch	Allows driver to select from 2WD/4WD and 4H/4LO.
4WD warning lamp	• Illuminates if malfunction is detected in 4WD system. • Flashes (1 flash / 2 seconds) if rotation difference of front wheels and rear wheels is large.
ATP warning lamp	Indicates that A/T parking mechanism does not operate when A/T selector lever is in “P” position because transfer case is in neutral.
4WD shift indicator lamp	Displays driving range selected by 4WD shift switch.
4LO indicator lamp	Displays 4LO range.
ABS actuator and electric unit (control unit)	Transmits the following signals via CAN communication to transfer control unit. • Vehicle speed signal • Stop lamp switch signal (brake signal)
TCM	Transmits the following signal via CAN communication to transfer control unit. • Output shaft revolution signal • A/T position indicator signal (transmission range switch signal)
ECM	Transmits engine speed signal via CAN communication to transfer control unit.

System Description

INFOID:0000000005258361

TRANSFER CONTROL DEVICE

Integrates actuator motor and actuator position switch.

Actuator Motor

Moves shift rods when signaled by transfer control unit.

Actuator Position Switch

Detects actuator motor position and then sends signal to transfer control unit.

WAIT DETECTION SWITCH

Detects if transfer case is in 4WD by the 2-4 shift fork position.

NOTE:

If 4WD shift switch is switched to 4H or 4LO and the transfer case is not in 4WD completely, the wait detection system will operate.

4LO SWITCH

4LO switch detects if the transfer case is in 4LO by the position of the L-H shift fork.

ATP SWITCH

ATP switch detects if transfer case is in neutral by the position of the L-H shift fork.

NOTE:

Transfer case may be in neutral when shifting between 4H-4LO.

TRANSFER CONTROL UNIT

- Transfer control unit controls transfer control device and it directs shifts from 4H-4LO and 2WD-4WD.
- Self-diagnosis can be done.

TRANSFER SHIFT HIGH AND LOW RELAYS

Transfer shift high and low relays apply power supply to transfer control device (actuator motor).

TRANSFER SHUT OFF RELAYS

Transfer shut off relays 1 and 2 apply power supply to transfer control unit.

4WD SHIFT SWITCH AND INDICATOR LAMP

4WD shift switch	Indicator lamp		Operation of 4WD shift switch	Use condition
	4WD shift	4LO		
2WD		OFF	2WD ⇔ 4H switching can be done while driving. The indicator lamp will change when the driving mode is changed. Gear shifting between 2WD ⇔ 4H position must be performed at speeds below 100km/h (60 MPH).	For driving on dry, paved roads.
4H				For driving on rough, sandy or snow-covered roads.
		Flashing	To shift between 4H ⇔ 4LO, stop the vehicle and select the A/T selector lever to the “N” position with the brake pedal depressed. Depress and turn the 4WD shift switch. The 4WD shift switch will not shift to the desired mode if the transmission is not in “N” or the vehicle is moving with the brake pedal depressed. The 4LO indicator lamp will be lit when the 4LO is engaged.	The 4LO indicator lamp flashes when shifting between 4LO ⇔ 4H.
4LO		ON		For use when maximum power and traction is required at low speed (for example on steep grades or rocky, sandy, muddy roads.).

WDIA0138E

4WD Shift Switch

4WD shift switch is able to select from 2WD, 4H or 4LO.

4WD Shift Indicator Lamp

- Displays driving conditions selected by the 4WD shift switch while engine is running. When the 4WD warning lamp is turned on, all 4WD shift indicator lamps will turn off.
- Turns ON when ignition switch is turned ON, for purpose of lamp check. Turns OFF approximately for 1 second after the engine starts if system is normal.

4LO Indicator Lamp

- Displays 4LO while engine is running. 4LO indicator lamp flashes if transfer gear does not shift completely into 4H⇔4LO. In this condition, the transfer case may be in neutral and the A/T parking mechanism may not operate.
- Turns ON when ignition switch is turned ON, for purpose of lamp check. Turns OFF approximately for 1 second after the engine starts if system is normal.

4WD WARNING LAMP

Turns on or flashes when there is a malfunction in 4WD system.
Also turns on when ignition switch is turned ON, for purpose of lamp check. Turns OFF approximately for 1 second after the engine starts if system is normal.

4WD Warning Lamp Indication

Condition	4WD warning lamp
System normal	OFF
Lamp check	Turns ON when ignition switch is turned ON. Turns OFF after engine start.
4WD system malfunction	ON
During self-diagnosis	Flashes malfunction mode.
Large difference in diameter of front/ rear tires	Flashes slow (1 flash / 2 seconds) (Continues to flash until the ignition switch is turned OFF)

ATP WARNING LAMP

When the A/T selector lever is in “P” position, the vehicle may move if the transfer case is in neutral. ATP warning lamp is turned on to indicate this condition to the driver.

Component Parts Location

INFOID:0000000005258362

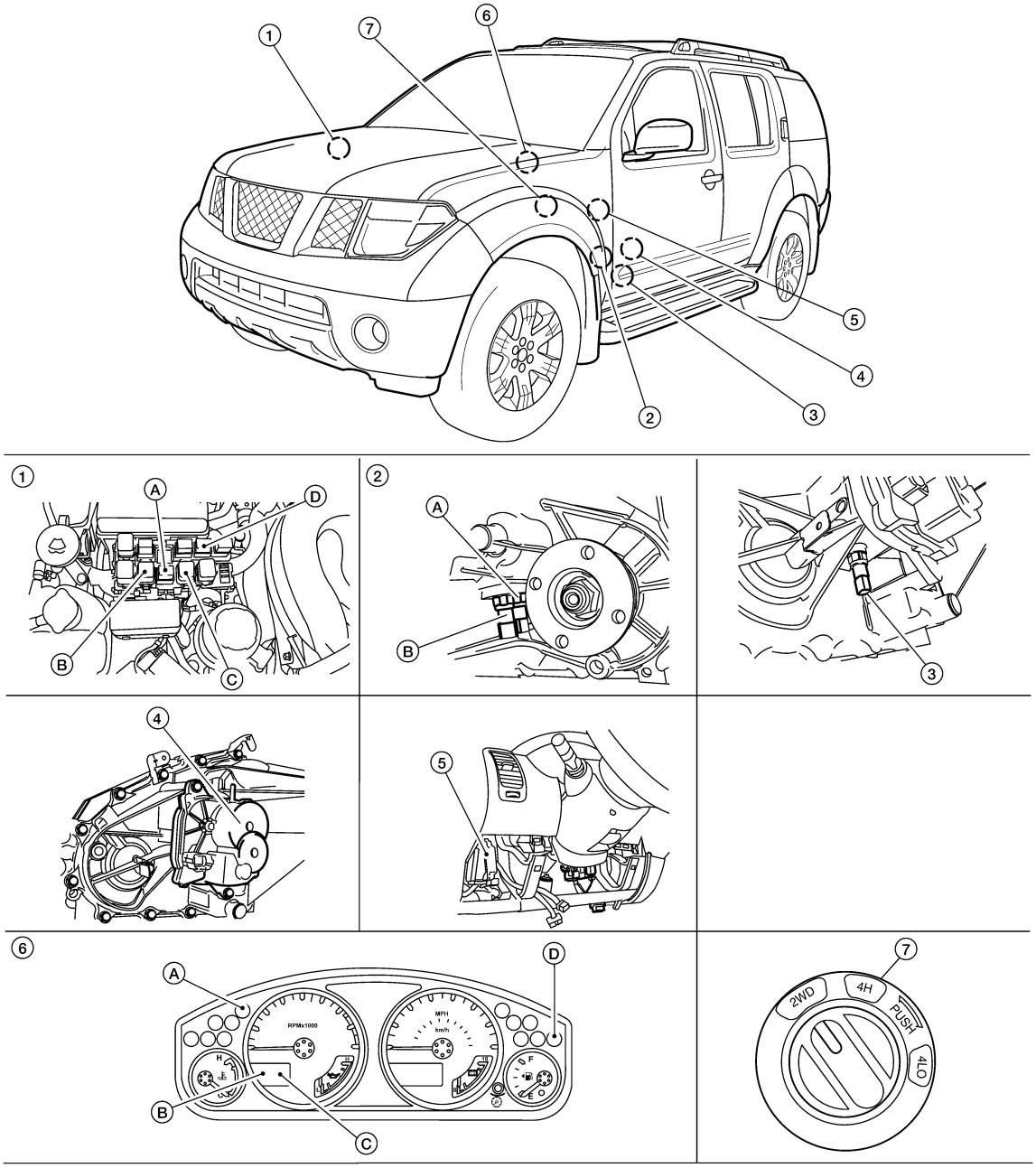

WDIA0337E

1. Fuse and relay box
   A: Transfer shut off relay 1 E156
   B: Transfer shift high relay E44
   C: Transfer shift low relay E43
   D: Transfer shut off relay 2 E157
2. A: ATP switch F71
   B: 4 LO switch F74
   (View with front propeller shaft removed.)
3. Wait detection switch F73

4. Transfer control device F72
5. Transfer control unit M165, M166 (View with lower instrument cover removed.)
6. Combination meter M24
   A: 4WD warning lamp
   B: 4LO indicator lamp
   C: 4WD shift indicator lamp
   D: ATP warning lamp
7. 4WD shift switch M138

CAN Communication

INFOID:0000000005258363

Refer to LAN-60, "DTC Index".

Cross-Sectional View

INFOID:0000000005258364

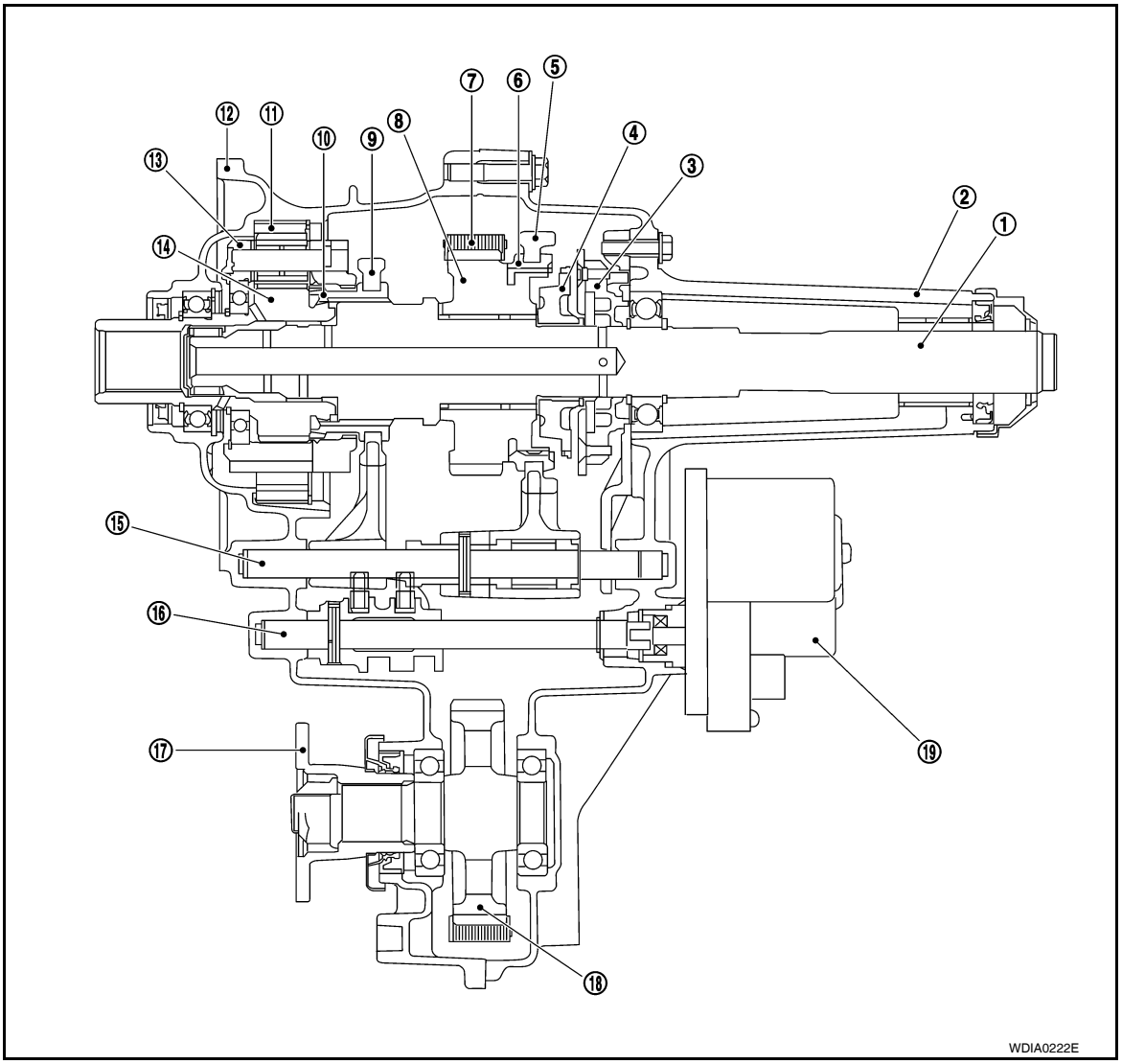

1. Mainshaft
2. Rear case
3. Oil pump assembly
4. Clutch gear
5. 2-4 shift fork
6. 2-4 sleeve
7. Drive chain
8. Sprocket
9. L-H shift fork
10. L-H sleeve
11. Internal gear
12. Front case
13. Planetary carrier assembly
14. Sun gear assembly
15. L-H shift rod
16. Control shift rod
17. Companion flange
18. Front drive shaft
19. Transfer control device

Power Transfer

INFOID:0000000005258365

POWER TRANSFER DIAGRAM

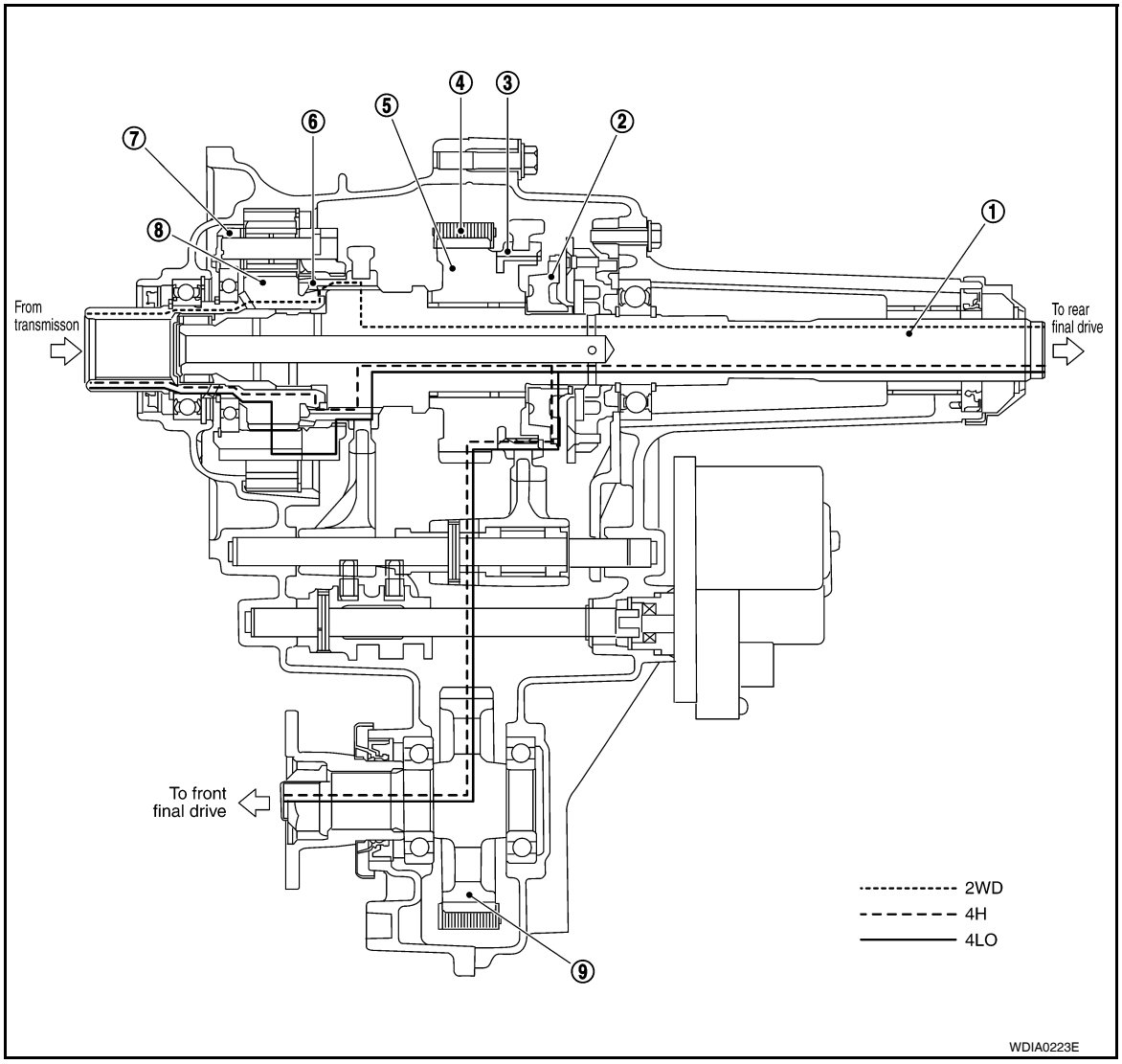

1.	Mainshaft	2.	Clutch gear	3.	2-4 sleeve
4.	Drive chain	5.	Sprocket	6.	L-H sleeve
7.	Planetary carrier assembly	8.	Sun gear assembly	9.	Front drive shaft

POWER TRANSFER FLOW

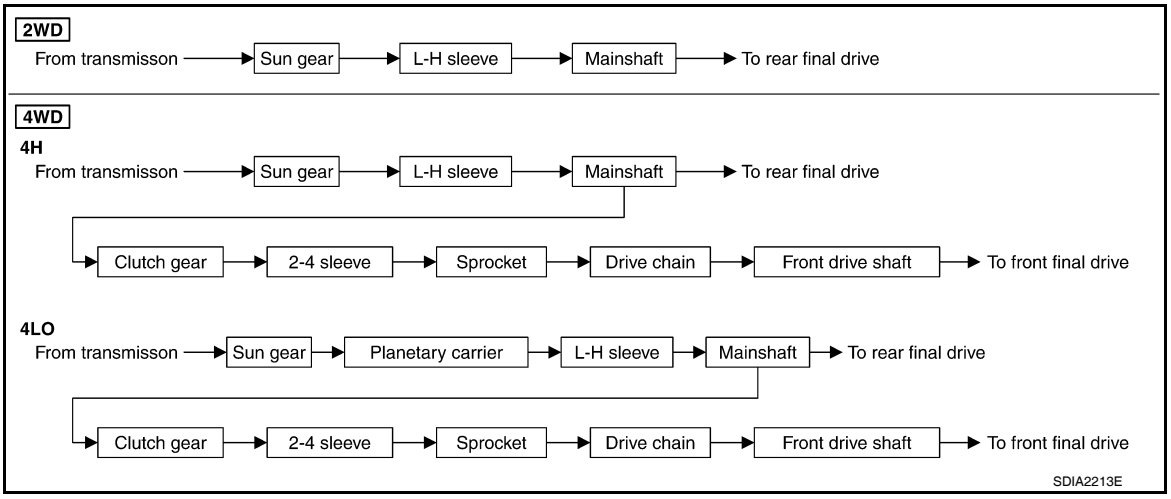
2WD
From transmisson
Sun gear
L-H sleeve
Mainshaft
To rear final drive
4WD
4H
From transmisson
Sun gear
L-H sleeve
Mainshaft
To rear final drive
Clutch gear
2-4 sleeve
Sprocket
Drive chain
Front drive shaft
To front final drive
4LO
From transmisson
Sun gear
Planetary carrier
L-H sleeve
Mainshaft
To rear final drive
Clutch gear
2-4 sleeve
Sprocket
Drive chain
Front drive shaft
To front final drive
SDIA2213E

DIAGNOSIS SYSTEM (TRANSFER CONTROL UNIT)

CONSULT-III Function (ALL MODE AWD/4WD)

INFOID:0000000005258366

FUNCTION

CONSULT-III can display each diagnostic item using the diagnostic test modes shown following.

Diagnostic Mode	Description
Self Diagnostic Result	Displays transfer control unit self-diagnosis results.
Data Monitor	Displays transfer control unit input/output data in real time.
CAN Diag Support Monitor	The results of transmit/receive diagnosis of CAN communication can be read.
ECU Identification	Transfer control unit part number can be read.

SELF DIAGNOSTIC RESULT MODE

Operation Procedure

1. Connect “CONSULT-III”.
2. With engine at idle, touch “SELF-DIAG RESULTS”.
   Display shows malfunction experienced since the last erasing operation.

NOTE:
The details for "TIME" are as follows:
- "0": Error currently detected with transfer control unit.
- Except for "0": Error detected in the past and memorized with transfer control unit.
  Detects frequency of driving after DTC occurs (frequency of turning ignition switch "ON/OFF").

How to Erase Self-diagnostic Results

1. Perform applicable inspection of malfunctioning item and then repair or replace.
2. Start engine and select “SELF-DIAG RESULTS” mode for “ALL MODE AWD/4WD” with CONSULT-III.
3. Touch “ERASE” on CONSULT-III screen to erase DTC memory.
   CAUTION:
   If memory cannot be erased, perform applicable diagnosis.

SELF-DIAGNOSTIC PROCEDURE (WITHOUT CONSULT-III)

Description

If the engine starts when there is something wrong with the 4WD system, the 4WD warning lamp turns ON or flickers in the combination meter. When the system functions properly, the warning lamp turns ON when the ignition switch is turned to “ON”, and it turns OFF after engine starts. To locate the cause of a problem, start the self-diagnosis function. The 4WD warning lamp in the combination meter will indicate the problem area by flickering according to the self-diagnostic results. Refer to DLN-247, "DTC Index".

Diagnostic Procedure

1. Warn up engine.
2. Turn ignition switch “ON” and “OFF” at least twice, and then turn ignition switch “OFF”.
3. Move A/T selector lever to “P” position.
4. Turn 4WD shift switch to “2WD” position.
5. Turn ignition switch “ON”. (Do not start engine.)
6. 4WD warning lamp ON.
   If 4WD warning lamp does not turn ON, refer to DLN-251, "Diagnosis Procedure".
7. Move A/T selector lever to “R” position.
8. Turn 4WD shift switch to “2WD”, “4H” and “2WD” in order.
9. Move A/T selector lever to “P” position.
10. Turn 4WD shift switch to “4H”, “2WD” and “4H” in order.
11. Move A/T selector lever to “N” position.
12. Turn 4WD shift switch to “2WD” position.
13. Move A/T selector lever to “P” position.

14. Read the flickering of 4WD warning lamp.

Self-diagnosis example

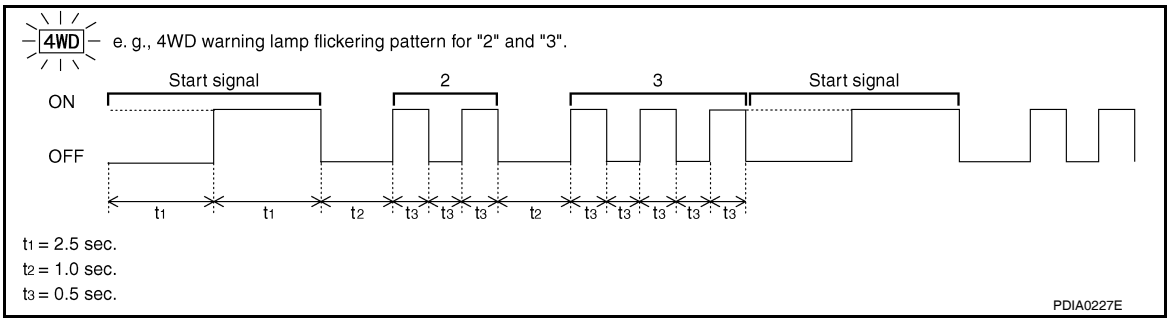

DATA MONITOR MODE

Operation Procedure

1. Connect “CONSULT-III.”
2. Touch “DATA MONITOR”.
3. Select from “SELECT MONITOR ITEM”, screen of data monitor mode is displayed.
   NOTE:
   When malfunction is detected, CONSULT-III performs REAL-TIME DIAGNOSIS.
   Also, any malfunction detected while in this mode will be displayed at real time.

Display Item List

×: Standard –: Not applicable

Monitored item (Unit)	Monitor item selection			Remarks
	ECU INPUT SIGNALS	MAIN SIGNALS	SELECTION FROM MENU	
VHCL/S SEN·FR [km/h] or [mph]	×	–	×	Wheel speed calculated by ABS actuator and electric unit (control unit). Signal input with CAN communication line.
VHCL/S SEN·RR [km/h] or [mph]	×	–	×	Wheel speed calculated by TCM. Signal input with CAN communication line.
ENGINE SPEED [rpm]	×	–	×	Engine speed is displayed. Signal input with CAN communication line.
BATTERY VOLT [V]	×	–	×	Power supply voltage for transfer control unit.
2WD SWITCH [On/Off]	×	–	×	4WD shift switch signal status is displayed. (4L means 4LO of 4WD shift switch.)
4H SWITCH [On/Off]	×	–	×	
4L SWITCH [On/Off]	×	–	×	
4L POSI SW [On/Off]	×	–	×	4LO switch signal status is displayed.
ATP SWITCH [On/Off]	×	–	×	ATP switch signal status is displayed.
WAIT DETCT SW [On/Off]	×	–	×	Wait detection switch signal status is displayed.
4WD MODE [2H/4H/4L]	–	×	×	Control status of 4WD recognized by transfer control unit. (2WD, 4H or 4LO)
VHCL/S COMP [km/h] or [mph]	–	×	×	Vehicle speed recognized by transfer control unit.
SHIFT ACT 1 [On/Off]	–	×	×	Output condition to actuator motor (clockwise)
SHIFT AC MON1 [On/Off]	–	–	×	Check signal for transfer control unit signal output
SHIFT ACT 2 [On/Off]	–	×	×	Output condition to actuator motor (counterclockwise)

Monitored item (Unit)	Monitor item selection			Remarks
	ECU INPUT SIGNALS	MAIN SIGNALS	SELECTION FROM MENU	
SHIFT AC MON2 [On/Off]	–	–	×	Check signal for transfer control unit signal output
SFT ACT/R MON [On/Off]	–	–	×	Operating condition of actuator motor relay (integrated in transfer control unit)
SHIFT POS SW1 [On/Off]	×	–	×	Condition of actuator position switch 1
SHIFT POS SW2 [On/Off]	×	–	×	Condition of actuator position switch 2
SHIFT POS SW3 [On/Off]	×	–	×	Condition of actuator position switch 3
SHIFT POS SW4 [On/Off]	×	–	×	Condition of actuator position switch 4
4WD FAIL LAMP [On/Off]	–	×	×	Control status of 4WD warning lamp is displayed.
2WD IND [On/Off]	–	–	×	Control status of 4WD shift indicator lamp (rear) is displayed.
4H IND [On/Off]	–	–	×	Control status of 4WD shift indicator lamp (front and center) is displayed.
4L IND [On/Off]	–	–	×	Control status of 4LO indicator lamp is displayed.

NOISE, VIBRATION AND HARSHNESS (NVH) TROUBLESHOOTING

NVH Troubleshooting Chart

INFOID:0000000005258367

Use the chart below to help you find the cause of the symptom. The numbers indicate the order of the inspection. If necessary, repair or replace these parts.

Reference page		DLN-271			DLN-283			DLN-307	DLN-283	DLN-301
SUSPECTED PARTS (Possible cause)		TRANSFER FLUID (Level low)	TRANSFER FLUID (Wrong)	TRANSFER FLUID (Level too high)	LIQUID GASKET (Damaged)	O-RING (Worn or damaged)	OIL SEAL (Worn or damaged)	SHIFT FORK (Worn or damaged)	GEAR (Worn or damaged)	BEARING (Worn or damaged)
Symptom	Noise	1	2						3	3
	Transfer fluid leakage		3	1	2	2	2			
	Hard to shift or will not shift		1	1				2		

COMPONENT DIAGNOSIS

P1801, P1811 POWER SUPPLY CIRCUIT FOR TRANSFER CONTROL UNIT

Description

INFOID:0000000005258368

The transfer control unit controls the transfer control device which controls shifts between 4H and 4LO and between 2WD and 4WD. When the vehicle battery is removed, the power supply to the transfer control unit is interrupted, and self-diagnosis memory function is suspended. These DTC's may also set when the power supply voltage for the transfer control unit is abnormally low while driving.

DTC Logic

INFOID:0000000005258369

DTC DETECTION LOGIC

DTC	CONSULT-III	Diagnostic item is detected when...	Reference
[P1801]	*INITIAL START*	Due to removal of battery which cuts off power supply to transfer control unit, self-diagnosis memory function is suspended.	DLN-204
[P1811]	BATTERY VOLTAGE	Power supply voltage for transfer control unit is abnormally low while driving.	

DTC CONFIRMATION PROCEDURE

1.DTC CONFIRMATION PROCEDURE

1. Turn ignition switch ON.
2. Perform self-diagnosis.

Are DTC's “P1801 or P1811 detected?

YES >> Perform diagnosis procedure. Refer to DLN-204, "Diagnosis Procedure".
NO >> Inspection End.

Diagnosis Procedure

INFOID:0000000005258370

Regarding Wiring Diagram information, refer to DLN-240, "Wiring Diagram - PART TIME 4WD SYSTEM -".

1.CHECK POWER SUPPLY

1. Turn ignition switch “OFF”. (Stay for at least 5 seconds.)
2. Disconnect transfer control unit harness connector.
3. Check voltage between transfer control unit harness connector terminals and ground.

Connector	Terminal	Voltage (Approx.)
M165	19 - Ground	Battery voltage
	25 - Ground	0V
M166	40 - Ground	Battery voltage
	44 - Ground	0V
	45 - Ground	

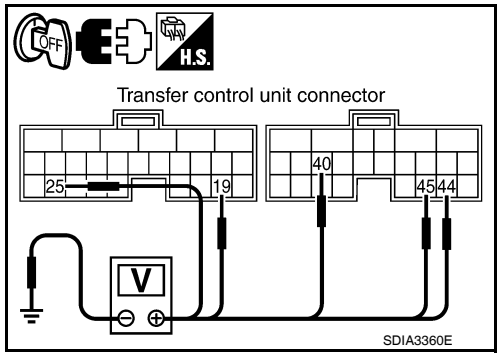

4. Turn ignition switch “ON”. (Do not start engine.)
5. Check voltage between transfer control unit harness connector terminals and ground.

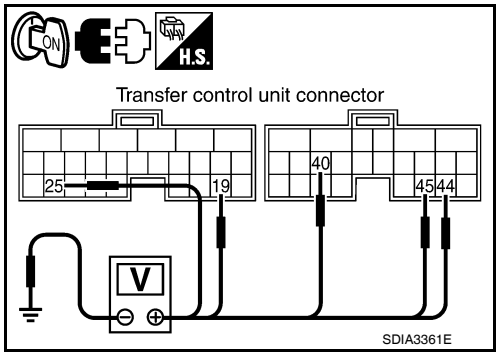

Connector	Terminal	Voltage (Approx.)
M165	19 - Ground	Battery voltage
	25 - Ground	
M166	40 - Ground	
	44 - Ground	
	45 - Ground	

Is there voltage?

YES >> GO TO 2.
NO >> Check the following. If any items are damaged, repair or replace damaged parts.
- 40A fuse (No. **j**, located in the fuse and fusible link box).
- 10A fuses (No. 21, located in the fuse block (J/B) and Nos. 60 and 61 located in the fuse and relay box).
- Harness for short or open between battery and transfer control unit harness connector M165 terminal 19.
- Harness for short or open between battery and transfer shut off relay 2 harness connector E157 terminal 1 and 3.
- Harness for short or open between battery and transfer shut off relay 1 harness connector E156 terminal 3.
- Harness for short or open between ignition switch and transfer control unit harness connector M165 terminal 25.
- Harness for short or open between ignition switch and transfer shut off relay 1 harness connector E156 terminal 1.
- Harness for short or open between transfer shut off relay 2 harness connector E157 terminal 5 and transfer control unit harness connector M166 terminals 44, 45.
- Harness for short or open between transfer shut off relay 1 harness connector E156 terminal 5 and transfer control unit harness connector M166 terminals 44, 45.
- Harness for short or open between transfer shut off relay 2 harness connector E157 terminal 2 and transfer control unit harness connector M166 terminal 40.
- Harness for open between transfer shut off relay 1 harness connector E156 terminal 2 and ground.
- Battery and ignition switch.
- Transfer shut off relay 1, 2. Refer to DLN-206, "Component Inspection".

2. CHECK GROUND CIRCUIT

1. Turn ignition switch “OFF”.
2. Disconnect transfer control unit harness connector.
3. Check continuity between transfer control unit harness connector M165 terminals 6 and 18, and M166 terminal 32 and ground.

Continuity should exist.

Also check harness for short to power.

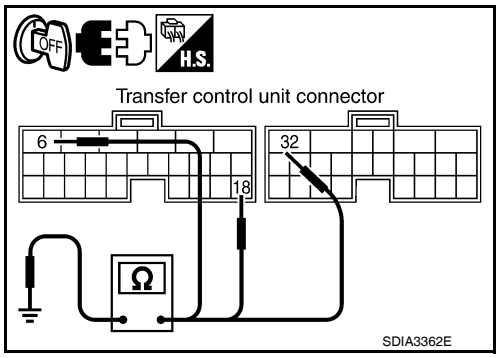

Do you have continuity?

YES >> GO TO 3.
NO >> Repair open circuit or short to power in harness or connectors.

3. CHECK TRANSFER CONTROL UNIT

Check transfer control unit input/output signal. Refer to DLN-235, "Reference Value".

Are the inspection results normal?

YES >> GO TO 4.

NO >> Check transfer control unit pin terminals for damage or loose connection with harness connector. If any items are damaged, repair or replace damaged parts.

4. CHECK DTC

Drive vehicle and then perform Self-diagnosis.

Do DTC's P1801 or P1811 display?

YES >> Replace transfer control unit. Refer to DLN-272, "Removal and Installation".
NO >> Inspection End.

Component Inspection

INFOID:0000000005258371

1. Turn ignition switch “OFF”. (Stay for at least 5 seconds.)
2. Remove transfer shut off relay 1 and transfer shut off relay 2. Refer to DLN-196, "Component Parts Location".
3. Apply 12V direct current between transfer shut off relay terminals 1 and 2.
4. Check continuity between relay terminals 3 and 5.

Condition	Continuity
12V direct current supply between terminals 1 and 2	Yes
OFF	No

5. If inspection results are not normal, replace the transfer shut off relay 1 or 2.

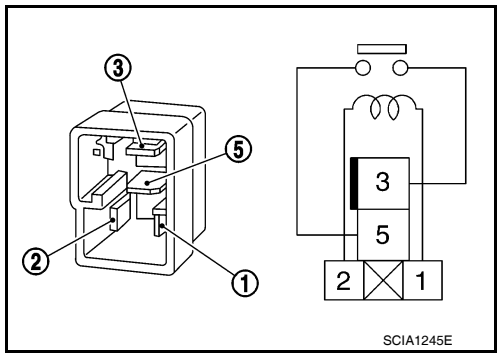

P1802 – P1804, P1809 TRANSFER CONTROL UNIT

Description

INFOID:0000000005258372

The transfer control unit controls the transfer control device which controls shifts between 4H and 4LO and between 2WD and 4WD. A DTC may set when any of the following occur:
- Malfunction is detected in the memory (RAM) system of transfer control unit.
- Malfunction is detected in the memory (ROM) system of transfer control unit.
- Malfunction is detected in the memory (EEPROM) system of transfer control unit.
- AD converter system of transfer control unit is malfunctioning.

DTC Logic

INFOID:0000000005258373

DTC DETECTION LOGIC

DTC	CONSULT-III	Diagnostic item is detected when...	Reference
[P1802]	CONTROL UNIT 1	Malfunction is detected in the memory (RAM) system of transfer control unit.	DLN-207
[P1803]	CONTROL UNIT 2	Malfunction is detected in the memory (ROM) system of transfer control unit.	
[P1804]	CONTROL UNIT 3	Malfunction is detected in the memory (EEPROM) system of transfer control unit.	
[P1809]	CONTROL UNIT 4	AD converter system of transfer control unit is malfunctioning.	

DTC CONFIRMATION PROCEDURE

1. DTC CONFIRMATION PROCEDURE

1. Turn ignition switch ON.
2. Perform self-diagnosis.

Are DTC's “P1802 - P1804 or P1809 detected?

YES >> Perform diagnosis procedure. Refer to DLN-207, "Diagnosis Procedure".
NO >> Inspection End.

Diagnosis Procedure

INFOID:0000000005258374

1. INSPECTION START

Do you have CONSULT-III?

YES or NO

YES >> GO TO 2.
NO >> GO TO 3.

2. PERFORM SELF-DIAGNOSIS (WITH CONSULT-III)

1. Turn ignition switch “ON”.
2. Select “SELF-DIAG RESULTS” mode for “ALL MODE AWD/4WD” with CONSULT-III.
3. Touch “ERASE”.
4. Turn ignition switch “OFF” and wait at least 10 seconds.
5. Perform the self-diagnosis again.

Is the “CONTROL UNIT 1 [P1802]”, “CONTROL UNIT 2 [P1803]”, “CONTROL UNIT 3 [P1804]” or CONTROL UNIT 4 [P1809]” displayed?

YES >> Replace transfer control unit. Refer to DLN-272, "Removal and Installation".
NO >> Inspection End.

3. PERFORM SELF-DIAGNOSIS (WITHOUT CONSULT-III)

1. Perform the self-diagnosis and then erase self-diagnostic results. Refer to DLN-200, "CONSULT-III Function (ALL MODE AWD/4WD)".
2. Perform the self-diagnosis again.

Do the self-diagnostic results indicate AD converter?

YES >> Replace transfer control unit. Refer to DLN-272, "Removal and Installation".
NO >> Inspection End.

P1807 VEHICLE SPEED SENSOR (A/T)

Description

INFOID:0000000005258375

The transmission control module (TCM) transmits the output shaft revolution signal via CAN communication to Transfer control unit. DTC P1807 will set when a malfunction is detected in the output shaft revolution signal or an improper signal is input while driving.

DTC Logic

INFOID:0000000005258376

DTC DETECTION LOGIC

DTC	CONSULT-III	Diagnostic item is detected when...	Reference
[P1807]	VHCL SPEED SEN·AT	• Malfunction is detected in output shaft revolution signalthat is output from TCM through CAN communication. • Improper signal is input while driving.	DLN-209

DTC CONFIRMATION PROCEDURE

1. DTC CONFIRMATION PROCEDURE

1. Turn ignition switch ON.
2. Perform self-diagnosis.

Is DTC P1807 detected?

YES >> Perform diagnosis procedure. Refer to DLN-209, "Diagnosis Procedure".
NO >> Inspection End.

Diagnosis Procedure

INFOID:0000000005258377

1. CHECK DTC WITH TCM

Perform self-diagnosis with TCM. Refer to TM-36, "CONSULT-III Function (TRANSMISSION)".

Is any malfunction detected by self-diagnosis?

YES >> Check the malfunctioning system.
NO >> GO TO 2.

2. CHECK TRANSFER CONTROL UNIT

Check transfer control unit input/output signal. Refer to DLN-235, "Reference Value".

Are the inspection results normal?

YES >> GO TO 3.
NO >> Check transfer control unit pin terminals for damage or loose connection with harness connector. If any items are damaged, repair or replace damaged parts.

3. CHECK DTC

Drive vehicle and then perform Self-diagnosis.

Is DTC P1807 displayed?

YES >> Perform self-diagnosis with TCM again.
NO >> Inspection End.

P1808 VEHICLE SPEED SENSOR (ABS)

Description

INFOID:0000000005258378

The ABS actuator and electric unit (control unit) transmits a vehicle speed signal via CAN communication to the transfer control unit. DTC P1808 sets when a malfunction is detected in the vehicle speed signal that is output from the ABS actuator and electric unit (control unit) or an improper signal is input while driving.

DTC Logic

INFOID:0000000005258379

DTC DETECTION LOGIC

DTC	CONSULT-III	Diagnostic item is detected when...	Reference
[P1808]	VHCL SPEED SEN·ABS	• Malfunction is detected in vehicle speed signal that is output from ABS actuator and electric unit (control unit) through CAN communication. • Improper signal is input while driving.	DLN-210

DTC CONFIRMATION PROCEDURE

1. DTC CONFIRMATION PROCEDURE

1. Turn ignition switch ON.
2. Perform self-diagnosis.

Is DTC “P1808 displayed?

YES >> Perform diagnosis procedure. Refer to DLN-210, "Diagnosis Procedure".
NO >> Inspection End.

Diagnosis Procedure

INFOID:0000000005258380

1. CHECK DTC WITH ABS ACTUATOR AND ELECTRIC UNIT (CONTROL UNIT)

Perform self-diagnosis with ABS actuator and electric unit (control unit) for specific BRC system type.

Is any malfunction detected by self-diagnosis?

YES >> Check the malfunctioning system.
NO >> GO TO 2.

2. CHECK TRANSFER CONTROL UNIT

Check transfer control unit input/output signal. Refer to DLN-235, "Reference Value".

Are the inspection results normal?

YES >> GO TO 3.
NO >> Check transfer control unit pin terminals for damage or loose connection with harness connector. If any items are damaged, repair or replace damaged parts.

3. CHECK DTC

Drive vehicle and then perform Self-diagnosis.

Is DTC P1808 displayed?

YES >> Perform self-diagnosis with ABS actuator and electric unit (control unit) for specific BRC system type.
NO >> Inspection End.

P1810 4 LO SWITCH

Description

INFOID:0000000005258381

The 4LO switch detects that the transfer case is in 4LO range. DTC P1810 will set when an improper signal from the 4LO switch is input due to an open or short circuit.

DTC Logic

INFOID:0000000005258382

DTC DETECTION LOGIC

DTC	CONSULT-III	Diagnostic item is detected when...	Reference
[P1810]	4L POSI SW TF	Improper signal from 4LO switch is input due to open or short circuit.	DLN-211

DTC CONFIRMATION PROCEDURE

1. DTC CONFIRMATION PROCEDURE

1. Turn ignition switch ON.
2. Perform self-diagnosis.

Is DTC P1810 displayed?

YES >> Perform diagnosis procedure. Refer to DLN-211, "Diagnosis Procedure".
NO >> Inspection End.

Diagnosis Procedure

INFOID:0000000005258383

Regarding Wiring Diagram information, refer to DLN-240, "Wiring Diagram - PART TIME 4WD SYSTEM -".

1. CHECK 4LO POSITION SWITCH SIGNAL

With CONSULT-III

1. Start engine.
2. Select “DATA MONITOR” mode for “ALL MODE AWD/4WD” with CONSULT-III.
3. Read out the value of “4L POSI SW”.

Condition		Display value
• Vehicle stopped • Engine running • A/T selector lever “N” position • Brake pedal depressed	4WD shift switch: 4LO	ON
	Except the above	OFF

Without CONSULT-III

1. Start engine.
2. Check voltage between transfer control unit harness connector terminal and ground.

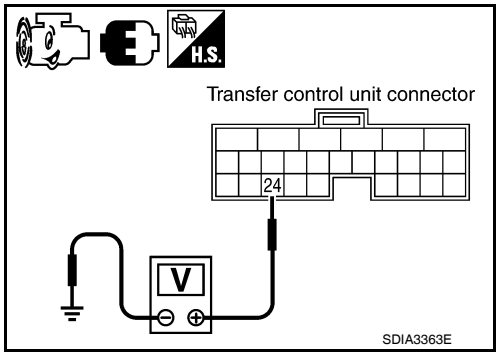

Connector	Terminal	Condition		Voltage (Approx.)
M165	24 - Ground	• Vehicle stopped • Engine running • A/T selector lever “N” position • Brake pedal depressed	4WD shift switch: 4LO	0V
			Except the above	Battery voltage

Are the inspection results normal?

YES >> GO TO 5.
NO >> GO TO 2.

2. CHECK HARNESS BETWEEN TRANSFER CONTROL UNIT AND 4LO SWITCH

1. Turn ignition switch “OFF”. (Stay for at least 5 seconds.)
2. Disconnect transfer control unit harness connector and the 4LO switch harness connector.
3. Check continuity between transfer control unit harness connector M165 terminal 24 and 4LO switch harness connector F74 terminal 13.

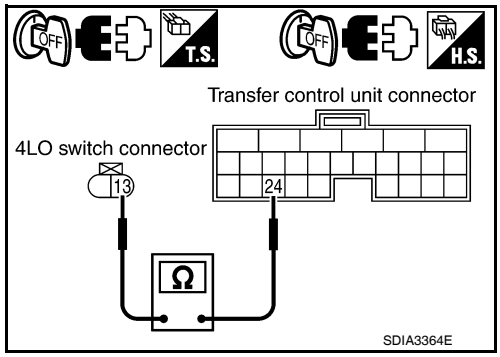

Continuity should exist.

Also check harness for short to ground and short to power.

Is there continuity?

YES >> GO TO 3.
NO >> Repair or replace damaged parts.

3. CHECK GROUND CIRCUIT

1. Turn ignition switch “OFF”. (Stay for at least 5 seconds.)
2. Disconnect 4LO switch harness connector.
3. Check continuity between 4LO switch harness connector F74 terminal 12 and ground.

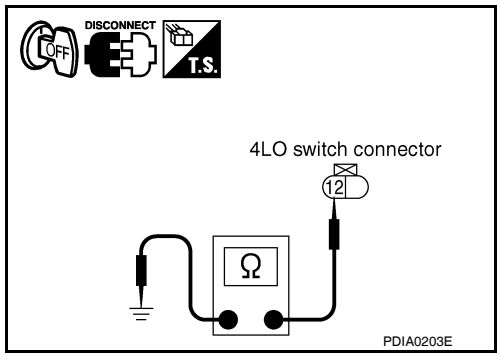

Continuity should exist.

Also check harness for short to power.

Is there continuity?

YES >> GO TO 4.
NO >> Repair open circuit or short to power in harness or connectors.

4. CHECK 4LO SWITCH

1. Turn ignition switch “OFF”. (Stay for at least 5 seconds.)
2. Disconnect 4LO switch harness connector.
3. Remove 4LO switch. Refer to DLN-196, "Component Parts Location".
4. Push and release 4LO switch and check continuity between 4LO switch terminals 12 and 13.

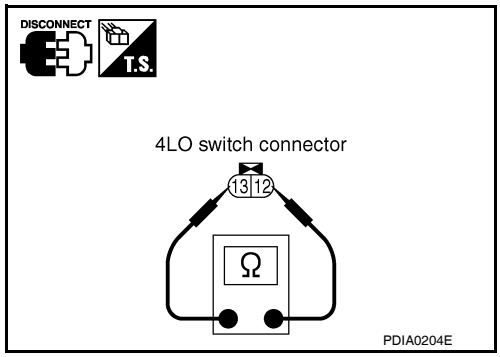

Terminal	Condition	Continuity
12 - 13	Push 4LO switch	Yes
	Release 4LO switch	No

Are the inspection results normal?

YES >> GO TO 5.
NO >> Replace 4LO switch.

5. CHECK TRANSFER CONTROL UNIT

Check transfer control unit input/output signal. Refer to DLN-235, "Reference Value".

Are the inspection results normal?

YES >> GO TO 6.
NO >> Check transfer control unit pin terminals for damage or loose connection with harness connector. If any items are damaged, repair or replace damaged parts.

6. CHECK DTC

Drive the vehicle and then perform self-diagnosis.

Is DTC P1810 displayed?

YES >> Replace transfer control unit. Refer to DLN-272, "Removal and Installation".
NO >> Inspection End.

Component Inspection

INFOID:0000000005258384

1. Turn ignition switch “OFF”. (Stay for at least 5 seconds.)
2. Disconnect 4LO switch harness connector.
3. Remove 4LO switch. Refer to DLN-196, "Component Parts Location".
4. Push and release 4LO switch and check continuity between 4LO switch terminals 12 and 13.

Terminal	Condition	Continuity
12 - 13	Push 4LO switch	Yes
	Release 4LO switch	No

5. If the inspection results are not normal replace the 4LO switch.

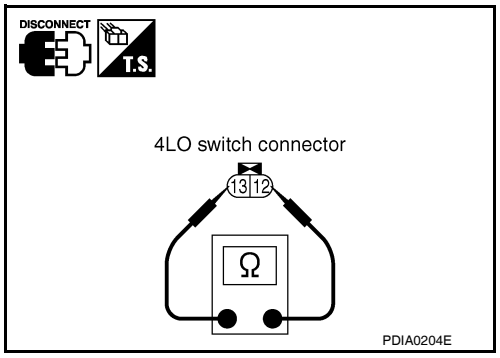

P1813 4WD SHIFT SWITCH

Description

INFOID:0000000005258385

The 4WD shift switch allows the driver to select 2WD or 4WD and 4H or 4LO. DTC P1813 will set if more than two switch inputs are simultaneously detected by the transfer control unit due to a short circuit in the 4WD shift switch.

DTC Logic

INFOID:0000000005258386

DTC DETECTION LOGIC

DTC	CONSULT-III	Diagnostic item is detected when...	Reference
[P1813]	4WD MODE SW	More than two switch inputs are simultaneously detected due to short circuit of 4WD shift switch.	DLN-214

DTC CONFIRMATION PROCEDURE

1. DTC CONFIRMATION PROCEDURE

1. Turn ignition switch ON.
2. Perform self-diagnosis.

Is DTC P1813 displayed?

YES >> Perform diagnosis procedure. Refer to DLN-214, "Diagnosis Procedure".
NO >> Inspection End.

Diagnosis Procedure

INFOID:0000000005258387

Regarding Wiring Diagram information, refer to DLN-240, "Wiring Diagram - PART TIME 4WD SYSTEM -".

1. CHECK 4WD SHIFT SWITCH SIGNAL

With CONSULT-III

1. Turn ignition switch “ON”.
2. Select “DATA MONITOR” mode for “ALL MODE AWD/4WD” with CONSULT-III.
3. Read out ON/OFF switching action of the “2WD SWITCH”, “4H SWITCH”, “4L SWITCH” with operating 4WD shift switch.

Without CONSULT-III

1. Turn ignition switch “ON”.
2. Check voltage between transfer control unit harness connector terminals and ground.

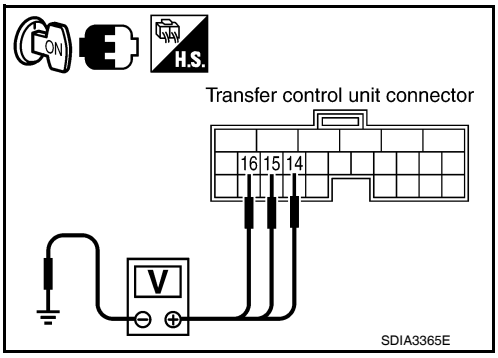

Connector	Terminal	Condition	Voltage (Approx.)
M165	14 - Ground	4WD shift switch: 2WD	Battery voltage
		4WD shift switch: 4H and 4LO	0V
	15 - Ground	4WD shift switch: 4H	Battery voltage
		4WD shift switch: 2WD and 4LO	0V
	16 - Ground	4WD shift switch: 4LO	Battery voltage
		4WD shift switch: 2WD and 4H	0V

Are the inspection results normal?

YES >> GO TO 5.

NO >> GO TO 2.

2. CHECK 4WD SHIFT SWITCH POWER SUPPLY CIRCUIT

1. Turn ignition switch “OFF”. (Stay for at least 5 seconds.)
2. Disconnect 4WD shift switch harness connector.
3. Check voltage between 4WD shift switch harness connector terminal 1 and ground.

Connector	Terminal	Voltage (Approx.)
M138	1 - Ground	0V

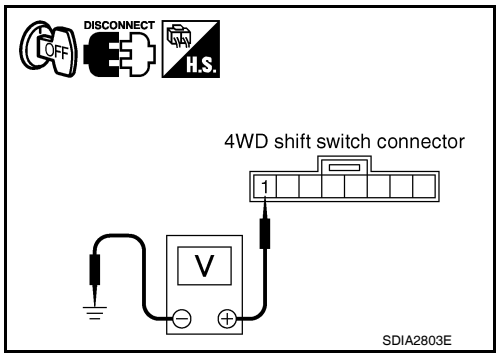

4. Turn ignition switch “ON”. (Do not start engine.)
5. Check voltage between 4WD shift switch harness connector terminal 1 and ground.

Connector	Terminal	Voltage (Approx.)
M138	1 - Ground	Battery voltage

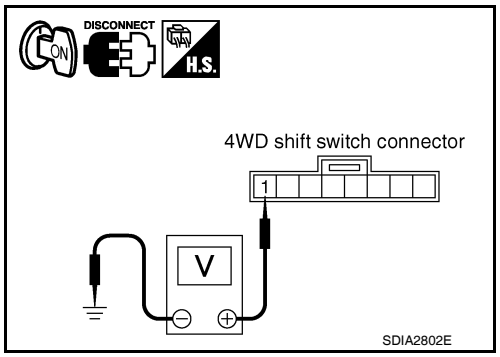

Is there voltage?

YES >> GO TO 3.

NO >> 1. Check harness for short or open between 4WD shift switch harness connector terminal 1 and transfer shut off relay 2 harness connector E157 terminal 5 and 10A fuse (No. 61 located in the fuse block). If any items are damaged, repair or replace damaged parts.

2. Perform trouble diagnosis for power supply circuit. Refer to DLN-204, "Diagnosis Procedure".

3. CHECK HARNESS BETWEEN 4WD SHIFT SWITCH AND TRANSFER CONTROL UNIT

1. Turn ignition switch “OFF”. (Stay for at least 5 seconds.)
2. Disconnect transfer control unit harness connector and the 4WD shift switch harness connector.
3. Check continuity between the following terminals.

- Transfer control unit harness connector M165 terminal 14 and 4WD shift switch harness connector M138 terminal 3.
- Transfer control unit harness connector M165 terminal 15 and 4WD shift switch harness connector M138 terminal 5.
- Transfer control unit harness connector M165 terminal 16 and 4WD shift switch harness connector M138 terminal 6.

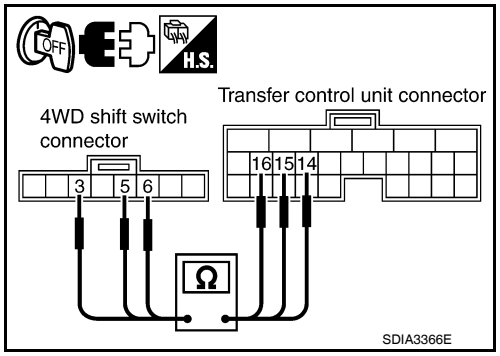

Continuity should exist.

Also check harness for short to ground and short to power.

Is there continuity?

YES >> GO TO 4.

NO >> Repair or replace damaged parts.

4. CHECK 4WD SHIFT SWITCH

1. Turn ignition switch “OFF”. (Stay for at least 5 seconds.)
2. Remove 4WD shift switch harness connector.

3. Operate 4WD shift switch and check continuity between 4WD shift switch terminals.

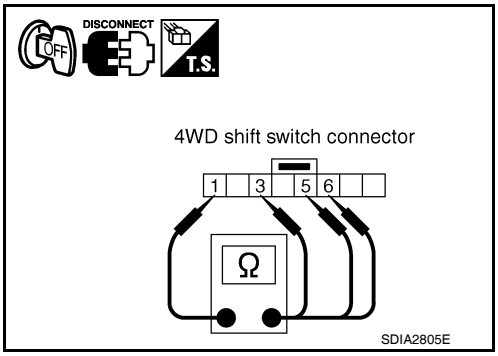

Terminal	Condition	Continuity
1 - 3	4WD shift switch: 2WD	Yes
	4WD shift switch: 4H and 4LO	No
1 - 5	4WD shift switch: 4H	Yes
	4WD shift switch: 2WD and 4LO	No
1 - 6	4WD shift switch: 4LO	Yes
	4WD shift switch: 2WD and 4H	No

Are the inspection results normal?

YES >> GO TO 5.
NO >> Replace 4WD shift switch.

5. CHECK TRANSFER CONTROL UNIT

Check transfer control unit input/output signal. Refer to DLN-235, "Reference Value".

Are the inspection results normal?

YES >> GO TO 6.
NO >> Check transfer control unit pin terminals for damage or loose connection with harness connector. If any items are damaged, repair or replace damaged parts.

6. CHECK DTC

Drive the vehicle and then perform self-diagnosis.

Is DTC P1813 displayed?

YES >> Replace transfer control unit. Refer to DLN-272, "Removal and Installation".
NO >> Inspection End.

Component Inspection

INFOID:0000000005258388

1. Turn ignition switch “OFF”. (Stay for at least 5 seconds.)
2. Remove 4WD shift switch harness connector.
3. Operate 4WD shift switch and check continuity between 4WD shift switch terminals.

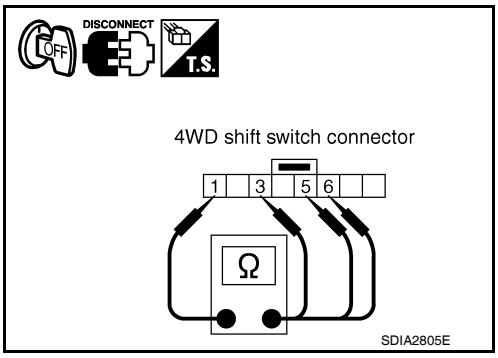

Terminal	Condition	Continuity
1 - 3	4WD shift switch: 2WD	Yes
	4WD shift switch: 4H and 4LO	No
1 - 5	4WD shift switch: 4H	Yes
	4WD shift switch: 2WD and 4LO	No
1 - 6	4WD shift switch: 4LO	Yes
	4WD shift switch: 2WD and 4H	No

4. If the inspection results are abnormal replace the 4WD shift switch.

P1814 WAIT DETECTION SWITCH

Description

INFOID:0000000005258389

The wait detection switch detects if the transfer case is in 4WD. DTC P1814 will set if an improper signal from the wait detection switch is input due to open or short circuit.

DTC Logic

INFOID:0000000005258390

DTC DETECTION LOGIC

DTC	CONSULT-III	Diagnostic item is detected when...	Reference
[P1814]	4WD DETECT SWITCH	Improper signal from wait detection switch is input due to open or short circuit.	DLN-217

DTC CONFIRMATION PROCEDURE

1. DTC CONFIRMATION PROCEDURE

1. Turn ignition switch ON.
2. Perform self-diagnosis.

Is DTC P1814 detected?

YES >> Perform diagnosis procedure. Refer to DLN-217, "Diagnosis Procedure".
NO >> Inspection End.

Diagnosis Procedure

INFOID:0000000005258391

Regarding Wiring Diagram information, refer to DLN-240, "Wiring Diagram - PART TIME 4WD SYSTEM -".

1. CHECK WAIT DETECTION SWITCH SIGNAL

With CONSULT-III

1. Start engine.
2. Select “DATA MONITOR” mode for “ALL MODE AWD/4WD” with CONSULT-III.
3. Read out the value of “WAIT DETCT SW”.

Condition		Display value
• Vehicle stopped • Engine running • A/T selector lever “N” position • Brake pedal depressed	4WD shift switch: 4H and 4LO	ON
	4WD shift switch: 2WD	OFF

Without CONSULT-III

1. Start engine.
2. Check voltage between transfer control unit harness connector terminal and ground.

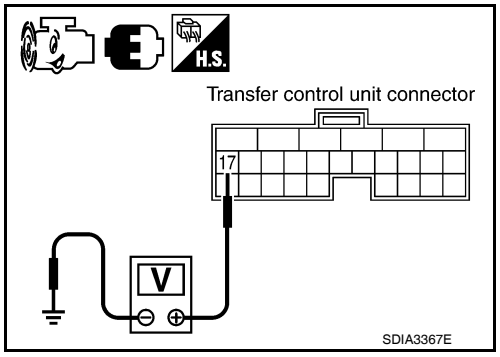

Connector	Terminal	Condition		Voltage (Approx.)
M165	17 - Ground	• Vehicle stopped • Engine running • A/T selector lever “N” position • Brake pedal depressed	4WD shift switch : 4H and 4LO	0V
			4WD shift switch: 2WD	Battery voltage

Are the inspection results normal?

YES >> GO TO 5.
NO >> GO TO 2.

2. CHECK HARNESS BETWEEN TRANSFER CONTROL UNIT AND WAIT DETECTION SWITCH

1. Turn ignition switch “OFF”. (Stay for at least 5 seconds.)
2. Disconnect transfer control unit harness connector and the wait detection switch harness connector.
3. Check continuity between transfer control unit harness connector M165 terminal 17 and wait detection switch harness connector F73 terminal 10.

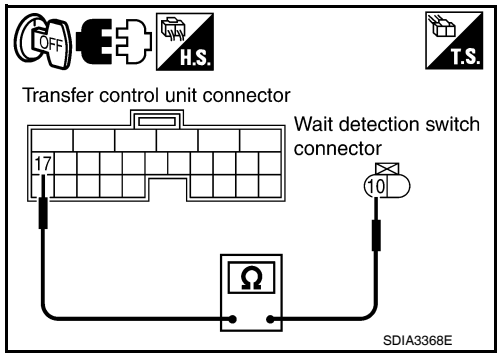

Continuity should exist.

Also check harness for short to ground and short to power.

Is there continuity?

YES >> GO TO 3.
NO >> Repair or replace damaged parts.

3. CHECK GROUND CIRCUIT

1. Turn ignition switch “OFF”. (Stay for at least 5 seconds.)
2. Disconnect wait detection switch harness connector.
3. Check continuity between wait detection switch harness connector F73 terminal 11 and ground.

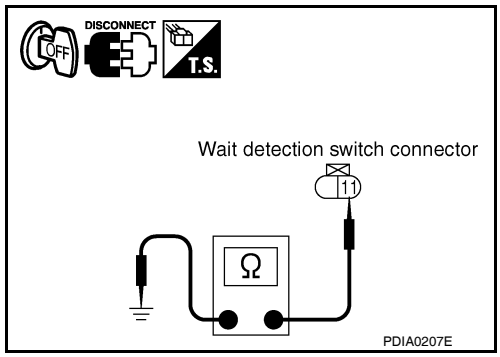

Continuity should exist.

Also check harness for short to power.

Is there continuity?

YES >> GO TO 4.
NO >> Repair open circuit or short to power in harness or connectors.

4. CHECK WAIT DETECTION SWITCH

1. Turn ignition switch “OFF”. (Stay for at least 5 seconds.)
2. Disconnect wait detection switch harness connector.
3. Remove wait detection switch. Refer to DLN-196, "Component Parts Location".
4. Push and release wait detection switch and check continuity between wait detection switch terminals 10 and 11.

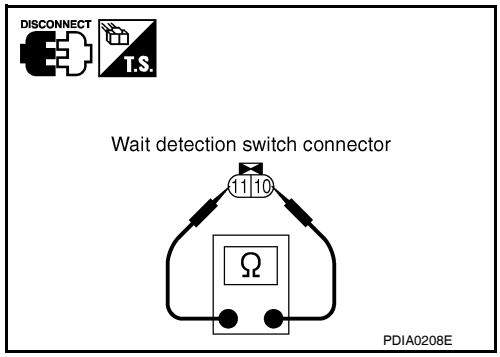

Terminal	Condition	Continuity
10 - 11	Push wait detection switch	Yes
	Release wait detection switch	No

Are the inspection results normal?

YES >> GO TO 5.
NO >> Replace wait detection switch.

5. CHECK TRANSFER CONTROL UNIT

Check transfer control unit input/output signal. Refer to DLN-235, "Reference Value".

Are the inspection results normal?

YES >> GO TO 6.
NO >> Check transfer control unit pin terminals for damage or loose connection with harness connector. If any items are damaged, repair or replace damaged parts.

6. CHECK DTC

Drive the vehicle and then perform self-diagnosis.

Is DTC P1814 displayed?

YES >> Replace transfer control unit. Refer to DLN-272, "Removal and Installation".
NO >> Inspection End.

Component Inspection

INFOID:0000000005258392

1. Turn ignition switch “OFF”. (Stay for at least 5 seconds.)
2. Disconnect wait detection switch harness connector.
3. Remove wait detection switch. Refer to DLN-196, "Component Parts Location".
4. Push and release wait detection switch and check continuity between wait detection switch terminals 10 and 11.

Terminal	Condition	Continuity
10 - 11	Push wait detection switch	Yes
	Release wait detection switch	No

5. If the inspection results are abnormal replace the wait detection switch.

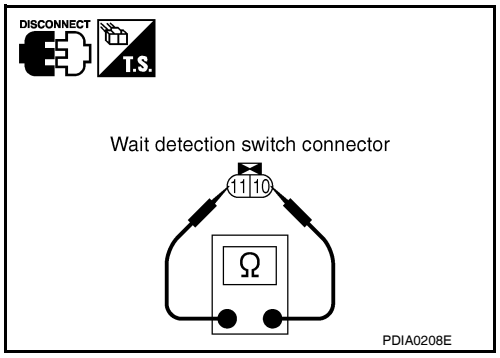

P1816 TRANSMISSION RANGE SWITCH

Description

INFOID:0000000005258393

The transmission range switch transmits the A/T position indicator signal (transmission range switch signal) via CAN communication to the transfer control unit. DTC P1816 will set when the transmission range switch signal is malfunctioning or there is a communication error.

DTC Logic

INFOID:0000000005258394

DTC DETECTION LOGIC

DTC	CONSULT-III	Diagnostic item is detected when...	Reference
[P1816]	PNP SW/CIRC	When transmission range switch signal is malfunction or communication error between the modules.	DLN-220

DTC CONFIRMATION PROCEDURE

1.DTC CONFIRMATION PROCEDURE

1. Turn ignition switch ON.
2. Perform self-diagnosis.

Is DTC P1816 displayed?

YES >> Perform diagnosis procedure. Refer to DLN-220, "Diagnosis Procedure".
NO >> Inspection End.

Diagnosis Procedure

INFOID:0000000005258395

1.CHECK DTC WITH TCM

Perform self-diagnosis with TCM. Refer to TM-36, "CONSULT-III Function (TRANSMISSION)".

Is any malfunction detected by self-diagnosis?

YES >> Check the malfunctioning system.
NO >> GO TO 2.

2.CHECK TRANSFER CONTROL UNIT

Check transfer control unit input/output signal. Refer to DLN-235, "Reference Value".

Is the inspection result normal?

YES >> GO TO 3.
NO >> Check transfer control unit pin terminals for damage or loose connection with harness connector. If any items are damaged, repair or replace damaged parts.

3.CHECK DTC

Drive the vehicle and then perform self-diagnosis.

Is DTC P1816 displayed?

YES >> Perform self-diagnosis with TCM again.
NO >> Inspection End.

P1817 ACTUATOR MOTOR

Description

INFOID:0000000005258396

The actuator motor receives signals from the transfer control unit and controls shift rods which shift the transfer case. DTC P1817 will set when any of the following occur:
- Motor does not operate properly due to open or short circuit in actuator motor.
- Malfunction is detected in the actuator motor. (When 4WD shift switch is operated and actuator motor does not operate)
- Malfunction is detected in transfer shift high relay or transfer shift low relay.

DTC Logic

INFOID:0000000005258397

DTC DETECTION LOGIC

DTC	CONSULT-III	Diagnostic item is detected when...	Reference
[P1817]	SHIFT ACTUATOR	• Motor does not operate properly due to open or short circuit in actuator motor. • Malfunction is detected in the actuator motor. (When 4WD shift switch is operated and actuator motor is not operated) • Malfunction is detected in transfer shift high relay or transfer shift low relay.	DLN-221

DTC CONFIRMATION PROCEDURE

1. DTC CONFIRMATION PROCEDURE

1. Turn ignition switch ON.
2. Perform self-diagnosis.

Is DTC P1817 detected?

YES >> Perform diagnosis procedure. Refer to DLN-221, "Diagnosis Procedure".
NO >> Inspection End.

Diagnosis Procedure

INFOID:0000000005258398

Regarding Wiring Diagram information, refer to DLN-240, "Wiring Diagram - PART TIME 4WD SYSTEM -".

1. CHECK ACTUATOR MOTOR SIGNAL

With CONSULT-III
1. Start engine.
2. Select “DATA MONITOR” mode for “ALL MODE AWD/4WD” with CONSULT-III.
3. Read out the value of “SHIFT ACT1”, “SHIFT AC MON1”, “SHIFT ACT2”, “SHIFT AC MON2”.

Monitored item	Condition		Display value
SHIFT ACT1	• Vehicle stopped • Engine running • A/T selector lever “N” position • Brake pedal depressed	4WD shift switch: 2WD to 4H or 4H to 4LO or 2WD to 4LO	ON
		Except the above	OFF
SHIFT AC MON1		4WD shift switch: 2WD to 4H or 4H to 4LO or 2WD to 4LO	ON
		Except the above	OFF
SHIFT ACT2		4WD shift switch: 4LO to 4H or 4H to 2WD or 4LO to 2WD	ON
		Except the above	OFF
SHIFT AC MON2		4WD shift switch: 4LO to 4H or 4H to 2WD or 4LO to 2WD	ON
		Except the above	OFF

Without CONSULT-III

1. Start engine.
2. Depress brake pedal and stop vehicle.
3. Set A/T selector lever to “N” position.
4. Check voltage between transfer control unit harness connector terminal and ground.

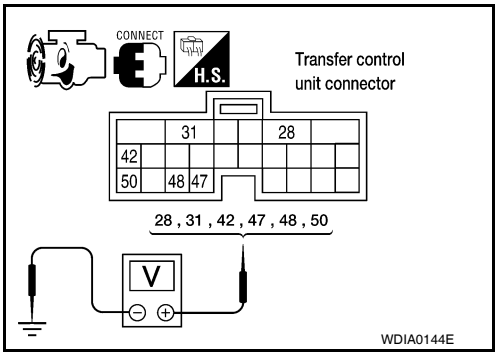

Connector	Terminal	Condition		Voltage (Approx.)
M165	28 - Ground	When 4WD shift switch is operated (While actuator motor is operating.)		Battery voltage → 0V
		When 4WD shift switch is not operated		0V
	31 - Ground	Always		0V
	42 - Ground	• Vehicle stopped • Engine running • A/T selector lever “N” position • Brake pedal depressed	4WD shift switch: 2WD to 4H or 4H to 4LO or 2WD to 4LO	0V
			Except the above	Battery voltage
M165	47 - Ground	• Vehicle stopped • Engine running • A/T selector lever “N” position • Brake pedal depressed	4WD shift switch: 2WD to 4H or 4H to 4LO or 2WD to 4LO	Battery voltage → 0V
			Except the above	0V
	48 - Ground		4WD shift switch: 4LO to 4H or 4H to 2WD or 4LO to 2WD	Battery voltage → 0V
			Except the above	0V
	50 - Ground		4WD shift switch: 4LO to 4H or 4H to 2WD or 4LO to 2WD	0V
			Except the above	Battery voltage

Are the inspection results normal?

YES >> GO TO 9.
NO >> GO TO 2.

2. CHECK ACTUATOR MOTOR POWER SUPPLY CIRCUIT

1. Turn ignition switch “OFF”. (Stay for at least 5 seconds.)
2. Disconnect transfer control unit harness connector.
3. Check voltage between transfer control unit harness connector terminal 27 and ground.

Connector	Terminal	Voltage (Approx.)
M165	27 - Ground	0V

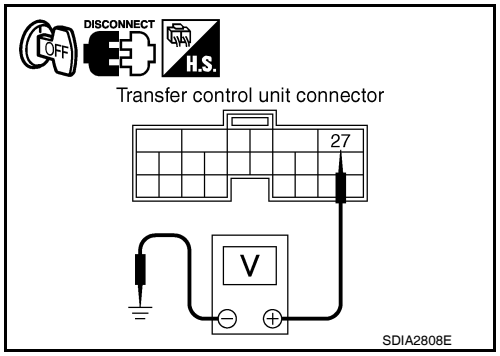

4. Turn ignition switch “ON”.
5. Check voltage between transfer control unit harness connector terminal 27 and ground.

Connector	Terminal	Voltage (Approx.)
M165	27 - Ground	Battery voltage

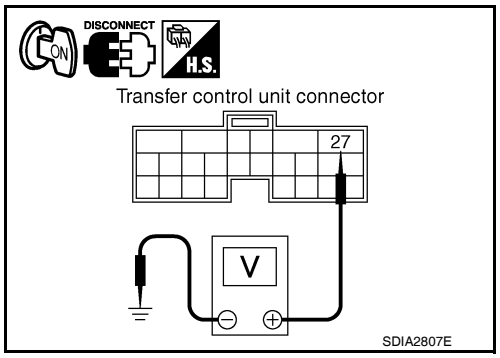

Are the inspection results normal?

YES >> GO TO 3.
NO >> 1. Check harness for short or open between transfer control unit harness connector M165 terminal 27 and transfer shut off relay 2 harness connector E157 terminal 5 and 10A fuse (No. 57, located in the fuse and relay block). If any items are damaged, repair or replace damaged parts.
2. Perform trouble diagnosis for power supply circuit. Refer to DLN-204, "Diagnosis Procedure".

3. CHECK TRANSFER RELAY POWER SUPPLY CIRCUIT

1. Turn ignition switch “OFF”. (Stay for at least 5 seconds.)
2. Remove transfer shift high relay and transfer shift low relay. Refer to DLN-196, "Component Parts Location".
3. Check voltage between transfer shift high and transfer shift low relay connector terminals and ground.

Connector	Terminal	Voltage (Approx.)
E44	2 - Ground	0V
E43	2 - Ground	0V

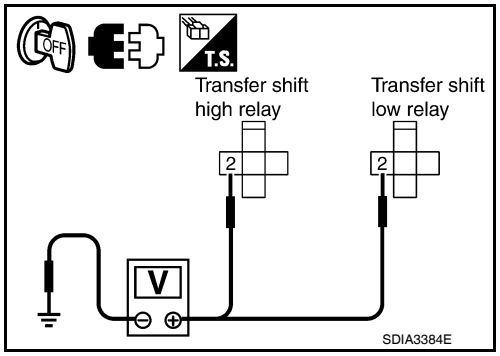

4. Turn ignition switch “ON”. (Do not start engine.)
5. Check voltage between transfer shift high and transfer shift low relay connector terminals and ground.

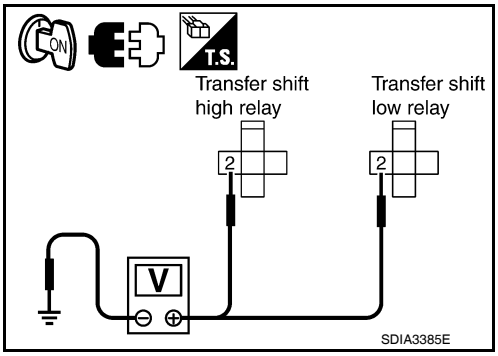

Connector	Terminal	Voltage (Approx.)
E44	2 - Ground	Battery voltage
E43	2 - Ground	Battery voltage

Are the inspection results normal?

YES >> GO TO 4.
NO >> Check the following. If any items are damaged, repair or replace damaged parts.
- Harness for short or open between transfer control unit harness connector terminal 27 and transfer shift high relay harness connector E44 terminal 2.
- Harness for short or open between transfer control unit harness connector terminal 27 and transfer shift low relay harness connector terminal E43 terminal 2.

4. CHECK TRANSFER RELAY

1. Turn ignition switch “OFF”. (Stay for at least 5 seconds.)
2. Remove transfer shift high relay and transfer shift low relay.
3. Apply 12V direct current between transfer shift high and low relay terminals 1 and 2.
4. Check continuity between relay terminals 3 and 4, 3 and 5.

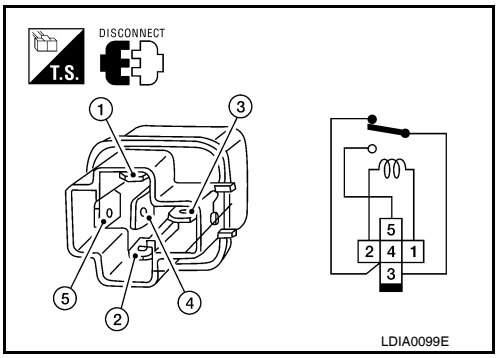

Terminal	Condition	Continuity
3 - 4	12V direct current supply between terminals 1 and 2	No
	OFF	Yes
3 - 5	12V direct current supply between terminals 1 and 2	Yes
	OFF	No

Are the inspection results normal?

YES >> GO TO 5.
NO >> Replace the transfer shift high or low relay.

5. CHECK (1): HARNESS BETWEEN TRANSFER CONTROL UNIT AND TRANSFER SHIFT RELAY

1. Turn ignition switch “OFF”. (Stay for at least 5 seconds.)
2. Disconnect transfer control unit harness connector.
3. Remove transfer shift high relay and transfer shift low relay.
4. Check continuity between the following terminals.

- Transfer control unit harness connector M165 terminal 42 and transfer shift high relay harness connector E44 terminal 1.
- Transfer control unit harness connector M165 terminal 50 and transfer shift low relay harness connector E43 terminal 1.

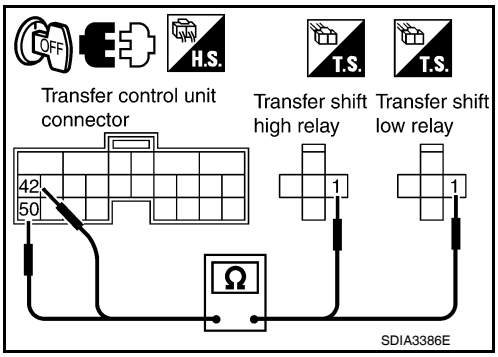

Continuity should exist.

Also check harness for short to ground and short to power.

Is there continuity?

YES >> GO TO 6.
NO >> Repair or replace damaged parts.

6. CHECK (2): HARNESS BETWEEN TRANSFER CONTROL UNIT AND TRANSFER SHIFT RELAY

1. Turn ignition switch “OFF”. (Stay for at least 5 seconds.)
2. Disconnect transfer control unit harness connector.
3. Remove transfer shift high relay and transfer shift low relay.

4. Check continuity between the following terminals.
- Transfer control unit harness connector M165 terminal 28 and transfer shift high relay harness connector E44 terminal 5.
- Transfer control unit harness connector M165 terminal 28 and transfer shift low relay harness connector E43 terminal 5.
- Transfer control unit harness connector M165 terminal 31 and transfer shift high relay harness connector E44 terminal 4.
- Transfer control unit harness connector M165 terminal 31 and transfer shift low relay harness connector E43 terminal 4.

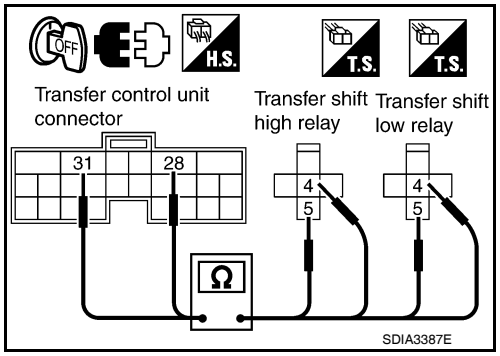

Continuity should exist.

Also check harness for short to ground and short to power.

Is there continuity?

YES >> GO TO 7.
NO >> Repair or replace damaged parts.

7. CHECK ACTUATOR MOTOR OPERATION CIRCUIT

1. Turn ignition switch “OFF”. (Stay for at least 5 seconds.)
2. Disconnect transfer control unit harness connector and the transfer control device (actuator motor) harness connector.
3. Check continuity between the following terminals.
- Transfer control unit harness connector M165 terminal 47 and transfer control device (actuator motor) harness connector F72 terminal 23.
- Transfer control unit harness connector M165 terminal 48 and transfer control device (actuator motor) harness connector F72 terminal 24.

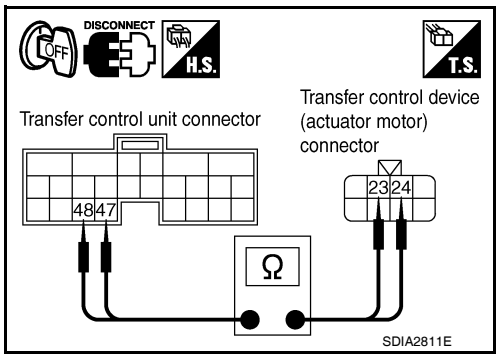

- Transfer control device (actuator motor) harness connector F72 terminal 24 and transfer shift high relay harness connector E44 terminal 3.
- Transfer control device (actuator motor) harness connector F72 terminal 23 and transfer shift low relay harness connector E43 terminal 3.

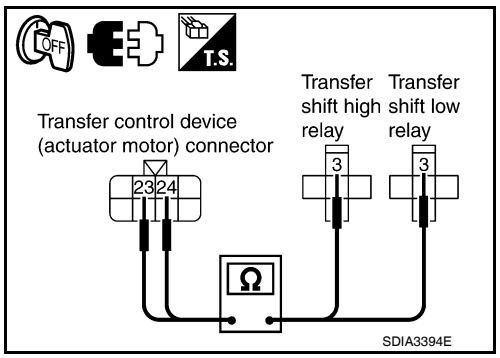

Continuity should exist.

Also check harness for short to ground and short to power.

Is there continuity?

YES >> GO TO 8.
NO >> Repair or replace damaged parts.

8. CHECK ACTUATOR MOTOR

1. Remove transfer control device. Refer to DLN-277, "Removal and Installation".

2. Check operation by applying battery voltage to transfer control device (actuator motor) terminals 23 and 24.
   CAUTION:
   Be careful not to overheat the harness.

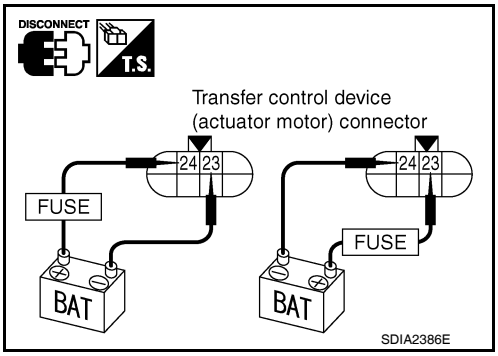

Terminal	Actuator motor
24 (Battery voltage) - 23 (Ground)	Clockwise rotate
23 (Battery voltage) - 24 (Ground)	Counterclockwise rotate

Does actuator motor rotate?

YES >> GO TO 9.
NO >> Replace transfer control device (actuator motor).

9. CHECK TRANSFER CONTROL UNIT

Check transfer control unit input/output signal. Refer to DLN-235, "Reference Value".

Are the inspection results normal?

YES >> GO TO 10.
NO >> Check transfer control unit pin terminals for damage or loose connection with harness connector. If any items are damaged, repair or replace damaged parts.

10. CHECK DTC

Perform the self-diagnosis, after driving a vehicle for a while.

Is DTC P1817 displayed?

YES >> Replace transfer control unit. Refer to DLN-272, "Removal and Installation".
NO >> Inspection End.

Component Inspection

INFOID:0000000005258399

ACTUATOR MOTOR

1. Remove transfer control device. Refer to DLN-277, "Removal and Installation".
2. Check operation by applying battery voltage to transfer control device (actuator motor) terminals 23 and 24.
   CAUTION:
   Be careful not to overheat the harness.

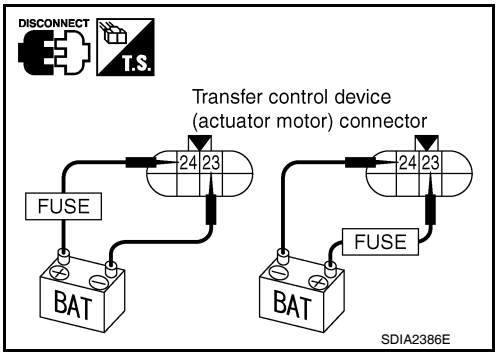

Terminal	Actuator motor
24 (Battery voltage) - 23 (Ground)	Clockwise rotate
23 (Battery voltage) - 24 (Ground)	Counterclockwise rotate

3. If the inspection results are abnormal replace the transfer control device (actuator motor).

TRANSFER RELAY

1. Turn ignition switch “OFF”. (Stay for at least 5 seconds.)
2. Remove transfer shift high relay and transfer shift low relay 2. Refer to DLN-196, "Component Parts Location".
3. Apply 12V direct current between transfer shift high and low relay terminals 1 and 2.

4. Check continuity between relay terminals 3 and 4, and 3 and 5.

Terminal	Condition	Continuity
3 - 4	12V direct current supply between terminals 1 and 2	No
	OFF	Yes
3 - 5	12V direct current supply between terminals 1 and 2	Yes
	OFF	No

5. If the inspection results are abnormal replace the transfer shift high or low relay.

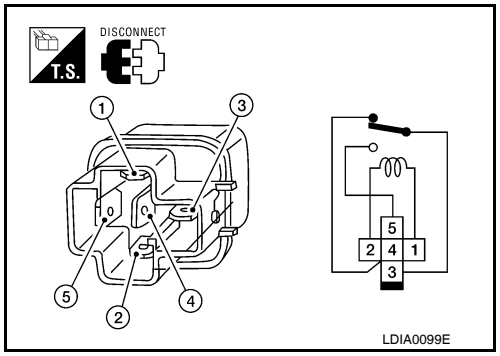

P1818 ACTUATOR POSITION SWITCH

Description

INFOID:0000000005258400

The actuator position switch detects the current actuator motor range. DTC P1818 will set if either of the following occur:
- Improper signal from actuator position switch is input due to open or short circuit.
- Malfunction is detected in actuator position switch.

DTC Logic

INFOID:0000000005258401

DTC DETECTION LOGIC

DTC	CONSULT-III	Diagnostic item is detected when...	Reference
[P1818]	SHIFT ACT POSI SW	• Improper signal from actuator position switch is input due to open or short circuit. • Malfunction is detected in actuator position switch.	DLN-228

DTC CONFIRMATION PROCEDURE

1. DTC CONFIRMATION PROCEDURE

1. Turn ignition switch ON.
2. Perform self-diagnosis.

Is DTC P1818 detected?

YES >> Perform diagnosis procedure. Refer to DLN-228, "Diagnosis Procedure".
NO >> Inspection End.

Diagnosis Procedure

INFOID:0000000005258402

Regarding Wiring Diagram information, refer to DLN-240, "Wiring Diagram - PART TIME 4WD SYSTEM -".

1. CHECK ACTUATOR POSITION SWITCH SIGNAL

With CONSULT-III
1. Start engine.
2. Depress brake pedal and stop vehicle.
3. Set A/T selector lever to "N" position.
4. Select “DATA MONITOR” mode for “ALL MODE AWD/4WD” with CONSULT-III.
5. Read out the value of “SHIFT POS SW1”, “SHIFT POS SW2”, “SHIFT POS SW3”, “SHIFT POS SW4”.

Monitored item	Condition	Display value
SHIFT POS SW1	4WD shift switch: 2WD and 4LO	ON
	4WD shift switch: 4H	OFF
SHIFT POS SW2	4WD shift switch: 4LO	ON
	4WD shift switch: 2WD and 4H	OFF
SHIFT POS SW3	4WD shift switch: 2WD and 4H	ON
	4WD shift switch: 4LO	OFF
SHIFT POS SW4	4WD shift switch: 4H and 4LO	ON
	4WD shift switch: 2WD	OFF

Without CONSULT-III
1. Start engine.

2. Depress brake pedal and stop vehicle.
3. Set A/T selector lever to "N" position.
4. Check voltage between transfer control unit harness connector terminal and ground.

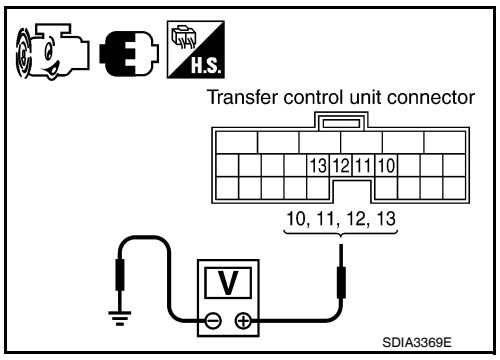

Connector	Terminal	Condition	Voltage (Approx.)
M165	10 - Ground	4WD shift switch: 2WD and 4LO	0V
		4WD shift switch: 4H	Battery voltage
	11 - Ground	4WD shift switch: 4LO	0V
		4WD shift switch: 2WD and 4H	Battery voltage
	12 - Ground	4WD shift switch: 2WD and 4H	0V
		4WD shift switch: 4LO	Battery voltage
	13 - Ground	4WD shift switch: 4H and 4LO	0V
		4WD shift switch: 2WD	Battery voltage

Are the inspection results normal?

YES >> GO TO 4.
NO >> GO TO 2.

2. CHECK HARNESS BETWEEN TRANSFER CONTROL UNIT AND ACTUATOR POSITION SWITCH

1. Turn ignition switch “OFF”. (Stay for at least 5 seconds.)
2. Disconnect transfer control unit harness connector and the transfer control device (actuator position switch) harness connector.
3. Check continuity between the following terminals.

- Transfer control unit harness connector M165 terminal 10 and transfer control device (actuator position switch) harness connector F72 terminal 26.
- Transfer control unit harness connector M165 terminal 11 and transfer control device (actuator position switch) harness connector F72 terminal 20.
- Transfer control unit harness connector M165 terminal 12 and transfer control device (actuator position switch) harness connector F72 terminal 21.
- Transfer control unit harness connector M165 terminal 13 and transfer control device (actuator position switch) harness connector F72 terminal 25.

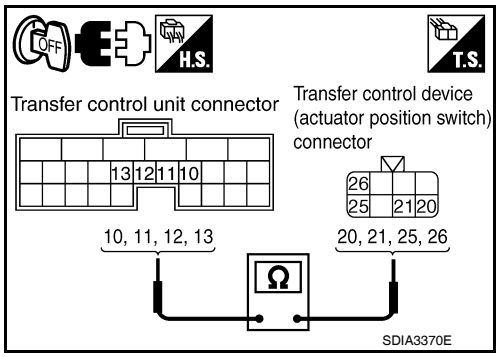

Continuity should exist.

Also check harness for short to ground and short to power.

Is there continuity?

YES >> GO TO 3.
NO >> Repair or replace damaged parts.

3. CHECK GROUND CIRCUIT

1. Turn ignition switch “OFF”. (Stay for at least 5 seconds.)

2. Check continuity between transfer control device (actuator position switch) harness connector F72 terminal 22 and ground.

Continuity should exist.

Also check harness for short to power.

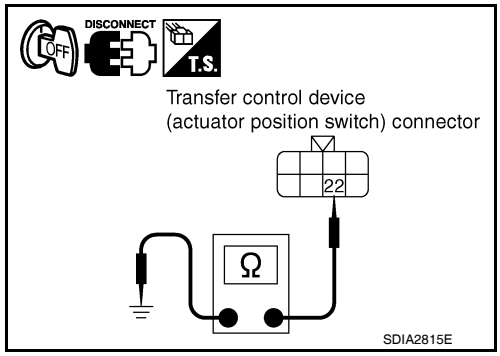

Is there continuity?

YES >> GO TO 4.
NO >> Repair open circuit or short to power in harness or connectors.

4. CHECK TRANSFER CONTROL UNIT

Check transfer control unit input/output signal. Refer to DLN-235, "Reference Value".

Are the inspection results normal?

YES >> GO TO 5.
NO >> Check transfer control unit pin terminals for damage or loose connection with harness connector. If any items are damaged, repair or replace damaged parts.

5. CHECK DTC

Perform the self-diagnosis, after driving a vehicle for a while.

Is DTC P1818 displayed?

YES >> Replace transfer control device. Refer to DLN-272, "Removal and Installation".
NO >> Inspection End.

P1819 TRANSFER CONTROL DEVICE

Description

INFOID:0000000005258403

The transfer control device integrates the actuator motor and actuator position switch. DTC P1819 will set if either of the following conditions exist:
- Malfunction occurs in transfer control device drive circuit.
- Malfunction is detected in transfer shut off relay 1 and transfer shut off relay 2.

DTC Logic

INFOID:0000000005258404

DTC DETECTION LOGIC

DTC	CONSULT-III	Diagnostic item is detected when...	Reference
[P1819]	SHIFT ACT CIR	• Malfunction is detected in transfer shut off relay 1 and transfer shut off relay 2. • Malfunction occurs in transfer control device drive circuit.	DLN-231

DTC CONFIRMATION PROCEDURE

1. DTC CONFIRMATION PROCEDURE

1. Turn ignition switch ON.
2. Perform self-diagnosis.

Is DTC P1819 detected?

YES >> Perform diagnosis procedure. Refer to DLN-231, "Diagnosis Procedure".
NO >> Inspection End.

Diagnosis Procedure

INFOID:0000000005258405

Regarding Wiring Diagram information, refer to DLN-240, "Wiring Diagram - PART TIME 4WD SYSTEM -".

1. CHECK POWER SUPPLY

1. Turn ignition switch “OFF”. (Stay for at least 5 seconds.)
2. Disconnect transfer control unit harness connector.
3. Check voltage between transfer control unit harness connector terminal and ground.

Connector	Terminal	Voltage (Approx.)
M165	25 - Ground	0V
M166	27 - Ground	

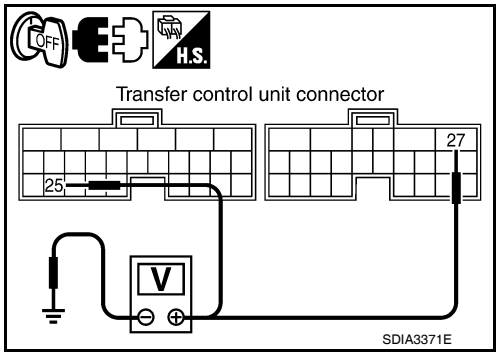

4. Turn ignition switch “ON”. (Do not start engine.)
5. Check voltage between transfer control unit harness connector terminals and ground.

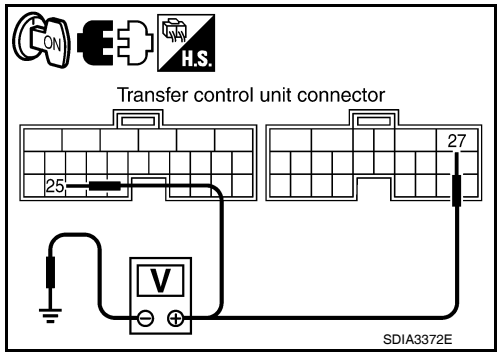

Connector	Terminal	Voltage (Approx.)
M165	25 - Ground	Battery voltage
M166	27 - Ground	

Are the inspection results normal?

YES >> GO TO 2.
NO >> Check the following. If any items are damaged, repair or replace damaged parts.
- 10A fuse (No. 57, located in the fuse and relay box).
- 40A fuse (No. **J**, located in the fuse and fusible link box).
- Harness for short or open between battery and transfer shut off relay 1 harness connector E156 terminal 3.
- Harness for short or open between transfer control unit harness connector M166 terminal 27 and transfer shut off relay 1 harness connector E156 terminal 5.
- Harness for short or open between ignition switch and transfer shut off relay 1 harness connector E156 terminal 1.
- Harness for short or open between transfer shut off relay 1 harness connector E156 terminal 2 and ground.
- Harness for short or open between ignition switch and transfer control unit harness connector M165 terminal 25.
- Battery and ignition switch.
- Transfer shut off relay 1. Refer to DLN-206, "Component Inspection".

2. CHECK GROUND CIRCUIT

1. Turn ignition switch "OFF".
2. Disconnect transfer control unit harness connector.
3. Check continuity between transfer control unit harness connector M166 terminal 32 and ground.

Continuity should exist.

Also check harness for short to power.

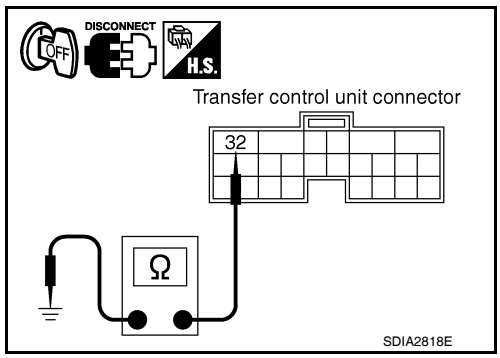

Is there continuity?

YES >> GO TO 3.
NO >> Repair open circuit or short to power in harness or connectors.

3. CHECK POWER SUPPLY SIGNAL

1. Turn ignition switch “OFF”. (Stay for at least 5 seconds.)
2. Connect transfer control unit harness connector.
3. Check voltage between transfer control unit harness connector terminal and ground.

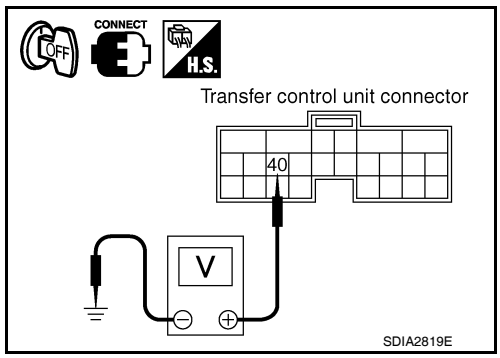

Connector	Terminal	Voltage (Approx.)
M166	40 - Ground	Battery voltage

4. Turn ignition switch “ON”. (Do not start engine.)
5. Check voltage between transfer control unit harness connector terminal and ground.

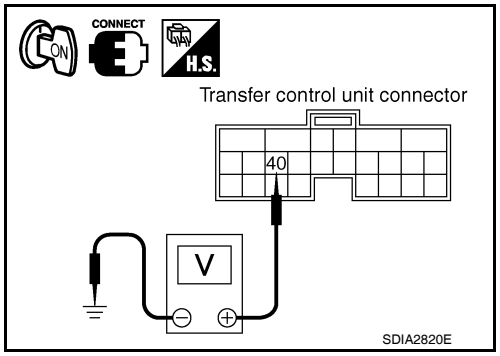

Connector	Terminal	Voltage (Approx.)
M166	40 - Ground	0V

Are the inspection results normal?

YES >> GO TO 4.
NO >> Check the following. If any items are damaged, repair or replace damaged parts.
- Harness for short or open between battery and transfer shut off relay 2 harness connector E157 terminal 1.
- Harness for short or open between transfer shut off relay 2 harness connector E157 terminal 2 and transfer control unit harness connector M166 terminal 40.
- Transfer shut off relay 2.

4. CHECK TRANSFER CONTROL UNIT

Check transfer control unit input/output signal. Refer to DLN-235, "Reference Value".

Are the inspection results normal?

YES >> GO TO 5 (With CONSULT-III) or GO TO 6 (Without CONSULT-III).
NO >> Check transfer control unit pin terminals for damage or loose connection with harness connector. If any items are damaged, repair or replace damaged parts.

5. PERFORM SELF-DIAGNOSIS (WITH CONSULT-III)

With CONSULT-III

1. Turn ignition switch “ON”. (Do not start engine.)
2. Select “SELF-DIAG RESULTS” mode for “ALL MODE AWD/4WD” with CONSULT-III.
3. Touch “ERASE”.
4. Turn ignition switch “OFF” and wait at least 10 seconds.
5. Perform the self-diagnosis again.

Is the “SHIFT ACT CIR [P1819]” displayed?

YES >> Replace transfer control unit. Refer to DLN-272, "Removal and Installation".
NO >> Inspection End.

6. PERFORM SELF-DIAGNOSIS (WITHOUT CONSULT-III)

Without CONSULT-III

1. Perform the self-diagnosis and then erase self-diagnostic results. Refer to DLN-200, "CONSULT-III Function (ALL MODE AWD/4WD)".
2. Perform the self-diagnosis again.

Do the self-diagnostic results indicate transfer control device?

YES >> Replace transfer control unit. Refer to DLN-272, "Removal and Installation".
NO >> Inspection End.

P1820 ENGINE SPEED SIGNAL

Description

INFOID:0000000005258406

The ECM transmits the engine speed signal via CAN communication to the transfer control unit. DTC P1820 will set when either of the following occur:
- Malfunction is detected in engine speed signal that is output from the ECM.
- Improper signal is input while driving.

DTC Logic

INFOID:0000000005258407

DTC DETECTION LOGIC

DTC	CONSULT-III	Diagnostic item is detected when...	Reference
[P1820]	ENGINE SPEED SIG	• Malfunction is detected in engine speed signal that is output from ECM through CAN communication. • Improper signal is input while driving.	DLN-234

DTC CONFIRMATION PROCEDURE

1. DTC CONFIRMATION PROCEDURE

1. Turn ignition switch ON.
2. Perform self-diagnosis.

Is DTC P1820 detected?

YES >> Perform diagnosis procedure. Refer to DLN-234, "Diagnosis Procedure".
NO >> Inspection End.

Diagnosis Procedure

INFOID:0000000005258408

1. CHECK DTC WITH ECM

Perform self-diagnosis with ECM. Refer to EC-79, "CONSULT-III Function (ENGINE)".

Is any malfunction detected by self-diagnosis?

YES >> Check the malfunctioning system.
NO >> GO TO 2.

2. CHECK TRANSFER CONTROL UNIT

Check transfer control unit input/output signal. Refer to DLN-235, "Reference Value".

Are the inspection results normal?

YES >> GO TO 3.
NO >> Check transfer control unit pin terminals for damage or loose connection with harness connector. If any items are damaged, repair or replace damaged parts.

3. CHECK DTC

Perform the self-diagnosis, after driving a vehicle for a while.

Is DTC P1820 displayed?

YES >> Perform self-diagnosis with ECM again.
NO >> Inspection End.

ECU DIAGNOSIS

TRANSFER CONTROL UNIT

Reference Value

INFOID:0000000005258409

VALUE ON THE DIAGNOSIS TOOL

CONSULT-III data monitor item

Monitored item [Unit]	Content	Condition		Display value
VHCL/S SEN·FR [km/h] or [mph]	Wheel speed (Front wheel)	Vehicle stopped		0 km/h (0 mph)
		Vehicle running **CAUTION:** **Check air pressure of tire under standard condition.**		Approximately equal to the indication on speedometer (Inside of ±10%)
VHCL/S SEN·RR [km/h] or [mph]	Wheel speed (Rear wheel)	Vehicle stopped		0 km/h (0 mph)
		Vehicle running **CAUTION:** **Check air pressure of tire under standard condition.**		Approximately equal to the indication on speedometer (Inside of ±10%)
ENGINE SPEED [rpm]	Engine speed	Engine stopped (Engine speed: Less than 400 rpm)		0 rpm
		Engine running (Engine speed: 400 rpm or more)		Approximately equal to the indication on tachometer
BATTERY VOLT [V]	Power supply voltage for transfer control unit	Ignition switch: On		Battery voltage
2WD SWITCH [On/Off]	Input condition from 4WD shift switch	4WD shift switch: 2WD		On
		4WD shift switch: 4H and 4LO		Off
4H SWITCH [On/Off]	Input condition from 4WD shift switch	4WD shift switch: 4H		On
		4WD shift switch: 2WD and 4LO		Off
4L SWITCH [On/Off]	Input condition from 4WD shift switch	4WD shift switch: 4LO		On
		4WD shift switch: 2WD and 4H		Off
4L POSI SW [On/Off]	Condition of 4LO switch	• Vehicle stopped • Engine running • A/T selector lever “N” position • Brake pedal depressed	4WD shift switch: 4LO	On
			Except the above	Off
ATP SWITCH [On/Off]	Condition of ATP switch	• Vehicle stopped • Engine running • A/T selector lever “N” position • Brake pedal depressed	4WD shift switch : 4H to 4LO or 4LO to 4H (While actuator motor is operating.)	On
			Except the above	Off
WAIT DETCT SW [On/Off]	Condition of wait detection switch	• Vehicle stopped • Engine running • A/T selector lever “N” position • Brake pedal depressed	4WD shift switch : 4H and 4LO	On
			4WD shift switch: 2WD	Off
4WD MODE [2H/4H/4L]	Control status of 4WD (Output condition of 4WD shift indicator lamp and 4LO indicator lamp)	4WD shift switch (Engine running)	2WD	2H
			4H	4H
			4LO	4L

Monitored item [Unit]	Content	Condition		Display value
VHCL/S COMP [km/h] or [mph]	Vehicle speed	Vehicle stopped		0 km/h (0 mph)
		Vehicle running **CAUTION:** **Check air pressure of tire under standard condition.**		Approximately equal to the indication on speedometer (Inside of ±10%)
SHIFT ACT 1 [On/Off]	Output condition to actuator motor (clockwise)	• Vehicle stopped • Engine running • A/T selector lever “N” position • Brake pedal depressed	4WD shift switch : 2WD to 4H or 4H to 4LO or 2WD to 4LO	On
			Except the above	Off
SHIFT AC MON1 [On/Off]	Check signal for transfer control unit signal output	• Vehicle stopped • Engine running • A/T selector lever “N” position • Brake pedal depressed	4WD shift switch : 2WD to 4H or 4H to 4LO or 2WD to 4LO	On
			Except the above	Off
SHIFT ACT 2 [On/Off]	Output condition to actuator motor (counterclockwise)	• Vehicle stopped • Engine running • A/T selector lever “N” position • Brake pedal depressed	4WD shift switch : 4LO to 4H or 4H to 2WD or 4LO to 2WD	On
			Except the above	Off
SHIFT AC MON2 [On/Off]	Check signal for transfer control unit signal output	• Vehicle stopped • Engine running • A/T selector lever “N” position • Brake pedal depressed	4WD shift switch : 4LO to 4H or 4H to 2WD or 4LO to 2WD	On
			Except the above	Off
SHIFT ACT/R MON [On/Off]	Operating condition of actuator motor relay (integrated in transfer control unit)	• Vehicle stopped • Engine running • A/T selector lever “N” position • Brake pedal depressed	When 4WD shift switch is operated	On
			When 4WD shift switch is not operated	Off
SHIFT POS SW1 [On/Off]	Condition of actuator position switch 1	• Vehicle stopped • Engine running • A/T selector lever “N” position • Brake pedal depressed	4WD shift switch: 2WD and 4LO	On
			4WD shift switch: 4H	Off
SHIFT POS SW2 [On/Off]	Condition of actuator position switch 2		4WD shift switch: 4LO	On
			4WD shift switch: 2WD and 4H	Off
SHIFT POS SW3 [On/Off]	Condition of actuator position switch 3		4WD shift switch: 2WD and 4H	On
			4WD shift switch: 4LO	Off
SHIFT POS SW4 [On/Off]	Condition of actuator position switch 4		4WD shift switch: 4H and 4LO	On
			4WD shift switch: 2WD	Off
4WD FAIL LAMP [On/Off]	4WD warning lamp condition	4WD warning lamp: On		On
		4WD warning lamp: Off		Off
2WD IND [On/Off]	Rear indicator of 4WD shift indicator lamp condition	Rear indicator of 4WD shift indicator lamp: On		On
		Rear indicator of 4WD shift indicator lamp: Off		Off
4H IND [On/Off]	Front and center indicator of 4WD shift indicator lamp condition	Front and center indicator of 4WD shift indicator lamp : On		On
		Front and center indicator of 4WD shift indicator lamp : Off		Off
4L IND [On/Off]	4LO indicator lamp condition	4LO indicator lamp: On		On
		4LO indicator lamp: Off		Off

PHYSICAL VALUES

Terminal Layout

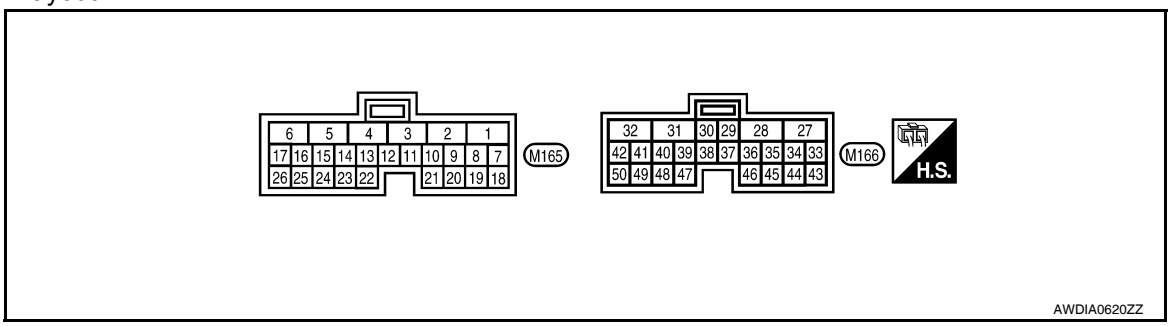

Terminal	Wire color	Item	Condition		Data (Approx.)
1	L	CAN-H	–		–
2	P	CAN-L	–		–
3	SB	K-LINE (CONSULT-III signal)	–		–
6	B	Ground	Always		0V
10	LG	Actuator position switch 1	• Vehicle stopped • Engine running • A/T selector lever “N” position • Brake pedal depressed	4WD shift switch: 2WD and 4LO	0V
				4WD shift switch: 4H	Battery voltage
11	W	Actuator position switch 2		4WD shift switch: 4LO	0V
				4WD shift switch: 2WD and 4H	Battery voltage
12	BR	Actuator position switch 3		4WD shift switch: 2WD and 4H	0V
				4WD shift switch: 4LO	Battery voltage
13	L	Actuator position switch 4		4WD shift switch: 4H and 4LO	0V
				4WD shift switch: 2WD	Battery voltage
14	G	4WD shift switch (2WD)	Ignition switch: ON	4WD shift switch: 2WD	Battery voltage
				4WD shift switch: 4H and 4LO	0V
15	O	4WD shift switch (4H)		4WD shift switch: 4H	Battery voltage
				4WD shift switch: 2WD and 4LO	0V
16	W	4WD shift switch (4LO)		4WD shift switch: 4LO	Battery voltage
				4WD shift switch: 2WD and 4H	0V
17	O	Wait detection switch	• Vehicle stopped • Engine running • A/T selector lever “N” position • Brake pedal depressed	4WD shift switch: 4H and 4LO	0V
				4WD shift switch: 2WD	Battery voltage
18	B	Ground	Always		0V
19	R	Power supply (Memory back-up)	Ignition switch: ON		Battery voltage
			Ignition switch: OFF		Battery voltage
23	R	ATP switch	• Vehicle stopped • Engine running • A/T selector lever “N” • Brake pedal depressed	4WD shift switch : 4H to 4LO or 4LO to 4H (While actuator motor is operating.)	0V
				Except the above	Battery voltage
24	Y	4LO switch	• Vehicle stopped • Engine running • A/T selector lever “N” position • Brake pedal depressed	4WD shift switch: 4LO	0V
				Except the above	Battery voltage

Terminal	Wire color	Item	Condition		Data (Approx.)
25	W/G	Ignition switch monitor	Ignition switch: ON		Battery voltage
			Ignition switch: OFF		0V
27	L	Actuator motor power supply	Ignition switch: ON		Battery voltage
			Ignition switch: OFF (5 seconds after ignition switch is turned OFF)		0V
28	SB	Actuator motor (+)	• Vehicle stopped • Engine running • A/T selector lever “N” position • Brake pedal depressed	When 4WD shift switch is operated (while actuator motor is operating)	Battery voltage → 0V
31	G	Actuator motor (-)		When 4WD shift switch is not operated	0V
				Always	0V
32	B	Ground	Always		0V
35	V	4WD shift indicator lamp (Rear indicator)	Engine running	Rear indicator of 4WD shift indicator lamp : ON	0V
				Rear indicator of 4WD shift indicator lamp : OFF	Battery voltage
36	BR	4WD shift indicator lamp (Front and center indicator)		Front and center indicator of 4WD shift indicator lamp: ON	0V
				Front and center indicator of 4WD shift indicator lamp: OFF	Battery voltage
37	O	4LO indicator lamp		4LO indicator lamp: ON	0V
				4LO indicator lamp: OFF	Battery voltage
38	GR	4WD warning lamp		4WD warning lamp: ON	0V
				4WD warning lamp: OFF	Battery voltage
39	LG	ATP warning lamp	• Vehicle stopped • Engine running • A/T selector lever “P” position • Brake pedal depressed	4WD shift switch: 4H to 4LO or 4LO to 4H (While actuator motor is operating.)	Battery voltage
				Except the above	0V
40	V	Transfer shut off relay	Ignition switch: ON		0V
			Ignition switch: OFF (5 seconds after ignition switch is turned OFF)		Battery voltage
42	LG	Transfer shift high relay	• Vehicle stopped • Engine running • A/T selector lever “N” position • Brake pedal depressed	4WD shift switch: 2WD to 4H or 4H to 4LO or 2WD to 4LO	0V
				Except the above	Battery voltage
44	Y	Power supply	Ignition switch: ON		Battery voltage
			Ignition switch: OFF (5 seconds after ignition switch is turned OFF)		0V
45	GR	Power supply	Ignition switch: ON		Battery voltage
			Ignition switch: OFF (5 seconds after ignition switch is turned OFF)		0V

Terminal	Wire color	Item	Condition		Data (Approx.)
47	O	Transfer shift high relay monitor	• Vehicle stopped • Engine running • A/T selector lever “N” position • Brake pedal depressed	4WD shift switch: 2WD to 4H or 4H to 4LO or 2WD to 4LO (while actuator motor is operating)	Battery voltage → 0V
				Except the above	0V
48	R	Transfer shift low relay monitor		4WD shift switch: 4LO to 4H or 4H to 2WD or 4LO to 2WD (while actuator motor is operating)	Battery voltage → 0V
				Except the above	0V
50	Y	Transfer shift low relay		4WD shift switch: 4LO to 4H or 4H to 2WD or 4LO to 2WD	0V
				Except the above	Battery voltage

CAUTION:

When using a circuit tester to measure voltage for inspection, be sure not to extend forcibly any connector terminals.

NOTE:

Data are reference value and are measured between each terminal and ground.

Wiring Diagram - PART TIME 4WD SYSTEM -

INFOID:0000000005258410

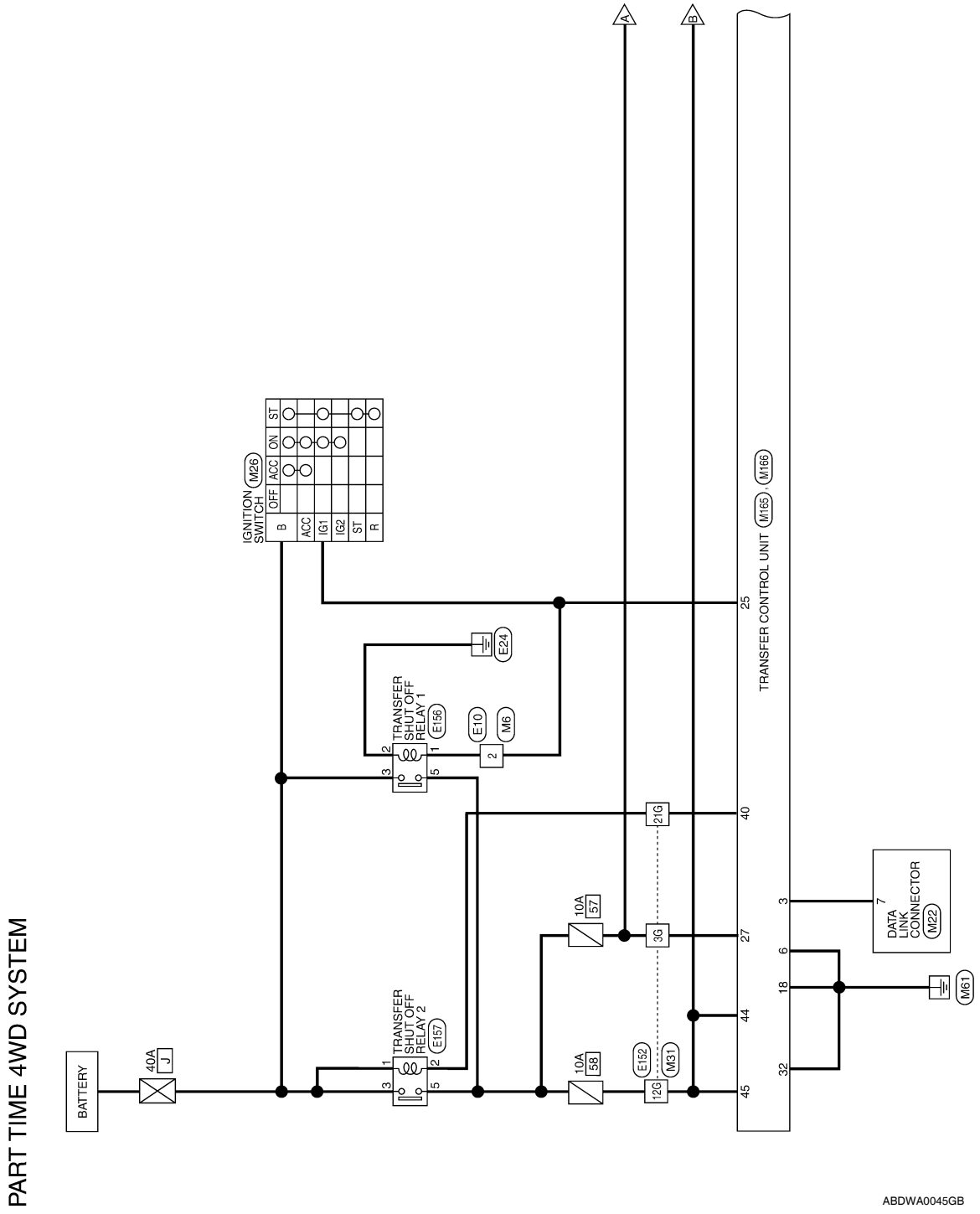

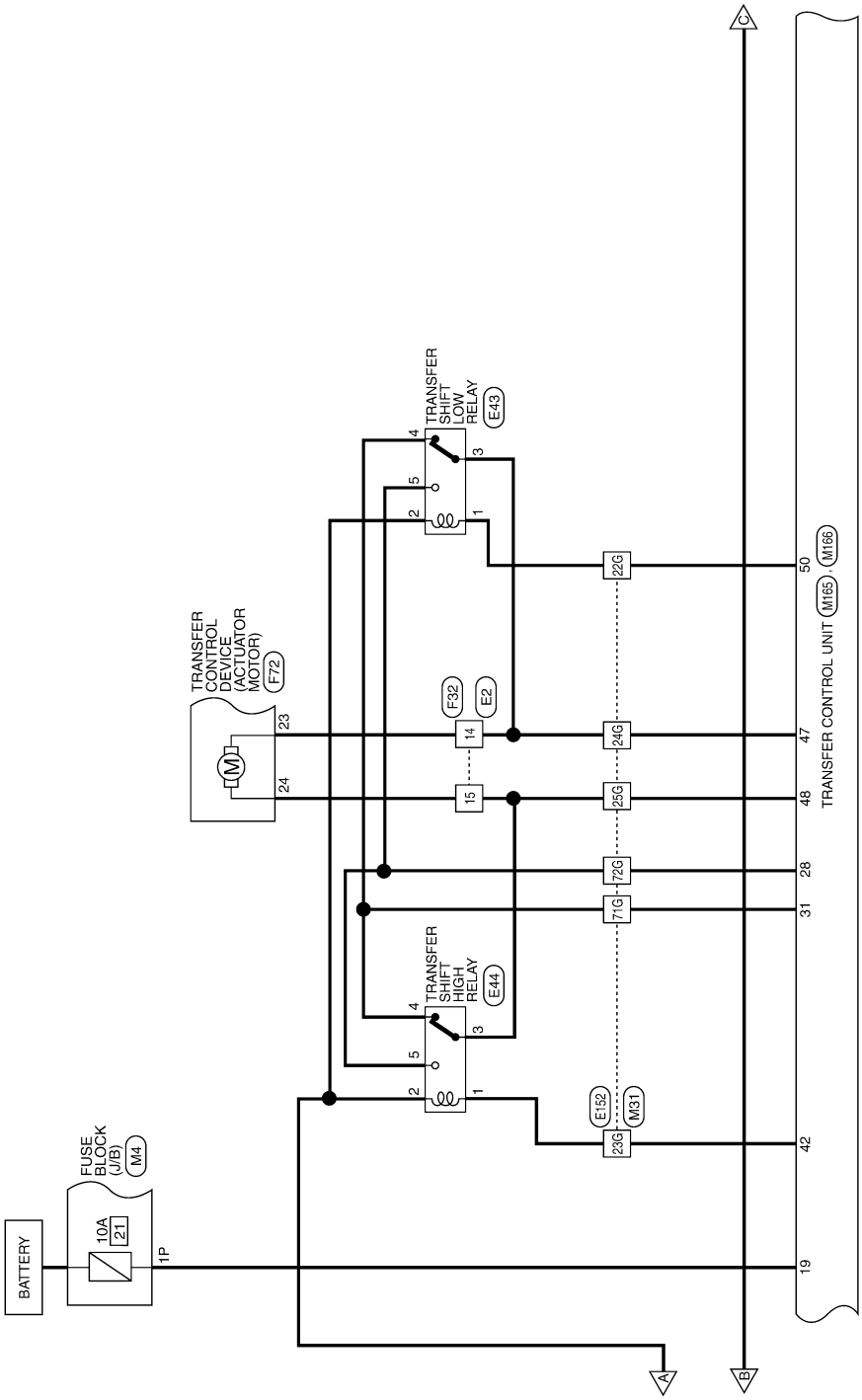

ABDWA0046GB

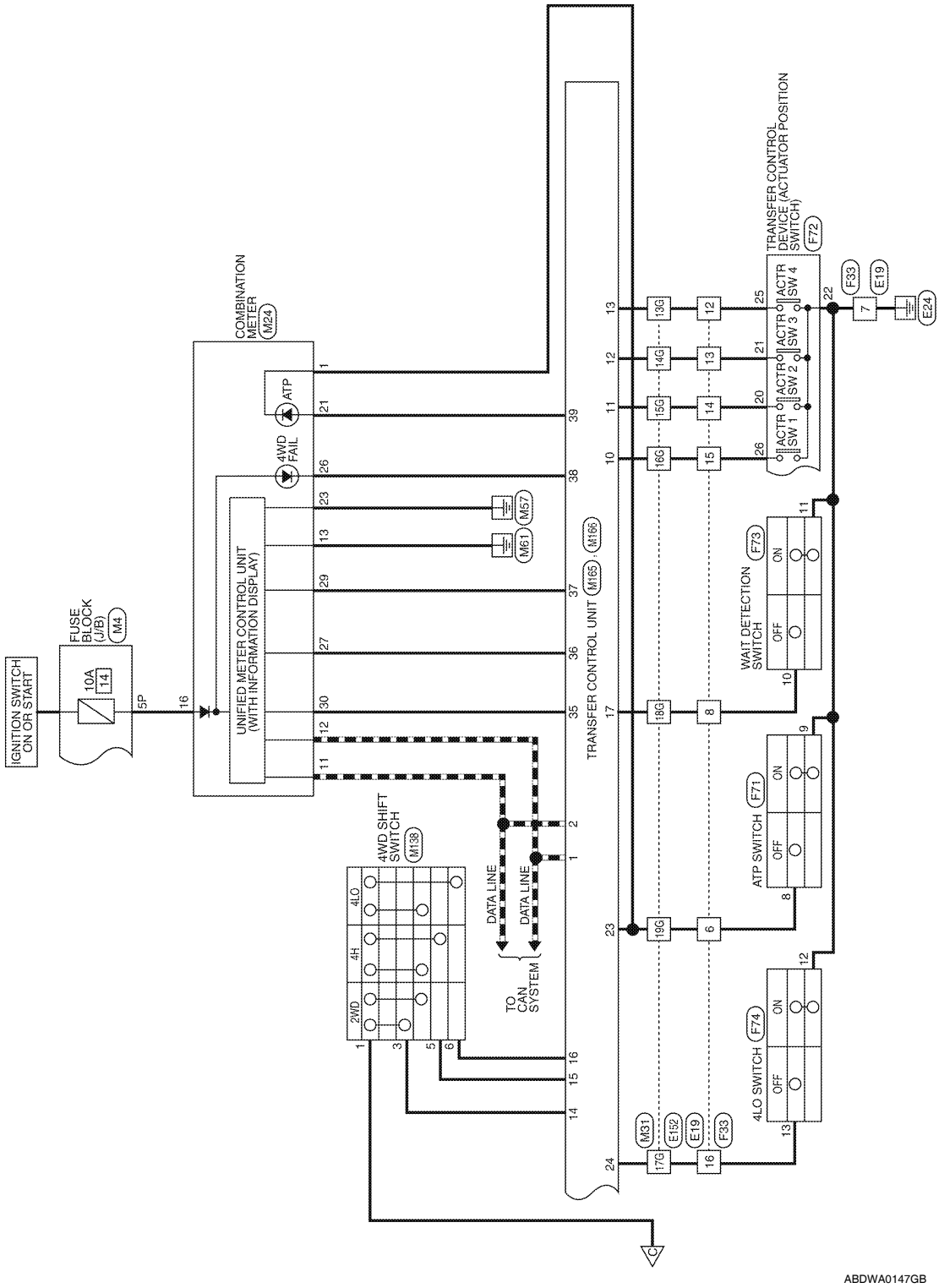
IGNITION SWITCH ON OR START
FUSE BLOCK (J/B) M4
10A 14
5P
16
COMBINATION METER M24
UNIFIED METER CONTROL UNIT (WITH INFORMATION DISPLAY)
ATP
4WD FAIL
M57
M61
4WD SHIFT SWITCH M138
2WD
4H
4LO
DATA LINE
DATA LINE
TO CAN SYSTEM
TRANSFER CONTROL UNIT M165 M166
13G
14G
15G
16G
18G
19G
17G
M31
E152
E19
F33
12
13
14
15
8
6
16
TRANSFER CONTROL DEVICE (ACTUATOR POSITION SWITCH) F72
ACTR SW 1
ACTR SW 2
ACTR SW 3
ACTR SW 4
7
E24
WAIT DETECTION SWITCH F73
ATP SWITCH F71
4LO SWITCH F74
OFF
ON
C
ABDWA0147GB

PART TIME 4WD SYSTEM CONNECTORS

Connector No.	M4
Connector Name	FUSE BLOCK (J/B)
Connector Color	WHITE

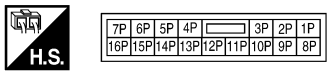

Terminal No.	Color of Wire	Signal Name
1P	R/B	–
5P	W/G	–

Connector No.	M6
Connector Name	WIRE TO WIRE
Connector Color	WHITE

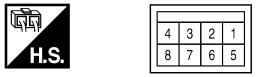

Terminal No.	Color of Wire	Signal Name
2	W/G	–

Connector No.	M22
Connector Name	DATA LINK CONNECTOR
Connector Color	WHITE

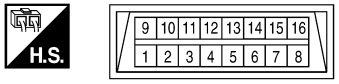

Terminal No.	Color of Wire	Signal Name
7	W	–

Connector No.	M24
Connector Name	COMBINATION METER
Connector Color	WHITE

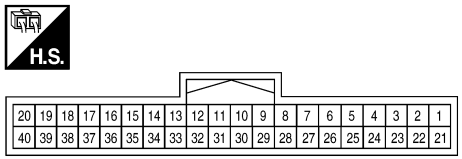

Terminal No.	Color of Wire	Signal Name
1	R	ATP-
11	P	CAN-L
12	L	CAN-H
13	GR	GROUND
16	W/G	RUN START
21	LG	ATP+
23	B	POWER GND
26	GR	4WD FAIL
27	BR	LOCK/4H
29	O	4LO
30	V	2WD

Connector No.	M26
Connector Name	IGNITION SWITCH
Connector Color	WHITE

Terminal No.	Color of Wire	Signal Name
B	G	–
IG1	W/G	–

ABDIA0117GB

Connector No.	M31
Connector Name	WIRE TO WIRE
Connector Color	WHITE

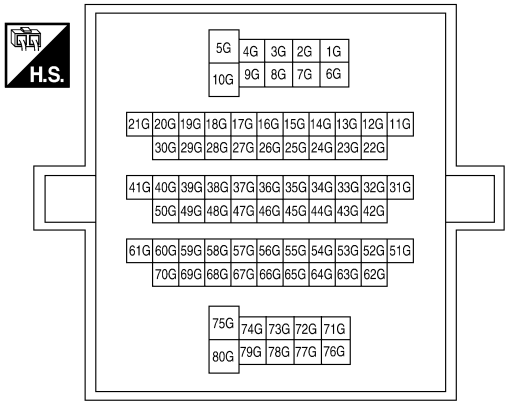

Terminal No.	Color of Wire	Signal Name
3G	L	–
12G	GR	–
13G	L	–
14G	BR	–
15G	W	–
16G	LG	–
17G	Y	–
18G	O	–
19G	R	–
21G	V	–
22G	Y	–
23G	LG	–

Terminal No.	Color of Wire	Signal Name
24G	O	–
25G	R	–
71G	G	–
72G	SB	–

Connector No.	M138
Connector Name	4WD SHIFT SWITCH (PART TIME 4WD SYSTEM)
Connector Color	GRAY

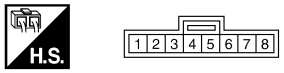

Terminal No.	Color of Wire	Signal Name
1	Y	–
3	G	–
5	O	–
6	W	–

Connector No.	M165
Connector Name	TRANSFER CONTROL UNIT (PART TIME 4WD SYSTEM)
Connector Color	WHITE

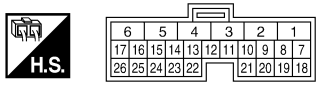

Terminal No.	Color of Wire	Signal Name
1	L	CAN-H
2	P	CAN-L
3	SB	K-LINE
4	–	–
5	–	–
6	B	GND
7	–	–
8	–	–
9	–	–
10	LG	ACTR SW1

Terminal No.	Color of Wire	Signal Name
11	W	ACTR SW2
12	BR	ACTR SW3
13	L	ACTR SW4
14	G	2WD SW
15	O	4H SW
16	W	4L SW
17	O	4WD-POSITION-SW
18	B	GND
19	R	MEMORY B/U
20	–	–
21	–	–
22	–	–
23	R	ATP-SW
24	Y	4L-POSITION-SW
25	W/G	IGN-SW
26	–	–

ABDIA0118GB

Connector No.	M166
Connector Name	TRANSFER CONTROL UNIT (PART TIME 4WD SYSTEM)
Connector Color	WHITE

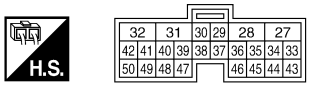

Terminal No.	Color of Wire	Signal Name
27	L	VIGN
28	SB	MOTOR_+
29	–	–
30	–	–
31	G	MOTOR_-
32	B	GND
33	–	–
34	–	–
35	V	2WD IND

Terminal No.	Color of Wire	Signal Name
36	BR	4H IND
37	O	4LO IND
38	GR	4WD_FAIL
39	LG	ATP IND
40	V	SSOF
41	–	–
42	LG	MTR_RLY_1
43	–	–
44	Y	VIGN
45	GR	VIGN
46	–	–
47	O	MTR_MONITOR_1
48	R	MTR_MONITOR_2
49	–	–
50	Y	MTR_RELAY_2

Connector No.	E2
Connector Name	WIRE TO WIRE
Connector Color	WHITE

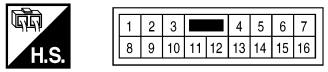

Terminal No.	Color of Wire	Signal Name
14	O	–
15	GR	–

Connector No.	E10
Connector Name	WIRE TO WIRE
Connector Color	WHITE

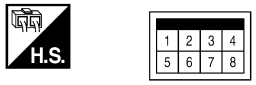

Terminal No.	Color of Wire	Signal Name
2	W/G	–

Connector No.	E19
Connector Name	WIRE TO WIRE
Connector Color	WHITE

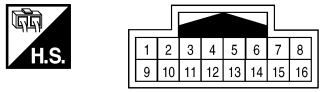

Terminal No.	Color of Wire	Signal Name
6	R	–
7	B	–
8	O	–
12	L	–
13	BR	–
14	W	–
15	LG	–
16	Y	–

Connector No.	E43
Connector Name	TRANSFER SHIFT LOW RELAY (PART TIME 4WD SYSTEM)
Connector Color	BLACK

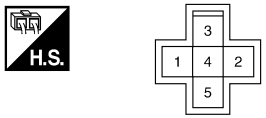

Terminal No.	Color of Wire	Signal Name
1	Y	–
2	R	–
3	O	–
4	G	–
5	SB	–

ABDIA0119GB

Connector No.	E44
Connector Name	TRANSFER SHIFT HIGH RELAY (PART TIME 4WD SYSTEM)
Connector Color	BLACK

H.S.

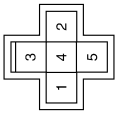

Terminal No.	Color of Wire	Signal Name
1	LG	–
2	R	–
3	GR	–
4	G	–
5	SB	–

Connector No.	E152
Connector Name	WIRE TO WIRE
Connector Color	WHITE

H.S.

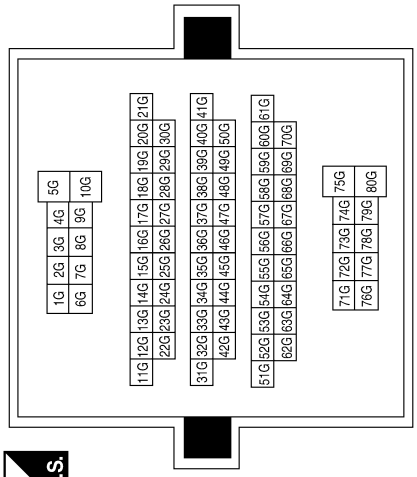

Terminal No.	Color of Wire	Signal Name
3G	L	–
12G	GR	–
13G	L	–
14G	BR	–
15G	W	–
16G	LG	–
17G	Y	–
18G	O	–
19G	R	–
21G	V	–
22G	Y	–
23G	LG	–
24G	O	–
25G	R	–
71G	G	–
72G	SB	–

Connector No.	E156
Connector Name	TRANSFER SHUT OFF RELAY 1
Connector Color	BLUE

H.S.

Terminal No.	Color of Wire	Signal Name
1	W/G	–
2	B	–
3	B	–
5	W	–

Connector No.	E157
Connector Name	TRANSFER SHUT OFF RELAY 2
Connector Color	BLUE

H.S.

Terminal No.	Color of Wire	Signal Name
1	G	–
2	V	–
3	B	–
5	W	–

Connector No.	F32
Connector Name	WIRE TO WIRE
Connector Color	WHITE

H.S.

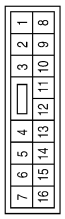

Terminal No.	Color of Wire	Signal Name
14	O	–
15	GR	–

ABDIA0120GB

Connector No.	F33
Connector Name	WIRE TO WIRE
Connector Color	WHITE

H.S.

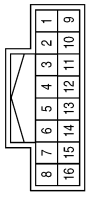

Terminal No.	Color of Wire	Signal Name
6	R	–
7	B	–
8	O	–
12	L	–
13	BR	–
14	W	–
15	LG	–
16	Y	–

Connector No.	F71
Connector Name	ATP SWITCH (PART TIME 4WD SYSTEM)
Connector Color	BLACK

H.S.

Terminal No.	Color of Wire	Signal Name
8	R	–
9	B	–

Connector No.	F72
Connector Name	TRANSFER CONTROL DEVICE (PART TIME 4WD SYSTEM)
Connector Color	BLACK

H.S.

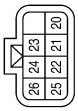

Terminal No.	Color of Wire	Signal Name
20	W	–
21	BR	–
22	B	–
23	O	–
24	GR	–
25	L	–
26	LG	–

Connector No.	F73
Connector Name	WAIT DETECTION SWITCH (PART TIME 4WD SYSTEM)
Connector Color	GRAY

H.S.

Terminal No.	Color of Wire	Signal Name
10	O	–
11	B	–

Connector No.	F74
Connector Name	4LO SWITCH (PART TIME 4WD SYSTEM)
Connector Color	GRAY

H.S.

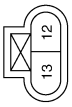

Terminal No.	Color of Wire	Signal Name
12	B	–
13	Y	–

ABDIA0121GB

DTC Index

INFOID:0000000005258411

DTC CHART

DTC	CONSULT-III	Diagnostic item is detected when...	Reference
[P1801]	*INITIAL START*	Due to removal of battery which cuts off power supply to transfer control unit, self-diagnosis memory function is suspended.	DLN-204
[P1802]	CONTROL UNIT (1,2,3)	Malfunction is detected in the memory (RAM) system of transfer control unit.	DLN-207
[P1803]		Malfunction is detected in the memory (ROM) system of transfer control unit.	
[P1804]		Malfunction is detected in the memory (EEPROM) system of transfer control unit.	
[P1807]	VHCL SPEED SEN·AT	• Malfunction is detected in output shaft revolution signal that is output from TCM through CAN communication. • Improper signal is input while driving.	DLN-209
[P1808]	VHCL SPEED SEN·ABS	• Malfunction is detected in vehicle speed signal that is output from ABS actuator and electric unit (control unit) through CAN communication. • Improper signal is input while driving.	DLN-210
[P1809]	CONTROL UNIT 4	AD converter system of transfer control unit is malfunctioning.	DLN-207
[P1810]	4L POSI SW TF	Improper signal from 4LO switch is input due to open or short circuit.	DLN-211
[P1811]	BATTERY VOLTAGE	Power supply voltage for transfer control unit is abnormally low while driving.	DLN-204
[P1813]	4WD MODE SW	More than two switch inputs are simultaneously detected due to short circuit of 4WD shift switch.	DLN-214
[P1814]	4WD DETECT SWITCH	Improper signal from wait detection switch is input due to open or short circuit.	DLN-217
[P1816]	PNP SW/CIRC	When transmission range switch signal is malfunction or communication error between the modules.	DLN-220
[P1817]	SHIFT ACTUATOR	• Motor does not operate properly due to open or short circuit in actuator motor. • Malfunction is detected in the actuator motor. (When 4WD shift switch is operated and actuator motor is not operated) • Malfunction is detected in transfer shift high relay or transfer shift low relay.	DLN-221
[P1818]	SHIFT ACT POSI SW	• Improper signal from actuator position switch is input due to open or short circuit. • Malfunction is detected in actuator position switch.	DLN-228
[P1819]	SHIFT ACT CIR	• Malfunction is detected in transfer shut off relay 1 and transfer shut off relay 2. • Malfunction occurs in transfer control device drive circuit.	DLN-231
[P1820]	ENGINE SPEED SIG	• Malfunction is detected in engine speed signal that is output from ECM through CAN communication. • Improper signal is input while driving.	DLN-234

NOTE:

If “SHIFT ACT POSI SW [P1818]” or “SHIFT ACT CIR [P1819]” is displayed, first erase self-diagnostic results. (“SHIFT ACT POSI SW [P1818]” or “SHIFT ACT CIR [P1819]” may be displayed after installing transfer control unit or transfer assembly.)

FLASH CODE CHART

Flashing pattern	Item	Diagnostic item is detected when...	Reference
2	Output shaft revolution signal (from TCM)	• Malfunction is detected in output shaft revolution signal that is output from TCM through CAN communication. • Improper signal is input while driving.	DLN-209
3	Vehicle speed signal (from ABS)	• Malfunction is detected in vehicle speed signal that is output from ABS actuator and electric unit (control unit) through CAN communication. • Improper signal is input while driving.	DLN-210
4	CAN communication	Malfunction has been detected from CAN communication.	DLN-197
5	AD converter	AD converter system of transfer control unit is malfunctioning.	DLN-207
6	4LO switch	Improper signal from 4LO switch is input due to open or short circuit.	DLN-211
7	Engine speed signal	• Malfunction is detected in engine speed signal that is output from ECM through CAN communication. • Improper signal is input while driving.	DLN-234
8	Power supply	Power supply voltage for transfer control unit is abnormally low while driving.	DLN-204
9	4WD shift switch	More than two switch inputs are simultaneously detected due to short circuit of 4WD shift switch.	DLN-214
10	Wait detection switch	Improper signal from wait detection switch is input due to open or short circuit.	DLN-217
11	Actuator motor	• Motor does not operate properly due to open or short circuit in actuator motor. • Malfunction is detected in the actuator motor. (When 4WD shift switch is operated and actuator motor is not operated.) • Malfunction is detected in transfer shift high relay or transfer shift low relay.	DLN-221
12	Actuator position switch	• Improper signal from actuator position switch is input due to open or short circuit. • Malfunction is detected in the actuator position switch.	DLN-228
13	Transfer control device	• Malfunction is detected in transfer shut off relay 1 and transfer shut off 2. • Malfunction occurs in transfer control device drive circuit.	, DLN-231
14	Transmission range switch signal	Transmission range switch signal is malfunction or communication error between the modules.	DLN-220
Repeats flickering every 0.25 sec.	Data erase display	• Power supply failure of memory back-up. • Battery is disconnected for a long time. • Battery performance is poor.	DLN-204
Repeats flickering every 2 to 5 sec.	—	Circuits that the self-diagnosis covers have no malfunction.	—
No flickering	Transmission range switch or 4WD shift switch	Transmission range switch or 4WD shift switch circuit is shorted or open.	DLN-220 or DLN-214

NOTE:

If actuator position switch" or transfer control device" is displayed, first erase self-diagnostic results. (They may be displayed after installing transfer control unit or transfer assembly.)

SYMPTOM DIAGNOSIS

4WD SYSTEM SYMPTOMS

Symptom Table

INFOID:0000000005258412

Symptom	Condition	Reference page
4WD shift indicator lamp and 4LO indicator lamp do not turn ON (lamp check)	Ignition switch: ON	DLN-253
4WD warning lamp does not turn ON (lamp check)		DLN-251
4WD shift indicator lamp or 4LO indicator lamp does not change	Engine running	DLN-255
ATP warning lamp does not turn ON		DLN-257
ATP switch is malfunctioning		DLN-261
4WD shift indicator lamp repeats flashing	While driving	DLN-259
4WD warning lamp flashes slowly (1 time/2 seconds)		DLN-260

4WD WARNING LAMP DOES NOT TURN ON

Description

INFOID:0000000005258413

4WD warning lamp does not turn ON when turning ignition switch to ON.

Diagnosis Procedure

INFOID:0000000005258414

Regarding Wiring Diagram information, refer to DLN-240, "Wiring Diagram - PART TIME 4WD SYSTEM -".

1. CHECK TRANSFER CONTROL UNIT POWER SUPPLY AND GROUND CIRCUITS

Refer to DLN-204, "Diagnosis Procedure".

Are the inspection results normal?

YES >> GO TO 2.
NO >> Perform repairs as necessary.

2. CHECK COMBINATION METER POWER SUPPLY CIRCUIT

1. Turn ignition switch “OFF”. (Stay for at least 5 seconds.)
2. Disconnect combination meter harness connector.
3. Check voltage between combination meter harness connector terminals and ground.

Connector	Terminal	Voltage (Approx.)
M24	16 - Ground	0V

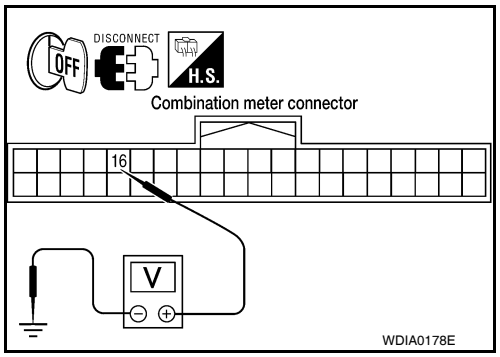

4. Turn ignition switch “ON”. (Do not start engine.)
5. Check voltage between combination meter harness connector terminals and ground.

Connector	Terminal	Voltage (Approx.)
M24	16 - Ground	Battery voltage

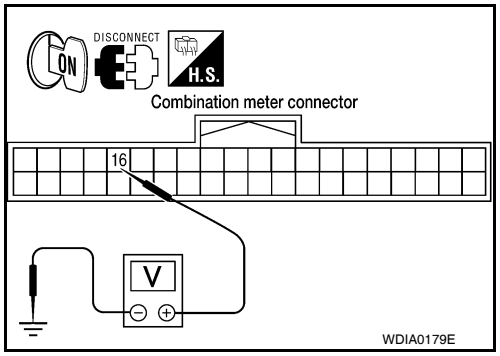

Are the inspection results normal?

YES >> GO TO 3.
NO >> Check the following. If any items are damaged, repair or replace damaged parts.
- 10A fuse [No. 14, located in the fuse block (J/B)] or ignition switch.
- Harness for short or open between ignition switch and combination meter harness connector terminal 16

3. CHECK HARNESS BETWEEN TRANSFER CONTROL UNIT AND COMBINATION METER

1. Turn ignition switch “OFF”. (Stay for at least 5 seconds.)

2. Check continuity between transfer control unit harness connector M166 terminal 38 and combination meter harness connector M24 terminal 28.

Continuity should exist.

Also check harness for short to ground and short to power.

Is there continuity?

YES >> GO TO 4.
NO >> Repair or replace damaged parts.

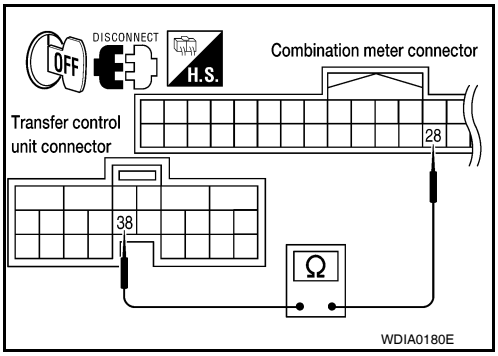

4. CHECK INDICATOR LAMP CIRCUIT

1. Turn ignition switch “OFF”. (Stay for at least 5 seconds.)
2. Connect combination meter harness connector.
3. Disconnect transfer control unit harness connector.
4. Turn ignition switch "ON". (Do not start engine.)
5. Ground the following terminal using suitable wiring.

- Transfer control unit harness connector M166 terminal 38 and ground.

Does the indicator lamp turn on?

YES >> GO TO 5.
NO >> Replace the combination meter. Refer to MWI-96, "Removal and Installation".

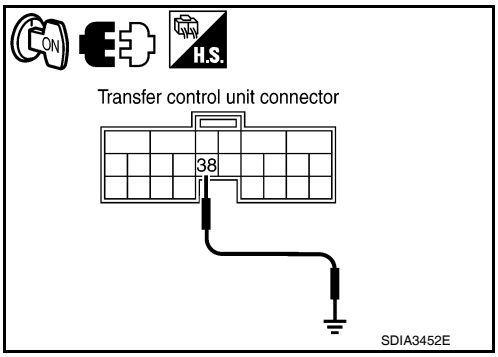

5. SYMPTOM CHECK

Check again.

Does the symptom still occur?

YES >> GO TO 6.
NO >> Inspection End.

6. CHECK TRANSFER CONTROL UNIT

Check transfer control unit input/output signal. Refer to DLN-235, "Reference Value".

Are the inspection results normal?

YES >> Inspection End.
NO >> Check transfer control unit pin terminals for damage or loose connection with harness connector. If any items are damaged, repair or replace damaged parts.

4WD SHIFT INDICATOR LAMP AND 4LO INDICATOR LAMP DO NOT TURN ON

Description

INFOID:0000000005258415

4WD shift indicator lamp and 4LO indicator lamp do not turn ON for approx. 1 second when turning ignition switch to ON.

Diagnosis Procedure

INFOID:0000000005258416

Regarding Wiring Diagram information, refer to DLN-240, "Wiring Diagram - PART TIME 4WD SYSTEM -".

1. CHECK TRANSFER CONTROL UNIT POWER SUPPLY AND GROUND CIRCUITS

Refer to DLN-204, "Diagnosis Procedure".

Are the inspection results normal?

YES >> GO TO 2.
NO >> Perform repairs as necessary.

2. CHECK COMBINATION METER POWER SUPPLY CIRCUIT

1. Turn ignition switch “OFF”. (Stay for at least 5 seconds.)
2. Disconnect combination meter harness connector.
3. Check voltage between combination meter harness connector terminals and ground.

Connector	Terminal	Voltage (Approx.)
M24	16 - Ground	0V

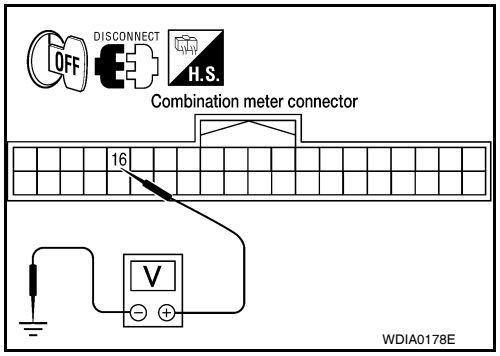

4. Turn ignition switch “ON”. (Do not start engine.)
5. Check voltage between combination meter harness connector terminals and ground.

Connector	Terminal	Voltage (Approx.)
M24	16 - Ground	Battery voltage

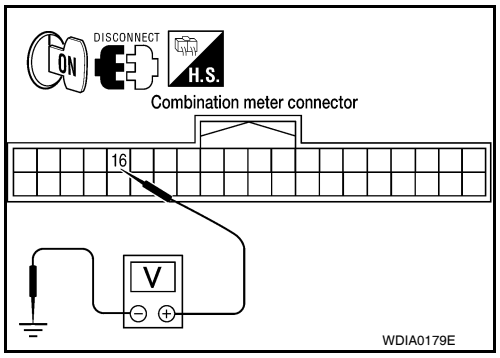

Are the inspection results normal?

YES >> GO TO 3.
NO >> Check the following. If any items are damaged, repair or replace damaged parts.
- 10A fuse [No. 14, located in the fuse block (J/B) or] ignition switch.
- Harness for short or open between ignition switch and combination meter harness connector terminal 16

3. CHECK HARNESS BETWEEN TRANSFER CONTROL UNIT AND COMBINATION METER

1. Turn ignition switch “OFF”. (Stay for at least 5 seconds.)

2. Check continuity between the following terminals.
- Transfer control unit harness connector M166 terminal 35 and combination meter harness connector M24 terminal 30.
- Transfer control unit harness connector M166 terminal 36 and combination meter harness connector M24 terminal 27.
- Transfer control unit harness connector M166 terminal 37 and combination meter harness connector M24 terminal 29.

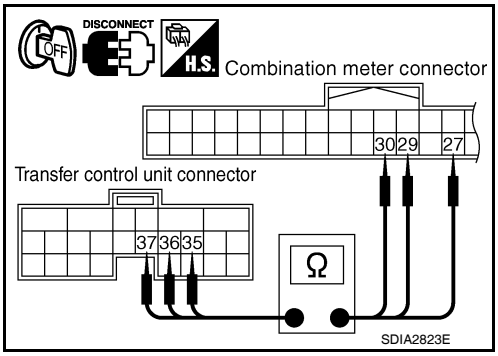

Continuity should exist.

Also check harness for short to ground and short to power.

Does continuity exist?

YES >> GO TO 4.
NO >> Repair or replace damaged parts.

4. CHECK INDICATOR LAMP CIRCUIT

1. Turn ignition switch “OFF”. (Stay for at least 5 seconds.)
2. Connect combination meter harness connector.
3. Disconnect transfer control unit harness connector.
4. Turn ignition switch "ON". (Do not start engine.)
5. Ground the following terminals using suitable wiring.
- Transfer control unit harness connector M166 terminal 35 and ground.
- Transfer control unit harness connector M166 terminal 36 and ground.
- Transfer control unit harness connector M166 terminal 37 and ground.

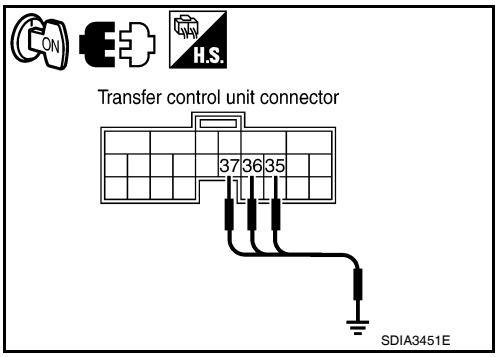

Do indicator lamps turn on?

YES >> GO TO 5.
NO >> Replace the combination meter. Refer to MWI-96, "Removal and Installation".

5. SYMPTOM CHECK

Check again.

Does the symptom still occur?

YES >> GO TO 6.
NO >> Inspection End.

6. CHECK TRANSFER CONTROL UNIT

Check transfer control unit input/output signal. Refer to DLN-235, "Reference Value".

Are the inspection results normal?

YES >> Inspection End.
NO >> Check transfer control unit pin terminals for damage or loose connection with harness connector. If any items are damaged, repair or replace damaged parts.

4WD SHIFT INDICATOR LAMP OR 4LO INDICATOR LAMP DO NOT CHANGE

Description

INFOID:0000000005258417

4WD shift indicator lamp or 4LO indicator lamp do not change when switching the 4WD shift switch.

Diagnosis Procedure

INFOID:0000000005258418

1. CONFIRM THE SYMPTOM

Confirm 4WD shift indicator lamp and 4LO indicator lamp when ignition switch is turned to ON.

Do 4WD shift indicator lamp and 4LO indicator lamp turn on?

YES >> GO TO 2.
NO >> Go to DLN-253, "Diagnosis Procedure".

2. CHECK SYSTEM FOR STOP LAMP SWITCH

Perform trouble diagnosis for stop lamp switch system. Refer to BRC-47, "Diagnosis Procedure (With VQ40DE)" or BRC-48, "Diagnosis Procedure (With VK56DE)".

Are the inspection results normal?

YES >> GO TO 3.
NO >> Repair or replace damaged parts.

3. CHECK SYSTEM FOR 4WD SHIFT SWITCH

Perform trouble diagnosis for 4WD shift switch system. Refer to DLN-214, "Diagnosis Procedure".

Are the inspection results normal?

YES >> GO TO 4.
NO >> Repair or replace damaged parts.

4. CHECK SYSTEM FOR WAIT DETECTION SWITCH

Perform trouble diagnosis for wait detection switch system. Refer to DLN-217, "Diagnosis Procedure".

Are the inspection results normal?

YES >> GO TO 5.
NO >> Repair or replace damaged parts.

5. CHECK SYSTEM FOR 4LO SWITCH

Perform trouble diagnosis for 4LO switch system. Refer to DLN-211, "Diagnosis Procedure".

Are the inspection results normal?

YES >> GO TO 6.
NO >> Repair or replace damaged parts.

6. CHECK SYSTEM FOR ATP SWITCH

Perform trouble diagnosis for ATP switch system. Refer to DLN-261, "Diagnosis Procedure".

Are the inspection results normal?

YES >> GO TO 7.
NO >> Repair or replace damaged parts.

7. SYMPTOM CHECK

Check again.

Does the symptom still occur?

YES >> GO TO 8.
NO >> Inspection End

8. CHECK TRANSFER CONTROL UNIT

Check transfer control unit input/output signal. Refer to DLN-235, "Reference Value".

Are the inspection results normal?

YES >> GO TO 9.

NO >> Check transfer control unit pin terminals for damage or loose connection with harness connector. If any items are damaged, repair or replace damaged parts.

9. CHECK TRANSFER INNER PARTS

1. Disassemble transfer assembly. Refer to DLN-283, "Disassembly and Assembly".
2. Check transfer inner parts.

Are the inspection results normal?

YES >> Inspection End.
NO >> Repair or replace damaged parts.

ATP WARNING LAMP DOES NOT TURN ON

Description

INFOID:0000000005258419

ATP warning lamp does not turn ON when the transfer case is switched in or out of 4LO with the A/T selector lever in N position.

Diagnosis Procedure

INFOID:0000000005258420

Regarding Wiring Diagram information, refer to DLN-240, "Wiring Diagram - PART TIME 4WD SYSTEM -".

1. CHECK SYSTEM FOR CAN COMMUNICATION LINE

Perform self-diagnosis. Refer to DLN-200, "CONSULT-III Function (ALL MODE AWD/4WD)".

Do the self-diagnostic results indicate CAN communication?

YES >> Perform trouble diagnosis for CAN communication line. Refer to LAN-60, "DTC Index".
NO >> GO TO 2.

2. CHECK SYSTEM FOR 4WD SHIFT SWITCH

Perform trouble diagnosis for 4WD shift switch system. Refer to DLN-214, "Diagnosis Procedure".

Are the inspection results normal?

YES >> GO TO 3.
NO >> Repair or replace damaged parts.

3. CHECK SYSTEM FOR TRANSMISSION RANGE SWITCH SIGNAL

Perform trouble diagnosis for transmission range switch signal system. Refer to DLN-220, "Diagnosis Procedure".

Are the inspection results normal?

YES >> GO TO 4.
NO >> Repair or replace damaged parts.

4. CHECK SYSTEM FOR ATP SWITCH

Perform trouble diagnosis for ATP switch system. Refer to DLN-261, "Diagnosis Procedure".

Are the inspection results normal?

YES >> GO TO 5.
NO >> Repair or replace damaged parts.

5. CHECK ATP WARNING LAMP CIRCUIT

1. Disconnect ATP switch harness connector.
2. Turn ignition switch “ON”. (Do not start engine.)
3. Ground terminal 8 on ATP switch connector F71 using suitable wiring.
4. Turn ignition switch “OFF”. (Stay for at least 5 seconds.)

Does ATP warning lamp turn on?

YES >> GO TO 9.
NO >> GO TO 6.

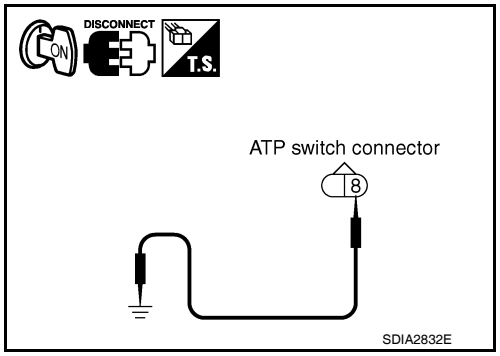

6. CHECK HARNESS BETWEEN TRANSFER CONTROL UNIT AND COMBINATION METER

1. Turn ignition switch “OFF”. (Stay for at least 5 seconds.)
2. Disconnect transfer control unit harness connector and combination meter harness connector.

3. Check continuity between transfer control unit harness connector M166 terminal 39 and combination meter harness connector M24 terminal 21.

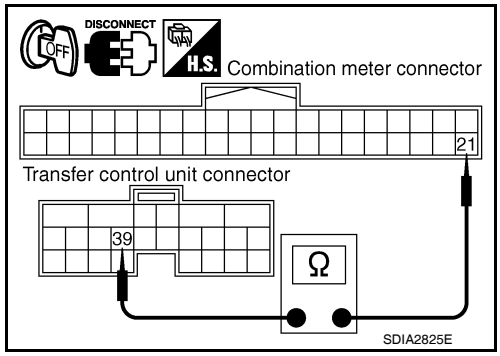

Continuity should exist.

Also check harness for short to ground and short to power.

Does continuity exist?

YES >> GO TO 7.
NO >> Repair or replace damaged parts.

7. CHECK HARNESS BETWEEN COMBINATION METER AND ATP SWITCH

1. Turn ignition switch “OFF”. (Stay for at least 5 seconds.)
2. Disconnect ATP switch harness connector.
3. Check continuity between combination meter harness connector M24 terminal 1 and ATP switch harness connector F71 terminal 8.

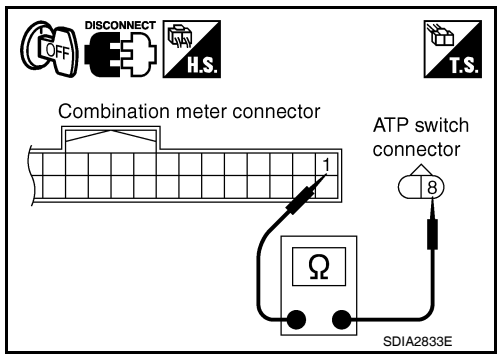

Continuity should exist.

Also check harness for short to ground and short to power.

Does continuity exist?

YES >> GO TO 8.
NO >> Repair or replace damaged parts.

8. SYMPTOM CHECK

Check again.

Does the symptom still occur?

YES >> GO TO 9.
NO >> Inspection End.

9. CHECK TRANSFER CONTROL UNIT

Check transfer control unit input/output signal. Refer to DLN-235, "Reference Value".

Are the inspection results normal?

YES >> GO TO 10.
NO >> Check transfer control unit pin terminals for damage or loose connection with harness connector. If any items are damaged, repair or replace damaged parts.

10. CHECK TRANSFER INNER PARTS

1. Disassemble transfer assembly. Refer to DLN-283, "Disassembly and Assembly".
2. Check transfer inner parts.

Are the inspection results normal?

YES >> Inspection End.
NO >> Repair or replace damaged parts.

4WD SHIFT INDICATOR LAMP KEEPS FLASHING

Description

INFOID:0000000005258421

The 4WD shift indicator lamp keeps flashing.

Diagnosis Procedure

INFOID:0000000005258422

1. CONFIRM THE SYMPTOM

1. Set 4WD shift switch to “2WD”.
2. Drive the vehicle straight forward and backward keeping speed under 20 km/h (12 MPH).

Does 4WD shift indicator lamp keep flashing?

YES >> GO TO 2.
NO >> Inspection End.

2. CHECK SYSTEM FOR WAIT DETECTION SWITCH

Perform trouble diagnosis for wait detection switch system. Refer to DLN-217, "Diagnosis Procedure".

Are the inspection results normal?

YES >> GO TO 3.
NO >> Repair or replace damaged parts.

3. CHECK SYSTEM FOR 4LO SWITCH

Perform trouble diagnosis for 4LO switch. Refer to DLN-211, "Diagnosis Procedure".

Are the inspection results normal?

YES >> GO TO 4.
NO >> Repair or replace damaged parts.

4. SYMPTOM CHECK

Check again.

Does the symptom still occur?

YES >> GO TO 5.
NO >> Inspection End.

5. CHECK TRANSFER CONTROL UNIT

Check transfer control unit input/output signal. Refer to DLN-235, "Reference Value".

Are the inspection results normal?

YES >> GO TO 6.
NO >> Check transfer control unit pin terminals for damage or loose connection with harness connector. If any items are damaged, repair or replace damaged parts.

6. CHECK TRANSFER INNER PARTS

1. Disassemble transfer assembly. Refer to DLN-283, "Disassembly and Assembly".
2. Check transfer inner parts.

Are the inspection results normal?

YES >> Inspection End.
NO >> Repair or replace damaged parts.

4WD WARNING LAMP FLASHES SLOWLY

Description

INFOID:0000000005258423

The 4WD warning lamp flashes slowly while driving (1 time / 2 seconds). The lamp continues to flash until the ignition switch is turned OFF.

Diagnosis Procedure

INFOID:0000000005258424

1. CHECK TIRES

Check the following. Refer to WT-53, "Tire".
- Tire size
- Tire wear
- Tire pressure

Are the inspection results normal?

YES >> GO TO 2.
NO >> Repair or replace damaged parts.

2. SYMPTOM CHECK

Check again.

Does the symptom still occur?

YES >> GO TO 3.
NO >> Inspection End.

3. CHECK TRANSFER CONTROL UNIT

Check transfer control unit input/output signal. Refer to DLN-235, "Reference Value".

Are the inspection results normal?

YES >> Inspection End.
NO >> Check transfer control unit pin terminals for damage or loose connection with harness connector. If any items are damaged, repair or replace damaged parts.

ATP SWITCH

Description

INFOID:0000000005258425

The ATP indicator does not come on when the transfer is in neutral and the A/T lever is in neutral or, the ATP indicator stays on when the transfer case is not in neutral.

Diagnosis Procedure

INFOID:0000000005258426

Regarding Wiring Diagram information, refer to DLN-240, "Wiring Diagram - PART TIME 4WD SYSTEM -".

1. CHECK ATP SWITCH SIGNAL

With CONSULT-III

1. Start engine.
2. Select “DATA MONITOR” mode for “ALL MODE AWD/4WD” with CONSULT-III.
3. Read out the value of “ATP SWITCH”.

Condition		Display value
• Vehicle stopped • Engine running • A/T selector lever “N” position • Brake pedal depressed	4WD shift switch: 4H to 4LO or 4LO to 4H (While actuator motor is operating.)	ON
	Except the above	OFF

Without CONSULT-III

1. Start engine.
2. Check voltage between transfer control unit harness connector terminal and ground.

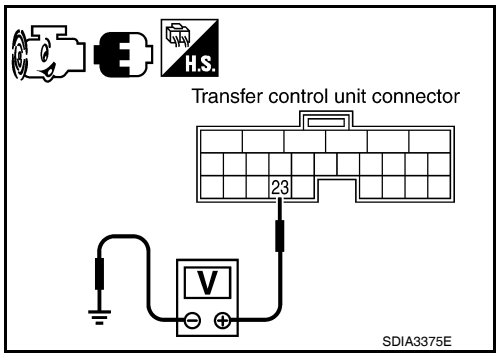

Connector	Terminal	Condition		Voltage (Approx.)
M165	23 - Ground	• Vehicle stopped • Engine running • A/T selector lever “N” position • Brake pedal depressed	4WD shift switch: 4H to 4LO or 4LO to 4H (While actuator motor is operating.)	0V
			Except the above	Battery voltage

Are the inspection results normal?

YES >> GO TO 5.
NO >> GO TO 2.

2. CHECK HARNESS BETWEEN TRANSFER CONTROL UNIT AND ATP SWITCH

1. Turn ignition switch “OFF”. (Stay for at least 5 seconds.)
2. Disconnect transfer control unit harness connector and the ATP switch harness connector.

3. Check continuity between transfer control unit harness connector M165 terminal 23 and ATP switch harness connector F71 terminal 8.

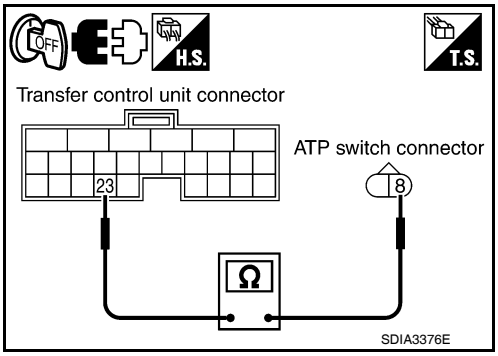

Continuity should exist.

Also check harness for short to ground and short to power.

Does continuity exist?

YES >> GO TO 3.
NO >> Repair or replace damaged parts.

3. CHECK GROUND CIRCUIT

1. Turn ignition switch “OFF”. (Stay for at least 5 seconds.)
2. Disconnect ATP switch harness connector.
3. Check continuity between ATP switch harness connector F71 terminal 9 and ground.

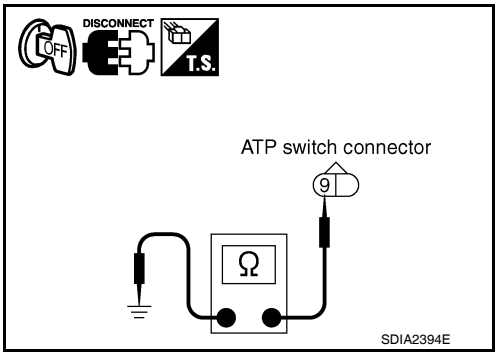

Continuity should exist.

Also check harness for short to power.

Does continuity exist?

YES >> GO TO 4.
NO >> Repair open circuit or short to power in harness or connectors.

4. CHECK ATP SWITCH

1. Turn ignition switch “OFF”. (Stay for at least 5 seconds.)
2. Remove ATP switch. Refer to DLN-196, "Component Parts Location".
3. Push and release ATP switch and check continuity between ATP switch terminals 8 and 9.

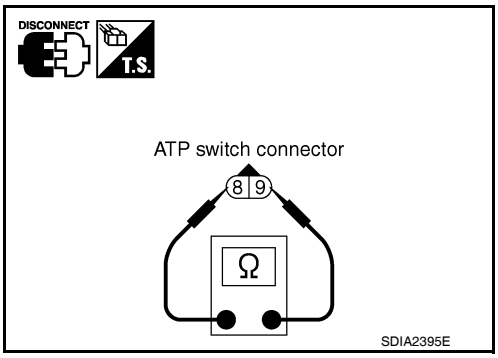

Terminal	Condition	Continuity
8 - 9	Push ATP switch	Yes
	Release ATP switch	No

Are the inspection results normal?

YES >> GO TO 5.
NO >> Replace ATP switch.

5. CHECK TRANSFER CONTROL UNIT

Check transfer control unit input/output signal. Refer to DLN-235, "Reference Value".

Are the inspection results normal?

YES >> GO TO 6.
NO >> Check transfer control unit pin terminals for damage or loose connection with harness connector. If any items are damaged, repair or replace damaged parts.

6. CHECK ATP WARNING LAMP

1. Turn ignition switch “ON”. (Do not start engine.)
2. A/T selector lever “N” position and engage the parking brake.
3. Switch 4WD shift switch from 4H to 4LO or 4LO to 4H.

Does the ATP warning lamp turn ON while the actuator motor is operating?

YES >> Inspection End.
NO >> Refer to DLN-257, "Diagnosis Procedure".

Component Inspection

INFOID:0000000005258427

1. Turn ignition switch “OFF”. (Stay for at least 5 seconds.)
2. Disconnect ATP switch harness connector.
3. Remove ATP switch. Refer to DLN-196, "Component Parts Location".
4. Push and release ATP switch and check continuity between ATP switch terminals 8 and 9.

Terminal	Condition	Continuity
8 - 9	Push ATP switch	Yes
	Release ATP switch	No

5. If the inspection results are abnormal replace the ATP switch.

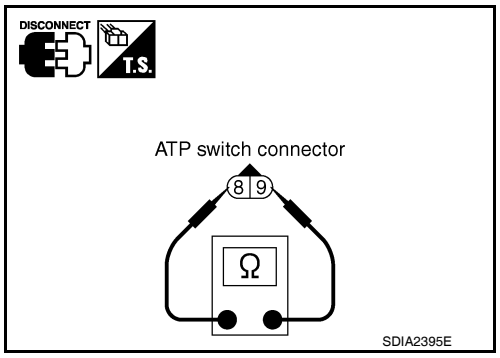

PRECAUTION

PRECAUTIONS

Precaution for Supplemental Restraint System (SRS) "AIR BAG" and "SEAT BELT PRE-TENSIONER"

INFOID:0000000005550691

The Supplemental Restraint System such as “AIR BAG” and “SEAT BELT PRE-TENSIONER”, used along with a front seat belt, helps to reduce the risk or severity of injury to the driver and front passenger for certain types of collision. This system includes seat belt switch inputs and dual stage front air bag modules. The SRS system uses the seat belt switches to determine the front air bag deployment, and may only deploy one front air bag, depending on the severity of a collision and whether the front occupants are belted or unbelted.
Information necessary to service the system safely is included in the SR and SB section of this Service Manual.

WARNING:
- **To avoid rendering the SRS inoperative, which could increase the risk of personal injury or death in the event of a collision which would result in air bag inflation, all maintenance must be performed by an authorized NISSAN/INFINITI dealer.**
- **Improper maintenance, including incorrect removal and installation of the SRS, can lead to personal injury caused by unintentional activation of the system. For removal of Spiral Cable and Air Bag Module, see the SR section.**
- **Do not use electrical test equipment on any circuit related to the SRS unless instructed to in this Service Manual. SRS wiring harnesses can be identified by yellow and/or orange harnesses or harness connectors.**

PRECAUTIONS WHEN USING POWER TOOLS (AIR OR ELECTRIC) AND HAMMERS

WARNING:
- **When working near the Airbag Diagnosis Sensor Unit or other Airbag System sensors with the Ignition ON or engine running, DO NOT use air or electric power tools or strike near the sensor(s) with a hammer. Heavy vibration could activate the sensor(s) and deploy the air bag(s), possibly causing serious injury.**
- **When using air or electric power tools or hammers, always switch the Ignition OFF, disconnect the battery, and wait at least 3 minutes before performing any service.**

Precaution Necessary for Steering Wheel Rotation After Battery Disconnect

INFOID:0000000005550692

NOTE:
- This Procedure is applied only to models with Intelligent Key system and NATS (NISSAN ANTI-THEFT SYSTEM).
- Remove and install all control units after disconnecting both battery cables with the ignition knob in the ″LOCK″ position.
- Always use CONSULT-III to perform self-diagnosis as a part of each function inspection after finishing work. If DTC is detected, perform trouble diagnosis according to self-diagnostic results.

For models equipped with the Intelligent Key system and NATS, an electrically controlled steering lock mechanism is adopted on the key cylinder.
For this reason, if the battery is disconnected or if the battery is discharged, the steering wheel will lock and steering wheel rotation will become impossible.
If steering wheel rotation is required when battery power is interrupted, follow the procedure below before starting the repair operation.

OPERATION PROCEDURE

1. Connect both battery cables.
   NOTE:
   Supply power using jumper cables if battery is discharged.
2. Use the Intelligent Key or mechanical key to turn the ignition switch to the ″ACC″ position. At this time, the steering lock will be released.
3. Disconnect both battery cables. The steering lock will remain released and the steering wheel can be rotated.
4. Perform the necessary repair operation.

5. When the repair work is completed, return the ignition switch to the ″LOCK″ position before connecting the battery cables. (At this time, the steering lock mechanism will engage.)
6. Perform a self-diagnosis check of all control units using CONSULT-III.

Precaution for Transfer Assembly and Transfer Control Unit Replacement

INFOID:0000000005258429

When replacing transfer assembly or transfer control unit, check the 4WD shift indicator pattern and adjustment of the position between transfer assembly and transfer control unit if necessary.

CHECK 4WD SHIFT INDICATOR PATTERN

1. Set 4WD shift switch to “2WD”, “4H”, “4LO”, “4H” and “2WD” in order. Stay at each switch position for at least 2 seconds.
2. Confirm 4WD shift indicator lamp and 4LO indicator lamp are changed properly as follows.

4WD shift switch	Indicator lamp		Operation of 4WD shift switch
	4WD shift	4LO	
2WD		OFF	2WD ⇔ 4H switching can be done while driving. The indicator lamp will change when the driving mode is changed. Gear shifting between 2WD ⇔ 4H position must be performed at speeds below 100km/h (60 MPH).
4H			
		Flashing	To shift between 4H ⇔ 4LO, stop the vehicle and select the A/T selector lever to the “N” position with the brake pedal depressed. Depress and turn the 4WD shift switch. The 4WD shift switch will not shift to the desired mode if the transmission is not in “N” or the vehicle is moving with the brake pedal depressed. The 4LO indicator lamp will be lit when the 4LO is engaged.
4LO		ON	

WDIA0137E

- If OK, the position between transfer assembly and transfer control unit is correct.
- If NG, the position is different between transfer assembly and transfer control unit.
  Adjust the position between transfer assembly and transfer control unit. Refer to pattern table below.

Transfer position adjustment pattern

4WD shift switch condition	Refer procedure
4WD shift switch is under “2WD” condition when engine is being stopped.	"METHOD FOR ADJUSTMENT WITH 4WD SHIFT SWITCH AT “2WD”"
4WD shift switch is under “4H” or “4LO” condition when engine is being stopped.	"METHOD FOR ADJUSTMENT WITH 4WD SHIFT SWITCH AT “4H” OR “4LO”"

NOTE:
Method of adjustment can be chosen voluntarily, according to location of 4WD shift switch.

METHOD FOR ADJUSTMENT WITH 4WD SHIFT SWITCH AT “2WD”

Select Adjustment Pattern

1. Start engine. Run engine for at least 10 seconds.
2. Check 4WD shift indicator lamp and 4LO indicator lamp.

Indicator lamp condition	Refer procedure
When 4WD shift indicator lamp or 4LO indicator lamp is flashing.	"Pattern A"
Except for above.	"Pattern B"

Pattern A

1. Stop vehicle and move A/T selector lever to “N” position with brake pedal depressed. Stay in "N" for at least 2 seconds.
2. Turn 4WD shift switch to “4LO” position. Stay in "4LO" for at least 2 seconds.
3. Turn ignition switch “OFF”.
4. Start engine.
5. Erase self-diagnosis. Refer to DLN-200, "CONSULT-III Function (ALL MODE AWD/4WD)".

6. Check 4WD shift indicator lamp and 4LO indicator lamp again. Refer to "CHECK 4WD SHIFT INDICATOR PATTERN".
   If 4WD shift indicator lamp and 4LO indicator lamp do not indicate proper pattern, install new transfer control unit and retry the above check.

Pattern B

1. Stop vehicle and move A/T selector lever to “N” position with brake pedal depressed. Stay in "N" for at least 2 seconds.
2. Turn ignition switch “OFF”.
3. Start engine.
4. Erase self-diagnosis. Refer to DLN-200, "CONSULT-III Function (ALL MODE AWD/4WD)".
5. Check 4WD shift indicator lamp and 4LO indicator lamp again. Refer to "CHECK 4WD SHIFT INDICATOR PATTERN".
   If 4WD shift indicator lamp and 4LO indicator lamp do not indicate proper pattern, install new transfer control unit and retry the above check.

METHOD FOR ADJUSTMENT WITH 4WD SHIFT SWITCH AT “4H” OR “4LO”

1. Start engine. Run the engine for at least 10 seconds.
2. Stop vehicle and move A/T selector lever to “N” position with brake pedal depressed. Stay in "N" for at least 2 seconds.)
3. Turn 4WD shift switch to “2WD” position. Stay in "2WD" for at least 2 seconds.
4. Turn ignition switch “OFF”.
5. Start engine.
6. Erase self-diagnosis. Refer to DLN-200, "CONSULT-III Function (ALL MODE AWD/4WD)".
7. Check 4WD shift indicator lamp and 4LO indicator lamp again. Refer to "CHECK 4WD SHIFT INDICATOR PATTERN".
   If 4WD shift indicator lamp and 4LO indicator lamp do not indicate proper pattern, install new transfer control unit and retry the above check.

Precaution

INFOID:0000000005258431

- **Before connecting or disconnecting the transfer control unit harness connector, turn ignition switch “OFF” and disconnect the battery cables. Battery voltage is applied to transfer control unit even if ignition switch is turned “OFF”.**

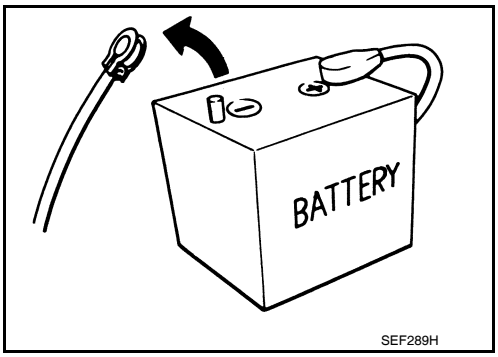

- **When connecting or disconnecting pin connectors into or from transfer control unit, take care not to damage pin terminals (bend or break).**
  When connecting pin connectors make sure that there are not any bends or breaks on transfer control unit pin terminals.

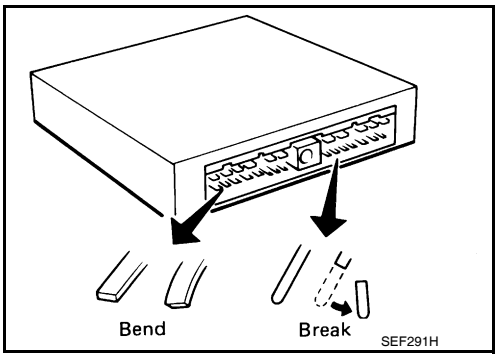

- **Before replacing transfer control unit, perform transfer control unit input/output signal inspection and make sure transfer control unit functions properly. Refer to DLN-235, "Reference Value".**

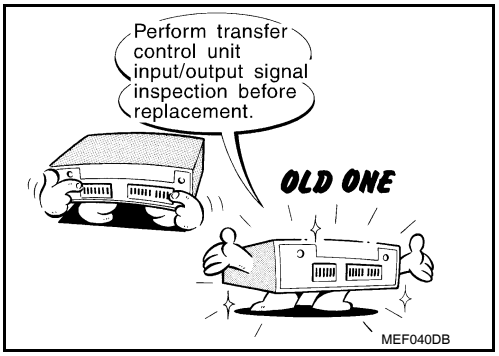

Service Notice

INFOID:0000000005258432

- After overhaul refill the transfer with new transfer fluid.
- Check the fluid level or replace the fluid only with the vehicle parked on level ground.
- During removal or installation, keep inside of transfer clear of dust or dirt.
- Disassembly should be done in a clean work area.
- Before proceeding with disassembly, thoroughly clean the transfer. It is important to prevent the internal parts from becoming contaminated by dirt or other foreign matter.
- Check for the correct installation status prior to removal or disassembly. If matchmarks are required, be certain they do not interfere with the function of the parts when applied.
- All parts should be carefully cleaned with a general purpose, non-flammable solvent before inspection or reassembly.
- Check appearance of the disassembled parts for damage, deformation, and unusual wear. Replace them with a new ones if necessary.
- Gaskets, seals and O-rings should replaced any time the transfer is disassembled.
- In principle, tighten bolts or nuts gradually in several steps working diagonally from inside to outside. If tightening sequence is specified, use it.
- Observe the specified torque when assembling.
- Clean and flush the parts sufficiently and blow-dry them.
- Be careful not to damage sliding surfaces and mating surfaces.
- Use lint-free cloth or towels for wiping parts clean. Common shop rags can leave fibers that could interfere with the operation of the transfer.

PREPARATION

PREPARATION

Special Service Tool

INFOID:0000000005258433

The actual shapes of Kent-Moore tools may differ from those of special service tools illustrated here.

Tool number (Kent-Moore No.) Tool name	Description
ST33290001 (J-34286) Puller 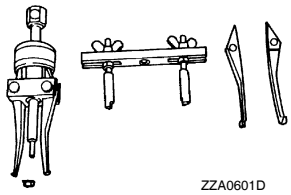 ZZA0601D	• Removing front oil seal • Removing rear oil seal • Removing metal bushing
KV38100500 (—) Drift 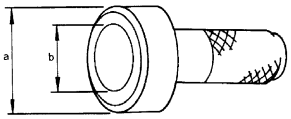 ZZA0811D	• Installing front oil seal • Installing rear oil seal • Installing rear bearing • Installing front bearing **a: 80 mm (3.15 in) dia.** **b: 60 mm (2.36 in) dia.**
KV40105310 (—) Drift 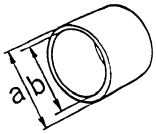 ZZA1003D	• Installing dust cover **a: 89 mm (3.50 in) dia.** **b: 80.7 mm (3.17 in) dia.**
KV38100200 (—) Drift 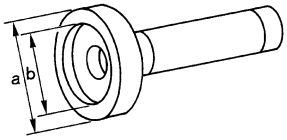 ZZA1143D	• Removing sun gear assembly and planetary carrier assembly • Removing input bearing • Installing sun gear assembly and planetary carrier assembly **a: 65 mm (2.56 in) dia.** **b: 49 mm (1.93 in) dia.**
ST30720000 (J-25405) Drift 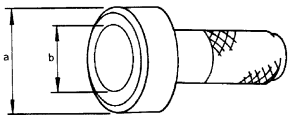 ZZA0811D	• Installing input bearing • Installing input oil seal • Installing carrier bearing **a: 77 mm (3.03 in) dia.** **b: 55 mm (2.17 in) dia.**
KV32102700 (—) Drift 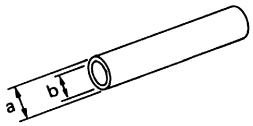 ZZA0534D	• Installing mainshaft rear bearing **a: 48 mm (1.89 in) dia.** **b: 41 mm (1.61 in) dia.**

Tool number (Kent-Moore No.) Tool name	Description
KV40104830 (—) Drift 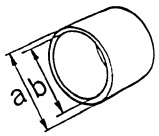 ZZA1003D	• Installing input oil seal **a: 70 mm (2.76 in) dia.** **b: 63.5 mm (2.50 in) dia.**
ST35300000 (—) Drift 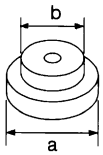 NT073	• Removing carrier bearing • Installing metal bushing • Removing front bearing **a: 59 mm (2.32 in) dia.** **b: 45 mm (1.77 in) dia.**
ST30021000 (J-22912-01) Puller 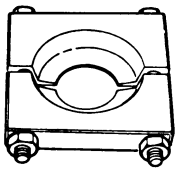 ZZA0537D	• Removing carrier bearing • Removing front bearing • Removing rear bearing
ST33710000 (—) Drift 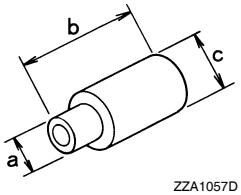 ZZA1057D	• Removing needle bearing • Removing metal bushing • Removing rear bearing **a: 89 mm (3.5 in)** **b: 30 mm (1.18 in) dia.** **c: 24 mm (0.94 in) dia.**
ST35325000 (—) Drift bar 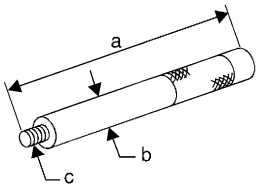 NT663	• Removing metal bushing **a: 215 mm (8.46 in)** **b: 25 mm (0.98 in) dia.** **c: M12 × 1.5P**
ST33220000 (—) Drift 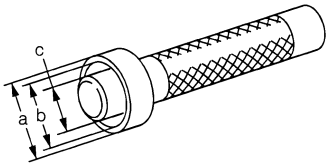 ZZA1046D	• Installing needle bearing **a: 37 mm (1.46 in) dia.** **b: 31 mm (1.22 in) dia.** **c: 22 mm (0.87 in) dia.**

Tool number (Kent-Moore No.) Tool name	Description
ST27863000 (—) Drift 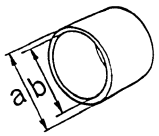 ZZA1003D	• Installing carrier bearing **a: 75 mm (2.95 in) dia.** **b: 62 mm (2.44 in) dia.**
ST30901000 (J-26010-01) Drift 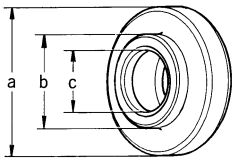 ZZA0978D	• Installing rear bearing • Installing front bearing **a: 79 mm (3.11 in) dia.** **b: 45 mm (1.77 in) dia.** **c: 35.2 mm (1.38 in) dia.**

Commercial Service Tool

INFOID:0000000005258434

Tool name	Description
Puller 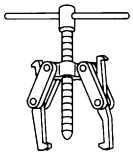 NT077	• Removing companion flange • Removing mainshaft rear bearing
Puller 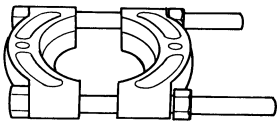 ZZB0823D	• Removing mainshaft rear bearing
Pin punch 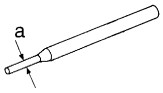 NT410	• Removing retaining pin **a: 6 mm (0.24 in) dia.**
Power tool 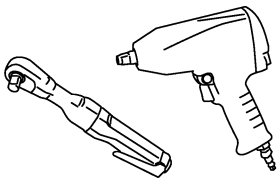 PBIC0190E	• Loosening bolts and nuts

ON-VEHICLE MAINTENANCE

TRANSFER FLUID

Replacement

INFOID:0000000005258435

CAUTION:
If using the vehicle for towing, the transfer fluid must be replaced as specified. Refer to MA-9, "For North America".

DRAINING

1. Stop engine.
2. Remove the drain plug and gasket and drain the fluid.
3. Install the drain plug with a new gasket to the transfer. Tighten to the specified torque. Refer to DLN-283, "Disassembly and Assembly".
   CAUTION:
   Do not reuse gasket.

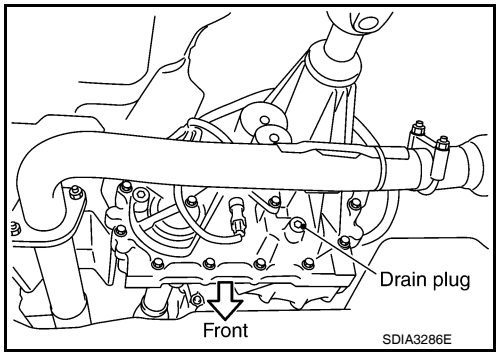

FILLING

1. Remove the filler plug and gasket.
2. Fill the transfer with new fluid until the fluid level reaches the specified limit near the filler plug hole.

   Fluid grade and capacity : Refer to MA-16, "For North America".

   CAUTION:
   Carefully fill fluid. (Fill up for approx. 3 minutes.)
3. Leave the vehicle for 3 minutes, and check fluid level again.
4. Install the filler plug with a new gasket to the transfer. Tighten to the specified torque. Refer to DLN-283, "Disassembly and Assembly".
   CAUTION:
   Do not reuse gasket.

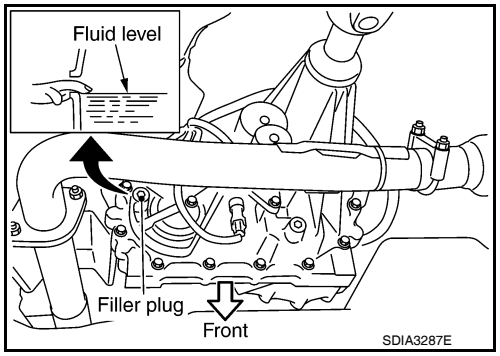

Inspection

INFOID:0000000005258436

CAUTION:
If using the vehicle for towing, the transfer fluid must be replaced as specified. Refer to MA-9, "For North America".

FLUID LEAKAGE AND FLUID LEVEL

1. Make sure that fluid is not leaking from the transfer assembly or around it.
2. Check fluid level from the filler plug hole as shown.
   CAUTION:
   Do not start engine while checking fluid level.
3. Install the filler plug with a new gasket to the transfer. Tighten to the specified torque. Refer to DLN-283, "Disassembly and Assembly".
   CAUTION:
   Do not reuse gasket.

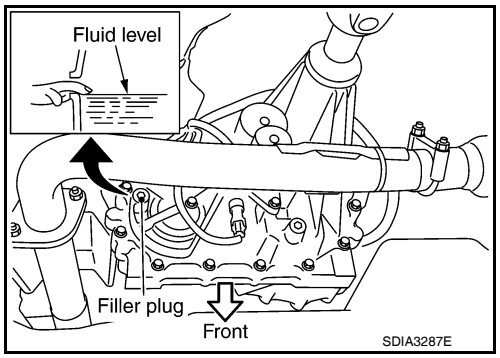

ON-VEHICLE REPAIR

TRANSFER CONTROL UNIT

Removal and Installation

INFOID:0000000005258437

REMOVAL

1. Switch 4WD shift switch to 2WD and set transfer assembly to 2WD.
   CAUTION:
   When removing transfer control unit, transfer state must be at 2WD.
2. Turn the ignition switch OFF and disconnect negative battery terminal.
3. Remove the lower instrument panel LH. Refer to IP-12, "Removal and Installation".
4. Disconnect the two transfer control unit connectors.
5. Remove the transfer control unit bolts.
6. Remove the transfer control unit.

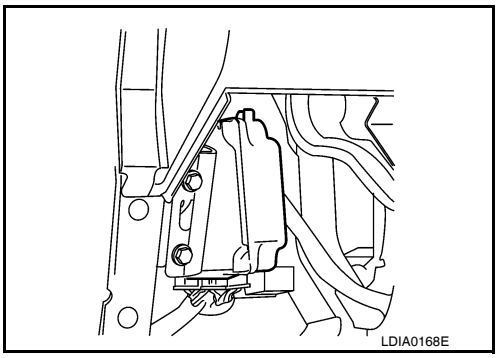

INSTALLATION

Installation is in the reverse order of removal.

- When installing the transfer control unit, tighten bolts to the specified torque.

Transfer control unit bolts : 3.4 N·m (0.35 kg-m, 30 in-lb)

- After the installation, check 4WD shift indicator pattern. If NG, adjust position between transfer assembly and transfer control unit. Refer to DLN-265, "Precaution for Transfer Assembly and Transfer Control Unit Replacement".

FRONT OIL SEAL

Removal and Installation

INFOID:0000000005258438

REMOVAL

1. Partially drain the transfer fluid. Refer to DLN-271, "Replacement".
2. Remove the front propeller shaft. Refer to DLN-315, "Removal and Installation".
3. Remove the companion flange self-lock nut using suitable tool.

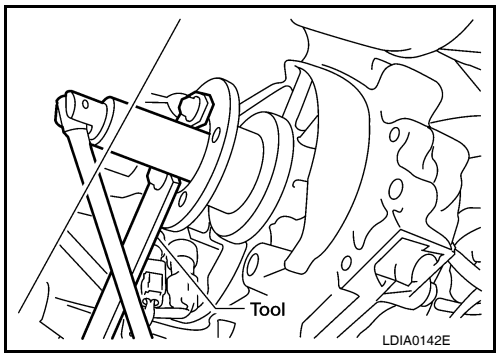

4. Put a matching mark on top of the front drive shaft in line with the mark on the companion flange.
   CAUTION:
   Use paint to make the matching mark on the front drive shaft. Do not damage the front drive shaft.

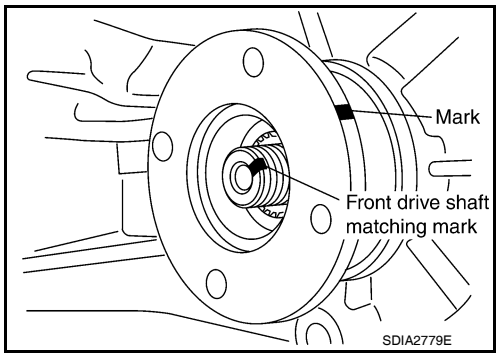

5. Remove the companion flange using suitable tool.

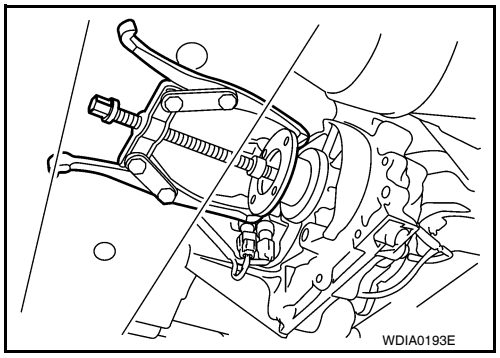

6. Remove the front oil seal from the front case using Tool.

   Tool number : ST33290001 (J-34286)

   CAUTION:
   Do not damage front case.

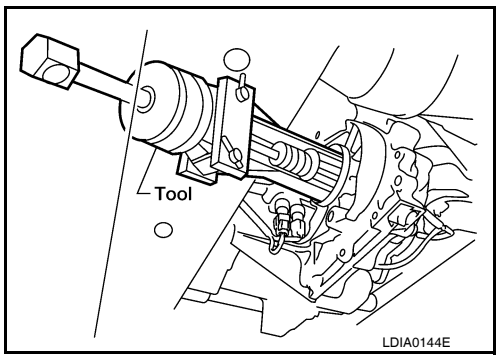

INSTALLATION

1. Install the new front oil seal until it is flush with the end face of the front case using suitable tool.
   CAUTION:
   - **Do not reuse oil seal.**
   - **Apply petroleum jelly to oil seal.**

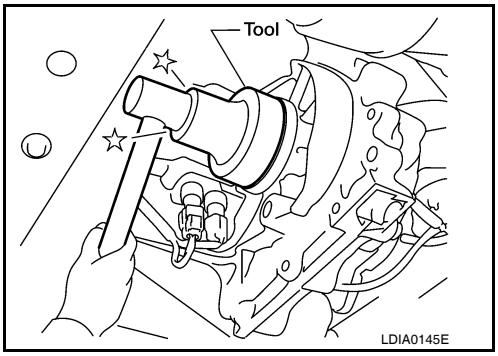

2. Align the matching mark of the front drive shaft with the matching mark of the companion flange, then install the companion flange.

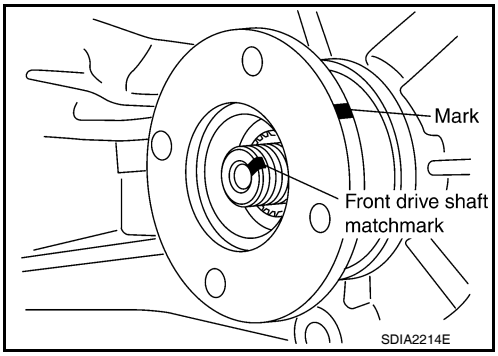

3. Install the new self-lock nut and tighten to the specified torque using suitable tool. Refer to DLN-283, "Disassembly and Assembly".
   CAUTION:
   Do not reuse self-lock nut.
4. Install the front propeller shaft. Refer to DLN-315, "Removal and Installation".
5. Refill the transfer with fluid and check for fluid leakage and fluid level. Refer to DLN-271, "Inspection".

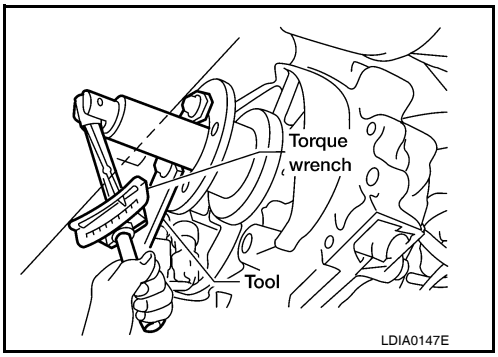

REAR OIL SEAL

Removal and Installation

INFOID:0000000005258439

REMOVAL

1. Partially drain the transfer fluid. Refer to DLN-271, "Replacement".
2. Remove the rear propeller shaft. Refer to DLN-325, "Removal and Installation".
3. Remove the dust cover from the rear case.
   CAUTION:
   Do not damage the rear case.

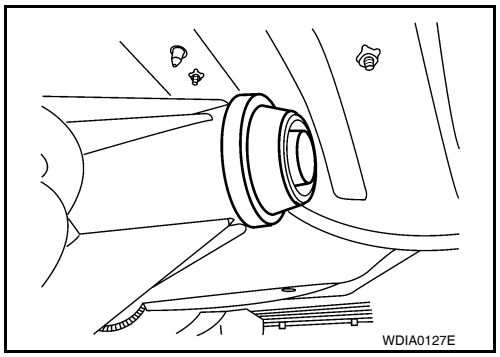

4. Remove the oil cover from the dust cover.
5. Remove the rear oil seal from the rear case using Tool.
   CAUTION:
   Do not damage the rear case.

   Tool number : ST33290001 (J-34286)

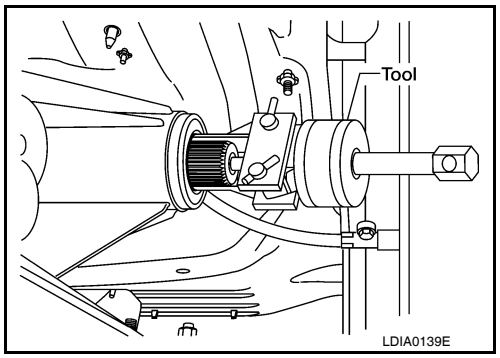

INSTALLATION

1. Install the new rear oil seal until it is flush with the end face of the rear case using Tool.

   Tool number : KV38100500 (—)

   CAUTION:
   - **Do not reuse oil seal.**
   - **Apply petroleum jelly to oil seal.**

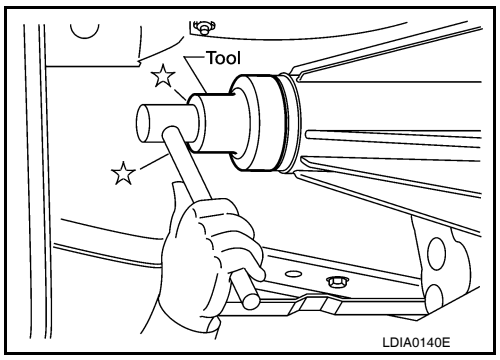

2. Install the oil cover until it reaches the end face of the new dust cover.
   CAUTION:
   Position the oil cover with the notch at bottom position.

3. Apply petroleum jelly to the circumference of the new dust cover. Position the new dust cover as shown.
   CAUTION:
   - **Do not reuse dust cover.**
   - **Position the protrusions at the position shown.**
   - 1: Dust cover
   - A: Protrusions
   - 2: Rear case assembly

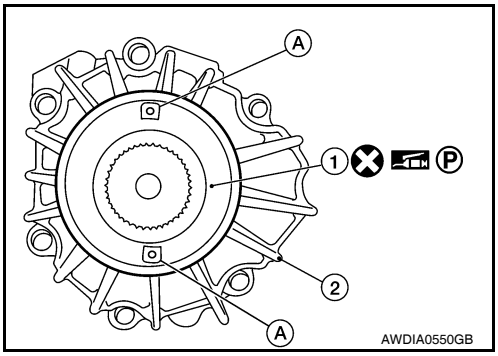

4. Install the new dust cover to the rear case using Tool.

   Tool number : KV40105310 (—)

   CAUTION:
   - **Do not reuse dust cover.**
   - **Apply petroleum jelly to dust cover.**
5. Install the rear propeller shaft. Refer to DLN-325, "Removal and Installation".
6. Refill the transfer with fluid and check for fluid leakage and fluid level. Refer to DLN-271, "Inspection".

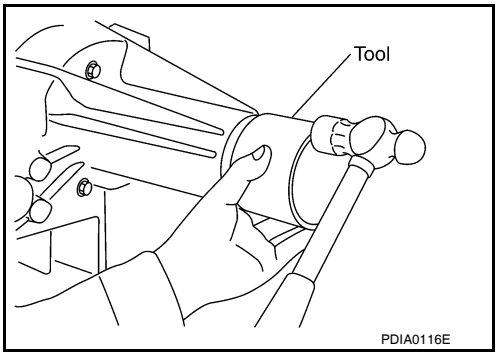

TRANSFER CONTROL DEVICE

Removal and Installation

INFOID:0000000005258440

REMOVAL

1. Switch the 4WD shift switch to 2WD and set the transfer assembly to 2WD.
2. Disconnect the transfer control device connector.
3. Remove the breather hose from the transfer control device.
4. Remove the bolts and detach the transfer control device.

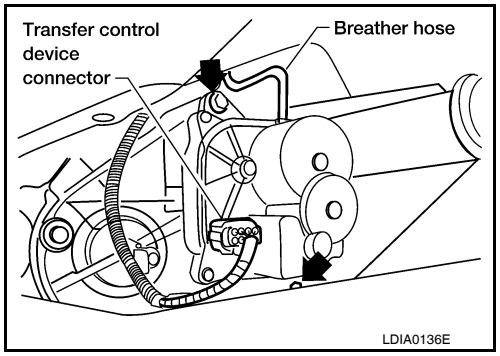

INSTALLATION

1. Install the new O-ring to the transfer control device.
   CAUTION:
   - **Do not reuse O-ring.**
   - **Apply petroleum jelly to O-ring.**

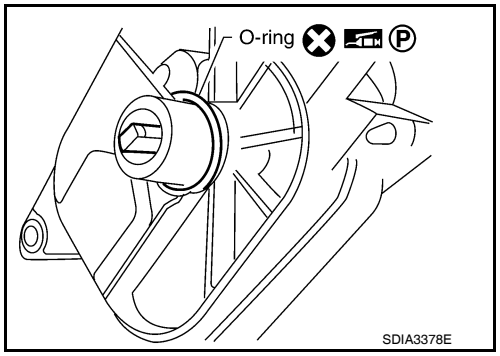

2. Install the transfer control device.

a. Turn the control shift rod fully counterclockwise using a suitable tool, and then put a mark on the control shift rod.

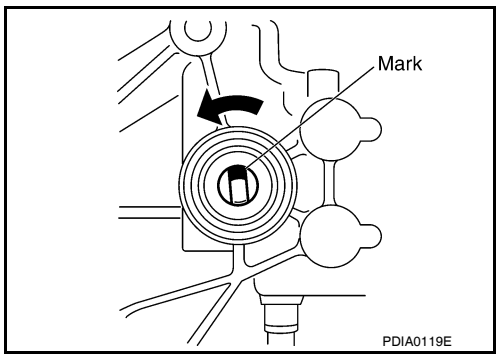

b. Align the transfer control device shaft cutout with the mark on the control shift rod, and install.
   NOTE:
   Turn the transfer control device when the transfer control device connection does not match.

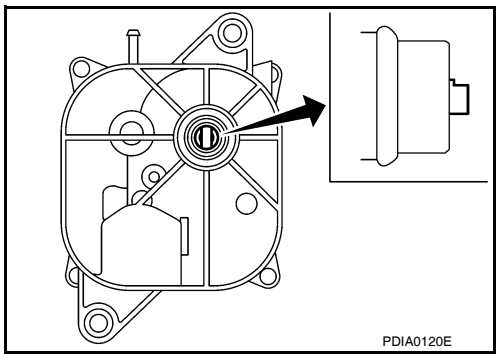

c. Tighten the bolts to the specified torque. Refer to DLN-283, "Disassembly and Assembly".
3. Install the breather hose to the transfer control device.
4. Connect the transfer control device connector.
5. After the installation, check the 4WD shift indicator pattern. If NG, adjust the position between the transfer assembly and transfer control unit. Refer to DLN-265, "Precaution for Transfer Assembly and Transfer Control Unit Replacement".

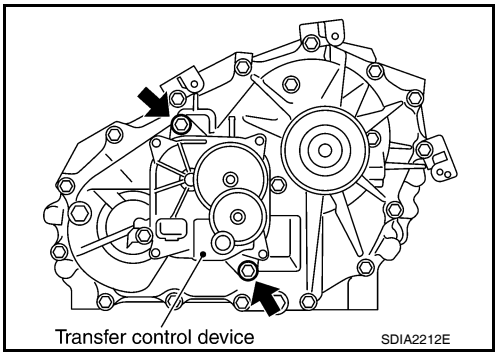

AIR BREATHER HOSE

Removal and Installation

INFOID:0000000005258441

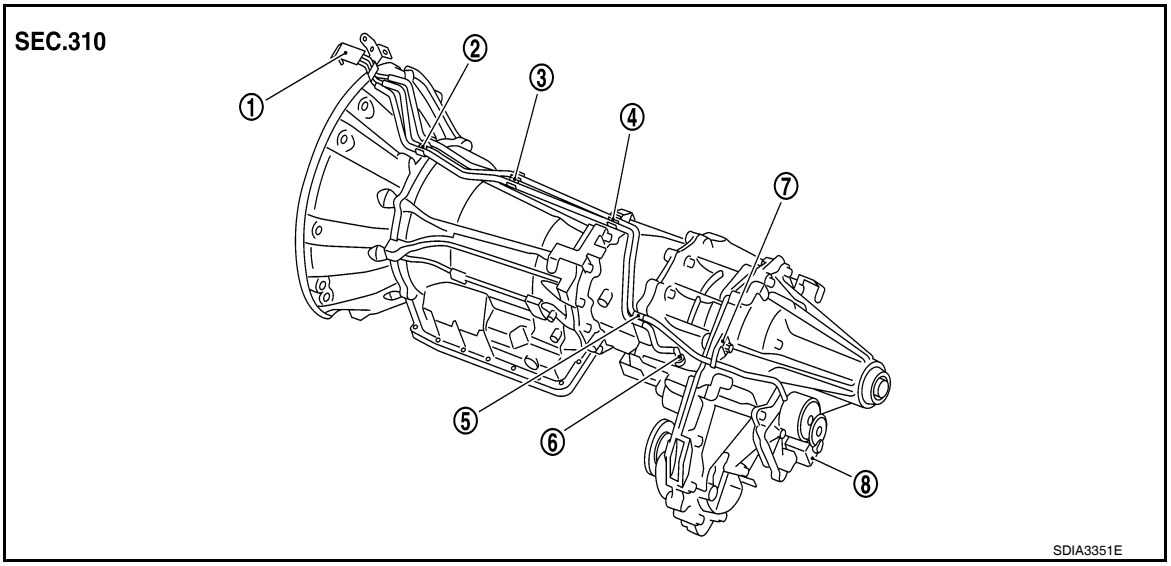

1.	Breather tube	2.	Clip A	3.	Clip B
4.	Clip C	5.	Clip D	6.	Breather tube (transfer)
7.	Air breather hose clamp	8.	Transfer control device		

CAUTION:

- **Make sure there are no pinched or restricted areas on each air breather hose caused by folding or bending when installing it.**
- **Install each air breather hose into the breather tube (metal connector) until the hose end reaches the end of the curved section. Set each air breather hose with paint mark facing upward.**
  - **A: Transfer control device air breather hose**
  - **B: A/T air breather hose**
  - **C: Paint marks**
  - **D: Transfer air breather hose**

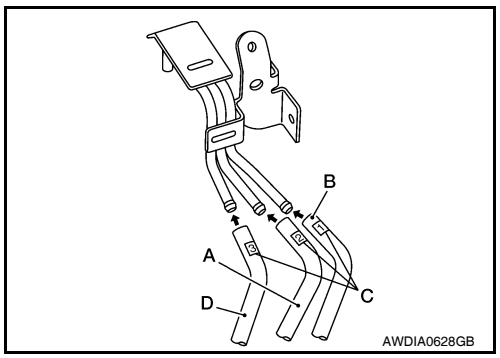

- **Install transfer control device air breather hose and transfer air breather hose on clip A and clip B with the paint mark facing upward.**

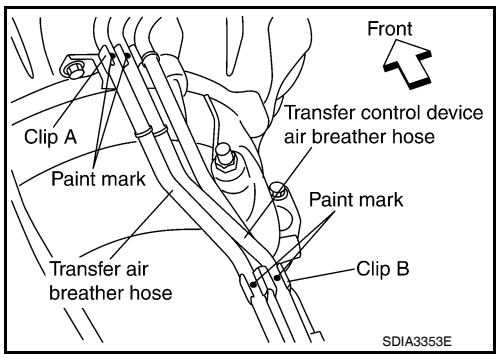

- **Install clip C on transfer control device air breather hose and transfer air breather hose with the paint mark matched.**

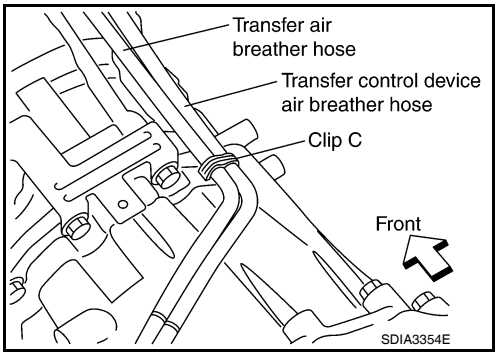

- **Install transfer control device air breather hose and transfer air breather hose on clip D with the paint mark facing upward.**

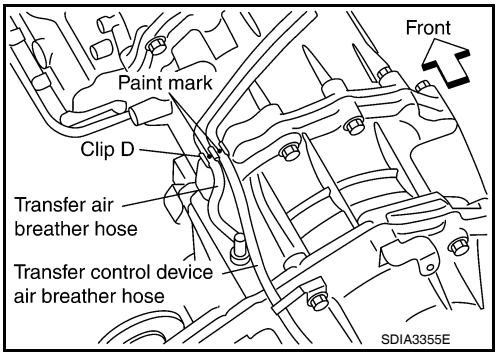

- **Install transfer air breather hose into the breather tube (transfer, metal connector) until the hose end reaches the base of the tube. Set transfer air breather hose with paint mark facing upward.**

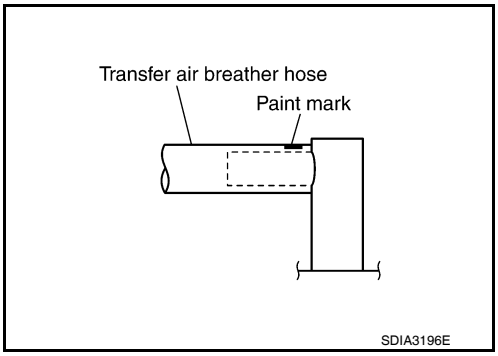

- **Install transfer control device air breather hose into transfer control device (case connector) until the hose end reaches the base of the tube. Set transfer control device air breather hose with paint mark facing forward.**

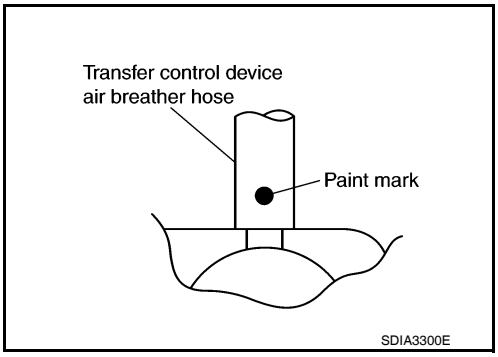

REMOVAL AND INSTALLATION

TRANSFER ASSEMBLY

Removal and Installation

INFOID:0000000005258442

REMOVAL

1. Switch 4WD shift switch to 2WD and set transfer assembly to 2WD.
2. Remove the undercovers using power tool.
3. Drain the transfer fluid. Refer to DLN-271.
4. Remove the center exhaust tube and main muffler. Refer to EX-7, "Removal and Installation".
5. Remove the front and rear propeller shafts. Refer to DLN-315, "Removal and Installation" (front), DLN-325, "Removal and Installation" (rear).
   CAUTION:
   Do not damage spline, sleeve yoke and rear oil seal when removing rear propeller shaft.
   NOTE:
   Insert a plug into the rear oil seal after removing the rear propeller shaft.
6. Remove the A/T nuts from the A/T crossmember. Refer to TM-194, "4WD : Exploded View".
7. Position two suitable jacks under the A/T and transfer assembly.
8. Remove the A/T crossmember. Refer to TM-194, "4WD : Exploded View".
   WARNING:
   Support A/T and transfer assembly using two suitable jacks while removing A/T crossmember.
9. Disconnect the electrical connectors from the following:
   - ATP switch
   - 4LO switch
   - Wait detection switch
   - Transfer control device
10. Disconnect each air breather hose from the following. Refer to TM-187, "4WD : Removal and Installation".
    - Transfer control device
    - Breather tube (transfer)
11. Remove the transfer to A/T and A/T to transfer bolts.
12. Remove the transfer assembly.
    WARNING:
    support transfer assembly with suitable jack while removing it.
    CAUTION:
    Do not damage rear oil seal (A/T).

INSTALLATION

Installation is in the reverse order of removal.

- Tighten the bolts to specification.

Tightening torque : 36 N·m (3.7kg-m, 27 ft-lb)

- Fill the transfer with new fluid and check for fluid leakage and fluid level. Refer to DLN-271, "Inspection".
- Start the engine for one minute. Then stop the engine and recheck the transfer fluid. Refer to DLN-271, "Inspection".
- After the installation, check the 4WD shift indicator pattern. If NG, adjust the position between the transfer assembly and transfer control unit. Refer to DLN-265, "Precaution for Transfer Assembly and Transfer Control Unit Replacement".

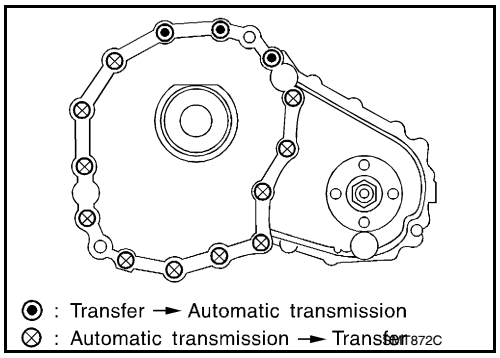

DISASSEMBLY AND ASSEMBLY

TRANSFER ASSEMBLY

Component Parts Location

INFOID:0000000005576393

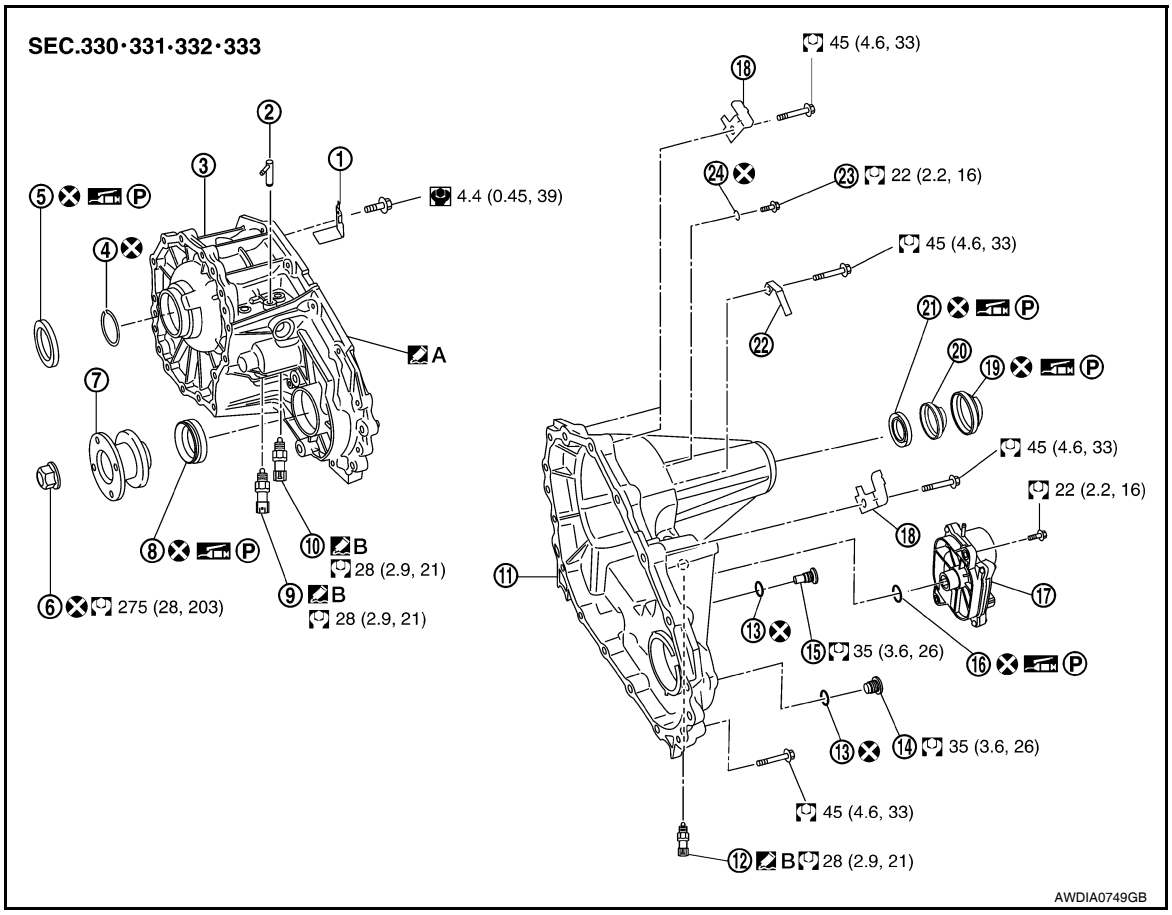

1.	Baffle plate	2.	Breather tube	3.	Front case
4.	Snap ring	5.	Input oil seal	6.	Self-lock nut
7.	Companion flange	8.	Front oil seal	9.	4LO switch (gray with green paint)
10.	ATP switch (black)	11.	Rear case	12.	Wait detection switch (gray)
13.	Gasket	14.	Filler plug	15.	Drain plug
16.	O-ring	17.	Transfer control device	18.	Harness bracket
19.	Dust cover	20.	Oil cover	21.	Rear oil seal
22.	Air breather hose clamp	23.	Retainer bolt	24.	Gasket
A.	Apply Genuine Anaerobic Liquid Gasket or equivalent.	B.	Apply Genuine Silicone RTV or equivalent.		

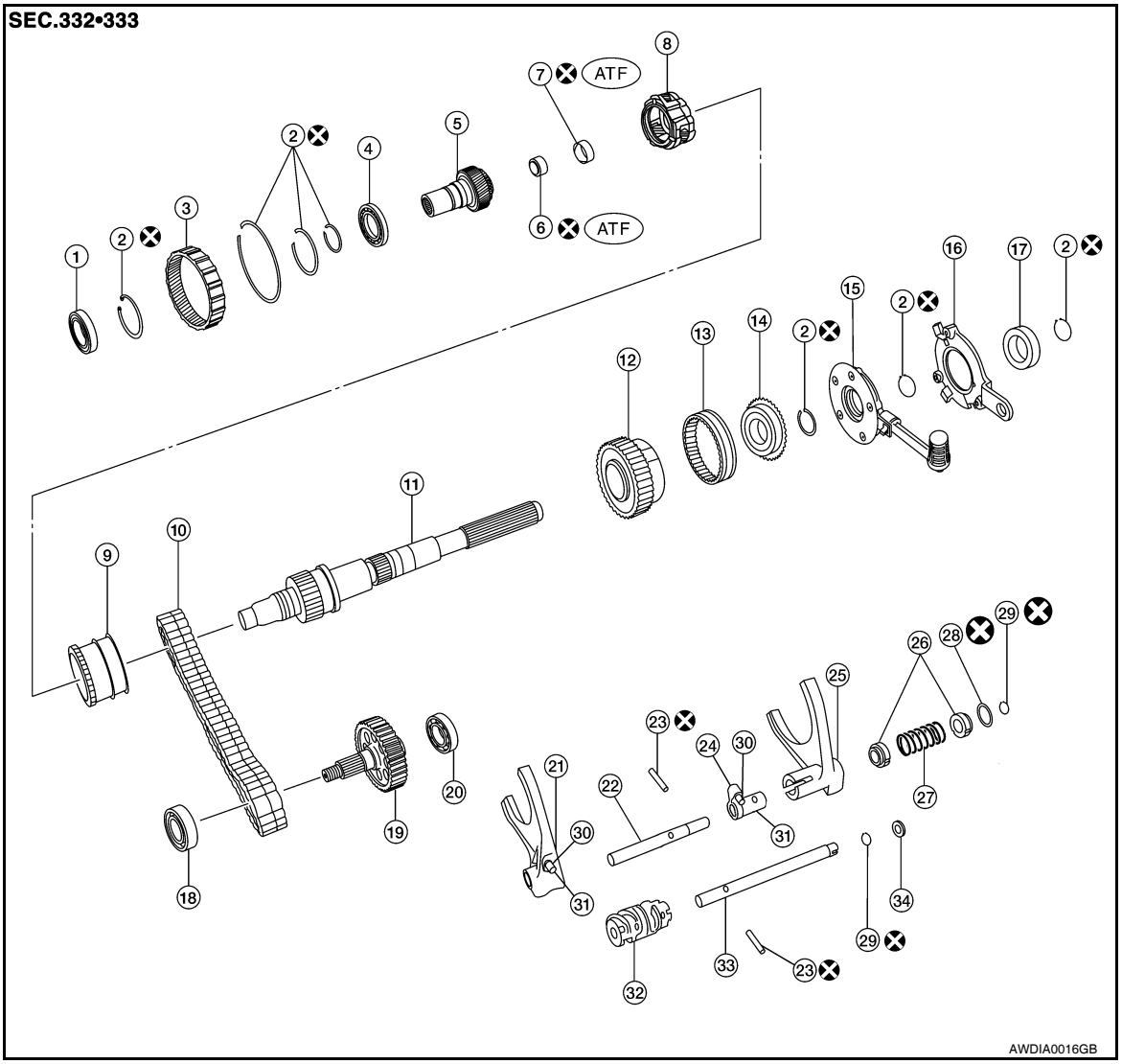

1. Input bearing	2. Snap ring	3. Internal gear
4. Carrier bearing	5. Sun gear	6. Needle bearing
7. Metal bushing	8. Planetary carrier assembly	9. L-H sleeve
10. Drive chain	11. Mainshaft	12. Sprocket
13. 2-4 sleeve	14. Clutch gear	15. Oil pump assembly
16. Retainer	17. Mainshaft rear bearing	18. Front bearing
19. Front drive shaft	20. Rear bearing	21. L-H shift fork
22. L-H shift rod	23. Retaining pin	24. 2-4 shift bracket
25. 2-4 shift fork	26. Fork guide collar	27. 2-4 shift fork spring
28. Retaining ring	29. Snap ring	30. Shift collar
31. Clevis pin	32. Drum cam	33. Control shift rod
34. Spacer		

Disassembly and Assembly

INFOID:0000000005258443

COMPONENTS

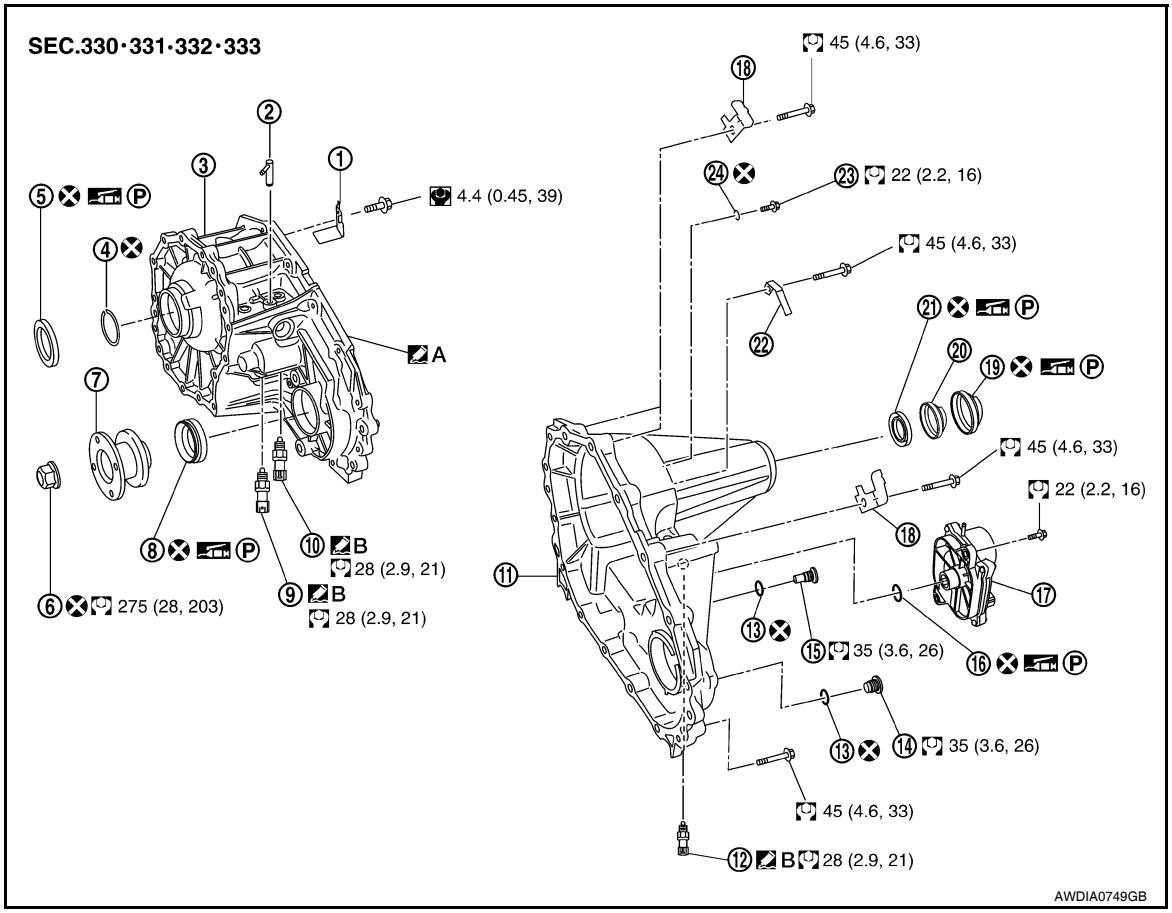

1.	Baffle plate	2.	Breather tube	3.	Front case
4.	Snap ring	5.	Input oil seal	6.	Self-lock nut
7.	Companion flange	8.	Front oil seal	9.	4LO switch (gray with green paint)
10.	ATP switch (black)	11.	Rear case	12.	Wait detection switch (gray)
13.	Gasket	14.	Filler plug	15.	Drain plug
16.	O-ring	17.	Transfer control device	18.	Harness bracket
19.	Dust cover	20.	Oil cover	21.	Rear oil seal
22.	Air breather hose clamp	23.	Retainer bolt	24.	Gasket
A.	Apply Genuine Anaerobic Liquid Gasket or equivalent.	B.	Apply Genuine Silicone RTV or equivalent.		

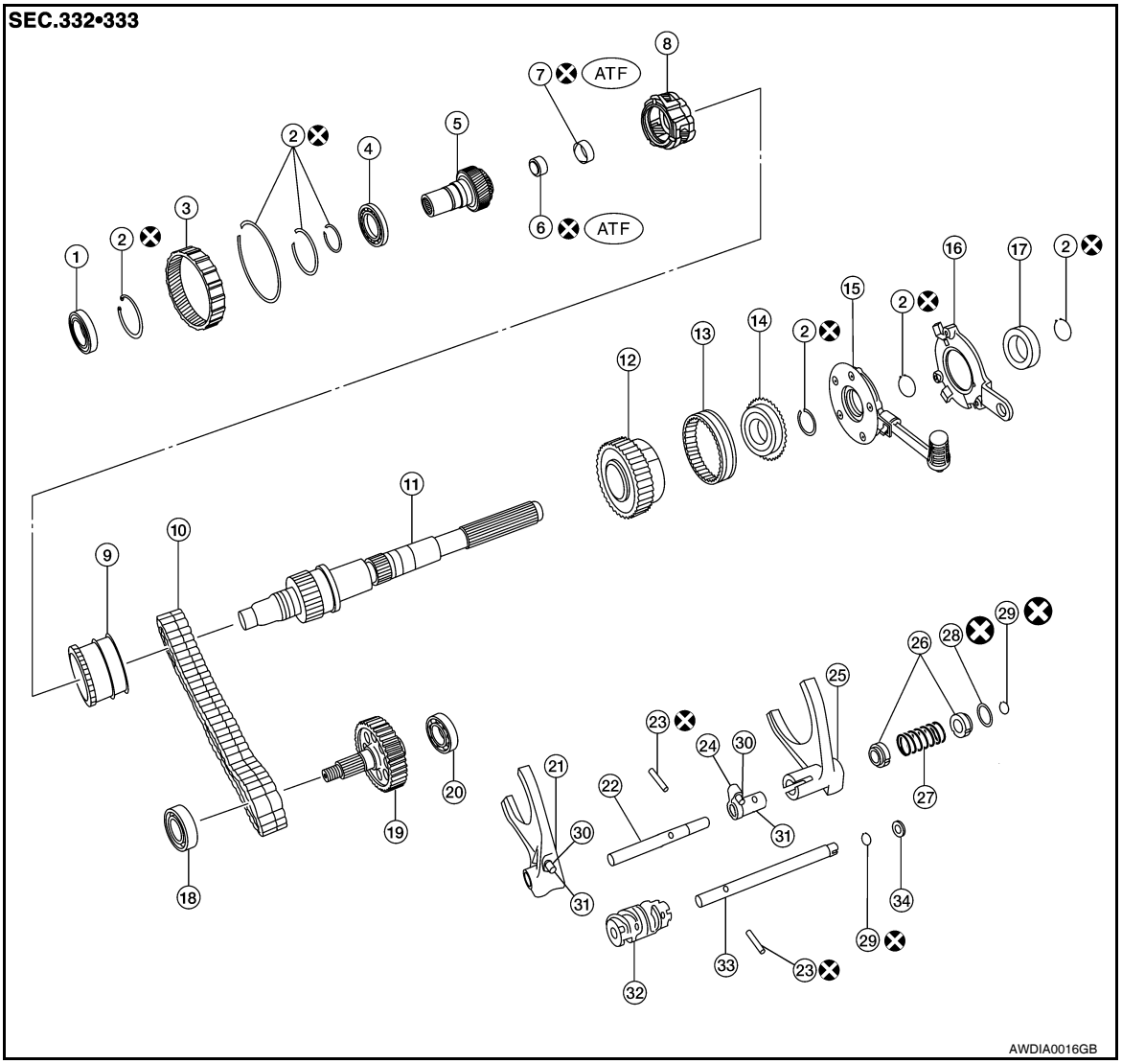

1. Input bearing	2. Snap ring	3. Internal gear
4. Carrier bearing	5. Sun gear	6. Needle bearing
7. Metal bushing	8. Planetary carrier assembly	9. L-H sleeve
10. Drive chain	11. Mainshaft	12. Sprocket
13. 2-4 sleeve	14. Clutch gear	15. Oil pump assembly
16. Retainer	17. Mainshaft rear bearing	18. Front bearing
19. Front drive shaft	20. Rear bearing	21. L-H shift fork
22. L-H shift rod	23. Retaining pin	24. 2-4 shift bracket
25. 2-4 shift fork	26. Fork guide collar	27. 2-4 shift fork spring
28. Retaining ring	29. Snap ring	30. Shift collar
31. Clevis pin	32. Drum cam	33. Control shift rod
34. Spacer		

DISASSEMBLY

1. Remove the drain plug and filler plug.

2. Remove the transfer control device from the rear case.
3. Remove the O-ring from the transfer control device.

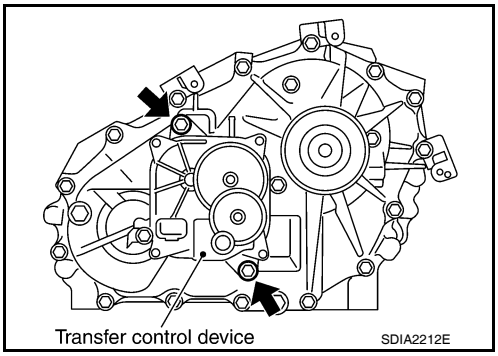

4. Remove the self-lock nut from the companion flange using suitable tool.

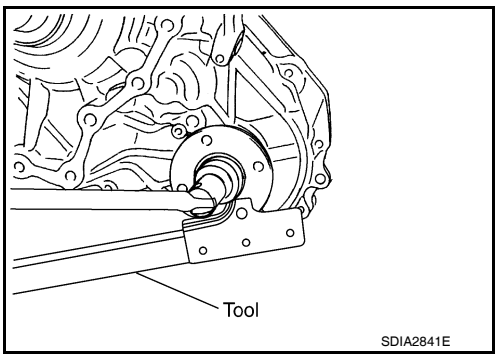

5. Put a matching mark on top of the front drive shaft in line with the mark on the companion flange.
CAUTION:
Use paint to make the matching mark on the front drive shaft. Do not damage the front drive shaft.

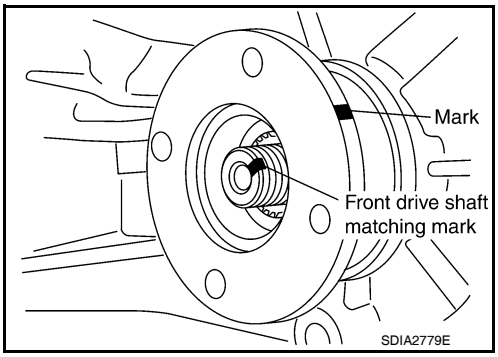

6. Remove the companion flange using suitable tool.

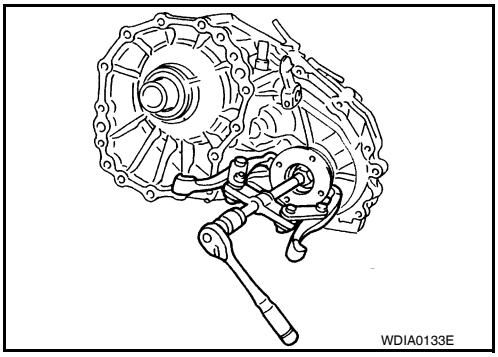

7. Remove the front oil seal from the front case using Tool.

Tool number : ST33290001 (J-34286)

CAUTION:
Do not damage front case or front drive shaft.

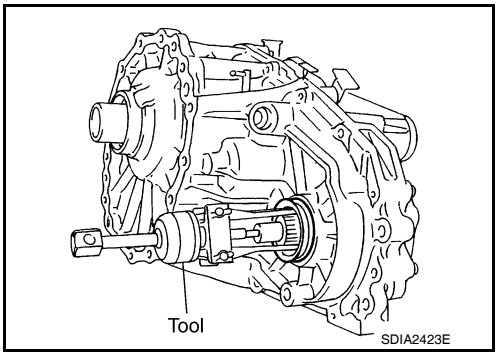

8. Remove the 4LO switch [gray (with green paint)] and ATP switch (black) from the front case.

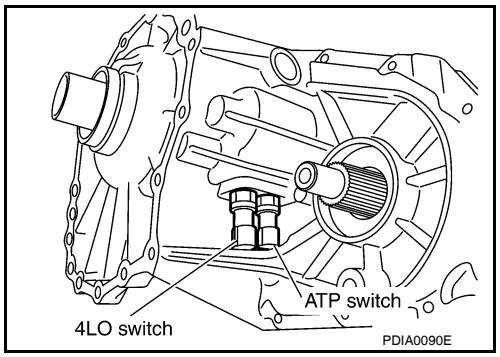

9. Remove the wait detection switch (gray) from the rear case.

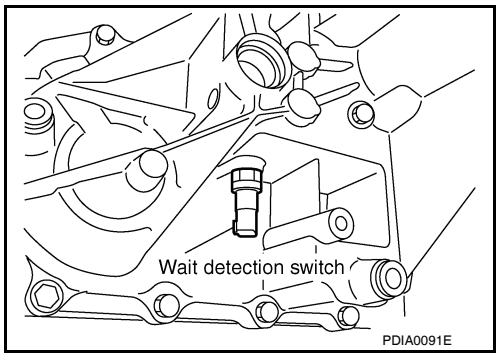

10. Remove the dust cover from the rear case using suitable tool.
CAUTION:
Do not damage rear case.

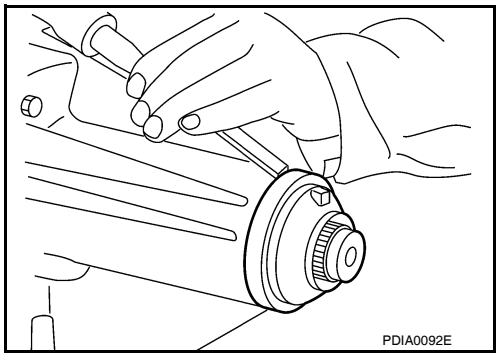

11. Remove oil cover from dust cover.
12. Remove the rear oil seal from the rear case using Tool.

Tool number : ST33290001 (J-34286)

CAUTION:
Do not damage rear case or mainshaft.

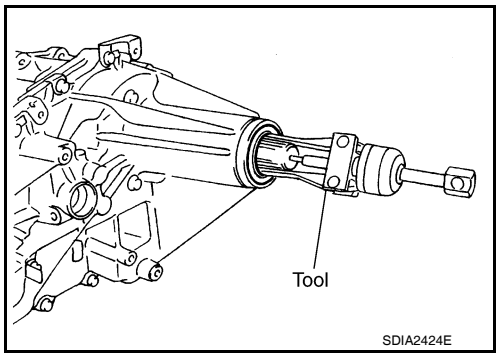

13. Remove the input oil seal from the front case using suitable tool.
    CAUTION:
    Do not damage front case, sun gear or input bearing.

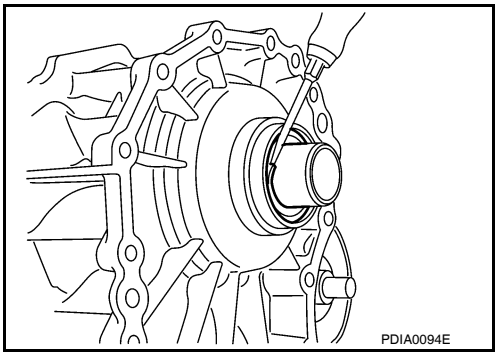

14. Remove the retainer bolts and gaskets.

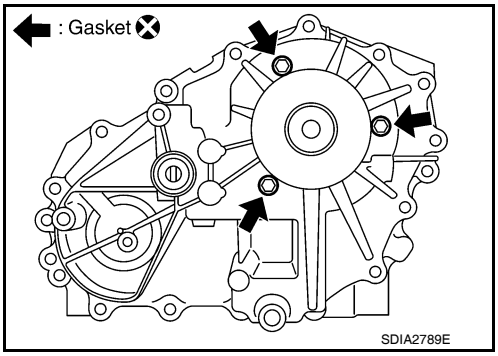

15. Remove the rear case bolts, harness bracket and air breather hose clamp from the rear case.

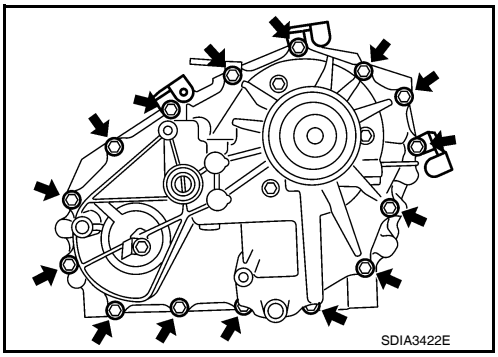

16. Separate the front case from the rear case. Then remove the rear case by prying it up using suitable tool.
    CAUTION:
    Do not damage the mating surface.
17. Remove the spacer from the control shift rod.
    CAUTION:
    Do not drop spacer.

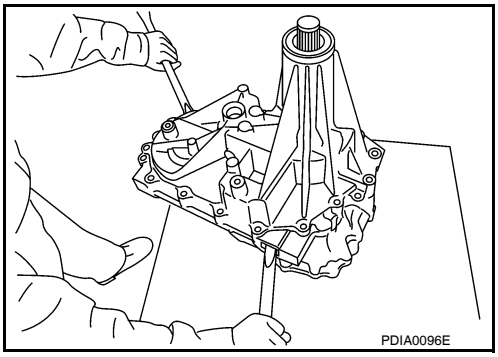

18. Remove the snap ring from the mainshaft using suitable tool.

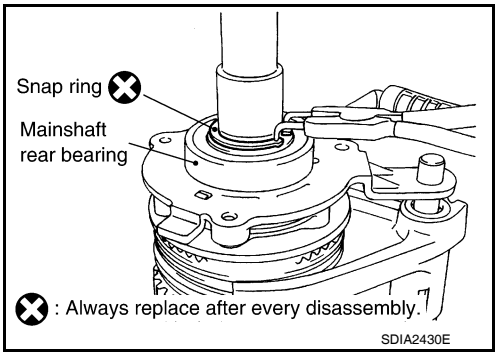

19. Remove the mainshaft rear bearing from the mainshaft using suitable tools.
20. Remove the retainer from the mainshaft.

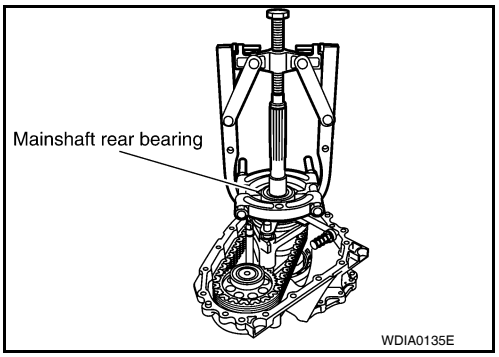

21. Remove the snap ring from the mainshaft using suitable tool.
22. Remove the oil pump assembly from the mainshaft.

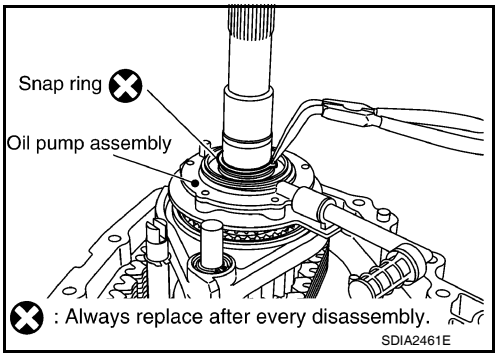

23. Remove the snap ring from the mainshaft using suitable tool.
24. Remove the clutch gear from the mainshaft.

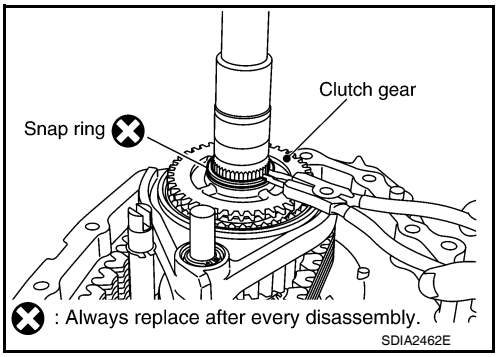

25. Remove the snap ring from the L-H shift rod assembly using suitable tool.
26. Remove the 2-4 sleeve and 2-4 shift fork assembly from the mainshaft.

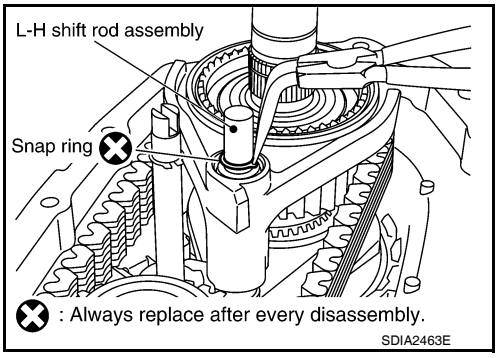

27. Remove the drive chain together with the sprocket and front drive shaft from the front case.
28. Remove the mainshaft from the sun gear assembly.
29. Remove the L-H shift rod assembly and control shift rod assembly from the front case.
30. Remove the L-H sleeve together with the L-H shift fork from the planetary carrier assembly.

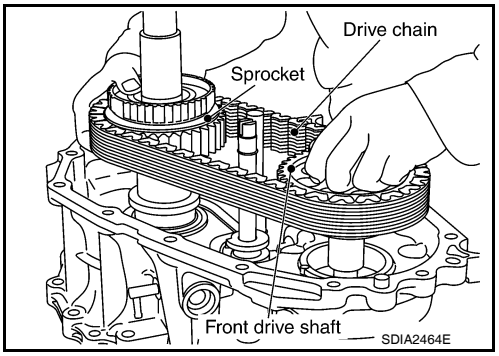

31. Remove the snap ring from the sun gear.
CAUTION:
Do not damage sun gear or input bearing.

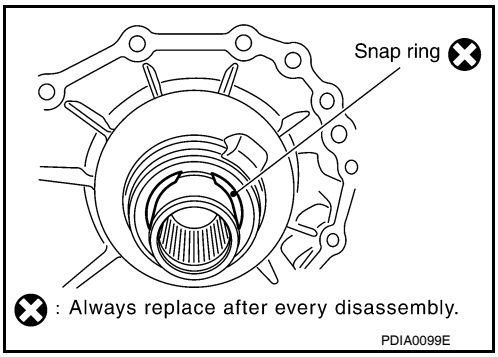

32. Press the sun gear assembly and planetary carrier assembly from the front case using Tool.

Tool number : KV38100200 (—)

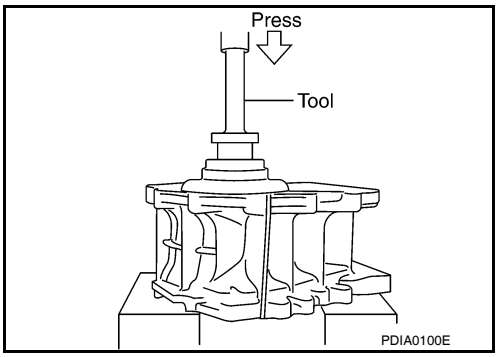

33. Remove the snap ring from the front case.

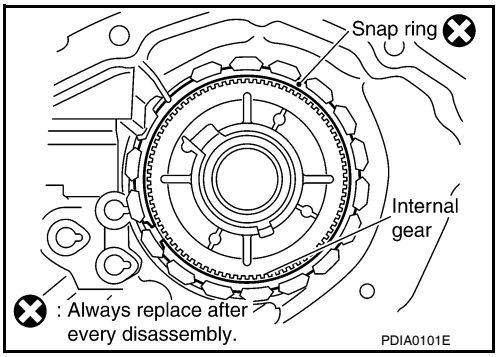

34. Remove the internal gear from the front case.

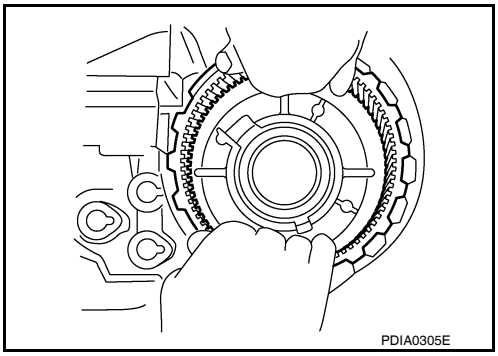

35. Remove the snap ring from the front case.

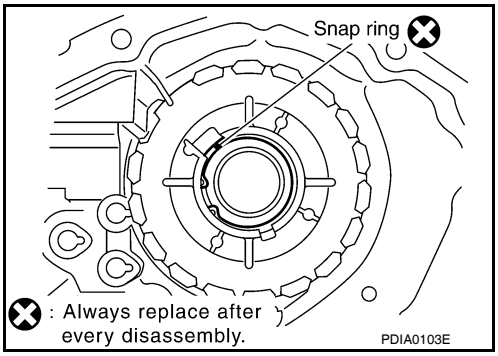

36. Remove the input bearing from the front case using Tool.

Tool number : KV38100200 (—)

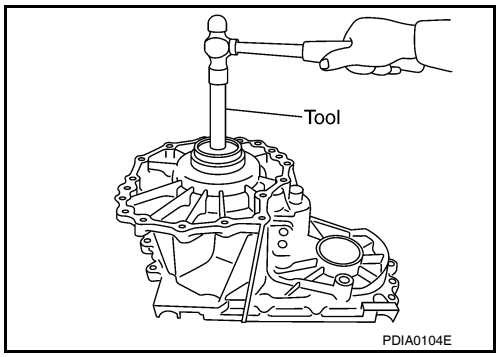

37. Remove the baffle plate from the front case.
38. Remove the breather tube from the front case.

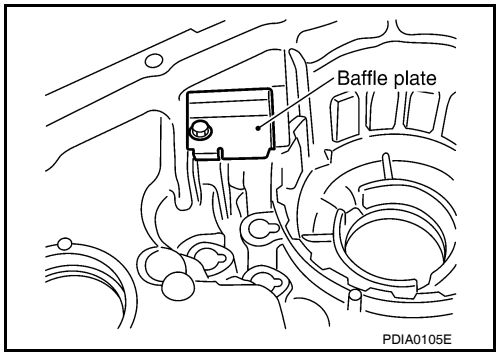

INSPECTION AFTER DISASSEMBLY

Case

Check the contact surfaces of the shift rod and bearing for wear and damage. If any is found, replace with a new one.

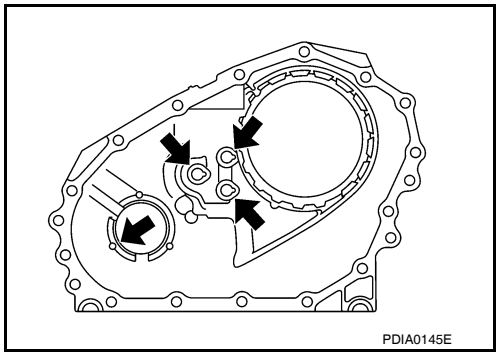

Sleeve

Check the items below. If necessary, replace them with new ones.

- Damage and excessive wear of the contact surfaces of the sprocket, mainshaft and sleeve.
- Sleeve must move smoothly.

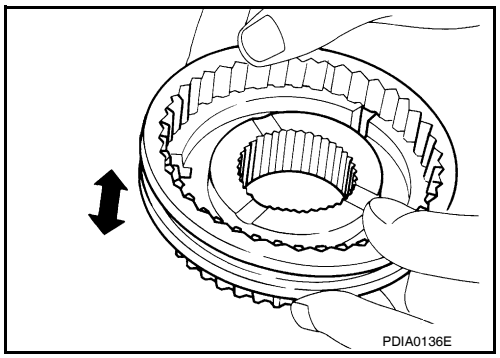

Gear, Shaft and Drive Chain

Check the items below. If necessary, replace them with new ones.
- Damage, peeling, uneven wear and bending of the shaft.
- Excessive wear, damage and peeling of the gear.

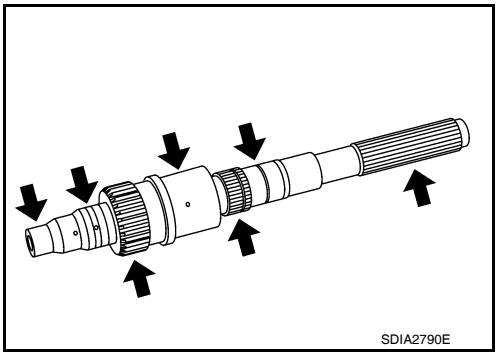

Bearing
Check the bearing for damage and rough rotation. If necessary, replace it with a new one.

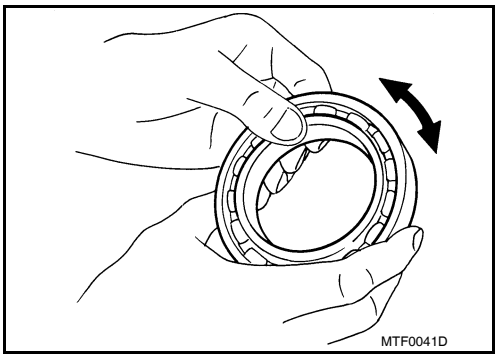

ASSEMBLY

1. Install the breather tube.
   CAUTION:
   Install breather tube in the direction shown.

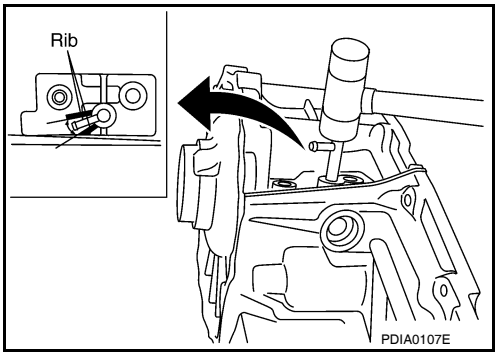

2. Install the baffle plate to the front case. Tighten the bolt to the specified torque. Refer to DLN-152, "Component Parts Location".
   CAUTION:
   Install baffle plate by pushing it in the direction shown while tightening the bolt.

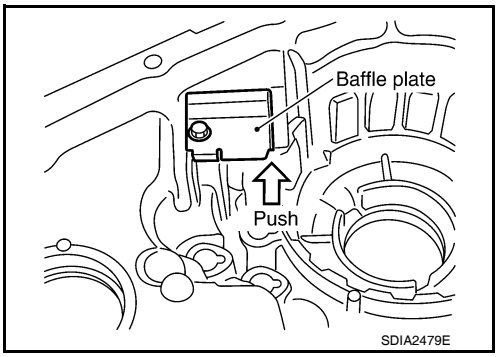

3. Install the input bearing to the front case using Tool.

Tool number : ST30720000 (J-25405)

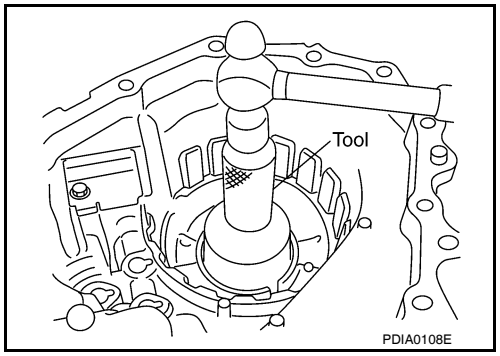

4. Install the new snap ring to the front case.
CAUTION:
Do not reuse snap ring.

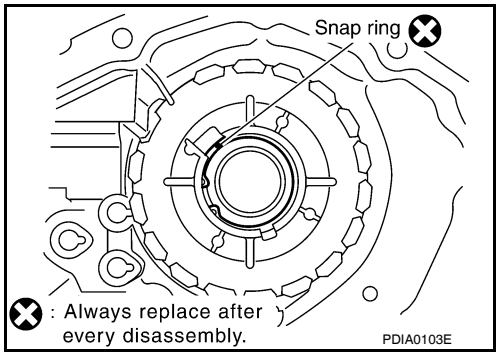

5. Install the internal gear with the groove facing up into the front case.

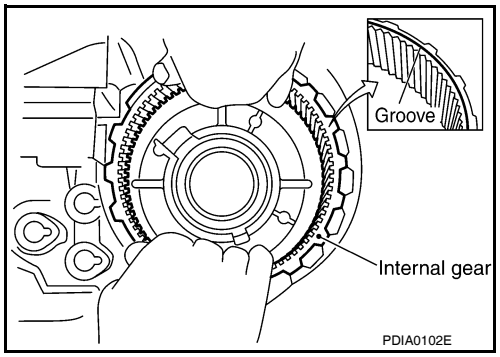

6. Install the new snap ring to the front case.
CAUTION:
Do not reuse snap ring.

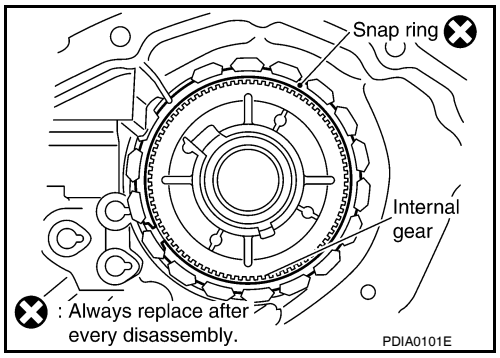

7. Install the planetary carrier assembly and sun gear assembly to the front case using Tool.

Tool number : KV38100200 (—)

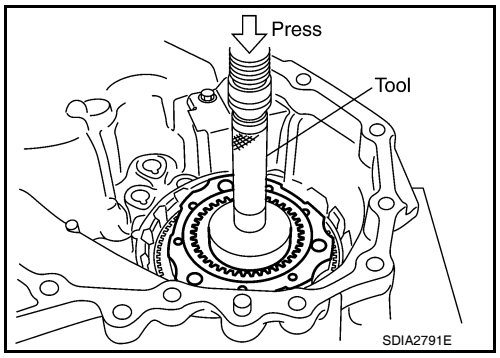

8. Install the new snap ring to the sun gear.
   CAUTION:
   - **Do not reuse snap ring.**
   - **Do not damage sun gear.**

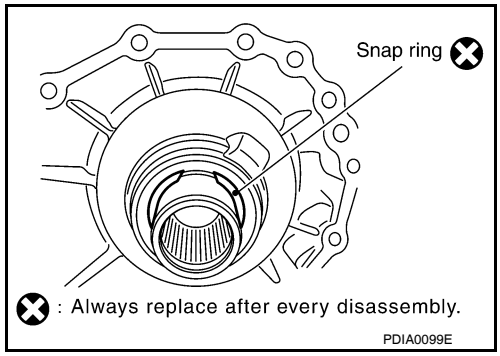

9. Set the L-H sleeve together with the L-H shift fork assembly onto the planetary carrier assembly.

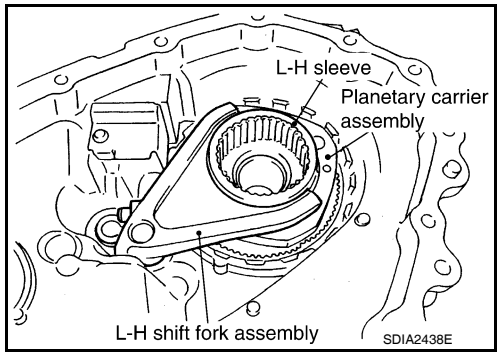

10. Install the control shift rod assembly to the front case.
    CAUTION:
    Set pin of L-H shift fork assembly into the groove of drum cam.
11. Turn the control shift rod assembly fully counterclockwise.

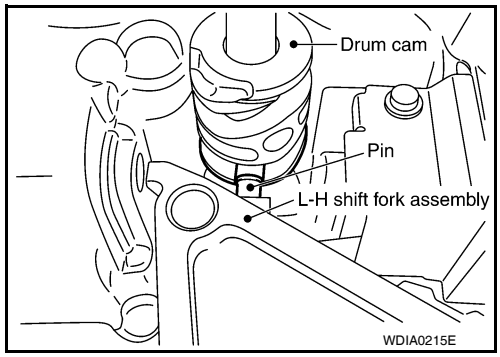

12. Install the L-H shift rod assembly through the L-H shift fork assembly opening to the front case.
    CAUTION:
    Set pin of L-H shift rod assembly into the groove of drum cam.
13. Install the mainshaft to the sun gear assembly.

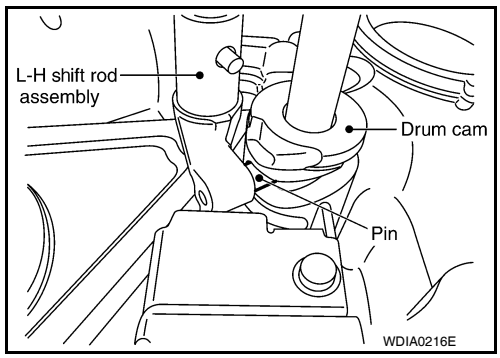

14. Install the drive chain to the front drive shaft and sprocket.
    CAUTION:
    Install with the Identification mark of drive chain on the side of the rear bearing of front drive shaft.

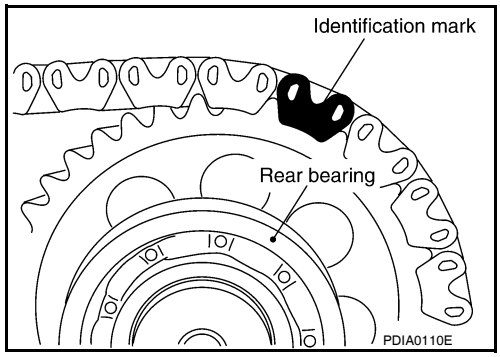

15. Install the drive chain together with the front drive shaft and sprocket to the front case.

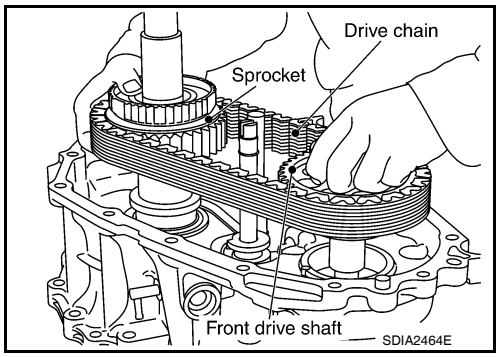

16. Install the 2-4 sleeve and 2-4 shift fork assembly to the mainshaft.
CAUTION:
- **Install with proper orientation of 2-4 sleeve.**
- **Install 2-4 shift fork with engaging the grooves of 2-4 shift fork in the retaining pin of 2-4 shift bracket.**

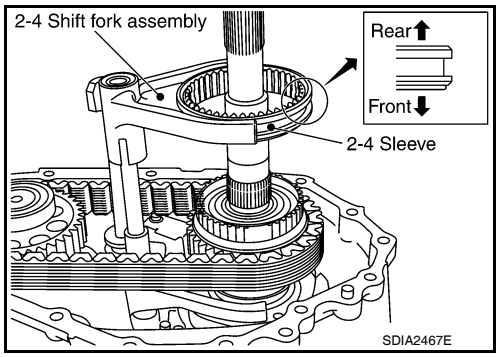

17. Install the new snap ring to the L-H shift rod assembly using suitable tool.
CAUTION:
Do not reuse snap ring.
18. Install the clutch gear to the mainshaft.

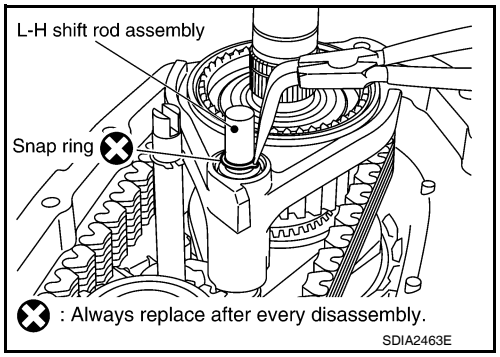

19. Install the new snap ring to the mainshaft using suitable tool.
CAUTION:
Do not reuse snap ring.
20. Install the oil pump assembly to the mainshaft.

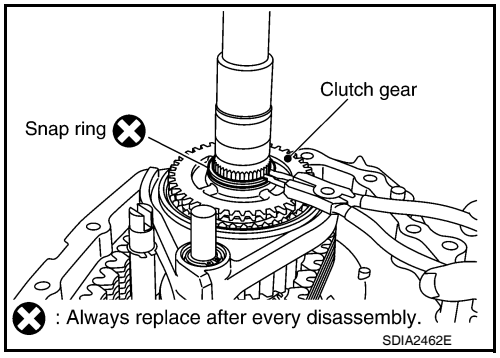

21. Install the new snap ring to the mainshaft using suitable tool.
CAUTION:
Do not reuse snap ring.

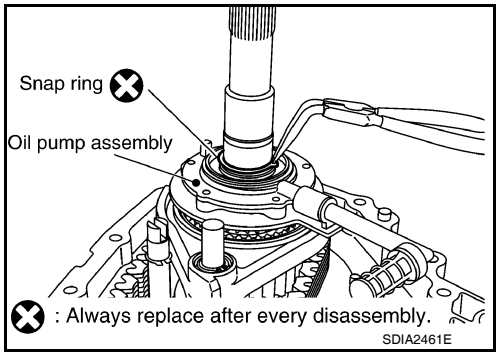

22. Install the retainer to the mainshaft.
CAUTION:
Set the projection of oil pump assembly to the identification hole, and then align locating hole of retainer to the L-H shift rod assembly.

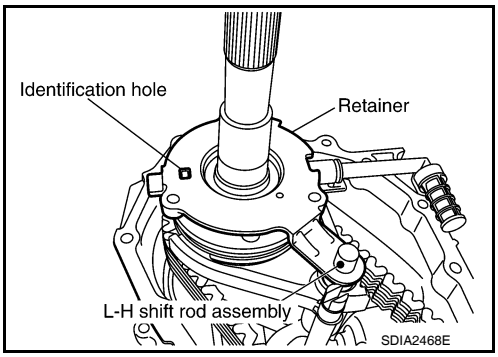

23. Install the mainshaft rear bearing to the mainshaft using Tool.

Tool number : KV32102700 (—)

CAUTION:
Do not push too hard in order to avoid snap rings becoming dislodged from mainshaft.

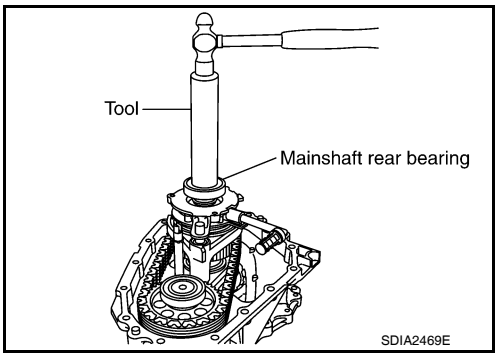

24. Install the new snap ring to the mainshaft using suitable tool.
CAUTION:
Do not reuse snap ring.
25. Install the spacer to the control shift rod.

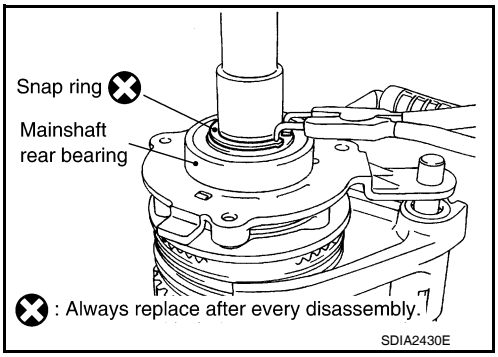

26. Apply liquid gasket to the mating surface of the front case.
- **Use Genuine Anaerobic Liquid Gasket or equivalent. Refer to GI-14, "Recommended Chemical Products and Sealants".**

CAUTION:
Remove old sealant adhering to mating surfaces. Also remove any moisture, oil, or foreign material adhering to application and mating surfaces.
27. Install the rear case to the front case.

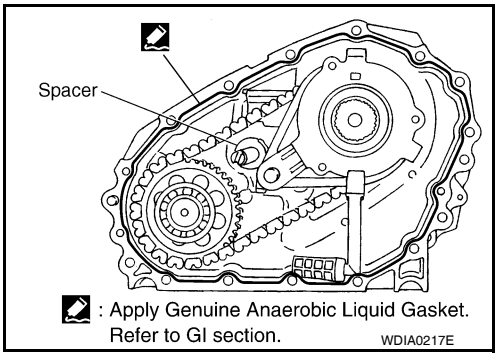

28. Tighten the bolts to the specified torque. Refer to DLN-152, "Component Parts Location".
CAUTION:
Be sure to install the harness brackets and air breather hose clamp.

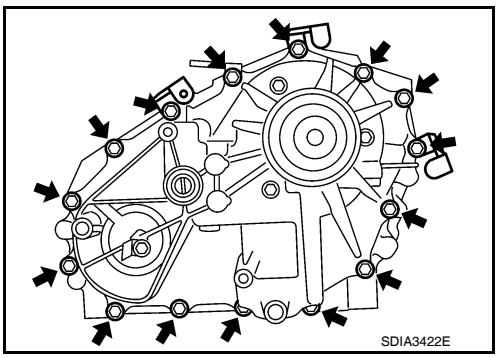

29. Install the retainer bolts with new gaskets. Tighten the bolts to the specified torque. Refer to DLN-152, "Component Parts Location".
CAUTION:
- **Do not reuse gasket.**
- **Tighten them to the specified torque again.**

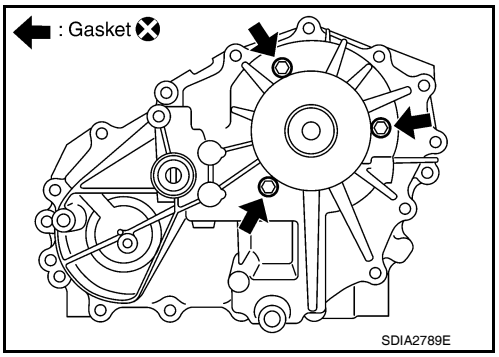

30. Apply petroleum jelly to the circumference of the new oil seal, and install it to the front case using Tools.

Tool number	**A: ST30720000 (J-25405)**
	B: KV40104830 (—)
Dimension A	**: 4.0 - 4.6 mm (0.157 - 0.181 in)**

CAUTION:
- **Do not reuse oil seal.**
- **Apply petroleum jelly to oil seal.**

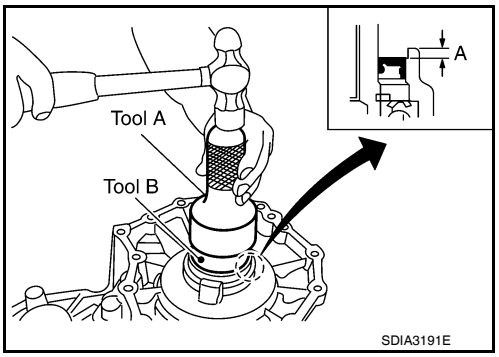

31. Install the new rear oil seal until it is flush with the end face of the rear case using Tool.

Tool number	**: KV38100500 (—)**

CAUTION:
Apply petroleum jelly to oil seal.

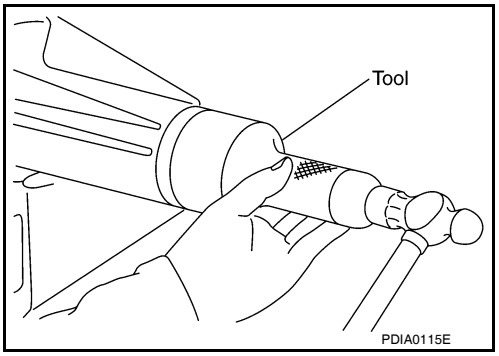

32. Install the oil cover until it reaches the end face of the new dust cover.
CAUTION:
- **Do not reuse oil cover.**
- **Position oil cover with the notch at the bottom position.**

33. Apply petroleum jelly to the circumference of the new dust cover. Position the new dust cover as shown.
CAUTION:
Position the protrusions at the position shown.
- 1: Dust cover
- 2: Rear case assembly
- A: Protrusions

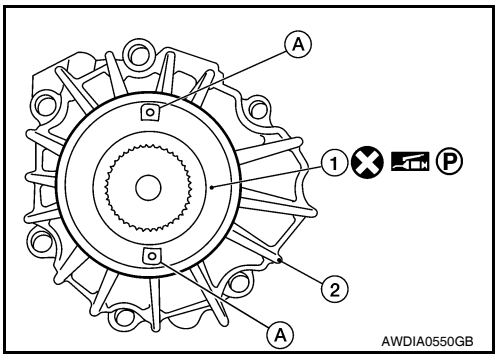

34. Install the new dust cover to the rear case using Tool.

Tool number : KV40105310 (—)

CAUTION:
- **Do not reuse dust cover.**
- **Apply petroleum jelly to dust cover.**

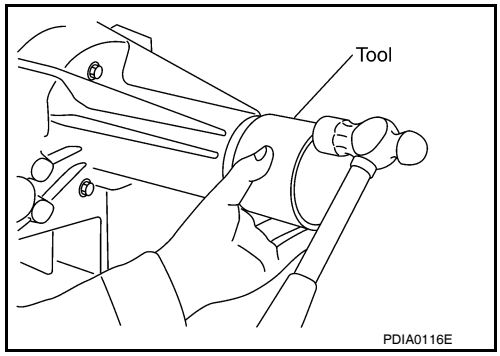

35. Apply sealant to the threads of the wait detection switch (gray). Then install it to the rear case and tighten to the specified torque. Refer to DLN-152, "Component Parts Location".
- **Use Genuine Silicone RTV or equivalent. Refer to GI-14, "Recommended Chemical Products and Sealants".**

CAUTION:
Remove old sealant and oil adhering to threads.

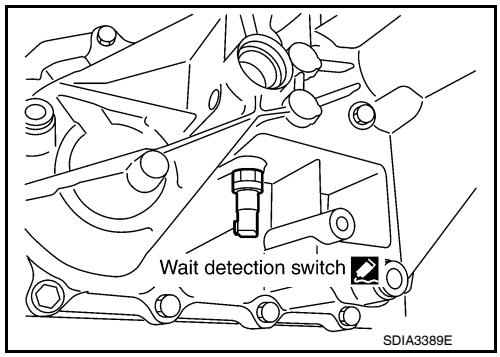

36. Apply sealant to the threads of the 4LO switch (gray with green paint) and ATP switch (black). Then install them to the front case and tighten to the specified torque. Refer to DLN-152, "Component Parts Location".
- **Use Genuine Silicone RTV or equivalent. Refer to GI-14, "Recommended Chemical Products and Sealants".**

CAUTION:
Remove old sealant and oil adhering to threads.

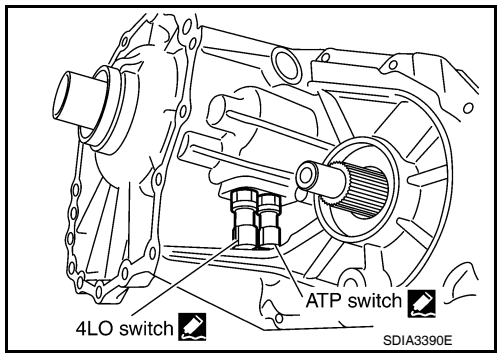

37. Install the new front oil seal until it is flush with the end face of the front case using Tool.

Tool number : KV38100500 (—)

CAUTION:
- **Do not reuse oil seal.**
- **Apply petroleum jelly to oil seal.**

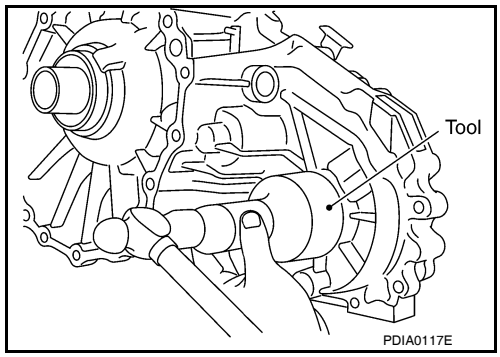

38. Align the matching mark on the front drive shaft with the mark on the companion flange, then install the companion flange.

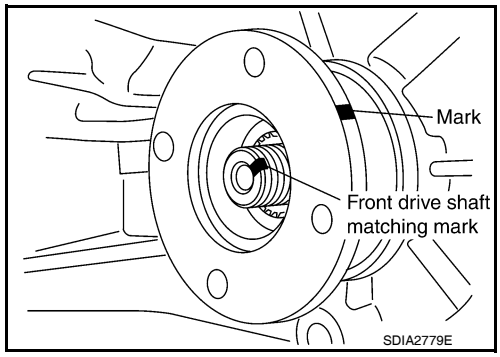

39. Install the new companion flange self-lock nut. Tighten to the specified torque using suitable tool. Refer to DLN-152, "Component Parts Location".
CAUTION:
Do not reuse self-lock nut.

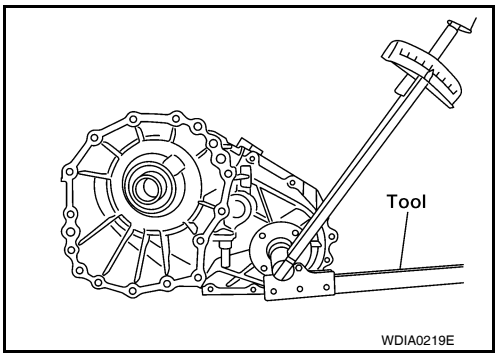

40. Install the new O-ring to the transfer control device.
CAUTION:
- **Do not reuse O-ring.**
- **Apply petroleum jelly to O-ring.**

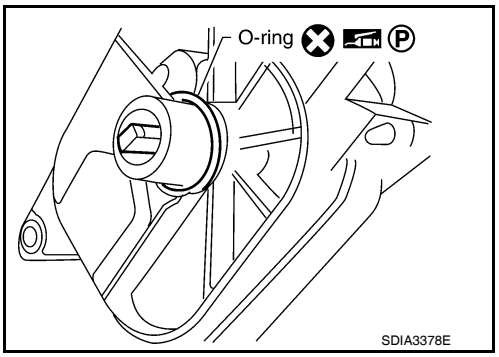

41. Install the transfer control device to the rear case.

a. Turn the control shift rod fully counterclockwise using a suitable tool, and then put a mark on the control shift rod.

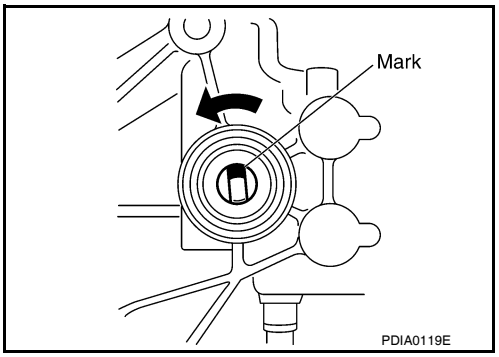

b. Align the transfer control device shaft cutout with the mark on the control shift rod, and install it.
NOTE:
Turn the transfer control device when the transfer control device connection does not match.

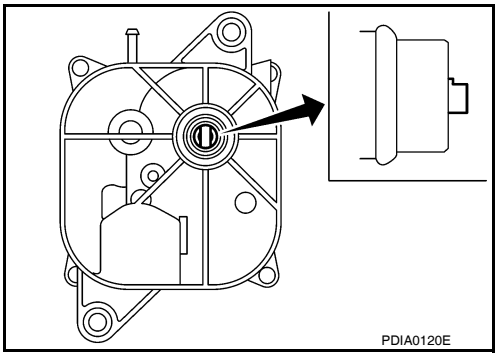

c. Tighten the bolts to the specified torque. Refer to DLN-152, "Component Parts Location".

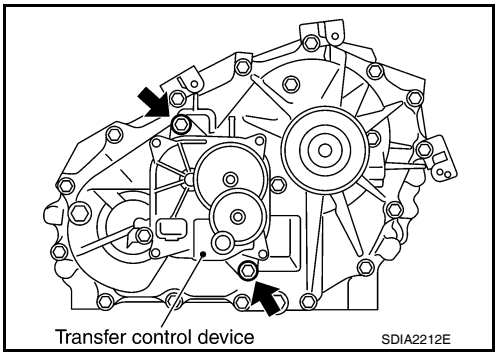

42. Install the drain plug and filler plug with new gaskets to the rear case. Tighten to the specified torque. Refer to DLN-152, "Component Parts Location".
    CAUTION:
    Do not reuse gaskets.

PLANETARY CARRIER

Disassembly and Assembly

INFOID:0000000005258444

DISASSEMBLY

1. Remove the snap ring.
2. Remove the sun gear assembly from the planetary carrier assembly using suitable tool.

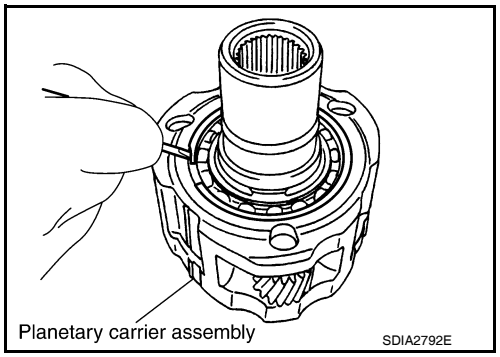

3. Remove the snap ring from the sun gear assembly using suitable tool.

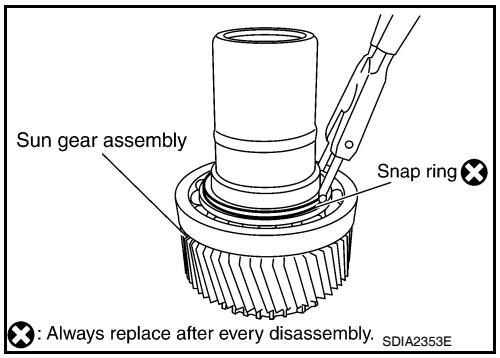

4. Remove the carrier bearing from the sun gear using Tools.

Tool number **A: ST35300000 (—)**
B: ST30021000 (J-22912-01)

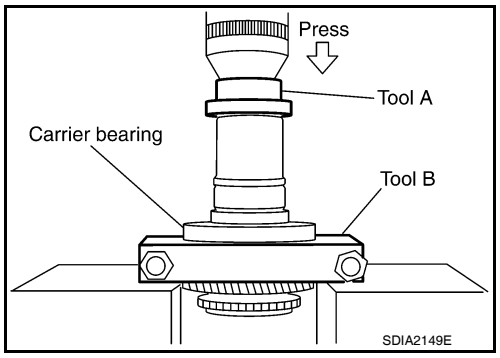

5. Remove the needle bearing from the sun gear using Tool.

Tool number **: ST33710000 (—)**

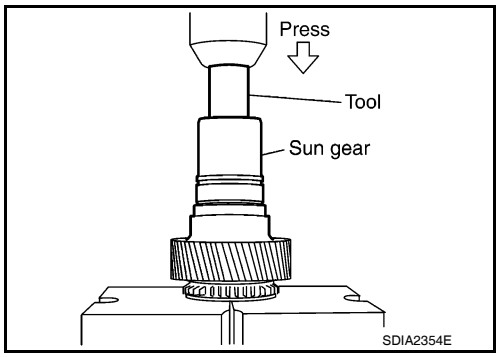

6. Remove the metal bushing from the sun gear using Tools.

Tool number **A: ST33710000 (—)**
B: ST35325000 (—)
C: ST33290001 (J-34286)

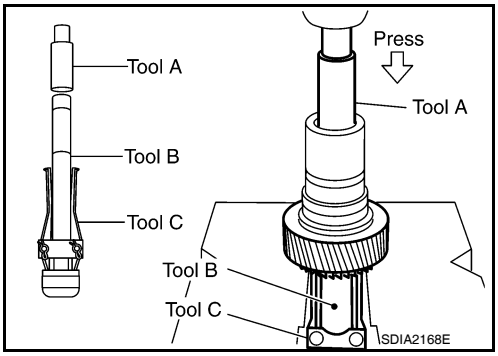

INSPECTION AFTER DISASSEMBLY

Bearing

Check the bearing for damage and rough rotation. If necessary, replace the bearing with a new one.

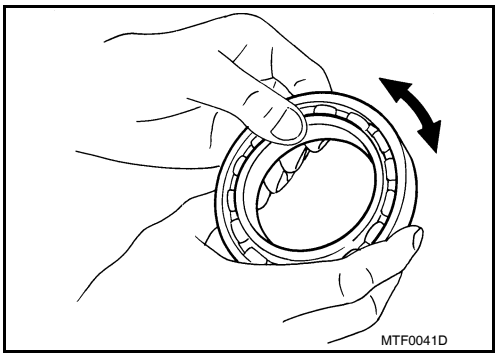

Planetary Carrier

- Measure the end play of each pinion gear. If it is out of specification, replace the planetary carrier assembly with new one.

Pinion gear end play **Refer to DLN-309, "Inspection and Adjustment"**

- Check the working face of each gear and bearing for damage, burrs, partial wear, dents and other abnormality. If any is found, replace the planetary carrier assembly with a new one.

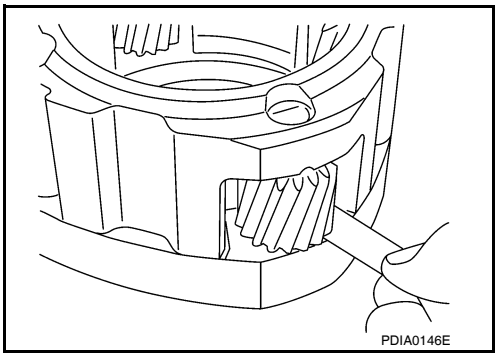

Sun Gear

- Check if the oil passage of the sun gear assembly is clogged. For this, try to pass a 3.6 mm (0.142 in) dia. wire through the oil passage as shown.
- Check the sliding and contact surface of each gear and bearing for damage, burrs, partial wear, dents and other abnormality. If any is found, replace the sun gear assembly with a new one.

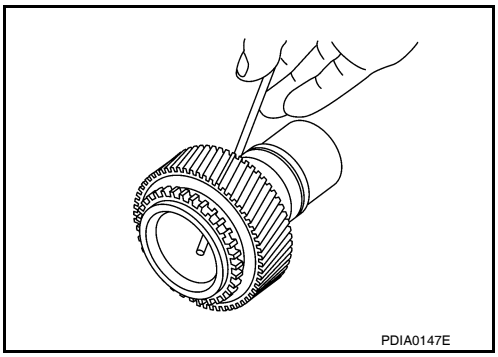

Internal Gear

Check the internal gear teeth for damage, partial wear, dents or other abnormality. If any is found, replace the internal gear with a new one.

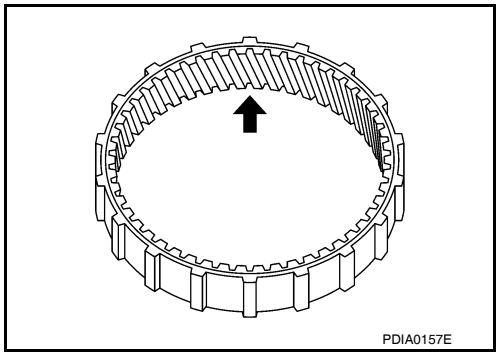

ASSEMBLY

1. Apply ATF to the new metal bushing, then install the new metal bushing until it becomes (Dimension A) using Tool.

   Tool number : ST35300000 (—)

   Dimension A : 7.7 - 8.3mm (0.303 - 0.327in)

   CAUTION:
   Do not reuse metal bushing.

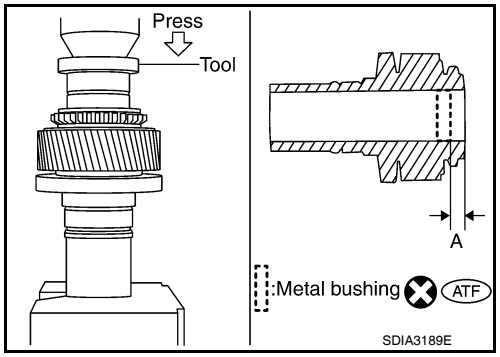

2. Apply ATF to the new needle bearing, then install the new needle bearing until it becomes (Dimension B) using Tool.

   Tool number : ST33220000 (—)

   Dimension B : 62.5 - 63.1mm (2.461 - 2.484in)

   CAUTION:
   Do not reuse needle bearing.

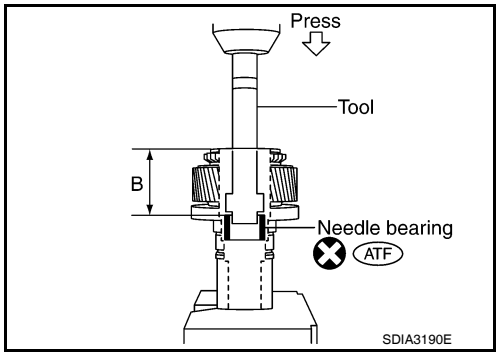

3. Install the carrier bearing to the sun gear using Tools.

   Tool number A: ST30720000 (J-25405)
   B: ST27863000 (—)

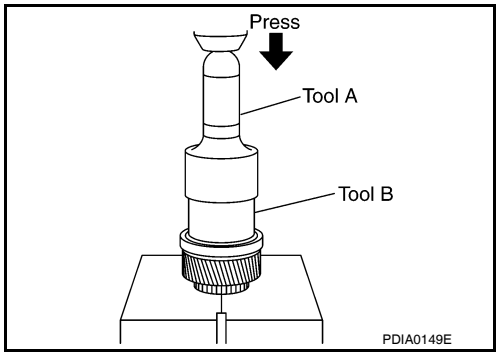

4. Install the new snap ring to the sun gear assembly using suitable tool.
   CAUTION:
   Do not reuse snap ring.

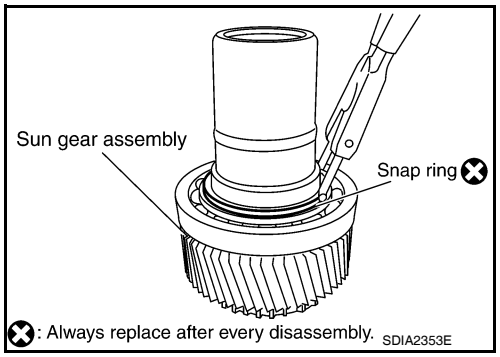

5. Install the sun gear assembly to the planetary carrier assembly.
6. Install the new snap ring to the planetary carrier assembly.
   CAUTION:
   Do not reuse snap ring.

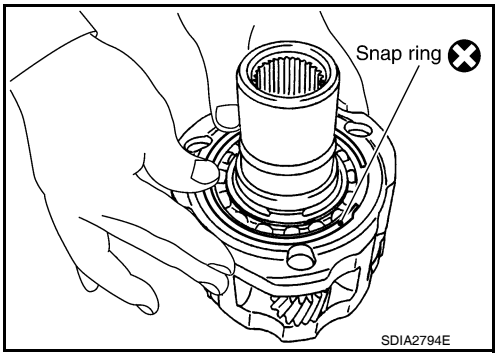

FRONT DRIVE SHAFT

Disassembly and Assembly

INFOID:0000000005258445

DISASSEMBLY

1. Remove the front bearing using Tools.

Tool number **A: ST35300000 (—)**
B: ST30021000 (J-22912-01)

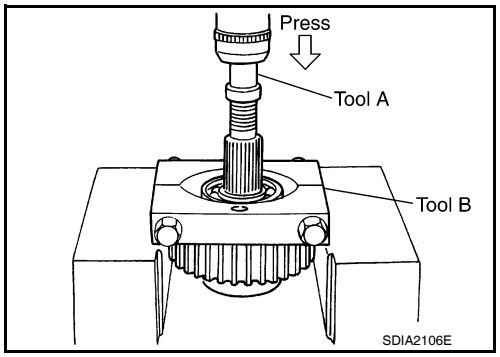

2. Remove the rear bearing using Tools.

Tool number **A: ST33710000 (—)**
B: ST30021000 (J-22912-01)

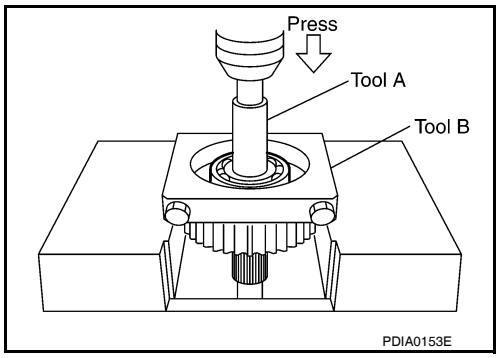

INSPECTION AFTER DISASSEMBLY

Front Drive Shaft

Check the items below. If necessary, replace them with new ones.
- Damage, peeling, dent, uneven wear and bending of the shaft.
- Excessive wear, damage and peeling of the gear.

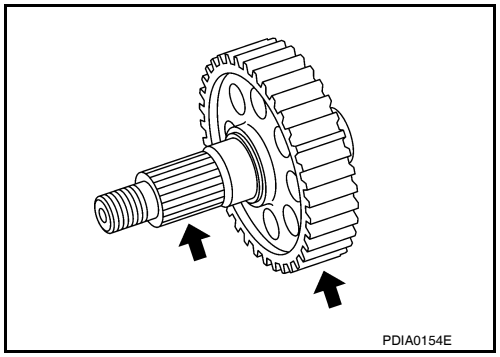

Bearing

Check the bearing for damage and rough rotation. If necessary, replace the bearing with a new one.

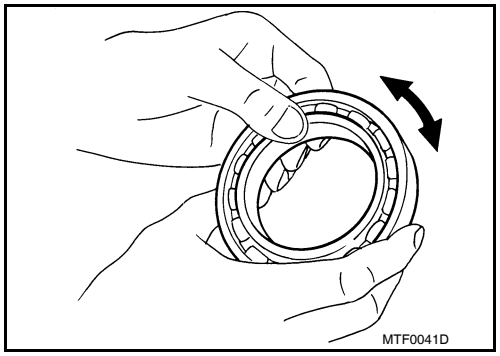

ASSEMBLY

1. Install the rear bearing using Tools.

Tool number **A: KV38100500 (—)**
B: ST30901000 (J-26010-01)

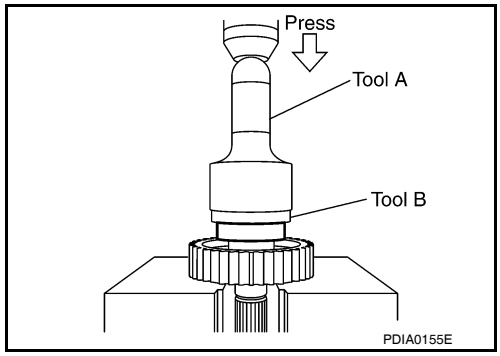

2. Install the front bearing using Tools.

Tool number **A: KV38100500 (—)**
B: ST30901000 (J-26010-01)

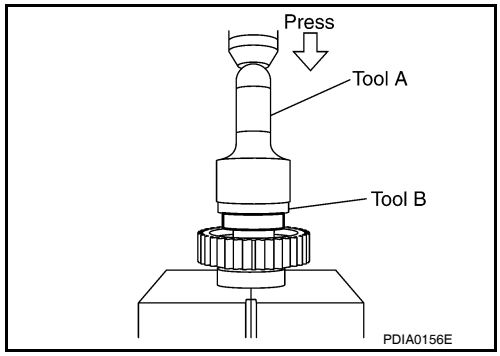

SHIFT CONTROL

Disassembly and Assembly

INFOID:0000000005258446

DISASSEMBLY

1. Remove the snap ring.
2. Remove the retaining pin.
3. Remove the drum cam from the control shift rod.

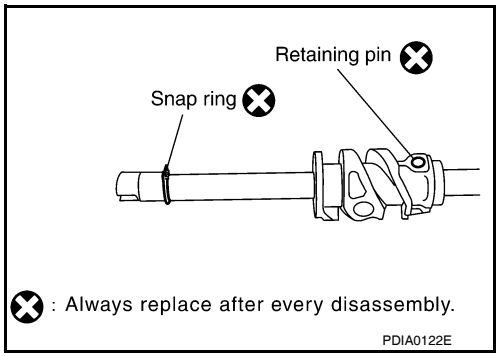

4. Remove the retaining pin from the L-H shift rod.
5. Remove the 2-4 shift bracket.

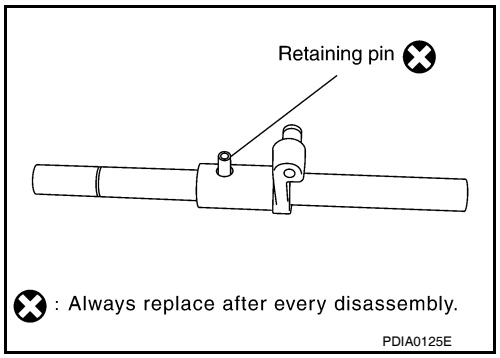

6. Remove the retaining ring from the 2-4 shift fork using suitable tool.
7. Remove the fork guide collar and 2-4 shift fork spring from the 2-4 shift fork.

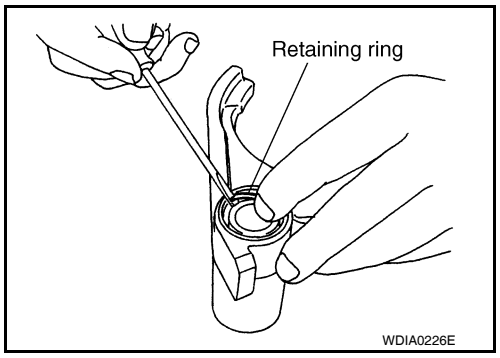

INSPECTION AFTER DISASSEMBLY

Shift Fork

- Measure the clearance between the shift fork and sleeve. If it is out of specification, replace it with a new one.

Standard value

2-4	**Refer to** DLN-309, "Inspection and Adjustment"
L-H	**Refer to** DLN-309, "Inspection and Adjustment"

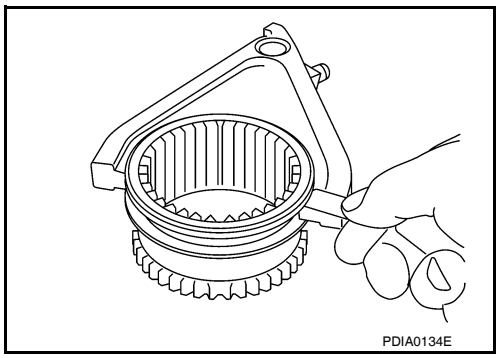

Shift Rod and Fork Components

- Check the working face of the shift rod and fork for wear, partial wear, abrasion, bending and other abnormality. If any is found, replace with a new one.

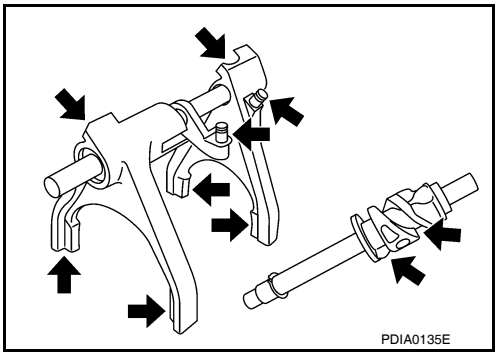

ASSEMBLY

1. Install clevis pin and shift collar to L-H shift fork after assembling them.
   CAUTION:
   Use caution when installing L-H shift fork, clevis pin or shift collar.
2. Install clevis pin and shift collar to 2-4 shift bracket after assembling them.
   CAUTION:
   Use caution when installing 2-4 shift bracket.
3. Install guide fork collar and 2-4 shift fork spring to the 2-4 shift fork, and then secure it with the new retaining ring.
   CAUTION:
   - **Do not reuse retaining ring.**
   - **Be careful with orientation.**

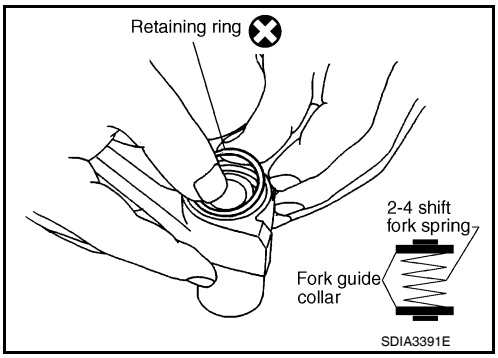

4. Install the 2-4shift bracket to the L-H shift rod.
5. Install the new retaining pin evenly to the L-H shift rod.
   CAUTION:
   Do not reuse retaining pin.

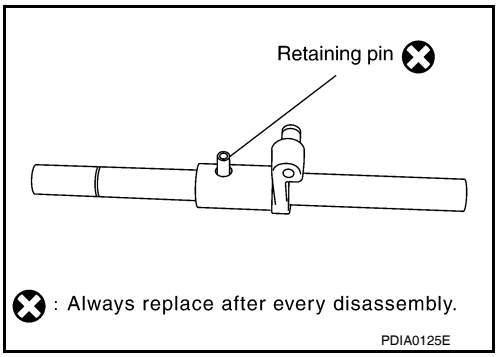

6. Install the drum cam to the control shift rod, and then secure it with the new retaining pin.
   CAUTION:
   Do not reuse retaining pin.
7. Install the new snap ring to the control shift rod.
   CAUTION:
   Do not reuse snap ring.

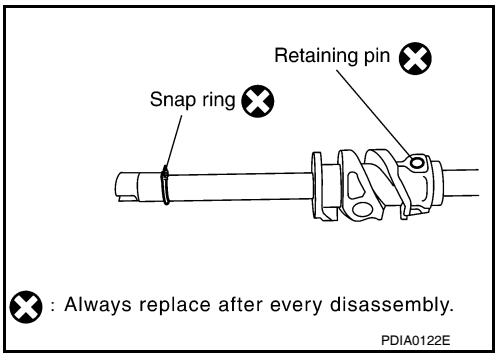

SERVICE DATA AND SPECIFICATIONS (SDS)

SERVICE DATA AND SPECIFICATIONS (SDS)

General Specification

INFOID:0000000005258447

Applied model			VQ40DE
Transfer model			TX15B
Gear ratio	High		1.000
	Low		2.625
Number of teeth	Planetary gear	Sun gear	56
		Internal gear	91
	Front drive sprocket		38
	Front drive shaft		38
Fluid Capacity (Approx)		ℓ (US qt, Imp qt)	2.0 (2 1/8, 1 3/4)

Inspection and Adjustment

INFOID:0000000005258448

PINION GEAR END PLAY

Unit: mm (in)

Item	Standard
Pinion gear end play	0.1 - 0.7 (0.004 - 0.028)

CLEARANCE BETWEEN SHIFT FORK AND SLEEVE

Unit: mm (in)

Item	Standard
2-4 shift fork to 2-4 sleeve	Less than 0.46 (0.018)
L-H shift fork to L-H sleeve	Less than 0.46 (0.018)

PRECAUTION

PRECAUTIONS

Precaution for Supplemental Restraint System (SRS) "AIR BAG" and "SEAT BELT PRE-TENSIONER"

INFOID:0000000005550701

The Supplemental Restraint System such as “AIR BAG” and “SEAT BELT PRE-TENSIONER”, used along with a front seat belt, helps to reduce the risk or severity of injury to the driver and front passenger for certain types of collision. This system includes seat belt switch inputs and dual stage front air bag modules. The SRS system uses the seat belt switches to determine the front air bag deployment, and may only deploy one front air bag, depending on the severity of a collision and whether the front occupants are belted or unbelted.
Information necessary to service the system safely is included in the SR and SB section of this Service Manual.

WARNING:
- **To avoid rendering the SRS inoperative, which could increase the risk of personal injury or death in the event of a collision which would result in air bag inflation, all maintenance must be performed by an authorized NISSAN/INFINITI dealer.**
- **Improper maintenance, including incorrect removal and installation of the SRS, can lead to personal injury caused by unintentional activation of the system. For removal of Spiral Cable and Air Bag Module, see the SR section.**
- **Do not use electrical test equipment on any circuit related to the SRS unless instructed to in this Service Manual. SRS wiring harnesses can be identified by yellow and/or orange harnesses or harness connectors.**

PRECAUTIONS WHEN USING POWER TOOLS (AIR OR ELECTRIC) AND HAMMERS

WARNING:
- **When working near the Airbag Diagnosis Sensor Unit or other Airbag System sensors with the Ignition ON or engine running, DO NOT use air or electric power tools or strike near the sensor(s) with a hammer. Heavy vibration could activate the sensor(s) and deploy the air bag(s), possibly causing serious injury.**
- **When using air or electric power tools or hammers, always switch the Ignition OFF, disconnect the battery, and wait at least 3 minutes before performing any service.**

Precaution Necessary for Steering Wheel Rotation After Battery Disconnect

INFOID:0000000005550702

NOTE:
- This Procedure is applied only to models with Intelligent Key system and NATS (NISSAN ANTI-THEFT SYSTEM).
- Remove and install all control units after disconnecting both battery cables with the ignition knob in the ″LOCK″ position.
- Always use CONSULT-III to perform self-diagnosis as a part of each function inspection after finishing work. If DTC is detected, perform trouble diagnosis according to self-diagnostic results.

For models equipped with the Intelligent Key system and NATS, an electrically controlled steering lock mechanism is adopted on the key cylinder.
For this reason, if the battery is disconnected or if the battery is discharged, the steering wheel will lock and steering wheel rotation will become impossible.
If steering wheel rotation is required when battery power is interrupted, follow the procedure below before starting the repair operation.

OPERATION PROCEDURE

1. Connect both battery cables.
   NOTE:
   Supply power using jumper cables if battery is discharged.
2. Use the Intelligent Key or mechanical key to turn the ignition switch to the ″ACC″ position. At this time, the steering lock will be released.
3. Disconnect both battery cables. The steering lock will remain released and the steering wheel can be rotated.
4. Perform the necessary repair operation.

5. When the repair work is completed, return the ignition switch to the ″LOCK″ position before connecting the battery cables. (At this time, the steering lock mechanism will engage.)
6. Perform a self-diagnosis check of all control units using CONSULT-III.

PREPARATION

PREPARATION

Commercial Service Tool

INFOID:0000000005258449

Tool name	Description
Power tool 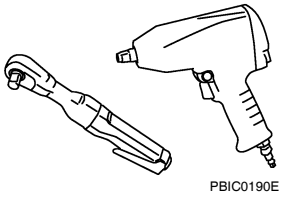 PBIC0190E	Loosening bolts and nuts

FUNCTION DIAGNOSIS

NOISE, VIBRATION, AND HARSHNESS (NVH) TROUBLESHOOTING

NVH Troubleshooting Chart

INFOID:0000000005258450

Use the chart below to help you find the cause of the symptom. If necessary, repair or replace these parts.

Reference page		DLN-314	DLN-314	DLN-314	DLN-346, "NVH Troubleshooting Chart" DLN-381, "NVH Troubleshooting Chart" DLN-414, "NVH Troubleshooting Chart" DLN-452, "NVH Troubleshooting Chart"	FAX-5, "NVH Troubleshooting Chart" RAX-5, "NVH Troubleshooting Chart"	FSU-5, "NVH Troubleshooting Chart" RSU-5, "NVH Troubleshooting Chart"	WT-46, "NVH Troubleshooting Chart"	WT-46, "NVH Troubleshooting Chart"	DLN-313, "NVH Troubleshooting Chart" DLN-323, "NVH Troubleshooting Chart" DLN-334, "NVH Troubleshooting Chart"	BR-6, "NVH Troubleshooting Chart"	ST-12, "NVH Troubleshooting Chart"
Possible cause and suspected parts		Uneven rotation torque	Rotation imbalance	Excessive run out	Differential	Axle	Suspension	Tires	Road wheel	Drive shaft	Brakes	Steering
Symptom	Noise	×	×	×	×	×	×	×	×	×	×	×
	Shake					×	×	×	×	×	×	×
	Vibration	×	×	×		×	×	×		×		×

×: Applicable

ON-VEHICLE REPAIR

PROPELLER SHAFT

On-Vehicle Service

INFOID:0000000005258451

APPEARANCE AND NOISE INSPECTION

- Check the propeller shaft tube surface for dents or cracks. If damaged, replace the propeller shaft assembly.
- Check the bearings for noise and damage. Repair or replace the bearings as necessary.

PROPELLER SHAFT VIBRATION

If a vibration is present at high speed, inspect the propeller shaft runout first.

1. Measure the runout of the propeller shaft tube at several points by rotating the final drive companion flange with your hands. Refer to DLN-319, "General Specification".
2. If the runout exceeds specifications, disconnect the propeller shaft at the final drive companion flange; then rotate the companion flange 90°, 180° and 270° and reconnect the propeller shaft.

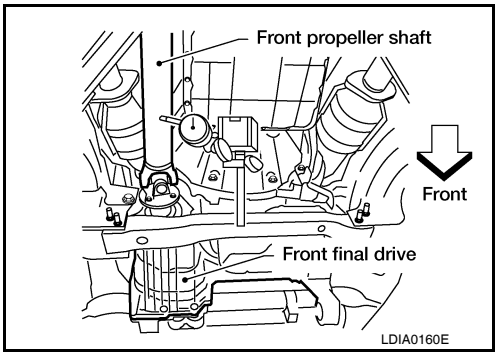

3. Check the runout again. If the runout still exceeds specifications, replace the propeller shaft assembly.
4. After installation, check for vibration by driving the vehicle.

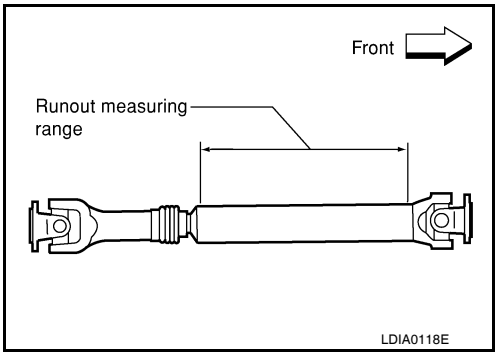

REMOVAL AND INSTALLATION

PROPELLER SHAFT

Removal and Installation

INFOID:0000000005258452

COMPONENTS

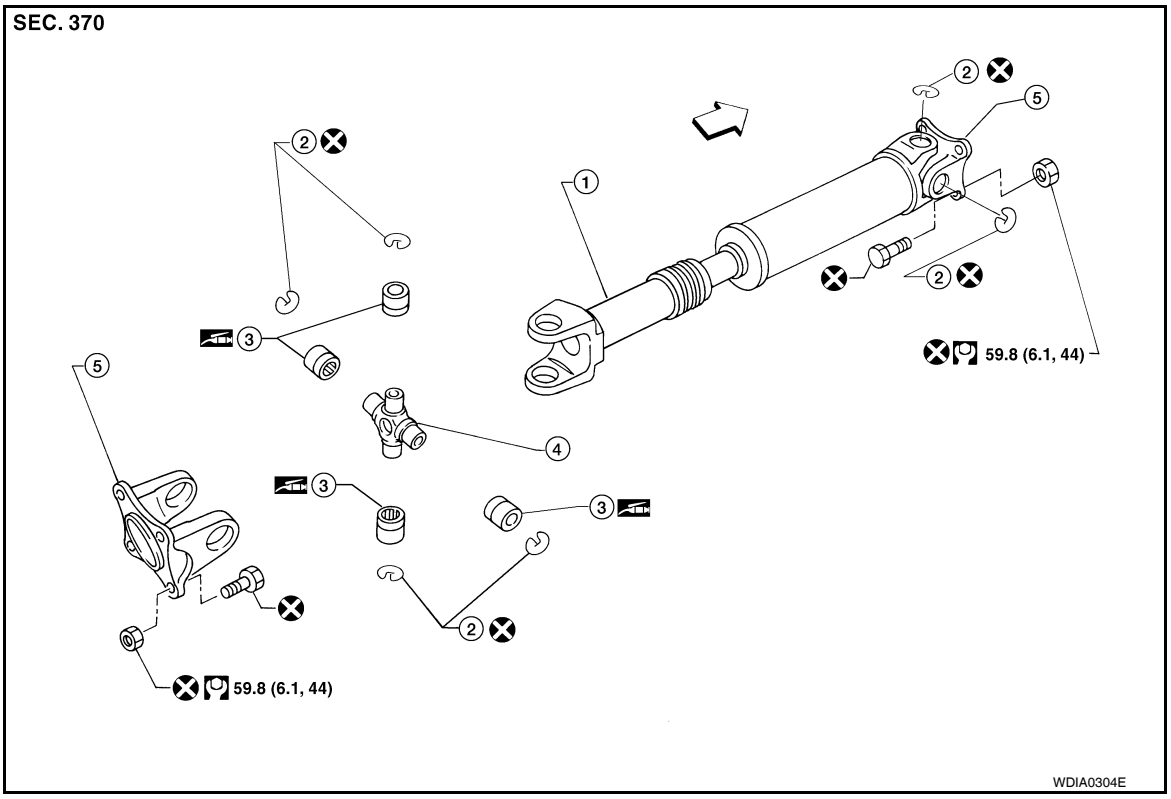

1.	Propeller shaft tube	2.	Snap ring	3.	Journal bearing
4.	Journal	5.	Flange yoke	⇦	Front

REMOVAL

1. Put matching marks on the front propeller shaft flange yoke and the front final drive companion flange as shown.
   CAUTION:
   For matching marks, use paint. Never damage the flange yoke and companion flange of the front final drive.
2. Put matching marks on the front propeller shaft flange yoke and the transfer companion flange.
   CAUTION:
   For matching marks, use paint. Never damage the flange yoke and companion flange of the front final drive.
3. Remove the bolts and then remove the front propeller shaft from the front final drive and transfer.

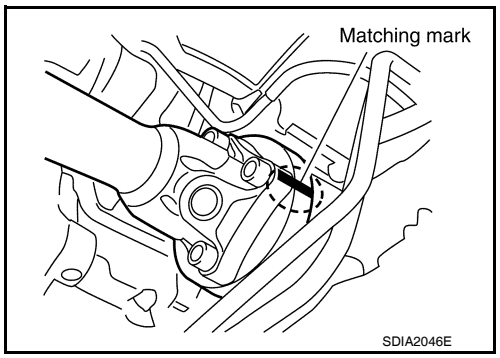

INSPECTION

- Inspect the propeller shaft runout. If runout exceeds the limit, replace the propeller shaft assembly. Refer to DLN-319, "General Specification".

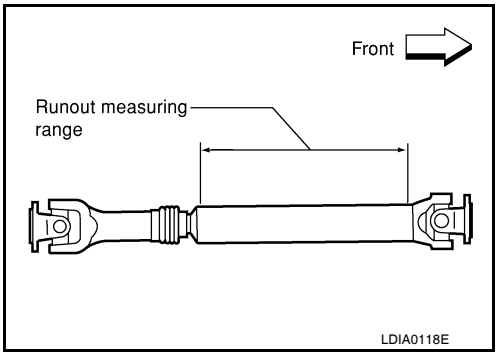

- While holding the flange yoke on one side, check axial play of the joint as shown. If the journal axial play exceeds the specification, repair or replace the journal parts. Refer to DLN-319, "General Specification".
- Check the propeller shaft tube surface for dents or cracks. If damage is detected, replace the propeller shaft assembly.

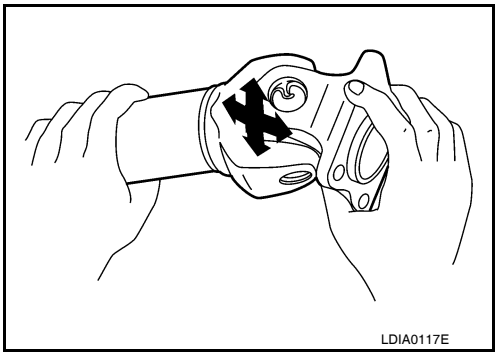

INSTALLATION

Installation is in the reverse order of removal.

- After installation, check for vibration by driving the vehicle. Refer to DLN-334, "NVH Troubleshooting Chart".

CAUTION:

Do not reuse the bolts and nuts. Always install new ones.

DISASSEMBLY AND ASSEMBLY

PROPELLER SHAFT

Disassembly and Assembly

INFOID:0000000005258453

DISASSEMBLY

Journal

1. Put matching marks on the front propeller shaft and flange yoke as shown.
   CAUTION:
   For matching marks, use paint. Never damage the front propeller shaft or flange yoke.

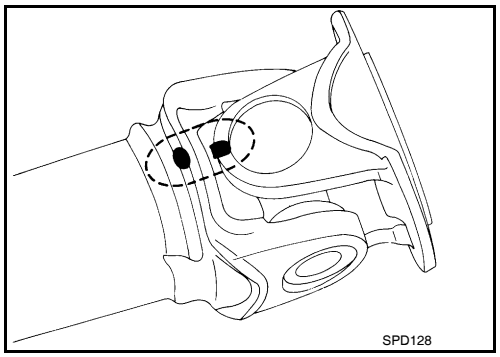

2. Remove the snap rings.

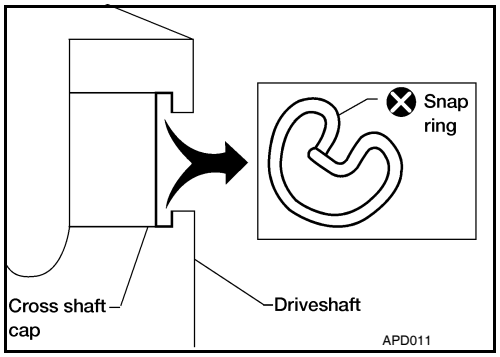

3. Push out and remove the journal bearings by lightly tapping the flange yoke with a hammer, taking care not to damage the journal or flange yoke hole.
   NOTE:
   Put marks on the disassembled parts so that they can be reinstalled in their original positions from which they were removed.

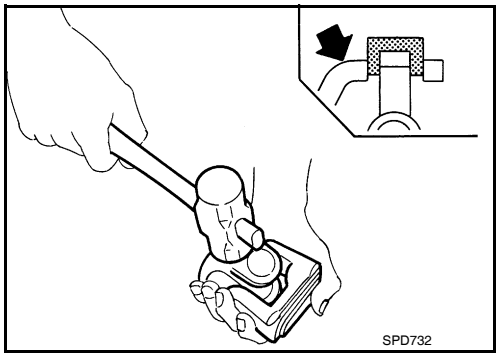

4. Push out and remove the remaining journal bearings at the opposite side by lightly tapping the flange yoke with a hammer, taking care not to damage the journal or flange yoke hole.
   NOTE:
   Put marks on the disassembled parts so that they can be reinstalled in their original positions from which they were removed.

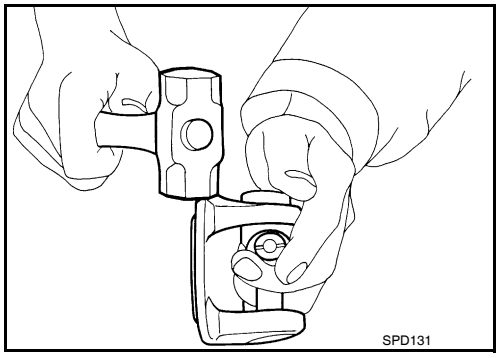

ASSEMBLY

Journal

1. Assemble the journal bearings. Apply multipurpose grease on the bearing inner surface.
   NOTE:
   During assembly, use caution so that the needle bearings do not fall down.

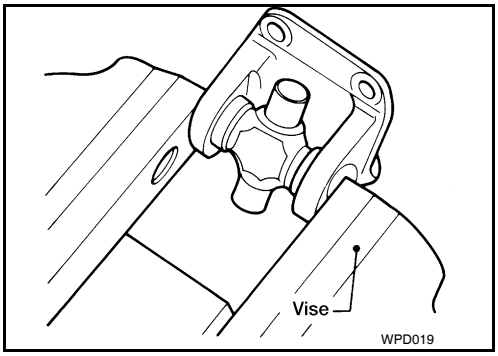

2. Select new snap rings that will provide the specified play in an axial direction of the journal, and install them. Refer to DLN-319.
   CAUTION:
   Do not reuse snap rings
   NOTE:
   Select snap rings with a difference in thickness at both sides within 0.02 mm (0.0008 in).

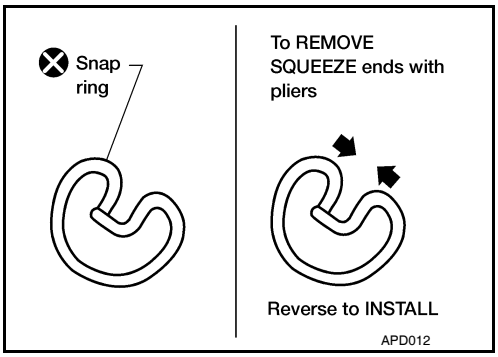

3. Adjust the thrust clearance between the bearing and snap ring to zero by tapping the yoke.

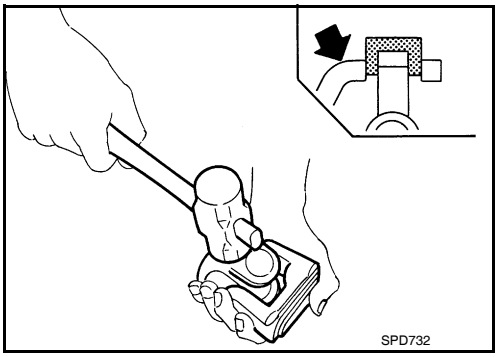

4. Make sure that the journal moves smoothly and is below the joint flex effort specification. Refer to DLN-319, "General Specification".

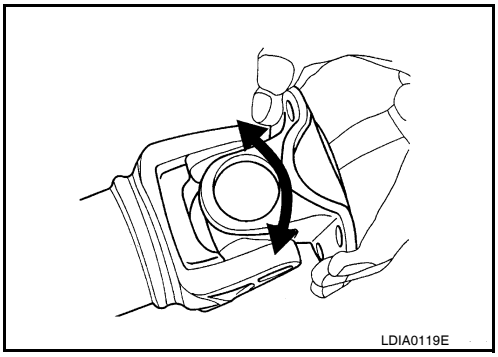

SERVICE DATA AND SPECIFICATIONS (SDS)

SERVICE DATA AND SPECIFICATIONS (SDS)

General Specification

INFOID:0000000005258454

Unit: mm (in)

Applied model	4WD	
	VQ40DE	VK56DE
	A/T	
Propeller shaft model	2F1310	
Number of joints	2	
Coupling method with front final drive	Flange type	
Coupling method with transfer	Flange type	
Shaft length (Spider to spider)	696 ± 1.5 (27.40 ± 0.06)	
Shaft outer diameter	63.5 + 0.00 / - 0.13 (2.5 in + 0.00 / - 0.01)	

Propeller Shaft Runout

Unit: mm (in)

Item	Limit
Propeller shaft runout	0.6 mm (0.024 in)

Propeller Shaft Joint Flex Effort

N·m (kg-m, in-lb)

Item	Limit
Propeller shaft joint flex effort	2.26 (0.23 , 20) or less

Journal Axial Play

Unit: mm (in)

Item	Limit
Journal axial play	0.02 mm (0.0008 in) or less

Snap Ring

INFOID:0000000005258455

Model 2F1310 (4WD)

Unit: mm (in)

Thickness	Color	Part Number*
1.99 (0.0783)	White	37146-C9400
2.02 (0.0795)	Yellow	37147-C9400
2.05 (0.0807)	Red	37148-C9400
2.08 (0.0819)	Green	37149-C9400
2.11 (0.0831)	Blue	37150-C9400
2.14 (0.0843)	Light brown	37151-C9400
2.17 (0.0854)	Black	37152-C9400
2.20 (0.0866)	No paint	37153-C9400

*Always check with the Parts Department for the latest parts information.

PRECAUTION

PRECAUTIONS

Precaution for Supplemental Restraint System (SRS) "AIR BAG" and "SEAT BELT PRE-TENSIONER"

INFOID:0000000005550718

The Supplemental Restraint System such as “AIR BAG” and “SEAT BELT PRE-TENSIONER”, used along with a front seat belt, helps to reduce the risk or severity of injury to the driver and front passenger for certain types of collision. This system includes seat belt switch inputs and dual stage front air bag modules. The SRS system uses the seat belt switches to determine the front air bag deployment, and may only deploy one front air bag, depending on the severity of a collision and whether the front occupants are belted or unbelted.
Information necessary to service the system safely is included in the SR and SB section of this Service Manual.

WARNING:
- **To avoid rendering the SRS inoperative, which could increase the risk of personal injury or death in the event of a collision which would result in air bag inflation, all maintenance must be performed by an authorized NISSAN/INFINITI dealer.**
- **Improper maintenance, including incorrect removal and installation of the SRS, can lead to personal injury caused by unintentional activation of the system. For removal of Spiral Cable and Air Bag Module, see the SR section.**
- **Do not use electrical test equipment on any circuit related to the SRS unless instructed to in this Service Manual. SRS wiring harnesses can be identified by yellow and/or orange harnesses or harness connectors.**

PRECAUTIONS WHEN USING POWER TOOLS (AIR OR ELECTRIC) AND HAMMERS

WARNING:
- **When working near the Airbag Diagnosis Sensor Unit or other Airbag System sensors with the Ignition ON or engine running, DO NOT use air or electric power tools or strike near the sensor(s) with a hammer. Heavy vibration could activate the sensor(s) and deploy the air bag(s), possibly causing serious injury.**
- **When using air or electric power tools or hammers, always switch the Ignition OFF, disconnect the battery, and wait at least 3 minutes before performing any service.**

Precaution Necessary for Steering Wheel Rotation After Battery Disconnect

INFOID:0000000005550719

NOTE:
- This Procedure is applied only to models with Intelligent Key system and NATS (NISSAN ANTI-THEFT SYSTEM).
- Remove and install all control units after disconnecting both battery cables with the ignition knob in the ″LOCK″ position.
- Always use CONSULT-III to perform self-diagnosis as a part of each function inspection after finishing work. If DTC is detected, perform trouble diagnosis according to self-diagnostic results.

For models equipped with the Intelligent Key system and NATS, an electrically controlled steering lock mechanism is adopted on the key cylinder.
For this reason, if the battery is disconnected or if the battery is discharged, the steering wheel will lock and steering wheel rotation will become impossible.
If steering wheel rotation is required when battery power is interrupted, follow the procedure below before starting the repair operation.

OPERATION PROCEDURE

1. Connect both battery cables.
   NOTE:
   Supply power using jumper cables if battery is discharged.
2. Use the Intelligent Key or mechanical key to turn the ignition switch to the ″ACC″ position. At this time, the steering lock will be released.
3. Disconnect both battery cables. The steering lock will remain released and the steering wheel can be rotated.
4. Perform the necessary repair operation.

5. When the repair work is completed, return the ignition switch to the ″LOCK″ position before connecting the battery cables. (At this time, the steering lock mechanism will engage.)
6. Perform a self-diagnosis check of all control units using CONSULT-III.

PREPARATION

PREPARATION

Commercial Service Tool

INFOID:0000000005258456

Tool name	Description
Power tool 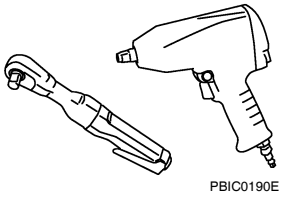 PBIC0190E	Loosening bolts and nuts

FUNCTION DIAGNOSIS

NOISE, VIBRATION, AND HARSHNESS (NVH) TROUBLESHOOTING

NVH Troubleshooting Chart

INFOID:0000000005258457

Use the chart below to help you find the cause of the symptom. If necessary, repair or replace these parts.

Reference page		DLN-324	DLN-324	DLN-329	DLN-346, "NVH Troubleshooting Chart" DLN-381, "NVH Troubleshooting Chart" DLN-414, "NVH Troubleshooting Chart" FAX-5, "NVH Troubleshooting Chart"	FAX-5, "NVH Troubleshooting Chart" RAX-5, "NVH Troubleshooting Chart"	FSU-5, "NVH Troubleshooting Chart" RSU-5, "NVH Troubleshooting Chart"	WT-46, "NVH Troubleshooting Chart"	WT-46, "NVH Troubleshooting Chart"	DLN-313, "NVH Troubleshooting Chart" DLN-323, "NVH Troubleshooting Chart" DLN-334, "NVH Troubleshooting Chart"	BR-6, "NVH Troubleshooting Chart"	ST-12, "NVH Troubleshooting Chart"
Possible cause and suspected parts		Uneven rotation torque	Rotation imbalance	Excessive run out	Differential	Axle	Suspension	Tires	Road wheel	Drive shaft	Brakes	Steering
Symptom	Noise	×	×	×	×	×	×	×	×	×	×	×
	Shake					×	×	×	×	×	×	×
	Vibration	×	×	×		×	×	×		×		×

×: Applicable

ON-VEHICLE REPAIR

PROPELLER SHAFT

On-Vehicle Service

INFOID:0000000005258458

APPEARANCE AND NOISE INSPECTION

- Check the propeller shaft tube surface for dents or cracks. If damaged, replace the propeller shaft assembly.
- Check the bearings for noise and damage. Repair or replace the bearings as necessary.

PROPELLER SHAFT VIBRATION

If a vibration is present at high speed, inspect the propeller shaft runout first.

1. Measure the runout of the propeller shaft tube at several points by rotating the final drive companion flange with your hands. Refer to DLN-329, "General Specification".
2. If the runout exceeds specifications, disconnect the propeller shaft at the final drive companion flange; then rotate the companion flange 90°, 180° and 270° and reconnect the propeller shaft.

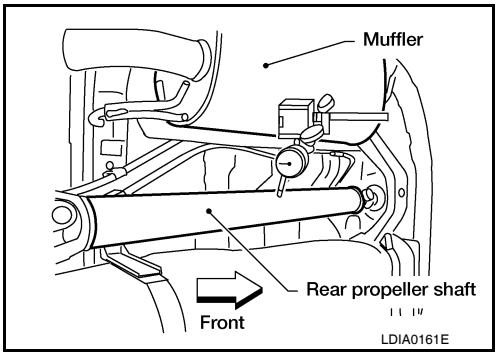

3. Check the runout again. If the runout still exceeds specifications, replace the propeller shaft assembly.
4. After installation, check for vibration by driving vehicle.

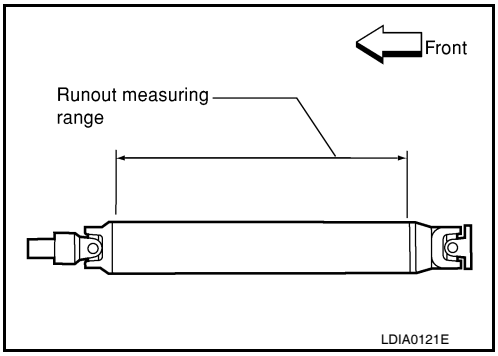

REMOVAL AND INSTALLATION

PROPELLER SHAFT

Removal and Installation

INFOID:0000000005258459

COMPONENTS

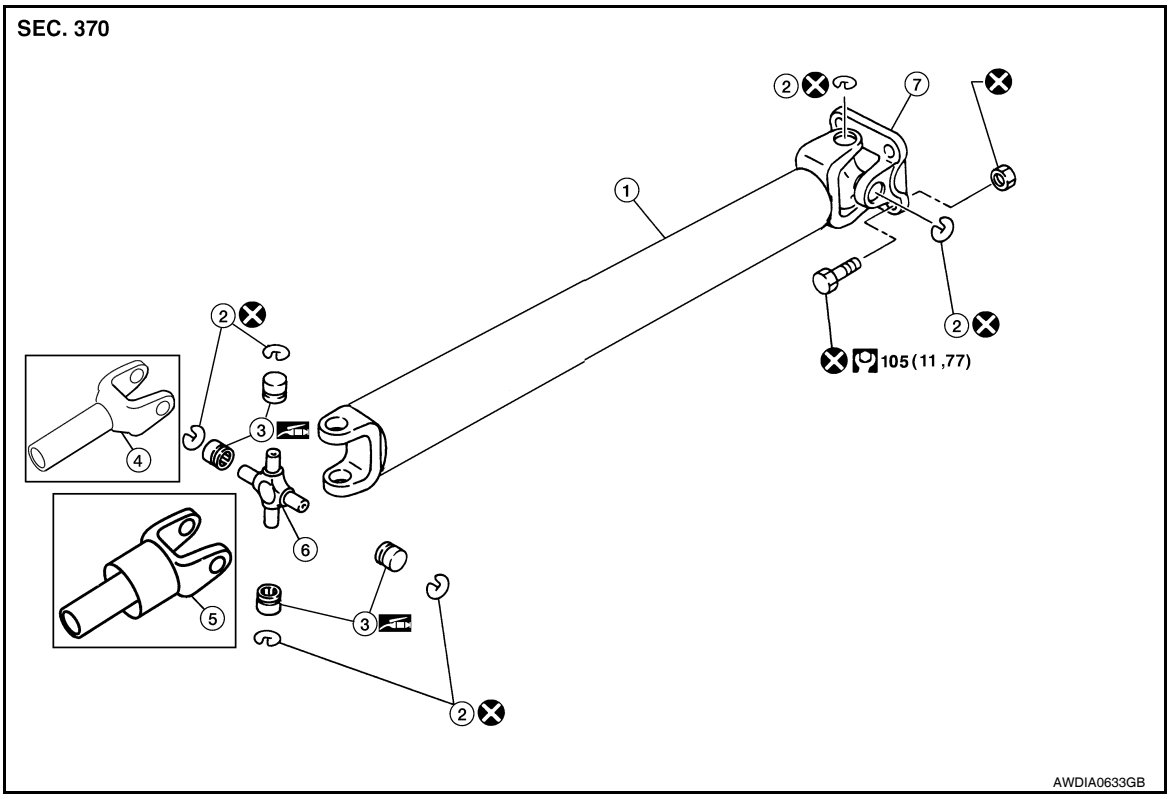

1.	Propeller shaft tube	2.	Snap ring	3.	Journal bearing
4.	Sleeve yoke (4WD)	5.	Sleeve yoke (2WD)	6.	Journal
7.	Flange yoke	⇦	Front		

REMOVAL

1. Move the A/T select lever to the N position and release the parking brake.
2. Put matching marks on the rear propeller shaft flange yoke and the rear final drive companion flange as shown.
   CAUTION:
   For matching marks, use paint. Never damage the rear propeller shaft flange yoke or the companion flange.
3. Remove the bolts, then remove the propeller shaft from the rear final drive and A/T or transfer.

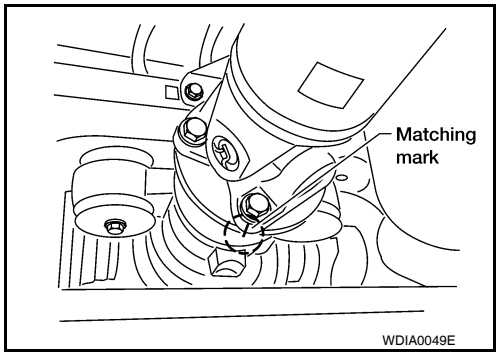

INSPECTION

- Inspect the propeller shaft runout. If runout exceeds the limit, replace the propeller shaft assembly. Refer to DLN-329, "General Specification".

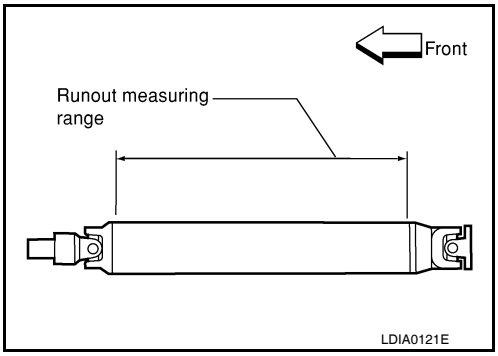

- While holding the flange yoke on one side, check axial play of the joint as shown. If the journal axial play exceeds the specification, repair or replace the journal parts. Refer to DLN-329, "General Specification".
- Check the propeller shaft tube for dents or cracks. If damage is detected, replace the propeller shaft assembly.

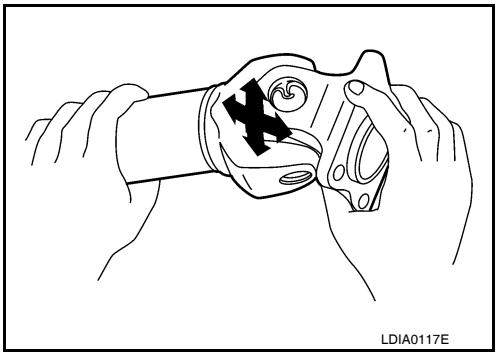

INSTALLATION

Installation is in the reverse order of removal.

- After installation, check for vibration by driving the vehicle. Refer to DLN-334, "NVH Troubleshooting Chart".
- If propeller shaft assembly or final drive assembly has been replaced,connect them as follows:

- Face companion flange mark (A) of the final drive (1) upward. With the mark (A) faced upward, couple the propeller shaft and the final drive so that the matching mark (B) of the propeller shaft (2) can be positioned as closest as possible with the matching mark (C) of the final drive companion flange.
- Tighte propeller shaft and final drive bolts and nuts to specifications. Refer to DLN-325, "Removal and Installation".

CAUTION:

Do not reuse the bolts and nuts. Always install new ones.

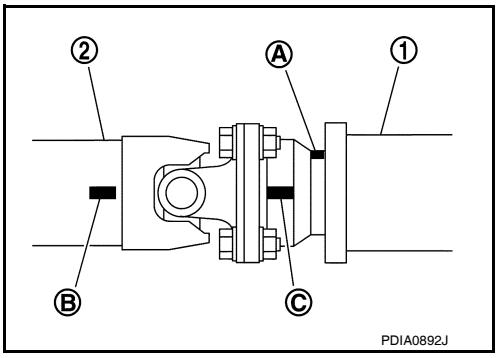

DISASSEMBLY AND ASSEMBLY

PROPELLER SHAFT

Disassembly and Assembly

INFOID:0000000005258460

DISASSEMBLY

Journal

1. Put matching marks on the rear propeller shaft and flange yoke as shown.
   CAUTION:
   For matching marks use paint. Never damage the rear propeller shaft or flange yoke.

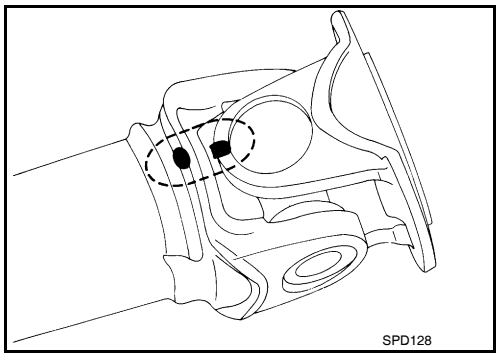

2. Remove the snap rings.

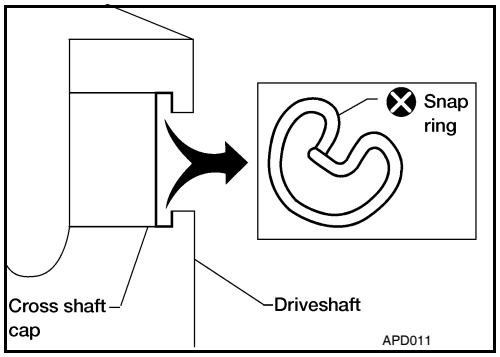

3. Push out and remove the journal bearings by lightly tapping the flange yoke with a hammer, taking care not to damage the journal or flange yoke hole.
   NOTE:
   Put marks on the disassembled parts so that they can be reinstalled in their original positions from which they were removed.

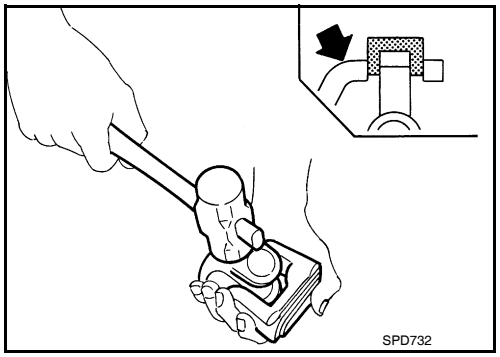

4. Push out and remove the remaining journal bearings at the opposite side by lightly tapping the flange yoke with a hammer, taking care not to damage the journal or flange yoke hole.
   NOTE:
   Put marks on the disassembled parts so that they can be reinstalled in their original positions from which they were removed.

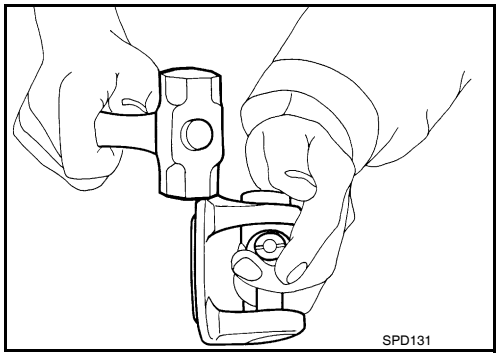

ASSEMBLY

Journal

1. Assemble the journal bearings. Apply multipurpose grease on the bearing inner surface.
   NOTE:
   During assembly, use caution so that the needle bearings do not fall down.

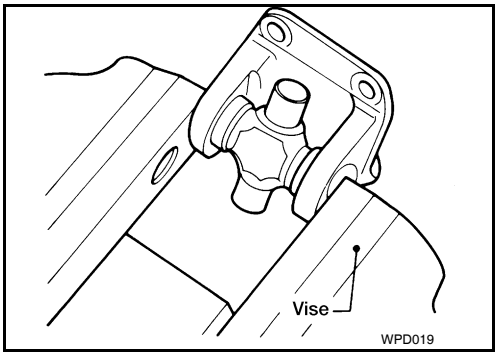

2. Select new snap rings that will provide the specified play in an axial direction of the journal, and install them. Refer to DLN-330, "Snap Ring".
   CAUTION:
   Do not reuse snap rings
   NOTE:
   Select snap rings with a difference in thickness at both sides within 0.02 mm (0.0008 in).

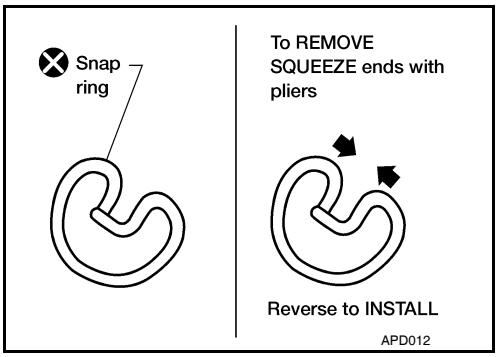

3. Adjust the thrust clearance between the bearing and snap ring to zero by tapping the yoke.

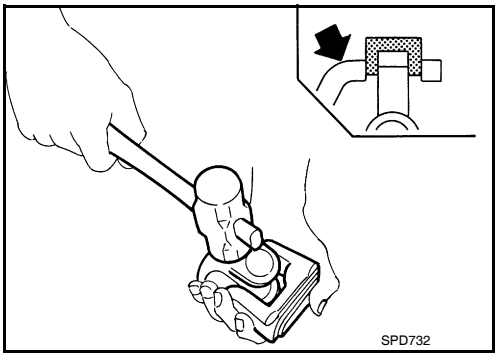

4. Make sure that the journal moves smoothly and is below the propeller joint flex effort specification. Refer to DLN-329, "General Specification".

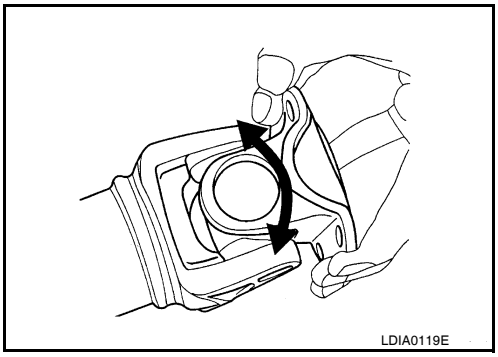

SERVICE DATA AND SPECIFICATIONS (SDS)

SERVICE DATA AND SPECIFICATIONS (SDS)

General Specification

INFOID:0000000005258461

2WD models

Unit: mm (in)

Applied model	2WD
	VQ40DE
	A/T
Propeller shaft model	2S1330 (aluminum tube)
Number of joints	2
Coupling method with rear final drive	Flange type
Coupling method with transmission	Sleeve type
Shaft length (Spider to spider)	1422.2 ± 1.5 (55.99 ± 0.06)
Shaft outer diameter	127.6 + 0.22 / - 0.29 (5.02 ± 0.01)

Propeller Shaft Runout

Item	Limit
Propeller shaft runout	1.02 mm (0.0402 in) or less

Propeller Shaft Joint Flex Effort

Item	Limit
Propeller shaft joint flex effort	2.26 N·m (0.23 kg-m, 20 in-lb) or less

Journal Axial Play

Item	Limit
Journal axial play	0.02 mm (0.0008 in) or less

4WD models

Unit: mm (in)

Applied model	4WD	
	Part time	Full time
	VQ40DE	
	A/T	
Propeller shaft model	2S1330 (steel tube)	
Number of joints	2	
Coupling method with front final drive	Flange type	
Coupling method with transfer	Sleeve type	
Shaft length (Spider to spider)	952.8 ± 1.5 (37.51± 0.06)	917.8 ± 1.5 (36.13 ± 0.06)
Shaft outer diameter	76.2 + 0.00 / - 0.13 (3.00 ± 0.01)	

Propeller Shaft Runout

Item	Limit
Propeller shaft runout	0.06 mm (0.024 in) or less

Propeller Shaft Joint Flex Effort

Item	Limit
Propeller shaft joint flex effort	2.26 N·m (0.23 kg-m, 20 in-lb) or less

Journal Axial Play

Item	Limit
Journal axial play	0.02 mm (0.0008 in) or less

Snap Ring

INFOID:0000000005258462

Model 2S1330 (4WD)

Unit: mm (in)

Thickness	Color	Part Number*
1.99 (0.0783)	White	37146-C9400
2.02 (0.0795)	Yellow	37147-C9400
2.05 (0.0807)	Red	37148-C9400
2.08 (0.0819)	Green	37149-C9400
2.11 (0.0831)	Blue	37150-C9400
2.14 (0.0843)	Light brown	37151-C9400
2.17 (0.0854)	Black	37152-C9400
2.20 (0.0866)	No paint	37153-C9400

*Always check with the Parts Department for the latest parts information.

Model 2S1330 (2WD)

Unit: mm (in)

Thickness	Color	Part Number*
1.600 - 1.638 (0.0630 - 0.0645)	Black	37146-EA500
1.549 - 1.588 (0.0610 - 0.0625)	Black	37147-EA500
1.524 - 1.562 (0.0600 - 0.0615)	Black	37148-EA500
1.499 - 1.537 (0.0590 - 0.0605)	Black	37149-EA500

*Always check with the Parts Department for the latest parts information.

PRECAUTION

PRECAUTIONS

Precaution for Supplemental Restraint System (SRS) "AIR BAG" and "SEAT BELT PRE-TENSIONER"

INFOID:0000000005550720

The Supplemental Restraint System such as “AIR BAG” and “SEAT BELT PRE-TENSIONER”, used along with a front seat belt, helps to reduce the risk or severity of injury to the driver and front passenger for certain types of collision. This system includes seat belt switch inputs and dual stage front air bag modules. The SRS system uses the seat belt switches to determine the front air bag deployment, and may only deploy one front air bag, depending on the severity of a collision and whether the front occupants are belted or unbelted.
Information necessary to service the system safely is included in the SR and SB section of this Service Manual.

WARNING:
- **To avoid rendering the SRS inoperative, which could increase the risk of personal injury or death in the event of a collision which would result in air bag inflation, all maintenance must be performed by an authorized NISSAN/INFINITI dealer.**
- **Improper maintenance, including incorrect removal and installation of the SRS, can lead to personal injury caused by unintentional activation of the system. For removal of Spiral Cable and Air Bag Module, see the SR section.**
- **Do not use electrical test equipment on any circuit related to the SRS unless instructed to in this Service Manual. SRS wiring harnesses can be identified by yellow and/or orange harnesses or harness connectors.**

PRECAUTIONS WHEN USING POWER TOOLS (AIR OR ELECTRIC) AND HAMMERS

WARNING:
- **When working near the Airbag Diagnosis Sensor Unit or other Airbag System sensors with the Ignition ON or engine running, DO NOT use air or electric power tools or strike near the sensor(s) with a hammer. Heavy vibration could activate the sensor(s) and deploy the air bag(s), possibly causing serious injury.**
- **When using air or electric power tools or hammers, always switch the Ignition OFF, disconnect the battery, and wait at least 3 minutes before performing any service.**

Precaution Necessary for Steering Wheel Rotation After Battery Disconnect

INFOID:0000000005550721

NOTE:
- This Procedure is applied only to models with Intelligent Key system and NATS (NISSAN ANTI-THEFT SYSTEM).
- Remove and install all control units after disconnecting both battery cables with the ignition knob in the ″LOCK″ position.
- Always use CONSULT-III to perform self-diagnosis as a part of each function inspection after finishing work. If DTC is detected, perform trouble diagnosis according to self-diagnostic results.

For models equipped with the Intelligent Key system and NATS, an electrically controlled steering lock mechanism is adopted on the key cylinder.
For this reason, if the battery is disconnected or if the battery is discharged, the steering wheel will lock and steering wheel rotation will become impossible.
If steering wheel rotation is required when battery power is interrupted, follow the procedure below before starting the repair operation.

OPERATION PROCEDURE

1. Connect both battery cables.
   NOTE:
   Supply power using jumper cables if battery is discharged.
2. Use the Intelligent Key or mechanical key to turn the ignition switch to the ″ACC″ position. At this time, the steering lock will be released.
3. Disconnect both battery cables. The steering lock will remain released and the steering wheel can be rotated.
4. Perform the necessary repair operation.

5. When the repair work is completed, return the ignition switch to the ″LOCK″ position before connecting the battery cables. (At this time, the steering lock mechanism will engage.)
6. Perform a self-diagnosis check of all control units using CONSULT-III.

PREPARATION

PREPARATION

Commercial Service Tool

INFOID:0000000005258463

Tool name	Description
Power tool 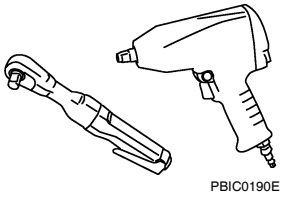 PBIC0190E	Loosening bolts and nuts

FUNCTION DIAGNOSIS

NOISE, VIBRATION, AND HARSHNESS (NVH) TROUBLESHOOTING

NVH Troubleshooting Chart

INFOID:0000000005258464

Use the chart below to help you find the cause of the symptom. If necessary, repair or replace these parts.

Reference page		DLN-335	DLN-335	DLN-340	DLN-346, "NVH Troubleshooting Chart" DLN-381, "NVH Troubleshooting Chart" DLN-414, "NVH Troubleshooting Chart" DLN-452, "NVH Troubleshooting Chart"	FAX-5, "NVH Troubleshooting Chart" RAX-5, "NVH Troubleshooting Chart"	FSU-5, "NVH Troubleshooting Chart" RSU-5, "NVH Troubleshooting Chart"	WT-46, "NVH Troubleshooting Chart"	WT-46, "NVH Troubleshooting Chart"	DLN-313, "NVH Troubleshooting Chart" DLN-323, "NVH Troubleshooting Chart" DLN-334, "NVH Troubleshooting Chart"	BR-6, "NVH Troubleshooting Chart"	ST-12, "NVH Troubleshooting Chart"
Possible cause and suspected parts		Uneven rotation torque	Rotation imbalance	Excessive run out	Differential	Axle	Suspension	Tires	Road wheel	Drive shaft	Brakes	Steering
Symptom	Noise	×	×	×	×	×	×	×	×	×	×	×
	Shake					×	×	×	×	×	×	×
	Vibration	×	×	×		×	×	×		×		×

×: Applicable

ON-VEHICLE REPAIR

PROPELLER SHAFT

On-Vehicle Service

INFOID:0000000005258465

APPEARANCE AND NOISE INSPECTION

- Check the propeller shaft tube surface for dents or cracks. If damaged, replace the propeller shaft assembly.
- Check the bearings for noise and damage. Repair or replace the bearings as necessary.

PROPELLER SHAFT VIBRATION

If a vibration is present at high speed, inspect the propeller shaft runout first.

1. Measure the runout of the propeller shaft tube at several points by rotating the final drive companion flange with your hands. Refr to DLN-340, "General Specification".
2. If the runout exceeds specifications, disconnect the propeller shaft at the final drive companion flange; then rotate the companion flange 90°, 180° and 270° and reconnect the propeller shaft.

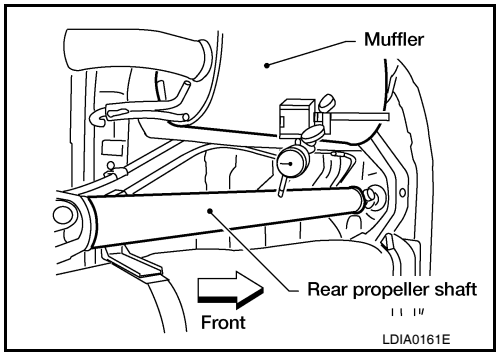

3. Check the runout again. If the runout still exceeds specifications, replace the propeller shaft assembly.
4. After installation, check for vibration by driving vehicle.

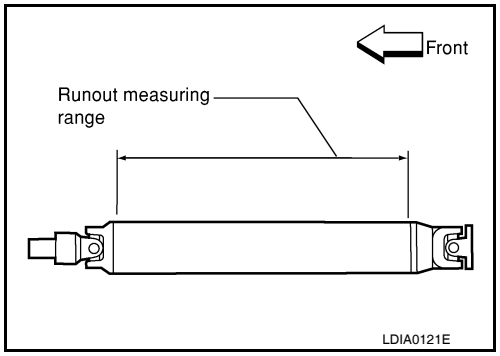

REMOVAL AND INSTALLATION

PROPELLER SHAFT

Removal and Installation

INFOID:0000000005258466

COMPONENTS

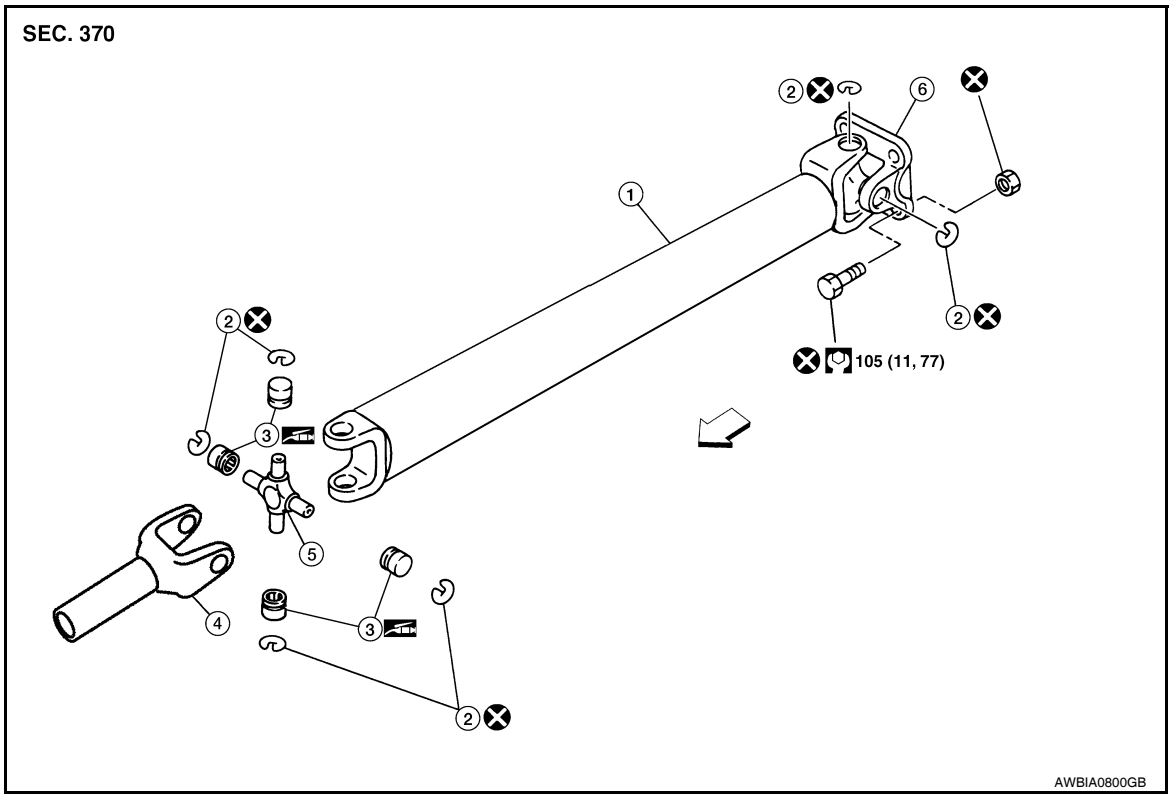

1. Propeller shaft tube
2. Snap ring
3. Journal bearing
4. Sleeve yoke
5. Journal
6. Flange yoke

⇦ Front

REMOVAL

1. Move the A/T select lever to the N position and release the parking brake.
2. Put matching marks on the rear propeller shaft flange yoke and the rear final drive companion flange as shown.
   CAUTION:
   For matching marks, use paint. Never damage the rear propeller shaft flange yoke or the companion flange.
3. Remove the bolts, then remove the propeller shaft from the rear final drive and A/T or transfer.

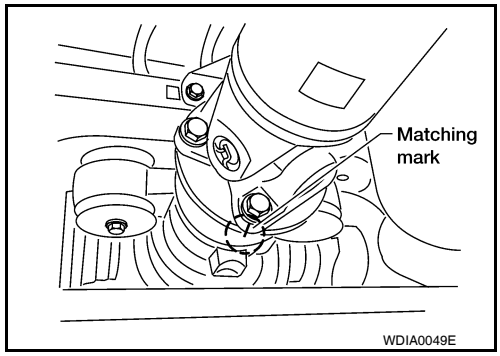

INSPECTION

- Inspect the propeller shaft runout. If runout exceeds the limit, replace the propeller shaft assembly. Refer to DLN-340, "General Specification".

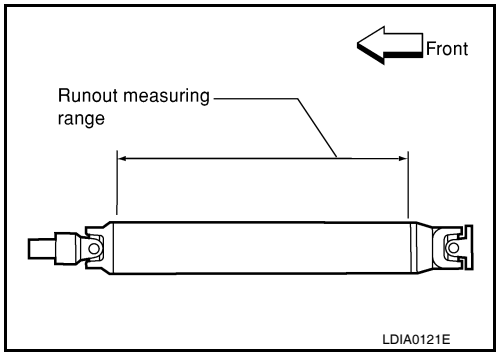

- While holding the flange yoke on one side, check axial play of the joint as shown. If the journal axial play exceeds the specification, repair or replace the journal parts. Refer to DLN-340, "General Specification".
- Check the propeller shaft tube for dents or cracks. If damage is detected, replace the propeller shaft assembly.

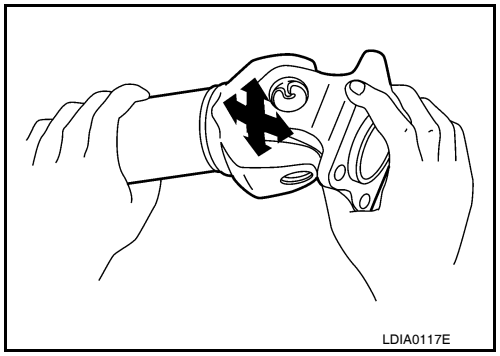

INSTALLATION

Installation is in the reverse order of removal.

- After installation, check for vibration by driving the vehicle. Refer to DLN-334, "NVH Troubleshooting Chart".
- If propeller shaft assembly of final drive assembly has been replaced, connect them as follows:
  - Face companion flange mark (A) of the final drive (1) upward. With the mark (A) faced upward, couple the propeller shaft and the final drive so that the matching mark (B) of the propeller shaft (2) can be positioned as close as possible with the matching mark (C) of the final drive companion flange.
  - Tighten propeller shaft and final drive bolts and nuts of the to specification. Refer to DLN-336, "Removal and Installation".

CAUTION:

Do not reuse the bolts and nuts. Always install new ones.

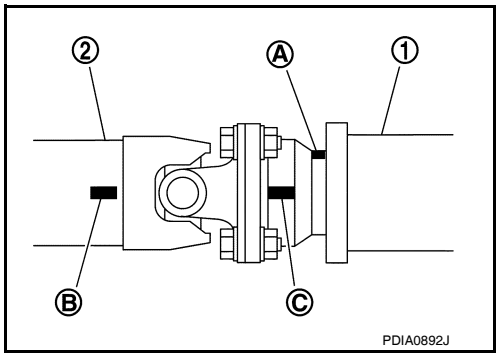

DISASSEMBLY AND ASSEMBLY

PROPELLER SHAFT

Disassembly and Assembly

INFOID:0000000005258467

DISASSEMBLY

Journal

1. Put matching marks on the rear propeller shaft and flange yoke as shown.
   CAUTION:
   For matching marks use paint. Never damage the rear propeller shaft or flange yoke.

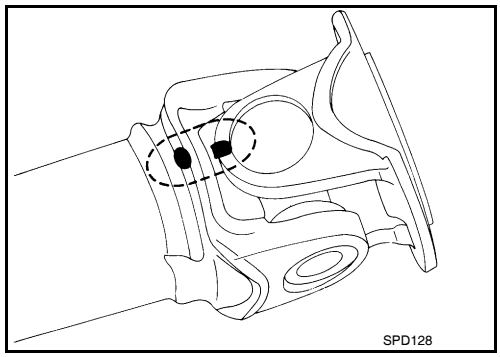

2. Remove the snap rings.

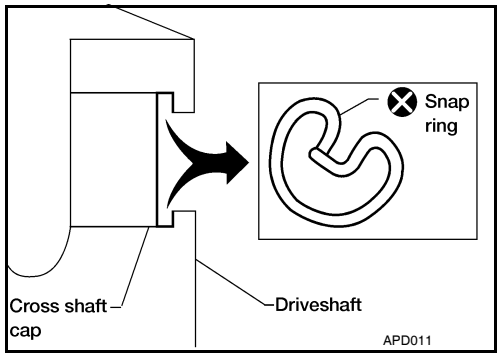

3. Push out and remove the journal bearings by lightly tapping the flange yoke with a hammer, taking care not to damage the journal or flange yoke hole.
   NOTE:
   Put marks on the disassembled parts so that they can be reinstalled in their original positions from which they were removed.

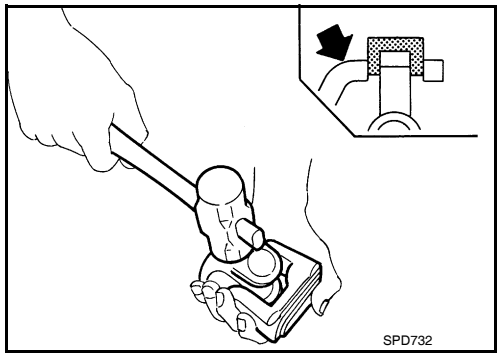

4. Push out and remove the remaining journal bearings at the opposite side by lightly tapping the flange yoke with a hammer, taking care not to damage the journal or flange yoke hole.
   NOTE:
   Put marks on the disassembled parts so that they can be reinstalled in their original positions from which they were removed.

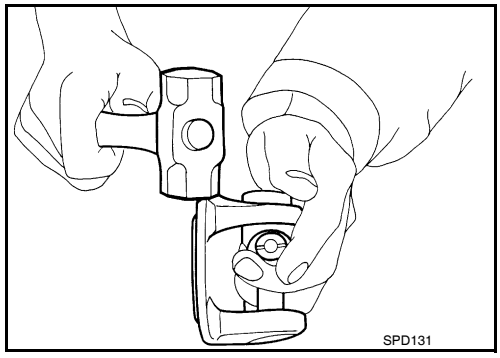

ASSEMBLY

Journal

1. Assemble the journal bearings. Apply multipurpose grease on the bearing inner surface.
   NOTE:
   During assembly, use caution so that the needle bearings do not fall down.

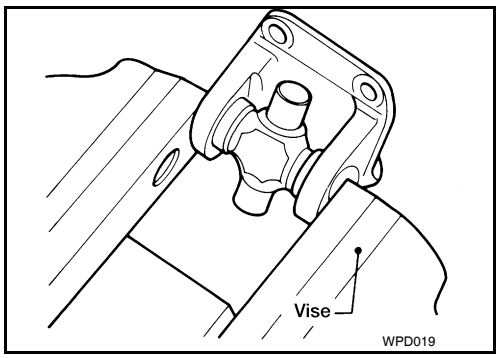

2. Select new snap rings that will provide the specified play in an axial direction of the journal, and install them. Refer to DLN-340, "Snap Ring".
   CAUTION:
   Do not reuse snap rings
   NOTE:
   Select snap rings with a difference in thickness at both sides within 0.02 mm (0.0008 in).

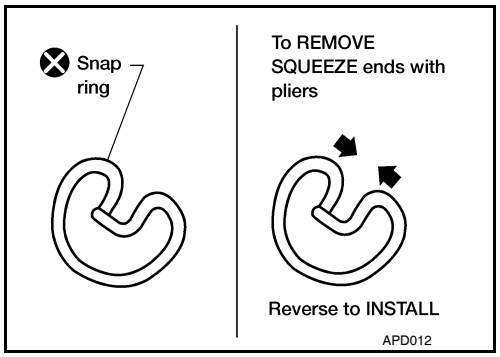

3. Adjust the thrust clearance between the bearing and snap ring to zero by tapping the yoke.

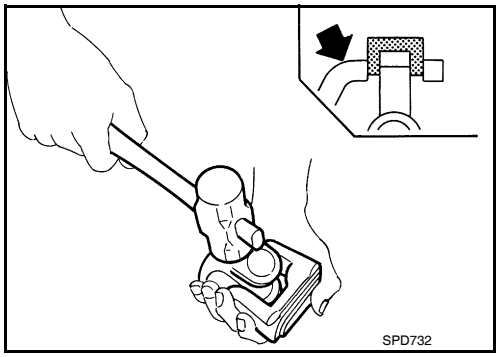

4. Make sure that the journal moves smoothly and is below the joint flex effort specification. Refer to DLN-340, "General Specification".

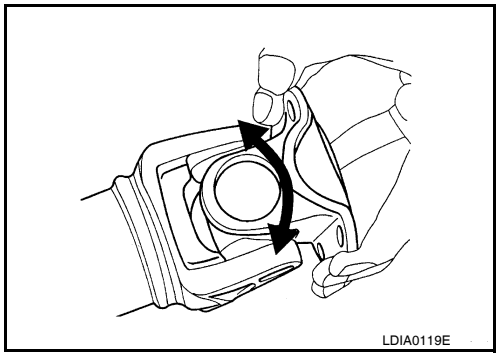

SERVICE DATA AND SPECIFICATIONS (SDS)

SERVICE DATA AND SPECIFICATIONS (SDS)

General Specification

INFOID:0000000005258468

4WD models

Unit: mm (in)

Applied model	4WD
	VK56DE
	A/T
Propeller shaft model	2S1350 (aluminum tube)
Number of joints	2
Coupling method with rear final drive	Flange type
Coupling method with transfer	Sleeve type
Shaft length (Spider to spider)	880.9 ± 1.5 (34.68 ± 0.06)
Shaft outer diameter	102.5 + 0.17 / - 0.25 (4.04 ± 0.01)

Propeller Shaft Runout

Unit: mm (in)

Item	Limit
Propeller shaft runout	0.6 (0.024) or less

Propeller Shaft Joint Flex Effort

Unit: N·m (kg-m, in-lb)

Item	Limit
Propeller shaft joint flex effort	2.26 (0.23, 20) or less

Journal Axial Play

Unit: mm (in)

Item	Limit
Journal axial play	0.02 (0.0008) or less

Snap Ring

INFOID:0000000005258469

Unit: mm (in)

Thickness	Color	Part Number*
1.99 (0.0783)	White	37146-C9400
2.02 (0.0795)	Yellow	37147-C9400
2.05 (0.0807)	Red	37148-C9400
2.08 (0.0819)	Green	37149-C9400
2.11 (0.0831)	Blue	37150-C9400
2.14 (0.0843)	Light brown	37151-C9400
2.17 (0.0854)	Black	37152-C9400
2.20 (0.0866)	No paint	37153-C9400

*Always check with the Parts Department for the latest parts information.

PRECAUTION

PRECAUTIONS

Precaution for Supplemental Restraint System (SRS) "AIR BAG" and "SEAT BELT PRE-TENSIONER"

INFOID:0000000005550722

The Supplemental Restraint System such as “AIR BAG” and “SEAT BELT PRE-TENSIONER”, used along with a front seat belt, helps to reduce the risk or severity of injury to the driver and front passenger for certain types of collision. This system includes seat belt switch inputs and dual stage front air bag modules. The SRS system uses the seat belt switches to determine the front air bag deployment, and may only deploy one front air bag, depending on the severity of a collision and whether the front occupants are belted or unbelted.
Information necessary to service the system safely is included in the SR and SB section of this Service Manual.

WARNING:
- **To avoid rendering the SRS inoperative, which could increase the risk of personal injury or death in the event of a collision which would result in air bag inflation, all maintenance must be performed by an authorized NISSAN/INFINITI dealer.**
- **Improper maintenance, including incorrect removal and installation of the SRS, can lead to personal injury caused by unintentional activation of the system. For removal of Spiral Cable and Air Bag Module, see the SR section.**
- **Do not use electrical test equipment on any circuit related to the SRS unless instructed to in this Service Manual. SRS wiring harnesses can be identified by yellow and/or orange harnesses or harness connectors.**

PRECAUTIONS WHEN USING POWER TOOLS (AIR OR ELECTRIC) AND HAMMERS

WARNING:
- **When working near the Airbag Diagnosis Sensor Unit or other Airbag System sensors with the Ignition ON or engine running, DO NOT use air or electric power tools or strike near the sensor(s) with a hammer. Heavy vibration could activate the sensor(s) and deploy the air bag(s), possibly causing serious injury.**
- **When using air or electric power tools or hammers, always switch the Ignition OFF, disconnect the battery, and wait at least 3 minutes before performing any service.**

Precaution Necessary for Steering Wheel Rotation After Battery Disconnect

INFOID:0000000005550723

NOTE:
- This Procedure is applied only to models with Intelligent Key system and NATS (NISSAN ANTI-THEFT SYSTEM).
- Remove and install all control units after disconnecting both battery cables with the ignition knob in the ″LOCK″ position.
- Always use CONSULT-III to perform self-diagnosis as a part of each function inspection after finishing work. If DTC is detected, perform trouble diagnosis according to self-diagnostic results.

For models equipped with the Intelligent Key system and NATS, an electrically controlled steering lock mechanism is adopted on the key cylinder.
For this reason, if the battery is disconnected or if the battery is discharged, the steering wheel will lock and steering wheel rotation will become impossible.
If steering wheel rotation is required when battery power is interrupted, follow the procedure below before starting the repair operation.

OPERATION PROCEDURE

1. Connect both battery cables.
   NOTE:
   Supply power using jumper cables if battery is discharged.
2. Use the Intelligent Key or mechanical key to turn the ignition switch to the ″ACC″ position. At this time, the steering lock will be released.
3. Disconnect both battery cables. The steering lock will remain released and the steering wheel can be rotated.
4. Perform the necessary repair operation.

5. When the repair work is completed, return the ignition switch to the ″LOCK″ position before connecting the battery cables. (At this time, the steering lock mechanism will engage.)
6. Perform a self-diagnosis check of all control units using CONSULT-III.

Precaution for Servicing Front Final Drive

INFOID:0000000005258470

- Before starting diagnosis of the vehicle, understand the symptoms well. Perform correct and systematic operations.
- Check for the correct installation status prior to removal or disassembly. When matching marks are required, be certain they do not interfere with the function of the parts they are applied to.
- Overhaul should be done in a clean work area, a dust proof area is recommended.
- Before disassembly, completely remove sand and mud from the exterior of the unit, preventing them from entering into the unit during disassembly or assembly.
- Always use shop paper for cleaning the inside of components.
- Avoid using cotton gloves or a shop cloth to prevent the entering of lint.
- Check appearance of the disassembled parts for damage, deformation, and abnormal wear. Replace them with new ones if necessary.
- Gaskets, seals and O-rings should be replaced any time the unit is disassembled.
- Clean and flush the parts sufficiently and blow them dry.
- Be careful not to damage sliding surfaces and mating surfaces.
- When applying sealant, remove the old sealant from the mating surface; then remove any moisture, oil, and foreign materials from the application and mating surfaces.
- In principle, tighten nuts or bolts gradually in several steps working diagonally from inside to outside. If a tightening sequence is specified, observe it.
- During assembly, observe the specified tightening torque.
- Add new differential gear oil, petroleum jelly, or multi-purpose grease, as specified.

PREPARATION

PREPARATION

Special Service Tool

INFOID:0000000005258471

The actual shapes of Kent-Moore tools may differ from those of special service tools illustrated here.

Tool number (Kent-Moore No.) Tool name		Description
KV381054S0 (J-34286) Puller	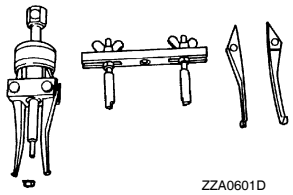	Removing front oil seal
ST30720000 (J-25405) Drift	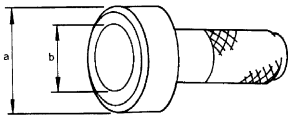	• Installing front oil seal • Installing side oil seal **a: 77 mm (3.03 in) dia.** **b: 55.5 mm (2.185 in) dia.**
ST27863000 (—) Drift	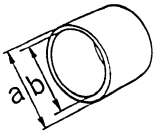	• Installing front oil seal • Installing side oil seal **a: 74.5 mm (2.933 in) dia.** **b: 62.5 mm (2.461 in) dia.**
ST3127S000 (J-25765-A) Preload gauge 1: GG91030000 (J-25765) Torque wrench 2: HT62940000 (—) Socket adapter (1/2″) 3: HT62900000 (—) Socket adapter (3/8″)	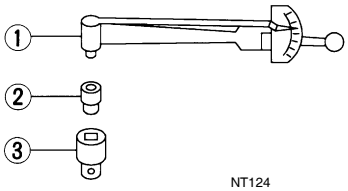	Measuring drive pinion bearing preload torque and total preload torque
KV10111100 (J-37228) Seal cutter	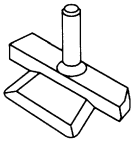	Removing carrier cover

Tool number (Kent-Moore No.) Tool name	Description
ST3306S001 (—) Differential side bearing puller set 1: ST33051001 (J-22888-20) Puller 2: ST33061000 (J-8107-2) Base 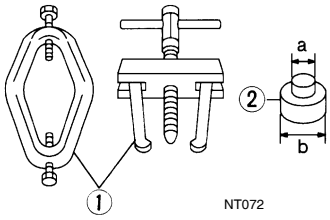	Removing and installing side bearing inner race **a: 28.5 mm (1.122 in) dia.** **b: 38 mm (1.50 in) dia.**
ST30031000 (J-22912-01) Replacer 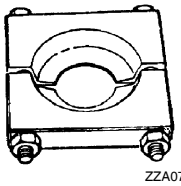	Removing drive pinion rear bearing inner race
KV38100600 (J-25267) Drift 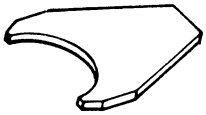	Installing side bearing adjusting washer
ST30613000 (J-25742-3) Drift 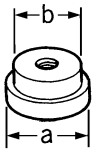	Installing drive pinion rear bearing outer race **a: 72 mm (2.83 in) dia.** **b: 48 mm (1.89 in) dia.**
ST30611000 (J-25742-1) Drift bar 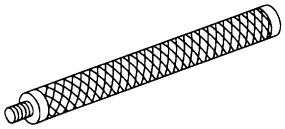	Installing drive pinion rear bearing outer race (Use with ST30613000)
KV38100200 (J-26233) Drift 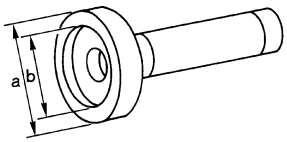	Installing drive pinion front bearing outer race **a: 65 mm (2.56 in) dia.** **b: 49 mm (1.93 in) dia.**
ST30901000 (J-26010-01) Drift 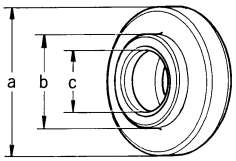	Installing drive pinion rear bearing inner race **a: 79 mm (3.11 in) dia.** **b: 45 mm (1.77 in) dia.** **c: 35.2 mm (1.386 in) dia.**

Tool number (Kent-Moore No.) Tool name	Description
ST33200000 (J-26082) Drift 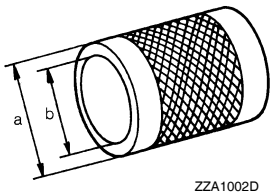	Installing drive pinion front bearing inner race **a: 60 mm (2.36 in) dia.** **b: 44.5 mm (1.752 in) dia.**
ST33230000 (J-35867) Drift 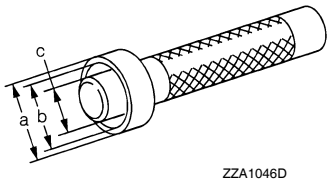	Installing side bearing inner race **a: 51 mm (2.01 in) dia.** **b: 41 mm (1.61 in) dia.** **c: 28 mm (1.10 in) dia.**
(—) (J-34309) Differential shim selector tool 	Adjusting bearing preload and drive pinion height
(—) (J-25269-18) Side bearing disc (2 Req'd) 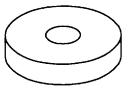	Selecting drive pinion height adjusting washer
KV10112100 (BT-8653-A) Angle wrench 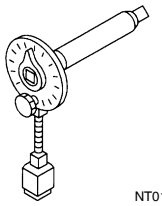	Tightening bolts for drive gear

Commercial Service Tool

INFOID:0000000005258472

Tool name	Description
Power tool 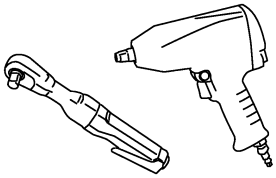	Loosening nuts and bolts

FUNCTION DIAGNOSIS

NOISE, VIBRATION AND HARSHNESS (NVH) TROUBLESHOOTING

NVH Troubleshooting Chart

INFOID:0000000005258473

Use the chart below to help you find the cause of the symptom. If necessary, repair or replace these parts.

Reference page		DLN-356	DLN-356	DLN-356	DLN-356	DLN-356	DLN-348	DLN-334, "NVH Troubleshooting Chart"	FAX-5, "NVH Troubleshooting Chart"	FSU-5, "NVH Troubleshooting Chart"	WT-46, "NVH Troubleshooting Chart"	WT-46, "NVH Troubleshooting Chart"	RAX-5, "NVH Troubleshooting Chart"	BR-6, "NVH Troubleshooting Chart"	ST-12, "NVH Troubleshooting Chart"
Possible cause and SUSPECTED PARTS		Gear tooth rough	Gear contact improper	Tooth surfaces worn	Backlash incorrect	Companion flange excessive runout	Gear oil improper	PROPELLER SHAFT	FRONT AXLE	FRONT SUSPENSION	TIRES	ROAD WHEEL	DRIVE SHAFT	BRAKES	STEERING
Symptom	Noise	×	×	×	×	×	×	×	×	×	×	×	×	×	×

×: Applicable

DESCRIPTION

Cross-Sectional View

INFOID:0000000005258474

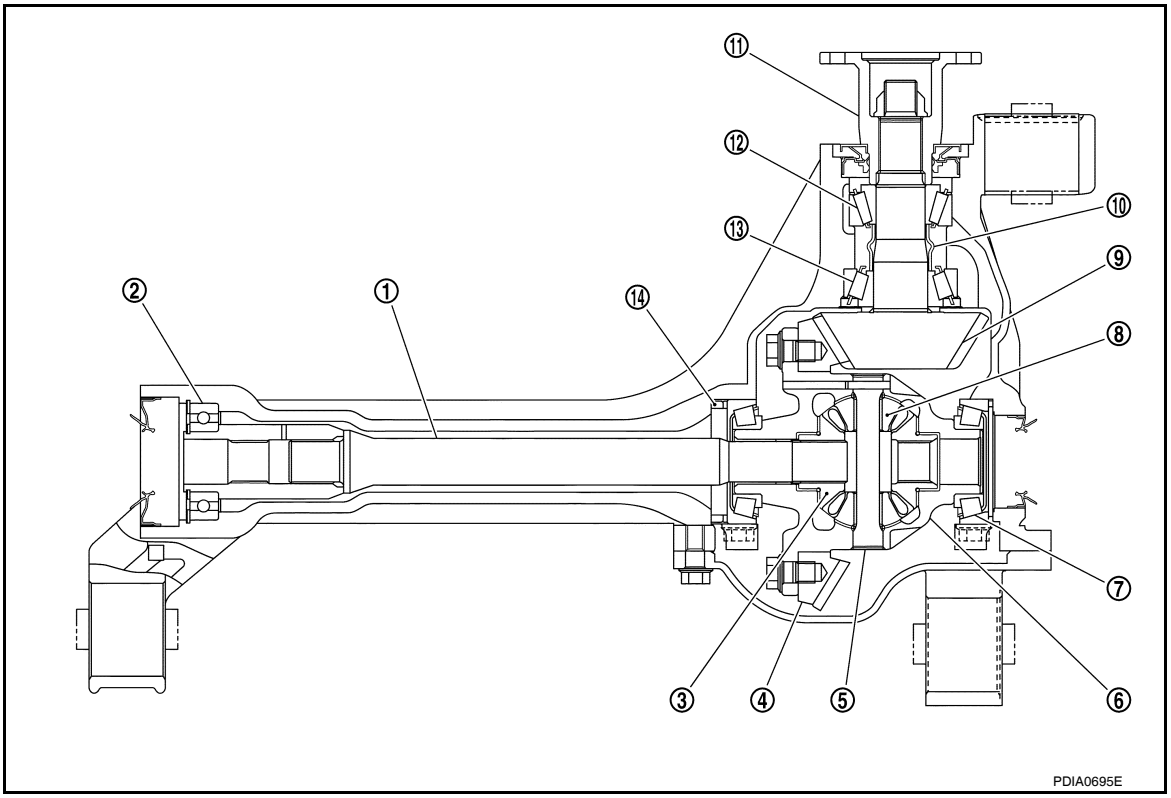

1. Differential side shaft
2. Differential side shaft bearing
3. Side gear
4. Drive gear
5. Pinion mate shaft
6. Differential case
7. Side bearing
8. Pinion mate gear
9. Drive pinion
10. Collapsible spacer
11. Companion flange
12. Drive pinion front bearing
13. Drive pinion rear bearing
14. Housing spacer

ON-VEHICLE MAINTENANCE

DIFFERENTIAL GEAR OIL

Changing Differential Gear Oil

INFOID:0000000005258475

DRAINING

1. Stop the engine.
2. Remove the drain plug and gasket from the front final drive assembly to drain the differential gear oil.
3. Install the drain plug with a new gasket to the front final drive assembly. Tighten to the specified torque. Refer to DLN-356, "Disassembly and Assembly".
   CAUTION:
   Do not reuse gasket.

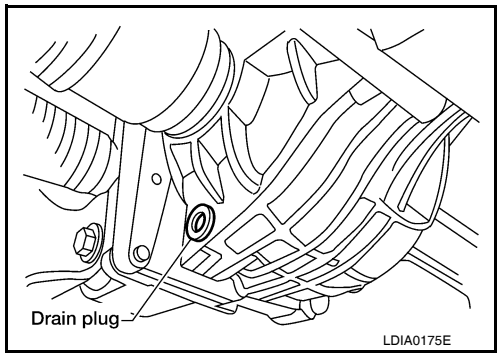

FILLING

1. Remove the filler plug and gasket from the front final drive assembly.
2. Fill the front final drive assembly with new differential gear oil until the level reaches the specified level near the filler plug hole.

Differential gear oil grade and capacity	**: Refer to MA-16, "For North America".**

3. Install the filler plug with a new gasket on it to the front final drive assembly. Tighten to the specified torque. Refer to DLN-356, "Disassembly and Assembly".
   CAUTION:
   Do not reuse gasket.

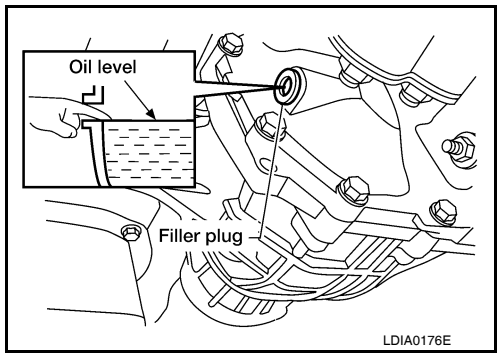

Checking Differential Gear Oil

INFOID:0000000005258476

DIFFERENTIAL GEAR OIL LEAKAGE AND LEVEL

1. Make sure that differential gear oil is not leaking from the front final drive assembly or around it.
2. Check the differential gear oil level from the filler plug hole as shown.
   CAUTION:
   Do not start engine while checking differential gear oil level.
3. Install the filler plug with a new gasket on it to the front final drive assembly. Tighten to the specified torque. Refer to DLN-356, "Disassembly and Assembly".
   CAUTION:
   Do not reuse gasket.

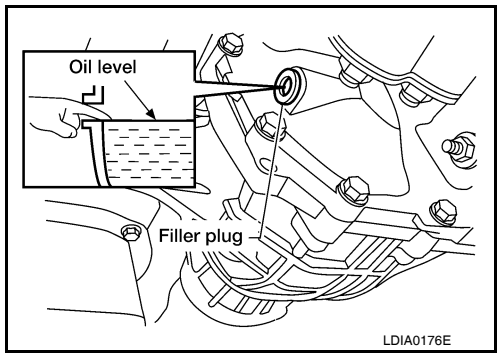

ON-VEHICLE REPAIR

FRONT OIL SEAL

Removal and Installation

INFOID:0000000005258477

REMOVAL

1. Remove the drive shafts from the front final drive assembly. Refer to RAX-8, "Removal and Installation".
2. Remove the front propeller shaft from the front final drive assembly. Refer to DLN-315, "Removal and Installation".
3. Measure the total preload torque. Refer to DLN-356, "Disassembly and Assembly".
   NOTE:
   Record the total preload torque measurement.
4. Remove the drive pinion lock nut using suitable tool.
5. Put matching marks on the companion flange and drive pinion using paint.
   CAUTION:
   Use paint to make the matching marks. Do not damage the companion flange or drive pinion.

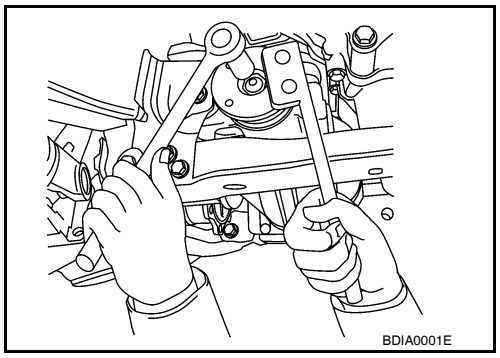

6. Remove the companion flange using suitable tool.

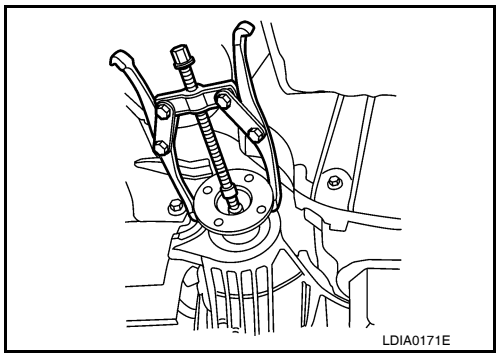

7. Remove the front oil seal using Tool.

   Tool number : KV381054S0 (J-34286)

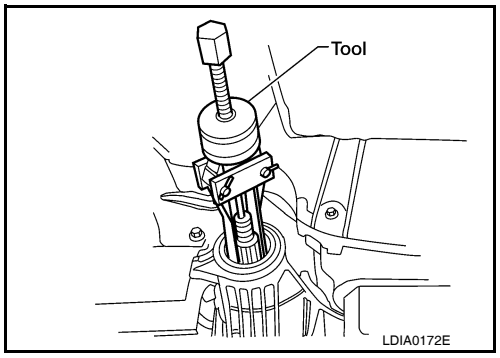

INSTALLATION

1. Apply multi-purpose grease to the lips and differential gear oil to the circumference of the new front oil seal. Then drive the new front oil seal in evenly until it becomes flush with the gear carrier using Tools.

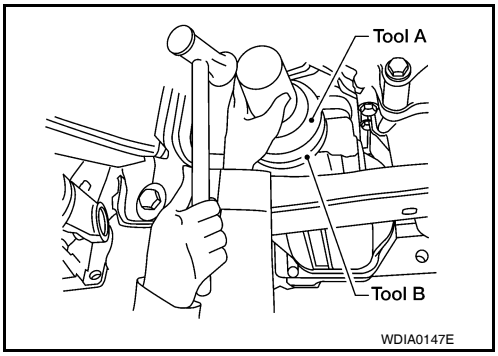

Tool number **A: ST30720000 (J-25405)**
B: ST27863000 (—)

CAUTION:
- **Do not reuse front oil seal.**
- **Do not incline the new front oil seal when installing.**
- **Apply multi-purpose grease to the lips and differential gear oil to the circumference of the new front oil seal.**

2. Install the companion flange to the drive pinion while aligning the matching marks.
3. Apply anti-corrosive oil to the threads of the drive pinion and the seating surface of the new drive pinion lock nut. Then adjust the drive pinion lock nut tightening torque using suitable tool A, and check the total preload torque using Tool B.

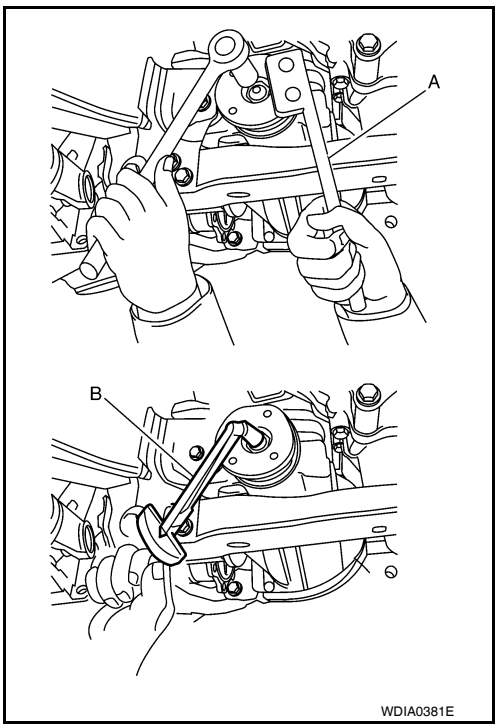

Tool number **B: ST3127S000 (J-25765-A)**

Total preload torque: **Refer to DLN-356, "Disassembly and Assembly".**

- The total preload torque should be within the total preload torque specification. When not replacing the collapsible spacer, it should also be equal to the measurement taken during removal plus an additional 0.56 N·m (0.06 Kg-m, 5 in-lb).
- If the total preload torque is low, tighten the drive pinion lock nut in 6.8 N·m (0.69 Kg-m, 5ft-lb) increments until the total preload torque is met.

CAUTION:
- **Do not reuse drive pinion lock nut.**
- **Apply anti-corrosive oil to the threads of the drive pinion and the seating surface of the new drive pinion lock nut.**
- **Adjust the drive pinion lock nut tightening torque to the lower limit first. Do not exceed the drive pinion lock nut specified torque. Refer to DLN-356, "Disassembly and Assembly".**
- **Do not loosen drive pinion lock nut to adjust the total preload torque. If the drive pinion lock nut torque or the total preload torque exceeds the specifications, replace the collapsible spacer and tighten it again to adjust. Refer to DLN-356, "Disassembly and Assembly".**
- **After adjustment, rotate drive pinion back and forth 2 to 3 times to check for unusual noise, rotation malfunction, and other malfunctions.**

4. Install new side oil seals into the front final drive assembly. Refer to DLN-351, "Removal and Installation".
5. Installation of the remaining components is in the reverse order of removal.

CAUTION:
Check the differential gear oil level after installation. Refer to DLN-348, "Checking Differential Gear Oil".

SIDE OIL SEAL

Removal and Installation

INFOID:0000000005258478

REMOVAL

1. Remove the drive shafts from the front final drive assembly. Refer to FAX-7, "VQ40DE : Removal and Installation".
2. Remove the side oil seal using suitable tool.
   CAUTION:
   Do not reuse the side oil seal.

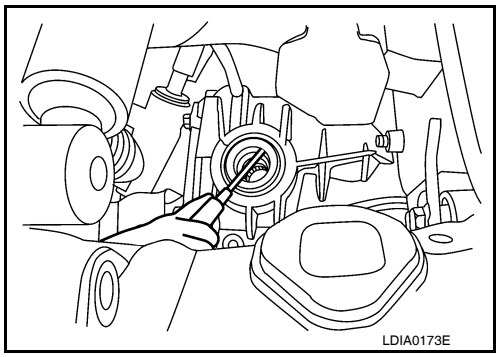

INSTALLATION

1. Apply multi-purpose grease to the lips and differential gear oil to the circumference of the new side oil seal. Then drive the new side oil seal in evenly until it becomes flush with the gear carrier using Tools.

   Tool number **A: ST30720000 (J-25405)**
   B: ST27863000 (—)

   CAUTION:
   - **Do not reuse side oil seal.**
   - **Do not incline the new side oil seal when installing.**
   - **Apply multi-purpose grease to the lips and differential gear oil to the circumference of the new side oil seal.**

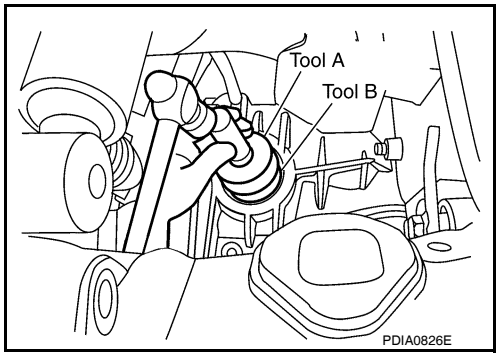

2. Installation of the remaining components is in the reverse order of removal.
   CAUTION:
   Check the differential gear oil level after installation. Refer to DLN-348, "Checking Differential Gear Oil".

CARRIER COVER

Removal and Installation

INFOID:0000000005258479

REMOVAL

1. Remove the front final drive assembly. Refer to DLN-353, "Removal and Installation".
2. Remove the carrier cover bolts and separate the carrier cover from the gear carrier using Tool.

   Tool number : KV10111100 (J-37228)

   CAUTION:
   - **Do not damage the mating surface.**
   - **Do not insert flat-bladed screwdriver, this will damage the mating surface.**

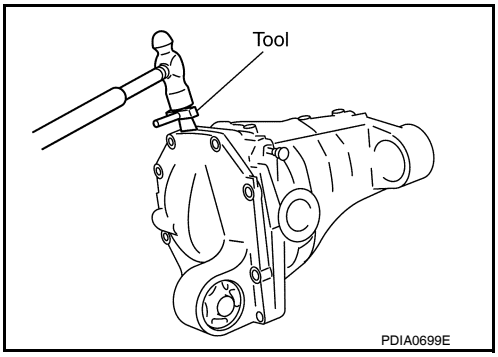

INSTALLATION

1. Apply a 3 mm (0.12 in) bead of sealant to the mating surface of the carrier cover as shown.
   - Use Genuine Silicone RTV or equivalent. Refer to GI-14, "Recommended Chemical Products and Sealants".

   CAUTION:
   Remove any old sealant adhering to the mating surfaces. Also remove any moisture, oil, or foreign material adhering to the application and mating surfaces.
2. Install the carrier cover to the gear carrier. Tighten the bolts to the specified torque. Refer to DLN-356, "Disassembly and Assembly".
3. Install the front final drive assembly. Refer to DLN-353, "Removal and Installation".

   CAUTION:
   Fill the front final drive assembly with recommended differential gear oil. Refer to DLN-348.

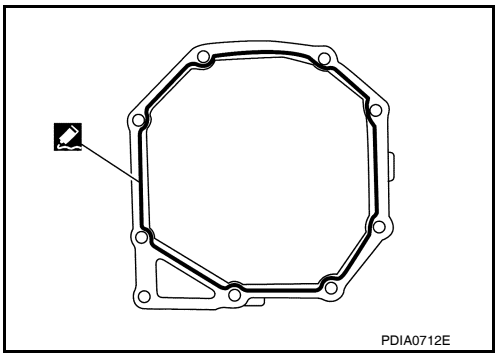

REMOVAL AND INSTALLATION

FRONT FINAL DRIVE ASSEMBLY

Removal and Installation

INFOID:0000000005258480

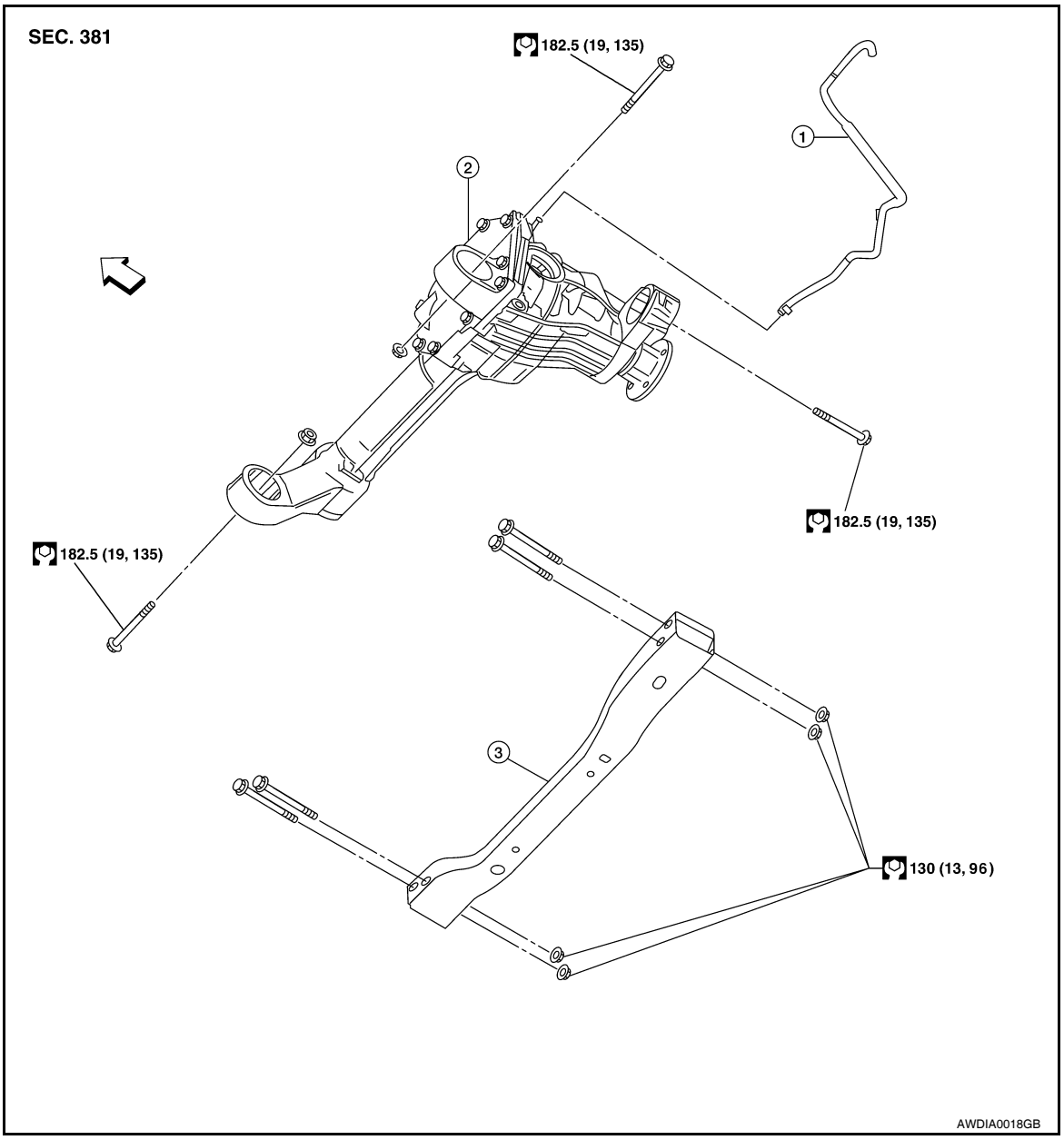

1. Breather hose
2. Front final drive assembly
3. Front crossmember

⇨ Vehicle front

REMOVAL

1. Drain the differential gear oil. Refer to DLN-348.
2. Remove the drive shafts from the front final drive assembly. Refer to FAX-7, "VQ40DE : Removal and Installation".
3. Remove the front crossmember.
4. Remove the front propeller shaft from the front final drive assembly. Refer to DLN-315, "Removal and Installation".
5. Disconnect the vent hose from the front final drive assembly.

6. Support the front final drive assembly using a suitable jack.
7. Remove the front final drive assembly bolts, then remove the front final drive assembly.
   CAUTION:
   Support the front final drive assembly while removing using a suitable jack.

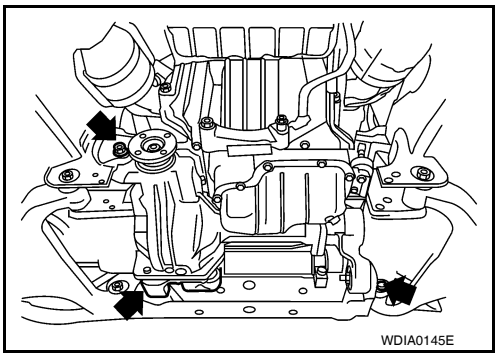

INSTALLATION

Installation is in the reverse order of removal.

- Install new side oil seals into the front final drive assembly. Refer to DLN-351, "Removal and Installation".

CAUTION:

- **Make sure there are no pinched or restricted areas on the breather hose caused by folding or bending when installing it.**
- **Fill the front final drive assembly with differential gear oil after installation. Refer to DLN-348.**

DISASSEMBLY AND ASSEMBLY

FRONT FINAL DRIVE

Exploded View

INFOID:0000000005588048

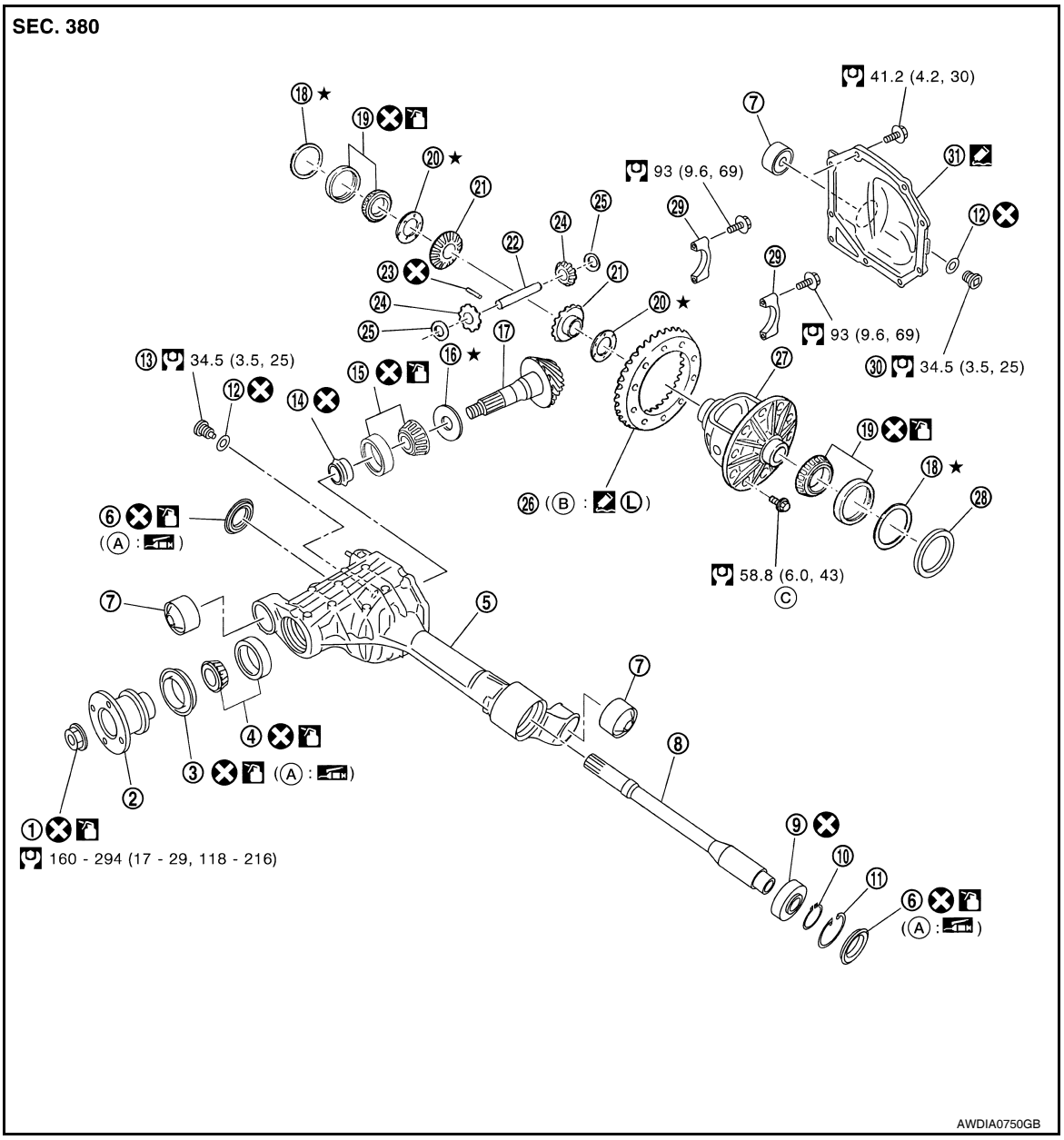

1.	Drive pinion lock nut	2.	Companion flange	3.	Front oil seal
4.	Drive pinion front bearing	5.	Gear carrier	6.	Side oil seal
7.	Bushing	8.	Differential side shaft	9.	Differential side shaft bearing
10.	Snap ring	11.	Snap ring	12.	Gasket
13.	Drain plug	14.	Collapsible spacer	15.	Drive pinion rear bearing
16.	Drive pinion height adjusting washer	17.	Drive pinion	18.	Side bearing adjusting washer
19.	Side bearing	20.	Side gear thrust washer	21.	Side gear
22.	Pinion mate shaft	23.	Lock pin	24.	Pinion mate gear
25.	Pinion mate thrust washer	26.	Drive gear	27.	Differential case
28.	Housing spacer	29.	Side bearing cap	30.	Filler plug

31. Carrier cover
A. Seal lip
B. Screw hole
C. Refer to INSTALLATION

Disassembly and Assembly

INFOID:0000000005258481

ASSEMBLY INSPECTION AND ADJUSTMENT

- Drain the differential gear oil before inspection and adjustment. Refer to DLN-348.
- Remove and install the carrier cover as necessary for inspection and adjustment. Refer to DLN-352.

Total Preload Torque

1. Install the differential side shaft if necessary. Refer to DLN-351, "Removal and Installation".
   CAUTION:
   The differential side shaft must be installed in order to measure total preload torque.
2. Rotate the drive pinion back and forth 2 to 3 times to check for unusual noise and rotation malfunction.
3. Rotate the drive pinion at least 20 times to check for smooth operation of the bearings.
4. Measure total preload torque using Tool.

Tool number : ST3127S000 (J-25765-A)

Total preload torque: Refer to DLN-374, "Inspection and Adjustment"

NOTE:
Total preload torque = Drive pinion bearing preload torque + Side bearing preload torque

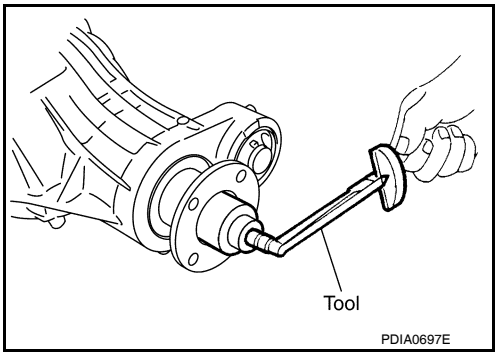

- If the measured value is out of the specification, check and adjust each part. Adjust the drive pinion bearing preload torque first, then adjust the side bearing preload torque.

If the total preload torque is greater than specification

On drive pinion bearings: Replace the collapsible spacer.

On side bearings: Use thinner side bearing adjusting washers by the same amount on each side. Refer to DLN-374, "Inspection and Adjustment".

If the total preload torque is less than specification

On drive pinion bearings: Tighten the drive pinion lock nut.

On side bearings: Use thicker side bearing adjusting washers by the same amount on each side. Refer to DLN-374, "Inspection and Adjustment".

CAUTION:
Select a side bearing adjusting washer for right and left individually.

Drive Gear Runout

1. Fit a dial indicator to the drive gear back face.
2. Rotate the drive gear to measure runout.

Runout limit: Refer to DLN-374, "Inspection and Adjustment"

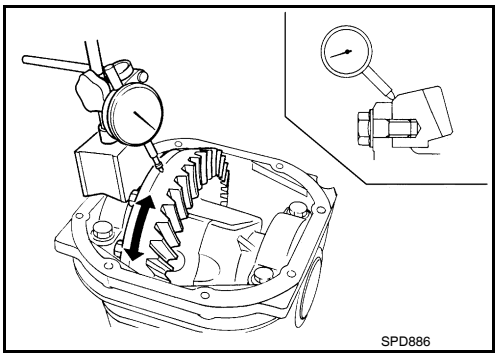

- If the runout is outside of the limit, check the condition of the drive gear assembly. Foreign material may be caught between the drive gear and differential case, or the differential case or drive gear may be deformed.
  CAUTION:

Replace drive gear and drive pinion as a set.

Tooth Contact

1. Apply red lead to the drive gear.
   NOTE:
   Apply red lead to both faces of three to four gears, at four locations evenly spaced on the drive gear.

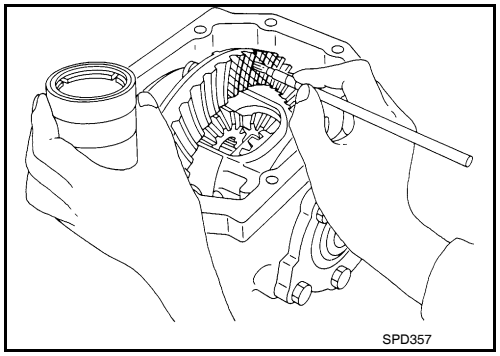

2. Rotate the drive gear back and forth several times. Then check for correct drive pinion to drive gear tooth contact as shown.
   CAUTION:
   Check tooth contact on drive side and reverse side.

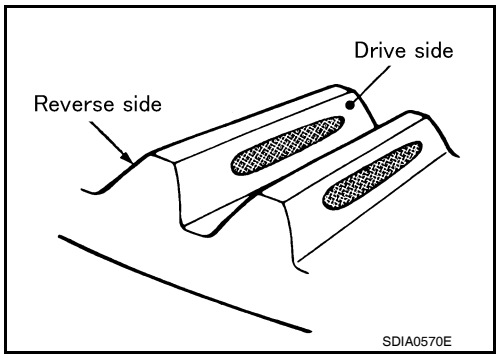

- If the tooth contact is improperly adjusted, adjust the drive pinion height (dimension X).

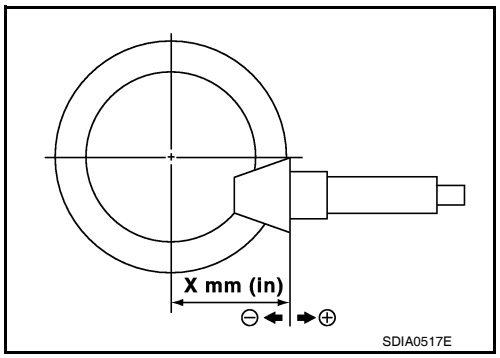

- If the tooth contact is near the face (face contact), or near the heel (heel contact), use a thicker drive pinion height adjusting washer to move drive pinion closer to the drive gear.
  Refer to DLN-374, "Inspection and Adjustment".

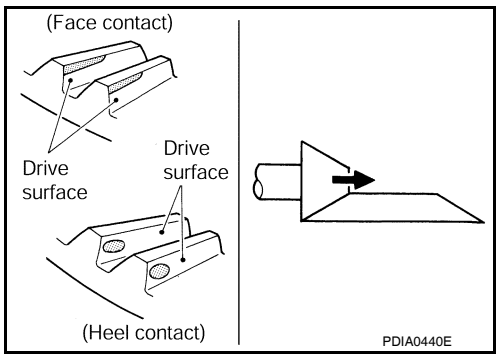

- If the tooth contact is near the flank (flank contact), or near the toe (toe contact), use a thinner drive pinion height adjusting washer to move the drive pinion farther from the drive gear. Refer to DLN-374, "Inspection and Adjustment".

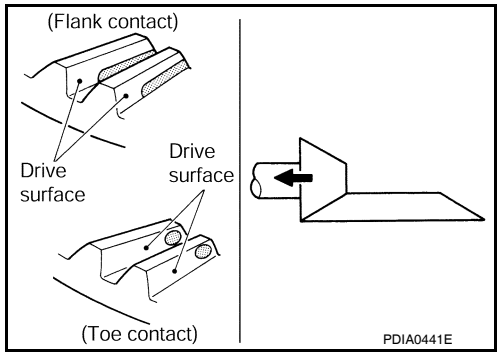

Backlash

1. Fit a dial indicator to the drive gear face to measure the backlash.

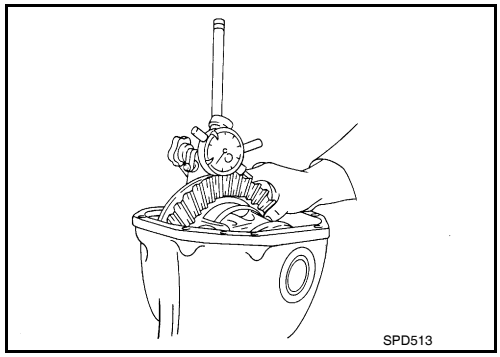

Backlash: **Refer to DLN-374, "Inspection and Adjustment"**

- If the backlash is outside of the specification, change the thickness of the side bearing adjusting washers.

If the backlash is greater than specification:

Make side bearing adjusting washer thicker on drive gear back side, and side bearing adjusting washer thinner on drive gear tooth side by the same amount. Refer to DLN-374, "Inspection and Adjustment".

If the backlash is less than specification:

Make side bearing adjusting washer thinner on drive gear back side, and side bearing adjusting washer thicker on drive gear tooth side by the same amount. Refer to DLN-374, "Inspection and Adjustment".

CAUTION:
Do not change the total thickness of side bearing adjusting washers as it will change the side bearing preload torque.

Companion Flange Runout

1. Rotate companion flange and check for runout on the companion flange face (inner side of the bolt holes) and companion flange inner side (socket diameter) using suitable tool.

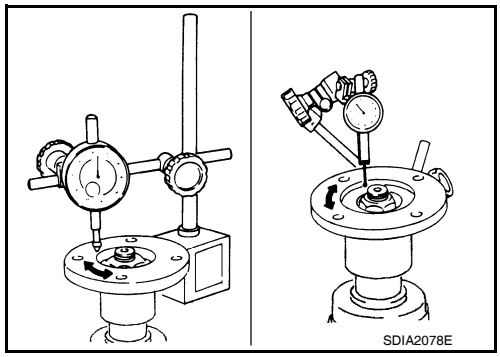

Runout limit: **Refer to DLN-374, "Inspection and Adjustment"**

2. If the runout is outside the runout limit, follow the procedure below to adjust.

a. Rotate the companion flange on the drive pinion by 90°, 180° and 270° while checking for the position where the runout is minimum.

b. If the runout is still outside of the runout limit after the companion flange has been rotated on the drive pinion, possible cause could be an assembly malfunction of drive pinion and drive pinion bearing or a malfunctioning drive pinion bearing.

c. If the runout is still outside of the runout limit after repair of the assembly of drive pinion and drive pinion bearing or drive pinion bearing, replace the companion flange.

DISASSEMBLY

Differential side shaft

1. Drain the differential gear oil if necessary.

2. Remove the carrier cover bolts and separate the carrier cover from the gear carrier using Tool.

Tool number : KV10111100 (J-37228)

CAUTION:
- **Do not damage the mating surface.**
- **Do not insert flat-bladed screwdriver, this will damage the mating surface.**

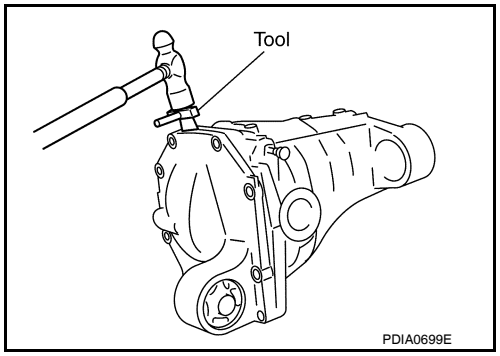

3. Remove side oil seal, using suitable tool.
CAUTION:
Do not damage gear carrier.

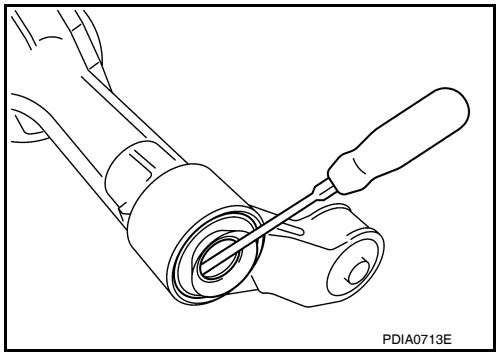

4. Remove snap ring (hole side) using suitable tool.

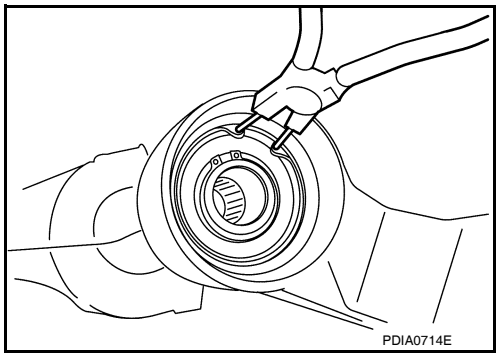

5. Remove differential side shaft assembly out of gear carrier using suitable tool.
NOTE:
Tap on differential side shaft assembly from side gear side.
6. Remove snap ring (differential side shaft side).

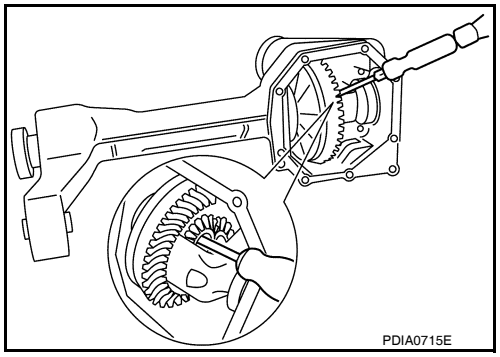

7. Press differential side shaft out of differential side shaft bearing.
CAUTION:
Do not drop differential side shaft.

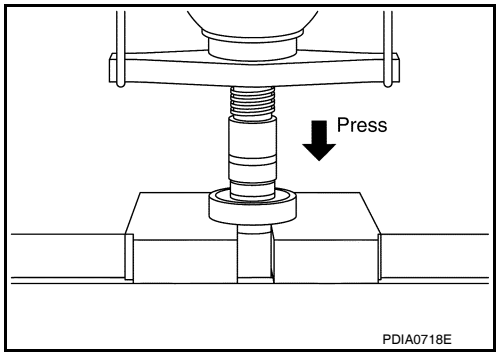

Differential Assembly

1. Remove differential side shaft assembly. Refer to DLN-351, "Removal and Installation".
2. Remove side seal from gear carrier using suitable tool.
3. For proper reinstallation, paint matching marks on one side of the side bearing cap and gear carrier.
   CAUTION:
   - **For matching marks, use paint. Do not damage side bearing cap or gear carrier.**
   - **Side bearing caps are line-board during manufacture. The matching marks are used to reinstall them in their original positions.**

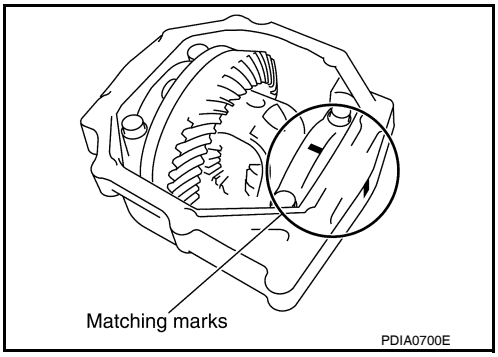

4. Remove the side bearing caps.

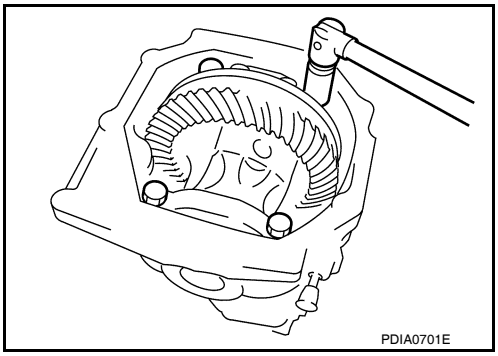

5. Lift the differential case assembly out of the gear carrier.
   CAUTION:
   - **Keep side bearing outer races together with side bearing inner races. Do not mix them up.**
   - **Keep side bearing adjusting washers together with side bearings.**

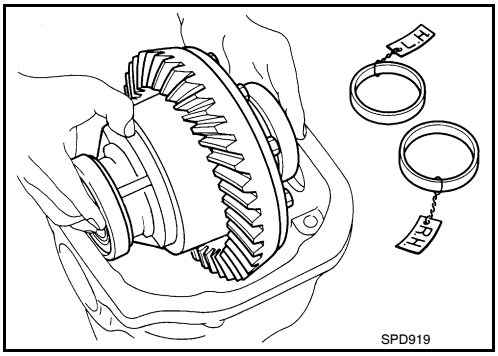

6. Remove housing spacer.
7. Remove side bearing inner race using Tools as shown.

Tool number	**A: ST33051001 (J-22888-20)**
	B: ST33061000 (J-8107-2)

CAUTION:
- **Do not remove side bearing inner race unless it is being replaced.**
- **Place copper plates between the vise and the side bearing inner race and drive gear to prevent damage.**

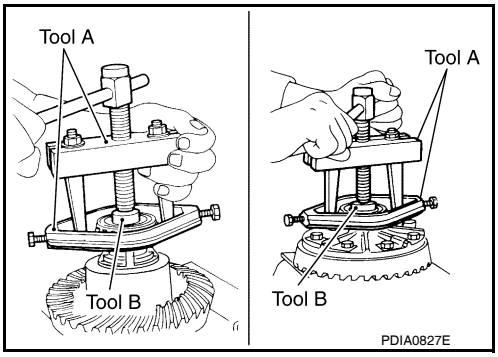

- **Keep side bearing outer races together with side bearing inner races. Do not mix them up.**

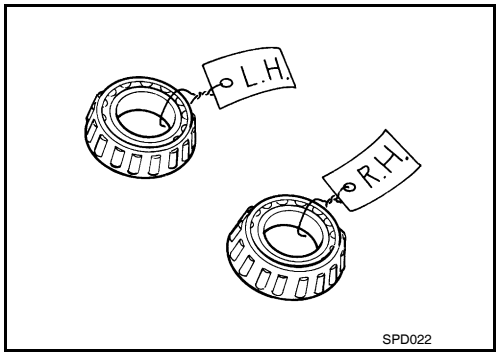

8. For proper reinstallation, paint matching marks on the differential case and drive gear.
   CAUTION:
   Use paint for matching marks. Do not damage differential case or drive gear.
9. Remove the drive gear bolts.
10. Tap the drive gear off the differential case using suitable tool.
    CAUTION:
    Tap evenly all around to keep drive gear from bending.

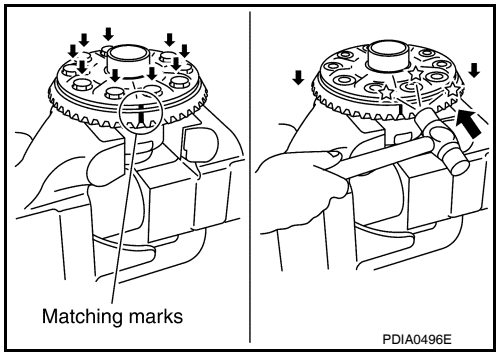

11. Remove the lock pin of the pinion mate shaft from the drive gear side using suitable tool.

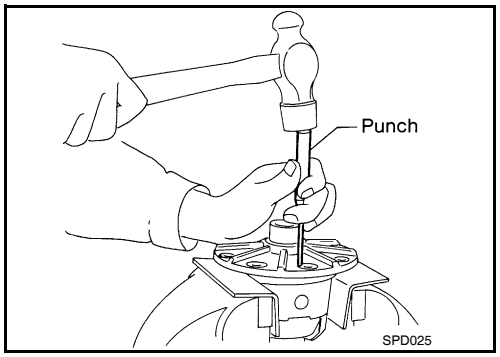

12. Remove the pinion mate shaft.

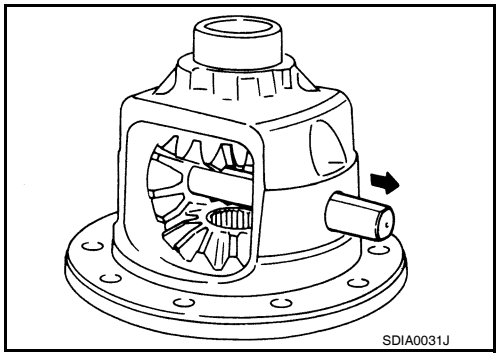

13. Turn the pinion mate gear, then remove the pinion mate gear, pinion mate thrust washer, side gear and side gear thrust washer from the differential case.

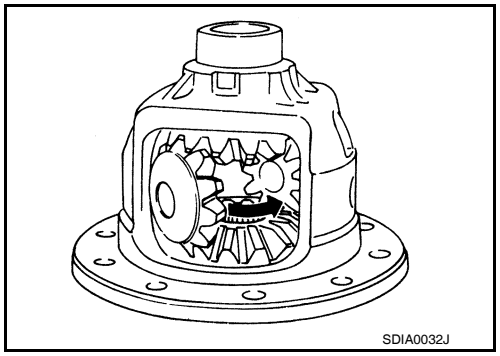

Drive Pinion Assembly

1. Remove the differential assembly.
2. Remove the drive pinion lock nut using suitable tool.
3. Put matching marks on the companion flange and drive pinion using paint.
   CAUTION:
   Use paint to make the matching marks. Do not damage the companion flange or drive pinion.

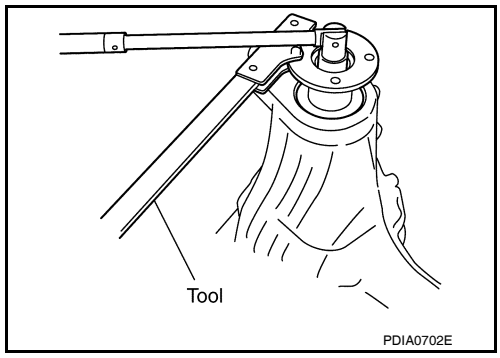

4. Remove the companion flange using suitable tool.

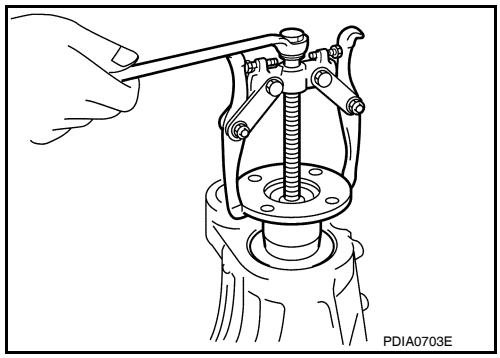

5. Press the drive pinion assembly (with rear inner bearing race and collapsible spacer) out of the gear carrier.
   CAUTION:
   Do not drop drive pinion assembly.

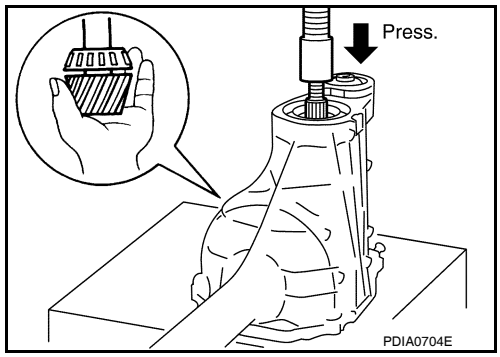

6. Remove the drive pinion rear bearing inner race and drive pinion height adjusting washer using Tool.

   Tool number : ST30031000 (J-22912-01)

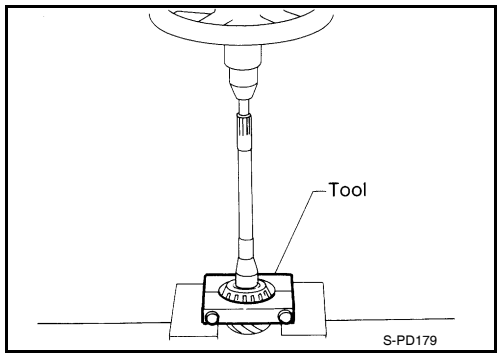

7. Remove the front oil seal using suitable tool.
   CAUTION:
   Do not damage gear carrier.

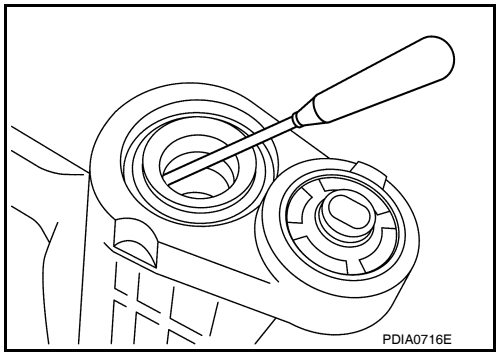

8. Remove the drive pinion front bearing inner race.
9. Remove the drive pinion front and rear bearing outer races by tapping them uniformly using suitable tool.
   CAUTION:
   Do not damage gear carrier.

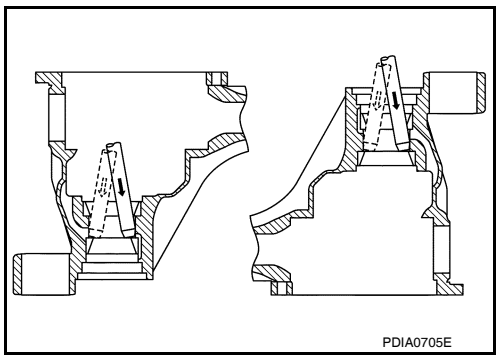

INSPECTION AFTER DISASSEMBLY

Clean the disassembled parts. Then inspect the parts for wear or damage. If wear or damage are found, follow the measures below.

Drive Pinion and Drive Gear
- If the drive pinion and drive gear teeth do not mesh or line-up correctly, determine the cause and adjust, repair, or replace as necessary.
- If the drive pinion or drive gear are worn, cracked, damaged, pitted or chipped (by friction) noticeably, replace with new drive pinion and drive gear.
- Drive pinion and drive gear are supplied in matched sets only. Matching numbers on both drive pinion and drive gear are etched for verification. If a new drive pinion and drive gear set are being used, verify the numbers of each drive pinion and drive gear before proceeding with assembly.

Bearing
- If bearings are chipped (by friction), pitted, worn, rusted, scratched, or unusual noise is coming from bearing, replace with new bearing assembly (as a new set).
- Bearing must be replaced with a new one whenever disassembled.

Side Gear and Pinion Mate Gear
- If any cracks or damage are found on the surface of the teeth, replace with new one.
- If any worn or chipped marks are found on the side of the side gear and pinion mate gear which contact the thrust washer, replace with new one.
- Replace both side gear and pinion mate gear as a set when replacing side gear or pinion mate gear.

Side Gear Thrust Washer and Pinion Mate Thrust Washer
- If any chips (by friction), damage, or unusual wear are found, replace with new one.

Gear Carrier
- If any wear or cracks are found on the contact sides of gear carrier, replace with new one.

Companion Flange
- If any chips (about 0.1mm, 0.004 in) or other damage on the companion flange surface which contacts the front oil seal lips are found, replace with new one.

ADJUSTING AND SELECTING WASHERS

Side Gear Back Clearance
- Assemble the differential parts if they are disassembled. Refer to DLN-355, "Exploded View".

1. Place the differential case straight up so that the side gear to be measured is upward.

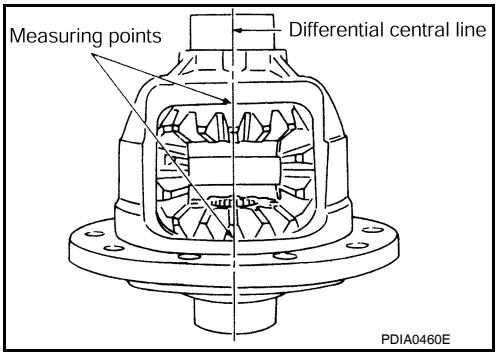

2. Using feeler gauges, measure the clearance between the side gear back and differential case at three different points, while rotating the side gear. Average the three readings to calculate the clearance. (Measure the clearance of the other side as well.)

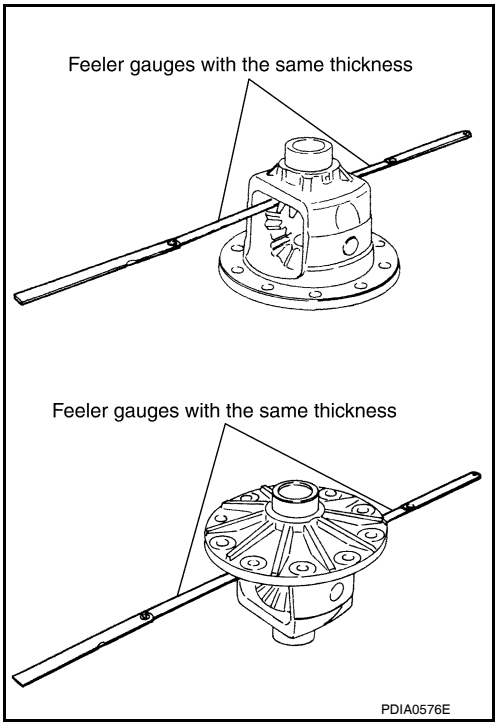

Side gear back clearance: **Refer to DLN-374, "Inspection and Adjustment"**

- If the side gear back clearance is outside of the specification, use a thicker or thinner side gear thrust washer to adjust. Refer to DLN-374, "Inspection and Adjustment".

If the side gear back clearance is greater than specification:

Use a thicker side gear thrust washer.

If the side gear back clearance is less than specification:

Use a thinner side gear thrust washer.

CAUTION:
- **Insert feeler gauges with the same thickness on both sides to prevent side gear from tilting.**
- **Each gear should rotate smoothly without excessive resistance during differential motion.**
- **Select a side gear thrust washer for right and left individually.**

NOTE:
Side gear back clearance is clearance between side gear and differential case for adjusting side gear backlash.

Drive Pinion Height

1. Make sure all parts are clean and that the bearings are well lubricated.
2. Assemble the drive pinion bearings onto the Tool.

Tool number : — (J-34309)

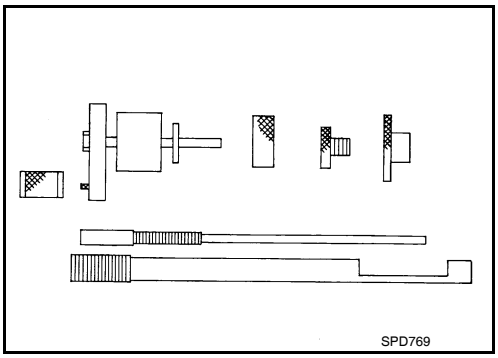

- **Drive pinion front bearing;** make sure the J-34309-3 drive pinion front bearing seat is secured tightly against the J-34309-2 gauge anvil. Then turn the J-34309-7 drive pinion front bearing pilot to secure the drive pinon front bearing in its proper position.
- **Drive pinion rear bearing;** the J-34309-8 drive pinion rear bearing pilot is used to center the drive pinion rear bearing only. The J-34309-4 drive pinion rear bearing locking seat is used to lock the drive pinion rear bearing to the assembly.
- **Installation of J-34309-9 and J-34309-16;** place a suitable 2.5 mm (0.098 in) thick plain washer between J-34309-9 and J-34309-16. Both surfaces of J-34309-9 and J-34309-16 must be parallel with a clearance of 2.5 mm (0.098 in).

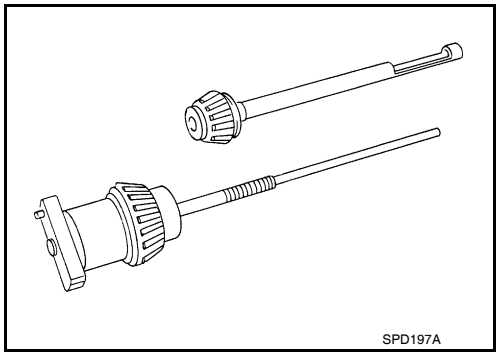

3. Install the drive pinion rear bearing inner race into the gear carrier. Then insert the drive pinion height adjusting washer selector tool, J-34309-1, gauge screw assembly.

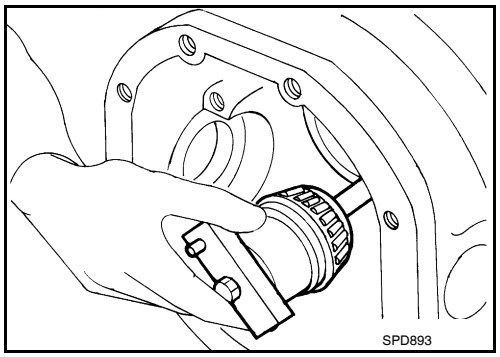

4. Assemble the drive pinion front bearing inner race and the J-34309-2 gauge anvil. Assemble them together with the J-34309-1 gauge screw in the gear carrier. Make sure that the drive pinion height gauge plate, J-34309-16, will turn a full 360°. Tighten the two sections together by hand.

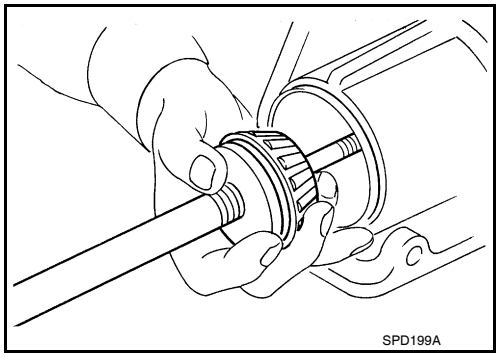

5. Turn the assembly several times to seat the drive pinon bearings.

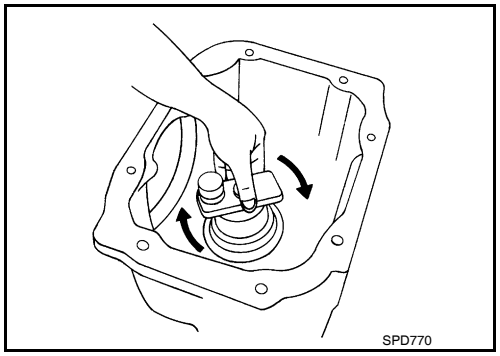

6. Measure the turning torque at the end of the J-34309-2 gauge anvil using Tool.

Tool number : ST3127S000 (J-25765- A)

Turning torque specification:
1.0 - 1.6 N·m (0.11 - 0.16 kg-m, 9 - 14 in-lb)

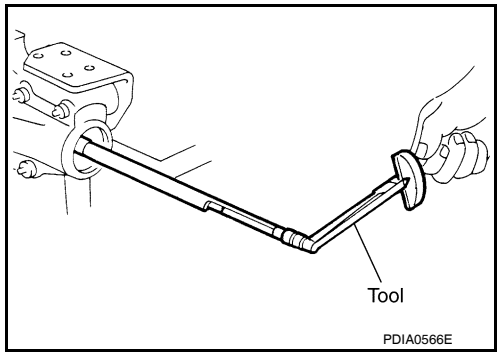

7. Place the J-34309-10 “R180A” drive pinion height adapter onto the gauge plate and tighten it by hand.
CAUTION:
Make sure all machined surfaces are clean.

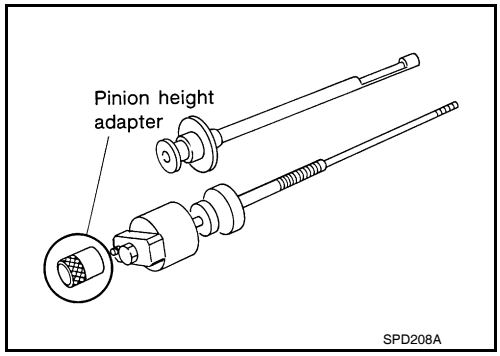

8. Position the side bearing discs, Tool, and arbor firmly into the side bearing bores. Install the side bearing caps and tighten the side bearing cap bolts to the specified torque. Refer to DLN-355, "Exploded View".

Tool number : — (J-25269-18)

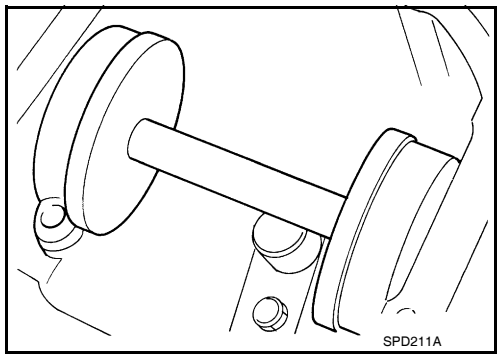

9. Select the correct standard drive pinion height adjusting washer thickness. Select by using a standard gauge of 3 mm (0.12 in) and your J-34309-101 feeler gauge. Measure the distance between the J-34309-10 drive pinion height adapter, including the standard gauge and the arbor.

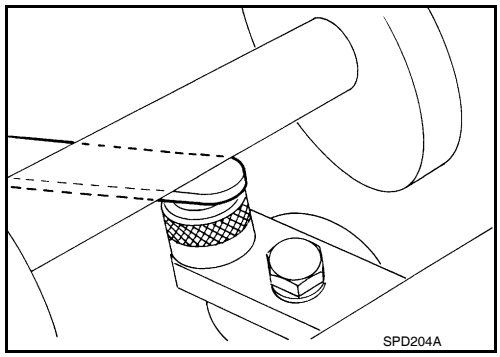

10. Write down the exact measurement (the value of feeler gauge).

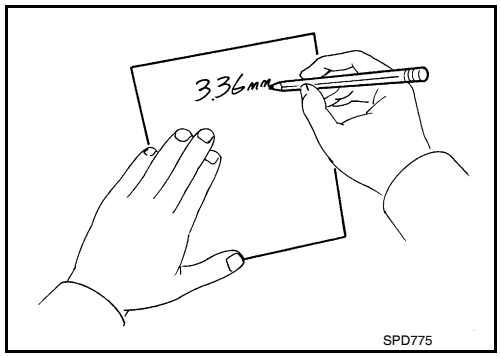

11. Correct the drive pinion height adjusting washer size by referring to the drive pinion “head number”.
There are two numbers painted on the drive pinion. The first one refers to the drive pinion and drive gear as a matched set. This number should be the same as the number on the drive gear. The second number is the drive pinion “head number”. It refers to the ideal drive pinion height from standard for quietest operation. Use the following chart to determine the correct drive pinion height adjusting washer.

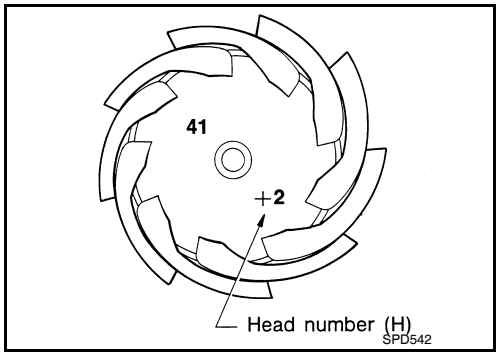

Head number	Add or remove from the standard drive pinion height adjusting washer thickness measurement
- 6	Add 0.06 mm (0.0024 in)
- 5	Add 0.05 mm (0.0020 in)
- 4	Add 0.04 mm (0.0016 in)
- 3	Add 0.03 mm (0.0012 in)
- 2	Add 0.02 mm (0.0008 in)
- 1	Add 0.01 mm (0.0004 in)
0	Use the selected washer thickness
+1	Subtract 0.01 mm (0.0004 in)
+2	Subtract 0.02 mm (0.0008 in)
+3	Subtract 0.03 mm (0.0012 in)
+4	Subtract 0.04 mm (0.0016 in)
+5	Subtract 0.05 mm (0.0020 in)
+6	Subtract 0.06 mm (0.0024 in)

12. Select the correct drive pinion height adjusting washer. Refer to DLN-374, "Inspection and Adjustment".
13. Remove the Tool from the gear carrier and disassemble to retrieve the drive pinion bearings.

Tool number : — (J-34309)

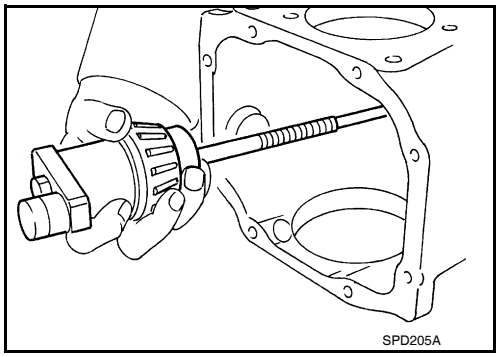

ASSEMBLY

Drive Pinion Assembly

1. Install drive pinion rear bearing outer race and drive pinion front bearing outer race using Tools.

Tool number **A: ST30611000 (J-25742-1)**
B: ST30613000 (J-25742-3)
C: KV38100200 (J-26233)

CAUTION:
- **First tap the drive pinion bearing outer race until it becomes flush with the gear carrier.**
- **Do not reuse drive pinion front and rear bearing outer race.**

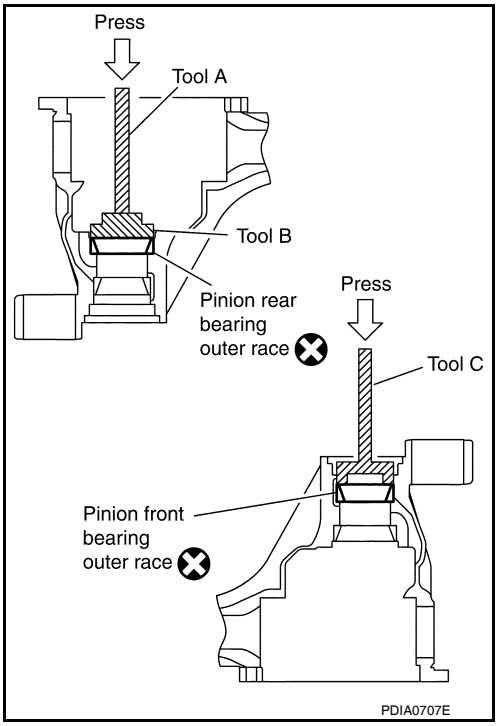

2. Select drive pinion height adjusting washer. Refer to DLN-374, "Inspection and Adjustment".
3. Install the selected drive pinion height adjusting washer to the drive pinion. Press the drive pinion rear bearing inner race to it using Tool.

Tool number **: ST30901000 (J-26010-01)**

CAUTION:
- **Install the drive pinion height adjusting washer in the proper direction as shown.**
- **Do not reuse drive pinion rear bearing inner race.**

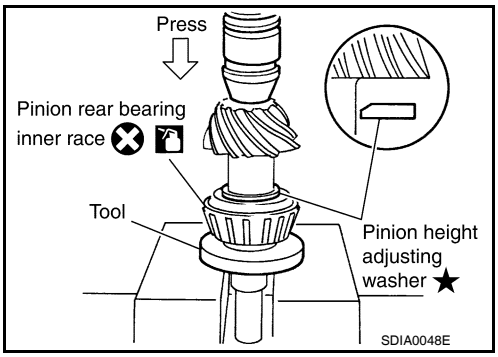

4. Install the collapsible spacer to the drive pinion.
CAUTION:
Do not reuse collapsible spacer.
5. Apply differential gear oil to the drive pinion rear bearing, and install the drive pinion assembly to the gear carrier.
6. Apply differential gear oil to the drive pinion front bearing, and install the drive pinion front bearing inner race to the drive pinion assembly.
CAUTION:
Do not reuse drive pinion front bearing inner race.

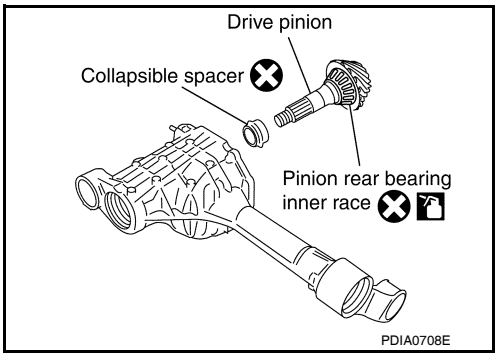

7. Press the drive pinion front bearing inner race to the drive pinion as far as drive pinion lock nut can be tightened using Tool.

Tool number : ST33200000 (J-26082)

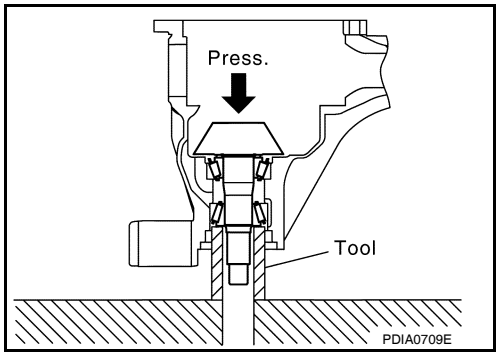

8. Apply multi-purpose grease to the lips and differential gear oil to the circumference of the new front oil seal. Then drive the new front oil seal in evenly until it becomes flush with the gear carrier using Tools.

Tool number A: ST30720000 (J-25405)
B: ST27863000 (—)

CAUTION:
- **Do not reuse front oil seal.**
- **Do not incline the new front oil seal when installing.**
- **Apply multi-purpose grease to the lips and differential gear oil to the circumference of the new front oil seal.**

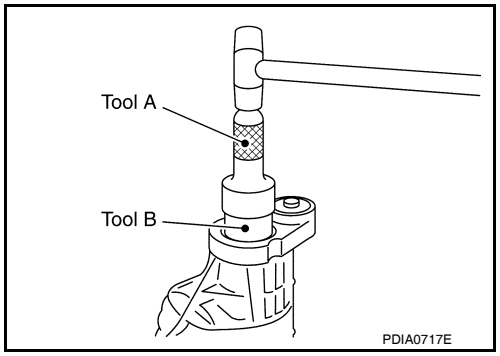

9. Install the companion flange to the drive pinion while aligning the matching marks.
10. Apply anti-corrosive oil to the threads of the drive pinion and the seating surface of the new drive pinion lock nut. Then adjust the drive pinion lock nut tightening torque using suitable tool A, and check the drive pinion bearing preload torque using Tool B.

Tool number B: ST3127S000 (J-25765-A)

Drive pinion bearing preload torque Refer to DLN-374, "Inspection and Adjustment"

CAUTION:
- **Do not reuse drive pinion lock nut.**
- **Apply anti-corrosive oil to the threads of the drive pinion and the seating surface of the new drive pinion lock nut.**
- **Adjust the drive pinion lock nut tightening torque to the lower limit first. Do not exceed the drive pinion lock nut specified torque. Refer to DLN-355, "Exploded View".**
- **If the drive pinion bearing preload torque exceeds the specified value, replace collapsible spacer and tighten it again to adjust. Do not loosen drive pinion lock nut to adjust the drive pinion bearing preload torque.**
- **After adjustment, rotate drive pinion back and forth 2 to 3 times to check for unusual noise, rotation malfunction, and other malfunctions.**

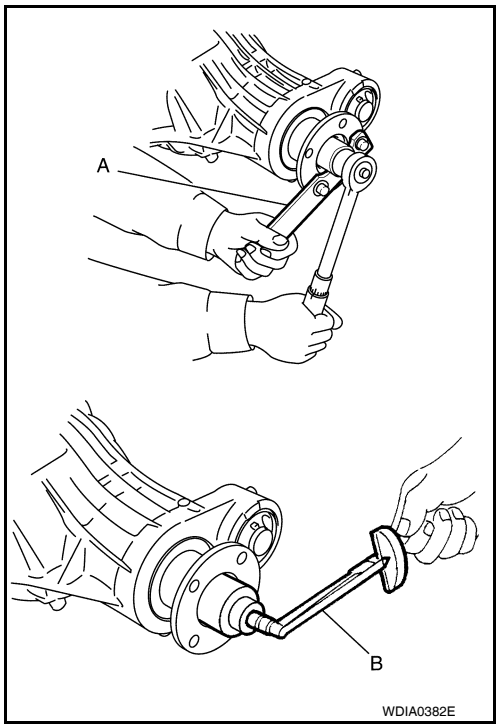

11. Check companion flange runout. Refer to DLN-374, "Inspection and Adjustment".
12. Install the differential case assembly.

Differential Assembly

1. Install side gear thrust washers with the same thickness as the ones installed prior to disassembly, or reinstall the old ones on the side gears.

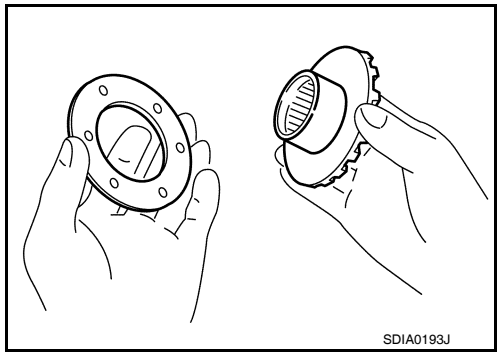

2. Install the side gears and side gear thrust washers into the differential case.
3. Install the pinion mate thrust washers to the two pinion mate gears. Then install the pinion mate gears with the pinion mate thrust washers by aligning them in diagonally opposite positions and rotating them into the differential case.

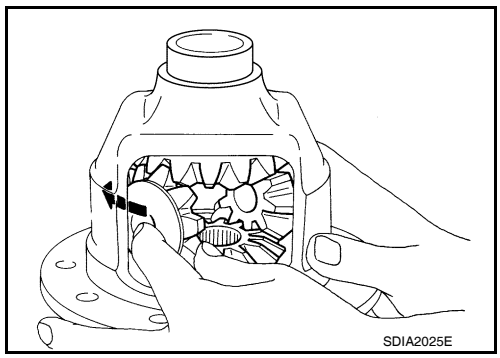

4. Install the pinion mate shaft and align the lock pin hole on the pinion mate shaft with the lock pin hole on the differential case.
5. Measure the side gear end play. If necessary, select the appropriate side gear thrust washers. Refer to DLN-374, "Inspection and Adjustment".

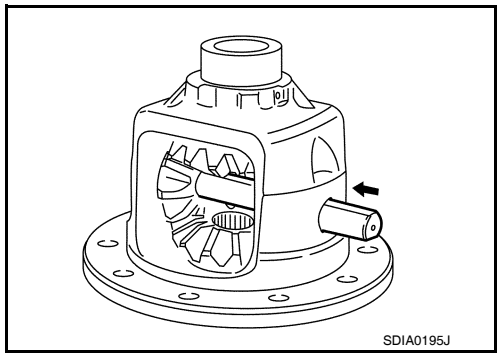

6. Drive a new lock pin into the pinion mate shaft until it is flush with the differential case using suitable tool.
CAUTION:
Do not reuse lock pin.

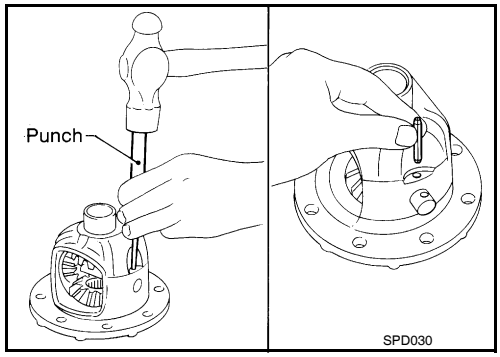

7. Align the matching mark of the differential case with the mark of the drive gear, then place the drive gear onto the differential case.

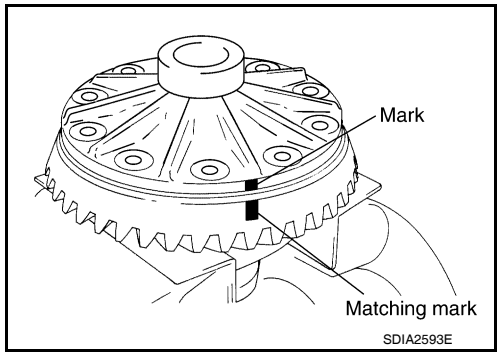

8. Apply thread locking sealant into the threaded holes of the drive gear and install the new drive gear bolts.
   - Use Genuine High Strength Thread Locking Sealant or equivalent. Refer to GI-14, "Recommended Chemical Products and Sealants".

   CAUTION:
   Make sure the drive gear back and threaded holes are clean.

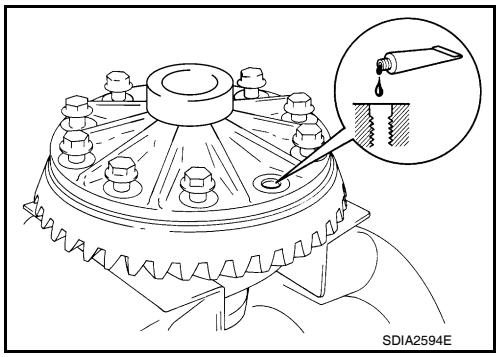

9. Tighten the new drive gear bolts to the specified torque. Refer to DLN-355, "Exploded View". After tightening the new drive gear bolts to the specified torque, tighten an additional 34° to 39° using Tool (A).

   Tool number A: KV10112100-A (BT-8653-A)

   CAUTION:
   - **Always use Tool. Avoid tightening based on visual check alone.**
   - **Tighten new drive gear bolts in a crisscross pattern.**

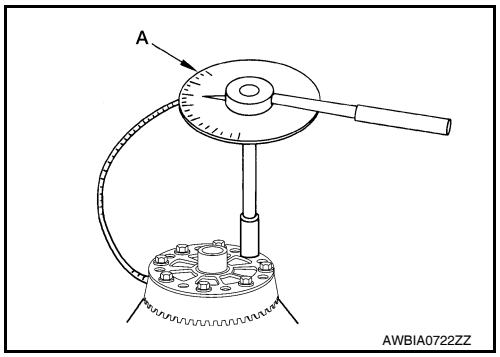

10. Press the new side bearing inner races to the differential case using Tools.

    Tool number A: ST33230000 (J-35867)
    B: ST33061000 (J-8107-2)

    CAUTION:
    Do not reuse side bearing inner races.

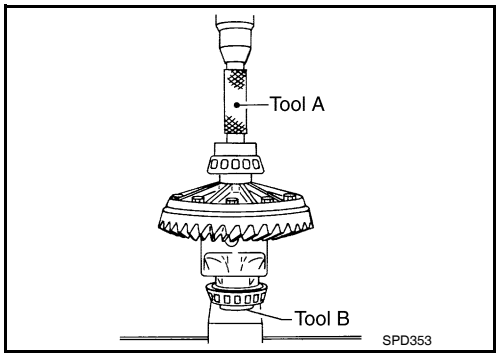

11. Install housing spacer into gear carrier.
12. Apply differential gear oil to the side bearings, and install the differential case assembly with the side bearing outer races into the gear carrier.

    CAUTION:
    Do not reuse side bearing outer race when replacing side bearing inner race (replace as a set).

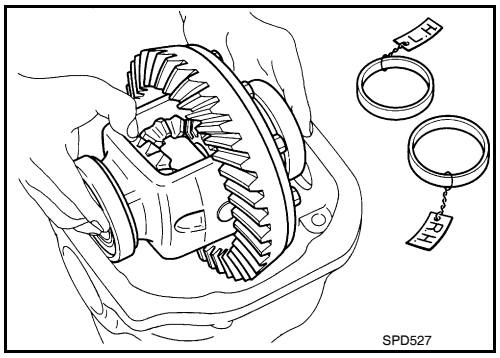

13. Insert left and right original side bearing adjusting washers in place between side bearings and gear carrier using Tool.

Tool number : KV38100600 (J-25267)

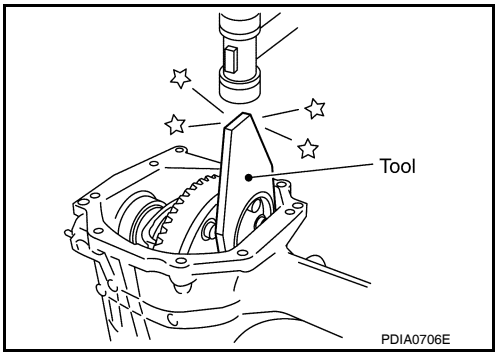

14. Install the side bearing caps with the matching marks aligned and tighten the side bearing cap bolts to the specified torque. Refer to DLN-355, "Exploded View".

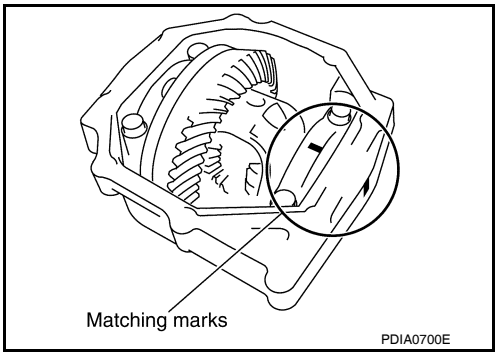

15. Apply multi-purpose grease to the lips and differential gear oil to the circumference of the new side oil seal. Then drive the new side oil seal in evenly until it becomes flush with the gear carrier using Tools.

Tool number A: ST30720000 (J-25405)
B: ST27863000 (—)

CAUTION:
- **Do not reuse side oil seal.**
- **Do not incline the new side oil seal when installing.**
- **Apply multi-purpose grease to the lips and differential gear oil to the circumference of the new side oil seal.**

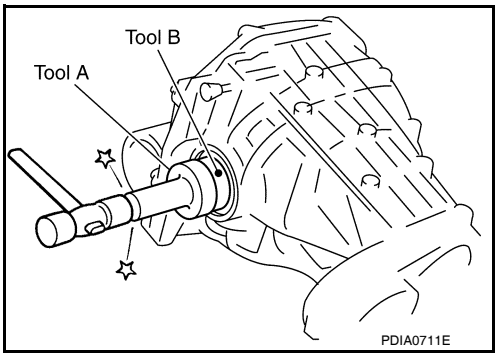

16. Check and adjust tooth contact, backlash, drive gear runout and total preload torque. Refer to DLN-374, "Inspection and Adjustment".
Recheck above items.

17. Apply a 3 mm (0.12 in) bead of sealant to the mating surface of the carrier cover as shown.
- Use Genuine Silicone RTV or equivalent. Refer to GI-14, "Recommended Chemical Products and Sealants".

CAUTION:
Remove any old sealant adhering to the mating surfaces. Also remove any moisture, oil, or foreign material adhering to the application and mating surfaces.

18. Install the carrier cover to the gear carrier. Tighten the bolts to the specified torque. Refer to DLN-355, "Exploded View".

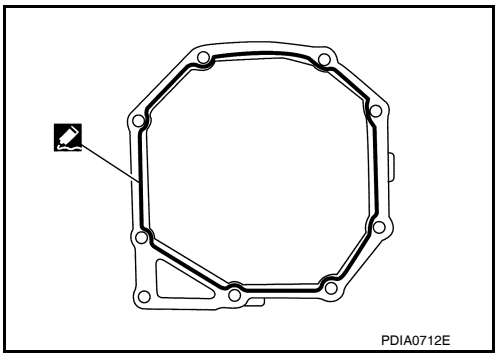

Differential side shaft

1. Press differential side shaft bearing to differential side shaft.
   CAUTION:
   Do not reuse differential side shaft bearing.
2. Install snap ring (differential side shaft side).
3. Install differential side shaft assembly into gear carrier.
4. Install snap ring (hole side).

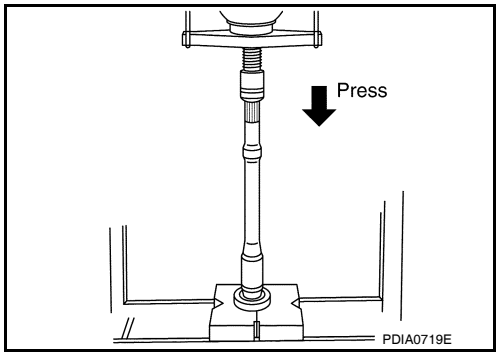

5. Apply multi-purpose grease to the lips and differential gear oil to the circumference of the new side oil seal. Then drive the new side oil seal in evenly until it becomes flush with the gear carrier using Tools.

   Tool number **A: ST30720000 (J-25405)**
   B: ST27863000 (—)

   CAUTION:
   - **Do not reuse side oil seal.**
   - **Do not incline the new side oil seal when installing.**
   - **Apply multi-purpose grease to the lips and differential gear oil to the circumference of the new side oil seal.**

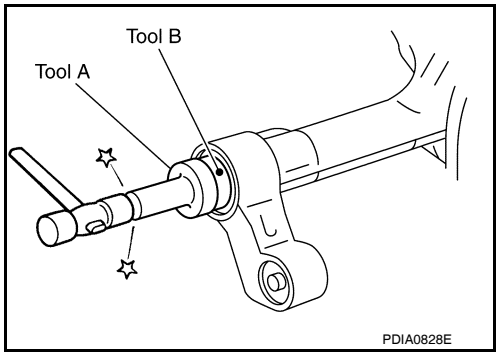

SERVICE DATA AND SPECIFICATIONS (SDS)

SERVICE DATA AND SPECIFICATIONS (SDS)

General Specification

INFOID:0000000005258482

Applied model	VQ40DE
Final drive model	R180A
Gear ratio	3.357
Number of teeth (Drive gear/Drive pinion)	47/14
Differential gear oil capacity (Approx.)	0.85 ℓ (1-3/4 US pt, 1-1/2 Imp pt)
Number of pinion gears	2
Drive pinion adjustment spacer type	Collapsible

Inspection and Adjustment

INFOID:0000000005258483

DRIVE GEAR RUNOUT

Unit: mm (in)

Item	Runout limit
Drive gear back face	0.08 (0.0031) or less

SIDE GEAR CLEARANCE

Unit: mm (in)

Item	Specification
Side gear back clearance (Clearance between side gear and differential case for adjusting side gear backlash)	0.1 (0.004) or less (Each gear should rotate smoothly without excessive resistance during differential motion.)

PRELOAD TORQUE

Unit: N·m (kg-m, in-lb)

Item	Specification
Drive pinion bearing preload torque	1.08 - 1.66 (0.11 - 0.16, 10 - 14)
Side bearing preload torque	0.59 - 1.08 (0.06 - 0.11, 6 - 9)
Total preload torque (Total preload torque = drive pinion bearing preload torque + side bearing preload torque).	1.67 - 2.74 (0.17 - 0.27, 15 - 24)

BACKLASH

Unit: mm (in)

Item	Specification
Drive gear to drive pinion backlash	0.10 - 0.15 (0.0039 - 0.0059)

COMPANION FLANGE RUNOUT

Unit: mm (in)

Item	Runout limit
Companion flange face	0.1 (0.004) or less
Companion flange inner side	0.1 (0.004) or less

SELECTIVE PARTS

Drive Pinion Height Adjusting Washer

Unit: mm (in)

Thickness	Part number*	Thickness	Part number*
3.09 (0.1217)	38154 EA000	3.39 (0.1335)	38154 EA010
3.12 (0.1228)	38154 EA001	3.42 (0.1346)	38154 EA011
3.15 (0.1240)	38154 EA002	3.45 (0.1358)	38154 EA012
3.18 (0.1252)	38154 EA003	3.48 (0.1370)	38154 EA013
3.21 (0.1264)	38154 EA004	3.51 (0.1382)	38154 EA014
3.24 (0.1276)	38154 EA005	3.54 (0.1394)	38154 EA015
3.27 (0.1287)	38154 EA006	3.57 (0.1406)	38154 EA016
3.30 (0.1299)	38154 EA007	3.60 (0.1417)	38154 EA017
3.33 (0.1311)	38154 EA008	3.63 (0.1429)	38154 EA018
3.36 (0.1323)	38154 EA009	3.66 (0.1441)	38154 EA019

*: Always check with the Parts Department for the latest parts information.

Side Gear Thrust Washer

Unit: mm (in)

Thickness	Part number*	Thickness	Part number*
0.75 (0.0295)	38424 W2010	0.87 (0.0343)	38424 W2014
0.78 (0.0307)	38424 W2011	0.90 (0.0354)	38424 W2015
0.81 (0.0319)	38424 W2012	0.93 (0.0366)	38424 W2016
0.84 (0.0331)	38424 W2013	0.96 (0.0378)	38424 W2017

*: Always check with the Parts Department for the latest parts information.

Side Bearing Adjusting Washer

Unit: mm (in)

Thickness	Part number*	Thickness	Part number*
1.95 (0.0768)	38453 EA000	2.35 (0.0925)	38453 EA008
2.00 (0.0787)	38453 EA001	2.40 (0.0945)	38453 EA009
2.05 (0.0807)	38453 EA002	2.45 (0.0965)	38453 EA010
2.10 (0.0827)	38453 EA003	2.50 (0.0984)	38453 EA011
2.15 (0.0846)	38453 EA004	2.55 (0.1004)	38453 EA012
2.20 (0.0866)	38453 EA005	2.60 (0.1024)	38453 EA013
2.25 (0.0886)	38453 EA006	2.65 (0.1043)	38453 EA014
2.30 (0.0906)	38453 EA007		

*: Always check with the Parts Department for the latest parts information.

PRECAUTION

PRECAUTIONS

Precaution for Supplemental Restraint System (SRS) "AIR BAG" and "SEAT BELT PRE-TENSIONER"

INFOID:0000000005550726

The Supplemental Restraint System such as “AIR BAG” and “SEAT BELT PRE-TENSIONER”, used along with a front seat belt, helps to reduce the risk or severity of injury to the driver and front passenger for certain types of collision. This system includes seat belt switch inputs and dual stage front air bag modules. The SRS system uses the seat belt switches to determine the front air bag deployment, and may only deploy one front air bag, depending on the severity of a collision and whether the front occupants are belted or unbelted.
Information necessary to service the system safely is included in the SR and SB section of this Service Manual.

WARNING:
- **To avoid rendering the SRS inoperative, which could increase the risk of personal injury or death in the event of a collision which would result in air bag inflation, all maintenance must be performed by an authorized NISSAN/INFINITI dealer.**
- **Improper maintenance, including incorrect removal and installation of the SRS, can lead to personal injury caused by unintentional activation of the system. For removal of Spiral Cable and Air Bag Module, see the SR section.**
- **Do not use electrical test equipment on any circuit related to the SRS unless instructed to in this Service Manual. SRS wiring harnesses can be identified by yellow and/or orange harnesses or harness connectors.**

PRECAUTIONS WHEN USING POWER TOOLS (AIR OR ELECTRIC) AND HAMMERS

WARNING:
- **When working near the Airbag Diagnosis Sensor Unit or other Airbag System sensors with the Ignition ON or engine running, DO NOT use air or electric power tools or strike near the sensor(s) with a hammer. Heavy vibration could activate the sensor(s) and deploy the air bag(s), possibly causing serious injury.**
- **When using air or electric power tools or hammers, always switch the Ignition OFF, disconnect the battery, and wait at least 3 minutes before performing any service.**

Precaution Necessary for Steering Wheel Rotation After Battery Disconnect

INFOID:0000000005550727

NOTE:
- This Procedure is applied only to models with Intelligent Key system and NATS (NISSAN ANTI-THEFT SYSTEM).
- Remove and install all control units after disconnecting both battery cables with the ignition knob in the ″LOCK″ position.
- Always use CONSULT-III to perform self-diagnosis as a part of each function inspection after finishing work. If DTC is detected, perform trouble diagnosis according to self-diagnostic results.

For models equipped with the Intelligent Key system and NATS, an electrically controlled steering lock mechanism is adopted on the key cylinder.
For this reason, if the battery is disconnected or if the battery is discharged, the steering wheel will lock and steering wheel rotation will become impossible.
If steering wheel rotation is required when battery power is interrupted, follow the procedure below before starting the repair operation.

OPERATION PROCEDURE

1. Connect both battery cables.
   NOTE:
   Supply power using jumper cables if battery is discharged.
2. Use the Intelligent Key or mechanical key to turn the ignition switch to the ″ACC″ position. At this time, the steering lock will be released.
3. Disconnect both battery cables. The steering lock will remain released and the steering wheel can be rotated.
4. Perform the necessary repair operation.

5. When the repair work is completed, return the ignition switch to the ″LOCK″ position before connecting the battery cables. (At this time, the steering lock mechanism will engage.)
6. Perform a self-diagnosis check of all control units using CONSULT-III.

Precaution for Servicing Front Final Drive

INFOID:0000000005258484

- Before starting diagnosis of the vehicle, understand the symptoms well. Perform correct and systematic operations.
- Check for the correct installation status prior to removal or disassembly. When matching marks are required, be certain they do not interfere with the function of the parts they are applied to.
- Overhaul should be done in a clean work area, a dust proof area is recommended.
- Before disassembly, completely remove sand and mud from the exterior of the unit, preventing them from entering into the unit during disassembly or assembly.
- Always use shop paper for cleaning the inside of components.
- Avoid using cotton gloves or a shop cloth to prevent the entering of lint.
- Check appearance of the disassembled parts for damage, deformation, and abnormal wear. Replace them with new ones if necessary.
- Gaskets, seals and O-rings should be replaced any time the unit is disassembled.
- Clean and flush the parts sufficiently and blow them dry.
- Be careful not to damage sliding surfaces and mating surfaces.
- When applying sealant, remove the old sealant from the mating surface; then remove any moisture, oil, and foreign materials from the application and mating surfaces.
- In principle, tighten nuts or bolts gradually in several steps working diagonally from inside to outside. If a tightening sequence is specified, observe it.
- During assembly, observe the specified tightening torque.
- Add new differential gear oil, petroleum jelly, or multi-purpose grease, as specified.

PREPARATION

PREPARATION

Special Service Tool

INFOID:0000000005258485

The actual shapes of Kent-Moore tools may differ from those of special service tools illustrated here.

Tool number (Kent-Moore No.) Tool name	Description
ST35271000 (—) Drift 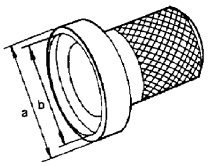 ZZA0702D	Installing drive pinion front bearing outer race. **a: 72 mm (2.83 in) dia.** **b: 36 mm (1.42 in) dia.**
KV10111100 (J-37228) Seal cutter 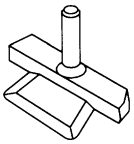 NT046	Removing carrier cover
KV38100500 (J-25273) Drift 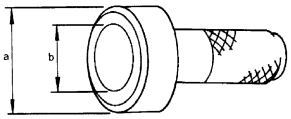 ZZA0811D	Installing front oil seal. **a: 80 mm (3.15 in) dia.** **b: 60 mm (2.36 in) dia.**
ST30021000 (—) Puller 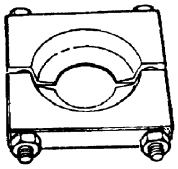 ZZA0700D	• Removing side bearing inner race. • Removing drive pinion rear bearing inner race.
KV38100300 (J-25523) Drift 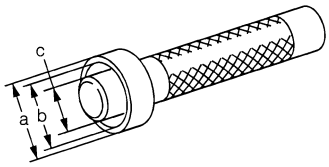 ZZA1046D	Installing side bearing inner race. **a: 54 mm (2.13 in) dia.** **b: 46 mm (1.81 in) dia.** **c: 32 mm (1.26 in) dia.**
ST30901000 (—) Drift 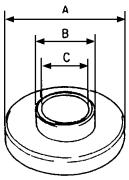 SDIA0217J	Installing drive pinion rear bearing outer race. **A: 79 mm (3.11 in) dia.** **B: 45 mm (1.77 in) dia.** **C: 35.2 mm (1.39 in) dia.**

Tool number (Kent-Moore No.) Tool name	Description
KV40104810 (—) Drift 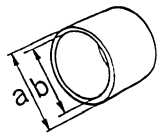 ZZA1003D	Installing drive pinion front bearing outer race. **a: 68 mm (2.68 in) dia.** **b: 55 mm (2.17 in) dia.**
KV38102200 (—) Drift 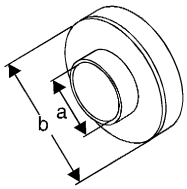 NT660	Installing front oil seal. **a: 90 mm (3.54 in) dia**. **b: 55.3 mm (2.18 in) dia.**
ST33081000 (—) Adapter 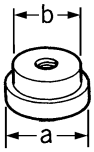 ZZA1000D	Removing and installing side bearing inner race. **a: 43 mm (1.69 in) dia**. **b: 33.5 mm (1.32 in) dia.**
ST3127S000 (J-25765-A) Preload gauge 1. GG91030000 (J-25765) Torque wrench 2. HT62940000 (—) Socket adapter (1/2″) 3. HT62900000 (—) Socket adapter (3/8″) 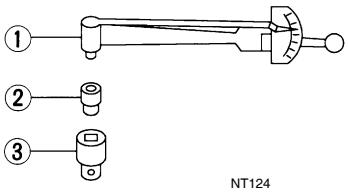 NT124	Inspecting drive pinion bearing preload and total preload
— (C-4040) Installer 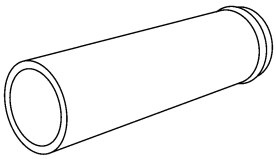 SDIA2607E	Installing drive pinion rear bearing inner race.
KV40105230 (—) Drift 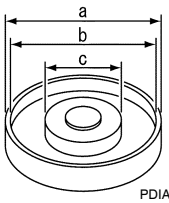 PDIA0591E	Installing drive pinion rear bearing outer race. **a: 92 mm (3.62 in) dia.** **b: 86 mm (3.39 in) dia.** **c: 45 mm (1.77 in) dia.**

Tool number (Kent-Moore No.) Tool name	Description
— (C-4171) Handle 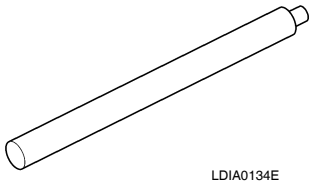 LDIA0134E	• Removing drive pinion front bearing outer race • Removing drive pinion rear bearing outer race
— (D-103) Remover 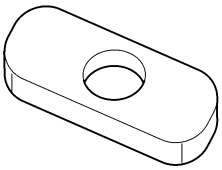 LDIA0135E	Removing drive pinion front bearing outer race
— (C-4307) Remover 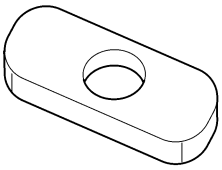 LDIA0135E	Removing drive pinion rear bearing outer race
(SP8P) Slide hammer 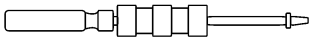 LDIA0133E	• Removing front oil seal • Removing side oil seal

Commercial Service Tool

INFOID:0000000005258486

(Kent-Moore No.) Tool name	Description
Power tool 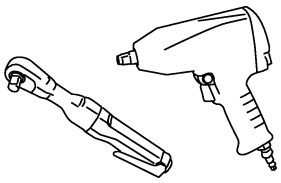 PBIC0190E	Loosening bolts and nuts

FUNCTION DIAGNOSIS

NOISE, VIBRATION AND HARSHNESS (NVH) TROUBLESHOOTING

NVH Troubleshooting Chart

INFOID:0000000005258487

Use the chart below to help you find the cause of the symptom. If necessary, repair or replace these parts.

Reference page		DLN-390	DLN-390	DLN-390	DLN-390	DLN-390	DLN-382	DLN-313, "NVH Troubleshooting Chart" DLN-323, "NVH Troubleshooting Chart" DLN-334, "NVH Troubleshooting Chart"	FAX-5, "NVH Troubleshooting Chart"	FSU-5, "NVH Troubleshooting Chart"	WT-46, "NVH Troubleshooting Chart"	WT-46, "NVH Troubleshooting Chart"	FAX-5, "NVH Troubleshooting Chart"	BR-6, "NVH Troubleshooting Chart"	ST-12, "NVH Troubleshooting Chart"
Possible cause and SUSPECTED PARTS		Gear tooth rough	Gear contact improper	Tooth surfaces worn	Incorrect backlash	Companion flange excessive runout	Gear oil improper	PROPELLER SHAFT	FRONT AXLE	FRONT SUSPENSION	TIRES	ROAD WHEEL	DRIVE SHAFT	BRAKES	STEERING
Symptom	Noise	×	×	×	×	×	×	×	×	×	×	×	×	×	×

×: Applicable

ON-VEHICLE MAINTENANCE

DIFFERENTIAL GEAR OIL

Changing Differential Gear Oil

INFOID:0000000005258488

DRAINING

1. Stop the engine.
2. Remove the drain plug from the front final drive assembly to drain the differential gear oil.
3. Install the drain plug with sealant applied on the threads to the front final drive assembly. Tighten to the specified torque. Refer to DLN-390, "Disassembly and Assembly".
   - Use High Performance Thread Sealant or equivalent. Refer to GI-14, "Recommended Chemical Products and Sealants".

FILLING

1. Remove the filler plug from the front final drive assembly.
2. Fill the front final drive assembly with new differential gear oil until the level reaches the specified level near the filler plug hole.

Differential gear oil grade and capacity	**: Refer to MA-16, "For North America".**

3. Install the filler plug with sealant applied on the threads to the front final drive assembly. Tighten to the specified torque. Refer to DLN-390, "Disassembly and Assembly".
   - Use High Performance Thread Sealant or equivalent. Refer to GI-14, "Recommended Chemical Products and Sealants".

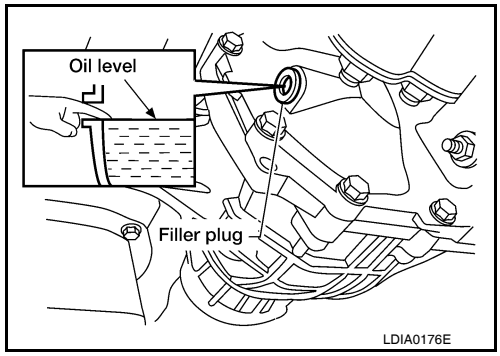

Checking Differential Gear Oil

INFOID:0000000005258489

DIFFERENTIAL GEAR OIL LEAKAGE AND LEVEL

1. Make sure that differential gear oil is not leaking from the front final drive assembly or around it.
2. Check the differential gear oil level from the filler plug hole as shown.
   CAUTION:
   Do not start engine while checking differential gear oil level.
3. Install the filler plug with sealant applied on the threads to the front final drive assembly. Tighten to the specified torque. Refer to DLN-390, "Disassembly and Assembly".
   - Use High Performance Thread Sealant or equivalent. Refer to GI-14, "Recommended Chemical Products and Sealants".

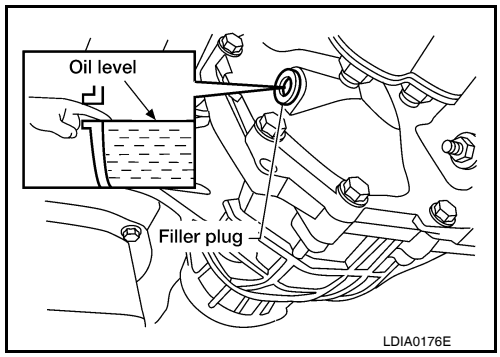

ON-VEHICLE REPAIR

SIDE OIL SEAL

Removal and Installation

INFOID:0000000005258490

REMOVAL

1. Remove the front final drive assembly. Refer to DLN-387, "Removal and Installation".
2. Remove the differential side shaft and differential side flange using suitable tool.

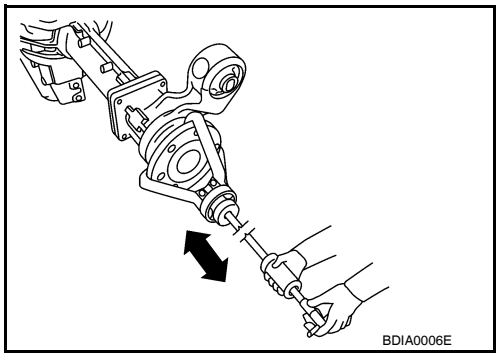

3. Place a small hole in the side oil seal case using suitable tool.

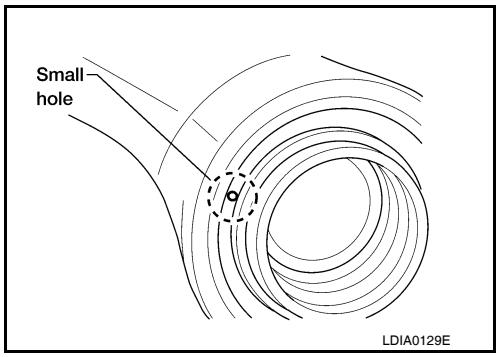

4. Remove the side oil seal using Tool as shown.

Tool number : SP8P

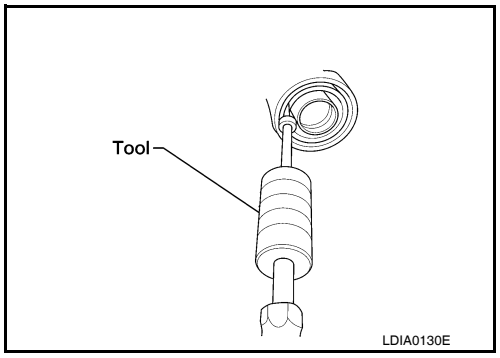

INSTALLATION

1. Apply multi-purpose grease to the lips of the new side oil seal. Then drive the new side oil seal in evenly to the gear carrier using suitable tool.
   CAUTION:
   - **Do not reuse side oil seal.**
   - **Do not incline the new side oil seal when installing.**
   - **Apply multi-purpose grease to the lips of the new side oil seal.**
2. Installation of the remaining components is in the reverse order of removal.
   CAUTION:
   Check the differential gear oil level after installation. Refer to DLN-382.

FRONT OIL SEAL

Removal and Installation

INFOID:0000000005258491

REMOVAL

1. Remove the drive shafts from the front final drive assembly. Refer to FAX-7, "VQ40DE : Removal and Installation".
2. Remove the front propeller shaft from the front final drive assembly. Refer to DLN-315, "Removal and Installation".
3. Measure the total preload torque. Refer to DLN-390, "Disassembly and Assembly".
   NOTE:
   Record the total preload torque measurement.
4. Remove the drive pinion lock nut using suitable tool.
5. Put matching marks on the companion flange and drive pinion using paint.
   CAUTION:
   Use paint to make the matching marks. Do not damage the companion flange or drive pinion.

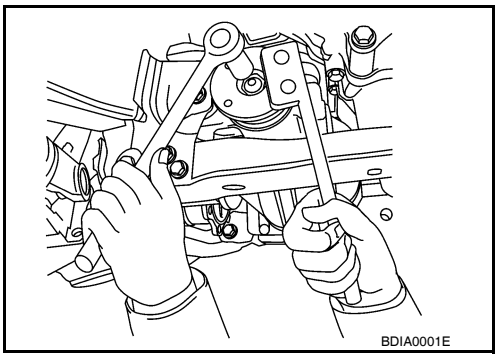

6. Remove companion flange using suitable tool.

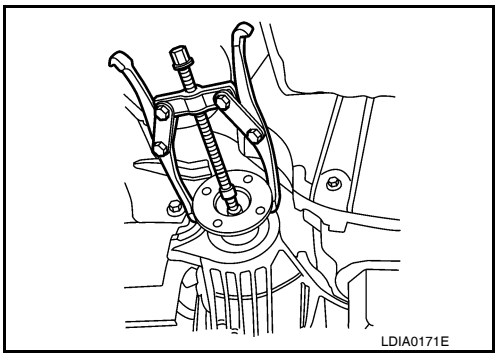

7. Place a small hole in the front oil seal case using suitable tool.

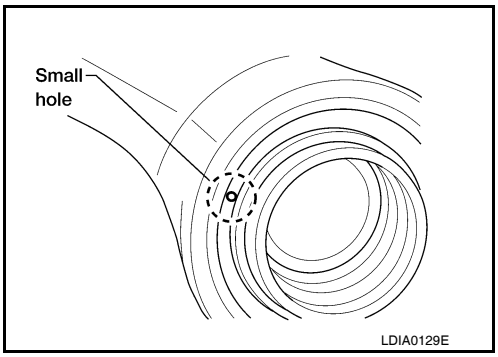

8. Remove the front oil seal using Tool as shown.

Tool number : SP8P

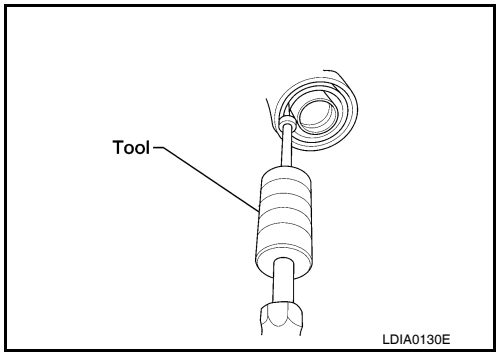

INSTALLATION

1. Apply multi-purpose grease to the lips of the new front oil seal. Then drive the new front oil seal in evenly to the gear carrier using Tool.

Tool number : KV38100500 (J-25273)

CAUTION:
- **Do not reuse front oil seal.**
- **Do not incline the new front oil seal when installing.**
- **Apply multi-purpose grease to the lips of the new front oil seal.**

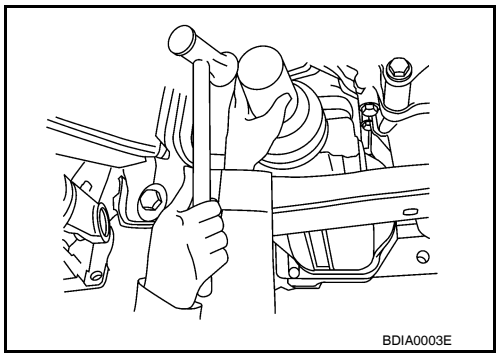

2. Install the companion flange to the drive pinion while aligning the matching marks.
3. Apply anti-corrosive oil to the threads of the drive pinion and the seating surface of the new drive pinion lock nut. Then adjust the drive pinion lock nut tightening torque using suitable tool A, and check the total preload torque using Tool B.

Tool number B: ST3127S000 (J-25765-A)

Total preload torque: Refer to DLN-390, "Disassembly and Assembly".

- The total preload torque should be within the total preload torque specification. When not replacing the collapsible spacer, it should also be equal to the measurement taken during removal plus an additional 0.56 N·m (0.06 Kg-m, 5 in-lb).
- If the total preload torque is low, tighten the drive pinion lock nut in 6.8 N·m (0.69 Kg-m, 5ft-lb) increments until the total preload torque is met.

CAUTION:
- **Do not reuse drive pinion lock nut.**
- **Apply anti-corrosive oil to the threads of the drive pinion and the seating surface of the new drive pinion lock nut.**
- **Adjust the drive pinion lock nut tightening torque to the lower limit first. Do not exceed the drive pinion lock nut specified torque. Refer to DLN-390, "Disassembly and Assembly".**
- **Do not loosen drive pinion lock nut to adjust the total preload torque. If the drive pinion lock nut torque or the total preload torque exceeds the specifications, replace the collapsible spacer and tighten it again to adjust. Refer to DLN-390, "Disassembly and Assembly".**
- **After adjustment, rotate drive pinion back and forth 2 to 3 times to check for unusual noise, rotation malfunction, and other malfunctions.**

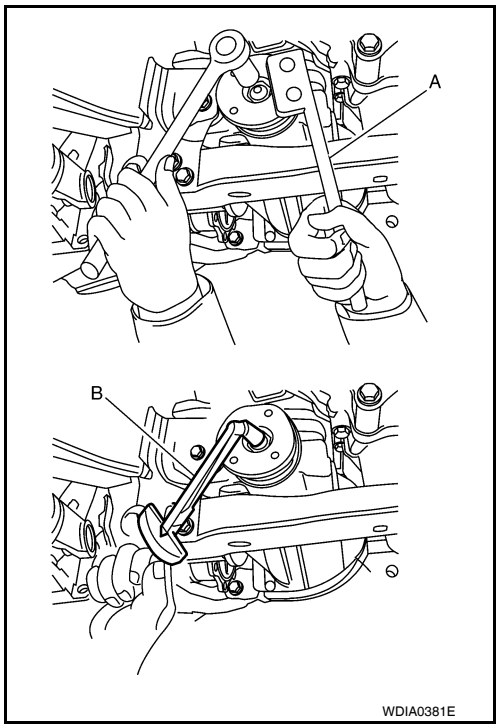

4. Installation of the remaining components is in the reverse order of removal.

CAUTION:
Check the differential gear oil level after installation. Refer to DLN-382.

CARRIER COVER

Removal and Installation

INFOID:0000000005258492

REMOVAL

1. Remove the front final drive assembly. Refer to DLN-387, "Removal and Installation".
2. Remove the carrier cover bolts and separate the carrier cover from the gear carrier using Tool.

   Tool number : KV10111100 (J-37228)

   CAUTION:
   - **Do not damage the mating surface.**
   - **Do not insert flat-bladed screwdriver, this will damage the mating surface.**

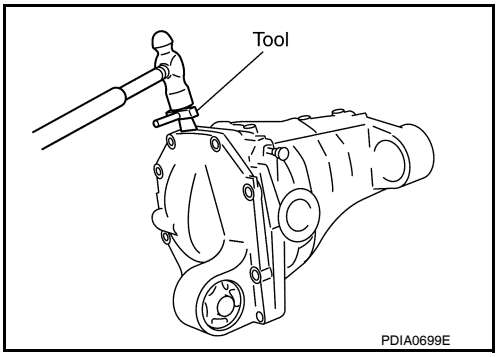

INSTALLATION

1. Apply 3 mm (0.12 in) bead of sealant to the mating surface of the carrier cover as shown.
   - Use Genuine Silicone RTV or equivalent. Refer to GI-14, "Recommended Chemical Products and Sealants".

   CAUTION:
   Remove any old sealant adhering to the mating surfaces. Also remove any moisture, oil, or foreign material adhering to the application and mating surfaces.
2. Install the carrier cover to the gear carrier. Tighten the bolts to the specified torque. Refer to DLN-390, "Disassembly and Assembly".
3. Install the front final drive assembly. Refer to DLN-387, "Removal and Installation".

   CAUTION:
   Fill the front final drive assembly with recommended differential gear oil. Refer to DLN-382.

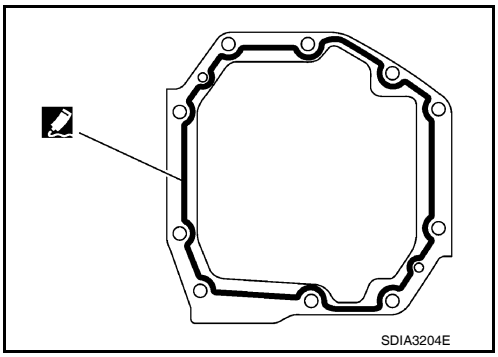

REMOVAL AND INSTALLATION

FRONT FINAL DRIVE

Removal and Installation

INFOID:0000000005258493

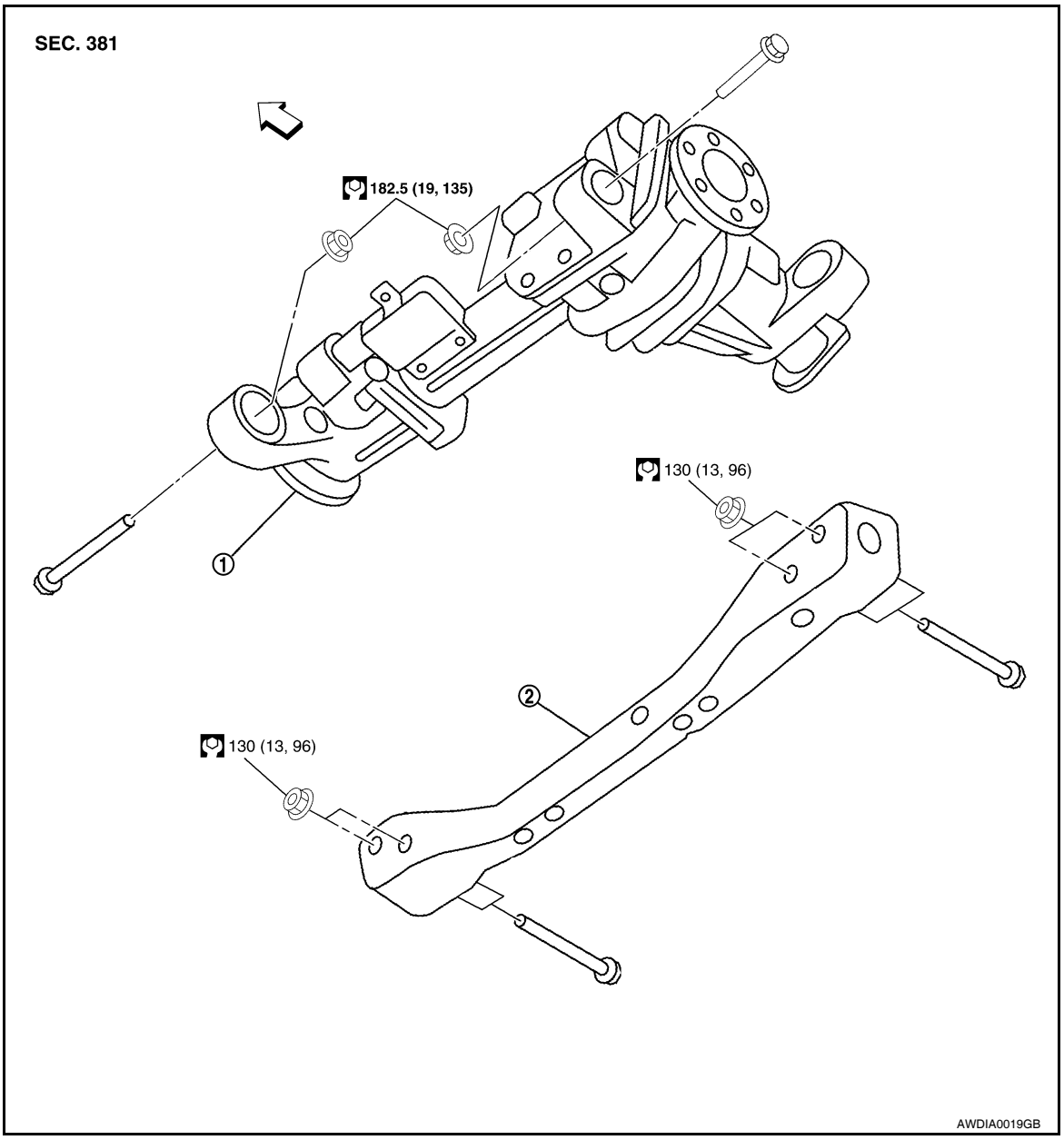

1. Front final drive assembly
2. Front cross member
⇨ Front

REMOVAL

1. Drain the differential gear oil. Refer to DLN-382.
2. Remove the drive shafts from the front final drive assembly. Refer to FAX-7, "VQ40DE : Removal and Installation".
3. Remove the front cross member.
4. Remove the front propeller shaft from the front final drive assembly. Refer to DLN-315, "Removal and Installation".
5. Disconnect the vent hose from the front final drive assembly.
6. Support the front final drive assembly using a suitable jack.

7. Remove the front final drive assembly bolts, then remove the front final drive assembly.
   CAUTION:
   Support the front final drive assembly while removing using a suitable jack.

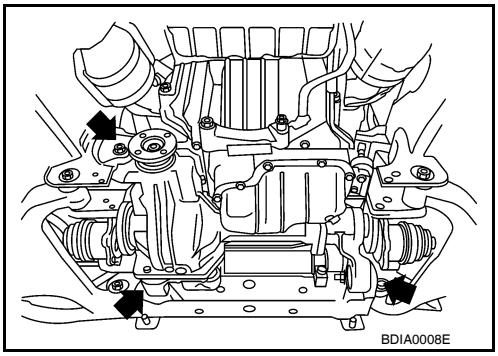

INSTALLATION

Installation is in the reverse order of removal.

CAUTION:

- **Make sure there are no pinched or restricted areas on the breather hose caused by folding or bending when installing it.**
- **Fill the front final drive assembly with differential gear oil after installation. Refer to DLN-382.**

DISASSEMBLY AND ASSEMBLY

FRONT FINAL DRIVE

Exploded View

INFOID:0000000005588049

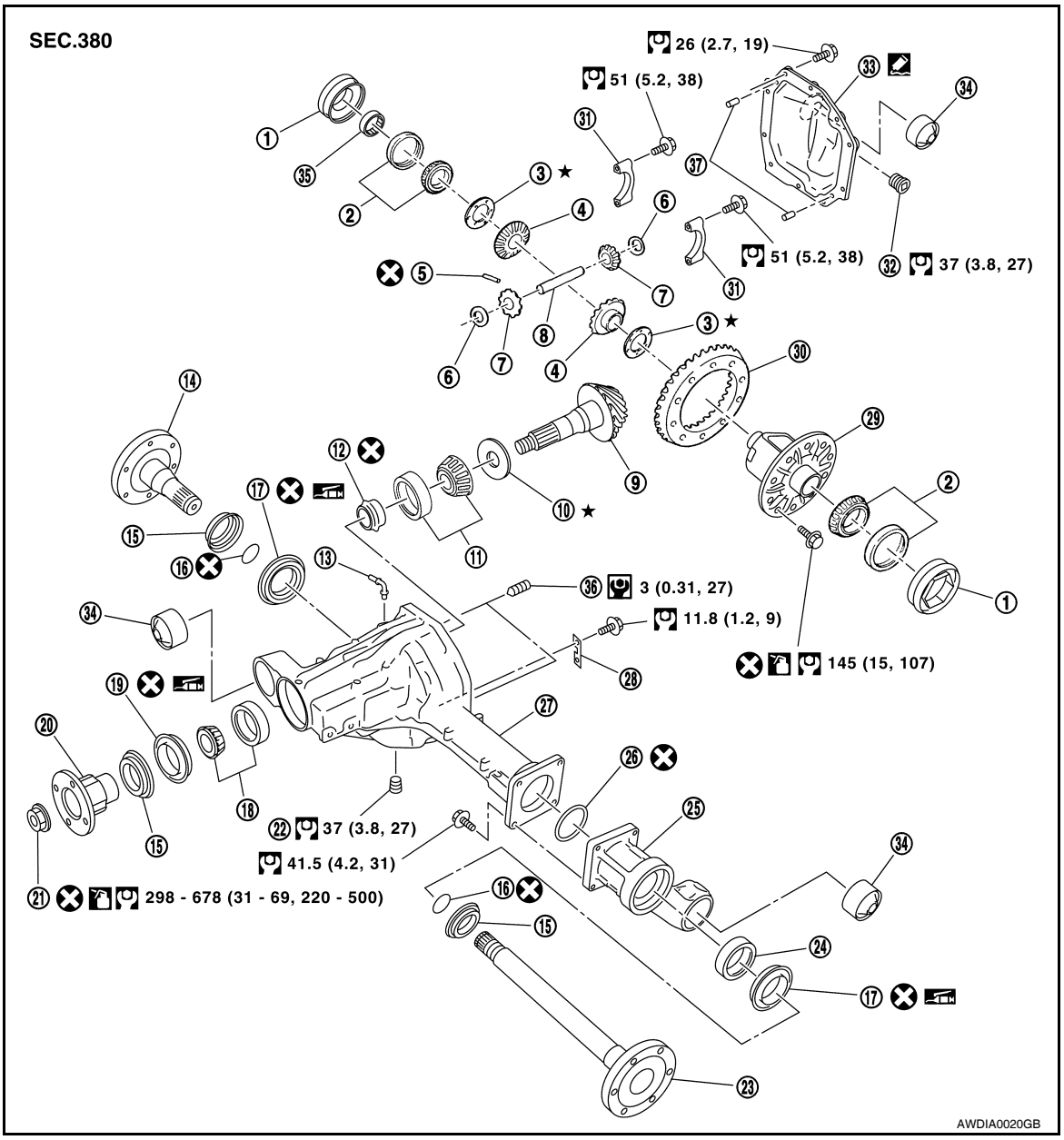

1. Side bearing adjuster	2. Side bearing	3. Side gear thrust washer
4. Side gear	5. Lock pin	6. Pinion mate thrust washer
7. Pinion mate gear	8. Pinion mate shaft	9. Drive pinion
10. Drive pinion height adjusting washer	11. Drive pinion rear bearing	12. Collapsible spacer
13. Breather tube	14. Differential side flange	15. Dust shield
16. Circular clip	17. Side oil seal	18. Drive pinion front bearing
19. Front oil seal	20. Companion flange	21. Drive pinion lock nut
22. Drain plug	23. Differential side shaft	24. Differential side shaft bearing
25. Extension tube	26. O-ring	27. Gear carrier
28. Plate	29. Differential case	30. Drive gear

31. Side bearing cap
32. Filler plug
33. Carrier cover
34. Bushing
35. Bearing
36 Screw
37 Dowel pin

Disassembly and Assembly

INFOID:0000000005258494

ASSEMBLY INSPECTION AND ADJUSTMENT

- Drain the differential gear oil before inspection and adjustment. Refer to DLN-382.
- Remove and install the carrier cover as necessary for inspection and adjustment. Refer to DLN-386.

Total Preload Torque

1. Install the differential side shaft and differential side flange if necessary.
   CAUTION:
   The differential side shaft and differential side flange must be installed in order to measure total preload torque.
2. Rotate the drive pinion back and forth 2 to 3 times to check for unusual noise and rotation malfunction.
3. Rotate the drive pinion at least 20 times to check for smooth operation of the bearings.
4. Measure total preload torque using Tool.

Tool number : **ST3127S000 (J-25765-A)**

Total preload torque: **Refer to DLN-406, "Inspection and Adjustment"**

NOTE:
Total preload torque = Drive pinion bearing preload torque + Side bearing preload torque

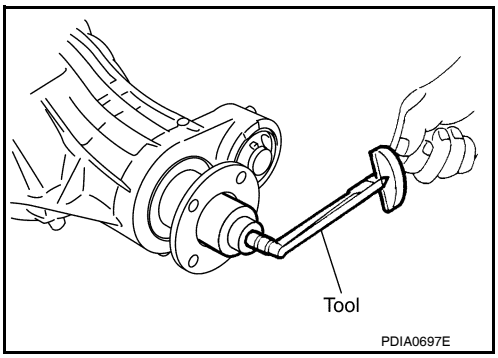

- If the measured value is out of the specification, check and adjust each part. Adjust the drive pinion bearing preload torque first, then adjust the side bearing preload torque.

If the total preload torque is greater than specification

On drive pinion bearings: **Replace the collapsible spacer.**

On side bearings: **Loosen the side bearing adjuster by the same amount on each side.**

If the total preload torque is less than specification

On drive pinion bearings: **Tighten the drive pinion lock nut.**

On side bearings: **Tighten the side bearing adjuster by the same amount on each side.**

Drive Gear Runout

1. Fit a dial indicator to the drive gear back face.
2. Rotate the drive gear to measure runout.

Runout limit: **Refer to DLN-406, "Inspection and Adjustment"**

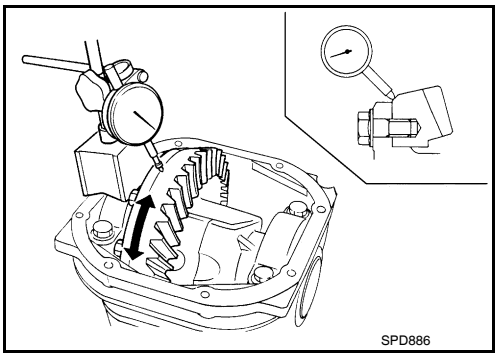

- If the runout is outside of the limit, check the condition of the drive gear assembly. Foreign material may be caught between the drive gear and differential case, or the differential case or drive gear may be deformed.
  CAUTION:
  Replace drive gear and drive pinion as a set.

Tooth Contact

1. Apply red lead to the drive gear.
   NOTE:
   Apply red lead to both faces of three to four gears, at four locations evenly spaced on the drive gear.

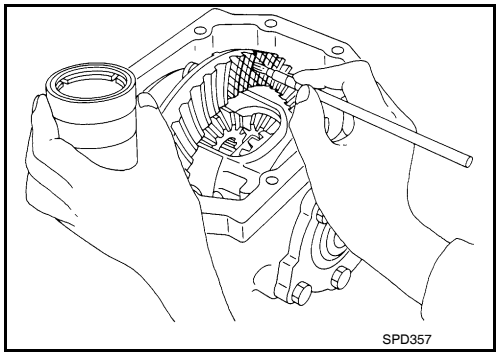

2. Rotate the drive gear back and forth several times. Then check for correct drive pinion to drive gear tooth contact as shown.
   CAUTION:
   Check tooth contact on drive side and reverse side.

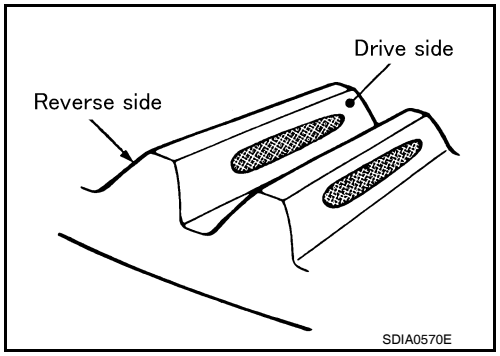

3. If the tooth contact is improperly adjusted, follow the procedure below to adjust the drive pinion height (dimension X).

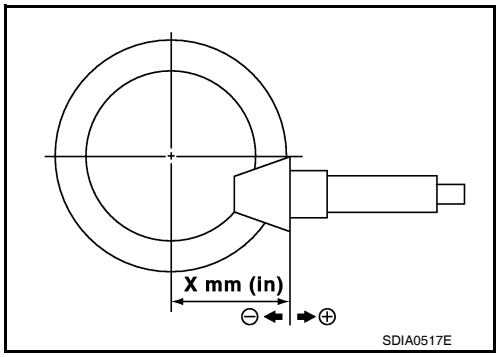

- If the tooth contact is near the face (face contact), or near the heel (heel contact), use a thicker drive pinion height adjusting washer to move drive pinion closer to the drive gear.
  Refer to DLN-406, "Inspection and Adjustment".

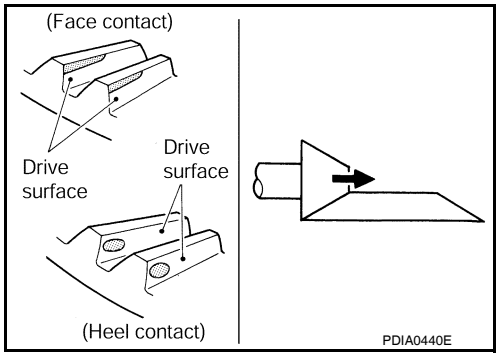

- If the tooth contact is near the flank (flank contact), or near the toe (toe contact), use a thinner drive pinion height adjusting washer to move the drive pinion farther from the drive gear.
  Refer to DLN-406, "Inspection and Adjustment".

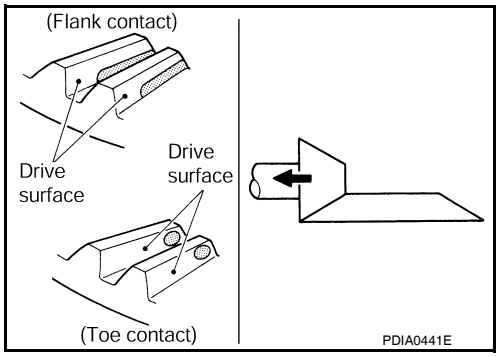

Backlash

1. Fit a dial indicator to the drive gear face to measure the backlash.

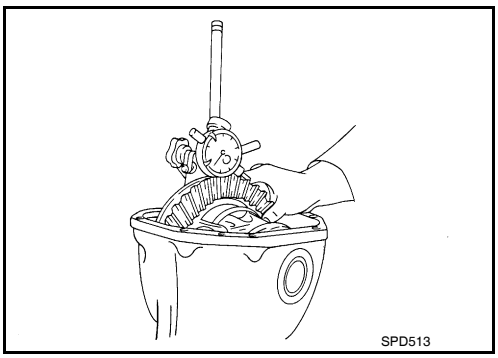

Backlash: **Refer to DLN-406, "Inspection and Adjustment"**

- If the backlash is outside of the specification, adjust each side bearing adjuster.

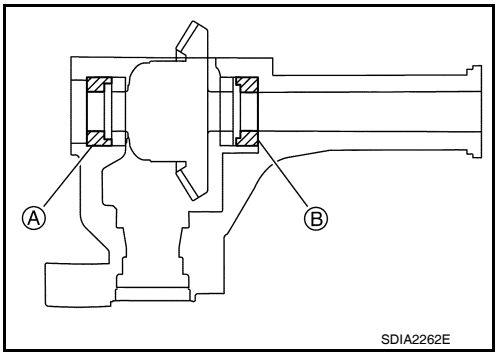

If the backlash is greater than specification:

Loosen side bearing adjuster A and tighten side bearing adjuster B by the same amount.

If the backlash is less than specification:

Loosen side bearing adjuster B and tighten side bearing adjuster A by the same amount.

CAUTION:
Do not change the side bearing adjusters by different amounts as it will change the side bearing preload torque.

Companion Flange Runout

1. Rotate companion flange and check for runout on the companion flange face (inner side of the bolt holes) and companion flange inner side (socket diameter) using suitable tool.

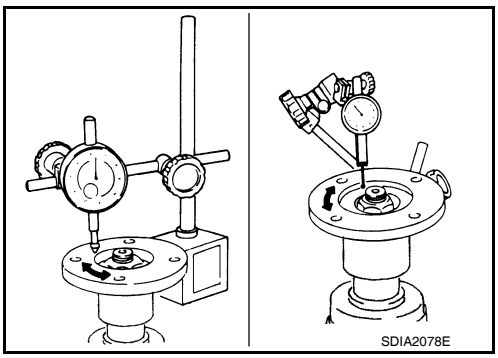

Runout limit

Companion flange face:	**Refer to DLN-406, "Inspection and Adjustment"**
Companion flange inner side:	**Refer to DLN-406, "Inspection and Adjustment"**

2. If the runout is outside the runout limit, follow the procedure below to adjust.

a. Rotate the companion flange on the drive pinion by 90°, 180° and 270° while checking for the position where the runout is minimum.

b. If the runout is still outside of the runout limit after the companion flange has been rotated on the drive pinion, possible cause could be an assembly malfunction of drive pinion and drive pinion bearing or a malfunctioning drive pinion bearing.

c. If the runout is still outside of the runout limit after repair of the assembly of drive pinion and drive pinion bearing or drive pinion bearing, replace the companion flange.

DISASSEMBLY

Differential Assembly

1. Drain the differential gear oil if necessary.

2. Remove the differential side shaft and differential side flange using suitable tool.

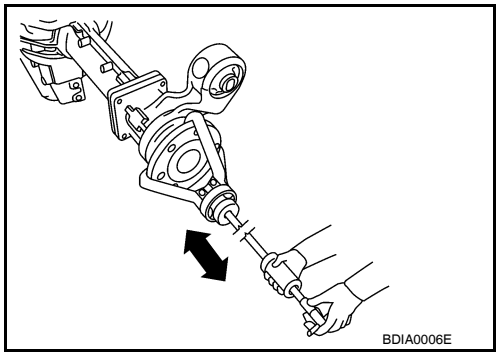

3. Remove the extension tube and O-ring from the gear carrier.

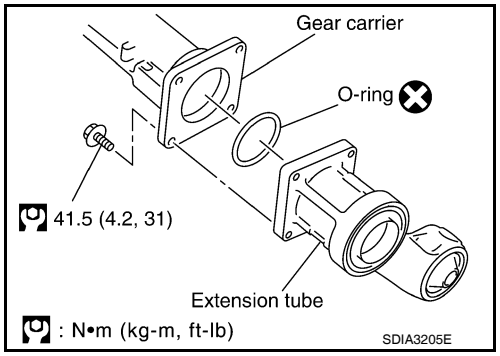

4. Place a small hole in the side oil seal case using suitable tool.

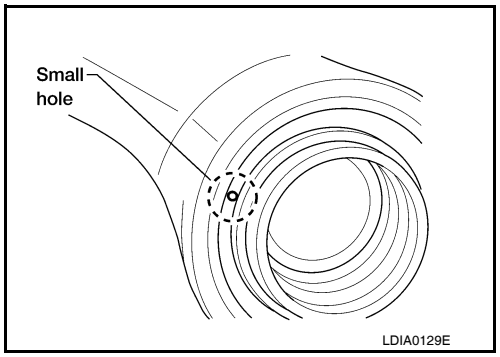

5. Remove the side oil seal using Tool as shown.

Tool number : — SP8P

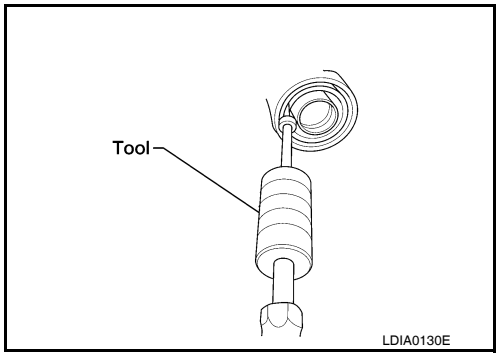

6. Remove the carrier cover bolts and separate the carrier cover from the gear carrier using Tool.

Tool number : KV10111100 (J-37228)

CAUTION:
- **Do not damage the mating surface.**
- **Do not insert flat-bladed screwdriver, this will damage the mating surface.**

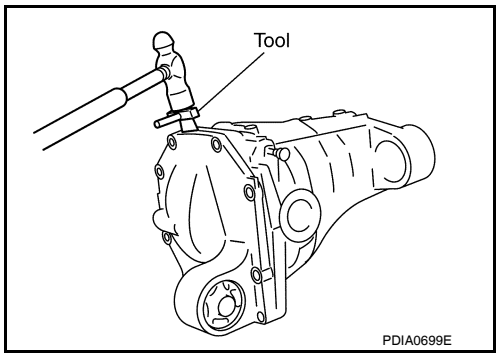

7. For proper reinstallation, paint matching marks on one side of the side bearing cap and gear carrier.

CAUTION:
- **For matching marks, use paint. Do not damage side bearing cap or gear carrier.**
- **Side bearing caps are line-board during manufacture. The matching marks are used to reinstall them in their original positions.**

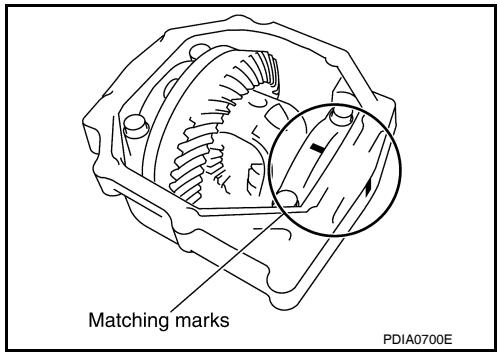

8. Remove the side bearing caps.

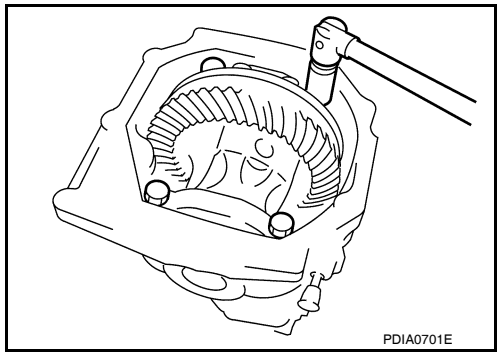

9. Remove the side bearing adjuster.

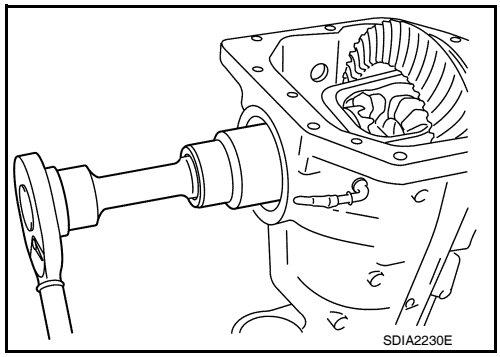

10. Lift the differential case assembly out of the gear carrier.

CAUTION:
Keep side bearing outer races together with side bearing inner races. Do not mix them up.

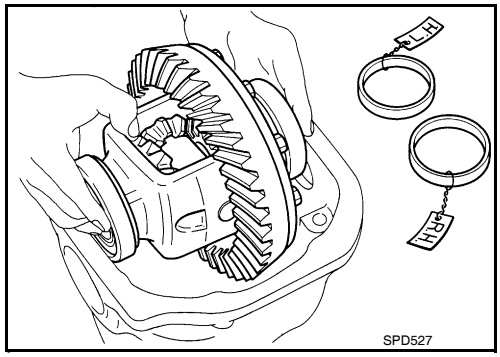

11. Remove side bearing inner race using Tools as shown.

Tool number	**A: ST33081000 (—)**
	B: ST30021000 (—)

CAUTION:
- **Do not remove side bearing inner race unless it is being replaced.**
- **Place copper plates between the vise and the side bearing inner race and drive gear to prevent damage.**
- **Engage puller jaws in groove to prevent damage to bearing.**

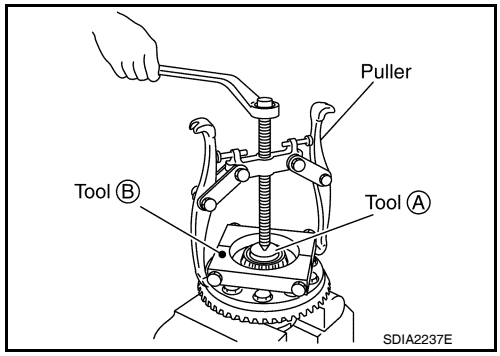

- **Keep side bearing outer races together with side bearing inner races. Do not mix them up.**

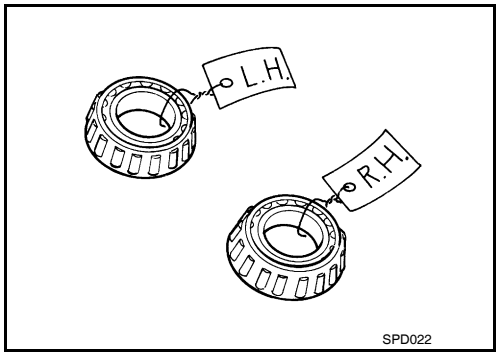

12. For proper reinstallation, paint matching marks on the differential case and drive gear.
    CAUTION:
    Use paint for matching marks. Do not damage differential case or drive gear.
13. Remove the drive gear bolts.
14. Tap the drive gear off the differential case using suitable tool.
    CAUTION:
    Tap evenly all around to keep drive gear from bending.

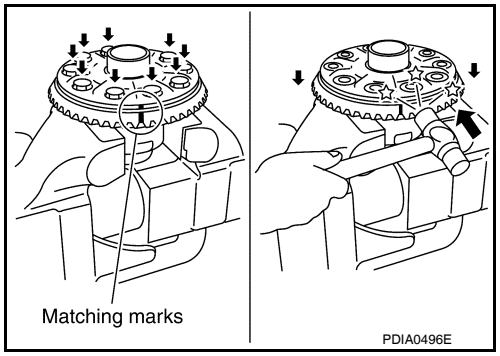

15. Remove the lock pin of the pinion mate shaft from the drive gear side using suitable tool.

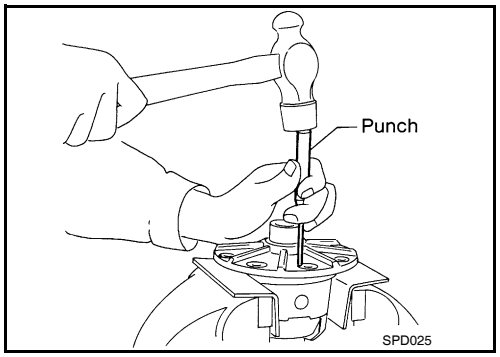

16. Remove the pinion mate shaft.

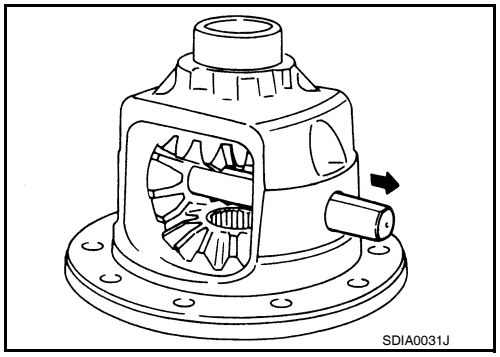

17. Turn the pinion mate gear, then remove the pinion mate gear, pinion mate thrust washer, side gear and side gear thrust washer from the differential case.

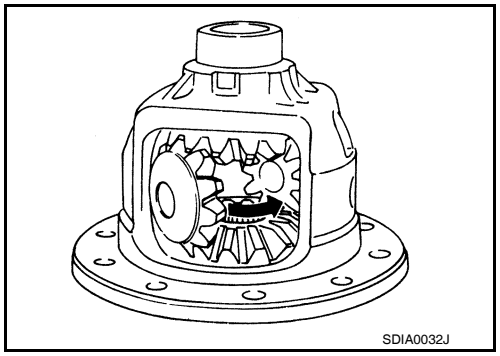

Drive Pinion Assembly

1. Remove the differential assembly.
2. Remove the drive pinion lock nut using suitable tool.
3. Put matching marks on the companion flange and drive pinion using paint.
   CAUTION:
   Use paint to make the matching marks. Do not damage the companion flange or drive pinion.

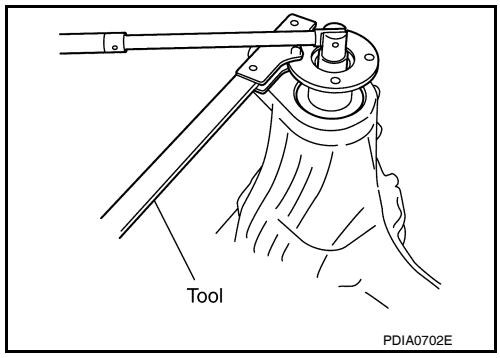

4. Remove the companion flange using suitable tool.

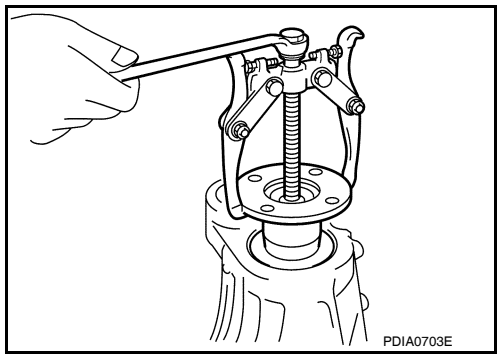

5. Press the drive pinion assembly (with rear inner bearing race and collapsible spacer) out of the gear carrier.
   CAUTION:
   Do not drop drive pinion assembly.

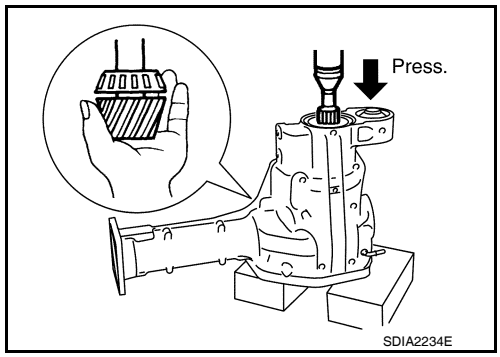

6. Remove the drive pinion rear bearing inner race and drive pinion height adjusting washer using Tool.

   Tool number : ST30021000 (—)

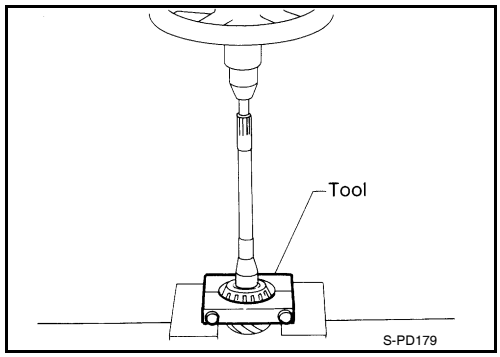

7. Place a small hole in the front oil seal case using suitable tool.

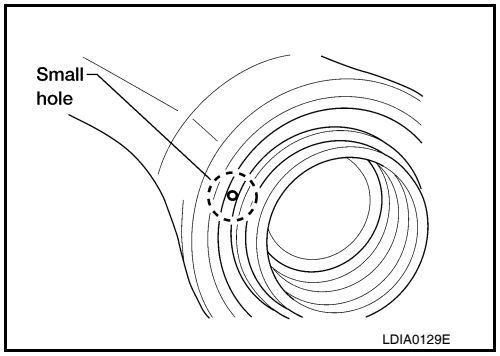

8. Remove the front oil seal using Tool as shown.

Tool number : — SP8P

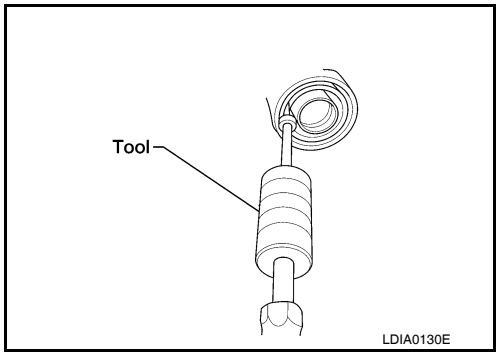

9. Remove the drive pinion front bearing inner race.
10. Remove the drive pinion front bearing outer race using Tool as shown. Locate the driver on the back edge of the drive pinion front bearing outer race, then drive the drive pinion front bearing outer race out.

Tool number A: — C-4171
B: — D-103

CAUTION:
Do not damage gear carrier.

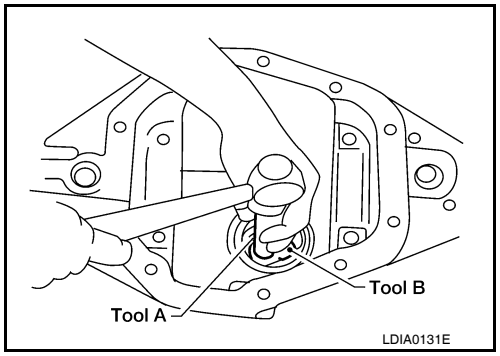

11. Remove the drive pinion rear bearing outer race using Tool as shown. Locate the driver on the back edge of the drive pinion rear bearing outer race, then drive the drive pinion rear bearing outer race out.

Tool number A: — C-4171
B: — C-4307

CAUTION:
Do not damage gear carrier.

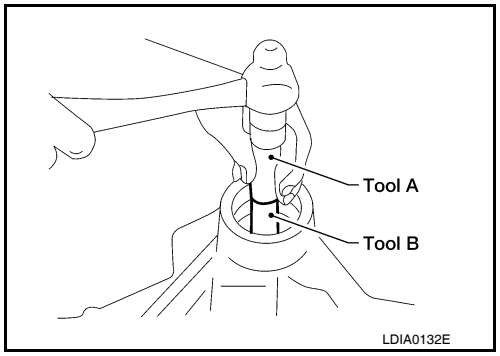

INSPECTION AFTER DISASSEMBLY

Clean the disassembled parts. Then inspect the parts for wear or damage. If wear or damage are found, follow the measures below.

Drive Pinion and Drive Gear

- If the drive pinion and drive gear teeth do not mesh or line-up correctly, determine the cause and adjust, repair, or replace as necessary.
- If the drive pinion or drive gear are worn, cracked, damaged, pitted or chipped (by friction) noticeably, replace with new drive pinion and drive gear.

- Drive pinion and drive gear are supplied in matched sets only. Matching numbers on both drive pinion and drive gear are etched for verification. If a new drive pinion and drive gear set are being used, verify the numbers of each drive pinion and drive gear before proceeding with assembly.

Bearing
- If bearings are chipped (by friction), pitted, worn, rusted, scratched, or unusual noise is coming from bearing, replace with new bearing assembly (as a new set).
- Bearing must be replaced with a new one whenever disassembled.

Side Gear and Pinion Mate Gear
- If any cracks or damage are found on the surface of the teeth, replace with new one.
- If any worn or chipped marks are found on the side of the side gear and pinion mate gear which contact the thrust washer, replace with new one.
- Replace both side gear and pinion mate gear as a set when replacing side gear or pinion mate gear.

Side Gear Thrust Washer and Pinion Mate Thrust Washer
- If any chips (by friction), damage, or unusual wear are found, replace with new one.

Gear Carrier
- If any wear or cracks are found on the contact sides of gear carrier, replace with new one.

Companion Flange
- If any chips (about 0.1mm, 0.004 in) or other damage on the companion flange surface which contacts the front oil seal lips are found, replace with new one.

ADJUSTING AND SELECTING WASHERS

Side Gear Back Clearance
- Assemble the differential parts if they are disassembled. Refer to DLN-389, "Exploded View"

1. Place the differential case straight up so that the side gear to be measured is upward.

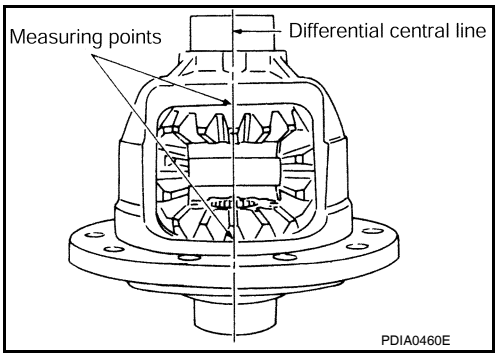

2. Using feeler gauges, measure the clearance between the side gear back and differential case at three different points, while rotating the side gear. Average the three readings to calculate the clearance. (Measure the clearance of the other side as well.)

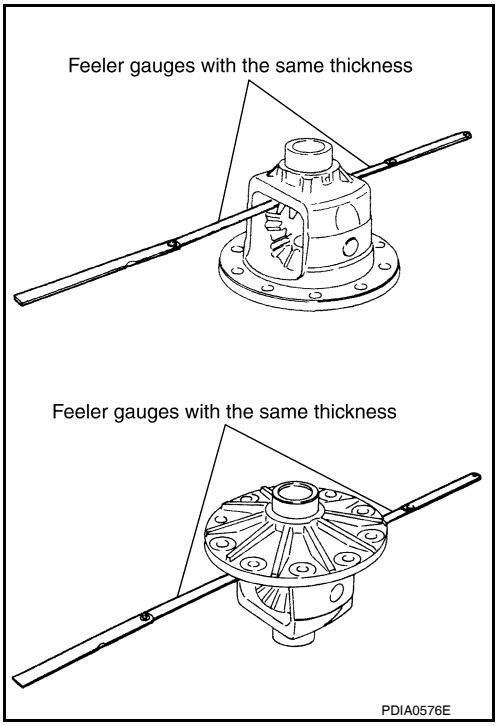

Side gear back clearance: **Refer to DLN-406, "Inspection and Adjustment"**

- If the side gear back clearance is outside of the specification, use a thicker or thinner side gear thrust washer to adjust. Refer to DLN-406, "Inspection and Adjustment".

If the side gear back clearance is greater than specification:

Use a thicker side gear thrust washer.

If the side gear back clearance is less than specification:

Use a thinner side gear thrust washer.

CAUTION:
- **Insert feeler gauges with the same thickness on both sides to prevent side gear from tilting.**
- **Each gear should rotate smoothly without excessive resistance during differential motion.**
- **Select a side gear thrust washer for right and left individually.**

NOTE:
Side gear back clearance is clearance between side gear and differential case for adjusting side gear backlash.

Drive Pinion Height

- Drive gear and drive pinion are supplied in matched sets only. Matching numbers on both drive pinion and drive gear are etched for verification. If a new gear set is being used, verify the numbers of each drive pinion and drive gear before proceeding with assembly.

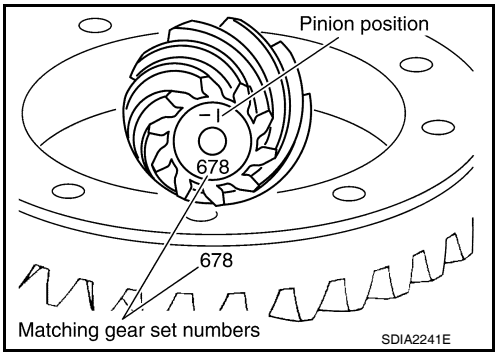

- The mounting distance from the centerline of the drive gear to the back face of the drive pinion for the M205 final drive assembly is 103.5 mm (4.0748 inches).
  On the button end of each drive pinion, there is etched a plus (+) number, a minus (-) number, or a zero (0), which indicates the best running position for each particular gear set. This dimension is controlled by a selective drive pinion height adjusting washer between the drive pinion rear bearing inner race and drive pinion.
  For example: If a drive pinion is etched m+8 (+3), it would require 0.08 mm (0.003 inch) less drive pinion height adjusting washer than a drive pinion etched “0”. This means decreasing drive pinion height adjusting washer thickness; increases the mounting distance of the drive pinion to 103.6 mm (4.0778 inches). If a drive pinion is etched m-8 (-3), it would require adding 0.08mm (0.003 inch) more to the drive pinion height adjusting washer than would be required if the drive pinion were etched “0”. By adding 0.08 mm (0.003 inch), the mounting distance of the drive pinion was decreased to 103.4 mm (4.0718 inches) which is just what a m-8 (-3) etching indicated.
- To change the drive pinion height, use different drive pinion height adjusting washers which come in different thickness.
- Use the following tables as a guide for selecting the correct drive pinion height adjusting washer thickness to add or subtract from the old drive pinion height adjusting washer.

OLD DRIVE PINION MARKING	NEW DRIVE PINION MARKING mm (in)								
	-10 (-4)	-8 (-3)	-5 (-2)	-3 (-1)	0 (0)	+3 (+1)	+5 (+2)	+8 (+3)	+10 (+4)
+10 (+4)	+0.20 (+0.008)	+0.18 (+0.007)	+0.15 (+0.006)	+0.13 (+0.005)	+0.10 (+0.004)	+0.08 (+0.003)	+0.05 (+0.002)	+0.02 (+0.001)	0 (0)
+8 (+3)	+0.18 (+0.007)	+0.15 (+0.006)	+0.13 (+0.005)	+0.10 (+0.004)	+0.08 (+0.003)	+0.05 (+0.002)	+0.02 (+0.001)	0 (0)	-0.02 (-0.001)
+5 (+2)	+0.15 (+0.006)	+0.13 (+0.005)	+0.10 (+0.004)	+0.08 (+0.003)	+0.05 (+0.002)	+0.02 (+0.001)	0 (0)	-0.02 (-0.001)	-0.05 (-0.002)
+3 (+1)	+0.13 (+0.005)	+0.10 (+0.004)	+0.08 (+0.003)	+0.05 (+0.002)	+0.02 (+0.001)	0 (0)	-0.02 (-0.001)	-0.05 (-0.002)	-0.08 (-0.003)
0 (0)	+0.10 (+0.004)	+0.08 (+0.003)	+0.05 (+0.002)	+0.02 (+0.001)	0 (0)	-0.02 (-0.001)	-0.05 (-0.002)	-0.08 (-0.003)	-0.10 (-0.004)
-3 (-1)	+0.08 (+0.003)	+0.05 (+0.002)	+0.02 (+0.001)	0 (0)	-0.02 (-0.001)	-0.05 (-0.002)	-0.08 (-0.003)	-0.10 (-0.004)	-0.13 (-0.005)
-5 (-2)	+0.05 (+0.002)	+0.02 (+0.001)	0 (0)	-0.02 (-0.001)	-0.05 (-0.002)	-0.08 (-0.003)	-0.10 (-0.004)	-0.13 (-0.005)	-0.15 (-0.006)
-8 (-3)	+0.02 (+0.001)	0 (0)	-0.02 (-0.001)	-0.05 (-0.002)	-0.08 (-0.003)	-0.10 (-0.004)	-0.13 (-0.005)	-0.15 (-0.006)	-0.18 (-0.007)
-10 (-4)	0 (0)	-0.02 (-0.001)	-0.05 (-0.002)	-0.08 (-0.003)	-0.10 (-0.004)	-0.13 (-0.005)	-0.15 (-0.006)	-0.18 (-0.007)	-0.20 (-0.008)

ASSEMBLY

Drive Pinion Assembly

1. Install drive pinion rear bearing outer race using Tools.

Tool number **A: ST30901000 (—)**
B: KV40105230 (—)

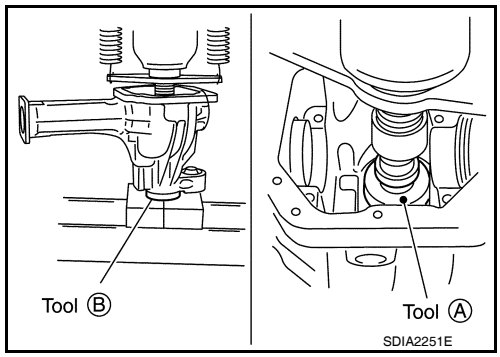

2. Install drive pinion front bearing outer race using Tools.

Tool number **A: ST35271000 (—)**
B: KV40104810 (—)

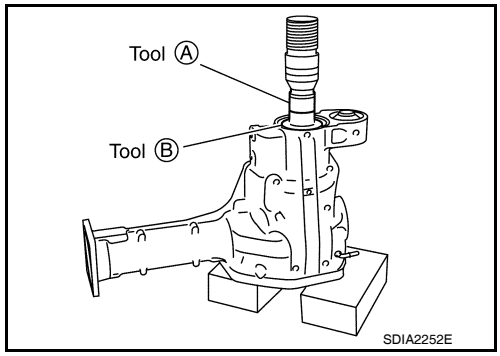

3. Select drive pinion height adjusting washer. Refer to DLN-406, "Inspection and Adjustment".

4. Install the selected drive pinion height adjusting washer to the drive pinion. Press the drive pinion rear bearing inner race to it using Tool.

Tool number : — C-4040

CAUTION:
Do not reuse drive pinion rear bearing inner race.

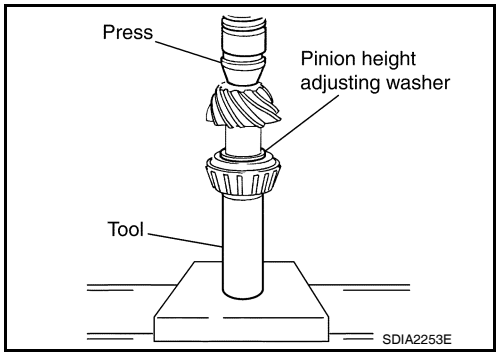

5. Install the collapsible spacer to the drive pinion.
CAUTION:
Do not reuse collapsible spacer.
6. Apply differential gear oil to the drive pinion rear bearing, and install the drive pinion assembly to the gear carrier.
7. Apply differential gear oil to the drive pinion front bearing, and install the drive pinion front bearing inner race to the drive pinion assembly.
CAUTION:
Do not reuse drive pinion front bearing inner race.

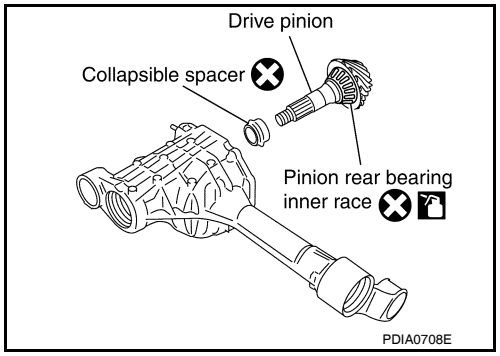

8. Apply multi-purpose grease to the lips of the new front oil seal. Then drive the new front oil seal in evenly using Tools.

Tool number A: KV38100500 (J-25273)
B: KV38102200 (—)

CAUTION:
- **Do not reuse front oil seal.**
- **Do not incline the new front oil seal when installing.**
- **Apply multi-purpose grease to the lips of the new front oil seal.**

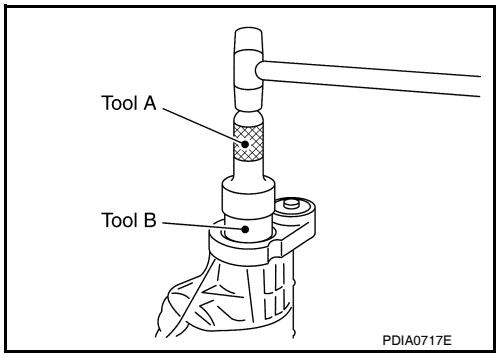

9. Install the companion flange to the drive pinion while aligning the matching marks. Tap the companion flange until fully seated using suitable tool.

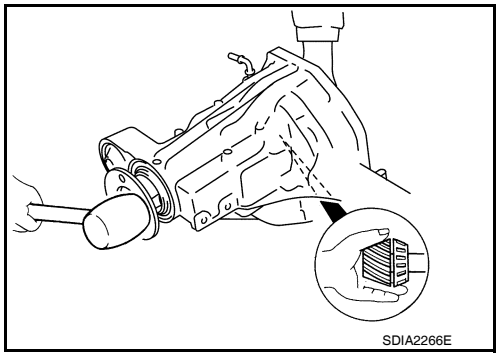

10. Apply anti-corrosive oil to the threads of the drive pinion and the seating surface of the new drive pinion lock nut. Then adjust the drive pinion lock nut tightening torque using suitable tool A, and check the drive pinion bearing preload torque using Tool B.

Tool number	**B: ST3127S000 (J-25765-A)**
Drive pinion bearing preload torque	**Refer to DLN-406, "Inspection and Adjustment"**

CAUTION:
- **Do not reuse drive pinion lock nut.**
- **Apply anti-corrosive oil to the threads of the drive pinion and the seating surface of the new drive pinion lock nut.**
- **Adjust the drive pinion lock nut tightening torque to the lower limit first. Do not exceed the drive pinion lock nut specified torque. Refer to DLN-389, "Exploded View".**
- **If the drive pinion bearing preload torque exceeds the specified value, replace collapsible spacer and tighten it again to adjust. Do not loosen drive pinion lock nut to adjust the drive pinion bearing preload torque.**
- **After adjustment, rotate drive pinion back and forth 2 to 3 times to check for unusual noise, rotation malfunction, and other malfunctions.**

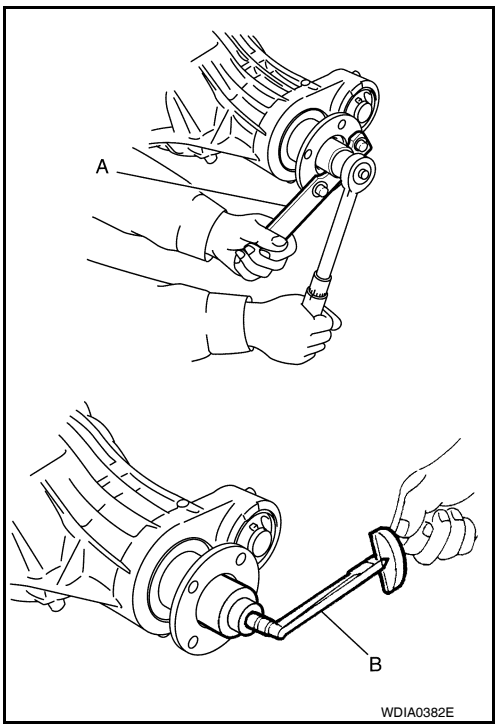

11. Check companion flange runout. Refer to DLN-406, "Inspection and Adjustment".
12. Install the differential case assembly. Refer to DLN-389, "Exploded View".

Differential Assembly

1. Install side gear thrust washers with the same thickness as the ones installed prior to disassembly, or reinstall the old ones on the side gears.

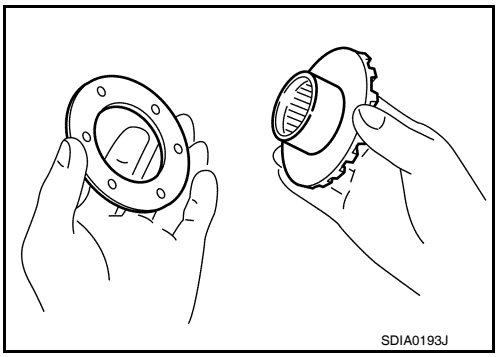

2. Install the side gears and side gear thrust washers into the differential case.
3. Install the pinion mate thrust washers to the two pinion mate gears. Then install the pinion mate gears with the pinion mate thrust washers by aligning them in diagonally opposite positions and rotating them into the differential case.

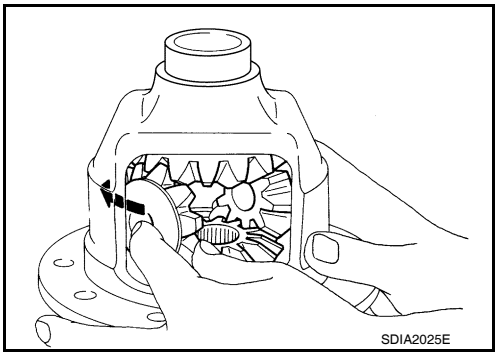

4. Install the pinion mate shaft and align the lock pin hole on the pinion mate shaft with the lock pin hole on the differential case.
5. Measure the side gear end play. If necessary, select the appropriate side gear thrust washers. Refer to DLN-406, "Inspection and Adjustment".

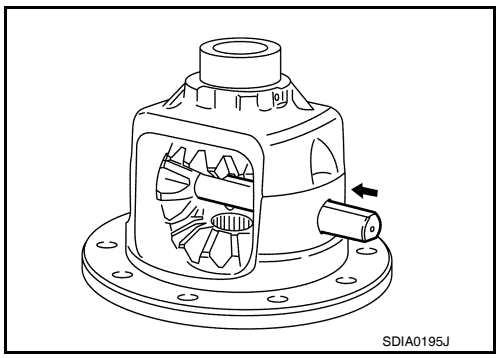

6. Drive a new lock pin into the pinion mate shaft until it is flush with the differential case using suitable tool.
CAUTION:
Do not reuse lock pin.

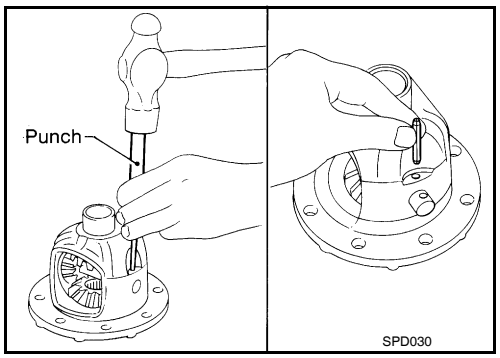

7. Align the matching mark of the differential case with the mark of the drive gear, then place the drive gear onto the differential case.

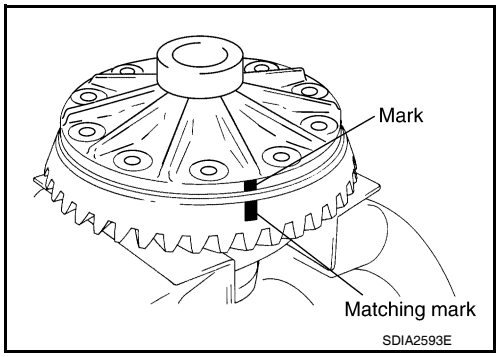

8. Install and tighten the new drive gear bolts to the specified torque. Refer to DLN-389, "Exploded View".
CAUTION:
- **Make sure the drive gear back and threaded holes are clean.**
- **Do not reuse drive gear bolts.**
- **Tighten new drive gear bolts in a crisscross pattern.**

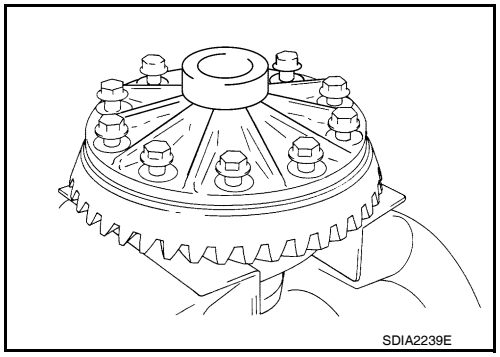

9. Press the new side bearing inner races to the differential case using Tools.

Tool number **A: KV38100300 (J-25523)**
B: ST33081000 (—)

CAUTION:
Do not reuse side bearing inner races.

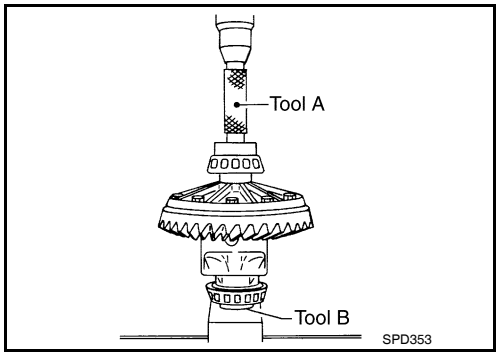

10. Install side bearing adjusters into gear carrier.
11. Apply differential gear oil to the side bearings, and install the differential case assembly with the side bearing outer races into the gear carrier.
    CAUTION:
    Do not reuse side bearing outer race when replacing side bearing inner race (replace as a set).

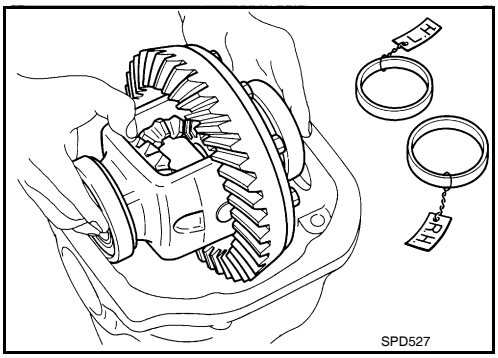

12. Install the side bearing caps with the matching marks aligned.
    NOTE:
    Do not tighten at this step. This allows further tightening of side bearing adjusters.

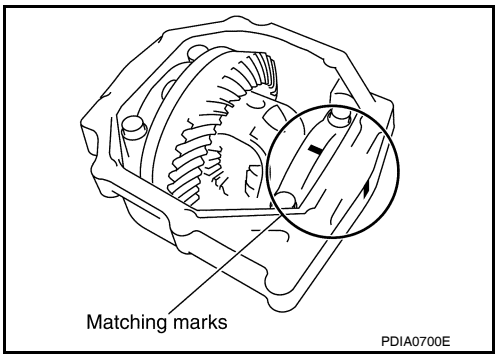

13. Tighten each side bearing adjuster alternately turning drive gear.

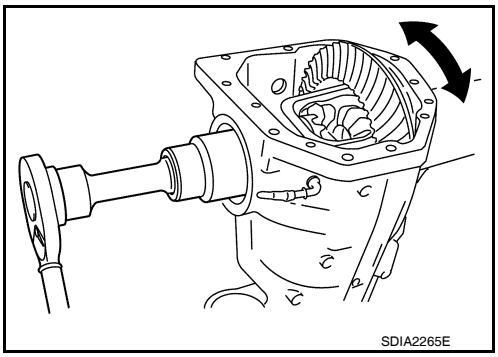

14. Check and adjust tooth contact, backlash, drive gear runout and total preload torque. Refer to DLN-406, "Inspection and Adjustment".
    Recheck above items.
    - After adjusting tooth contact and backlash secure side bearing adjuster with screws and tighten side bearing cap bolt to the specified torque. Refer to DLN-389, "Exploded View".

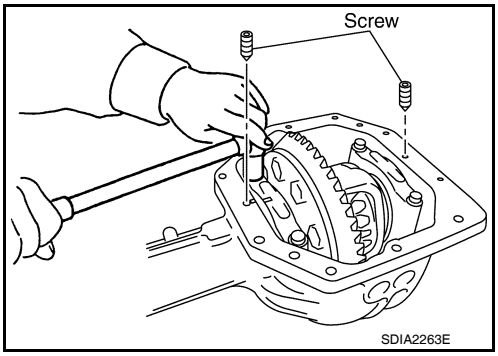

15. Apply multi-purpose grease to the lips of the new side oil seal. Then drive the new side oil seal in evenly to the gear carrier using suitable tool.
    CAUTION:
    - **Do not reuse side oil seal.**
    - **Do not incline the new side oil seal when installing.**
    - **Apply multi-purpose grease to the lips of the new side oil seal.**

16. Install the extension tube with a new O-ring.
    CAUTION:
    - **Do not reuse O-ring.**
    - **If the extension tube is being replaced, install a new axle shaft bearing.**

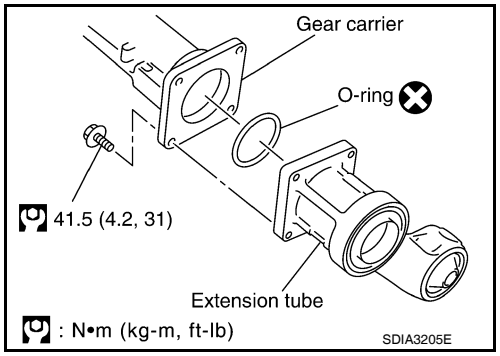

17. Apply 3 mm (0.12 in) bead of sealant to the mating surface of the carrier cover as shown.
    - Use Genuine Silicone RTV or equivalent. Refer to GI-14, "Recommended Chemical Products and Sealants".
    CAUTION:
    Remove any old sealant adhering to the mating surfaces. Also remove any moisture, oil, or foreign material adhering to the application and mating surfaces.
18. Install the carrier cover to the gear carrier. Tighten the bolts to the specified torque. Refer to DLN-389, "Exploded View".
19. Install side shaft and side flange.

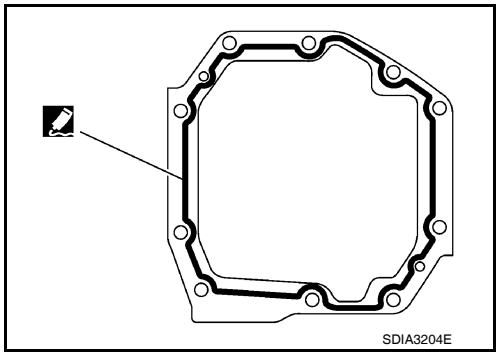

SERVICE DATA AND SPECIFICATIONS (SDS)

SERVICE DATA AND SPECIFICATIONS (SDS)

General Specification

INFOID:0000000005258495

Applied model	VK56DE
Final drive model	M205
Gear ratio	2.937
Number of teeth (Drive gear/Drive pinion)	47/16
Differential gear oil capacity (Approx.)	1.6 ℓ (3 3/8 US pt, 2 7/8 Imp pt)
Number of pinion gears	2
Drive pinion adjustment spacer type	Collapsible

Inspection and Adjustment

INFOID:0000000005258496

DRIVE GEAR RUNOUT

Unit: mm (in)

Item	Runout limit
Drive gear back face	0.08 (0.0031) or less

SIDE GEAR CLEARANCE

Unit: mm (in)

Item	Specification
Side gear back clearance (Clearance between side gear and differential case for adjusting side gear backlash)	0.20 (0.0079) or less (Each gear should rotate smoothly without excessive resistance during differential motion.)

PRELOAD TORQUE

Unit: N·m (kg-m, in-lb)

Item	Specification
Drive pinion bearing preload torque	2.3 - 3.4 (0.23 - 0.35, 21 - 31)
Total preload torque (Total preload torque = drive pinion bearing preload torque + side bearing preload torque).	2.98 - 4.76 (0.31 - 0.48, 27 - 42)

BACKLASH

Unit: mm (in)

Item	Specification
Drive gear to drive pinion backlash	0.13 - 0.18 (0.0051 - 0.0071)

COMPANION FLANGE RUNOUT

Unit: mm (in)

Item	Runout limit
Companion flange face	0.10 (0.0039) or less
Companion flange inner side	0.13 (0.0051) or less

SELECTIVE PARTS

Drive Pinion Height Adjusting Washer

Unit: mm (in)

Thickness	Package part number*
1.22 (0.048) 1.24 (0.049) 1.27 (0.050) 1.30 (0.051) 1.32 (0.052)	38154 8S111
1.35 (0.053) 1.37 (0.054) 1.40 (0.055) 1.42 (0.056) 1.45 (0.057)	38154 8S112
1.47 (0.058) 1.50 (0.059) 1.52 (0.060) 1.55 (0.061) 1.57 (0.062)	38154 8S113
1.60 (0.063) 1.63 (0.064) 1.65 (0.065) 1.68 (0.066) 1.70 (0.067)	38154 8S114
1.73 (0.068) 1.75 (0.069) 1.78 (0.070) 1.80 (0.071) 1.83 (0.072)	38154 8S115

*Always check with the Parts Department for the latest parts information.

Side Gear Thrust Washer

Unit: mm (in)

Thickness	Package part number*
0.76 (0.030) 0.79 (0.031) 0.81 (0.032) 0.84 (0.033) 0.87 (0.034)	38424 8S111
0.89 (0.035) 0.91 (0.036) 0.94 (0.037) 0.97 (0.038) 0.99 (0.039)	38424 8S112

*: Always check with the Parts Department for the latest parts information.

PRECAUTION

PRECAUTIONS

Precaution for Supplemental Restraint System (SRS) "AIR BAG" and "SEAT BELT PRE-TENSIONER"

INFOID:0000000005550728

The Supplemental Restraint System such as “AIR BAG” and “SEAT BELT PRE-TENSIONER”, used along with a front seat belt, helps to reduce the risk or severity of injury to the driver and front passenger for certain types of collision. This system includes seat belt switch inputs and dual stage front air bag modules. The SRS system uses the seat belt switches to determine the front air bag deployment, and may only deploy one front air bag, depending on the severity of a collision and whether the front occupants are belted or unbelted.
Information necessary to service the system safely is included in the SR and SB section of this Service Manual.

WARNING:
- **To avoid rendering the SRS inoperative, which could increase the risk of personal injury or death in the event of a collision which would result in air bag inflation, all maintenance must be performed by an authorized NISSAN/INFINITI dealer.**
- **Improper maintenance, including incorrect removal and installation of the SRS, can lead to personal injury caused by unintentional activation of the system. For removal of Spiral Cable and Air Bag Module, see the SR section.**
- **Do not use electrical test equipment on any circuit related to the SRS unless instructed to in this Service Manual. SRS wiring harnesses can be identified by yellow and/or orange harnesses or harness connectors.**

PRECAUTIONS WHEN USING POWER TOOLS (AIR OR ELECTRIC) AND HAMMERS

WARNING:
- **When working near the Airbag Diagnosis Sensor Unit or other Airbag System sensors with the Ignition ON or engine running, DO NOT use air or electric power tools or strike near the sensor(s) with a hammer. Heavy vibration could activate the sensor(s) and deploy the air bag(s), possibly causing serious injury.**
- **When using air or electric power tools or hammers, always switch the Ignition OFF, disconnect the battery, and wait at least 3 minutes before performing any service.**

Precaution Necessary for Steering Wheel Rotation After Battery Disconnect

INFOID:0000000005550729

NOTE:
- This Procedure is applied only to models with Intelligent Key system and NATS (NISSAN ANTI-THEFT SYSTEM).
- Remove and install all control units after disconnecting both battery cables with the ignition knob in the ″LOCK″ position.
- Always use CONSULT-III to perform self-diagnosis as a part of each function inspection after finishing work. If DTC is detected, perform trouble diagnosis according to self-diagnostic results.

For models equipped with the Intelligent Key system and NATS, an electrically controlled steering lock mechanism is adopted on the key cylinder.
For this reason, if the battery is disconnected or if the battery is discharged, the steering wheel will lock and steering wheel rotation will become impossible.
If steering wheel rotation is required when battery power is interrupted, follow the procedure below before starting the repair operation.

OPERATION PROCEDURE

1. Connect both battery cables.
   NOTE:
   Supply power using jumper cables if battery is discharged.
2. Use the Intelligent Key or mechanical key to turn the ignition switch to the ″ACC″ position. At this time, the steering lock will be released.
3. Disconnect both battery cables. The steering lock will remain released and the steering wheel can be rotated.
4. Perform the necessary repair operation.

5. When the repair work is completed, return the ignition switch to the ″LOCK″ position before connecting the battery cables. (At this time, the steering lock mechanism will engage.)
6. Perform a self-diagnosis check of all control units using CONSULT-III.

Precaution for Servicing Rear Final Drive

INFOID:0000000005258497

- Before starting diagnosis of the vehicle, understand the symptoms well. Perform correct and systematic operations.
- Check for the correct installation status prior to removal or disassembly. When matching marks are required, be certain they do not interfere with the function of the parts they are applied to.
- Overhaul should be done in a clean work area, a dust proof area is recommended.
- Before disassembly, completely remove sand and mud from the exterior of the unit, preventing them from entering into the unit during disassembly or assembly.
- Always use shop paper for cleaning the inside of components.
- Avoid using cotton gloves or a shop cloth to prevent the entering of lint.
- Check appearance of the disassembled parts for damage, deformation, and abnormal wear. Replace them with new ones if necessary.
- Gaskets, seals and O-rings should be replaced any time the unit is disassembled.
- Clean and flush the parts sufficiently and blow them dry.
- Be careful not to damage sliding surfaces and mating surfaces.
- When applying sealant, remove the old sealant from the mating surface; then remove any moisture, oil, and foreign materials from the application and mating surfaces.
- In principle, tighten nuts or bolts gradually in several steps working diagonally from inside to outside. If a tightening sequence is specified, observe it.
- During assembly, observe the specified tightening torque.
- Add new differential gear oil, petroleum jelly, or multi-purpose grease, as specified.

PREPARATION

PREPARATION

Special Service Tool

INFOID:0000000005258498

The actual shapes of Kent-Moore tools may differ from those of special service tools illustrated here.

Tool number (Kent-Moore No.) Tool name	Description
KV381054S0 (J-34286) Puller 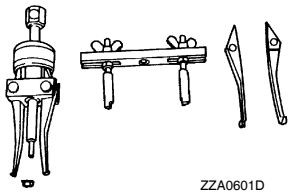 ZZA0601D	Removing front oil seal
ST30720000 (J-25405) Drift 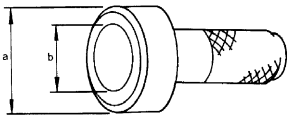 ZZA0811D	• Installing front oil seal • Installing drive pinion rear bearing outer race **a: 77 mm (3.03 in) dia.** **b: 55.5 mm (2.185 in) dia.**
ST36230000 (J-25840-A) Sliding hammer 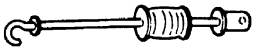 ZZA0803D	Removing side flange
KV40104100 (—) Attachment 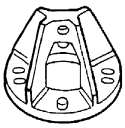 ZZA0804D	Removing side flange
KV38100200 (J-26233) Drift 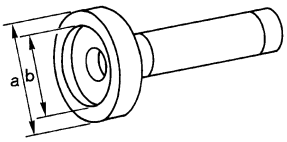 ZZA1143D	Installing side oil seal **a: 65 mm (2.56 in) dia.** **b: 49 mm (1.93 in) dia.**
KV38107900 (J-39352) Protector 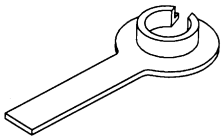 S-NT129	Installing side flange

Tool number (Kent-Moore No.) Tool name	Description
KV38100800 (J-25604-01) Attachment 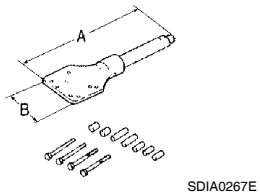	Securing unit assembly **a: 541 mm (21.30 in)** **b: 200 mm (7.87 in)**
ST3127S000 (J-25765-A) Preload gauge 1: GG91030000 (J-25765) Torque wrench 2: HT62940000 (—) Socket adapter (1/2″) 3: HT62900000 (—) Socket adapter (3/8″) 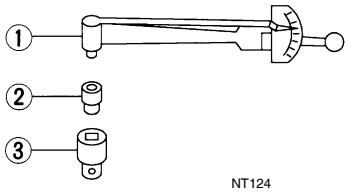	Measuring drive pinion bearing preload torque and total preload torque
KV10111100 (J-37228) Seal cutter 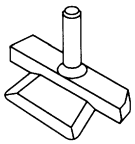	Removing carrier cover
ST3306S001 (—) Differential side bearing puller set 1: ST33051001 (J-22888-20) Puller 2: ST33061000 (J-8107-2) Base 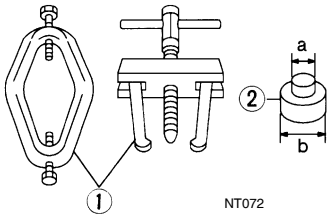	Removing and installing side bearing inner race **a: 28.5 mm (1.122 in) dia.** **b: 38 mm (1.50 in) dia.**
ST30031000 (J-22912-01) Puller 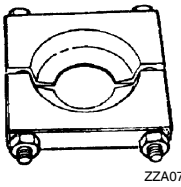	Removing drive pinion rear bearing inner race
KV40105230 (—) Drift 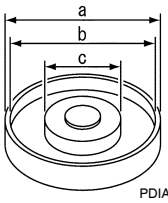	Installing drive pinion rear bearing outer race **a: 92 mm (3.62 in) dia.** **b: 86 mm (3.39 in) dia.** **c: 45 mm (1.77 in) dia.**

Tool number (Kent-Moore No.) Tool name	Description
ST30611000 (J-25742-1) Drift bar 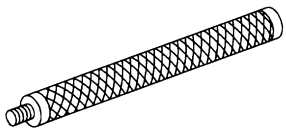 S-NT090	Installing drive pinion front bearing outer race (Use with ST30613000)
ST30613000 (J-25742-3) Drift 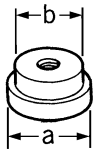 ZZA1000D	Installing drive pinion front bearing outer race **a: 72 mm (2.83 in) dia.** **b: 48 mm (1.89 in) dia.**
KV38100300 (J-25523) Drift 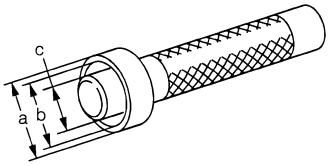 ZZA1046D	Installing side bearing inner race **a: 54 mm (2.13 in) dia.** **b: 46 mm (1.81 in) dia.** **c: 32 mm (1.26 in) dia.**
ST30901000 (J-26010-01) Drift 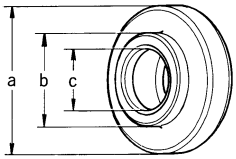 ZZA0978D	Installing drive pinion rear bearing inner race **a: 79 mm (3.11 in) dia.** **b: 45 mm (1.77 in) dia.** **c: 35.2 mm (1.386 in) dia.**
HT72400000 (—) Slide hammer  S-NT125	Removing differential case assembly
— (J-8129) Spring gauge 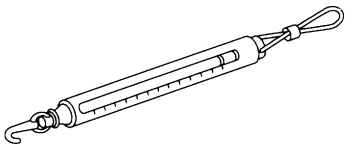 NT127	Measuring turning torque
— (J-34309) Differential shim selector tool  NT134	Adjusting drive pinion bearing preload and drive pinion height

Tool number (Kent-Moore No.) Tool name	Description
— (J-25269-4) Side bearing disc (2 Req'd) 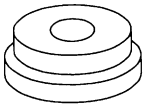 NT136	Selecting drive pinion height adjusting washer
KV10112100 (BT-8653-A) Angle wrench 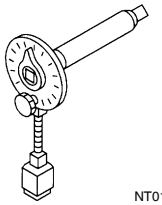 NT014	Tightening bolts for drive gear

Commercial Service Tool

INFOID:0000000005258499

Tool name	Description
Spacer 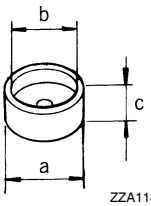 ZZA1133D	Installing drive pinion front bearing inner race **a: 60 mm (2.36 in) dia.** **b: 36 mm (1.42 in) dia.** **c: 30 mm (1.18 in)**
Power tool 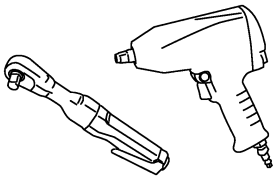 PBIC0190E	Loosening nuts and bolts

FUNCTION DIAGNOSIS

NOISE, VIBRATION AND HARSHNESS (NVH) TROUBLESHOOTING

NVH Troubleshooting Chart

INFOID:0000000005258500

Use the chart below to help you find the cause of the symptom. If necessary, repair or replace these parts.

Reference page		DLN-426	DLN-426	DLN-426	DLN-426	DLN-444	MA-16	DLN-323, "NVH Troubleshooting Chart" DLN-334, "NVH Troubleshooting Chart"	RAX-5, "NVH Troubleshooting Chart"	RSU-5, "NVH Troubleshooting Chart"	WT-46, "NVH Troubleshooting Chart"	WT-46, "NVH Troubleshooting Chart"	RAX-5, "NVH Troubleshooting Chart"	BR-6, "NVH Troubleshooting Chart"	ST-12, "NVH Troubleshooting Chart"
Possible cause and SUSPECTED PARTS		Gear tooth rough	Gear contact improper	Tooth surfaces worn	Backlash incorrect	Companion flange excessive runout	Gear oil improper	PROPELLER SHAFT	REAR AXLE	REAR SUSPENSION	TIRES	ROAD WHEEL	DRIVE SHAFT	BRAKES	STEERING
Symptom	Noise	×	×	×	×	×	×	×		×	×	×	×	×	×

×: Applicable

DESCRIPTION

Cross-Sectional View

INFOID:0000000005258501

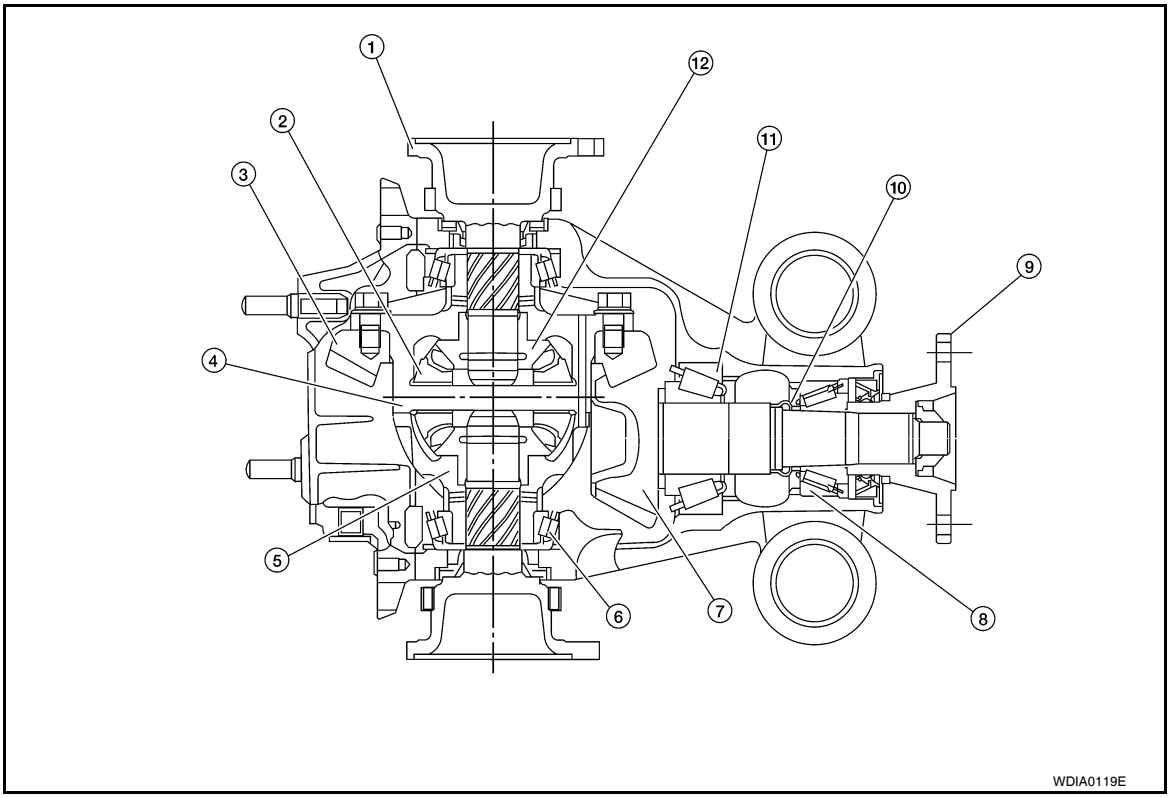

1. Side flange	2. Pinion mate gear	3. Drive gear
4. Pinion mate shaft	5. Differential case	6. Side bearing
7. Drive pinion	8. Drive pinion front bearing	9. Companion flange
10. Collapsible spacer	11. Drive pinion rear bearing	12. Side gear

ON-VEHICLE MAINTENANCE

DIFFERENTIAL GEAR OIL

Changing Differential Gear Oil

INFOID:0000000005258502

DRAINING

1. Stop the engine.
2. Remove the drain plug and gasket from the rear final drive assembly to drain the differential gear oil.
3. Install the drain plug with a new gasket to the rear final drive assembly. Tighten to the specified torque. Refer to DLN-426, "Disassembly and Assembly".
   CAUTION:
   Do not reuse gasket.

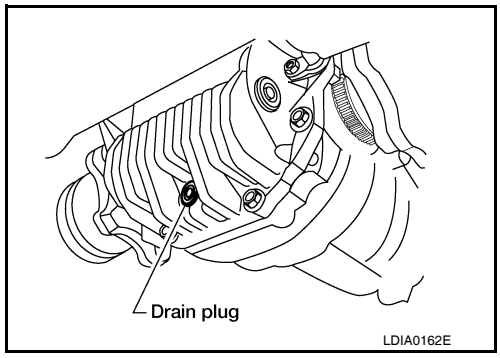

FILLING

1. Remove the filler plug and gasket from the rear final drive assmebly.
2. Fill the rear final drive assembly with new differential gear oil until the level reaches the specified level near the filler plug hole.

Differential gear oil grade and capacity	**: Refer to MA-16, "For North America".**

3. Install the filler plug with a new gasket on it to the rear final drive assembly. Tighten to the specified torque. Refer to DLN-426, "Disassembly and Assembly".
   CAUTION:
   Do not reuse gasket.

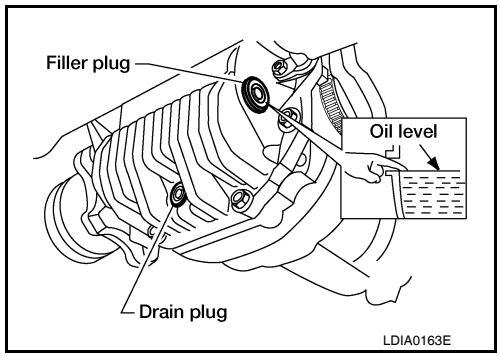

Checking Differential Gear Oil

INFOID:0000000005258503

OIL LEAKAGE AND OIL LEVEL

1. Make sure that differential gear oil is not leaking from the rear final drive assembly or around it.
2. Check the differential gear oil level from the filler plug hole as shown.
   CAUTION:
   Do not start engine while checking differential gear oil level.
3. Install the filler plug with a new gasket on it to the rear final drive assembly. Tighten to the specified torque. Refer to DLN-426, "Disassembly and Assembly".
   CAUTION:
   Do not reuse gasket.

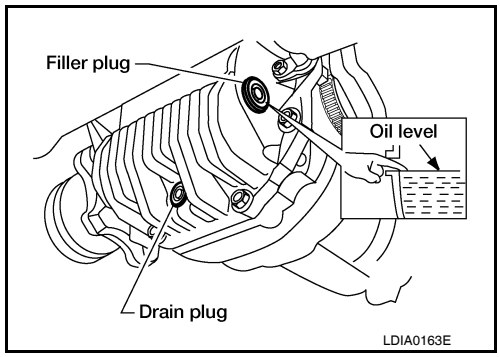

ON-VEHICLE REPAIR

FRONT OIL SEAL

Removal and Installation

INFOID:0000000005258504

REMOVAL

1. Remove the drive shafts from the rear final drive assembly. Refer to RAX-8, "Removal and Installation".
2. Remove the side flanges and side oil seals. Refer to DLN-419, "Removal and Installation".
3. Remove the rear propeller shaft. Refer to DLN-325, "Removal and Installation" (2S1330).
4. Measure the total preload torque. Refer to DLN-426, "Disassembly and Assembly".
   NOTE:
   Record the total preload torque measurement.
5. Remove the drive pinion lock nut using suitable tool.
6. Put matching marks on the companion flange and drive pinion using paint.
   CAUTION:
   Use paint to make the matching marks. Do not damage the companion flange or drive pinion.

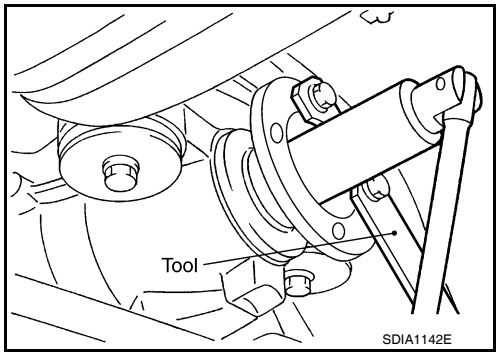

7. Remove the companion flange using suitable tool.

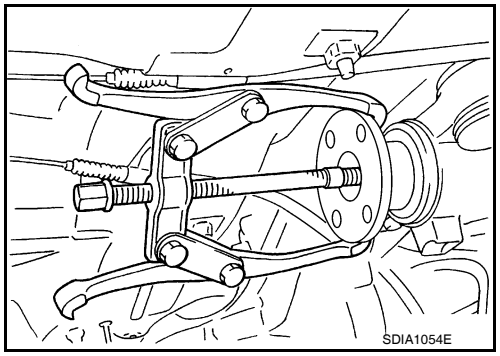

8. Remove the front oil seal using Tool.

   Tool number : KV381054S0 (J-34286)

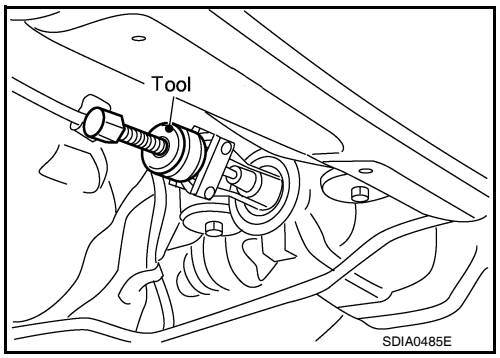

INSTALLATION

1. Apply multi-purpose grease to the lips and differential gear oil to the circumference of the new front oil seal. Then drive the new front oil seal in evenly until it becomes flush with the gear carrier using Tool.

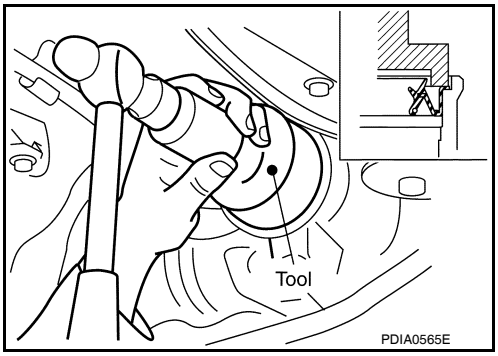

Tool number : ST30720000 (J-25405)

CAUTION:
- **Do not reuse front oil seal.**
- **Do not incline the new front oil seal when installing.**
- **Apply multi-purpose grease to the lips and differential gear oil to the circumference of the new front oil seal.**

2. Install the companion flange to the drive pinion while aligning the matching marks.
3. Apply anti-corrosive oil to the threads of the drive pinion and the seating surface of the new drive pinion lock nut. Then adjust the drive pinion lock nut tightening torque using suitable tool A, and check the total preload torque using Tool B.

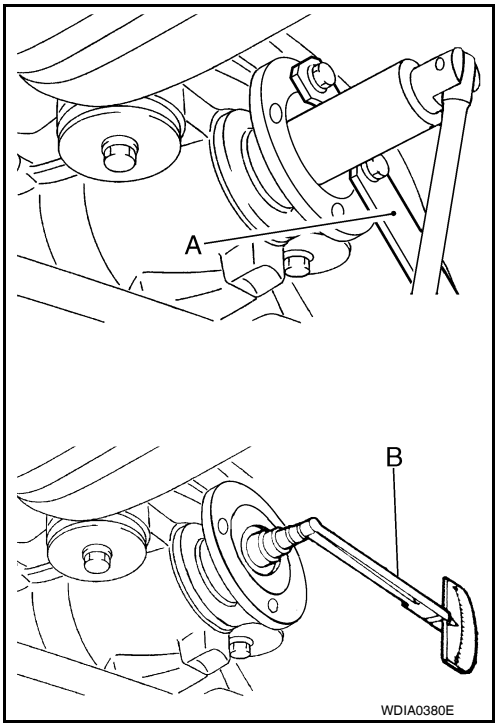

Tool number B: ST3127S000 (J-25765-A)

Total preload torque: Refer to DLN-444, "Inspection and Adjustment".

- The total preload torque should be within the total preload torque specification. When not replacing the collapsible spacer, it should also be equal to the measurement taken during removal plus an additional 0.56 N·m (0.06 Kg-m, 5 in-lb).
- If the total preload torque is low, tighten the drive pinion lock nut in 6.8 N·m (0.69 Kg-m, 5ft-lb) increments until the total preload torque is met.

CAUTION:
- **Do not reuse drive pinion lock nut.**
- **Apply anti-corrosive oil to the threads of the drive pinion and the seating surface of the new drive pinion lock nut.**
- **Adjust the drive pinion lock nut tightening torque to the lower limit first. Do not exceed the drive pinion lock nut specified torque. Refer to DLN-426, "Disassembly and Assembly".**
- **Do not loosen drive pinion lock nut to adjust the total preload torque. If the total preload torque exceeds the specifications, replace the collapsible spacer and tighten it again to adjust. Refer to DLN-426, "Disassembly and Assembly".**
- **After adjustment, rotate drive pinion back and forth 2 to 3 times to check for unusual noise, rotation malfunction, and other malfunctions.**

4. Installation of the remaining components is in the reverse order of removal.

CAUTION:
Check the differential gear oil level after installation. Refer to DLN-416, "Checking Differential Gear Oil".

SIDE OIL SEAL

Removal and Installation

INFOID:0000000005258505

REMOVAL

1. Remove the rear wheel sensor. Refer to BRC-125, "Removal and Installation".
2. Remove the drive shaft from the rear final drive assembly. Refer to RAX-8, "Removal and Installation".
3. Remove the side flange using Tools.

Tool numbers **A: KV40104100 (—)**
B: ST36230000 (J-25840-A)

NOTE:
Circular clip installation position: Rear final drive side

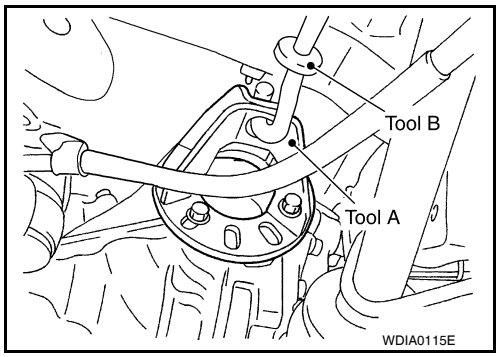

4. Remove the side oil seal using suitable tool.
CAUTION:
Do not to damage gear carrier.

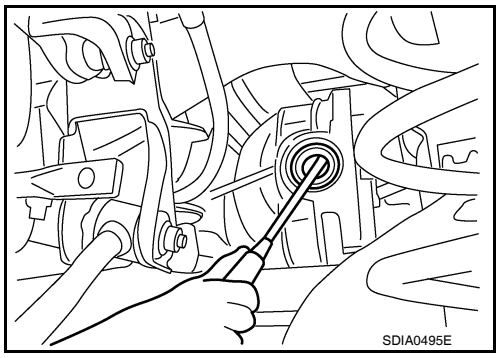

INSTALLATION

1. Apply multi-purpose grease to the lips and differential gear oil to the circumference of the new side oil seal. Then drive the new side oil seal in evenly until it becomes flush with the gear carrier using Tool.

Tool number **: KV38100200 (J-26233)**

CAUTION:
- **Do not reuse side oil seal.**
- **Do not incline the new side oil seal when installing.**
- **Apply multi-purpose grease to the lips and differential gear oil to the circumference of the new side oil seal.**

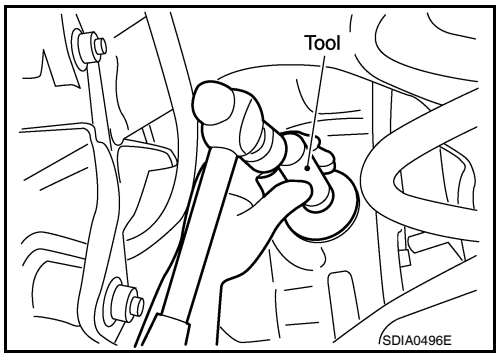

2. Install the side flange using Tool.
a. Install the Tool to the side oil seal as shown.

Tool number **: KV38107900 (J-39352)**

b. Insert the side flange until the serrated part of the side flange has engaged the serrated part of the side gear and remove the Tool.
c. Drive in the side flange using suitable tool.
NOTE:
Installation is completed when the driving sound of the side flange turns into a sound which seems to affect the whole rear final drive assembly.

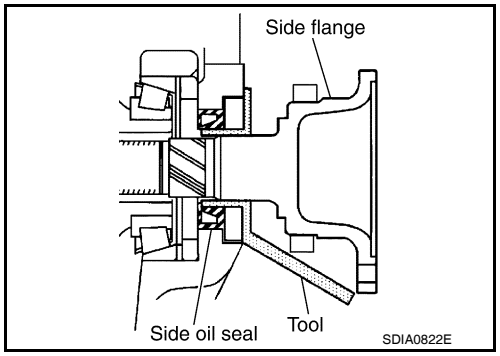

3. Installation of the remaining components is in the reverse order of removal.

CAUTION:
Check the differential gear oil level after installation. Refer to DLN-416, "Checking Differential Gear Oil".

CARRIER COVER

Removal and Installation

INFOID:0000000005258506

REMOVAL

1. Remove the rear final drive assembly. Refer to DLN-422, "Removal and Installation".
2. Remove the carrier cover bolts and separate the carrier cover from the gear carrier using Tool.

   Tool number : KV10111100 (J-37228)

   CAUTION:
   - **Do not damage the mating surface.**
   - **Do not insert flat-bladed screwdriver, this will damage the mating surface.**

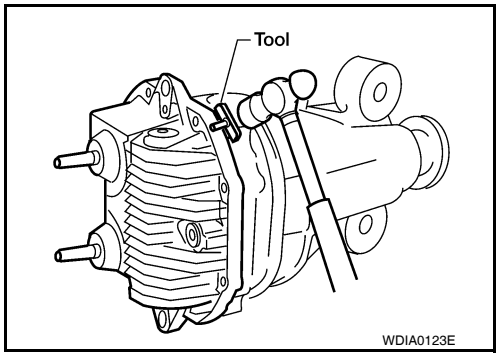

INSTALLATION

1. Apply a 3 mm (0.12 in) bead of sealant to the mating surface of the carrier cover as shown.
   - Use Genuine Silicone RTV or equivalent. Refer to GI-14, "Recommended Chemical Products and Sealants".

   CAUTION:
   Remove any old sealant adhering to the mating surfaces. Also remove any moisture, oil, or foreign material adhering to the application and mating surfaces.
2. Install the carrier cover to the gear carrier. Tighten the bolts to the specified torque. Refer to DLN-426, "Disassembly and Assembly".
3. Install the rear final drive assembly. Refer to DLN-422, "Removal and Installation".

   CAUTION:
   Fill the rear final drive assembly with recommended differential gear oil. Refer to DLN-416, "Changing Differential Gear Oil".

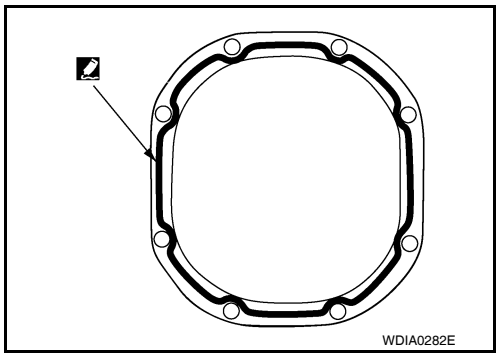

REMOVAL AND INSTALLATION

REAR FINAL DRIVE

Removal and Installation

INFOID:0000000005258507

COMPONENTS

Rear Final Drive

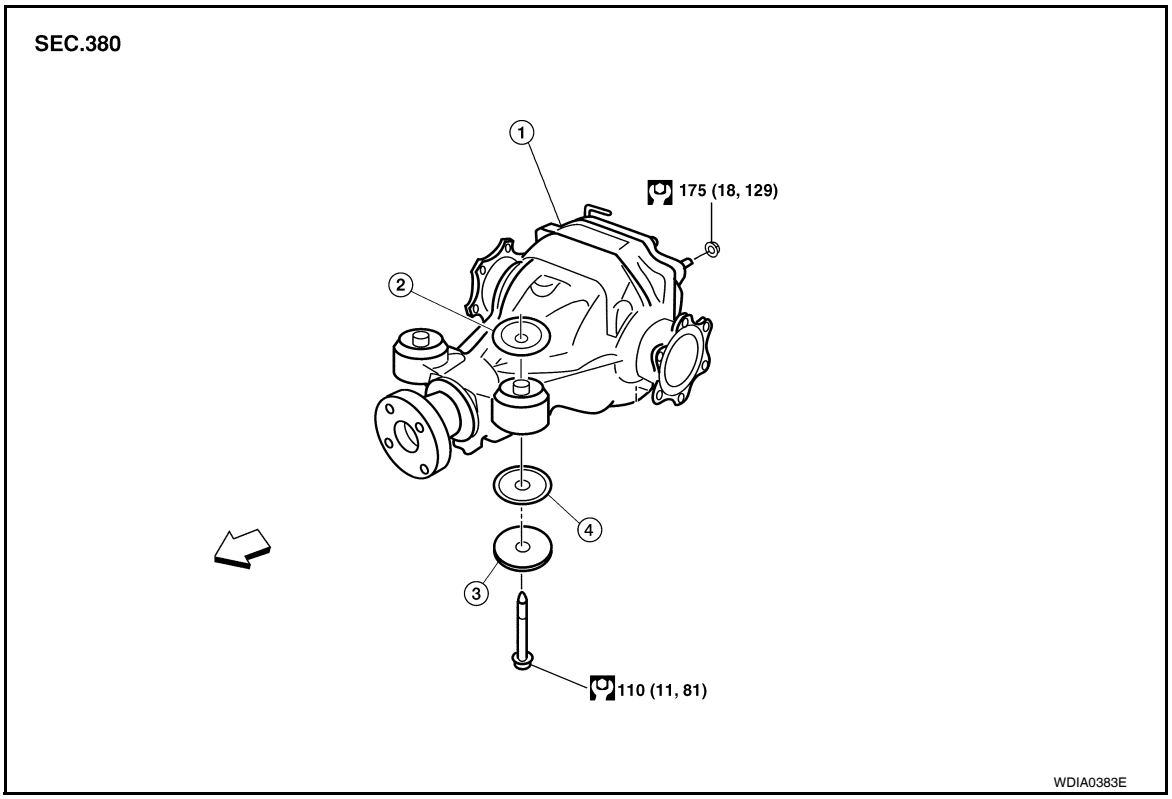

1. Rear final drive assembly
2. Upper stopper
3. Washer
4. Lower stopper
⇦ Front

Rear Final Drive Breather Hose

SEC. 380

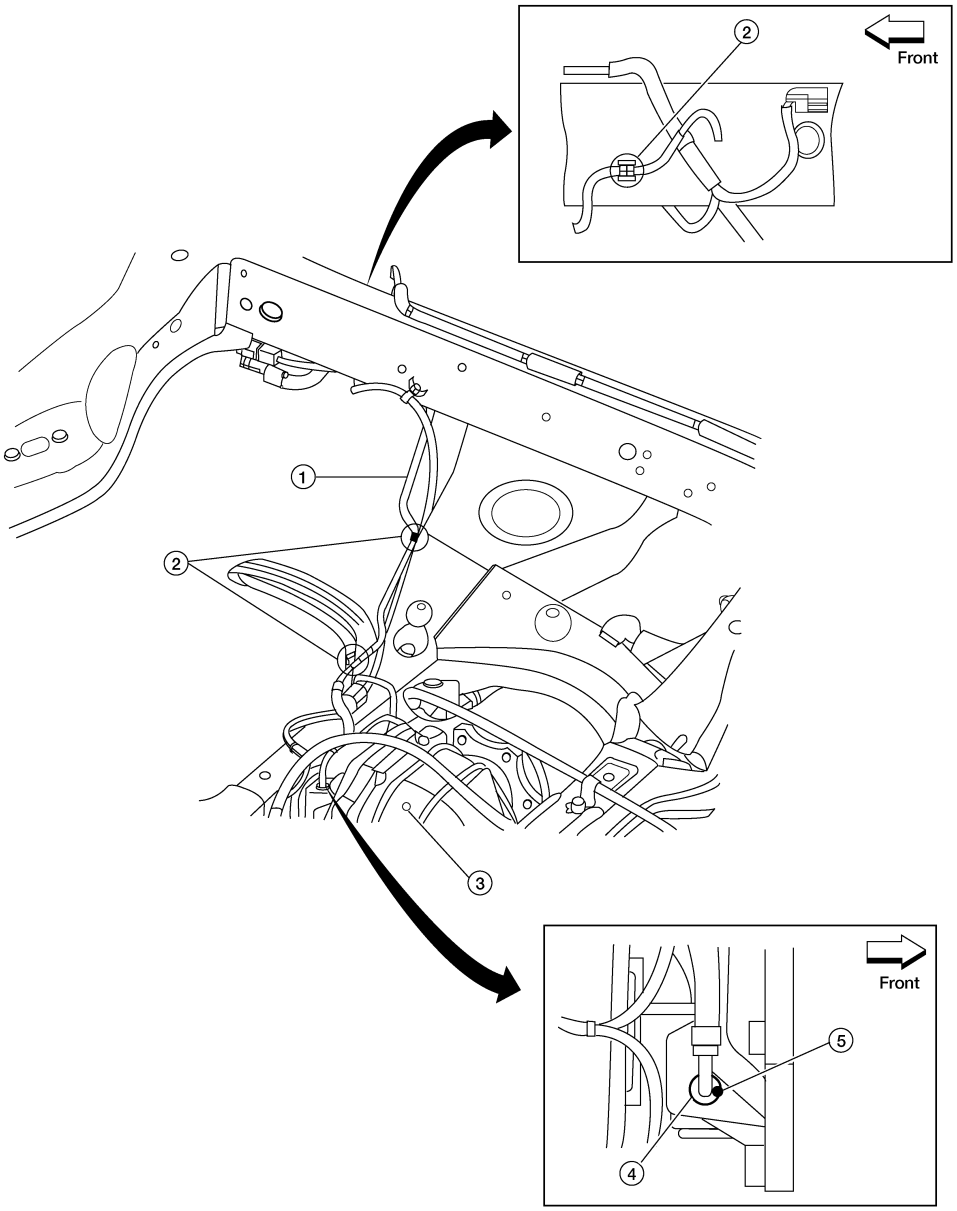

1. Breather hose
2. Plastic connectors
3. Rear final drive assembly
4. Metal connector
5. Paint mark

REMOVAL

1. Remove the spare tire.
2. Drain the differential gear oil. Refer to DLN-416, "Changing Differential Gear Oil".
3. Remove the rear stabilizer bar. Refer to RSU-18, "Removal and Installation".
4. Remove the rear propeller shaft. Refer to DLN-325, "Removal and Installation".

5. Remove the rear drive shafts from the rear final drive assembly and support them using suitable wire. Refer to RAX-8, "Removal and Installation".

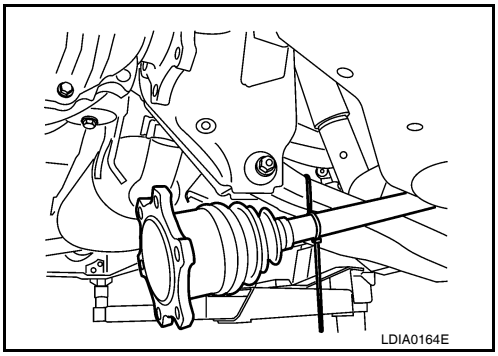

6. Disconnect the breather hose from the rear final drive assembly.
7. Remove the rear wheel sensors. Refer to BRC-125, "Removal and Installation".

8. Place a suitable jack under the rear final drive assembly.
   CAUTION:
   Do not place the jack on the carrier cover.
9. Remove the nuts and bolts and remove the rear final drive assembly.
   CAUTION:
   Secure rear final drive assembly to the jack while removing it.

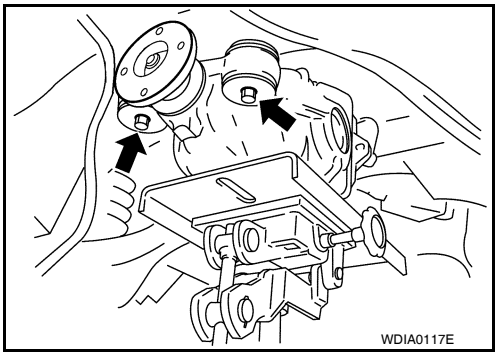

INSTALLATION

Installation is in the reverse order of removal.

CAUTION:

- **When installing the breather hose make sure the painted marking on the metal end of breather hose is to the front of the vehicle and there are no pinched or restricted areas on the breather hose caused by folding or bending when installing it.**
- **Make sure the breather hose plastic connectors are in the appropriate holes.**
- **Fill the front final drive assembly with differential gear oil after installation. Refer to DLN-416, "Changing Differential Gear Oil".**

DISASSEMBLY AND ASSEMBLY

REAR FINAL DRIVE

Exploded View

INFOID:0000000005588050

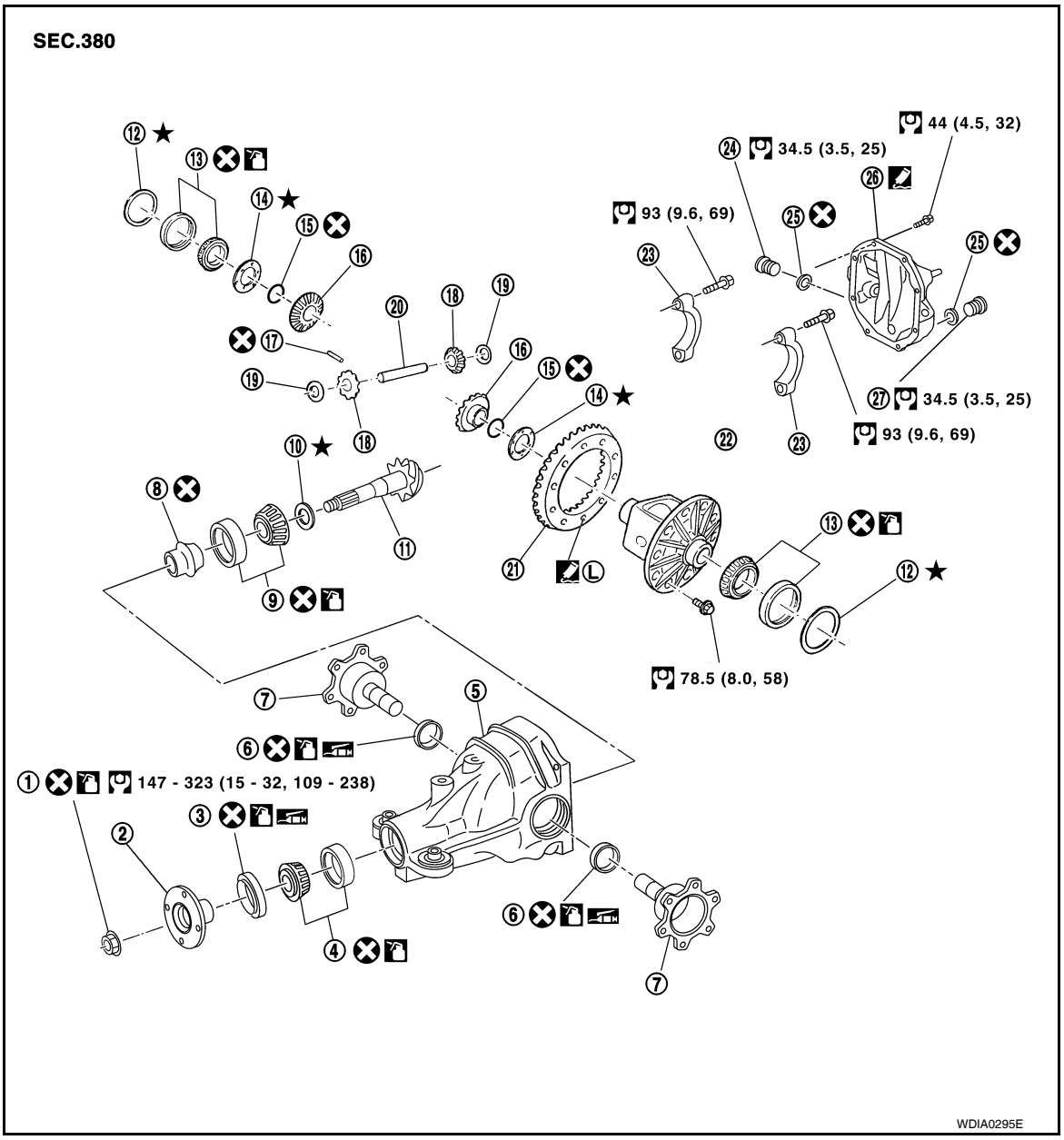

1. Drive pinion lock nut	2. Companion flange	3. Front oil seal
4. Drive pinion front bearing	5. Gear carrier	6. Side oil seal
7. Side flange	8. Collapsible spacer	9. Drive pinion rear bearing
10. Drive pinion height adjusting washer	11. Drive pinion	12. Side bearing adjusting washer
13. Side bearing	14. Side gear thrust washer	15. Circular clip
16. Side gear	17. Lock pin	18. Pinion mate gear
19. Pinion mate thrust washer	20. Pinion mate shaft	21. Drive gear
22. Differential case	23. Side bearing cap	24. Filler plug
25. Gasket	26. Carrier cover	27. Drain plug

Disassembly and Assembly

INFOID:0000000005258508

ASSEMBLY INSPECTION AND ADJUSTMENT

- Drain the differential gear oil before inspection and adjustment. Refer to DLN-416, "Changing Differential Gear Oil".
- Remove and install the carrier cover as necessary for inspection and adjustment. Refer to DLN-421, "Removal and Installation".

Total Preload Torque

1. Remove the side flanges if necessary. Refer to DLN-419, "Removal and Installation".
   CAUTION:
   The side flanges shaft must removed in order to measure total preload torque.
2. Rotate the drive pinion back and forth 2 to 3 times to check for unusual noise and rotation malfunction.
3. Rotate the drive pinion at least 20 times to check for smooth operation of the bearings.
4. Measure total preload torque using Tool.

Tool number : **ST3127S000 (J-25765-A)**

Total preload torque: **Refer to DLN-444, "Inspection and Adjustment"**

NOTE:
Total preload torque = Drive pinion bearing preload torque + Side bearing preload torque

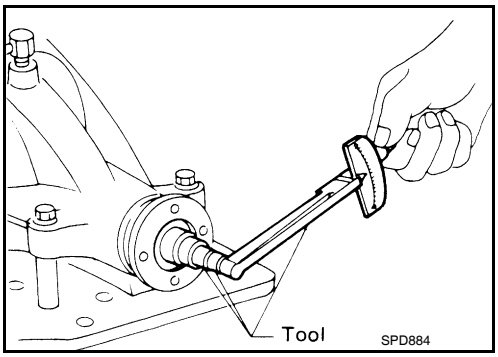

- If the measured value is out of the specification, check and adjust each part. Adjust the drive pinion bearing preload torque first, then adjust the side bearing preload torque.

If the total preload torque is greater than specification

On drive pinion bearings: **Replace the collapsible spacer.**

On side bearings: **Use thinner side bearing adjusting washers by the same amount on each side. Refer to DLN-444, "Inspection and Adjustment".**

If the total preload torque is less than specification

On drive pinion bearings: **Tighten the drive pinion lock nut.**

On side bearings: **Use thicker side bearing adjusting washers by the same amount on each side. Refer to DLN-444, "Inspection and Adjustment".**

CAUTION:
Select a side bearing adjusting washer for right and left individually.

Drive Gear Runout

1. Fit a dial indicator to the drive gear back face.
2. Rotate the drive gear to measure runout.

Runout limit **Refer to DLN-444, "Inspection and Adjustment"**

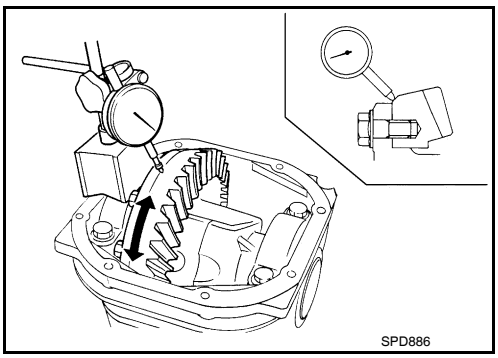

- If the runout is outside of the limit, check the condition of the drive gear assembly. Foreign material may be caught between the drive gear and differential case, or the differential case or drive gear may be deformed.
  CAUTION:
  Replace drive gear and drive pinion as a set.

Tooth Contact

1. Apply red lead to the drive gear.
   NOTE:
   Apply red lead to both faces of three to four gears, at four locations evenly spaced on the drive gear.

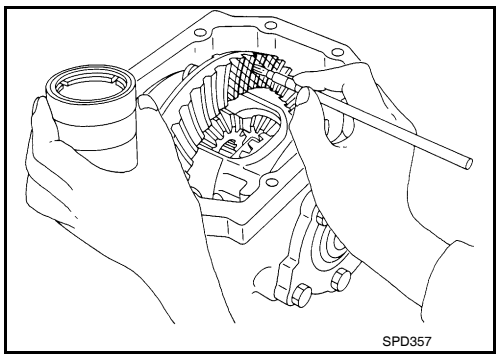

2. Rotate the drive gear back and forth several times. Then check for correct drive pinion to drive gear tooth contact as shown.
   CAUTION:
   Check tooth contact on drive side and reverse side.

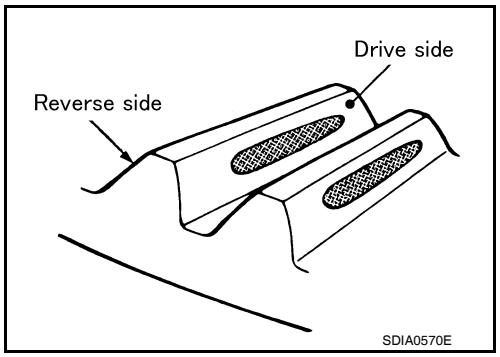

3. If the tooth contact is improperly adjusted, follow the procedure below to adjust the pinion height (dimension X).

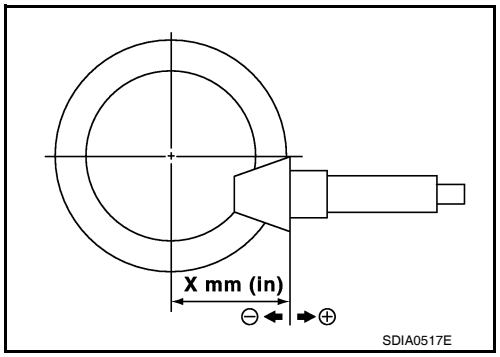

- If the tooth contact is near the face (face contact), or near the heel (heel contact), use a thicker drive pinion height adjusting washers to move the drive pinion closer to the drive gear.
  Refer to DLN-444, "Inspection and Adjustment".

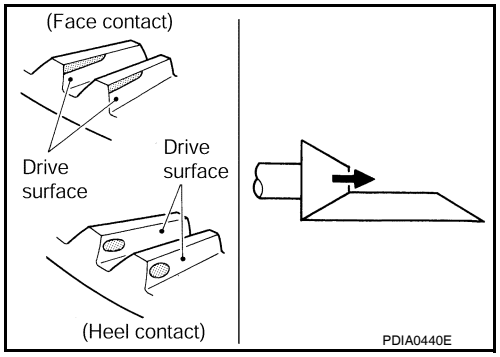

- If the tooth contact is near the flank (flank contact), or near the toe (toe contact), use a thinner drive pinion height adjusting washers to move the drive pinion farther from the drive gear.
  Refer to DLN-444, "Inspection and Adjustment".

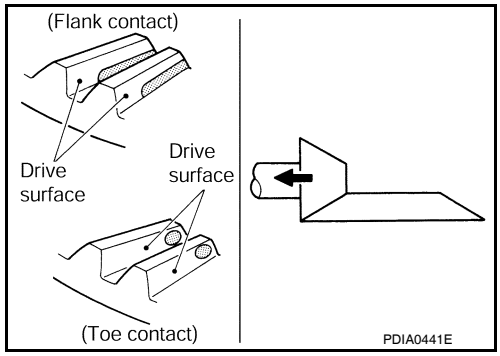

Backlash

1. Fit a dial indicator to the drive gear face to measure the backlash.

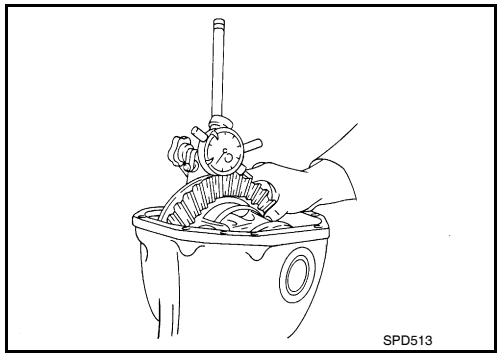

Backlash: **Refer to DLN-444, "Inspection and Adjustment"**

- If the backlash is outside of the specification, change the thickness of the side bearing adjusting washers.

If the backlash is greater than specification:

Make side bearing adjusting washer thicker on drive gear back side, and side bearing adjusting washer thinner on drive gear tooth side by the same amount. Refer to DLN-444, "Inspection and Adjustment".

If the backlash is less than specification:

Make side bearing adjusting washer thinner on drive gear back side, and side bearing adjusting washer thicker on drive gear tooth side by the same amount. Refer to DLN-444, "Inspection and Adjustment".

CAUTION:
Do not change the total thickness of side bearing adjusting washers as it will change the side bearing preload torque.

Companion Flange Runout

1. Rotate companion flange and check for runout on the outer face of the companion flange using suitable tool.

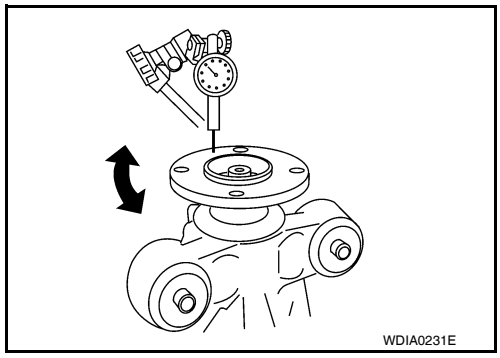

Runout limit **Refer to DLN-444, "Inspection and Adjustment"**

2. If the runout is outside of the runout limit, follow the procedure below to adjust.

a. Rotate the companion flange on the drive pinion by 90°, 180° and 270° while checking for the position where the runout is minimum.

b. If the runout is still outside of the runout limit after the companion flange has been rotated on the drive pinion, possible cause could be an assembly malfunction of drive pinion and drive pinion bearing or a malfunctioning drive pinion bearing.

c. If the runout is still outside of the runout limit after repair of the assembly of drive pinion and drive pinion bearing or drive pinion bearing, replace the companion flange.

DISASSEMBLY

Side Flange

1. Drain the differential gear oil if necessary.

2. Remove the side flange using Tools.

Tool numbers **A: KV40104100 (—)**
B: ST36230000 (J-25840-A)

NOTE:
Circular clip installation position: Rear final drive side

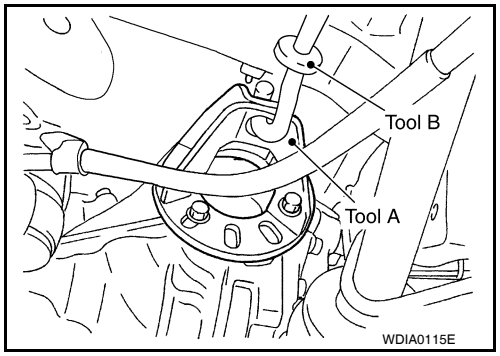

3. Remove the side oil seal using suitable tool.
CAUTION:
Do not to damage gear carrier.

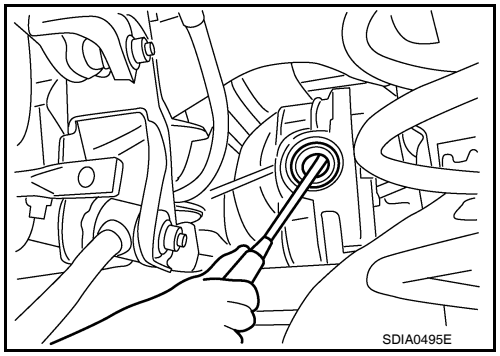

Differential Assembly

1. Remove the side flanges. Refer to DLN-419, "Removal and Installation".
2. Remove the carrier cover bolts.
3. Remove the carrier cover bolts and separate the carrier cover from the gear carrier using Tool.

Tool number : KV10111100 (J-37228)

CAUTION:
- **Do not damage the mating surface.**
- **Do not insert flat-bladed screwdriver, this will damage the mating surface.**

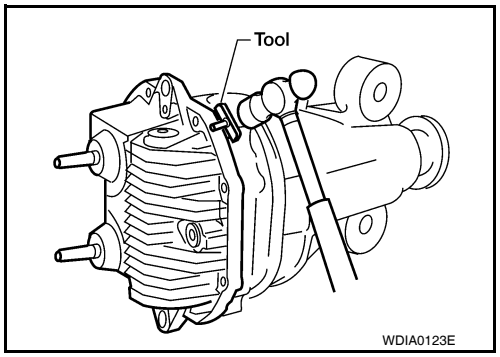

4. Mount the carrier on the Tool using two 45 mm (1.77 in) spacers.

Tool number : KV38100800 (J-25604-01)

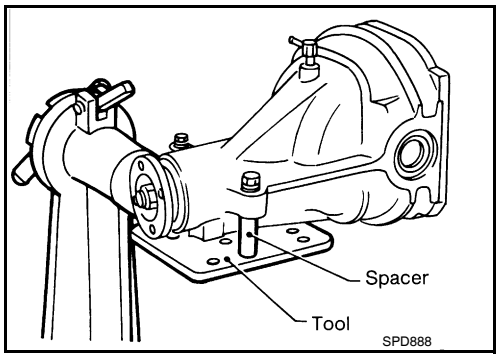

5. For proper reinstallation, paint matching marks on one side of the side bearing cap and gear carrier.

CAUTION:
- **For matching marks, use paint. Do not damage side bearing cap or gear carrier.**
- **Side bearing caps are line-board during manufacture. The matching marks are used to reinstall them in their original positions.**

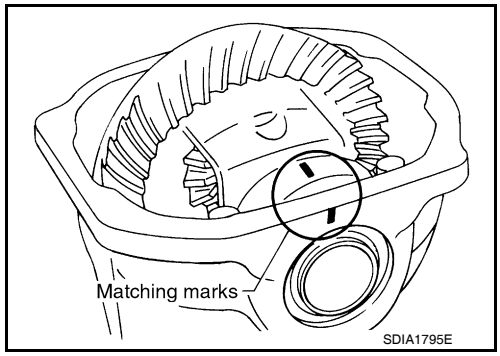

6. Remove the side bearing caps.

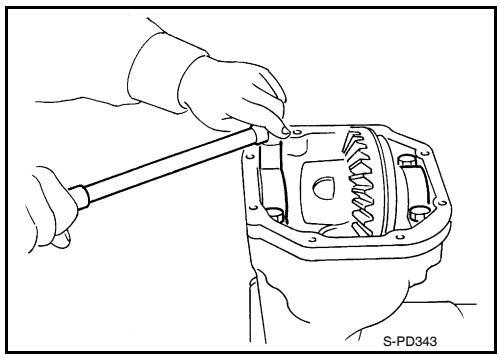

7. Lift the differential case assembly out using Tool.

Tool number : HT72400000 (—)

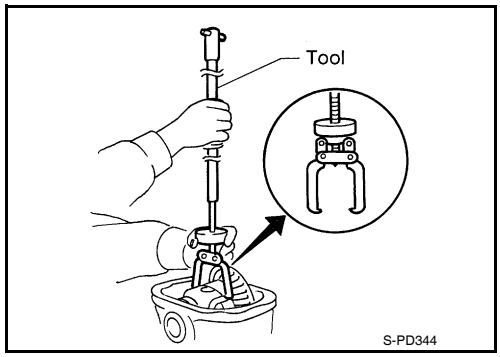

CAUTION:
- **Keep side bearing outer races together with inner race. Do not mix them up.**
- **Keep side bearing adjusting washers together with side bearings.**

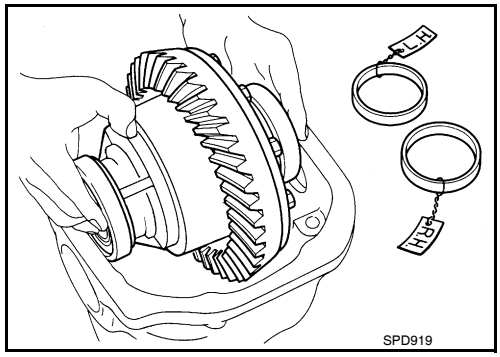

8. Remove the side bearing inner races using Tools.

Tool number **A: ST33051001 (J-22888-20)**
B: ST33061000 (J-8107-2)

CAUTION:
- **Engage Tool jaws in bearing groove to prevent damage.**
- **Place copper plates between the side bearing and drive gear and the vise to prevent damage.**
- **Do not remove side bearing inner race unless it is being replaced.**

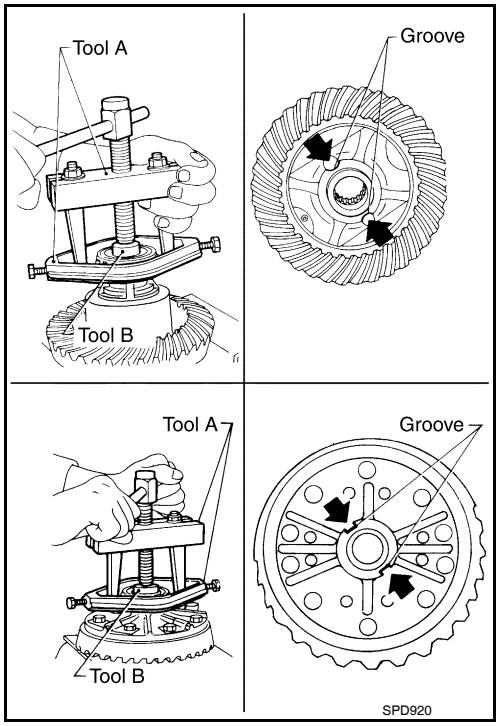

9. For proper reinstallation, paint matching marks on the differential case and drive gear.
CAUTION:
Use paint for matching marks. Do not damage differential case or drive gear.
10. Remove the drive gear bolts.
11. Tap the drive gear off the differential case using suitable tool.
CAUTION:
Tap evenly all around to keep drive gear from bending.

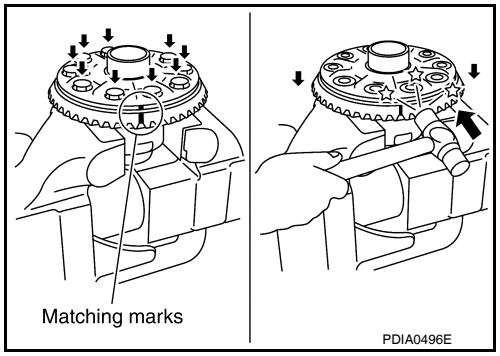

12. Remove the lock pin of the pinion mate shaft from the drive gear side using suitable tool.

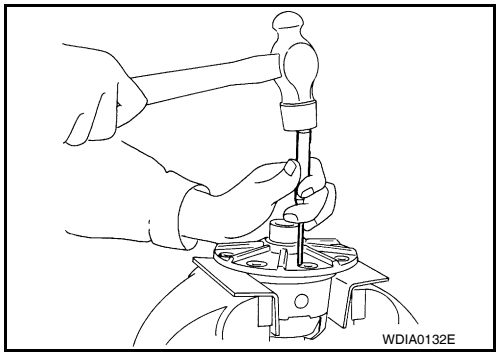

13. Remove the pinion mate shaft.

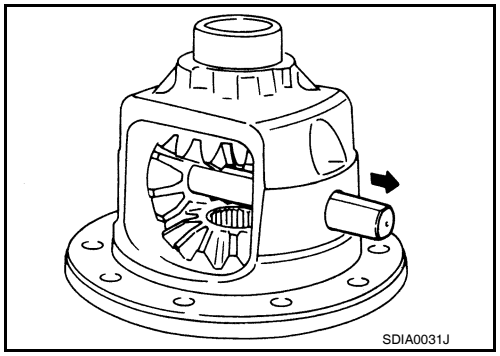

14. Turn the pinion mate gear, then remove the pinion mate gear, pinion mate thrust washer, side gear and side gear thrust washer from the differential case.

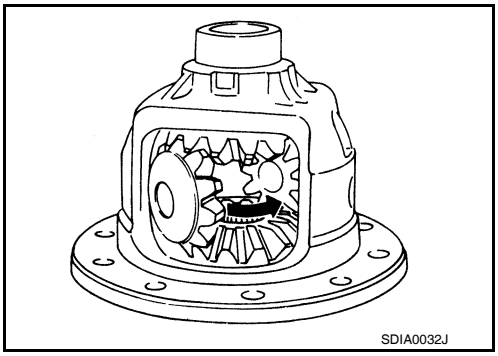

Drive Pinion Assembly

1. Remove the differential assembly. Refer to DLN-422, "Removal and Installation".
2. Remove the drive pinion lock nut using suitable tool.
3. Put matching marks on the companion flange and drive pinion using paint.
   CAUTION:
   Use paint to make the matching marks. Do not damage the companion flange or drive pinion.

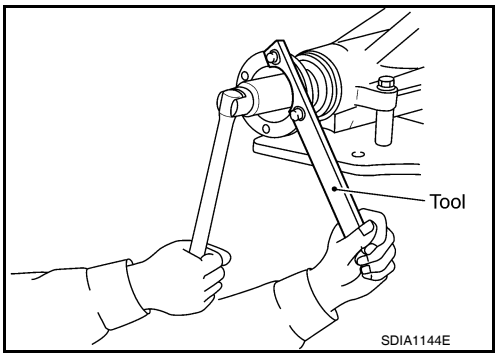

4. Remove the companion flange using suitable tool.

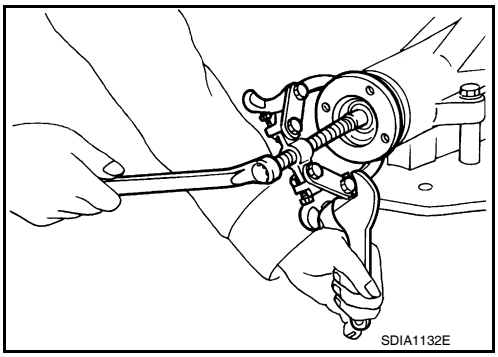

5. Press the drive pinion assembly (with rear inner bearing race and collapsible spacer) out of the gear carrier.
   CAUTION:
   Do not drop drive pinion assembly.
6. Remove the front oil seal.
   CAUTION:
   Do not damage gear carrier.
7. Remove the drive pinion front bearing inner race.

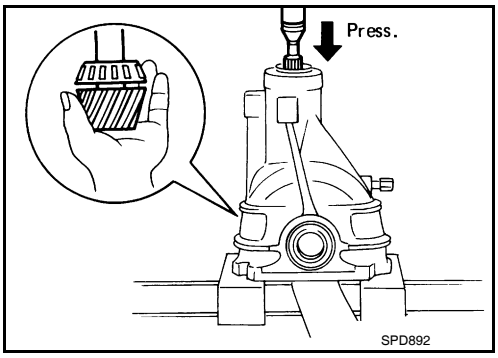

8. Remove the drive pinion rear bearing inner race and drive pinion height adjusting washer using Tool.

Tool number : ST30031000 (J-22912-01)

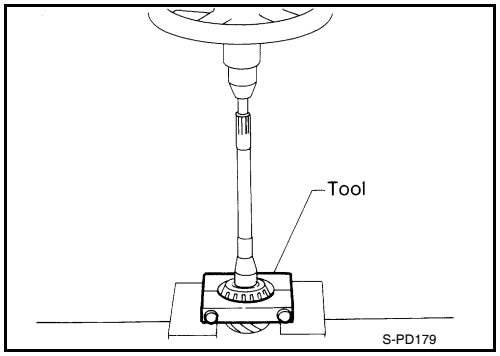

9. Remove the drive pinion front and rear bearing outer races by tapping them uniformly using suitable tool.
CAUTION:
Do not damage gear carrier.

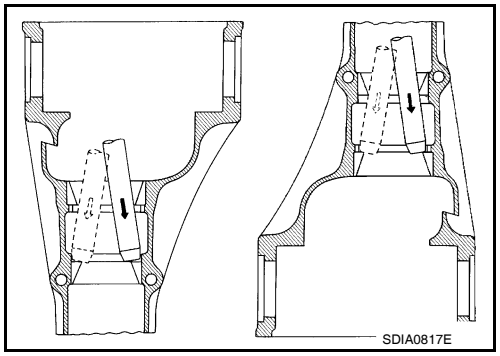

INSPECTION AFTER DISASSEMBLY

Clean the disassembled parts. Then inspect the parts for wear or damage. If wear or damage are found, follow the measures below.

Drive Pinion and Drive Gear
- If the drive pinion and drive gear teeth do not mesh or line-up correctly, determine the cause and adjust, repair, or replace as necessary.
- If the drive pinion or drive gear are worn, cracked, damaged, pitted or chipped (by friction) noticeably, replace with new drive pinion and drive gear.
- Drive pinion and drive gear are supplied in matched sets only. Matching numbers on both drive pinion and drive gear are etched for verification. If a new drive pinion and drive gear set are being used, verify the numbers of each drive pinion and drive gear before proceeding with assembly.

Bearing
- If bearings are chipped (by friction), pitted, worn, rusted, scratched, or unusual noise is coming from bearing, replace with new bearing assembly (as a new set).
- Bearing must be replaced with a new one whenever disassembled.

Side Gear and Pinion Mate Gear
- If any cracks or damage are found on the surface of the teeth, replace with new one.
- If any worn or chipped marks are found on the side of the side gear and pinion mate gear which contact the thrust washer, replace with new one.
- Replace both side gear and pinion mate gear as a set when replacing side gear or pinion mate gear.

Side Gear Thrust Washer and Pinion Mate Thrust Washer
- If any chips (by friction), damage, or unusual wear are found, replace with new one.

Gear Carrier
- If any wear or cracks are found on the contact sides of gear carrier, replace with new one.

Companion Flange
- If any chips (about 0.1mm, 0.004 in) or other damage on the companion flange surface which contacts the front oil seal lips are found, replace with new one.

ADJUSTING AND SELECTING WASHERS

Side Gear Back Clearance
- Assemble the differential parts if they are disassembled. Refer to DLN-425, "Exploded View".

1. Place the differential case straight up so that the side gear to be measured is upward.

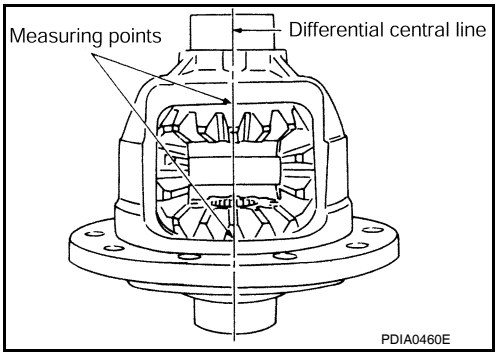

2. Using feeler gauges, measure the clearance between the side gear back and differential case at three different points, while rotating the side gear. Average the three readings to calculate the clearance. (Measure the clearance of the other side as well.)

Side gear back clearance: **Refer to DLN-444, "Inspection and Adjustment"**

- If the side gear back clearance is outside of the specification, use a thicker or thinner side gear thrust washer to adjust. Refer to DLN-444, "Inspection and Adjustment".

If the side gear back clearance is greater than specification:

Use a thicker side gear thrust washer.

If the side gear back clearance is less than specification:

Use a thinner side gear thrust washer.

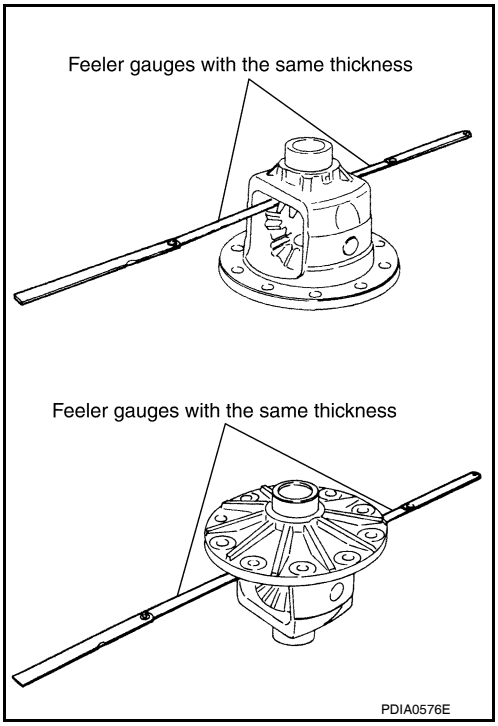

CAUTION:
- **Insert feeler gauges with the same thickness on both sides to prevent side gear from tilting.**
- **Each gear should rotate smoothly without excessive resistance during differential motion.**
- **Select a side gear thrust washer for right and left individually.**

NOTE:
Side gear back clearance is clearance between side gear and differential case for adjusting side gear backlash.

Side Bearing Preload Torque
- A selection of side bearing adjusting washers is required for successful completion of this procedure.

1. Apply differential gear oil to the side bearings, and install the differential case assembly with the side bearing outer races into the gear carrier.
CAUTION:
Do not reuse side bearing outer race when replacing side bearing inner race (replace as a set).

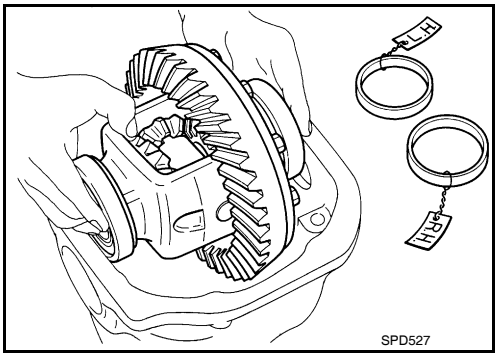

2. Insert the left and right original side bearing adjusting washers in place between side bearings and gear carrier.

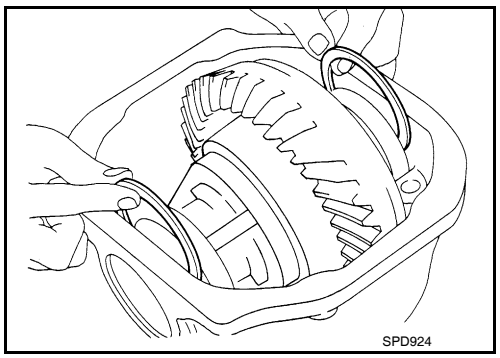

3. Align the matching mark on the side bearing cap with the matching mark on the gear carrier.
4. Install the side bearing caps and tighten the side bearing cap bolts to the specified torque. Refer to DLN-425, "Exploded View".
5. Turn the differential assembly several times to seat the side bearings.

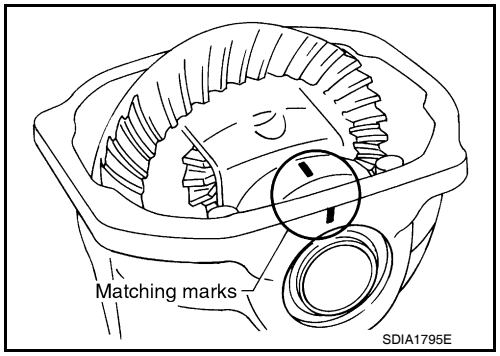

6. To determine side bearing preload torque, measure the pulling force of the differential assembly at the drive gear bolt using Tool.

Tool number : — (J-8129)

Specification Refer to DLN-444, "Inspection and Adjustment"

NOTE:
If pulling force of the differential assembly at the drive gear bolt is within specification, side bearing preload torque will also be within specification. Refer to DLN-444, "Inspection and Adjustment".

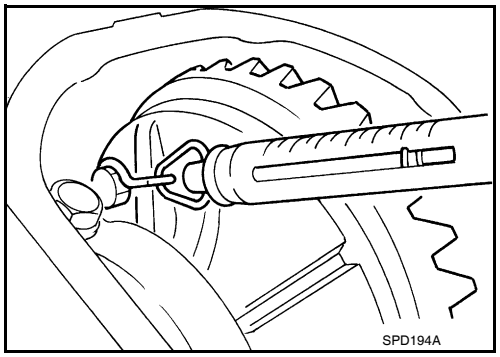

7. If the pulling force is outside the specification, use a thicker or thinner side bearing adjusting washer to adjust. Refer to DLN-444, "Inspection and Adjustment".

If the pulling force is less than the specification:
Use a thicker side bearing adjusting washer.
If the pulling force is greater than the specification:
Use a thinner side bearing adjusting washer.

CAUTION:
Select a side bearing adjusting washer for right and left individually.

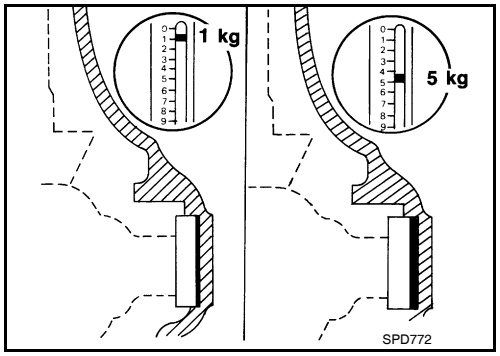

8. Record the total amount of washer thickness required for the correct side bearing preload torque.

Drive Pinion Height

1. Make sure all parts are clean and that the bearings are well lubricated.
2. Assemble the drive pinion bearings onto the Tool.

Tool number : — (J-34309)

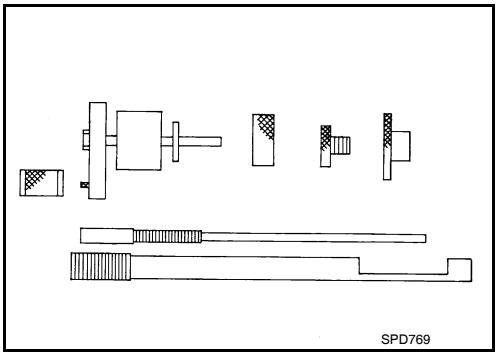

- **Drive pinion front bearing;** make sure the J-34309-3 drive pinion front bearing seat is secured tightly against the J-34309-2 gauge anvil. Then turn the J-34309-5 drive pinion front bearing pilot to secure the drive pinion bearing in its proper position.
- **Drive pinion rear bearing;** the J-34309-8 drive pinion rear bearing pilot is used to center the drive pinion rear bearing only. The J-34309-4 drive pinion rear bearing locking seat is used to lock the drive pinion rear bearing to the assembly.
- **Installation of J-34309-9 and J-34309-16;** place a suitable 2.5 mm (0.098 in) thick plain washer between J-34309-9 and J-34309-16. Both surfaces of J-34309-9 and J-34309-16 must be parallel with a clearance of 2.5 mm (0.098 in).

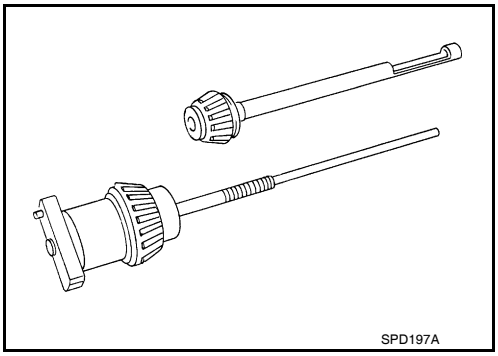

3. Install the drive pinion rear bearing inner race into the gear carrier. Then insert the drive pinion height adjusting washer selector tool, J-34309-1, gauge screw assembly.

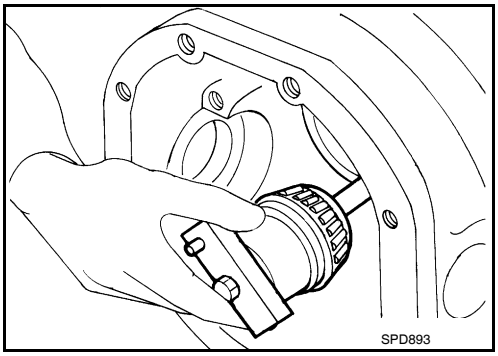

4. Assemble the drive pinion front bearing inner race and the J-34309-2 gauge anvil. Assemble them together with the J-34309-1 gauge screw in the gear carrier. Make sure that the drive pinion height gauge plate, J-34309-16, will turn a full 360°. Tighten the two sections together by hand.

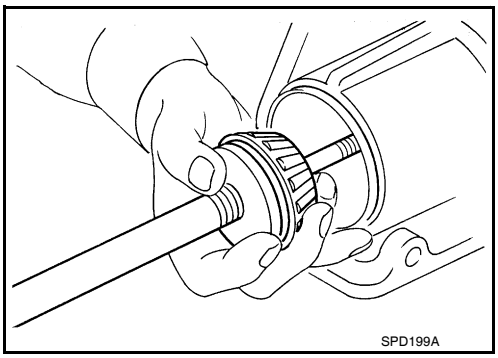

5. Turn the assembly several times to seat the drive pinion bearings.

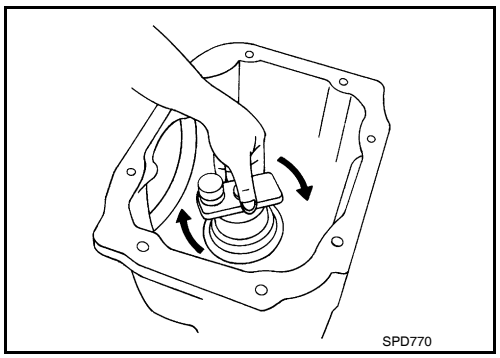

6. Measure the turning torque at the end of the J-34309-2 gauge anvil using Tool.

Tool number : ST3127S000 (J-25765- A)

Turning torque: 1.0 - 1.3 N·m (0.11 - 0.13 kg-m, 9 - 11 in-lb)

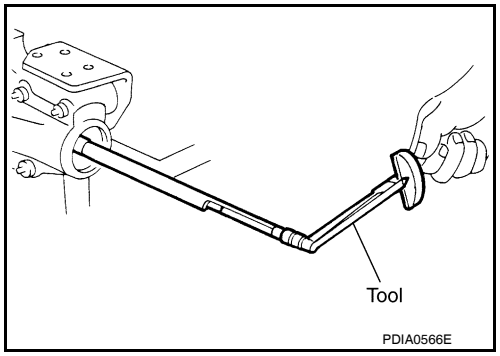

7. Place the J-34309-11 “R200A” drive pinion height adapter onto the gauge plate and tighten it by hand.
CAUTION:
Make sure all machined surfaces are clean.

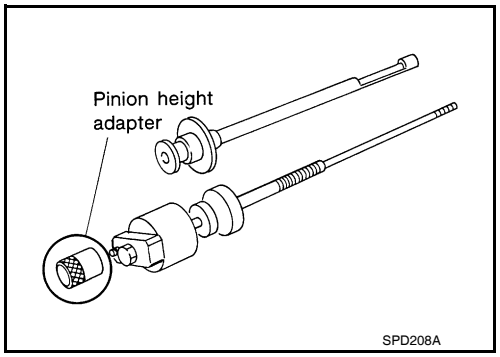

8. Position the side bearing discs, Tool, and arbor firmly into the side bearing bores. Install the side bearing caps and tighten the side bearing cap bolts to the specified torque. Refer to DLN-425, "Exploded View".

Tool number : — (J-25269-4)

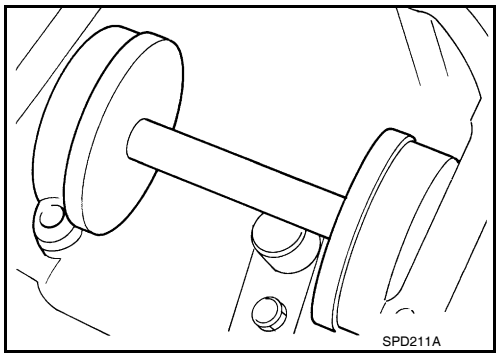

9. Select the correct standard drive pinion height adjusting washer thickness. Select by using a standard gauge of 3 mm (0.12 in) and your J-34309-101 feeler gauge. Measure the distance between the J-34309-11 drive pinion height adapter, including the standard gauge and the arbor.

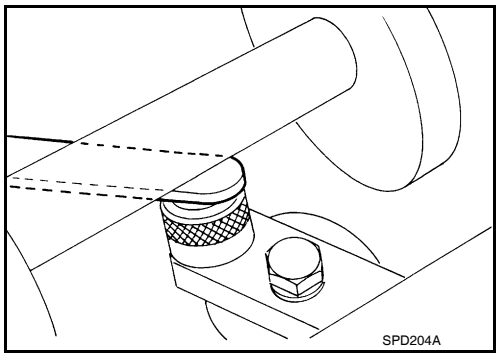

10. Write down the exact measurement (the value of feeler gauge).

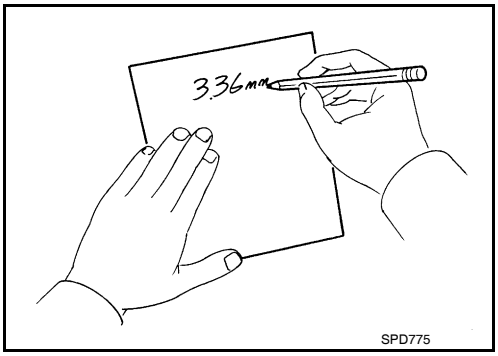

11. Correct the drive pinion height adjusting washer size by referring to the drive pinion “head number”.
There are two numbers painted on the drive pinion. The first one refers to the drive pinion and drive gear as a matched set. This number should be the same as the number on the drive gear. The second number is the drive pinion “head number”. It refers to the ideal drive pinion height from standard for quietest operation. Use the following chart to determine the correct drive pinion height adjusting washer.

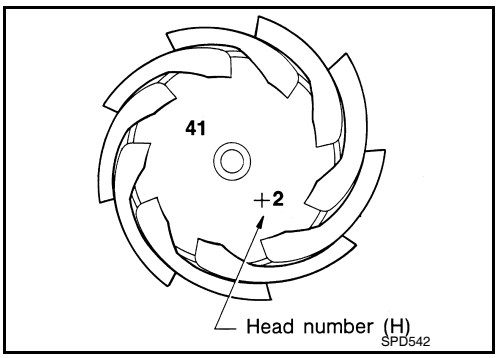

Head number	Add or remove from the standard drive pinion height adjusting washer thickness measurement
- 6	Add 0.06 mm (0.0024 in)
- 5	Add 0.05 mm (0.0020 in)
- 4	Add 0.04 mm (0.0016 in)
- 3	Add 0.03 mm (0.0012 in)
- 2	Add 0.02 mm (0.0008 in)
- 1	Add 0.01 mm (0.0004 in)
0	Use the selected washer thickness
+1	Subtract 0.01 mm (0.0004 in)
+2	Subtract 0.02 mm (0.0008 in)
+3	Subtract 0.03 mm (0.0012 in)
+4	Subtract 0.04 mm (0.0016 in)
+5	Subtract 0.05 mm (0.0020 in)
+6	Subtract 0.06 mm (0.0024 in)

12. Select the correct drive pinion height adjusting washer. Refer to DLN-444, "Inspection and Adjustment".
13. Remove the Tool from the gear carrier and disassemble to retrieve the drive pinion bearings.

Tool number : — (J-34309)

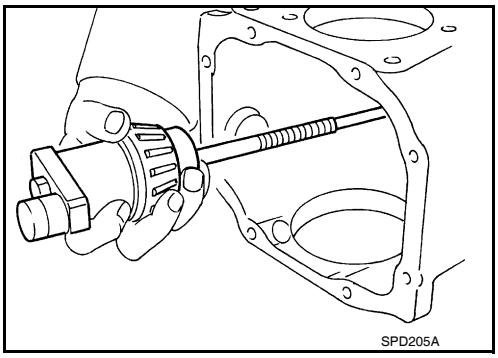

ASSEMBLY

Drive Pinion Assembly

1. Install the drive pinion front and rear bearing outer races using Tools.

Tool number **A: ST30720000 (J-25405)**
B: KV40105230 (—)
C: ST30611000 (J-25742-1)
D: ST30613000 (J-25742-3)

CAUTION:
- **First tap the drive pinion bearing outer race until it becomes flush with the gear carrier.**
- **Do not reuse drive pinion front and rear bearing outer race.**

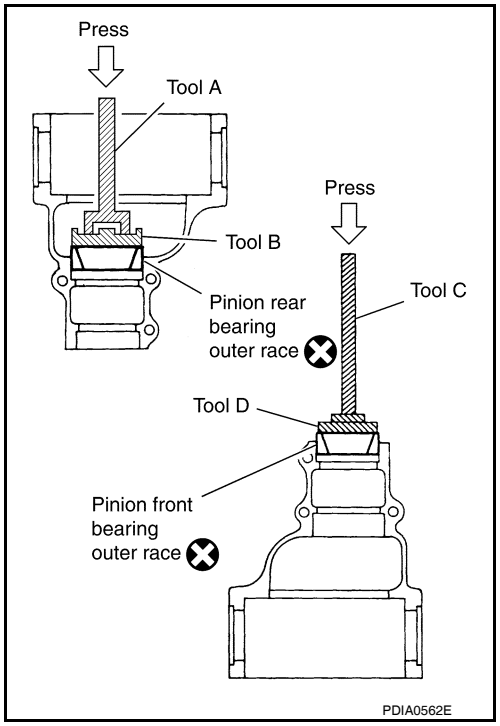

2. Select a drive pinion height adjusting washer. Refer to DLN-425, "Exploded View".
3. Install the selected drive pinion height adjusting washer to the drive pinion. Press the drive pinion rear bearing inner race to it using Tool.

Tool number **: ST30901000 (J-26010-01)**

CAUTION:
- **Install the drive pinion height adjusting washer in the proper direction as shown.**
- **Do not reuse drive pinion rear bearing inner race.**

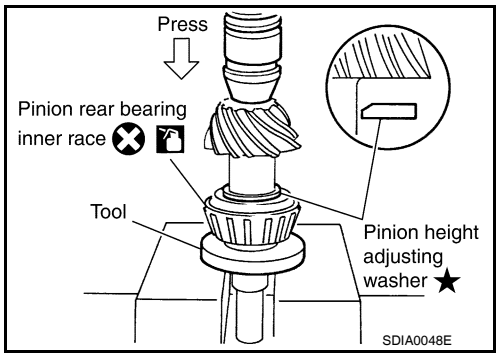

4. Assemble the collapsible spacer to the drive pinion.
CAUTION:
Do not reuse collapsible spacer.
5. Apply differential gear oil to the drive pinion rear bearing, and install the drive pinion assembly to the gear carrier.
6. Apply differential gear oil to the drive pinion front bearing, and install the drive pinion front bearing inner race to the drive pinion assembly.
CAUTION:
Do not reuse drive pinion front bearing inner race.

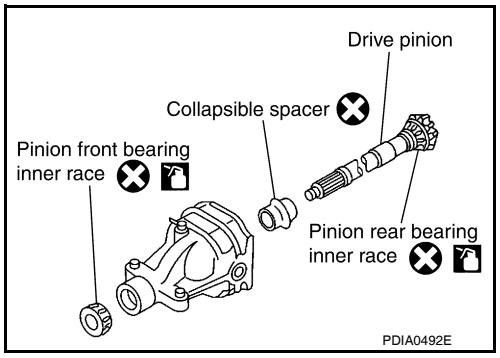

7. Press the drive pinion front bearing inner race to the drive pinion as far as drive pinion lock nut can be tightened using suitable spacer.

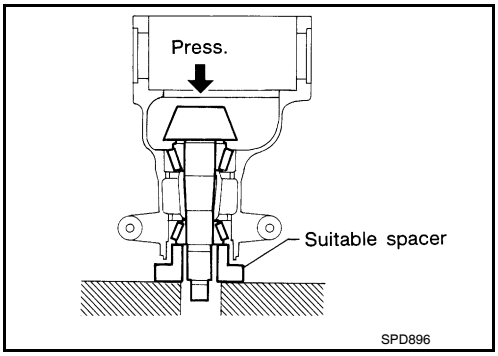

8. Apply multi-purpose grease to the lips and differential gear oil to the circumference of the new front oil seal. Then drive the new front oil seal in evenly until it becomes flush with the gear carrier using Tool.

Tool number : ST30720000 (J-25405)

CAUTION:
- **Do not reuse front oil seal.**
- **Do not incline the new front oil seal when installing.**
- **Apply multi-purpose grease to the lips and differential gear oil to the circumference of the new front oil seal.**

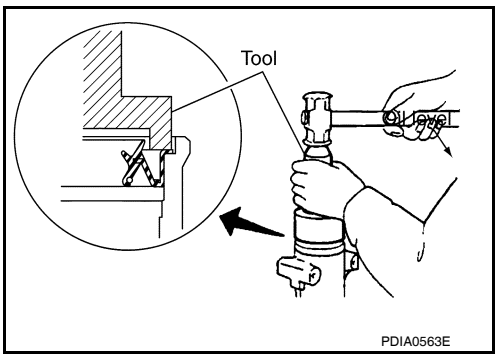

9. Install the companion flange to the drive pinion while aligning the matching marks.
10. Apply anti-corrosive oil to the threads of the drive pinion and the seating surface of the new drive pinion lock nut. Then adjust the drive pinion lock nut tightening torque using suitable tool A, and check the drive pinion bearing preload torque using Tool B.

Tool number B: ST3127S000 (J-25765-A)

Drive pinion bearing preload torque: Refer to DLN-444, "Inspection and Adjustment"

CAUTION:
- **Do not reuse drive pinion lock nut.**
- **Apply anti-corrosive oil to the threads of the drive pinion and the seating surface of the new drive pinion lock nut.**
- **Adjust the drive pinion lock nut tightening torque to the lower limit first. Do not exceed the drive pinion lock nut specified torque. Refer to DLN-425, "Exploded View".**
- **If the drive pinion bearing preload torque exceeds the specified value, replace collapsible spacer and tighten it again to adjust. Do not loosen drive pinion lock nut to adjust the drive pinion bearing preload torque.**
- **After adjustment, rotate drive pinion back and forth 2 to 3 times to check for unusual noise, rotation malfunction, and other malfunctions.**

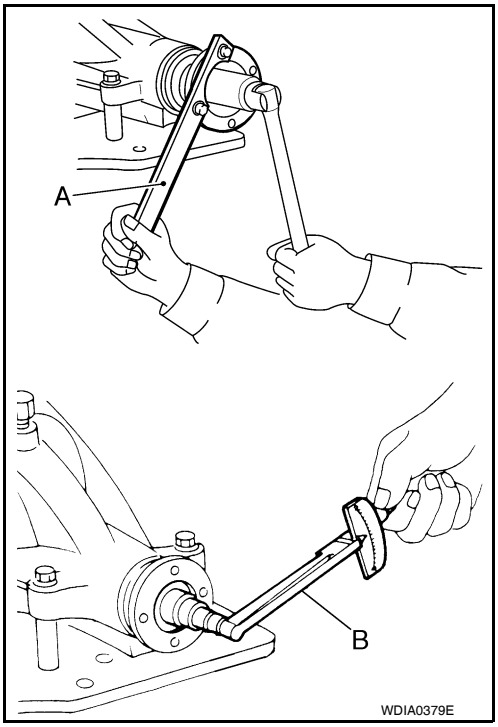

11. Check companion flange runout. Refer to DLN-444, "Inspection and Adjustment".
12. Install the differential case assembly. Refer to DLN-422, "Removal and Installation".

Differential Assembly

1. Install side gear thrust washers with the same thickness as the ones installed prior to disassembly, or reinstall the old ones on the side gears.

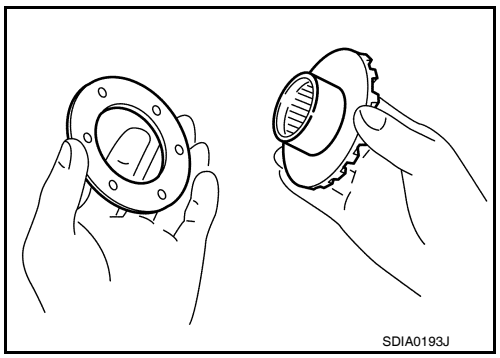

2. Install the side gears and side gear thrust washers into the differential case.
CAUTION:
Make sure that the circular clip is installed to side gears.
3. Install the pinion mate thrust washers to the two pinion mate gears. Then install the pinion mate gears with the pinion mate thrust washers by aligning them in diagonally opposite positions and rotating them into the differential case.

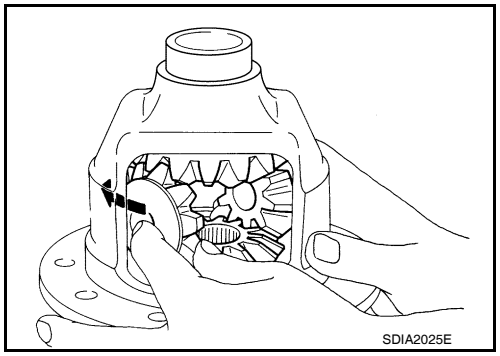

4. Align the lock pin hole on the differential case with the lock pin hole on the pinion mate shaft, and install the pinion mate shaft.
5. Measure the side gear end play. If necessary, select the appropriate side gear thrust washers. Refer to DLN-444, "Inspection and Adjustment".

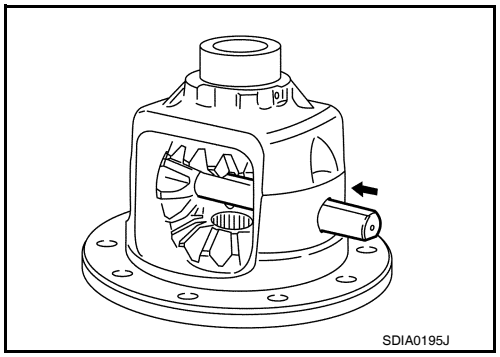

6. Drive a new lock pin into the pinion mate shaft until it is flush with the differential case using suitable tool.
CAUTION:
Do not reuse lock pin.

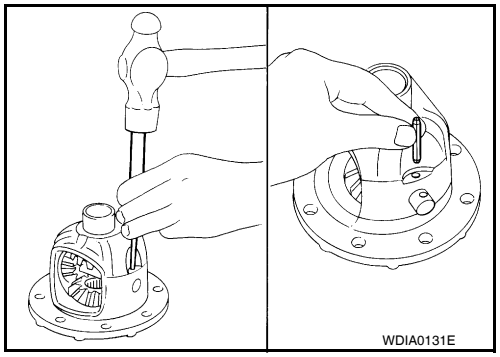

7. Align the matching mark of the differential case with the mark of the drive gear, then place the drive gear onto the differential case.

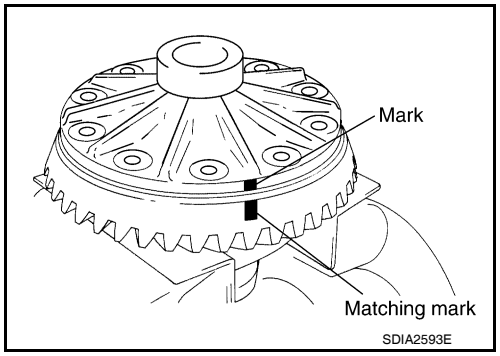

8. Apply thread locking sealant into the threaded holes of the drive gear and install the bolts.
   - Use Genuine Medium Strength Thread Locking Sealant or equivalent. Refer to GI-14, "Recommended Chemical Products and Sealants".

   CAUTION:
   Make sure the drive gear back and threaded holes are clean.

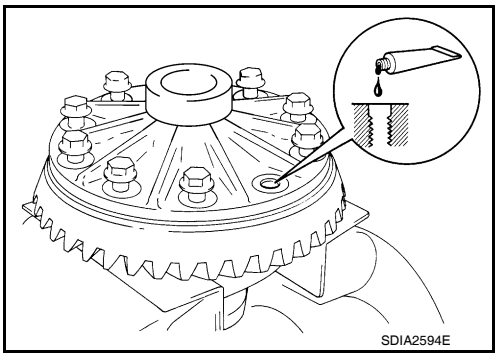

9. Tighten the drive gear bolts to the specified torque. Refer to DLN-425, "Exploded View". After tightening the drive gear bolts to the specified torque, tighten an additional 31° to 36° using Tool (A).

   Tool number **A: KV10112100-A (BT-8653-A)**

   CAUTION:
   - **Always use Tool. Avoid tightening based on visual check alone.**
   - **Tighten drive gear bolts in a crisscross pattern.**

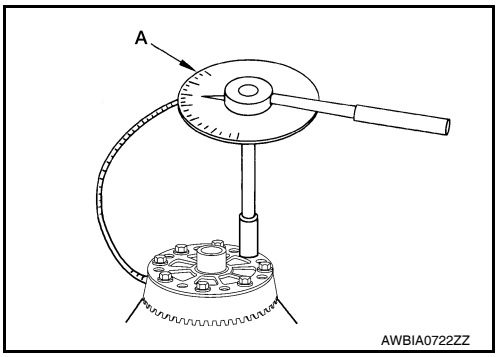

10. Press the side bearing inner races into the differential case using Tools.

    Tool number **A: KV38100300 (J-25523)**
    B: ST33061000 (J-8107-2)

    CAUTION:
    Do not reuse side bearing inner race.

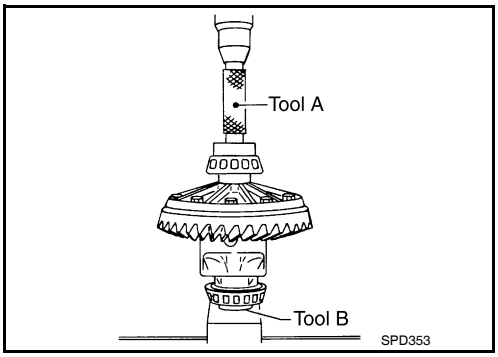

11. Install the differential case assembly with the side bearing outer races into the gear carrier.
12. Measure the side bearing preload torque. If necessary, select the appropriate side bearing adjusting washers. Refer to DLN-444, "Inspection and Adjustment".

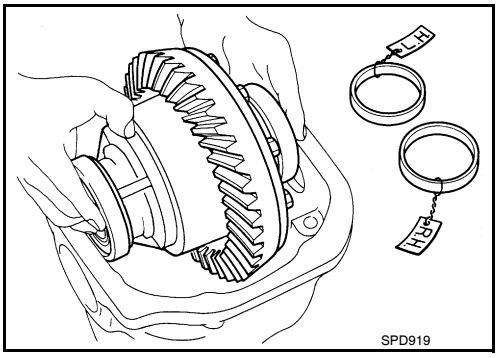

13. Insert the selected left and right side bearing adjusting washers in place between the side bearings and gear carrier.

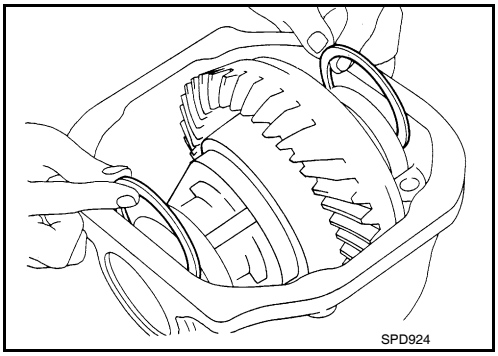

14. Install the side bearing caps with the matching marks aligned and tighten the side bearing cap bolts to the specified torque. Refer to DLN-425, "Exploded View".

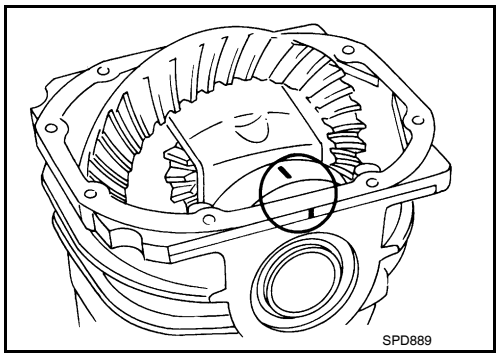

15. Check and adjust the drive gear runout, tooth contact, drive gear to drive pinion backlash, and total pre-load torque. Refer to DLN-444, "Inspection and Adjustment"
Recheck the above items.
16. Install the side flanges. Refer to DLN-425, "Exploded View".
17. Apply a 3.2 mm (0.126 in) bead of sealant to the mating surface of the carrier cover.
    - Use Genuine Silicone RTV or equivalent. Refer to GI-14, "Recommended Chemical Products and Sealants".

    CAUTION:
    Remove any old sealant adhering to the mating surfaces. Also remove any moisture, oil, or foreign material adhering to the application and mating surfaces.
18. Install the carrier cover to the gear carrier. Tighten the bolts to the specified torque. Refer to DLN-425, "Exploded View".
19. Install the side flange. Refer to DLN-425, "Exploded View".

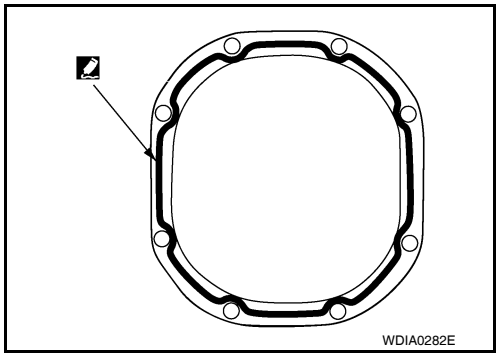

Side Flange

1. Apply multi-purpose grease to the lips and differential gear oil to the circumference of the new side oil seal. Then drive the new side oil seal in evenly until it becomes flush with the gear carrier using Tool.

    Tool number : KV38100200 (J-26233)

    CAUTION:
    - **Do not reuse side oil seal.**
    - **Do not incline the new side oil seal when installing.**
    - **Apply multi-purpose grease to the lips and differential gear oil to the circumference of the new side oil seal.**

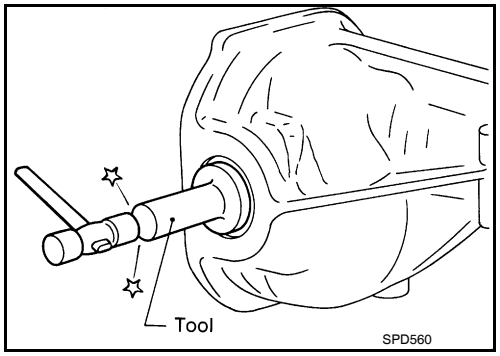

2. Install the side flange using Tool.

a. Install the Tool to the side oil seal as shown.

    Tool number : KV38107900 (J-39352)

b. Insert the side flange until the serrated part of the side flange has engaged the serrated part of the side gear and remove the Tool.

c. Drive in the side flange using suitable tool.
    NOTE:
    Installation is completed when the driving sound of the side flange turns into a sound which seems to affect the whole rear final drive assembly.

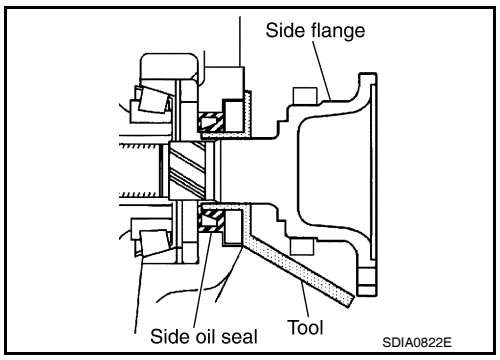

SERVICE DATA AND SPECIFICATIONS (SDS)

SERVICE DATA AND SPECIFICATIONS (SDS)

General Specification

INFOID:0000000005258509

Applied model	VQ40DE	
	2WD	4WD
Final drive model	R200	
Gear ratio	3.133	3.357
Number of teeth (Drive gear/Drive pinion)	47/15	47/14
Oil capacity (Approx.)	1.4 ℓ (3 US pt, 2-1/2 Imp pt)	
Number of pinion gears	2	
Drive pinion adjustment spacer type	Collapsible	

Inspection and Adjustment

INFOID:0000000005258510

DRIVE GEAR RUNOUT

Unit: mm (in)

Item	Runout limit
Drive gear back face	0.05 (0.0020) or less

SIDE GEAR CLEARANCE

Unit: mm (in)

Item	Specification
Side gear back clearance (Clearance between side gear and differential case for adjusting side gear backlash)	0.2 (0.008) or less (Each gear should rotate smoothly without excessive resistance during differential motion.)

PRELOAD TORQUE

Item	Specification
Drive pinion bearing preload torque	2.65 - 3.23 N·m (0.27 - 0.32 kg–m, 24 - 28 in-lb)
Side bearing preload torque (reference value determined by drive gear bolt pulling force)	0.20 - 0.52 N·m (0.02 - 0.05 kg–m, 2 - 4 in-lb)
Drive gear bolt pulling force (by spring gauge)	34.2 – 39.2 N (3.5 – 4 kg, 7.7 – 8.8 lb)
Total preload torque (Total preload torque = drive pinion bearing preload torque + Side bearing preload torque)	2.84 - 3.75 N·m (0.29 - 0.38 kg–m, 26 - 33 in-lb)

BACKLASH

Unit: mm (in)

Item	Specification
Drive gear to drive pinion gear	0.10 - 0.15 (0.0039 - 0.0059)

COMPANION FLANGE RUNOUT

Unit: mm (in)

Item	Runout limit
Outer side of the companion flange	0.08 (0.0031) or less

SELECTIVE PARTS

Side Gear Thrust Washer

Unit: mm (in)

Thickness	Part number*	Thickness	Part number*
0.75 (0.0295)	38424 0C000	0.87 (0.0343)	38424 0C004
0.78 (0.0307)	38424 0C001	0.90 (0.0350)	38424 0C005
0.81 (0.0319)	38424 0C002	0.93 (0.0366)	38424 0C006
0.84 (0.0331)	38424 0C003		

*: Always check with the Parts Department for the latest parts information.

Drive Pinion Height Adjusting Washer

Unit: mm (in)

Thickness	Part number*	Thickness	Part number*
3.05 (0.1201)	38154 0C000	3.17 (0.1248)	38154 0C004
3.08 (0.1213)	38154 0C001	3.20 (0.1260)	38154 0C005
3.11 (0.1224)	38154 0C002	3.23 (0.1272)	38154 0C006
3.14 (0.1236)	38154 0C003	3.26 (0.1283)	38154 0C007

*: Always check with the Parts Department for the latest parts information.

Side Bearing Adjusting Washer

Unit: mm (in)

Thickness	Part number*	Thickness	Part number*
2.00 (0.0787)	38453 N3100	2.35 (0.0925)	38453 N3107
2.05 (0.0807)	38453 N3101	2.40 (0.0945)	38453 N3108
2.10 (0.0827)	38453 N3102	2.45 (0.0965)	38453 N3109
2.15 (0.0846)	38453 N3103	2.50 (0.0984)	38453 N3110
2.20 (0.0866)	38453 N3104	2.55 (0.1004)	38453 N3111
2.25 (0.0886)	38453 N3105	2.60 (0.1024)	38453 N3112
2.30 (0.0906)	38453 N3106	2.65 (0.1043)	38453 N3113

*: Always check with the Parts Department for the latest parts information.

PRECAUTION

PRECAUTIONS

Precaution for Supplemental Restraint System (SRS) "AIR BAG" and "SEAT BELT PRE-TENSIONER"

INFOID:0000000005550752

The Supplemental Restraint System such as “AIR BAG” and “SEAT BELT PRE-TENSIONER”, used along with a front seat belt, helps to reduce the risk or severity of injury to the driver and front passenger for certain types of collision. This system includes seat belt switch inputs and dual stage front air bag modules. The SRS system uses the seat belt switches to determine the front air bag deployment, and may only deploy one front air bag, depending on the severity of a collision and whether the front occupants are belted or unbelted.
Information necessary to service the system safely is included in the SR and SB section of this Service Manual.

WARNING:
- **To avoid rendering the SRS inoperative, which could increase the risk of personal injury or death in the event of a collision which would result in air bag inflation, all maintenance must be performed by an authorized NISSAN/INFINITI dealer.**
- **Improper maintenance, including incorrect removal and installation of the SRS, can lead to personal injury caused by unintentional activation of the system. For removal of Spiral Cable and Air Bag Module, see the SR section.**
- **Do not use electrical test equipment on any circuit related to the SRS unless instructed to in this Service Manual. SRS wiring harnesses can be identified by yellow and/or orange harnesses or harness connectors.**

PRECAUTIONS WHEN USING POWER TOOLS (AIR OR ELECTRIC) AND HAMMERS

WARNING:
- **When working near the Airbag Diagnosis Sensor Unit or other Airbag System sensors with the Ignition ON or engine running, DO NOT use air or electric power tools or strike near the sensor(s) with a hammer. Heavy vibration could activate the sensor(s) and deploy the air bag(s), possibly causing serious injury.**
- **When using air or electric power tools or hammers, always switch the Ignition OFF, disconnect the battery, and wait at least 3 minutes before performing any service.**

Precaution Necessary for Steering Wheel Rotation After Battery Disconnect

INFOID:0000000005550753

NOTE:
- This Procedure is applied only to models with Intelligent Key system and NATS (NISSAN ANTI-THEFT SYSTEM).
- Remove and install all control units after disconnecting both battery cables with the ignition knob in the ″LOCK″ position.
- Always use CONSULT-III to perform self-diagnosis as a part of each function inspection after finishing work. If DTC is detected, perform trouble diagnosis according to self-diagnostic results.

For models equipped with the Intelligent Key system and NATS, an electrically controlled steering lock mechanism is adopted on the key cylinder.
For this reason, if the battery is disconnected or if the battery is discharged, the steering wheel will lock and steering wheel rotation will become impossible.
If steering wheel rotation is required when battery power is interrupted, follow the procedure below before starting the repair operation.

OPERATION PROCEDURE

1. Connect both battery cables.
   NOTE:
   Supply power using jumper cables if battery is discharged.
2. Use the Intelligent Key or mechanical key to turn the ignition switch to the ″ACC″ position. At this time, the steering lock will be released.
3. Disconnect both battery cables. The steering lock will remain released and the steering wheel can be rotated.
4. Perform the necessary repair operation.

5. When the repair work is completed, return the ignition switch to the ″LOCK″ position before connecting the battery cables. (At this time, the steering lock mechanism will engage.)
6. Perform a self-diagnosis check of all control units using CONSULT-III.

Precaution for Servicing Rear Final Drive

INFOID:0000000005258511

- Before starting diagnosis of the vehicle, understand the symptoms well. Perform correct and systematic operations.
- Check for the correct installation status prior to removal or disassembly. When matching marks are required, be certain they do not interfere with the function of the parts they are applied to.
- Overhaul should be done in a clean work area, a dust proof area is recommended.
- Before disassembly, completely remove sand and mud from the exterior of the unit, preventing them from entering into the unit during disassembly or assembly.
- Always use shop paper for cleaning the inside of components.
- Avoid using cotton gloves or a shop cloth to prevent the entering of lint.
- Check appearance of the disassembled parts for damage, deformation, and abnormal wear. Replace them with new ones if necessary.
- Gaskets, seals and O-rings should be replaced any time the unit is disassembled.
- Clean and flush the parts sufficiently and blow them dry.
- Be careful not to damage sliding surfaces and mating surfaces.
- When applying sealant, remove the old sealant from the mating surface; then remove any moisture, oil, and foreign materials from the application and mating surfaces.
- In principle, tighten nuts or bolts gradually in several steps working diagonally from inside to outside. If a tightening sequence is specified, observe it.
- During assembly, observe the specified tightening torque.
- Add new differential gear oil, petroleum jelly, or multi-purpose grease, as specified.

PREPARATION

PREPARATION

Special Service Tool

INFOID:0000000005258512

The actual shapes of Kent-Moore tools may differ from those of special service tools illustrated here.

Tool number (Kent-Moore No.) Tool name	Description
KV381054S0 (J-34286) Puller 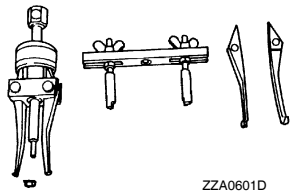 ZZA0601D	Removing front oil seal
ST15310000 (J-25640-B) Drift 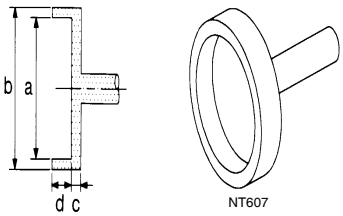 NT607	Installing oil seal **a: 84 mm (3.31 in) dia.** **b: 96 mm (3.78 in) dia.** **c: 8 mm (0.31 in) dia.** **d: 20 mm (0.79 in)**
ST36230000 (J-25840-A) Sliding hammer 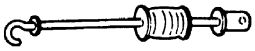 ZZA0803D	Removing side flange
KV40104100 (—) Attachment 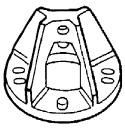 ZZA0804D	Removing side flange
KV38100200 (J-26233) Drift 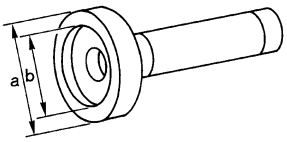 ZZA1143D	Installing side oil seal **a: 65 mm (2.56 in) dia.** **b: 49 mm (1.93 in) dia.**
KV38107900 (J-39352) Protector 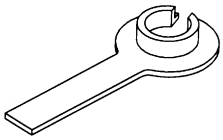 S-NT129	Installing side flange

Tool number (Kent-Moore No.) Tool name	Description
ST35325000 (—) Drift bar 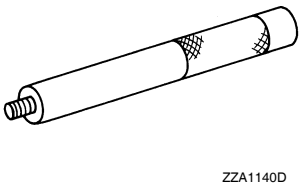 ZZA1140D	Installing drive pinion outer race
ST30621000 (J-25742-5) Drift 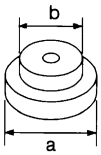 NT073	Installing drive pinion outer race **a: 79 mm (3.11 in) dia.** **b: 59 mm (2.32 in) dia.**
ST33081000 (—) Adapter 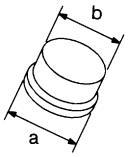 NT431	Installing side bearing race **a: 43 mm (1.69 in) dia.** **b: 33.5 mm (1.319 in) dia.**
ST30022000 (—) Inserter 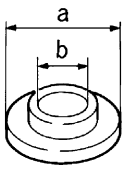 ZZA0920D	Installing drive pinion inner race **a: 110 mm (4.33 in) dia.** **b: 46 mm (1.81 in) dia.**
KV38100800 (J-25604-01) Attachment 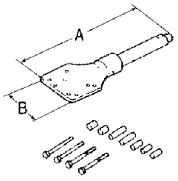 SDIA0267E	Securing unit assembly **a: 541 mm (21.30 in)** **b: 200 mm (7.87 in)**
ST3127S000 (J-25765-A) Preload gauge 1: GG91030000 (J-25765) Torque wrench 2: HT62940000 (—) Socket adapter (1/2″) 3: HT62900000 (—) Socket adapter (3/8″) 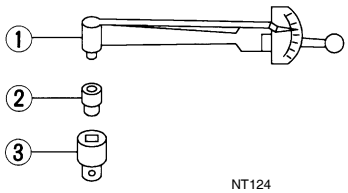 NT124	Measuring drive pinion bearing preload torque and total preload torque

Tool number (Kent-Moore No.) Tool name	Description
KV10111100 (J-37228) Seal cutter 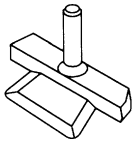 S-NT046	Removing carrier cover
ST3306S001 (—) Differential side bearing puller set 1: ST33051001 (J-22888-20) Puller 2: ST33061000 (J-8107-2) Base 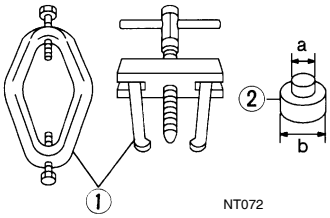 NT072	Removing and installing side bearing inner race **a: 28.5 mm (1.122 in) dia.** **b: 38 mm (1.50 in) dia.**
ST30031000 (J-22912-01) Puller 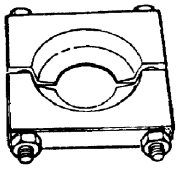 ZZA0700D	Removing drive pinion rear bearing inner race
ST35271000 (—) Drift 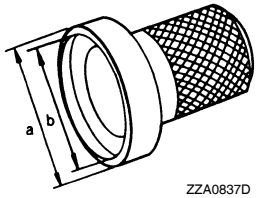 ZZA0837D	Installing oil seal **a: 72 mm (2.83 in) dia.** **b: 63 mm (2.48 in) dia.**
HT72400000 (—) Slide hammer 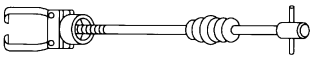 S-NT125	Removing differential case assembly
— (J-8129) Spring gauge 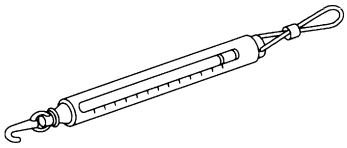 NT127	Measuring turning torque
KV10112100 (BT-8653-A) Angle wrench 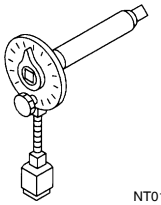 NT014	Tightening bolts for drive gear

Commercial Service Tool

INFOID:0000000005258513

Tool name	Description
Spacer 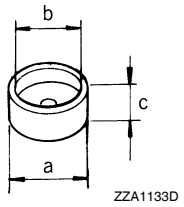	Installing drive pinion front bearing inner race **a: 60 mm (2.36 in) dia.** **b: 36 mm (1.42 in) dia.** **c: 30 mm (1.18 in)**
Power tool 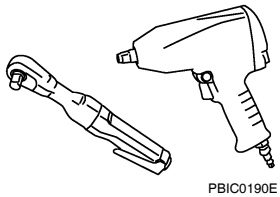	Loosening nuts and bolts

FUNCTION DIAGNOSIS

NOISE, VIBRATION AND HARSHNESS (NVH) TROUBLESHOOTING

NVH Troubleshooting Chart

INFOID:0000000005258514

Use the chart below to help you find the cause of the symptom. If necessary, repair or replace these parts.

Reference page		DLN-464	DLN-464	DLN-464	DLN-464	DLN-480	MA-16, "For North America"	DLN-323, "NVH Troubleshooting Chart" DLN-334, "NVH Troubleshooting Chart"	RAX-5, "NVH Troubleshooting Chart"	RSU-5, "NVH Troubleshooting Chart"	WT-46, "NVH Troubleshooting Chart"	WT-46, "NVH Troubleshooting Chart"	RAX-5, "NVH Troubleshooting Chart"	BR-6, "NVH Troubleshooting Chart"	ST-12, "NVH Troubleshooting Chart"
Possible cause and SUSPECTED PARTS		Gear tooth rough	Gear contact improper	Tooth surfaces worn	Backlash incorrect	Companion flange excessive runout	Gear oil improper	PROPELLER SHAFT	REAR AXLE	REAR SUSPENSION	TIRES	ROAD WHEEL	DRIVE SHAFT	BRAKES	STEERING
Symptom	Noise	×	×	×	×	×	×	×		×	×	×	×	×	×

×: Applicable

DESCRIPTION

Cross-Sectional View

INFOID:0000000005258515

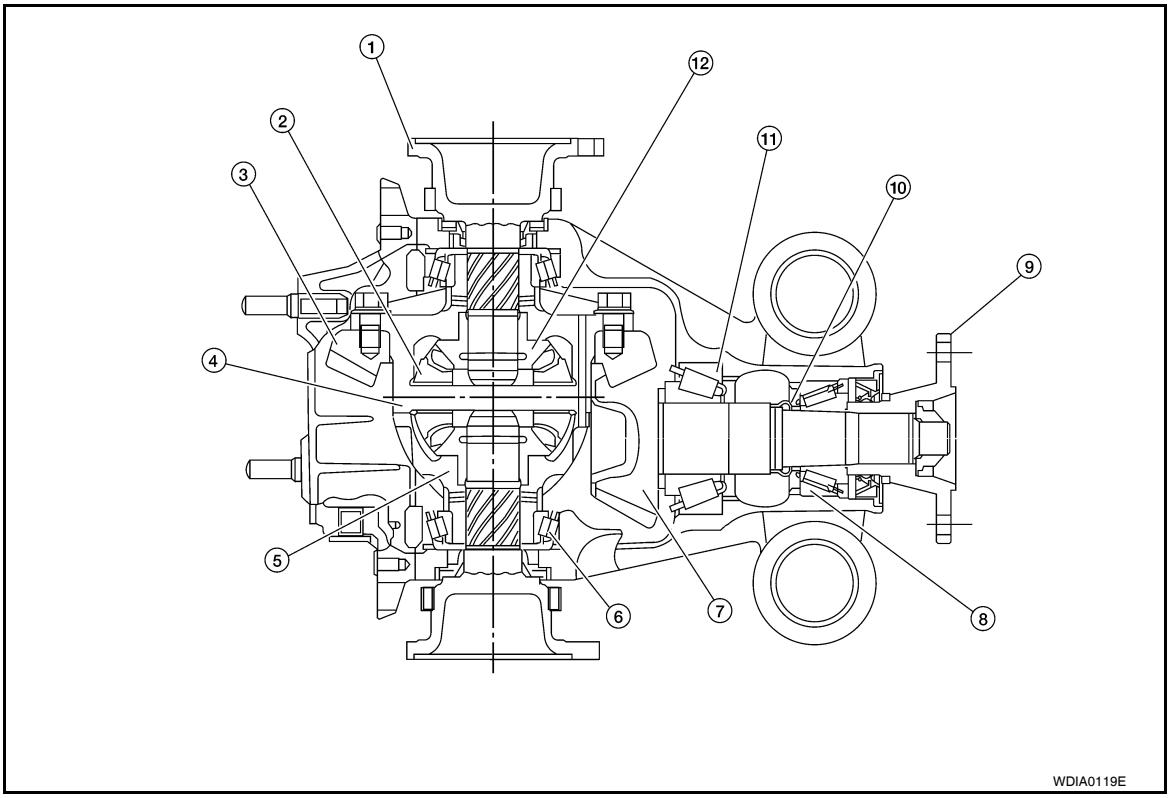

1. Side flange	2. Pinion mate gear	3. Drive gear
4. Pinion mate shaft	5. Differential case	6. Side bearing
7. Drive pinion	8. Drive pinion front bearing	9. Companion flange
10. Collapsible spacer	11. Drive pinion rear bearing	12. Side gear

ON-VEHICLE MAINTENANCE

DIFFERENTIAL GEAR OIL

Changing Differential Gear Oil

INFOID:0000000005258516

DRAINING

1. Stop the engine.
2. Remove the drain plug and gasket from the rear final drive assembly to drain the differential gear oil.
3. Install the drain plug with a new gasket to the rear final drive assembly. Tighten to the specified torque. Refer to DLN-464, "Disassembly and Assembly".
   CAUTION:
   Do not reuse gasket.

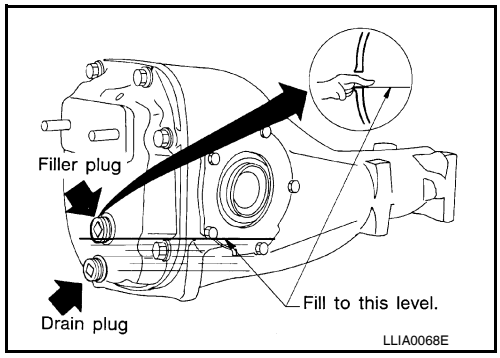

FILLING

1. Remove the filler plug and gasket from the rear final drive assembly.
2. Fill the rear final drive assembly with new differential gear oil until the level reaches the specified level near the filler plug hole.

Differential gear oil grade and capacity	**: Refer to MA-16, "For North America".**

3. Install the filler plug with a new gasket on it to the rear final drive assembly. Tighten to the specified torque. Refer to DLN-464, "Disassembly and Assembly".
   CAUTION:
   Do not reuse gasket.

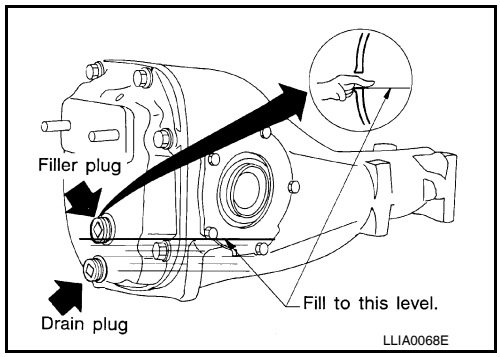

Checking Differential Gear Oil

INFOID:0000000005258517

OIL LEAKAGE AND OIL LEVEL

1. Make sure that differential gear oil is not leaking from the rear final drive assembly or around it.
2. Check the differential gear oil level from the filler plug hole as shown.
   CAUTION:
   Do not start engine while checking differential gear oil level.
3. Install the filler plug with a new gasket on it to the rear final drive assembly. Tighten to the specified torque. Refer to DLN-464, "Disassembly and Assembly".
   CAUTION:
   Do not reuse gasket.

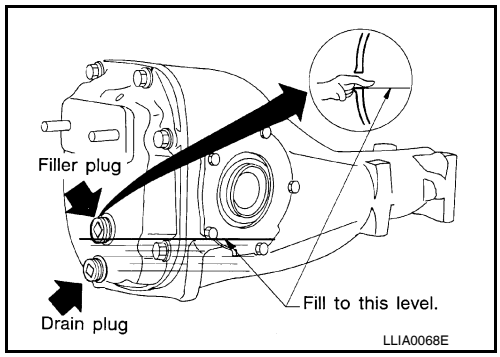

ON-VEHICLE REPAIR

FRONT OIL SEAL

Removal and Installation

INFOID:0000000005258518

REMOVAL

1. Remove the drive shafts from the rear final drive assembly. Refer to RAX-8, "Removal and Installation".
2. Remove the side flanges and side oil seals. Refer to DLN-457, "Removal and Installation".
3. Remove the rear propeller shaft. Refer to DLN-336, "Removal and Installation".
4. Measure the total preload torque. Refer to DLN-480, "Inspection and Adjustment".
   NOTE:
   Record the total preload torque measurement.
5. Remove the drive pinion lock nut using suitable tool.
6. Put matching marks on the companion flange and drive pinion using paint.
   CAUTION:
   Use paint to make the matching marks. Do not damage the companion flange or drive pinion.

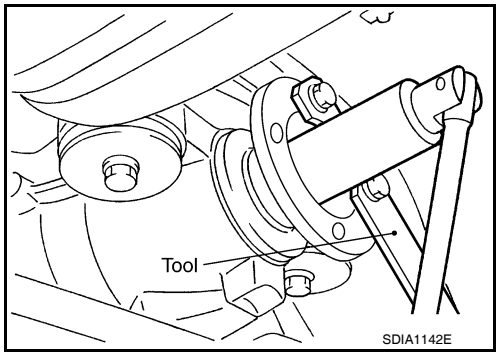

7. Remove the companion flange using suitable tool.

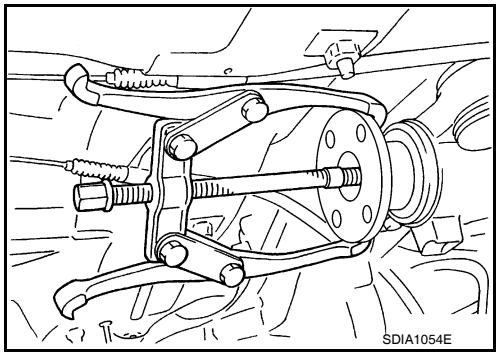

8. Remove the front oil seal using Tool.

   Tool number : KV381054S0 (J-34286)

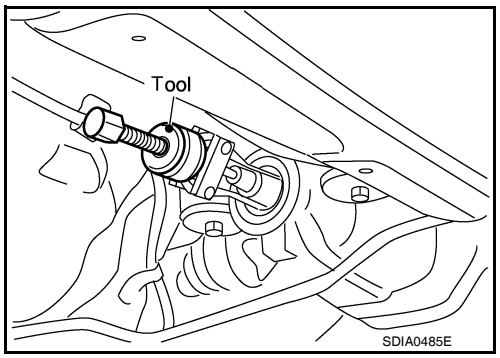

INSTALLATION

1. Apply multi-purpose grease to the lips of the new front oil seal. Then drive the new front oil seal in evenly until it becomes flush with the gear carrier using Tool.

   Tool number : ST15310000 (—)

   CAUTION:
   - **Do not reuse front oil seal.**
   - **Do not incline the new front oil seal when installing.**
   - **Apply multi-purpose grease to the lips of the new front oil seal.**

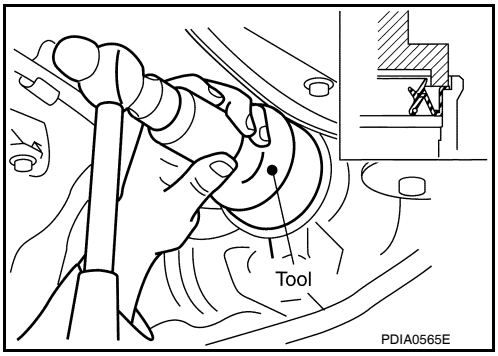

2. Install the companion flange to the drive pinion while aligning the matching marks.
3. Apply anti-corrosive oil to the threads of the drive pinion and the seating surface of the new drive pinion lock nut. Then adjust the drive pinion lock nut tightening torque using suitable tool A, and check the total preload torque using Tool B.

   Tool number B: ST3127S000 (J-25765-A)

   Total preload torque: Refer to DLN-480, "Inspection and Adjustment".

   - The total preload torque should be within the total preload torque specification. When not replacing the collapsible spacer, it should also be equal to the measurement taken during removal plus an additional 0.56 N·m (0.06 Kg-m, 5 in-lb).
   - If the total preload torque is low, tighten the drive pinion lock nut in 6.8 N·m (0.69 Kg-m, 5ft-lb) increments until the total preload torque is met.

   CAUTION:
   - **Do not reuse drive pinion lock nut.**
   - **Apply anti-corrosive oil to the threads of the drive pinion and the seating surface of the new drive pinion lock nut.**
   - **Adjust the drive pinion lock nut tightening torque to the lower limit first. Do not exceed the drive pinion lock nut specified torque. Refer to DLN-464, "Disassembly and Assembly".**
   - **Do not loosen drive pinion lock nut to adjust the total preload torque. If the total preload torque exceeds the specifications, replace the collapsible spacer and tighten it again to adjust. Refer to DLN-464, "Disassembly and Assembly".**
   - **After adjustment, rotate drive pinion back and forth 2 to 3 times to check for unusual noise, rotation malfunction, and other malfunctions.**

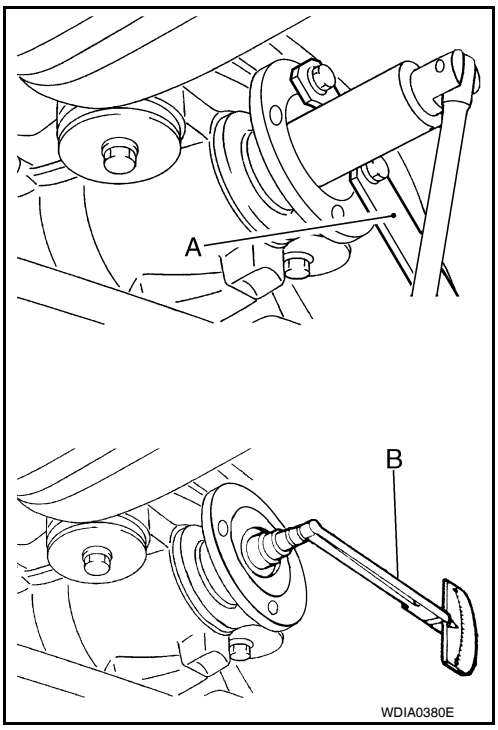

4. Installation of the remaining components is in the reverse order of removal.

   CAUTION:
   Check the differential gear oil level after installation. Refer to DLN-454, "Checking Differential Gear Oil".

SIDE OIL SEAL

Removal and Installation

INFOID:0000000005258519

REMOVAL

1. Remove the drive shaft from the rear final drive assembly. Refer to RAX-8, "Removal and Installation".
2. Remove the side flange using Tools.

Tool numbers **A: KV40104100 (—)**
B: ST36230000 (J-25840-A)

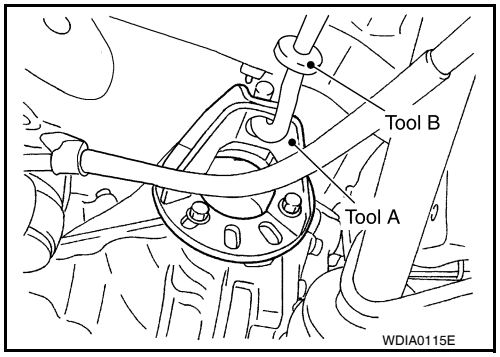

3. Remove the side oil seal using suitable tool.
CAUTION:
Do not to damage gear carrier.

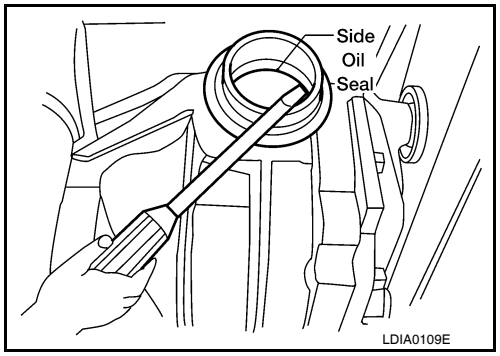

INSTALLATION

1. Apply multi-purpose grease to the lips of the new side oil seal. Then drive the new side oil seal in evenly until it becomes flush with the gear carrier using Tool.

Tool number **: ST35271000 (J-26091)**

CAUTION:
- **Do not reuse side oil seal.**
- **Do not incline the new side oil seal when installing.**
- **Apply multi-purpose grease to the lips of the new side oil seal.**

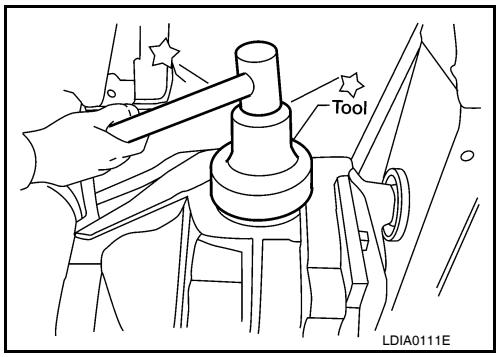

2. Install the side flange using Tool.

a. Install the Tool to the side oil seal as shown.

Tool number **: KV38107900 (J-39352)**

b. Insert the side flange until the serrated part of the side flange has engaged the serrated part of the side gear and remove the Tool.

c. Drive in the side flange using suitable tool.
NOTE:
Installation is completed when the driving sound of the side flange turns into a sound which seems to affect the whole rear final drive assembly.

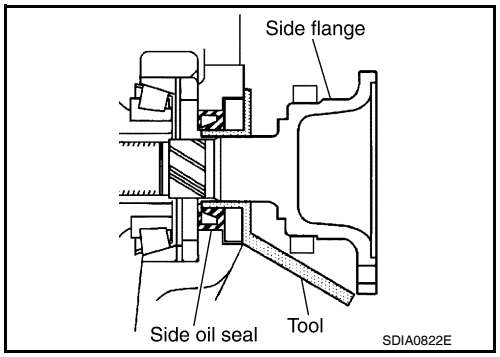

3. Installation of the remaining components is in the reverse order of removal.
CAUTION:

Check the differential gear oil level after installation. Refer to DLN-454, "Checking Differential Gear Oil".

CARRIER COVER

Removal and Installation

INFOID:0000000005258520

REMOVAL

1. Remove the rear final drive assembly. Refer to DLN-460, "Removal and Installation".
2. Remove the carrier cover bolts and separate the carrier cover from the gear carrier using Tool.

   Tool number : KV10111100 (J-37228)

   CAUTION:
   - **Do not damage the mating surface.**
   - **Do not insert flat-bladed screwdriver, this will damage the mating surface.**

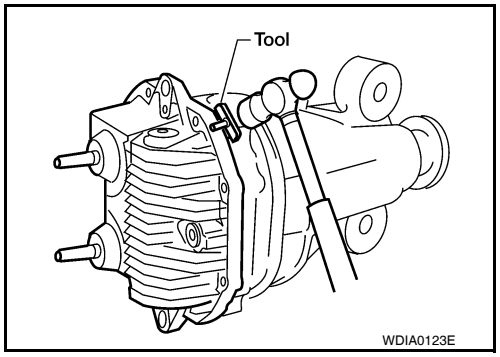

INSTALLATION

1. Apply a 3 mm (0.12 in) bead of sealant to the mating surface of the carrier cover as shown.
   - Use Genuine Silicone RTV or equivalent. Refer to GI-14, "Recommended Chemical Products and Sealants".

   CAUTION:
   Remove any old sealant adhering to the mating surfaces. Also remove any moisture, oil, or foreign material adhering to the application and mating surfaces.
2. Install the carrier cover to the gear carrier. Tighten the bolts to the specified torque. Refer to DLN-464, "Disassembly and Assembly".
3. Install the rear final drive assembly. Refer to DLN-460, "Removal and Installation".

   CAUTION:
   Fill the rear final drive assembly with recommended differential gear oil. Refer to DLN-454.

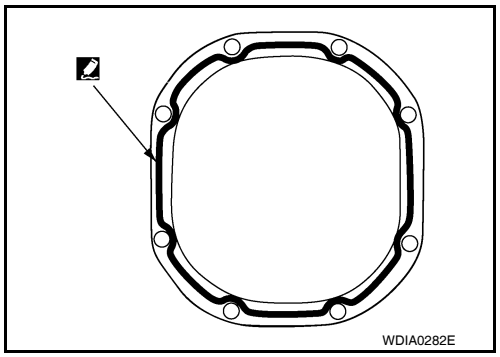

REMOVAL AND INSTALLATION

REAR FINAL DRIVE

Removal and Installation

INFOID:0000000005258521

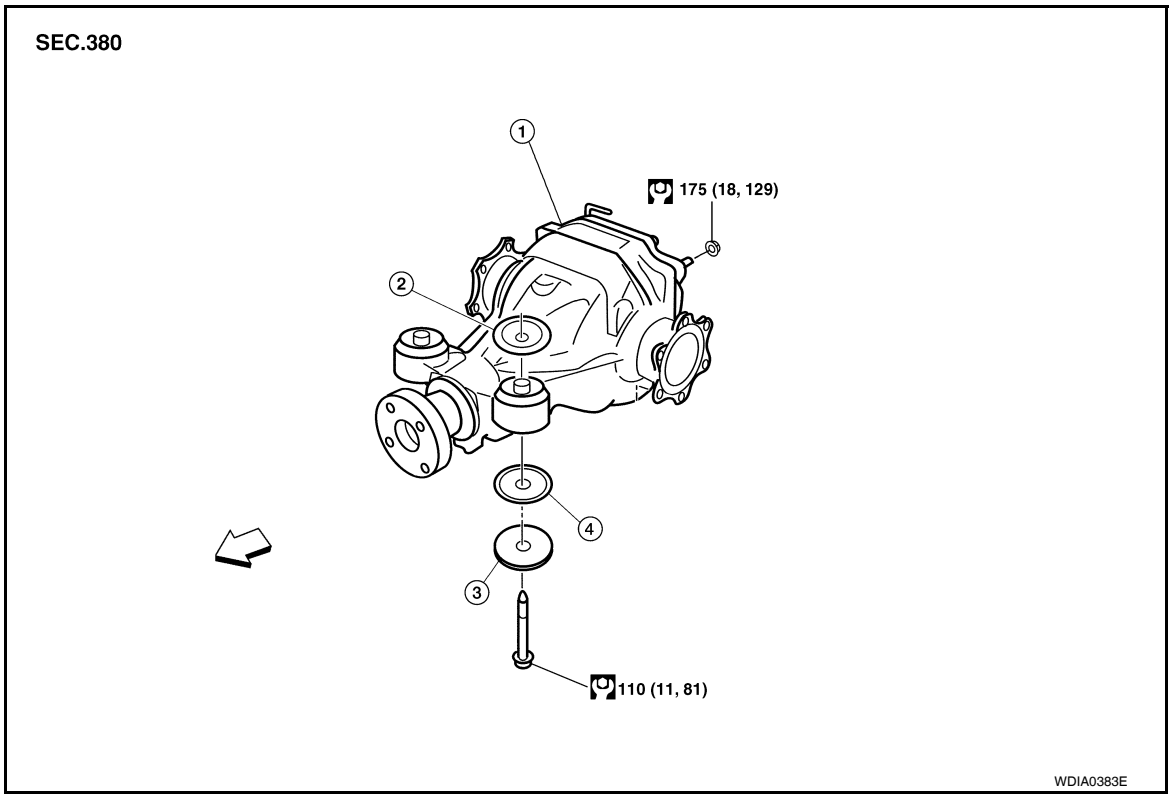

1. Rear final drive assembly
2. Upper stopper
3. Washer
4. Lower stopper
⇨ Vehicle front

REMOVAL

1. Remove the spare tire.
2. Drain the differential gear oil. Refer to DLN-454, "Changing Differential Gear Oil".
3. Remove the rear stabilizer bar. Refer to RSU-18, "Removal and Installation".
4. Remove the rear propeller shaft. Refer to DLN-336, "Removal and Installation" (2S1350).
5. Remove the rear drive shafts from the rear final drive assembly and support them using suitable wire. Refer to RAX-8, "Removal and Installation".

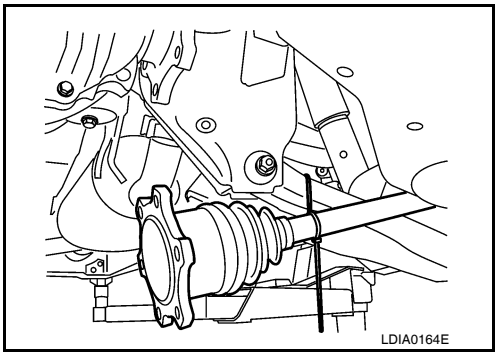

6. Disconnect the breather hose from the rear final drive assembly.

7. Place a suitable jack under the rear final drive assembly.
   CAUTION:
   Do not place the jack on the carrier cover.
8. Remove the nuts and bolts and remove the rear final drive assembly.
   CAUTION:
   Secure rear final drive assembly to the jack while removing it.

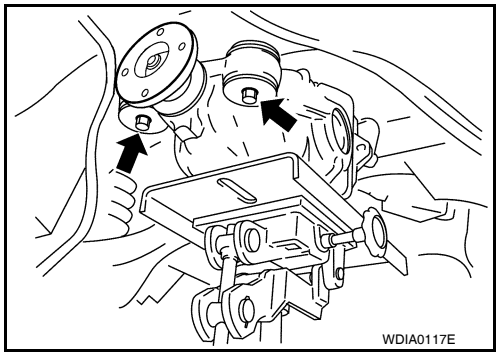

INSTALLATION

Installation is in the reverse order of removal.

CAUTION:

- **When installing the breather hose make sure the painted marking on the metal end of breather hose is to the front of the vehicle and there are no pinched or restricted areas on the breather hose caused by folding or bending when installing it.**
- **When installing the breather hose insert the plastic end of the breather hose into the hole in the suspension member.**

REAR FINAL DRIVE BREATHER

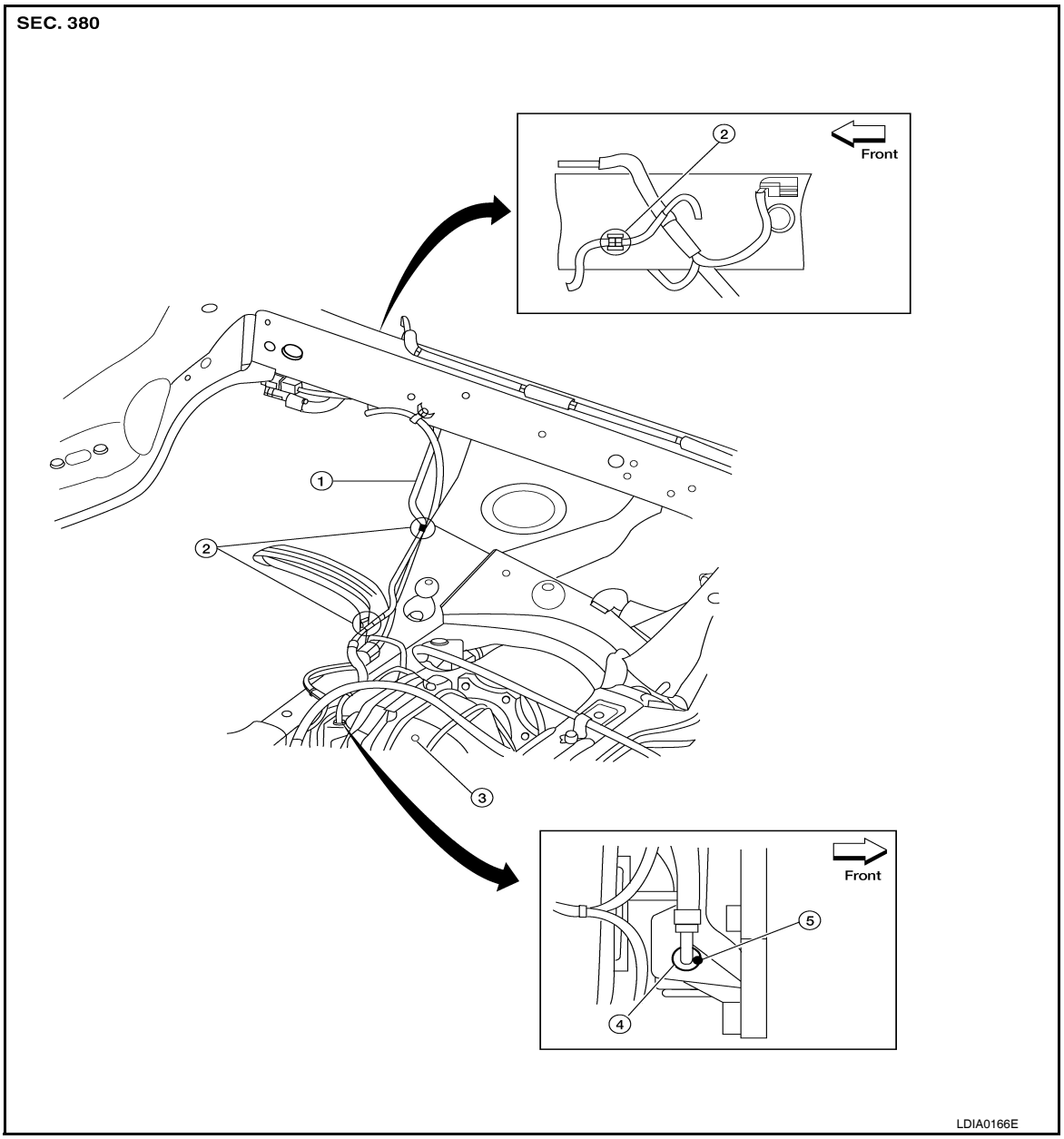

1. Breather hose
2. Plastic connector
3. Rear final drive assembly
4. Metal connector
5. Paint mark

- **Fill the rear final drive assembly with differential gear oil after installation. Refer to DLN-454, "Changing Differential Gear Oil".**

DISASSEMBLY AND ASSEMBLY

REAR FINAL DRIVE

Exploded View

INFOID:0000000005588051

SEC.380

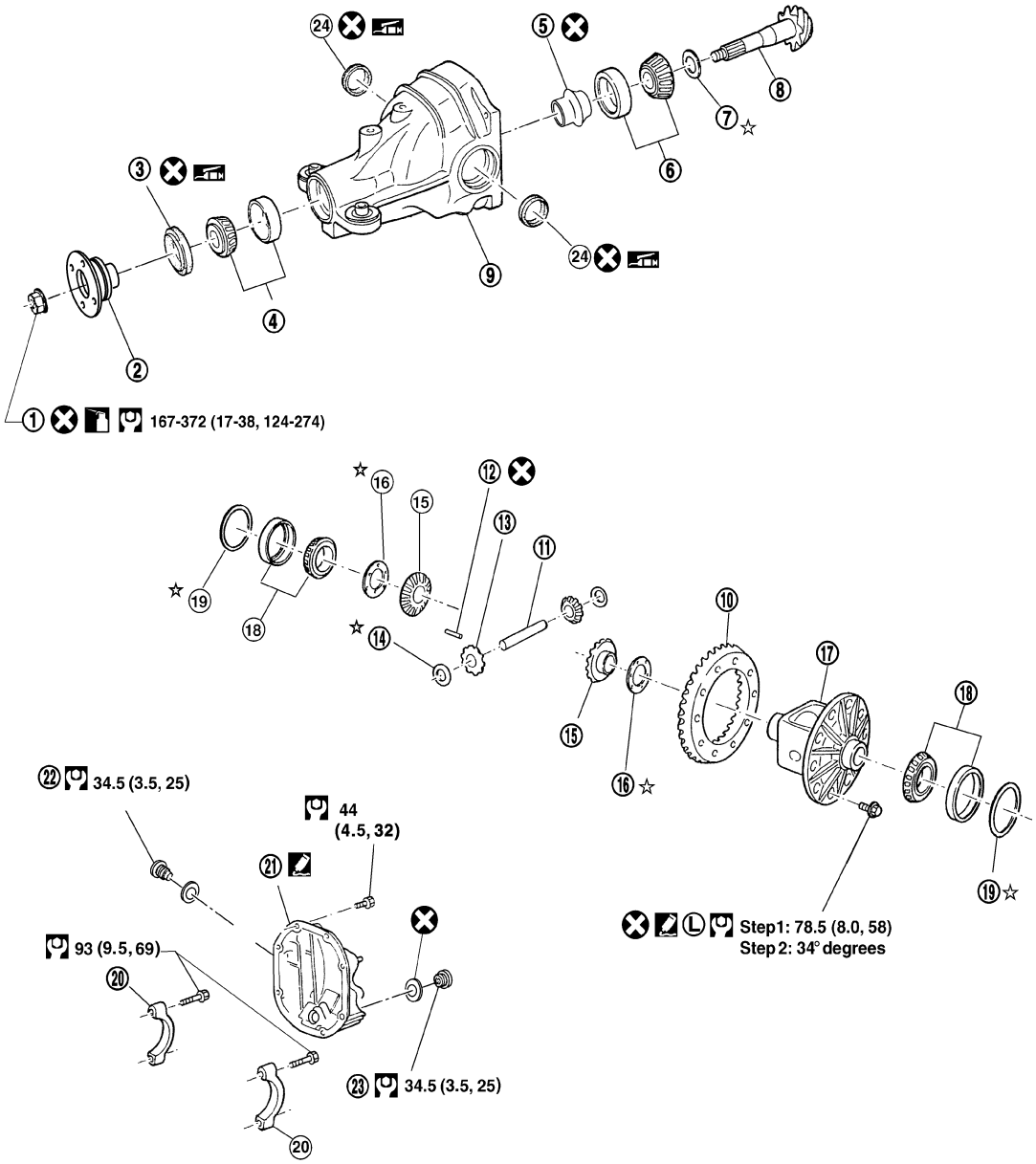

: Lubricate with new gear oil
: Apply genuine medium strength locking sealant or equivalent. Refer to GI section.
: N•m (kg-m, ft-lb)
: Apply genuine thread sealant or equivalent. Refer to GI section.
☆ : Adjustment is required.
: Always replace after every disassembly.
: Lubricate with grease.

WDIA0191E

1.	Drive pinion lock nut	2.	Companion flange	3.	Front oil seal
4.	Drive pinion front bearing	5.	Collapsible spacer	6.	Drive pinion rear bearing
7.	Drive pinion height adjusting washer	8.	Drive pinion	9.	Gear carrier
10.	Drive gear	11.	Pinion mate shaft	12.	Lock pin
13.	Pinion mate gear	14.	Pinion mate thrust washer	15.	Side gear
16.	Side gear thrust washer	17.	Differential case	18.	Side bearing
19.	Side bearing adjusting washer	20.	Bearing cap	21.	Carrier cover
22.	Filler plug	23.	Drain plug	24.	Side oil seal

Disassembly and Assembly

INFOID:0000000005258522

ASSEMBLY INSPECTION AND ADJUSTMENT

- Drain the differential gear oil before inspection and adjustment. Refer to DLN-454.
- Remove and install the carrier cover as necessary for inspection and adjustment. Refer to DLN-459.

Total Preload Torque

1. Remove the side flanges if necessary. Refer to DLN-457, "Removal and Installation".
   CAUTION:
   The side flanges shaft must removed in order to measure total preload torque.
2. Rotate the drive pinion back and forth 2 to 3 times to check for unusual noise and rotation malfunction.
3. Rotate the drive pinion at least 20 times to check for smooth operation of the bearings.
4. Measure the total preload torque using Tool.

Tool number : **ST3127S000 (J-25765-A)**

Total preload torque: **Refer to DLN-480, "Inspection and Adjustment"**

NOTE:
Total preload torque = Drive pinion bearing preload torque + Side bearing preload torque

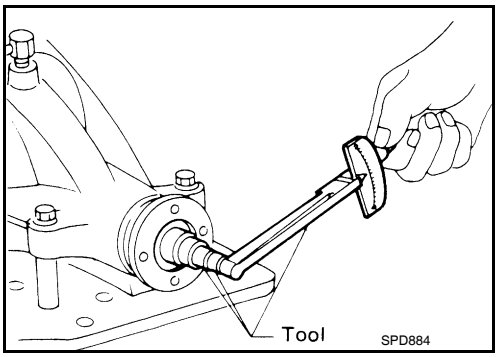

- If the measured value is out of the specification, check and adjust each part. Adjust the drive pinion bearing preload torque first, then adjust the side bearing preload torque.

If the total preload torque is greater than specification

On drive pinion bearings: **Replace the collapsible spacer.**

On side bearings: **Use thinner side bearing adjusting washers by the same amount on each side. Refer to DLN-480, "Inspection and Adjustment".**

If the total preload torque is less than specification

On drive pinion bearings: **Tighten the drive pinion lock nut.**

On side bearings: **Use thicker side bearing adjusting washers by the same amount on each side. Refer to DLN-480, "Inspection and Adjustment".**

CAUTION:
Select a side bearing adjusting washer for right and left individually.

Drive Gear Runout

1. Fit a dial indicator to the drive gear back face.
2. Rotate the drive gear to measure runout.

Runout limit	**Refer to DLN-480, "Inspection and Adjustment"**

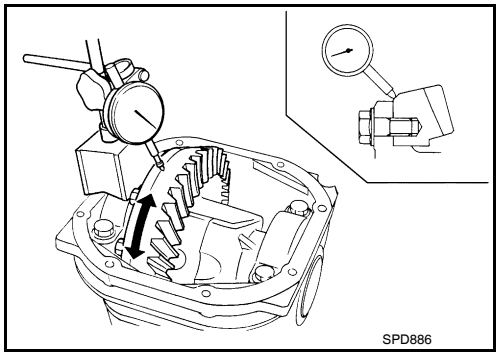

- If the runout is outside of the limit, check the condition of the drive gear assembly. Foreign material may be caught between the drive gear and differential case, or the differential case or drive gear may be deformed.
  CAUTION:
  Replace drive gear and drive pinion as a set.

Tooth Contact

1. Apply red lead to the drive gear.
   NOTE:
   Apply red lead to both faces of three to four gears, at four locations evenly spaced on the drive gear.

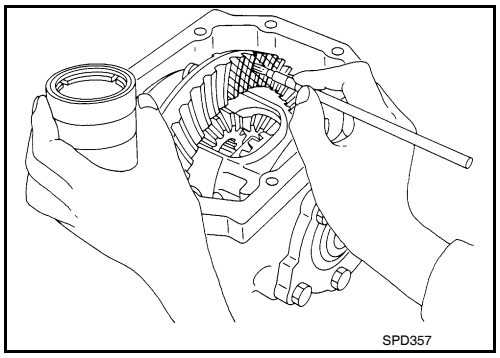

2. Rotate the drive gear back and forth several times. Then check for correct drive pinion to drive gear tooth contact as shown.
   CAUTION:
   Check tooth contact on drive side and reverse side.

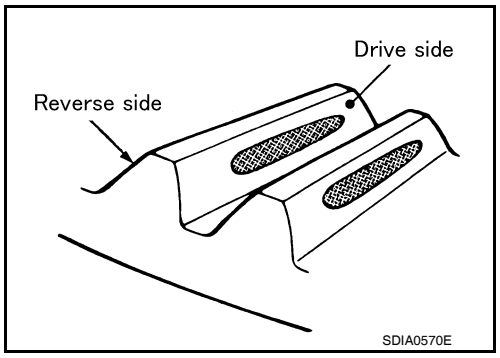

3. If the tooth contact is improperly adjusted, follow the procedure below to adjust the pinion height (dimension X).

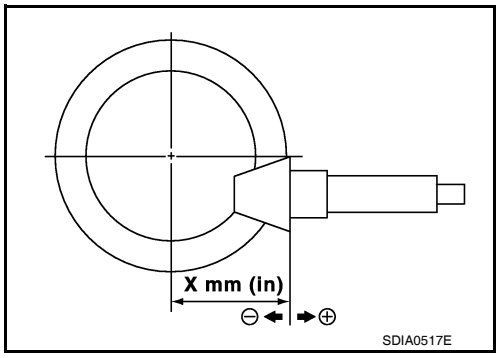

- If the tooth contact is near the face (face contact), or near the heel (heel contact), use a thicker drive pinion height adjusting washers to move the drive pinion closer to the drive gear.
  Refer to DLN-480, "Inspection and Adjustment".

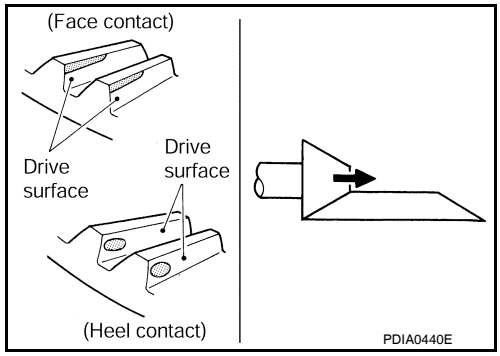

- If the tooth contact is near the flank (flank contact), or near the toe (toe contact), use a thinner drive pinion height adjusting washers to move the drive pinion farther from the drive gear.
  Refer to DLN-480, "Inspection and Adjustment".

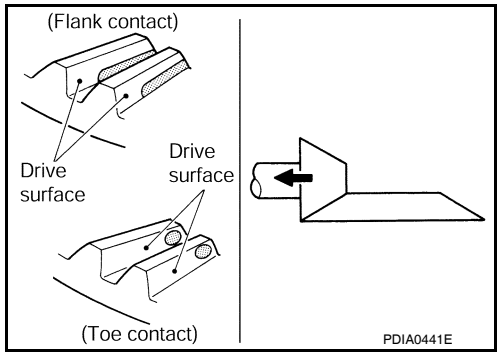

Backlash

1. Fit a dial indicator to the drive gear face to measure the backlash.

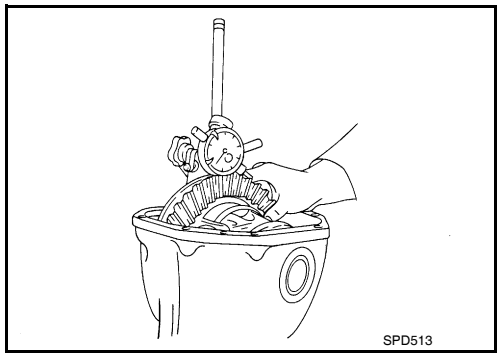

Backlash **Refer to DLN-480, "Inspection and Adjustment"**

- If the backlash is outside of the specification, change the thickness of the side bearing adjusting washers.

If the backlash is greater than specification:

Make side bearing adjusting washer thicker on drive gear back side, and side bearing adjusting washer thinner on drive gear tooth side by the same amount. Refer to DLN-480, "Inspection and Adjustment".

If the backlash is less than specification:

Make side bearing adjusting washer thinner on drive gear back side, and side bearing adjusting washer thicker on drive gear tooth side by the same amount. Refer to DLN-480, "Inspection and Adjustment".

CAUTION:

Do not change the total thickness of side bearing adjusting washers as it will change the side bearing preload torque.

Companion Flange Runout

1. Rotate companion flange and check for runout on the outer face of the companion flange using suitable tool.

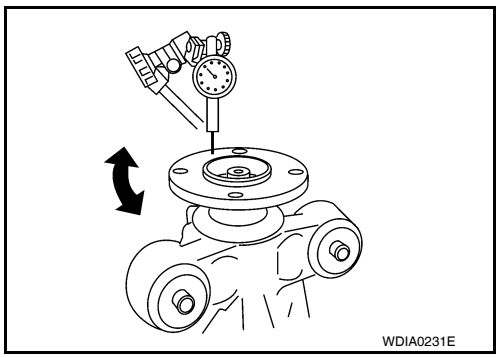

Runout limit **Refer to** **DLN-480, "Inspection and Adjustment"**

2. If the runout is outside of the runout limit, follow the procedure below to adjust.

a. Rotate the companion flange on the drive pinion by 90°, 180° and 270° while checking for the position where the runout is minimum.

b. If the runout is still outside of the runout limit after the companion flange has been rotated on the drive pinion, possible cause could be an assembly malfunction of drive pinion and drive pinion bearing or a malfunctioning drive pinion bearing.

c. If the runout is still outside of the runout limit after repair of the assembly of drive pinion and drive pinion bearing or drive pinion bearing, replace the companion flange.

DISASSEMBLY

Side Flange

1. Drain the differential gear oil if necessary.
2. Remove the side flange using Tools.

Tool numbers **A: KV40104100 (—)**
B: ST36230000 (J-25840-A)

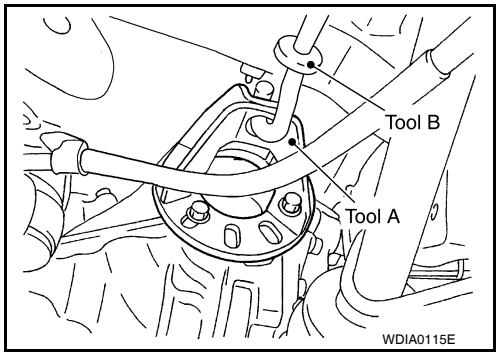

3. Remove the side oil seal using suitable tool.
CAUTION:
Do not to damage gear carrier.

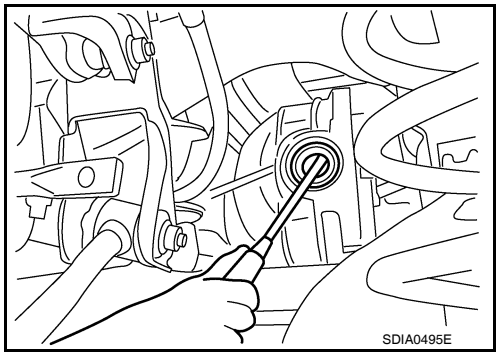

Differential Assembly

1. Remove the side flanges. Refer to DLN-457, "Removal and Installation".
2. Remove the carrier cover bolts.
3. Remove the carrier cover bolts and separate the carrier cover from the gear carrier using Tool.

Tool number **: KV10111100 (J-37228)**

CAUTION:
- **Do not damage the mating surface.**
- **Do not insert flat-bladed screwdriver, this will damage the mating surface.**

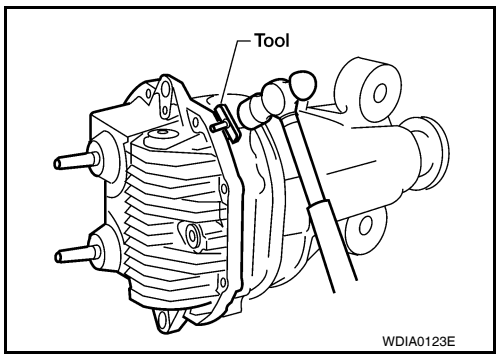

4. Mount the carrier on the Tool using two 45 mm (1.77 in) spacers.

Tool number : KV38100800 (J-25604-01)

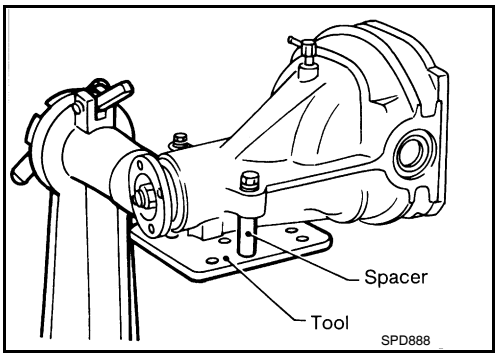

5. For proper reinstallation, paint matching marks on one side of the side bearing cap and gear carrier.

CAUTION:
- **For matching marks, use paint. Do not damage side bearing cap or gear carrier.**
- **Side bearing caps are line-board during manufacture. The matching marks are used to reinstall them in their original positions.**

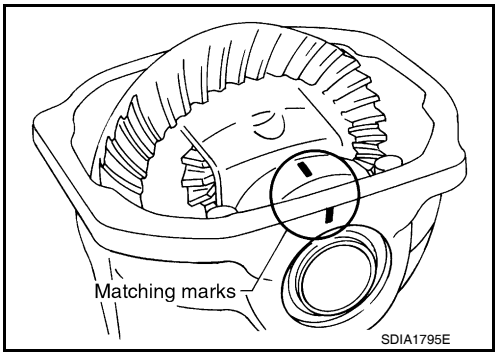

6. Remove the side bearing caps.

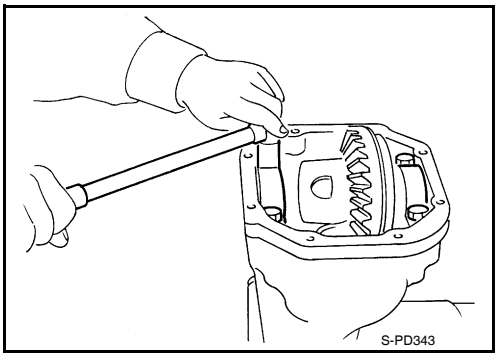

7. Lift the differential case assembly out using Tool.

Tool number : HT72400000 (—)

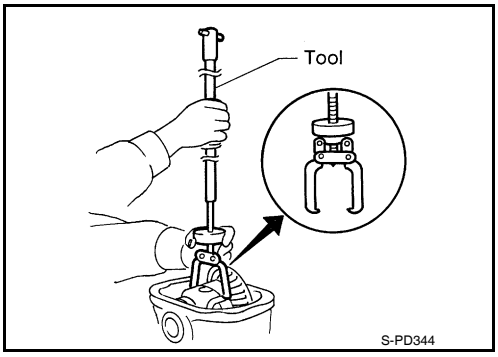

CAUTION:

- **Keep side bearing outer races together with inner race. Do not mix them up.**
- **Keep side bearing adjusting washers together with side bearings.**

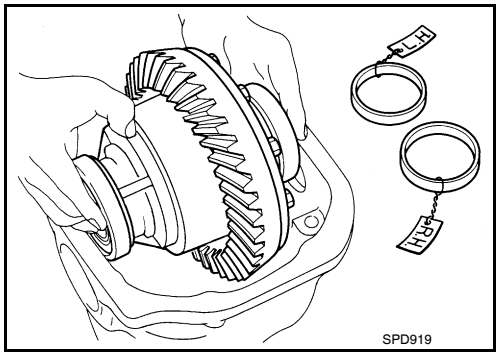

8. Remove the side bearing inner races using Tools.

Tool number	**A: ST3306S001 (—)**
	B: ST33061000 (J-8107-2)

CAUTION:
- **Engage Tool jaws in bearing groove to prevent damage.**
- **Place copper plates between the side bearing and drive gear and the vise to prevent damage.**
- **Do not remove side bearing inner race unless it is being replaced.**

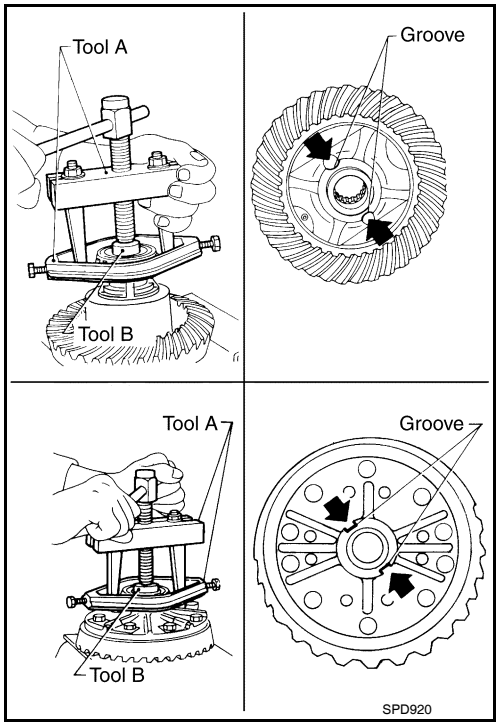

9. For proper reinstallation, paint matching marks on the differential case and drive gear.
CAUTION:
Use paint for matching marks. Do not damage differential case or drive gear.
10. Remove the drive gear bolts.
11. Tap the drive gear off the differential case using suitable tool.
CAUTION:
Tap evenly all around to keep drive gear from bending.

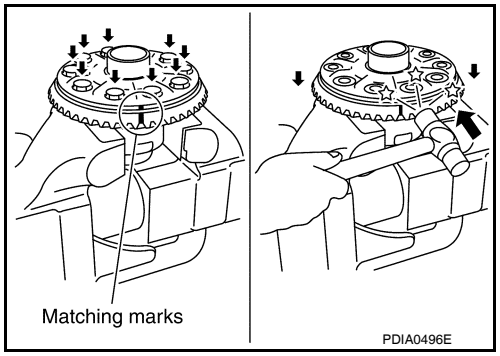

12. Remove the lock pin of the pinion mate shaft from the drive gear side using suitable tool.

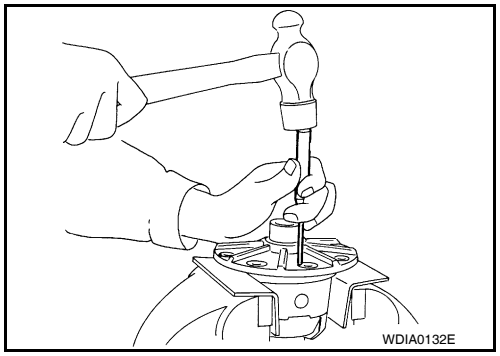

13. Remove the pinion mate shaft.

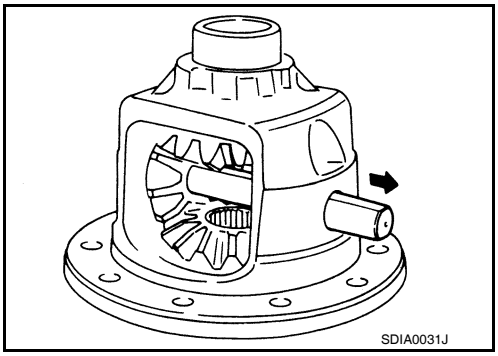

14. Turn the pinion mate gear, then remove the pinion mate gear, pinion mate thrust washer, side gear and side gear thrust washer from the differential case.

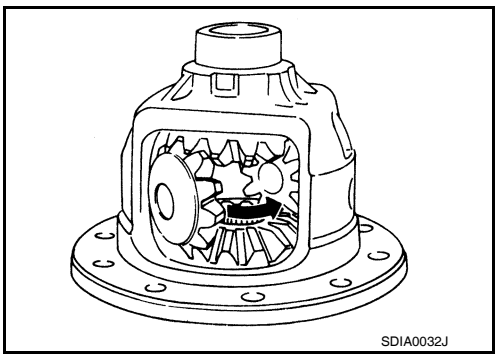

Drive Pinion Assembly

1. Remove the differential assembly. Refer to DLN-460, "Removal and Installation".
2. Remove the drive pinion lock nut using suitable tool.
3. Put matching marks on the companion flange and drive pinion using paint.
   CAUTION:
   Use paint to make the matching marks. Do not damage the companion flange or drive pinion.

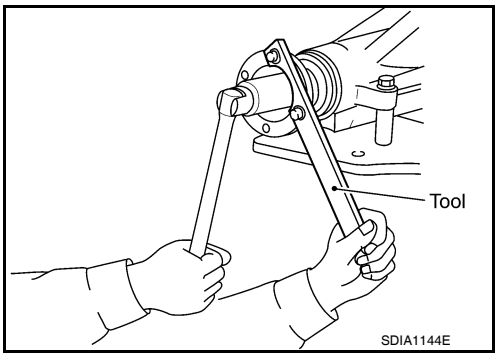

4. Remove the companion flange using suitable tool.

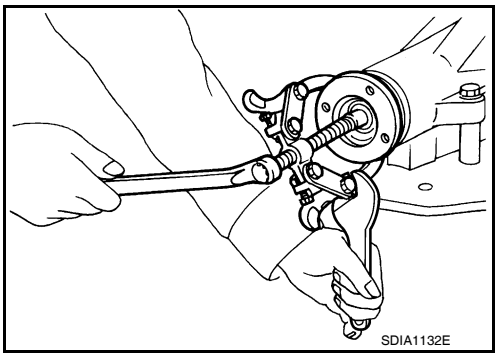

5. Press the drive pinion assembly (with rear inner bearing race and collapsible spacer) out of the gear carrier.
   CAUTION:
   Do not drop drive pinion assembly.
6. Remove the front oil seal.
   CAUTION:
   Do not damage gear carrier.
7. Remove the drive pinion front bearing inner race.

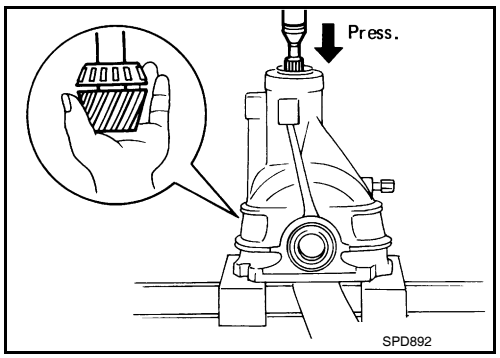

8. Remove the drive pinion rear bearing inner race and drive pinion height adjusting washer using Tool.

   Tool number: : ST30031000 (J-22912-01)

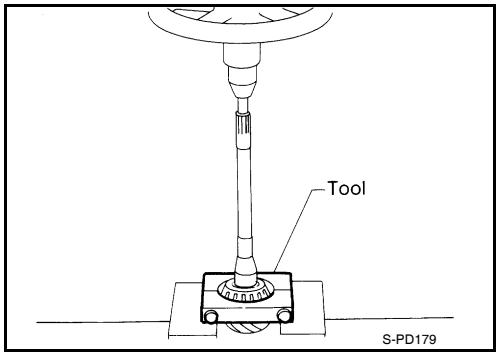

9. Remove the drive pinion front and rear bearing outer races by tapping them uniformly using suitable tool.
   CAUTION:
   Do not damage gear carrier.

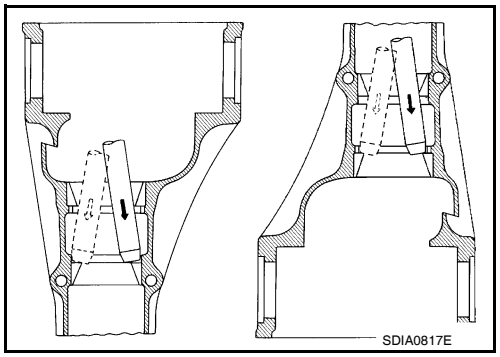

INSPECTION AFTER DISASSEMBLY

Clean the disassembled parts. Then inspect the parts for wear or damage. If wear or damage are found, follow the measures below.

Drive Pinion and Drive Gear

- If the drive pinion and drive gear teeth do not mesh or line-up correctly, determine the cause and adjust, repair, or replace as necessary.
- If the drive pinion or drive gear are worn, cracked, damaged, pitted or chipped (by friction) noticeably, replace with new drive pinion and drive gear.
- Drive pinion and drive gear are supplied in matched sets only. Matching numbers on both drive pinion and drive gear are etched for verification. If a new drive pinion and drive gear set are being used, verify the numbers of each drive pinion and drive gear before proceeding with assembly.

Bearing

- If bearings are chipped (by friction), pitted, worn, rusted, scratched, or unusual noise is coming from bearing, replace with new bearing assembly (as a new set).
- Bearing must be replaced with a new one whenever disassembled.

Side Gear and Pinion Mate Gear

- If any cracks or damage are found on the surface of the teeth, replace with new one.
- If any worn or chipped marks are found on the side of the side gear and pinion mate gear which contact the thrust washer, replace with new one.
- Replace both side gear and pinion mate gear as a set when replacing side gear or pinion mate gear.

Side Gear Thrust Washer and Pinion Mate Thrust Washer

- If any chips (by friction), damage, or unusual wear are found, replace with new one.

Gear Carrier
- If any wear or cracks are found on the contact sides of gear carrier, replace with new one.

Companion Flange
- If any chips (about 0.1mm, 0.004 in) or other damage on the companion flange surface which contacts the front oil seal lips are found, replace with new one.

ADJUSTING AND SELECTING WASHERS

Side Gear Back Clearance
- Assemble the differential parts if they are disassembled.

1. Place the differential case straight up so that the side gear to be measured is upward.

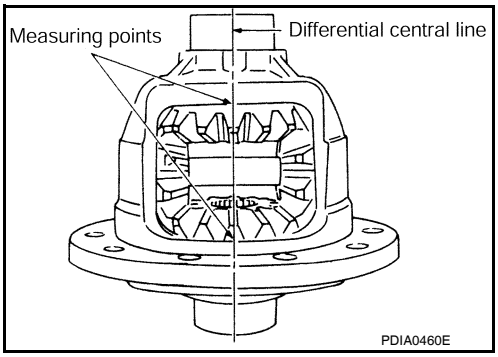

2. Using feeler gauges, measure the clearance between the side gear back and differential case at three different points, while rotating the side gear. Average the three readings to calculate the clearance. (Measure the clearance of the other side as well.)

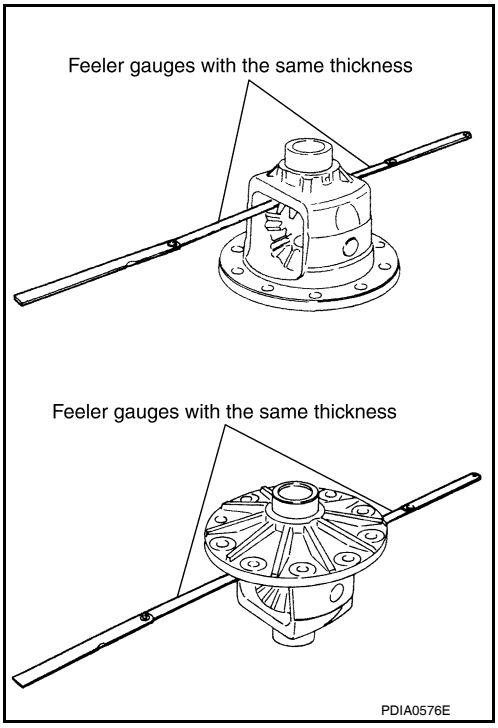

Side gear back clearance: **Refer to DLN-480, "Inspection and Adjustment"**

- If the side gear back clearance is outside of the specification, use a thicker or thinner side gear thrust washer to adjust. Refer to DLN-480, "Inspection and Adjustment".

If the side gear back clearance is greater than specification:

Use a thicker side gear thrust washer.

If the side gear back clearance is less than specification:

Use a thinner side gear thrust washer.

CAUTION:
- **Insert feeler gauges with the same thickness on both sides to prevent side gear from tilting.**
- **Each gear should rotate smoothly without excessive resistance during differential motion.**
- **Select a side gear thrust washer for right and left individually.**

NOTE:
Side gear back clearance is clearance between side gear and differential case for adjusting side gear backlash.

Side Bearing Preload Torque
- A selection of side bearing adjusting washers is required for successful completion of this procedure.

1. Apply differential gear oil to the side bearings, and install the differential case assembly with the side bearing outer races into the gear carrier.
CAUTION:
Do not reuse side bearing outer race when replacing side bearing inner race (replace as a set).

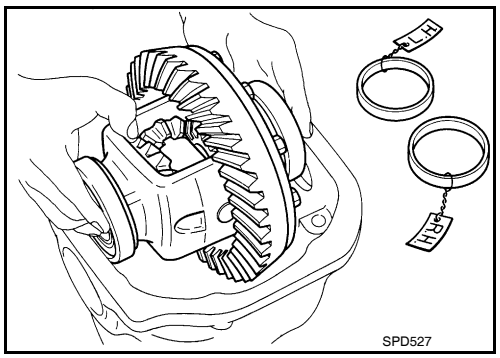

2. Insert the left and right original side bearing adjusting washers in place between side bearings and gear carrier.

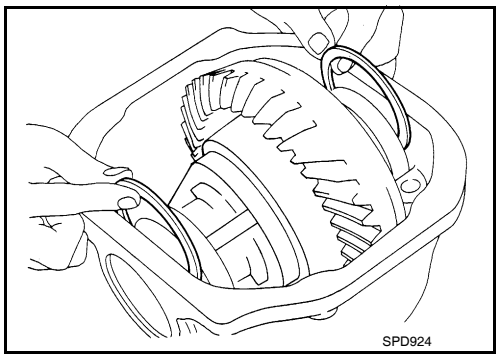

3. Align the matching mark on the side bearing cap with the matching mark on the gear carrier.
4. Install the side bearing caps and tighten the side bearing cap bolts to the specified torque. Refer to DLN-463, "Exploded View".
5. Turn the differential assembly several times to seat the side bearings.

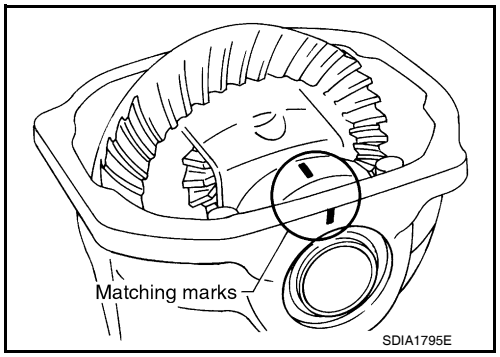

6. To determine side bearing preload torque, measure the pulling force of the differential assembly at the drive gear bolt using Tool.

Tool number : — (J-8129)

Specification Refer to DLN-480, "Inspection and Adjustment"

NOTE:
If pulling force of the differential assembly at the drive gear bolt is within specification, side bearing preload torque will also be within specification. Refer to DLN-480, "Inspection and Adjustment".

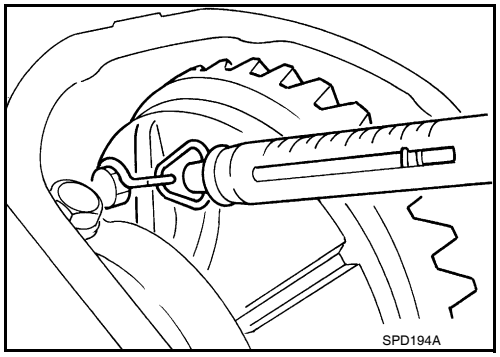

7. If the pulling force is outside the specification, use a thicker or thinner side bearing adjusting washer to adjust. Refer to DLN-480, "Inspection and Adjustment".

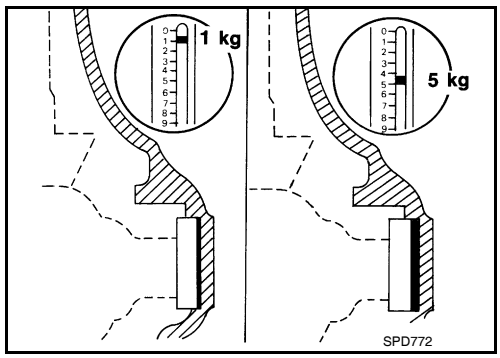

If the pulling force is less than the specification:

Use a thicker side bearing adjusting washer.

If the pulling force is greater than the specification:

Use a thinner side bearing adjusting washer.

CAUTION:
Select a side bearing adjusting washer for right and left individually.

8. Record the total amount of washer thickness required for the correct side bearing preload torque.

ASSEMBLY

Drive Pinion Assembly

1. Install the drive pinion front and rear bearing outer races using Tools.

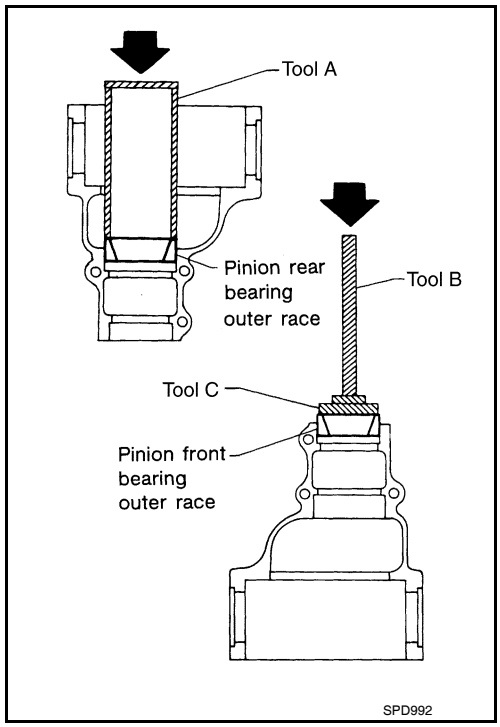

Tool number **A: ST15310000 (—)**
B: ST35325000 (—)
C: ST30621000 (J-25742-5)

CAUTION:
Do not reuse drive pinion front and rear bearing outer race.

2. Select a drive pinion height adjusting washer. Refer to DLN-480, "Inspection and Adjustment".
3. Install the selected drive pinion height adjusting washer to the drive pinion. Press the drive pinion rear bearing inner race to it using Tool.

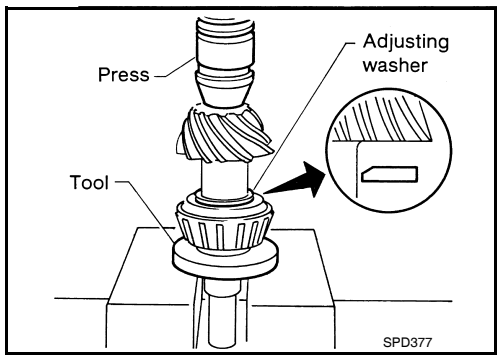

Tool number **: ST30022000 (—)**

CAUTION:
- **Install the drive pinion height adjusting washer in the proper direction as shown.**
- **Do not reuse drive pinion rear bearing inner race.**

4. Assemble the collapsible spacer to the drive pinion.
   CAUTION:
   Do not reuse collapsible spacer.
5. Apply differential gear oil to the drive pinion rear bearing, and install the drive pinion assembly to the gear carrier.
6. Apply differential gear oil to the drive pinion front bearing, and install the drive pinion front bearing inner race to the drive pinion assembly.
   CAUTION:
   Do not reuse drive pinion front bearing inner race.

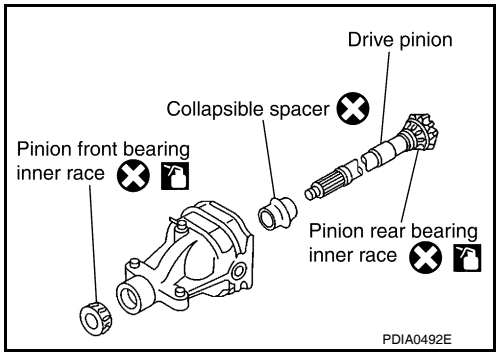

7. Press the drive pinion front bearing inner race to the drive pinion as far as drive pinion lock nut can be tightened using suitable spacer.

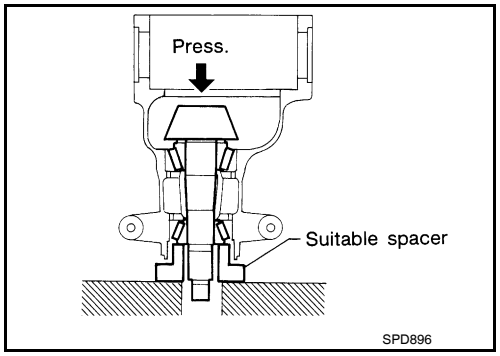

8. Apply multi-purpose grease to the lips of the new front oil seal. Then drive the new front oil seal in evenly until it becomes flush with the gear carrier using Tool.

   Tool number : ST15310000 (—)

   CAUTION:
   - **Do not reuse front oil seal.**
   - **Do not incline the new front oil seal when installing.**
   - **Apply multi-purpose grease to the lips of the new front oil seal.**

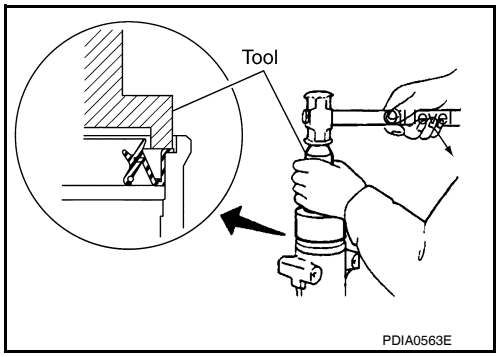

9. Install the companion flange to the drive pinion while aligning the matching marks.

10. Apply anti-corrosive oil to the threads of the drive pinion and the seating surface of the new drive pinion lock nut. Then adjust the drive pinion lock nut tightening torque using suitable tool A, and check the drive pinion bearing preload torque using Tool B.

Tool number	**B: ST3127S000 (J-25765-A)**
Drive pinion bearing preload torque:	**Refer to DLN-480, "Inspection and Adjustment"**

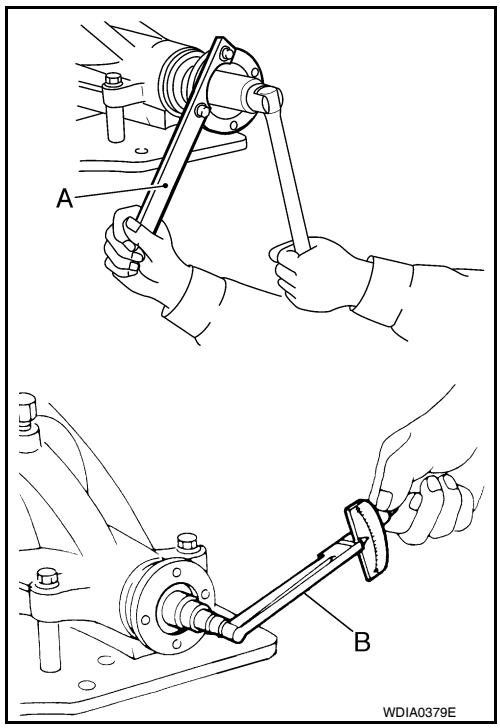

CAUTION:
- **Do not reuse drive pinion lock nut.**
- **Apply anti-corrosive oil to the threads of the drive pinion and the seating surface of the new drive pinion lock nut.**
- **Adjust the drive pinion lock nut tightening torque to the lower limit first. Do not exceed the drive pinion lock nut specified torque. Refer to DLN-463, "Exploded View".**
- **If the drive pinion bearing preload torque exceeds the specified value, replace collapsible spacer and tighten it again to adjust. Do not loosen drive pinion lock nut to adjust the drive pinion bearing preload torque.**
- **After adjustment, rotate drive pinion back and forth 2 to 3 times to check for unusual noise, rotation malfunction, and other malfunctions.**

11. Check companion flange runout. Refer to DLN-480, "Inspection and Adjustment".
12. Install the differential case assembly. Refer to DLN-463, "Exploded View".

Differential Assembly

1. Install side gear thrust washers with the same thickness as the ones installed prior to disassembly, or reinstall the old ones on the side gears.

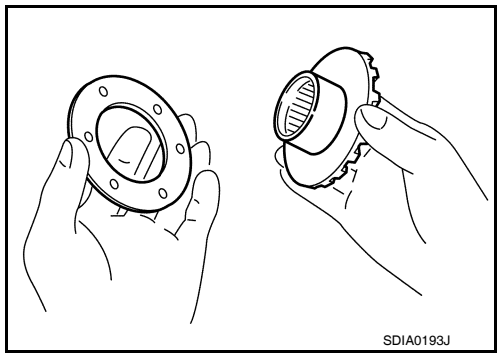

2. Install the side gears and side gear thrust washers into the differential case.
   CAUTION:
   Make sure that the circular clip is installed to side gears.
3. Install the pinion mate thrust washers to the two pinion mate gears. Then install the pinion mate gears with the pinion mate thrust washers by aligning them in diagonally opposite positions and rotating them into the differential case.

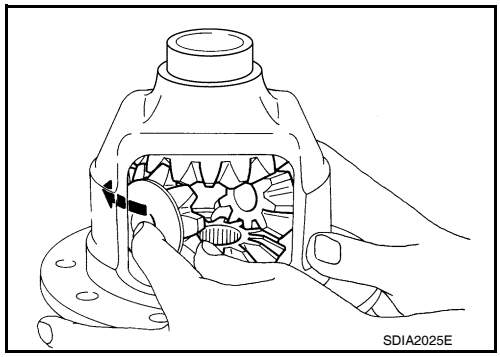

4. Align the lock pin hole on the differential case with the lock pin hole on the pinion mate shaft, and install the pinion mate shaft.
5. Measure the side gear end play. If necessary, select the appropriate side gear thrust washers. Refer to DLN-480, "Inspection and Adjustment".

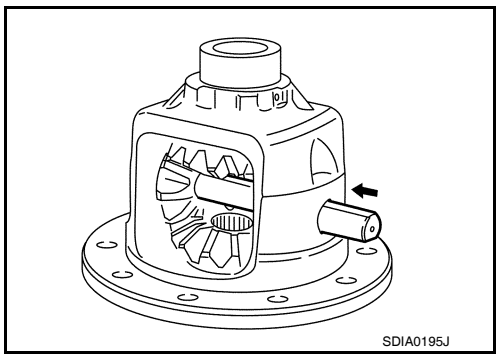

6. Drive a new lock pin into the pinion mate shaft until it is flush with the differential case using suitable tool.
CAUTION:
Do not reuse lock pin.

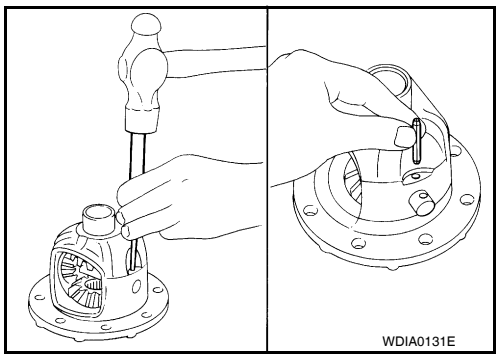

7. Align the matching mark of the differential case with the mark of the drive gear, then place the drive gear onto the differential case.

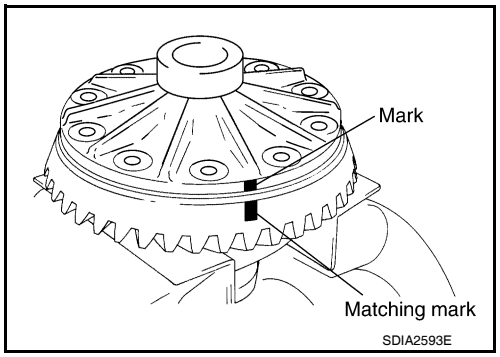

8. Apply thread locking sealant into the threaded holes of the drive gear and install the bolts.
   - Use Genuine Medium Strength Thread Locking Sealant or equivalent. Refer to GI-14, "Recommended Chemical Products and Sealants".

CAUTION:
Make sure the drive gear back and threaded holes are clean.

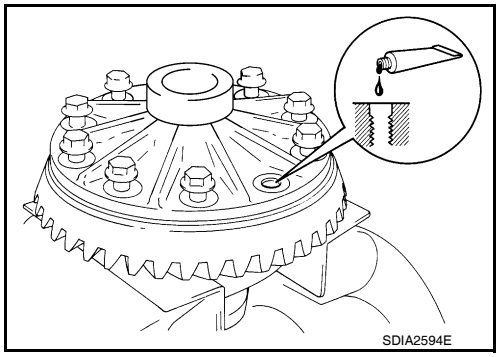

9. Tighten the drive gear bolts to the specified torque. Refer to DLN-463, "Exploded View". After tightening the drive gear bolts to the specified torque, tighten an additional 34° using Tool.

Tool number **A: KV10112100-A (BT-8653-A)**

CAUTION:
- **Always use Tool. Avoid tightening based on visual check alone.**
- **Tighten drive gear bolts in a crisscross pattern.**

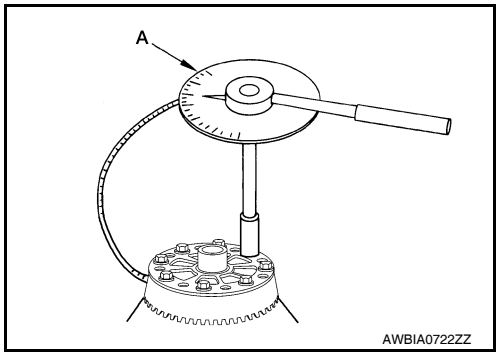

10. Press the side bearing inner races into the differential case using Tools.

Tool number **A: KV38100200 (J-26233)**
B: ST33081000 (—)

CAUTION:
Do not reuse side bearing inner race.

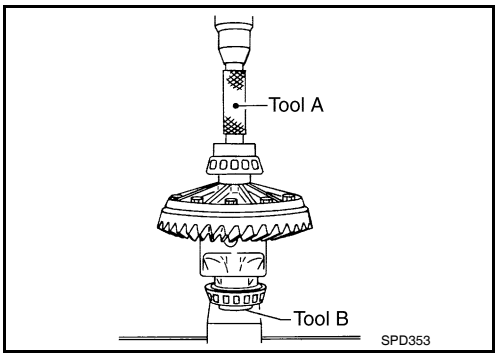

11. Install the differential case assembly with the side bearing outer races into the gear carrier.
12. Measure the side bearing preload torque. If necessary, select the appropriate side bearing adjusting washers. Refer to DLN-480, "Inspection and Adjustment".

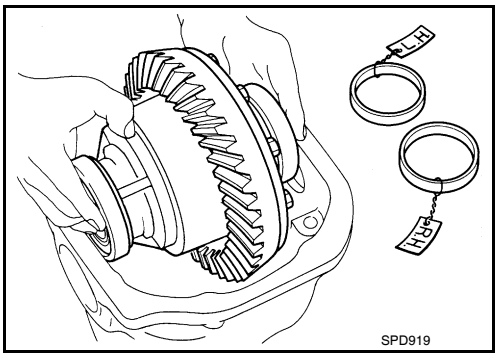

13. Insert the selected left and right side bearing adjusting washers in place between the side bearings and gear carrier.

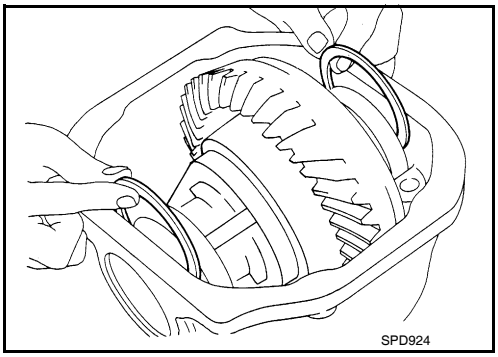

14. Install the side bearing caps with the matching marks aligned and tighten the side bearing cap bolts to the specified torque. Refer to DLN-463, "Exploded View".

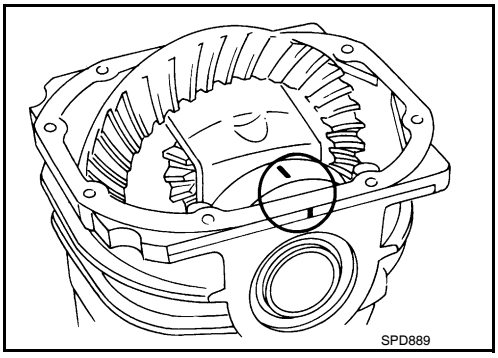

15. Check and adjust the drive gear runout, tooth contact, drive gear to drive pinion backlash, and total preload torque. Refer to DLN-480, "Inspection and Adjustment".
Recheck the above items.
16. Install the side flanges. Refer to DLN-457, "Removal and Installation".

17. Apply a 3.2mm (0.126 in) bead of sealant to the mating surface of the carrier cover.
    - Use Genuine Silicone RTV or equivalent. Refer to GI-14, "Recommended Chemical Products and Sealants".

    CAUTION:
    Remove any old sealant adhering to the mating surfaces. Also remove any moisture, oil, or foreign material adhering to the application and mating surfaces.
18. Install the carrier cover to the gear carrier. Tighten the bolts to the specified torque. Refer to DLN-463, "Exploded View".
19. Install the side flange. Refer to DLN-457, "Removal and Installation"

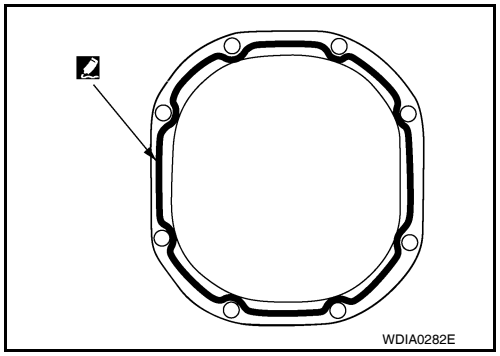

Side Flange

1. Apply multi-purpose grease to the lips of the new side oil seal. Then drive the new side oil seal in evenly until it becomes flush with the gear carrier using Tool.

   Tool number : ST35271000 (—)

   CAUTION:
   - **Do not reuse side oil seal.**
   - **Do not incline the new side oil seal when installing.**
   - **Apply multi-purpose grease to the lips of the new side oil seal.**

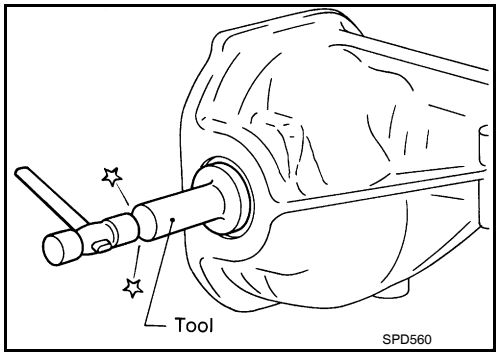

2. Install the side flange using Tool.

a. Install the Tool to the side oil seal as shown.

   Tool number : KV38107900 (J-39352)

b. Insert the side flange until the serrated part of the side flange has engaged the serrated part of the side gear and remove the Tool.

c. Drive in the side flange using suitable tool.
   NOTE:
   Installation is completed when the driving sound of the side flange turns into a sound which seems to affect the whole rear final drive assembly.

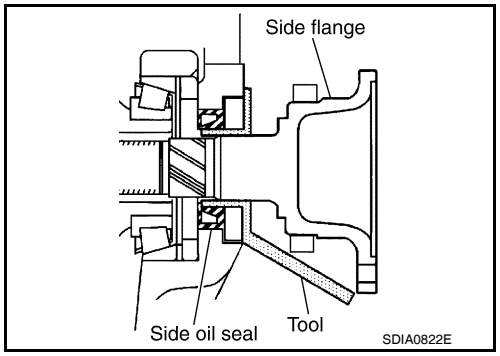

SERVICE DATA AND SPECIFICATIONS (SDS)

SERVICE DATA AND SPECIFICATIONS (SDS)

General Specification

INFOID:0000000005258523

Applied model	VK56DE
Final drive model	R230
Gear ratio	2.937
Number of teeth (Drive gear/Drive pinion)	47 / 16
Oil capacity (Approx.)	1.75 ℓ (3 3/4 US pt, 3 1/8 Imp pt)
Number of pinion gears	2
Drive pinion adjustment spacer type	Collapsible

Inspection and Adjustment

INFOID:0000000005258524

DRIVE GEAR RUNOUT

Unit: mm (in)

Item	Runout limit
Drive gear back face	0.05 (0.0020) or less

SIDE GEAR CLEARANCE

Unit: mm (in)

Item	Specification
Side gear back clearance (Clearance limit between side gear and differential case for adjusting side gear backlash)	0.20 (0.0079) or less (Each gear should rotate smoothly without excessive resistance during differential motion.)

PRELOAD TORQUE

Unit: N·m (kg-m, in-lb)

Item	Specification
Drive pinion bearing preload torque	1.77 – 2.64 N·m (0.18 – 0.26 kg–m, 16 – 23 in-lb)
Side bearing preload torque (reference value determined by drive gear bolt pulling force)	0.20 – 0.52 N·m (0.02 – 0.05 kg–m, 2 – 4 in-lb)
Drive gear bolt pulling force (by spring gauge)	34.2 – 39.2 N (3.5 – 4 kg, 7.7 – 8.8 lb)
Total preload torque (Total preload torque = drive pinion bearing preload torque + Side bearing preload torque)	2.05 – 4.11 N·m (0.21 – 0.42 kg–m, 19 – 36 in-lb)

BACKLASH

Unit: mm (in)

Item	Specification
Drive gear to drive pinion gear	0.13 – 0.18 (0.0051 – 0.0070)

COMPANION FLANGE RUNOUT

Unit: mm (in)

Item	Runout limit
Outer side of the companion flange	0.08 (0.0031) or less

SELECTIVE PARTS

Side Gear Thrust Washer

Unit: mm (in)

Thickness	Part number*
1.75 (0.0688)	38424 7S000
1.80 (0.0708)	38424 7S001
1.85 (0.0728)	38424 7S002

*: Always check with the Parts Department for the latest parts information.

Drive Pinion Height Adjusting Washer

Unit: mm (in)

Thickness	Part number*	Thickness	Part number*
2.59 (0.1020)	38154 40P00	2.79 (0.1098)	38154 40P10
2.61 (0.1028)	38154 40P01	2.81 (0.1106)	38154 40P11
2.63 (0.1035)	38154 40P02	2.83 (0.1114)	38154 40P12
2.65 (0.1043)	38154 40P03	2.85 (0.1122)	38154 40P13
2.67 (0.1051)	38154 40P04	2.87 (0.1130)	38154 40P14
2.69 (0.1059)	38154 40P05	2.89 (0.1138)	38154 40P15
2.71 (0.1067)	38154 40P06	2.91 (0.1146)	38154 40P16
2.73 (0.1075)	38154 40P07	2.93 (0.1154)	38154 40P17
2.75 (0.1083)	38154 40P08	2.95 (0.1161)	38154 40P18
2.77 (0.1091)	38154 40P09	2.97 (0.1169)	38154 40P19

*: Always check with the Parts Department for the latest parts information.

Side Bearing Adjusting Washer

Unit: mm (in)

Thickness	Part number*	Thickness	Part number*
2.00 (0.0787)	38453 40P00	2.35 (0.0925)	38453 40P07
2.05 (0.0807)	38453 40P01	2.40 (0.0945)	38453 40P08
2.10 (0.0827)	38453 40P02	2.45 (0.0965)	38453 40P09
2.15 (0.0846)	38453 40P03	2.50 (0.0984)	38453 40P10
2.20 (0.0866)	38453 40P04	2.55 (0.1004)	38453 40P11
2.25 (0.0886)	38453 40P05	2.60 (0.1024)	38453 40P12
2.30 (0.0906)	38453 40P06		

*: Always check with the Parts Department for the latest parts information.