SECTION HAC

HEATER & AIR CONDITIONING CONTROL SYSTEM

CONTENTS

MANUAL AIR CONDITIONER

BASIC INSPECTION

DIAGNOSIS AND REPAIR WORKFLOW

How to Perform Trouble Diagnosis For Quick And Accurate Repair

INFOID:0000000005256899

WORK FLOW

1.LISTEN TO CUSTOMER COMPLAINT

Listen to customer complaint. Get detailed information about the conditions and environment when the symptom occurs.

>> GO TO 2

2.CHECK FOR SERVICE BULLETINS

Check for any service bulletins.

>> GO TO 3.

3.VERIFY THE SYMPTOM WITH OPERATIONAL CHECK

Verify the symptom with operational check. Refer to HAC-123, "Operational Check".

Can a symptom be duplicated?

YES >> GO TO 4
NO >> GO TO 5

4.GO TO APPROPRIATE TROUBLE DIAGNOSIS

Go to appropriate trouble diagnosis. Refer to HAC-172, "Symptom Matrix Chart".

Can a symptom be duplicated?

>> GO TO 5.

5.PERFORM THE A/C AUTO AMP SELF-DIAGNOSIS

Perform A/C auto amp. self-diagnosis. Refer to HAC-24, "A/C Auto Amp. Self-Diagnosis".

>> If any diagnostic trouble codes set. Refer to HAC-25, "A/C System Self-Diagnosis Code Chart".
>> Confirm the repair by performing operational check. Refer to HAC-123, "Operational Check".

INSPECTION AND ADJUSTMENT

Operational Check (Front)

INFOID:0000000005256900

The purpose of the operational check is to confirm that the system operates properly.

Conditions : Engine running and at normal operating temperature

CHECKING MEMORY FUNCTION

1. Set the temperature to 32°C (90°F).
2. Press the OFF switch.
3. Turn ignition switch OFF.
4. Turn ignition switch ON.
5. Press the AUTO switch.
6. Confirm that the set temperature remains at previous temperature.
7. Press the OFF switch.

If NG, go to trouble diagnosis procedure for HAC-119, "Memory Function Check".
If OK, continue with next check.

CHECKING BLOWER

1. Press the blower speed control switch (+) once, blower should operate on low speed. The fan display should have one bar lit (on display).
2. Press the blower speed control switch (+) again, and continue checking blower speed and fan display until all speeds are checked.
3. Leave blower on maximum speed.

If NG, go to trouble diagnosis procedure for HAC-147, "Front Blower Motor Diagnosis Procedure".
If OK, continue with next check.

CHECKING DISCHARGE AIR

1. Press MODE switch four times and the DEF switch.
2. Each position indicator should change shape (on display).
3. Confirm that discharge air comes out according to the air distribution table. Refer to HAC-18, "Discharge Air Flow (Front)".
   Mode door position is checked in the next step.
   If NG, go to trouble diagnosis procedure for HAC-137, "Mode Door Motor (Front) Diagnosis Procedure".
   If OK, continue the check.
   NOTE:
   Confirm that the compressor clutch is engaged (sound or visual inspection) and intake door position is at fresh when the FOOT, DEF or D/F is selected.

CHECKING RECIRCULATION (, ONLY)

1. Press recirculation ( ) switch one time. Recirculation indicator should illuminate.
2. Press recirculation ( ) switch one more time. Recirculation indicator should go off.
3. Listen for intake door position change (blower sound should change slightly).

If NG, go to trouble diagnosis procedure for HAC-144, "Intake Door Motor Diagnosis Procedure".
If OK, continue the check.
NOTE:
Confirm that the compressor clutch is engaged (sound or visual inspection) and intake door position is at fresh when the FOOT, DEF or D/F is selected. REC ( ) is not allowed in DEF ( ) D/F ( ) or FOOT ( ).

CHECKING TEMPERATURE DECREASE

1. Rotate temperature control dial (drive or passenger) counterclockwise until 18°C (60°F) is displayed.
2. Check for cold air at appropriate discharge air outlets.

If NG, listen for sound of air mix door motor operation. If OK, go to trouble diagnosis procedure for HAC-173, "Component Function Check". If air mix door motor appears to be malfunctioning, go to HAC-32, "Air Mix Door Motor (Driver) Component Function Check".
If OK, continue the check.

CHECKING TEMPERATURE INCREASE

1. Rotate temperature control dial clockwise (drive or passenger) until 32°C (90°F) is displayed.
2. Check for hot air at appropriate discharge air outlets.

If NG, listen for sound of air mix door motor operation. If OK, go to trouble diagnosis procedure for HAC-181, "Component Function Check". If air mix door motor appears to be malfunctioning, go to HAC-32, "Air Mix Door Motor (Driver) Component Function Check".
If OK, continue with next check.

CHECK A/C SWITCH

1. Press A/C switch when AUTO switch is ON, or in manual mode.
2. A/C switch indicator will turn ON.
   - Confirm that the compressor clutch engages (sound or visual inspection).

NOTE:
If current mode setting is DEF or D/F, compressor clutch will already be engaged and cannot be turned off.
If NG, go to trouble diagnosis procedure for HAC-153, "Magnet Clutch Diagnosis Procedure".
If OK, continue with next check.

CHECKING AUTO MODE

1. Press AUTO switch.
2. Display should indicate AUTO.
   - If ambient temperature is warm, and selected temperature is cool, confirm that the compressor clutch engages (sound or visual inspection). (Discharge air and blower speed will depend on ambient, in-vehicle, and set temperatures.)

If NG, go to trouble diagnosis procedure for HAC-160, "Front Air Control Power and Ground Diagnosis Procedure", then if necessary, trouble diagnosis procedure for HAC-153, "Magnet Clutch Diagnosis Procedure".
If all operational checks are OK (symptom cannot be duplicated), go to malfunction Simulation Tests in HAC-122, "How to Perform Trouble Diagnosis For Quick And Accurate Repair" and perform tests as outlined to simulate driving conditions environment. If symptom appears. Refer to HAC-172, "Symptom Matrix Chart", and perform applicable trouble diagnosis procedures.

Operational Check (Rear)

INFOID:0000000005256901

The purpose of the operational check is to confirm that the system operates properly.

Conditions : Engine running and at normal operating temperature

CHECKING REAR BLOWER MOTOR

1. Turn the ignition switch ON.
2. Rotate rear air control (front) blower control dial to low speed.
3. Rotate the blower control dial clockwise and continue checking blower speed until all speeds are checked.
4. Leave blower on maximum speed.
5. Press the REAR CTRL switch from the rear air control (front).
6. Rotate rear air control (rear) blower control dial to low speed.
7. Rotate the blower control dial clockwise and continue checking blower speed until all speeds are checked.
8. Leave blower on maximum speed.

If NG, go to trouble diagnosis procedure for HAC-50, "Rear Blower Motor Component Function Check".
If OK, continue with next check.

CHECKING REAR TEMPERATURE DECREASE

1. Press the REAR CTRL switch (indicator off).
2. Rotate the rear air control (front) temperature control dial counterclockwise to maximum cold.
3. Check for cold air at appropriate discharge air outlets.

4. Press the REAR CTRL switch (indicator on) from the rear air control (front).
5. Rotate the rear air control (rear) temperature control dial counterclockwise to maximum cold.
6. Check for cold air at appropriate discharge air outlets.

If NG, listen for sound of air mix door motor operation. If OK, go to trouble diagnosis procedure for HAC-140, "Air Mix Door Motor Component Function Check". If air mix door motor appears to be malfunctioning, go to HAC-62, "Rear Air Control (Rear) Diagnosis Procedure".
If OK, continue with next check.

CHECKING REAR TEMPERATURE INCREASE

1. Press the REAR CTRL switch (indicator off).
2. Rotate the rear air control (front) temperature control dial clockwise to maximum heat.
3. Check for hot air at appropriate discharge air outlets.
4. Press the REAR CTRL switch (indictor on) from the rear air control (front).
5. Rotate the rear air control (rear) temperature control dial clockwise to maximum heat.
6. Check for hot air at appropriate discharge air outlets.

If NG, listen for sound of air mix door motor operation. If OK, go to trouble diagnosis procedure for HAC-115, "Component Function Check". If air mix door motor appears to be malfunctioning, go to HAC-62, "Rear Air Control (Rear) Diagnosis Procedure".
If NG, go to trouble diagnosis procedure for HAC-181, "Component Function Check".
If all operational checks are OK (symptom cannot be duplicated), go to HAC-122, "How to Perform Trouble Diagnosis For Quick And Accurate Repair" and perform tests as outlined. If symptom appears, refer to HAC-172, "Symptom Matrix Chart" and perform applicable trouble diagnosis procedures.

FUNCTION DIAGNOSIS

FUNCTION INFORMATION

Component Part Location

INFOID:0000000005256902

ENGINE COMPARTMENT

VQ40DE

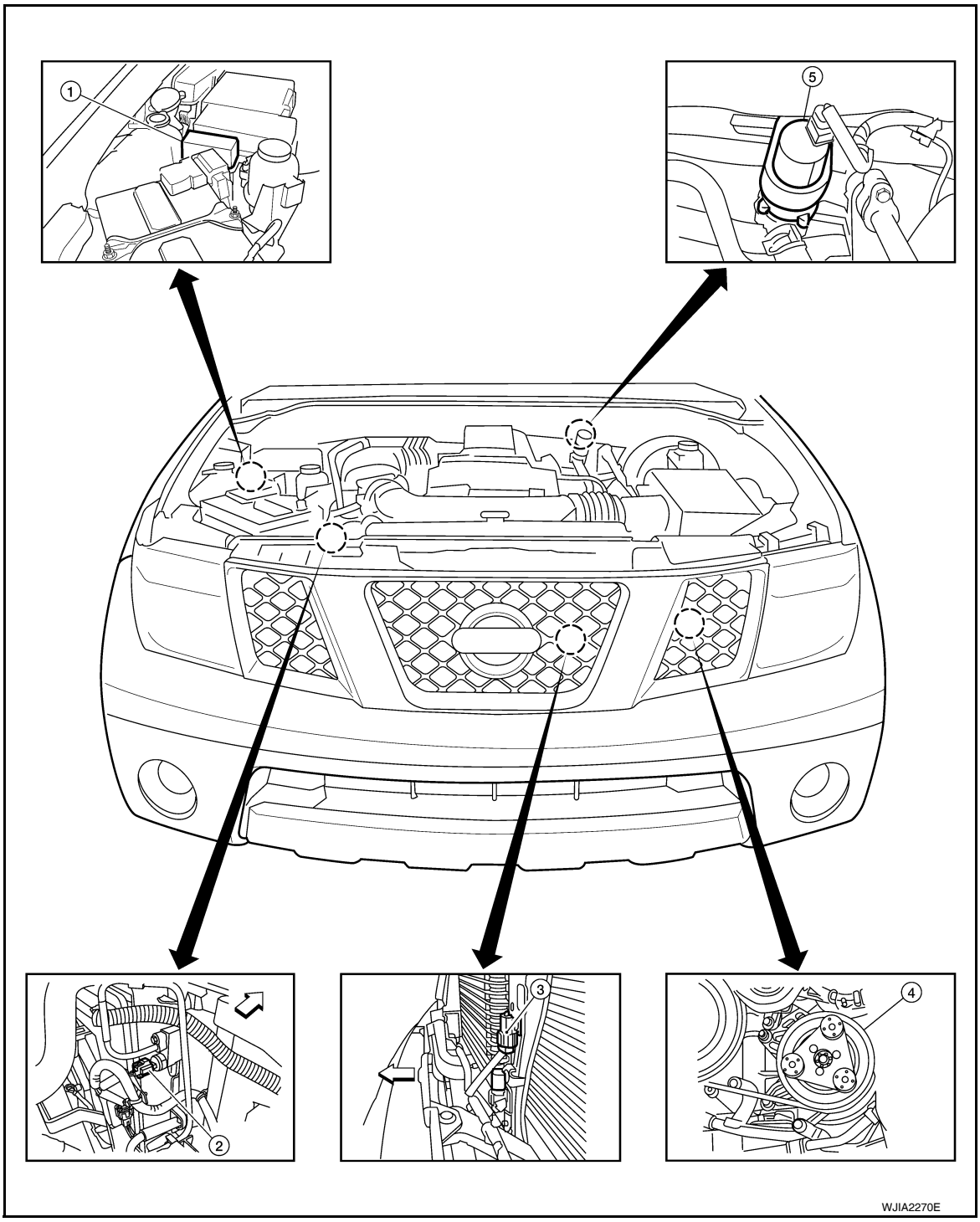

1. Heater pump relay E144
2. Refrigerant pressure sensor E48 (View with battery removed) ⇐: Front
3. Ambient sensor E1 (View with grille removed)
4. A/C compressor F3
5. Heater pump E141

VK56DE

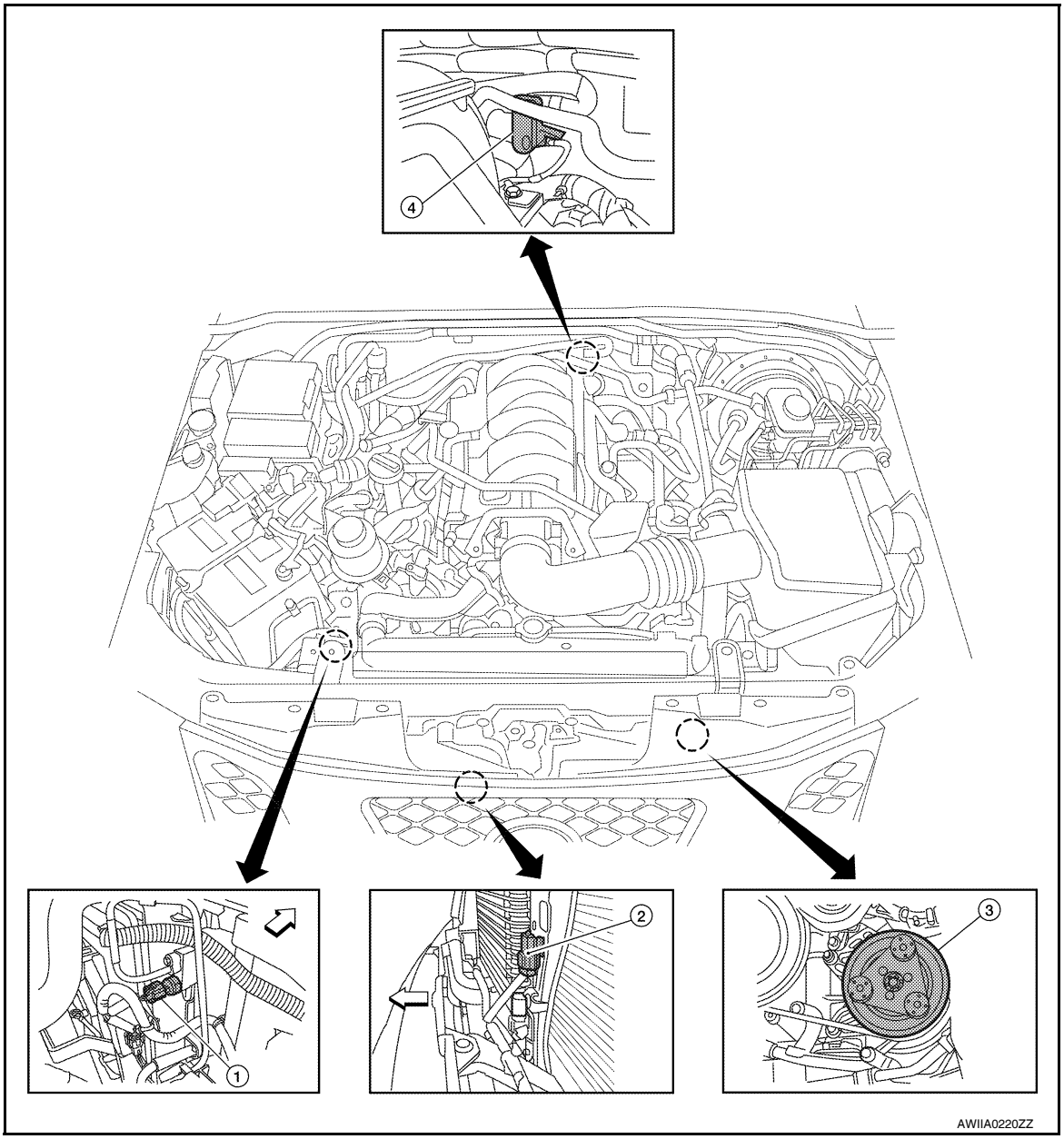

1. Refrigerant pressure sensor E50 (View with battery removed) ⇐: Front
2. Ambient sensorE1 (View with grille removed)
3. A/C compressor F3
4. Water valve F68

PASSENGER COMPARTMENT

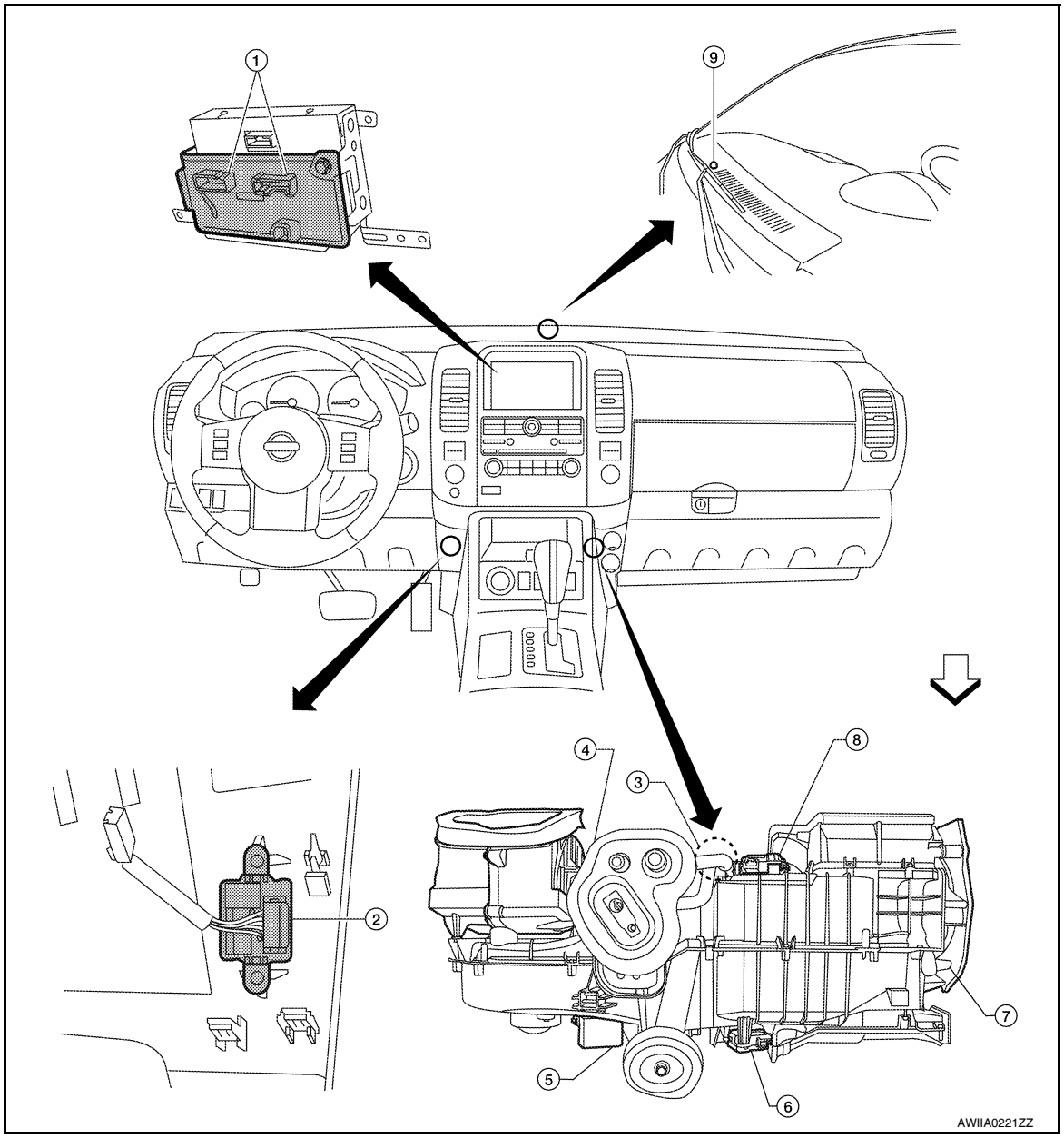

1. A/C Auto amp. M49, M50	2. In-vehicle sensor M32	3. Intake sensor M146
4. Intake door motor M58	5. Variable blower control (front) M122	6. Air mix door motor (driver) M147
7. Mode door motor (front) M142	8. Air mix door motor (passenger) M143	9. Optical sensor M145

⇐ :Front

REAR PASSENGER COMPARTMENT

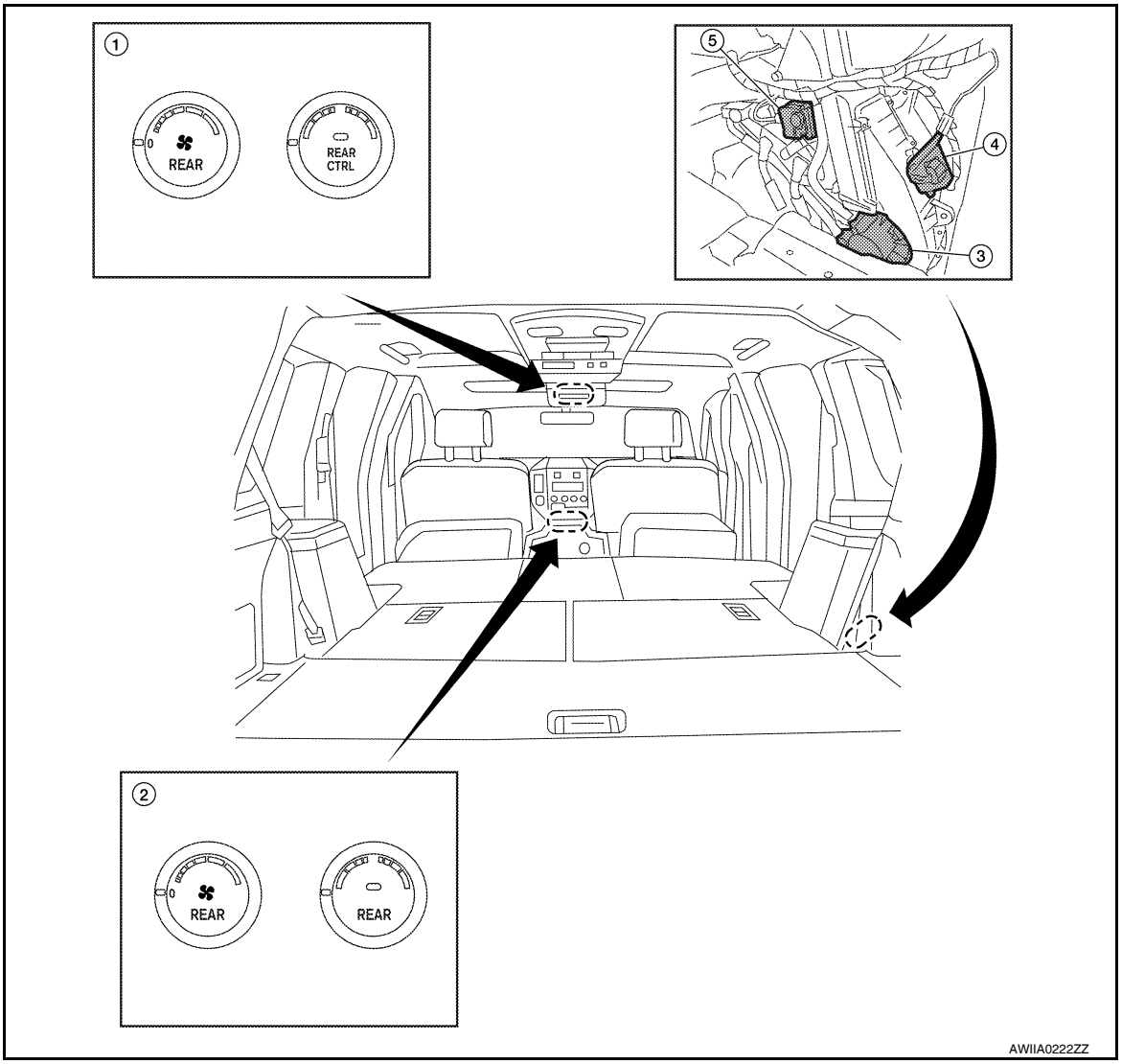

1. Rear air control (front) R2
2. Rear air control (rear) M208
3. Rear blower motor B501
4. Variable blower control (rear) B133
5. Air mix door motor (rear) B155

Symptom Table

INFOID:0000000005256903

Symptom	Reference Page	
A/C system does not come on.	Go to Trouble Diagnosis Procedure for A/C System.	HAC-86
A/C system display is malfunctioning (with NAVI).	Go to Navigation System.	AV-372
A/C system display is malfunctioning (without NAVI).	Go to Mid-level Audio System.	AV-194
A/C system cannot be controlled.	Go to Self-diagnosis Function.	HAC-24
Air outlet does not change.	Go to Trouble Diagnosis Procedure for Mode Door Motor.	HAC-27
Mode door motor is malfunctioning.		
Discharge air temperature does not change.	Go to Trouble Diagnosis Procedure for Air Mix Door Motor.	HAC-32
Air mix door motor is malfunctioning.		

Symptom	Reference Page	
Intake door does not change.	Go to Trouble Diagnosis Procedure for Intake Door Motor.	HAC-41
Intake door motor is malfunctioning.		
Front blower motor operation is malfunctioning.	Go to Trouble Diagnosis Procedure for Front Blower Motor.	HAC-44
Rear blower motor operation is malfunctioning.	Go to Trouble Diagnosis Procedure for Rear Blower Motor.	HAC-50
Rear discharge air temperature and/or air outlet does not change.	Go to Trouble Diagnosis Procedure for Rear Air Control circuit.	HAC-59
Magnet clutch does not engage.	Go to Trouble Diagnosis Procedure for Magnet Clutch.	HAC-65
Insufficient cooling	Go to Trouble Diagnosis Procedure for Insufficient Cooling.	HAC-107
Insufficient heating	Go to Trouble Diagnosis Procedure for Insufficient Heating.	HAC-115
Noise	Go to Trouble Diagnosis Procedure for Noise.	HAC-117
Self-diagnosis cannot be performed.	Go to Trouble Diagnosis Procedure for Self-diagnosis.	HAC-86
Memory function does not operate.	Go to Trouble Diagnosis Procedure for Memory Function.	HAC-119

REFRIGERATION SYSTEM

Refrigerant Cycle

INFOID:0000000005476015

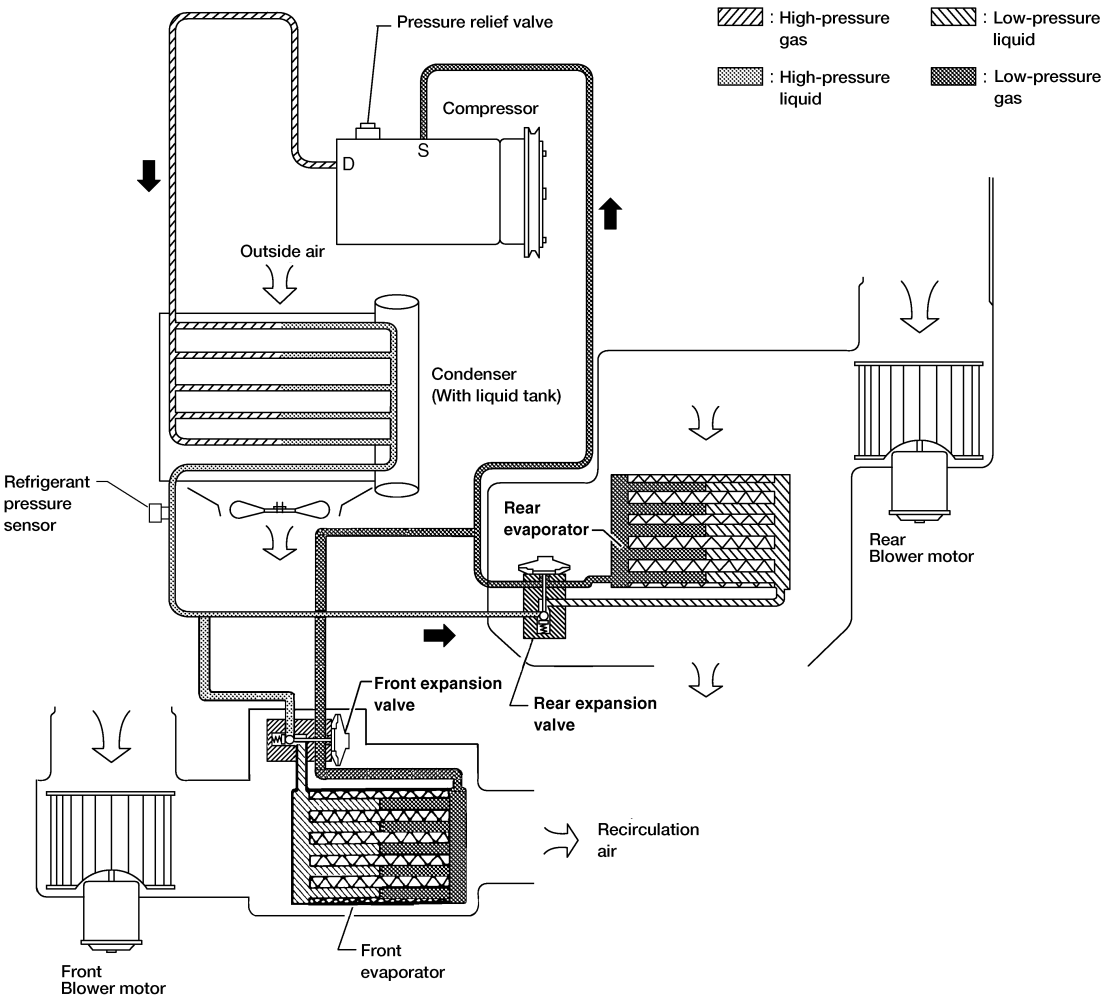

WJIA1342E

REFRIGERANT FLOW

The refrigerant flows in the standard pattern, that is, through the compressor, the condenser with liquid tank, through the front and rear evaporators, and back to the compressor. The refrigerant evaporation through the evaporator coils are controlled by front and rear externally equalized expansion valves, located inside the front and rear evaporator cases.

FREEZE PROTECTION

The compressor cycles on and off to maintain the evaporator temperature within a specified range. When the evaporator coil temperature falls below a specified point, the intake sensor interrupts the compressor operation. When the evaporator coil temperature rises above the specification, the intake sensor allows compressor operation.

Refrigerant System Protection

INFOID:0000000005476016

REFRIGERANT PRESSURE SENSOR

The refrigerant system is protected against excessively high- or low-pressures by the refrigerant pressure sensor, located on the condenser. If the system pressure rises above or falls below the specifications, the refrigerant pressure sensor detects the pressure inside the refrigerant line and sends a voltage signal to the ECM. The ECM de-energizes the A/C relay to disengage the magnetic compressor clutch when pressure on the high pressure side detected by refrigerant pressure sensor is over about 2,746 kPa (28 kg/cm^2, 398 psi), or below about 120 kPa (1.22 kg/cm^2, 17.4 psi).

PRESSURE RELIEF VALVE

The refrigerant system is also protected by a pressure relief valve, located in the rear head of the compressor. When the pressure of refrigerant in the system increases to an abnormal level [more than 2,990 kPa (30.5 kg/cm^2, 433.6 psi)], the release port on the pressure relief valve automatically opens and releases refrigerant into the atmosphere.

AUTOMATIC AIR CONDITIONER SYSTEM

Control System Diagram

INFOID:0000000005256906

CONTROL SYSTEM

The control system consists of input sensors, switches, the A/C auto amp. (microcomputer) and outputs. The relationship of these components is shown in the figure below:

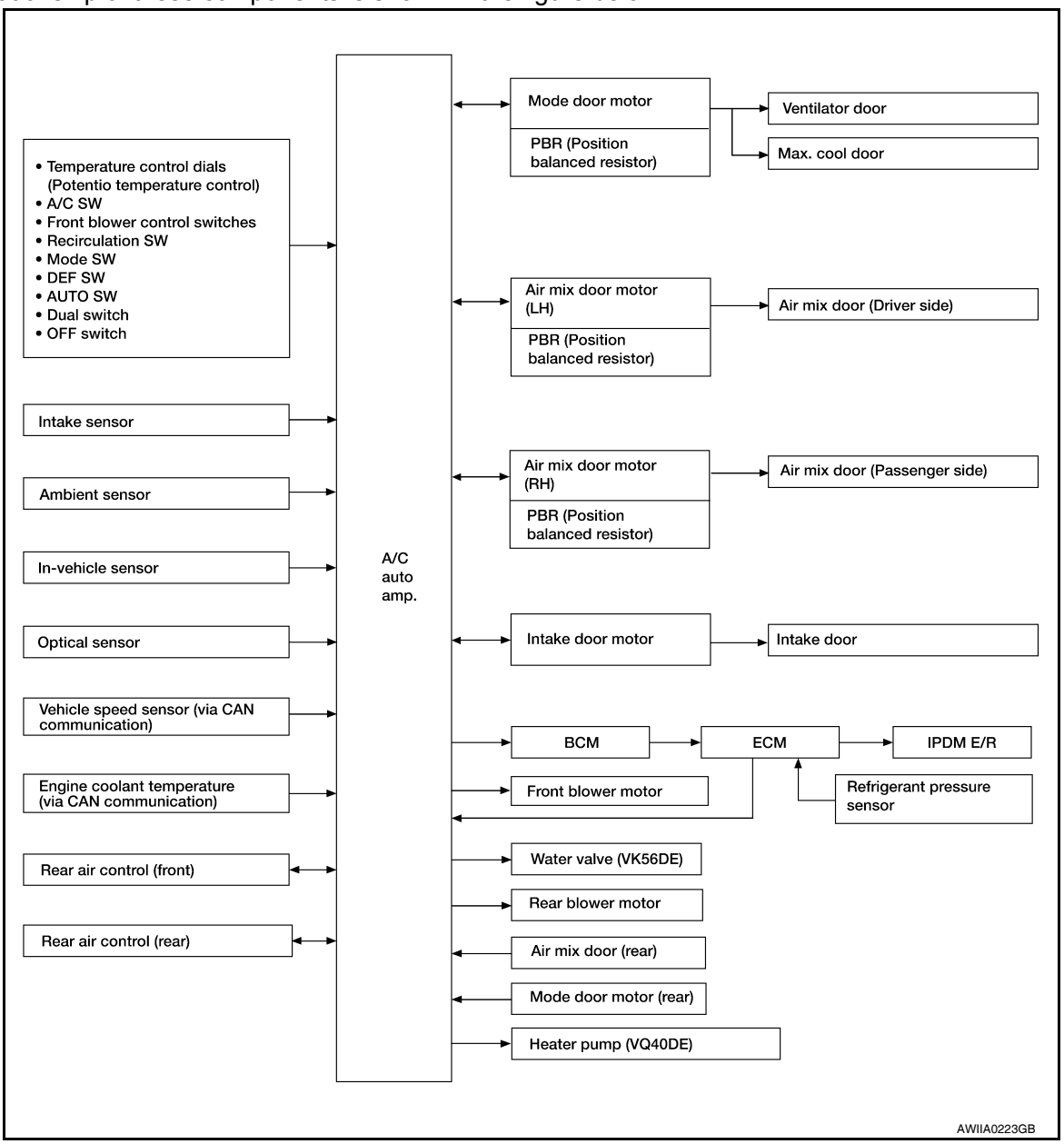

Control System Description

INFOID:0000000005256907

CONTROL OPERATION

A/C Auto Amp.

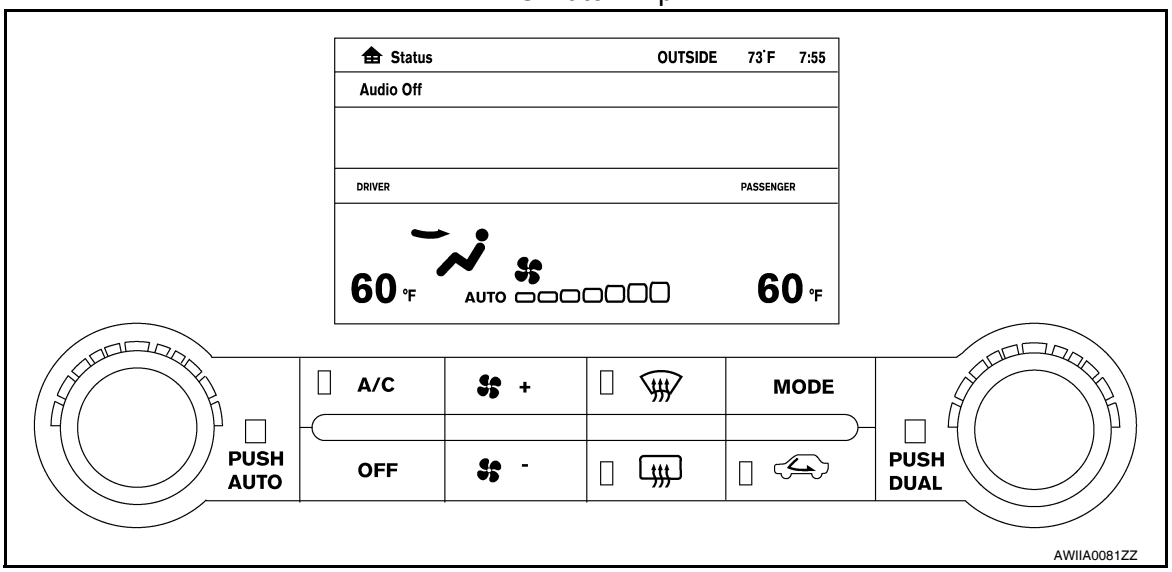

DISPLAY SCREEN

Displays the operational status of the system.

AUTO SWITCH

- Pressing the AUTO switch will illuminate the LED and "Auto" will be visible on the display. The A/C indicator will illuminate.
- The A/C compressor, intake door, air mix doors, outlet doors and blower speed are automatically controlled so that the in-vehicle temperature will reach, and be maintained at the set temperature selected by the operator.
- When pressing AUTO switch, air inlet, air outlet, blower speed, and discharge air temperature are automatically controlled.
- A partial AUTO mode can be achieved by only changing the blower speed or by changing the mode position. If both the blower speed and the mode positions are changed, the AUTO mode will be cancelled.

TEMPERATURE CONTROL DIAL (DRIVER)

Increases or decreases the set temperature.

TEMPERATURE CONTROL DIAL (PASSENGER)

Increases or decreases the set temperature.

RECIRCULATION ( ) SWITCH

- When REC switch is ON, REC switch indicator turns ON, and air inlet is set to REC.
- When REC switch is turned OFF, or when compressor is turned from ON to OFF, REC switch is automatically turned OFF. REC mode can be re-entered by pressing REC switch again.
- REC switch is not operated when DEF switch is turned ON, at the D/F position, or in floor position.

DEFROSTER ( ) SWITCH

Positions the air outlet doors to the defrost position. Also positions the intake doors to the outside air position, and turns A/C compressor ON.

REAR WINDOW DEFOGGER SWITCH

When switch is ON, rear window and door mirrors are defogged.

OFF SWITCH

The A/C compressor and blower are OFF, the intake doors are set to the outside air position, and the air outlet doors are set to the foot (75% foot and 25% defrost) position.

A/C SWITCH

The compressor is ON or OFF.
(Pressing the A/C switch when the AUTO switch is ON will turn off the A/C switch and compressor.)

MODE SWITCH

Controls the air discharge outlets.

FRONT BLOWER CONTROL SWITCHES

Manually control the blower speed.

Rear Air Controls

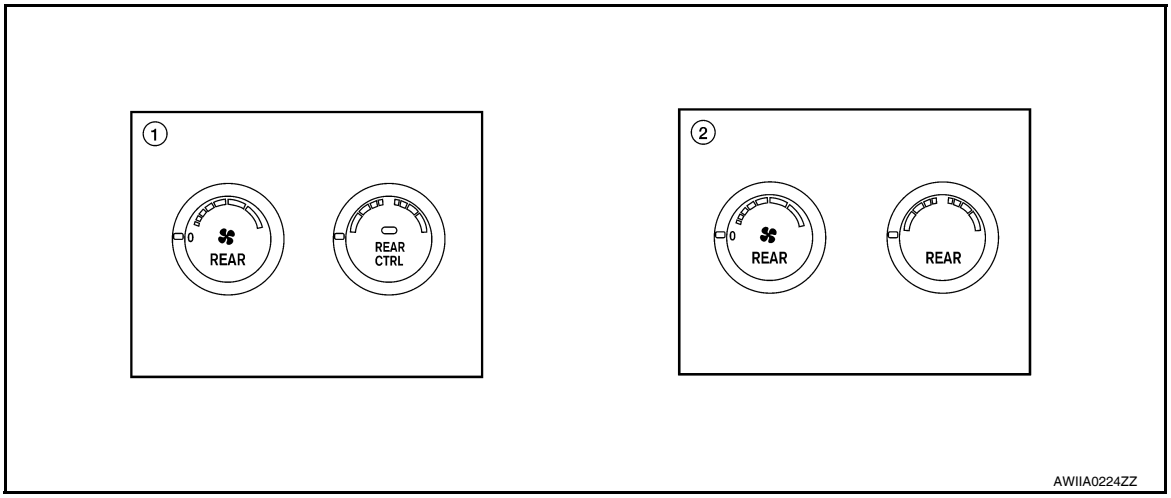

1. Rear air control (front)
2. Rear air control (rear)

TEMPERATURE CONTROL DIAL (TEMPERATURE AND MODE CONTROL)

The temperature increases or decreases the set temperature. The mode also changes from foot at full hot setting, to foot/vent at mid-range (warm) setting, and then to vent at full cold setting.

REAR BLOWER CONTROL DIAL (FRONT)

When the REAR CTRL switch is in the off (indicator off) the rear air control (front) controls the rear blower motor speed regardless of the rear air control (rear) blower control dial (rear) position. The rear air control (front) controls the blower motor speed.

REAR BLOWER CONTROL DIAL (REAR)

When the REAR CTRL switch is on (indicator on) the rear air control (rear) controls the rear blower motor speed regardless of the rear air control (front) blower control dial (front) position. The rear air control (rear) controls the blower motor speed.

MAGNET CLUTCH CONTROL

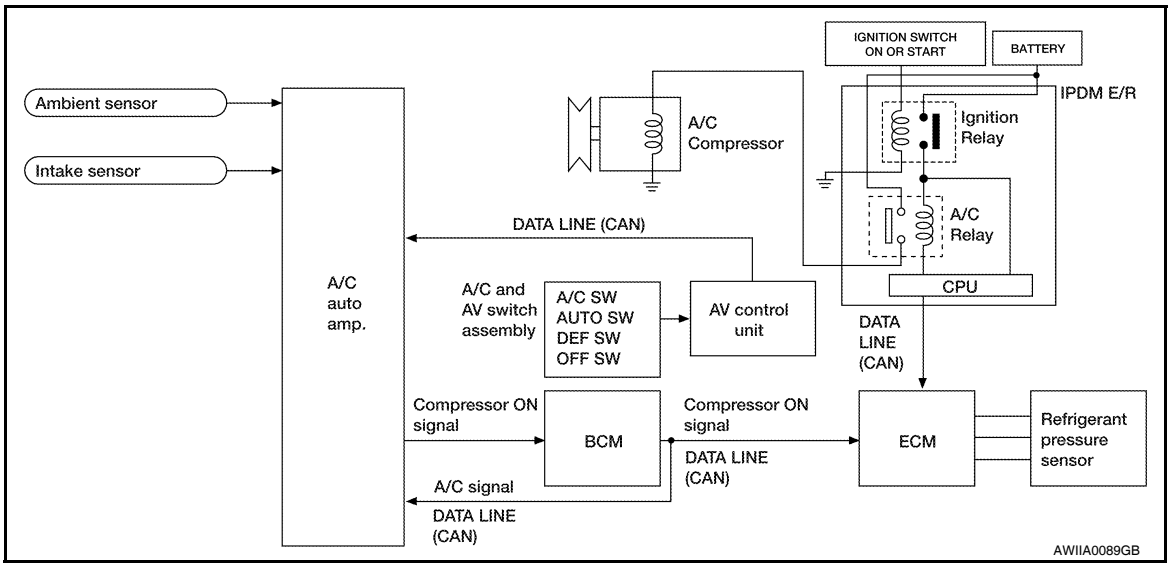

When A/C switch or DEF switch is pressed, A/C auto amp. inputs compressor ON signal to BCM.
BCM sends compressor ON signal to ECM and A/C auto amp., via CAN communication line.

ECM judges whether compressor can be turned ON, based on each sensor status (refrigerant pressure sensor signal, throttle angle sensor, etc.). If it judges compressor can be turned ON, it sends compressor ON signal to IPDM E/R, via CAN communication line.
Upon receipt of compressor ON signal from ECM, IPDM E/R turns air conditioner relay ON to operate compressor.

Discharge Air Flow (Front)

INFOID:0000000005256908

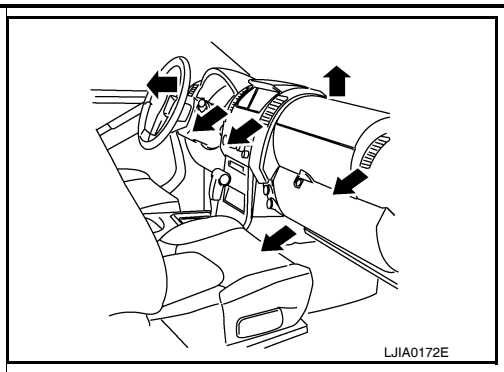

Mode door position	Air outlet/distribution		
	Vent	Foot	Defroster
	100%	0%	—
	60%	40%	—
	18%	64%	18%
	14%	53%	33%
	—	13%	87%

Switches And Their Control Function (Front)

INFOID:0000000005256909

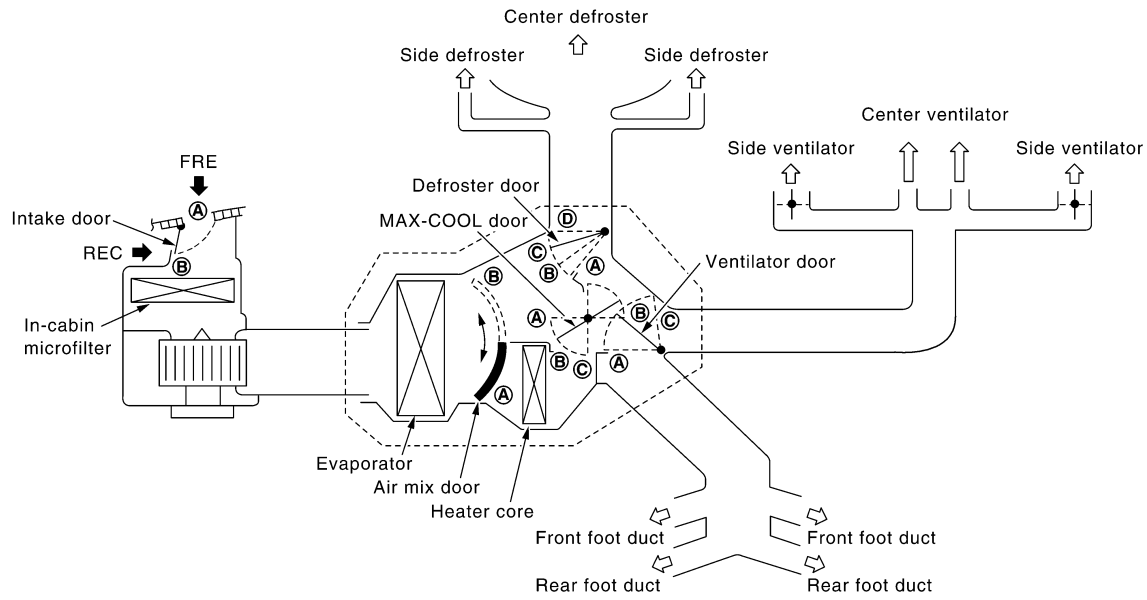

Position or switch / Door	MODE SW				DEF SW		REC SW		Temperature control dial			OFF SW
	VENT	B/L	FOOT	D/F	ON	OFF	ON	OFF				
					FRONT				PUSH DUAL			OFF
						○		○	COLD	~	HOT	
Ventilator door	Ⓐ	Ⓑ	Ⓒ	Ⓒ	Ⓒ	—	—		—			Ⓒ
MAX-COOL door	Ⓐ	Ⓑ	Ⓑ	Ⓑ	Ⓒ		—		—			Ⓑ
Defroster door	Ⓓ	Ⓓ	Ⓓ or Ⓒ	Ⓑ	Ⓐ		—		—			Ⓒ
Intake door	—				Ⓑ		Ⓐ	Ⓑ	—			Ⓑ
Air mix door	—				—		—		Ⓐ	AUTO	Ⓑ	—

AWIIA0236GB

Switches And Their Control Function (Rear)

INFOID:0000000005256910

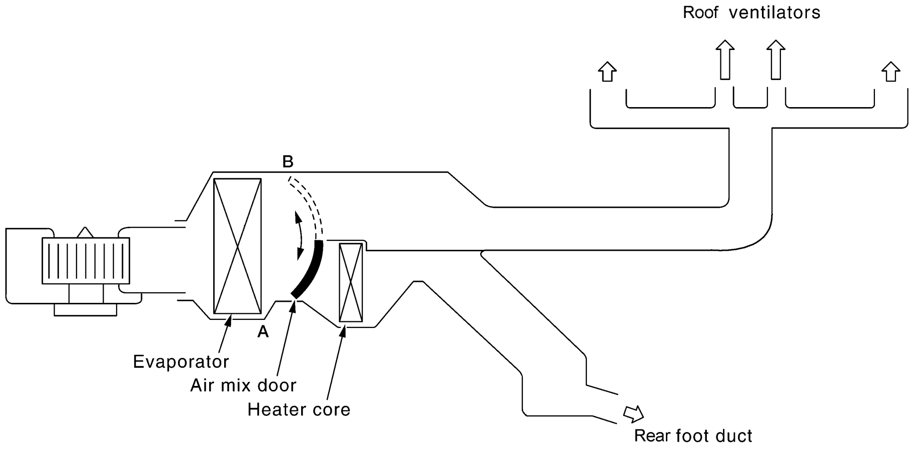

AWIIA0239GB

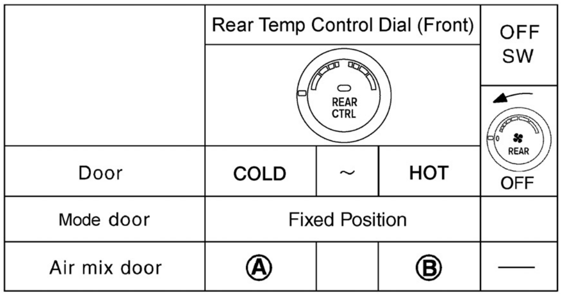

	Rear Temp Control Dial (Front)			OFF SW
Door	COLD	~	HOT	OFF
Mode door	Fixed Position			
Air mix door	Ⓐ		Ⓑ	——

AWIIA0240GB

DIAGNOSIS SYSTEM (HVAC)

CONSULT-III Function (HVAC)

INFOID:0000000005256911

CONSULT-III can display each diagnostic item using the diagnostic test modes shown following.

Diagnostic mode	Description
ECU PART NUMBER	A/C auto amp. part number can be read.
SELF-DIAG RESULTS	Displays A/C auto amp. self-diagnosis results.
DATA MONITOR	Displays A/C auto amp. input/output data in real time.

SELF-DIAGNOSIS

Display Item List

DTC	Description	Reference page
B2573	Battery voltage out of range	CHG-5, "Work Flow"
B2578	In-vehicle sensor circuit out of range (low)	HAC-78, "In-Vehicle Sensor Diagnosis Procedure"
B2579	In-vehicle sensor circuit out of range (high)	
B257B	Ambient sensor circuit short	HAC-75, "Ambient Sensor Diagnosis Procedure"
B257C	Ambient sensor circuit open	
B257F	Optical sensor (Driver) circuit open or short	HAC-81, "Optical Sensor Diagnosis Procedure".
B2580	Optical sensor (Passenger) circuit open or short	
B2581	Intake sensor circuit short	HAC-83, "Intake Sensor Diagnosis Procedure"
B2582	Intake sensor circuit open	
U1000	CAN bus fault	LAN-4, "System Description"

DATA MONITOR

Display Item List

Monitor item	Value	Contents
BATT VIA CAN	"V"	Displays battery voltage signal.
IGN VIA CAN	"ON/OFF"	Displays ignition switch signal.
DVR SUNLD SEN	"w/m2"	Displays optical sensor (driver) signal.
PAS SUNLD SEN	"w/m2"	Displays optical sensor (passenger) signal.
AMB TEMP SEN	"°C/°F"	Displays ambient sensor signal.
EVAP TEMP SEN	"°C/°F"	Displays intake sensor signal.
INCAR TMP SEN	"°C/°F"	Displays in-vehicle sensor signal.
RR TEMPSET FR	"V"	Displays air mix door (front) set point signal.
RR TEMPSET RR	"V"	Displays air mix door (rear) set point signal.
MODE FDBCK	"V"	Displays mode door motor feedback signal.
DVR MIX FDBCK	"V"	Displays air mix door motor (driver) feedback signal.
PAS MIX FDBCK	"V"	Displays air mix door motor (passenger) feedback signal.
RR FDBCK	"V"	Displays air mix door motor (rear) feedback signal.

DIAGNOSIS SYSTEM (BCM)

CONSULT-III Function (BCM - COMMON ITEM)

INFOID:0000000005476018

APPLICATION ITEM

CONSULT-III performs the following functions via CAN communication with BCM.

Diagnosis mode	Function Description
WORK SUPPORT	Changes the setting for each system function.
SELF-DIAG RESULTS	Displays the diagnosis results judged by BCM. Refer to BCS-54, "DTC Index".
CAN DIAG SUPPORT MNTR	Monitors the reception status of CAN communication viewed from BCM.
DATA MONITOR	The BCM input/output signals are displayed.
ACTIVE TEST	The signals used to activate each device are forcibly supplied from BCM.
ECU IDENTIFICATION	The BCM part number is displayed.
CONFIGURATION	• Enables to read and save the vehicle specification. • Enables to write the vehicle specification when replacing BCM.

SYSTEM APPLICATION

BCM can perform the following functions for each system.

NOTE:

It can perform the diagnosis modes except the following for all sub system selection items.

System	Sub system selection item	Diagnosis mode		
		WORK SUPPORT	DATA MONITOR	ACTIVE TEST
BCM	BCM	×		
Door lock	DOOR LOCK	×	×	×
Rear window defogger	REAR DEFOGGER		×	×
Warning chime	BUZZER		×	×
Interior room lamp timer	INT LAMP	×	×	×
Remote keyless entry system[1]	MULTI REMOTE ENT	×	×	×
Exterior lamp	HEAD LAMP	×	×	×
Wiper and washer	WIPER	×	×	×
Turn signal and hazard warning lamps	FLASHER		×	×
Air conditioner	AIR CONDITONER		×	
Intelligent Key system[2]	INTELLIGENT KEY		×	
Combination switch	COMB SW		×	
Immobilizer	IMMU		×	×
Interior room lamp battery saver	BATTERY SAVER	×	×	×
Back door open	TRUNK		×	×
RAP (retained accessory power)	RETAINED PWR	×	×	×
Signal buffer system	SIGNAL BUFFER		×	×
TPMS (tire pressure monitoring system)	AIR PRESSURE MONITOR	×	×	×
Vehicle security system	THEFT ALM	×	×	×
Panic alarm	PANIC ALARM			×

1: With remote keyless entry system

2: With Intelligent Key

CONSULT-III Function (BCM - AIR CONDITIONER)

INFOID:0000000005476019

DATA MONITOR

Monitor Item [Unit]	Contents
IGN ON SW [ON/OFF]	Display [ignition switch position (On)/(Off), ACC position (Off)] status as judged from ignition switch signal
FAN ON SIG [ON/OFF]	Display [FAN (On)/FAN (Off)] status as judged form blower fan motor switch signal
AIR COND SW [ON/OFF]	Display [COMP (On)/COMP (Off)] status as judged form air conditioner switch signal

SELF-DIAGNOSIS FUNCTION

A/C Auto Amp. Self-Diagnosis

INFOID:0000000005256914

A/C SYSTEM SELF-DIAGNOSIS FUNCTION

The self-diagnosis function is built into the A/C auto amp. to quickly locate the cause of malfunctions.

DESCRIPTION

The self-diagnostic system diagnoses sensors, CAN system, and battery voltage on A/C auto amp. Refer to applicable sections (items) for details. Fault codes (if any are present) will be displayed in the ambient temperature display area. Refer to HAC-25, "A/C System Self-Diagnosis Code Chart".

SELF-DIAGNOSTIC MODE

NOTE:
Radio must be OFF.

1. Turn the ignition switch ON.
2. On the A/C and AV switch assembly, press the "SETTING" button and twist the volume knob clockwise and counterclockwise until the Self-Diagnosis screen shows on the display.
3. Scroll down to "Confirmation/Adjustment" and press the "ENTER" button.
4. Scroll down to "Climate Control" and press the "ENTER" button.
5. The fan bars will flash on the display during the self-test, and then the fault codes will display in the ambient temperature area. They will continue scrolling until diagnostic mode is exited.
6. Exit by pressing the "BACK" button on A/C and AV switch assembly until display returns to its normal operation screen. HVAC system will be OFF or by turning the ignition switch OFF.

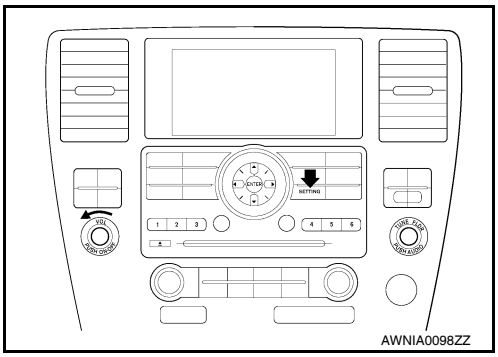

The self-diagnostic system diagnoses sensors, CAN system, and battery voltage on A/C auto amp. Refer to applicable sections (items) for details. Fault codes (if any are present) will be displayed in the ambient temperature display area. Refer to HAC-25, "A/C System Self-Diagnosis Code Chart".

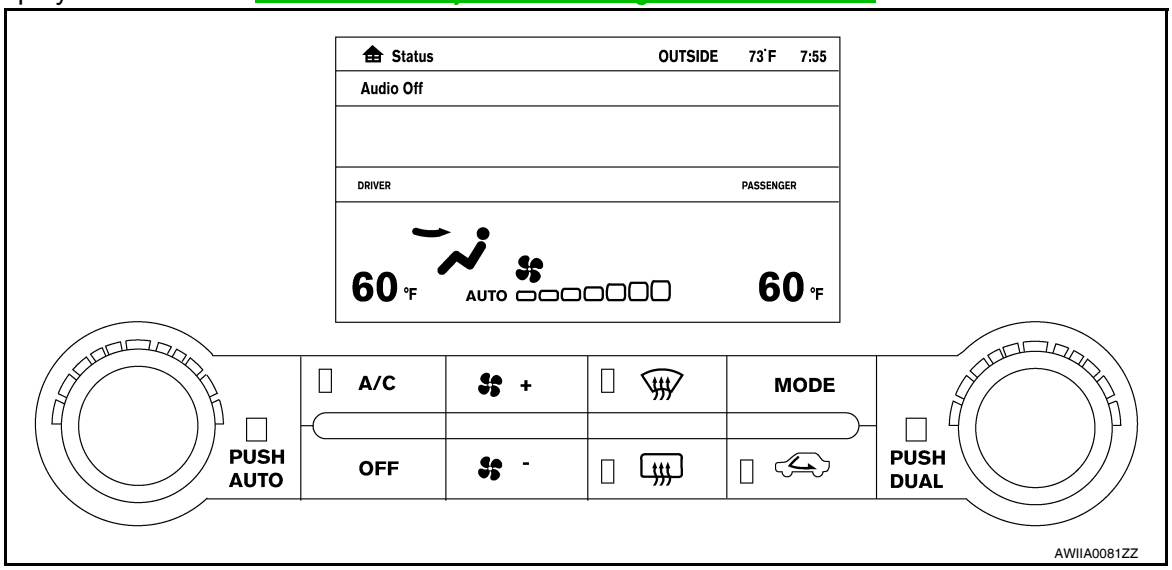

A/C and AV Switch Assembly Self-Diagnosis

INFOID:0000000005256915

A/C and AV switch assembly self-diagnosis function

The ON/OFF operation (continuity) of each switch in the A/C and AV switch assembly can be checked.

Self-diagnosis mode

- Press the “BACK” switch and the “UP” switch within 10 seconds after turning the ignition switch from OFF to ACC and hold them for 3 seconds or more. Then the buzzer sounds, all indicators of the preset switch illuminate, and the self-diagnosis mode starts.
- The continuity of each switch and control dials (A/C and AV switch assembly only) at the ON position can be checked by pressing each switch and turning each control dial. The buzzer sounds and LED's will illuminate if the switch is normal.

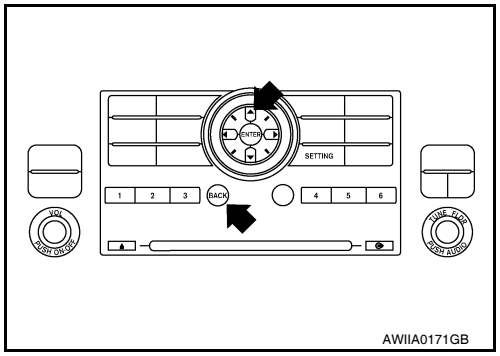

Finishing self-diagnosis mode

Self-diagnosis mode is canceled when turning the ignition switch OFF.

A/C System Self-Diagnosis Code Chart

INFOID:0000000005256916

SELF-DIAGNOSTIC CODE CHART

Code No.	Reference page	
02	EE changed by calibration	VTL-7, "Removal and Installation"
03	Battery voltage out of range	CHG-9, "Inspection Procedure"
12	Passenger air mix door open/short/out of limits	HAC-36, "Air Mix Door Motor (Passenger) Diagnosis Procedure"
22	Driver air mix door open/short	HAC-33, "Air Mix Door Motor (Driver) Diagnosis Procedure"
30	In-vehicle sensor circuit out of range (low)	HAC-78, "In-Vehicle Sensor Diagnosis Procedure"
31	In-vehicle sensor circuit out of range (high)	
38	Air mix door motor (rear) circuit failure	HAC-59, "Rear Air Control Component Function Check"
40	Ambient sensor circuit short	HAC-75, "Ambient Sensor Diagnosis Procedure"
41	Ambient sensor circuit open	
44	Intake door motor open	HAC-41, "Intake Door Motor Diagnosis Procedure"
46	Intake door motor short	
50	Optical sensor (Driver) circuit open or short	HAC-81, "Optical Sensor Diagnosis Procedure"
52	Optical sensor (Passenger) circuit open or short	
56	Intake sensor circuit short	HAC-157, "Intake Sensor Diagnosis Procedure"
57	Intake sensor circuit open	
80	CAN bus fault	LAN-14, "Trouble Diagnosis Flow Chart"
81	BCM message missing	
82	Intake door motor circuit malfunction	HAC-41, "Intake Door Motor Diagnosis Procedure"
90	Stuck button	VTL-7, "Removal and Installation"
92	Mode door motor circuit malfunction	HAC-27, "Mode Door Motor (Front) Component Function Check"

COMPONENT DIAGNOSIS

MODE DOOR MOTOR

System Description

INFOID:0000000005256917

SYSTEM DESCRIPTION

Component Parts

Mode door control system components are:
- A/C auto amp.
- A/C and AV switch assembly
- Mode door motor (front)
- PBR (built into mode door motor)
- In-vehicle sensor
- Ambient sensor
- Optical sensor
- Intake sensor

System Operation
The mode door position (vent, B/L, foot, D/F, and defrost) is set by the A/C auto amp. by means of the mode door motor (front). When a mode door position is selected on the A/C auto amp., voltage is applied to one circuit of the mode door motor (front) while ground is applied to the other circuit, causing the mode door motor (front) to rotate. The direction of rotation is determined by which circuit has voltage applied to it, and which one has ground applied to it. The A/C auto amp. monitors the mode door position by measuring the voltage signal on the PBR circuit.
In AUTO mode the mode door position is set by the A/C auto amp. which determines the proper position based on inputs from the in-vehicle sensor, ambient sensor, optical sensor, intake sensor, and the temperature selected by the driver or passenger.

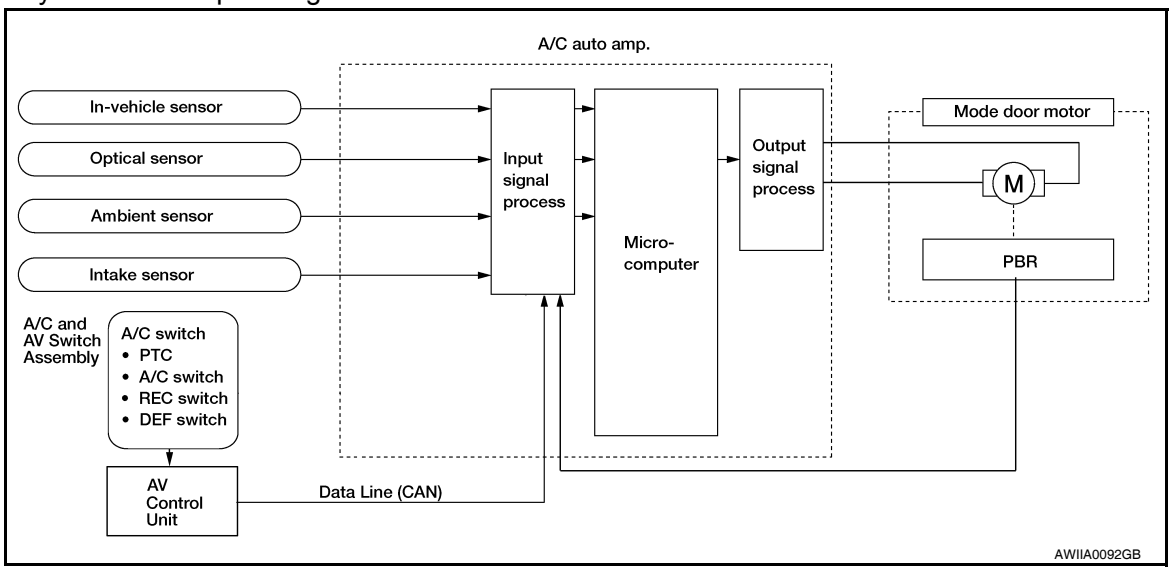

Mode Door Control Specification

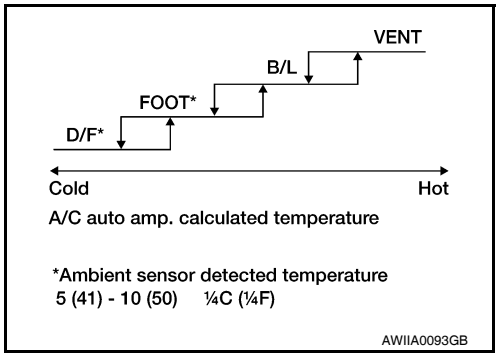

COMPONENT DESCRIPTION

Mode Door Motor (Front)

The mode door motor (front) is attached to the heater & cooling unit assembly. It rotates so that air is discharged from the outlet as indicated by the A/C auto amp. Motor rotation is conveyed to a link which activates the mode door.

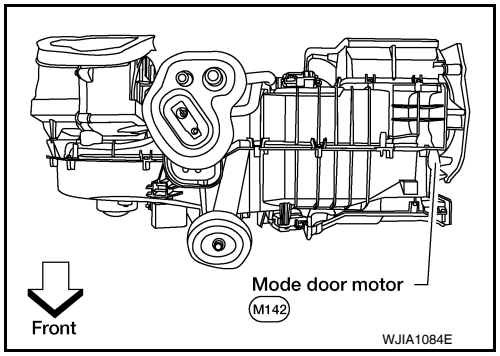

Mode Door Motor (Front) Component Function Check

INFOID:0000000005256918

INSPECTION FLOW

1. CONFIRM SYMPTOM BY PERFORMING OPERATIONAL CHECK - DISCHARGE AIR

1. Press mode switch four times and then press the (DEF) switch. Each position indicator should change shape (on display).
2. Confirm that discharge air comes out according to the air distribution table. Refer to HAC-132, "Discharge Air Flow".
   NOTE:
   Confirm that the compressor clutch is engaged (visual inspection) and intake door position is at FRESH when FOOT ( ), DEF ( ) or D/F ( ) is selected.

Can a symptom be duplicated?

YES >> Inspection End.
NO >> Go to diagnosis procedure. Refer to HAC-27, "Mode Door Motor (Front) Diagnosis Procedure".

Mode Door Motor (Front) Diagnosis Procedure

INFOID:0000000005256919

Regarding Wiring Diagram information, refer to HAC-90, "Wiring Diagram".

SYMPTOM:
- Air outlet does not change.
- Mode door motor does not operate normally.

1. CHECK A/C AUTO AMP. FOR POWER AND GROUND

1. Turn ignition switch ON.
2. Press the mode switch to the B/L ( ) mode.
3. Check voltage between A/C auto amp. harness connector M49 terminal 19 and terminal 20 while pressing the mode switch to the floor ( ) mode.

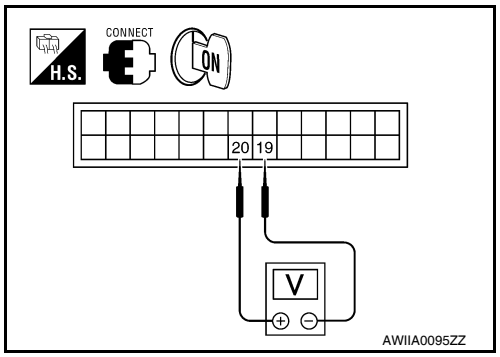

Connector	Terminals		Condition	Voltage (Approx.)
	(+)	(-)		
A/C auto amp.: M49	20	19	Press mode switch	Battery voltage

Is the inspection result normal?

YES >> GO TO 3.
NO >> GO TO 2.

2. CHECK MODE DOOR MOTOR CIRCUITS FOR SHORT TO GROUND

1. Turn ignition switch OFF.
2. Disconnect the A/C auto amp. harness connector.
3. Check continuity between A/C auto amp. harness connector M49 terminal 19, 20 and ground.

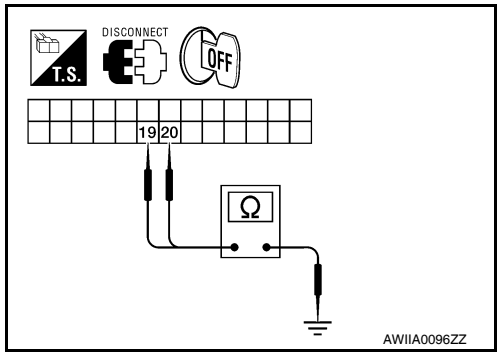

19 - Ground : Continuity should not exist.
20 - Ground : Continuity should not exist.

Is the inspection result normal?

YES >> Replace A/C auto amp. Refer to VTL-7, "Removal and Installation".
NO >> Repair or replace harness as necessary.

3. CHECK A/C AUTO AMP. FOR GROUND AND POWER

1. Press the mode switch to the D/F ( ) mode.
2. Check voltage between A/C auto amp. harness connector M49 terminal 19 and terminal 20 while pressing the mode switch to the vent ( ) mode.

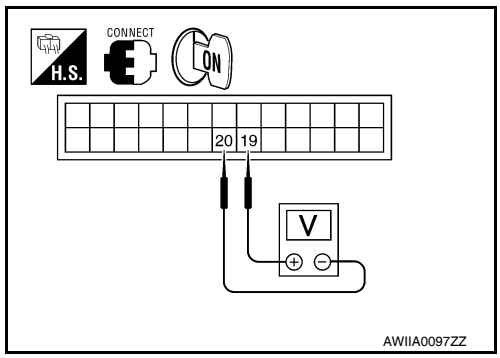

Connector	Terminals		Condition	Voltage (Approx.)
	(+)	(-)		
A/C auto amp.: M49	19	20	Press mode switch	Battery voltage

Is the inspection result normal?

YES >> GO TO 4.
NO >> Replace A/C auto amp. Refer to VTL-7, "Removal and Installation".

4. CHECK MODE DOOR MOTOR AND CIRCUITS FOR OPEN

1. Turn ignition switch OFF.
2. Disconnect the A/C auto amp. harness connector.
3. Check continuity between A/C auto amp. harness connector M49 terminal 19 and terminal 20.

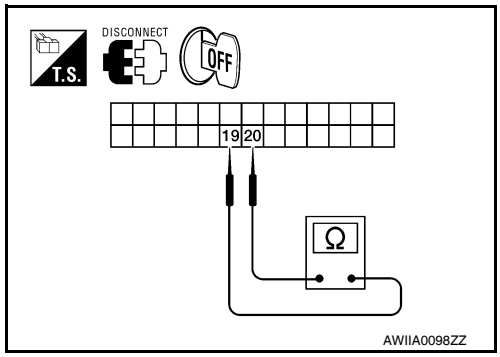

Continuity should exist.

Is the inspection result normal?

YES >> GO TO 6.
NO >> GO TO 5.

5. CHECK MODE DOOR MOTOR CIRCUITS FOR OPEN

1. Disconnect the mode door motor harness connector.
2. Check continuity between A/C auto amp. harness connector M49 (A) terminal 19, 20 and the mode door motor harness connector M142 (B) terminal 1, 6.

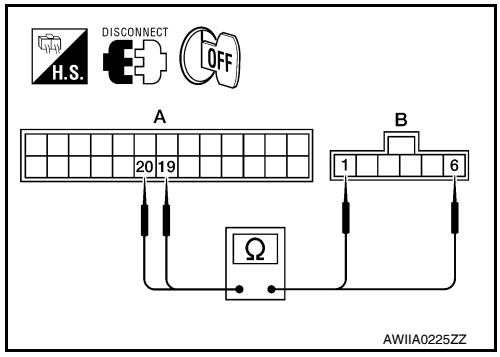

6 - 19 : Continuity should exist.
1 - 20 : Continuity should exist.

Is the inspection result normal?

YES >> Replace mode door motor. Refer to VTL-28, "Removal and Installation".
NO >> Repair or replace harness as necessary.

6. CHECK A/C AUTO AMP. FOR PBR POWER AND GROUND

1. Reconnect A/C auto amp. harness connector.
2. Turn ignition switch ON.
3. Check voltage between A/C auto amp. harness connector M50 (A) terminal 28 and M49 (B) terminal 3.

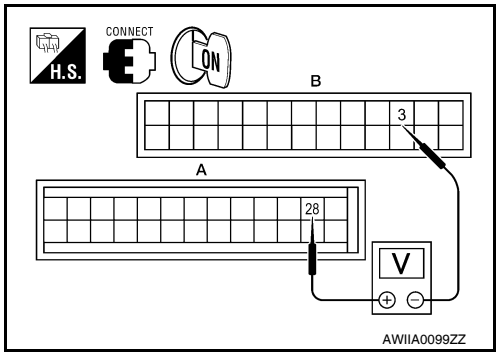

Connector	Terminals		Voltage (Approx.)
	(+)	(-)	
A/C auto amp.: M49, M50	28	3	5V

Is the inspection result normal?

YES >> GO TO 8.
NO >> GO TO 7.

7. CHECK PBR REFERENCE VOLTAGE CIRCUIT FOR SHORT TO GROUND

1. Turn ignition switch OFF.
2. Disconnect the A/C auto amp. harness connector.
3. Check continuity between A/C auto amp. harness connector M50 terminal 28 and ground.

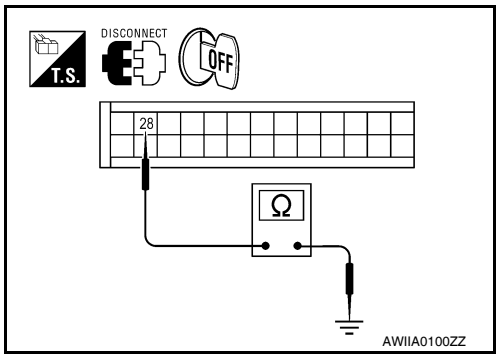

Continuity should not exist.

Is the inspection result normal?

YES >> Replace A/C auto amp. Refer to VTL-7, "Removal and Installation".
NO >> Repair or replace harness as necessary.

8. CHECK PBR REFERENCE VOLTAGE AND GROUND CIRCUITS

1. Turn ignition switch OFF.
2. Disconnect the A/C auto amp. harness connector.
3. Check continuity between A/C auto amp. harness connector M50 (A) terminal 28 and M49 (B) terminal 3.

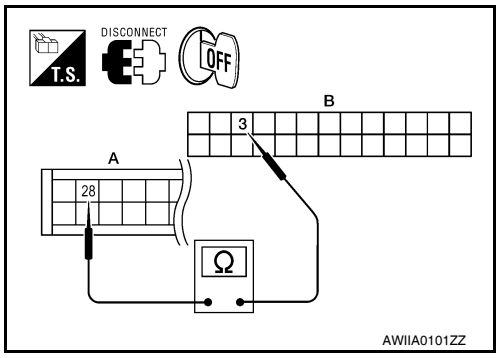

Continuity should exist.

Is the inspection result normal?

YES >> GO TO 10.
NO >> GO TO 9

9. CHECK PBR REFERENCE VOLTAGE CIRCUIT FOR OPEN

1. Disconnect the mode door motor harness connector.
2. Check continuity between mode door motor harness connector M142 (B) terminal 3, 1 and A/C auto amp. harness connector M49 (C) terminal 3, M50 (A) terminal 28.

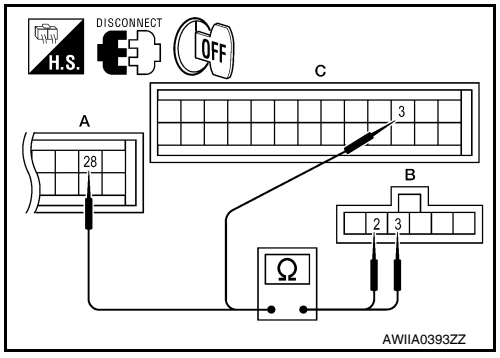

28 - 3 : Continuity should exist.
3 - 2 : Continuity should exist.

Is the inspection result normal?

YES >> Replace mode door motor. Refer to VTL-28, "Removal and Installation".
NO >> Repair or replace harness as necessary.

10. CHECK PBR FEEDBACK VOLTAGE

1. Reconnect the A/C auto amp. harness connector.
2. Turn ignition switch ON.
3. Check voltage between A/C auto amp. harness connector M49 terminal 7 and ground while cycling mode switch through all modes.

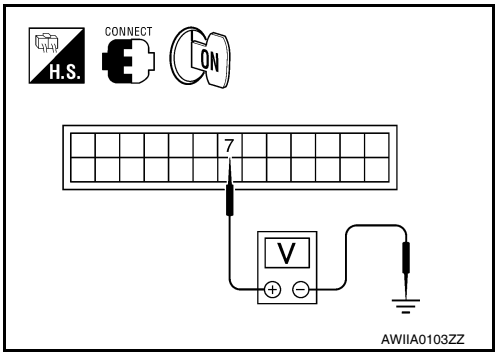

Voltage : Approx. 1V - 4.5V

Is the inspection result normal?

YES >> GO TO 12.
NO >> GO TO 11.

11. CHECK PBR FEEDBACK SIGNAL CIRCUIT FOR SHORT TO GROUND

1. Turn ignition switch OFF.
2. Disconnect A/C auto amp. harness connector.
3. Check continuity between A/C auto amp. harness connector M49 terminal 7 and ground.

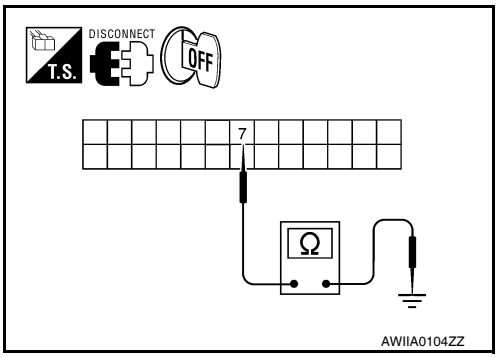

Continuity should not exist.

Is the inspection result normal?

YES >> Replace A/C auto amp. Refer to VTL-7, "Removal and Installation".
NO >> Repair or replace harness as necessary.

12. CHECK PBR FEEDBACK CIRCUIT FOR OPEN

1. Turn ignition switch OFF.
2. Disconnect the mode door motor harness connector and A/C auto amp. harness connector.
3. Check continuity between mode door motor harness connector M142 (B) terminal 4 and A/C auto amp. harness connector M49 (A) terminal 7.

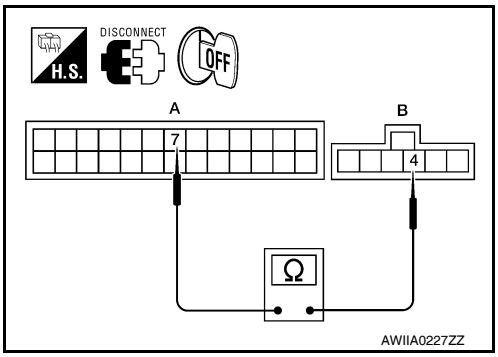

Continuity should exist.

Is the inspection result normal?

YES >> Replace mode door motor. Refer to VTL-28, "Removal and Installation".
NO >> Repair or replace harness as necessary.

AIR MIX DOOR MOTOR

System Description

INFOID:0000000005256920

SYSTEM DESCRIPTION

SYMPTOM:
- Discharge air temperature does not change.
- Air mix door motor does not operate.

SYSTEM DESCRIPTION

Component Parts

Air mix door control system components are:
- A/C auto amp.
- A/C and AV switch assembly
- Air mix door motors (driver, passenger, and rear)
- PBR (built-into air mix door motors)
- In-vehicle sensor
- Ambient sensor
- Optical sensor
- Intake sensor

System Operation

The A/C auto amp. receives data from the temperature selected by the driver side, passenger side, and rear. The A/C auto amp. then applies a voltage to one circuit of the appropriate air mix door motor, while ground is applied to the other circuit, causing the appropriate air mix door motor to rotate. The direction of rotation is determined by which circuit has voltage applied to it, and which one has ground applied to it. The A/C auto amp. monitors the air mix door positions by measuring the voltage signal on the PBR circuits of each door.
In AUTO mode the air mix, intake, mode door, and defrost door positions are set by the A/C auto amp. which determines the proper position based on inputs from the in-vehicle sensor, ambient sensor, optical sensor, intake sensor, and the temperature selected by the driver and front and rear passengers.
Subsequently, HOT/COLD or DEFROST/VENT or FRESH/RECIRCULATION operation is selected. The new door position data is returned to the A/C auto amp.

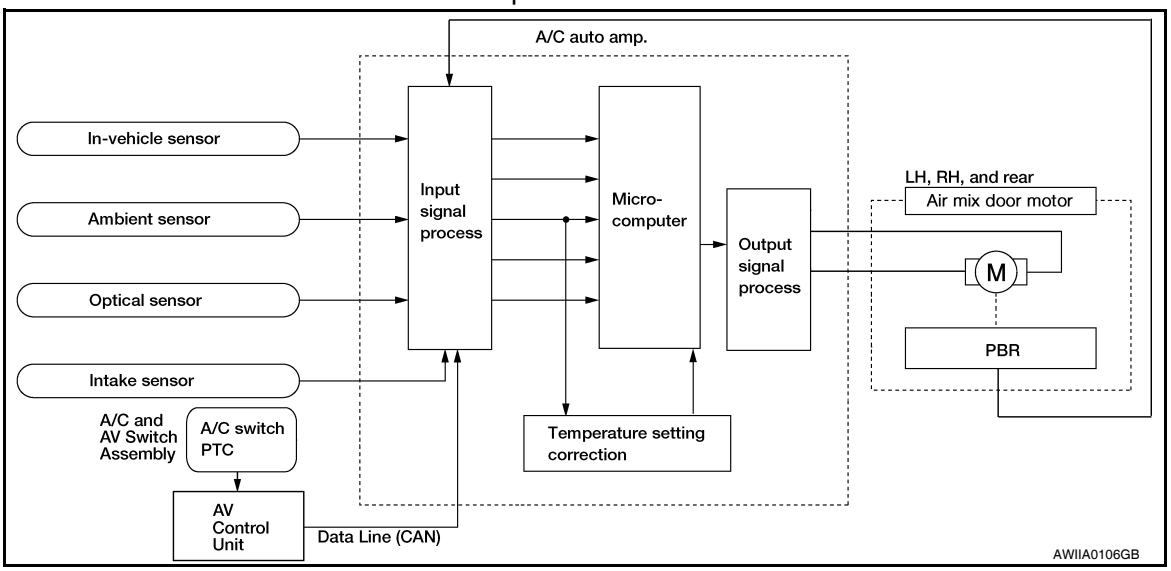

Air Mix Door Control Specification

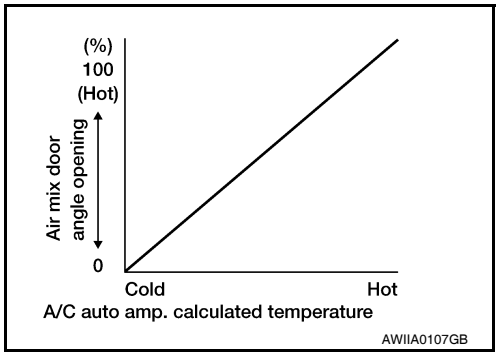

COMPONENT DESCRIPTION

Air Mix Door Motors (front)

The driver (2) and passenger (1) air mix door motors are attached to the front heater & cooling unit assembly. These motors rotate so that the air mix door is opened or closed to a position set by the A/C auto amp. Motor rotation is then conveyed through a shaft and the air mix door position is then fed back to the A/C auto amp. by the PBR built into the air mix door motors.

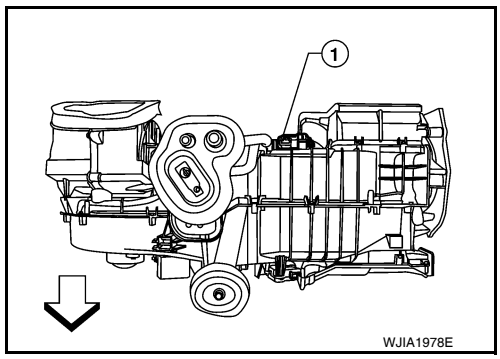

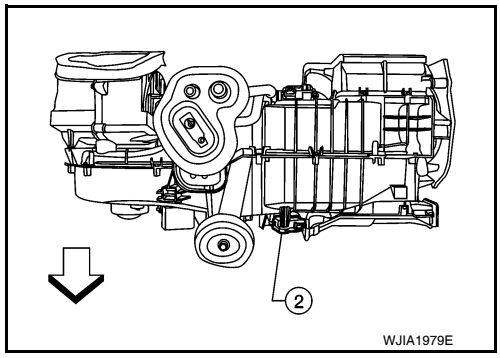

Air Mix Door Motor (rear)

The air mix door motor (rear) (1) is attached to the rear heater & cooling unit assembly. These motors rotate so that the air mix door is opened or closed to a position set by the front (or rear) air control. Motor rotation is then conveyed through a shaft and the air mix door position is then fed back to the A/C auto amp. by the PBR built into the air mix door motors.

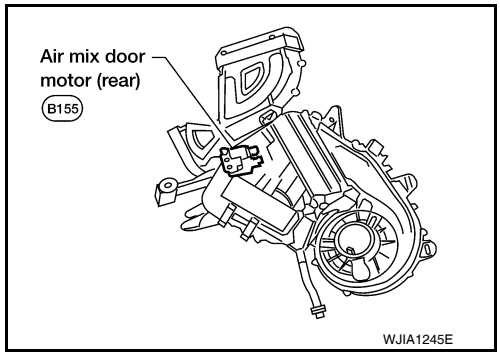

Air Mix Door Motor (Driver) Component Function Check

INFOID:0000000005256921

INSPECTION FLOW

1. CONFIRM SYMPTOM BY PERFORMING OPERATIONAL CHECK - TEMPERATURE INCREASE

1. Turn the temperature control dial (driver) clockwise until 32°C (90°F) is displayed.
2. Check for hot air at discharge air outlets.

>> GO TO 2.

2. CONFIRM SYMPTOM BY PERFORMING OPERATIONAL CHECK - TEMPERATURE DECREASE

1. Turn the temperature control dial (driver) counterclockwise until 18°C (60°F) is displayed.
2. Check for cold air at discharge air outlets.

Can a symptom be duplicated?

YES >> Inspection End.
NO >> Go to diagnosis procedure. Refer to HAC-41, "Intake Door Motor Diagnosis Procedure".

Air Mix Door Motor (Driver) Diagnosis Procedure

INFOID:0000000005256922

Regarding Wiring Diagram information, refer to HAC-90, "Wiring Diagram".

SYMPTOM:
- Discharge air temperature does not change.
- Air mix door motor does not operate.

DIAGNOSTIC PROCEDURE FOR AIR MIX DOOR MOTOR (DRIVER)

1. CHECK A/C AUTO AMP. FOR POWER AND GROUND

1. Turn ignition switch ON.
2. Rotate temperature control dial (driver) to 32°C (90°F).
3. Check voltage between A/C auto amp. harness connector M49 terminal 17 and terminal 18 while rotating temperature control dial (driver) to 18°C (60°F).

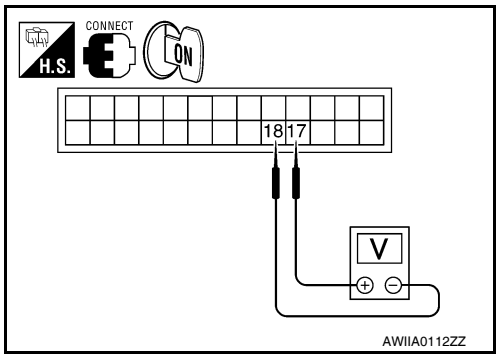

Connector	Terminals		Condition	Voltage (Approx.)
	(+)	(-)		
A/C auto amp.: M49	17	18	Rotate temp control dial	Battery voltage

Is the inspection result normal?

YES >> GO TO 3.
NO >> GO TO 2.

2. CHECK AIR MIX DOOR MOTOR (DRIVER) CIRCUITS FOR SHORT TO GROUND

1. Turn ignition switch OFF.
2. Disconnect the A/C auto amp. harness connector.
3. Check continuity between A/C auto amp. harness connector M49 terminal 17, 18 and ground.

17 - Ground : Continuity should not exist.
18 - Ground : Continuity should not exist.

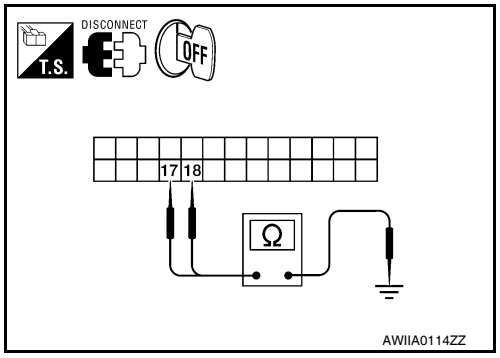

Is the inspection result normal?

YES >> Replace A/C auto amp. Refer to VTL-7, "Removal and Installation".
NO >> Repair or replace harness as necessary.

3. CHECK A/C AUTO AMP. FOR POWER AND GROUND

1. Turn ignition switch ON.
2. Rotate temperature control dial (driver) to 32°C (90°F).
3. Check voltage between A/C auto amp. harness connector M49 terminal 17 and terminal 18 while rotating temperature control dial (driver) to 18°C (60°F).

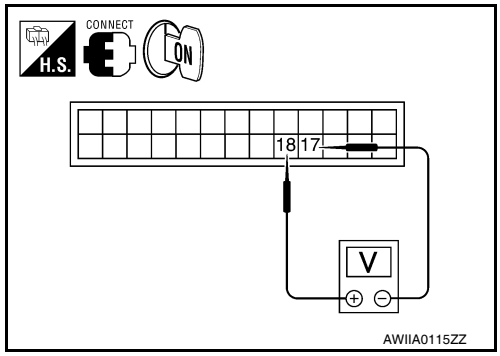

Connector	Terminals		Condition	Voltage (Approx.)
	(+)	(-)		
A/C auto amp.: M49	18	17	Rotate temp control dial	Battery voltage

Is the inspection result normal?

YES >> GO TO 4.
NO >> Replace A/C auto amp. Refer to VTL-7, "Removal and Installation".

4. CHECK AIR MIX DOOR MOTOR (DRIVER) CIRCUITS FOR OPEN

1. Turn ignition switch OFF.
2. Disconnect the A/C auto amp. harness connector.
3. Check continuity between A/C auto amp. harness connector M49 terminal 17 and terminal 18.

Continuity should exist.

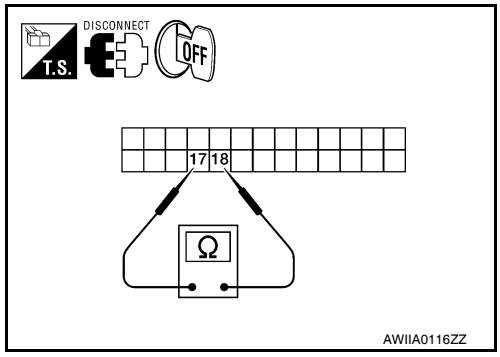

Is the inspection result normal?

YES >> GO TO 6.
NO >> GO TO 5.

5. CHECK AIR MIX DOOR MOTOR (DRIVER) CIRCUITS FOR OPEN

1. Disconnect the air mix door motor (driver) harness connector.
2. Check continuity between A/C auto amp. harness connector M49 (A) terminal 17, 18 and the air mix door motor (driver) harness connector M147 (B) terminal 5, 6.

17 - 6 : Continuity should exist.
18 - 5 : Continuity should exist.

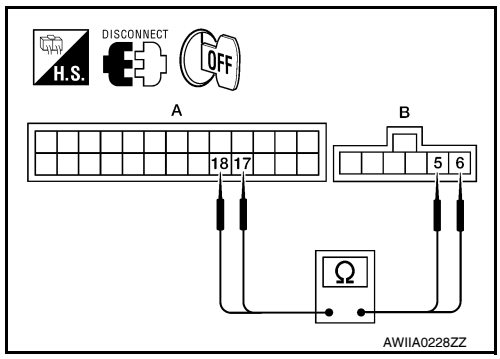

Is the inspection result normal?

YES >> Replace air mix door motor (driver). Refer to VTL-30, "Removal and Installation".
NO >> Repair or replace harness as necessary.

6. CHECK A/C AUTO AMP. FOR PBR POWER AND GROUND

1. Reconnect A/C auto amp. harness connector.
2. Turn ignition switch ON.
3. Check voltage between A/C auto amp. harness connector M50 (A) terminal 28 and M49 (B) terminal 3.

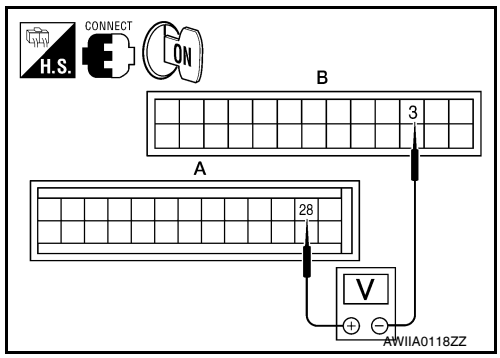

Connector	Terminals		Voltage (Approx.)
	(+)	(-)	
A/C auto amp.: M50, M49	28	3	5V

Is the inspection result normal?

YES >> GO TO 8.
NO >> GO TO 7.

7. CHECK PBR REFERENCE VOLTAGE CIRCUIT FOR SHORT TO GROUND

1. Turn ignition switch OFF.
2. Disconnect the A/C auto amp. harness connector.
3. Check continuity between A/C auto amp. harness connector M50 terminal 28 and ground.

Continuity should not exist.

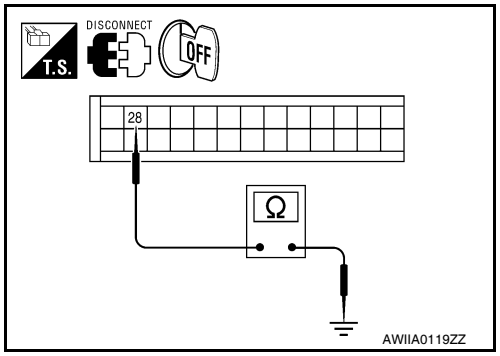

Is the inspection result normal?

YES >> Replace A/C auto amp. Refer to VTL-7, "Removal and Installation".
NO >> Repair or replace harness as necessary.

8. CHECK PBR REFERENCE VOLTAGE AND GROUND CIRCUITS

1. Turn ignition switch OFF.
2. Disconnect the A/C auto amp. harness connector.
3. Check continuity between A/C auto amp. harness connector M50 (A) terminal 28 and M49 (B) terminal 3.

Continuity should exist.

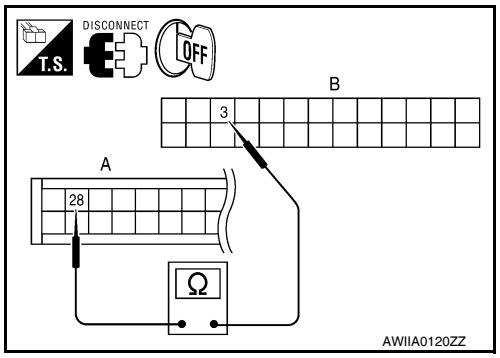

Is the inspection result normal?

YES >> GO TO 10.
NO >> GO TO 9.

9. CHECK PBR REFERENCE VOLTAGE CIRCUIT FOR OPEN

1. Disconnect the air mix door motor (driver) harness connector.
2. Check continuity between air mix door motor (driver) harness connector M147 (B) terminal 3, 1 and A/C auto amp. harness connector M49 (C) terminal 3 and M50 (A) terminal 28.

28 - 1 : Continuity should exist.
3 - 3 : Continuity should exist.

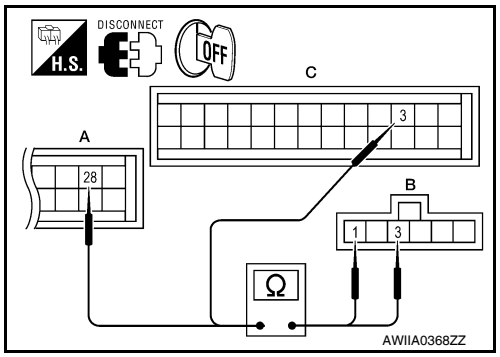

Is the inspection result normal?

YES >> Replace air mix door motor (driver). Refer to VTL-30, "Removal and Installation".
NO >> Repair or replace harness as necessary.

10. CHECK PBR FEEDBACK VOLTAGE

1. Reconnect the A/C auto amp. harness connector.
2. Turn ignition switch ON.
3. Check voltage between A/C auto amp. harness connector M49 terminal 6 and ground while rotating temperature control dial from 32°C (90°F) to 18°C (60°F).

Voltage : Approx. .5V - 4.5V

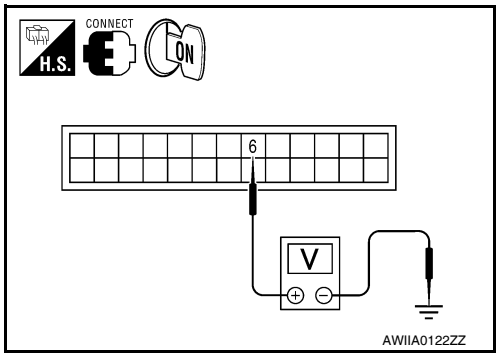

Is the inspection result normal?

YES >> GO TO 12.
NO >> GO TO 11.

11. CHECK PBR FEEDBACK SIGNAL CIRCUIT FOR SHORT TO GROUND

1. Turn ignition switch OFF.
2. Disconnect A/C auto amp. harness connector.
3. Check continuity between A/C auto amp. harness connector M49 terminal 6 and ground.

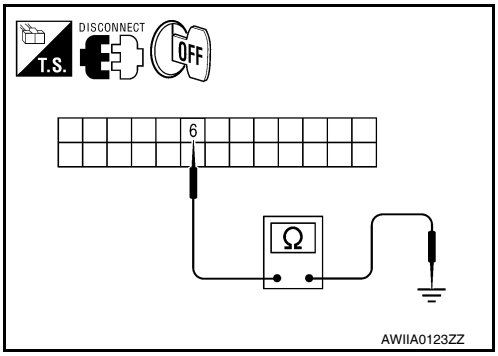

Continuity should not exist.

Is the inspection result normal?

YES >> Replace A/C auto amp. Refer to VTL-7, "Removal and Installation".
NO >> Repair or replace harness as necessary.

12. CHECK PBR FEEDBACK CIRCUIT FOR OPEN

1. Turn ignition switch OFF.
2. Disconnect the air mix door motor (driver) harness connector and A/C auto amp. harness connector.
3. Check continuity between air mix door motor (driver) harness connector M147 (B) terminal 2 and A/C auto amp. harness connector M49 (A) terminal 6.

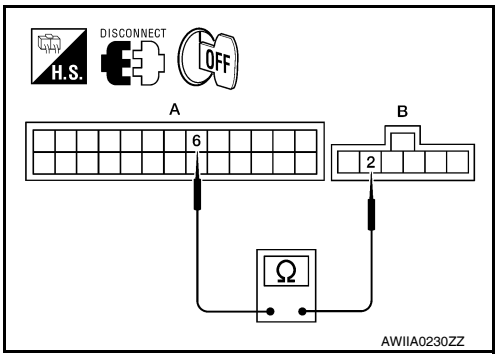

Continuity should exist.

Is the inspection result normal?

YES >> Replace air mix door motor (driver). Refer to VTL-30, "Removal and Installation".
NO >> Repair or replace harness as necessary.

Air Mix Door Motor (Passenger) Component Function Check

INFOID:0000000005476024

INSPECTION FLOW

1. CONFIRM SYMPTOM BY PERFORMING OPERATIONAL CHECK - TEMPERATURE INCREASE

1. Turn the temperature control dial (driver) clockwise until 32°C (90°F) is displayed.
2. Check for hot air at discharge air outlets.

>> GO TO 2.

2. CONFIRM SYMPTOM BY PERFORMING OPERATIONAL CHECK - TEMPERATURE DECREASE

1. Turn the temperature control dial (driver) counterclockwise until 18°C (60°F) is displayed.
2. Check for cold air at discharge air outlets.

Can a symptom be duplicated?

YES >> Inspection End.
NO >> Go to diagnosis procedure. Refer to HAC-41, "Intake Door Motor Diagnosis Procedure".

Air Mix Door Motor (Passenger) Diagnosis Procedure

INFOID:0000000005256923

Regarding Wiring Diagram information, refer to HAC-90, "Wiring Diagram".

SYMPTOM:
- Discharge air temperature does not change.
- Air mix door motor does not operate.

DIAGNOSTIC PROCEDURE FOR AIR MIX DOOR MOTOR (PASSENGER)

1. CHECK A/C AUTO AMP. FOR POWER AND GROUND

1. Turn ignition switch ON.
2. Rotate temperature control dial (passenger) to 32°C (90°F).
3. Check voltage between A/C auto amp. harness connector M49 terminal 14 and terminal 2 while rotating temperature control dial (passenger) to 18°C (60°F).

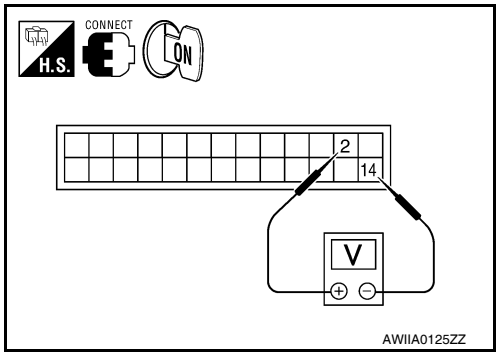

Connector	Terminals		Condition	Voltage (Approx.)
	(+)	(-)		
A/C auto amp.: M49	2	14	Rotate temp control dial	Battery voltage

Is the inspection result normal?

OK >> GO TO 3.
NG >> GO TO 2.

2. CHECK AIR MIX DOOR MOTOR (PASSENGER) CIRCUITS FOR SHORT TO GROUND

1. Turn ignition switch OFF.
2. Disconnect the A/C auto amp. harness connector.
3. Check continuity between A/C auto amp. harness connector M49 terminal 14, 2 and ground.

14 - Ground : Continuity should not exist.
2 - Ground : Continuity should not exist.

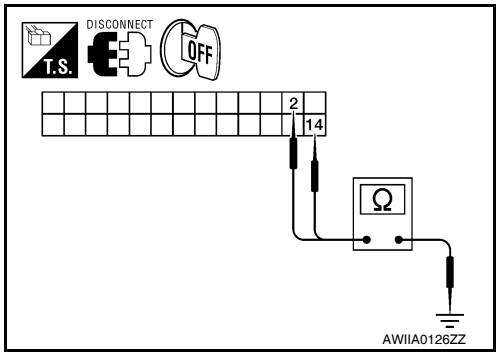

Is the inspection result normal?

YES >> Replace A/C auto amp. Refer to VTL-7, "Removal and Installation".
NO >> Repair or replace harness as necessary.

3. CHECK A/C AUTO AMP. FOR POWER AND GROUND

1. Turn ignition switch ON.
2. Rotate temperature control dial (passenger) to 18°C (60°F).
3. Check voltage between A/C auto amp. harness connector M49 terminal 14 and terminal 2 while rotating temperature control dial (passenger) to 32°C (90°F).

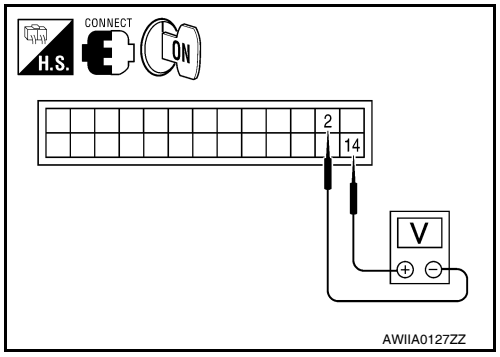

Connector	Terminals		Condition	Voltage (Approx.)
	(+)	(-)		
A/C auto amp.: M49	14	2	Rotate temp control dial	Battery voltage

Is the inspection result normal?

YES >> GO TO 4.
NO >> Replace A/C auto amp. Refer to VTL-7, "Removal and Installation".

4. CHECK AIR MIX DOOR MOTOR (PASSENGER) CIRCUITS FOR OPEN

1. Turn ignition switch OFF.
2. Disconnect the A/C auto amp. harness connector.
3. Check continuity between A/C auto amp. harness connector M50 terminal 14 and terminal 2.

Continuity should exist.

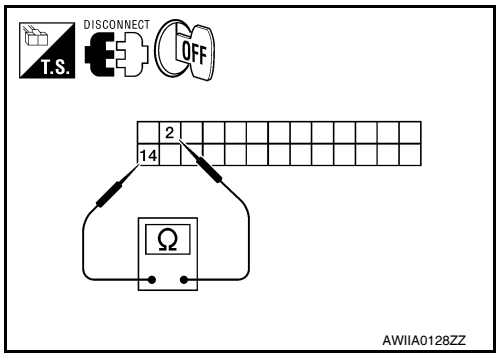

Is the inspection result normal?

YES >> GO TO 6.
NO >> GO TO 5.

5. CHECK AIR MIX DOOR MOTOR (PASSENGER) CIRCUITS FOR OPEN

1. Disconnect the air mix door motor (passenger) harness connector.
2. Check continuity between A/C auto amp. harness connector M49 (A) terminal 14, 2 and the air mix door motor (passenger) harness connector M143 (B) terminal 5, 6.

14 - 6 : Continuity should exist.
2 - 5 : Continuity should exist.

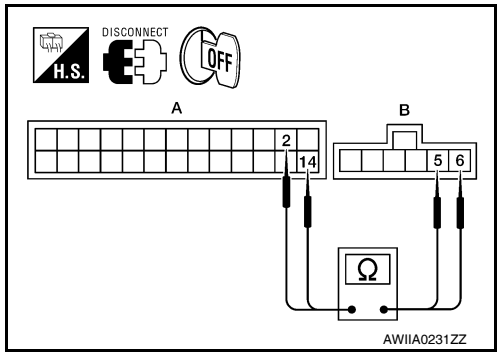

Is the inspection result normal?

YES >> Replace air mix door motor (passenger). Refer to VTL-30, "Removal and Installation".
NO >> Repair or replace harness as necessary.

6. CHECK A/C AUTO AMP. FOR PBR POWER AND GROUND

1. Reconnect A/C auto amp. harness connector.
2. Turn ignition switch ON.
3. Check voltage between A/C auto amp. harness connector M50 (A) terminal 28 and M49 (B) terminal 3.

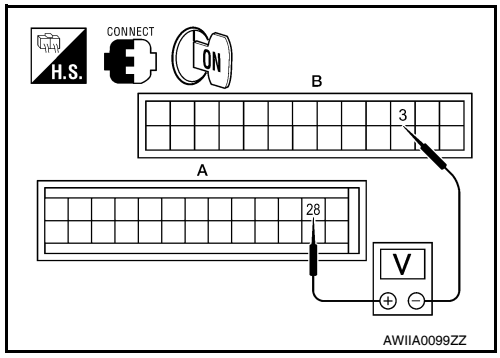

Connector	Terminals		Voltage (Approx.)
	(+)	(-)	
A/C auto amp.: M49	28	3	5V

Is the inspection result normal?

YES >> GO TO 8.
NO >> GO TO 7.

7. CHECK PBR REFERENCE VOLTAGE CIRCUIT FOR SHORT TO GROUND

1. Turn ignition switch OFF.
2. Disconnect the A/C auto amp. harness connector.
3. Check continuity between A/C auto amp. harness connector M49 terminal 29 and ground.

Continuity should not exist.

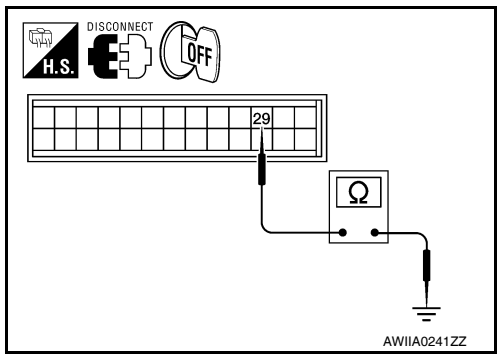

Is the inspection result normal?

YES >> Replace A/C auto amp. Refer to VTL-7, "Removal and Installation".
NO >> Repair or replace harness as necessary.

8. CHECK PBR REFERENCE VOLTAGE AND GROUND CIRCUITS

1. Turn ignition switch OFF.
2. Disconnect the A/C auto amp. harness connector.
3. Check continuity between A/C auto amp. harness connector M50 (A) terminal 28 and M49 (B) terminal 3.

Continuity should exist.

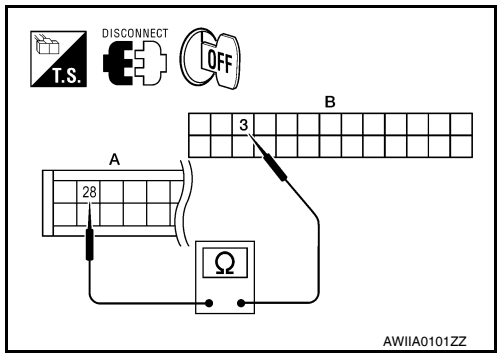

Is the inspection result normal?

YES >> GO TO 10.
NO >> GO TO 9.

9. CHECK PBR REFERENCE VOLTAGE CIRCUIT FOR OPEN

1. Disconnect the air mix door motor (passenger) harness connector.
2. Check continuity between air mix door motor (passenger) harness connector M143 (B) terminal 3, 1 and A/C auto amp. harness connector M49 (C) terminal 3 and M50 (A) terminal 28.

28 - 1 : Continuity should exist.
3 - 3 : Continuity should exist.

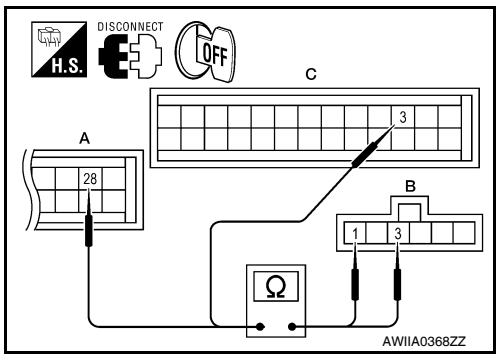

Is the inspection result normal?

YES >> Replace air mix door motor (passenger). Refer to VTL-30, "Removal and Installation".
NO >> Repair or replace harness as necessary.

10. CHECK PBR FEEDBACK VOLTAGE

1. Reconnect the A/C auto amp. harness connector.
2. Turn ignition switch ON.
3. Check voltage between A/C auto amp. harness connector M50 terminal 29 and ground while rotating temperature control dial (passenger) from 32°C (90°F) to 18°C (60°F).

Voltage : Approx. .5V - 4.5V

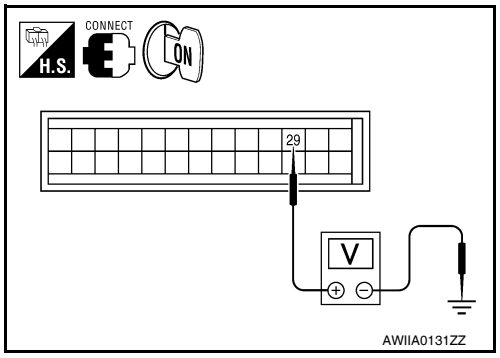

Is the inspection result normal?

YES >> GO TO 12.
NO >> GO TO 11.

11. CHECK PBR FEEDBACK SIGNAL CIRCUIT FOR SHORT TO GROUND

1. Turn ignition switch OFF.
2. Disconnect A/C auto amp. harness connector.
3. Check continuity between A/C auto amp. harness connector M50 terminal 29 and ground.

Continuity should not exist.

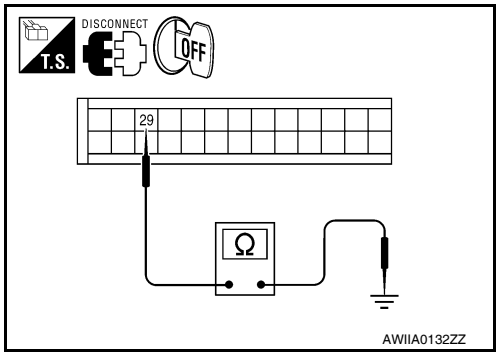

Is the inspection result normal?

YES >> Replace A/C auto amp. Refer to VTL-7, "Removal and Installation".
NO >> Repair or replace harness as necessary.

12. CHECK PBR FEEDBACK CIRCUIT FOR OPEN

1. Turn ignition switch OFF.
2. Disconnect the air mix door motor (passenger) harness connector and A/C auto amp. harness connector.
3. Check continuity between air mix door motor (passenger) harness connector M143 (B) terminal 2 and A/C auto amp. harness connector M50 (A) terminal 29.

Continuity should exist.

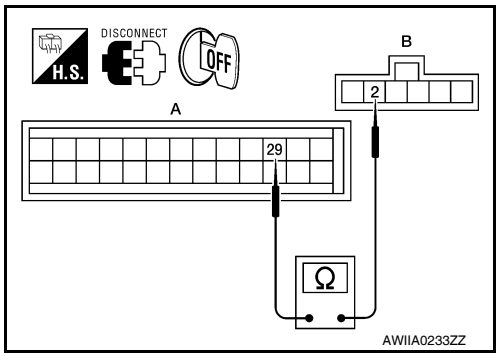

Is the inspection result normal?

YES >> Replace air mix door motor (passenger). Refer to VTL-30, "Removal and Installation".
NO >> Repair or replace harness as necessary.

INTAKE DOOR MOTOR

System Description

INFOID:0000000005256924

SYSTEM DESCRIPTION

SYMPTOM:
- Intake door motor does not operate normally.
- Intake door does not change.

SYSTEM DESCRIPTION

Component Parts

Intake door control system components are:
- A/C auto amp.
- A/C and AV switch assembly
- Intake door motor (PRB built into the intake door motor)
- In-vehicle sensor
- Ambient sensor
- Optical sensor
- Intake sensor

System Operation

The intake door control determines the intake door position based on the position of the recirculation switch. When the recirculation switch is depressed the intake door motor rotates closing off the fresh air inlet and recirculating the cabin air. If the recirculation switch is depressed again, the intake door motor rotates in the opposite direction, again allowing fresh air into the cabin.

In the AUTO mode, the A/C auto amp. determines the intake door position based on the ambient temperature, the intake air temperature and the in-vehicle temperature. When the DEF, D/F, FLOOR or OFF switches are pushed, the A/C auto amp. sets the intake door at the fresh position.

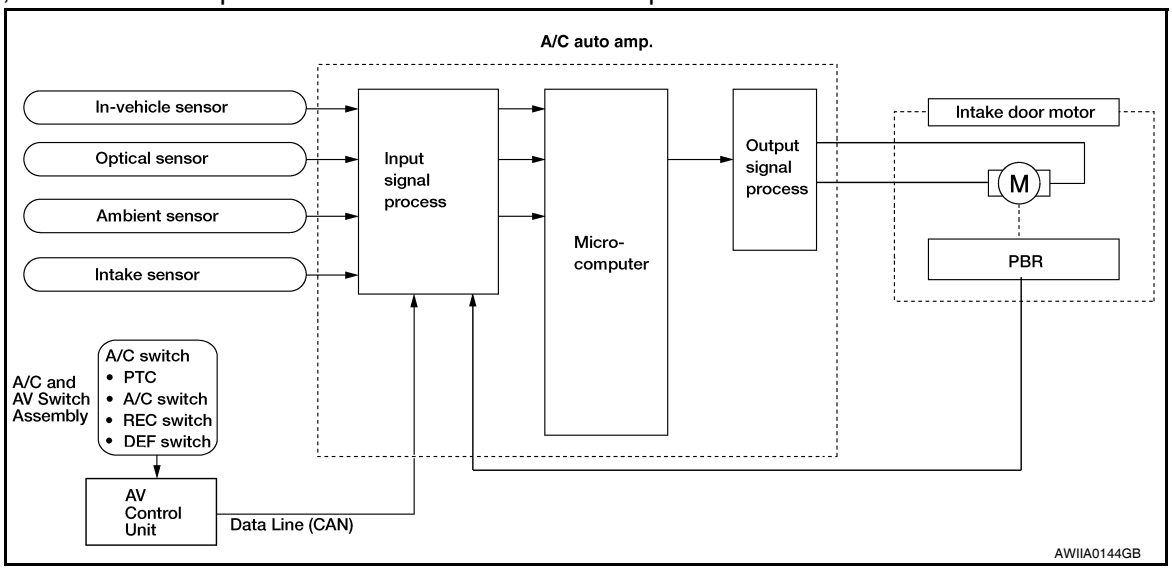

Intake Door Control Specification

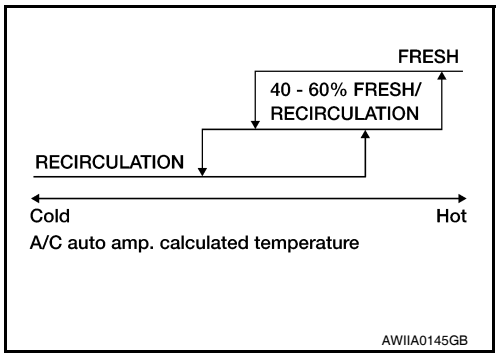

COMPONENT DESCRIPTION

Intake door motor

The intake door motor is attached to the intake unit. It rotates so that air is drawn from inlets set by the A/C auto amp. Motor rotation is conveyed to a lever which activates the intake door.

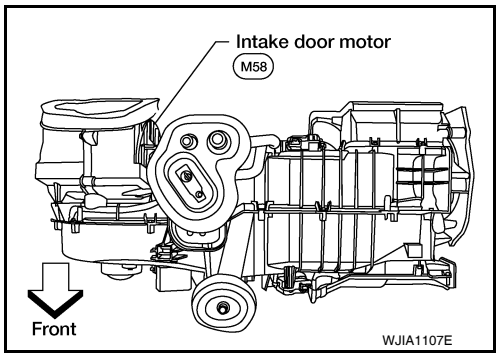

Intake Door Motor Component Function Check

INFOID:0000000005256925

INSPECTION FLOW

1. CONFIRM SYMPTOM BY PERFORMING OPERATIONAL CHECK - REC ( )

1. Press the mode switch to vent mode( ).
2. Press REC ( ) switch. The REC ( )indicator should illuminate.
3. Press REC ( ) switch again. The REC ( ) indicator should go out.
4. Listen for intake door position change (you should hear blower sound changes slightly).

Can a symptom be duplicated?

YES >> Inspection End.
NO >> Go to diagnosis procedure. Refer to HAC-83, "Intake Sensor Diagnosis Procedure".

Intake Door Motor Diagnosis Procedure

INFOID:0000000005256926

Regarding Wiring Diagram information, refer to HAC-90, "Wiring Diagram".

SYMPTOM:
- Intake door does not change.
- Intake door motor does not operate normally.

DIAGNOSTIC PROCEDURE FOR INTAKE DOOR MOTOR

1. CHECK A/C AUTO AMP. FOR POWER AND GROUND

1. Turn ignition switch ON.
2. Check voltage between A/C auto amp. harness connector M49 terminal 21 and terminal 22 while placing the HVAC system into self-diagnostic mode.

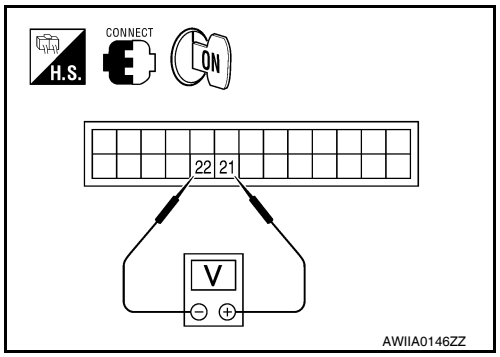

Connector	Terminals		Condition	Voltage (Approx.)
	(+)	(-)		
A/C auto amp.: M49	21	22	Self-diagnostic mode	Battery voltage

Is the inspection result normal?

OK >> GO TO 3.
NO >> GO TO 2.

2. CHECK INTAKE DOOR MOTOR CIRCUITS FOR SHORT TO GROUND

1. Turn ignition switch OFF.
2. Disconnect the A/C auto amp. harness connector.
3. Check continuity between A/C auto amp. harness connector M49 terminal 21, 22 and ground.

21 - Ground : Continuity should not exist.
22 - Ground : Continuity should not exist.

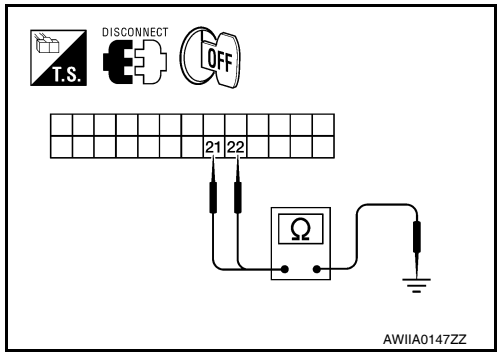

Is the inspection result normal?

OK >> Replace A/C auto amp. Refer to VTL-7, "Removal and Installation".
NO >> Repair or replace harness as necessary.

3. CHECK A/C AUTO AMP. FOR GROUND AND POWER

1. Press the BACK button to back out of self-diagnostic mode.
2. Check voltage between A/C auto amp. harness connector M49 terminal 21 and terminal 22 while placing the HVAC system into self-diagnostic mode.

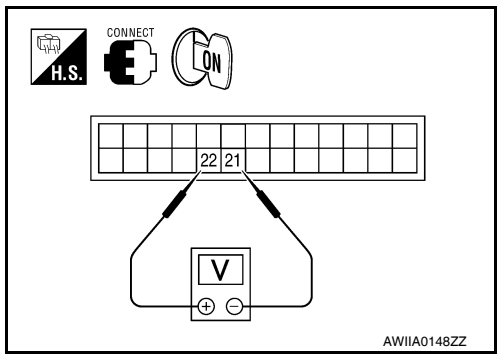

Connector	Terminals		Condition	Voltage (Approx.)
	(+)	(-)		
A/C auto amp.: M49	22	21	Self-diagnostic mode	Battery voltage

Is the inspection result normal?

OK >> GO TO 4.
NO >> Replace A/C auto amp. Refer to VTL-7, "Removal and Installation".

4. CHECK INTAKE DOOR MOTOR AND CIRCUITS FOR OPEN

1. Turn ignition switch OFF.
2. Disconnect the A/C auto amp. harness connector.
3. Check continuity between A/C auto amp. harness connector M49 terminal 21 and terminal 22.

Continuity should exist.

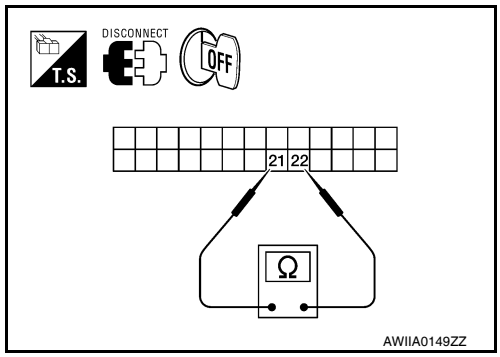

Is the inspection result normal?

OK >> Replace intake door motor. Refer to VTL-27, "Removal and Installation".
NO >> GO TO 5.

5. CHECK INTAKE DOOR MOTOR CIRCUITS FOR OPEN

1. Disconnect the intake door motor harness connector.
2. Check continuity between A/C auto amp. harness connector M49 (A) terminal 21, 22 and the intake door motor harness connector M58 (B) terminal 1, 6.

21 - 6 : Continuity should exist.
22 - 1 : Continuity should exist.

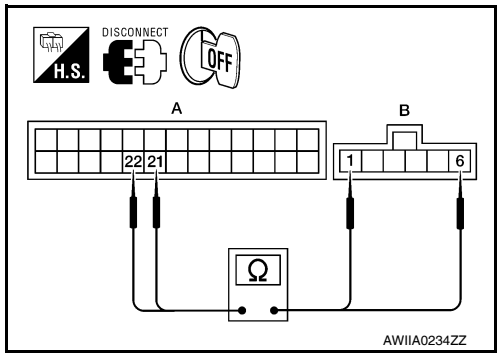

Is the inspection result normal?

YES >> Replace intake door motor. Refer to VTL-27, "Removal and Installation".
NO >> Repair or replace harness as necessary.

BLOWER MOTOR CONTROL SYSTEM

System Description

INFOID:0000000005256927

SYSTEM DESCRIPTION

Component Parts

Blower speed control system components are:
- A/C auto amp.
- A/C and AV switch assembly
- Variable blower control
- Front blower motor relay
- Front blower motor
- In-vehicle sensor
- Ambient sensor
- Optical sensor
- Intake sensor

System Operation

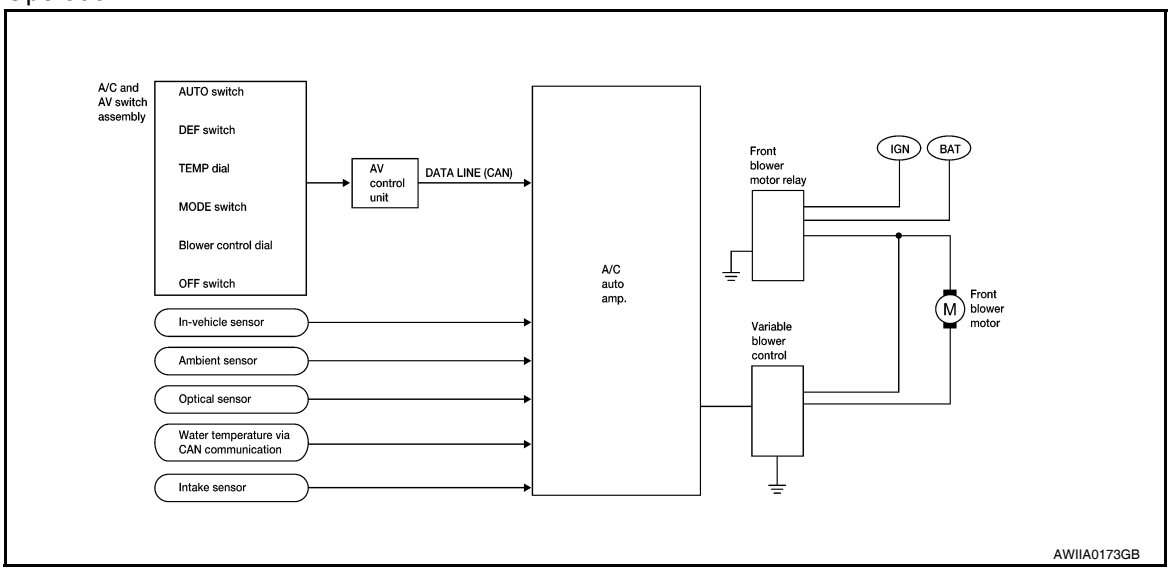

Automatic Mode

In the automatic mode, the blower motor speed is calculated by the A/C auto amp. and variable blower control based on input from the in-vehicle sensor, optical sensor, intake sensor and ambient sensor, and potentio temperature control (PTC).

When the air flow is increased, the blower motor speed is adjusted gradually to prevent a sudden increase in air flow.

In addition to manual air flow control and the usual automatic air flow control, starting air flow control, low water temperature starting control and high passenger compartment temperature starting control are available.

Starting Blower Speed Control

Start up from cold soak condition (Automatic mode).

In a cold start up condition where the engine coolant temperature is below 50°C (122°F), the blower will not operate at blower speed 1 for a short period of time (up to 210 seconds). The exact start delay time varies depending on the ambient and engine coolant temperatures.

In the most extreme case (very low ambient temperature) the blower starting delay will be 210 seconds as described above. After the coolant temperature reaches 50°C (122°F), or the 210 seconds has elapsed, the blower speed will increase to the objective blower speed.

Start up from usual operating or hot soak condition (Automatic mode).

The blower will begin operation momentarily after the AUTO switch is pushed. The blower speed will gradually rise to the objective speed over a time period of 3 seconds or less (actual time depends on the objective blower speed).

Blower Speed Compensation - Sunload

When the in-vehicle temperature and the set temperature are very close, the blower will be operating at low speed. The speed will vary depending on the sunload. During conditions of low or no sunload, the blower operates at low speed. During high sunload conditions, the A/C auto amp. causes the blower speed to increase.

Blower Speed Control Specification

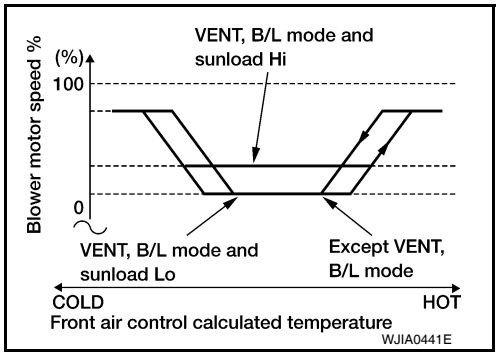

COMPONENT DESCRIPTION

Variable Blower Control

The variable blower control is located on the cooling unit. The variable blower control receives a gate voltage from the A/C auto amp. to steplessly maintain the blower motor voltage in the 0 to 5 volt range (approx.).

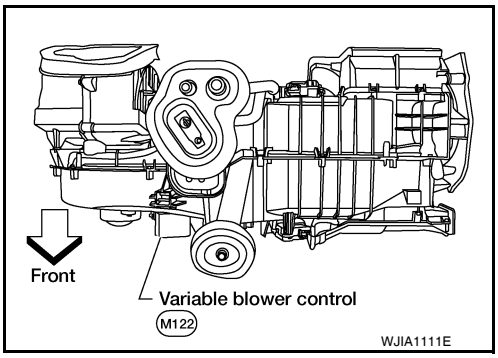

Front Blower Motor Component Function Check

INFOID:0000000005256928

INSPECTION FLOW

1. CONFIRM SYMPTOM BY PERFORMING OPERATIONAL CHECK - FRONT BLOWER MOTOR

1. Press the blower (+) switch. Blower should operate.
2. Press the blower (+) switch and continue checking blower speed and fan symbol until all speeds are checked.

Can the symptom be duplicated?

YES >> Inspection End.
NO >> Go to diagnosis procedure. Refer to HAC-44, "Front Blower Motor Diagnosis Procedure".

Front Blower Motor Diagnosis Procedure

INFOID:0000000005256929

Regarding Wiring Diagram information, refer to HAC-90, "Wiring Diagram".

SYMPTOM: Blower motor operation is malfunctioning.

DIAGNOSTIC PROCEDURE FOR BLOWER MOTOR

SYMPTOM: Blower motor operation is malfunctioning under starting blower speed control.

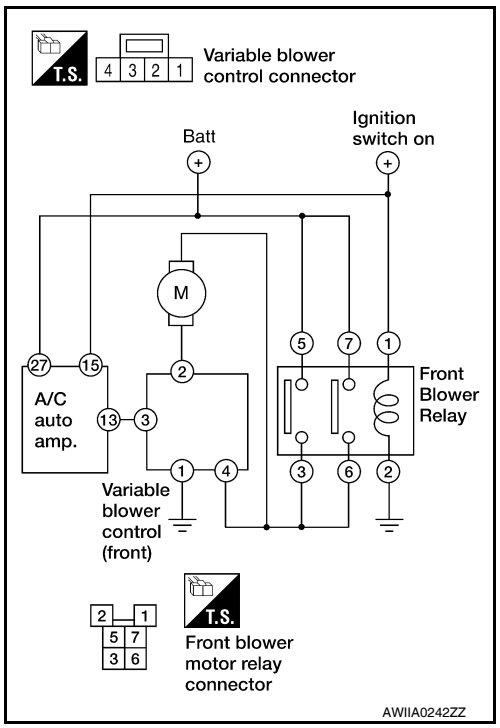

1. CHECK FUSES

Check 15A fuses [No. 24 and 27 (Located in the fuse and fusible link box)].

Fuses are good.

Is the inspection result normal?

YES >> GO TO 2.
NO >> GO TO 8.

2. CHECK FRONT BLOWER MOTOR POWER SUPPLY CIRCUIT

1. Turn ignition switch OFF.
2. Disconnect front blower motor connector.
3. Turn ignition switch ON.
4. Press the A/C switch.
5. Press the front blower control "+" switch to maximum speed.
6. Check voltage between front blower motor harness connector M62 terminal 2 and ground.

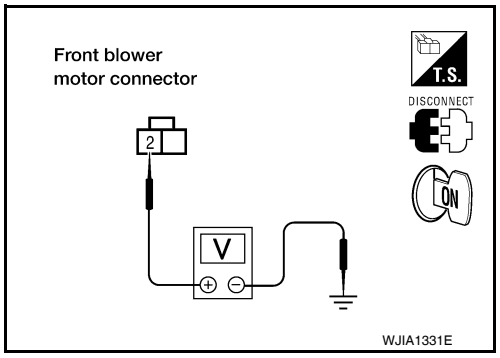

2 - Ground : Battery voltage

Is the inspection result normal?

YES >> GO TO 11.
NO >> GO TO 3.

3. CHECK FRONT BLOWER MOTOR RELAY (SWITCH SIDE) POWER SUPPLY CIRCUIT

1. Turn ignition switch OFF.
2. Disconnect front blower motor relay.
3. Check voltage between front blower motor relay harness connector E22 terminals 5, 7 and ground.

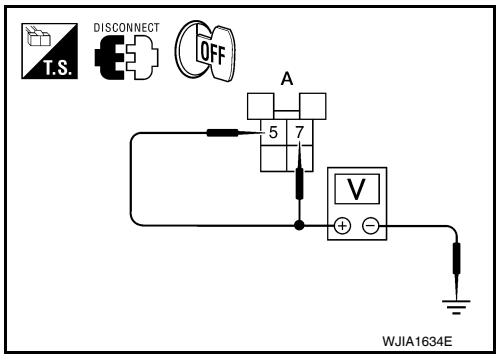

5 - Ground : Battery voltage
7 - Ground : Battery voltage

Is the inspection result normal?

YES >> GO TO 4.
NO >> Repair harness or connector.

4. CHECK FRONT BLOWER MOTOR RELAY

Turn ignition switch OFF.
Check front blower motor relay. Refer to HAC-150, "Front Blower Motor Component Inspection".

Is the inspection result normal?

YES >> GO TO 5.
NO >> Replace front blower motor relay.

5. CHECK FRONT BLOWER MOTOR RELAY (SWITCH SIDE) CIRCUIT FOR OPEN

Check continuity between front blower motor relay harness connector E22 terminals 3, 6 and front blower motor harness connector M62 terminal 2.

3, 6 - 2 : Continuity should exist.

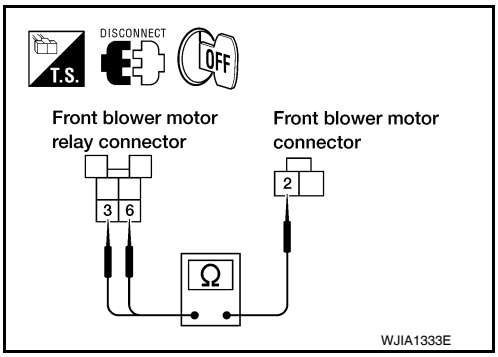

Is the inspection result normal?

YES >> GO TO 6.
NO >> Repair harness or connector.

6. CHECK VARIABLE BLOWER CONTROL POWER SUPPLY CIRCUIT FOR OPEN

1. Disconnect variable blower control harness connector.
2. Check continuity between front blower motor relay harness connector E22 (A) terminals 3, 6 and variable blower control harness connector M122 (B) terminal 4.

3, 6 - 4 : Continuity should exist.

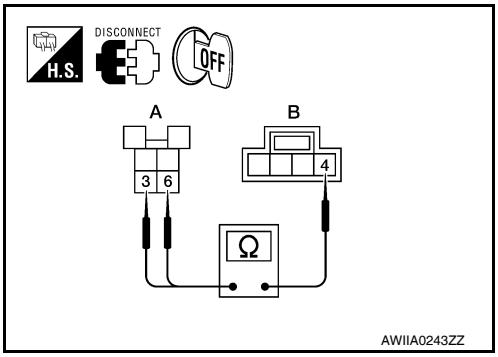

Is the inspection result normal?

YES >> GO TO 7.
NO >> Repair harness or connector.

7. CHECK FRONT BLOWER MOTOR RELAY (COIL SIDE) POWER SUPPLY

1. Turn ignition switch ON.
2. Check voltage between front blower motor relay harness connector E22 terminal 1 and ground.

1 - Ground : Battery voltage

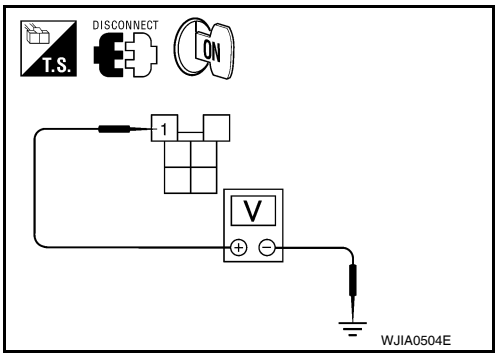

Is the inspection result normal?

YES >> Repair front blower motor ground circuit or connector.
NO >> Repair harness or connector.

8. REPLACE FUSES

Replace fuses.

Does the fuse blow?

YES >>
- If fuse blows without activating the front blower motor, repair short between fuse and front blower motor relay.
- If fuse blows activating the front blower motor, GO TO 9.

NO >> Inspection End.

9. CHECK FRONT BLOWER MOTOR POWER SUPPLY CIRCUIT FOR SHORT

1. Turn ignition switch OFF.
2. Disconnect front blower motor connector, front blower motor relay and variable blower control connector.
3. Check continuity between variable blower control harness connector M122 terminal 4 and ground.

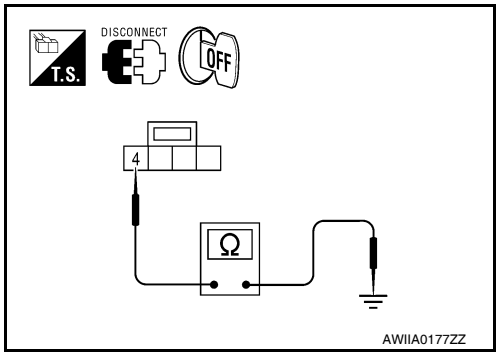

4 - Ground : Continuity should not exist.

Is the inspection result normal?

YES >> GO TO 10.
NO >> Repair harness or connector.

10. CHECK FRONT BLOWER MOTOR

Check front blower motor. Refer to HAC-150, "Front Blower Motor Component Inspection".

Is the inspection result normal?

YES >> Replace variable blower control (front). Refer to VTL-14, "Removal and Installation".
NO >> Replace front blower motor. Refer to VTL-12, "Removal and Installation".

11. CHECK FRONT BLOWER MOTOR

Check front blower motor. Refer to HAC-48, "Front Blower Motor Component Inspection".

Is the inspection result normal?

YES >> GO TO 12.
NO >> Replace front blower motor. Refer to VTL-12, "Removal and Installation".

12. CHECK BLOWER MOTOR GROUND CIRCUIT

1. Disconnect variable blower control (front) connector.
2. Check continuity between front blower motor harness connector M62 (B) terminal 1 and variable blower control harness connector M122 (A) terminal 2.

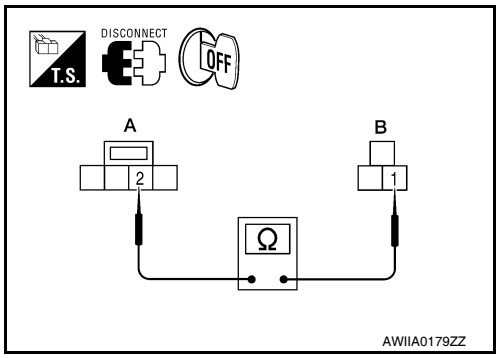

1 - 2 : Continuity should exist.

Is the inspection result normal?

YES >> GO TO 13.
NO >> Repair harness or connector.

13. CHECK VARIABLE BLOWER CONTROL POWER SUPPLY CIRCUIT FOR OPEN

1. Disconnect front blower motor relay.
2. Check continuity between front blower motor relay harness connector E22 (A) terminals 3, 5 and variable blower control harness connector M122 (B) terminal 4.

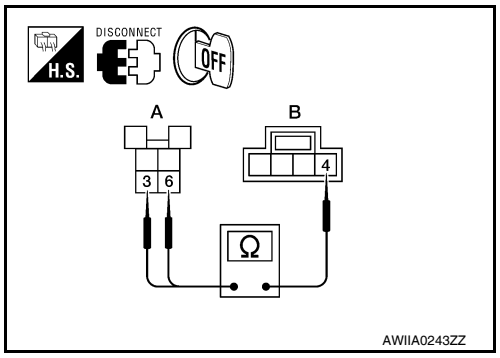

3 - 4 : Continuity should exist.

Is the inspection result normal?

YES >> GO TO 14.
NO >> Repair harness or connector.

14. CHECK VARIABLE BLOWER CONTROL GROUND CIRCUIT

Check continuity between variable blower control harness connector M122 terminal 1 and ground.

1 - Ground : Continuity should exist.

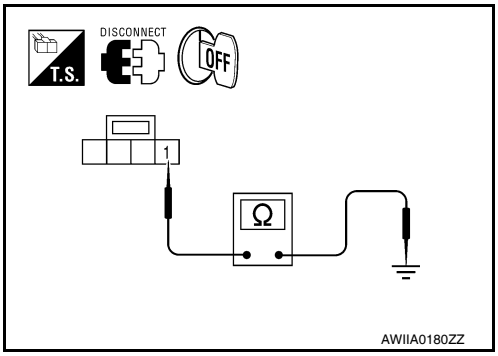

Is the inspection result normal?

YES >> GO TO 15.
NO >> Repair harness or connector.

15. CHECK VARIABLE BLOWER CONTROL SIGNAL CIRCUIT

1. Reconnect all disconnected component connectors.
2. Disconnect A/C auto amp. connector.
3. Turn ignition switch ON.
4. Press the blower (+) switch to maximum speed.
5. Check voltage between A/C auto amp. harness connector M49 terminal 13 and ground.

13 - Ground : Approx. 4.5V

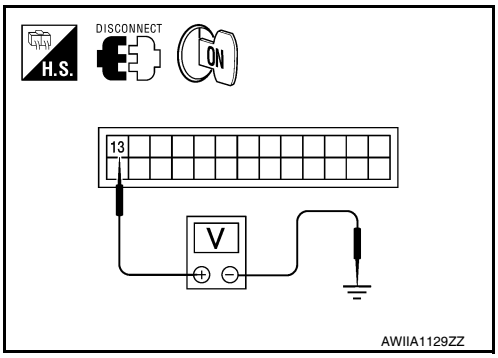

Is the inspection result normal?

YES >> Replace A/C auto amp. Refer to VTL-7, "Removal and Installation"
NO >> GO TO 16.

16. CHECK VARIABLE BLOWER CONTROL SIGNAL CIRCUIT FOR OPEN

1. Disconnect variable blower control connector.
2. Check continuity between A/C auto amp. harness connector M49 (B) terminal 13 and variable blower control harness connector M122 (A) terminal 3.

13 - 3 : Continuity should exist.

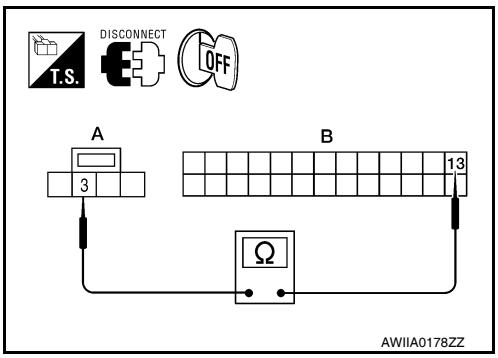

Is the inspection result normal?

YES >> Replace variable blower control (front). Refer to VTL-14, "Removal and Installation".
NO >> Repair harness or connector.

Front Blower Motor Component Inspection

INFOID:0000000005256930

COMPONENT INSPECTION

Front Blower Motor Relay

Check continuity between terminals 6-7 and 3-5 by supplying 12 volts to terminal 1 and ground to terminal 2 of relay.

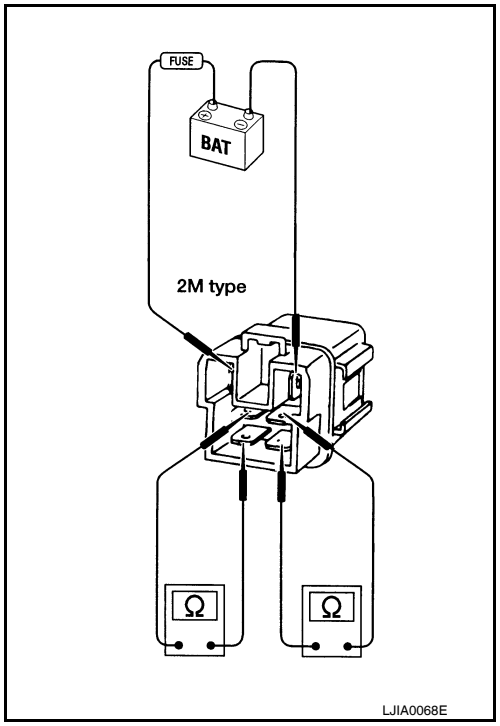

Front Blower Motor

Confirm smooth rotation of the blower motor.

- Ensure that there are no foreign particles inside the blower unit.
- Apply 12 volts to terminal 2 and ground to terminal 1 and verify that the motor operates freely and quietly.

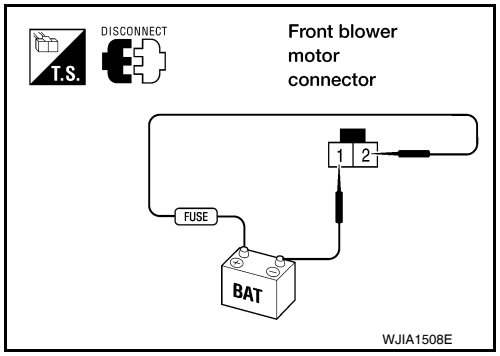

Rear Blower Motor Description

INFOID:0000000005256931

SYSTEM DESCRIPTION

Component Parts

Rear blower speed control system components are:

- A/C auto amp.
- A/C and AV switch assembly
- Rear air control (front)
- Rear air control (rear)
- Variable blower control (rear)
- Rear blower motor
- Rear blower motor relay

System Operation

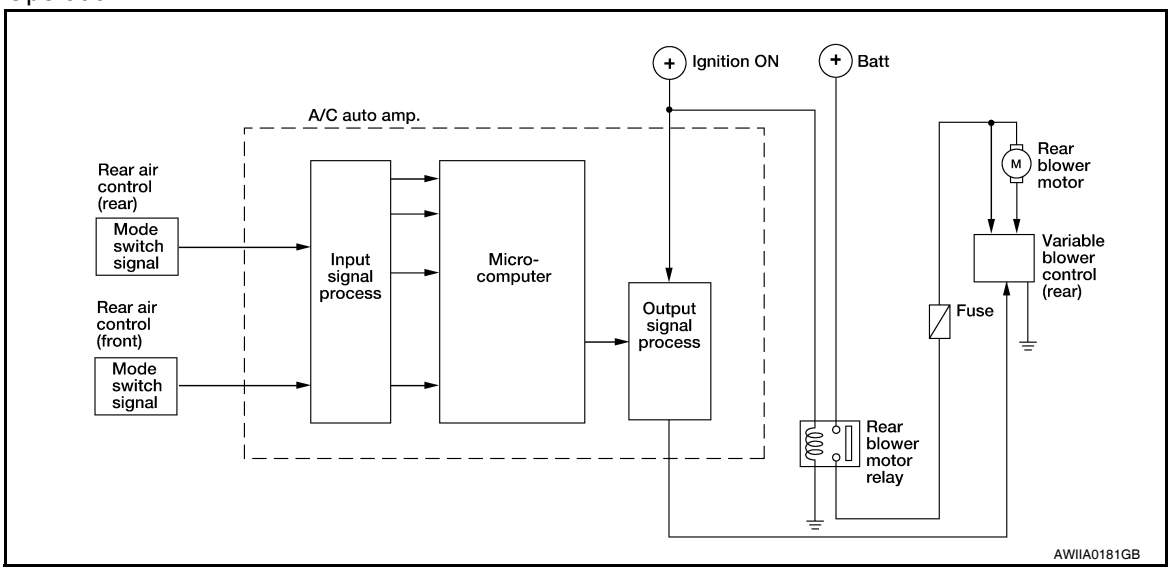

Rear Blower Control

When the rear blower control dial (front) REAR CTRL switch is pressed (indicator on), it allows the rear air control (rear) to control the rear blower motor speed. If the REAR CTRL switch is off (indicator off), the rear air control (front) controls the rear blower motor speed regardless of the rear air control (rear) position.

Rear Blower Motor Component Function Check

INFOID:0000000005256932

SYMPTOM:

- Rear blower motor does not operate from the rear air control (front) and the rear air control (rear).
- Rear blower motor operates from rear air control (front) only.
- Rear blower motor operates from rear air control (rear) only.
- Rear blower motor speed does not match the rear air control (front) speed selected.
- Rear blower motor speed does not match the rear air control (rear) speed selected.
- Rear blower motor operates in high all the time when controlled from the rear air control (front).
- Rear blower motor operates in high all the time when controlled from the rear air control (rear).

INSPECTION FLOW

1. CONFIRM SYMPTOM BY PERFORMING OPERATIONAL CHECK - REAR AIR CONTROL (FRONT)

1. Press AUTO switch.
2. Turn the rear air control (front) blower control dial to the lowest speed and check for rear blower operation (REAR CTRL indicator off).
3. Continue checking that rear blower speed increases as the rear blower control dial is rotated clockwise.

Does the rear blower motor operate correctly?

YES >> GO TO 3.
NO >> GO TO 2.

2. CONFIRM SYMPTOM BY PERFORMING OPERATIONAL CHECK - REAR AIR CONTROL (REAR)

1. Press the REAR CTRL switch (indicator on) on the rear air control (front) to send control of the rear blower motor back the rear air control (rear).
2. Turn the rear air control (rear) blower control dial to the lowest speed and check for rear blower operation.
3. Continue checking that rear blower speed increases as the rear blower control dial is rotated clockwise.

Does the rear blower motor operate correctly?

YES >>
- Rear blower motor does not operate at any speed from the rear air control (front). Refer to HAC-51, "Rear Air Control (Front) Diagnosis Procedure #1".
- Rear blower motor operates in high speed all the time or does not match the rear air control (front) speed selected. Refer to HAC-52, "Rear Air Control (Rear) Diagnosis Procedure #2".

NO >>
- Rear blower motor does not operate from the rear air control (front) and the rear air control (rear). Refer to HAC-53, "Rear Air Control (Rear) Diagnosis Procedure #3"

3. CONFIRM SYMPTOM BY PERFORMING OPERATIONAL CHECK - REAR AIR CONTROL (REAR)

1. Press the REAR CTRL switch (indicator on) on the rear air control (front) to send control of the rear blower motor back the rear air control (rear).
2. Turn the rear air control (rear) blower control dial to the lowest speed and check for rear blower operation.
3. Continue checking that rear blower speed increases as the rear blower control dial is rotated clockwise.

Does the rear blower motor operate correctly?

YES >> GO TO 4.
NO >> Check rear air control (rear). Refer to HAC-56, "Rear Air Control (Rear) Diagnosis Procedure #4".

4. CHECK FOR SERVICE BULLETINS

Check for any service bulletins.

>> GO TO 5.

5. RECHECK FOR ANY SYMPTOMS

Perform a complete operational check for any symptoms. Refer to HAC-5, "Operational Check (Front)".

Does another symptom exist?

YES >> Refer to HAC-4, "How to Perform Trouble Diagnosis For Quick And Accurate Repair".
NO >> Inspection End.

Rear Air Control (Front) Diagnosis Procedure #1

INFOID:0000000005256933

Regarding Wiring Diagram information, refer to HAC-90, "Wiring Diagram".

TROUBLE DIAGNOSIS PROCEDURE

1. CHECK REAR AIR CONTROL (FRONT) POWER SUPPLY

1. Disconnect rear air control (front) harness connector.
2. Turn ignition switch ON.
3. Check voltage between rear air control (front) harness connector R2 terminal 10 and ground.

Battery voltage should exist.

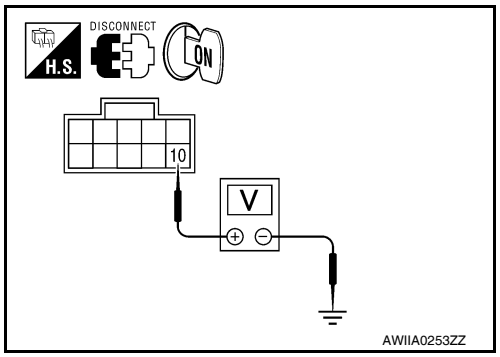

Is the inspection result normal?

YES >> GO TO 2.
NO >> Repair harness or connector.

2. CHECK REAR AIR CONTROL (FRONT) FRONT AUX BLOWER POT REFERENCE VOLTAGE

1. Disconnect rear air control (front) harness connector.
2. Turn ignition switch ON.
3. Check voltage between rear air control (front) harness connector R2 terminal 6 and ground.

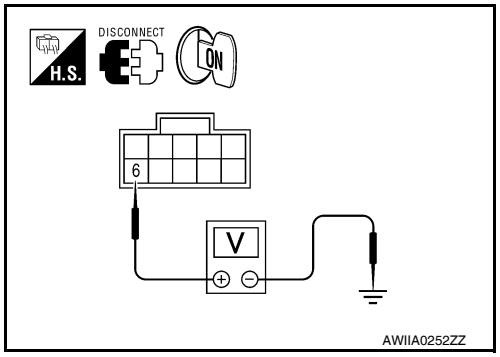

Connector	Terminals		Voltage (Approx.)
	(+)	(-)	
Rear air control (front): R2	6	Ground	5V

Is the inspection result normal?

YES >> GO TO 3.
NO >> Repair harness or connector.

3. CHECK REAR AIR CONTROL (FRONT) GROUND CIRCUIT

Check continuity between rear air control (front) harness connector R2 terminal 1 and ground.

Continuity should exist.

Is the inspection result normal?

YES >> Replace A/C auto amp. Refer to VTL-7, "Removal and Installation".
NO >> Repair harness or connector.

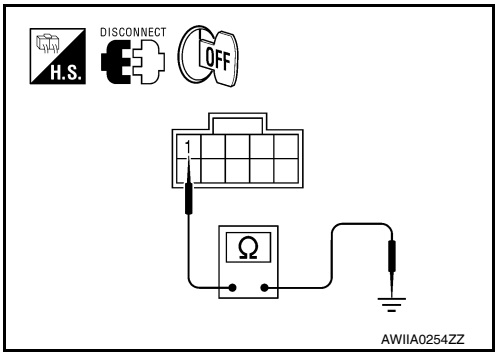

Rear Air Control (Rear) Diagnosis Procedure #2

INFOID:0000000005256934

Regarding Wiring Diagram information, refer to HAC-90, "Wiring Diagram".

TROUBLE DIAGNOSIS PROCEDURE

1. CHECK REAR AIR CONTROL (FRONT) POWER SUPPLY

1. Disconnect rear air control (front) harness connector.
2. Turn ignition switch ON.
3. Check voltage between rear air control (front) harness connector R2 terminal 10 and ground.

Battery voltage should exist.

Is the inspection result normal?

YES >> GO TO 2.
NO >> Repair harness or connector.

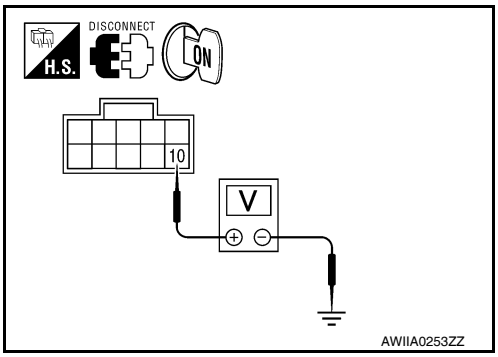

2. CHECK REAR AIR CONTROL (FRONT) FRONT AUX BLOWER POT REFERENCE VOLTAGE

1. Disconnect rear air control (front) harness connector.
2. Check voltage between rear air control (front) harness connector R2 terminal 6 and ground.

Connector	Terminals		Voltage (Approx.)
	(+)	(-)	
Rear air control (front): R2	6	Ground	5V

Is the inspection result normal?

YES >> GO TO 3.
NO >> GO TO 4.

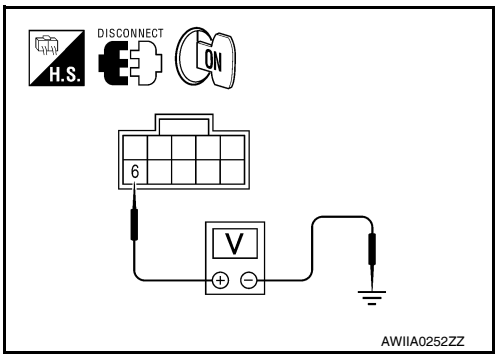

3. CHECK REAR AIR CONTROL (FRONT) GROUND CIRCUIT

1. Turn ignition switch OFF.
2. Check continuity between rear air control (front) harness connector R2 terminal 1 and ground.

Continuity should exist.

Is the inspection result normal?

YES >> Replace rear air control (front). Refer to VTL-7, "Removal and Installation".
NO >> Repair harness or connector.

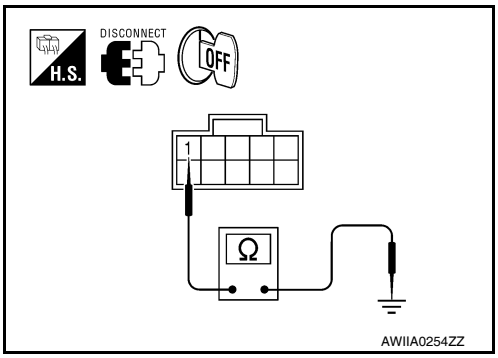

4. CHECK REAR AIR CONTROL (FRONT) BLOWER POT CIRCUIT FOR OPEN

1. Turn ignition switch OFF.
2. Disconnect A/C auto amp. connector.
3. Check continuity between A/C auto amp. harness connector M50 (A) terminal 38 and rear air control (front) harness connector R2 (B) terminal 6.

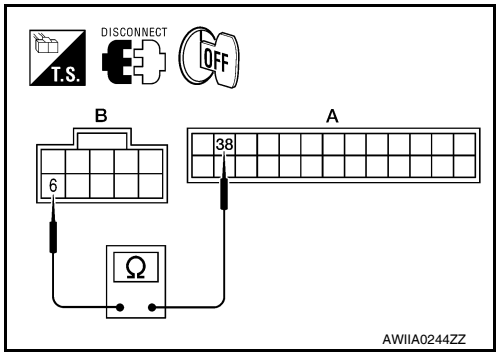

Continuity should exist.

Is the inspection result normal?

YES >> Replace A/C auto amp. Refer to VTL-7, "Removal and Installation".
NO >> Repair harness or connector.

Rear Air Control (Rear) Diagnosis Procedure #3

INFOID:0000000005256935

Regarding Wiring Diagram information, refer to HAC-90, "Wiring Diagram".

TROUBLE DIAGNOSIS PROCEDURE

1. CHECK REAR AIR CONTROL (FRONT)

1. Disconnect rear air control (front) connector.
2. Turn ignition switch ON.
3. Press AUTO switch.

Does rear blower motor operate in high speed?

YES >> GO TO 17.
NO >> GO TO 2.

2. CHECK REAR BLOWER MOTOR POWER SUPPLY

1. Turn ignition switch OFF.
2. Disconnect rear blower motor harness connector.
3. Turn ignition switch ON.
4. Press AUTO switch.
5. Rotate rear air control (front) blower speed control dial to maximum speed (REAR CTRL indicator off).
6. Check voltage between rear blower motor harness connector B501 terminal 2 and ground.

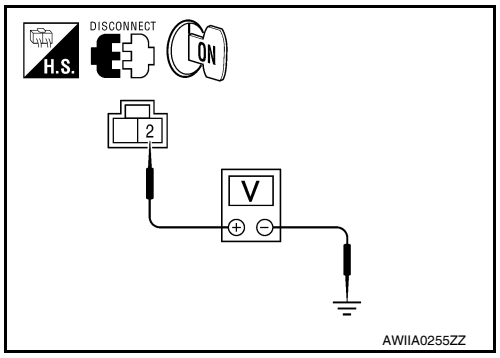

Battery voltage should exist.

Is the inspection result normal?

YES >> GO TO 3.
NO >> GO TO 9.

3. CHECK VARIABLE BLOWER CONTROL (REAR) POWER SUPPLY

1. Turn ignition switch OFF.
2. Disconnect variable blower control (rear) connector.
3. Turn ignition switch ON.
4. Check voltage between variable blower control connector B133 terminal 4 and ground.

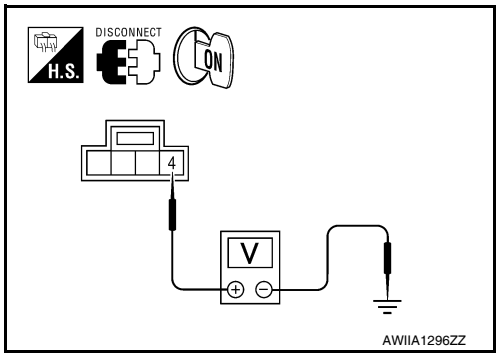

Battery voltage should exist.

Is the inspection result normal?

YES >> GO TO 4.
NO >> Repair harness or connector.

4. CHECK VARIABLE BLOWER CONTROL (REAR) AUX BLOWER SPEED SIGNAL CIRCUIT FOR SHORT

Check voltage between variable blower control (rear) harness connector B133 terminal 3 and ground.

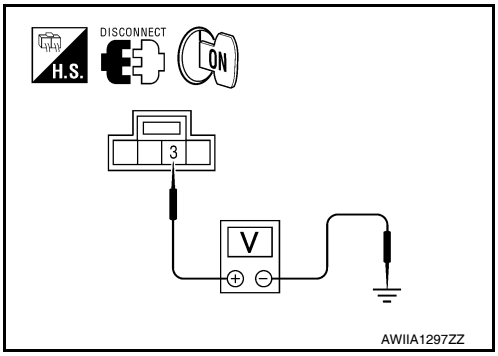

Connector	Terminals		Voltage (Approx.)
	(+)	(-)	
Variable blower control: B133	3	Ground	4.5 V

Is the inspection result normal?

YES >> GO TO 5.
NO >> GO TO 8.

5. CHECK VARIABLE BLOWER CONTROL (REAR) GROUND CIRCUIT

1. Turn ignition switch OFF.
2. Check continuity between variable blower control (rear) harness connector B133 terminal 1 and ground.

Continuity should exist.

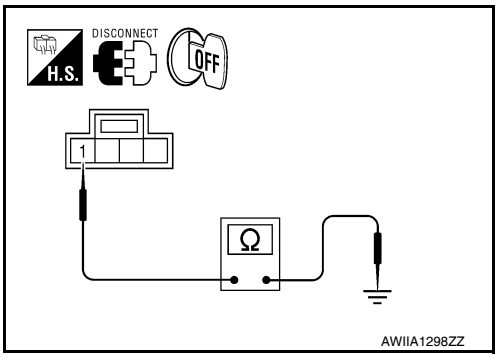

Is the inspection result normal?

YES >> GO TO 6.
NO >> Repair harness or connector.

6. CHECK REAR BLOWER MOTOR

Check rear blower motor. Refer to HAC-57, "Rear Blower Motor And Relay Component Inspection".

Is the inspection result normal?

YES >> GO TO 7.
NO >> Replace rear blower motor. Refer to VTL-12, "Removal and Installation".

7. CHECK VARIABLE BLOWER CONTROL (REAR) BLOWER MOTOR GROUND CIRCUIT

Check continuity between rear blower motor connector B501 (B) terminal 1 and variable blower control (rear) connector B133 (A) terminal 2.

Continuity should exist.

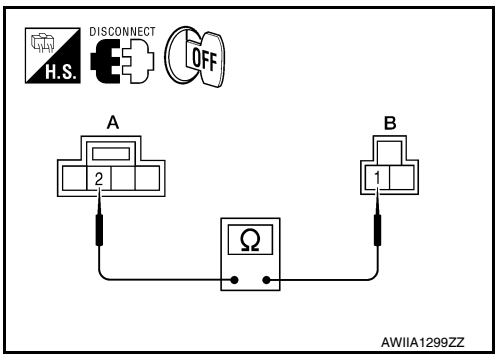

Is the inspection result normal?

YES >> Replace A/C auto amp. Refer to VTL-7, "Removal and Installation".
NO >> Repair harness or connector.

8. CHECK VARIABLE BLOWER CONTROL (REAR) AUX BLOWER SPEED CIRCUIT FOR OPEN

1. Turn ignition switch OFF.
2. Disconnect A/C auto amp. connector.
3. Check continuity between A/C auto amp. harness connector M49 (A) terminal 12 and variable blower control (rear) harness connector B133 (B) terminal 3.

Continuity should exist.

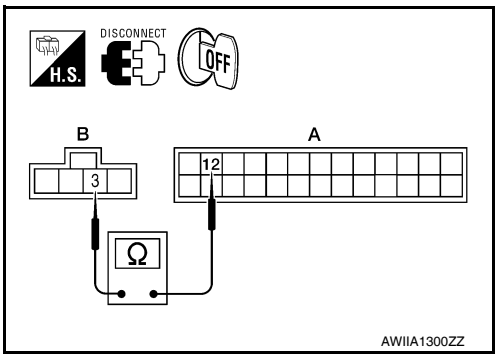

Is the inspection result normal?

YES >> Replace A/C auto amp. Refer to VTL-7, "Removal and Installation".
NO >> Repair harness or connector.

9. CHECK FUSES

Check 15A fuses [Nos. 10 and 11, located in the fuse block (J/B)].

Is the inspection result normal?

YES >> GO TO 10.
NO >> GO TO 14.

10. CHECK REAR BLOWER MOTOR RELAY

Check rear blower motor relay. Refer to HAC-57, "Rear Blower Motor And Relay Component Inspection".

Is the inspection result normal?

YES >> GO TO 11.
NO >> Replace rear blower motor relay.

11. CHECK REAR BLOWER MOTOR CIRCUIT BETWEEN REAR BLOWER MOTOR AND FUSE BLOCK (J/B)

1. Turn ignition switch OFF.
2. Disconnect fuse block (J/B) M3 harness connector.
3. Check continuity between fuse block (J/B) harness connector M3 (A) terminal 3N and 8N and rear blower motor harness connector B501 (B) terminal 2.

Continuity should exist.

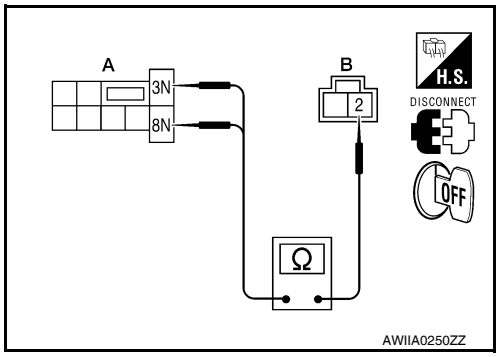

Is the inspection result normal?

YES >> GO TO 12.
NO >> Repair harness or connector.

12. CHECK REAR BLOWER MOTOR RELAY (COIL SIDE) GROUND CIRCUIT

Check continuity between fuse block (J/B) harness connector M3 terminal 7N and ground.

Continuity should exist.

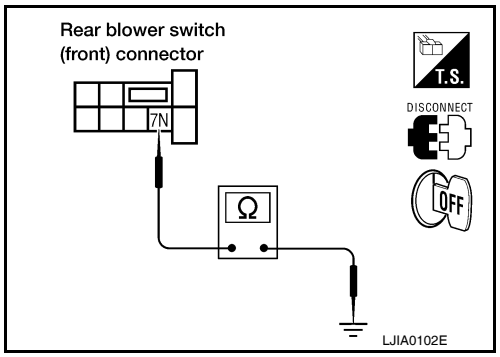

Is the inspection result normal?

YES >> GO TO 13.
NO >> Repair harness or connector.

13. CHECK REAR BLOWER MOTOR RELAY (COIL SIDE) POWER SUPPLY CIRCUIT FOR OPEN

1. Turn ignition switch ON.
2. Check voltage between rear blower motor relay harness connector J-1 terminal 1 and ground.

Battery voltage should exist.

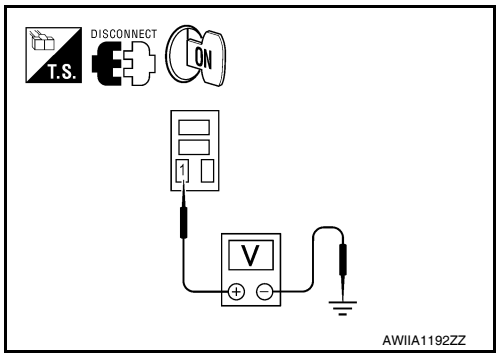

Is the inspection result normal?

YES >> Replace fuse block (J/B).
NO >> Repair harness or connector.

14. REPLACE FUSE

1. Turn ignition switch OFF.
2. Replace fuses.
3. Reconnect all disconnected parts.
4. Turn ignition switch ON.
5. Activate the rear blower motor from the rear air control (front).

Does the fuse blow?

YES >> GO TO 15.

NO >> Inspection End.

15. CHECK REAR BLOWER MOTOR

Check rear blower motor. Refer to HAC-57, "Rear Blower Motor And Relay Component Inspection".

Is the inspection result normal?

YES >> GO TO 16.
NO >> Replace rear blower motor. Refer to VTL-12, "Removal and Installation".

16. CHECK REAR BLOWER MOTOR POWER SUPPLY CIRCUIT FOR SHORT

1. Turn ignition switch OFF.
2. Disconnect fuse block (J/B) M3 harness connector and variable blower control (rear).
3. Check continuity between rear blower motor harness connector B501 terminal 2 and ground.

Continuity should not exist.

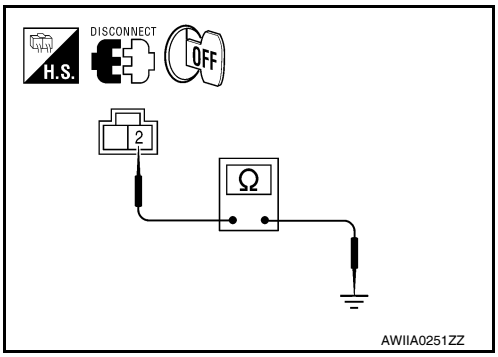

Is the inspection result normal?

YES >> Replace variable blower control (rear). Refer to VTL-14, "Removal and Installation".
NO >> Repair harness or connector.

17. CHECK REAR AIR CONTROL (FRONT) POWER SUPPLY

Check voltage between rear air control (front) harness connector R2 terminal 10 and ground.

Battery voltage should exist.

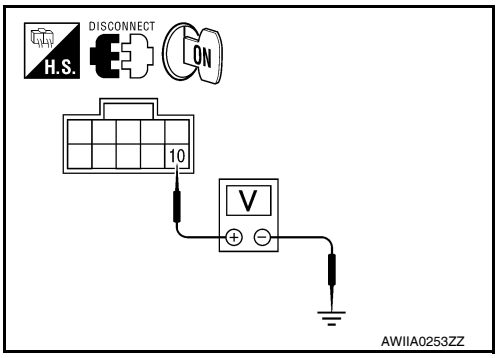

Is the inspection result normal?

YES >> GO TO 18.
NO >> Repair harness or connector.

18. CHECK A/C AUTO AMP. FRONT AUX BLOWER POT CIRCUIT FOR SHORT

1. Turn ignition switch OFF.
2. Disconnect A/C auto amp. harness connector M50.
3. Check continuity between rear air control (front) harness connector R2 terminal 6 and ground.

Continuity should not exist.

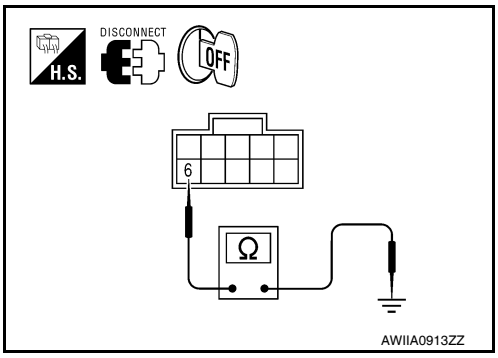

Is the inspection result normal?

YES >> Replace rear air control (front) Refer to VTL-7, "Removal and Installation".
NO >> Repair harness or connector.

Rear Air Control (Rear) Diagnosis Procedure #4

INFOID:0000000005256936

Regarding Wiring Diagram information, refer to HAC-90, "Wiring Diagram".

TROUBLE DIAGNOSIS PROCEDURE

1. CHECK REAR AIR CONTROL (REAR) REAR AUX BLOWER POT REFERENCE VOLTAGE

1. Turn ignition switch OFF.

2. Disconnect rear air control (rear) harness connector.
3. Turn ignition switch ON.
4. Check voltage between rear air control (rear) harness connector M208 terminal 6 and ground.

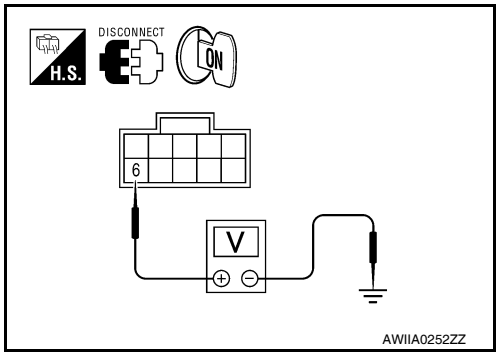

Connector	Terminals		Voltage (Approx.)
	(+)	(-)	
Rear air control (rear): M208	6	Ground	5V

Is the inspection result normal?

YES >> GO TO 2.
NO >> GO TO 3.

2. CHECK REAR AIR CONTROL (REAR) GROUND CIRCUIT

1. Turn ignition switch OFF.
2. Check continuity between rear air control (rear) harness connector M208 terminal 1 and ground.

Continuity should exist.

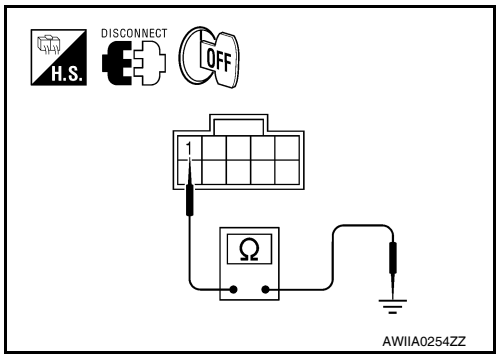

Is the inspection result normal?

YES >> Replace rear air control (rear). Refer to VTL-7, "Removal and Installation".
NO >> Repair harness or connector.

3. CHECK REAR AIR CONTROL (REAR) REAR AUX BLOWER POT FOR SHORT

1. Turn ignition switch OFF.
2. Check continuity between rear air control (rear) harness connector M208 terminal 6 and ground.

Continuity should not exist.

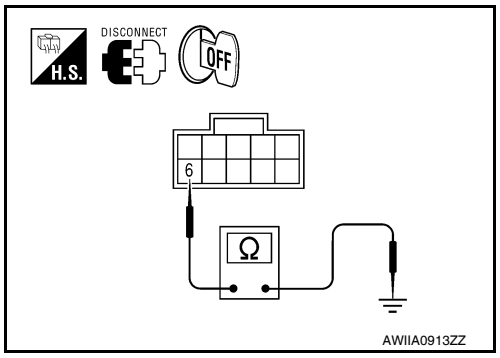

Is the inspection result normal?

YES >> GO TO 4.
NO >> Repair harness or connector.

4. CHECK REAR AIR CONTROL (REAR) REAR AUX BLOWER POT BETWEEN A/C AUTO AMP. AND REAR AIR CONTROL REAR

1. Disconnect A/C auto amp. harness connector.
2. Check continuity between A/C auto amp. harness connector M50 (A) terminal 52 and rear air control (rear) harness connector M208 (B) terminal 6.

Continuity should exist.

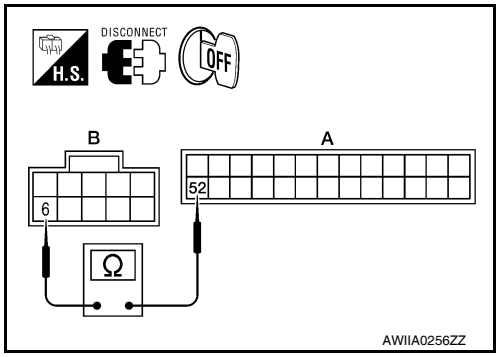

Is the inspection result normal?

YES >> Replace A/C auto amp. Refer to VTL-7, "Removal and Installation".
NO >> Repair harness or connector.

Rear Blower Motor And Relay Component Inspection

INFOID:0000000005256937

COMPONENT INSPECTION

Rear Blower Motor Relay

Check circuit continuity between terminals by supplying 12 volts and ground to coil side terminals of relays.

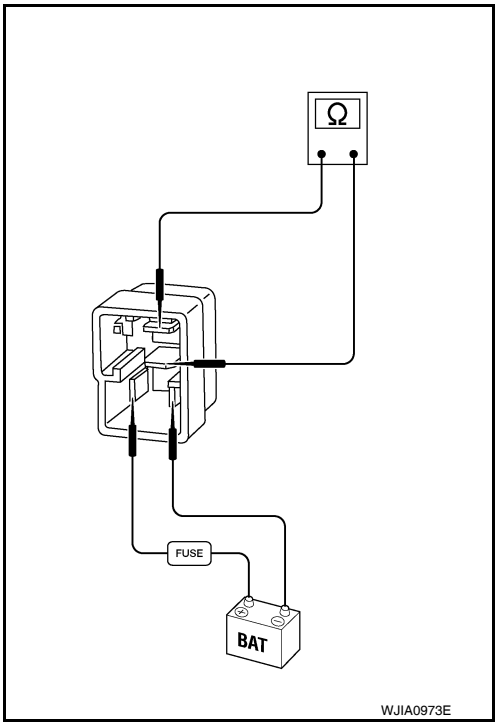

Rear Blower Motor

Check that there are no foreign particles inside the intake unit.

Apply 12 volts to terminal 2 and ground to terminal 1 and ensure that the blower motor rotates freely and quietly.

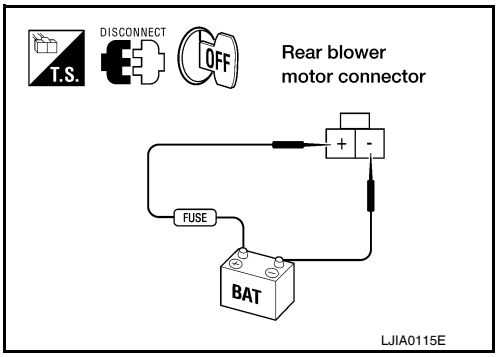

REAR AIR CONTROL SYSTEM

Rear Air Control System Description

INFOID:0000000005256938

SYSTEM DESCRIPTION

Component Parts

Rear air control system components are:

- A/C auto amp.
- Rear air control (front)
- Rear air control (rear)
- Air mix door motor (rear)

System Operation

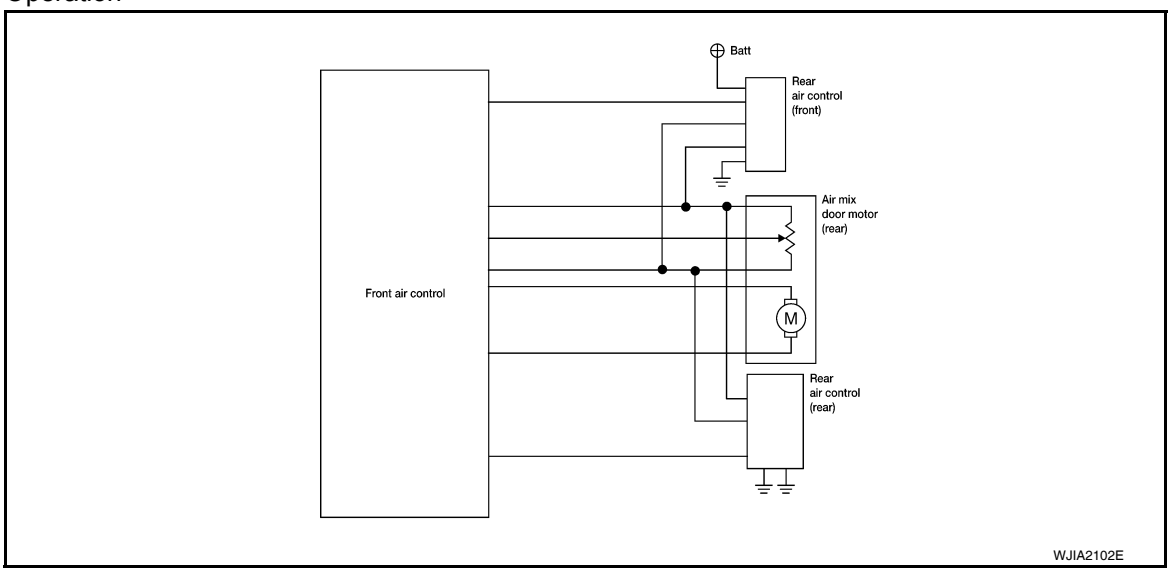

Rear Air Control

When the REAR CTRL indicator is off the rear air control (front) will control all rear blower motor speeds and the rear temperature/mode operations. When the REAR CTRL switch is pressed (indicator on), the rear air control (rear) will control all the rear blower motor speeds and the rear temperature/mode operations.

Rear Air Control Component Function Check

INFOID:0000000005256939

SYMPTOM:

- Temperature cannot be adjusted from the rear air control.

INSPECTION FLOW

1. CONFIRM SYMPTOM BY PERFORMING REAR AIR CONTROL (FRONT) OPERATIONAL CHECK

1. Press AUTO switch (rear air controls only operate when front blower is on).
2. Turn the rear blower motor to maximum speed from the rear air control (front).
3. Turn rear air control (front) temperature/mode control dial clockwise and then counterclockwise (REAR CTRL indicator off).
4. Check for hot air at rear floor discharge air outlets in the maximum heat position and cold air at rear roof discharge air outlets in the maximum cold position.

Does the rear air control (front) operate properly?

YES >> GO TO 2.
NO >> Check rear air control (front). Refer to HAC-60, "Rear Air Control (Front) Diagnosis Procedure".

2. CONFIRM SYMPTOM BY PERFORMING REAR AIR CONTROL (REAR) OPERATIONAL CHECK

1. Press the REAR CTRL switch on rear air control (front) to send control to the rear air control (rear).
2. Turn the rear blower motor to maximum speed from the rear air control (rear).
3. Turn rear air control (rear) temperature/mode control dial slowly clockwise and then counterclockwise (REAR CTRL indicator on).

4. Check for hot air at rear floor discharge air outlets in the maximum heat position and cold air at rear roof discharge air outlets in the maximum cold position.

Does the rear air control (rear) operate properly?

YES >> GO TO 3.
NO >> Check rear air control (rear). Refer to HAC-62, "Rear Air Control (Rear) Diagnosis Procedure".

3. CHECK FOR ANY SYMPTOMS

Perform a complete operational check (rear) for any symptoms.

Does another symptom exist?

YES >> Refer to HAC-4, "How to Perform Trouble Diagnosis For Quick And Accurate Repair".
NO >> System OK.

4. CHECK FOR SERVICE BULLETINS

Check for any service bulletins.

>> GO TO 5.

5. CONFIRM SYMPTOM BY PERFORMING REAR AIR CONTROL (REAR) OPERATIONAL CHECK

Perform rear air control operation diagnosis to check for any codes. Refer to HAC-6, "Operational Check (Rear)".

Are any symptoms present?

YES >> Refer to HAC-106, "Symptom Matrix Chart".
NO >> System OK.

Rear Air Control (Front) Diagnosis Procedure

INFOID:0000000005256940

Regarding Wiring Diagram information, refer to HAC-90, "Wiring Diagram".

DIAGNOSTIC PROCEDURE FOR REAR AIR CONTROL (FRONT)

SYMPTOM:
- Temperature/mode operation is malfunctioning.

1. CHECK REAR AIR CONTROL (FRONT) POWER SUPPLY

1. Disconnect rear air control (front) harness connector.
2. Turn ignition switch ON.
3. Check voltage between rear air control (front) harness connector R2 terminal 10 and ground.

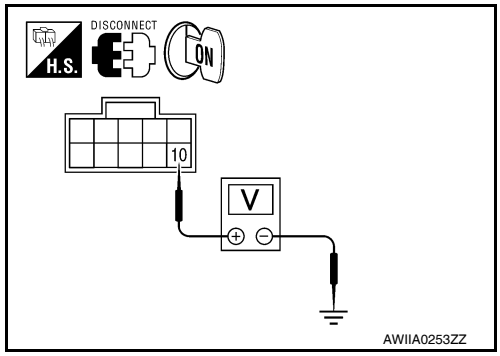

Battery voltage should exist.

Is the inspection result normal?

YES >> GO TO 2.
NO >> Repair harness or connector.

2. CHECK REAR AIR CONTROL (FRONT) REFERENCE VOLTAGE

Check voltage between rear air control (front) harness connector R2 terminal 3 and ground.

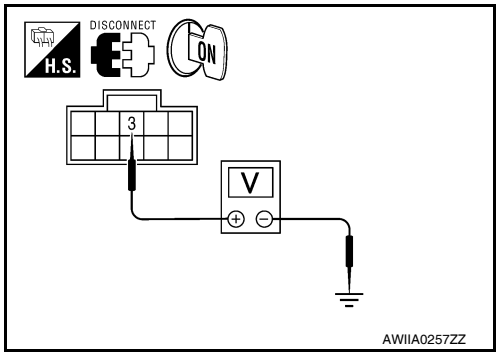

Connector	Terminals		Voltage (Approx.)
	(+)	(-)	
Rear air control (front): R2	3	Ground	4.5V

Is the inspection result normal?

YES >> GO TO 3.
NO >> GO TO 6.

3. CHECK REAR AIR CONTROL (FRONT) AUX TEMP POT VOLTAGE

Check voltage between rear air control (front) harness connector R2 terminal 7 and ground.

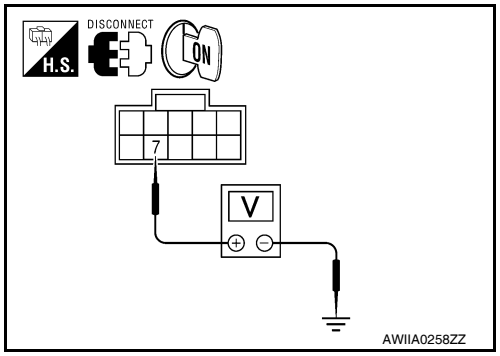

Connector	Terminals		Voltage (Approx.)
	(+)	(-)	
Rear air control (front): R2	7	Ground	4.5V

Is the inspection result normal?

YES >> GO TO 4.
NO >> GO TO 7.

4. CHECK REAR AIR CONTROL (FRONT) GROUND CIRCUIT

1. Turn ignition switch OFF.
2. Check continuity between rear air control (front) harness connector R2 terminal 1 and ground.

Continuity should exist.

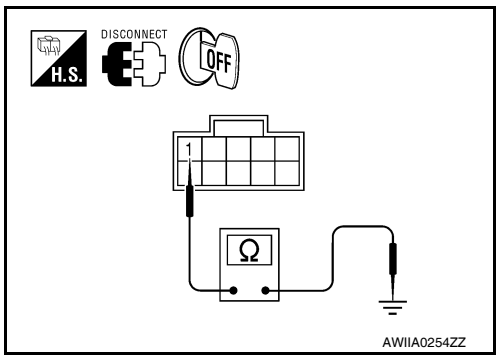

Is the inspection result normal?

YES >> GO TO 5.
NO >> Repair harness or connector.

5. CHECK REAR AIR CONTROL (FRONT) REFERENCE GROUND CIRCUIT

Check continuity between rear air control (front) harness connector R2 terminal 8 and ground.

Continuity should exist.

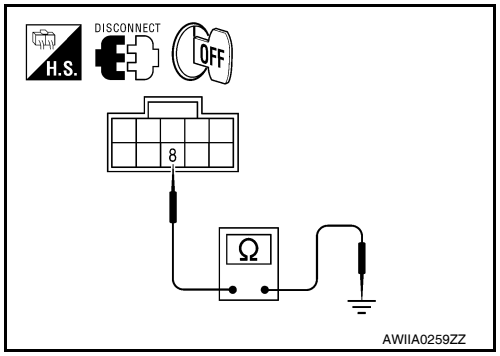

Is the inspection result normal?

YES >> Replace rear air control (front). Refer to VTL-7, "Removal and Installation".
NO >> GO TO 8.

6. CHECK REAR AIR CONTROL (FRONT) REFERENCE VOLTAGE CIRCUIT

1. Turn ignition switch OFF.
2. Disconnect A/C auto amp. connector.
3. Check continuity between A/C auto amp. harness connector M50 (A) terminal 28 and rear air control (front) harness connector R2 (B) terminal 3.

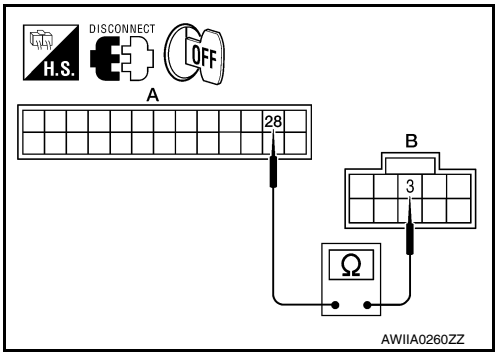

Continuity should exist.

Is the inspection result normal?

YES >> Replace A/C auto amp. Refer to VTL-7, "Removal and Installation".
NO >> Repair harness or connector.

7. CHECK REAR AIR CONTROL (FRONT) AUX TEMP POT CIRCUIT

1. Turn ignition switch OFF.
2. Disconnect A/C auto amp. connector.
3. Check continuity between A/C auto amp. harness connector M50 (A) terminal 37 and rear air control (front) harness connector R2 (B) terminal 7.

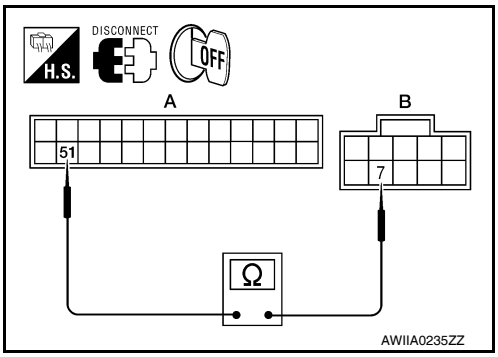

Continuity should exist.

Is the inspection result normal?

YES >> Replace A/C auto amp. Refer to VTL-7, "Removal and Installation".
NO >> Repair harness or connector.

8. CHECK REAR AIR CONTROL (FRONT) REFERENCE GROUND CIRCUIT FOR OPEN

1. Disconnect A/C auto amp. connector.
2. Check continuity between A/C auto amp. harness connector M49 (A) terminal 3 and rear air control (front) harness connector R2 (B) terminal 8.

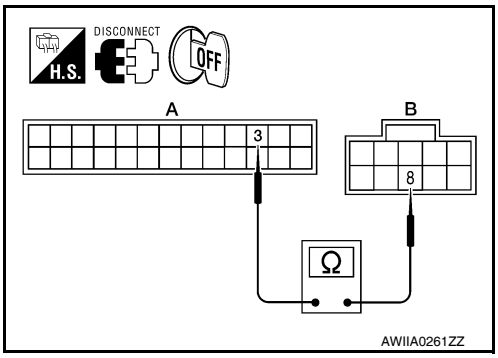

Continuity should exist.

Is the inspection result normal?

YES >> Replace A/C auto amp. Refer to VTL-7, "Removal and Installation".
NO >> Repair harness or connector.

Rear Air Control (Rear) Diagnosis Procedure

INFOID:0000000005256941

Regarding Wiring Diagram information, refer to HAC-90, "Wiring Diagram".

DIAGNOSTIC PROCEDURE FOR REAR AIR CONTROL (REAR)

1. CHECK REAR AIR CONTROL (REAR) AUX TEMPERATURE POT VOLTAGE

1. Turn ignition switch OFF.
2. Disconnect rear air control (rear).
3. Turn ignition switch ON.
4. Check voltage between rear air control (rear) harness connector M208 terminal 7 and ground.

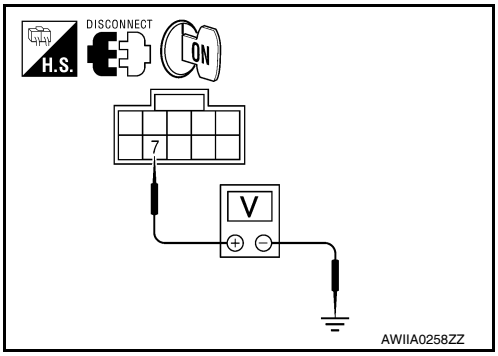

Connector	Terminals		Voltage (Approx.)
	(+)	(-)	
Rear air control (rear): M208	7	Ground	4.5V

Is the inspection result normal?

YES >> GO TO 2.
NO >> GO TO 5.

2. CHECK REAR AIR CONTROL (REAR) REFERENCE VOLTAGE

Check voltage between rear air control (rear) harness connector M208 terminal 3 and ground.

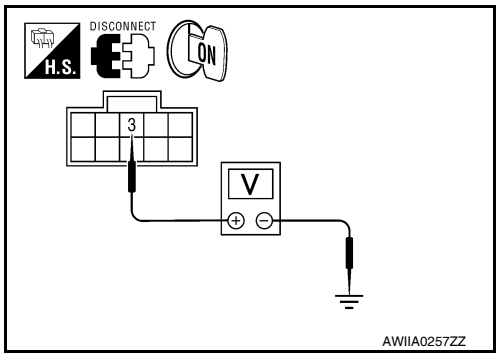

Connector	Terminals		Voltage (Approx.)
	(+)	(-)	
Rear air control (rear): M208	3	Ground	4.5V

Is the inspection result normal?

YES >> GO TO 3.
NO >> GO TO 6

3. CHECK REAR AIR CONTROL (REAR) REFERENCE RETURN GROUND

1. Turn ignition switch OFF.
2. Check continuity between rear air control (rear) harness connector M208 terminal 8 and ground.

Continuity should exist.

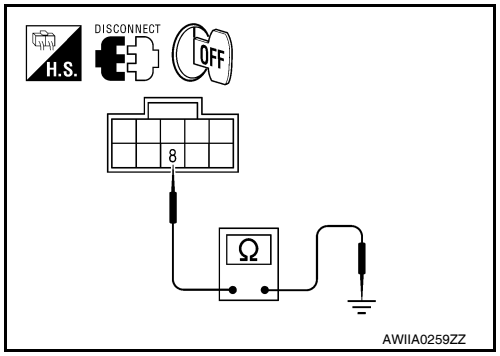

Is the inspection result normal?

YES >> GO TO 4.
NO >> GO TO 7.

4. CHECK REAR AIR CONTROL (REAR) GROUND CIRCUIT

1. Check continuity between rear air control (rear) harness connector M208 terminal 1 and ground.

Continuity should exist.

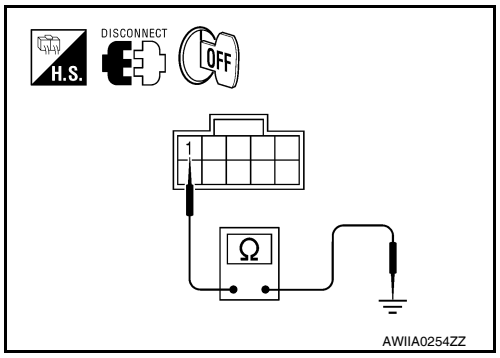

Is the inspection result normal?

YES >> Replace rear air control (rear). Refer to VTL-7, "Removal and Installation".
NO >> Repair harness or connector.

5. CHECK REAR AUX TEMP CIRCUIT BETWEEN REAR AIR CONTROL (REAR) AND A/C AUTO AMP. FOR OPEN

1. Turn ignition switch OFF.
2. Disconnect A/C auto amp. connector.
3. Check continuity between rear air control (rear) harness connector M50 (A) terminal 51 and rear air control (rear) harness connector M208 (B) terminal 7.

Continuity should exist.

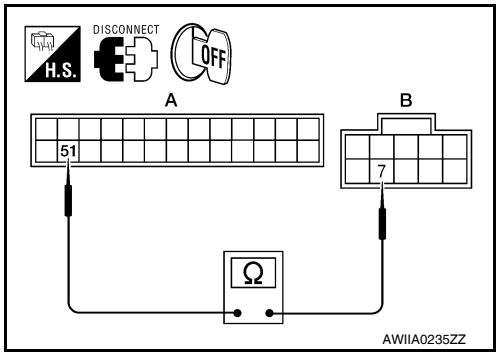

Is the inspection result normal?

YES >> Replace A/C auto amp. Refer to VTL-7, "Removal and Installation".
NO >> Repair harness or connector.

6. CHECK REFERENCE VOLTAGE CIRCUIT BETWEEN REAR AIR CONTROL (REAR) AND A/C AUTO AMP. FOR OPEN

1. Turn ignition switch OFF.
2. Disconnect A/C auto amp. connector.
3. Check continuity between rear air control (rear) harness connector M50 (A) terminal 28 and rear air control (rear) harness connector M208 (B) terminal 3.

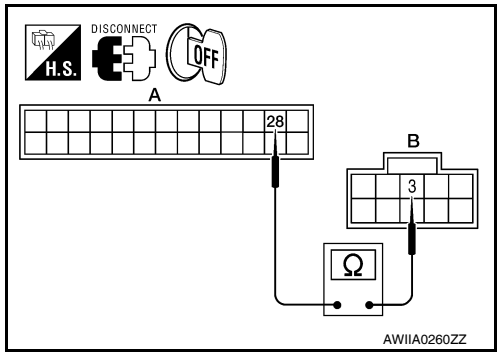

Continuity should exist.

Is the inspection result normal?

YES >> Replace A/C auto amp. Refer to VTL-7, "Removal and Installation".

NO >> Repair harness or connector.

7. CHECK REFERENCE RETURN GROUND CIRCUIT BETWEEN REAR AIR CONTROL (REAR) AND A/C AUTO AMP. FOR OPEN

1. Turn ignition switch OFF.
2. Disconnect A/C auto amp. connector.
3. Check continuity between rear air control (rear) harness connector M49 (A) terminal 3 and rear air control (rear) harness connector M208 (B) terminal 8.

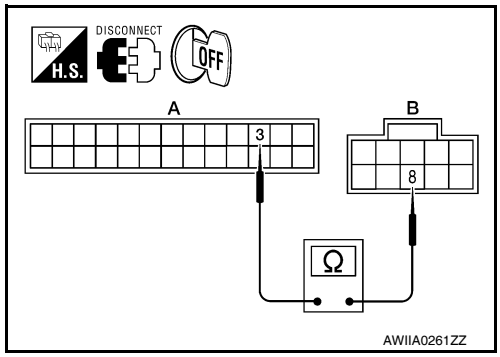

Continuity should exist.

Is the inspection result normal?

YES >> Replace A/C auto amp. Refer to VTL-7, "Removal and Installation".

NO >> Repair harness or connector.

MAGNET CLUTCH

System Description

INFOID:0000000005256942

SYSTEM DESCRIPTION

The A/C auto amp. controls compressor operation based on ambient and intake temperature and a signal from ECM.

Low Temperature Protection Control

The A/C auto amp. will turn the compressor ON or OFF as determined by a signal detected by the intake sensor and the ambient sensor.

When intake air temperature is higher than the preset value, the compressor turns ON. The compressor turns OFF when intake air temperature is lower than the preset value. That preset value is dependent on the ambient temperature, refer to the following table.

Ambient temperature °C (°F)	VK56DE Model		VQ40DE Model	
	Compressor ON intake temperature °C (°F)	Compressor OFF intake temperature °C (°F)	Compressor ON intake temperature °C (°F)	Compressor OFF intake temperature °C (°F)
0 (32)	6.0 (43)	5.5 (42)	5.5 (42)	5.0 (41)
10 (50)	5.0 (41)	5.0 (41)	4.5 (40)	4.5 (40)
20 (68)	3.5 (38)	3.0 (37)	3.0 (37)	2.5 (37)
30 (86)	3.0 (37)	2.5 (37)	2.5 (37)	1.5 (35)
40 (104)	3.0 (37)	2.5 (37)	2.0 (36)	1.0 (34)
50 (122)	3.0 (37)	2.5 (37)	2.0 (36)	1.0 (34)

Magnet Clutch Component Function Check

INFOID:0000000005256943

INSPECTION FLOW

1. CONFIRM SYMPTOM BY PERFORMING OPERATIONAL CHECK - MAGNET CLUTCH

1. Turn ignition switch ON.
2. Press the A/C switch.
3. Press vent switch ( ).
4. Display shows , A/C. Confirm that the compressor clutch engages (sound or visual inspection). (Discharge air and blower speed will depend on ambient, in-vehicle and set temperatures.)

Can the symptom be duplicated?

YES >> Inspection End.
NO >> Go to diagnosis procedure. Refer to HAC-65, "Magnet Clutch Diagnosis Procedure".

Magnet Clutch Diagnosis Procedure

INFOID:0000000005256944

Regarding Wiring Diagram information, refer to HAC-90, "Wiring Diagram".

DIAGNOSTIC PROCEDURE FOR MAGNET CLUTCH

SYMPTOM: Magnet clutch does not engage when A/C switch is ON.

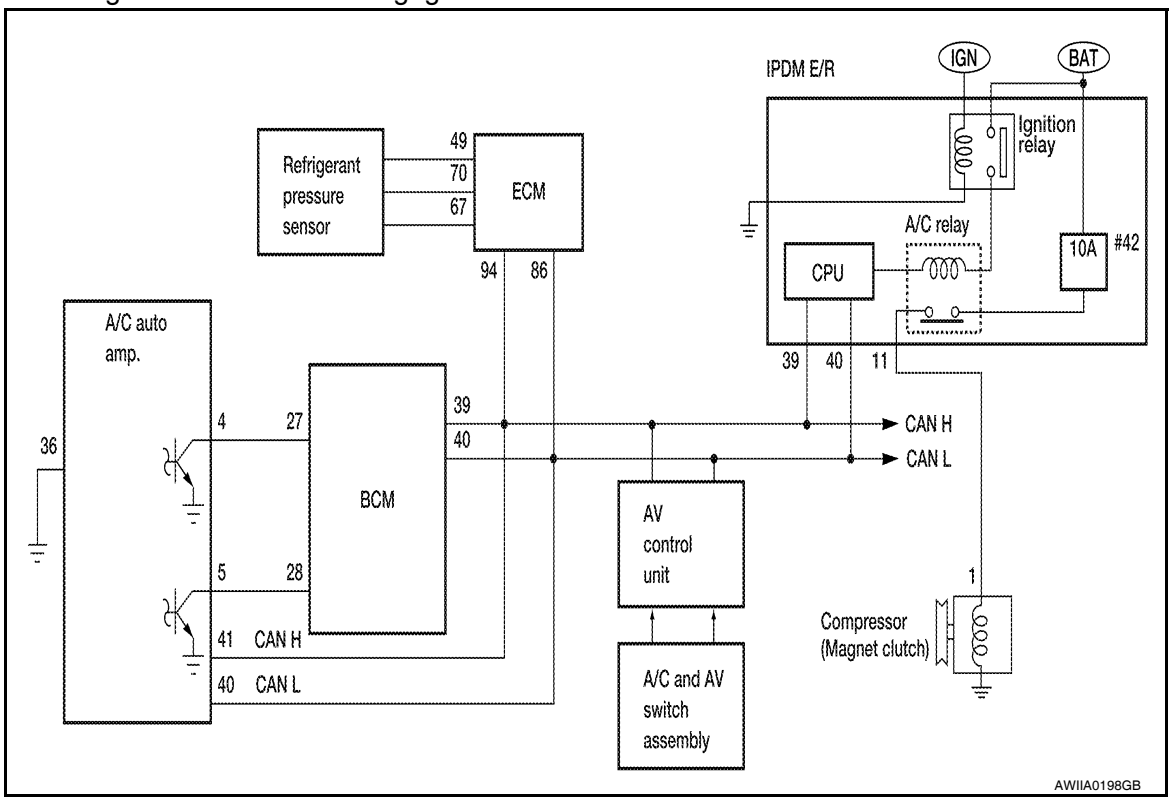

1. CHECK INTAKE AND AMBIENT SENSOR CIRCUITS

Check intake and ambient sensors. Refer to HAC-24, "A/C Auto Amp. Self-Diagnosis".

Is the inspection result normal?

YES >> GO TO 2.
NO >> • Malfunctioning intake sensor. Refer to HAC-157, "Intake Sensor Diagnosis Procedure".
• Malfunctioning ambient sensor. Refer to HAC-75, "Ambient Sensor Diagnosis Procedure".

2. PERFORM AUTO ACTIVE TEST

Refer to PCS-12, "Diagnosis Description".

Does magnet clutch operate?

YES >> • WITH CONSULT-III
GO TO 5.
• WITHOUT CONSULT-III
GO TO 6.
NO >> Check 10A fuse (No. 42, located in IPDM E/R), and GO TO 3.

3. CHECK CIRCUIT CONTINUITY BETWEEN IPDM E/R AND COMPRESSOR

1. Turn ignition switch OFF.
2. Disconnect IPDM E/R connector and compressor (magnet clutch) connector.
3. Check continuity between IPDM E/R harness connector E119 terminal 11 and A/C compressor harness connector F3 terminal 1.

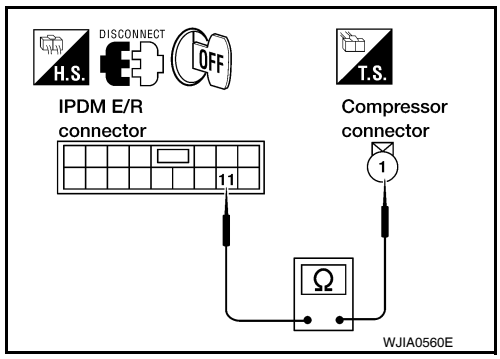

11 – 1 : Continuity should exist.

Is the inspection result normal?

YES >> GO TO 4.
NO >> Repair harness or connector.

4. CHECK MAGNET CLUTCH CIRCUIT

Check for operation sound when applying battery voltage direct current to terminal.

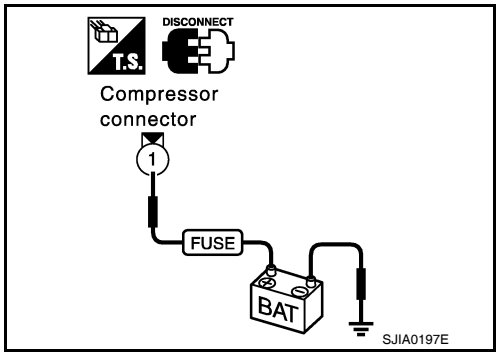

Is the inspection result normal?

YES >> Replace IPDM E/R. Refer to PCS-33, "Removal and Installation of IPDM E/R".
NO >> Replace magnet clutch. Refer to HA-40, "Removal and Installation for Compressor Clutch".

5. CHECK BCM INPUT (COMPRESSOR ON) SIGNAL

Check compressor ON/OFF signal. Refer to HAC-21, "CONSULT-III Function (HVAC)".

A/C SW ON	**: COMP ON SIG ON**
A/C SW OFF	**: COMP ON SIG OFF**

Is the inspection result normal?

YES >> GO TO 8.
NO >> GO TO 6.

6. CHECK CIRCUIT CONTINUITY BETWEEN BCM AND A/C AUTO AMP.

1. Turn ignition switch OFF.
2. Disconnect BCM connector and A/C auto amp. connector.
3. Check continuity between BCM harness connector M18 (A) terminal 27 and A/C auto amp. harness connector M49 (B) terminal 4.

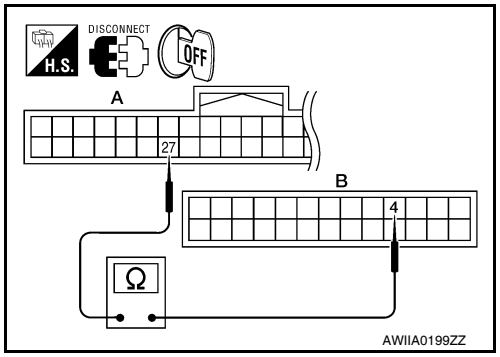

27 - 4	**Continuity should exist.**

Is the inspection result normal?

YES >> GO TO 7.
NO >> Repair harness or connector.

7. CHECK VOLTAGE FOR A/C AUTO AMP. (A/C COMPRESSOR ON SIGNAL)

1. Reconnect BCM connector and A/C auto amp. connector.
2. Turn ignition switch ON.
3. Check voltage between A/C auto amp. harness connector M49 terminal 4 and ground.

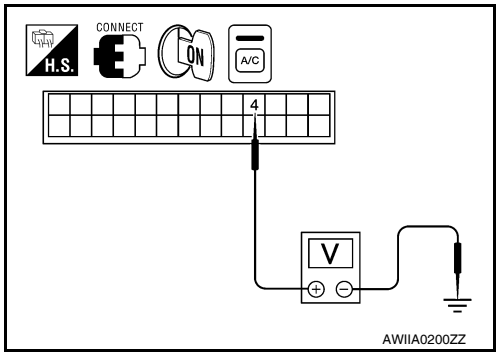

Terminals			Condition	Voltage
(+)		(-)		
A/C auto amp. connector	Terminal No.			
M49	4	Ground	A/C switch: ON	Approx. 0V
			A/C switch: OFF	Approx. 5V

Is the inspection result normal?

YES >> GO TO 8.
NO-1 >> If the voltage is approx. 5V when A/C switch is ON, replace A/C auto amp. Refer to VTL-7, "Removal and Installation".
NO-2 >> If the voltage is approx. 0V when A/C switch is OFF, replace BCM. Refer to BCS-59, "Removal and Installation".

8. CHECK REFRIGERANT PRESSURE SENSOR

1. Start engine.

2. Check voltage between ECM harness connector F54 (VQ40DE) or F79 (VK56DE) terminal 70 and ground.

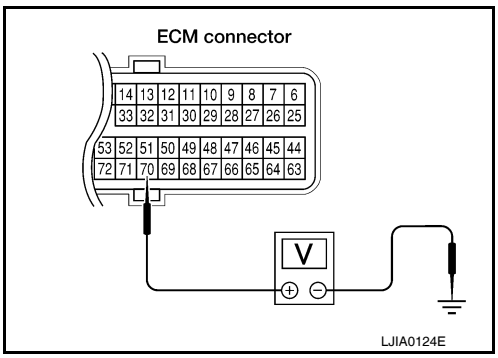

Terminals			Condition	Voltage
(+)		(-)		
ECM connector	Terminal No.			
F54 (VQ40DE) F79 (VK56DE)	70	Ground	A/C switch: ON	Approx. 0.36 - 3.88V

Is the inspection result normal?

YES >> GO TO 9.
NO >> Refer to EC-419, "Diagnosis Procedure" (VQ40DE) or EC-893, "Diagnosis Procedure" (VK56DE).

9. CHECK BCM INPUT (FAN ON) SIGNAL

Check FAN ON/OFF signal. Refer to HAC-21, "CONSULT-III Function (HVAC)".

FRONT BLOWER CONTROL DIAL ON **: FAN ON SIG ON**

FRONT BLOWER CONTROL DIAL OFF **: FAN ON SIG OFF**

Is the inspection result normal?

YES >> GO TO 12.
NO >> GO TO 10.

10. CHECK CIRCUIT CONTINUITY BETWEEN BCM AND A/C AUTO AMP.

1. Turn ignition switch OFF.
2. Disconnect BCM connector and A/C auto amp. connector.
3. Check continuity between BCM harness connector M18 (A) terminal 28 and A/C auto amp. harness connector M49 (B) terminal 5.

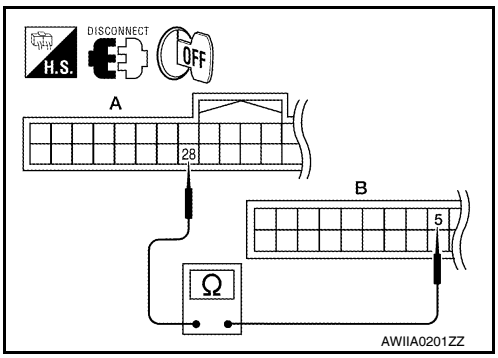

28 - 5 **Continuity should exist.**

Is the inspection result normal?

YES >> GO TO 11.
NO >> Repair harness or connector.

11. CHECK VOLTAGE FOR A/C AUTO AMP. (FAN ON SIGNAL)

1. Reconnect BCM connector and A/C auto amp. connector.
2. Turn ignition switch ON.
3. Check voltage between A/C auto amp. harness connector M49 terminal 5 and ground.

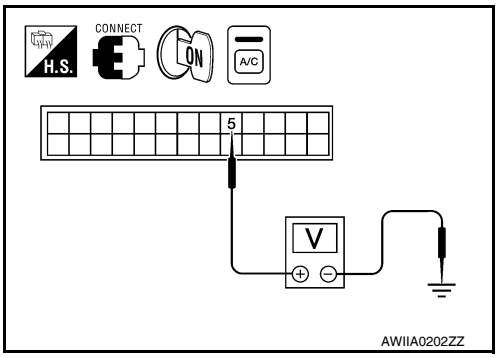

Terminals			Condition	Voltage
(+)		(-)		
A/C auto amp. connector	Terminal No.			
M49	5	Ground	A/C switch: ON Blower motor operates	Approx. 0V
			A/C switch: OFF	Approx. 5V

Is the inspection result normal?

YES >> GO TO 12.
NO-1 >> If the voltage is approx. 5V when blower motor is ON, replace A/C auto amp. Refer to VTL-7, "Removal and Installation".

NO-2 >> If the voltage is approx. 0V when blower motor is OFF, replace BCM. Refer to BCS-59, "Removal and Installation".

12. CHECK CAN COMMUNICATION

Check CAN communication. Refer to LAN-14, "Trouble Diagnosis Flow Chart".
- BCM – ECM
- ECM – IPDM E/R
- ECM – A/C auto amp.

Is the inspection result normal?

YES >> Inspection End.
NO >> Repair or replace malfunctioning part(s).

WATER VALVE CIRCUIT

Water Valve Description (VK56DE)

INFOID:0000000005256945

COMPONENT DESCRIPTION

Water Valve
The water valve (1) cuts the flow of engine coolant to the front and rear heater cores to allow for maximum cooling during A/C operation. It is controlled by the A/C auto amp.

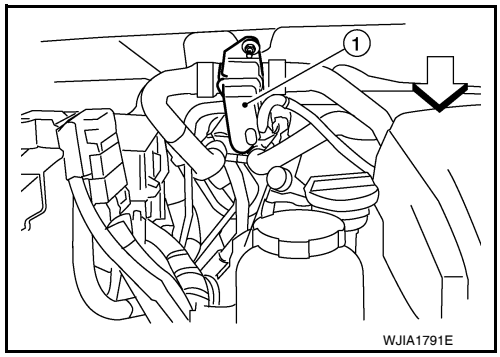

Water Valve Diagnosis Procedure (VK56DE)

INFOID:0000000005256946

Regarding Wiring Diagram information, refer to HAC-90, "Wiring Diagram".

DIAGNOSTIC PROCEDURE FOR WATER VALVE

1. CHECK WATER VALVE POWER AND GROUND CIRCUITS

1. Disconnect water valve connector F68.
2. Turn ignition switch ON.
3. Rotate temperature control dial (driver) to 32°C (90°F).
4. Check voltage between water valve harness connector F68 terminal 1 and terminal 2 while rotating temperature control dial (driver) to 18°C (60°F).

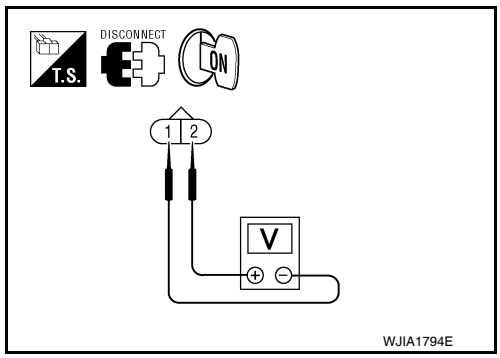

Connector	Terminals		Condition	Voltage (Approx.)
	(+)	(-)		
Water valve: F68	2	1	Rotate temperature control dial	Battery voltage

Is the inspection result normal?

YES >> GO TO 3.
NO >> GO TO 2.

2. CHECK WATER VALVE CONTROL OUTPUT CIRCUIT

1. Turn ignition switch OFF.
2. Disconnect A/C auto amp. connector M50.
3. Check continuity between water valve harness connector F68 (A) terminal 2 and A/C auto amp. harness connector M50 (B) terminal 46.

2 - 46 : Continuity should exist.

4. Check continuity between water valve harness connector F68 (A) terminal 2 and ground.

2 - Ground : Continuity should not exist.

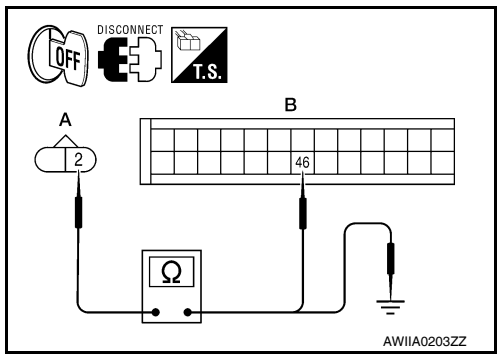

Is the inspection result normal?

YES >> Replace A/C auto amp. Refer to VTL-7, "Removal and Installation".
NO >> Repair harness or connector.

3. CHECK WATER VALVE POWER AND GROUND CIRCUITS

1. Rotate temperature control dial (driver) to 18°C (60°F).
2. Check voltage between water valve harness connector F68 terminal 1 and terminal 2 while rotating temperature control dial (driver) to 32°C (90°F).

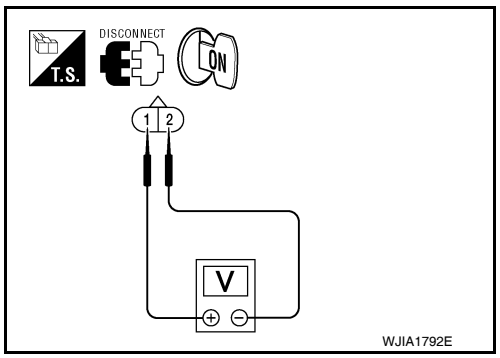

Connector	Terminals		Condition	Voltage (Approx.)
	(+)	(-)		
Water valve: F68	1	2	Rotate temperature control dial	Battery voltage

Is the inspection result normal?

YES >> Replace the water valve.
NO >> GO TO 4.

4. CHECK WATER VALVE CONTROL OUTPUT CIRCUIT

1. Turn ignition switch OFF.
2. Disconnect A/C auto amp. connector M50.
3. Check continuity between water valve harness connector F68 (A) terminal 1 and A/C auto amp. harness connector M50 (B) terminal 45.

1 - 45 : Continuity should exist.

4. Check continuity between water valve harness connector F68 (A) terminal 1 and ground.

1 - Ground : Continuity should not exist.

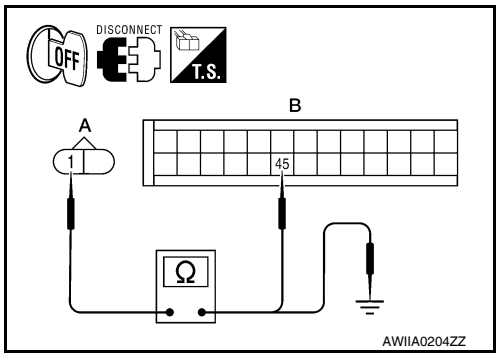

Is the inspection result normal?

YES >> Replace A/C auto amp. Refer to VTL-7, "Removal and Installation".
NO >> Repair harness or connector.

HEATER PUMP

System Description (VQ40DE)

INFOID:0000000005256947

SYSTEM DESCRIPTION

Component Parts

Heater pump control system components are:

- A/C auto amp.
- Heater pump relay
- Heater pump
- Intake sensor

System Operation

The heater pump improves heater performance specifically at idle conditions. It is designed to operate in either of the following 2 situations:

1. Front blower motor set to maximum speed and temperature control dial (driver or passenger) set to full hot 32°C (90°F) or
2. Engine coolant temperature (signal via CAN communication) minus heater core outlet temperature (intake sensor input to A/C auto amp.) is greater than 20°C (68°F). If the difference is less than 16°C (61°F), the heater pump will not operate unless the conditions in item No. 1 above are met.

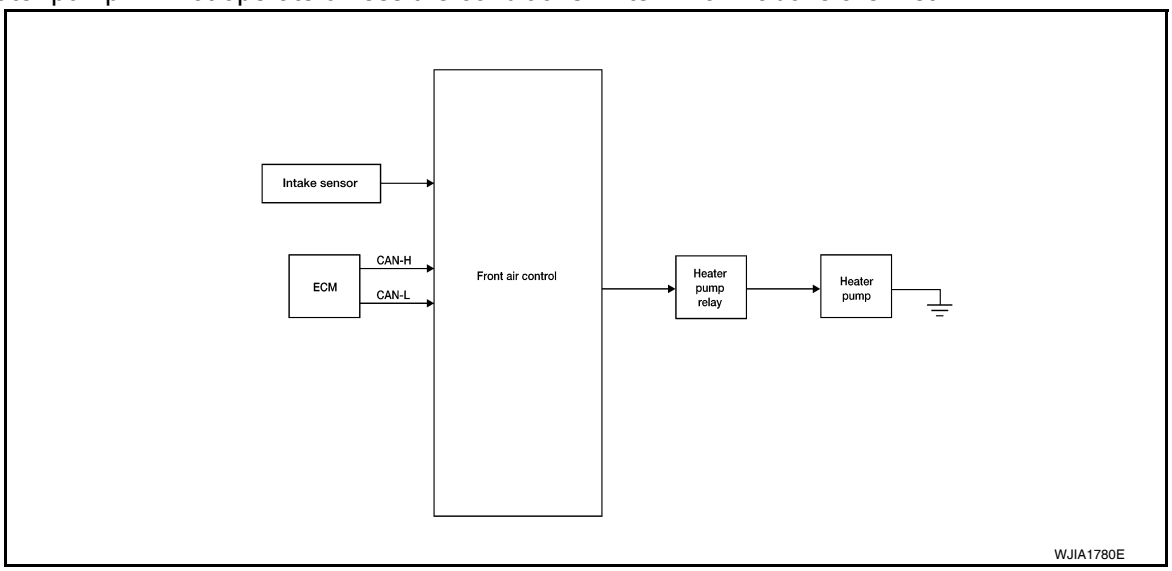

Diagnosis Procedure (VQ40DE)

INFOID:0000000005256948

Regarding Wiring Diagram information, refer to HAC-90, "Wiring Diagram".

DIAGNOSTIC PROCEDURE FOR HEATER PUMP CIRCUIT

1. CHECK POWER SUPPLY TO HEATER PUMP

1. Disconnect heater pump connector.
2. Turn ignition switch ON.
3. Set front blower motor to maximum speed.
4. Turn temperature control dial (passenger or driver) to full hot 32°C (90°F).

5. Check voltage between heater pump harness connector E141 terminal 1 and ground.

1 - Ground : Battery voltage

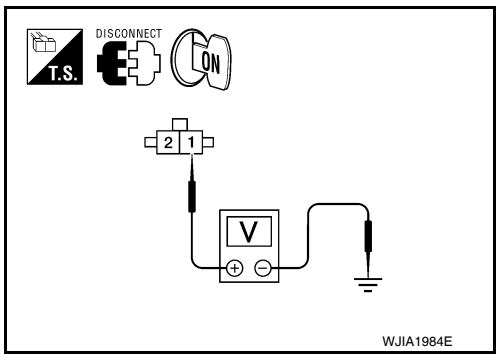

Is the inspection result normal?

YES >> GO TO 2.
NO >> GO TO 3.

2. CHECK HEATER PUMP GROUND

1. Turn ignition switch OFF.
2. Check continuity between heater pump harness connector E141 terminal 2 and ground.

2 - Ground : Continuity should exist.

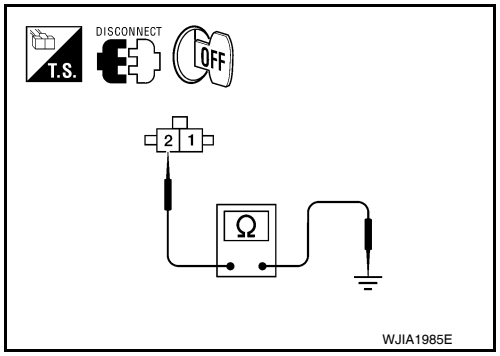

Is the inspection result normal?

YES >> Replace heater pump. Refer to HA-57, "Removal and Installation".
NO >> Repair harness or connector.

3. CHECK HEATER PUMP RELAY

1. Turn ignition switch OFF.
2. Check heater pump relay. Refer to HAC-74, "Component Inspection (VQ40DE)".

Is the inspection result normal?

YES >> GO TO 4.
NO >> Replace heater pump relay.

4. CHECK RELAY POWER SUPPLY

1. Turn ignition switch ON.
2. Check voltage between heater pump relay harness connector E144 terminals 2, 5 and ground.

2 - Ground : Battery voltage
5 - Ground : Battery voltage

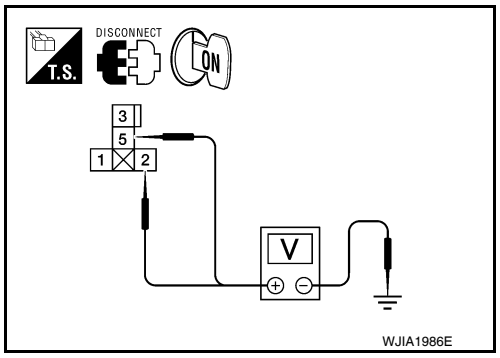

Is the inspection result normal?

YES >> GO TO 5.
NO >> Repair harness or connector.

5. CHECK HEATER PUMP MOTOR POWER CIRCUIT

1. Turn ignition switch OFF.

2. Check continuity between heater pump relay harness connector (A) E144 terminal 3 and heater pump harness connector (B) E141 terminal 1.

3 - 1 : Continuity should exist.

3. Check continuity between heater pump relay harness connector (A) E144 terminal 3 and ground.

3 - Ground : Continuity should not exist.

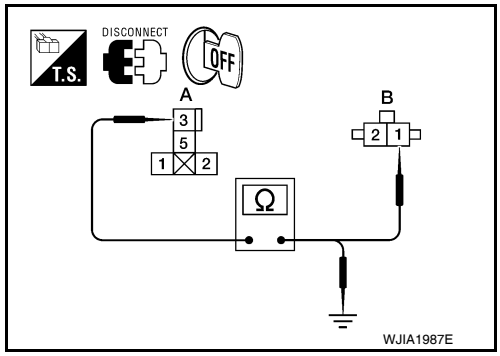

Is the inspection result normal?

YES >> GO TO 6.
NO >> Repair harness or connector.

6. CHECK CIRCUIT BETWEEN HEATER PUMP RELAY AND A/C AUTO AMP.

1. Disconnect A/C auto amp. connector.
2. Check continuity between A/C auto amp. harness connector M50 (A) terminal 50 and heater pump relay harness connector E144 (B) terminal 1.

1 - 50 : Continuity should exist.

3. Check continuity between heater pump relay harness connector E144 (B) terminal 1 and ground.

1 - Ground : Continuity should not exist.

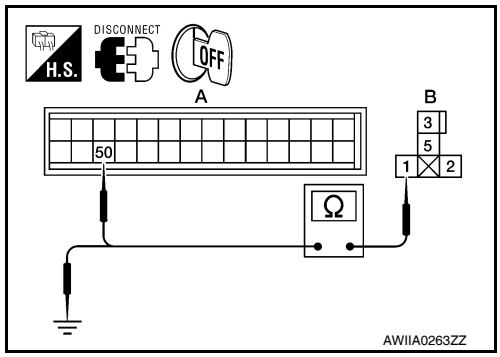

Is the inspection result normal?

YES >> Replace A/C auto amp. Refer to VTL-7, "Removal and Installation".
NO >> Repair harness or connector.

Component Inspection (VQ40DE)

INFOID:0000000005256949

COMPONENT INSPECTION

Heater Pump Relay
Check continuity between terminals 3 and 5.

Conditions	Continuity
12V direct current supply between terminals 1 and 2	Yes
No current supply	No

If NG, replace relay.

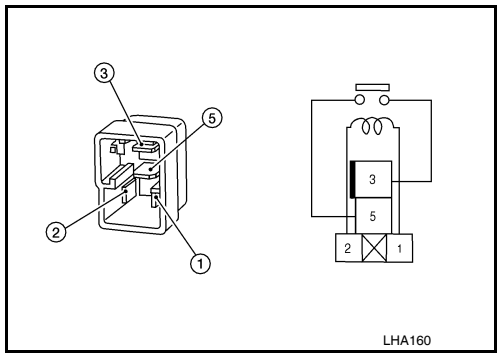

AMBIENT SENSOR

Component Description

INFOID:0000000005256950

COMPONENT DESCRIPTION

Ambient Sensor

Ambient sensor (1) is attached to the radiator core support (left side). It detects ambient temperature and converts it into a value which is then input into the A/C auto amp.

- ⇐: Front

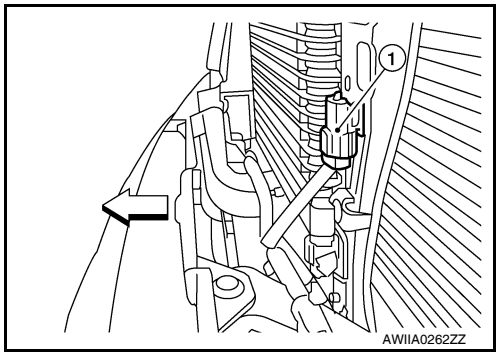

AMBIENT TEMPERATURE INPUT PROCESS

The A/C auto amp. includes a processing circuit for the ambient sensor input. However, when the temperature detected by the ambient sensor increases quickly, the processing circuit retards the A/C auto amp. function. It only allows the A/C auto amp. to recognize an ambient temperature increase of 0.33°C (0.6°F) per 100 seconds.

This prevents constant adjustments due to momentary conditions, such as stopping after high speed driving. Although the actual ambient temperature has not changed, the temperature detected by the ambient sensor will increase. This is because the heat from the engine compartment can radiate to the front grille area, location of the ambient sensor.

Ambient Sensor Diagnosis Procedure

INFOID:0000000005256951

Regarding Wiring Diagram information, refer to HAC-90, "Wiring Diagram".

DIAGNOSTIC PROCEDURE FOR AMBIENT SENSOR

SYMPTOM: Ambient sensor circuit is open or shorted. (40 or 41 is indicated on A/C auto amp. as a result of conducting the A/C auto amp. self-diagnosis)

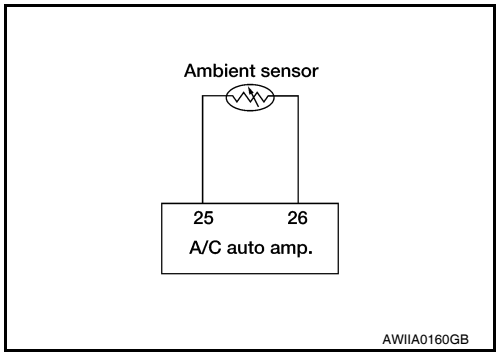

1. CHECK VOLTAGE BETWEEN AMBIENT SENSOR AND GROUND

1. Disconnect ambient sensor connector.
2. Turn ignition switch ON.
3. Check voltage between ambient sensor harness connector E1 terminal 1 and ground.

1 - Ground : Approx. 5V

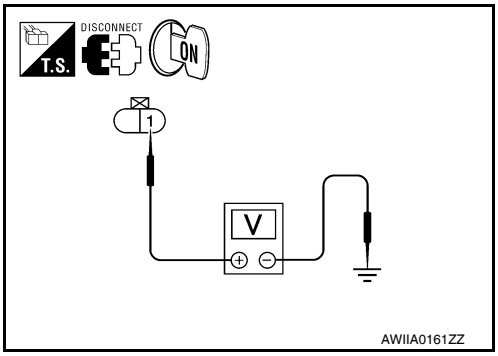

Is the inspection result normal?

YES >> GO TO 2.
NO >> GO TO 4.

2. CHECK CIRCUIT CONTINUITY BETWEEN AMBIENT SENSOR AND A/C AUTO AMP.

1. Turn ignition switch OFF.
2. Disconnect A/C auto amp. connector.
3. Check continuity between ambient sensor harness connector E1 (B) terminal 2 and A/C auto amp. harness connector M49 (A) terminal 26.

2 - 26 : Continuity should exist.

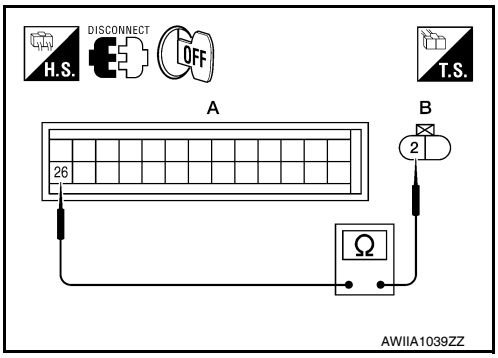

Is the inspection result normal?

YES >> GO TO 3.
NO >> Repair harness or connector.

3. CHECK AMBIENT SENSOR

Check the Ambient Sensor Circuit. Refer to HAC-76, "Ambient Sensor Component Inspection".

Is the inspection result normal?

YES >> 1. Replace A/C auto amp. Refer to VTL-7, "Removal and Installation".
2. GO TO HAC-24, "A/C Auto Amp. Self-Diagnosis" and perform self-diagnosis.
NO >> 1. Replace ambient sensor.
2. GO TO HAC-24, "A/C Auto Amp. Self-Diagnosis" and perform self-diagnosis.

4. CHECK CIRCUIT CONTINUITY BETWEEN AMBIENT SENSOR AND A/C AUTO AMP.

1. Turn ignition switch OFF.
2. Disconnect A/C auto amp. connector.
3. Check continuity between ambient sensor harness connector E1 (B) terminal 1 and A/C auto amp. harness connector M49 (A) terminal 25.

1 - 25 : Continuity should exist.

4. Check continuity between ambient sensor harness connector E1 (B) terminal 1 and ground.

1 - Ground : Continuity should not exist.

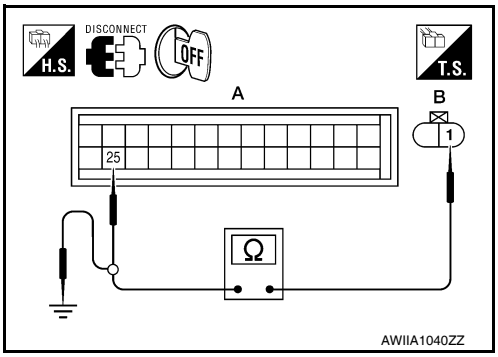

Is the inspection result normal?

YES >> 1. Replace A/C auto amp. Refer to VTL-7, "Removal and Installation"
2. GO TO HAC-24, "A/C Auto Amp. Self-Diagnosis" and perform self-diagnosis.
NO >> Repair harness or connector.

Ambient Sensor Component Inspection

INFOID:0000000005256952

COMPONENT INSPECTION

Ambient Sensor

After disconnecting ambient sensor (1) connector E1, measure resistance between terminals 1 and 2 at sensor component side, using the table below.

- ⇐: Front

NOTE:

The ambient sensor is located behind the front grille, below the hood latch. The ambient sensor (1) provides input for the automatic A/C system.

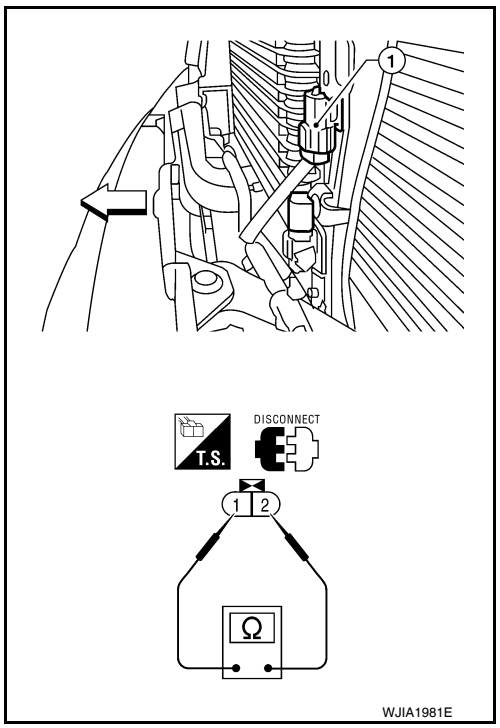

Temperature °C (°F)	Resistance kΩ
–15 (5)	12.73
–10 (14)	9.92
–5 (23)	7.80
0 (32)	6.19
5 (41)	4.95
10 (50)	3.99
15 (59)	3.24
20 (68)	2.65
25 (77)	2.19
30 (86)	1.81
35 (95)	1.51
40 (104)	1.27
45 (113)	1.07

If NG, replace ambient sensor. Refer to HA-56, "Removal and Installation".

IN-VEHICLE SENSOR

Component Description

INFOID:0000000005256953

COMPONENT DESCRIPTION

In-vehicle Sensor

The in-vehicle sensor (1) is located on the lower instrument panel LH. It converts variations in temperature of passenger compartment air (drawn in through the integrated fan) into a resistance value. It is then input into the A/C auto amp.

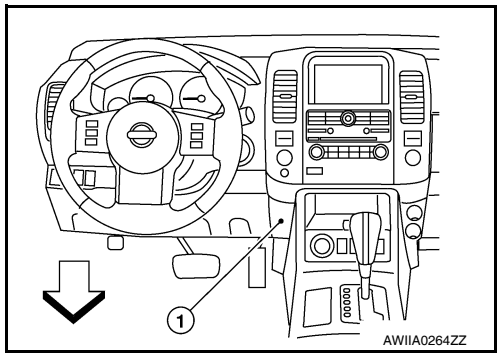

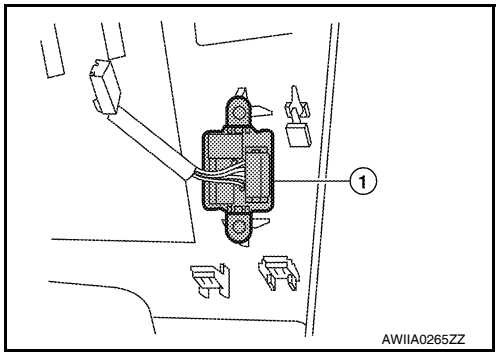

In-Vehicle Sensor Diagnosis Procedure

INFOID:0000000005256954

Regarding Wiring Diagram information, refer to HAC-90, "Wiring Diagram".

DIAGNOSTIC PROCEDURE FOR IN-VEHICLE SENSOR

SYMPTOM: In-vehicle sensor circuit is open or shorted. Using the CONSULT-III, DTC B2578 or B2579 is displayed. Without a CONSULT-III, code 30, 31, 44 or 46 is indicated on A/C auto amp. as a result of conducting self-diagnosis.

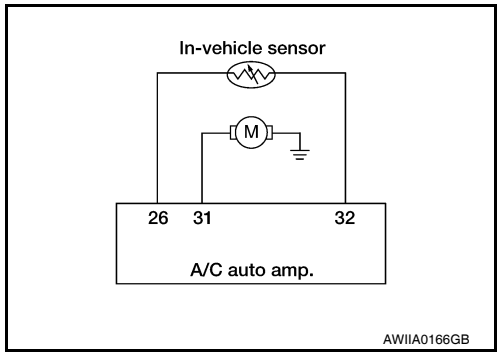

1. CHECK IN-VEHICLE SENSOR CIRCUIT

Is self-diagnosis DTC B2578 or B2579 (with CONSULT-III) or code 30, 31 44 or 46 (without CONSULT-III) present?

YES or NO?

YES >> GO TO 6.
NO >> GO TO 2.

2. CHECK VOLTAGE BETWEEN IN-VEHICLE SENSOR AND GROUND

1. Disconnect in-vehicle sensor connector.
2. Turn ignition switch ON.
3. Check voltage between in-vehicle sensor harness connector M32 terminal 1 and ground.

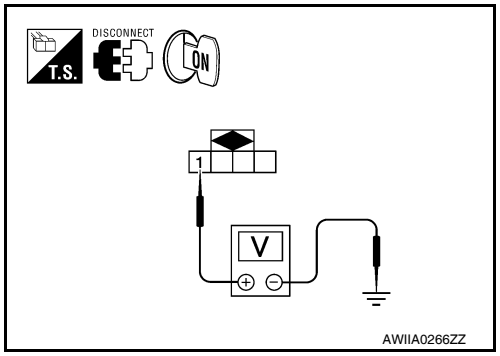

1 - Ground : Approx. 5V.

Is the inspection result normal?

YES >> GO TO 3.
NO >> GO TO 5.

3. CHECK CIRCUIT CONTINUITY BETWEEN IN-VEHICLE SENSOR AND A/C AUTO AMP.

1. Turn ignition switch OFF.
2. Disconnect A/C auto amp. connector M49.
3. Check continuity between in-vehicle sensor harness connector M32 (B) terminal 1 and A/C auto amp. harness connector M50 (A) terminal 32.

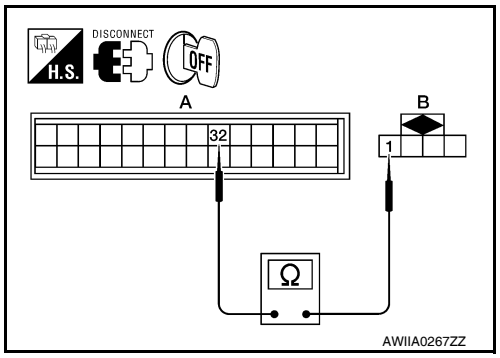

1 - 32 : Continuity should exist.

Is the inspection result normal?

YES >> GO TO 4.
NO >> Repair harness or connector.

4. CHECK IN-VEHICLE SENSOR

Check in-vehicle sensor. Refer to HAC-80, "In-Vehicle Sensor Component Inspection".

Is the inspection result normal?

YES >> 1. Replace A/C auto amp. Refer to VTL-7, "Removal and Installation".
2. Go to HAC-24, "A/C Auto Amp. Self-Diagnosis" and perform self-diagnosis.

NO >> 1. Replace in-vehicle sensor. Refer to VTL-9, "Removal and Installation".
2. Go to HAC-24, "A/C Auto Amp. Self-Diagnosis" and perform self-diagnosis.

5. CHECK CIRCUIT CONTINUITY BETWEEN IN-VEHICLE SENSOR AND A/C AUTO AMP.

1. Turn ignition switch OFF.
2. Disconnect A/C auto amp. connector.
3. Check continuity between in-vehicle sensor harness connector M32 (B) terminal 4 and A/C auto amp. harness connector M49 (A) terminal 26.

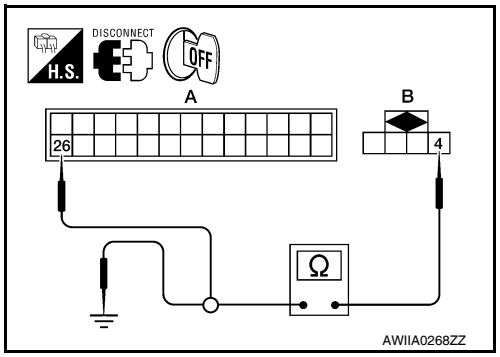

4 - 26 : Continuity should exist.

4. Check continuity between in-vehicle sensor harness connector M32 (B) terminal 4 and ground.

4 - Ground Continuity should not exist.

Is the inspection result normal?

YES >> 1. Replace A/C auto amp. Refer to VTL-7, "Removal and Installation".
2. Go to HAC-24, "A/C Auto Amp. Self-Diagnosis" and perform self-diagnosis.

NO >> Repair harness or connector.

6. CHECK CIRCUIT CONTINUITY BETWEEN IN-VEHICLE SENSOR MOTOR AND A/C AUTO AMP. (SELF-DIAGNOSIS CODES 30, 31, 44, 46 OR DTC B2578, B2579)

1. Turn ignition switch OFF.
2. Disconnect A/C auto amp. connector and in-vehicle sensor connector.
3. Check continuity between in-vehicle sensor harness connector M32 (B) terminal 3 and A/C auto amp. harness connector M50 (A) terminal 31.

3 - 31 : Continuity should exist.

4. Check continuity between in-vehicle sensor harness connector M32 (B) terminal 3 and ground.

2 - Ground : Continuity should exist.
3 - Ground : Continuity should not exist.

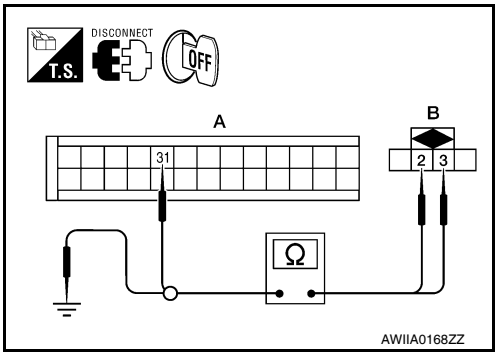

Is the inspection result normal?

YES >> 1. Replace A/C auto amp. Refer to VTL-7, "Removal and Installation".
2. Go to HAC-24, "A/C Auto Amp. Self-Diagnosis" and perform self-diagnosis.

NO >> Repair harness or connector.

In-Vehicle Sensor Component Inspection

INFOID:0000000005256955

COMPONENT INSPECTION

In-vehicle Sensor

After disconnecting in-vehicle sensor connector M32, measure resistance between terminals 1 and 4 at sensor component side, using the table below.

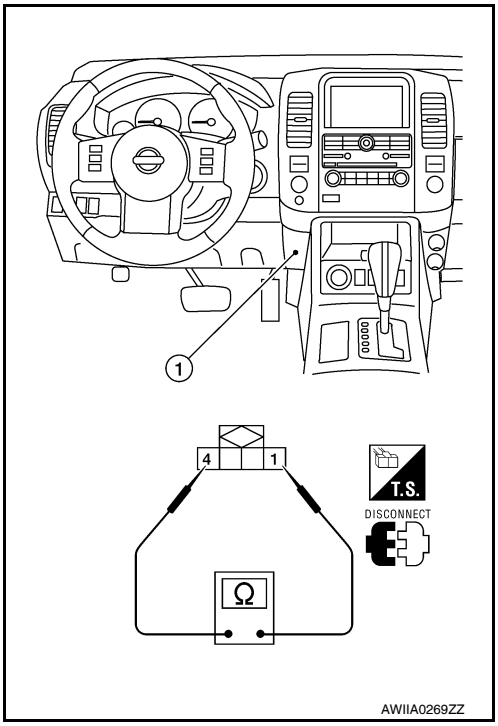

Temperature °C (°F)	Resistance kΩ
–15 (5)	21.40
–10 (14)	16.15
–5 (23)	12.29
0 (32)	9.41
5 (41)	7.27
10 (50)	5.66
15 (59)	4.45
20 (68)	3.51
25 (77)	2.79
30 (86)	2.24
35 (95)	1.80
40 (104)	1.45
45 (113)	1.18

If NG, replace in-vehicle sensor. Refer to VTL-9, "Removal and Installation".

OPTICAL SENSOR

Component Description

INFOID:0000000005256956

COMPONENT DESCRIPTION

The optical sensor (1) is located in the center of the defroster grille. It detects sunload entering through windshield by means of a photo diode. The sensor converts the sunload into a current value which is then input into the A/C auto amp.

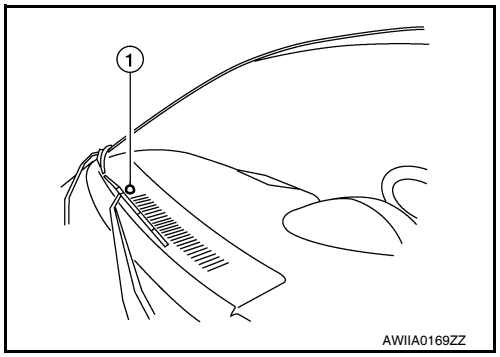

OPTICAL INPUT PROCESS

The A/C auto amp. includes a processing circuit which averages the variations in detected sunload over a period of time. This prevents adjustments in the ATC system operation due to small or quick variations in detected sunload.

For example, consider driving along a road bordered by an occasional group of large trees. The sunload detected by the optical sensor will vary whenever the trees obstruct the sunlight. The processing circuit averages the detected sunload over a period of time, so that the (insignificant) effect of the trees momentarily obstructing the sunlight does not cause any change in the ATC system operation. On the other hand, shortly after entering a long tunnel, the system will recognize the change in sunload, and the system will react accordingly.

Optical Sensor Diagnosis Procedure

INFOID:0000000005256957

Regarding Wiring Diagram information, refer to HAC-90, "Wiring Diagram".

DIAGNOSTIC PROCEDURE FOR OPTICAL SENSOR

SYMPTOM: Optical sensor circuit is open or shorted. Using the CONSULT-III, DTC B257F or B2580 is displayed. Without a CONSULT-III, code 50 or 52 is indicated on A/C auto amp. as a result of conducting self-diagnosis.

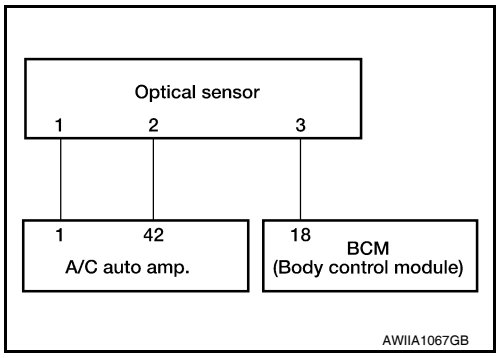

1. CHECK CIRCUIT CONTINUITY BETWEEN OPTICAL SENSOR AND A/C AUTO AMP.

1. Turn ignition switch OFF.
2. Disconnect A/C auto amp. connector and optical sensor connector.
3. Check continuity between optical sensor harness connector M145 (B) terminals 1 and 2 and A/C auto amp. harness connector M50 (C) terminal 42 and M49 (A) terminal 1.

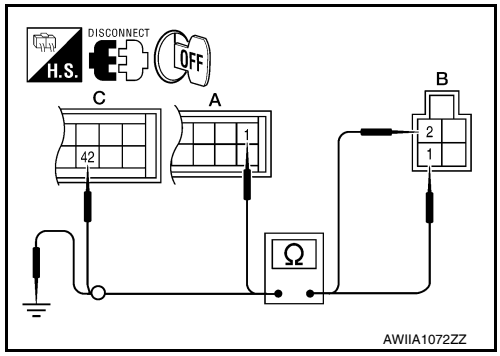

1 - 1 : Continuity should exist.

2 - 42 : Continuity should exist.

4. Check continuity between optical sensor harness connector M145 (B) terminal 1 and 2 and ground.

1, 2 - Ground. : Continuity should not exist.

Is the inspection result normal?

YES >> GO TO 2.
NO >> Repair harness or connector.

2. CHECK CIRCUIT CONTINUITY BETWEEN OPTICAL SENSOR AND BCM

1. Disconnect BCM connector.
2. Check continuity between optical sensor harness connector M145 (B) terminal 3 and BCM harness connector M18 (A) terminal 18.

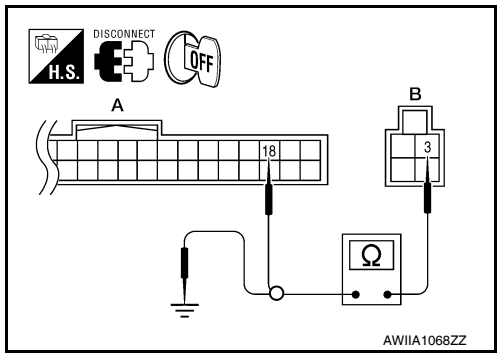

3 - 18 : Continuity should exist.

3. Check continuity between optical sensor harness connector M145 (B) terminal 3 and ground.

3 - Ground : Continuity should not exist.

Is the inspection result normal?

YES >> Replace optical sensor. Refer to VTL-10, "Removal and Installation".
NO >> Repair harness or connector.

INTAKE SENSOR

System Description

INFOID:0000000005256958

COMPONENT DESCRIPTION

Intake Sensor

The intake sensor is located on the heater & cooling unit assembly. It converts temperature of air after if passes through the evaporator into a resistance value which is then input to the A/C auto amp.

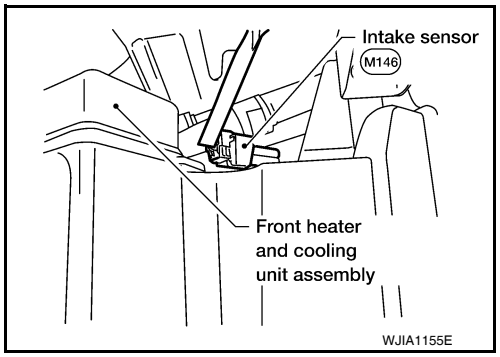

Intake Sensor Diagnosis Procedure

INFOID:0000000005256959

Regarding Wiring Diagram information, refer to HAC-90, "Wiring Diagram".

DIAGNOSTIC PROCEDURE FOR INTAKE SENSOR

SYMPTOM: Intake sensor circuit is open or shorted. Using the CONSULT-III, DTC B2581 or B2582 is displayed. Without a CONSULT-III, code 56 or 57 is indicated on A/C auto amp. as a result of conducting self-diagnosis.

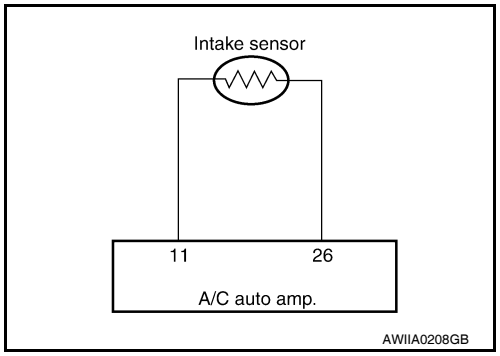

1. CHECK VOLTAGE BETWEEN INTAKE SENSOR AND GROUND

1. Disconnect intake sensor connector.
2. Turn ignition switch ON.
3. Check voltage between intake sensor harness connector M146 terminal 2 and ground.

2 - Ground : Approx. 5V

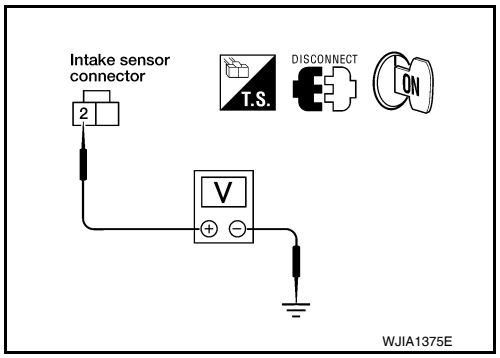

Is the inspection result normal?

YES >> GO TO 2.
NO >> GO TO 4.

2. CHECK CIRCUIT CONTINUITY BETWEEN INTAKE SENSOR AND A/C AUTO AMP.

1. Turn ignition switch OFF.
2. Disconnect A/C auto amp. connector.
3. Check continuity between intake sensor harness connector M146 (B) terminal 1 and A/C auto amp. harness connector M49 (A) terminal 26.

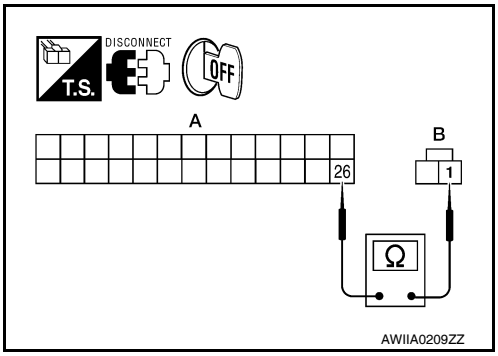

1 - 26 : Continuity should exist.

Is the inspection result normal?

YES >> GO TO 3.
NO >> Repair harness or connector.

3. CHECK INTAKE SENSOR

Check intake sensor. Refer to HAC-84, "Intake Sensor Component Inspection".

Is the inspection result normal?

YES >> 1. Replace A/C auto amp. Refer to VTL-7, "Removal and Installation".
2. Go to HAC-24, "A/C Auto Amp. Self-Diagnosis" and perform self-diagnosis.

NO >> 1. Replace intake sensor. Refer to VTL-11, "Removal and Installation".
2. Go to HAC-24, "A/C Auto Amp. Self-Diagnosis" and perform self-diagnosis.

4. CHECK CIRCUIT CONTINUITY BETWEEN INTAKE SENSOR AND A/C AUTO AMP.

1. Turn ignition switch OFF.
2. Disconnect A/C auto amp. connector.
3. Check continuity between intake sensor harness connector M146 (B) terminal 2 and A/C auto amp. harness connector M49 (A) terminal 11.

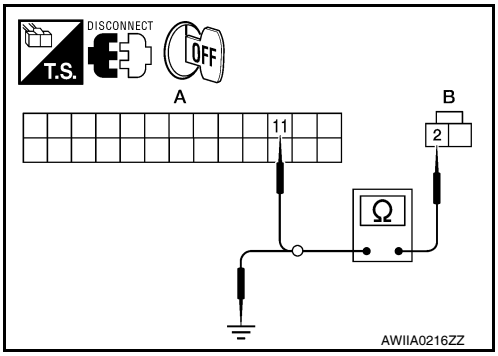

2 - 11 : Continuity should exist.

4. Check continuity between intake sensor harness connector M146 (B) terminal 2 and ground.

2 - Ground : Continuity should not exist.

Is the inspection result normal?

YES >> 1. Replace A/C auto amp. Refer to VTL-7, "Removal and Installation".
2. Go to HAC-24, "A/C Auto Amp. Self-Diagnosis" and perform self-diagnosis.

NO >> Repair harness or connector.

Intake Sensor Component Inspection

INFOID:0000000005256960

COMPONENT INSPECTION

Intake Sensor

After disconnecting intake sensor connector, measure resistance between terminals 1 and 2 at sensor harness side, using the table below.

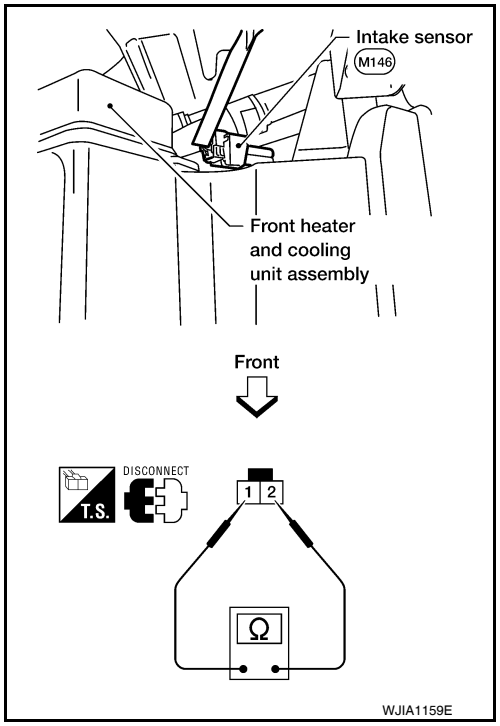

Temperature °C (°F)	Resistance kΩ
–15 (5)	209.0
–10 (14)	160.0
–5 (23)	123.0
0 (32)	95.8
5 (41)	74.9
10 (50)	58.9
15 (59)	46.7
20 (68)	37.3
25 (77)	30.0
30 (86)	24.2
35 (95)	19.7
40 (104)	16.1
45 (113)	13.2

If NG, replace intake sensor. Refer to VTL-11, "Removal and Installation".

POWER SUPPLY AND GROUND CIRCUIT FOR CONTROLLER

Component Description

INFOID:0000000005256961

COMPONENT DESCRIPTION

A/C auto amp.

The A/C auto amp. (1) has a built-in microcomputer which processes information sent from various sensors needed for air conditioner operation. The air mix door motors, mode door motor, intake door motor, defroster door motor, blower motor and compressor are then controlled.

The A/C auto amp. is unitized with control mechanisms. When the various switches and temperature dials are operated, data is input to the A/C auto amp.

Self-diagnostic functions are also built into the A/C auto amp. to provide quick check of malfunctions in the auto air conditioner system.

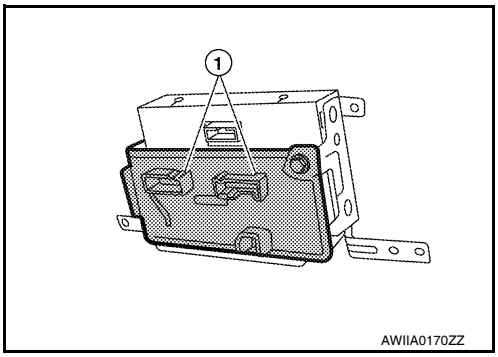

Potentio Temperature Control (PTC)

There are two PTCs (driver and passenger) built into the A/C auto amp. They can be set at an interval of 0.5°C (1.0°F) in the 18°C (60°F) to 32°C (90°F) temperature range by rotating the temperature dial. The set temperature is displayed.

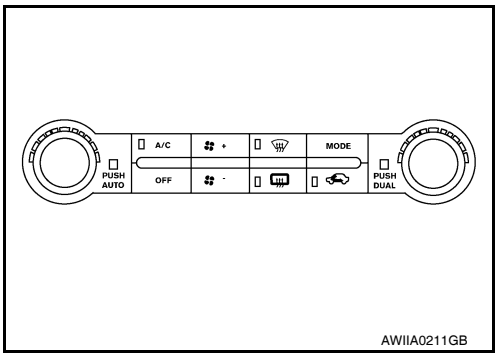

A/C Auto Amp. Component Function Check

INFOID:0000000005256962

SYMPTOM: A/C system does not come on.

INSPECTION FLOW

1. CONFIRM SYMPTOM BY PERFORMING OPERATIONAL CHECK - AUTO MODE

1. Press AUTO switch.
2. Display should indicate AUTO. Confirm that the compressor clutch engages (sound or visual inspection). (Discharge air and blower speed will depend on ambient, in-vehicle and set temperatures.)

Can a symptom be duplicated?

YES >> GO TO 3.
NO >> GO TO 2.

2. PERFORM COMPLETE OPERATIONAL CHECK

Perform a complete operational check and check for any symptoms. Refer to HAC-123, "Operational Check".

Can a symptom be duplicated?

YES >> Refer to HAC-122, "How to Perform Trouble Diagnosis For Quick And Accurate Repair".
NO >> System OK.

3. CHECK FOR SERVICE BULLETINS

Check for any service bulletins.

>> GO TO 4.

4. CHECK POWER AND GROUND CIRCUIT

Check main power supply and ground circuit. Refer to HAC-160, "Front Air Control Power and Ground Diagnosis Procedure".

Is the inspection result normal?

YES >> System OK.
NO >> Replace A/C auto amp. Refer to VTL-7, "Removal and Installation".

A/C Auto Amp Power and Ground Diagnosis Procedure

INFOID:0000000005256963

Regarding Wiring Diagram information, refer to HAC-90, "Wiring Diagram".

DIAGNOSTIC PROCEDURE FOR A/C SYSTEM

SYMPTOM: A/C system does not come on.

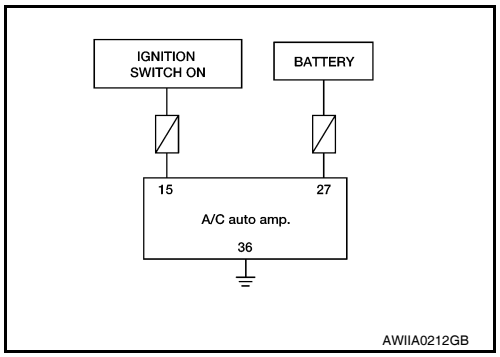

1. CHECK POWER SUPPLY CIRCUITS FOR A/C AUTO AMP.

1. Disconnect A/C auto amp. connectors.
2. Check voltage between A/C auto amp. harness connector M49 (B) terminal 15 and M50 (A) terminal 27, and ground.

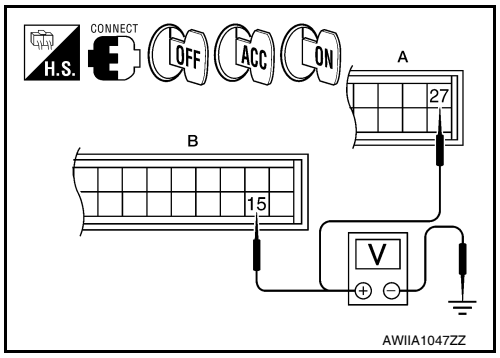

Terminals			Ignition switch position		
(+)		(-)	OFF	ACC	ON
A/C auto amp. connector	Terminal No.				
M49	15	Ground	Approx. 0V	Approx. 0V	Battery voltage
M50	27		Battery voltage	Battery voltage	Battery voltage

Is the inspection result normal?

YES >> GO TO 2.
NO >> Check 10A fuses [Nos. 8 and 19, located in the fuse block (J/B)]. Refer to HAC-88, "A/C Auto Amp. Terminals Reference Values".
- If fuses are OK, check harness for open circuit. Repair or replace as necessary.
- If fuses are NG, replace fuse and check harness for short circuit. Repair or replace as necessary.

2. CHECK GROUND CIRCUIT FOR A/C AUTO AMP.

1. Turn ignition switch OFF.
2. Check continuity between A/C auto amp. harness connector M50 terminal 36 and ground.

36 - Ground : Continuity should exist.

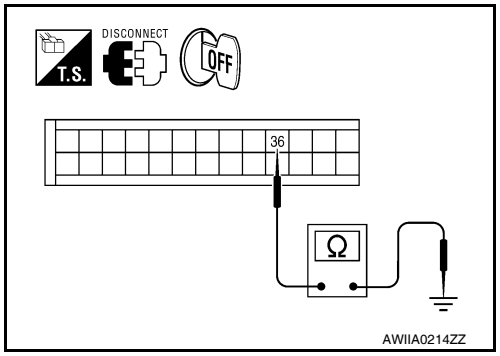

Is the inspection result normal?

OK >> Replace A/C auto amp. Refer to VTL-7, "Removal and Installation".
NG >> Repair harness or connector.

ECU DIAGNOSIS

AIR CONDITIONER CONTROL

A/C Auto Amp. Terminals Reference Values

INFOID:0000000005256964

Measure voltage between each terminal and ground by following Terminals and Reference Value for A/C auto amp. (1).

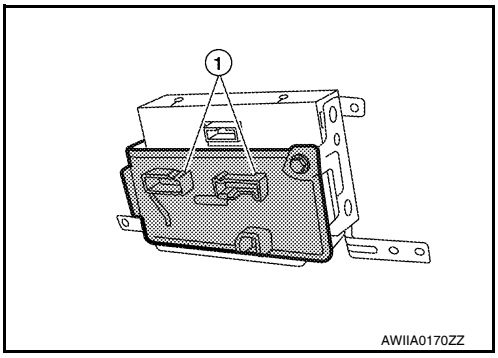

A/C AUTO AMP. HARNESS CONNECTOR TERMINAL LAYOUT

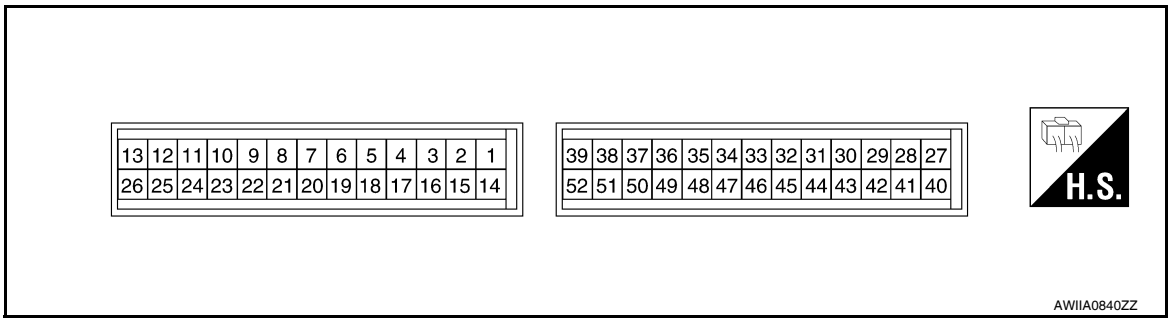

TERMINALS AND REFERENCE VALUES FOR A/C AUTO AMP.

Terminal No.	Wire color	Item	Ignition switch	Condition	Voltage (V) (Approx.)
1	G	Optical sensor (driver)	ON	-	0 - 5V
2	L	Air mix door motor (passenger) CCW	ON	-	0 - 5V
3	G	V ref ACTR (ground)	ON	-	5V
4	W	Compressor ON signal	ON	A/C switch OFF	5V
			ON	A/C switch ON	0V
5	R	Fan ON signal	ON	Blower switch OFF	5V
			ON	Blower switch ON	0V
6	SB	Air mix door motor (driver) feedback	ON	-	0 - 5V
7	V	Mode door motor (front) feedback	ON	-	0 - 5V
8	G	Illumination +	ON	Park lamps ON	Battery voltage
9	BR	Illumination -	-	Park lamps ON	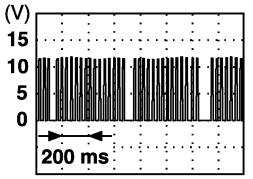 PIIA2344E
11	L	Intake sensor	ON	-	0 - 5V
12	P	Variable blower control (rear)	ON	-	0 - 5V
13	R	Variable blower control (front)	ON	Blower speed (low)	1.7V
				Blower speed (high)	4.5V

Terminal No.	Wire color	Item	Ignition switch	Condition	Voltage (V) (Approx.)
14	LG	Air mix door motor (passenger) CW	ON	Clockwise rotation	Battery voltage
15	W/G	Power supply for IGN	ON	-	Battery voltage
17	GR	Air mix door motor (driver) CW	ON	Clockwise rotation	Battery voltage
18	BR	Air mix door motor (driver) CCW	ON	Counterclockwise rotation	Battery voltage
19	L	Mode door motor CW (front)	ON	Clockwise rotation	Battery voltage
20	B/R	Mode door motor CCW	ON	Counterclockwise rotation	Battery voltage
21	O	Intake door motor CCW	ON	Counterclockwise rotation	Battery voltage
22	O	Intake door motor CW	ON	Clockwise rotation	Battery voltage
25	W	Ambient sensor	ON	-	0 - 5V
26	V	Sensor ground	ON	-	0V
27	R/Y	Power supply for BAT	-	-	Battery voltage
28	P	V ref ACTR (5V)	ON	-	0 - 5V
29	SB	Air mix door motor (passenger) feed-back	ON	-	0 - 5V
30	R	Air mix door motor (Rear) feedback	ON	-	0 - 5V
31	BR	In-vehicle sensor motor (+)	ON	-	Battery voltage
32	LG	In-vehicle sensor signal	ON	-	0 - 5V
34	GY	Front aux backlight dim	ON	Headlamps OFF	Battery voltage
35	W/G	Front aux tell tale LED	ON	Tell tale OFF	Battery voltage
36	B	Ground	-	-	0V
37	GR	Front aux temp pot	ON	Rear air control (front) tem-perature control dial	0 - 5V
38	P	Front aux blower pot	ON	Rear air control (front) blower motor	0 - 5V
39	SB	Front AUX (rear)	ON	-	0 - 5V
40	P	CAN-L	ON	-	0 - 5V
41	L	CAN-H	ON	-	0 - 5V
42	GR	Optical sensor (passenger)	ON	-	0 - 5V
43	V	Air mix door motor (Rear) CW	ON	Clockwise rotation	Battery voltage
44	O	Air mix door motor (Rear) CCW	ON	Counterclockwise rotation	Battery voltage
45	P	Water valve (VK56DE)	ON	Water valve open	Battery voltage
				Water valve closed	0V
46	R	Water valve (VK56DE)	ON	Water valve open	0V
				Water valve closed	Battery voltage
50	GR	Heater pump request (VQ40DE)	ON	Heater pump on	0V
				Heater pump off	Battery voltage
51	L	Rear aux temp pot	ON	Rear air control (rear) tem-perature control dial	0 - 5V
52	W	Rear aux blower pot	ON	Rear blower motor	0 - 5V

Wiring Diagram

INFOID:0000000005256965

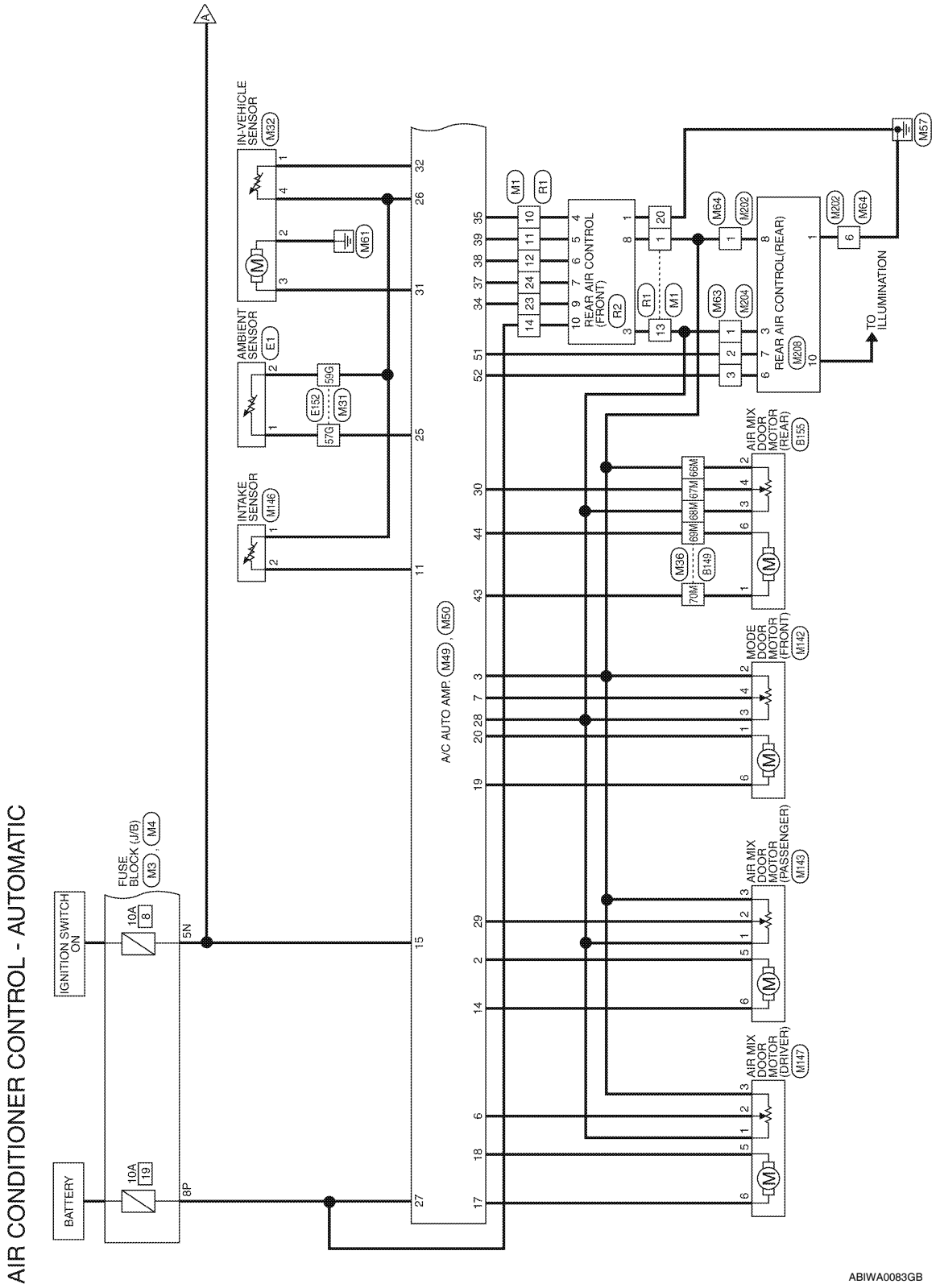

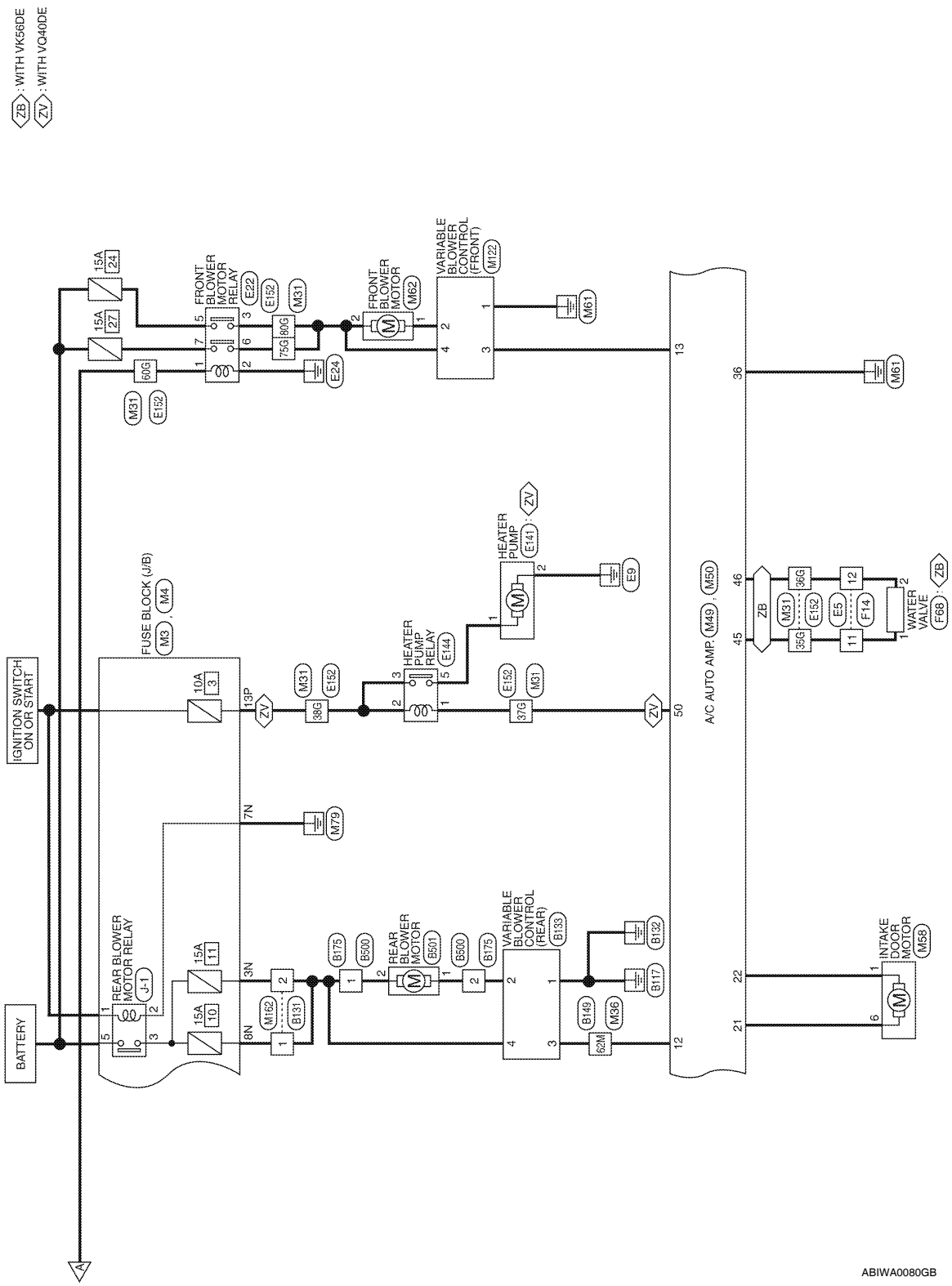
ZB : WITH VK56DE
ZV : WITH VQ40DE
BATTERY
IGNITION SWITCH ON OR START
FUSE BLOCK (J/B)
M3, M4
REAR BLOWER MOTOR RELAY
J-1
15A 24
15A 27
15A 111
15A 10
10A 3
FRONT BLOWER MOTOR RELAY
E22
E152
M31
60G
80G
75G
E24
FRONT BLOWER MOTOR
M62
VARIABLE BLOWER CONTROL (FRONT)
M122
M61
HEATER PUMP RELAY
E144
38G
37G
HEATER PUMP
E141
E9
M79
M162
B131
B175
B500
REAR BLOWER MOTOR
B501
B600
VARIABLE BLOWER CONTROL (REAR)
B133
B132
B117
B149
M36
62M
A/C AUTO AMP.
M49
M50
ZB
36G
35G
E5
11
12
F14
WATER VALVE
F68
INTAKE DOOR MOTOR
M58
13P
7N
3N
8N
ABIWA0080GB

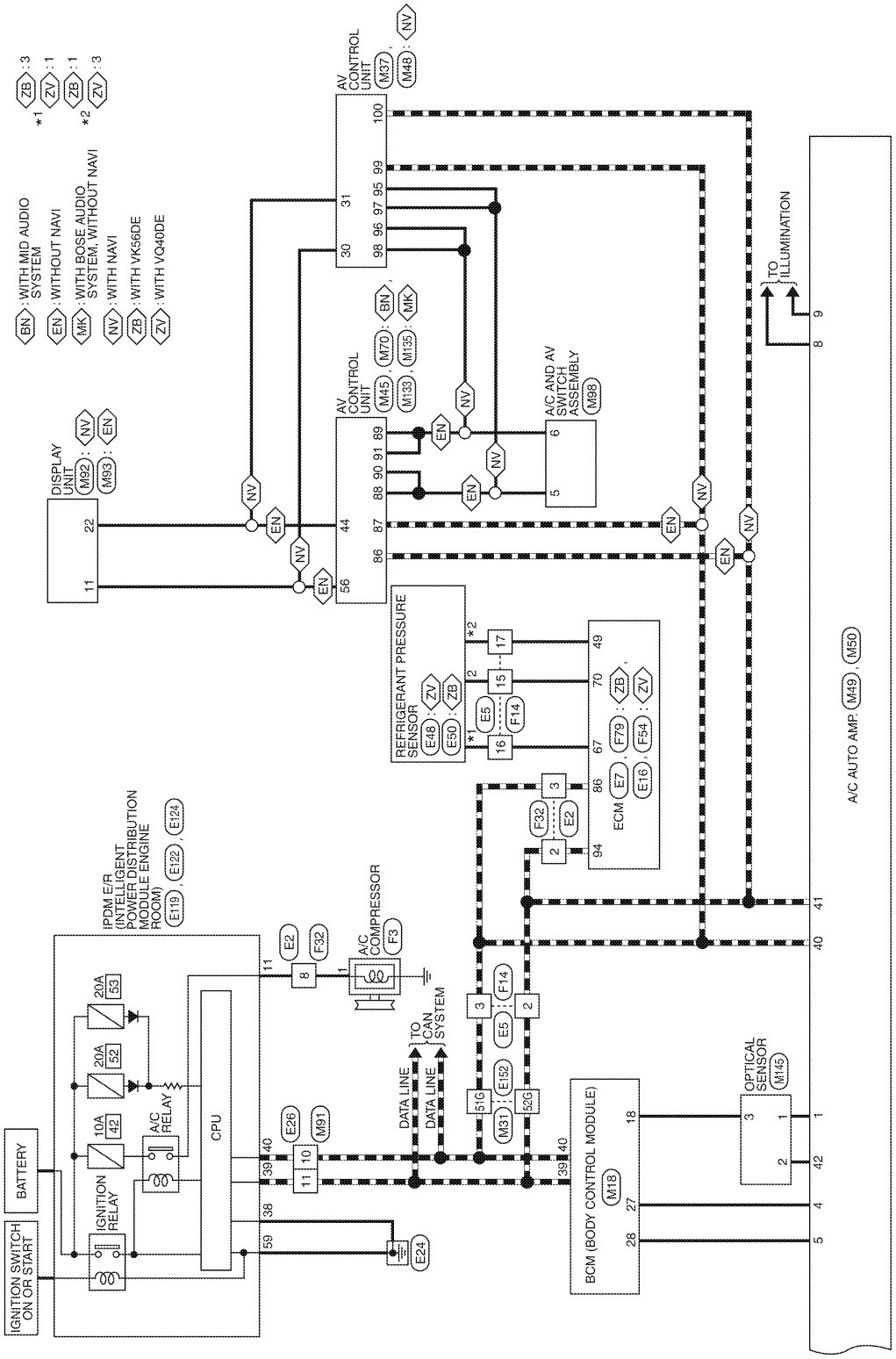

ABIWA0081GB

AIR CONDITIONER CONTROL CONNECTORS - AUTOMATIC

Connector No.	M1
Connector Name	WIRE TO WIRE
Connector Color	WHITE

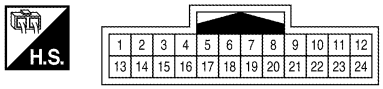

Terminal No.	Color of Wire	Signal Name
1	LG	–
10	W/G	–
11	SB	–
12	P	–
13	R	–
14	R/Y	–
20	B	–
23	G	–
24	GR	–

Connector No.	M3
Connector Name	FUSE BLOCK (J/B)
Connector Color	WHITE

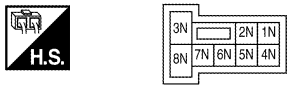

Terminal No.	Color of Wire	Signal Name
3N	L	–
5N	W/G	–
7N	B	–
8N	GR	–

Connector No.	M4
Connector Name	FUSE BLOCK (J/B)
Connector Color	WHITE

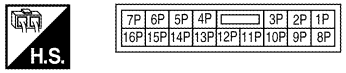

Terminal No.	Color of Wire	Signal Name
8P	R/Y	–
13P	W/G	–

Connector No.	M18
Connector Name	BCM (BODY CONTROL MODULE)
Connector Color	WHITE

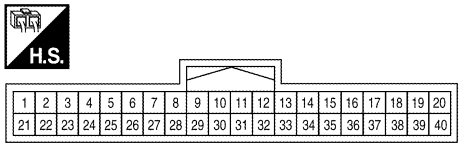

Terminal No.	Color of Wire	Signal Name
18	BR	KEYLESS TUNER GND
27	W	AIRCON SW
28	LG	BLOWER FAN SW
39	L	CAN-H
40	P	CAN-L

ABIIA0344GB

Connector No.	M31
Connector Name	WIRE TO WIRE
Connector Color	WHITE

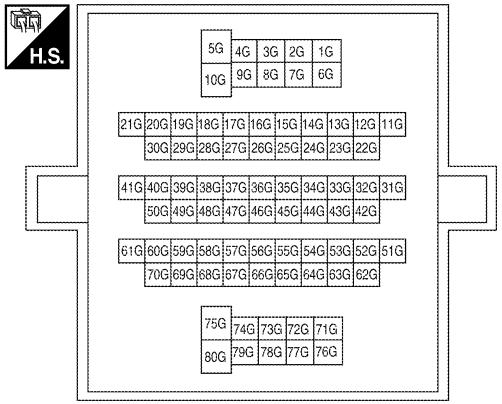

Terminal No.	Color of Wire	Signal Name
35G	P	–
36G	R	–
37G	GR	–
38G	W/G	–
51G	P	–
52G	L	–
57G	W	–
59G	V	–
60G	W/G	–
75G	W/G	–
80G	W/G	–

Connector No.	M32
Connector Name	IN-VEHICLE SENSOR
Connector Color	WHITE

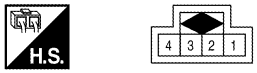

Terminal No.	Color of Wire	Signal Name
1	LG	–
2	O	–
3	BR	–
4	V	–

Connector No.	M36
Connector Name	WIRE TO WIRE
Connector Color	WHITE

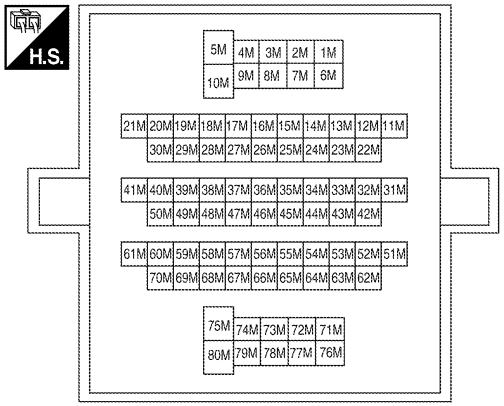

ABIIA0345GB

Terminal No.	Color of Wire	Signal Name
62M	P	–
66M	P	–
67M	R	–
68M	Y	–
69M	O	–
70M	V	–

Connector No.	M37
Connector Name	AV CONTROL UNIT (WITH BOSE AUDIO SYSTEM, WITH NAVI)
Connector Color	WHITE

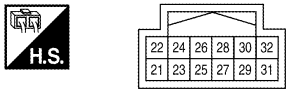

Terminal No.	Color of Wire	Signal Name
30	V	IT-DISP
31	LG	DISP-IT

Connector No.	M45
Connector Name	AV CONTROL UNIT (WITH BOSE AUDIO SYSTEM, WITHOUT NAVI)
Connector Color	WHITE

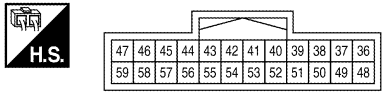

Terminal No.	Color of Wire	Signal Name
44	LG	DISP-IT
56	V	IT-DISP

Connector No.	M48
Connector Name	AV CONTROL UNIT (WITH BOSE AUDIO SYSTEM, WITH NAVI)
Connector Color	WHITE

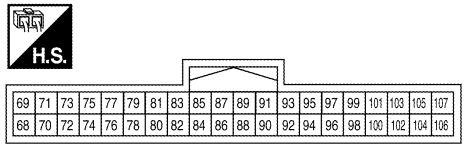

Terminal No.	Color of Wire	Signal Name
95	L	M-CAN2-H
96	P	M-CAN2-L
97	L	M-CAN1-H
98	P	M-CAN1-L
99	L	CAN-H
100	P	CAN-L

Connector No.	M49
Connector Name	A/C AUTO AMP.
Connector Color	BLACK

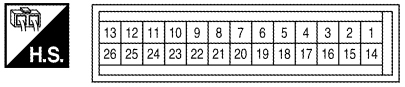

Terminal No.	Color of Wire	Signal Name
1	G	SUNLOAD SEN LEFT
2	L	PASS BLEND DR B
3	G	V REF RETURN
4	W	A/C REQUEST
5	R	FAN ON
6	SB	DR BLEND DOOR FEED BACK
7	V	MODE FEED BACK
8	G	–
9	BR	–
10	–	–
11	L	DISCHARGE AIR TEM SENS
12	P	AUX BLOWER VBC
13	R	FRONT BLOWER VBC

Terminal No.	Color of Wire	Signal Name
14	LG	PASS BLEND DOOR A
15	W/G	IGN
16	–	–
17	GR	DR BLEND DOOR A
18	BR	DR BLEND DOOR B
19	L	MODE A
20	BR	MODE B
21	O	INTAKE A
22	Y	INTAKE B
23	–	–
24	–	–
25	W	AMB TEMP SENS
26	V	SENSOR RETURN

ABIIA0346GB

Connector No.	M50
Connector Name	A/C AUTO AMP
Connector Color	BLUE

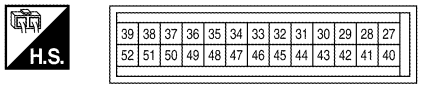

Terminal No.	Color of Wire	Signal Name
27	R/Y	B
28	P	V REF ACTR
29	SB	PASS BLEND DR FEED BACK
30	R	AUX BLEND FEED BACK
31	BR	IN CAR MTR+
32	LG	IN CAR TEMP SEN
33	–	–
34	G	FRONT AUX BACKLIGHT DIMMING
35	W/G	REAR TELLTALE
36	B	GND
37	GR	FRONT AUX TEMP POT
38	P	FRONT AUX BLOWER POT
39	SB	REAR BUTTON
40	P	CAN-L
41	L	CAN-H
42	GR	SUNLOAD SEN RIGHT
43	V	AUX BLEND A
44	O	BLEND B
45	P	WATER VALVE A (WITH VK56DE)
46	R	WATER VALVE B (WITH VK56DE)
47	–	–
48	–	–
49	–	–
50	GR	COOLANT PUMP REQUEST (WITH VQ40DE)
51	L	REAR AUX TEMP POT
52	W	REAR AUX BLOWER POT

Connector No.	M58
Connector Name	INTAKE DOOR MOTOR
Connector Color	BLACK

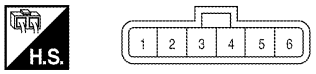

Terminal No.	Color of Wire	Signal Name
1	Y	–
6	O	–

Connector No.	M62
Connector Name	FRONT BLOWER MOTOR
Connector Color	BLACK

Terminal No.	Color of Wire	Signal Name
1	L	–
2	W/G	–

Connector No.	M63
Connector Name	WIRE TO WIRE
Connector Color	WHITE

Terminal No.	Color of Wire	Signal Name
1	R	–
2	L	–
3	W	–

ABIIA0347GB

Connector No.	M64
Connector Name	WIRE TO WIRE
Connector Color	WHITE

H.S.

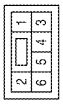

Terminal No.	Color of Wire	Signal Name
1	LG	–
6	B	–

Connector No.	M70
Connector Name	AV CONTROL UNIT (WITH BOSE AUDIO SYSTEM) (WITHOUT NAVI)
Connector Color	WHITE

H.S.

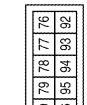

Terminal No.	Color of Wire	Signal Name
86	L	CAN-H
87	P	CAN-L
88	L	M CAN1 H
89	P	M CAN1 L
90	L	M CAN2 H
91	P	M CAN2 L

Connector No.	M91
Connector Name	WIRE TO WIRE
Connector Color	WHITE

H.S.

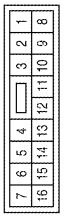

Terminal No.	Color of Wire	Signal Name
10	P	–
11	L	–

Connector No.	M92
Connector Name	DISPLAY UNIT (WITH NAVI)
Connector Color	WHITE

H.S.

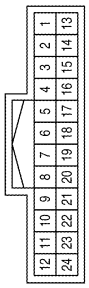

Terminal No.	Color of Wire	Signal Name
11	V	IT DISP
22	LG	DISP IT

Connector No.	M93
Connector Name	DISPLAY UNIT (WITHOUT NAVI)
Connector Color	WHITE

H.S.

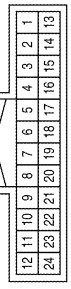

Terminal No.	Color of Wire	Signal Name
11	V	IT-DISP
22	LG	DISP-IT

Connector No.	M98
Connector Name	A/C AND AV SWITCH ASSEMBLY
Connector Color	WHITE

H.S.

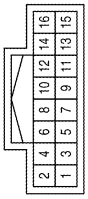

Terminal No.	Color of Wire	Signal Name
5	L	M CAN1-L
6	P	M CAN1-H

ABIIA0348GB

Connector No.	M122
Connector Name	VARIABLE BLOWER CONTROL (FRONT)
Connector Color	WHITE

Terminal No.	Color of Wire	Signal Name
1	B	GND
2	L	MOTOR -
3	R	SET POINT
4	W/G	MOTOR +

Connector No.	M133
Connector Name	AV CONTROL UNIT (WITH MID AUDIO SYSTEM)
Connector Color	WHITE

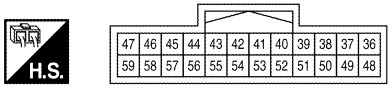

Terminal No.	Color of Wire	Signal Name
44	LG	DISP-IT
56	V	IT-DISP

Connector No.	M135
Connector Name	AV CONTROL UNIT (WITH MID AUDIO SYSTEM)
Connector Color	WHITE

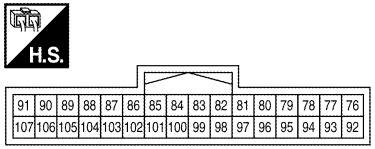

Terminal No.	Color of Wire	Signal Name
86	L	CAN-H
87	P	CAN-L
88	L	M CAN1 H
89	P	M CAN1 L
90	L	M CAN2 H
91	P	M CAN2 L

Connector No.	M142
Connector Name	MODE DOOR MOTOR (FRONT)(WITH AUTO A/C)
Connector Color	BLACK

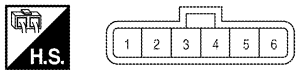

Terminal No.	Color of Wire	Signal Name
1	BR	–
2	P	–
3	G	–
4	V	–
6	L	–

Connector No.	M143
Connector Name	AIR MIX DOOR MOTOR (PASSENGER)
Connector Color	BLACK

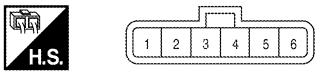

Terminal No.	Color of Wire	Signal Name
1	Y	–
2	SB	–
3	R	–
5	L	–
6	LG	–

Connector No.	M145
Connector Name	OPTICAL SENSOR
Connector Color	BLACK

Terminal No.	Color of Wire	Signal Name
1	G	–
2	GR	–
3	P	–

ABIIA0349GB

Connector No.	M146
Connector Name	INTAKE SENSOR
Connector Color	GRAY

Terminal No.	Color of Wire	Signal Name
1	V	–
2	L	–

Connector No.	M147
Connector Name	AIR MIX DOOR MOTOR (DRIVER)
Connector Color	BLACK

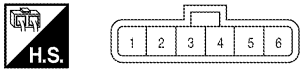

Terminal No.	Color of Wire	Signal Name
1	P	–
2	SB	–
3	G	–
5	BR	–
6	GR	–

Connector No.	M162
Connector Name	WIRE TO WIRE
Connector Color	WHITE

Terminal No.	Color of Wire	Signal Name
1	GR	–
2	L	–

Connector No.	M202
Connector Name	WIRE TO WIRE
Connector Color	WHITE

Terminal No.	Color of Wire	Signal Name
1	LG	–
6	B	–

Connector No.	M204
Connector Name	WIRE TO WIRE
Connector Color	WHITE

Terminal No.	Color of Wire	Signal Name
1	R	–
2	L	–
3	W	–

Connector No.	M208
Connector Name	REAR AIR CONTROL (REAR)
Connector Color	BLACK

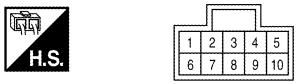

Terminal No.	Color of Wire	Signal Name
1	B	GND
2	–	–
3	R	VREF 5V
4	–	–
5	–	–
6	W	BLOWER SPEED POT
7	L	TEMP POT
8	LG	VREF RETURN
9	–	–
10	G	ILL+

ABIIA0350GB

Connector No.	E1
Connector Name	AMBIENT SENSOR
Connector Color	BLACK

Terminal No.	Color of Wire	Signal Name
1	W	–
2	V	–

Connector No.	E2
Connector Name	WIRE TO WIRE
Connector Color	WHITE

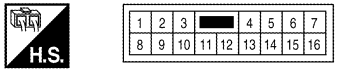

Terminal No.	Color of Wire	Signal Name
2	L	–
3	P	–
8	Y	–

Connector No.	E5
Connector Name	WIRE TO WIRE
Connector Color	WHITE

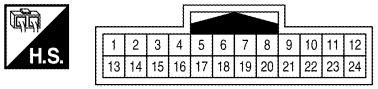

Terminal No.	Color of Wire	Signal Name
2	L	–
3	P	–
11	P	–
12	R	–
15	BR	–
16	B	–
17	P	–

Connector No.	E7
Connector Name	ECM (WITH VK56DE)
Connector Color	BLACK

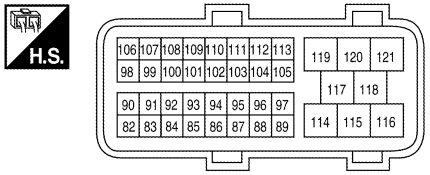

Terminal No.	Color of Wire	Signal Name
86	P	CAN-L
94	L	CAN-H

Connector No.	E16
Connector Name	ECM (WITH VQ40DE)
Connector Color	BLACK

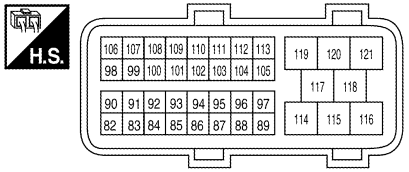

Terminal No.	Color of Wire	Signal Name
86	P	CAN-L
94	L	CAN-H

Connector No.	E22
Connector Name	FRONT BLOWER MOTOR RELAY (WITH AUTO A/C)
Connector Color	BROWN

Terminal No.	Color of Wire	Signal Name
1	W/G	–
2	B	–
3	W/G	–
5	L	–
6	W/G	–
7	GR	–

ABIIA0351GB

Connector No.	E26
Connector Name	WIRE TO WIRE
Connector Color	WHITE

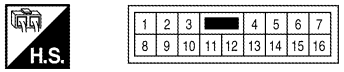

Terminal No.	Color of Wire	Signal Name
10	P	–
11	L	–

Connector No.	E48
Connector Name	REFRIGERANT PRESSURE SENSOR (WITH VQ40DE)
Connector Color	BLACK

Terminal No.	Color of Wire	Signal Name
1	B	GND
2	BR	SIGNAL
3	P	POWER SUPPLY

Connector No.	E50
Connector Name	REFRIGERANT PRESSURE SENSOR (WITH VK56DE)
Connector Color	BLACK

Terminal No.	Color of Wire	Signal Name
1	P	POWER SUPPLY
2	BR	SIGNAL
3	B	GND

Connector No.	E119
Connector Name	IPDM E/R (INTELLIGENT POWER DISTRIBUTION MODULE ENGINE ROOM)
Connector Color	WHITE

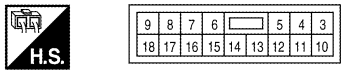

Terminal No.	Color of Wire	Signal Name
11	Y	A/C COMPRESSOR

Connector No.	E122
Connector Name	IPDM E/R (INTELLIGENT POWER DISTRIBUTION MODULE ENGINE ROOM)
Connector Color	WHITE

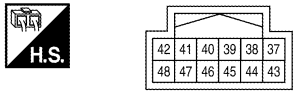

Terminal No.	Color of Wire	Signal Name
38	B	GND (SIGNAL)
39	L	CAN-H
40	P	CAN-L

Connector No.	E124
Connector Name	IPDM E/R (INTELLIGENT POWER DISTRIBUTION MODULE ENGINE ROOM)
Connector Color	BLACK

Terminal No.	Color of Wire	Signal Name
59	B	GND (POWER)

ABIIA0352GB

Connector No.	E141
Connector Name	HEATER PUMP
Connector Color	BLACK

Terminal No.	Color of Wire	Signal Name
1	V	–
2	B	–

Connector No.	E144
Connector Name	HEATER PUMP RELAY
Connector Color	BLUE

Terminal No.	Color of Wire	Signal Name
1	GR	–
2	W/G	–
3	W/G	–
5	V	–

Connector No.	E152
Connector Name	WIRE TO WIRE
Connector Color	WHITE

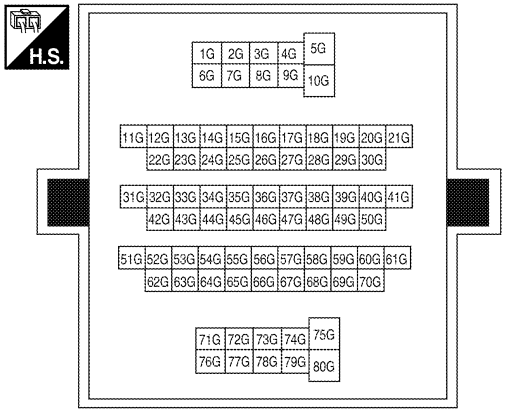

ABIIA0353GB

Terminal No.	Color of Wire	Signal Name
35G	P	–
36G	R	–
37G	GR	–
38G	W/G	–
51G	P	–
52G	L	–
57G	W	–
59G	V	–
60G	W/G	–
75G	W/G	–
80G	W/G	–

Connector No.	F3
Connector Name	A/C COMPRESSOR
Connector Color	BLACK

Terminal No.	Color of Wire	Signal Name
1	Y	–

Connector No.	F14
Connector Name	WIRE TO WIRE
Connector Color	WHITE

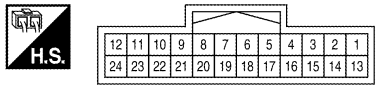

Terminal No.	Color of Wire	Signal Name
2	L	–
3	P	–
11	P	–
12	R	–
15	BR	–
16	B	–
17	P	–

Connector No.	F32
Connector Name	WIRE TO WIRE
Connector Color	WHITE

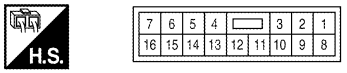

Terminal No.	Color of Wire	Signal Name
2	L	–
3	P	–
8	Y	–

Connector No.	F54
Connector Name	ECM (WITH VQ40DE)
Connector Color	BLACK

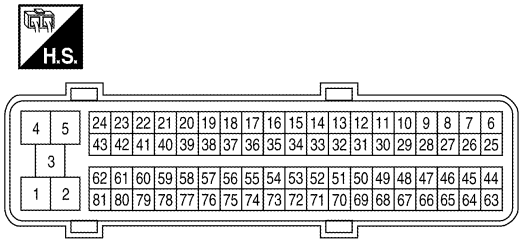

Terminal No.	Color of Wire	Signal Name
49	P	AVCC (PDPRES)
67	B	GND-A
70	BR	PDPRESS

Connector No.	F68
Connector Name	WATER VALVE
Connector Color	GRAY

Terminal No.	Color of Wire	Signal Name
1	P	–
2	R	–

Connector No.	F79
Connector Name	ECM (WITH VK56DE)
Connector Color	BLACK

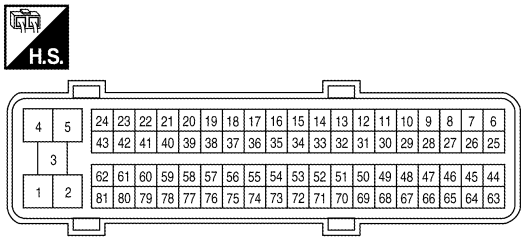

Terminal No.	Color of Wire	Signal Name
49	P	AVCC (PDPRES)
67	B	GND-A
70	BR	PDPRESS

Connector No.	B131
Connector Name	WIRE TO WIRE
Connector Color	WHITE

Terminal No.	Color of Wire	Signal Name
1	L	–
2	L	–

ABIIA0354GB

Connector No.	B133
Connector Name	VARIABLE BLOWER CONTROL (REAR)
Connector Color	WHITE

H.S.

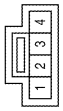

Terminal No.	Color of Wire	Signal Name
1	B	GND
2	O	MOTOR -
3	P	SET POINT
4	L	MOTOR +

Connector No.	B149
Connector Name	WIRE TO WIRE
Connector Color	WHITE

H.S.

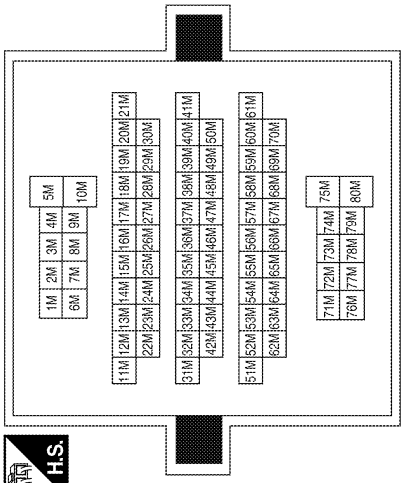

Terminal No.	Color of Wire	Signal Name
62M	P	–
66M	P	–
67M	R	–
68M	Y	–
69M	O	–
70M	V	–

Connector No.	B155
Connector Name	AIR MIX DOOR MOTOR (REAR)
Connector Color	BLACK

H.S.

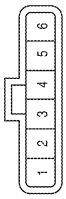

Terminal No.	Color of Wire	Signal Name
1	V	–
2	P	–
3	Y	–
4	R	–
6	O	–

Connector No.	B175
Connector Name	WIRE TO WIRE
Connector Color	WHITE

H.S.

Terminal No.	Color of Wire	Signal Name
1	L	–
2	O	–

Connector No.	B500
Connector Name	WIRE TO WIRE
Connector Color	WHITE

H.S.

Terminal No.	Color of Wire	Signal Name
1	R	–
2	G	–

ABIIA0355GB

Connector No.	B501
Connector Name	REAR BLOWER MOTOR
Connector Color	BLACK

Terminal No.	Color of Wire	Signal Name
1	G	–
2	R	–

Connector No.	R1
Connector Name	WIRE TO WIRE
Connector Color	WHITE

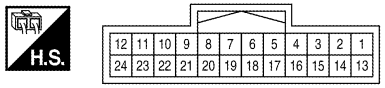

Terminal No.	Color of Wire	Signal Name
1	G	–
10	W/G	–
11	SB	–
12	P	–
13	P	–
14	R/Y	–
20	B	–
23	G	–
24	GR	–

Connector No.	R2
Connector Name	REAR AIR CONTROL (FRONT)
Connector Color	BLACK

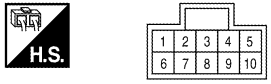

Terminal No.	Color of Wire	Signal Name
1	B	GND
2	–	–
3	P	VREF 5V
4	W/G	REAR TELLTALE
5	SB	REAR BUTTON
6	P	BLOWER SPEED POT
7	GR	TEMP POT
8	G	VREF RETURN
9	G	BACKLIGHT DIMMING
10	R/Y	BATTERY

Connector No.	J-1
Connector Name	FUSE BLOCK (J/B) (REAR BLOWER MOTOR RELAY)
Connector Color	–

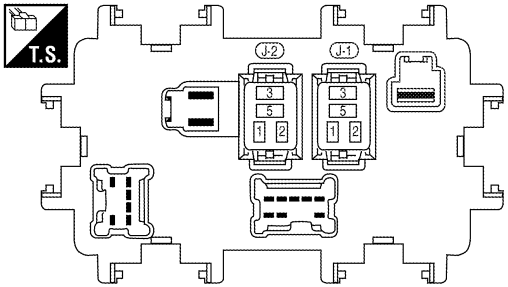

ABIIA0356GB

SYMPTOM DIAGNOSIS

AIR CONDITIONER CONTROL

Symptom Matrix Chart

INFOID:0000000005256966

SYMPTOM TABLE

Symptom	Reference Page	
A/C system does not come on.	Go to Trouble Diagnosis Procedure for A/C System.	HAC-86
A/C system display is malfunctioning.	Go to AV System.	AV-193, AV-73
A/C system cannot be controlled.	Go to Self-diagnosis Function.	HAC-24
Air outlet does not change.	Go to Trouble Diagnosis Procedure for Mode Door Motor.	HAC-27
Mode door motor is malfunctioning.		
Discharge air temperature does not change.	Go to Trouble Diagnosis Procedure for Air Mix Door Motor.	HAC-33, HAC-36
Air mix door motor is malfunctioning.		
Intake door does not change.	Go to Trouble Diagnosis Procedure for Intake Door Motor.	HAC-41
Intake door motor is malfunctioning.		
Front blower motor operation is malfunctioning.	Go to Trouble Diagnosis Procedure for Front Blower Motor.	HAC-44
Rear blower motor operation is malfunctioning.	Go to Trouble Diagnosis Procedure for Rear Blower Motor.	HAC-50
Rear discharge air temperature and/or air outlet does not change.	Go to Trouble Diagnosis Procedure for Rear Air Control system.	HAC-59
Magnet clutch does not engage.	Go to Trouble Diagnosis Procedure for Magnet Clutch.	HAC-65
Insufficient cooling	Go to Trouble Diagnosis Procedure for Insufficient Cooling.	HAC-107
Insufficient heating	Go to Trouble Diagnosis Procedure for Insufficient Heating.	HAC-115
Noise	Go to Trouble Diagnosis Procedure for Noise.	HAC-117
Self-diagnosis cannot be performed.	Go to Trouble Diagnosis Procedure for Self-diagnosis.	HAC-87
Memory function does not operate.	Go to Trouble Diagnosis Procedure for Memory Function.	HAC-119

INSUFFICIENT COOLING

Component Function Check

INFOID:0000000005256967

SYMPTOM: Insufficient cooling

INSPECTION FLOW

1. CONFIRM SYMPTOM BY PERFORMING OPERATIONAL CHECK - TEMPERATURE DECREASE

1. Press the AUTO switch.
2. Turn temperature control dial (driver) counterclockwise until 18°C (60°F) is displayed.
3. Check for cold air at discharge air outlets.

Can the symptom be duplicated?

YES >> GO TO 3.
NO >> GO TO 2.

2. CHECK FOR ANY SYMPTOMS

Perform a complete operational check for any symptoms. Refer to HAC-123, "Operational Check".

Does another symptom exist?

YES >> Refer to HAC-172, "Symptom Matrix Chart".
NO >> System OK.

3. CHECK FOR SERVICE BULLETINS

Check for any service bulletins.

>> GO TO 4.

4. PERFORM SELF-DIAGNOSIS

Perform self-diagnosis Refer to HAC-24, "A/C Auto Amp. Self-Diagnosis".

Is the inspection result normal?

YES >> GO TO 5.
NO >> Refer to HAC-25, "A/C System Self-Diagnosis Code Chart".

5. CHECK DRIVE BELTS

Check compressor belt tension. Refer to EM-14, "Checking Drive Belts" (VQ40DE) or EM-149, "Checking Drive Belts" (VK56DE).

Is the inspection result normal?

OK >> GO TO 6.
NG >> Adjust or replace compressor belt. Refer to EM-14, "Adjustment", EM-14, "Removal and Installation" (VQ40DE) or EM-149, "Adjustment", EM-149, "Removal and Installation" (VK56DE).

6. CHECK AIR MIX DOOR OPERATION

Check and verify air mix door mechanism for smooth operation. Refer to HAC-140, "Air Mix Door Motor Component Function Check"

Does air mix door operate correctly?

YES >> GO TO 7.
NO >> Check air mix door motor circuit. Refer to HAC-140, "Air Mix Door Motor Diagnosis Procedure" or HAC-36, "Air Mix Door Motor (Passenger) Diagnosis Procedure".

7. CHECK COOLING FAN MOTOR OPERATION

Check and verify cooling fan motor for smooth operation.

Does cooling fan motor operate correctly?

YES >> GO TO 8.
NO >> Check cooling fan motor.

8. CHECK WATER VALVE OPERATION (VK56DE ONLY)

Check and verify water valve for smooth operation. Refer to HAC-70, "Water Valve Description (VK56DE)".

Does water valve operate correctly?

YES >> GO TO 9.
NO >> Check water valve circuit. Refer to HAC-70, "Water Valve Diagnosis Procedure (VK56DE)".

9. CHECK RECOVERY/RECYCLING EQUIPMENT BEFORE USAGE

Check recovery/recycling equipment before connecting to vehicle. Verify there is no pressure in the recovery/recycling equipment by checking the gauges. If pressure exists, recover refrigerant from equipment lines.

>> GO TO 10.

10. CHECK REFRIGERANT PURITY

1. Connect recovery/recycling equipment to vehicle.
2. Confirm refrigerant purity in supply tank using recovery/recycling and refrigerant identifier.

Is the inspection result normal?

YES >> GO TO 11.
NO >> Check contaminated refrigerant. Refer to HAC-185, "Working with HFC-134a (R-134a)".

11. CHECK FOR EVAPORATOR FREEZE UP

Start engine and run A/C. Check for evaporator freeze up.

Does evaporator freeze up?

YES >> Perform diagnostic work flow. Refer to HAC-174, "Diagnostic Work Flow".
NO >> GO TO 12.

12. CHECK REFRIGERANT PRESSURE

Check refrigerant pressure with manifold gauge connected. Refer to HAC-110, "Performance Chart".

Is the inspection result normal?

YES >> GO TO 13.
NO >> Perform diagnostic work flow. Refer to HAC-174, "Diagnostic Work Flow".

13. CHECK AIR DUCTS

Check ducts for air leaks.

Is the inspection result normal?

YES >> System OK.
NO >> Repair air leaks.

Diagnostic Work Flow

INFOID:0000000005256968

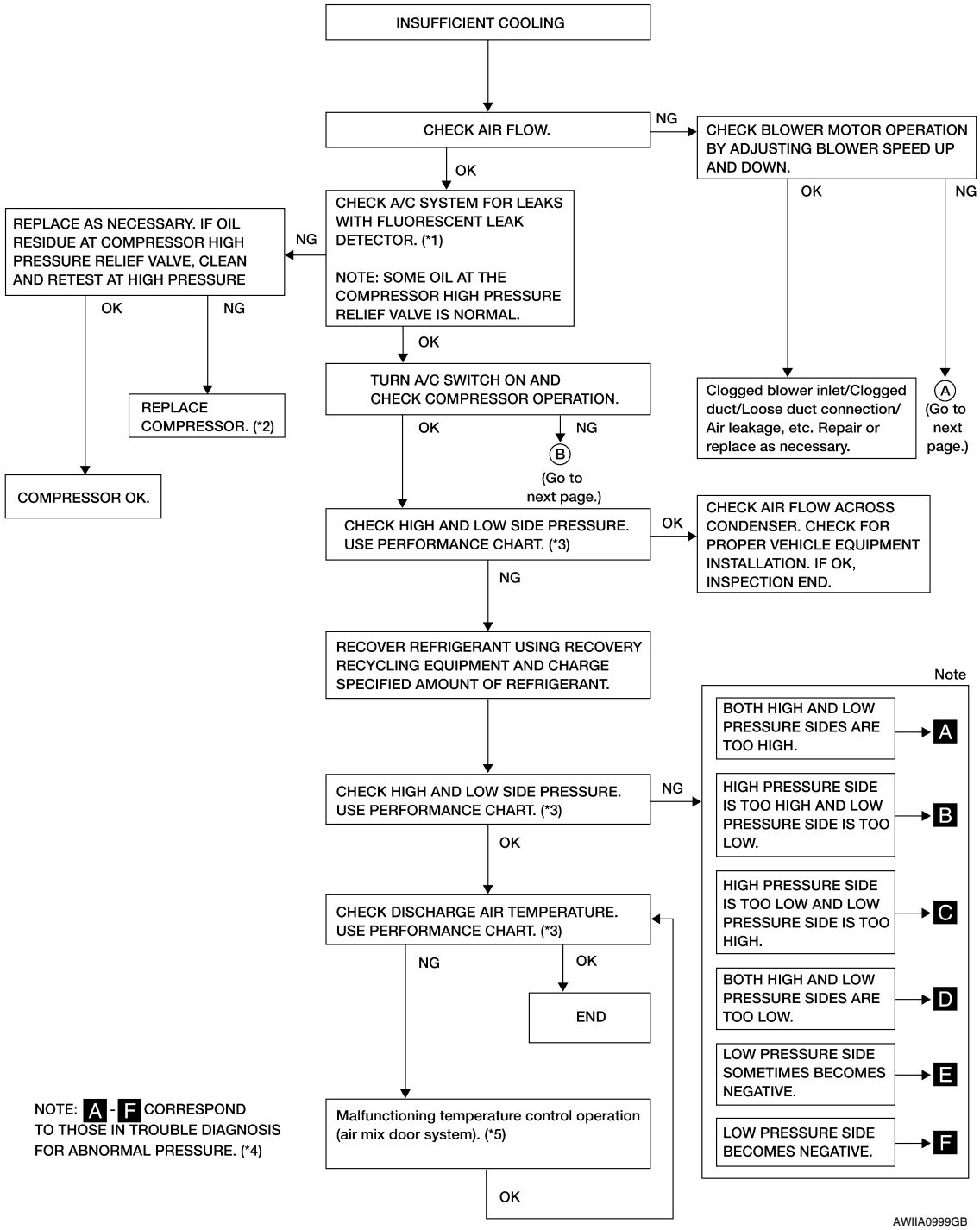

*1 HA-29, "Checking System for Leaks Using the Fluorescent Dye Leak Detector"
*2 HA-39, "Removal and Installation for Compressor"
*3 HAC-110, "Performance Chart"
*4 HAC-111, "Trouble Diagnoses for Abnormal Pressure"
*5 HAC-32, "Air Mix Door Motor (Driver) Component Function Check"

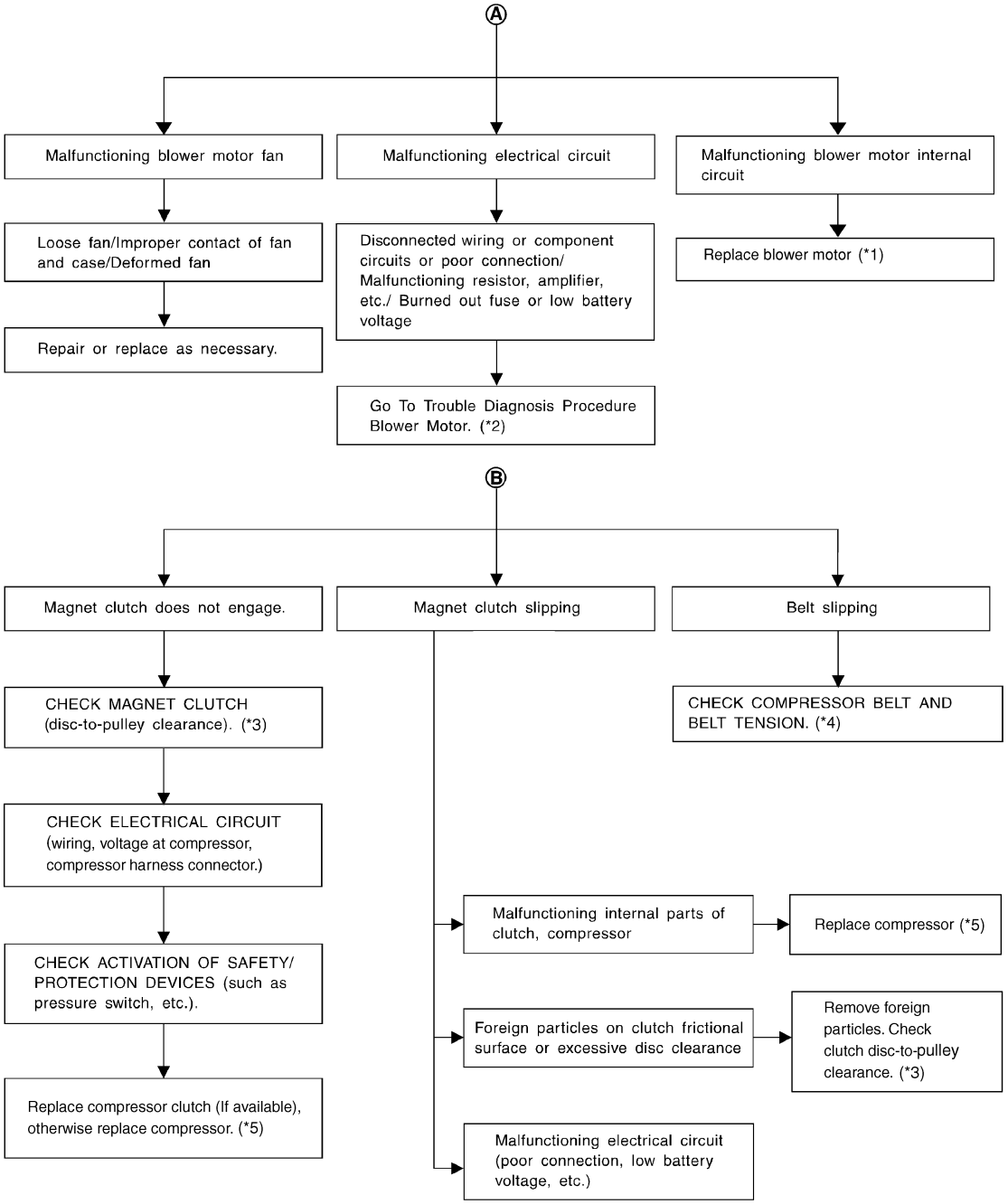

*1 VTL-12, "Removal and Installation"

*2 HAC-44, "Front Blower Motor Diagnosis Procedure"

*3 HA-40, "Removal and Installation for Compressor Clutch"

*4 EM-14, "Checking Drive Belts" (VQ40DE) or EM-149, "Checking Drive Belts" (VK56DE)

*5 HA-39, "Removal and Installation for Compressor"

Performance Chart

INFOID:0000000005256969

TEST CONDITION

Testing must be performed as follows:

Vehicle location	Indoors or in the shade (in a well-ventilated place)
Doors	Closed
Door window	Open
Hood	Open
TEMP.	Max. COLD
Mode switch	(Ventilation) set
Recirculation (REC) switch	(Recirculation) set
Blower speed	Max. speed set
Engine speed	Idle speed
Operate the air conditioning system for 10 minutes before taking measurements.	

TEST READING

Recirculating-to-discharge Air Temperature Table

Inside air (Recirculating air) at blower assembly inlet		Discharge air temperature at center ventilator °C (°F)
Relative humidity %	Air temperature °C (°F)	
50 - 60	20 (68)	5.3 - 6.5 (42 - 44)
	25 (77)	9.7 - 11.5 (49 - 53)
	30 (86)	13.8 - 16.3 (57 - 61)
	35 (95)	18.0 - 21.2 (64 - 70)
	40 (104)	22.2 - 25.7 (72 - 78)
60 - 70	20 (68)	6.5 - 7.7 (44 - 46)
	25 (77)	11.5 - 13.3 (53 - 56)
	30 (86)	16.3 - 18.8 (61 - 66)
	35 (95)	21.2 - 24.0 (70 - 75)
	40 (104)	25.7 - 29.2 (78 - 85)

Ambient Air Temperature-to-operating Pressure Table

Ambient air		High-pressure (Discharge side) kPa (kg/cm^2, psi)	Low-pressure (Suction side) kPa (kg/cm^2, psi)
Relative humidity %	Air temperature °C (°F)		
50 - 70	20 (68)	680 - 840 (6.94 - 8.57, 98.6 - 121.8)	160 - 198 (1.63 - 2.02, 23.2 - 28.7)
	25 (77)	800 - 985 (8.16 - 10.05, 116.0 - 142.8)	198 - 245 (2.02 - 2.50, 28.7 - 35.5)
	30 (86)	940 - 1,150 (9.59 - 11.73, 136.3 - 166.8)	225 - 278 (2.30 - 2.84, 32.6 - 40.3)
	35 (95)	1,160 - 1,410 (11.83 - 14.38, 168.2 - 204.5)	273 - 335 (2.78 - 3.42, 39.6 - 48.6)
	40 (104)	1,325 - 1,620 (13.52 - 16.52, 192.1 - 234.9)	325 - 398 (3.32 - 4.06, 47.1 - 57.7)

Trouble Diagnoses for Abnormal Pressure

INFOID:0000000005256970

Whenever system's high and/or low side pressure is abnormal, diagnose using a manifold gauge. The marker above the gauge scale in the following tables indicates the standard (usual) pressure range. Since the stan-

dard (usual) pressure, however, differs from vehicle to vehicle, refer to above table (Ambient air temperature-to-operating pressure table).

Both High- and Low-pressure Sides are Too High

Gauge indication	Refrigerant cycle	Probable cause	Corrective action
A Both high- and low-pressure sides are too high. 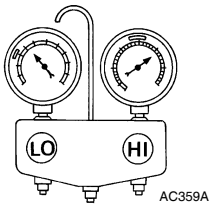 	Pressure is reduced soon after water is splashed on condenser.	Excessive refrigerant charge in refrigeration cycle	Reduce refrigerant until specified pressure is obtained.
	Air suction by cooling fan is insufficient.	Insufficient condenser cooling performance ↓ 1. Condenser fins are clogged. 2. Improper fan rotation of cooling fan	• Clean condenser. • Check and repair cooling fan if necessary.
	• Low-pressure pipe is not cold. • When compressor is stopped high-pressure value quickly drops by approximately 196 kPa (2 kg/cm^2, 28 psi). It then decreases gradually thereafter.	Poor heat exchange in condenser (After compressor operation stops, high-pressure decreases too slowly.) ↓ Air in refrigeration cycle	Evacuate and recharge system.
	Engine tends to overheat.	Engine cooling systems malfunction.	Check and repair engine cooling system.
	• An area of the low-pressure pipe is colder than areas near the evaporator outlet. • Plates are sometimes covered with frost.	• Excessive liquid refrigerant on low-pressure side • Excessive refrigerant discharge flow • Expansion valve is open a little compared with the specification. ↓ Improper expansion valve adjustment	Replace expansion valve.

High-pressure Side is Too High and Low-pressure Side is Too Low

Gauge indication	Refrigerant cycle	Probable cause	Corrective action
B High-pressure side is too high and low-pressure side is too low. 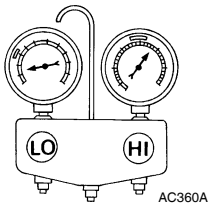 	Upper side of condenser and high-pressure side are hot, however, liquid tank is not so hot.	High-pressure tube or parts located between compressor and condenser are clogged or crushed.	• Check and repair or replace malfunctioning parts. • Check oil for contamination.

High-pressure Side is Too Low and Low-pressure Side is Too High

Gauge indication	Refrigerant cycle	Probable cause	Corrective action
C High-pressure side is too low and low-pressure side is too high. 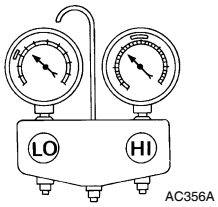 	High- and low-pressure sides become equal soon after compressor operation stops.	Compressor pressure operation is improper. ↓ Damaged inside compressor packings.	Replace compressor.
	No temperature difference between high- and low-pressure sides.	Compressor pressure operation is improper. ↓ Damaged inside compressor packings.	Replace compressor.

Both High- and Low-pressure Sides are Too Low

Gauge indication	Refrigerant cycle	Probable cause	Corrective action
D Both high- and low-pressure sides are too low. 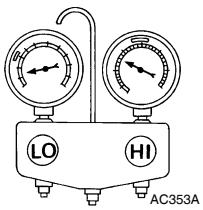 	• There is a big temperature difference between liquid tank outlet and inlet. Outlet temperature is extremely low. • Liquid tank inlet and expansion valve are frosted.	Liquid tank inside is slightly clogged.	• Replace liquid tank. • Check oil for contamination.
	• Temperature of expansion valve inlet is extremely low as compared with areas near liquid tank. • Expansion valve inlet may be frosted. • Temperature difference occurs somewhere in high-pressure side.	High-pressure pipe located between liquid tank and expansion valve is clogged.	• Check and repair malfunctioning parts. • Check oil for contamination.
	Expansion valve and liquid tank are warm or only cool when touched.	Low refrigerant charge. ↓ Leaking fittings or components.	Check refrigerant system for leaks. Refer to HA-29, "Checking System for Leaks Using the Fluorescent Dye Leak Detector" or HA-31, "Electronic Refrigerant Leak Detector".
	There is a big temperature difference between expansion valve inlet and outlet while the valve itself is frosted.	Expansion valve closes a little compared with the specification. ↓ 1. Improper expansion valve adjustment. 2. Malfunctioning expansion valve. 3. Outlet and inlet may be clogged.	• Remove foreign particles by using compressed air. • Check oil for contamination.
	An area of the low-pressure pipe is colder than areas near the evaporator outlet.	Low-pressure pipe is clogged or crushed.	• Check and repair malfunctioning parts. • Check oil for contamination.
	Air flow volume is too low.	Evaporator is frozen.	• Check intake sensor circuit. Refer to HAC-157, "Intake Sensor Diagnosis Procedure". • Repair evaporator fins. • Replace evaporator. • Refer to HAC-146, "Front Blower Motor Component Function Check".

Low-pressure Side Sometimes Becomes Negative

Gauge indication	Refrigerant cycle	Probable cause	Corrective action
E Low-pressure side sometimes becomes negative. 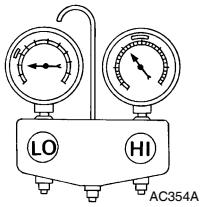 	• Air conditioning system does not function and does not cyclically cool the compartment air. • The system constantly functions for a certain period of time after compressor is stopped and restarted.	Refrigerant does not discharge cyclically. ↓ Moisture is frozen at expansion valve outlet and inlet. ↓ Water is mixed with refrigerant.	• Drain water from refrigerant or replace refrigerant. • Replace liquid tank.

Low-pressure Side Becomes Negative

Gauge indication	Refrigerant cycle	Probable cause	Corrective action
F Low-pressure side becomes negative. 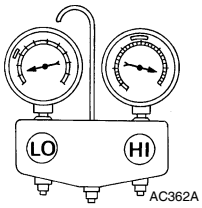 	Liquid tank or front/rear side of expansion valve's pipe is frosted or dewed.	High-pressure side is closed and refrigerant does not flow. ↓ Expansion valve or liquid tank is frosted.	Leave the system at rest until no frost is present. Start it again to check whether or not the malfunction is caused by water or foreign particles. • If water is the cause, initially cooling is okay. Then the water freezes causing a blockage. Drain water from refrigerant or replace refrigerant. • If due to foreign particles, remove expansion valve and remove the particles with dry and compressed air (not shop air). • If either of the above methods cannot correct the malfunction, replace expansion valve. • Replace liquid tank. • Check oil for contamination.

INSUFFICIENT HEATING

Component Function Check

INFOID:0000000005256971

SYMPTOM: Insufficient heating

INSPECTION FLOW

1. CONFIRM SYMPTOM BY PERFORMING OPERATIONAL CHECK - TEMPERATURE INCREASE

1. Press the AUTO switch.
2. Turn the temperature control dial (driver) clockwise until 32°C (90°F) is displayed.
3. Check for hot air at discharge air outlets.

Can this symptom be duplicated?

YES >> GO TO 2.
NO >> Perform complete system operational check. Refer to HAC-123, "Operational Check".

2. CHECK FOR SERVICE BULLETINS

Check for any service bulletins.

>> GO TO 3.

3. PERFORM SELF-DIAGNOSIS

Perform self-diagnosis. Refer to HAC-24, "A/C Auto Amp. Self-Diagnosis".

Is the inspection results normal?

YES >> GO TO 4.
NO >> Refer to HAC-25, "A/C System Self-Diagnosis Code Chart".

4. CHECK ENGINE COOLING SYSTEM

1. Check for proper engine coolant level. Refer to CO-11, "System Inspection" (VQ40DE) or CO-39, "System Inspection" (VK56DE).
2. Check hoses for leaks or kinks.
3. Check radiator cap. Refer to CO-18, "Checking Radiator" (VQ40DE) or CO-46, "Checking Radiator" (VK56DE).
4. Check for air in cooling system.

>> GO TO 5.

5. CHECK AIR MIX DOOR OPERATION

Check the operation of the air mix door.

Is the inspection result normal?

YES >> GO TO 6.
NO >> Check the air mix door motor circuit. Refer to HAC-140, "Air Mix Door Motor Component Function Check".

6. CHECK AIR DUCTS

Check for disconnected or leaking air ducts.

Is the inspection result normal?

YES >> GO TO 7.
NO >> Repair all disconnected or leaking air ducts.

7. CHECK HEATER HOSE TEMPERATURES

1. Start engine and warm it up to normal operating temperature.
2. Touch both the inlet and outlet heater hoses. The inlet hose should be hot and the outlet hose should be warm.

Is the inspection result normal?

YES >> Hot inlet hose and a warm outlet hose: GO TO 8.
NO >>
- Inlet hose cold: GO TO 11.
- Both hoses warm: GO TO 9.

8. CHECK ENGINE COOLANT SYSTEM

Check engine coolant temperature sensor.

Is the inspection result normal?

YES >> System OK.
NO >> Repair or replace as necessary. Retest.

9. CHECK HEATER HOSES

Check heater hoses for proper installation.

Is the inspection result normal?

YES >> System OK.
NO >> 1. Back flush heater core.
2. Drain the water from the system.
3. Refill system with new engine coolant. Refer to CO-12, "Changing Engine Coolant" (VQ40DE) or CO-40, "Changing Engine Coolant" (VK56DE).
4. GO TO 10 to retest.

10. CHECK HEATER HOSE TEMPERATURES

1. Start engine and warm it up to normal operating temperature.
2. Touch both the inlet and outlet heater hoses. The inlet hose should be hot and the outlet hose should be warm.

Is the inspection result normal?

YES >> System OK.
NO >> Replace heater core. Refer to VTL-26, "Removal and Installation".

11. CHECK HEATER PUMP (VQ40DE ONLY)

Check the operation of the heater pump valve. Refer to HAC-74, "Component Inspection (VQ40DE)".

Is the inspection result normal?

YES >> System OK.
NO >> Replace heater pump. Refer to HA-57, "Removal and Installation".

NOISE

Component Function Check

INFOID:0000000005256972

SYMPTOM: Noise

INSPECTION FLOW

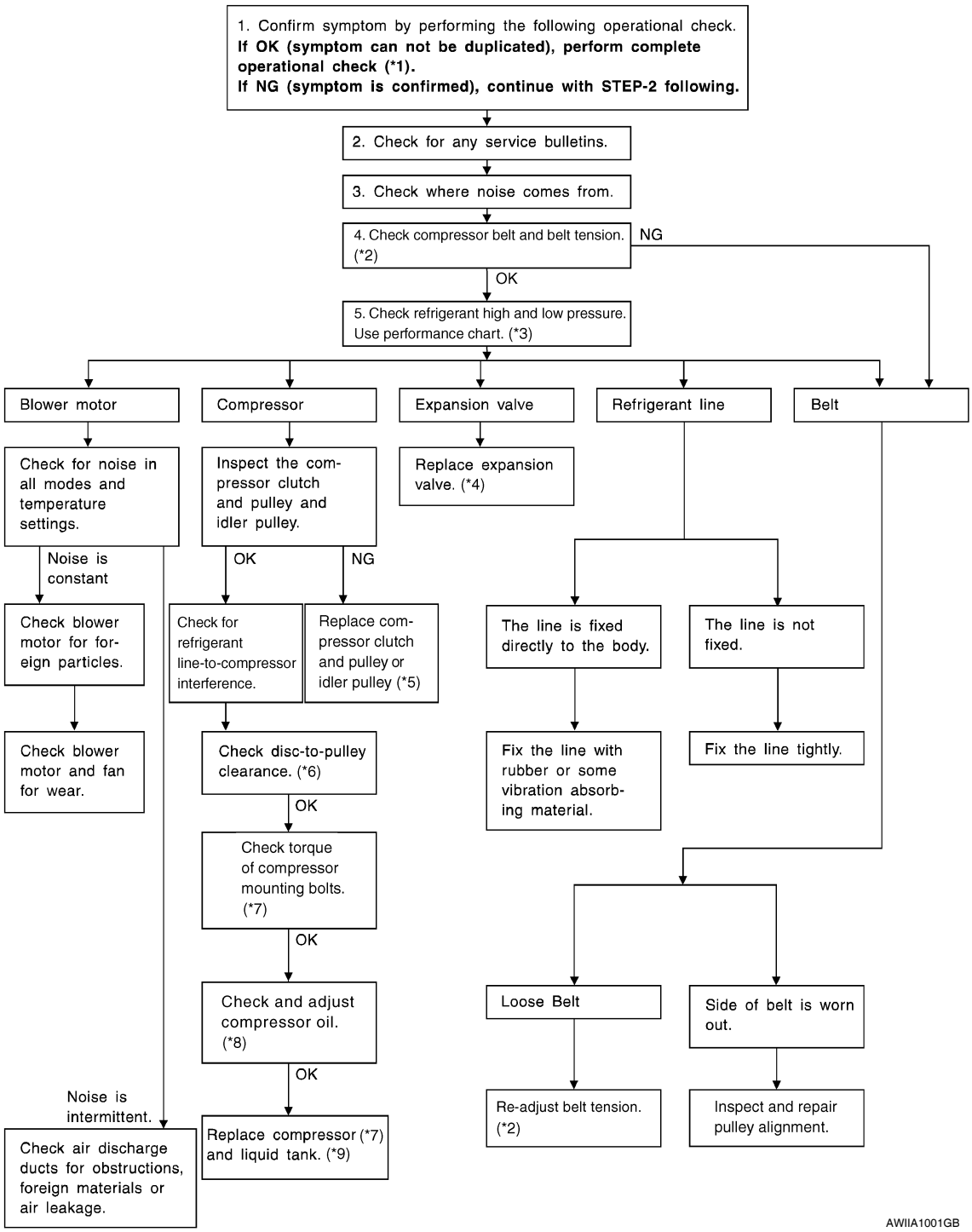

*1	HAC-5, "Operational Check (Front)" and HAC-6, "Operational Check (Rear)"	*2	EM-14, "Checking Drive Belts" (VQ40DE) or EM-149, "Checking Drive Belts" (VK56DE)	*3	HAC-110, "Performance Chart"
*4	VTL-24, "Removal and Installation for Rear Expansion Valve"	*5	HA-40, "Removal and Installation for Compressor Clutch"	*6	HA-40, "Removal and Installation for Compressor Clutch"
*7	HA-39, "Removal and Installation for Compressor"	*8	HA-27, "Maintenance of Oil Quantity in Compressor"	*9	HA-53, "Removal and Installation for Condenser"

MEMORY FUNCTION DOES NOT OPERATE

Memory Function Check

INFOID:0000000005256973

SYMPTOM: Memory function does not operate.

INSPECTION FLOW

1. CONFIRM SYMPTOM BY PERFORMING OPERATIONAL CHECK - MEMORY FUNCTION

1. Set the temperature to 32°C (90°F).
2. Press the OFF switch.
3. Turn ignition switch OFF.
4. Turn ignition switch ON.
5. Press the AUTO switch.
6. Confirm that the set temperature remains at previous temperature.
7. Press the OFF switch.

Can the symptom be duplicated?

YES >> GO TO 3.
NO >> GO TO 2.

2. PERFORM COMPLETE OPERATIONAL CHECK

Perform a complete operational check and check for any symptoms. Refer to HAC-123, "Operational Check".

Can a symptom be duplicated?

YES >> Refer to HAC-122, "How to Perform Trouble Diagnosis For Quick And Accurate Repair".
NO >> System OK.

3. CHECK FOR SERVICE BULLETINS

Check for any service bulletins.

>> GO TO 4.

4. PERFORM SELF-DIAGNOSIS

Perform self-diagnosis to check for any codes. Refer to HAC-24, "A/C Auto Amp. Self-Diagnosis".

Are any self-diagnosis codes present?

YES >> Refer to HAC-25, "A/C System Self-Diagnosis Code Chart".
NO >> GO TO 5.

5. CHECK POWER AND GROUND CIRCUIT

Check main power supply and ground circuit. Refer to HAC-160, "Front Air Control Component Function Check".

Is the inspection result normal?

YES >> GO TO 6.
NO >> Repair or replace as necessary.

6. RECHECK FOR SYMPTOMS

Perform a complete operational check for any symptoms. Refer to HAC-123, "Operational Check".

Does another symptom exist?

YES >> Refer to HAC-122, "How to Perform Trouble Diagnosis For Quick And Accurate Repair".
NO >> Replace A/C auto amp. Refer to VTL-7, "Removal and Installation".

PRECAUTION

PRECAUTIONS

Precaution for Supplemental Restraint System (SRS) "AIR BAG" and "SEAT BELT PRE-TENSIONER"

INFOID:0000000005476025

The Supplemental Restraint System such as “AIR BAG” and “SEAT BELT PRE-TENSIONER”, used along with a front seat belt, helps to reduce the risk or severity of injury to the driver and front passenger for certain types of collision. This system includes seat belt switch inputs and dual stage front air bag modules. The SRS system uses the seat belt switches to determine the front air bag deployment, and may only deploy one front air bag, depending on the severity of a collision and whether the front occupants are belted or unbelted.
Information necessary to service the system safely is included in the SR and SB section of this Service Manual.

WARNING:

- **To avoid rendering the SRS inoperative, which could increase the risk of personal injury or death in the event of a collision which would result in air bag inflation, all maintenance must be performed by an authorized NISSAN/INFINITI dealer.**
- **Improper maintenance, including incorrect removal and installation of the SRS, can lead to personal injury caused by unintentional activation of the system. For removal of Spiral Cable and Air Bag Module, see the SR section.**
- **Do not use electrical test equipment on any circuit related to the SRS unless instructed to in this Service Manual. SRS wiring harnesses can be identified by yellow and/or orange harnesses or harness connectors.**

PRECAUTIONS WHEN USING POWER TOOLS (AIR OR ELECTRIC) AND HAMMERS

WARNING:

- **When working near the Airbag Diagnosis Sensor Unit or other Airbag System sensors with the Ignition ON or engine running, DO NOT use air or electric power tools or strike near the sensor(s) with a hammer. Heavy vibration could activate the sensor(s) and deploy the air bag(s), possibly causing serious injury.**
- **When using air or electric power tools or hammers, always switch the Ignition OFF, disconnect the battery, and wait at least 3 minutes before performing any service.**

Working with HFC-134a (R-134a)

INFOID:0000000005256975

WARNING:

- **CFC-12 (R-12) refrigerant and HFC-134a (R-134a) refrigerant are not compatible. If the refrigerants are mixed compressor failure is likely to occur. Refer to HA-4, "Contaminated Refrigerant". To determine the purity of HFC-134a (R-134a) in the vehicle and recovery tank, use Refrigerant Recovery/Recycling Recharging equipment and Refrigerant Identifier.**
- **Use only specified oil for the HFC-134a (R-134a) A/C system and HFC-134a (R-134a) components. If oil other than that specified is used, compressor failure is likely to occur.**
- **The specified HFC-134a (R-134a) oil rapidly absorbs moisture from the atmosphere. The following handling precautions must be observed:**
- **When removing refrigerant components from a vehicle, immediately cap (seal) the component to minimize the entry of moisture from the atmosphere.**
- **When installing refrigerant components to a vehicle, do not remove the caps (unseal) until just before connecting the components. Connect all refrigerant loop components as quickly as possible to minimize the entry of moisture into system.**
- **Only use the specified oil from a sealed container. Immediately reseal containers of oil. Without proper sealing, oil will become moisture saturated and should not be used.**
- **Avoid breathing A/C refrigerant and oil vapor or mist. Exposure may irritate eyes, nose and throat. Remove HFC-134a (R-134a) from the A/C system using certified service equipment meeting requirements of SAE J2210 [HFC-134a (R-134a) recycling equipment], or J2209 [HFC-134a (R-134a) recycling equipment], If accidental system discharge occurs, ventilate work area before resuming service. Additional health and safety information may be obtained from refrigerant and oil manufacturers.**
- **Do not allow A/C oil to come in contact with styrofoam parts. Damage may result.**

CONTAMINATED REFRIGERANT

If a refrigerant other than pure HFC-134a (R-134a) is identified in a vehicle, your options are:

- Explain to the customer that environmental regulations prohibit the release of contaminated refrigerant into the atmosphere.
- Explain that recovery of the contaminated refrigerant could damage your service equipment and refrigerant supply.
- Suggest the customer return the vehicle to the location of previous service where the contamination may have occurred.
- If you choose to perform the repair, recover the refrigerant using only **dedicated equipment and containers. Do not recover contaminated refrigerant into your existing service equipment.** If your facility does not have dedicated recovery equipment, you may contact a local refrigerant product retailer for available service. This refrigerant must be disposed of in accordance with all federal and local regulations. In addition, replacement of all refrigerant system components on the vehicle is recommended.
- If the vehicle is within the warranty period, the air conditioner warranty is void. Please contact NISSAN Customer Affairs for further assistance.

Precaution for Service Equipment

INFOID:0000000005256976

MANIFOLD GAUGE SET

Be certain that the gauge face indicates R-134a or 134a. Make sure the gauge set has 1/2″-16 ACME threaded connections for service hoses. Confirm the set has been used only with refrigerant HFC-134a (R-134a) along with specified oil.

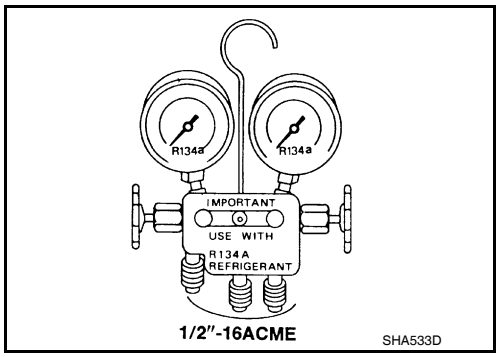

SERVICE HOSES

Be certain that the service hoses display the markings described (colored hose with black stripe). All hoses must include positive shut-off devices (either manual or automatic) near the end of the hoses opposite the manifold gauge.

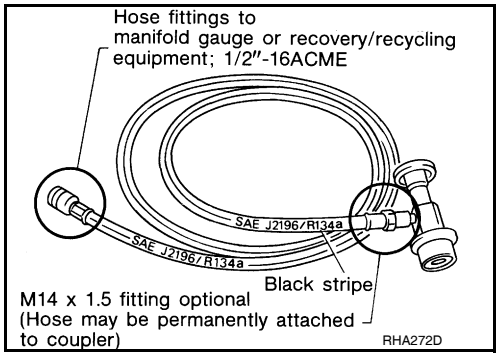

SERVICE COUPLERS

Never attempt to connect HFC-134a (R-134a) service couplers to a CFC-12 (R-12) A/C system. The HFC-134a (R-134a) couplers will not properly connect to the CFC-12 (R-12) system. However, if an improper connection is attempted, discharging and contamination may occur.

Shut-off valve rotation	A/C service valve
Clockwise	Open
Counterclockwise	Close

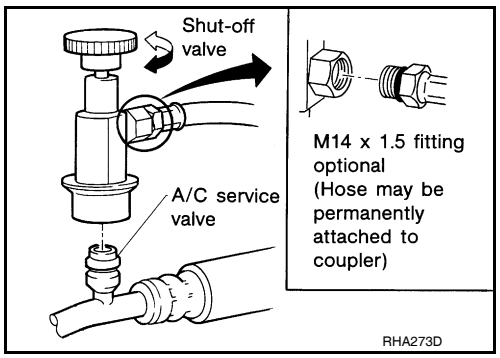

BASIC INSPECTION

DIAGNOSIS AND REPAIR WORKFLOW

How to Perform Trouble Diagnosis For Quick And Accurate Repair

INFOID:0000000005256977

WORK FLOW

1.LISTEN TO CUSTOMER COMPLAINT

Listen to customer complaint. Get detailed information about the conditions and environment when the symptom occurs.

>> GO TO 2.

2.CHECK FOR SERVICE BULLETINS

Check for any service bulletins.

>> GO TO 3.

3.VERIFY THE SYMPTOM WITH OPERATIONAL CHECK

Verify the symptom with operational check. Refer to HAC-123, "Operational Check".

Can a symptom be duplicated?

YES >> Go to trouble diagnosis. Refer to HAC-172, "Symptom Matrix Chart".
NO >> System OK.

INSPECTION AND ADJUSTMENT

Operational Check

INFOID:0000000005256978

The purpose of the operational check is to confirm that the system operates properly.

Conditions : Engine running and at normal operating temperature

CHECKING BLOWER

1. Turn blower control dial clockwise. Blower should operate on low speed.
2. Turn the blower control dial again, and continue checking each blower speed until all speeds are checked.
3. Leave blower on speed 4.

If NG, go to trouble diagnosis procedure for HAC-147, "Front Blower Motor Diagnosis Procedure".
If OK, continue with next check.

CHECKING DISCHARGE AIR

1. Turn the mode switch to each position.
2. Confirm that discharge air comes out according to the air distribution table. Refer to HAC-132, "Discharge Air Flow".

Mode door position is checked in the next step.
If NG, go to trouble diagnosis procedure for HAC-137, "Mode Door Motor (Front) Diagnosis Procedure".
If OK, continue with next check.

NOTE:
Confirm that the A/C compressor clutch is engaged (sound or visual inspection) and intake door position is at fresh when the DEF ( ) or D/F ( ) is selected.

CHECKING RECIRCULATION

1. Press recirculation ( ) switch one time. Recirculation indicator should illuminate.
2. Press recirculation ( ) switch one more time. Recirculation indicator should go off.
3. Listen for intake door position change (blower sound should change slightly).

If NG, go to trouble diagnosis procedure for HAC-144, "Intake Door Motor Diagnosis Procedure".
If OK, continue with next check.

NOTE:
Confirm that the compressor clutch is engaged (sound or visual inspection) and intake door position is at fresh when the DEF or D/F is selected.

CHECKING TEMPERATURE DECREASE

1. Rotate temperature control dial counterclockwise.
2. Check for cold air at appropriate discharge air outlets.

If NG, listen for sound of air mix door motor operation if OK, go to trouble diagnosis procedure for HAC-173, "Component Function Check". If air mix door motor appears to be malfunctioning, go to HAC-140, "Air Mix Door Motor Component Function Check".
If OK, continue with next check.

CHECKING TEMPERATURE INCREASE

1. Rotate temperature control dial clockwise.
2. Check for hot air at appropriate discharge air outlets.

If NG, listen for sound of air mix door motor operation. If OK, go to trouble diagnosis procedure for HAC-181, "Component Function Check". If air mix door motor (front) appears to be malfunctioning, go to HAC-140, "Air Mix Door Motor Component Function Check".
If OK, continue with next check.

CHECK A/C SWITCH

1. Press A/C switch with the blower switch ON.
2. A/C switch indicator will turn ON.
   - Confirm that the compressor clutch engages (sound or visual inspection).

If NG, go to trouble diagnosis procedure for HAC-153, "Magnet Clutch Diagnosis Procedure".
If OK, continue with next check.

FUNCTION DIAGNOSIS

FUNCTION INFORMATION

Component Part Location

INFOID:0000000005256979

ENGINE COMPARTMENT

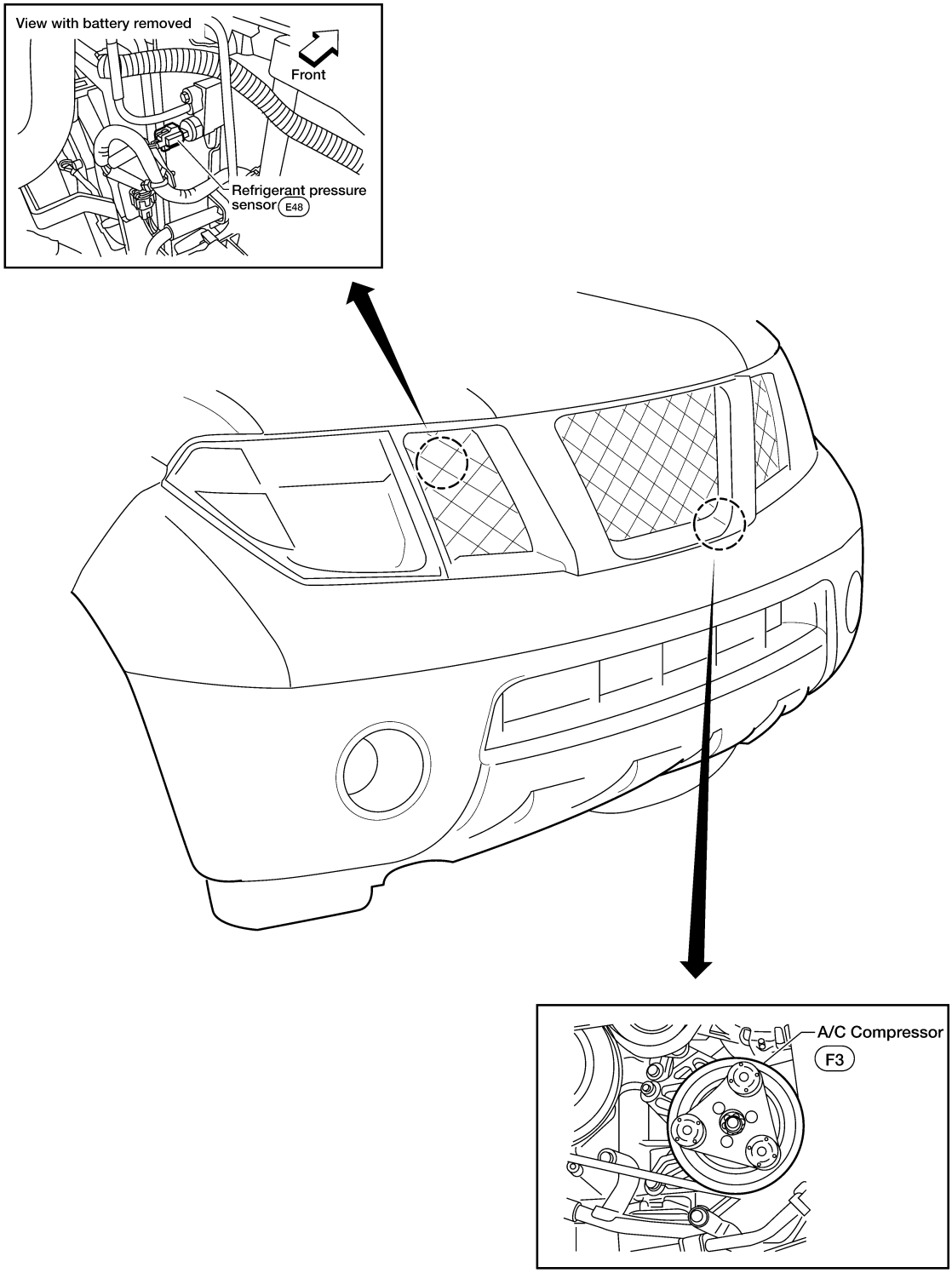

WJIA1489E

PASSENGER COMPARTMENT

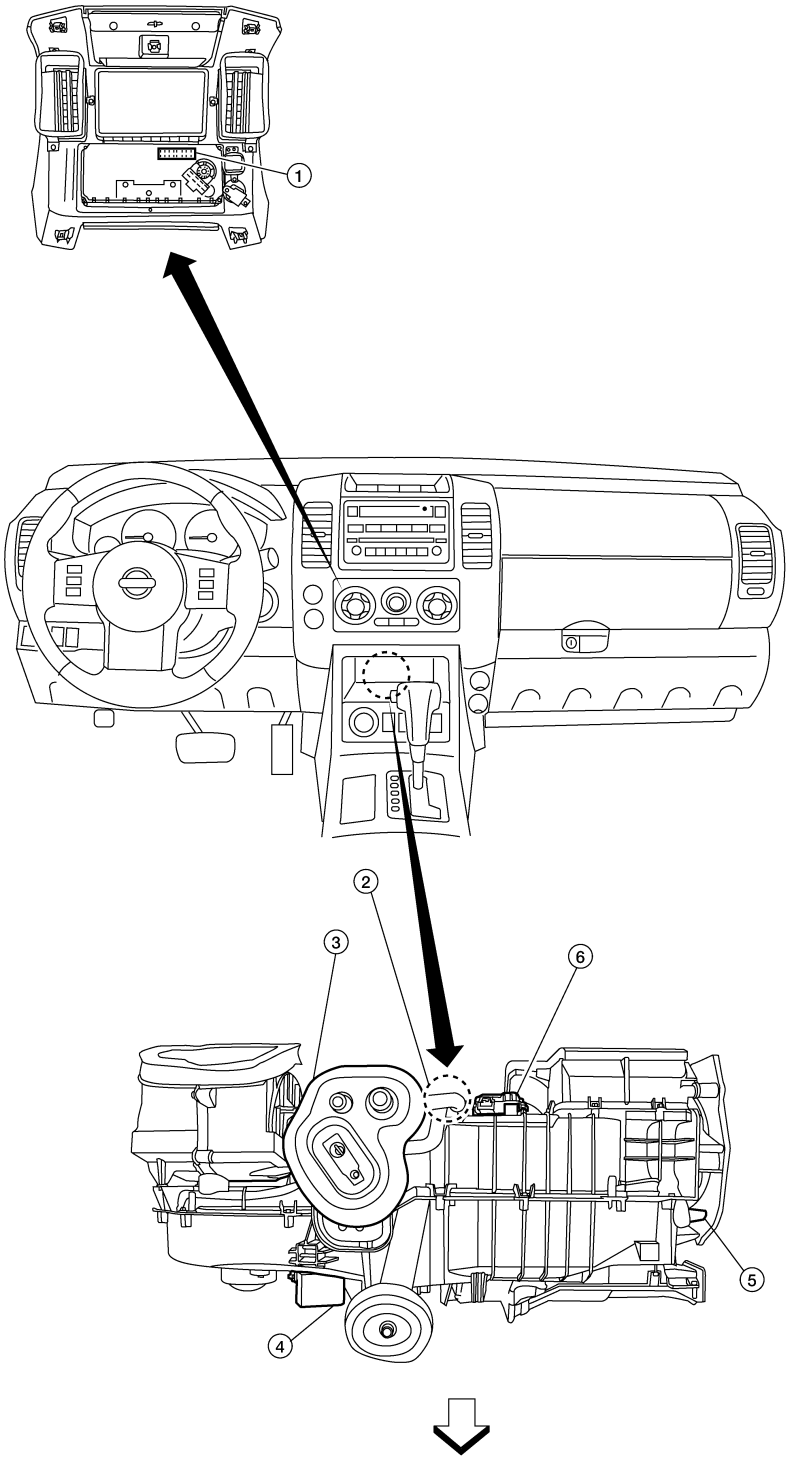

1. Front air control M52
2. Intake sensor M146
3. Intake door motor M58
4. Front blower motor resistor M121
5. Mode door motor M144
6. Air mix door motor (front) M149

Symptom Table

INFOID:0000000005256980

Symptom	Reference Page	
A/C system does not come on.	Go to Trouble Diagnosis Procedure for A/C System.	HAC-160
Air outlet does not change.	Go to Trouble Diagnosis Procedure for Mode Door Motor.	HAC-136
Mode door motor is malfunctioning.		
Discharge air temperature does not change.	Go to Trouble Diagnosis Procedure for Air Mix Door Motor.	HAC-140
Air mix door motor is malfunctioning.		
Intake door does not change.	Go to Trouble Diagnosis Procedure for Intake Door Motor.	HAC-143
Intake door motor is malfunctioning.		
Front blower motor operation is malfunctioning.	Go to Trouble Diagnosis Procedure for Front Blower Motor.	HAC-146
Magnet clutch does not engage.	Go to Trouble Diagnosis Procedure for Magnet Clutch.	HAC-153
Insufficient cooling	Go to Trouble Diagnosis Procedure for Insufficient Cooling.	HAC-173
Insufficient heating	Go to Trouble Diagnosis Procedure for Insufficient Heating.	HAC-181
Noise	Go to Trouble Diagnosis Procedure for Noise.	HAC-183

REFRIGERATION SYSTEM

Refrigerant Cycle

INFOID:0000000005256981

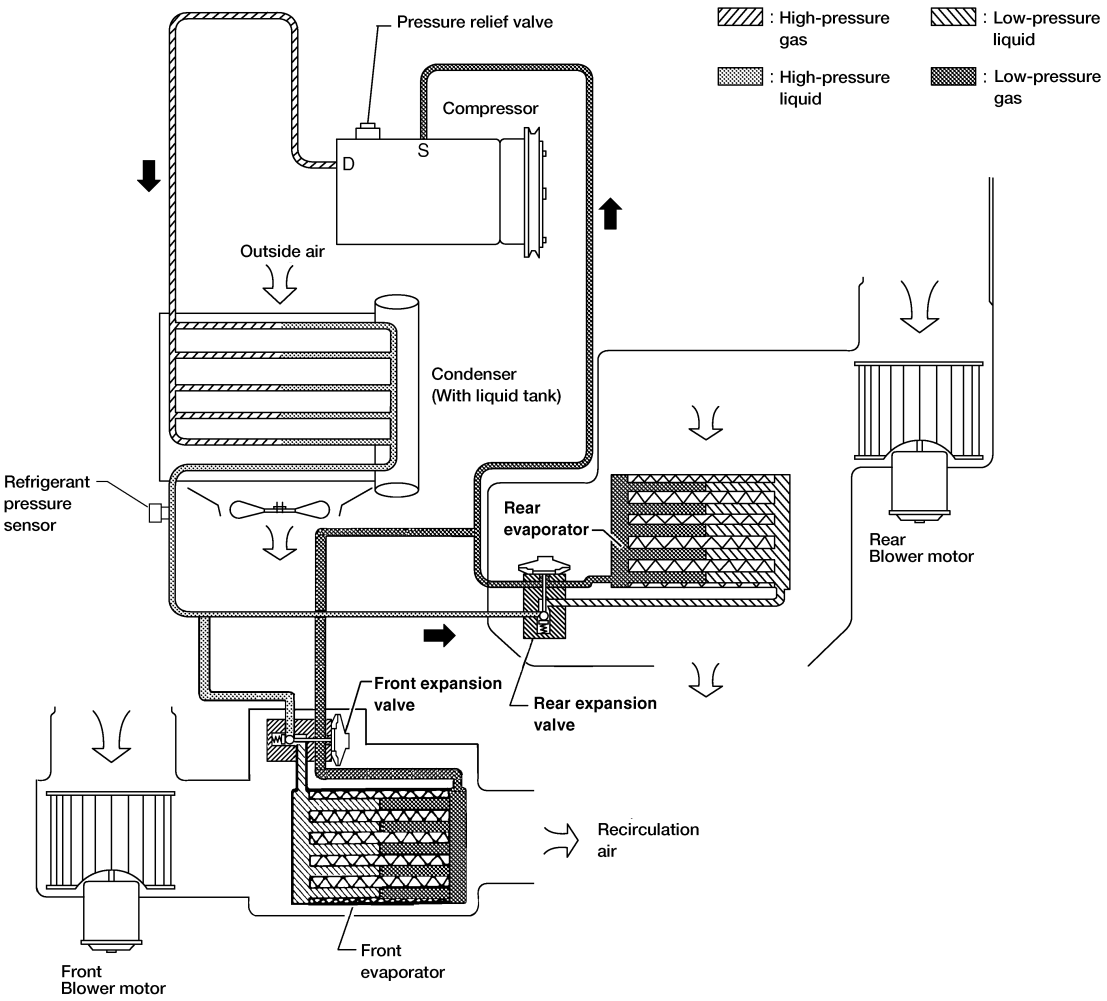

WJIA1342E

REFRIGERANT FLOW

The refrigerant flows in the standard pattern, that is, through the compressor, the condenser with liquid tank, through the front and rear evaporators, and back to the compressor. The refrigerant evaporation through the evaporator coils are controlled by front and rear externally equalized expansion valves, located inside the front and rear evaporator cases.

FREEZE PROTECTION

The compressor cycles on and off to maintain the evaporator temperature within a specified range. When the evaporator coil temperature falls below a specified point, the intake sensor interrupts the compressor operation. When the evaporator coil temperature rises above the specification, the intake sensor allows compressor operation.

Refrigerant System Protection

INFOID:0000000005256982

REFRIGERANT PRESSURE SENSOR

The refrigerant system is protected against excessively high- or low-pressures by the refrigerant pressure sensor, located on the condenser. If the system pressure rises above or falls below the specifications, the refrigerant pressure sensor detects the pressure inside the refrigerant line and sends a voltage signal to the ECM. The ECM de-energizes the A/C relay to disengage the magnetic compressor clutch when pressure on the high pressure side detected by refrigerant pressure sensor is over about 2,746 kPa (28 kg/cm^2, 398 psi), or below about 120 kPa (1.22 kg/cm^2, 17.4 psi).

PRESSURE RELIEF VALVE

The refrigerant system is also protected by a pressure relief valve, located in the rear head of the compressor. When the pressure of refrigerant in the system increases to an abnormal level [more than 2,990 kPa (30.5 kg/cm^2, 433.6 psi)], the release port on the pressure relief valve automatically opens and releases refrigerant into the atmosphere.

MANUAL AIR CONDITIONER SYSTEM

Control System Diagram

INFOID:0000000005256983

CONTROL SYSTEM

The control system consists of input sensors, switches, the front air control (microcomputer) and outputs. The relationship of these components is shown in the figure below:

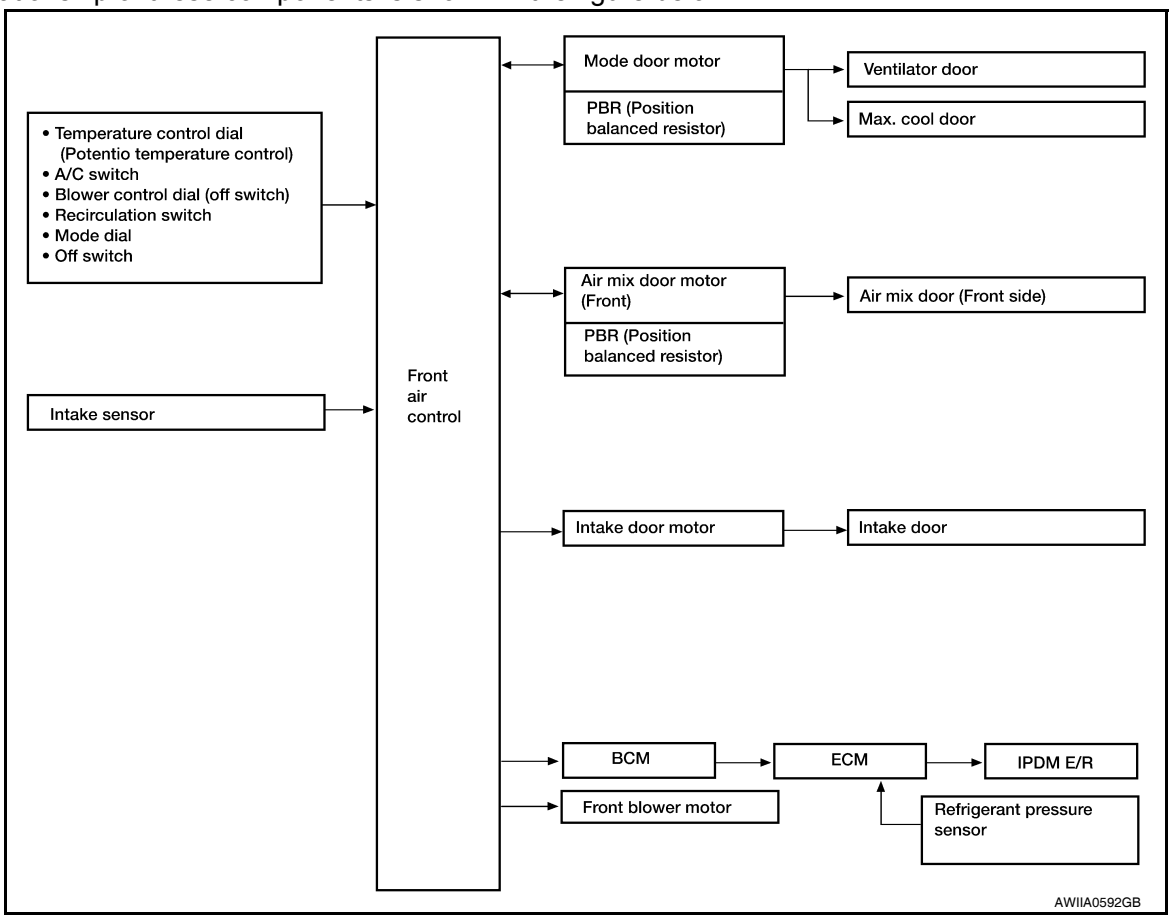

Control System Description

INFOID:0000000005256984

CONTROL OPERATION

Front air control

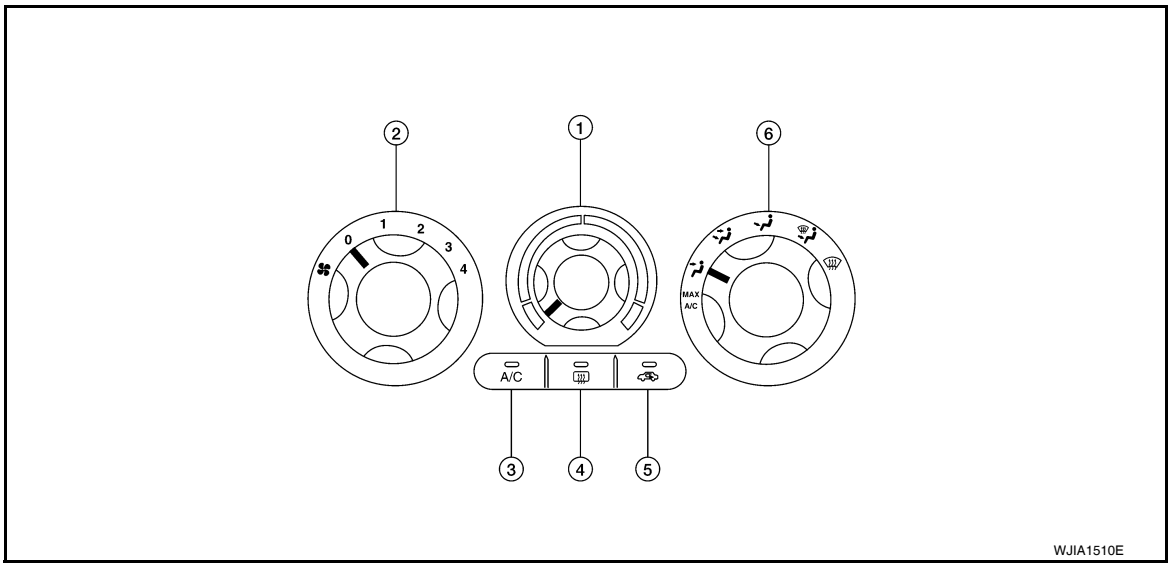

1. Temperature control dial
2. Blower control dial
3. A/C switch
4. Rear window defogger switch
5. Recirculation switch
6. Mode dial

TEMPERATURE CONTROL DIAL (TEMPERATURE CONTROL)
Increases or decreases the set temperature.

RECIRCULATION ( ) SWITCH
- When REC switch is ON, REC switch indicator turns ON, and air inlet is set to REC.
- When REC switch is turned OFF, or when compressor is turned from ON to OFF, REC switch is automatically turned OFF. REC mode can be re-entered by pressing REC switch again.
- REC switch is not operated when DEF switch is turned ON, or at the D/F or FOOT position.

DEFROSTER ( ) SWITCH
Positions the air outlet doors to the defrost position. Also positions the intake doors to the outside air position.

REAR WINDOW DEFOGGER SWITCH
When switch is ON, rear window is defogged.

OFF SWITCH (BLOWER SPEED SET TO 0)
The compressor and blower are OFF.

A/C SWITCH
The compressor is ON or OFF.
(Pressing the A/C switch will turn off the A/C switch and compressor.)

MODE DIAL
Controls the air discharge outlets.

FRONT BLOWER CONTROL DIAL
Manually controls the four blower speeds.

MAGNET CLUTCH CONTROL

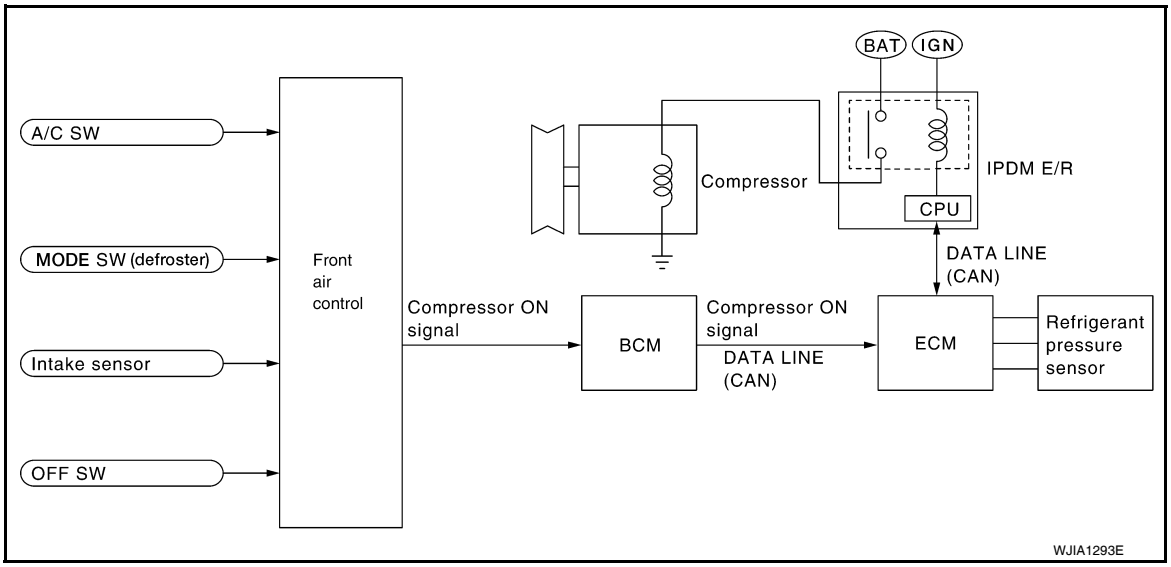

When the A/C switch is pressed, or the mode dial is turned to the DEF or D/F position, the front air control outputs a compressor ON signal to BCM.
The BCM then sends a compressor ON signal to ECM, via CAN communication line.
ECM judges whether compressor can be turned ON, based on each sensor status (refrigerant pressure sensor signal, throttle angle sensor, etc.). If it judges compressor can be turned ON, it sends compressor ON signal to IPDM E/R, via CAN communication line.
Upon receipt of compressor ON signal from ECM, IPDM E/R turns air conditioner relay ON to operate compressor.

Discharge Air Flow

INFOID:0000000005256985

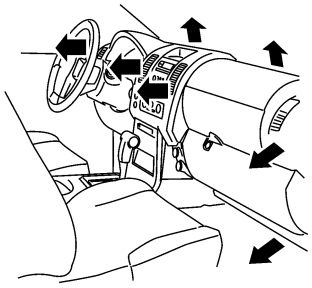

WJIA1296E

Mode door position	Air outlet/distribution		
	Vent	Foot	Defroster
	95%	5%	—
	60%	40%	—
	20%	55%	25%
	15%	50%	35%
	7%	15%	78%
Airflow always present at driver and passenger side demisters			

Switches And Their Control Function

INFOID:0000000005256986

SWITCHES AND THEIR CONTROL FUNCTION

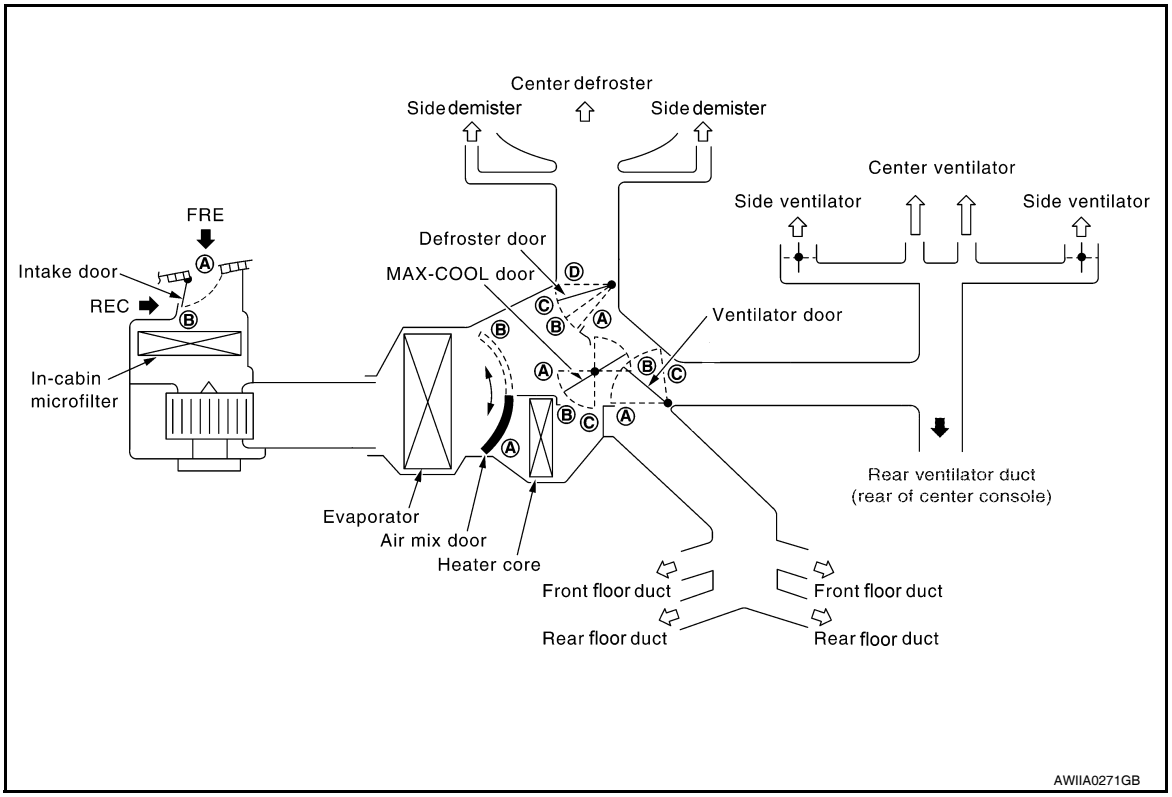

Position or switch / Door	MODE SW				DEF SW		REC SW		Temperature dial			OFF SW
	VENT	B/L	FOOT	D/F	ON	OFF	ON	OFF				
					FRONT							
					☀	○	☀	○	COLD	~	HOT	OFF
Ventilator door	Ⓐ	Ⓑ	Ⓒ	Ⓒ	Ⓒ	—	—		—			Ⓒ
MAX-COOL door	Ⓐ	Ⓑ	Ⓑ	Ⓑ	Ⓒ		—		—			Ⓑ
Defroster door	Ⓓ	Ⓓ	Ⓓ or Ⓒ	Ⓑ	Ⓐ		—		—			Ⓒ
Intake door	—				Ⓑ		Ⓐ	Ⓑ	—			Ⓑ
Air mix door	—				—		—		Ⓐ		Ⓑ	—

WJIA1497E

DIAGNOSIS SYSTEM (BCM)

CONSULT-III Function (BCM - COMMON ITEM)

INFOID:0000000005483706

APPLICATION ITEM

CONSULT-III performs the following functions via CAN communication with BCM.

Diagnosis mode	Function Description
WORK SUPPORT	Changes the setting for each system function.
SELF-DIAG RESULTS	Displays the diagnosis results judged by BCM. Refer to BCS-54, "DTC Index".
CAN DIAG SUPPORT MNTR	Monitors the reception status of CAN communication viewed from BCM.
DATA MONITOR	The BCM input/output signals are displayed.
ACTIVE TEST	The signals used to activate each device are forcibly supplied from BCM.
ECU IDENTIFICATION	The BCM part number is displayed.
CONFIGURATION	• Enables to read and save the vehicle specification. • Enables to write the vehicle specification when replacing BCM.

SYSTEM APPLICATION

BCM can perform the following functions for each system.

NOTE:

It can perform the diagnosis modes except the following for all sub system selection items.

System	Sub system selection item	Diagnosis mode		
		WORK SUPPORT	DATA MONITOR	ACTIVE TEST
BCM	BCM	×		
Door lock	DOOR LOCK	×	×	×
Rear window defogger	REAR DEFOGGER		×	×
Warning chime	BUZZER		×	×
Interior room lamp timer	INT LAMP	×	×	×
Remote keyless entry system[1]	MULTI REMOTE ENT	×	×	×
Exterior lamp	HEAD LAMP	×	×	×
Wiper and washer	WIPER	×	×	×
Turn signal and hazard warning lamps	FLASHER		×	×
Air conditioner	AIR CONDITONER		×	
Intelligent Key system[2]	INTELLIGENT KEY		×	
Combination switch	COMB SW		×	
Immobilizer	IMMU		×	×
Interior room lamp battery saver	BATTERY SAVER	×	×	×
Back door open	TRUNK		×	×
RAP (retained accessory power)	RETAINED PWR	×	×	×
Signal buffer system	SIGNAL BUFFER		×	×
TPMS (tire pressure monitoring system)	AIR PRESSURE MONITOR	×	×	×
Vehicle security system	THEFT ALM	×	×	×
Panic alarm	PANIC ALARM			×

1: With remote keyless entry system

2: With Intelligent Key

CONSULT-III Function (BCM - AIR CONDITIONER)

INFOID:0000000005483707

DATA MONITOR

Monitor Item [Unit]	Contents
IGN ON SW [ON/OFF]	Display [ignition switch position (On)/(Off), ACC position (Off)] status as judged from ignition switch signal
FAN ON SIG [ON/OFF]	Display [FAN (On)/FAN (Off)] status as judged form blower fan motor switch signal
AIR COND SW [ON/OFF]	Display [COMP (On)/COMP (Off)] status as judged form air conditioner switch signal

COMPONENT DIAGNOSIS

MODE DOOR MOTOR

System Description

INFOID:0000000005256989

SYSTEM DESCRIPTION

Component Parts

Mode door control system components are:
- Front air control
- Mode door motor
- PBR (built into mode door motor)
- Intake sensor

System Operation
The mode door position (vent, B/L, foot, D/F, and defrost) is set by the front air control by means of the mode door motor. When a mode door position is selected on the front air control, voltage is applied to one circuit of the mode door motor while ground is applied to the other circuit, causing the mode door motor to rotate. The direction of rotation is determined by which circuit has voltage applied to it, and which one has ground applied to it. The front air control monitors the mode door position by measuring the voltage signal on the PBR circuit.

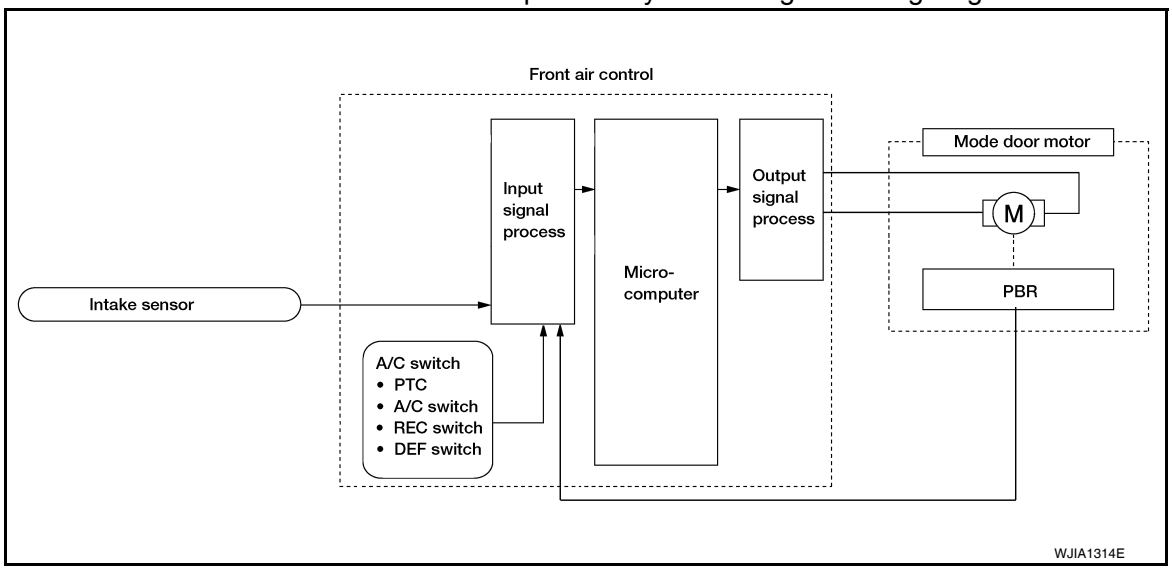

COMPONENT DESCRIPTION

Mode Door Motor
The mode door motor is attached to the heater and cooling unit assembly. It rotates so that air is discharged from the outlet as indicated by the front air control. Motor rotation is conveyed to a link which activates the mode door.

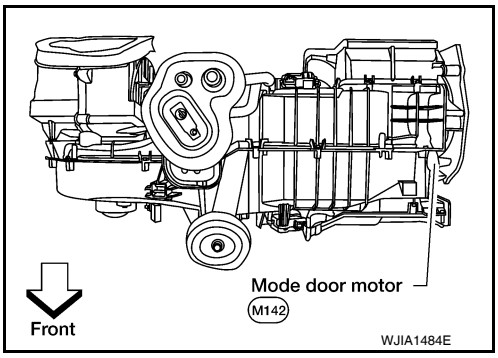

Mode Door Motor (Front) Component Function Check

INFOID:0000000005256990

SYMPTOM:
- Air outlet does not change.
- Mode door motor does not operate normally.

INSPECTION FLOW

1. CONFIRM SYMPTOM BY PERFORMING OPERATIONAL CHECK - DISCHARGE AIR

1. Turn blower control dial to 4.
2. Turn the mode dial and check all positions.
3. Confirm that discharge air comes out according to the air distribution table. Refer to HAC-132, "Discharge Air Flow".
   NOTE:
   Confirm that the compressor clutch is engaged (visual inspection) and intake door position is at FRESH when DEF ( ) or D/F ( ) is selected.

Can a symptom be duplicated?

YES >> Inspection End.
NO >> Go to diagnosis procedure. Refer to HAC-137, "Mode Door Motor (Front) Diagnosis Procedure".

Mode Door Motor (Front) Diagnosis Procedure

INFOID:0000000005256991

Regarding Wiring Diagram information, refer to HAC-165, "Wiring Diagram".

MODE DOOR MOTOR DIAGNOSTIC PROCEDURE

1. CHECK POWER SUPPLY AND GROUND CIRCUITS FOR MODE DOOR MOTOR

1. Turn ignition switch OFF.
2. Disconnect front air control connector and mode door motor connector.
3. Check continuity between front air control harness connector M52 terminal 1 and mode door motor harness connector M144 terminal 1 and between front air control harness connector M52 terminal 14 and mode door motor harness connector M144 terminal 6.

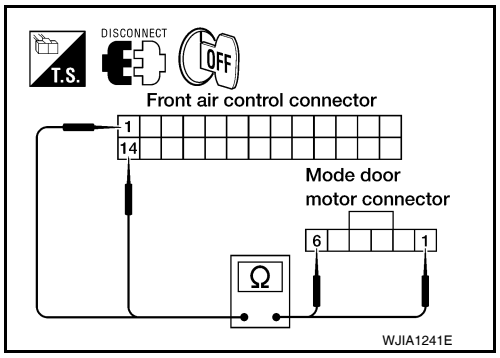

1 - 1	**: Continuity should exist.**
14 - 6	**: Continuity should exist.**

Is inspection result normal?

YES >> GO TO 2.
NO >> Repair or replace harness as necessary.

2. CHECK PBR REFERENCE SIGNAL VOLTAGE

1. Reconnect the front air control connector.
2. Turn ignition switch ON.
3. Check voltage between mode door motor harness connector M144 terminal 3 and ground.

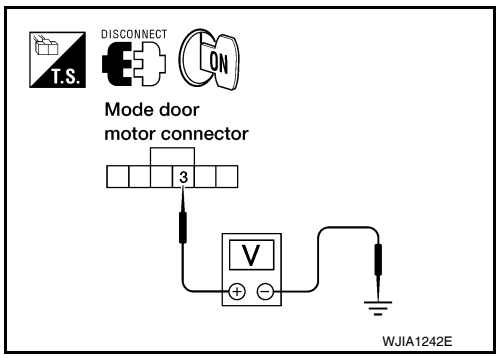

3 - Ground	**: Approx. 5V**

Is inspection result normal?

YES >> GO TO 4.
NO >> GO TO 3.

3. CHECK PBR REFERENCE VOLTAGE CIRCUIT BETWEEN MODE DOOR AND FRONT AIR CONTROL

1. Turn ignition switch OFF.
2. Disconnect the front air control connector.
3. Check continuity between mode door motor harness connector M144 terminal 3 and front air control harness connector M52 terminal 23.

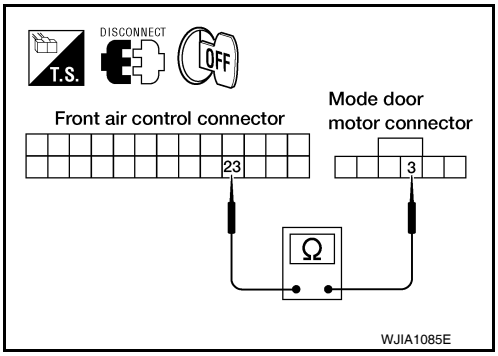

3 - 23 **: Continuity should exist.**

Is inspection result normal?

YES >> Replace front air control. Refer to VTL-7, "Removal and Installation".
NO >> Repair or replace harness as necessary.

4. CHECK PBR GROUND REFERENCE CIRCUIT

1. Turn ignition switch OFF.
2. Disconnect the front air control connector.
3. Check continuity between mode door motor harness connector M144 terminal 2 and front air control harness connector M52 terminal 26.

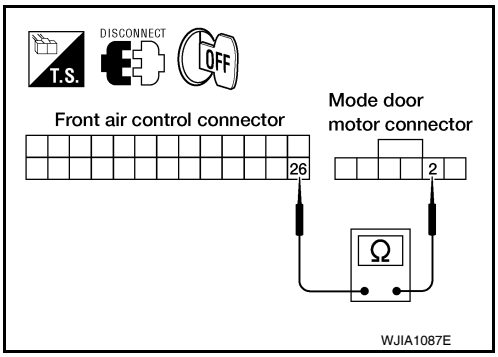

2 - 26 **: Continuity should exist.**

Is inspection result normal?

YES >> GO TO 5.
NO >> Repair or replace harness as necessary.

5. CHECK PBR FEEDBACK SIGNAL

1. Reconnect the front air control connector and mode door motor connector.
2. Turn ignition switch ON.
3. Check voltage between front air control harness connector M52 terminal 21 and ground.
4. Press mode switch through all modes.

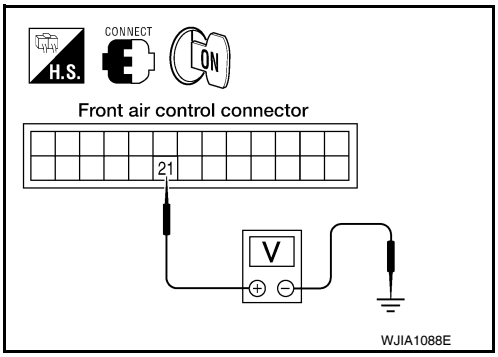

21 - Ground **: Approx. 0 - 5V**

Is inspection result normal?

YES >> Replace front air control. Refer to VTL-7, "Removal and Installation".
NO >> GO TO 6.

6. CHECK PBR FEEDBACK CIRCUIT

1. Turn ignition switch OFF.
2. Disconnect the mode door motor connector and front air control harness connector.
3. Check continuity between mode door motor harness connector M144 terminal 4 and front air control harness connector M52 terminal 21.

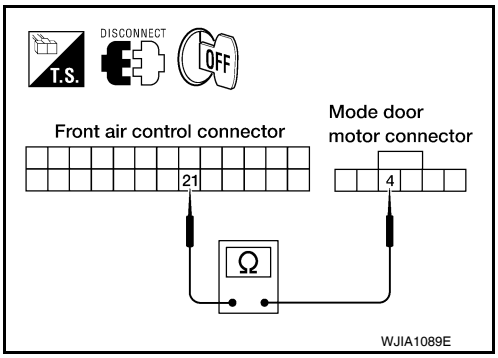

4 - 21 **: Continuity should exist.**

Is inspection result normal?

YES >> Replace mode door motor. Refer to VTL-28, "Removal and Installation".
NO >> Repair or replace harness as necessary.

AIR MIX DOOR MOTOR

System Description

INFOID:0000000005256992

SYSTEM DESCRIPTION

Component Parts

Air mix door control system components are:
- Front air control
- Air mix door motor
- PBR (built into air mix door motor)
- Intake sensor

System Operation

The front air control receives data from the temperature selected by the driver. The front air control then applies a voltage to one circuit of the air mix door motor, while ground is applied to the other circuit, causing the air mix door motor to rotate. The direction of rotation is determined by which circuit has voltage applied to it, and which one has ground applied to it. The front air control monitors the air mix door positions by measuring the voltage signal on the PBR circuits of each door.

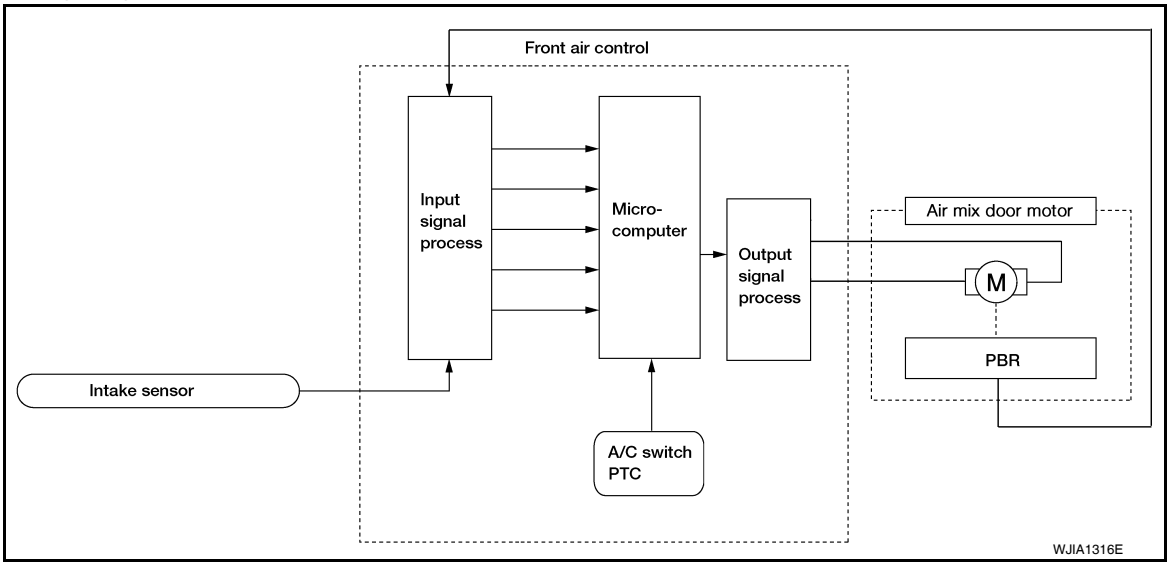

Air Mix Door Control Specification

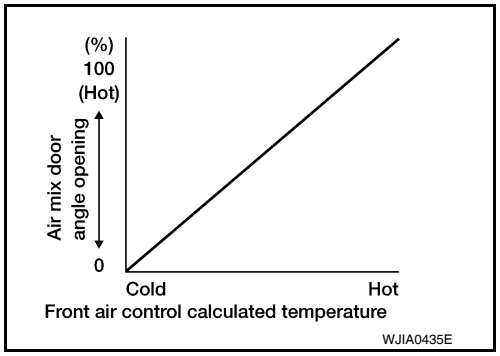

COMPONENT DESCRIPTION

Air Mix Door Motors

The air mix door motor (1) is attached to the front heater and cooling unit assembly. This motor rotates so that the air mix door is opened or closed to a position set by the front air control. Motor rotation is then conveyed through a shaft and the air mix door position is then fed back to the front air control by the PBR built into the air mix door motor (⇒: Front).↓

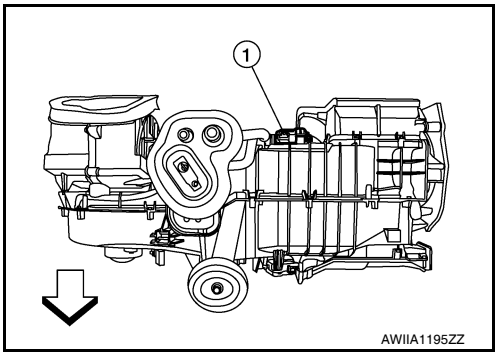

Air Mix Door Motor Component Function Check

INFOID:0000000005256993

INSPECTION FLOW

1. CONFIRM SYMPTOM BY PERFORMING OPERATIONAL CHECK - TEMPERATURE INCREASE

1. Blower must be on (1, 2, 3, 4).
2. Turn the temperature control dial clockwise to maximum heat.
3. Check for hot air at discharge air outlets.

>> GO TO 2.

2. CONFIRM SYMPTOM BY PERFORMING OPERATIONAL CHECK - TEMPERATURE DECREASE

1. Turn the temperature control dial counterclockwise to maximum cold.
2. Check for cold air at discharge air outlets.

Can a symptom be duplicated?

YES >> Inspection End.
NO >> Go to diagnosis procedure. Refer to HAC-140, "Air Mix Door Motor Diagnosis Procedure".

Air Mix Door Motor Diagnosis Procedure

INFOID:0000000005256994

Regarding Wiring Diagram information, refer to HAC-165, "Wiring Diagram".

DIAGNOSTIC PROCEDURE FOR AIR MIX DOOR MOTOR

1. CHECK POWER SUPPLY CIRCUITS FOR AIR MIX DOOR MOTOR

1. Turn ignition switch OFF.
2. Disconnect front air control connector and air mix door motor connector.
3. Check continuity between front air control harness connector M52 terminal 2 and 3 and air mix door motor harness connector M149 terminal 6 and 5.

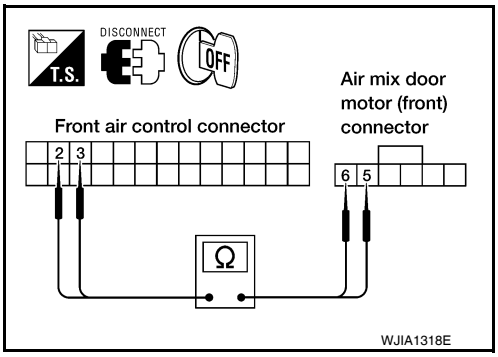

2 - 6	**: Continuity should exist.**
3 - 5	**: Continuity should exist.**

Is inspection result normal?

YES >> GO TO 2.
NO >> Repair or replace harness as necessary.

2. CHECK PBR REFERENCE SIGNAL VOLTAGE

1. Reconnect the front air control connector.
2. Turn ignition switch ON.
3. Check voltage between air mix door motor harness connector M149 terminal 1 and ground.

1 - Ground : Approx. 5V

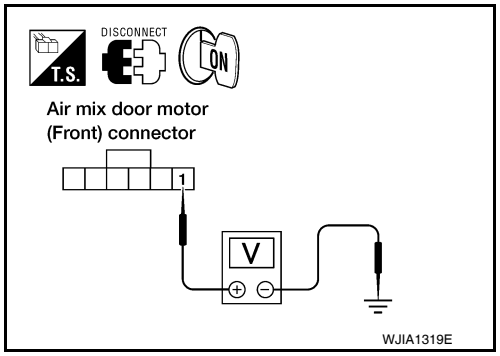

Is inspection result normal?

YES >> GO TO 4.
NO >> GO TO 3.

3. CHECK PBR REFERENCE VOLTAGE CIRCUIT BETWEEN AIR MIX DOOR MOTOR AND FRONT AIR CONTROL

1. Turn ignition switch OFF.
2. Disconnect the front air control connector.
3. Check continuity between air mix door motor harness connector M149 (B) terminal 1 and front air control harness connector M52 (A) terminal 23.

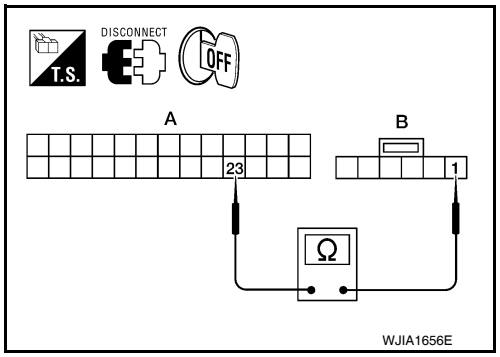

A		B		
Connector	Terminal	Connector	Terminal	Continuity
Front air control: M52	23	Air mix door motor : M143	1	Yes

Is inspection result normal?

YES >> Replace front air control. Refer to VTL-7, "Removal and Installation".
NO >> Repair or replace harness as necessary.

4. CHECK PBR GROUND REFERENCE CIRCUIT

1. Turn ignition switch OFF.
2. Disconnect the front air control connector.
3. Check continuity between air mix door motor harness connector M149 terminal 3 and front air control harness connector M52 terminal 26.

3 - 26 : Continuity should exist.

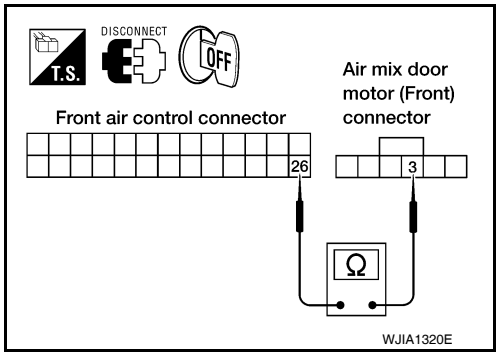

Is inspection result normal?

YES >> GO TO 5.
NO >> Repair or replace harness as necessary.

5. CHECK PBR FEEDBACK SIGNAL

1. Reconnect the front air control connector and air mix door motor connector.
2. Turn ignition switch ON.
3. Check voltage between front air control harness connector M52 terminal 22 and ground.
4. Rotate temperature control dial through complete range.

22 - Ground : Approx. 0V - 5V

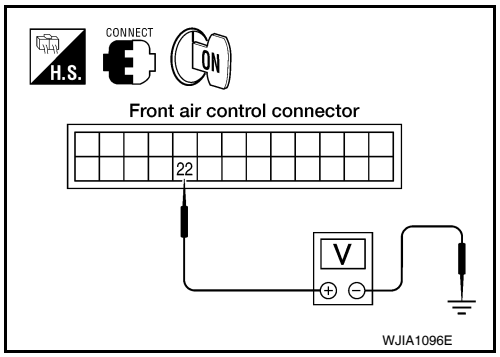

Is inspection result normal?

YES >> Replace front air control. Refer to VTL-7, "Removal and Installation".
NO >> GO TO 6.

6. CHECK PBR FEEDBACK CIRCUIT

1. Turn ignition switch OFF.
2. Disconnect the air mix door motor connector and front air control connector.
3. Check continuity between air mix door motor harness connector M149 terminal 2 and front air control harness connector M52 terminal 22.

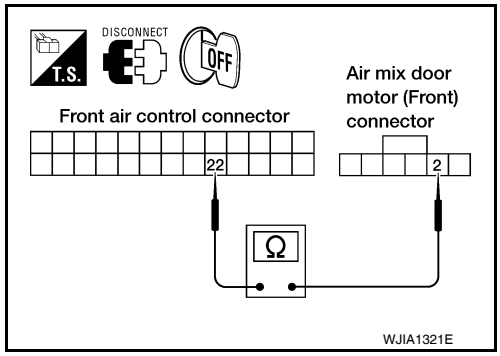

2 - 22 : Continuity should exist.

Is inspection result normal?

YES >> Replace air mix door motor. Refer to VTL-30, "Removal and Installation".

NO >> Repair or replace harness as necessary.

INTAKE DOOR MOTOR

System Description

INFOID:0000000005256995

SYSTEM DESCRIPTION

Component Parts

Intake door control system components are:
- Front air control
- Intake door motor
- Intake sensor

System Operation

The intake door control determines the intake door position based on the position of the recirculation switch. When the recirculation switch is depressed the intake door motor rotates closing off the fresh air inlet and recirculating the cabin air. If the recirculation switch is depressed again, the intake door motor rotates in the opposite direction, again allowing fresh air into the cabin.

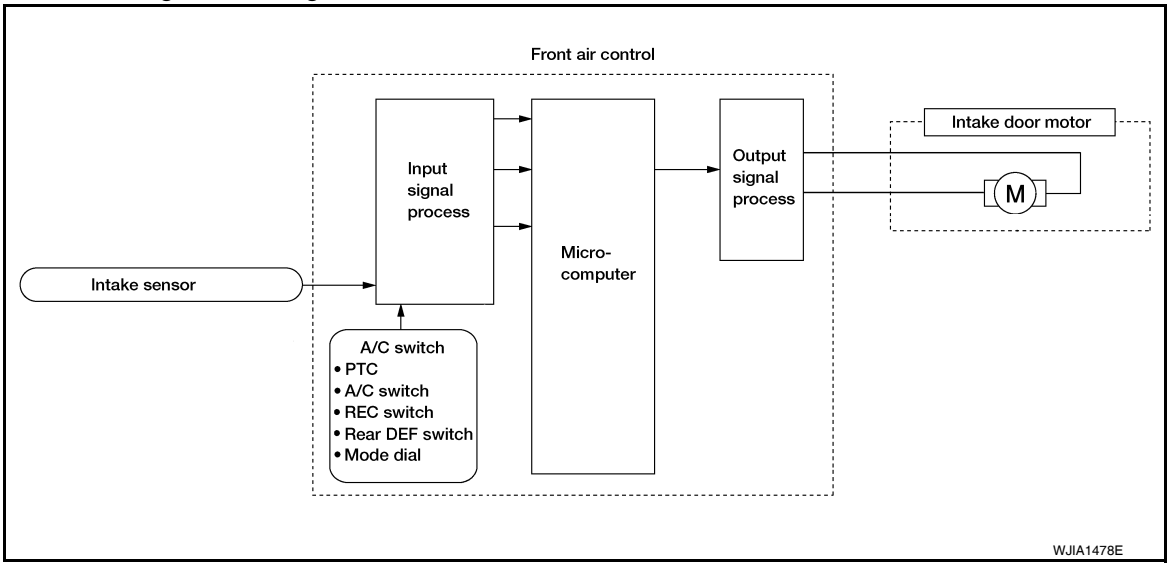

COMPONENT DESCRIPTION

Intake door motor

The intake door motor is attached to the intake unit. It rotates so that air is drawn from inlets set by the front air control. Motor rotation is conveyed to a lever which activates the intake door.

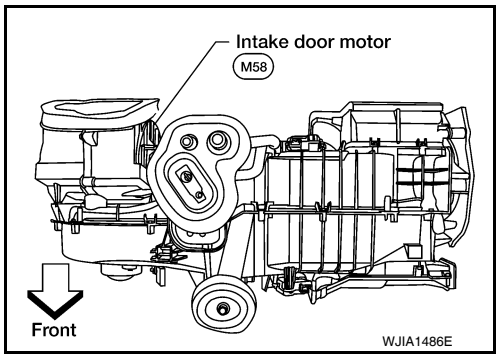

Intake Door Motor Component Function Check

INFOID:0000000005256996

SYMPTOM:
- Intake door does not change.
- Intake door motor does not operate normally.

INSPECTION FLOW

1. CONFIRM SYMPTOM BY PERFORMING OPERATIONAL CHECK - REC ( )

1. Turn blower control dial to 4.

2. Turn mode dial to vent mode ( ).
3. Press REC ( ) switch.
4. Press REC ( ) switch again.
5. Listen for intake door position change (you should hear blower sound change slightly).

Can a symptom be duplicated?

YES >> Inspection End.
NO >> Go to diagnosis procedure. Refer to HAC-144, "Intake Door Motor Diagnosis Procedure".

Intake Door Motor Diagnosis Procedure

INFOID:0000000005256997

Regarding Wiring Diagram information, refer to HAC-165, "Wiring Diagram".

DIAGNOSTIC PROCEDURE FOR INTAKE DOOR MOTOR

1. CHECK INTAKE DOOR MOTOR CIRCUIT VOLTAGE

1. Turn ignition switch OFF.
2. Disconnect intake door motor connector.
3. Turn ignition switch ON.
4. Rotate the temperature control dial counterclockwise.
5. Check voltage between intake door motor harness connector M58 terminal 6 and ground.

6 - Ground : Battery voltage

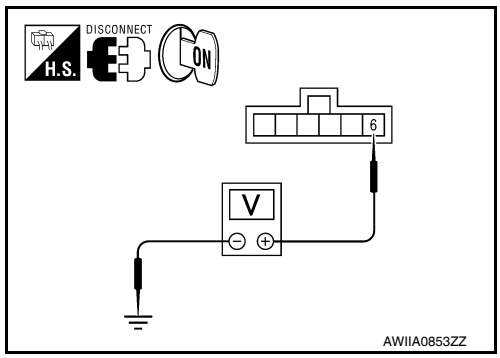

Is inspection result normal?

YES >> GO TO 3.
NO >> GO TO 2.

2. CHECK INTAKE DOOR MOTOR CIRCUIT FOR OPEN

1. Turn ignition switch OFF.
2. Disconnect front air control connector.
3. Check continuity between front air control harness connector M52 (A) terminal 5 and intake door motor harness connector M58 (B) terminal 6.

5 - 6 : Continuity should exist.

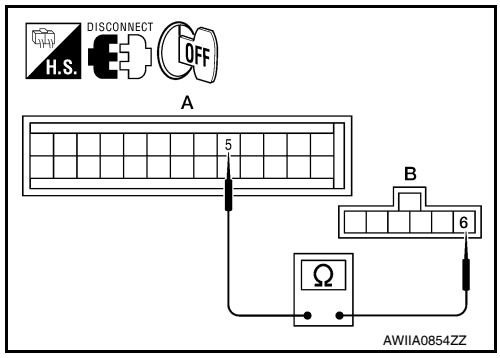

Is inspection result normal?

YES >> Replace front air control. Refer to VTL-7, "Removal and Installation".
NO >> Repair or replace harness as necessary.

3. CHECK INTAKE DOOR MOTOR CIRCUIT VOLTAGE

1. Rotate the temperature control dial clockwise.
2. Check voltage between intake door motor harness connector M58 terminal 1 and ground.

1 - Ground :Battery voltage

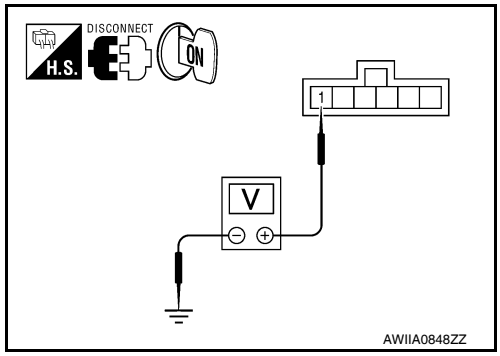

Is inspection result normal?

YES >> Replace intake door motor. Refer to VTL-27, "Removal and Installation".
NO >> GO TO 4.

4. CHECK INTAKE DOOR MOTOR CIRCUIT FOR OPEN

1. Turn ignition switch OFF.
2. Disconnect front air control connector.
3. Check continuity between front air control harness connector M52 (A) terminal 4 and intake door motor harness connector M58 (B) terminal 1.

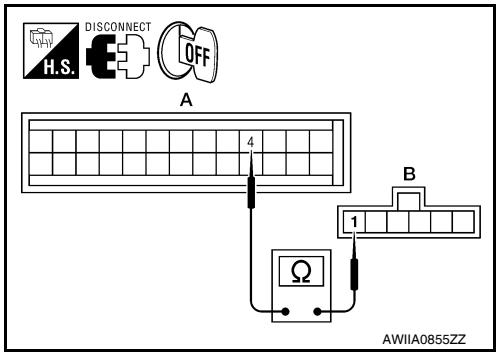

A		B		
Connector	Terminal	Connector	Terminal	Continuity
Front air control: M52	4	Intake door motor: M58	1	Yes

Is inspection result normal?

YES >> Replace front air control. Refer to VTL-7, "Removal and Installation".
NO >> Repair or replace harness as necessary.

BLOWER MOTOR

System Description

INFOID:0000000005256998

Component Parts

Blower speed control system components are:
- Front air control
- Front blower motor resistor
- Front blower motor
- Front blower relay

System Operation

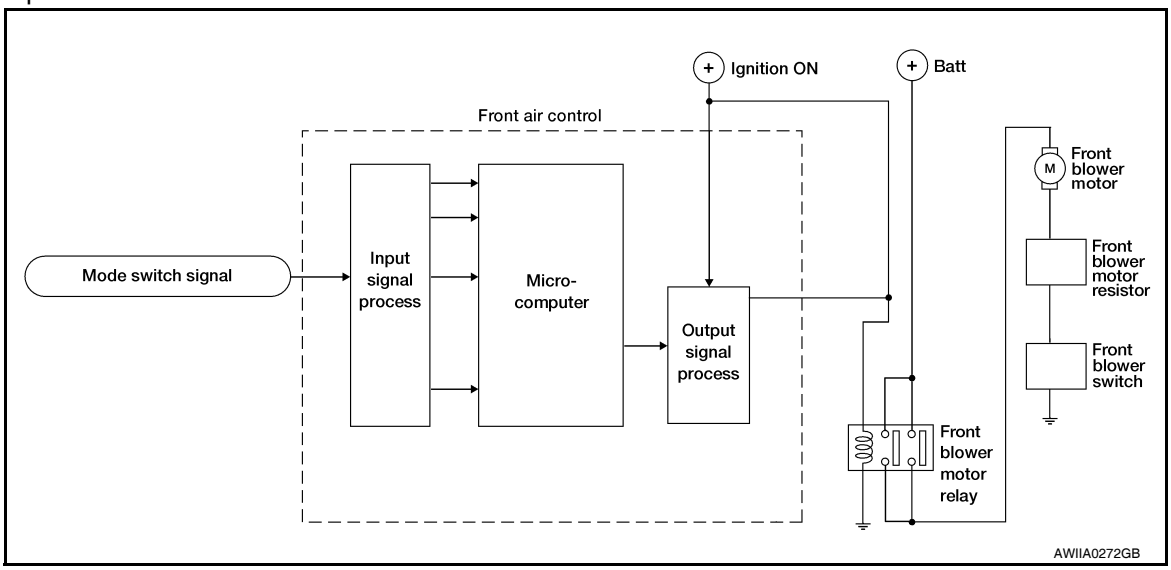

COMPONENT DESCRIPTION

Blower Motor Resistor

The front blower motor resistor (1) is located on the heater and cooling unit assembly. The front blower motor resistor grounds the front blower motor through a series of 1, 2, or 3 resistors, depending upon speed selected. For high speed operation the front blower motor resistor is circumvented and the front blower motor grounds directly (⇒: Front).

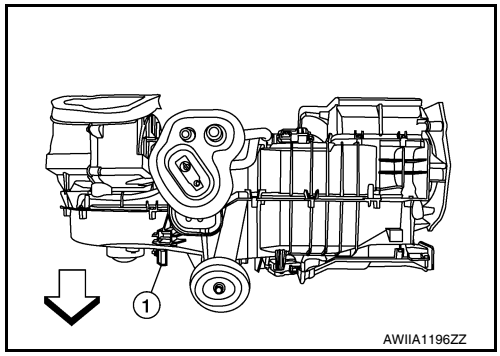

Front Blower Motor Component Function Check

INFOID:0000000005256999

INSPECTION FLOW

1. CONFIRM SYMPTOM BY PERFORMING OPERATIONAL CHECK - FRONT BLOWER

1. Rotate the blower control dial clockwise. Blower should operate.
2. Rotate the blower control dial clockwise, and continue checking blower speed until all speeds are checked.

Can the symptom be duplicated?

YES >> Inspection End.
NO >> Go to diagnosis procedure. Refer to HAC-147, "Front Blower Motor Diagnosis Procedure".

Front Blower Motor Diagnosis Procedure

INFOID:0000000005257000

Regarding Wiring Diagram information, refer to HAC-165, "Wiring Diagram".

SYMPTOM: Blower motor operation is malfunctioning under starting blower speed control.

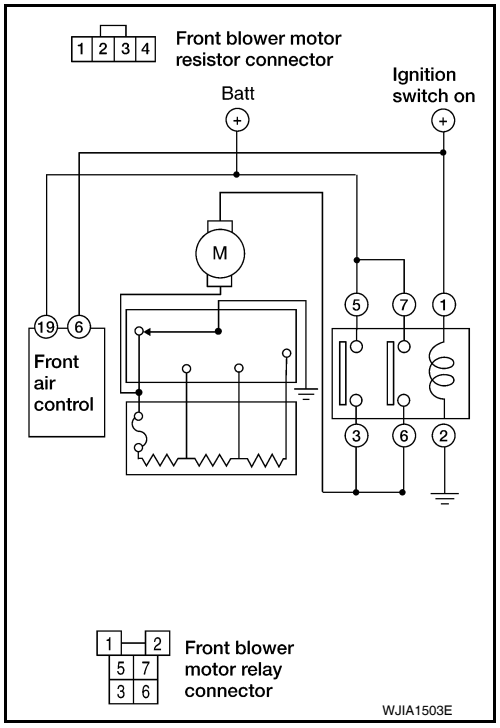

1. DIAGNOSTIC PROCEDURE

1. Turn ignition switch ON.
2. Turn the front blower switch to each of its four speeds.
   Does blower motor rotate normally at each speed?

YES or NO

YES >> Inspection End.
NO >> 1. Does not rotate at any speed, GO TO 2.
2. Does not rotate at 1 - 3 speed, GO TO 13.
3. Does not rotate at 4 speed, GO TO 16.

2. CHECK FUSES

1. Check 15A fuses (Nos. 24 and 27, located in the fuse and fusible link box). Refer to PG-74, "Terminal Arrangement".
2. Check 10A fuse [No. 8, located in the fuse block (JB)]. Refer to PG-73, "Terminal Arrangement".

Is inspection result normal?

YES >> GO TO 3.
NO >> GO TO 8.

3. CHECK FRONT BLOWER MOTOR POWER SUPPLY

1. Turn ignition switch OFF.
2. Disconnect front blower motor harness connector.
3. Turn ignition switch ON.
4. Select any front blower speed except OFF.
5. Check voltage between front blower motor harness connector M62 terminal 2 and ground.

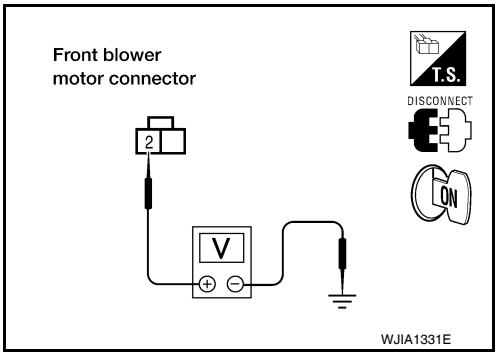

2 - Ground : Battery voltage

Is inspection result normal?

YES >> GO TO 12.
NO >> GO TO 4.

4. CHECK FRONT BLOWER MOTOR RELAY

1. Turn Ignition switch OFF.
2. Check front blower motor relay. Refer to HAC-150, "Front Blower Motor Component Inspection".

Is inspection result normal?

YES >> GO TO 5.
NO >> Replace front blower motor relay.

5. CHECK FRONT BLOWER MOTOR RELAY POWER SUPPLY (SWITCH SIDE)

Check voltage between front blower motor relay harness connector E54 terminals 7 and 5 and ground.

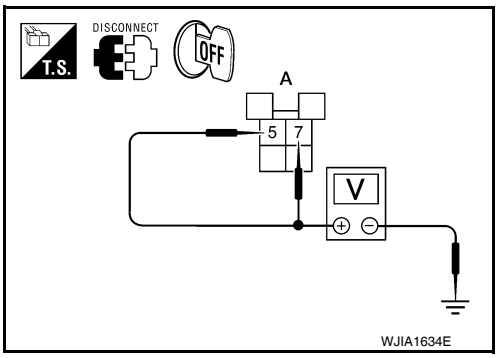

A			Condition	Voltage (Approx.)
(+)				
Front air control connector	Terminal	(-)		
M54	5	Ground	Blower motor relay power supply	Battery voltage
M54	7	Ground	Blower motor relay power supply	Battery voltage

Is inspection result normal?

YES >> GO TO 6.
NO >> Repair harness or connector.

6. CHECK FRONT BLOWER MOTOR RELAY POWER SUPPLY (COIL SIDE)

1. Turn ignition switch ON.
2. Check voltage between front blower motor relay harness connector E54 terminal 1 and ground.

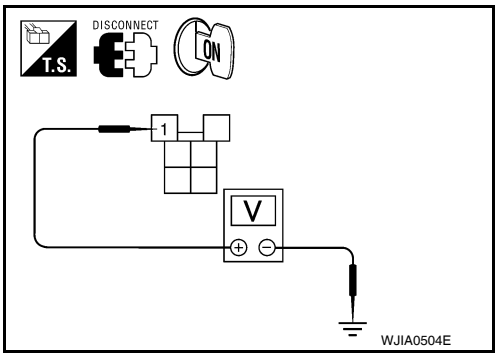

A			Condition	Voltage (Approx.)
(+)				
Front air control connector	Terminal	(-)		
M54	1	Ground	Blower motor relay power supply (coil side)	Battery voltage

Is inspection result normal?

YES >> GO TO 7.
NO >> Repair or replace harness as necessary.

7. CHECK FRONT BLOWER MOTOR POWER FROM RELAY TO FRONT BLOWER MOTOR

1. Turn ignition switch OFF.
2. Check continuity between front blower motor relay harness connector E54 terminals 6 and 3 and front blower motor harness connector M62 terminal 2.

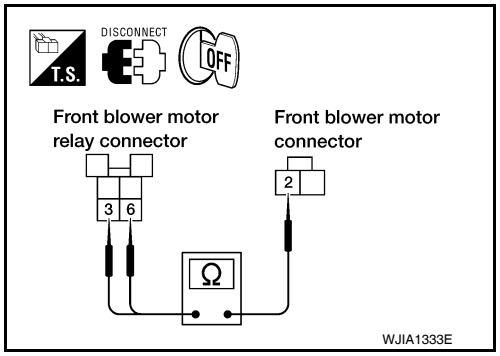

3, 6 - 2 **: Continuity should exist.**

Is inspection result normal?

YES >> Repair open front blower motor relay ground circuit.
NO >> Repair harness or connector between the front blower motor relay and the front blower motor.

8. REPLACE FUSE

Refer to PG-75, "Terminal Arrangement".
Does fuse No. 24 or 27 open when the front blower motor is turned on?

YES or NO

YES >> GO TO 10.
NO >> GO TO 9.

9. REPLACE FUSE

Refer to PG-75, "Terminal Arrangement".
Does fuse No. 8 open when the ignition switch is turned ON?

YES or NO

YES >> Repair or replace harness as necessary.
NO >> Inspection End.

10. CHECK FRONT BLOWER MOTOR POWER SUPPLY CIRCUIT FOR SHORT

1. Turn ignition switch OFF.
2. Disconnect front blower motor connector.
3. Check continuity between front blower motor harness connector M62 terminal 2 and ground.

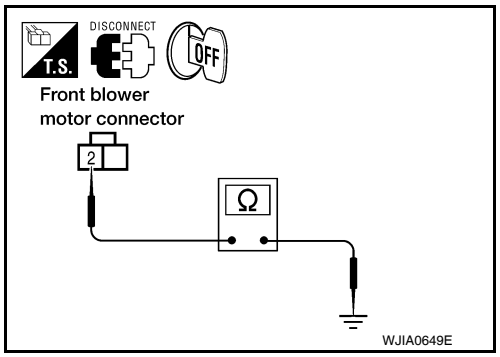

2 - Ground **: Continuity should not exist.**

Is inspection result normal?

YES >> GO TO 11.
NO >> Repair or replace harness as necessary.

11. CHECK FRONT BLOWER MOTOR RELAY (SWITCH SIDE) POWER SUPPLY CIRCUIT FOR SHORT

1. Disconnect front blower motor relay connector.
2. Check continuity between the front blower motor relay harness connector E54 terminal 7 and terminal 5 and ground.

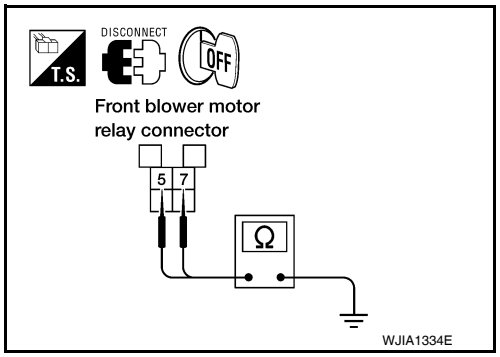

7, 5 - Ground **: Continuity should not exist.**

Is inspection result normal?

YES >> Check front blower motor. Refer to HAC-147, "Front Blower Motor Diagnosis Procedure".
NO >> Repair harness or connector.

12. CHECK FRONT BLOWER MOTOR

1. Turn ignition switch OFF.
2. Check front blower motor. Refer to HAC-150, "Front Blower Motor Component Inspection".

Is inspection result normal?

YES >> GO TO 13.
NO >> Replace front blower motor. Refer to PG-75, "Terminal Arrangement".

13. CHECK FRONT BLOWER MOTOR RESISTOR

Check front blower motor resistor. Refer to HAC-150, "Front Blower Motor Component Inspection".

Is inspection result normal?

YES >> GO TO 14.
NO >> Replace front blower motor resistor. Refer to VTL-16, "Removal and Installation".

14. CHECK FRONT BLOWER SWITCH

Check front blower switch. Refer to HAC-150, "Front Blower Motor Component Inspection".

Is inspection result normal?

YES >> GO TO 15.
NO >> Replace front blower switch. Refer to VTL-7, "Removal and Installation".

15. CHECK FRONT BLOWER MOTOR GROUND CIRCUIT TO FRONT BLOWER MOTOR RESISTOR

1. Disconnect front blower motor resistor harness connector.
2. Check continuity between front blower motor connector M62 (A) terminal 1 and front blower motor resistor harness connector M121 (B) terminal 3.

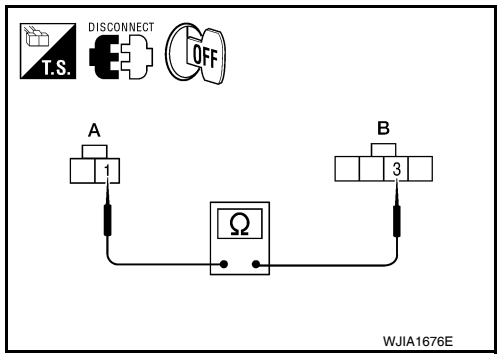

A		B		
Connector	Terminal	Connector	Terminal	Continuity
Front blower motor: M62	1	Front blower motor resistor: M121	3	Yes

Is inspection result normal?

YES >> Repair harness or connector between front blower switch connector M51 terminal 8 and ground.
NO >> Repair harness or connector between front blower motor resistor and front blower motor.

16. CHECK FRONT BLOWER SWITCH

Check front blower switch. Refer to HAC-150, "Front Blower Motor Component Inspection".

Is inspection result normal?

YES >> Repair harness or connector between front blower motor switch connector M51 terminal 8 and front blower motor resistor connector M121 terminal 3.
NO >> Replace front blower switch. Refer to VTL-7, "Removal and Installation".

Front Blower Motor Component Inspection

INFOID:0000000005257001

COMPONENT INSPECTION

Front Blower Motor Relay

Check continuity between terminals by supplying 12 volts and ground to coil side terminals of relay.

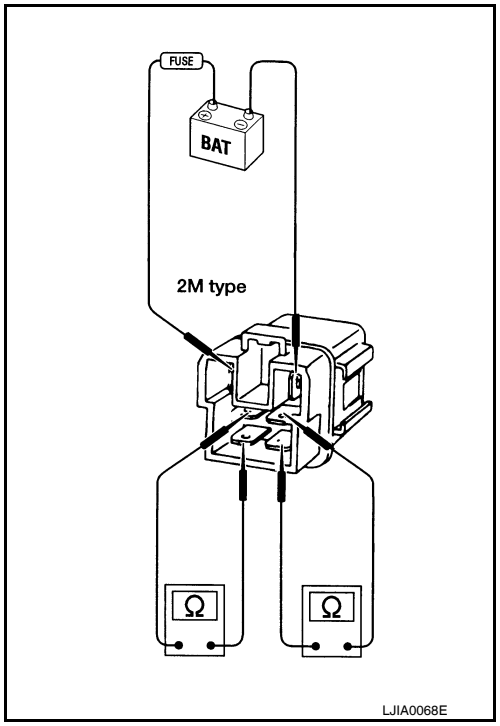

Front Blower Motor

Confirm smooth rotation of the blower motor.

- Ensure that there are no foreign particles inside the blower unit.
- Apply 12 volts to terminal 2 and ground to terminal 1 and verify that the motor operates freely and quietly.

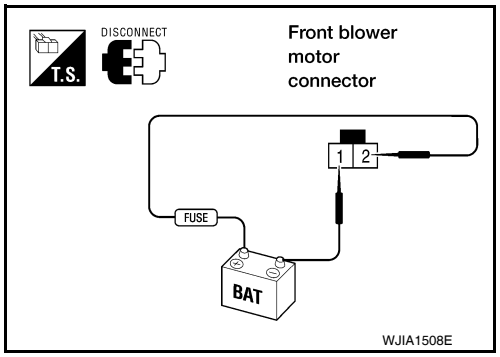

Front Blower Switch

Check continuity between the terminals at each front blower switch position.

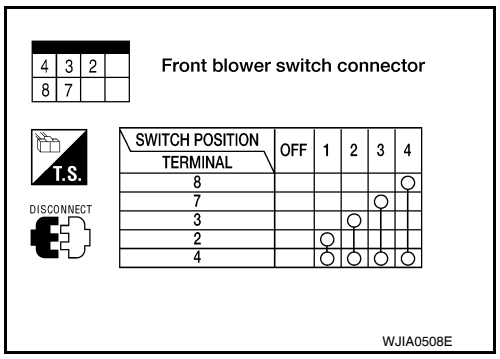

SWITCH POSITION / TERMINAL	OFF	1	2	3	4
8					○
7				○	
3			○		
2		○			
4		○	○	○	○

Blower Motor Resistor

Check continuity between terminals. There will be resistance, but there should not be an open or short between any two terminals.

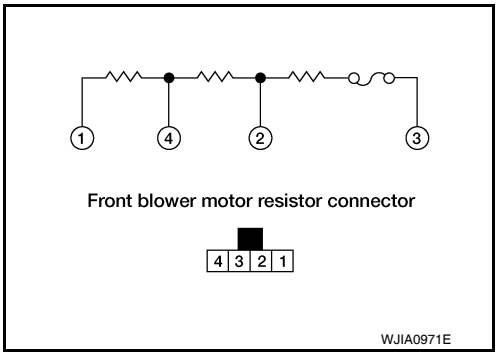

MAGNET CLUTCH

System Description

INFOID:0000000005257002

SYSTEM DESCRIPTION

The front air control controls compressor operation based on ambient and intake temperature and a signal from ECM.

Low Temperature Protection Control

The front air control will turn the compressor ON or OFF as determined by a signal detected by the intake sensor and the ambient sensor.
When intake air temperature is higher than 3.5° C (38.3° F), the compressor turns ON. The compressor turns OFF when intake air temperature is lower than 2.5° C (36.5° F).

Magnet Clutch Component Function Check

INFOID:0000000005257003

SYMPTOM: Magnet clutch does not engage.

INSPECTION FLOW

1.CONFIRM SYMPTOM BY PERFORMING OPERATIONAL CHECK - MAGNET CLUTCH

1. Rotate blower control dial clockwise.
2. Rotate mode dial to vent ( ) position.
3. Press A/C switch. Confirm that the compressor clutch engages (sound or visual inspection).

Can the symptom be duplicated?

YES >> Inspection End.
NO >> Go to diagnosis procedure. Refer to HAC-153, "Magnet Clutch Diagnosis Procedure".

Magnet Clutch Diagnosis Procedure

INFOID:0000000005257004

Regarding Wiring Diagram information, refer to HAC-165, "Wiring Diagram".

DIAGNOSTIC PROCEDURE FOR MAGNET CLUTCH

SYMPTOM: Magnet clutch does not engage when A/C switch is ON.

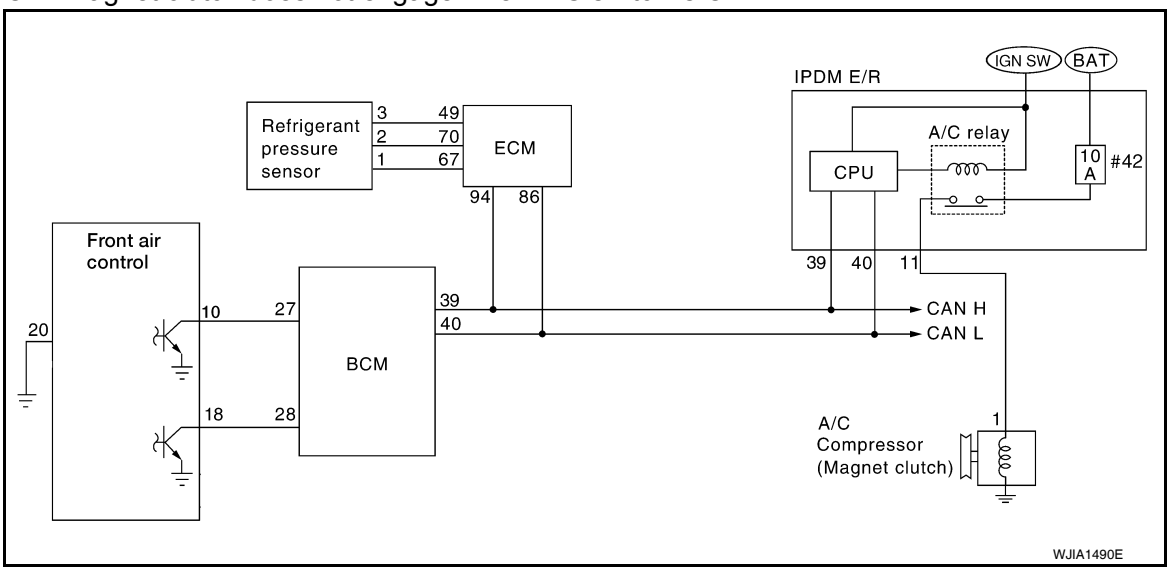

1.PERFORM AUTO ACTIVE TEST

Refer to PCS-14, "CONSULT - III Function (IPDM E/R)".
Does magnet clutch operate?

YES or NO

YES >> • WITH CONSULT-III
GO TO 2.

- ⊗WITHOUT CONSULT-III
  GO TO 8.

NO >> Check 10A fuse (No. 42, located in IPDM E/R), and GO TO 12.

2. CHECK BCM INPUT (A/C COMPRESSOR ON) SIGNAL

Check A/C compressor ON/OFF signal. Refer to HAC-134, "CONSULT-III Function (BCM - COMMON ITEM)".

A/C SW ON	**: COMP ON SIG ON**
A/C SW OFF	**: COMP ON SIG OFF**

Is the inspection result normal?

YES >> GO TO 3.
NO >> GO TO 8.

3. CHECK REFRIGERANT PRESSURE SENSOR

Check refrigerant pressure sensor. Refer to EC-134, "Diagnosis Procedure" (VQ40DE) or EC-615, "Diagnosis Procedure" (VK56DE).

Is the inspection result normal?

YES >> GO TO 4.
NO >> Replace refrigerant pressure sensor. Refer to HA-54, "Removal and Installation for Refrigerant Pressure Sensor".

4. CHECK BCM INPUT (FAN ON) SIGNAL

Check FAN ON/OFF signal. Refer to HAC-134, "CONSULT-III Function (BCM - COMMON ITEM)".

BLOWER CONTROL DIAL ON	**: FAN ON SIG ON**
BLOWER CONTROL DIAL OFF	**: FAN ON SIG OFF**

Is the inspection result normal?

YES >> GO TO 7.
NO >> GO TO 5.

5. CHECK CIRCUIT CONTINUITY BETWEEN BCM AND FRONT AIR CONTROL

1. Turn ignition switch OFF.
2. Disconnect BCM connector and front air control connector.
3. Check continuity between BCM harness connector M18 (A) terminal 28 and front air control harness connector M52 (B) terminal 18.

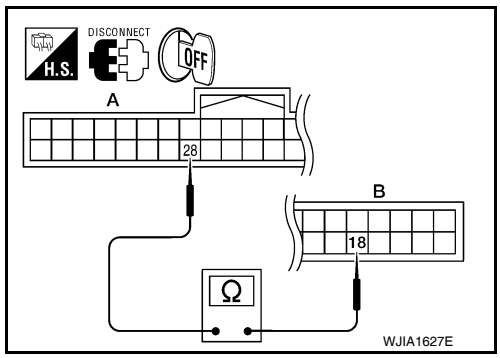

A		B		
Connector	Terminal	Connector	Terminal	Continuity
BCM: M18	28	Front air control: M52	18	Yes

Is the inspection result normal?

YES >> GO TO 6.
NO >> Repair harness or connector.

6. CHECK VOLTAGE FOR FRONT AIR CONTROL (FAN ON SIGNAL)

1. Reconnect BCM connector and front air control connector.
2. Turn ignition switch ON.
3. Turn A/C switch ON.
4. Check voltage between front air control harness connector M52 terminal 18 and ground.

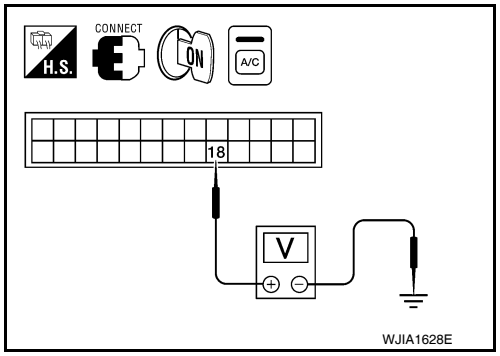

Terminals			Condition	Voltage (Approx.)
(+)		(-)		
Front air control connector	Terminal No.			
M52	18	Ground	A/C switch: ON Blower motor operates	0V
			A/C switch: OFF	Battery voltage

Is the inspection result normal?

YES >> Replace BCM. Refer to BCS-59, "Removal and Installation".
NO-1 >> If the voltage is approx. 5V when blower motor is ON, replace front air control. Refer to VTL-7, "Removal and Installation".
NO-2 >> If the voltage is approx. 0V when blower motor is OFF, replace BCM. Refer to BCS-59, "Removal and Installation".

7. CHECK CAN COMMUNICATION

Check CAN communication. Refer to LAN-14, "Trouble Diagnosis Flow Chart".

Is the inspection result normal?

YES >> Inspection End.
NO >> Repair or replace malfunctioning part(s).

8. CHECK VOLTAGE FOR FRONT AIR CONTROL (A/C COMPRESSOR ON SIGNAL)

1. Reconnect BCM connector and front air control connector.
2. Turn ignition switch ON.
3. Check voltage between front air control harness connector M52 terminal 10 and ground.

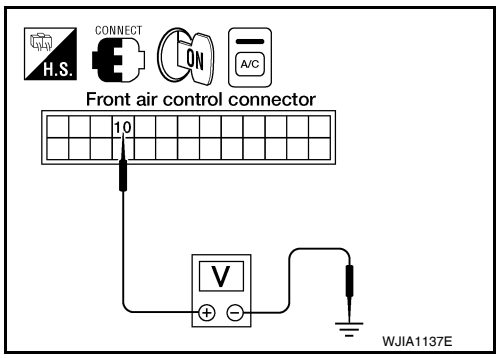

Terminals			Condition	Voltage (Approx.)
(+)		(-)		
Front air control connector	Terminal No.			
M52	10	Ground	A/C switch: ON	Approx. 0V
			A/C switch: OFF	Approx. 5V

Is the inspection result normal?

YES >> GO TO 9.
NO-1 >> If the voltage is approx. 5V when A/C switch is ON, replace front air control. Refer to VTL-7, "Removal and Installation".
NO-2 >> If the voltage is approx. 0V when A/C switch is OFF, replace BCM. Refer to BCS-59, "Removal and Installation".

9. CHECK CIRCUIT CONTINUITY BETWEEN BCM AND FRONT AIR CONTROL

1. Disconnect BCM connector and front air control connector.
2. Check continuity between BCM harness connector M18 terminal 27 and front air control harness connector M52 terminal 10.

27 - 10 : Continuity should exist.

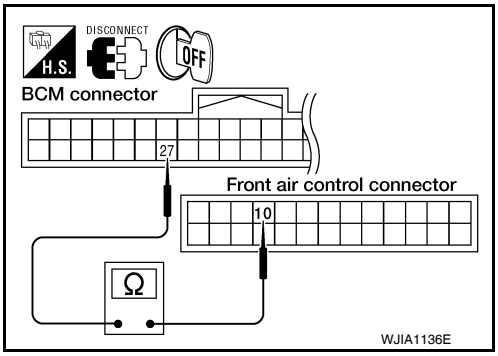

Is the inspection result normal?

YES >> GO TO 10.
NO >> Repair harness or connector.

10. CHECK INTAKE SENSOR CIRCUITS

Check intake sensor. Refer to VTL-11, "Removal and Installation".

Is the inspection result normal?

YES >> GO TO 11.
NO >> Replace intake sensor. Refer to VTL-11, "Removal and Installation".

11. CHECK CAN COMMUNICATION

Check CAN communication. Refer to LAN-14, "Trouble Diagnosis Flow Chart".

Is the inspection result normal?

YES >> Replace BCM. Refer to BCS-59, "Removal and Installation".
NO >> Repair or replace malfunctioning part(s).

12. CHECK MAGNET CLUTCH CIRCUIT

Check for operation sound when applying battery voltage to terminal.

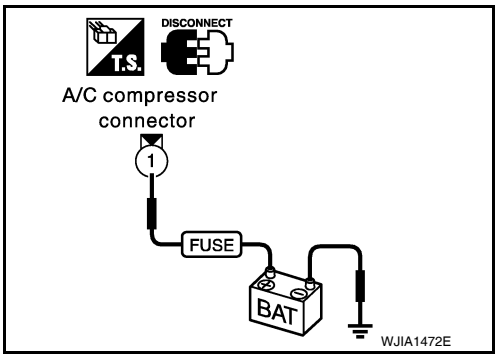

Is the inspection result normal?

YES >> GO TO 13.
NO >> Replace magnet clutch. Refer to HA-40, "Removal and Installation for Compressor Clutch".

13. CHECK CIRCUIT CONTINUITY BETWEEN IPDM E/R AND A/C COMPRESSOR

1. Turn ignition switch OFF.
2. Disconnect IPDM E/R connector and A/C compressor (magnet clutch) connector.
3. Check continuity between IPDM E/R harness connector E119 terminal 11 and A/C compressor harness connector F3 terminal 1.

11 – 1 : Continuity should exist.

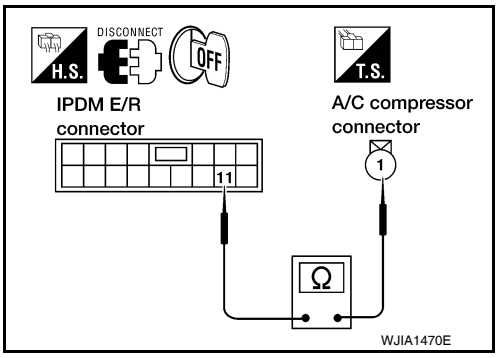

Is the inspection result normal?

YES >> Replace IPDM E/R. Refer to PCS-33, "Removal and Installation of IPDM E/R".
NO >> Repair harness or connector.

INTAKE SENSOR

System Description

INFOID:0000000005257005

COMPONENT DESCRIPTION

Intake Sensor

The intake sensor is located on top of the heater and cooling unit assembly next to the A/C evaporator cover. It converts temperature of air after it passes through the evaporator into a resistance value which is then input to the front air control.

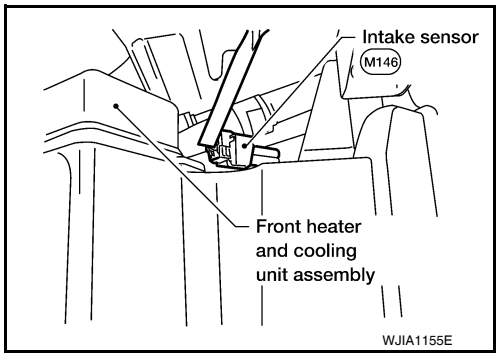

Intake Sensor Diagnosis Procedure

INFOID:0000000005257006

Regarding Wiring Diagram information, refer to HAC-165, "Wiring Diagram".

DIAGNOSTIC PROCEDURE FOR INTAKE SENSOR

SYMPTOM: Intake sensor circuit is open or shorted.

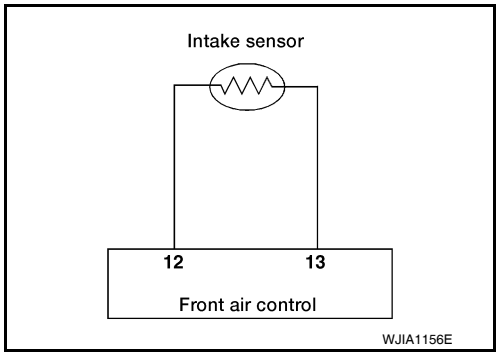

1. CHECK VOLTAGE BETWEEN INTAKE SENSOR AND GROUND

1. Disconnect intake sensor connector.
2. Turn ignition switch ON.
3. Check voltage between intake sensor harness connector M146 terminal 2 and ground.

2 - Ground : Approx. 5V

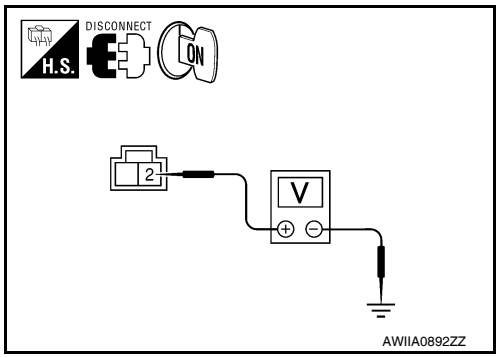

Is the inspection result normal?

YES >> GO TO 2.
NO >> GO TO 4.

2. CHECK CIRCUIT CONTINUITY BETWEEN INTAKE SENSOR AND FRONT AIR CONTROL

1. Turn ignition switch OFF.
2. Disconnect front air control connector.
3. Check continuity between intake sensor harness connector M146 (A) terminal 1 and front air control harness connector M52 (B) terminal 13.

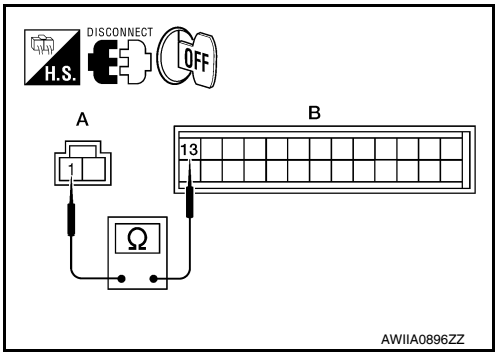

1 - 13 : Continuity should exist.

Is the inspection result normal?

YES >> GO TO 3.
NO >> Repair harness or connector.

3. CHECK INTAKE SENSOR

Refer to HAC-158, "Intake Sensor Component Inspection".

Is the inspection result normal?

YES >> Replace front air control. Refer to VTL-7, "Removal and Installation".
NO >> Replace intake sensor. Refer to VTL-11, "Removal and Installation".

4. CHECK CIRCUIT CONTINUITY BETWEEN INTAKE SENSOR AND FRONT AIR CONTROL

1. Turn ignition switch OFF.
2. Disconnect front air control connector.
3. Check continuity between intake sensor harness connector M146 (B) terminal 2 and front air control harness connector M52 (A) terminal 12.

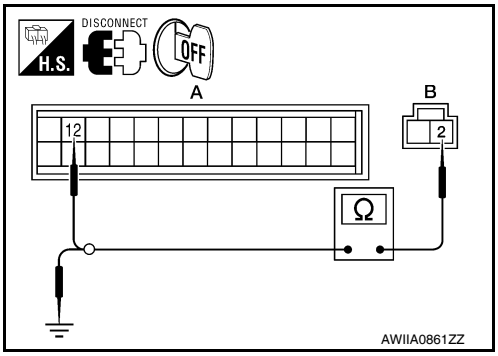

2 - 12 : Continuity should exist.

4. Check continuity between intake sensor harness connector M146 (A) terminal 2 and ground.

2 - Ground : Continuity should not exist.

Is the inspection result normal?

YES >> Replace front air control. Refer to VTL-7, "Removal and Installation".
NO >> Repair harness or connector.

Intake Sensor Component Inspection

INFOID:0000000005257007

COMPONENT INSPECTION

Intake Sensor

After disconnecting intake sensor connector, measure resistance between terminals 1 and 2 at sensor harness side, using the table below.

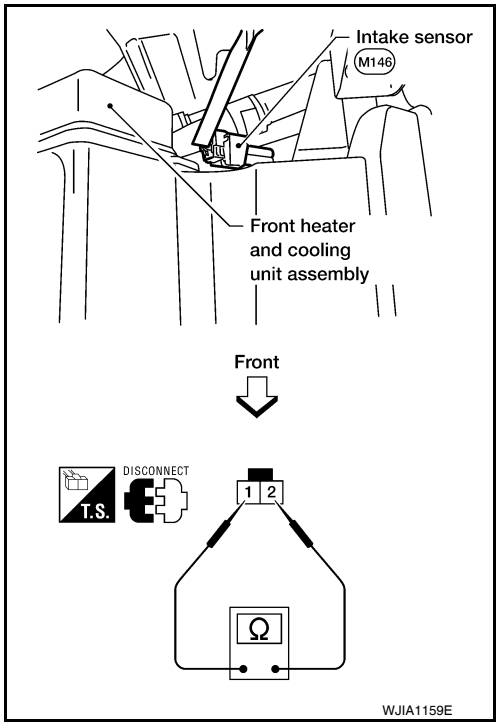

Temperature °C (°F)	Resistance kΩ
–15 (5)	209.0
–10 (14)	160.0
–5 (23)	123.0
0 (32)	95.8
5 (41)	74.9
10 (50)	58.9
15 (59)	46.7
20 (68)	37.3
25 (77)	30.0
30 (86)	24.2
35 (95)	19.7
40 (104)	16.1
45 (113)	13.2

If NG, replace intake sensor. Refer to VTL-11, "Removal and Installation".

POWER SUPPLY AND GROUND CIRCUIT FOR CONTROLLER

Component Description

INFOID:0000000005257008

COMPONENT DESCRIPTION

Front Air Control

The front air control (1) has a built-in microcomputer which processes information sent from various sensors needed for air conditioner operation. The air mix door motor, mode door motor, intake door motor, defroster door motor, blower motor and compressor are then controlled.

The front air control is unitized with control mechanisms. When the various switches and temperature dials are operated, data is input to the front air control.

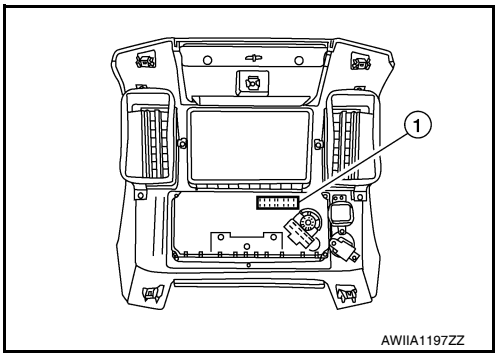

Potentio Temperature Control (PTC)

The PTC is built into the front air control. It can be set from cold to hot or any intermediate position by rotating the temperature dial.

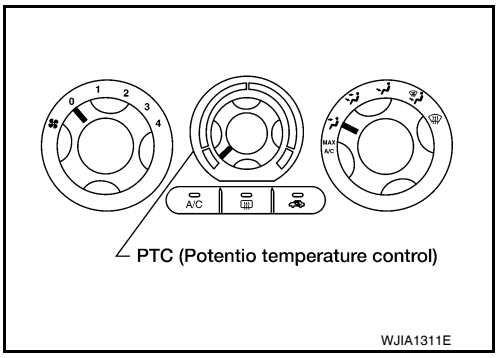

Front Air Control Component Function Check

INFOID:0000000005257009

SYMPTOM: A/C system does not come on.

INSPECTION FLOW

1. CONFIRM SYMPTOM BY PERFORMING OPERATIONAL CHECK

1. Turn blower control dial to position 1-4, then press A/C switch.
2. Confirm that the compressor clutch engages (sound or visual inspection).

Can a symptom be duplicated?

YES >> Inspection End.

NO >> Go to diagnosis procedure. Refer to HAC-160, "Front Air Control Power and Ground Diagnosis Procedure".

Front Air Control Power and Ground Diagnosis Procedure

INFOID:0000000005257010

Regarding Wiring Diagram information, refer to HAC-165, "Wiring Diagram".

DIAGNOSTIC PROCEDURE FOR A/C SYSTEM

SYMPTOM: A/C system does not come on.

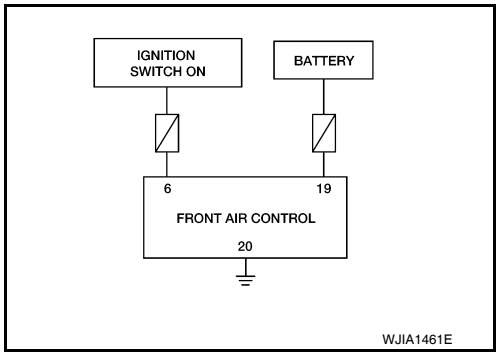

1. CHECK POWER SUPPLY CIRCUITS FOR FRONT AIR CONTROL

1. Turn ignition switch OFF.
2. Disconnect front air control connector.
3. Turn ignition switch ON.
4. Check voltage between front air control harness connector M52 terminals 6 and 19, and ground.

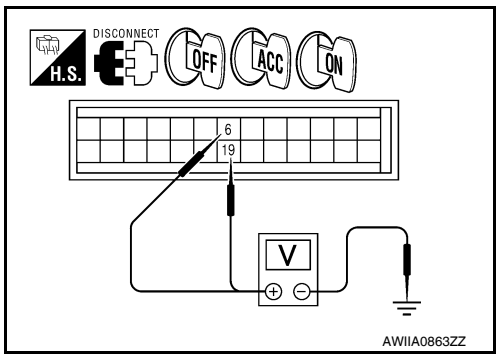

Terminals			Ignition switch position		
(+)		(-)	OFF	ACC	ON
Front air control connector	Terminal No.				
M52	6	Ground	Approx. 0V	Approx. 0V	Battery voltage
M52	19		Battery voltage	Battery voltage	Battery voltage

Is the inspection result normal?

YES >> GO TO 2.

NO >> Check 10A fuses [Nos. 8 and 19, located in the fuse block (J/B)]. Refer to PG-73, "Terminal Arrangement".
- If fuses are OK, check harness for open circuit. Repair or replace as necessary.
- If fuses are NG, replace fuse and check harness for short circuit. Repair or replace as necessary.

2. CHECK GROUND CIRCUIT FOR FRONT AIR CONTROL

1. Turn ignition switch OFF.
2. Check continuity between front air control harness connector M52 terminal 20 and ground.

20 - Ground : Continuity should exist.

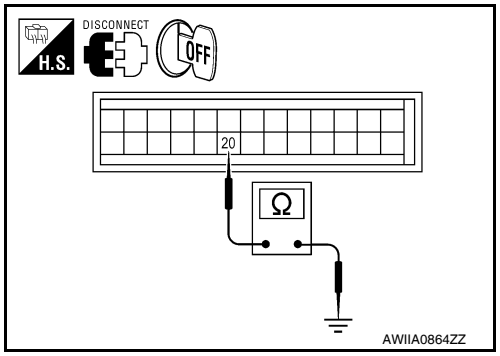

Is the inspection result normal?

YES >> Replace front air control. Refer to VTL-7, "Removal and Installation".

NO >> Repair harness or connector.

ECU DIAGNOSIS

AIR CONDITIONER CONTROL

System Description

INFOID:0000000005257011

The front air control provides regulation of the vehicle's interior temperature. The system is based on the position of the front air controls temperature switch selected by the driver. This is done by utilizing a microcomputer, also referred to as the front air control, which receives input signals from the following two sensors:
- Intake sensor
- PBR (position balanced resistor)

The front air control uses these signals (including the set position of the temperature switch) to control:
- Outlet air volume
- Air temperature
- Air distribution

System Operation

INFOID:0000000005257012

AIR MIX DOOR CONTROL

The air mix door is controlled so that in-vehicle temperature changed based on the position of the temperature control dial.

BLOWER SPEED CONTROL

Blower speed is controlled based on front blower switch settings.
When blower switch is turned, the blower motor starts and increases air flow volume each time the blower switch is turned counterclockwise, and decreases air flow volume each time the blower switch is turned counterclockwise.
When engine coolant temperature is low, the blower motor operation is delayed to prevent cool air from flowing.

INTAKE DOORS CONTROL

The intake doors are controlled by the recirculation switch setting, and the mode (defroster) switch setting.

MODE DOOR CONTROL

The mode door is controlled by the position of the mode dial.

DEFROSTER DOOR CONTROL

The defroster door is controlled by the defroster dial set to defroster.

MAGNET CLUTCH CONTROL

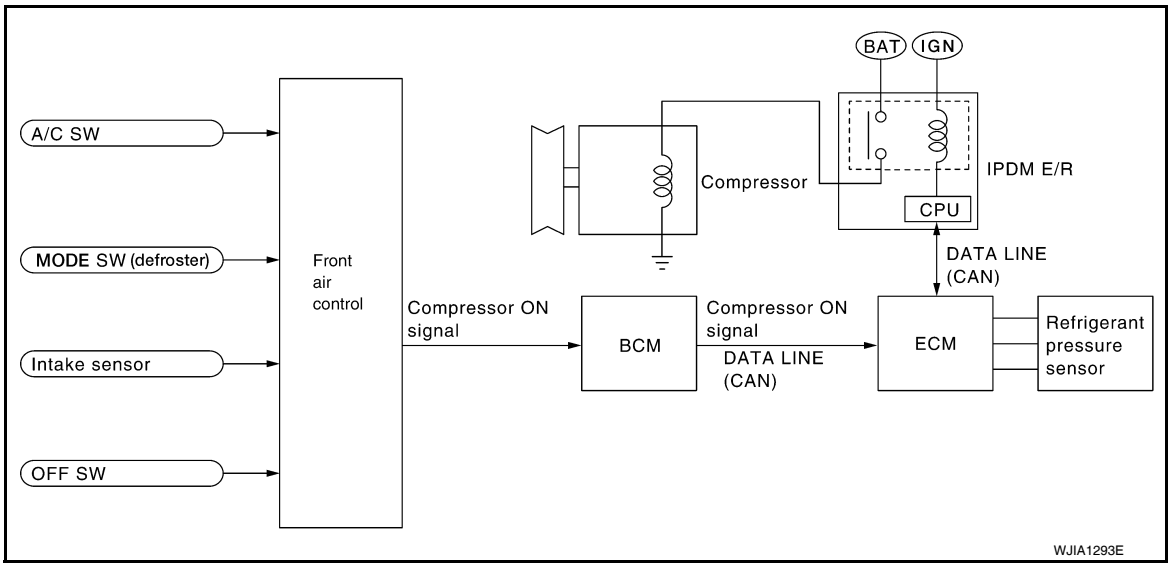

When the A/C switch is pressed, or the mode dial is turned to the defroster position, the front air control outputs a compressor ON signal to BCM.
The BCM then sends a compressor ON signal to ECM, via CAN communication line.

ECM judges whether compressor can be turned ON, based on each sensor status (refrigerant pressure sensor signal, throttle angle sensor, etc.). If it judges compressor can be turned ON, it sends compressor ON signal to IPDM E/R, via CAN communication line.
Upon receipt of compressor ON signal from ECM, IPDM E/R turns air conditioner relay ON to operate compressor.

Front Air Control Terminals Reference Values

INFOID:0000000005257013

Measure voltage between each terminal and ground by following Terminals and Reference Values for front air control.

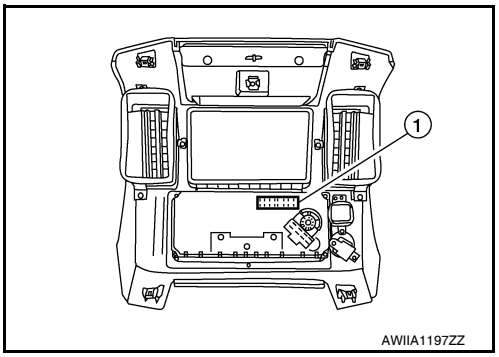

FRONT AIR CONTROL HARNESS CONNECTOR TERMINAL LAYOUT

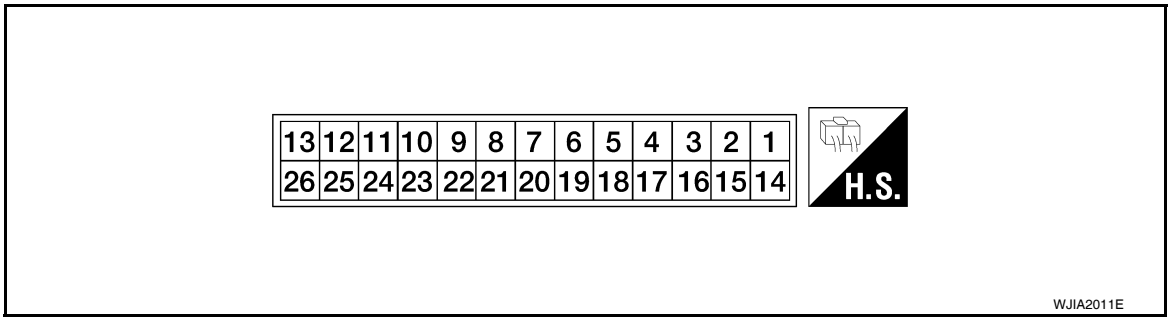

TERMINALS AND REFERENCE VALUES FOR FRONT AIR CONTROL

Terminal No.	Wire color	Item	Ignition switch	Condition	Voltage (V) (Approx.)
1	BR	Mode door motor CW	ON	Clockwise rotation	Battery voltage
2	W	Air mix door motor (Driver) CW	ON	Clockwise rotation	Battery voltage
3	GR	Air mix door motor (Driver) CCW	ON	Counterclockwise rotation	Battery voltage
4	Y	Intake door motor CW	ON	Clockwise rotation	Battery voltage
5	O	Intake door motor CCW	ON	Counterclockwise rotation	Battery voltage
6	W/G	Power supply for IGN	ON	-	Battery voltage
8	G	Illumination +	ON	Park lamps ON	Battery voltage
9	BR	Illumination -	-	Park lamps ON	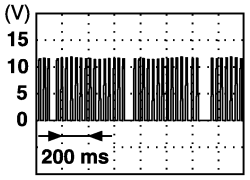
10	W	Compressor ON signal	ON	A/C switch OFF	5V
			ON	A/C switch ON	0V
11	Y	Rear defrost request	ON	-	Battery voltage
12	L	Intake sensor	ON	-	0 - 5V
13	V	Sensor ground	ON	-	0 - 5V
14	R	Mode door motor CCW	ON	Counterclockwise rotation	Battery voltage

Terminal No.	Wire color	Item	Ignition switch	Condition	Voltage (V) (Approx.)
18	BR	Front blower monitor	ON	Front blower motor OFF	Battery voltage
				Front blower motor ON	0V
19	R/Y	Power supply for BAT	-	-	Battery voltage
20	B	Ground	-	-	0V
21	V	Mode door motor feedback	ON	-	0 - 5V
22	SB	Air mix door motor (Front) feedback	ON	-	0 - 5V
23	G	Power supply for mode door motor and air mix door motor (Front) PBR	ON	-	5V
25	R	Rear defroster request	ON	-	Battery voltage
26	P	Ground for mode door motor and air mix door motor (Front) PBR	ON	-	0V

Wiring Diagram

INFOID:0000000005257014

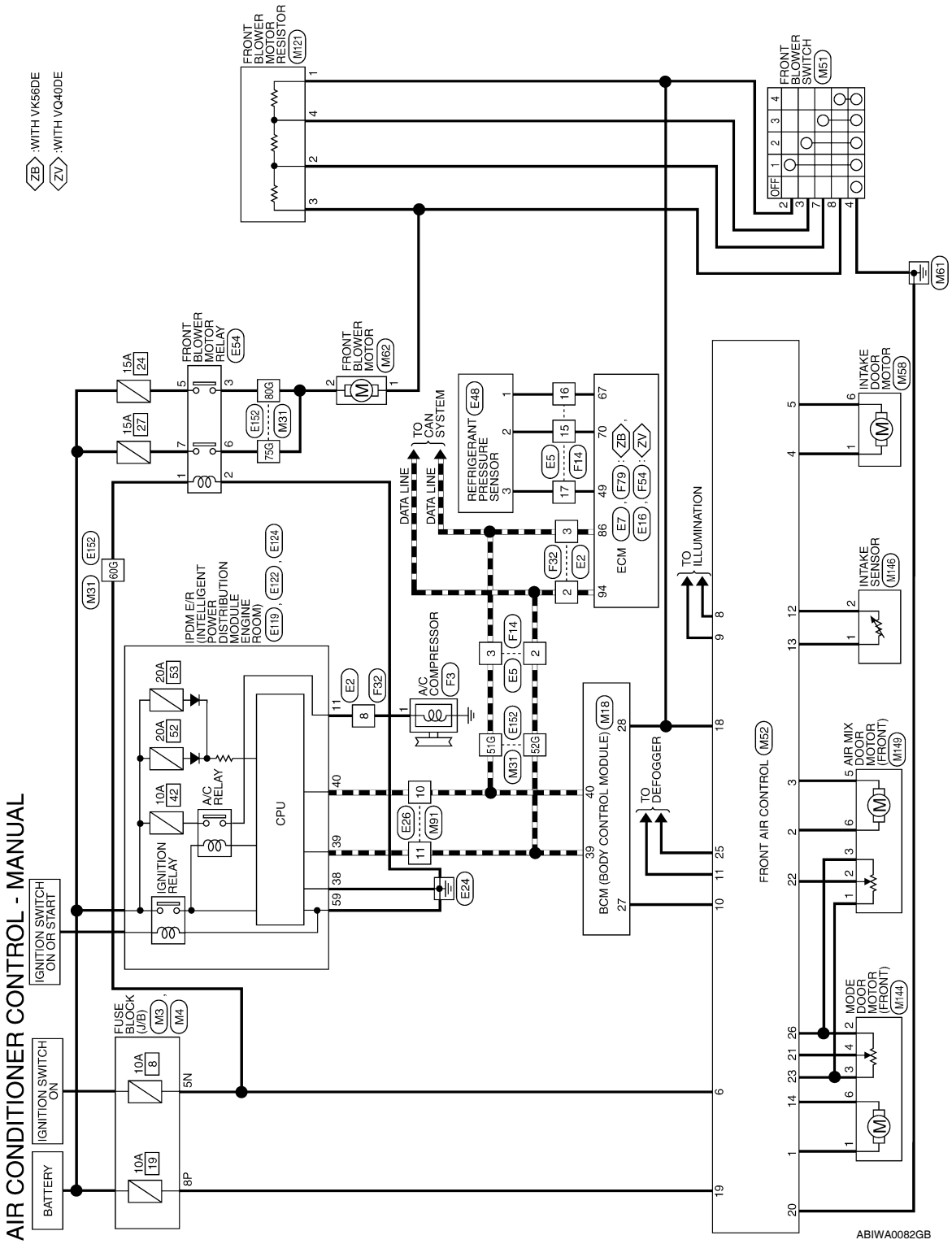

AIR CONDITIONER CONTROL CONNECTORS - MANUAL

Connector No.	M3
Connector Name	FUSE BLOCK (J/B)
Connector Color	WHITE

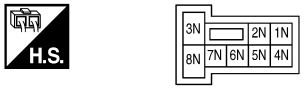

Terminal No.	Color of Wire	Signal Name
5N	W/G	–

Connector No.	M4
Connector Name	FUSE BLOCK (J/B)
Connector Color	WHITE

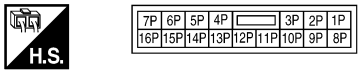

Terminal No.	Color of Wire	Signal Name
8P	R/Y	–

Connector No.	M18
Connector Name	BCM (BODY CONTROL MODULE)
Connector Color	WHITE

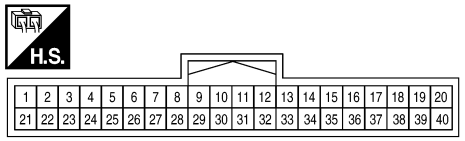

Terminal No.	Color of Wire	Signal Name
27	W	AIRCON SW
28	LG	BLOWER FAN SW
39	L	CAN-H
40	P	CAN-L

Connector No.	M31
Connector Name	WIRE TO WIRE
Connector Color	WHITE

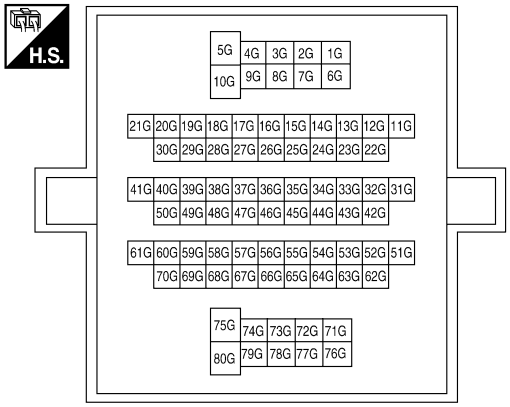

ABIIA0357GB

Terminal No.	Color of Wire	Signal Name
51G	P	–
52G	L	–
60G	W/G	–
75G	W/G	–
80G	W/G	–

Connector No.	M51
Connector Name	FRONT BLOWER SWITCH
Connector Color	WHITE

Terminal No.	Color of Wire	Signal Name
2	BR	–
3	SB	–
4	B	–
7	Y	–
8	W	–

Connector No.	M52
Connector Name	FRONT AIR CONTROL
Connector Color	BLACK

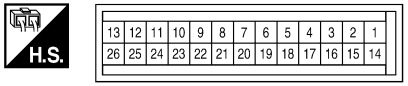

Terminal No.	Color of Wire	Signal Name
1	BR	PANEL/FLOOR CW
2	W	DR BLEND DR CW
3	GR	DR BLEND DR CCW
4	Y	RECIRC DOOR CW
5	O	RECIRC DOOR CCW
6	W/G	IGN
7	–	–
8	G	–
9	BR	–
10	W	A/C REQUEST

Terminal No.	Color of Wire	Signal Name
11	Y	REAR DEFROST REQUEST
12	L	EVAP AIR TEMP SENS
13	V	SENS RETURN
14	R	PANEL/FLOOR CCW
15	–	–
16	–	–
17	–	–
18	BR	FR BLOWER MONITOR
19	R/Y	VB
20	B	GND
21	V	PANEL/FLOOR FEED BACK
22	SB	DR BLEND DR FEED BACK
23	G	V REF.ACTR(5V)
24	–	–
25	R	REAR DEFROST STATUS
26	P	V REF RETURN

Connector No.	M58
Connector Name	INTAKE DOOR MOTOR
Connector Color	BLACK

Terminal No.	Color of Wire	Signal Name
1	Y	–
6	O	–

Connector No.	M62
Connector Name	FRONT BLOWER MOTOR
Connector Color	BLACK

Terminal No.	Color of Wire	Signal Name
1	L	–
2	W/G	–

Connector No.	M91
Connector Name	WIRE TO WIRE
Connector Color	WHITE

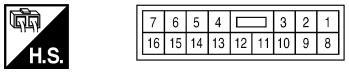

Terminal No.	Color of Wire	Signal Name
10	P	–
11	L	–

Connector No.	M121
Connector Name	FRONT BLOWER MOTOR RESISTOR
Connector Color	WHITE

Terminal No.	Color of Wire	Signal Name
1	R	–
2	Y	–
3	L	–
4	SB	–

ABIIA0356GB

Connector No.	M144
Connector Name	MODE DOOR MOTOR (FRONT) (WITHOUT A/C)
Connector Color	BLACK

Terminal No.	Color of Wire	Signal Name
1	BR	–
2	P	–
3	G	–
4	V	–
6	R	–

Connector No.	M146
Connector Name	INTAKE SENSOR
Connector Color	GRAY

Terminal No.	Color of Wire	Signal Name
1	V	–
2	L	–

Connector No.	M149
Connector Name	AIR MIX DOOR (FRONT)
Connector Color	BLACK

Terminal No.	Color of Wire	Signal Name
1	Y	–
2	SB	–
3	P	–
5	GR	–
6	W	–

Connector No.	E2
Connector Name	WIRE TO WIRE
Connector Color	GRAY

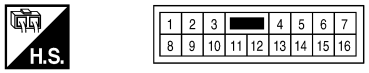

Terminal No.	Color of Wire	Signal Name
2	L	–
3	P	–
8	Y	–

Connector No.	E5
Connector Name	WIRE TO WIRE
Connector Color	WHITE

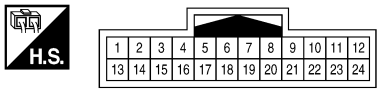

Terminal No.	Color of Wire	Signal Name
2	L	–
3	P	–
15	BR	–
16	B	–
17	P	–

Connector No.	E7
Connector Name	ECM (WITH VK56DE)
Connector Color	BLACK

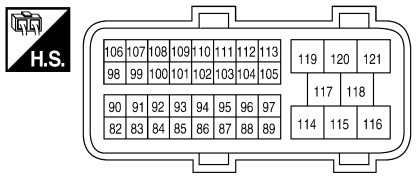

Terminal No.	Color of Wire	Signal Name
86	P	CAN-L
94	L	CAN-H

ABIIA0359GB

Connector No.	E16
Connector Name	ECM (WITH VQ40DE)
Connector Color	BLACK

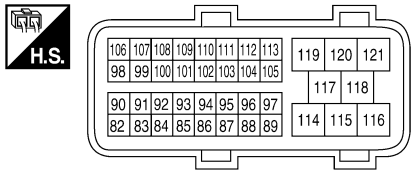

Terminal No.	Color of Wire	Signal Name
86	P	CAN-L
94	L	CAN-H

Connector No.	E26
Connector Name	WIRE TO WIRE
Connector Color	WHITE

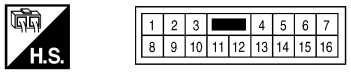

Terminal No.	Color of Wire	Signal Name
10	P	–
11	L	–

Connector No.	E48
Connector Name	REFRIGERANT PRESSURE SENSOR (WITH VQ40DE)
Connector Color	BLACK

Terminal No.	Color of Wire	Signal Name
1	B	GND
2	BR	SIGNAL
3	P	POWER SUPPLY

Connector No.	E54
Connector Name	FRONT BLOWER MOTOR RELAY (WITHOUT AUTO A/C)
Connector Color	BROWN

Terminal No.	Color of Wire	Signal Name
1	W/G	–
2	B	–
3	W/G	–
5	L	–
6	W/G	–
7	GR	–

Connector No.	E119
Connector Name	IPDM E/R (INTELLIGENT POWER DISTRIBUTION MODULE ENGINE ROOM)
Connector Color	WHITE

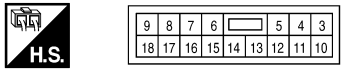

Terminal No.	Color of Wire	Signal Name
11	Y	A/C COMPRESSOR

Connector No.	E122
Connector Name	IPDM E/R (INTELLIGENT POWER DISTRIBUTION MODULE ENGINE ROOM)
Connector Color	WHITE

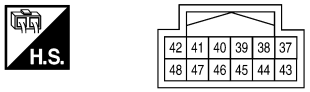

Terminal No.	Color of Wire	Signal Name
38	B	GND (SIGNAL)
39	L	CAN-H
40	P	CAN-L

ABIIA0360GB

Connector No.	E124
Connector Name	IPDM E/R (INTELLIGENT POWER DISTRIBUTION MODULE ENGINE ROOM)
Connector Color	BLACK

Terminal No.	Color of Wire	Signal Name
59	B	GND (POWER)

Connector No.	E152
Connector Name	WIRE TO WIRE
Connector Color	WHITE

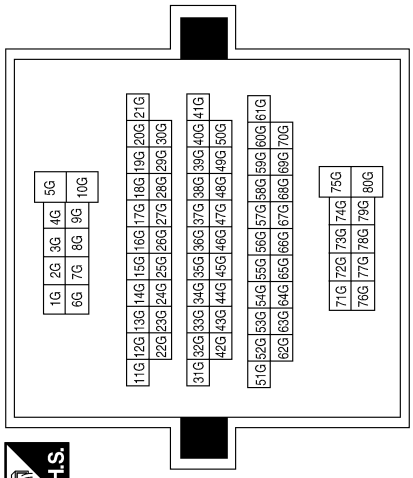

Terminal No.	Color of Wire	Signal Name
51G	P	–
52G	L	–
60G	W/G	–
75G	W/G	–
80G	W/G	–

Connector No.	F3
Connector Name	A/C COMPRESSOR
Connector Color	BLACK

Terminal No.	Color of Wire	Signal Name
1	Y	–

Connector No.	F14
Connector Name	WIRE TO WIRE
Connector Color	WHITE

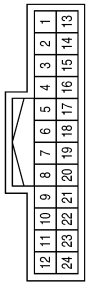

Terminal No.	Color of Wire	Signal Name
2	L	–
3	P	–
15	BR	–
16	B	–
17	P	–

Connector No.	F32
Connector Name	WIRE TO WIRE
Connector Color	WHITE

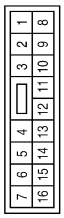

Terminal No.	Color of Wire	Signal Name
2	L	–
3	P	–
8	Y	–

ABIIA0361GB

Connector No.	F54
Connector Name	ECM (WITH VQ40DE)
Connector Color	BLACK

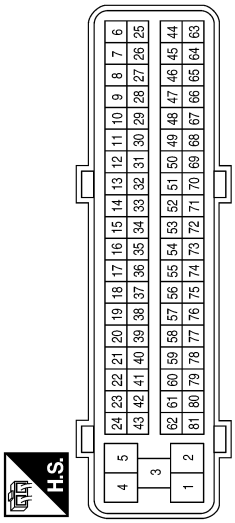

Terminal No.	Color of Wire	Signal Name
49	P	AVCC(PDPRES)
67	B	GND-A
70	BR	PDPRESS

Connector No.	F79
Connector Name	ECM (WITH VK56DE)
Connector Color	BLACK

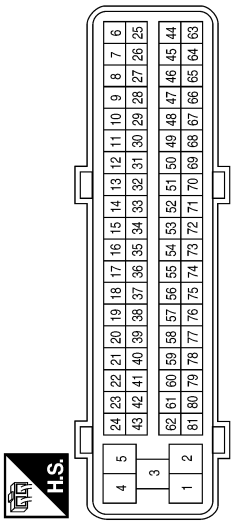

Terminal No.	Color of Wire	Signal Name
49	P	AVCC(PDPRES)
67	B	GND-A
70	BR	PDPRESS

ABIIA0394GB

SYMPTOM DIAGNOSIS

AIR CONDITIONER CONTROL

Symptom Matrix Chart

INFOID:0000000005257015

SYMPTOM TABLE

Symptom	Reference Page	
A/C system does not come on.	Go to Trouble Diagnosis Procedure for A/C System.	HAC-160
Air outlet does not change.	Go to Trouble Diagnosis Procedure for Mode Door Motor.	HAC-136
Mode door motor is malfunctioning.		
Discharge air temperature does not change.	Go to Trouble Diagnosis Procedure for Air Mix Door Motor.	HAC-140
Air mix door motor is malfunctioning.		
Intake door does not change.	Go to Trouble Diagnosis Procedure for Intake Door Motor.	HAC-143
Intake door motor is malfunctioning.		
Front blower motor operation is malfunctioning.	Go to Trouble Diagnosis Procedure for Front Blower Motor.	HAC-146
Magnet clutch does not engage.	Go to Trouble Diagnosis Procedure for Magnet Clutch.	HAC-153
Insufficient cooling	Go to Trouble Diagnosis Procedure for Insufficient Cooling.	HAC-173
Insufficient heating	Go to Trouble Diagnosis Procedure for Insufficient Heating.	HAC-181
Noise	Go to Trouble Diagnosis Procedure for Noise.	HAC-183

INSUFFICIENT COOLING

Component Function Check

INFOID:0000000005257016

SYMPTOM: Insufficient cooling

INSPECTION FLOW

1. CONFIRM SYMPTOM BY PERFORMING OPERATIONAL CHECK - TEMPERATURE DECREASE

1. Turn temperature control dial counterclockwise to maximum cold.
2. Check for cold air at discharge air outlets.

Can the symptom be duplicated?

YES >> GO TO 3.
NO >> GO TO 2.

2. CHECK FOR ANY SYMPTOMS

Perform a complete operational check for any symptoms. Refer to HAC-123, "Operational Check".

Does another symptom exist?

YES >> Refer to HAC-172, "Symptom Matrix Chart".
NO >> System OK.

3. CHECK FOR SERVICE BULLETINS

Check for any service bulletins.

>> GO TO 4.

4. CHECK DRIVE BELTS

Check compressor belt tension. Refer to EM-14, "Checking Drive Belts".

Is the inspection result normal?

YES >> GO TO 5.
NO >> Adjust or replace compressor belt. Refer to EM-14, "Checking Drive Belts".

5. CHECK AIR MIX DOOR OPERATION

Check and verify air mix door mechanism for smooth operation.

Does air mix door operate correctly?

YES >> GO TO 6.
NO >> Repair or replace air mix door control linkage.

6. CHECK COOLING FAN MOTOR OPERATION

Check and verify cooling fan motor for smooth operation. Refer to EC-396, "Component Inspection".

Does cooling fan motor operate correctly?

YES >> GO TO 7.
NO >> Check cooling fan motor. Refer to EC-395, "Diagnosis Procedure".

7. CHECK RECOVERY/RECYCLING EQUIPMENT BEFORE USAGE

Check recovery/recycling equipment before connecting to vehicle. Verify there is no pressure in the recovery/recycling equipment by checking the gauges. If pressure exists, recover refrigerant from equipment lines.

>> GO TO 8.

8. CHECK REFRIGERANT PURITY

1. Connect recovery/recycling equipment to vehicle.
2. Confirm refrigerant purity in supply tank using recovery/recycling and refrigerant identifier.

Is the inspection result normal?

YES >> GO TO 9.
NO >> Check contaminated refrigerant. Refer to HA-4, "Contaminated Refrigerant".

9. CHECK FOR EVAPORATOR FREEZE UP

Start engine and run A/C. Check for evaporator freeze up.

Does evaporator freeze up?

YES >> Perform diagnostic work flow. Refer to HAC-174, "Diagnostic Work Flow".
NO >> GO TO 10.

10. CHECK REFRIGERANT PRESSURE

Check refrigerant pressure with manifold gauge connected. Refer to HAC-176, "Performance Chart".

Is the inspection result normal?

YES >> GO TO 11.
NO >> Perform diagnostic work flow. Refer to HAC-174, "Diagnostic Work Flow".

11. CHECK AIR DUCTS

Check ducts for air leaks.

Is the inspection result normal?

YES >> System OK.
NO >> Repair air leaks.

Diagnostic Work Flow

INFOID:0000000005257017

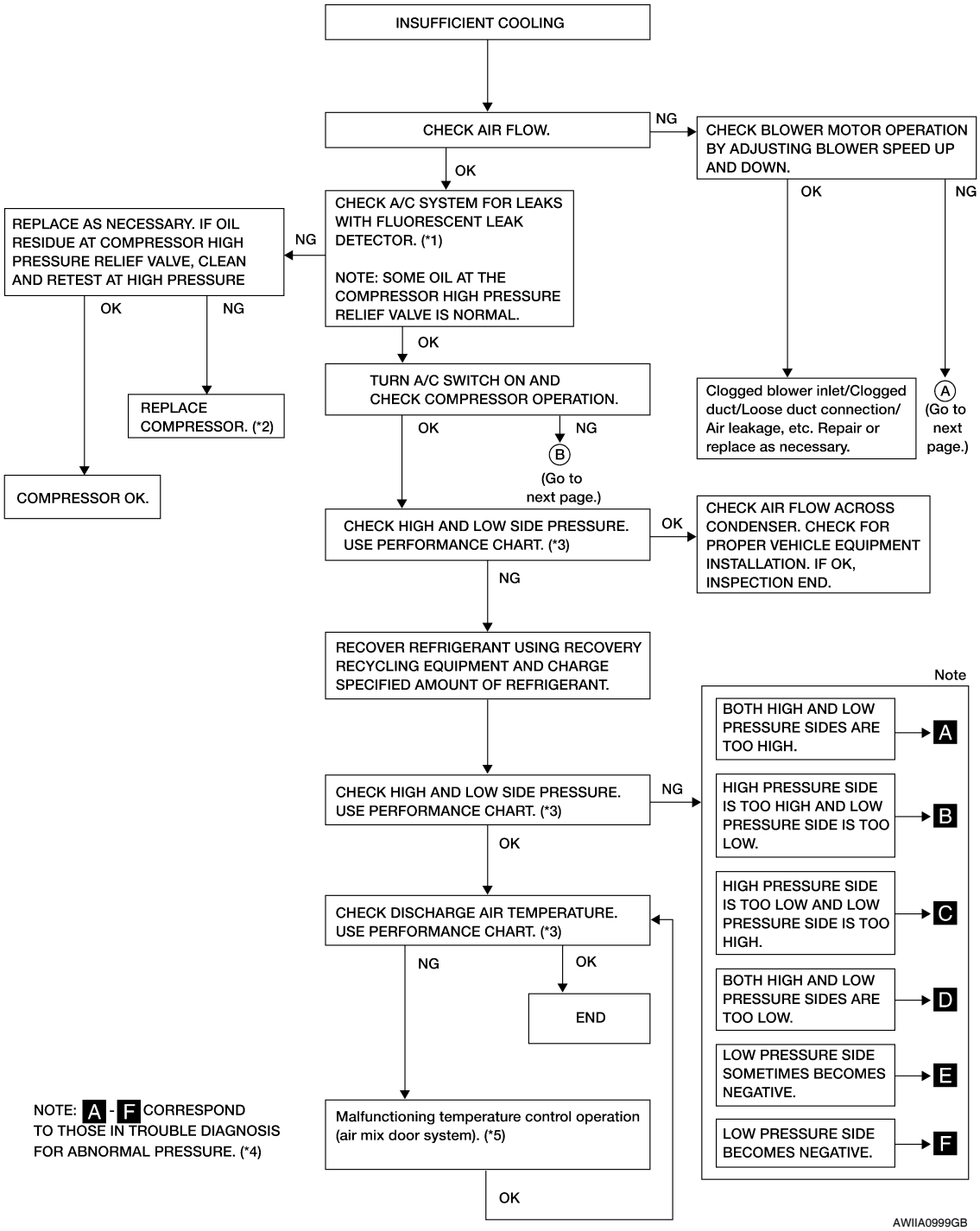

*1 HA-29, "Checking System for Leaks Using the Fluorescent Dye Leak Detector"
*2 HA-53, "Removal and Installation for Condenser"
*3 HAC-176, "Performance Chart"
*4 HAC-177, "Trouble Diagnoses for Abnormal Pressure"
*5 HAC-140, "Air Mix Door Motor Diagnosis Procedure"

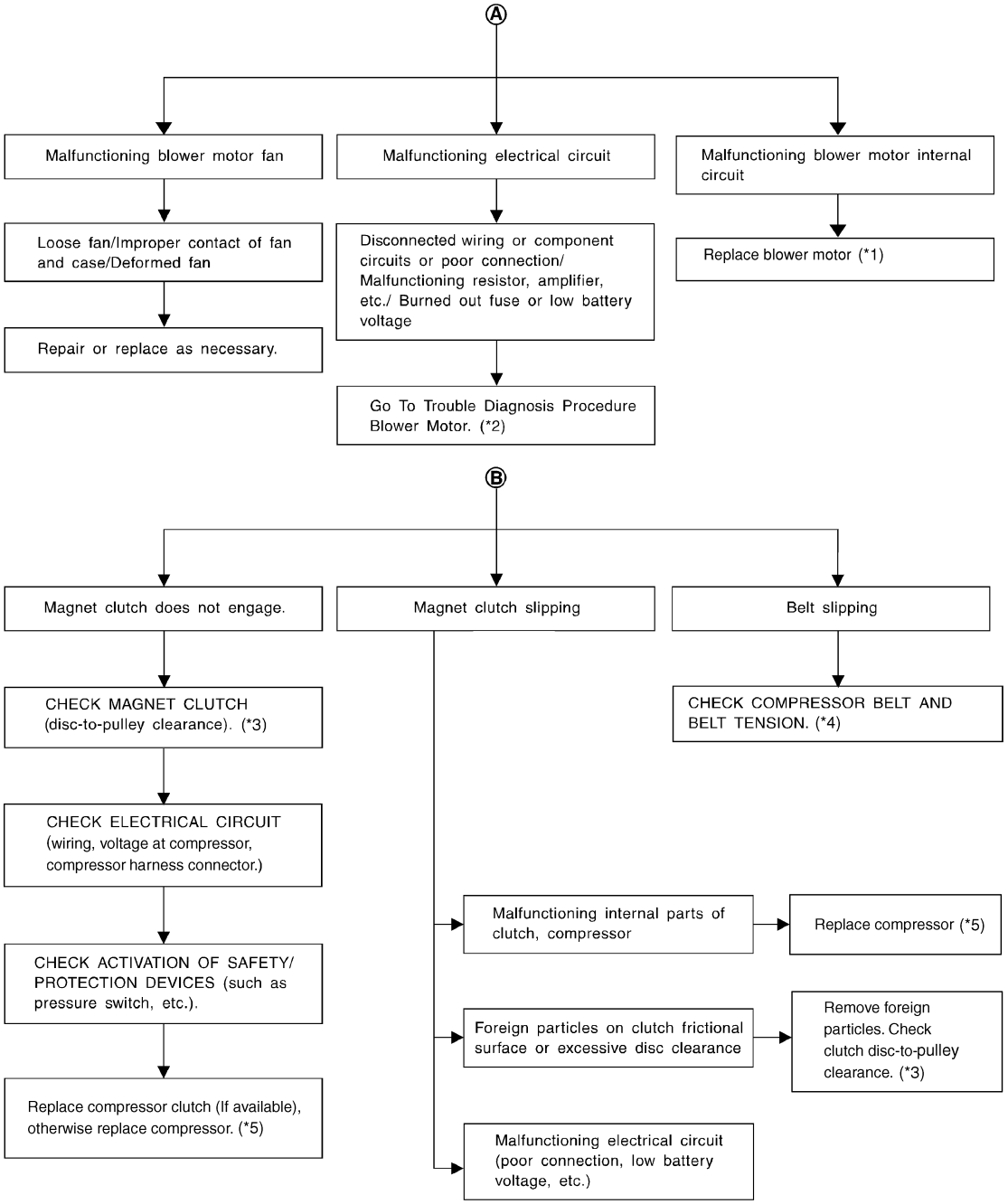

*1 VTL-12, "Removal and Installation"
*2 HAC-147, "Front Blower Motor Diagnosis Procedure"
*3 HA-40, "Removal and Installation for Compressor Clutch"
*4 EM-14, "Checking Drive Belts"
*5 HA-39, "Removal and Installation for Compressor"

Performance Chart

INFOID:0000000005257018

TEST CONDITION

Testing must be performed as follows:

Vehicle location	Indoors or in the shade (in a well-ventilated place)
Doors	Closed
Door window	Open
Hood	Open
TEMP.	Max. COLD
Mode switch	(Ventilation) set
Recirculation (REC) switch	(Recirculation) set
Blower speed	Max. speed set
Engine speed	Idle speed
Operate the air conditioning system for 10 minutes before taking measurements.	

TEST READING

Recirculating-to-discharge Air Temperature Table

Inside air (Recirculating air) at blower assembly inlet		Discharge air temperature at center ventilator °C (°F)
Relative humidity %	Air temperature °C (°F)	
50 - 60	20 (68)	5.3 - 6.5 (42 - 44)
	25 (77)	9.7 - 11.5 (49 - 53)
	30 (86)	13.8 - 16.3 (57 - 61)
	35 (95)	18.0 - 21.2 (64 - 70)
	40 (104)	22.2 - 25.7 (72 - 78)
60 - 70	20 (68)	6.5 - 7.7 (44 - 46)
	25 (77)	11.5 - 13.3 (53 - 56)
	30 (86)	16.3 - 18.8 (61 - 66)
	35 (95)	21.2 - 24.0 (70 - 75)
	40 (104)	25.7 - 29.2 (78 - 85)

Ambient Air Temperature-to-operating Pressure Table

Ambient air		High-pressure (Discharge side) kPa (kg/cm^2, psi)	Low-pressure (Suction side) kPa (kg/cm^2, psi)
Relative humidity %	Air temperature °C (°F)		
50 - 70	20 (68)	680 - 840 (6.94 - 8.57, 98.6 - 121.8)	160 - 198 (1.63 - 2.02, 23.2 - 28.7)
	25 (77)	800 - 985 (8.16 - 10.05, 116.0 - 142.8)	198 - 245 (2.02 - 2.50, 28.7 - 35.5)
	30 (86)	940 - 1,150 (9.59 - 11.73, 136.3 - 166.8)	225 - 278 (2.30 - 2.84, 32.6 - 40.3)
	35 (95)	1,160 - 1,410 (11.83 - 14.38, 168.2 - 204.5)	273 - 335 (2.78 - 3.42, 39.6 - 48.6)
	40 (104)	1,325 - 1,620 (13.52 - 16.52, 192.1 - 234.9)	325 - 398 (3.32 - 4.06, 47.1 - 57.7)

Trouble Diagnoses for Abnormal Pressure

INFOID:0000000005257019

Whenever system's high and/or low side pressure is abnormal, diagnose using a manifold gauge. The marker above the gauge scale in the following tables indicates the standard (usual) pressure range. Since the stan-

dard (usual) pressure, however, differs from vehicle to vehicle, refer to above table (Ambient air temperature-to-operating pressure table).

Both High- and Low-pressure Sides are Too High

Gauge indication	Refrigerant cycle	Probable cause	Corrective action
A Both high- and low-pressure sides are too high. 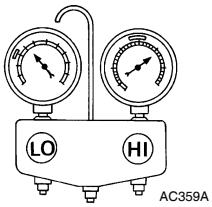 	Pressure is reduced soon after water is splashed on condenser.	Excessive refrigerant charge in refrigeration cycle	Reduce refrigerant until specified pressure is obtained.
	Air suction by cooling fan is insufficient.	Insufficient condenser cooling performance ↓ 1. Condenser fins are clogged. 2. Improper fan rotation of cooling fan	• Clean condenser. • Check and repair cooling fan if necessary.
	• Low-pressure pipe is not cold. • When compressor is stopped high-pressure value quickly drops by approximately 196 kPa (2 kg/cm^2, 28 psi). It then decreases gradually thereafter.	Poor heat exchange in condenser (After compressor operation stops, high-pressure decreases too slowly.) ↓ Air in refrigeration cycle	Evacuate and recharge system.
	Engine tends to overheat.	Engine cooling systems malfunction.	Check and repair engine cooling system.
	• An area of the low-pressure pipe is colder than areas near the evaporator outlet. • Plates are sometimes covered with frost.	• Excessive liquid refrigerant on low-pressure side • Excessive refrigerant discharge flow • Expansion valve is open a little compared with the specification. ↓ Improper expansion valve adjustment	Replace expansion valve.

High-pressure Side is Too High and Low-pressure Side is Too Low

Gauge indication	Refrigerant cycle	Probable cause	Corrective action
B High-pressure side is too high and low-pressure side is too low. 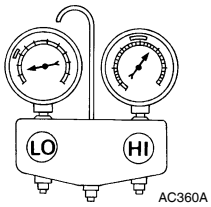 	Upper side of condenser and high-pressure side are hot, however, liquid tank is not so hot.	High-pressure tube or parts located between compressor and condenser are clogged or crushed.	• Check and repair or replace malfunctioning parts. • Check oil for contamination.

High-pressure Side is Too Low and Low-pressure Side is Too High

Gauge indication	Refrigerant cycle	Probable cause	Corrective action
C High-pressure side is too low and low-pressure side is too high. 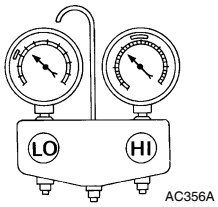 	High- and low-pressure sides become equal soon after compressor operation stops.	Compressor pressure operation is improper. ↓ Damaged inside compressor packings.	Replace compressor.
	No temperature difference between high- and low-pressure sides.	Compressor pressure operation is improper. ↓ Damaged inside compressor packings.	Replace compressor.

Both High- and Low-pressure Sides are Too Low

Gauge indication	Refrigerant cycle	Probable cause	Corrective action
D Both high- and low-pressure sides are too low. 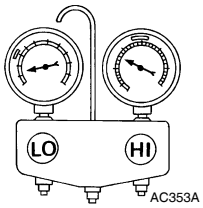 	• There is a big temperature difference between liquid tank outlet and inlet. Outlet temperature is extremely low. • Liquid tank inlet and expansion valve are frosted.	Liquid tank inside is slightly clogged.	• Replace liquid tank. • Check oil for contamination.
	• Temperature of expansion valve inlet is extremely low as compared with areas near liquid tank. • Expansion valve inlet may be frosted. • Temperature difference occurs somewhere in high-pressure side.	High-pressure pipe located between liquid tank and expansion valve is clogged.	• Check and repair malfunctioning parts. • Check oil for contamination.
	Expansion valve and liquid tank are warm or only cool when touched.	Low refrigerant charge. ↓ Leaking fittings or components.	Check refrigerant system for leaks. Refer to HA-31, "Checking of Refrigerant Leaks".
	There is a big temperature difference between expansion valve inlet and outlet while the valve itself is frosted.	Expansion valve closes a little compared with the specification. ↓ 1. Improper expansion valve adjustment. 2. Malfunctioning expansion valve. 3. Outlet and inlet may be clogged.	• Remove foreign particles by using compressed air. • Check oil for contamination.
	An area of the low-pressure pipe is colder than areas near the evaporator outlet.	Low-pressure pipe is clogged or crushed.	• Check and repair malfunctioning parts. • Check oil for contamination.
	Air flow volume is too low.	Evaporator is frozen.	• Check intake sensor circuit. Refer to HAC-157, "Intake Sensor Diagnosis Procedure". • Replace compressor. • Repair evaporator fins. • Replace evaporator. • Refer to HAC-146, "Front Blower Motor Component Function Check".

Low-pressure Side Sometimes Becomes Negative

Gauge indication	Refrigerant cycle	Probable cause	Corrective action
E Low-pressure side sometimes becomes negative. 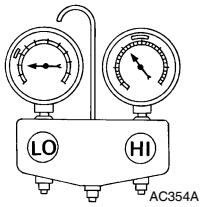	• Air conditioning system does not function and does not cyclically cool the compartment air. • The system constantly functions for a certain period of time after compressor is stopped and restarted.	Refrigerant does not discharge cyclically. ↓ Moisture is frozen at expansion valve outlet and inlet. ↓ Water is mixed with refrigerant.	• Drain water from refrigerant or replace refrigerant. • Replace liquid tank.

Low-pressure Side Becomes Negative

Gauge indication	Refrigerant cycle	Probable cause	Corrective action
F Low-pressure side becomes negative. 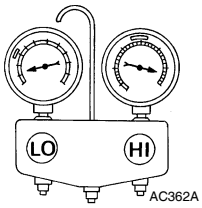	Liquid tank or front/rear side of expansion valve's pipe is frosted or dewed.	High-pressure side is closed and refrigerant does not flow. ↓ Expansion valve or liquid tank is frosted.	Leave the system at rest until no frost is present. Start it again to check whether or not the malfunction is caused by water or foreign particles. • If water is the cause, initially cooling is okay. Then the water freezes causing a blockage. Drain water from refrigerant or replace refrigerant. • If due to foreign particles, remove expansion valve and remove the particles with dry and compressed air (not shop air). • If either of the above methods cannot correct the malfunction, replace expansion valve. • Replace liquid tank. • Check oil for contamination.

INSUFFICIENT HEATING

Component Function Check

INFOID:0000000005257020

SYMPTOM: Insufficient heating

INSPECTION FLOW

1. CONFIRM SYMPTOM BY PERFORMING OPERATIONAL CHECK - TEMPERATURE INCREASE

1. Rotate blower control dial clockwise.
2. Turn the temperature control dial clockwise to maximum heat.
3. Check for hot air at discharge air outlets.

Can the symptom be duplicated?

YES >> GO TO 2.
NO >> Perform complete operational check (front). Refer to HAC-123, "Operational Check".

2. CHECK FOR SERVICE BULLETINS

Check for any service bulletins.

>> GO TO 3.

3. CHECK ENGINE COOLING SYSTEM

1. Check for proper engine coolant level.
2. Check hoses for leaks or kinks.
3. Check radiator cap. Refer to CO-18, "Checking Radiator".
4. Check for air in cooling system.

>> GO TO 4.

4. CHECK AIR MIX DOOR OPERATION

Check the operation of the air mix door.

Is the inspection result normal?

YES >> GO TO 5.
NO >> Check the air mix door motor circuit. Refer to HAC-140, "Air Mix Door Motor Component Function Check".

5. CHECK AIR DUCTS

Check for disconnected or leaking air ducts.

Is the inspection result normal?

YES >> GO TO 6.
NO >> Repair all disconnected or leaking air ducts.

6. CHECK HEATER HOSE TEMPERATURES

1. Start engine and warm it up to normal operating temperature.
2. Touch both the inlet and outlet heater hoses. The inlet hose should be hot and the outlet hose should be warm.

Is the inspection result normal?

YES >> Hot inlet hose and a warm outlet hose: GO TO 7.
NO >> Both hoses warm: GO TO 8.

7. CHECK ENGINE COOLANT SYSTEM

Check engine coolant temperature sensor. Refer to EC-135, "Component Inspection".

Is the inspection result normal?

YES >> System OK.
NO >> Repair or replace as necessary. Retest.

8. CHECK HEATER HOSES

Check heater hoses for proper installation.

Is the inspection result normal?

YES >> System OK.
NO >> 1. Back flush heater core.
2. Drain the water from the system.
3. Refill system with new engine coolant. Refer to CO-12, "Changing Engine Coolant".
4. GO TO 9 to retest.

9. CHECK HEATER HOSE TEMPERATURES

1. Start engine and warm it up to normal operating temperature.
2. Touch both the inlet and outlet heater hoses.The inlet hose should be hot and the outlet hose should be warm.

Is the inspection result normal?

YES >> System OK.
NO >> Replace heater core. Refer to VTL-26, "Removal and Installation".

NOISE

Component Function Check

INFOID:0000000005257021

SYMPTOM: Noise

INSPECTION FLOW

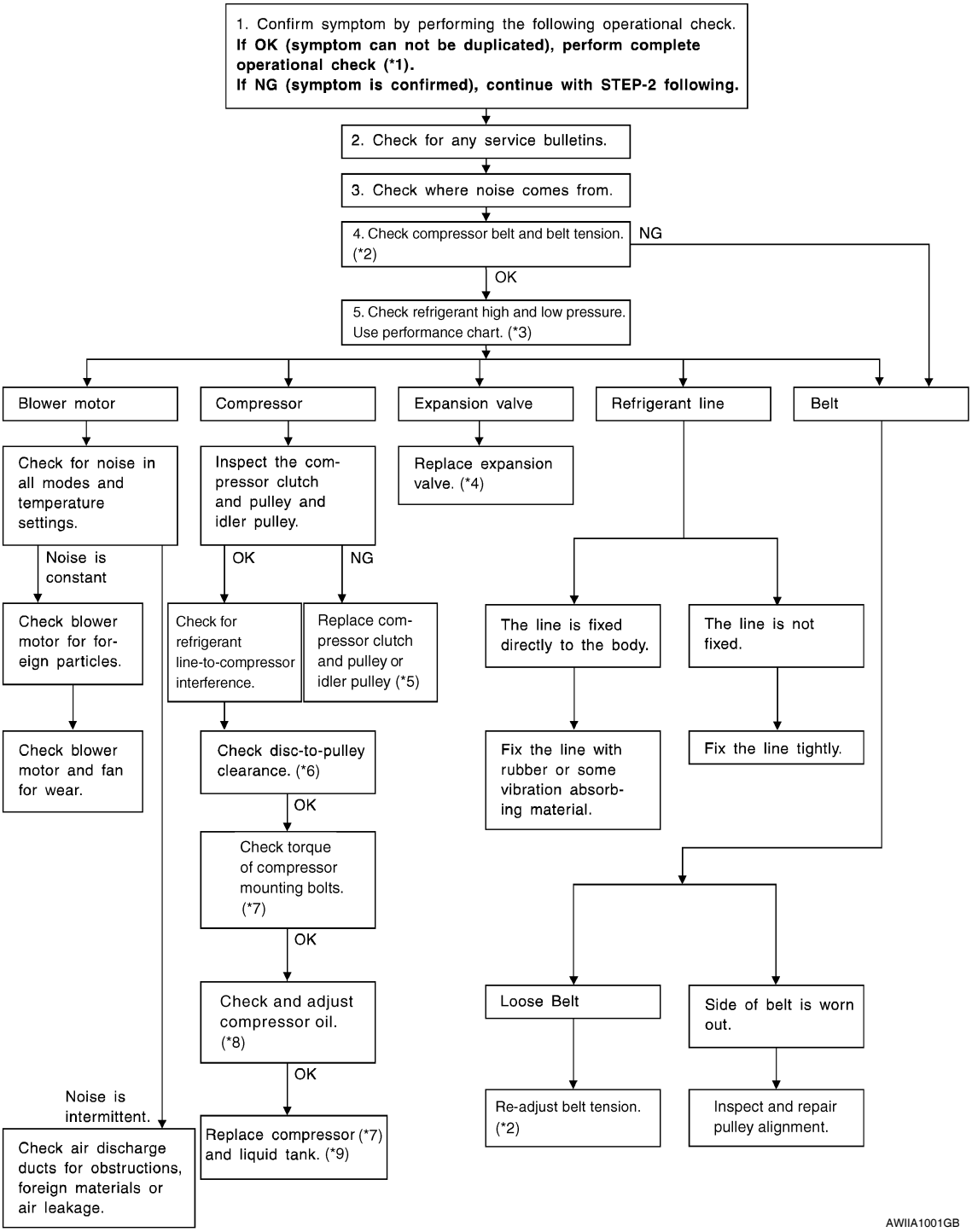

*1 HAC-123, "Operational Check" *2 EM-14, "Checking Drive Belts" *3 HAC-176, "Performance Chart"

*4	HA-55, "Removal and Installation for Front Expansion Valve"	*5	HA-40, "Removal and Installation for Compressor Clutch"	*6	HA-40, "Removal and Installation for Compressor Clutch"
*7	HA-39, "Removal and Installation for Compressor"	*8	HA-27, "Maintenance of Oil Quantity in Compressor"	*9	HA-53, "Removal and Installation for Condenser"

PRECAUTION

PRECAUTIONS

Precaution for Supplemental Restraint System (SRS) "AIR BAG" and "SEAT BELT PRE-TENSIONER"

INFOID:0000000005484537

The Supplemental Restraint System such as “AIR BAG” and “SEAT BELT PRE-TENSIONER”, used along with a front seat belt, helps to reduce the risk or severity of injury to the driver and front passenger for certain types of collision. This system includes seat belt switch inputs and dual stage front air bag modules. The SRS system uses the seat belt switches to determine the front air bag deployment, and may only deploy one front air bag, depending on the severity of a collision and whether the front occupants are belted or unbelted.
Information necessary to service the system safely is included in the SR and SB section of this Service Manual.

WARNING:

- **To avoid rendering the SRS inoperative, which could increase the risk of personal injury or death in the event of a collision which would result in air bag inflation, all maintenance must be performed by an authorized NISSAN/INFINITI dealer.**
- **Improper maintenance, including incorrect removal and installation of the SRS, can lead to personal injury caused by unintentional activation of the system. For removal of Spiral Cable and Air Bag Module, see the SR section.**
- **Do not use electrical test equipment on any circuit related to the SRS unless instructed to in this Service Manual. SRS wiring harnesses can be identified by yellow and/or orange harnesses or harness connectors.**

PRECAUTIONS WHEN USING POWER TOOLS (AIR OR ELECTRIC) AND HAMMERS

WARNING:

- **When working near the Airbag Diagnosis Sensor Unit or other Airbag System sensors with the Ignition ON or engine running, DO NOT use air or electric power tools or strike near the sensor(s) with a hammer. Heavy vibration could activate the sensor(s) and deploy the air bag(s), possibly causing serious injury.**
- **When using air or electric power tools or hammers, always switch the Ignition OFF, disconnect the battery, and wait at least 3 minutes before performing any service.**

Working with HFC-134a (R-134a)

INFOID:0000000005257023

WARNING:

- **CFC-12 (R-12) refrigerant and HFC-134a (R-134a) refrigerant are not compatible. If the refrigerants are mixed compressor failure is likely to occur. Refer to HA-4, "Contaminated Refrigerant". To determine the purity of HFC-134a (R-134a) in the vehicle and recovery tank, use Refrigerant Recovery/Recycling Recharging equipment and Refrigerant Identifier.**
- **Use only specified oil for the HFC-134a (R-134a) A/C system and HFC-134a (R-134a) components. If oil other than that specified is used, compressor failure is likely to occur.**
- **The specified HFC-134a (R-134a) oil rapidly absorbs moisture from the atmosphere. The following handling precautions must be observed:**
- **When removing refrigerant components from a vehicle, immediately cap (seal) the component to minimize the entry of moisture from the atmosphere.**
- **When installing refrigerant components to a vehicle, do not remove the caps (unseal) until just before connecting the components. Connect all refrigerant loop components as quickly as possible to minimize the entry of moisture into system.**
- **Only use the specified oil from a sealed container. Immediately reseal containers of oil. Without proper sealing, oil will become moisture saturated and should not be used.**
- **Avoid breathing A/C refrigerant and oil vapor or mist. Exposure may irritate eyes, nose and throat. Remove HFC-134a (R-134a) from the A/C system using certified service equipment meeting requirements of SAE J2210 [HFC-134a (R-134a) recycling equipment], or J2209 [HFC-134a (R-134a) recycling equipment], If accidental system discharge occurs, ventilate work area before resuming service. Additional health and safety information may be obtained from refrigerant and oil manufacturers.**
- **Do not allow A/C oil to come in contact with styrofoam parts. Damage may result.**

CONTAMINATED REFRIGERANT

If a refrigerant other than pure HFC-134a (R-134a) is identified in a vehicle, your options are:

- Explain to the customer that environmental regulations prohibit the release of contaminated refrigerant into the atmosphere.
- Explain that recovery of the contaminated refrigerant could damage your service equipment and refrigerant supply.
- Suggest the customer return the vehicle to the location of previous service where the contamination may have occurred.
- If you choose to perform the repair, recover the refrigerant using only **dedicated equipment and containers. Do not recover contaminated refrigerant into your existing service equipment.** If your facility does not have dedicated recovery equipment, you may contact a local refrigerant product retailer for available service. This refrigerant must be disposed of in accordance with all federal and local regulations. In addition, replacement of all refrigerant system components on the vehicle is recommended.
- If the vehicle is within the warranty period, the air conditioner warranty is void. Please contact NISSAN Customer Affairs for further assistance.

Precaution for Service Equipment

INFOID:0000000005257024

MANIFOLD GAUGE SET

Be certain that the gauge face indicates R-134a or 134a. Make sure the gauge set has 1/2″-16 ACME threaded connections for service hoses. Confirm the set has been used only with refrigerant HFC-134a (R-134a) along with specified oil.

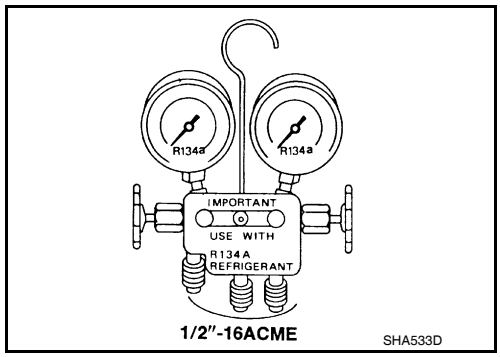

SERVICE HOSES

Be certain that the service hoses display the markings described (colored hose with black stripe). All hoses must include positive shut-off devices (either manual or automatic) near the end of the hoses opposite the manifold gauge.

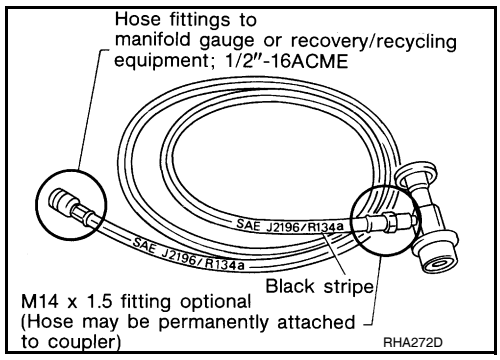

SERVICE COUPLERS

Never attempt to connect HFC-134a (R-134a) service couplers to a CFC-12 (R-12) A/C system. The HFC-134a (R-134a) couplers will not properly connect to the CFC-12 (R-12) system. However, if an improper connection is attempted, discharging and contamination may occur.

Shut-off valve rotation	A/C service valve
Clockwise	Open
Counterclockwise	Close