SECTION TM
TRANSAXLE & TRANSMISSION

CONTENTS

CVT: RE0F10E

PRECAUTION 6

PRECAUTIONS 6
- Precaution for Supplemental Restraint System (SRS) "AIR BAG" and "SEAT BELT PRE-TENSIONER" 6
- Precaution for Procedure without Cowl Top Cover 6
- Precaution for TCM and Transaxle Assembly Replacement 6
- General Precautions 7
- On Board Diagnosis (OBD) System of CVT and Engine 8
- Removal and Installation Procedure for CVT Unit Connector 8

PREPARATION 10

PREPARATION 10
- Special Service Tools 10
- Commercial Service Tools 10

SYSTEM DESCRIPTION 11

COMPONENT PARTS 11

CVT CONTROL SYSTEM 11
- CVT CONTROL SYSTEM : Component Parts Location 11
- CVT CONTROL SYSTEM : TCM 13
- CVT CONTROL SYSTEM : Transmission Range Switch 13
- CVT CONTROL SYSTEM : Input Speed Sensor 13
- CVT CONTROL SYSTEM : Primary Speed Sensor 14
- CVT CONTROL SYSTEM : Output Speed Sensor 15
- CVT CONTROL SYSTEM : CVT Fluid Temperature Sensor 15
- CVT CONTROL SYSTEM : Primary Pressure Sensor 16
- CVT CONTROL SYSTEM : Secondary Pressure Sensor 16
- CVT CONTROL SYSTEM : Line Pressure Solenoid Valve 16
- CVT CONTROL SYSTEM : Primary Pressure Solenoid Valve 17
- CVT CONTROL SYSTEM : Secondary Pressure Solenoid Valve 17
- CVT CONTROL SYSTEM : Torque Converter Clutch Solenoid Valve 17
- CVT CONTROL SYSTEM : Select Solenoid Valve 18
- CVT CONTROL SYSTEM : Overdrive Control Switch 18
- CVT CONTROL SYSTEM : Tow Mode Switch 18
- CVT CONTROL SYSTEM : OD OFF Indicator Lamp 18
- CVT CONTROL SYSTEM : TOW Mode Indicator Lamp 19
- CVT CONTROL SYSTEM : Shift Position Indicator 19
- CVT CONTROL SYSTEM : Malfunction Indicator Lamp (MIL) 19

SHIFT LOCK SYSTEM 19
- SHIFT LOCK SYSTEM : Component Parts Location 20

STRUCTURE AND OPERATION 21

TRANSAXLE 21
- TRANSAXLE : Cross-Sectional View 21
- TRANSAXLE : Transaxle Mechanism 22
- TRANSAXLE : Operation Status 24
- TRANSAXLE : Oil Pressure System 25
- TRANSAXLE : Component Description 25

FLUID COOLER & FLUID WARMER SYSTEM 26
- FLUID COOLER & FLUID WARMER SYSTEM : System Description 26

SHIFT LOCK SYSTEM 28

SHIFT LOCK SYSTEM : System Description 28

SYSTEM 30

CVT CONTROL SYSTEM 30
CVT CONTROL SYSTEM : System Description ... 30
CVT CONTROL SYSTEM : Fail-safe 31
CVT CONTROL SYSTEM : Protection Control 34

LINE PRESSURE CONTROL 35
LINE PRESSURE CONTROL : System Description 35

SHIFT CONTROL 36
SHIFT CONTROL : System Description 36

SELECT CONTROL 38
SELECT CONTROL : System Description 38

LOCK-UP CONTROL 38
LOCK-UP CONTROL : System Description 39

ON BOARD DIAGNOSTIC (OBD) SYSTEM 40
Description 40
Function of OBD 40

DIAGNOSIS SYSTEM (TCM) 41

DIAGNOSIS DESCRIPTION 41
DIAGNOSIS DESCRIPTION : 1 Trip Detection Diagnosis and 2 Trip Detection Diagnosis 41
DIAGNOSIS DESCRIPTION : DTC and DTC of 1st Trip 41
DIAGNOSIS DESCRIPTION : Malfunction Indicator Lamp (MIL) 41
DIAGNOSIS DESCRIPTION : Counter System 41
CONSULT Function 43

ECU DIAGNOSIS INFORMATION 48

TCM 48
Reference Value 48
Fail-safe 55
Protection Control 58
DTC Inspection Priority Chart 58
DTC Index 60

WIRING DIAGRAM 62

CVT CONTROL SYSTEM 62
Wiring diagram 62

CVT SHIFT LOCK SYSTEM 74
Wiring diagram 74

BASIC INSPECTION 78

DIAGNOSIS AND REPAIR WORK FLOW 78
Work Flow 78
Diagnostic Work Sheet 79

ADDITIONAL SERVICE WHEN REPLACING TCM 81
Description 81
Work Procedure 81

ADDITIONAL SERVICE WHEN REPLACING TRANSAXLE ASSEMBLY 82
Description 82
Work Procedure 82

CVT FLUID COOLER SYSTEM 84
Cleaning 84

STALL TEST 87
Work Procedure 87

CVT POSITION 88
Inspection and Adjustment 88

DTC/CIRCUIT DIAGNOSIS 89

U0073 COMMUNICATION BUS A OFF 89
DTC Logic 89
Diagnosis Procedure 89

U0100 LOST COMMUNICATION (ECM A) 90
DTC Logic 90
Diagnosis Procedure 90

U0102 LOST COMMUNICATION (TRANSFER) 91
DTC Logic 91
Diagnosis Procedure 91

U0140 LOST COMMUNICATION (BCM) 92
DTC Logic 92
Diagnosis Procedure 92

U0141 LOST COMMUNICATION (BCM A) 93
DTC Logic 93
Diagnosis Procedure 93

U0155 LOST COMMUNICATION (IPC) 94
DTC Logic 94
Diagnosis Procedure 94

U0300 CAN COMMUNICATION DATA 95
DTC Logic 95
Diagnosis Procedure 95

U1000 CAN COMM CIRCUIT 96
Description 96
DTC Logic 96
Diagnosis Procedure 96

U1117 LOST COMMUNICATION (ABS) 97
DTC Logic 97
Diagnosis Procedure 97

P062F EEPROM 98
Description 98
DTC Logic 98
Diagnosis Procedure 98

P0705 TRANSMISSION RANGE SENSOR A....99
DTC Logic 99
Diagnosis Procedure 99
Component Inspection 103

P0706 TRANSMISSION RANGE SENSOR A..105
DTC Logic 105
Diagnosis Procedure 105
Component Inspection 107

P0711 TRANSMISSION FLUID TEMPERATURE SENSOR A 108
DTC Logic (For North America) 108
DTC Logic (Except for North America) 109
Diagnosis Procedure 110

P0712 TRANSMISSION FLUID TEMPERATURE SENSOR A 112
DTC Logic 112
Diagnosis Procedure 112

P0713 TRANSMISSION FLUID TEMPERATURE SENSOR A 114
DTC Logic 114
Diagnosis Procedure 114

P0715 INPUT SPEED SENSOR A 116
DTC Logic 116
Diagnosis Procedure 117

P0717 INPUT SPEED SENSOR A 119
DTC Logic 119
Diagnosis Procedure 120

P0740 TORQUE CONVERTER 122
DTC Logic 122
Diagnosis Procedure 123

P0743 TORQUE CONVERTER 124
DTC Logic 124
Diagnosis Procedure 125

P0744 TORQUE CONVERTER 126
DTC Logic 126
Diagnosis Procedure 127

P0746 PRESSURE CONTROL SOLENOID A.128
DTC Logic 128
Diagnosis Procedure 129

P0776 PRESSURE CONTROL SOLENOID B.130
DTC Logic 130
Diagnosis Procedure 131

P0778 PRESSURE CONTROL SOLENOID B.132
DTC Logic 132
Diagnosis Procedure 132

P0779 PRESSURE CONTROL SOLENOID B.134
DTC Logic 134
Diagnosis Procedure 134

P0841 TRANSMISSION FLUID PRESSURE SEN/SW A 136
DTC Logic 136
Diagnosis Procedure 136

P0847 TRANSMISSION FLUID PRESSURE SEN/SW B 137
DTC Logic 137
Diagnosis Procedure 137

P0848 TRANSMISSION FLUID PRESSURE SEN/SW B 139
DTC Logic 139
Diagnosis Procedure 139

P084C TRANSMISSION FLUID PRESSURE SEN/SW H 141
DTC Logic 141
Diagnosis Procedure 141

P084D TRANSMISSION FLUID PRESSURE SEN/SW H 143
DTC Logic 143
Diagnosis Procedure 143

P0863 TCM COMMUNICATION 145
DTC Logic 145
Diagnosis Procedure 145

P0890 TCM 146
DTC Logic 146
Diagnosis Procedure 146

P0962 PRESSURE CONTROL SOLENOID A.148
DTC Logic 148
Diagnosis Procedure 148

P0963 PRESSURE CONTROL SOLENOID A.150
DTC Logic 150
Diagnosis Procedure 150

P0965 PRESSURE CONTROL SOLENOID B.152
DTC Logic 152
Diagnosis Procedure 153

P0966 PRESSURE CONTROL SOLENOID B.154
DTC Logic 154
Diagnosis Procedure 154

P0967 PRESSURE CONTROL SOLENOID B.156
DTC Logic 156
Diagnosis Procedure 156

P2765 INPUT SPEED SENSOR B 158
DTC Logic 158
Diagnosis Procedure 159

P2813 SELECT SOLENOID 161
DTC Logic 161
Diagnosis Procedure 162

P2814 SELECT SOLENOID 163

DTC Logic 163
Diagnosis Procedure 163

P2815 SELECT SOLENOID 165
DTC Logic 165
Diagnosis Procedure 165

MAIN POWER SUPPLY AND GROUND CIRCUIT 167
Diagnosis Procedure 167

SHIFT POSITION INDICATOR CIRCUIT 169
Component Parts Function Inspection 169
Diagnosis Procedure 169

OVERDRIVE CONTROL SWITCH 170
Component Function Check 170
Diagnosis Procedure 170
Component Inspection 171

OD OFF INDICATOR LAMP 173
Component Function Check 173
Diagnosis Procedure 173

TOW MODE SYSTEM 174
Component Function Check 174
Diagnosis Procedure 174
Component Inspection 175

SHIFT LOCK SYSTEM 177
Component Function Check 177
Diagnosis Procedure 177
Component Inspection (Shift Lock Solenoid) 178
Component Inspection (Park Position Switch) 178
Component Inspection (Stop Lamp Switch) 179

SYMPTOM DIAGNOSIS 180

CVT CONTROL SYSTEM 180
Symptom Table 180

PERIODIC MAINTENANCE 185

CVT FLUID 185
Inspection 185
Replacement 185
Adjustment 187

REMOVAL AND INSTALLATION 189

CVT SHIFT SELECTOR 189
Exploded View 189
Removal and Installation 189
Inspection 190

CONTROL CABLE 191
Exploded View 191
Removal and Installation 191
Inspection and Adjustment 192

TOW MODE SWITCH 194
Removal and Installation 194

TCM 195
Exploded View 195
Removal and Installation 195
Adjustment 195

AIR BREATHER HOSE 196
Removal and Installation 196

OIL PAN 197
Exploded View 197
Removal and Installation 197
Inspection and Adjustment 198

INPUT SPEED SENSOR 199
Exploded View 199
Removal and Installation 199
Inspection and Adjustment 199

PRIMARY SPEED SENSOR 201
Exploded View 201
Removal and Installation 201
Inspection and Adjustment 201

OUTPUT SPEED SENSOR 203
Exploded View 203
Removal and Installation 203
Inspection and Adjustment 203

DIFFERENTIAL SIDE OIL SEAL 204
Exploded View 204
Removal and Installation 204
Inspection and Adjustment 205

WATER HOSE 206
Exploded View 206
Removal and Installation 206
Inspection 207

CVT FLUID COOLER SYSTEM 208
Exploded View 208
Removal and Installation 208
Inspection 209

CVT OIL WARMER 211
Exploded View 211
Removal and Installation 211
Inspection 211

PLUG 212
Description 212
Exploded View 212
Removal and Installation 212
Inspection and Adjustment 212

UNIT REMOVAL AND INSTALLATION 213

TRANSMISSION ASSEMBLY 213
Exploded View 213
Removal and Installation 214
Inspection and Adjustment 216

UNIT DISASSEMBLY AND ASSEMBLY 217

TORQUE CONVERTER AND CONVERTER HOUSING OIL SEAL **217**
Exploded View 217
Disassembly 217
Assembly 217
Inspection 218

SERVICE DATA AND SPECIFICATIONS (SDS) **219**

SERVICE DATA AND SPECIFICATIONS (SDS) **219**
General Specification 219
Shift Characteristics 219
Stall Speed 219
Torque Converter 219
Heater Thermostat 219

PRECAUTION

PRECAUTIONS

Precaution for Supplemental Restraint System (SRS) "AIR BAG" and "SEAT BELT PRE-TENSIONER"

INFOID:0000000009723907

The Supplemental Restraint System such as “AIR BAG” and “SEAT BELT PRE-TENSIONER”, used along with a front seat belt, helps to reduce the risk or severity of injury to the driver and front passenger for certain types of collision. Information necessary to service the system safely is included in the SR and SB section of this Service Manual.

WARNING:

- **To avoid rendering the SRS inoperative, which could increase the risk of personal injury or death in the event of a collision which would result in air bag inflation, all maintenance must be performed by an authorized NISSAN/INFINITI dealer.**
- **Improper maintenance, including incorrect removal and installation of the SRS, can lead to personal injury caused by unintentional activation of the system. For removal of Spiral Cable and Air Bag Module, see the SR section.**
- **Do not use electrical test equipment on any circuit related to the SRS unless instructed to in this Service Manual. SRS wiring harnesses can be identified by yellow and/or orange harnesses or harness connectors.**

PRECAUTIONS WHEN USING POWER TOOLS (AIR OR ELECTRIC) AND HAMMERS

WARNING:

- **When working near the Airbag Diagnosis Sensor Unit or other Airbag System sensors with the Ignition ON or engine running, DO NOT use air or electric power tools or strike near the sensor(s) with a hammer. Heavy vibration could activate the sensor(s) and deploy the air bag(s), possibly causing serious injury.**
- **When using air or electric power tools or hammers, always switch the Ignition OFF, disconnect the battery and wait at least three minutes before performing any service.**

Precaution for Procedure without Cowl Top Cover

INFOID:0000000009177469

When performing the procedure after removing cowl top cover, cover the lower end of windshield with urethane, etc to prevent damage to windshield.

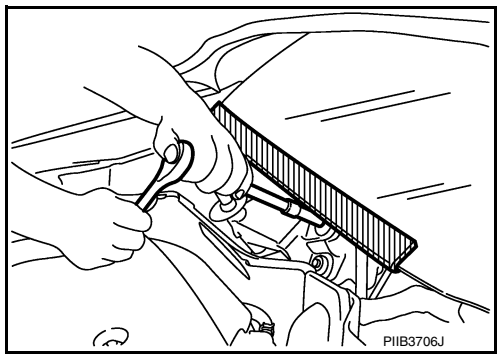

Precaution for TCM and Transaxle Assembly Replacement

INFOID:0000000009177470

CAUTION:

- **To replace TCM, refer to TM-81, "Description".**
- **To replace transaxle assembly, refer to TM-82, "Description".**

General Precautions

INFOID:0000000009177471

- **Turn ignition switch OFF and disconnect the battery cable from the negative terminal before connecting or disconnecting the CVT assembly harness connector. Because battery voltage is applied to TCM even if ignition switch is turned OFF.**

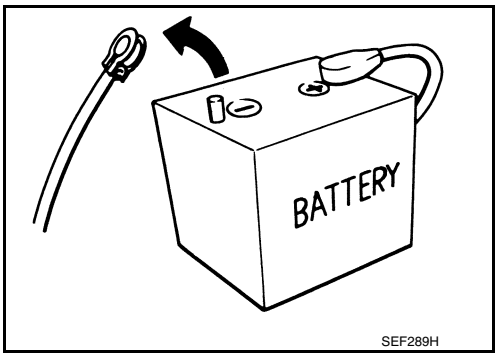

- **When connecting or disconnecting pin connectors into or from TCM, do not damage pin terminals (bend or break).**
  Check that there are not any bends or breaks on TCM pin terminal, when connecting pin connectors.

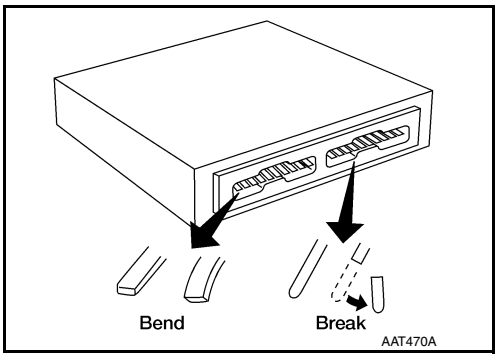

- **Perform TCM input/output signal inspection and check whether TCM functions normally or not before replacing TCM. Refer to TM-48, "Reference Value".**

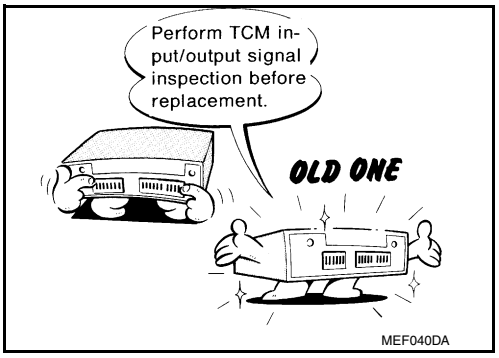

- **Perform "DTC (Diagnostic Trouble Code) CONFIRMATION PROCEDURE".**
  If the repair is completed DTC should not be displayed in the "DTC CONFIRMATION PROCEDURE".

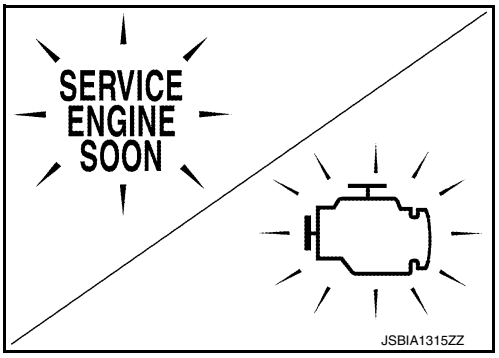

- Always use the specified brand of CVT fluid. Refer to MA-15, "FOR USA AND CANADA : Fluids and Lubricants" (For USA and Canada), MA-16, "FOR MEXICO : Fluids and Lubricants" (For Mexico).
- Use lint-free paper not cloth rags during work.
- Dispose of the waste oil using the methods prescribed by law, ordinance, etc. after replacing the CVT fluid.

On Board Diagnosis (OBD) System of CVT and Engine

INFOID:0000000009177472

The TCM and ECM have an on board diagnostic system. It will light up the malfunction indicator lamp (MIL) to warn the driver of a malfunction causing emission deterioration.

CAUTION:

- **Be sure to turn the ignition switch OFF and disconnect the battery cable from the negative terminal before any repair or inspection work. The open/short circuit of related switches, sensors, solenoid valves, etc. will cause the MIL to light up.**
- **Be sure to connect and lock the connectors securely after work. A loose (unlocked) connector will cause the MIL to light up due to an open circuit. (Be sure the connector is free from water, grease, dirt, bent terminals, etc.)**
- **Be sure to route and secure the harnesses properly after work. Interference of the harness with a bracket, etc. may cause the MIL to light up due to a short circuit.**
- **Be sure to connect rubber tubes properly after work. A misconnected or disconnected rubber tube may cause the MIL to light up due to a malfunction of the EGR system or fuel injection system, etc.**
- **Be sure to erase the unnecessary malfunction information (repairs completed) from the TCM and ECM before returning the vehicle to the customer.**

Removal and Installation Procedure for CVT Unit Connector

INFOID:0000000009177473

REMOVAL

- Rotate bayonet ring ① counterclockwise. Pull out CVT unit harness connector ② upward and remove it.

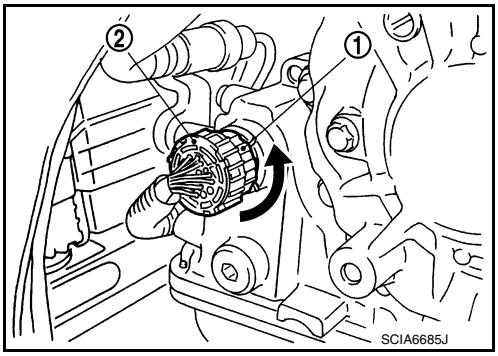

INSTALLATION

1. Align marking Ⓐ on CVT unit harness connector terminal with marking Ⓑ on bayonet ring. Insert CVT unit harness connector.
2. Rotate bayonet ring clockwise.

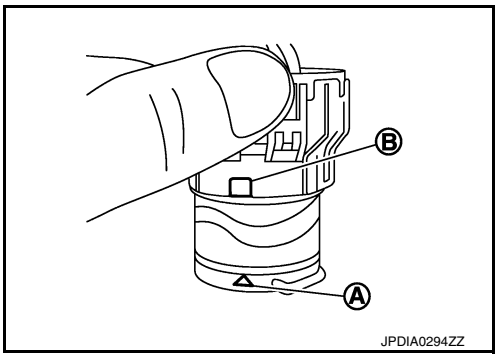

3. Rotate bayonet ring clockwise until marking Ⓐ on CVT unit harness connector terminal body is aligned with the slit Ⓑ on bayonet ring as shown in the figure (correctly fitting condition).

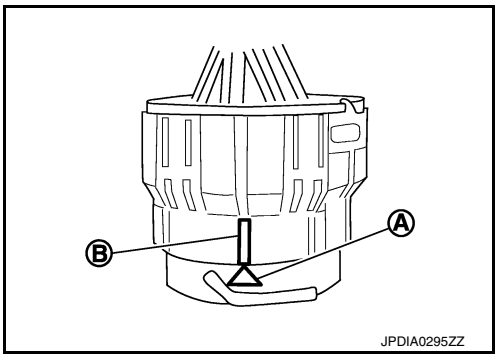

CAUTION:

- **Securely align marking (A) on CVT unit harness connector terminal body with bayonet ring slit Ⓑ. Then, be careful not to make a half fit condition as shown in the figure.**
- **Never mistake the slit of bayonet ring for other dent portion.**

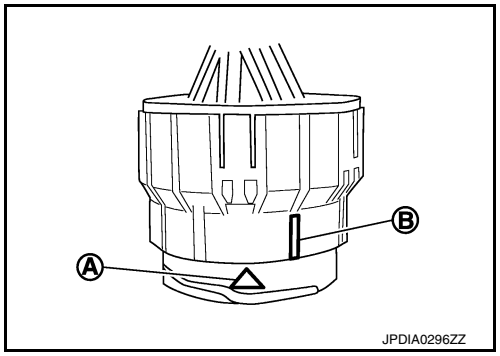

PREPARATION

PREPARATION

Special Service Tools

INFOID:0000000009177474

Tool number Tool name		Description
1. KV311039S0 Charging pipe set 2. KV31103920* O-ring	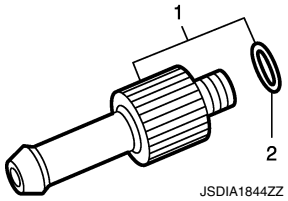	CVT fluid changing and adjustment
KV38107900 Protector a: 32 mm (1.26 in) dia.	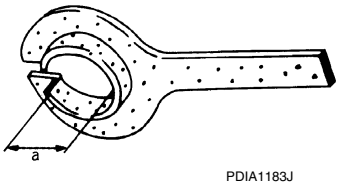	Installing drive shaft

*: The O-ring as a unit part is set as a SST.

Commercial Service Tools

INFOID:0000000009177475

Tool number Tool name		Description
Power tool	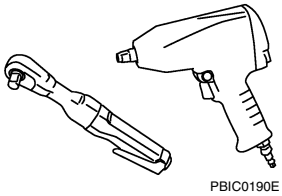	Installing differential side oil seal
Drift a: 56 mm (2.20 in) dia. b: 50 mm (1.97 in) dia.	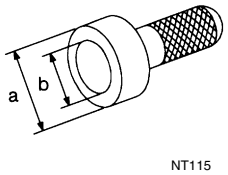	Installing differential side oil seal
Drift a: 65 mm (2.56 in) dia. b: 60 mm (2.36 in) dia.	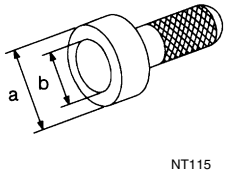	Installing converter housing oil seal

SYSTEM DESCRIPTION

COMPONENT PARTS

CVT CONTROL SYSTEM

CVT CONTROL SYSTEM : Component Parts Location

INFOID:0000000009177476

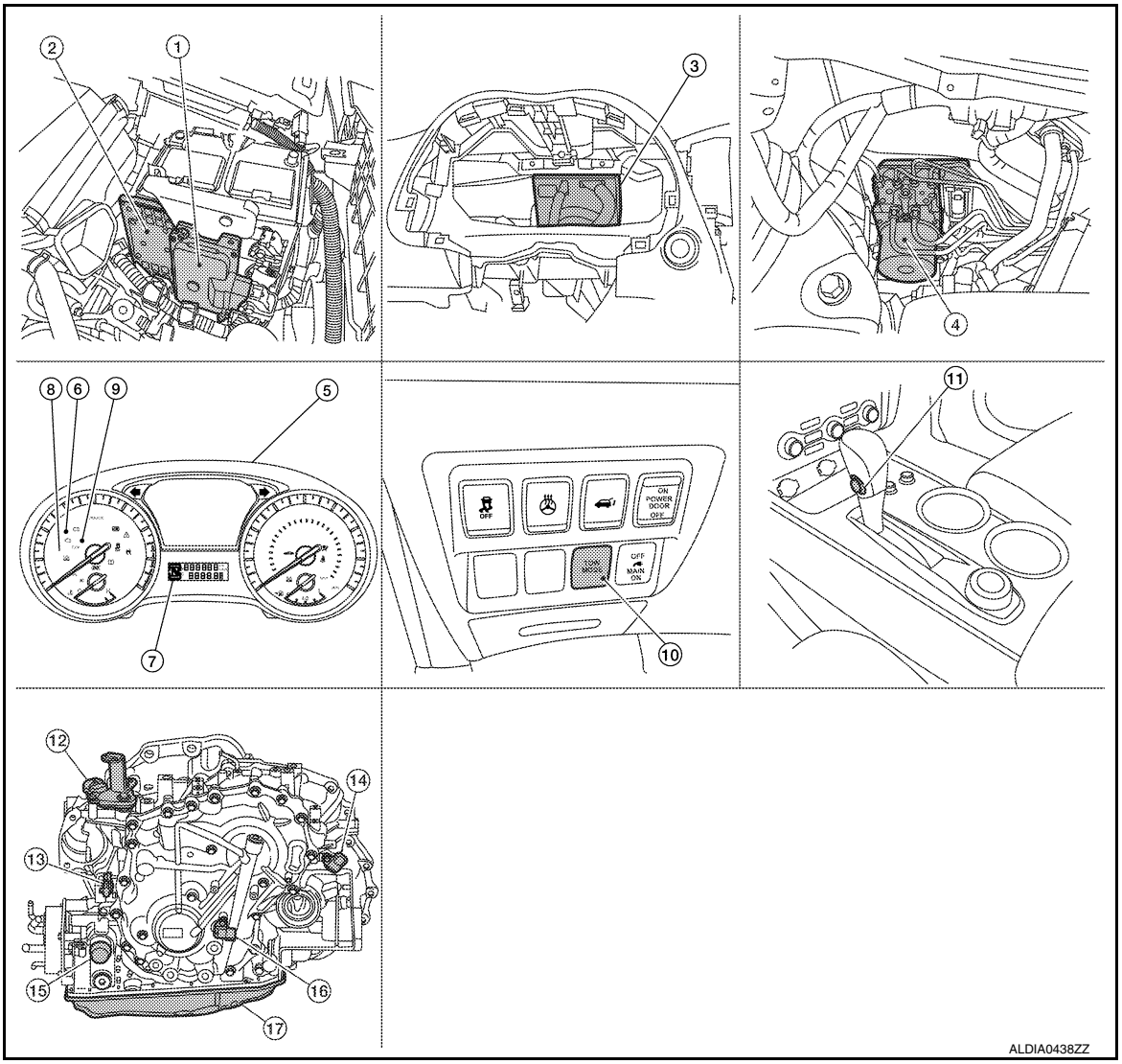

COMPONENT DESCRIPTION

NO.	Component	Function
①	TCM	TM-13, "CVT CONTROL SYSTEM : TCM"
②	ECM	Mainly transmits the following signal to TCM via CAN communication. • Engine and CVT integrated control signal **NOTE:** General term for the communication (torque-down permission, torque-down request, etc.) exchanged between the ECM and TCM. • Engine speed signal • Engine coolant temperature signal • Accelerator pedal position signal • Closed throttle position signal Mainly receives the following signals from TCM via CAN communication. • Malfunction indicator lamp (MIL) signal Refer to EC-14, "ENGINE CONTROL SYSTEM : Component Parts Location" for detailed installation location.
③	BCM	Mainly transmits the following signal to TCM via CAN communication. • Stop lamp switch signal Refer to BCS-4, "BODY CONTROL SYSTEM : Component Parts Location" for detailed installation location.
④	ABS actuator and electric unit (control unit)	Mainly transmits the following signal to TCM via CAN communication. • Vehicle speed signal (ABS) • ABS operation signal • TCS operation signal • VDC operation signal • ABS malfunction signal Refer to BRC-7, "Component Parts Location" for detailed installation location.
⑤	Combination meter	Mainly transmits the following signal to TCM via CAN communication. • Overdrive control switch signal • Tow mode switch signal Mainly receives the following signals from TCM via CAN communication. • Shift position indicator signal • OD OFF indicator lamp signal • Tow mode indicator lamp signal Refer to MWI-6, "METER SYSTEM : Component Parts Location" for detailed installation location.
⑥	Malfunction indicator lamp (MIL)	TM-19, "CVT CONTROL SYSTEM : Malfunction Indicator Lamp (MIL)"
⑦	Shift position indicator	TM-19, "CVT CONTROL SYSTEM : Shift Position Indicator"
⑧	OD OFF indicator lamp	TM-18, "CVT CONTROL SYSTEM : OD OFF Indicator Lamp"
⑨	Tow mode indicator lamp	TM-19, "CVT CONTROL SYSTEM : TOW Mode Indicator Lamp"
⑩	Tow mode switch	TM-18, "CVT CONTROL SYSTEM : Tow Mode Switch"
⑪	Overdrive control switch	TM-18, "CVT CONTROL SYSTEM : Overdrive Control Switch"
⑫	Transmission range switch	TM-13, "CVT CONTROL SYSTEM : Transmission Range Switch"
⑬	Input speed sensor	TM-13, "CVT CONTROL SYSTEM : Input Speed Sensor"
⑭	Output speed sensor	TM-15, "CVT CONTROL SYSTEM : Output Speed Sensor"
⑮	CVT unit connector	—
⑯	Primary speed sensor	TM-14, "CVT CONTROL SYSTEM : Primary Speed Sensor"

NO.	Component		Function
⑰	Control valve	CVT fluid temperature sensor*	TM-15, "CVT CONTROL SYSTEM : CVT Fluid Temperature Sensor"
		Primary pressure sensor*	TM-16, "CVT CONTROL SYSTEM : Primary Pressure Sensor"
		Secondary pressure sensor*	TM-16, "CVT CONTROL SYSTEM : Secondary Pressure Sensor"
		Line pressure solenoid valve*	TM-16, "CVT CONTROL SYSTEM : Line Pressure Solenoid Valve"
		Primary pressure solenoid valve*	TM-17, "CVT CONTROL SYSTEM : Primary Pressure Solenoid Valve"
		Secondary pressure solenoid valve*	TM-17, "CVT CONTROL SYSTEM : Secondary Pressure Solenoid Valve"
		Torque converter clutch solenoid valve*	TM-17, "CVT CONTROL SYSTEM : Torque Converter Clutch Solenoid Valve"
		Select solenoid valve*	TM-18, "CVT CONTROL SYSTEM : Select Solenoid Valve"

*: These components are included in control valve assembly.

CVT CONTROL SYSTEM : TCM

INFOID:0000000009177477

- The TCM consists of a microcomputer and connectors for signal input and output and for power supply.
- The vehicle driving status is judged based on the signals from the sensors, switches, and other control units, and the optimal transaxle control is performed.
- For TCM control items, refer to TM-30, "CVT CONTROL SYSTEM : System Description".

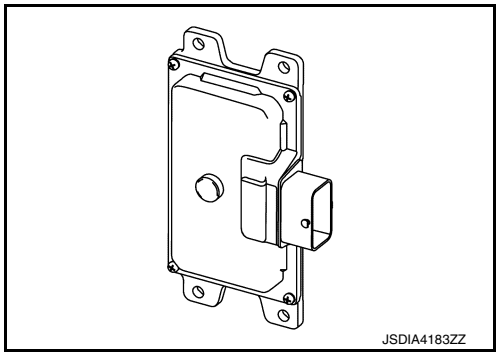

CVT CONTROL SYSTEM : Transmission Range Switch

INFOID:0000000009177479

- The transmission range switch is installed to upper part of transaxle case.
- The transmission range switch detects the selector lever position.

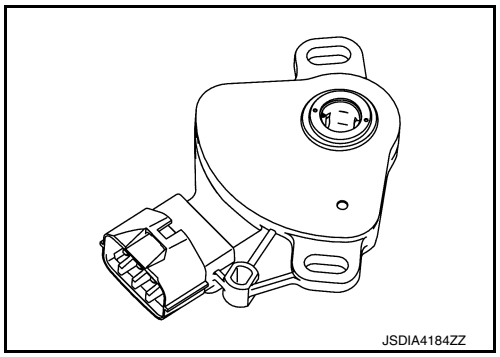

CVT CONTROL SYSTEM : Input Speed Sensor

INFOID:0000000009177480

- The input speed sensor is installed to the front side of transaxle case.
- The input speed sensor detects input shaft speed.

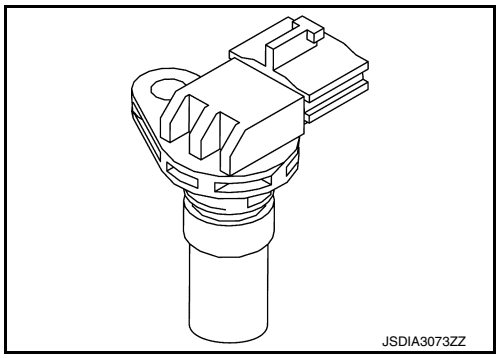

- The input speed sensor generates an ON-OFF pulse signal according to the rotating body speed. TCM judges the rotating body speed from the pulse signal.

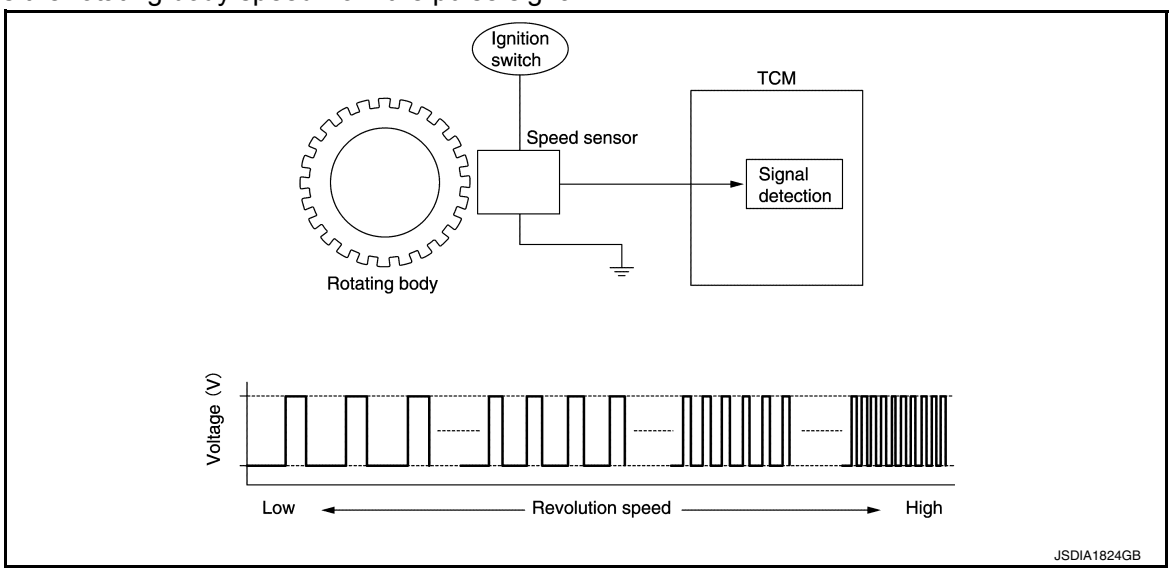

CVT CONTROL SYSTEM : Primary Speed Sensor

INFOID:0000000009177481

- The primary speed sensor is installed to transaxle side cover.
- The primary speed sensor detects primary pulley speed.

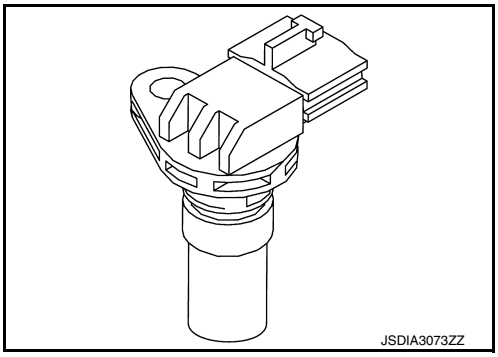

- The primary speed sensor generates an ON-OFF pulse signal according to the rotating body speed. TCM judges the rotating body speed from the pulse signal.

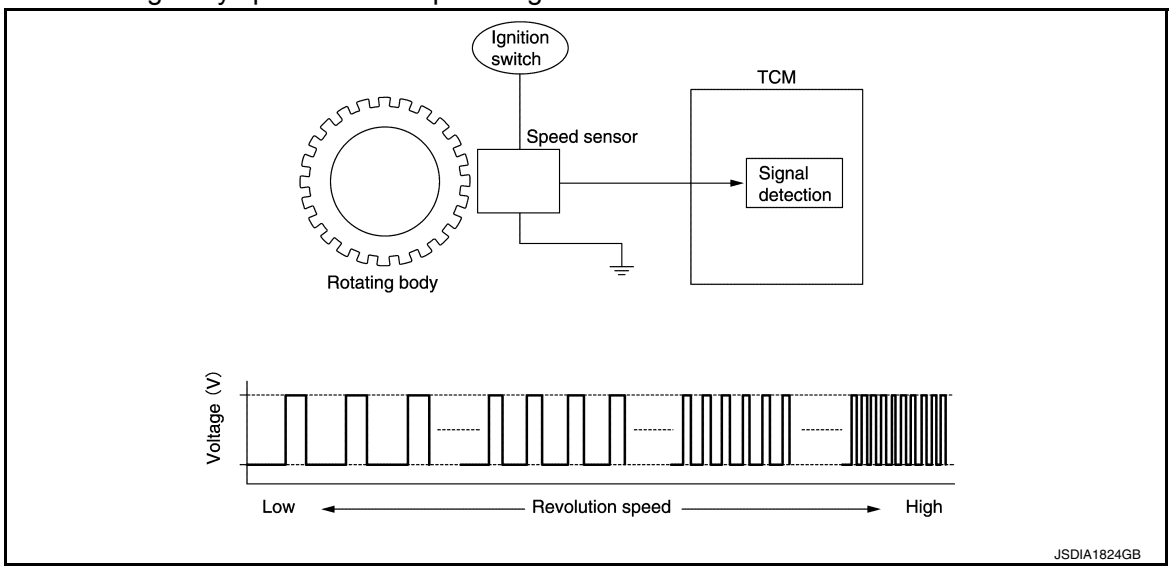

CVT CONTROL SYSTEM : Output Speed Sensor

INFOID:0000000009177482

- The output speed sensor is installed to the back side of transaxle case.
- The output speed sensor detects final gear speed.
-

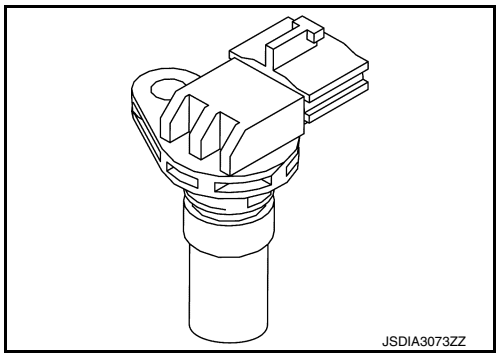

- The output speed sensor generates an ON-OFF pulse signal according to the rotating body speed. TCM judges the rotating body speed from the pulse signal.

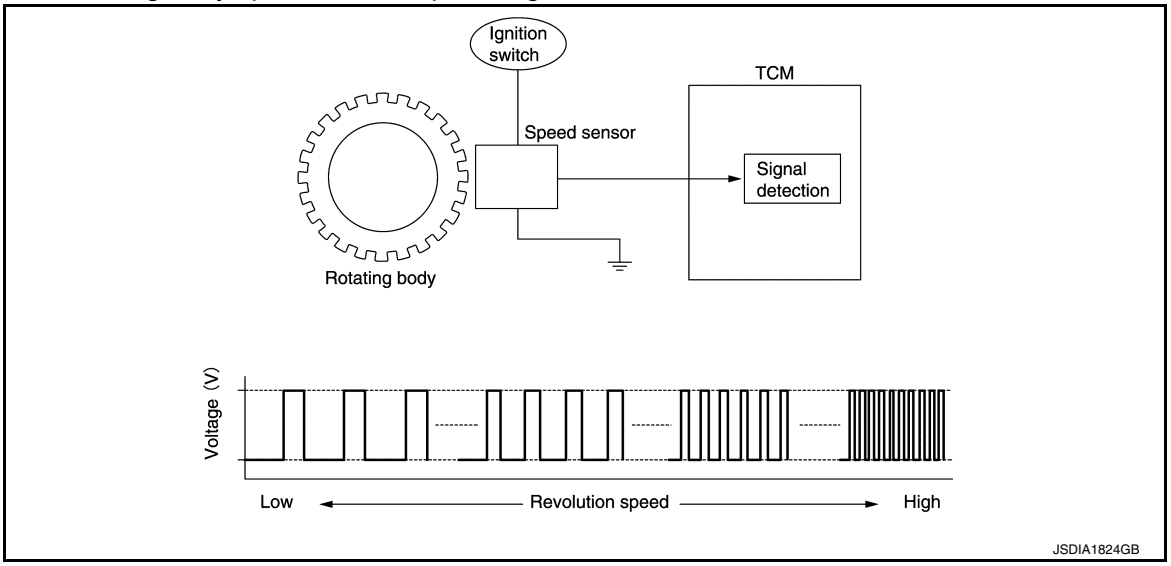

CVT CONTROL SYSTEM : CVT Fluid Temperature Sensor

INFOID:0000000009177483

- The CVT fluid temperature sensor is installed to control valve.
- The CVT fluid temperature sensor detects CVT fluid temperature in oil pan.
- The fluid temperature sensor uses a thermistor, and changes the signal voltage by converting changes in the CVT fluid temperature to a resistance value. TCM evaluates the CVT fluid temperature from the signal voltage value.

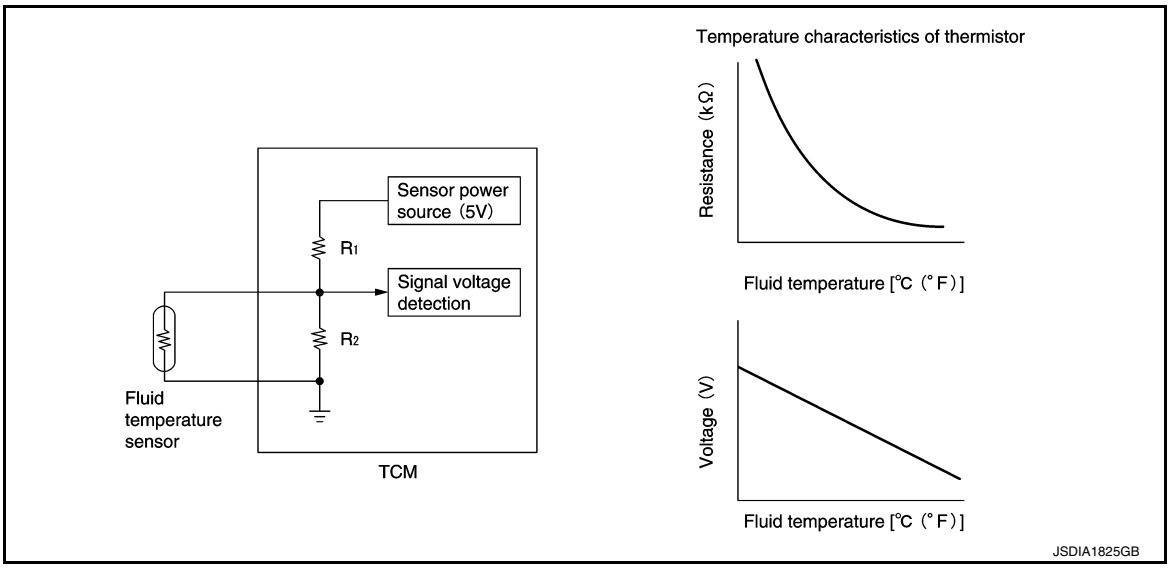

CVT CONTROL SYSTEM : Primary Pressure Sensor

INFOID:0000000009177484

- The primary pressure sensor is installed to control valve.
- The primary pressure sensor detects the pressure applied to the primary pulley.
- When pressure is applied to the ceramic device in the primary pressure sensor, the ceramic device is deformed, resulting in voltage change. TCM evaluates the primary pressure from its voltage change. Voltage is increased along with pressure increase.

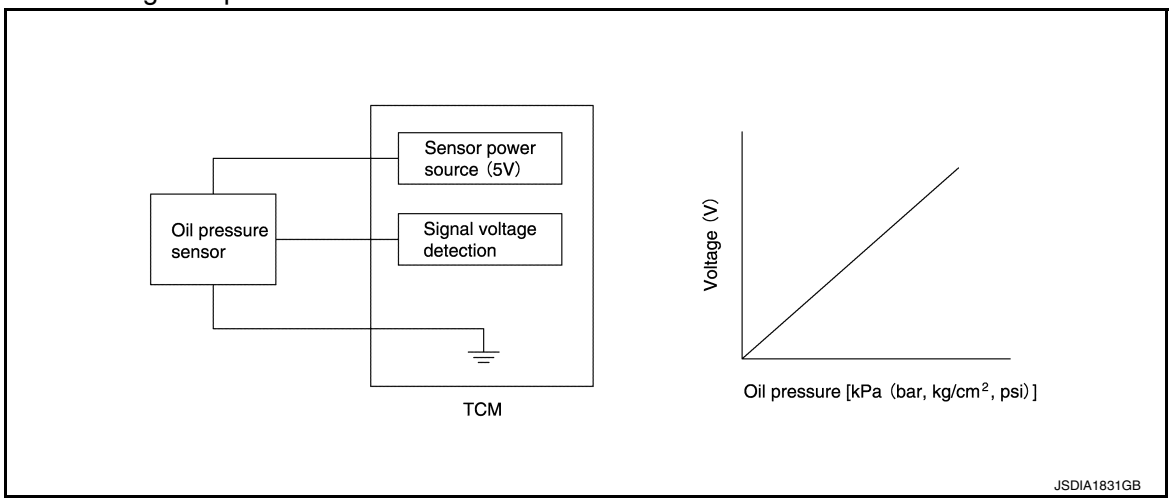

CVT CONTROL SYSTEM : Secondary Pressure Sensor

INFOID:0000000009177485

- The secondary pressure sensor is installed to control valve.
- The secondary pressure sensor detects the pressure applied to the secondary pulley.
- When pressure is applied to the metal diaphragm in the secondary pressure sensor, the metal diaphragm is deformed, resulting in voltage change. TCM evaluates the secondary pressure from its voltage change. Voltage is increased along with pressure increase.

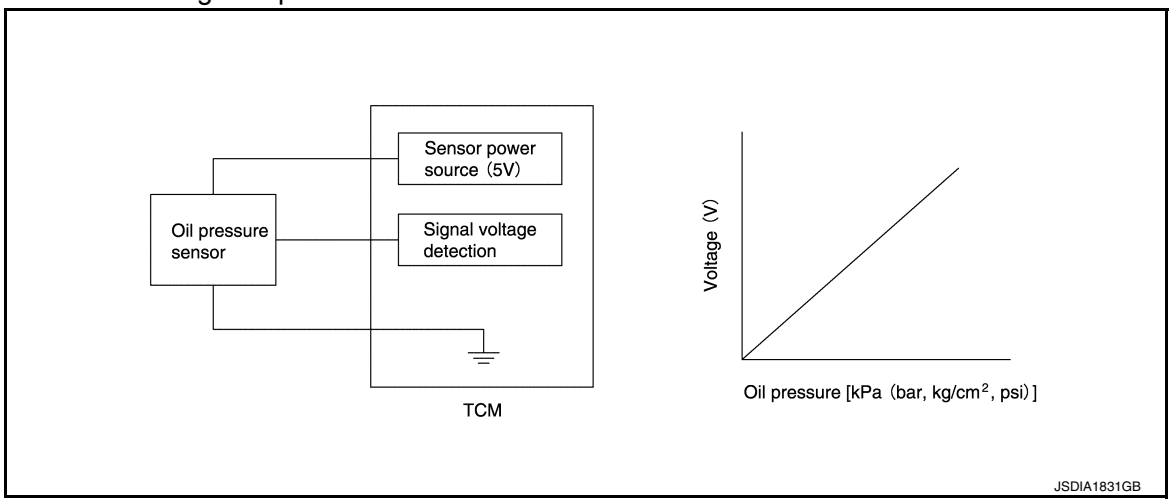

CVT CONTROL SYSTEM : Line Pressure Solenoid Valve

INFOID:0000000009177486

- The line pressure solenoid valve is installed to control valve.
- The line pressure solenoid valve controls the pressure regulator valve. For information about the pressure regulator valve, refer to TM-25, "TRANSAXLE : Component Description".

- The line pressure solenoid valve uses the linear solenoid valve [N/H (normal high) type].
  NOTE:
  - The principle of the linear solenoid valve utilizes the fact that the force pressing on the valve spool installed inside the coil increases nearly in proportion to the current. This allows it to produce a fluid pressure that is proportional to this pressing force.
  - The N/H (normal high) produces hydraulic control when the coil is not energized.

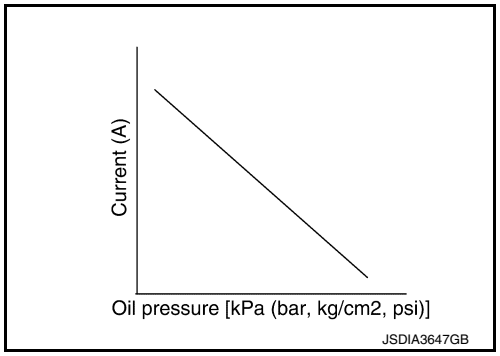

CVT CONTROL SYSTEM : Primary Pressure Solenoid Valve

INFOID:0000000009177487

- The primary pressure solenoid valve is installed to control valve.
- The primary pressure solenoid valve controls the primary reducing valve. For information about the primary reducing valve, refer to TM-25, "TRANSAXLE : Component Description".
- The primary pressure solenoid valve uses the linear solenoid valve [N/H (normal high) type].
  NOTE:
  - The principle of the linear solenoid valve utilizes the fact that the force pressing on the valve spool installed inside the coil increases nearly in proportion to the current. This allows it to produce a fluid pressure that is proportional to this pressing force.
  - The N/H (normal high) produces hydraulic control when the coil is not energized.

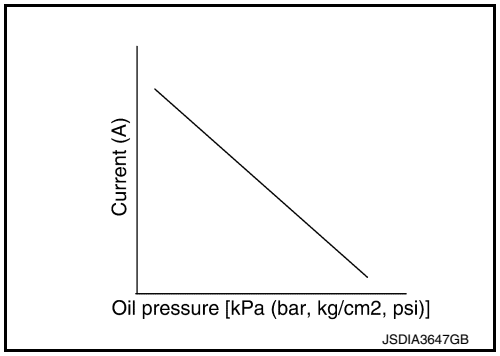

CVT CONTROL SYSTEM : Secondary Pressure Solenoid Valve

INFOID:0000000009177488

- The secondary pressure solenoid valve is installed to control valve.
- The secondary pressure solenoid valve controls the secondary reducing valve. For information about the secondary reducing valve, refer to TM-25, "TRANSAXLE : Component Description".
- The secondary pressure solenoid valve uses the linear solenoid valve [N/H (normal high) type].
  NOTE:
  - The principle of the linear solenoid valve utilizes the fact that the force pressing on the valve spool installed inside the coil increases nearly in proportion to the current. This allows it to produce a fluid pressure that is proportional to this pressing force.
  - The N/H (normal high) produces hydraulic control when the coil is not energized.

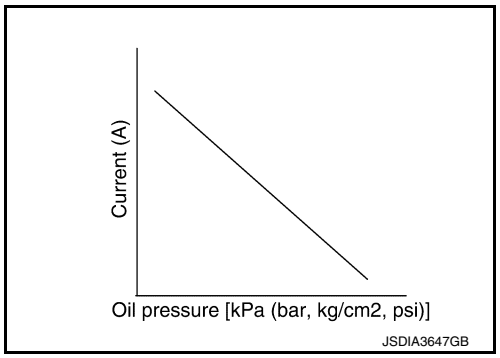

CVT CONTROL SYSTEM : Torque Converter Clutch Solenoid Valve

INFOID:0000000009177489

- The torque converter clutch solenoid valve is installed to control valve.
- The torque converter clutch solenoid valve controls the torque converter clutch control valve. For information about the torque converter clutch control valve, refer to TM-25, "TRANSAXLE : Component Description".

- The torque converter clutch solenoid valve utilizes a linear solenoid valve [N/L (normal low) type].
  NOTE:
  - The principle of the linear solenoid valve utilizes the fact that the force pressing on the valve spool installed inside the coil increases nearly in proportion to the current. This allows it to produce a fluid pressure that is proportional to this pressing force.
  - The N/L (normal low) type does not produce hydraulic control when the coil is not energized.

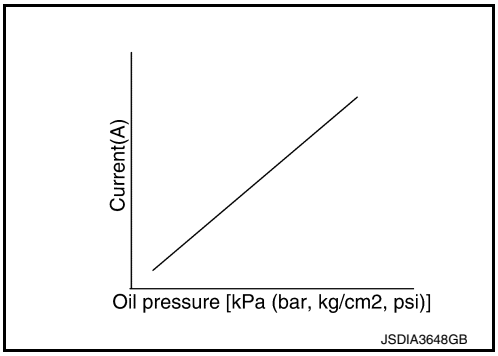

CVT CONTROL SYSTEM : Select Solenoid Valve

INFOID:0000000009177490

- The select solenoid valve is installed to control valve.
- The select solenoid valve adjusts the forward clutch engaging pressure and the reverse brake engaging pressure.
- The select solenoid valve uses the linear solenoid valve [N/H (normal high) type].
  NOTE:
  - The principle of the linear solenoid valve utilizes the fact that the force pressing on the valve spool installed inside the coil increases nearly in proportion to the current. This allows it to produce a fluid pressure that is proportional to this pressing force.
  - The N/H (normal high) produces hydraulic control when the coil is not energized.

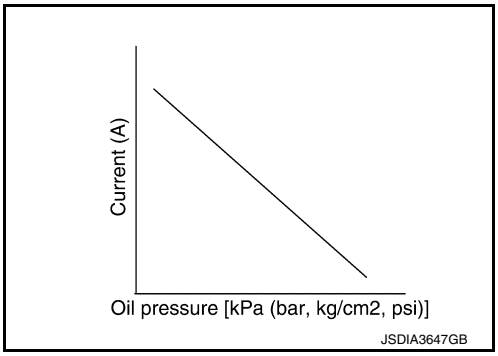

CVT CONTROL SYSTEM : Overdrive Control Switch

INFOID:0000000009177491

- The overdrive control switch is installed to the selector lever handle.
- When the OD OFF indicator lamp on the combination meter is OFF and the overdrive control switch is pressed, the overdrive is cancelled and the OD OFF indicator lamp is ON.
- When the OD OFF indicator lamp on the combination meter is ON and the overdrive control switch is pressed, the overdrive is active and the OD OFF indicator lamp is OFF.

CVT CONTROL SYSTEM : Tow Mode Switch

INFOID:0000000009177492

- The Tow mode switch is installed to instrument lower panel (LH).
- When the Tow mode indicator lamp on the combination meter is OFF and the Tow mode switch is pressed, the Tow mode is active and the Tow mode indicator lamp is ON.
- When the Tow mode indicator lamp on the combination meter is ON and the Tow mode switch is pressed, the Tow mode is cancelled and the Tow mode indicator lamp is OFF.

CVT CONTROL SYSTEM : OD OFF Indicator Lamp

INFOID:0000000009177493

- OD OFF indicator lamp is positioned on the combination meter.
- OD OFF indicator lamp is ON when set to the overdrive OFF.
- OD OFF indicator lamp turns on for a certain period of time when the ignition switch turns ON, and then turns OFF.

Condition (status)	OD OFF indicator lamp
Ignition switch OFF.	OFF
Ignition switch ON.	ON (Approx. 2 sec.)
Overdrive control switch is pressed when the selector lever is in the “D” position and the OD OFF indicator lamp is OFF	ON

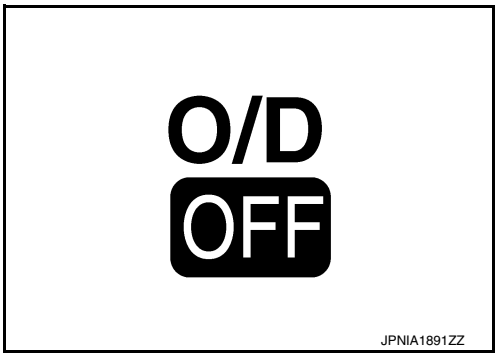

Condition (status)	OD OFF indicator lamp
Overdrive control switch is pressed when the selector lever is in the “D” position and the OD OFF indicator lamp is ON.	OFF
Selector lever is shifted to other position when the selector lever is at “D” position and the OD OFF indicator lamp is ON.	OFF

CVT CONTROL SYSTEM : TOW Mode Indicator Lamp

INFOID:0000000009177494

- TOW mode indicator lamp is positioned on the combination meter.
- TOW mode indicator lamp is ON when set to the tow mode.

Condition (status)	Tow mode indicator lamp
Ignition switch OFF.	OFF
Ignition switch ON.	OFF
Tow mode switch is pressed when the TOW mode indicator lamp is OFF	ON
Tow mode switch is pressed when the TOW mode indicator lamp is ON.	OFF

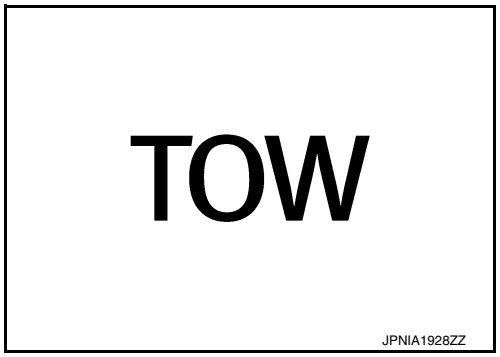

CVT CONTROL SYSTEM : Shift Position Indicator

INFOID:0000000009177495

TCM transmits shift position signal to combination meter via CAN communication. The actual shift position is displayed on combination meter according to the signal.

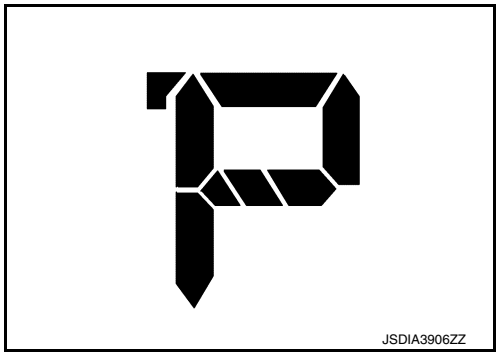

CVT CONTROL SYSTEM : Malfunction Indicator Lamp (MIL)

INFOID:0000000009177496

The malfunction indicator lamp (MIL) is located on the combination meter.
The MIL will illuminate when the ignition switch is turned ON without the engine running. This is a bulb check.
When the engine is started, the MIL should turn off. If the MIL remains illuminated, the on board diagnostic system has detected an engine system malfunction.
For details, refer to EC-26, "Malfunction Indicator Lamp (MIL)".

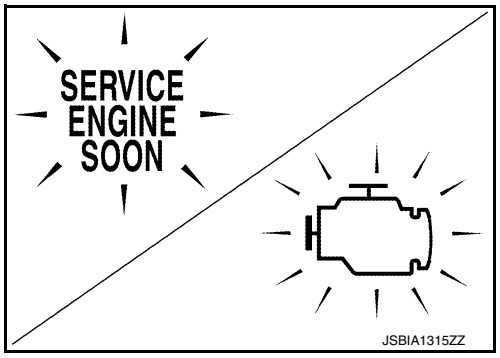

SHIFT LOCK SYSTEM

SHIFT LOCK SYSTEM : Component Parts Location

INFOID:0000000009177499

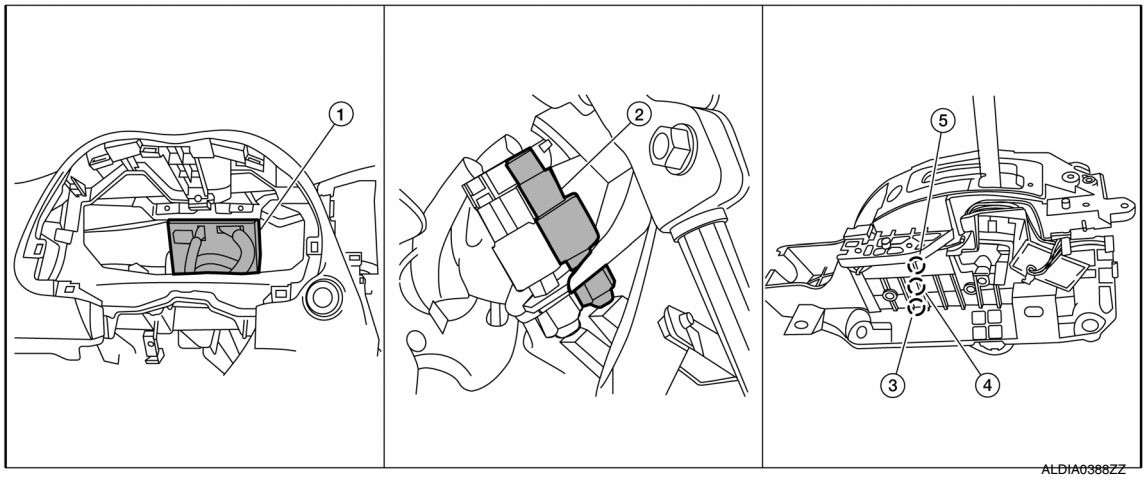

1. BCM (view with combination meter removed)
2. Stop lamp switch
3. Shift lock release button (view with center console removed)
4. Shift lock solenoid (view with center console removed)
5. Park position switch (view with center console removed)

COMPONENT DESCRIPTION

Component	Function
Stop lamp switch	• The stop lamp switch turns ON when the brake pedal is depressed. • When the stop lamp switch turns ON, the shift lock solenoid is energized.
Shift lock release button	Forcibly releases the shift lock when pressed.
Shift lock solenoid	It operates according to the signal from the stop lamp switch and moves the lock lever.
Park position switch	It detects that the selector lever is in “P” position.

STRUCTURE AND OPERATION

TRANSAXLE

TRANSAXLE : Cross-Sectional View

INFOID:0000000009177500

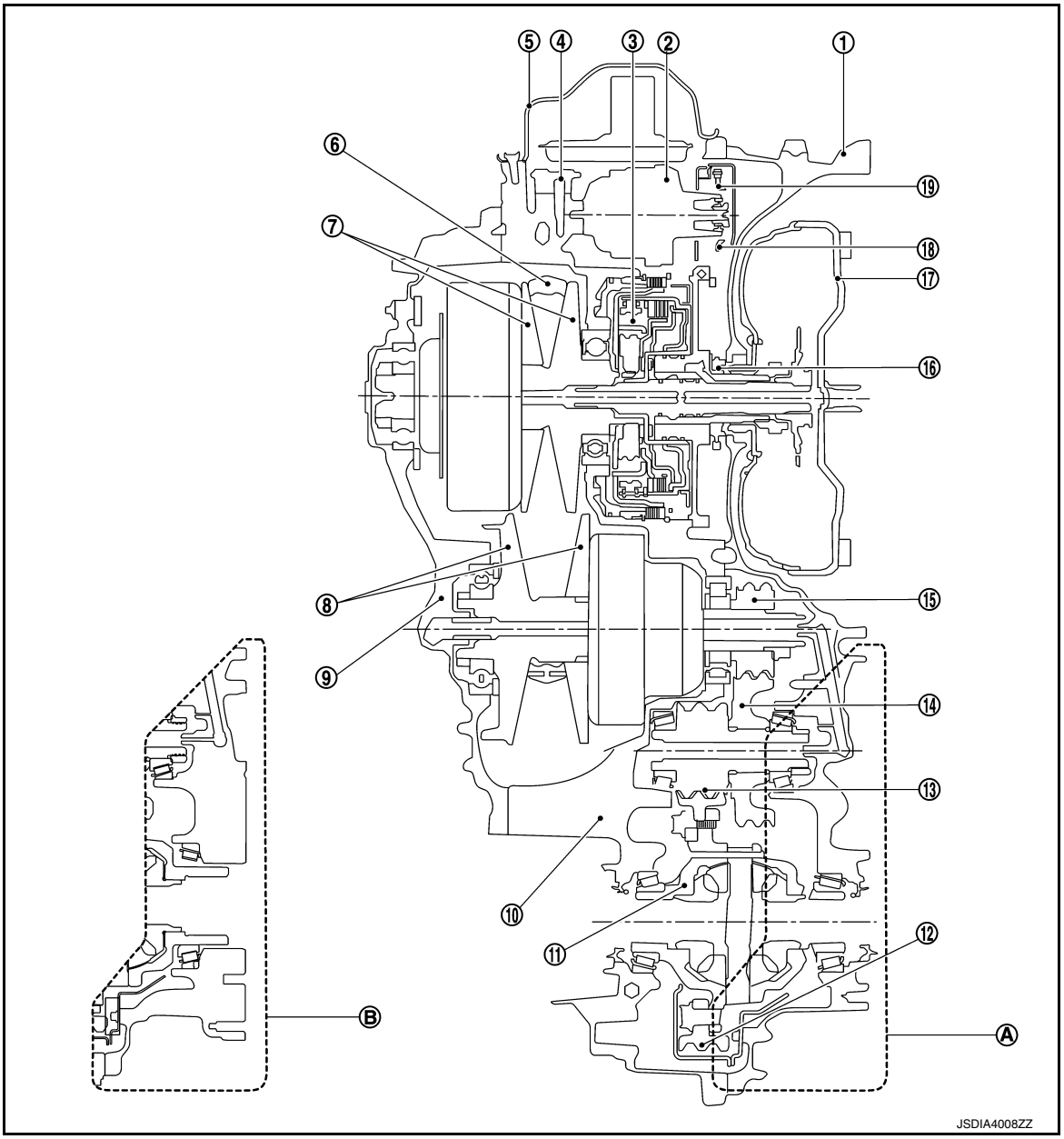

① Converter housing	② Oil pump	③ Planetary gear
④ Control valve	⑤ Oil pan	⑥ Chain belt
⑦ Planetary pulley	⑧ Secondary pulley	⑨ Side cover
⑩ Transaxle case	⑪ Differential case	⑫ Final gear
⑬ Reduction gear	⑭ Idler gear	⑮ Output gear
⑯ Drive sprocket	⑰ Torque converter	⑱ Driven sprocket
⑲ Oil pump chain		
Ⓐ 2WD models	Ⓑ 4WD models	

TRANSAXLE : Transaxle Mechanism

INFOID:0000000009177501

TORQUE CONVERTER (WITH LOCK-UP FUNCTION)

In the same way as a conventional A/T, the torque converter is a system that increases the engine torque and transmits the torque to the transaxle. A symmetrical 3-element, 1-stage, 2-phase type is used here.

OIL PUMP

Utilizes a vane-type oil pump that is driven by the engine through the oil pump drive chain in order to increase efficiency of pump discharge volume in low-speed zone and optimize pump discharge volume in high-speed zone. Discharged oil from oil pump is transmitted to control valve. It is used as the oil of primary and secondary pulley operation, the oil of clutch operation, and the lubricant for each part.

PLANETARY GEAR

- A planetary gear type of forward/reverse selector mechanism is installed between the torque converter and primary pulley.
- The power from the torque converter is input via the input shaft, operating a wet multi-plate clutch by means of hydraulic pressure to switch between forward and reverse driving.

Operation of Planetary gear

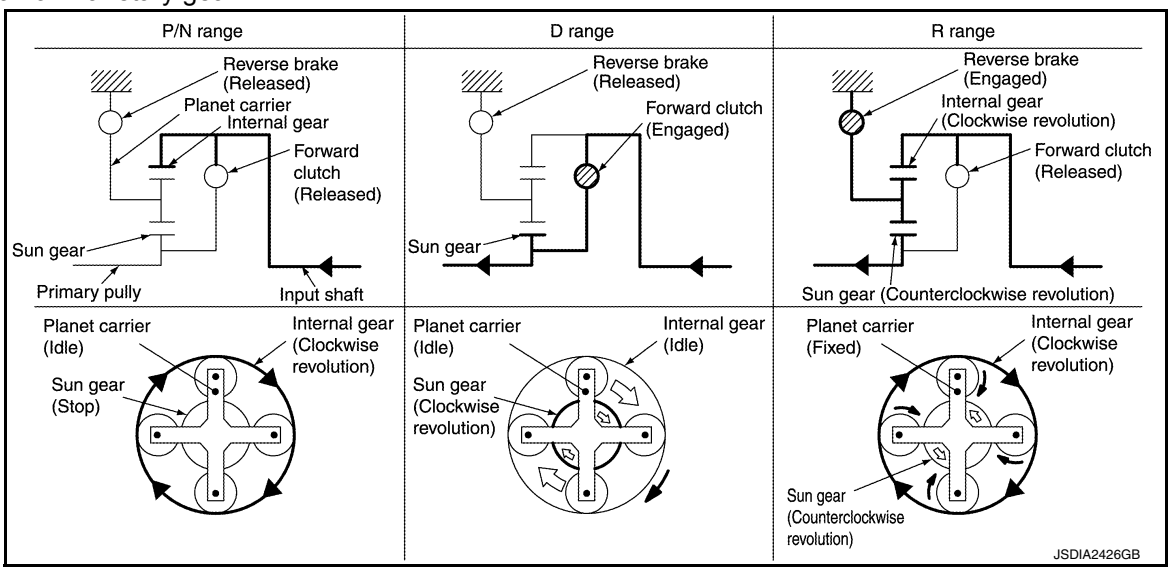

BELT & PULLEY

It is composed of a pair of pulleys (the groove width is changed freely in the axial direction) and the chain belt .The groove width changes according to wrapping radius of chain belt and pulley from low status to overdrive status continuously with non-step. It is controlled with the oil pressures of primary pulley and secondary pulley.

Chain belt

The chain belt consists of approximately 150 locker pins ① and 1,000 link plates ②. Chains are rotated by locker pins sandwiched by pulleys. This produces tension difference in chains among pulleys. Accordingly, the power is transferred by the tension.

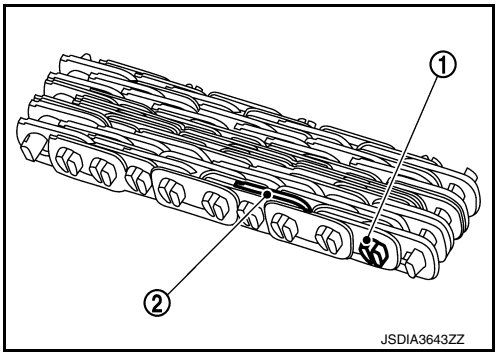

Pulley

The primary pulley (input shaft side) and the secondary pulley (output shaft side) have the shaft with slope (fixed cone surface), movable sheave (movable cone surface that can move in the axial direction) and oil pressure chamber at the back of the movable sheave.

The movable sheave slides on the shaft to change the groove width of the pulley. Input signals of engine load (accelerator pedal opening), primary pulley speed and secondary pulley speed change the operation pressures of the primary pulley and the secondary pulley, and controls the pulley groove width.

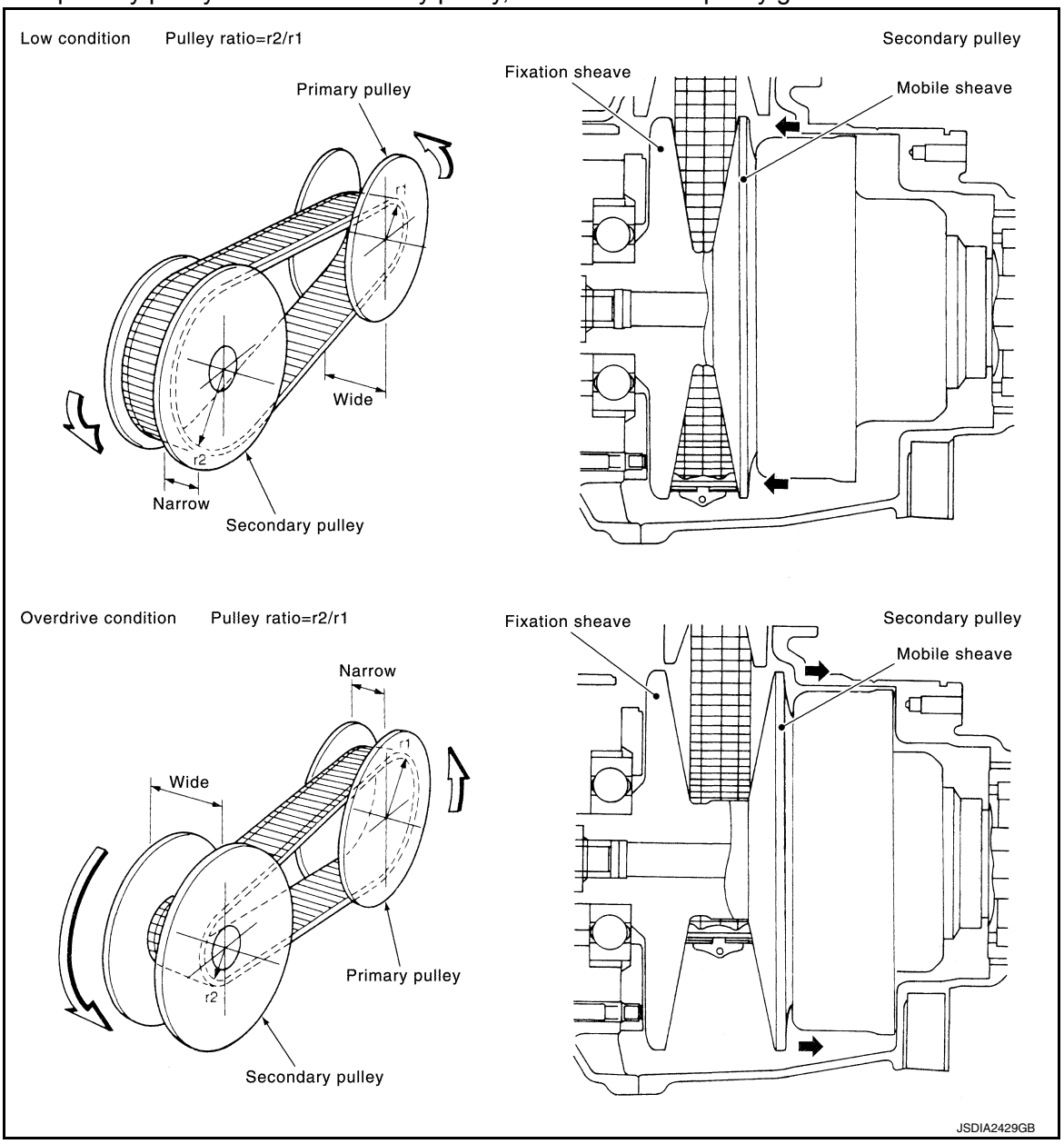

FINAL DRIVE AND DIFFERENTIAL

The deceleration gears are composed of 2 stages: primary deceleration (output gear, idler gear pair) and secondary deceleration (reduction gear, final gear pair). All of these gears are helical gears.

The lubrication oil is the same as the CVT fluid which lubricates the entire transaxle.

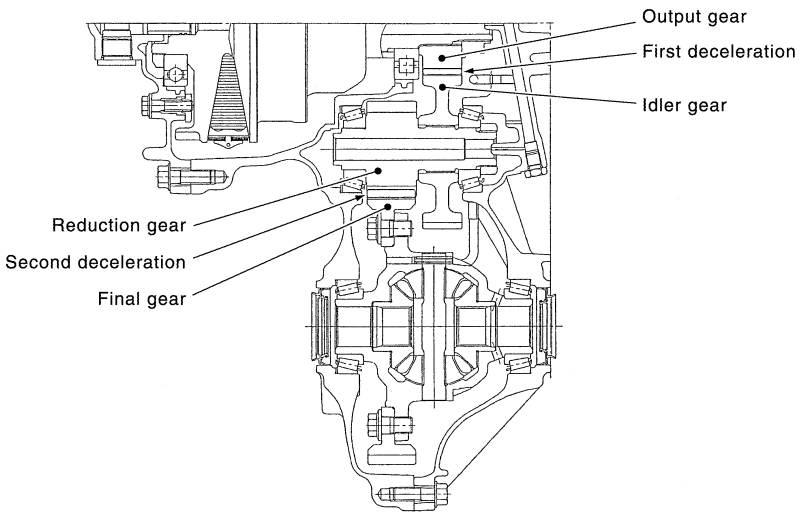

TRANSAXLE : Operation Status

INFOID:0000000009177502

×: Engaged or applied.

Selector lever position	Parking mechanism	Forward clutch	Reverse brake	Primary pulley	Secondary pulley	Chain belt	Final drive
P	×						
R			×	×	×	×	×
N							
D, L		×		×	×	×	×

TRANSAXLE : Oil Pressure System

INFOID:0000000009177503

Oil pressure required for operation of the transaxle transmission mechanism is generated by oil pump, oil pressure control valve, solenoid valve, etc.

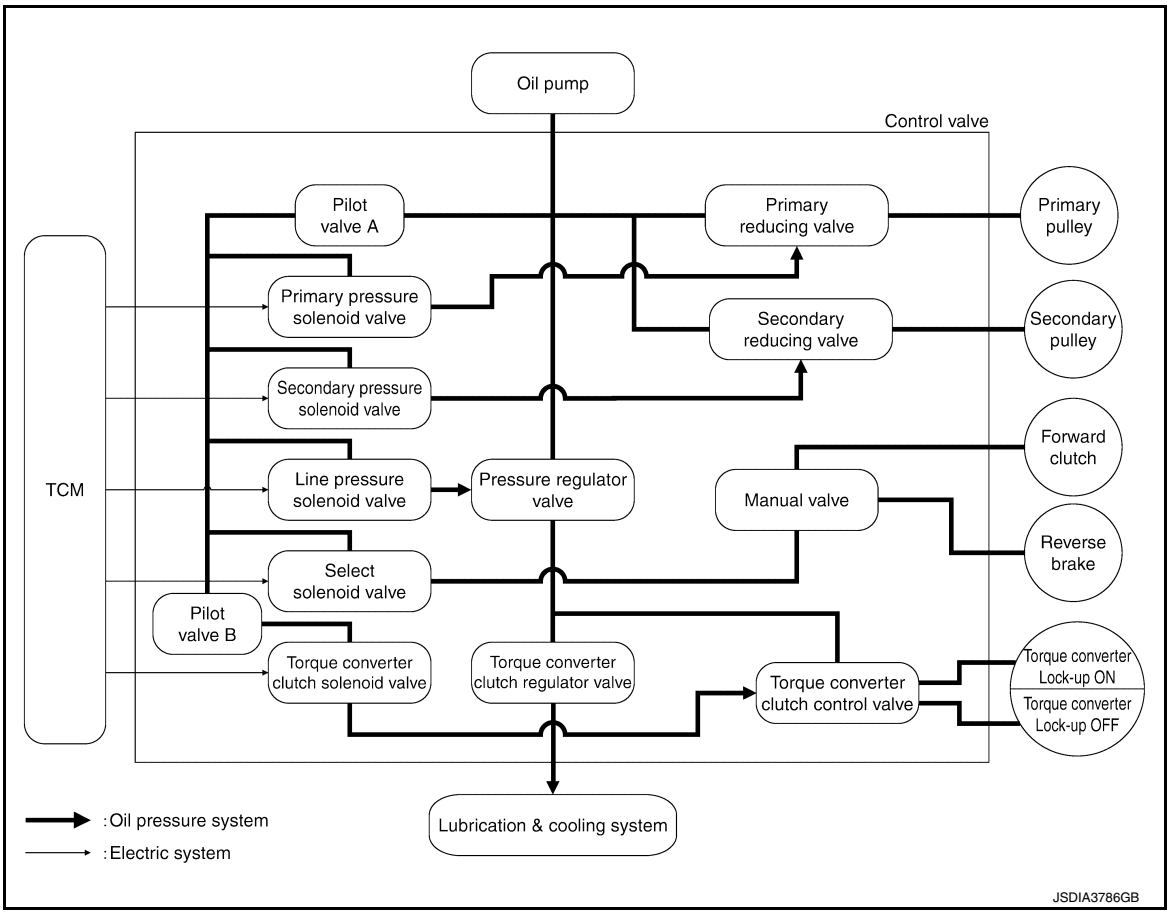

TRANSAXLE : Component Description

INFOID:0000000009177504

Part name	Function
Torque converter	Increases engine torque and transmits it to the transaxle.
Oil pump	Utilizes a vane-type oil pump that is driven by the engine through the oil pump drive chain in order to increase efficiency of pump discharge volume in low-speed zone and optimize pump discharge volume in high-speed zone. Discharged oil from oil pump is transmitted to control valve. It is used as the oil of primary and secondary pulley operation, the oil of clutch operation, and the lubricant for each part.
Forward clutch	The forward clutch is wet and multiple plate type clutch that consists of clutch drum, piston, drive plate, and driven plate. It is a clutch to move the vehicle forward by activating piston hydraulically, engaging plates, and directly connecting sun gear and input shaft.
Reverse brake	The reverse brake is a wet multiple-plate type brake that consists of transaxle case, piston, drive plate, and driven plate. It is a brake to move the vehicle in reverse by activating piston hydraulically, engaging plates, and fixing planetary gear.
Internal gear	The internal gear is directly connected to forward clutch drum. It is a gear that moves the outer edge of pinion planet of planet carrier. It transmits power to move the vehicle in reverse when the planet carrier is fixed.
Planet carrier	Composed of a carrier, pinion planet, and pinion shaft. This gear fixes and releases the planet carrier in order to switch between forward and reverse driving.
Sun gear	Sun gear is a set part with planet carrier and internal gear. It transmits transmitted force to primary fixed sheave. It rotates in forward or reverse direction according to activation of either forward clutch or reverse brake.

Part name	Function
Input shaft	The input shaft is directly connected to forward clutch drum and transmits traction force from torque converter. In shaft center, there are holes for hydraulic distribution to primary pulley and hydraulic distribution for lockup ON/OFF.
Primary pulley	It is composed of a pair of pulleys (the groove width is changed freely in the axial direction) and the chain belt. The groove width changes according to wrapping radius of steel belt and pulley from low status to overdrive status continuously with non-step. It is controlled with the oil pressures of primary pulley and secondary pulley.
Secondary pulley	
Chain belt	
Manual shaft	When the manual shaft is in the P position, the parking rod that is linked to the manual shaft rotates the parking pole. When the parking pole rotates, it engages with the parking gear, fixing the parking gear. As a result, the secondary pulley that is integrated with the parking gear is fixed.
Parking rod	
Parking pawl	
Parking gear	
Output gear	The deceleration gears are composed of 2 stages: primary deceleration (output gear, idler gear pair) and secondary deceleration (reduction gear, final gear pair). All of these gears are helical gears.
Idler gear	
Reduction gear	
Differential	
Torque converter regulator valve	Adjusts the feed pressure to the torque converter to the optimum pressure corresponding to the driving condition.
Pressure regulator valve	Adjusts the discharge pressure from the oil pump to the optimum pressure (line pressure) corresponding to the driving condition.
Torque converter clutch control valve	Adjusts the torque converter engage and disengage pressures.
Manual valve	Distributes the clutch operation pressure to each circuit according to the selector lever position.
Secondary reducing valve	Reduces line pressure and adjusts secondary pressure.
Primary reducing valve	Reduces line pressure and adjusts primary pressure.
Pilot valve A	Reduces line pressure and adjusts pilot pressure to the solenoid valves listed below. • Primary pressure solenoid valve • Secondary pressure solenoid valve • Select solenoid valve • Line pressure solenoid valve
Pilot valve B	Reduces pilot pressure and adjusts pilot pressure to the torque converter clutch solenoid valve.

FLUID COOLER & FLUID WARMER SYSTEM

FLUID COOLER & FLUID WARMER SYSTEM : System Description

INFOID:0000000009177505

CVT FLUID COOLER SCHEMATIC

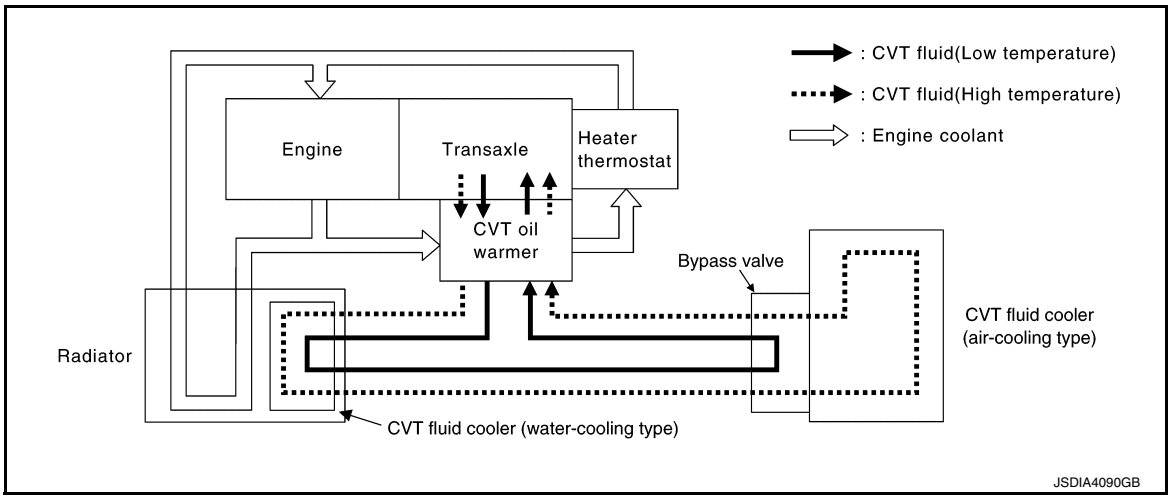

COMPONENT DESCRIPTION

CVT Oil Warmer

- The CVT oil warmer ① is installed on the front part of transaxle assembly.
- When engine is started while engine and CVT are cold, engine coolant temperature rises more quickly than CVT fluid temperature. CVT oil warmer is provided with two circuits for CVT and engine coolant respectively so that warmed engine coolant warms CVT quickly. This helps shorten CVT warming up time, improving fuel economy.
- A cooling effect is obtained when CVT fluid temperature is high.

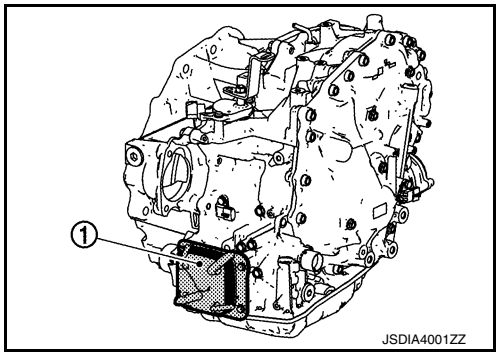

CVT Fluid Cooler

- The CVT fluid cooler is installed to the vehicle front LH.
- The CVT fluid cooler prevents CVT fluid temperature from an abnormal increase while driving the vehicle. When flowing into the CVT fluid cooler, CVT fluid is cooled by driving blast while driving the vehicle.

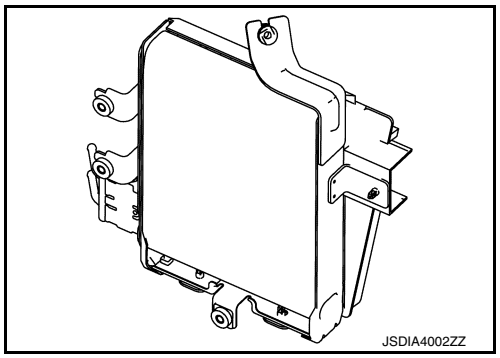

Bypass Valve

- The bypass valve ① is installed to the CVT fluid cooler.
- Bypass valve controls CVT fluid flow.

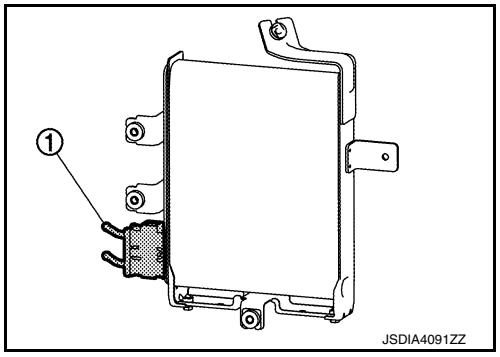

- When CVT fluid temperature is low, the bypass valve is open. Most of CVT fluid therefore returns to the transaxle without flowing into the cooler core that has larger flow resistance.

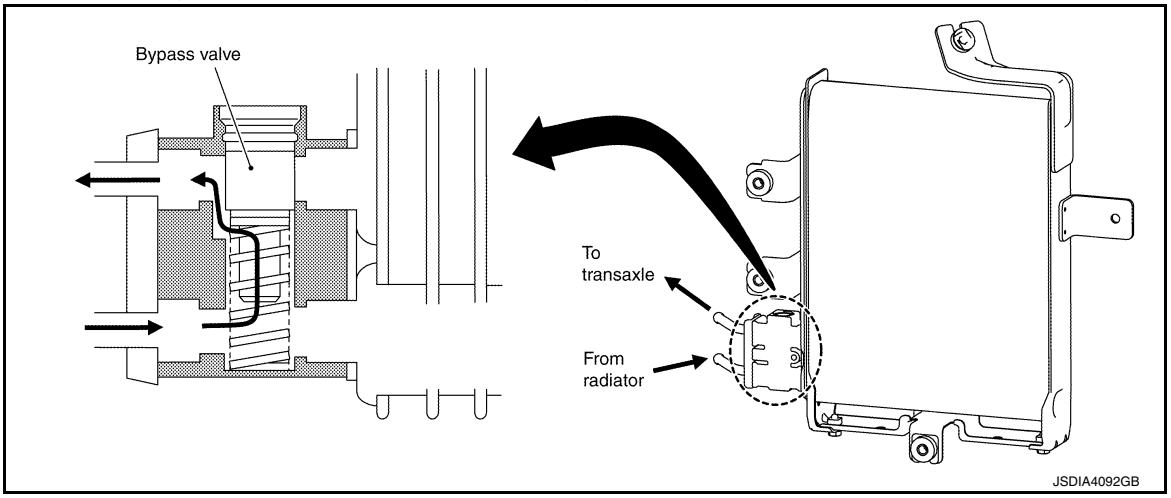

- When CVT fluid temperature rises [to approximately 65°C (149°F)], bypass valve fully closes and allows CVT fluid to flow into cooler core. CVT fluid flowing into cooler core is cooled by air stream caused by vehicle travel and returned to transaxle.

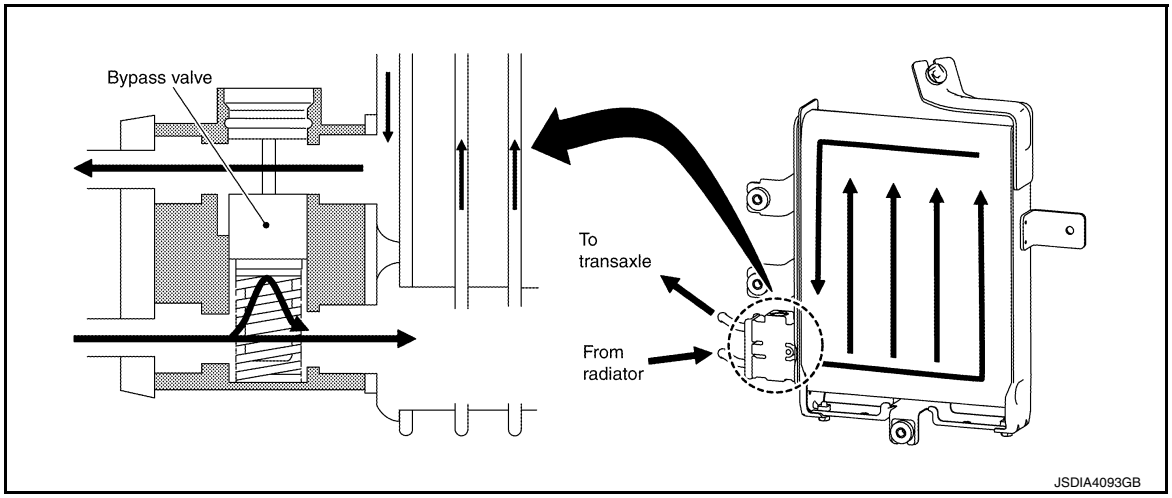

Heater Thermostat

- The heater thermostat ① is installed on the front part of transaxle assembly.
- The heater thermostat open and close with set temperature.

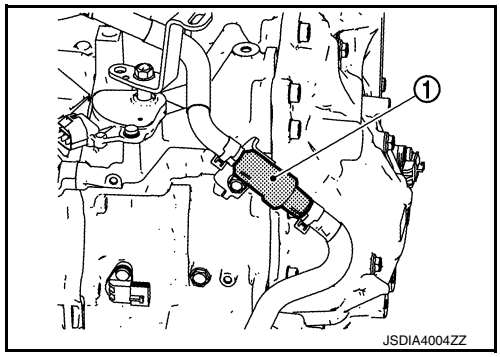

SHIFT LOCK SYSTEM

SHIFT LOCK SYSTEM : System Description

INFOID:0000000009177506

The shift lever cannot be shifted from the “P” position unless the brake pedal is depressed while the ignition switch is set to ON. The shift lock is unlocked by turning the shift lock solenoid ON when the ignition switch is set to ON, the park position switch is turned ON (selector lever is in “P” position), and the stop lamp switch is turned ON (brake pedal is depressed) as shown in the operation chart in the figure. Therefore, the shift lock solenoid receives no ON signal and the shift lock remains locked if all of the above conditions are not fulfilled. However, selector operation is allowed if the shift lock release button is pressed.

SHIFT LOCK OPERATION AT “P” POSITION

When Brake Pedal Is Not Depressed (No Selector Operation Allowed)

The shift lock solenoid (A) is turned OFF (not energized) and the solenoid rod (B) is extended with the spring when the brake pedal is not depressed (no selector operation allowed) with the ignition switch ON.
The connecting lock lever (C) is located at the position shown in the figure when the solenoid rod is extended. It prevents the movement of the detent rod (D). For these reasons, the selector lever cannot be shifted from the “P” position.

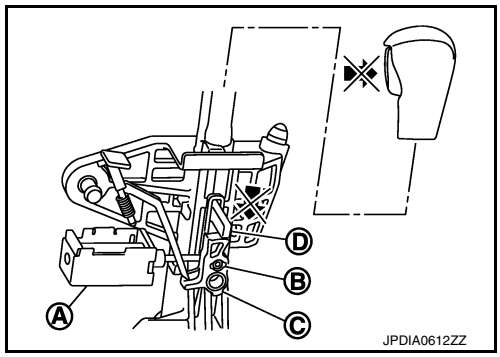

When Brake Pedal Is Depressed (Shift Operation Allowed)

The shift lock solenoid (A) is turned ON (energized) when the brake pedal is depressed with the ignition switch ON. The solenoid rod (B) is compressed by the electromagnetic force. The connecting lock lever (C) rotates when the solenoid is activated. Therefore, the detent rod (D) can be moved. For these reasons, the selector lever can be shifted to other positions.

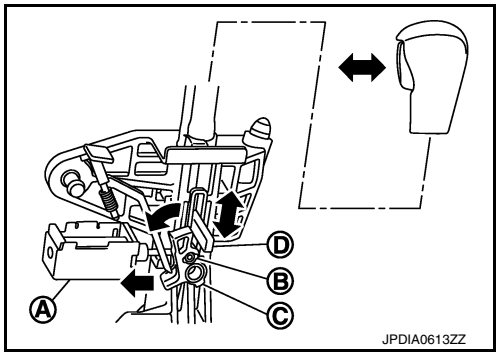

“P” POSITION HOLD MECHANISM (IGNITION SWITCH LOCK)

The shift lock solenoid (A) is not energized when the ignition switch is in any position other than ON. In this condition, the shift mechanism is locked and “P” position is held. The operation cannot be performed from “P” position if the brake pedal is depressed with the ignition switch ON when the operation system of shift lock solenoid is malfunctioning. However, the lock lever (B) is forcibly rotated and the shift lock is released when the shift lock release button (C) is pressed from above. Then the selector operation from “P” position can be performed.

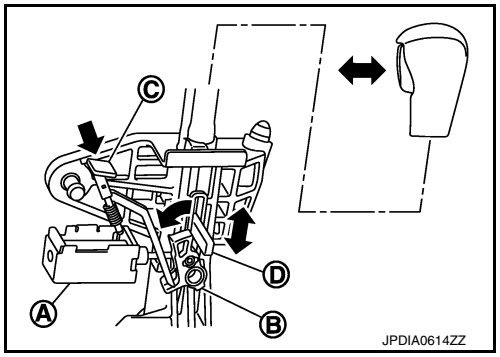

D : Detent rod

CAUTION:

Use the shift lock release button only when the selector lever cannot be operated even if the brake pedal is depressed with the ignition switch ON.

SYSTEM

CVT CONTROL SYSTEM

CVT CONTROL SYSTEM : System Description

INFOID:0000000009177507

SYSTEM DIAGRAM

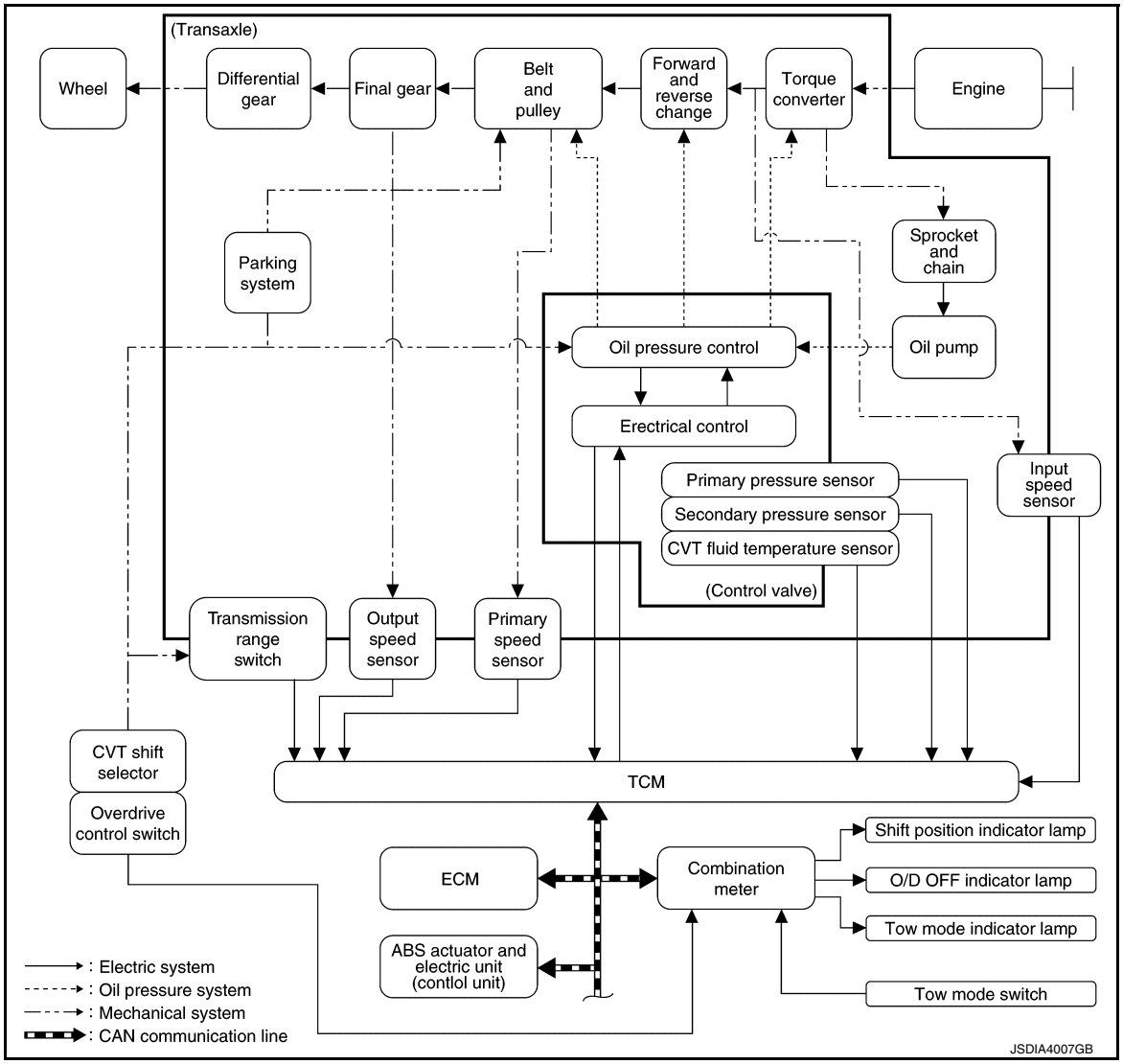

MAIN CONTROL CONTENTS OF TCM

Controls	Reference
Line pressure control	TM-35, "LINE PRESSURE CONTROL : System Description"
Shift control	TM-36, "SHIFT CONTROL : System Description"
Select control	TM-38, "SELECT CONTROL : System Description"
Lock-up control	TM-39, "LOCK-UP CONTROL : System Description"
Fail-safe	TM-55, "Fail-safe"
Self-diagnosis function	TM-43, "CONSULT Function"
Communication function with CONSULT	TM-43, "CONSULT Function"

LIST OF CONTROL ITEMS AND INPUT/OUTPUT

Control Item		Shift control	Line pressure control	Select control	Lock-up control	Fail-safe function*
Input	Engine torque signal (CAN communication)	×	×	×	×	×
	Engine speed signal (CAN communication)	×	×	×	×	×
	Accelerator pedal position signal (CAN communication)	×	×	×	×	
	Closed throttle position signal (CAN communication)	×	×		×	
	Stop lamp switch signal (CAN communication)	×	×	×	×	
	Primary pressure sensor					×
	Secondary pressure sensor	×	×			×
	CVT fluid temperature sensor	×	×	×	×	×
	Primary speed sensor	×	×	×	×	×
	Output speed sensor	×	×		×	×
	Input speed sensor	×	×	×	×	×
	Transmission range switch	×	×	×	×	×
	Overdrive control switch (CAN communication)	×	×		×	
Output	Line pressure solenoid valve	×	×	×		×
	Primary pressure solenoid valve	×	×			×
	Torque converter clutch solenoid valve				×	×
	Secondary pressure solenoid valve	×	×			×
	Select solenoid valve	×		×		×
	Shift position indicator (CAN communication)			×		
	Overdrive control switch (CAN communication)	×				

*: If these input/output signals show errors, TCM activates the fail-safe function.

CVT CONTROL SYSTEM : Fail-safe

INFOID:0000000009177508

TCM has a fail-safe mode. The mode functions so that operation can be continued even if the signal circuit of the main electronically controlled input/output parts is damaged.
If the vehicle shows following behaviors including “poor acceleration”, a malfunction of the applicable system is detected by TCM and the vehicle may be in a fail-safe mode. At this time, check the DTC code and perform inspection and repair according to the malfunction diagnosis procedures.

Fail-safe function

DTC	Vehicle behavior	Conditions of vehicle
P062F	• Not changed from normal driving	—
P0705	• Shift position indicator on combination meter is not displayed • Selector shock is large • Start is slow • Acceleration is slow • Lock-up is not performed	—

DTC	Vehicle behavior	Conditions of vehicle
P0706	• Shift position indicator on combination meter is not displayed • Selector shock is large • Start is slow • Acceleration is slow • Lock-up is not performed	—
P0711	• Start is slow • Acceleration is slow	Engine coolant temperature when engine start: Temp. ≥ 10°C (50°F)
	• Selector shock is large • Start is slow • Acceleration is slow	Engine coolant temperature when engine start: –35°C (–31°F) ≤ Temp. < 10°C (50°F)
	• Selector shock is large • Start is slow • Acceleration is slow	Engine coolant temperature when engine star: Temp. < –35°C (–31°F)
P0712	• Start is slow • Acceleration is slow	Engine coolant temperature when engine start: Temp. ≥ 10°C (50°F)
	• Selector shock is large • Start is slow • Acceleration is slow	Engine coolant temperature when engine start: –35°C (–31°F) ≤ Temp. < 10°C (50°F)
	• Selector shock is large • Start is slow • Acceleration is slow	Engine coolant temperature when engine star: Temp. < –35°C (–31°F)
P0713	• Start is slow • Acceleration is slow	Engine coolant temperature when engine start: Temp. ≥ 10°C (50°F)
	• Selector shock is large • Start is slow • Acceleration is slow	Engine coolant temperature when engine start: –35°C (–31°F) ≤ Temp. < 10°C (50°F)
	• Selector shock is large • Start is slow • Acceleration is slow	Engine coolant temperature when engine star: Temp. < –35°C (–31°F)
P0715	• Start is slow • Acceleration is slow • Lock-up is not performed	—
P0717	• Start is slow • Acceleration is slow • Lock-up is not performed	—
P0740	• Start is slow • Acceleration is slow • Lock-up is not performed	—
P0743	• Start is slow • Acceleration is slow • Lock-up is not performed	—
P0744	• Start is slow • Acceleration is slow • Lock-up is not performed	—
P0746	• Selector shock is large • Start is slow • Acceleration is slow • Lock-up is not performed	—

DTC	Vehicle behavior	Conditions of vehicle
P0776	• Selector shock is large • Start is slow • Acceleration is slow • Lock-up is not performed • Vehicle speed is not increased	When a malfunction occurs on the low oil pressure side
	• Selector shock is large • Start is slow • Acceleration is slow • Lock-up is not performed	When a malfunction occurs on the high oil pressure side
P0778	• Selector shock is large • Start is slow • Acceleration is slow • Lock-up is not performed	—
P0779	• Selector shock is large • Start is slow • Acceleration is slow • Lock-up is not performed	
P0841	• Not changed from normal driving	
P0847	• Not changed from normal driving	—
P0848	• Not changed from normal driving	—
P084C	• Not changed from normal driving	
P084D	• Not changed from normal driving	
P0863	• Selector shock is large • Start is slow • Acceleration is slow • Lock-up is not performed	—
P0890	• Selector shock is large • Start is slow • Acceleration is slow • Lock-up is not performed • Vehicle speed is not increased	
P0962	• Selector shock is large • Start is slow • Acceleration is slow • Lock-up is not performed	—
P0963	• Selector shock is large • Start is slow • Acceleration is slow • Lock-up is not performed	—
P0965	• Selector shock is large • Start is slow • Acceleration is slow • Lock-up is not performed	When a malfunction occurs on the low oil pressure side
	• Selector shock is large • Lock-up is not performed	When a malfunction occurs on the high oil pressure side
P0966	• Selector shock is large • Start is slow • Acceleration is slow • Lock-up is not performed	—
P0967	• Selector shock is large • Start is slow • Acceleration is slow • Lock-up is not performed	—
P2765	• Start is slow • Acceleration is slow • Lock-up is not performed	—

DTC	Vehicle behavior	Conditions of vehicle
P2813	• Selector shock is large • Start is slow • Acceleration is slow • Vehicle speed is not increased	When a malfunction occurs on the low oil pressure side
	• Selector shock is large	When a malfunction occurs on the high oil pressure side
P2814	• Selector shock is large	—
P2815	• Selector shock is large	—
U0073	• Selector shock is large • Start is slow • Acceleration is slow • Lock-up is not performed	—
U0100	• Selector shock is large • Start is slow • Acceleration is slow • Lock-up is not performed	—
U0102	• Not changed from normal driving	—
U0140	• Not changed from normal driving	—
U0141	• Not changed from normal driving	—
U0155	• Not changed from normal driving	—
U0300	• Selector shock is large • Start is slow • Acceleration is slow • Lock-up is not performed	—
U1000	• Not changed from normal driving	—
U1117	• Not changed from normal driving	—

CVT CONTROL SYSTEM : Protection Control

INFOID:0000000009177509

The TCM becomes the protection control status temporarily to protect the safety when the safety of TCM and transmission is lost. It automatically returns to the normal status if the safety is secured.
The TCM has the following protection control.

CONTROL FOR WHEEL SPIN

Control	When a wheel spin is detected, the engine output and gear ratio are limited and the line pressure is increased. Limits engine output when a wheel spin occurs in any of right and left drive wheels.
Vehicle behavior in control	If the accelerator is kept depressing during wheel spin, the engine revolution and vehicle speed are limited to a certain degree.
Normal return condition	Wheel spin convergence returns the control to the normal control.

TORQUE IS REDUCED WHEN DRIVING WITH THE REVERSE GEAR

Control	Engine output is controlled according to a vehicle speed while reversing the vehicle.
Vehicle behavior in control	Power performance may be lowered while reversing the vehicle.
Normal return condition	Torque returns to normal by positioning the selector lever in a range other than “R” position.

CONTROL WHEN FLUID TEMPERATURE IS HIGH

Control	When the CVT fluid temperature is high, the gear shift permission maximum revolution and the maximum torque are reduced than usual to prevent increase of the oil temperature.

Vehicle behavior in control	Power performance may be lowered, compared to normal control.
Normal return condition	The control returns to the normal control when CVT fluid temperature is lowered.

REVERSE PROHIBIT CONTROL

Control	The reverse brake is controlled to avoid becoming engaged when the selector lever is set in “R” position while driving in forward direction at more than the specified speed.
Vehicle behavior in control	If the selector lever is put at “R” position when driving with the forward gear, the gear becomes neutral, not reverse.
Normal return condition	The control returns to normal control when the vehicle is driven at low speeds. (The reverse brake becomes engaged.)

LINE PRESSURE CONTROL

LINE PRESSURE CONTROL : System Description

INFOID:0000000009177510

SYSTEM DIAGRAM

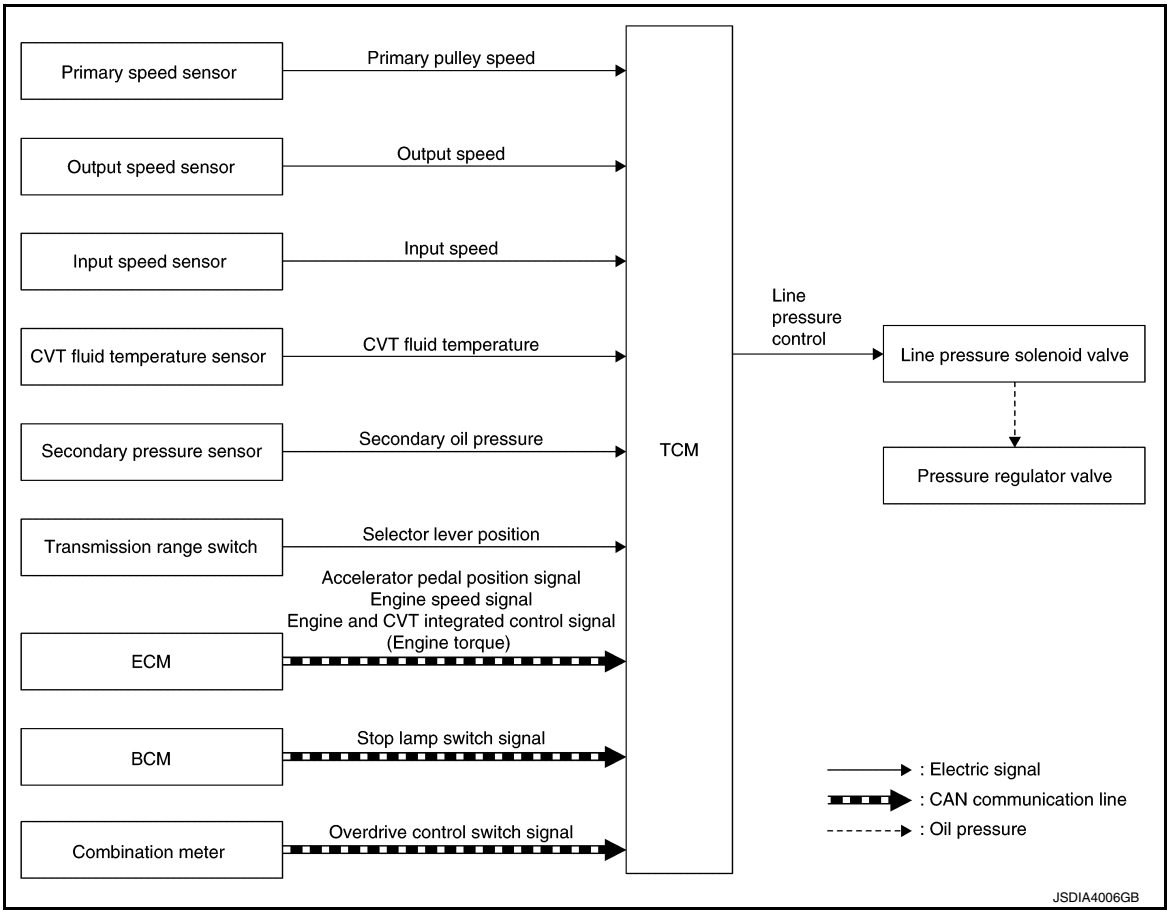

DESCRIPTION

Highly accurate line pressure control (secondary pressure control) reduces friction for improvement of fuel economy.

Normal Oil Pressure Control

Appropriate line pressure and secondary pressure suitable for driving condition are determined based on the accelerator pedal position, engine speed, primary pulley (input) speed, secondary pulley (output) speed, vehicle speed, input torque, stop lamp switch signal, transmission range switch signal, lock-up signal, power voltage, target shift ratio, oil temperature, oil pressure, and overdrive control switch signal.

Secondary Pressure Feedback Control

In normal oil pressure control and oil pressure control in shifting, highly accurate secondary pressure is determined by detecting the secondary pressure using an oil pressure sensor and by feedback control.

SHIFT CONTROL

SHIFT CONTROL : System Description

INFOID:0000000009177511

SYSTEM DIAGRAM

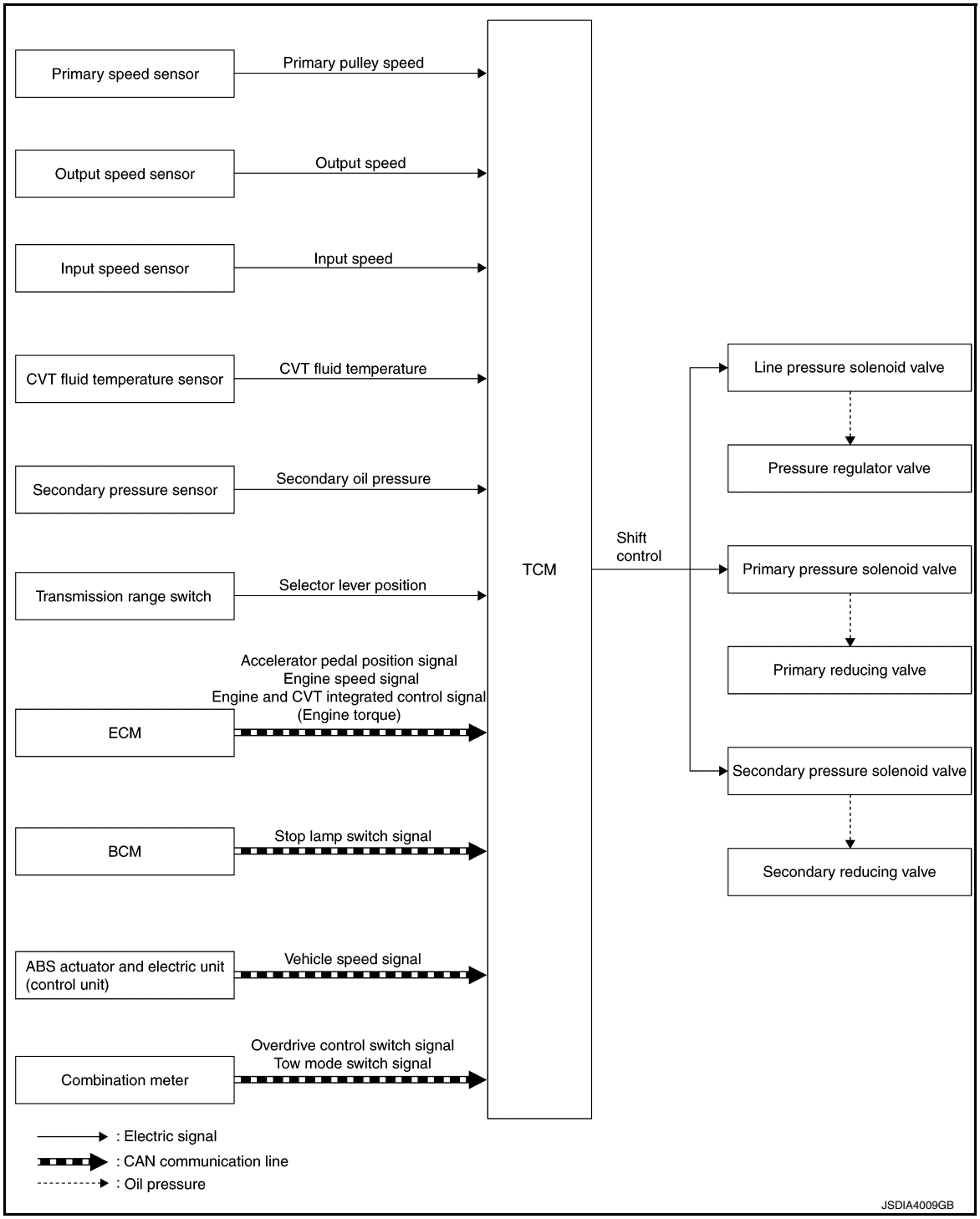

DESCRIPTION

To select the gear ratio that can give the driving force to meet driver's intent or vehicle situation, the vehicle driving condition such as vehicle speed or accelerator pedal position is detected and the most appropriate gear ratio is selected and the shifting method before reaching the speed is determined. The information is out-

put to the primary pressure solenoid valve and secondary pressure solenoid valve to control the line pressure input/output to the pulley, to determine the pulley (movable pulley) position and to control the gear position.

Shift Position Function

- D Position (Normal)
  Gear shifting is performed in all shifting ranges from the lowest to the highest gear ratio.

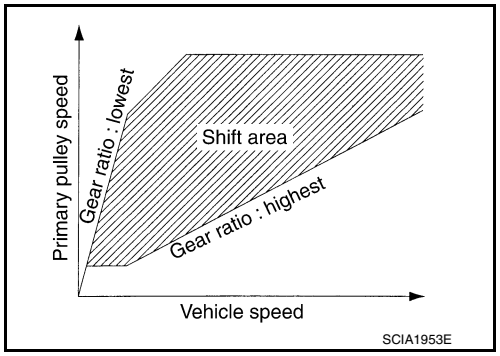

- D Position (OD OFF)
  The gear ratio is generally high by limiting the shifting range on the high side, and this always generates a large driving power.

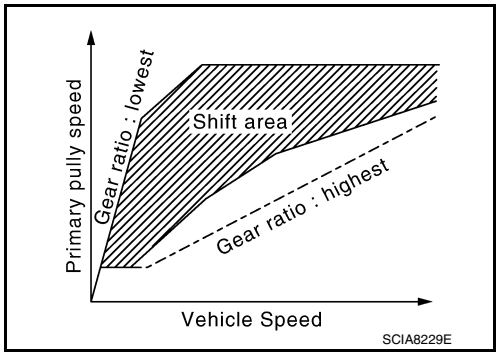

- L Position
  By limiting the shifting range only to the lowest of the gear ratio, a large driving force and engine brake are obtained.

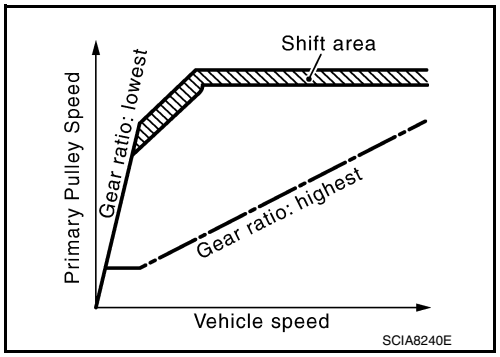

Hill Climbing And Descending Control

If a downhill is detected with the accelerator pedal is released, the system performs downshift to increase the engine brake force so that vehicle may not be accelerated more than necessary. If a climbing hill is detected, the system improves the acceleration performance in re-acceleration by limiting the gear shift range on the high side.

NOTE:

For engine brake control on a downhill, the control can be stopped with CONSULT.

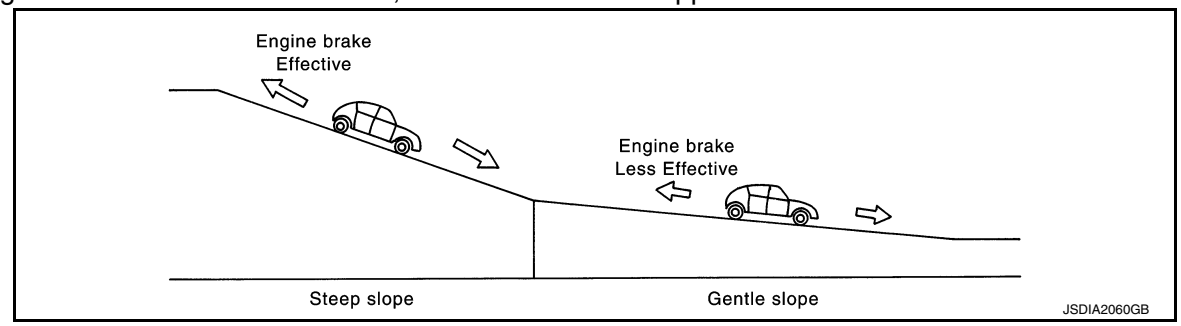

Control In Acceleration

From change of the vehicle speed or accelerator pedal position, the acceleration request level of the driver or driving scene is evaluated. In start or acceleration during driving, the gear shift characteristics with linearity of revolution increase and vehicle speed increase are gained to improve the acceleration feel.

Tow Mode

- In tow mode, sluggish acceleration and insufficient engine brake output resulting from towing are assisted and improved by CVT gear shifting.
- When all of the following conditions are satisfied, CVT goes into tow mode.
- Tow mode switch is ON
- When CVT judges a towing condition from vehicle behavior.

Tow Mode Function

Situation		Operation
Road condition	Brake pedal operation	
Flat road	Depressed	To assist deceleration resulting from brake operation, the tow mode function increases engine revolution by shifting down and makes the engine brake effective.
Uphill	—	In tow mode, the shift range on the HIGH side is limited more than that of normal mode and uphill driving control is improved.
Downhill	Depressed	To assist deceleration resulting from brake operation, the tow mode function increases engine revolution by shifting down more than the time when driving on flat roads and makes the engine brake effective.

SELECT CONTROL

SELECT CONTROL : System Description

INFOID:0000000009177512

SYSTEM DIAGRAM

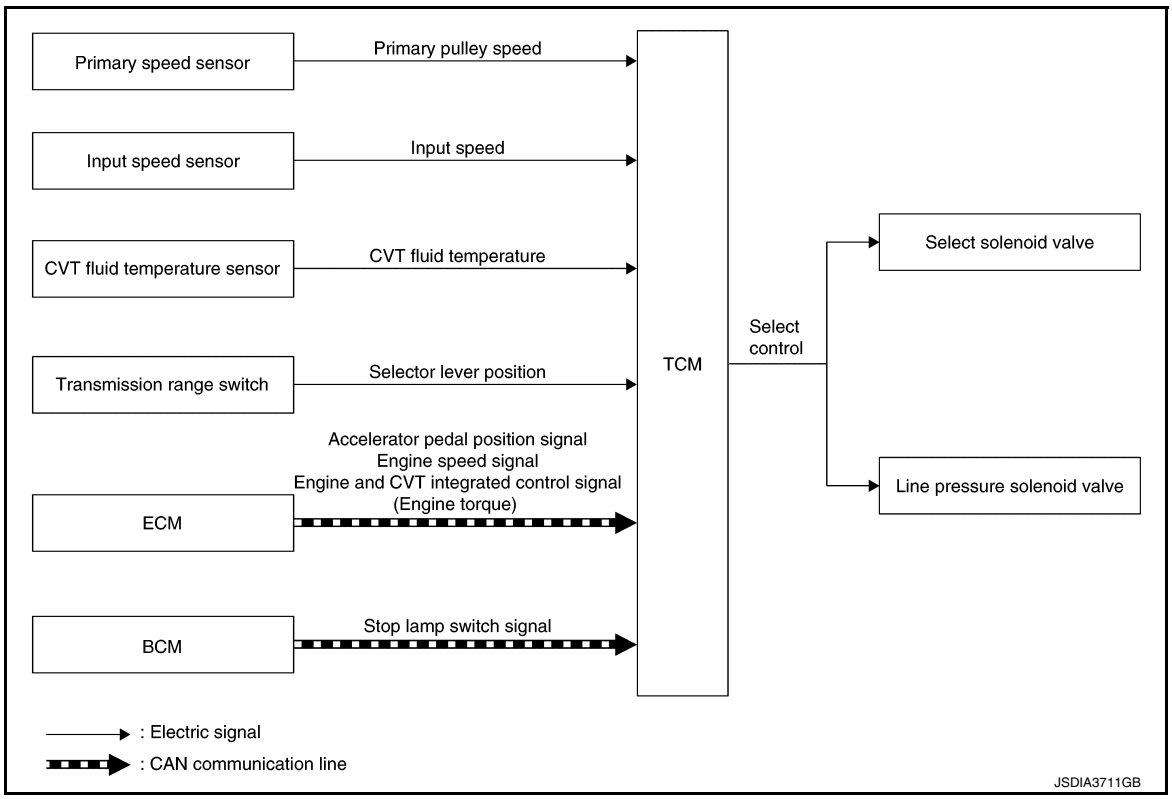

DESCRIPTION

Based on accelerator pedal angle, engine speed, primary pulley speed, and the input speed, the optimum operating pressure is set to reduce impact of a selector lever operation while shifting from “N” (“P”) to “D” (“R”) position.

LOCK-UP CONTROL

LOCK-UP CONTROL : System Description

INFOID:0000000009177513

SYSTEM DIAGRAM

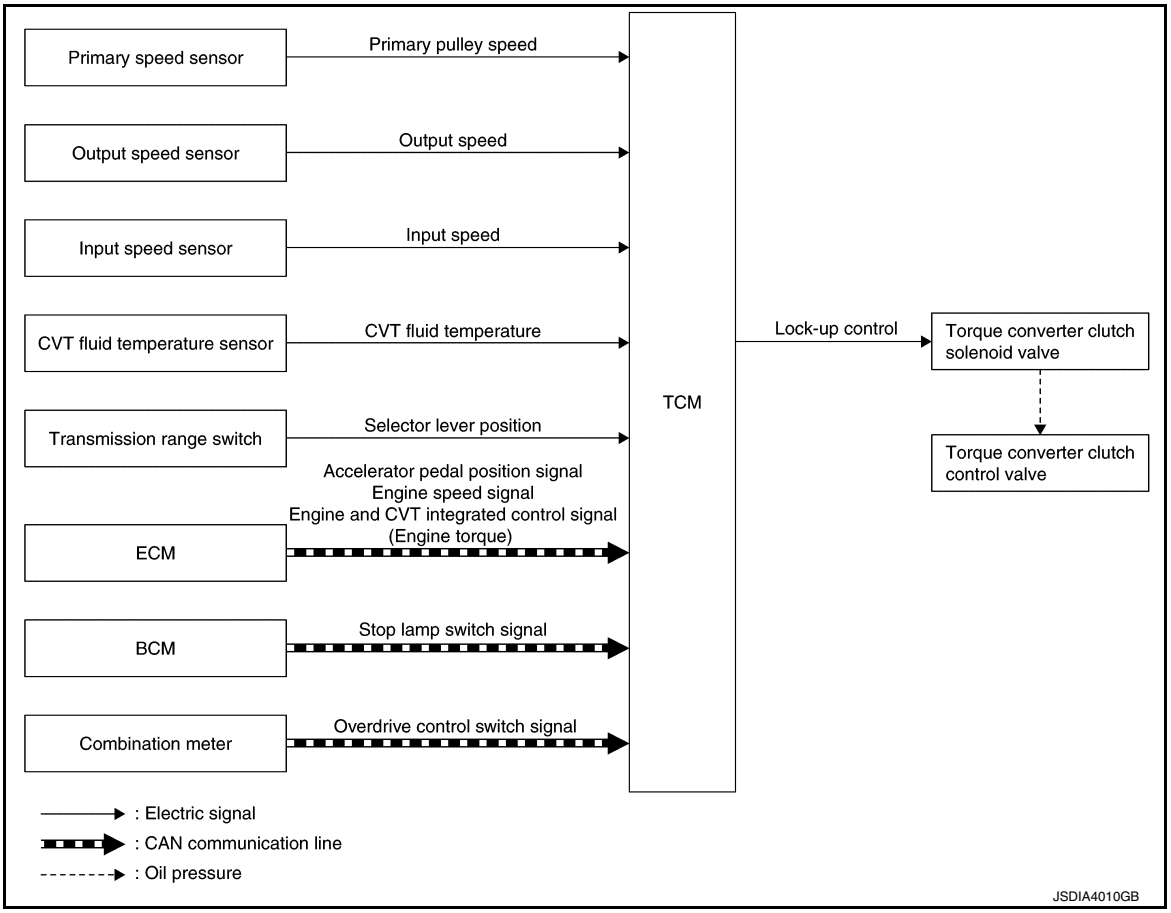

DESCRIPTION

- Controls for improvement of the transmission efficiency by engaging the torque converter clutch in the torque converter and eliminating slip of the converter. Achieves comfortable driving with slip control of the torque converter clutch.
- The oil pressure feed circuit for the torque converter clutch piston chamber is connected to the torque converter clutch control valve. The torque converter clutch control valve is switched by the torque converter clutch solenoid valve with the signal from TCM. This controls the oil pressure circuit, which is supplied to the torque converter clutch piston chamber, to the release side or engagement side.
- If the CVT fluid temperature is low or the vehicle is in fail-safe mode due to malfunction, lock-up control is prohibited.

Lock-up engagement

In lock-up engagement, the torque converter clutch solenoid valve makes the torque converter clutch control valve locked up to generate the lock-up apply pressure. This pushes the torque converter clutch piston for engagement.

Lock-up release condition

In lock-up release, the torque converter clutch solenoid valve makes the torque converter clutch control valve non-locked up to drain the lock-up apply pressure. This does not engage the torque converter clutch piston.

ON BOARD DIAGNOSTIC (OBD) SYSTEM

Description

INFOID:0000000009177514

This is an on board diagnosis system which records diagnosis information related to the exhaust gases. It detects malfunctions related to sensors and actuators. The malfunctions are indicated by means of the malfunction indicator lamp (MIL) and are stored as DTC in the ECU memory. The diagnosis information can be checked using a diagnosis tool (GST: Generic Scan Tool).

Function of OBD

INFOID:0000000009177515

The GST is connected to the diagnosis connector on the vehicle and communicates with the on-board control units to perform diagnosis. The diagnosis connector is the same as for CONSULT. Refer to GI-57, "Description".

DIAGNOSIS SYSTEM (TCM)

DIAGNOSIS DESCRIPTION

DIAGNOSIS DESCRIPTION : 1 Trip Detection Diagnosis and 2 Trip Detection Diagnosis

INFOID:0000000009177516

NOTE:
"Start the engine and turn OFF the ignition switch after warm-up." This is defined as 1 trip.

1 TRIP DETECTION DIAGNOSIS

When initial malfunction is detected, TCM memorizes DTC. In these diagnoses, some illuminate MIL and some do not. Refer to TM-60, "DTC Index".

2 TRIP DETECTION DIAGNOSIS

When initial malfunction is detected, TCM memorizes DTC of the 1st trip. MIL does not light at this stage. <1 trip>
If the same malfunction is detected again in next driving, TCM memorizes DTC. When DTC is memorized, MIL lights. <2 trip>
"Trip" of the "2 trip detection diagnosis" indicates the driving mode that executes self-diagnosis during driving.

×: Check possible —: Check not possible

Item	DTC at the 1st trip		DTC		MIL	
	Display at the 1st trip	Display at the 2nd trip	Display at the 1st trip	Display at the 2nd trip	Illumination at the 1st trip	Illumination at the 2nd trip
1 trip detection diagnosis (Refer to TM-60, "DTC Index")	—	—	×	—	×	—
2 trip detection diagnosis (Refer to TM-60, "DTC Index")	×	—	—	×	—	×

DIAGNOSIS DESCRIPTION : DTC and DTC of 1st Trip

INFOID:0000000009177517

2 TRIP DETECTION DIAGNOSIS THAT ILLUMINATES MIL

- The DTC number of the 1st trip is the same as the DTC number.
- When a malfunction is detected at the 1st trip, TCM memorizes DTC of the 1st trip. MIL does not light at this stage. If the same malfunction is not detected at the 2nd trip (conforming to necessary driving conditions), DTC at the 1st trip is erased from TCM. If the same malfunction is detected at the 2nd trip, TCM memorizes DTC and MIL lights at the same time.
- The DTC of the 1st trip is specified in Service $01 of SAE J1979/ISO 15031-5. Since detection of DTC at the 1st trip does not illuminate MIL, warning for a problem is not given to a driver.
- For procedure to delete DTC and 1st trip DTC from TCM, refer to TM-43, "CONSULT Function".
- If DTC of the 1st trip is detected, it is necessary to check the cause according to the "Diagnosis flow". Refer to TM-78, "Work Flow".

DIAGNOSIS DESCRIPTION : Malfunction Indicator Lamp (MIL)

INFOID:0000000009177518

- TCM not only detects DTC, but also sends the MIL signal to ECM through CAN communication. ECM sends the MIL signal to the combination meter through CAN communication according to the signal, and illuminates MIL.
- For malfunction indicator lamp (MIL) description, refer to EC-26, "Malfunction Indicator Lamp (MIL)".

DIAGNOSIS DESCRIPTION : Counter System

INFOID:0000000009177519

RELATION BETWEEN DTC AT 1ST TRIP/DTC/MIL AND DRIVING CONDITIONS (FOR 2 TRIP DETECTION DIAGNOSIS THAT ILLUMINATES MIL)

- When initial malfunction is detected, TCM memorizes DTC of the 1st trip. MIL does not light at this stage.
- If the same malfunction is detected at the 2nd trip, TCM memorizes DTC and MIL lights at the same time.
- Then, MIL goes after driving the vehicle for 3 trips under "Driving condition B" without malfunction.
- DTC is displayed until 40 trips of "Driving condition A" are satisfied without detecting the same malfunction. DTC is erased when 40 trips are satisfied.

- When the self-diagnosis result is acceptable at the 2nd trip (conforming to driving condition B), DTC of the 1st trip is erased.

COUNTER SYSTEM LIST

Item	Driving condition	Trip
MIL (OFF)	B	3
DTC (clear)	A	40
DTC at 1st trip (clear)	B	1

DRIVING CONDITION

Driving condition A
Driving condition A is the driving condition that provides warm-up.
In specific, count-up is performed when all of the following conditions are satisfied.
- Engine speed is 400 rpm or more.
- After start of the engine, the water temperature increased by 20°C (36°F) or more.
- Water temperature was 70°C (158°F) or more.
- The ignition switch was changed from ON to OFF.

NOTE:
- If the same malfunction is detected regardless of the driving condition, reset the A counter.
- When the above is satisfied without detecting the same malfunction, count up the A counter.
- When MIL goes off due to the malfunction and the A counter reaches 40, the DTC is erased.

Driving condition B
Driving condition B is the driving condition that performs all diagnoses once.
In specific, count-up is performed when all of the following conditions are satisfied.
- Engine speed is 400 rpm or more.
- Water temperature was 70°C (158°F) or more.
- In closed loop control, vehicle speed of 70 – 120 km/h (43 – 75 MPH) continued for 60 seconds or more.
- In closed loop control, vehicle speed of 30 – 60 km/h (19 – 37 MPH) continued for 10 seconds or more.
- In closed loop control, vehicle speed of 4 km/h (2 MPH) or less and idle determination ON continued for 12 seconds or more.
- After start of the engine, 22 minutes or more have passed.
- The condition that the vehicle speed is 10 km/h (6 MPH) or more continued for 10 seconds or more in total.
- The ignition switch was changed from ON to OFF.

NOTE:
- If the same malfunction is detected regardless of the driving condition, reset the B counter.
- When the above is satisfied without detecting the same malfunction, count up the B counter.
- When the B counter reaches 3 without malfunction, MIL goes off.
- When the B counter is counted once without detecting the same malfunction after TCM memorizes DTC of the 1st trip, DTC of the 1st trip is erased.

TIME CHART

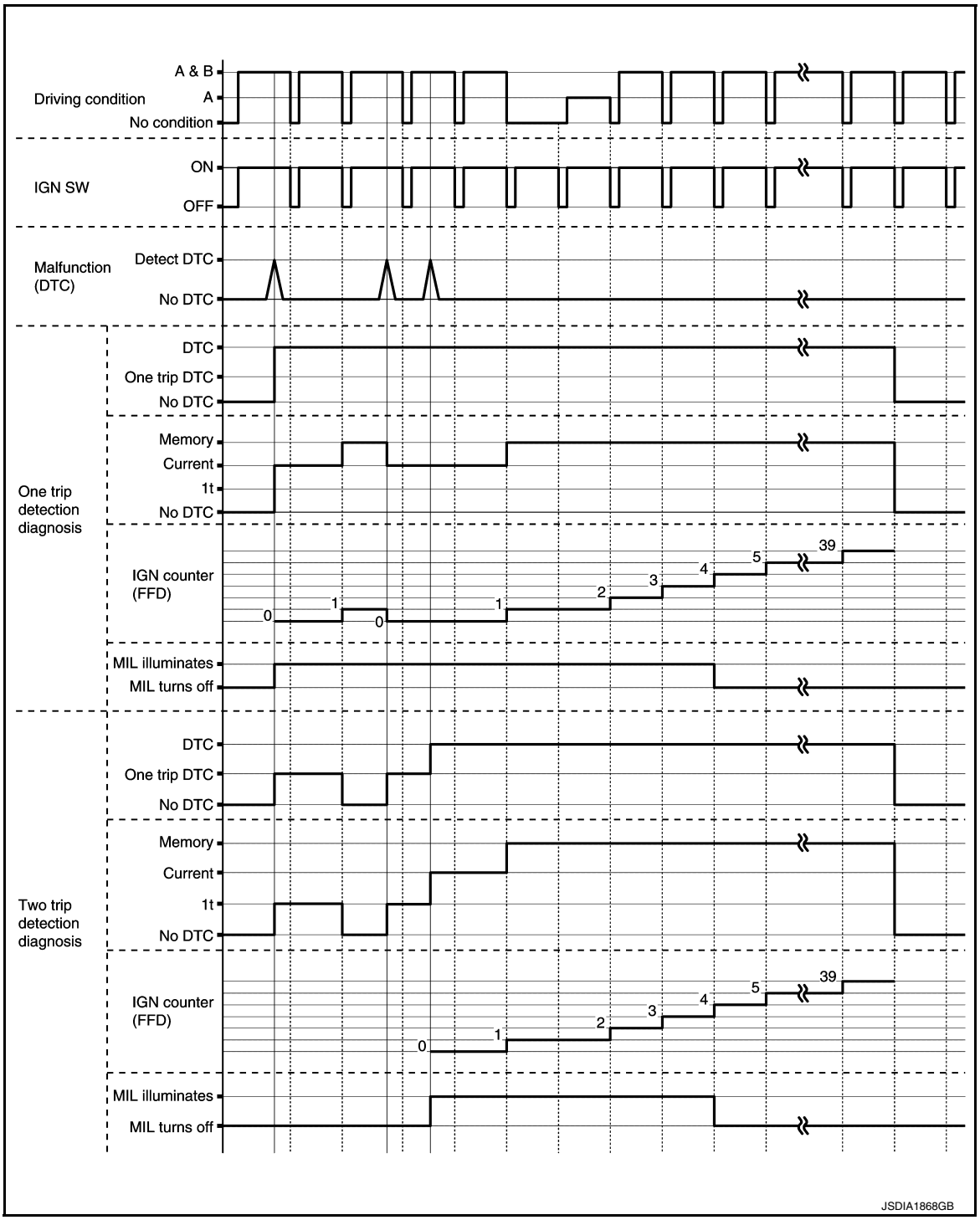

CONSULT Function

INFOID:0000000009177520

CAUTION:

After disconnecting the CONSULT vehicle interface (VI) from the data link connector, the ignition must be cycled OFF → ON (for at least 5 seconds) → OFF. If this step is not performed, the BCM may not go to ”sleep mode”, potentially causing a discharged battery and a no-start condition.

APPLICABLE ITEM

Conditions	Function
Work Support	The settings for ECU functions can be changed.
Self Diagnostic Results	The ECU self diagnostic results are displayed.
Data Monitor	The ECU input/output data is displayed in real time.
CAN Diagnosis Support Monitor	The result of transmit/receive diagnosis of CAN communication is displayed.
ECU Identification	The ECU part number is displayed.
CALIB DATA	The calibration data status of TCM can be checked.

SELF DIAGNOSTIC RESULTS

Refer to TM-60, "DTC Index".

DTC at 1st trip and method to read DTC

- DTC (P0705, P0711, P0720, etc.) is specified by SAE J2012/ISO 15031-6.
- DTC and DTC at 1st trip are displayed on “Self Diagnostic results” of CONSULT.
  When DTC is currently detected, “CRNT” is displayed. If “PAST” is displayed, it shows a malfunction occurred in the past. The trip number of drive without malfunction of concerned DTC can be confirmed with “IGN counter” inside “FFD”.
- When the DTC at the 1st trip is detected, “1t” is displayed.

DTC deletion method

NOTE:

If the ignition switch is left ON after repair, turn OFF the ignition switch and wait for 10 seconds or more. Then, turn the ignition ON again. (Engine stop)

1. Touch “TRANSMISSION” of CONSULT.
2. Touch “Self Diagnostic Result”.
3. Touch “Erase”. (DTC memorized in TCM is erased.)

IGN counter

The ignition counter is displayed in “FFD” and the number of times of satisfied “Driving condition A” is displayed after normal recovery of DTC. Refer to TM-41, "DIAGNOSIS DESCRIPTION : Counter System".

- If malfunction (DTC) is currently detected, “0” is displayed.
- After normal recovery, every time “Driving condition A” is satisfied, the display value increases from 1 → 2 → 3...38 → 39.
- When MIL turns OFF due to the malfunction and the counter reaches 40, the DTC is erased.
  NOTE:
  The counter display of “40” cannot be checked.

DATA MONITOR

NOTE:

The following table includes information (items) inapplicable to this vehicle. For information (items) applicable to this vehicle, refer to CONSULT display items.

Monitored item	(Unit)	Remarks
VSP SENSOR	(km/h or mph)	Displays the vehicle speed calculated from the CVT output shaft speed.
ESTM VSP SIG	(km/h or mph)	• Displays the vehicle speed signal (ABS) received through CAN communication. • Models with ABS are displayed.
INPUT SPEED SENSOR	(rpm)	Displays the input speed calculated from the pulse signal of the input speed sensor.
PRI SPEED SEN	(rpm)	Displays the primary pulley speed calculated from the pulse signal of the primary speed sensor.
SEC REV SENSOR	(rpm)	Displays the secondary pulley speed calculated from the pulse signal of the output speed sensor.
ENG SPEED SIG	(rpm)	Displays the engine speed received through CAN communication.
SEC PRESSURE SEN	(V)	Displays the signal voltage of the secondary pressure sensor.
PRI PRESSURE SEN	(V)	Displays the signal voltage of the primary pressure sensor.
ATF TEMP SEN	(V)	Displays the signal voltage of the CVT fluid temperature sensor.
G SENSOR*	(G)	Displays the signal voltage of the G sensor.

Monitored item	(Unit)	Remarks
VIGN SEN	(V)	Displays the battery voltage applied to TCM.
PVING VOLT	(V)	Displays the backup voltage of TCM.
VEHICLE SPEED	(km/h or mph)	Displays the vehicle speed recognized by TCM.
INPUT REV	(rpm)	Displays the input shaft speed of CVT recognized by TCM.
PRI SPEED	(rpm)	Displays the primary pulley speed recognized by TCM.
SEC SPEED	(rpm)	Displays the secondary pulley speed recognized by TCM.
ENG SPEED	(rpm)	Displays the engine speed recognized by TCM.
SLIP REV	(rpm)	Displays the speed difference between the input shaft speed of CVT and the engine speed.
PULLEY GEAR RATIO		Displays the pulley gear ratio calculated from primary pulley speed/secondary pulley speed.
G SPEED	(G)	Displays the acceleration and deceleration speed of the vehicle calculated from vehicle speed change.
ACCEL POSI SEN 1	(deg)	Displays the estimated throttle position received through CAN communication.
VENG TRQ	(Nm)	Display the engine torque recognized by TCM.
PRI TRQ	(Nm)	Display the input shaft torque of CVT.
TRQ RTO		Display the torque ratio of torque converter.
SEC PRESSURE	(MPa)	Displays the secondary pressure calculated from the signal voltage of the secondary pressure sensor.
PRI PRESSURE	(MPa)	Displays the primary pressure calculated from the signal voltage of the primary pressure sensor.
FLUID TEMP	(°C or °F)	Displays the CVT fluid temperature calculated from the signal voltage of the CVT fluid temperature sensor.
DSR REV	(rpm)	Displays the target primary pulley speed calculated from processing of gear shift control.
TGT PLLY GR RATIO		Displays the target gear ratio of the pulley from processing of gear shift control.
LU PRS	(MPa)	Displays the target oil pressure of the torque converter clutch solenoid valve calculated from oil pressure processing of gear shift control.
LINE PRS	(MPa)	Displays the target oil pressure of the line pressure solenoid valve calculated from oil pressure processing of gear shift control.
TRGT PRI PRESSURE	(MPa)	Displays the target oil pressure of the primary pressure solenoid valve calculated from oil pressure processing of gear shift control.
TRGT SELECT PRESSURE	(MPa)	Displays the target oil pressure of the select solenoid valve calculated from oil pressure processing of gear shift control.
TRGT SEC PRESSURE	(MPa)	Displays the target oil pressure of the secondary pressure solenoid valve calculated from oil pressure processing of gear shift control.
ISOLT1	(A)	Displays the command current from TCM to the torque converter clutch solenoid valve.
ISOLT2	(A)	Displays the command current from TCM to the line pressure solenoid valve.
PRI SOLENOID	(A)	Displays the command current from TCM to the primary pressure solenoid valve.
SEC SOLENOID CURRENT	(A)	Displays the command current from TCM to the secondary pressure solenoid valve.
SELECT SOLENOID CURRENT	(A)	Displays the command current from TCM to the select solenoid valve.
SOLMON1	(A)	Monitors the command current from TCM to the torque converter clutch solenoid valve and displays the monitored value.
SOLMON2	(A)	Monitors the command current from TCM to the line pressure solenoid valve and displays the monitored value.
PRI SOL MON	(A)	Monitors the command current from TCM to the primary pressure solenoid valve and displays the monitored value.

Monitored item	(Unit)	Remarks
SEC SOL MON CURRENT	(A)	Monitors the command current from TCM to the secondary pressure solenoid valve and displays the monitored value.
SELECT SOL MON CURRENT	(A)	Monitors the command current from TCM to the select solenoid valve and displays the monitored value.
D POSITION SW	(On/Off)	Displays the operation status of the transmission range switch (D position).
N POSITION SW	(On/Off)	Displays the operation status of the transmission range switch (N position).
R POSITION SW	(On/Off)	Displays the operation status of the transmission range switch (R position).
P POSITION SW	(On/Off)	Displays the operation status of the transmission range switch (P position).
L POSITION SW	(On/Off)	Displays the operation status of the transmission range switch (L position).
DS RANGE SW*	(On/Off)	Displays the operation status of the transmission range switch (Ds position).
BRAKESW	(On/Off)	Displays the reception status of the stop lamp switch signal received through CAN communication.
IDLE SW	(On/Off)	Displays the reception status of the closed throttle position signal received through CAN communication.
SPORT MODE SW	(On/Off)	Displays the reception status of the overdrive control switch signal received through CAN communication.
ECO MODE SW*	(On/Off)	Displays the reception status of the ECO mode switch signal received through CAN communication.
STRDWNSW*	(On/Off)	Displays the operation status of the paddle shifter (down switch).
STRUPSW*	(On/Off)	Displays the operation status of the paddle shifter (up switch).
DOWNLVR*	(On/Off)	Displays the operation status of the selector lever (down switch).
UPLVR*	(On/Off)	Displays the operation status of the selector lever (up switch).
NONMMODE*	(On/Off)	Displays if the selector lever position is not at the manual shift gate.
MMODE*	(On/Off)	Displays if the selector lever position is at the manual shift gate.
TOW MODE SW	(On/Off)	Displays the reception status of the TOW mode switch signal received through CAN communication.
SHIFT IND SIGNAL		Displays the transaxle value of shift position signal transmitted via CAN communication.
CVT LAMP*	(On/Off)	Displays the transaxle status of the CVT warning lamp signal transmitted through CAN communication.
SPORT MODE IND	(On/Off)	Displays the transaxle status of the O/D OFF indicator lamp signal transmitted through CAN communication.
MANU MODE SIGNAL*	(On/Off)	Displays the transaxle status of the manual mode signal transmitted through CAN communication.
DS RANGE SIGNAL*	(On/Off)	Displays the shift position signal status from transmission range switch (Ds position).
ECO MODE SIGNAL*	(On/Off)	Displays the transaxle status of the ECO mode signal transmitted through CAN communication.
VDC ON	(On/Off)	Displays the reception status of the VDC operation signal received through CAN communication.
TCS ON	(On/Off)	Displays the reception status of the TCS operation signal received through CAN communication.
ABS FAIL SIGNAL	(On/Off)	Displays the reception status of the ABS malfunction signal received through CAN communication.
ABS ON	(On/Off)	Displays the reception status of the ABS operation signal received through CAN communication.
RANGE		Displays the gear position recognized by TCM.
M GEAR POS*		Display the target gear of manual mode
G SEN SLOPE*	(%)	Displays the gradient angle calculated from the G sensor signal voltage.
G SEN CALIBRATION*	(YET/DONE)	Displays the status of “G SENSOR CALIBRATION” in “Work Support”.

Monitored item	(Unit)	Remarks
N IDLE STATUS*	(On/Off)	Displays idle neutral status.
ENGBRKLVL	(On/Off)	Displays the setting of “ENGINE BRAKE ADJ” in “Work Support”.
DRIVE MODE STATS*		Displays the drive mode status recognized by TCM.
SNOW MODE*	(On/Off)	Displays whether it is the SNOW mode.
ECO MODE*	(On/Off)	Displays whether it is the ECO mode.
NORMAL MODE*	(On/Off)	Displays whether it is the NORMAL mode.
SPORT MODE*	(On/Off)	Displays whether it is the SPORT mode.
AIR BLDING STATE*	(INCOMP/ COMP)	Displays the status of “ELECTRIC O.P. AIR BLEEDING” in “Work Support”.
ELECTRIC OP DUTY*	(%)	Displays the command signal value (duty) of the electric oil pump transmitted from TCM.
E-OP DUTY MON*	(%)	Monitors the status signal value (duty) transmitted from the electric oil pump and displays the monitored value.
ELECTRIC OP RELAY*	(On/Off)	Displays the command status from TCM to the electric oil pump relay.
E-OP RELAY MON*	(On/Off)	Monitors the command status from TCM to the oil pump relay and displays the monitored value.
CVT-B		• Displays CVT fluid temperature count. • This monitor item does not use.
CVT-A	(On/Off)	• Displays CVT fluid temperature count. • This monitor item does not use.

*: Not applicable but displayed.

WORK SUPPORT

Item name	Description
CONFORM CVTF DETERIORTN	Checks the degradation level of the CVT fluid under severe conditions.
ERASE MEMORY DATA	Performs “erasing of the calibration data” and “erasing of the learned value” at the same time.
G SENSOR CALIBRATION	Compensates the G sensor.
ERASE LEARNING VALUE	Erases learning value memorized by TCM.
ENGINE BRAKE ADJ.	Although there is no malfunction on the transaxle and the CVT system, if a customer make a complaint like “I do not feel comfortable with automatic operation of the engine brake on downhill”, the engine brake may be cancelled with “engine brake adjustment”.
ERASE CALIBRATION DATA	Erases calibration data memorized by TCM.
WRITE IP CHARA - REPLACEMENT AT/CVT	Writes IP characteristics when transaxle assembly is replaced.
READ IP CHARA - REPLACEMENT TCM	Reads IP characteristics when TCM is replaced.
WRITE IP CHARA - REPLACEMENT TCM	Writes IP characteristics when TCM is replaced.

Engine brake adjustment

ENGINE BRAKE LEVEL
ON : Turn ON the engine brake control.
OFF : Turn OFF the engine brake control.

Check the degradation level of the CVT fluid.

CVTF degradation level data
210,000 or more : Replacement of the CVT fluid is required.
Less than 210,000 : Replacement of the CVT fluid is not required.

ECU DIAGNOSIS INFORMATION

TCM

Reference Value

INFOID:0000000009177521

CONSULT DATA MONITOR STANDARD VALUE

- In CONSULT, electric shift timing or lock-up timing, i.e. operation timing of each solenoid valve, is displayed. Therefore, if there is an obvious difference between the shift timing estimated from a shift shock (or engine speed variations) and that shown on the CONSULT, the mechanism parts (including the hydraulic circuit) excluding the solenoids and sensors may be malfunctioning. In this case, check the mechanical parts following the appropriate diagnosis procedure.
- Shift point (gear position) displayed on CONSULT slightly differs from shift pattern described in Service Manual. This is due to the following reasons.

- Actual shift pattern may vary slightly within specified tolerances.
- While shift pattern described in Service Manual indicates start of each shift, CONSULT shows gear position at end of shift.
- The solenoid display (ON/OFF) on CONSULT is changed at the start of gear shifting. In contrast, the gear position display is changed at the time when gear shifting calculated in the control unit is completed.

NOTE:
The following table includes information (items) inapplicable to this vehicle. For information (items) applicable to this vehicle, refer to CONSULT display items.

Monitor item	Condition	Value/Status (Approx.)
VSP SENSOR	While driving	Almost same as the speedometer display.
ESTM VSP SIG	While driving	Almost same as the speedometer display.
INPUT SPEED SENSOR	In driving (lock-up ON)	Approximately matches the engine speed.
PRI SPEED SEN	In driving (lock-up ON)	Approximately matches the engine speed.
SEC REV SENSOR	While driving	VSP SENSOR × 40
ENG SPEED SIG	Engine running	Almost same reading as tachometer
SEC PRESSURE SEN	• After engine warm up • Selector lever: “N” position • At idle	1.7 V
PRI PRESSURE SEN	• After engine warm up • Selector lever: “N” position • At idle	1.23 V
ATF TEMP SEN	CVT fluid: Approx. 20°C (68°F)	2.01 – 2.05 V
	CVT fluid: Approx. 50°C (122°F)	1.45 – 1.50 V
	CVT fluid: Approx. 80°C (176°F)	0.90 – 0.94 V
G SENSOR	Always	0 V
VIGN SEN	Ignition switch: ON	10.0 – 16.0 V
PVIGN VOLT	Ignition switch: ON	10.0 – 16.0 V
VEHICLE SPEED	While driving	Almost same as the speedometer display.
INPUT REV	In driving (lock-up ON)	Almost same as the engine speed.
PRI SPEED	In driving (lock-up ON)	Approximately matches the engine speed.
SEC SPEED	While driving	VSP SENSOR × 40
ENG SPEED	Engine running	Almost same reading as tachometer
SLIP REV	While driving	Engine speed – Input speed
PULLEY GEAR RATIO	In driving (forward)	2.43 – 0.38
	In driving (reverse)	2.43

Monitor item	Condition	Value/Status (Approx.)
G SPEED	Vehicle stopped	0.00 G
	During acceleration	The value changes to the positive side along with acceleration.
	During deceleration	The value changes to the positive side along with deceleration.
ACCEL POSI SEN 1	Accelerator pedal released	0.00 deg
	Accelerator pedal fully depressed	80.00 deg
VENG TRQ	While driving	The value changes along with acceleration/ deceleration.
PRI TRQ	While driving	The value changes along with acceleration/ deceleration.
TRQ RTO	While driving	The value changes along with acceleration/ deceleration.
SEC PRESSURE	• After engine warm up • Selector lever: “N” position • At idle	1.800 MPa
PRI PRESSURE	• After engine warm up • Selector lever: “N” position • At idle	1.100 MPa
FLUID TEMP	Ignition switch ON.	Displays the CVT fluid temperature.
DSR REV	While driving	It varies along with the driving condition.
TGT PLLY GR RATIO	In driving (forward)	2.43 – 0.38
	In driving (reverse)	2.43
LU PRS	• Engine started • Vehicle is stopped.	–0.50 MPa
	• Selector lever: “D” position • Accelerator pedal position: 1/8 or less • Vehicle speed: 20 km/h (12 MPH) or more	0.45 MPa
LINE PRS	• After engine warm up • Selector lever: “N” position • At idle	1.800 MPa
	• After engine warm up • Selector lever: “N” position • Depress the accelerator pedal fully	4.930 – 5.430 MPa
TRGT PRI PRESSURE	• After engine warm up • Selector lever: “N” position • At idle	1.100 MPa
TARGET SELECT PRESSURE	• After engine warm up • Selector lever: “N” position • At idle	0.000 MPa
TARGET SEC PRESSUR	• After engine warm up • Selector lever: “N” position • At idle	1.800 MPa
ISOLT1	• Engine started • Vehicle is stopped.	0.000 A
	• Selector lever: “D” position • Accelerator pedal position: 1/8 or less • Vehicle speed: 20 km/h (12 MPH) or more	0.500 A

Monitor item	Condition	Value/Status (Approx.)
ISOLT2	• After engine warm up • Selector lever: “N” position • At idle	0.750 – 0.800 A
	• After engine warm up • Selector lever: “N” position • Depress the accelerator pedal fully	0.350 – 0.400 A
PRI SOLENOID	• After engine warm up • Selector lever: “N” position • At idle	0.750 – 0.800 A
SEC SOLENOID CURRENT	• After engine warm up • Selector lever: “N” position • At idle	0.750 A
SELECT SOLENOID CURRENT	• After engine warm up • Selector lever: “N” position • At idle	1.000 A
SOLMON1	• Engine started • Vehicle is stopped.	0.000 A
	• Selector lever: “D” position • Accelerator pedal position: 1/8 or less • Vehicle speed: 20 km/h (12 MPH) or more	0.500 A
SOLMON2	• After engine warm up • Selector lever: “N” position • At idle	0.800 – 0.900 A
	• After engine warm up • Selector lever: “N” position • Depress the accelerator pedal fully	0.350 – 0.400 A
PRI SOL MON	• After engine warm up • Selector lever: “N” position • At idle	0.850 – 0.900 A
SEC SOL MON CURRENT	• After engine warm up • Selector lever: “N” position • At idle	0.750 A
SELECT SOL MON CURRENT	• After engine warm up • Selector lever: “N” position • At idle	1.000 A
D POSITION SW	Selector lever: “D” position	On
	Other than the above	Off
N POSITION SW	Selector lever: “N” position	On
	Other than the above	Off
R POSITION SW	Selector lever: “R” position	On
	Other than the above	Off
P POSITION SW	Selector lever: “P” position	On
	Other than the above	Off
L POSITION SW	Selector lever: “L” position	On
	Other than the above	Off
DS RANGE SW	Always	Off
BRAKESW	Brake pedal is depressed	On
	Brake pedal is released	Off
IDLE SW	Accelerator pedal is released	On
	Accelerator pedal is fully depressed	Off

Monitor item	Condition	Value/Status (Approx.)
SPORT MODE SW	Press the overdrive control switch	On
	Release the overdrive control switch	Off
ECO MODE SW	Always	Off
STRDWNSW	Always	Off
STRUPSW	Always	Off
DOWNLVR	Always	Off
UPLVR	Always	Off
NONMMODE	Always	On
MMODE	Always	Off
TOW MODE SW	In tow mode	On
	Other than above	Off
SHIFT IND SIGNAL	When the selector lever is positioned in between each position.	OFF
	Selector lever: P position	P
	Selector lever: R position	R
	Selector lever: N position	N
	Selector lever: D position	D
	Selector lever: L position	L
CVT LAMP	Approx. 2 seconds after ignition switch ON	On
	Other than the above	Off
SPORT MODE IND	In OD OFF	On
	Other than the above	Off
MANU MODE SIGNAL	Always	Off
DS RANGE SIGNAL	Always	Off
ECO MODE SIGNAL	Always	Off
VDC ON	VDC is activated	On
	Other than the above	Off
TCS ON	TCS is activated	On
	Other than the above	Off
ABS FAIL SIGNAL	When ABS malfunction signal is received	On
	Other than the above	Off
ABS ON	ABS is activated	On
	Other than the above	Off
RANGE	Selector lever: P and N positions	N/P
	Selector lever: R position	R
	Selector lever: D position	D
	Selector lever: D position (in OD OFF)	S
	Selector lever: L position	L
M GEAR POS	Always	1
G SEN SLOPE	Always	0%
G SEN CALIBRATION	When G sensor calibration is completed	DONE
	When G sensor calibration is not completed	YET
N IDLE STATUS	Always	Off

Monitor item	Condition	Value/Status (Approx.)
ENGBRKLVL	When the engine brake level of “ENGINE BRAKE ADJ”. in “Work Support” is ON	On
	When the engine brake level of “ENGINE BRAKE ADJ”. in “Work Support” is OFF	Off
DRIVE MODE STATS	Always	NOMAL
SNOW MODE	Always	Off
ECO MODE	Always	Off
NORMAL MODE	Always	Off
SPORT MODE	Always	Off
AIR BLDING STATE	Always	COMP
ELECTRIC OP DUTY	Always	0%
E-OP DUTY MON	Always	0%
ELECTRIC OP RELAY	Always	Off
E-OP RELAY MON	Always	Off
CVT-A*	—	—
CVT-B*	—	—

*: These monitor items do not use.

TERMINAL LAYOUT

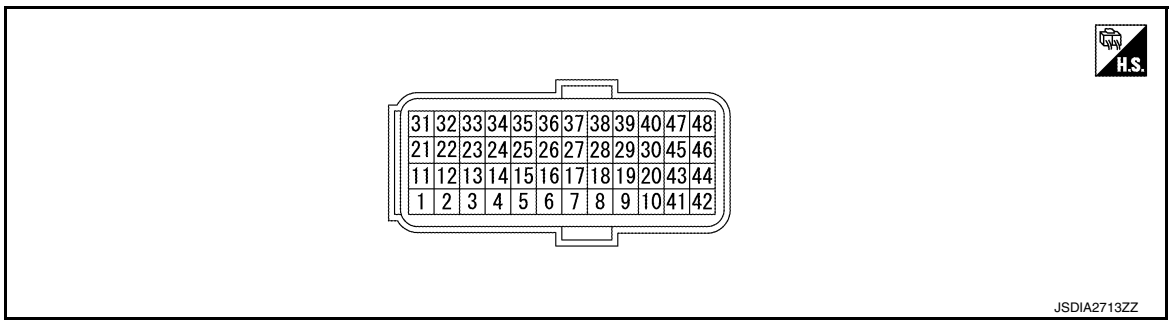

INPUT/OUTPUT SIGNAL STANDARD

Terminal No. (Wire color)		Description		Condition		Value (Approx.)
+	–	Signal	Input/ Output			
2 (SB)	Ground	L position switch	Input	Ignition switch ON	Selector lever: “L” position	10 – 16 V
					Other than the above	0 V
4 (Y)	Ground	D position switch	Input		Selector lever: “D” position	10 – 16 V
					Other than the above	0 V
5 (L)	Ground	N position switch	Input		Selector lever: “N” position	10 – 16 V
					Other than the above	0 V
6 (BR)	Ground	R position switch	Input		Selector lever: “R” position	10 – 16 V
					Other than the above	0 V
7 (V)	Ground	P position switch	Input		Selector lever: “P” position	10 – 16 V
					Other than the above	0 V
11 (Y)	Ground	Sensor ground	—	Always		0 V

Terminal No. (Wire color)		Description		Condition		Value (Approx.)
+	–	Signal	Input/ Output			
12 (LG)	Ground	CVT fluid temperature sensor	Output	Ignition switch ON	CVT fluid: Approx. 20°C (68°F)	2.01 – 2.05 V
					CVT fluid: Approx. 50°C (122°F)	1.45 – 1.50 V
					CVT fluid: Approx. 80°C 176°F)	0.90 – 0.94 V
16 (Y)	Ground	Secondary pressure sensor	Input	• Selector lever: “N” position • At idle		1.67 – 1.69 V
17 (LG)	Ground	Primary pressure sensor	Input	• Selector lever: “N” position • At idle		0.90 – 0.92 V
23 (P)	—	CAN-L	Input/ Output	—		—
24 (LG)	Ground	Input speed sensor	Input	• Selector lever: “L” position • Vehicle speed: 20 km/h (12 MPH)		800 Hz 1mSec/div 5V/div JSDIA3770GB
26 (LG)	Ground	Sensor power supply	Output	Ignition switch: ON		5.0 V
				Ignition switch: OFF		0 V
30 (SB)	Ground	Line pressure solenoid valve	Output	• After engine warming up • Selector lever: “N” position • At idle		2.5mSec/div 5V/div JSDIA1897GB
				• After engine warming up • Selector lever: “N” position • Depress the accelerator pedal fully		2.5mSec/div 5V/div JSDIA1898GB
33 (L)	—	CAN-H	Input/ Output	—		—
34 (BR)	Ground	Output speed sensor	Input	• Selector lever: “L” position • Vehicle speed: 20 km/h (12 MPH)		200 Hz 2.5mSec/div 5V/div JSDIA1897GB

Terminal No. (Wire color)		Description		Condition	Value (Approx.)
+	–	Signal	Input/ Output		
35 (LG)	Ground	Primary speed sensor	Input	• Selector lever: “L” position • Vehicle speed: 20 km/h (12 MPH)	600 Hz 1mSec/div 5V/div JSDIA3770GB
37 (BR)	Ground	Select solenoid valve	Output	• Engine started • Vehicle is stopped • Selector lever: “N” position	2.5mSec/div 5V/div JSDIA1897GB
38 (Y)	Ground	Torque converter clutch solenoid valve	Output	• Selector lever: “D” position • Accelerator pedal position: 1/8 or less • Vehicle speed: 20 km/h (12 MPH) or more	1mSec/div 5V/div JSDIA1900GB
				• Engine started • Vehicle is stopped	2.5mSec/div 5V/div JSDIA1903GB
39 (L)	Ground	Secondary pressure solenoid valve	Output	• Selector lever: “L” position • Vehicle speed: 20 km/h (12 MPH)	2.5mSec/div 5V/div JSDIA1897GB
40 (V)	Ground	Primary pressure solenoid valve	Output	• Selector lever: “L” position • Vehicle speed: 20 km/h (12 MPH)	2.5mSec/div 5V/div JSDIA1897GB
41 (B)	Ground	Ground	Output	Always	0 V
42 (B)	Ground	Ground	Output	Always	0 V
45 (LG)	Ground	Power (backup)	Input	Always	10 – 16 V

Terminal No. (Wire color)		Description		Condition	Value (Approx.)
+	–	Signal	Input/ Output		
46 (LG)	Ground	Power (backup)	Input	Always	10 – 16 V
47 (Y)	Ground	Power supply	Input	Ignition switch: ON	10 – 16 V
				Ignition switch: OFF	0 V
48 (Y)	Ground	Power supply	Input	Ignition switch: ON	10 – 16 V
				Ignition switch: OFF	0 V

Fail-safe

INFOID:0000000009177522

TCM has a fail-safe mode. The mode functions so that operation can be continued even if the signal circuit of the main electronically controlled input/output parts is damaged.
If the vehicle shows following behaviors including “poor acceleration”, a malfunction of the applicable system is detected by TCM and the vehicle may be in a fail-safe mode. At this time, check the DTC code and perform inspection and repair according to the malfunction diagnosis procedures.

Fail-safe function

DTC	Vehicle behavior	Conditions of vehicle
P062F	• Not changed from normal driving	—
P0705	• Shift position indicator on combination meter is not displayed • Selector shock is large • Start is slow • Acceleration is slow • Lock-up is not performed	—
P0706	• Shift position indicator on combination meter is not displayed • Selector shock is large • Start is slow • Acceleration is slow • Lock-up is not performed	—
P0711	• Start is slow • Acceleration is slow	Engine coolant temperature when engine start: Temp. ≥ 10°C (50°F)
	• Selector shock is large • Start is slow • Acceleration is slow	Engine coolant temperature when engine start: –35°C (–31°F) ≤ Temp. < 10°C (50°F)
	• Selector shock is large • Start is slow • Acceleration is slow	Engine coolant temperature when engine star: Temp. < –35°C (–31°F)
P0712	• Start is slow • Acceleration is slow	Engine coolant temperature when engine start: Temp. ≥ 10°C (50°F)
	• Selector shock is large • Start is slow • Acceleration is slow	Engine coolant temperature when engine start: –35°C (–31°F) ≤ Temp. < 10°C (50°F)
	• Selector shock is large • Start is slow • Acceleration is slow	Engine coolant temperature when engine star: Temp. < –35°C (–31°F)

DTC	Vehicle behavior	Conditions of vehicle
P0713	• Start is slow • Acceleration is slow	Engine coolant temperature when engine start: Temp. ≥ 10°C (50°F)
	• Selector shock is large • Start is slow • Acceleration is slow	Engine coolant temperature when engine start: −35°C (−31°F) ≤ Temp. < 10°C (50°F)
	• Selector shock is large • Start is slow • Acceleration is slow	Engine coolant temperature when engine star: Temp. < −35°C (−31°F)
P0715	• Start is slow • Acceleration is slow • Lock-up is not performed	—
P0717	• Start is slow • Acceleration is slow • Lock-up is not performed	—
P0740	• Start is slow • Acceleration is slow • Lock-up is not performed	—
P0743	• Start is slow • Acceleration is slow • Lock-up is not performed	—
P0744	• Start is slow • Acceleration is slow • Lock-up is not performed	—
P0746	• Selector shock is large • Start is slow • Acceleration is slow • Lock-up is not performed	—
P0776	• Selector shock is large • Start is slow • Acceleration is slow • Lock-up is not performed • Vehicle speed is not increased	When a malfunction occurs on the low oil pressure side
	• Selector shock is large • Start is slow • Acceleration is slow • Lock-up is not performed	When a malfunction occurs on the high oil pressure side
P0778	• Selector shock is large • Start is slow • Acceleration is slow • Lock-up is not performed	—
P0779	• Selector shock is large • Start is slow • Acceleration is slow • Lock-up is not performed	
P0841	• Not changed from normal driving	
P0847	• Not changed from normal driving	—
P0848	• Not changed from normal driving	—
P084C	• Not changed from normal driving	
P084D	• Not changed from normal driving	
P0863	• Selector shock is large • Start is slow • Acceleration is slow • Lock-up is not performed	—

DTC	Vehicle behavior	Conditions of vehicle
P0890	• Selector shock is large • Start is slow • Acceleration is slow • Lock-up is not performed • Vehicle speed is not increased	
P0962	• Selector shock is large • Start is slow • Acceleration is slow • Lock-up is not performed	—
P0963	• Selector shock is large • Start is slow • Acceleration is slow • Lock-up is not performed	—
P0965	• Selector shock is large • Start is slow • Acceleration is slow • Lock-up is not performed	When a malfunction occurs on the low oil pressure side
	• Selector shock is large • Lock-up is not performed	When a malfunction occurs on the high oil pressure side
P0966	• Selector shock is large • Start is slow • Acceleration is slow • Lock-up is not performed	—
P0967	• Selector shock is large • Start is slow • Acceleration is slow • Lock-up is not performed	—
P2765	• Start is slow • Acceleration is slow • Lock-up is not performed	—
P2813	• Selector shock is large • Start is slow • Acceleration is slow • Vehicle speed is not increased	When a malfunction occurs on the low oil pressure side
	• Selector shock is large	When a malfunction occurs on the high oil pressure side
P2814	• Selector shock is large	—
P2815	• Selector shock is large	—
U0073	• Selector shock is large • Start is slow • Acceleration is slow • Lock-up is not performed	—
U0100	• Selector shock is large • Start is slow • Acceleration is slow • Lock-up is not performed	—
U0102	• Not changed from normal driving	—
U0140	• Not changed from normal driving	—
U0141	• Not changed from normal driving	—
U0155	• Not changed from normal driving	—
U0300	• Selector shock is large • Start is slow • Acceleration is slow • Lock-up is not performed	—
U1000	• Not changed from normal driving	—
U1117	• Not changed from normal driving	—

Protection Control

INFOID:0000000009177523

The TCM becomes the protection control status temporarily to protect the safety when the safety of TCM and transmission is lost. It automatically returns to the normal status if the safety is secured.
The TCM has the following protection control.

CONTROL FOR WHEEL SPIN

Control	When a wheel spin is detected, the engine output and gear ratio are limited and the line pressure is increased. Limits engine output when a wheel spin occurs in any of right and left drive wheels.
Vehicle behavior in control	If the accelerator is kept depressing during wheel spin, the engine revolution and vehicle speed are limited to a certain degree.
Normal return condition	Wheel spin convergence returns the control to the normal control.

TORQUE IS REDUCED WHEN DRIVING WITH THE REVERSE GEAR

Control	Engine output is controlled according to a vehicle speed while reversing the vehicle.
Vehicle behavior in control	Power performance may be lowered while reversing the vehicle.
Normal return condition	Torque returns to normal by positioning the selector lever in a range other than “R” position.

CONTROL WHEN FLUID TEMPERATURE IS HIGH

Control	When the CVT fluid temperature is high, the gear shift permission maximum revolution and the maximum torque are reduced than usual to prevent increase of the oil temperature.
Vehicle behavior in control	Power performance may be lowered, compared to normal control.
Normal return condition	The control returns to the normal control when CVT fluid temperature is lowered.

REVERSE PROHIBIT CONTROL

Control	The reverse brake is controlled to avoid becoming engaged when the selector lever is set in “R” position while driving in forward direction at more than the specified speed.
Vehicle behavior in control	If the selector lever is put at “R” position when driving with the forward gear, the gear becomes neutral, not reverse.
Normal return condition	The control returns to normal control when the vehicle is driven at low speeds. (The reverse brake becomes engaged.)

DTC Inspection Priority Chart

INFOID:0000000009177524

If multiple malfunction codes are detected at the same time, check each code according to the DTC check priority list below.

Priority	DTC (Diagnostic Trouble Code)	Reference
1	P0863 CONTROL UNIT (CAN)	TM-145, "DTC Logic"
	U0073 COMM BUS A OFF	TM-89, "DTC Logic"
	U0100 LOST COMM (ECM A)	TM-90, "DTC Logic"
	U0102 LOST COMM (TRANSFER)	TM-91, "DTC Logic"
	U0140 LOST COMM (BCM)	TM-92, "DTC Logic"
	U0141 LOST COMM (BCM A)	TM-93, "DTC Logic"
	U0155 LOST COMM (IPC)	TM-94, "DTC Logic"
	U0300 CAN COMM DATA	TM-95, "DTC Logic"
	U1000 CAN COMM CIRC	TM-96, "DTC Logic"
	U1117 LOST COMM (ABS)	TM-97, "DTC Logic"
2	P0740 TORQUE CONVERTER	TM-122, "DTC Logic"
	P0743 TORQUE CONVERTER	TM-124, "DTC Logic"
	P0778 PC SOLENOID B	TM-132, "DTC Logic"
	P0779 PC SOLENOID B	TM-134, "DTC Logic"
	P0962 PC SOLENOID A	TM-148, "DTC Logic"
	P0963 PC SOLENOID A	TM-150, "DTC Logic"
	P0966 PC SOLENOID B	TM-154, "DTC Logic"
	P0967 PC SOLENOID B	TM-156, "DTC Logic"
	P2814 SELECT SOLENOID	TM-163, "DTC Logic"
	P2815 SELECT SOLENOID	TM-165, "DTC Logic"
3	P062F EEPROM	TM-98, "DTC Logic"
	P0705 T/M RANGE SENSOR A	TM-99, "DTC Logic"
	P0706 T/M RANGE SENSOR A	TM-105, "DTC Logic"
	P0711 FLUID TEMP SENSOR A	TM-108, "DTC Logic (For North America)" (For North America), TM-109, "DTC Logic (Except for North America)" (Except for North America)
	P0712 FLUID TEMP SENSOR A	TM-112, "DTC Logic"
	P0713 FLUID TEMP SENSOR A	TM-114, "DTC Logic"
	P0715 INPUT SPEED SENSOR A	TM-116, "DTC Logic"
	P0717 INPUT SPEED SENSOR A	TM-119, "DTC Logic"
	P0841 FLUID PRESS SEN/SW A	TM-136, "DTC Logic"
	P0847 FLUID PRESS SEN/SW B	TM-137, "DTC Logic"
	P0848 FLUID PRESS SEN/SW B	TM-139, "DTC Logic"
	P084C FLUID PRESS SEN/SW H	TM-141, "DTC Logic"
	P084D FLUID PRESS SEN/SW H	TM-143, "DTC Logic"
	P0890 TCM	TM-146, "DTC Logic"
	P2765 INPUT SPEED SENSOR B	TM-158, "DTC Logic"
4	P0744 TORQUE CONVERTER	TM-126, "DTC Logic"
	P0746 PC SOLENOID A	TM-128, "DTC Logic"
	P0776 PC SOLENOID B	TM-130, "DTC Logic"
	P0965 PC SOLENOID B	TM-152, "DTC Logic"
	P2813 SELECT SOLENOID	TM-161, "DTC Logic"

DTC Index

INFOID:0000000009177525

NOTE:
- If multiple malfunction codes are detected at the same time, check each code according to the “DTC check priority list”. TM-58, "DTC Inspection Priority Chart".
- The ignition counter is displayed in “FFD”. Refer to TM-43, "CONSULT Function".

DTC*1, *2		Items (CONSULT screen terms)	Trip	MIL	Reference
GST	CONSULT (TRANSMISSION)				
P062F	P062F	EEPROM	1	ON	TM-98
P0705	P0705	T/M RANGE SENSOR A	2	ON	TM-99
P0706	P0706	T/M RANGE SENSOR A	2	ON	TM-105
P0711	P0711	FLUID TEMP SENSOR A	2	ON	TM-108 (For North America), TM-109 (Except for North America)
P0712	P0712	FLUID TEMP SENSOR A	2	ON	TM-112
P0713	P0713	FLUID TEMP SENSOR A	2	ON	TM-114
P0715	P0715	INPUT SPEED SENSOR A	2	ON	TM-116
P0717	P0717	INPUT SPEED SENSOR A	2	ON	TM-119
P0740	P0740	TORQUE CONVERTER	2	ON	TM-122
P0743	P0743	TORQUE CONVERTER	2	ON	TM-124
P0744	P0744	TORQUE CONVERTER	2	ON	TM-126
P0746	P0746	PC SOLENOID A	2	ON	TM-128
P0776	P0776	PC SOLENOID B	2	ON	TM-130
P0778	P0778	PC SOLENOID B	2	ON	TM-132
P0779	P0779	PC SOLENOID B	2	ON	TM-134
P0841	P0841	FLUID PRESS SEN/SW A	2	ON	TM-136
P0847	P0847	FLUID PRESS SEN/SW B	2	ON	TM-137
P0848	P0848	FLUID PRESS SEN/SW B	2	ON	TM-139
P084C	P084C	FLUID PRESS SEN/SW H	2	ON	TM-141
P084D	P084D	FLUID PRESS SEN/SW H	2	ON	TM-143
P0863	P0863	CONTROL UNIT (CAN)	1	ON	TM-145
P0890	P0890	TCM	1	ON	TM-146
P0962	P0962	PC SOLENOID A	2	ON	TM-148
P0963	P0963	PC SOLENOID A	2	ON	TM-150
P0965	P0965	PC SOLENOID B	2	ON	TM-152
P0966	P0966	PC SOLENOID B	2	ON	TM-154
P0967	P0967	PC SOLENOID B	2	ON	TM-156
P2765	P2765	INPUT SPEED SENSOR B	2	ON	TM-158
P2813	P2813	SELECT SOLENOID	2	ON	TM-161
P2814	P2814	SELECT SOLENOID	2	ON	TM-163
P2815	P2815	SELECT SOLENOID	2	ON	TM-165
U0073	U0073	COMM BUS A OFF	1	ON	TM-89
U0100	U0100	LOST COMM (ECM A)	1	ON	TM-90
—	U0102	LOST COMM (TRANSFER)	1	—	TM-91

DTC*1, *2		Items (CONSULT screen terms)	Trip	MIL	Reference
GST	CONSULT (TRANSMISSION)				
—	U0140	LOST COMM (BCM)	1	—	TM-92
—	U0141	LOST COMM (BCM A)	1	—	TM-93
—	U0155	LOST COMM (IPC)	1	—	TM-94
—	U0300	CAN COMM DATA	1	—	TM-95
—	U1000	CAN COMM CIRC	1	—	TM-96
—	U1117	LOST COMM (ABS)	1	—	TM-97

*1: These numbers are specified by SAE J2012/ISO 15031-6.
*2: The DTC number of the 1st trip is the same as the DTC number.

WIRING DIAGRAM

CVT CONTROL SYSTEM

Wiring diagram

INFOID:0000000009177526

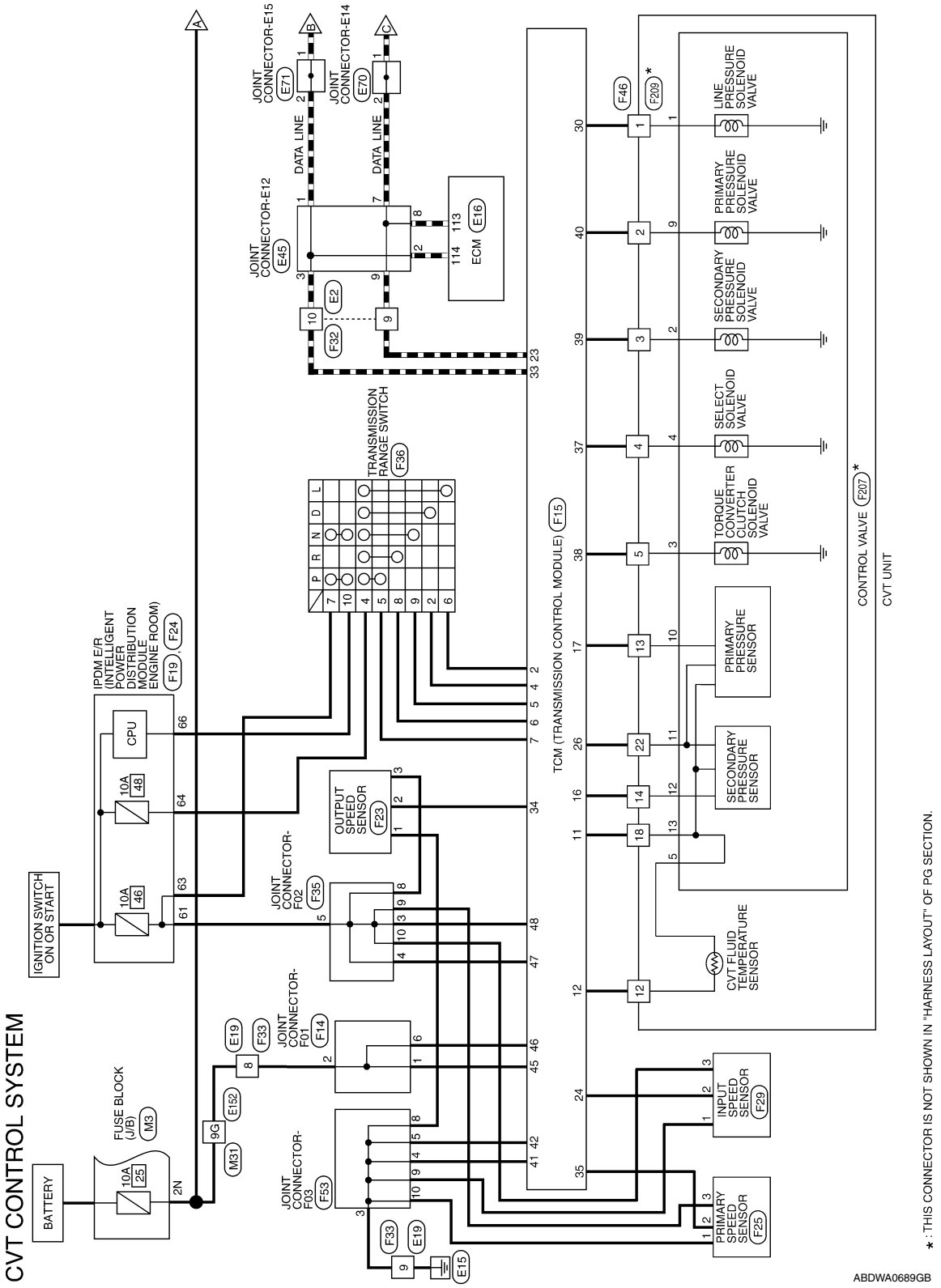

★: THIS CONNECTOR IS NOT SHOWN IN "HARNESS LAYOUT" OF PG SECTION.

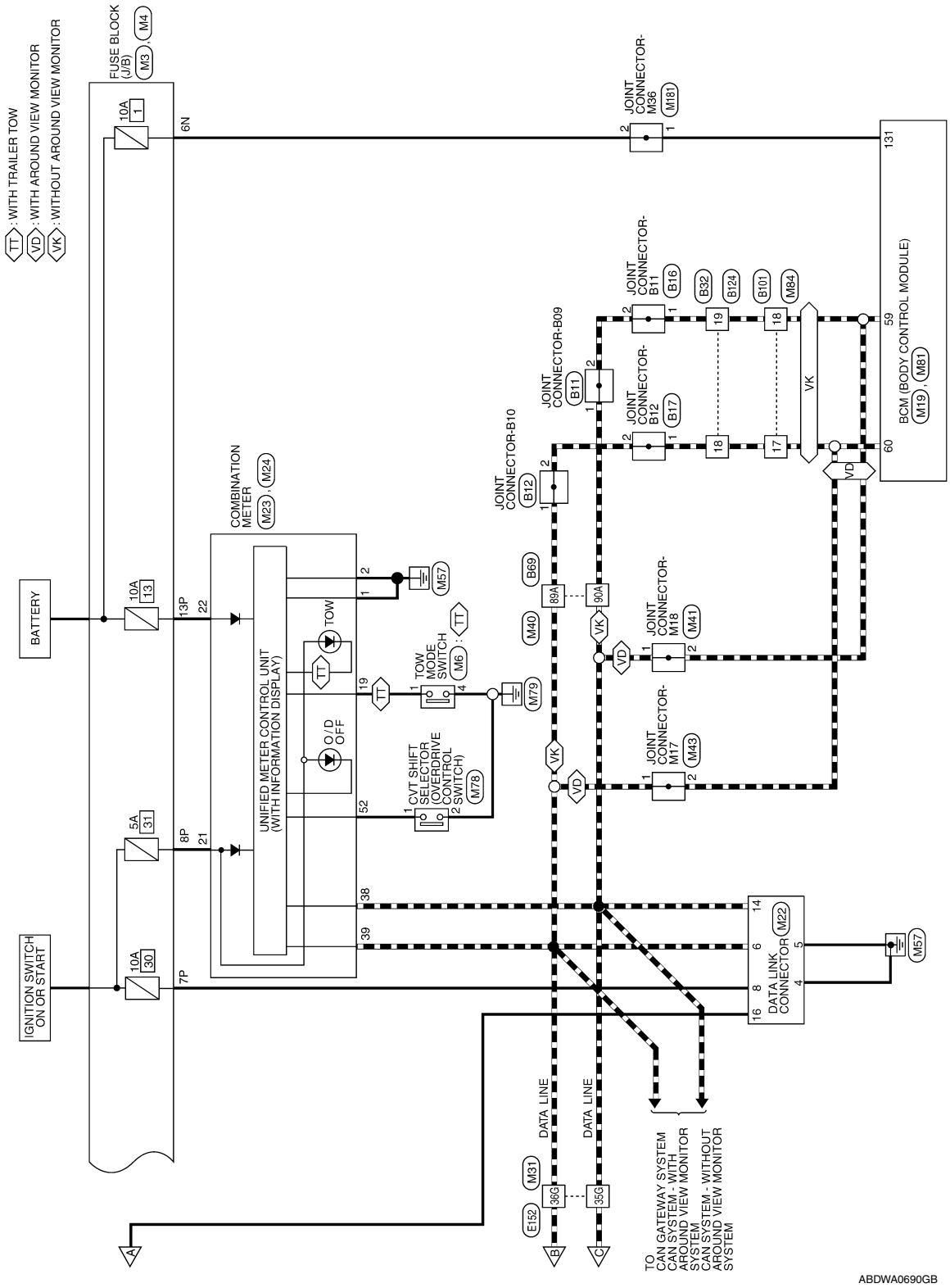
TT : WITH TRAILER TOW
VD : WITH AROUND VIEW MONITOR
VK : WITHOUT AROUND VIEW MONITOR
FUSE BLOCK (J/B)
M3, M4
BATTERY
IGNITION SWITCH ON OR START
COMBINATION METER
M23, M24
UNIFIED METER CONTROL UNIT (WITH INFORMATION DISPLAY)
TOW
O/D OFF
TOW MODE SWITCH
M6
CVT SHIFT SELECTOR (OVERDRIVE CONTROL SWITCH)
M78
M57
M79
M40
JOINT CONNECTOR-B09
JOINT CONNECTOR-B10
JOINT CONNECTOR-M36
M181
JOINT CONNECTOR-B11
B16
JOINT CONNECTOR-B12
B17
JOINT CONNECTOR-M18
M41
JOINT CONNECTOR-M17
M43
B32
B124
B101
M84
BCM (BODY CONTROL MODULE)
M19, M81
DATA LINK CONNECTOR
M22
DATA LINE
M31
E152
TO CAN GATEWAY SYSTEM
CAN SYSTEM - WITH AROUND VIEW MONITOR SYSTEM
CAN SYSTEM - WITHOUT AROUND VIEW MONITOR SYSTEM
ABDWA0690GB

CVT CONTROL SYSTEM CONNECTORS

Connector No.	M3
Connector Name	FUSE BLOCK (J/B)
Connector Color	WHITE

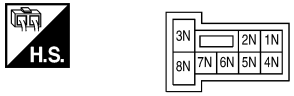

Terminal No.	Color of Wire	Signal Name
2N	BG	–
6N	W	–

Connector No.	M4
Connector Name	FUSE BLOCK (J/B)
Connector Color	WHITE

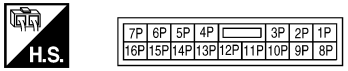

Terminal No.	Color of Wire	Signal Name
7P	LG	–
8P	BG	–
13P	W	–

Connector No.	M6
Connector Name	TOW MODE SWITCH
Connector Color	GRAY

Terminal No.	Color of Wire	Signal Name
1	SB	–
4	B	–

Connector No.	M19
Connector Name	BCM (BODY CONTROL MODULE)
Connector Color	BLACK

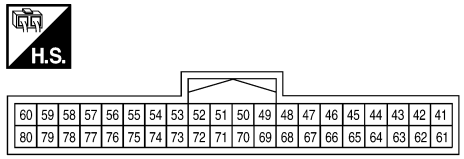

Terminal No.	Color of Wire	Signal Name
59	P	CAN-L
60	L	CAN-H

Connector No.	M22
Connector Name	DATA LINK CONNECTOR
Connector Color	WHITE

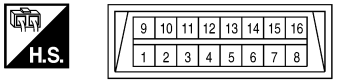

Terminal No.	Color of Wire	Signal Name
4	B	–
5	B	–
6	L	–
8	LG	–
14	P	–
16	BG	–

Connector No.	M23
Connector Name	COMBINATION METER
Connector Color	WHITE

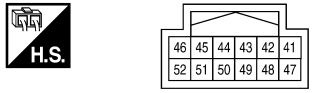

Terminal No.	Color of Wire	Signal Name
52	P	O/D OFF/SPORTS SW

ABDIA1090GB

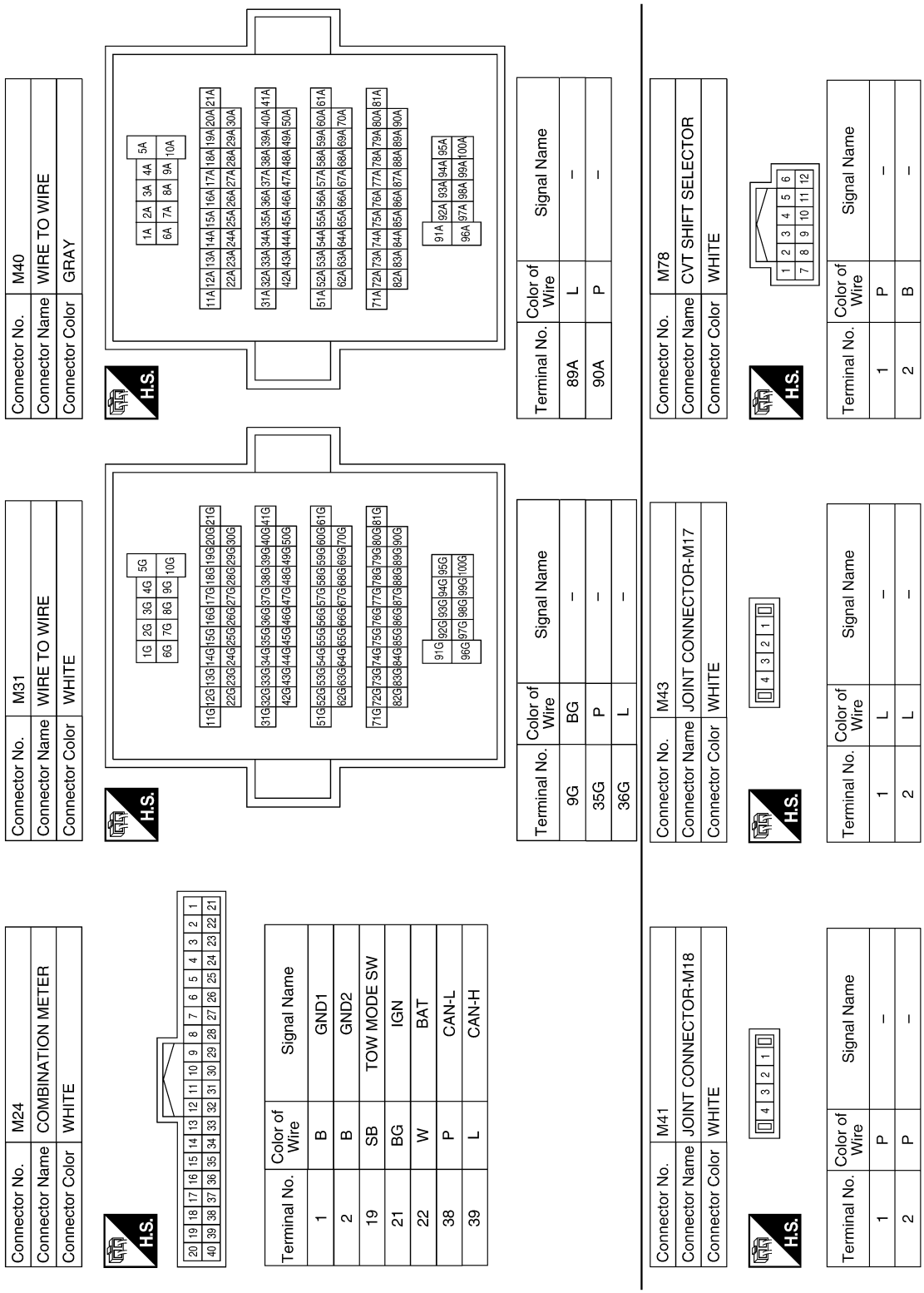
Connector No. M24
Connector Name COMBINATION METER
Connector Color WHITE
H.S.
Terminal No. | Color of Wire | Signal Name
1 | B | GND1
2 | B | GND2
19 | SB | TOW MODE SW
21 | BG | IGN
22 | W | BAT
38 | P | CAN-L
39 | L | CAN-H
Connector No. M31
Connector Name WIRE TO WIRE
Connector Color WHITE
H.S.
Terminal No. | Color of Wire | Signal Name
9G | BG | –
35G | P | –
36G | L | –
Connector No. M40
Connector Name WIRE TO WIRE
Connector Color GRAY
H.S.
Terminal No. | Color of Wire | Signal Name
89A | L | –
90A | P | –
Connector No. M41
Connector Name JOINT CONNECTOR-M18
Connector Color WHITE
H.S.
Terminal No. | Color of Wire | Signal Name
1 | P | –
2 | P | –
Connector No. M43
Connector Name JOINT CONNECTOR-M17
Connector Color WHITE
H.S.
Terminal No. | Color of Wire | Signal Name
1 | L | –
2 | L | –
Connector No. M78
Connector Name CVT SHIFT SELECTOR
Connector Color WHITE
H.S.
Terminal No. | Color of Wire | Signal Name
1 | P | –
2 | B | –
ABDIA1091GB

Connector No.	M81
Connector Name	BCM (BODY CONTROL MODULE)
Connector Color	WHITE

H.S.

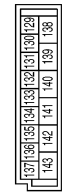

Terminal No.	Color of Wire	Signal Name
131	W	BAT BCM FUSE

Connector No.	M84
Connector Name	WIRE TO WIRE
Connector Color	WHITE

H.S.

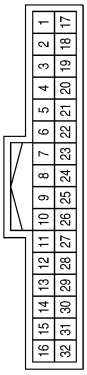

Terminal No.	Color of Wire	Signal Name
17	L	–
18	P	–

Connector No.	M181
Connector Name	JOINT CONNECTOR-M36
Connector Color	WHITE

H.S.

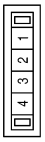

Terminal No.	Color of Wire	Signal Name
1	W	–
2	W	–

Connector No.	E2
Connector Name	WIRE TO WIRE
Connector Color	WHITE

H.S.

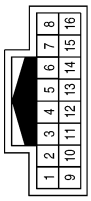

Terminal No.	Color of Wire	Signal Name
9	P	–
10	L	–

Connector No.	E16
Connector Name	ECM
Connector Color	GRAY

H.S.

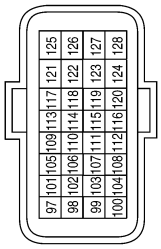

Terminal No.	Color of Wire	Signal Name
113	P	CAN-L
114	L	CAN-H

Connector No.	E19
Connector Name	WIRE TO WIRE
Connector Color	WHITE

H.S.

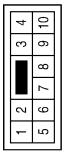

Terminal No.	Color of Wire	Signal Name
8	LG	–
9	B	–

ABDIA1092GB

Connector No.	E45
Connector Name	JOINT CONNECTOR-E12
Connector Color	BLUE

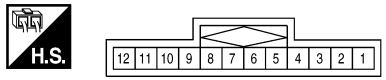

Terminal No.	Color of Wire	Signal Name
1	L	–
2	L	–
3	L	–
7	P	–
8	P	–
9	P	–

Connector No.	E70
Connector Name	JOINT CONNECTOR-E14
Connector Color	BLACK

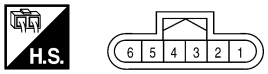

Terminal No.	Color of Wire	Signal Name
1	P	–
2	P	–

Connector No.	E71
Connector Name	JOINT CONNECTOR-E15
Connector Color	BLACK

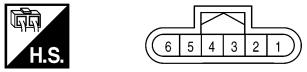

Terminal No.	Color of Wire	Signal Name
1	L	–
2	L	–

Connector No.	E152
Connector Name	WIRE TO WIRE
Connector Color	WHITE

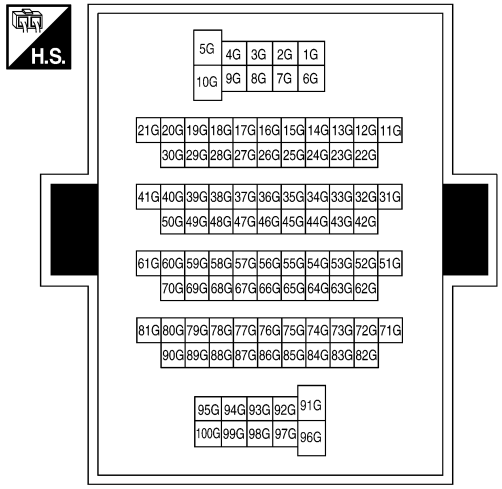

ABDIA1093GB

Terminal No.	Color of Wire	Signal Name
9G	LG	–
35G	P	–
36G	L	–

Connector No.	F14
Connector Name	JOINT CONNECTOR-F01
Connector Color	BLACK

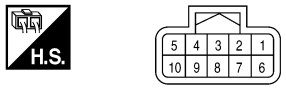

Terminal No.	Color of Wire	Signal Name
1	LG	–
2	LG	–
6	LG	–

Connector No.	F15
Connector Name	TCM (TRANSMISSION CONTROL MODULE)
Connector Color	BLACK

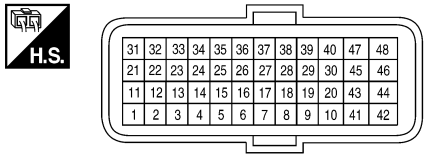

Terminal No.	Color of Wire	Signal Name
1	–	–
2	SB	L RANGE SW
3	–	–
4	Y	D RANGE SW
5	L	N RANGE SW
6	BR	R RANGE SW
7	V	P RANGE SW
8	–	–
9	–	–
10	–	–

Terminal No.	Color of Wire	Signal Name
11	Y	SENSOR GND
12	LG	CVT FLUID TEMP SENS
13	–	–
14	–	–
15	–	–
16	Y	SEC PRESS SENS
17	LG	PRI PRESS SENS
18	–	–
19	–	–
20	–	–
21	–	–
22	–	–
23	P	CAN-L
24	LG	INPUT SPEED SENS
25	–	–
26	LG	SENS PWR SUPPLY
27	–	–
28	–	–
29	–	–
30	SB	LINE PRESS SOL VALVE
31	–	–

Terminal No.	Color of Wire	Signal Name
32	–	–
33	L	CAN-H
34	BR	OUTPUT SPEED SENS
35	LG	PRI SPEED SENS
36	–	–
37	BR	SELECT SOL VALVE
38	Y	TCC SOLE VALVE
39	L	SEC PRESS SOLE VALVE
40	V	PRI PRESS SOLE VALVE
41	B	GND
42	B	GND
43	–	–
44	–	–
45	LG	BATT
46	LG	BATT
47	Y	VIGN
48	Y	VIGN

Connector No.	F19
Connector Name	IPDM E/R (INTELLIGENT POWER DISTRIBUTION MODULE ENGINE ROOM)
Connector Color	WHITE

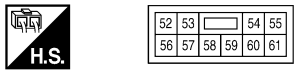

Terminal No.	Color of Wire	Signal Name
61	Y	AT ECU

Connector No.	F23
Connector Name	OUTPUT SPEED SENSOR
Connector Color	BLACK

Terminal No.	Color of Wire	Signal Name
1	B	–
2	BR	–
3	Y	–

ABDIA1094GB

Connector No.	F24
Connector Name	IPDM E/R (INTELLIGENT POWER DISTRIBUTION MODULE ENGINE ROOM)
Connector Color	WHITE

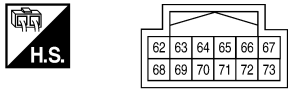

Terminal No.	Color of Wire	Signal Name
63	L	INHIBIT SW
64	LG	START IG EGI
66	G	NP SW

Connector No.	F25
Connector Name	PRIMARY SPEED SENSOR
Connector Color	BLACK

Terminal No.	Color of Wire	Signal Name
1	B	–
2	LG	–
3	Y	–

Connector No.	F29
Connector Name	INPUT SPEED SENSOR
Connector Color	BLACK

Terminal No.	Color of Wire	Signal Name
1	B	–
2	LG	–
3	Y	–

Connector No.	F32
Connector Name	WIRE TO WIRE
Connector Color	WHITE

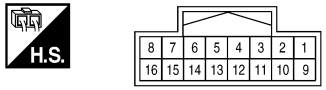

Terminal No.	Color of Wire	Signal Name
9	P	–
10	L	–

Connector No.	F33
Connector Name	WIRE TO WIRE
Connector Color	WHITE

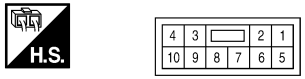

Terminal No.	Color of Wire	Signal Name
8	LG	–
9	B	–

Connector No.	F35
Connector Name	JOINT CONNECTOR-F02
Connector Color	BLACK

Terminal No.	Color of Wire	Signal Name
3	Y	–
4	Y	–
5	Y	–
8	Y	–
9	Y	–
10	Y	–

ABDIA1095GB

Connector No.	F36
Connector Name	TRANSMISSION RANGE SWITCH
Connector Color	BLACK

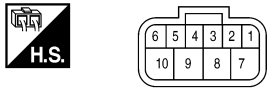

Terminal No.	Color of Wire	Signal Name
1	–	–
2	Y	–
3	–	–
4	LG	–
5	V	–
6	SB	–
7	L	–
8	BR	–
9	L	–
10	G	–

Connector No.	F46
Connector Name	CVT UNIT
Connector Color	GRAY

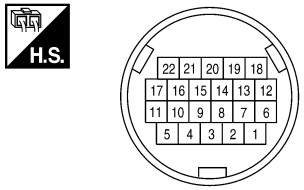

Terminal No.	Color of Wire	Signal Name
1	SB	–
2	V	–
3	L	–
4	BR	–
5	Y	–
6	–	–
7	–	–
8	–	–
9	–	–
10	–	–
11	–	–
12	LG	–
13	LG	–
14	Y	–
15	–	–
16	–	–
17	–	–
18	Y	–
19	–	–
20	–	–
21	–	–
22	LG	–

Connector No.	F53
Connector Name	JOINT CONNECTOR-F03
Connector Color	BLACK

Terminal No.	Color of Wire	Signal Name
3	B	–
4	B	–
5	B	–
8	B	–
9	B	–
10	B	–

ABDIA1096GB

Connector No.	F207
Connector Name	CONTROL VALVE
Connector Color	–

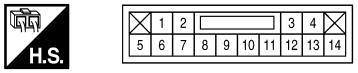

Terminal No.	Color of Wire	Signal Name
1	GR	–
2	BR	–
3	Y	–
4	P	–
5	B	–
6	–	–
7	–	–
8	–	–
9	O	–
10	L	–
11	W	–
12	R	–
13	B/Y	–
14	–	–

Connector No.	F209
Connector Name	CVT UNIT
Connector Color	BLACK

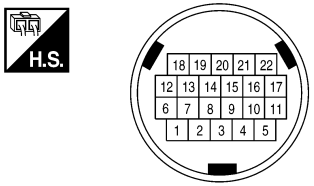

Terminal No.	Color of Wire	Signal Name
1	BR	–
2	LG	–
3	L	–
4	Y	–
5	BR	–
6	–	–
7	–	–
8	–	–
9	–	–
10	–	–
11	–	–
12	V	–
13	LG	–
14	Y	–
15	–	–
16	–	–
17	–	–
18	Y	–
19	–	–
20	–	–
21	–	–
22	LG	–

Connector No.	B11
Connector Name	JOINT CONNECTOR-B09
Connector Color	WHITE

Terminal No.	Color of Wire	Signal Name
1	P	–
2	P	–

ABDIA1097GB

Connector No.	B12
Connector Name	JOINT CONNECTOR-B10
Connector Color	WHITE

H.S.

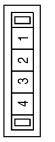

Terminal No.	Color of Wire	Signal Name
1	L	–
2	L	–

Connector No.	B16
Connector Name	JOINT CONNECTOR-B11
Connector Color	WHITE

H.S.

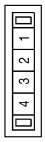

Terminal No.	Color of Wire	Signal Name
1	P	–
2	P	–

Connector No.	B17
Connector Name	JOINT CONNECTOR-B12
Connector Color	WHITE

H.S.

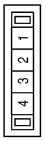

Terminal No.	Color of Wire	Signal Name
1	L	–
2	L	–

Connector No.	B32
Connector Name	WIRE TO WIRE
Connector Color	WHITE

H.S.

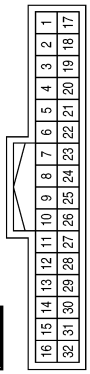

Terminal No.	Color of Wire	Signal Name
18	L	–
19	P	–

Connector No.	B69
Connector Name	WIRE TO WIRE
Connector Color	GRAY

H.S.

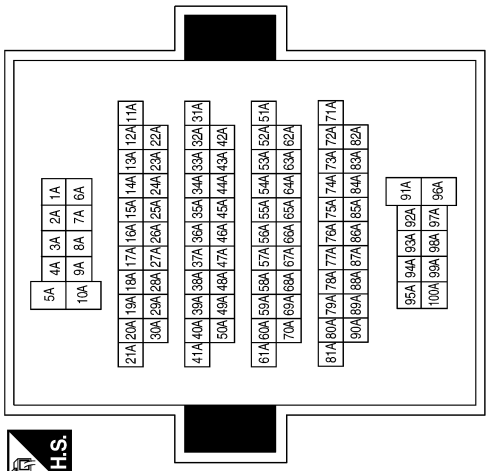

Terminal No.	Color of Wire	Signal Name
89A	L	–
90A	P	–

ABDIA1098GB

Connector No.	B124
Connector Name	WIRE TO WIRE
Connector Color	WHITE

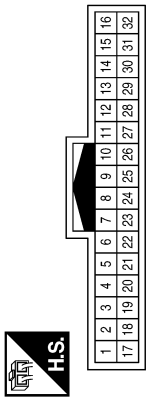

Terminal No.	Color of Wire	Signal Name
18	L	–
19	P	–

Connector No.	B101
Connector Name	WIRE TO WIRE
Connector Color	WHITE

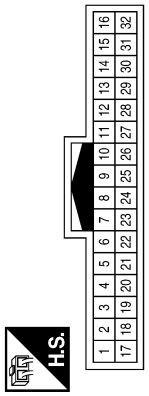

Terminal No.	Color of Wire	Signal Name
17	L	–
18	P	–

ABDIA1099GB

CVT SHIFT LOCK SYSTEM

Wiring diagram

INFOID:0000000009177527

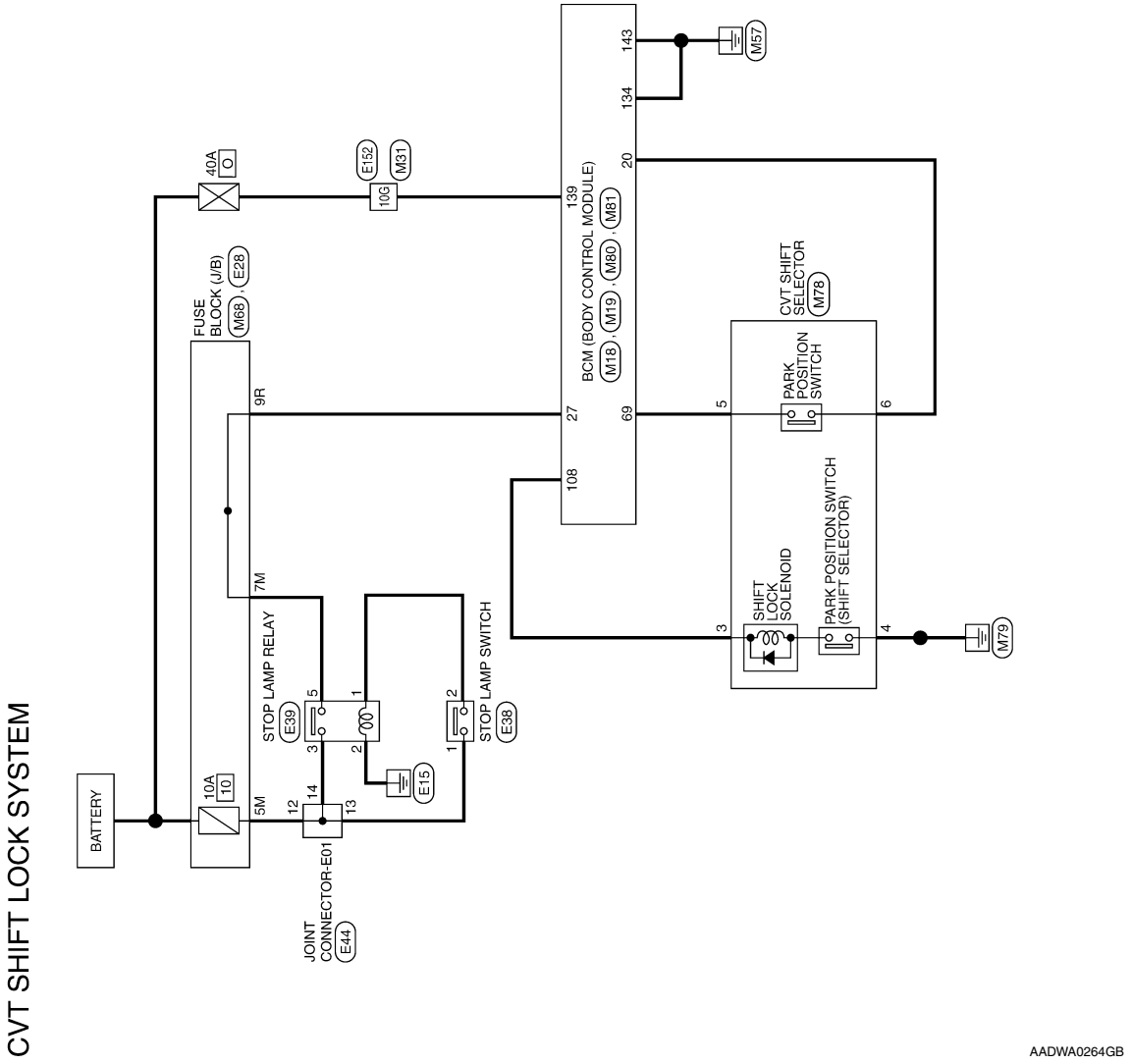

CVT SHIFT LOCK SYSTEM CONNECTORS

Connector No.	M18
Connector Name	BCM (BODY CONTROL MODULE)
Connector Color	GREEN

H.S.

20	19	18	17	16	15	14	13	12	11	10	9	8	7	6	5	4	3	2	1
40	39	38	37	36	35	34	33	32	31	30	29	28	27	26	25	24	23	22	21

Terminal No.	Color of Wire	Signal Name
20	W	SHIFT P
27	G	BRAKE SW LAMP

Connector No.	M19
Connector Name	BCM (BODY CONTROL MODULE)
Connector Color	BLACK

H.S.

60	59	58	57	56	55	54	53	52	51	50	49	48	47	46	45	44	43	42	41
80	79	78	77	76	75	74	73	72	71	70	69	68	67	66	65	64	63	62	61

Terminal No.	Color of Wire	Signal Name
69	G	AT DEVICE OUT

Connector No.	M31
Connector Name	WIRE TO WIRE
Connector Color	WHITE

H.S.

		1G	2G	3G	4G	5G
		6G	7G	8G	9G	10G
11G	12G	13G	14G	15G	16G	17G	18G	19G	20G	21G
	22G	23G	24G	25G	26G	27G	28G	29G	30G	
31G	32G	33G	34G	35G	36G	37G	38G	39G	40G	41G
	42G	43G	44G	45G	46G	47G	48G	49G	50G	
51G	52G	53G	54G	55G	56G	57G	58G	59G	60G	61G
	62G	63G	64G	65G	66G	67G	68G	69G	70G	
71G	72G	73G	74G	75G	76G	77G	78G	79G	80G	81G
	82G	83G	84G	85G	86G	87G	88G	89G	90G	
		91G	92G	93G	94G	95G				
			96G	97G	98G	99G	100G			

Terminal No.	Color of Wire	Signal Name
10G	W	–

Connector No.	M68
Connector Name	FUSE BLOCK (J/B)
Connector Color	BROWN

H.S.

7R	6R	5R	4R		3R	2R	1R
16R	15R	14R	13R	12R	11R	10R	9R

Terminal No.	Color of Wire	Signal Name
9R	G	–

Connector No.	M78
Connector Name	CVT SHIFT SELECTOR
Connector Color	WHITE

H.S.

1	2	3	4	5	6
7	8	9	10	11	12

Terminal No.	Color of Wire	Signal Name
3	GR	–
4	B	–
5	G	–
6	W	–

Connector No.	M80
Connector Name	BCM (BODY CONTROL MODULE)
Connector Color	BLACK

H.S.

116	115	114	113	112	111	110	109	108	107	106	105
128	127	126	125	124	123	122	121	120	119	118	117

Terminal No.	Color of Wire	Signal Name
108	GR	SHIFT LOCK SOLENOID OUT

ABDIA1100GB

Connector No.	M81
Connector Name	BCM (BODY CONTROL MODULE)
Connector Color	WHITE

Terminal No.	Color of Wire	Signal Name
134	B	GND2
139	W	BAT POWER F/L
143	B	GND1

Connector No.	E28
Connector Name	FUSE BLOCK (J/B)
Connector Color	WHITE

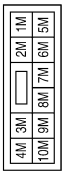

Terminal No.	Color of Wire	Signal Name
5M	Y	–
7M	R	–

Connector No.	E38
Connector Name	STOP LAMP SWITCH
Connector Color	WHITE

Terminal No.	Color of Wire	Signal Name
1	Y	–
2	W	–

Connector No.	E39
Connector Name	STOP LAMP RELAY
Connector Color	BLUE

Terminal No.	Color of Wire	Signal Name
1	W	–
2	B	–
3	Y	–
5	R	–

Connector No.	E44
Connector Name	JOINT CONNECTOR-E01
Connector Color	WHITE

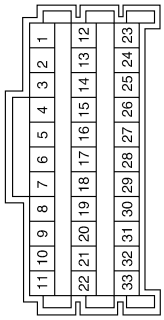

Terminal No.	Color of Wire	Signal Name
12	Y	–
13	Y	–
14	Y	–

ABDIA1101GB

Terminal No.	Color of Wire	Signal Name
10G	P	–

Connector No.	E152
Connector Name	WIRE TO WIRE
Connector Color	WHITE

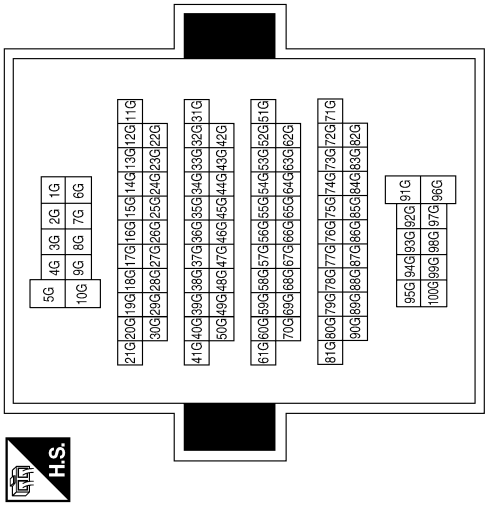

ABDIA1102GB

BASIC INSPECTION

DIAGNOSIS AND REPAIR WORK FLOW

Work Flow

INFOID:0000000009177528

NOTE:
"DTC" includes DTC at the 1st trip.

1. OBTAIN INFORMATION ABOUT SYMPTOM

Refer to TM-79, "Diagnostic Work Sheet" and interview the customer to obtain the malfunction information (conditions and environment when the malfunction occurred) as much as possible when the customer brings in the vehicle.

>> GO TO 2.

2. CHECK DTC

1. Before checking the malfunction, check whether any DTC exists.
2. If DTC exists, perform the following operations.
- Records the DTCs. (Print out using CONSULT and affix to the Work Order Sheet.)
- Erase DTCs.
- Check the relation between the cause found by DTC and the malfunction information from customer. TM-180, "Symptom Table" can be used effectively.
3. Check the relevant information including STI, etc.

Do malfunction information and DTC exists?

Malfunction information and DTC exists.>>GO TO 3.
Malfunction information exists but no DTC.>>GO TO 4.
No malfunction information, but DTC exists.>>GO TO 5.

3. REPRODUCE MALFUCTION SYSTEM

Check the malfunction described by the customer on the vehicle.
Check if the behavior is fail safe or normal operation. Refer to TM-55, "Fail-safe".
Interview sheet can be used effectively when reproduce malfunction conditions. Refer to TM-79, "Diagnostic Work Sheet".
Verify the relationship between the symptom and the conditions in which the malfunction described by the customer occurs.

>> GO TO 5.

4. REPRODUCE MALFUNCTION SYMPTOM

Check the malfunction described by the customer on the vehicle.
Check if the behavior is fail safe or normal operation. Refer to TM-55, "Fail-safe".
Interview sheet can be used effectively when reproduce malfunction conditions. Refer to TM-79, "Diagnostic Work Sheet".
Verify the relationship between the symptom and the conditions in which the malfunction described by the customer occurs.

>> GO TO 6.

5. PERFORM "DTC CONFIRMATION PROCEDURE"

Perform "DTC CONFIRMATION PROCEDURE" of the appropriate DTC to check if DTC is detected again.
Refer to TM-58, "DTC Inspection Priority Chart" when multiple DTCs are detected, and then determine the order for performing the diagnosis.

Is any DTC detected?

YES >> GO TO 7.
NO >> Follow GI-49, "Intermittent Incident" to check.

6. IDENTIFY MALFUNCTIONING SYSTEM WITH "DIAGNOSIS CHART BY SYMPTOM"

Use TM-180, "Symptom Table" from the symptom inspection result in step 4. Then identify where to start performing the diagnosis based on possible causes and symptoms.

>> GO TO 8.

7. REPAIR OR REPLACE THE MALFUNCTIONING PARTS

Repair or replace the detected malfunctioning parts.
Reconnect parts or connector after repairing or replacing, and then erase DTC if necessary.

>> GO TO 8.

8. FINAL CHECK

Perform “DTC CONFIRMATION PROCEDURE” again to make sure that the repair is correctly performed.
Check that malfunctions are not reproduced when obtaining the malfunction information from the customer, referring to the symptom inspection result in step 3 or 4.

Is DTC or malfunction symptom reproduced?

YES-1 (DTC is reproduced.)>>GO TO 5.
YES-2 (Malfunction is reproduced.)>>GO TO 6.
NO >> Before delivering the vehicle to the customer, make sure that DTC is erased.

Diagnostic Work Sheet

INFOID:0000000009177529

DESCRIPTION

There are many operating conditions that may cause a malfunction of the transmission parts. By understanding those conditions properly, a quick and exact diagnosis can be achieved.
In general, perception of a problem varies depending on individuals. Ask the customer about his/her concerns carefully. It is important to understand the phenomenon or status. To systemize all the information for the diagnosis, prepare the question sheet referring to the question points.
In some cases, multiple conditions that appear simultaneously may cause a DTC to be detected.

KEY POINTS

WHAT ..... Vehicle & engine model
WHEN ..... Date, Frequencies
WHERE..... Road conditions
HOW ..... Operating conditions, Weather conditions, Symptoms

SEF907L

Worksheet Sample

Question sheet					
Customer's name	MR/MS	Registration number		Initial year registration	Year Month day
		Vehicle type		Chassis No.	
Storage date	Year Month day	Engine		Mileage	km/mile
Symptom		☐ Vehicle does not start. (☐ R position ☐ D position ☐ L position)			
		☐ Upshifting does not occur. ☐ Downshifting does not occur.			
		☐ Lock-up malfunction			
		☐ Shift point is too high. ☐ Shift point is too low.			
		☐ Shift shock (☐ N⇒D ☐ Lock-up ☐ R, D, and L position)			
		☐ Slip (☐ N⇒D ☐ Lock-up ☐ R, D, and L position)			
		☐ Noise ☐ Vibration			
		When selector lever position is shifted, shift pattern does not change.			
		☐ Other ( )			
First occurrence		☐ Recently (as from month of year)			
Frequency of occurrence		☐ Always ☐ Under certain conditions ☐ Sometimes (time(s)/day)			

Question sheet

Customer's name	MR/MS	Registration number		Initial year registration	Year Month day
		Vehicle type		Chassis No.	
Storage date	Year Month day	Engine		Mileage	km/mile
Climate conditions		Irrelevant			
	Weather	☐ Clear ☐ Cloud ☐ Rain ☐ Snow ☐ Others)			
	Temperature	☐ Hot ☐ Warm ☐ Cool ☐ Cold ☐ Temperature (Approx. °C/°F)			
	Relative humidity	☐ High ☐ Moderate ☐ Low			
Transaxle condition		☐ In cold-start ☐ During warm-up (approx. °C/°F) ☐ After warm-up ☐Engine speed: rpm			
Road conditions		☐ Urban area ☐ Suburb area ☐ Highway ☐ Mountainous road (uphill or downhill)			
Operating condition, etc.		Irrelevant ☐ When engine starts ☐ During idling ☐ During driving ☐ During acceleration ☐ At constant speed driving ☐ During deceleration ☐ During cornering (RH curve or LH curve)			
Other conditions					

ADDITIONAL SERVICE WHEN REPLACING TCM

Description

INFOID:0000000009177530

Always perform the following items when the TCM is replaced.

SAVING AND WRITING OF TCM DATA
- TCM performs accurate control by retrieving data (inherent characteristic value) of each solenoid. For this reason, it is necessary to save data of current TCM in CONSULT before replacing the TCM. After this, the saved data must be written in new TCM.

Work Procedure

INFOID:0000000009177531

CAUTION:
When replacing TCM together with transaxle assembly, perform "ADDITIONAL SERVICE WHEN REPLACING TRANSAXLE ASSEMBLY". Refer to TM-82, "Work Procedure".

1. SAVE THE TCM DATA

NOTE:
Save necessary data stored in TCM in CONSULT according to the following instructions:

With CONSULT
1. Turn ignition switch OFF and wait for 10 seconds.
2. Turn ignition switch ON.
3. Select "Work Support" in "TRANSMISSION".
4. Select "READ IP CHARA - REPLACEMENT TCM".
5. Import data according to the instructions on the CONSULT screen.

>> GO TO 2.

2. REPLACE THE TCM

1. Turn ignition switch OFF and wait for 10 seconds.
2. Replace the TCM. Refer to TM-195, "Removal and Installation".

>> GO TO 3.

3. WRITE THE TCM DATA

NOTE:
Write data saved in CONSULT into a new TCM according to the following instructions:

With CONSULT
1. Turn ignition switch OFF and wait for 10 seconds.
2. Turn ignition switch ON.
3. Select "Work Support" in "TRANSMISSION".
4. Select "WRITE IP CHARA - REPLACEMENT TCM".
5. Write data saved in CONSULT in TCM according to the instructions on the CONSULT screen.

>> WORK END

ADDITIONAL SERVICE WHEN REPLACING TRANSAXLE ASSEMBLY

Description

INFOID:0000000009177532

Perform the following work after the transaxle assembly is replaced.

ERASING AND WRITING TCM DATA
- TCM performs accurate control by retrieving data (inherent characteristic value) of each solenoid. For this reason, after replacing transaxle assembly, it is necessary to erase data stored in TCM and write new data.

ERASING OF CVT FLUID DEGRADATION LEVEL DATA
- TCM records the degradation level of the CVT fluid calculated from the vehicle driving status. Therefore, if the transaxle assembly is replaced, it is necessary to erase the CVT fluid degradation level data recorded by TCM.

Work Procedure

INFOID:0000000009177533

1. CHECK THE SERIAL NUMBER (PART 1)

Write down the serial number of new transaxle assembly.

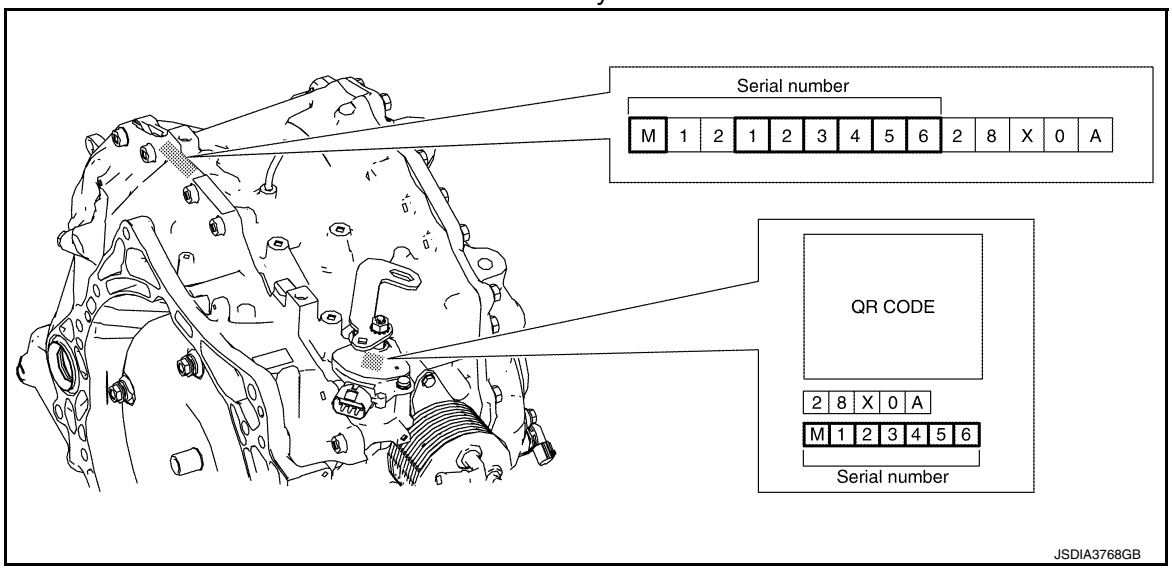

>> GO TO 2.

2. CHECK THE SERIAL NUMBER (PART 2)

With CONSULT
1. Turn ignition switch ON.
2. Insert the attached CD into CONSULT.
3. Select “Work Support” in “TRANSMISSION”.
4. Select “WRITE IP CHARA - REPLACEMENT AT/CVT”.
5. Check that the serial number displayed on CONSULT screen and those written in the memo agree.
   CAUTION:
   Never perform writing procedure.
6. Go back to MENU of “Work Support”.

>> GO TO 3.

3. INITIALIZE TCM

With CONSULT
1. Set parking brake.
2. Select “ERASE MEMORY DATA”.
3. Touch “Start” according to the instructions on the CONSULT screen.

Is “COMPLETED” displayed?

YES >> GO TO 4.
NO >> Turn ignition switch OFF and wait for a minimum of 10 seconds then perform the work again.

4. WRITE THE DATA

NOTE:
Write data of new solenoid in TCM according to the following instructions:

With CONSULT

1. Shift the selector lever to the P position.
2. Turn ignition switch OFF and wait for 10 seconds.
3. Turn ignition switch ON.
4. Select “Work Support” in “TRANSMISSION”.
5. Select “WRITE IP CHARA - REPLACEMENT AT/CVT”.
6. Write data in TCM according to the instructions on the CONSULT screen.
   NOTE:
   When writing is complete, the shift position indicator of the combination meter displays P.

>> GO TO 5.

5. ERASE CVT FLUID DEGRADATION LEVEL DATA

1. Select “WORK SUPPORT” in “TRANSMISSION”.
2. Select “CONFORM CVTF DETERIORTN”.
3. Touch “Clear”.

>> WORK END

CVT FLUID COOLER SYSTEM

Cleaning

INFOID:0000000009177534

Whenever an automatic transaxle is repaired, overhauled, or replaced, the CVT fluid cooler mounted in the radiator must be inspected and cleaned.
Metal debris and friction material, if present, can be trapped or be deposited in the CVT fluid cooler. This debris can contaminate the newly serviced CVT or, in severe cases, can block or restrict the flow of CVT fluid. In either case, malfunction of the newly serviced CVT may occur.
Debris, if present, may deposit as CVT fluid enters the cooler inlet. It will be necessary to back flush the cooler through the cooler outlet in order to flush out any built up debris.

CVT FLUID COOLER CLEANING PROCEDURE

1. Position an oil pan under the transaxle's inlet and outlet cooler hoses.
2. Identify the inlet and outlet fluid cooler hoses.
3. Disconnect the fluid cooler inlet and outlet rubber hoses from the steel cooler tubes or bypass valve.
   NOTE:
   Replace the cooler hoses if rubber material from the hose remains on the tube fitting.
4. Allow any CVT fluid that remains in the cooler hoses to drain into the oil pan.

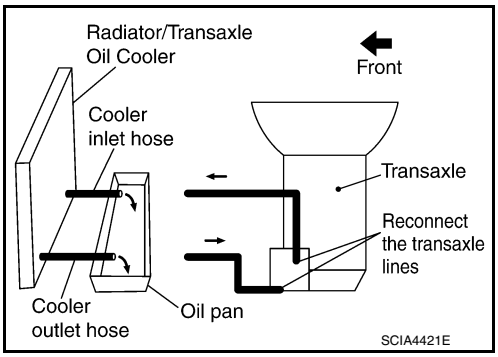

5. Insert the extension adapter hose of a can of Transmission Cooler Cleaner (Nissan P/N 999MP-AM006) into the cooler outlet hose.
   CAUTION:
   - **Wear safety glasses and rubber gloves when spraying the Transmission Cooler Cleaner.**
   - **Spray Transmission Cooler Cleaner only with adequate ventilation.**
   - **Avoid contact with eyes and skin.**
   - **Never breath vapors or spray mist.**
6. Hold the hose and can as high as possible and spray Transmission Cooler Cleaner in a continuous stream into the cooler outlet hose until CVT fluid flows out of the cooler inlet hose for 5 seconds.

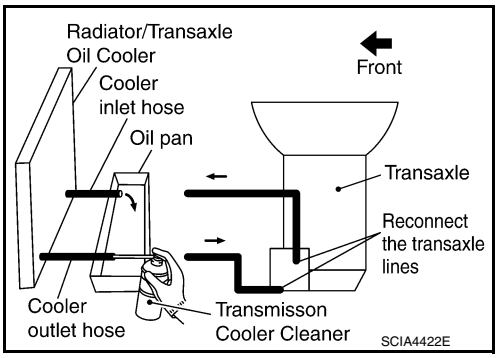

7. Insert the tip of an air gun into the end of the cooler outlet hose.
8. Wrap a shop rag around the air gun tip and end of the cooler outlet hose.
9. Blow compressed air regulated to 5 to 9 kg/cm^2 (70 to 130 psi) through the cooler outlet hose for 10 seconds to force out any remaining CVT fluid.
10. Repeat steps 5 through 9 three additional times.
11. Position an oil pan under the banjo bolts that connect the CVT fluid cooler steel lines to the transaxle.
12. Remove the banjo bolts.

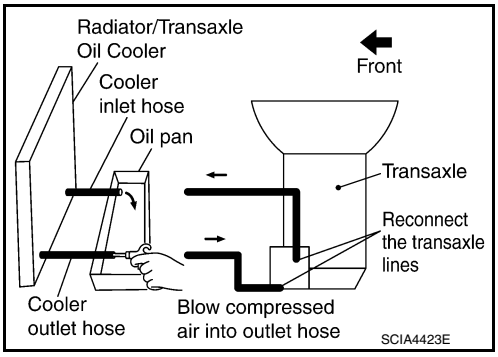

13. Flush each steel line from the cooler side back toward the transaxle by spraying Transmission Cooler Cleaner in a continuous stream for 5 seconds.
14. Blow compressed air regulated to 5 to 9 kg/cm^2 (70 to 130 psi) through each steel line from the cooler side back toward the transaxle for 10 seconds to force out any remaining CVT fluid.
15. Ensure all debris is removed from the steel cooler lines.
16. Ensure all debris is removed from the banjo bolts and fittings.

17. Perform “CVT FLUID COOLER DIAGNOSIS PROCEDURE”.

CVT FLUID COOLER DIAGNOSIS PROCEDURE

NOTE:
Insufficient cleaning of the cooler inlet hose exterior may lead to inaccurate debris identification.

1. Position an oil pan under the transaxle's inlet and outlet cooler hoses.
2. Clean the exterior and tip of the cooler inlet hose.
3. Insert the extension adapter hose of a can of Transmission Cooler Cleaner (Nissan P/N 999MP-AM006) into the cooler outlet hose.
   CAUTION:
   - **Wear safety glasses and rubber gloves when spraying the Transmission Cooler Cleaner.**
   - **Spray Transmission Cooler Cleaner only with adequate ventilation.**
   - **Avoid contact with eyes and skin.**
   - **Never breath vapors or spray mist.**
4. Hold the hose and can as high as possible and spray Transmission Cooler Cleaner in a continuous stream into the cooler outlet hose until CVT fluid flows out of the cooler inlet hose for 5 seconds.

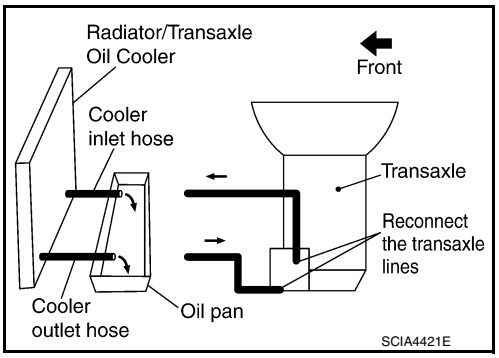

5. Tie a common white, basket-type coffee filter to the end of the cooler inlet hose.

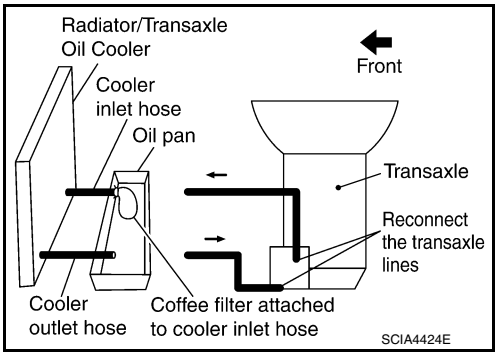

6. Insert the tip of an air gun into the end of the cooler outlet hose.
7. Wrap a shop rag around the air gun tip and end of cooler outlet hose.
8. Blow compressed air regulated to 5 to 9 kg/cm^2 (70 to 130 psi) through the cooler outlet hose to force any remaining CVT fluid into the coffee filter.
9. Remove the coffee filter from the end of the cooler inlet hose.
10. Perform “CVT FLUID COOLER INSPECTION PROCEDURE”.

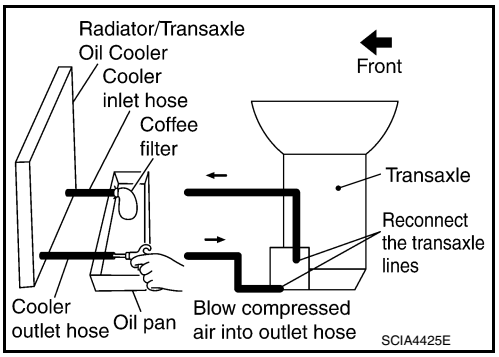

CVT FLUID COOLER INSPECTION PROCEDURE

1. Inspect the coffee filter for debris.

a. If small metal debris less than 1 mm (0.040 in) in size or metal powder is found in the coffee filter, this is normal. If normal debris is found, the CVT fluid cooler/radiator can be reused and the procedure is ended.

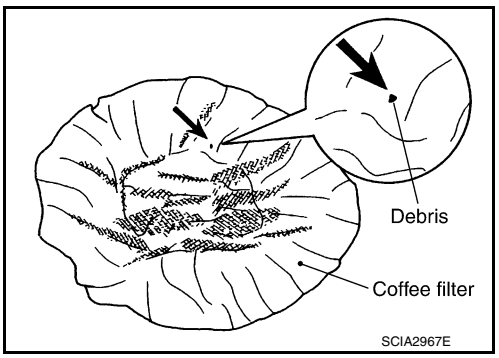

b. If one or more pieces of debris are found that are over 1 mm (0.040 in) in size and/or peeled clutch facing material is found in the coffee filter, the fluid cooler is not serviceable. The radiator/ fluid cooler must be replaced and the inspection procedure is ended.

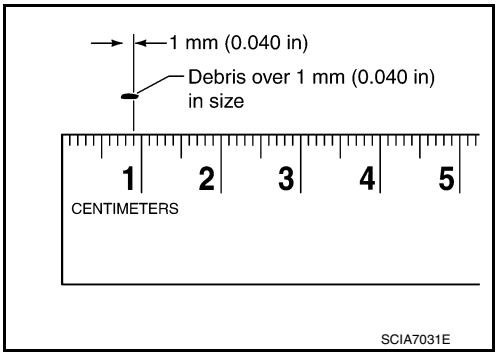

CVT FLUID COOLER FINAL INSPECTION

After performing all procedures, ensure that all remaining oil is cleaned from all components.

STALL TEST

Work Procedure

INFOID:0000000009177535

INSPECTION

1. Check the engine oil level. Replenish if necessary. Refer to LU-8, "Inspection".
2. Check for leak of the CVT fluid. Refer to TM-185, "Inspection".
3. Drive for about 10 minutes to warm up the vehicle so that the CVT fluid temperature is 50 to 80°C (122 to 176°F).
4. Be sure to apply the parking brake and block the tires.
5. Start the engine, depress the brake pedal and shift the selector lever to “D” position.
6. While depressing the brake pedal, depress the accelerator pedal gradually.
7. Read the stall speed quickly and release your foot from the accelerator pedal quickly.
   CAUTION:
   Do not depress the accelerator pedal for 5 seconds or more during the test.

   Stall speed : Refer to TM-219, "Stall Speed".
8. Shift the selector lever to “N” position.
9. Cool the CVT fluid.
   CAUTION:
   Run the engine with the idle speed for at least 1 minute.
10. Put the selector lever to the R position and perform Step 6 to Step 9 again.

NARROWING-DOWN MALFUNCTIONING PARTS

	Selector lever position		Possible cause
	D	R	
Stall speed	H	O	• Forward clutch
	O	H	• Reverse brake
	L	L	• Engine • Torque converter one way clutch
	H	H	• Line pressure is low. • Primary pulley • Secondary pulley • Chain belt

O: Within the stall speed standard value.

H: Stall speed is higher than the standard value.

L: Stall speed is lower than the standard value.

CVT POSITION

Inspection and Adjustment

INFOID:0000000009177536

INSPECTION

1. Turn ON the ignition switch with the shift selector at the “P” position.
2. Press the shift selector button with the brake pedal depressed, and confirm that the shift selector can be moved to positions other than “P”. Also confirm that movement is not allowed from the “P” position to other position without depressing the brake pedal.
3. Move the shift selector and check for “excessive effort”, “sticking”, “noise” or “rattle”.
4. Confirm that shift selector stops at each position with the feel of engagement when it is moved through all the positions. Check whether or not the actual position the shift selector is in matches the position shown by the transaxle body.
5. Make sure that the shift selector is moved to all the shift positions in the manner shown.
   - (A): Press shift selector button to operate shift selector, while depressing the brake pedal.
   - (B): Press shift selector button to operate shift selector.
   - (C): Shift selector can be operated without pressing the shift selector button.
6. When the shift selector button is pressed without applying forward/backward force to the shift selector at “P”, “R”, “N”, “D” or “Ds” positions, there should be no “sticking” on the shift selector button operation.

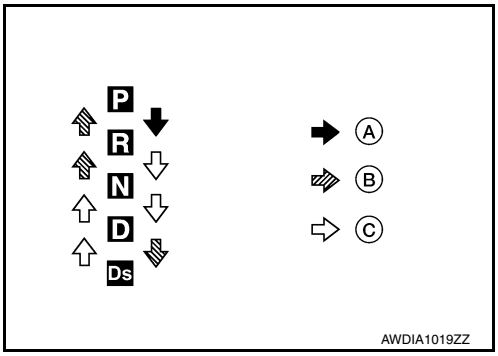

7. Check that the back-up lamps do not illuminate when the shift selector is in the “P” position.
8. Check that the engine can be started with the shift selector in the “P” and “N” positions only.
9. Check that the transaxle is locked completely when the shift selector is in the “P” position.

ADJUSTMENT

1. Move the selector lever to the “P” position.
   CAUTION:
   Rotate the wheels at least a quarter turn and be certain the Park position mechanism is fully engaged.
2. Loosen control cable nut (A) and set manual lever (B) to the “P” position.
   CAUTION:
   Do not apply force to the manual lever.
3. Tighten control cable nut to the specified torque. Refer to TM-191, "Exploded View".
   CAUTION:
   Hold the manual lever securely in the "P" position when tightening control cable nut.

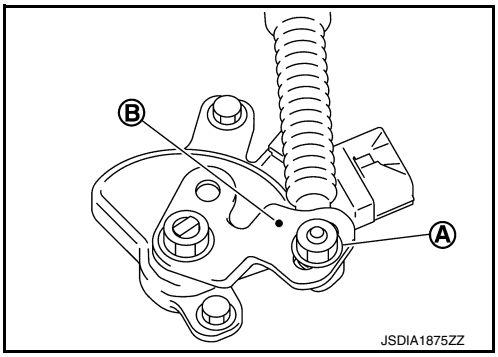

DTC/CIRCUIT DIAGNOSIS

U0073 COMMUNICATION BUS A OFF

DTC Logic

INFOID:0000000009177538

DTC DETECTION LOGIC

DTC	CONSULT screen terms (Trouble diagnosis content)	DTC detection condition	Possible causes
U0073	COMM BUS A OFF (Control Module Communication Bus A Off)	TCM communication blockage lasts for 2 seconds or more when turning ON the ignition switch. (Communication not established.)	Harness or connector (CAN communication line is error)

DTC CONFIRMATION PROCEDURE

1. PREPARATION BEFORE WORK

If another “DTC CONFIRMATION PROCEDURE” occurs just before, turn ignition switch OFF and wait for at least 10 seconds, then perform the next test.

>> GO TO 2.

2. PERFORM DTC CONFIRMATION PROCEDURE

1. Start the engine and wait for at least 5 seconds.
2. Check the DTC.

Is “U0073” detected?

YES >> Go to TM-89, "Diagnosis Procedure".
NO >> INSPECTION END

Diagnosis Procedure

INFOID:0000000009177539

For the diagnosis procedure, refer to LAN-20, "Trouble Diagnosis Flow Chart".

U0100 LOST COMMUNICATION (ECM A)

DTC Logic

INFOID:0000000009177540

DTC DETECTION LOGIC

DTC	CONSULT screen terms (Trouble diagnosis content)	DTC detection condition	Possible causes
U0100	LOST COMM (ECM A) (Lost Communication With ECM/PCM A)	When the ignition switch is ON, TCM is unable to receive the CAN communications signal from ECM continuously for 2 seconds or more.	• ECM • Harness or connector (CAN communication line is open or shorted)

DTC CONFIRMATION PROCEDURE

1.PREPARATION BEFORE WORK

If another “DTC CONFIRMATION PROCEDURE” occurs just before, turn ignition switch OFF and wait for at least 10 seconds, then perform the next test.

>> GO TO 2.

2.PERFORM DTC CONFIRMATION PROCEDURE

1. Start the engine and wait for at least 5 seconds.
2. Check the DTC.

Is “U0100” detected?

YES >> Go to TM-90, "Diagnosis Procedure".
NO >> INSPECTION END

Diagnosis Procedure

INFOID:0000000009177541

For the diagnosis procedure, refer to LAN-20, "Trouble Diagnosis Flow Chart".

U0102 LOST COMMUNICATION (TRANSFER)

DTC Logic

INFOID:0000000009177542

DTC DETECTION LOGIC

DTC	CONSULT screen terms (Trouble diagnosis content)	DTC detection condition	Possible causes
U0140	LOST COMM (TRANSFER) (Lost Communication With Transfer Case Control Module)	When the ignition switch is ON, TCM is unable to receive the CAN communications signal from 4WD control unit continuously for 2 seconds or more.	• 4WD control unit • Harness or connector (CAN communication line is open or shorted)

DTC CONFIRMATION PROCEDURE

1.PREPARATION BEFORE WORK

If another “DTC CONFIRMATION PROCEDURE” occurs just before, turn ignition switch OFF and wait for at least 10 seconds, then perform the next test.

>> GO TO 2.

2.PERFORM DTC CONFIRMATION PROCEDURE

With CONSULT

1. Start the engine and wait for at least 5 seconds.
2. Check the DTC.

Is “U0102” detected?

YES >> Go to TM-91, "Diagnosis Procedure".
NO >> INSPECTION END

Diagnosis Procedure

INFOID:0000000009177543

For the diagnosis procedure, refer to LAN-20, "Trouble Diagnosis Flow Chart".

U0140 LOST COMMUNICATION (BCM)

DTC Logic

INFOID:0000000009177544

DTC DETECTION LOGIC

DTC	CONSULT screen terms (Trouble diagnosis content)	DTC detection condition	Possible causes
U0140	LOST COMM (BCM) (Lost Communication With Body Control Module)	When the ignition switch is ON, TCM is unable to receive the CAN communications signal from BCM continuously for 2 seconds or more.	• BCM • Harness or connector (CAN communication line is open or shorted)

DTC CONFIRMATION PROCEDURE

1. PREPARATION BEFORE WORK

If another “DTC CONFIRMATION PROCEDURE” occurs just before, turn ignition switch OFF and wait for at least 10 seconds, then perform the next test.

>> GO TO 2.

2. PERFORM DTC CONFIRMATION PROCEDURE

With CONSULT

1. Start the engine and wait for at least 5 seconds.
2. Check the DTC.

Is “U0140” detected?

YES >> Go to TM-92, "Diagnosis Procedure".
NO >> INSPECTION END

Diagnosis Procedure

INFOID:0000000009177545

For the diagnosis procedure, refer to LAN-20, "Trouble Diagnosis Flow Chart".

U0141 LOST COMMUNICATION (BCM A)

DTC Logic

INFOID:0000000009177546

DTC DETECTION LOGIC

DTC	CONSULT screen terms (Trouble diagnosis content)	DTC detection condition	Possible causes
U0141	LOST COMM (BCM A) (Lost Communication With Body Control Module A)	When the ignition switch is turned ON, TCM continues no reception of the CAN communication signal from IPDM E/R for 2 seconds or more.	• IPDM E/R • Harness or connector (CAN communication line is open or shorted)

DTC CONFIRMATION PROCEDURE

1.PREPARATION BEFORE WORK

If another “DTC CONFIRMATION PROCEDURE” occurs just before, turn ignition switch OFF and wait for at least 10 seconds, then perform the next test.

>> GO TO 2.

2.PERFORM DTC CONFIRMATION PROCEDURE

With CONSULT

1. Start the engine and wait for at least 5 seconds.
2. Check the DTC.

Is “U0141” detected?

YES >> Go to TM-93, "Diagnosis Procedure".
NO >> INSPECTION END

Diagnosis Procedure

INFOID:0000000009177547

For the diagnosis procedure, refer to LAN-20, "Trouble Diagnosis Flow Chart".

U0155 LOST COMMUNICATION (IPC)

DTC Logic

INFOID:0000000009177548

DTC DETECTION LOGIC

DTC	CONSULT screen terms [Trouble diagnosis content]	DTC detection condition	Possible causes
U0155	LOST COMM (IPC) [Lost Communication With Instrument Panel Cluster (IPC) Control Module]	When the ignition switch is ON, TCM is unable to receive the CAN communications signal from the combination meter continuously for 2 seconds or more.	• Combination meter • Harness or connector (CAN communication line is open or shorted)

DTC CONFIRMATION PROCEDURE

1.PREPARATION BEFORE WORK

If another “DTC CONFIRMATION PROCEDURE” occurs just before, turn ignition switch OFF and wait for at least 10 seconds, then perform the next test.

>> GO TO 2.

2.PERFORM DTC CONFIRMATION PROCEDURE

1. Start the engine and wait for at least 5 seconds.
2. Check the DTC.

Is “U0155” detected?

YES >> Go to TM-94, "Diagnosis Procedure".
NO >> INSPECTION END

Diagnosis Procedure

INFOID:0000000009177549

For the diagnosis procedure, refer to LAN-20, "Trouble Diagnosis Flow Chart".

U0300 CAN COMMUNICATION DATA

DTC Logic

INFOID:0000000009177550

DTC DETECTION LOGIC

DTC	CONSULT screen terms (Trouble diagnosis content)	DTC detection condition	Possible causes
U0300	CAN COMM DATA (Internal Control Module Software Incompatibility)	When the ignition switch is ON, the data length transmitted from each control unit is shorter than the specified length and the status continues for 2 seconds or more.	Control unit other than TCM

DTC CONFIRMATION PROCEDURE

1.PREPARATION BEFORE WORK

If another “DTC CONFIRMATION PROCEDURE” occurs just before, turn ignition switch OFF and wait for at least 10 seconds, then perform the next test.

>> GO TO 2.

2.CHECK DTC DETECTION

With CONSULT

1. Start the engine and wait for 5 seconds or more.
2. Check the DTC.

Is “U0300” detected?

YES >> Go to TM-95, "Diagnosis Procedure".
NO >> INSPECTION END

Diagnosis Procedure

INFOID:0000000009177551

1.CONTROL UNIT CHECK

Check the number of control units replaced before “U0300” is detected.

Is one control unit replaced?

YES >> The specification of the control unit replaced may be incorrect. Check the part number and the specification.
NO >> GO TO 2.

2.CONTROL UNIT CHECK

With CONSULT

1. Remove one of the control unit replaced.
2. Assemble the old control unit before replacement.
3. Turn ignition switch ON, and wait for 2 seconds or more.
4. Select “Self Diagnostic Results” in “TRANSMISSION”.

Is “U0300”detected?

YES >> Turn OFF the ignition switch and check other control units in the same manner.
NO >> The specification of the control unit removed may be incorrect. Check the part number and the specification.

U1000 CAN COMM CIRCUIT

Description

INFOID:0000000009177552

CAN (Controller Area Network) is a serial communication line for real-time application. It is an on-vehicle multiplex communication line with high data communication speed and excellent malfunction detection ability. Many electronic control units are equipped onto a vehicle, and each control unit shares information and links with other control units during operation (not independently). In CAN communication, control units are connected with 2 communication lines (CAN-H line, CAN-L line) allowing a high rate of information transmission with less wiring. Each control unit transmits/receives data but selectively reads required data only.

DTC Logic

INFOID:0000000009177553

DTC DETECTION LOGIC

DTC	CONSULT screen terms (Trouble diagnosis content)	DTC detection condition	Possible causes
U1000	CAN COMM CIRCUIT (CAN Communication Line)	When the ignition switch is ON, TCM cannot send the CAN communication signal continuously for 2 seconds or more.	Harness or connector (CAN communication line is open or shorted)

DTC CONFIRMATION PROCEDURE

1. PREPARATION BEFORE WORK

If another “DTC CONFIRMATION PROCEDURE” occurs just before, turn ignition switch OFF and wait for at least 10 seconds, then perform the next test.

>> GO TO 2.

2. CHECK DTC DETECTION

With CONSULT

1. Start the engine and wait for at least 5 seconds.
2. Check the DTC.

Is “U1000” detected?

YES >> Go to TM-96, "Diagnosis Procedure".
NO >> INSPECTION END

Diagnosis Procedure

INFOID:0000000009177554

For the diagnosis procedure, refer to LAN-20, "Trouble Diagnosis Flow Chart".

U1117 LOST COMMUNICATION (ABS)

DTC Logic

INFOID:0000000009177555

DTC DETECTION LOGIC

DTC	CONSULT screen terms (Trouble diagnosis content)	DTC detection condition	Possible causes
U1117	LOST COMM (ABS) (Lost Communication With ABS)	When the ignition switch is ON, TCM is unable to receive the CAN communications signal from ABS actuator and electric unit (control unit) continuously for 2 seconds or more.	• ABS actuator and electric unit (control unit) • Harness or connector (CAN communication line is open or shorted)

DTC CONFIRMATION PROCEDURE

1.PREPARATION BEFORE WORK

If another "DTC CONFIRMATION PROCEDURE" occurs just before, turn ignition switch OFF and wait for at least 10 seconds, then perform the next test.

>> GO TO 2.

2.PERFORM DTC CONFIRMATION PROCEDURE

With CONSULT

1. Start the engine and wait for 5 seconds or more.
2. Check the DTC.

Is “U1117” detected?

YES >> Go to TM-97, "Diagnosis Procedure".
NO >> INSPECTION END

Diagnosis Procedure

INFOID:0000000009177556

For the diagnosis procedure, refer to LAN-20, "Trouble Diagnosis Flow Chart".

P062F EEPROM

Description

INFOID:0000000009177557

TCM compares the calculated value stored in the flash ROM with the value stored in TCM. If the calculated value does not agree with the stored value, TCM judges this as a malfunction.

DTC Logic

INFOID:0000000009177558

DTC DETECTION LOGIC

DTC	CONSULT screen terms (Trouble diagnosis content)	DTC detection condition	Possible causes
P062F	EEPROM (Internal Control Module EE-PROM Error)	Flash ROM error is detected when turning ON the ignition switch.	• TCM (Flash ROM) • Harness or connector [TCM power supply (back-up) circuit is open or shorted]

DTC CONFIRMATION PROCEDURE

1.PREPARATION BEFORE WORK

If another "DTC CONFIRMATION PROCEDURE" occurs just before, turn ignition switch OFF and wait for at least 10 seconds, then perform the next test.

>> GO TO 2.

2.CHECK DTC DETECTION

1. Start the engine.
2. Check the DTC.

Is “P062F” detected?

YES >> Go to TM-98, "Diagnosis Procedure".
NO >> INSPECTION END

Diagnosis Procedure

INFOID:0000000009177559

1.CHECK INTERMITTENT INCIDNT

Refer to GI-49, "Intermittent Incident".

Is the inspection result normal?

YES >> Replace the TCM. Refer to TM-195, "Removal and Installation".
NO >> Repair or replace malfunctioning parts.

P0705 TRANSMISSION RANGE SENSOR A

DTC Logic

INFOID:0000000009177560

DTC DETECTION LOGIC

DTC	CONSULT screen terms (Trouble diagnosis content)	DTC detection condition	Possible causes
P0705	T/M RANGE SENSOR A [Transmission Range Sensor A Circuit (PRNDL Input)]	When all of the following conditions are satisfied and this state is maintained for 2 seconds: • Two or more range signals simultaneously stay ON continuously • TCM power supply voltage: More than 11 V	• Harness or connector (Short circuit between transmission range switch and TCM) • Transmission range switch

DTC CONFIRMATION PROCEDURE

1.PREPARATION BEFORE WORK

If another "DTC CONFIRMATION PROCEDURE" occurs just before, turn ignition switch OFF and wait for at least 10 seconds, then perform the next test.

>> GO TO 2.

2.CHECK DTC DETECTION

1. Turn ignition switch ON.
2. Shift the selector lever through entire positions from “P” to “L”. (Hold the selector lever at each position for 5 seconds or more.)
3. Check the first trip DTC.

Is “P0705” detected?

YES >> Go to TM-99, "Diagnosis Procedure".
NO >> INSPECTION END

Diagnosis Procedure

INFOID:0000000009177561

1.CHECK TCM INPUT SIGNALS

With CONSULT

1. Turn ignition switch ON.
2. Select “Data Monitor” in “TRANSMISSION”.
3. Select “D POSITION SW”, “N POSITION SW”, “R POSITION SW”, “P POSITION SW” and “L RANGE SW”.
4. Shift the selector lever through entire positions from “P” to “L” and check ON/OFF of each monitor item.

Monitor item	Condition	Condition
D POSITION SW	Selector lever: “D” position	On
	Other than the above	Off
N POSITION SW	Selector lever: “N” position	On
	Other than the above	Off
R POSITION SW	Selector lever: “R” position	On
	Other than the above	Off
P POSITION SW	Selector lever: “P” position	On
	Other than the above	Off
L POSITION SW	Selector lever: “L” position	On
	Other than the above	Off

Without CONSULT

1. Turn ignition switch OFF.
2. Disconnect TCM connector.

3. Turn ignition switch ON.
4. Shift the selector lever from “P” to “L” and check voltage between TCM harness connector terminals and ground.

+		–	Condition	Voltage
TCM				
Connector	Terminal			
F15	2	Ground	Selector lever: “ L” position	10 – 16 V
			Other than the above	Approx. 0 V
	4		Selector lever: “D” position	10 – 16 V
			Other than the above	Approx. 0 V
	5		Selector lever: “N” position	10 – 16 V
			Other than the above	Approx. 0 V
	6		Selector lever: “R” position	10 – 16 V
			Other than the above	Approx. 0 V
	7		Selector lever: “P” position	10 – 16 V
			Other than the above	Approx. 0 V

Is the inspection result normal?

YES >> Check intermittent incident. Refer to GI-49, "Intermittent Incident".
NO-1 [“D POSITION SW” is “ON” when selector is not in “D” position. (Or connector terminal 4 is at power voltage.)]>>GO TO 2.
NO-2 [“N POSITION SW” is “ON” when selector is not in “N” position. (Or connector terminal 5 is at power voltage.)]>>GO TO 4.
NO-3 [“R POSITION SW” is “ON” when selector is not in “R” position. (Or connector terminal 6 is at power voltage.)]>>GO TO 6.
NO-4 [“P POSITION SW” is “ON” when selector is not in “P” position. (Or connector terminal 7 is at power voltage.)]>>GO TO 8.
NO-5 [“L POSITION SW” is “ON” when selector is not in “L” position. (Or connector terminal 2 is at power voltage.)]>>GO TO 10.

2. CHECK D POSITION SW CIRCUIT (PART 1)

1. Turn ignition switch OFF.
2. Disconnect TCM connector.
3. Check continuity between TCM harness connector terminals.

TCM			Continuity
Connector	Terminal		
F15	4	2	Not existed
		5	
		6	
		7	

Is the inspection result normal?

YES >> GO TO 3.
NO >> Repair or replace malfunctioning parts.

3. CHECK D POSITION SW CIRCUIT (PART 2)

1. Disconnect transmission range switch connector.
2. Turn ignition switch ON.
3. Check voltage between TCM harness connector terminal and ground.

+		–	Voltage (Approx.)
TCM			
Connector	Terminal		
F15	4	Ground	0 V

Is the inspection result normal?

YES >> GO TO 12.
NO >> Repair or replace malfunctioning parts.

4. CHECK N POSITION SW CIRCUIT (PART 1)

1. Turn ignition switch OFF.
2. Disconnect TCM connector.
3. Check continuity between TCM harness connector terminals.

TCM			Continuity
Connector	Terminal		
F15	5	2	Not existed
		4	
		6	
		7	

Is the inspection result normal?

YES >> GO TO 5.
NO >> Repair or replace malfunctioning parts.

5. CHECK N POSITION SW CIRCUIT (PART 2)

1. Disconnect transmission range switch connector.
2. Turn ignition switch ON.
3. Check voltage between TCM harness connector terminal and ground.

+		–	Voltage (Approx.)
TCM			
Connector	Terminal		
F15	5	Ground	0 V

Is the inspection result normal?

YES >> GO TO 12.
NO >> Repair or replace malfunctioning parts.

6. CHECK P POSITION SW CIRCUIT (PART 1)

1. Turn ignition switch OFF.
2. Disconnect TCM connector.
3. Check continuity between TCM harness connector terminals.

TCM			Continuity
Connector	Terminal		
F15	7	2	Not existed
		4	
		5	
		6	

Is the inspection result normal?

YES >> GO TO 7.
NO >> Repair or replace malfunctioning parts.

7. CHECK P POSITION SW CIRCUIT (PART 2)

1. Disconnect transmission range switch connector.
2. Turn ignition switch ON.
3. Check voltage between TCM harness connector terminal and ground.

+		–	Voltage (Approx.)
TCM			
Connector	Terminal		
F15	7	Ground	0 V

Is the inspection result normal?

YES >> GO TO 12.
NO >> Repair or replace malfunctioning parts.

8. CHECK R POSITION SW CIRCUIT (PART1)

1. Turn ignition switch OFF.
2. Disconnect TCM connector.
3. Check continuity between TCM harness connector terminals.

TCM			Continuity
Connector	Terminal		
F15	6	2	Not existed
		4	
		5	
		7	

Is the inspection result normal?

YES >> GO TO 9.
NO >> Repair or replace malfunctioning parts.

9. CHECK R POSITION SW CIRCUIT (PART 2)

1. Disconnect transmission range switch connector.
2. Turn ignition switch ON.
3. Check voltage between TCM harness connector terminal and ground.

+		–	Voltage (Approx.)
TCM			
Connector	Terminal		
F15	6	Ground	0 V

Is the inspection result normal?

YES >> GO TO 12.
NO >> Repair or replace malfunctioning parts.

10. CHECK L POSITION SWITCH CIRCUIT (PART 1)

1. Turn ignition switch OFF.
2. Disconnect TCM connector.
3. Check continuity between TCM harness connector terminals.

TCM			Continuity
Connector	Terminal		
F15	2	4	Not existed
		5	
		6	
		7	

Is the inspection result normal?

YES >> GO TO 11.
NO >> Repair or replace malfunctioning parts.

11. CHECK L POSITION SWITCH CIRCUIT (PART 2)

1. Disconnect transmission range switch connector.
2. Turn ignition switch ON.
3. Check voltage between TCM harness connector terminal and ground.

+		–	Voltage (Approx.)
TCM			
Connector	Terminal		
F15	2	Ground	0 V

Is the inspection result normal?

YES >> GO TO 12.
NO >> Repair or replace malfunctioning parts.

12. CHECK TRANSMISSION RANGE SWITCH

Check transmission range switch. Refer to TM-103, "Component Inspection".

Is the check result normal?

YES >> Check intermittent incident. Refer to GI-49, "Intermittent Incident".
NO >> Repair or replace malfunctioning parts.

Component Inspection

INFOID:0000000009177562

1. CHECK TRANSMISSION RANGE SWITCH

Check continuity between transmission range switch connector terminals.

Transmission range switch	Condition	Continuity
Terminal		
7 – 10	Manual lever: “P” and “N” positions	Existed
	Other than the above	Not existed
4 – 5	Manual lever: “P” position	Existed
	Other than the above	Not existed
4 – 8	Manual lever: “R” position	Existed
	Other than the above	Not existed
4 – 9	Manual lever: “N position	Existed
	Other than the above	Not existed
4 – 2	Manual lever: “D” position	Existed
	Other than the above	Not existed
4 – 6	Manual lever: “L” position	Existed
	Other than the above	Not existed

Is the inspection result normal?

YES >> INSPECTION END
NO >> There is a malfunction of transmission range switch. Replace transaxle assembly. Refer to TM-214, "Removal and Installation".

P0706 TRANSMISSION RANGE SENSOR A

DTC Logic

INFOID:0000000009177563

DTC DETECTION LOGIC

DTC	CONSULT screen terms (Trouble diagnosis content)	DTC detection condition	Possible causes
P0706	T/M RANGE SENSOR A (Transmission Range Sensor A Circuit Range/Performance)	When all of the following conditions are satisfied and this state is maintained for 30 seconds: • All range signals stay OFF • TCM power supply voltage: More than 11 V	• Harness or connector (Open circuit between ignition switch and transmission range switch/open circuit between transmission range switch and TCM) • Transmission range switch • Control cable

DTC CONFIRMATION PROCEDURE

1.PREPARATION BEFORE WORK

If another "DTC CONFIRMATION PROCEDURE" occurs just before, turn ignition switch OFF and wait for at least 10 seconds, then perform the next test.

>> GO TO 2.

2.PERFORM DTC CONFIRMATION PROCEDURE

1. Turn ignition switch ON.
2. Shift the selector lever through entire positions from “P” to “L”. (Hold the selector lever at each position for 40 seconds or more.)
3. Check the first trip DTC.

Is “P0706” detected?

YES >> Go to TM-105, "Diagnosis Procedure".
NO >> INSPECTION END

Diagnosis Procedure

INFOID:0000000009177564

1.ADJUSTMENT OF CONTROL CABLE

Adjust control cable. Refer to TM-88, "Inspection and Adjustment".

>> GO TO 2.

2.PERFORM DTC CONFIRMATION PROCEDURE

With CONSULT

1. Turn ignition switch ON.
2. Select “Self Diagnostic Results” in “TRANSMISSION”.
3. Touch “Erase”.
4. Perform “DTC CONFIRMATION PROCEDURE". Refer to TM-105, "DTC Logic".

Is “P0706” detected?

YES >> GO TO 3.
NO >> INSPECTION END

3.CHECK POWER CIRCUIT

1. Turn ignition switch OFF.
2. Disconnect transmission range switch connector.
3. Turn ignition switch ON.
4. Check voltage between transmission range switch harness connector terminal and ground.

+		–	Voltage
Transmission range switch			
Connector	Terminal		
F36	4	Ground	10 – 16 V

Is the inspection result normal?

YES >> GO TO 4.
NO >> GO TO 7.

4. CHECK CIRCUIT BETWEEN TRANSMISSION RANGE SWITCH AND TCM (PART 1)

1. Turn ignition switch OFF.
2. Disconnect TCM connector.
3. Check continuity between transmission range switch harness connector terminals and TCM harness connector terminals.

Transmission range switch		TCM		Continuity
Connector	Terminal	Connector	Terminal	
F36	2	F15	4	Existed
	5		7	
	6		2	
	8		6	
	9		5	

Is the inspection result normal?

YES >> GO TO 5.
NO >> Repair or replace malfunctioning parts.

5. CHECK CIRCUIT BETWEEN TRANSMISSION RANGE SWITCH AND TCM (PART 2)

Check continuity between transmission range switch harness connector terminals and ground.

Transmission range switch		—	Continuity
Connector	Terminal		
F36	2	Ground	Not existed
	5		
	6		
	8		
	9		

Is the inspection result normal?

YES >> GO TO 6.
NO >> Repair or replace malfunctioning parts.

6. CHECK TRANSMISSION RANGE SWITCH

Check transmission range switch. Refer to TM-107, "Component Inspection".

Is the inspection result normal?

YES >> Check intermittent incident. Refer to GI-49, "Intermittent Incident".
NO >> Repair or replace malfunctioning parts.

7. DETECT MALFUNCTIONING ITEMS

Check the following items:

- Open circuit or short circuit in harness between ignition switch and IPDM E/R. Refer to PG-23, "Wiring Diagram - IGNITION POWER SUPPLY -".
- Open circuit or short circuit in harness between IPDM E/R harness connector terminal 64 and transmission range switch harness connector terminal 4.

- 10A fuse (No. 48, located in the IPDM E/R). Refer to PG-85, "IPDM E/R Terminal Arrangement".
- IPDM E/R

Is the check result normal?

YES >> Check intermittent incident. Refer to GI-49, "Intermittent Incident".
NO >> Repair or replace malfunctioning parts.

Component Inspection

INFOID:0000000009177565

1. CHECK TRANSMISSION RANGE SWITCH

Check continuity between transmission range switch connector terminals.

Transmission range switch Terminal	Condition	Continuity
7 – 10	Manual lever: “P” and “N” positions	Existed
	Other than the above	Not existed
4 – 5	Manual lever: “P” position	Existed
	Other than the above	Not existed
4 – 8	Manual lever: “R” position	Existed
	Other than the above	Not existed
4 – 9	Manual lever: “N position	Existed
	Other than the above	Not existed
4 – 2	Manual lever: “D” position	Existed
	Other than the above	Not existed
4 – 6	Manual lever: “L” position	Existed
	Other than the above	Not existed

Is the inspection result normal?

YES >> INSPECTION END
NO >> There is a malfunction of transmission range switch. Replace transaxle assembly. Refer to TM-214, "Removal and Installation".

P0711 TRANSMISSION FLUID TEMPERATURE SENSOR A

DTC Logic (For North America)

INFOID:0000000009177566

DTC DETECTION LOGIC

DTC	CONSULT screen terms (Trouble diagnosis content)	DTC detection condition	Possible causes
P0711	FLUID TEMP SENSOR A (Transmission Fluid Temperature Sensor A Circuit Range/Performance)	When any of 1 or 2 is satisfied: 1. Under the following diagnosis conditions, CVT fluid temperature does not rise to 10°C (50°F) after driving for a certain period of time with the TCM-received fluid temperature sensor value between – 40°C (–40°F) and 9°C (48.2°F). - TCM power supply voltage: More than 11 V - CAN communication is normal - Engine speed: 450 rpm or more - Accelerator pedal position: 3 deg. or more - Vehicle speed: 10 km/h (7 MPH) or more - U0100, P0705 and P0706 are not detected. - Selector lever: “D” position 2. When the condition of the final judgment is satisfied after satisfying that of the provisional judgment: - Provisional judgment: All of the following conditions are satisfied within 2 seconds after the ignition switch is turned ON. • U0073, U0100, P0712 and P0713 are not detected. • CAN communication is normal. • TCM power supply voltage: More than 11 V • The difference between CVT fluid temperature and engine coolant temperature is 55°C (131°F) or more, or –27°C (–16°F) or less. - Final judgment: When all of the following conditions are satisfied and this state is maintained for 300 seconds: • ECM is normal. • Provisional judgment is satisfied.	CVT fluid temperature sensor

DTC CONFIRMATION PROCEDURE

CAUTION:

Always drive vehicle at a safe speed.

1.PREPARATION BEFORE WORK

If another "DTC CONFIRMATION PROCEDURE" occurs just before, turn ignition switch OFF and wait for at least 10 seconds, then perform the next test.

>> GO TO 2.

2.PERFORM DTC CONFIRMATION PROCEDURE

With CONSULT

1. Turn ignition switch OFF and cool the engine.
2. Turn ignition switch ON.
   CAUTION:
   Never start the engine.
3. Select “Data Monitor” in “TRANSMISSION”.
4. Select “FLUID TEMP”.
5. Record CVT fluid temperature.
6. Start the engine and wait for at least 2 minutes.
7. Drive the vehicle for the total minutes specified in the Driving time column below with the following conditions satisfied.

Selector lever	: “D” position
Accelerator pedal position	: 1.0/8 or more
Vehicle speed	: 10 km/h (7 MPH) or more

CVT fluid temperature before engine start	Driving time
–40°C (–40°F) – –31°C (–23.8°F)	20 minutes or more
–30°C (–22°F) – –21°C (–5.8°F)	18 minutes or more
–20°C (–4°F) – –11°C (–12.2°F)	14 minutes or more
–10°C (14°F) – –1°C (30.2°F)	10 minutes or more
0°C (32°F) – 9°C (48.2°F)	7 minutes or more
Other than the above	— (Go to 3.)

8. Stop the vehicle.
9. Check the first trip DTC.

With GST

1. Turn ignition switch OFF and cool the engine.
2. Start the engine and wait for at least 2 minutes.
3. Drive the vehicle and maintain the following conditions for 20 minutes or more.

Selector lever	: “D” position
Accelerator pedal position	: 1.0/8 or more
Vehicle speed	: 10 km/h (7 MPH) or more

4. Stop the vehicle.
5. Check the first trip DTC.

Is “P0711” detected?

YES >> Go to TM-110, "Diagnosis Procedure".
NO >> GO TO 3.

3. CHECK CVT FLUID TEMPERATURE SENSOR

1. Turn ignition switch OFF.
2. Disconnect CVT unit connector.
3. Check resistance between CVT unit connector terminals.

CVT unit / Terminal	Condition	Resistance (Approx.)
12 – 18	CVT fluid temperature: 20°C (68°F)	6.5 kΩ
	CVT fluid temperature: 50°C (122°F)	2.2 kΩ
	CVT fluid temperature: 80°C (176°F)	0.87 kΩ

Is the inspection result normal?

YES >> INSPECTION END
NO >> There is a malfunction of CVT fluid temperature sensor. Replace transaxle assembly. Refer to TM-214, "Removal and Installation".

DTC Logic (Except for North America)

INFOID:0000000009774645

DTC DETECTION LOGIC

DTC	CONSULT screen terms (Trouble diagnosis content)	DTC detection condition	Possible causes
P0711	FLUID TEMP SENSOR A (Transmission Fluid Temperature Sensor A Circuit Range/Performance)	When the temperature does not increase to the specified temperature within a specified time after all of the following conditions are satisfied: • TCM power supply voltage: More than 11 V • CAN communication is normal • Engine speed: 450 rpm or more • Accelerator pedal position: 3 deg. or more • Vehicle speed: 10 km/h (7 MPH) or more • U0100, P0705 and P0706 are not detected. • Selector lever: “D” position	CVT fluid temperature sensor

DTC CONFIRMATION PROCEDURE

CAUTION:

Always drive vehicle at a safe speed.

1. PREPARATION BEFORE WORK

If another "DTC CONFIRMATION PROCEDURE" occurs just before, turn ignition switch OFF and wait for at least 10 seconds, then perform the next test.

>> GO TO 2.

2. PRECONDITIONING

1. Turn ignition switch ON.
2. Select “Data Monitor” in “TRANSMISSION”.
3. Select “ATF TEMP SEN”.

Is “ATF TEMP SEN” value within 2.03 – 0.16 V?

YES >> INSPECTION END
NO-1 (“ATF TEMP SEN” indicates 0.15 V or less.)>>Go to TM-110, "Diagnosis Procedure".
NO-2 (“ATF TEMP SEN” indicates 2.04 V or more.)>>GO TO 3.

3. CHECK DTC DETECTION

1. Start the engine.
2. Drive the vehicle.
3. Maintain the following conditions for 14 minutes or more.

Selector lever	: “D” position
Vehicle speed	: More than 10 km/h (7 MPH)

4. Stop the vehicle.
5. Check the first trip DTC.

Is “P0711” detected?

YES >> Go to TM-110, "Diagnosis Procedure".
NO >> INSPECTION END

Diagnosis Procedure

INFOID:0000000009177567

1. CHECK CVT FLUID TEMPERATURE SENSOR

1. Turn ignition switch OFF.
2. Disconnect CVT unit connector.
3. Check resistance between CVT unit connector terminals.

CVT unit		Condition	Resistance (Approx.)
Connector	Terminal		
F209	12 – 18	CVT fluid temperature: 20°C (68°F)	6.5 kΩ
		CVT fluid temperature: 50°C (122°F)	2.2 kΩ
		CVT fluid temperature: 80°C (176°F)	0.87 kΩ

Is the inspection result normal?

YES >> GO TO 2.
NO >> Replace transaxle assembly. Refer to TM-214, "Removal and Installation"

2. CHECK CIRCUIT BETWEEN TCM AND CVT UNIT (CVT FLUID TEMPERATURE SENSOR) (PART 1)

1. Disconnect the TCM connector.
2. Check continuity between TCM harness connector terminals and CVT unit harness connector terminals.

TCM		CVT unit		Continuity
Connector	Terminal	Connector	Terminal	
F15	11	F46	18	Existed
	12		12	

Is the inspection result normal?

YES >> GO TO 3.
NO >> Repair or replace damaged parts.

3. CHECK CIRCUIT BETWEEN TCM AND CVT UNIT (CVT FLUID TEMPERATURE SENSOR) (PART 2)

Check continuity between TCM harness connector terminals and ground.

TCM		Ground	Continuity
Connector	Terminal		
F15	11	Ground	Not existed
	12		

Is the inspection result normal?

YES >> Check intermittent incident. Refer to GI-49, "Intermittent Incident".
NO >> Repair or replace damaged parts.

P0712 TRANSMISSION FLUID TEMPERATURE SENSOR A

DTC Logic

INFOID:0000000009177568

DTC DETECTION LOGIC

DTC	CONSULT screen terms (Trouble diagnosis content)	DTC detection condition	Possible causes
P0712	FLUID TEMP SENSOR A (Transmission Fluid Temperature Sensor A Circuit Low)	When all of the following conditions are satisfied and this state is maintained for 5 seconds: • TCM power supply voltage: More than 11 V • Fluid temperature sensor detection voltage: 0.15 V or less	• Harness or connector (CVT fluid temperature sensor circuit is shorted to ground) • CVT fluid temperature sensor

DTC CONFIRMATION PROCEDURE

1.PREPARATION BEFORE WORK

If another "DTC CONFIRMATION PROCEDURE" occurs just before, turn ignition switch OFF and wait for at least 10 seconds, then perform the next test.

>> GO TO 2.

2.PERFORM DTC CONFIRMATION PROCEDURE

1. Start the engine and wait for 10 seconds or more.
2. Check the first trip DTC.

Is “P0712” detected?

YES >> Go to TM-112, "Diagnosis Procedure".
NO >> INSPECTION END

Diagnosis Procedure

INFOID:0000000009177569

1.CHECK CIRCUIT BETWEEN TCM AND CVT UNIT

1. Turn ignition switch OFF.
2. Disconnect TCM connector and CVT unit connector.
3. Check continuity between TCM harness connector terminal and ground.

TCM		—	Continuity
Connector	Terminal		
F15	12	Ground	Not existed

Is the inspection result normal?

YES >> GO TO 2.
NO >> Repair or replace malfunctioning part.

2.CHECK TERMINAL CODE ASSEMBLY

Check continuity between CVT unit connector terminal and ground

CVT unit		—	Continuity
Connector	Terminal		
F209	12	Ground	Not existed

Is the inspection result normal?

YES >> GO TO 3.
NO >> Replace transaxle assembly. Refer to TM-214, "Removal and Installation".

3.CHECK CVT FLUID TEMPERATURE SENSOR

Check resistance between CVT unit connector terminals.

CVT unit		Condition	Resistance (Approx.)
Connector	Terminal		
F209	12 – 18	CVT fluid temperature: 20°C (68°F)	6.5 kΩ
		CVT fluid temperature: 50°C (122°F)	2.2 kΩ
		CVT fluid temperature: 80°C (176°F)	0.87 kΩ

Is the inspection result normal?

YES >> Check intermittent incident. Refer to GI-49, "Intermittent Incident".
NO >> Replace transaxle assembly. Refer to TM-214, "Removal and Installation".

P0713 TRANSMISSION FLUID TEMPERATURE SENSOR A

DTC Logic

INFOID:0000000009177570

DTC DETECTION LOGIC

DTC	CONSULT screen terms (Trouble diagnosis content)	DTC detection condition	Possible causes
P0713	FLUID TEMP SENSOR A (Transmission Fluid Temperature Sensor A Circuit High)	When all of the following conditions are satisfied and this state is maintained for 5 seconds: • TCM power supply voltage: More than 11 V • Vehicle speed: More than 10 km/h (7 MPH) • Fluid temperature sensor detection voltage: 2.48 V or more	• Harness or connector (CVT fluid temperature sensor circuit is open or shorted to power supply) • CVT fluid temperature sensor

DTC CONFIRMATION PROCEDURE

1.PREPARATION BEFORE WORK

If another "DTC CONFIRMATION PROCEDURE" occurs just before, turn ignition switch OFF and wait for at least 10 seconds, then perform the next test.

>> GO TO 2.

2.PERFORM DTC CONFIRMATION PROCEDURE

1. Start the engine.
2. Maintain the following condition for 10 seconds or more.

Vehicle speed : 20 km/h (12 MPH) or more

3. Stop the vehicle.
4. Check the first trip DTC.

Is “P0713” detected?

YES >> Go to TM-114, "Diagnosis Procedure".
NO >> INSPECTION END

Diagnosis Procedure

INFOID:0000000009177571

1.CHECK CIRCUIT BETWEEN TCM AND CVT UNIT (PART 1)

1. Turn ignition switch OFF.
2. Disconnect TCM connector and CVT unit connector.
3. Check continuity between TCM harness connector terminals and CVT unit harness connector terminals.

TCM		CVT unit		Continuity
Connector	Terminal	Connector	Terminal	
F15	11	F46	18	Existed
	12		12	

Is the inspection result normal?

YES >> GO TO 2.
NO >> Repair or replace malfunctioning parts.

2.CHECK CIRCUIT BETWEEN TCM AND CVT UNIT (PART 2)

1. Turn ignition switch ON.
2. Check voltage between TCM harness connector terminal and ground.

+		–	Voltage (Approx.)
TCM			
Connector	Terminal		
F15	12	Ground	0 V

Is the inspection result normal?

YES >> GO TO 3.
NO >> Repair or replace malfunctioning parts.

3. CHECK CVT FLUID TEMPERATURE SENSOR

1. Turn ignition switch OFF.
2. Check resistance between CVT unit connector terminals.

CVT unit		Condition	Resistance (Approx.)
Connector	Terminal		
F209	12 – 18	CVT fluid temperature: 20°C (68°F)	6.5 kΩ
		CVT fluid temperature: 50°C (122°F)	2.2 kΩ
		CVT fluid temperature: 80°C (176°F)	0.87 kΩ

Is the inspection result normal?

YES >> Check intermittent incident. Refer to GI-49, "Intermittent Incident".
NO >> There is malfunction of CVT fluid temperature sensor circuit. Replace transaxle assembly. Refer to TM-214, "Removal and Installation".

P0715 INPUT SPEED SENSOR A

DTC Logic

INFOID:0000000009177572

DTC DETECTION LOGIC

DTC	CONSULT screen terms (Trouble diagnosis content)	DTC detection condition	Possible causes
P0715	INPUT SPEED SENSOR A (Input/Turbine Speed Sensor A Circuit)	When 1 is satisfied and any of 2, 3 or 4 is satisfied: 1. When the following conditions are satisfied: - TCM power supply voltage: More than 11 V - After range change completion, it spends 2 seconds or more. 2. When all of the following conditions are satisfied and this state is maintained for 5 seconds: - Primary pulley speed: Less than 150 rpm - Secondary pulley speed: 500 rpm or more 3. When all of the following conditions are satisfied and this state is maintained for 0.5 seconds: - 10-msec-ago primary pulley speed: 1,000 rpm or more - Now primary pulley speed: 0 rpm 4. When all of the following conditions are satisfied and this state is maintained for 5 seconds: - Range: D or L - Engine speed: 450 rpm or more - Input peed: 300 rpm or more - Primary pulley speed: 300 rpm or more - Secondary pulley seed: 300 rpm or more - Differences between engine speed and primary pulley speed: More than 1,000 rpm - Differences between primary pulley speed and input speed: More than 1,000 rpm - Differences between engine speed and input speed: 1,000 rpm or less - Lock-up command is being given (except for slip lock-up) - DTC other than the applicable DTC is not detected.	• Harness or connector (Primary speed sensor circuit is open or shorted) • Primary speed sensor

DTC CONFIRMATION PROCEDURE

CAUTION:

Be careful of the driving speed.

1. PREPARATION BEFORE WORK

If another "DTC CONFIRMATION PROCEDURE" occurs just before, turn ignition switch OFF and wait for at least 10 seconds, then perform the next test.

>> GO TO 2.

2. CHECK DTC DETECTION

1. Start the engine.
2. Drive the vehicle.
3. Maintain the following conditions for 10 seconds or more.

Selector lever	: “D” position
Engine speed	: 1,200 rpm or more
Vehicle speed	: 40 km/h (25 MPH) or more

4. Stop the vehicle.
5. Check the first trip DTC.

Is “P0715” detected?

YES >> Go to TM-117, "Diagnosis Procedure".
NO >> INSPECTION END

Diagnosis Procedure

INFOID:0000000009177573

1. CHECK PRIMARY SPEED SENSOR POWER CIRCUIT

1. Turn ignition switch OFF.
2. Disconnect primary speed sensor connector.
3. Turn ignition switch ON.
4. Check voltage between primary speed sensor harness connector terminal and ground.

+		–	Voltage
Primary speed sensor			
Connector	Terminal		
F25	3	Ground	10 – 16 V

Is the inspection result normal?

YES >> GO TO 2.
NO >> GO TO 6.

2. CHECK PRIMARY SPEED SENSOR GROUND CIRCUIT

Check continuity between primary speed sensor harness connector terminal and ground.

Primary speed sensor		—	Continuity
Connector	Terminal		
F25	1	Ground	Existed

Is the inspection result normal?

YES >> GO TO 3.
NO >> Repair or replace malfunctioning parts.

3. CHECK CIRCUIT BETWEEN PRIMARY SPEED SENSOR AND TCM (PART 1)

1. Turn ignition switch OFF.
2. Disconnect TCM connector.
3. Check continuity between primary speed sensor harness connector terminal and TCM harness connector terminal.

Primary speed sensor		TCM		Continuity
Connector	Terminal	Connector	Terminal	
F25	2	F15	35	Existed

Is the inspection result normal?

YES >> GO TO 4.
NO >> Repair or replace malfunctioning parts.

4. CHECK CIRCUIT BETWEEN PRIMARY SPEED SENSOR AND TCM (PART 2)

Check continuity between primary speed sensor harness connector terminal and ground.

Primary speed sensor		—	Continuity
Connector	Terminal		
F25	2	Ground	Not existed

Is the inspection result normal?

YES >> GO TO 5.
NO >> Repair or replace malfunctioning parts.

5. CHECK TCM INPUT SIGNALS

1. Connect all of disconnected connectors.
2. Lift the vehicle.
3. Start the engine.
4. Check frequency of primary speed sensor.

+		–	Condition	Frequency (Approx.)
TCM				
Connector	Terminal			
F15	35	Ground	• Selector lever: “L” position • Vehicle speed: 20 km/h (12 MPH)	700 Hz 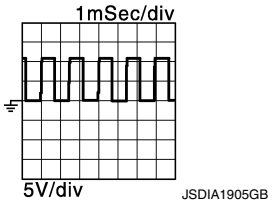

Is the inspection result normal?

YES >> Check intermittent incident. Refer to GI-49, "Intermittent Incident".
NO >> Replace primary speed sensor. Refer to TM-201, "Removal and Installation".

6. DETECT MALFUNCTIONING ITEMS

Check the following items:

- Open circuit or short circuit in harness between ignition switch and IPDM E/R. Refer to PG-23, "Wiring Diagram - IGNITION POWER SUPPLY -".
- Open circuit or short circuit in harness between IPDM E/R harness connector terminal 61 and primary speed sensor harness connector terminal 3.
- 10A fuse (No.46, located in the IPDM E/R). Refer to PG-85, "IPDM E/R Terminal Arrangement".
- IPDM E/R

Is the check result normal?

YES >> Check intermittent incident. Refer to GI-49, "Intermittent Incident".
NO >> Repair or replace malfunctioning parts.

P0717 INPUT SPEED SENSOR A

DTC Logic

INFOID:0000000009177574

DTC DETECTION LOGIC

DTC	CONSULT screen terms (Trouble diagnosis content)	DTC detection condition	Possible cause
P0717	INPUT SPEED SENSOR A (Input/Turbine Speed Sensor “A” Circuit No Signal)	When 1 is satisfied and any of 2, 3 or 4 is satisfied: 1. When the following conditions are satisfied: - TCM power supply voltage: More than 11 V - After range change completion, it spends 2 seconds or more. 2. When all of the following conditions are satisfied and this state is maintained for 5 seconds: - Primary pulley speed: 500 rpm or more - Input speed: Less than 150 rpm - Range: Other than P, N - P0715 is not detected 3. When all of the following conditions are satisfied and this state is maintained for 0.5 seconds: - 10-msec-ago input speed: 1,000 rpm or more - Now input speed: 0 rpm 4. When all of the following conditions are satisfied and this state is maintained for 5 seconds: - Range: D or L - Engine speed: 450 rpm or more - Input peed: 300 rpm or more - Primary pulley speed: 300 rpm or more - Secondary pulley seed: 300 rpm or more - Differences between engine speed and primary pulley speed: 1,000 rpm or less - Differences between primary pulley speed and input speed: More than 1,000 rpm - Differences between engine speed and input speed: More than 1,000 rpm - Lock-up command is being given (except for slip lock-up) - DTC other than the applicable DTC is not detected.	• Harness or connectors (Input speed sensor circuit is open or shorted.) • Input speed sensor

DTC CONFIRMATION PROCEDURE

CAUTION:

Always drive vehicle at a safe speed.

1. PREPARATION BEFORE WORK

If another “DTC CONFIRMATION PROCEDURE” occurs just before, turn ignition switch OFF and wait for at least 10 seconds, then perform the next test.

>> GO TO 2.

2. CHECK DTC DETECTION

With CONSULT

1. Start the engine.
2. Drive the vehicle.
3. Maintain the following conditions for 10 seconds or more.

Selector lever : “D” position

Engine speed : 1,200 rpm or more
Vehicle speed : 40 km/h (25 MPH) or more

4. Stop the vehicle.
5. Check the first trip DTC.

Is “P0717” detected?

YES >> Go to TM-120, "Diagnosis Procedure".
NO >> INSPECTION END

Diagnosis Procedure

INFOID:0000000009177575

1. CHECK INPUT SPEED SENSOR POWER CIRCUIT

1. Turn ignition switch OFF.
2. Disconnect input speed sensor connector.
3. Turn ignition switch ON.
4. Check voltage between input speed sensor harness connector terminal and ground.

+		–	Voltage
Input speed sensor			
Connector	Terminal		
F29	3	Ground	10 – 16 V

Is the inspection result normal?

YES >> GO TO 2.
NO >> GO TO 6.

2. CHECK INPUT SPEED SENSOR GROUND CIRCUIT

Check continuity between input speed sensor harness connector terminal and ground.

Input speed sensor		—	Continuity
Connector	Terminal		
F29	1	Ground	Existed

Is the inspection result normal?

YES >> GO TO 3.
NO >> Repair or replace malfunctioning parts.

3. CHECK CIRCUIT BETWEEN INPUT SPEED SENSOR AND TCM (PART 1)

1. Turn ignition switch OFF.
2. Disconnect TCM connector.
3. Check continuity between input speed sensor harness connector terminal and TCM harness connector terminal.

Input speed sensor		TCM		Continuity
Connector	Terminal	Connector	Terminal	
F29	2	F15	24	Existed

Is the inspection result normal?

YES >> GO TO 4.
NO >> Repair or replace malfunctioning parts.

4. CHECK CIRCUIT BETWEEN INPUT SPEED SENSOR AND TCM (PART 2)

Check continuity between input speed sensor harness connector terminal and ground.

Input speed sensor		—	Continuity
Connector	Terminal		
F29	2	Ground	Not existed

Is the inspection result normal?

YES >> GO TO 5.
NO >> Repair or replace malfunctioning parts.

5. CHECK TCM INPUT SIGNALS

1. Connect all of disconnected connectors.
2. Lift the vehicle.
3. Start the engine.
4. Check frequency of input speed sensor.

+		–	Condition	Frequency (Approx.)
TCM				
Connector	Terminal			
F15	24	Ground	• Selector lever: “L” position • Vehicle speed: 20 km/h (12 MPH)	880 Hz 1mSec/div 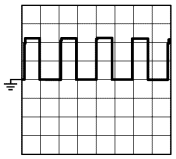 5V/div JSDIA3769GB

Is the inspection result normal?

YES >> Check intermittent incident. Refer to GI-49, "Intermittent Incident".
NO >> Replace input speed sensor. Refer to TM-199, "Removal and Installation".

6. DETECT MALFUNCTIONING ITEMS

Check the following items:

- Open circuit or short circuit in harness between ignition switch and IPDM E/R. Refer to PG-23, "Wiring Diagram - IGNITION POWER SUPPLY -".
- Open circuit or short circuit in harness between IPDM E/R harness connector terminal 61 and input speed sensor harness connector terminal 3.
- 10A fuse (No.46, located in the IPDM E/R). Refer to PG-85, "IPDM E/R Terminal Arrangement".
- IPDM E/R

Is the check result normal?

YES >> Check intermittent incident. Refer to GI-49, "Intermittent Incident".
NO >> Repair or replace malfunctioning parts.

P0740 TORQUE CONVERTER

DTC Logic

INFOID:0000000009177576

DTC DETECTION LOGIC

DTC	CONSULT screen terms (Trouble diagnosis content)	DTC detection condition	Possible causes
P0740	TORQUE CONVERTER (Torque Converter Clutch Circuit/Open)	When all of the following conditions are satisfied and this state is maintained for 5 seconds: • TCM power supply voltage: More than 11 V • P0743 is not detected. • TCM judges that solenoid valve circuit is open.	• Harness or connector (Torque converter clutch solenoid valve circuit is open or shorted to power supply) • Torque converter clutch solenoid valve

DTC CONFIRMATION PROCEDURE

CAUTION:

Be careful of the driving speed.

1. PREPARATION BEFORE WORK

If another "DTC CONFIRMATION PROCEDURE" occurs just before, turn ignition switch OFF and wait for at least 10 seconds, then perform the next test.

>> GO TO 2.

2. PREPARATION BEFORE OPERATION

With CONSULT

1. Start the engine.
2. Select “Data Monitor” in “TRANSMISSION”.
3. Select “FLUID TEMP”.
4. Confirm that the CVT fluid temperature is in the following range.

FLUID TEMP	: 20°C (68°F) or more

With GST

1. Start the engine.
2. Set the CVT fluid to 20°C (68°F) or more.

   NOTE:

   When the ambient temperature is 20°C (68°F), the CVT fluid usually increases to 50 to 80°C (122 to 176°F) with driving in an urban area for approximately 10 minutes.

Is the CVT fluid 20°C (68°F) or more?

YES >> GO TO 3.

NO >> 1. Warm the transaxle.
2. GO TO 3.

3. CHECK DTC DETECTION

1. Drive the vehicle.
2. Maintain the following conditions for 10 seconds or more.

Selector lever	: “D” position
Vehicle speed	: 40 km/h (25 MPH) or more

3. Stop the vehicle.
4. Check the first trip DTC.

Is “P0740” detected?

YES >> Go to TM-123, "Diagnosis Procedure".

NO >> INSPECTION END

Diagnosis Procedure

INFOID:0000000009177577

1. CHECK CIRCUIT BETWEEN TCM AND CVT UNIT

1. Turn ignition switch OFF.
2. Disconnect TCM connector and CVT unit connector.
3. Check continuity between TCM harness connector terminal and CVT unit harness connector terminal.

TCM		CVT unit		Continuity
Connector	Terminal	Connector	Terminal	
F15	38	F46	2	Existed

Is the inspection result normal?

YES >> GO TO 2.
NO >> Repair or replace malfunctioning parts.

2. CHECK TORQUE CONVERTER CLUTCH SOLENOID VALVE CIRCUIT

Check resistance between CVT unit harness connector terminal and ground.

CVT unit		—	Condition	Resistance
Connector	Terminal			
F209	5	Ground	CVT fluid temperature: 20°C (68°F)	5.5 – 7.0 Ω
			CVT fluid temperature: 50°C (122°F)	6.0 – 8.0 Ω
			CVT fluid temperature: 80°C (176°F)	6.5 – 8.5 Ω

Is the inspection result normal?

YES >> Check intermittent incident. Refer to GI-49, "Intermittent Incident".
NO >> There is malfunction of torque converter clutch solenoid valve circuit. Replace transaxle assembly. Refer to TM-214, "Removal and Installation".

P0743 TORQUE CONVERTER

DTC Logic

INFOID:0000000009177578

DTC DETECTION LOGIC

DTC	CONSULT screen terms (Trouble diagnosis content)	DTC detection condition	Possible causes
P0743	TORQUE CONVERTER (Torque Converter Clutch Circuit Electrical)	When all of the following conditions are satisfied and this state is maintained for 0.48 seconds: • TCM power supply voltage: More than 11 V • TCM judges that solenoid valve circuit is shorted to ground.	• Harness or connector (Torque converter clutch solenoid valve circuit is shorted to ground) • Torque converter clutch solenoid valve

DTC CONFIRMATION PROCEDURE

CAUTION:

Be careful of the driving speed.

1. PREPARATION BEFORE WORK

If another "DTC CONFIRMATION PROCEDURE" occurs just before, turn ignition switch OFF and wait for at least 10 seconds, then perform the next test.

>> GO TO 2.

2. PREPARATION BEFORE OPERATION

With CONSULT

1. Start the engine.
2. Select “Data Monitor” in “TRANSMISSION”.
3. Select “FLUID TEMP”.
4. Confirm that the CVT fluid temperature is in the following range.

FLUID TEMP	: 20°C (68°F) or more

With GST

1. Start the engine.
2. Set the CVT fluid to 20°C (68°F) or more.
   NOTE:
   When the ambient temperature is 20°C (68°F), the CVT fluid usually increases to 50 to 80°C (122 to 176°F) with driving in an urban area for approximately 10 minutes.

Is the CVT fluid 20°C (68°F) or more?

YES >> GO TO 3.
NO >> 1. Warm the transaxle.
2. GO TO 3.

3. CHECK DTC DETECTION

1. Drive the vehicle.
2. Maintain the following conditions for 10 seconds or more.

Selector lever	: “D” position
Vehicle speed	: 40 km/h (25 MPH) or more

3. Stop the vehicle.
4. Check the first trip DTC.

Is “P0743” detected?

YES >> Go to TM-125, "Diagnosis Procedure".
NO >> INSPECTION END

Diagnosis Procedure

INFOID:0000000009177579

1. CHECK CIRCUIT BETWEEN TCM AND CVT UNIT

1. Turn ignition switch OFF.
2. Disconnect TCM connector and CVT unit connector.
3. Check continuity between TCM harness connector terminal and ground.

TCM		—	Continuity
Connector	Terminal		
F15	38	Ground	Not existed

Is the inspection result normal?

YES >> GO TO 2.
NO >> Repair or replace malfunctioning parts.

2. CHECK TORQUE CONVERTER CLUTCH SOLENOID VALVE CIRCUIT

Check resistance between CVT unit harness connector terminal and ground.

CVT unit		—	Condition	Resistance
Connector	Terminal			
F209	5	Ground	CVT fluid temperature: 20°C (68°F)	5.5 – 7.0 Ω
			CVT fluid temperature: 50°C (122°F)	6.0 – 8.0 Ω
			CVT fluid temperature: 80°C (176°F)	6.5 – 8.5 Ω

Is the inspection result normal?

YES >> Check intermittent incident. Refer to GI-49, "Intermittent Incident".
NO >> There is malfunction of torque converter clutch solenoid valve circuit. Replace transaxle assembly. Refer to TM-214, "Removal and Installation".

P0744 TORQUE CONVERTER

DTC Logic

INFOID:0000000009177580

DTC DETECTION LOGIC

DTC	CONSULT screen terms (Trouble diagnosis content)	DTC detection condition	Possible causes
P0744	TORQUE CONVERTER (Torque converter clutch circuit intermittent)	When all of the following conditions are satisfied and this state is maintained for 30 seconds: • TCM power supply voltage: More than 11 V • P0717 is not detected. • CAN communication is normal • Torque converter slip speed: (40+vihicle speed/2) rpm • LU pressure: More than 0.2 MPa	• Torque converter clutch solenoid valve • Control valve assembly • Torque converter

DTC CONFIRMATION PROCEDURE

CAUTION:

Be careful of the driving speed.

1. PREPARATION BEFORE WORK

If another "DTC CONFIRMATION PROCEDURE" occurs just before, turn ignition switch OFF and wait for at least 10 seconds, then perform the next test.

>> GO TO 2.

2. PREPARATION BEFORE OPERATION

With CONSULT

1. Start the engine.
2. Select “Data Monitor” in “TRANSMISSION”.
3. Select “FLUID TEMP”.
4. Confirm that the CVT fluid temperature is in the following range.

FLUID TEMP	: 20°C (68°F) or more

With GST

1. Start the engine.
2. Set the CVT fluid to 20°C (68°F) or more.
   NOTE:
   When the ambient temperature is 20°C (68°F), the CVT fluid usually increases to 50 to 80°C (122 to 176°F) with driving in an urban area for approximately 10 minutes.

Is the CVT fluid 20°C (68°F) or more?

YES >> GO TO 3.
NO >> 1. Warm the transaxle.
2. GO TO 3.

3. CHECK DTC DETECTION

1. Drive the vehicle.
2. Maintain the following conditions for 10 seconds or more.

Selector lever	: “D” position
Accelerator pedal position	: 0.5/8 or more
Vehicle speed	: 40 km/h (25 MPH) or more

3. Stop the vehicle.
4. Check the first trip DTC.

Is “P0744” detected?

YES >> Go to TM-127, "Diagnosis Procedure".

NO >> INSPECTION END

Diagnosis Procedure

INFOID:0000000009177581

1. CHECK INTERMITTENT INCIDNT

Refer to GI-49, "Intermittent Incident".

Is the inspection result normal?

YES >> Replace transaxle assembly. Refer to TM-214, "Removal and Installation".
NO >> Repair or replace the malfunction items.

P0746 PRESSURE CONTROL SOLENOID A

DTC Logic

INFOID:0000000009177582

DTC DETECTION LOGIC

DTC	CONSULT screen terms (Trouble diagnosis content)	DTC detection condition	Possible causes
P0746	PC SOLENOID A (Pressure Control Solenoid A Performance/Stuck Off)	The detecting condition A or detection condition B is detected twice or more (1 second or more later after detection of the first) in the same DC under the following diagnosis conditions: • Diagnosis conditions - Engine speed: More than 600 rpm - Primary pulley speed: More than 450 rpm - Idle is not being detected. - Acceleration/deceleration speed: –0.49 m/s^2 (–0.05 G) or more - The primary pulley speed experienced 300 rpm or more and the secondary pulley speed experienced 250 rpm or more at least once. - Secondary pulley speed: More than 150 rpm - TCM power supply voltage: More than 11 V • Detection condition A - Status with the shifting ratio of the primary pulley speed/secondary pulley ratio exceeding 2.825 is 0.2 sec or more continuously. • Detection condition B - Status with the shifting ratio of the primary pulley speed/secondary pulley ratio exceeding 3.625 is 0.1 sec or more continuously.	• Line pressure solenoid valve • Control valve assembly

NOTE:
DC stands for "DRIVING CYCLE" and indicates a series of driving cycle of "Ignition switch OFF → ON → driving → OFF".

DTC CONFIRMATION PROCEDURE

CAUTION:
Be careful of the driving speed.

1. PREPARATION BEFORE WORK

If another "DTC CONFIRMATION PROCEDURE" occurs just before, turn ignition switch OFF and wait for at least 10 seconds, then perform the next test.

>> GO TO 2.

2. CHECK DTC DETECTION

1. Start the engine.
2. Drive the vehicle.
3. Maintain the following conditions for 10 seconds or more.

Selector lever	: “D” position
Accelerator pedal position	: 0.5/8 or more
Vehicle speed	: 40 km/h (25 MPH) or more

4. Stop the vehicle.
5. Check the first trip DTC.

Is “P0746”detected?

YES >> Go to TM-129, "Diagnosis Procedure".

NO >> INSPECTION END

Diagnosis Procedure

INFOID:0000000009177583

1. CHECK INTERMITTENT INCIDNT

Refer to GI-49, "Intermittent Incident".

Is the inspection result normal?

YES >> Replace transaxle assembly. Refer to TM-214, "Removal and Installation".
NO >> Repair or replace the malfunction items.

P0776 PRESSURE CONTROL SOLENOID B

DTC Logic

INFOID:0000000009177584

DTC DETECTION LOGIC

DTC	CONSULT screen terms (Trouble diagnosis content)	DTC detection condition	Possible cause
P0776	PC SOLENOID B (Pressure Control Solenoid “B” Performance/Stuck Off)	When any of 1 or 2 is satisfied and this state is maintained for 10 seconds: 1. When all of the following conditions are satisfied: - DTC other than the applicable DTC is not detected. - Engine speed: More than 625 rpm - Selector lever: Other than P/N position - CVT fluid temperature: More than -20°C (-4°F) - TCM power supply: More than 11 V - The difference between instruction pressure of secondary pressure and 10-msec-ago instruction secondary pressure is 0 MPa or more - Instruction pressure of secondary pressure: 0 MPa or more - Instruction pressure of secondary pressure - secondary pressure: More than 1.2 MPa - When all of the following conditions are satisfied and this state is maintained for 5.5 seconds: • DTC other than the applicable DTC is not detected. • CVT fluid temperature: More than -20°C (-4°F) • Selector lever: Other than P/N position • Secondary pressure - instruction pressure of secondary pressure: 1.2 MPa or more 2. When all of the following conditions are satisfied: - DTC other than the applicable DTC is not detected. - CVT fluid temperature: More than -20°C (-4°F) - Selector lever: Other than P/N position - TCM power supply: More than 11 V - When all of the following conditions are satisfied and this state is maintained for 5.5 seconds: • DTC other than the applicable DTC is not detected. • CVT fluid temperature: More than -20°C (-4°F) • Selector lever: Other than P/N position • Secondary pressure - instruction pressure of secondary pressure: 1.2 MPa or more - The difference between instruction pressure of secondary pressure and 10-msec-ago instruction secondary pressure is 0 MPa or more - Secondary pressure - instruction pressure of secondary pressure: More than 1.2 MPa	Secondary pressure solenoid valve

DTC CONFIRMATION PROCEDURE

CAUTION:
Always drive vehicle at a safe speed.

1.PREPARATION BEFORE WORK

If another “DTC CONFIRMATION PROCEDURE” occurs just before, turn ignition switch OFF and wait for at least 10 seconds, then perform the next test.

>> GO TO 2.

2.CHECK DTC DETECTION

1. Start the engine.
2. Drive the vehicle.
3. Maintain the following condition for 20 seconds or more.

Selector lever	: “D” position
Vehicle speed	: 40 km/h (25 MPH) or more
Accelerator pedal position	: 1.0/8 or more

4. Stop the vehicle.
5. Check the first trip DTC.

Is “P0776” detected?

YES >> Go to TM-131, "Diagnosis Procedure".
NO >> INSPECTION END

Diagnosis Procedure

INFOID:0000000009177585

1.CHECK INTERMITTENT INCIDNT

Refer to GI-49, "Intermittent Incident".

Is the inspection result normal?

YES >> Replace transaxle assembly. Refer to TM-214, "Removal and Installation".
NO >> Repair or replace the malfunction items.

P0778 PRESSURE CONTROL SOLENOID B

DTC Logic

INFOID:0000000009177586

DTC DETECTION LOGIC

DTC	CONSULT screen terms (Trouble diagnosis content)	DTC detection condition	Possible cause
P0778	PC SOLENOID B (Pressure Control Solenoid “B” Electrical)	When all of the following conditions are satisfied and this state is maintained for 0.48 seconds: • TCM power supply voltage: More than 11 V • TCM judges that solenoid valve circuit is shorted to ground.	• Harness or connectors (Secondary pressure solenoid valve circuit is shorted to ground.) • Secondary pressure solenoid valve

DTC CONFIRMATION PROCEDURE

CAUTION:

Always drive vehicle at a safe speed.

1.PREPARATION BEFORE WORK

If another “DTC CONFIRMATION PROCEDURE” occurs just before, turn ignition switch OFF and wait for at least 10 seconds, then perform the next test.

>> GO TO 2.

2.CHECK DTC DETECTION

1. Start the engine and wait for 5 seconds or more.
2. Check the first trip DTC.

Is “P0778” detected?

YES >> Go to TM-132, "Diagnosis Procedure".
NO >> INSPECTION END

Diagnosis Procedure

INFOID:0000000009177587

1.CHECK CIRCUIT BETWEEN TCM AND CVT UNIT

1. Turn ignition switch OFF.
2. Disconnect TCM connector and CVT unit connector.
3. Check continuity between TCM harness connector terminal and ground.

TCM		—	Continuity
Connector	Terminal		
F15	39	Ground	Not existed

Is the inspection result normal?

YES >> GO TO 2.
NO >> Repair or replace damaged parts.

2.CHECK SECONDARY PRESSURE SOLENOID VALVE CIRCUIT

Check continuity between CVT unit harness connector terminal and ground.

CVT unit		—	Condition	Resistance
Connector	Terminal			
F209	3	Ground	CVT fluid temperature: 20°C (68°F)	5.5 – 7.0 Ω
			CVT fluid temperature: 50°C (122°F)	6.0 – 8.0 Ω
			CVT fluid temperature: 80°C (176°F)	6.5 – 8.5 Ω

Is the inspection result normal?

YES >> Check intermittent incident. Refer to GI-49, "Intermittent Incident".

NO >> There is malfunction of secondary pressure solenoid valve circuit. Replace transaxle assembly. Refer to TM-214, "Removal and Installation".

P0779 PRESSURE CONTROL SOLENOID B

DTC Logic

INFOID:0000000009177588

DTC DETECTION LOGIC

DTC	Trouble diagnosis name	DTC detection condition	Possible causes
P0779	Pressure control solenoid B Intermittent	When all of the following conditions are satisfied and this state is maintained for 0.2 seconds: • TCM power supply voltage: More than 11 V • P0778 is not detected • TCM judges that solenoid valve circuit is open or shorted to power supply.	• Harness or connector (Secondary pressure solenoid valve circuit open or shorted to power supply) • Secondary pressure solenoid valve

DTC CONFIRMATION PROCEDURE

1.PREPARATION BEFORE WORK

If another "DTC CONFIRMATION PROCEDURE" occurs just before, turn ignition switch OFF and wait for at least 10 seconds, then perform the next test.

>> GO TO 2.

2.CHECK DTC DETECTION

1. Start the engine.
2. Drive the vehicle.
3. Maintain the following conditions for 5 seconds or more.

Selector lever	: “D” position
Vehicle speed	: 40 km/h (25 MPH) or more

4. Stop the vehicle.
5. Check the first trip DTC.

Is “P0779” detected?

YES >> Go to TM-134, "Diagnosis Procedure".
NO >> INSPECTION END

Diagnosis Procedure

INFOID:0000000009177589

1.CHECK CIRCUIT BETWEEN TCM AND CVT UNIT

1. Turn ignition switch OFF.
2. Disconnect TCM connector and CVT unit connector.
3. Check continuity between TCM harness connector terminal and CVT unit harness connector terminal.

TCM		CVT unit		Continuity
Connector	Terminal	Connector	Terminal	
F15	39	F46	3	Existed

Is the inspection result normal?

YES >> GO TO 2.
NO >> Repair or replace damaged parts.

2.CHECK SECONDARY PRESSURE SOLENOID VALVE CIRCUIT

Check continuity between CVT unit harness connector terminal and ground.

CVT unit		—	Condition	Resistance
Connector	Terminal			
F209	3	Ground	CVT fluid temperature: 20°C (68°F)	5.5 – 7.0 Ω
			CVT fluid temperature: 50°C (122°F)	6.0 – 8.0 Ω
			CVT fluid temperature: 80°C (176°F)	6.5 – 8.5 Ω

Is the inspection result normal?

YES >> Check intermittent incident. Refer to GI-49, "Intermittent Incident".

NO >> There is malfunction of secondary pressure solenoid valve circuit. Replace transaxle assembly. Refer to TM-214, "Removal and Installation".

P0841 TRANSMISSION FLUID PRESSURE SEN/SW A

DTC Logic

INFOID:0000000009177590

DTC DETECTION LOGIC

DTC	CONSULT screen terms (Trouble diagnosis content)	DTC detection condition	Possible cause
P0841	FLUID PRESS SEN/SW A (Transmission Fluid Pressure Sensor/Switch “A” Circuit Range/Performance)	When all of the following conditions are satisfied and this state is maintained for 5 seconds: • TCM power supply voltage: More than 11 V • DTC other than the applicable DTC is not detected. • Primary pulley speed: 300 rpm or more • Secondary pulley speed: 250 rpm or more • Target speed for shifting: Less than 0.1 seconds • Primary pulley pressure is outside the specified value.	• Harness or connectors (Secondary pressure sensor circuit is open or shorted.) • Harness or connectors (Primary pressure sensor circuit is open or shorted.) • Secondary pressure sensor

DTC CONFIRMATION PROCEDURE

CAUTION:

Always drive vehicle at a safe speed.

1. PREPARATION BEFORE WORK

If another “DTC CONFIRMATION PROCEDURE” occurs just before, turn ignition switch OFF and wait for at least 10 seconds, then perform the next test.

>> GO TO 2.

2. CHECK DTC DETECTION

1. Start the engine.
2. Drive the vehicle.
3. Maintain the following condition for 10 seconds or more.

Selector lever	: “D” position
Vehicle speed	: Constant speed of 40 km/h (25 MPH)

CAUTION:

Also keep the accelerator pedal position constant.

4. Stop the vehicle.
5. Check the first trip DTC.

Is “P0841” detected?

YES >> Go to TM-136, "Diagnosis Procedure".
NO >> INSPECTION END

Diagnosis Procedure

INFOID:0000000009177591

1. CHECK INTERMITTENT INCIDENT

Refer to GI-49, "Intermittent Incident".

Is the inspection result normal?

YES >> Replace the transaxle assembly. Refer to TM-214, "Removal and Installation".
NO >> Repair or replace damaged parts.

P0847 TRANSMISSION FLUID PRESSURE SEN/SW B

DTC Logic

INFOID:0000000009177592

DTC DETECTION LOGIC

DTC	CONSULT screen terms (Trouble diagnosis content)	DTC detection condition	Possible causes
P0847	FLUID PRESS SEN/SW B (Transmission Fluid Pressure Sensor/Switch B Circuit Low)	When all of the following conditions are satisfied and this state is maintained for 5 seconds: • CVT fluid temperature: More than –20°C (–4°F) • TCM power supply voltage: 11 V or more • Secondary pressure sensor voltage: 0.09 V or less	• Harness or connector (Secondary pressure sensor circuit is open or shorted to ground) • Secondary pressure sensor • Control valve assembly

DTC CONFIRMATION PROCEDURE

1.PREPARATION BEFORE WORK

If another "DTC CONFIRMATION PROCEDURE" occurs just before, turn ignition switch OFF and wait for at least 10 seconds, then perform the next test.

>> GO TO 2.

2.CHECK DTC DETECTION

With CONSULT

1. Start the engine.
2. Select “Data Monitor” in “TRANSMISSION”.
3. Select “FLUID TEMP”.
4. Maintain the following conditions for 10 seconds or more.

FLUID TEMP : –20°C (–4°F)

5. Check the first trip DTC.

With GST

1. Start the engine and wait for at least 10 seconds.
   CAUTION:
   When the ambient temperature is less than –20°C (–4°F) and the engine is cold, warm up the engine for approximately 5 minutes.
2. Check the first trip DTC.

Is “P0847”detected?

YES >> Go to TM-137, "Diagnosis Procedure".
NO >> INSPECTION END

Diagnosis Procedure

INFOID:0000000009177593

1.CHECK TCM INPUT SIGNALS

1. Turn ignition switch OFF.
2. Start the engine.
3. Check voltage between TCM harness connector terminals.

+		–	Condition	Voltage
TCM				
Connector	Terminal			
F15	16	Ground	• Selector lever: “N” position • At idle	1.67 – 1.69 V

Is the inspection result normal?

YES >> Check intermittent incident. Refer to GI-49, "Intermittent Incident".
NO >> GO TO 2.

2. CHECK CIRCUIT BETWEEN TCM AND CVT UNIT (PART 1)

1. Turn ignition switch OFF.
2. Disconnect TCM connector and CVT unit connector.
3. Check continuity between TCM harness connector terminals and CVT unit harness connector terminals.

TCM		CVT unit		Continuity
Connector	Terminal	Connector	Terminal	
F15	11	F46	18	Existed
	16		14	
	26		22	

Is the inspection result normal?

YES >> GO TO 3.
NO >> Repair or replace malfunctioning parts.

3. CHECK CIRCUIT BETWEEN TCM AND CVT UNIT (PART 2)

Check continuity between TCM harness connector terminals and ground.

TCM		—	Continuity
Connector	Terminal		
F15	16	Ground	Not existed
	26		

Is the inspection result normal?

YES >> There is malfunction of secondary pressure sensor circuit. Replace transaxle assembly. Refer to TM-214, "Removal and Installation".
NO >> Repair or replace malfunctioning parts.

P0848 TRANSMISSION FLUID PRESSURE SEN/SW B

DTC Logic

INFOID:0000000009177594

DTC DETECTION LOGIC

DTC	CONSULT screen terms (Trouble diagnosis content)	DTC detection condition	Possible causes
P0848	FLUID PRESS SEN/SW B (Transmission Fluid Pressure Sensor/Switch B Circuit Low)	When all of the following conditions are satisfied and this state is maintained for 5 seconds: • CVT fluid temperature: More than –20°C (–4°F) • TCM power supply voltage: More than 11 V • Instruction secondary pressure: 5.7 MPa or less • Secondary pressure sensor voltage: 4.7 V or more	• Harness or connector (Secondary pressure sensor circuit is shorted to power supply) • Secondary pressure sensor • Control valve assembly

DTC CONFIRMATION PROCEDURE

1.PREPARATION BEFORE WORK

If another "DTC CONFIRMATION PROCEDURE" occurs just before, the ignition switch OFF and wait for at least 10 seconds, then perform the next test.

>> GO TO 2.

2.CHECK DTC DETECTION

With CONSULT

1. Start the engine.
2. Select “Data Monitor” in “TRANSMISSION”.
3. Select “FLUID TEMP”.
4. Maintain the following conditions for 10 seconds or more.

FLUID TEMP : More than –20°C (–4°F)

5. Check the first trip DTC.

With GST

1. Start the engine and wait for at least 10 seconds.
   CAUTION:
   When the ambient temperature is less than –20°C (–4°F) and the engine is cold, warm up the engine for approximately 5 minutes.
2. Check the first trip DTC.

Is “P0848”detected?

YES >> Go to TM-139, "Diagnosis Procedure".
NO >> INSPECTION END

Diagnosis Procedure

INFOID:0000000009177595

1.CHECK TCM INPUT SIGNALS

1. Turn ignition switch OFF.
2. Start the engine.
3. Check voltage between TCM harness connector terminals.

+		–	Condition	Voltage
TCM				
Connector	Terminal			
F15	16	Ground	• Selector lever: “N” position • At idle	1.67 – 1.69 V

Is the inspection result normal?

YES >> Check intermittent incident. Refer to GI-49, "Intermittent Incident".
NO >> GO TO 2.

2. CHECK SECONDARY PRESSURE SENSOR POWER CIRCUIT

1. Turn ignition switch OFF.
2. Connect TCM connector.
3. Disconnect CVT unit connector.
4. Check voltage between CVT unit harness connector terminal and ground.

+		–	Voltage (Approx.)
CVT unit			
Connector	Terminal		
F46	22	Ground	5.0 V

Is the inspection result normal?

YES >> GO TO 3.
NO >> Repair or replace malfunctioning parts.

3. CHECK SECONDARY PRESSURE SENSOR SIGNAL CIRCUIT

Check voltage between CVT unit harness connector terminal and ground.

+		–	Voltage (Approx.)
CVT unit			
Connector	Terminal		
F46	14	Ground	0 V

Is the inspection result normal?

YES >> There is malfunction of secondary pressure sensor circuit. Replace transaxle assembly. Refer to TM-214, "Removal and Installation".
NO >> Repair or replace malfunctioning parts.

P084C TRANSMISSION FLUID PRESSURE SEN/SW H

DTC Logic

INFOID:0000000009177596

DTC DETECTION LOGIC

DTC	CONSULT screen terms (Trouble diagnosis content)	DTC detection condition	Possible causes
P084C	FLUID PRESS SEN/SW H (Transmission Fluid Pressure Sensor/Switch H Circuit Low)	When all of the following conditions are satisfied and this state is maintained for 5 seconds: • CVT fluid temperature: More than –20°C (–4°F) • TCM power supply voltage: More than 11 V • Primary pressure sensor voltage: 0.09 V or less	• Harness or connector (Primary pressure sensor circuit is open or shorted to ground) • Primary pressure sensor • Control valve assembly

DTC CONFIRMATION PROCEDURE

1.PREPARATION BEFORE WORK

If another "DTC CONFIRMATION PROCEDURE" occurs just before, turn ignition switch OFF and wait for at least 10 seconds, then perform the next test.

>> GO TO 2.

2.CHECK DTC DETECTION

With CONSULT

1. Start the engine.
2. Select “Data Monitor” in “TRANSMISSION”.
3. Select “FLUID TEMP”.
4. Maintain the following conditions for 10 seconds or more.

FLUID TEMP : More than –20°C (–4°F)

5. Check the first trip DTC.

With GST

1. Start the engine and wait for at least 10 seconds.
   CAUTION:
   When the ambient temperature is less than –20°C (–4°F) and the engine is cold, warm up the engine for approximately 5 minutes.
2. Check the first trip DTC.

Is “P084C”detected?

YES >> Go to TM-141, "Diagnosis Procedure".
NO >> INSPECTION END

Diagnosis Procedure

INFOID:0000000009177597

1.CHECK TCM INPUT SIGNALS

1. Turn ignition switch OFF.
2. Start the engine.
3. Check voltage between TCM harness connector terminals.

+		–	Condition	Voltage
TCM				
Connector	Terminal			
F15	17	Ground	• Selector lever: “N” position • At idle	0.90 – 0.92 V

Is the inspection result normal?

YES >> Check intermittent incident. Refer to GI-49, "Intermittent Incident".
NO >> GO TO 2.

2. CHECK CIRCUIT BETWEEN TCM AND CVT UNIT (PART 1)

1. Turn ignition switch OFF.
2. Disconnect TCM connector and CVT unit connector.
3. Check continuity between TCM harness connector terminals and CVT unit harness connector terminals.

TCM		CVT unit		Continuity
Connector	Terminal	Connector	Terminal	
F15	11	F46	18	Existed
	17		13	
	26		22	

Is the inspection result normal?

YES >> GO TO 3.
NO >> Repair or replace malfunctioning parts.

3. CHECK CIRCUIT BETWEEN TCM AND CVT UNIT (PART 2)

Check continuity between TCM harness connector terminals and ground.

TCM		—	Continuity
Connector	Terminal		
F15	17	Ground	Not existed
	26		

Is the inspection result normal?

YES >> There is malfunction of primary pressure sensor circuit. Replace transaxle assembly. Refer to TM-214, "Removal and Installation".
NO >> Repair or replace malfunctioning parts.

P084D TRANSMISSION FLUID PRESSURE SEN/SW H

DTC Logic

INFOID:0000000009177598

DTC DETECTION LOGIC

DTC	CONSULT screen terms (Trouble diagnosis content)	DTC detection condition	Possible causes
P084D	FLUID PRESS SEN/SW H (Transmission Fluid Pressure Sensor/Switch “H” Circuit High)	When all of the following conditions are satisfied and this state is maintained for 5 seconds: • CVT fluid temperature: More than –20°C (–4°F) • TCM power supply voltage: More than 11 V • Primary pressure sensor voltage: 4.7 V or more	• Harness or connector (Primary pressure sensor circuit is open or shorted to ground) • Primary pressure sensor • Control valve assembly

DTC CONFIRMATION PROCEDURE

1.PREPARATION BEFORE WORK

If another "DTC CONFIRMATION PROCEDURE" occurs just before, turn ignition switch OFF and wait for at least 10 seconds, then perform the next test.

>> GO TO 2.

2.CHECK DTC DETECTION

With CONSULT

1. Start the engine.
2. Select “Data Monitor” in “TRANSMISSION”.
3. Select “FLUID TEMP”.
4. Maintain the following conditions for 10 seconds or more.

FLUID TEMP : More than –20°C (–4°F)

5. Check the first trip DTC.

With GST

1. Start the engine and wait for at least 10 seconds.
   CAUTION:
   When the ambient temperature is less than –20°C (–4°F) and the engine is cold, warm up the engine for approximately 5 minutes.
2. Check the first trip DTC.

Is “P084D”detected?

YES >> Go to TM-143, "Diagnosis Procedure".
NO >> INSPECTION END

Diagnosis Procedure

INFOID:0000000009177599

1.CHECK TCM INPUT SIGNALS

1. Turn ignition switch OFF.
2. Start the engine.
3. Check voltage between TCM harness connector terminals.

+		–	Condition	Voltage
TCM				
Connector	Terminal			
F15	17	Ground	• Selector lever: “N” position • At idle	0.90 – 0.92 V

Is the inspection result normal?

YES >> Check intermittent incident. Refer to GI-49, "Intermittent Incident".
NO >> GO TO 2.

2. CHECK PRIMARY PRESSURE SENSOR POWER CIRCUIT

1. Turn ignition switch OFF.
2. Connect TCM connector.
3. Disconnect CVT unit connector.
4. Check voltage between CVT unit harness connector terminal and ground.

+		–	Voltage (Approx.)
CVT unit			
Connector	Terminal		
F46	22	Ground	5.0 V

Is the inspection result normal?

YES >> GO TO 3.
NO >> Repair or replace malfunctioning parts.

3. CHECK PRIMARY PRESSURE SENSOR SIGNAL CIRCUIT

Check voltage between CVT unit harness connector terminal and ground.

+		–	Voltage (Approx.)
CVT unit			
Connector	Terminal		
F46	13	Ground	0 V

Is the inspection result normal?

YES >> There is malfunction of primary pressure sensor circuit. Replace transaxle assembly. Refer to TM-214, "Removal and Installation".
NO >> Repair or replace malfunctioning parts.

P0863 TCM COMMUNICATION

DTC Logic

INFOID:0000000009177600

DTC DETECTION LOGIC

DTC	CONSULT screen terms (Trouble diagnosis content)	DTC detection condition	Possible causes
P0863	CONTROL UNIT (CAN) (TCM Communication Circuit)	An error is detected at the initial CAN diagnosis of TCM.	TCM

DTC CONFIRMATION PROCEDURE

1.PREPARATION BEFORE WORK

If another "DTC CONFIRMATION PROCEDURE" occurs just before, turn ignition switch OFF and wait for at least 10 seconds, then perform the next test.

>> GO TO 2.

2.CHECK DTC DETECTION

1. Start the engine.
2. Check the DTC.

Is “P0863” detected?

YES >> Go to TM-145, "Diagnosis Procedure".
NO >> INSPECTION END

Diagnosis Procedure

INFOID:0000000009177601

1.CHECK INTERMITTENT INCIDNT

Refer to GI-49, "Intermittent Incident".

Is the inspection result normal?

YES >> Replace TCM. Refer to TM-195, "Removal and Installation".
NO >> Repair or replace malfunctioning parts.

P0890 TCM

DTC Logic

INFOID:0000000009177602

DTC DETECTION LOGIC

DTC	CONSULT screen terms (Trouble diagnosis content)	DTC detection condition	Possible causes
P0890	TCM (Transmission Control Module Power Relay Sense Circuit Low)	When all of the following conditions are satisfied and this state is maintained for 0.2 seconds: • TCM power supply voltage: More than 11 V • Battery voltage: Less than 8.4 V	• Harness or connector (TCM power supply (back-up) circuit is open or shorted.) • TCM

DTC CONFIRMATION PROCEDURE

1.PREPARATION BEFORE WORK

If another "DTC CONFIRMATION PROCEDURE" occurs just before, turn ignition switch OFF and wait for at least 10 seconds, then perform the next test.

>> GO TO 2.

2.CHECK DTC DETECTION

1. Start the engine and wait for 5 seconds or more.
2. Check the DTC.

Is “P0890” detected?

YES >> Go to TM-146, "Diagnosis Procedure".
NO >> INSPECTION END

Diagnosis Procedure

INFOID:0000000009177603

1.CHECK TCM POWER SUPPLY (BACK-UP) CIRCUIT

1. Turn ignition switch OFF.
2. Disconnect TCM connector.
3. Check voltage between TCM harness connector terminals and ground.

TCM		Ground	Voltage
Connector	Terminal		
F15	45	Ground	10 – 16 V
	46		

Is the inspection result normal?

YES >> GO TO 3.
NO >> GO TO 2.

2.DETECT MALFUNCTIONING ITEMS

Check the following items:
- Open circuit or short circuit in harness between battery positive terminal and TCM harness connector terminals 45, and 46.
- 10A fuse [No.25, located in the fuse block (J/B)]. Refer to PG-81, "Terminal Arrangement".

Is the inspection result normal?

YES >> Check intermittent incident. Refer to GI-49, "Intermittent Incident".
NO >> Repair or replace malfunctioning parts.

3.CHECK INTERMITTENT INCIDENT

Refer to GI-49, "Intermittent Incident".

Is the inspection result normal?

YES >> Replace the TCM. Refer to TM-195, "Removal and Installation".
NO >> Repair or replace malfunctioning parts.

P0962 PRESSURE CONTROL SOLENOID A

DTC Logic

INFOID:0000000009177604

DTC DETECTION LOGIC

DTC	CONSULT screen terms (Trouble diagnosis content)	DTC detection condition	Possible causes
P0962	PC SOLENOID A (Pressure Control Solenoid A Control Circuit Low)	When all of the following conditions are satisfied and this state is maintained for 0.2 seconds: • TCM power supply voltage: More than 11 V • TCM judges that solenoid valve circuit is shorted to ground.	• Harness or connector (Line pressure solenoid valve circuit is shorted to ground) • Line pressure solenoid valve

DTC CONFIRMATION PROCEDURE

1.PREPARATION BEFORE WORK

If another "DTC CONFIRMATION PROCEDURE" occurs just before, turn ignition switch OFF and wait for at least 10 seconds, then perform the next test.

>> GO TO 2.

2.CHECK DTC DETECTION

1. Start the engine and wait for 5 seconds or more.
2. Check the first trip DTC.

Is “P0962” detected?

YES >> Go to TM-148, "Diagnosis Procedure".
NO >> INSPECTION END

Diagnosis Procedure

INFOID:0000000009177605

1.CHECK CIRCUIT BETWEEN TCM AND CVT UNIT

1. Turn ignition switch OFF.
2. Disconnect TCM connector and CVT unit connector.
3. Check continuity between TCM harness connector terminal and ground.

TCM		—	Continuity
Connector	Terminal		
F15	30	Ground	Not existed

Is the inspection result normal?

YES >> GO TO 2.
NO >> Repair or replace damaged parts.

2.CHECK LINE PRESSURE SOLENOID VALVE CIRCUIT

Check continuity between CVT unit harness connector terminal and ground.

CVT unit		—	Condition	Resistance
Connector	Terminal			
F209	1	Ground	CVT fluid temperature: 20°C (68°F)	5.5 – 7.0 Ω
			CVT fluid temperature: 50°C (122°F)	6.0 – 8.0 Ω
			CVT fluid temperature: 80°C (176°F)	6.5 – 8.5 Ω

Is the inspection result normal?

YES >> Check intermittent incident. Refer to GI-49, "Intermittent Incident".

NO >> There is malfunction of line pressure solenoid valve circuit. Replace transaxle assembly. Refer to TM-214, "Removal and Installation".

P0963 PRESSURE CONTROL SOLENOID A

DTC Logic

INFOID:0000000009177606

DTC DETECTION LOGIC

DTC	CONSULT screen terms (Trouble diagnosis content)	DTC detection condition	Possible causes
P0963	PC SOLENOID A (Pressure Control Solenoid A Control Circuit High)	When all of the following conditions are satisfied and this state is maintained for 0.2 seconds: • TCM power supply voltage: More than 11 V • P0962 is not detected • TCM judges that solenoid valve circuit is open.	• Harness or connector (Line pressure solenoid valve circuit is open or shorted to power supply) • Line pressure solenoid valve

DTC CONFIRMATION PROCEDURE

1.PREPARATION BEFORE WORK

If another "DTC CONFIRMATION PROCEDURE" occurs just before, turn ignition switch OFF and wait for at least 10 seconds, then perform the next test.

>> GO TO 2.

2.CHECK DTC DETECTION

1. Start the engine and wait for 5 seconds or more.
2. Check the first trip DTC.

Is “P0963” detected?

YES >> Go to TM-150, "Diagnosis Procedure".
NO >> INSPECTION END

Diagnosis Procedure

INFOID:0000000009177607

1.CHECK CIRCUIT BETWEEN TCM AND CVT UNIT

1. Turn ignition switch OFF.
2. Disconnect TCM connector and CVT unit connector.
3. Check continuity between TCM harness connector terminal and ground.

TCM		CVT unit		Continuity
Connector	Terminal	Connector	Terminal	
F15	30	F46	1	Existed

Is the inspection result normal?

YES >> GO TO 2.
NO >> Repair or replace damaged parts.

2.CHECK LINE PRESSURE SOLENOID VALVE CIRCUIT

Check continuity between CVT unit harness connector terminal and ground.

CVT unit		—	Condition	Resistance
Connector	Terminal			
F209	1	Ground	CVT fluid temperature: 20°C (68°F)	5.5 – 7.0 Ω
			CVT fluid temperature: 50°C (122°F)	6.0 – 8.0 Ω
			CVT fluid temperature: 80°C (176°F)	6.5 – 8.5 Ω

Is the inspection result normal?

YES >> Check intermittent incident. Refer to GI-49, "Intermittent Incident".

NO >> There is malfunction of line pressure solenoid valve circuit. Replace transaxle assembly. Refer to TM-214, "Removal and Installation".

P0965 PRESSURE CONTROL SOLENOID B

DTC Logic

INFOID:0000000009177608

DTC DETECTION LOGIC

DTC	CONSULT screen terms (Trouble diagnosis content)	DTC detection condition	Possible causes
P0965	PC SOLENOID B (Pressure Control Solenoid B Control Circuit Range Performance)	When any of 1 or 2 is satisfied and this state is maintained for 10 seconds: 1. When all of the following conditions are satisfied: - DTC other than the applicable DTC is not detected. - Engine speed: More than 625 rpm - Selector lever: Other than P/N position - CVT fluid temperature: More than -20°C (-4°F) - TCM power supply: More than 11 V - The difference between instruction pressure of primary pressure and 10-msec-ago instruction primary pressure is 0 MPa or more - Instruction pressure of primary pressure: 0.86 MPa or more - Instruction pressure of primary pressure - primary pressure: More than 1.2 MPa - When all of the following conditions are satisfied and this state is maintained for 1 second: • DTC other than the applicable DTC is not detected. • CVT fluid temperature: More than -20°C (-4°F) • Selector lever: Other than P/N position • Engine speed: More than 625 rpm • Instruction pressure of primary pressure: More than 2 MPa • Primary pressure: 0.4 MPa or less 2. When all of the following conditions are satisfied: - DTC other than the applicable DTC is not detected. - CVT fluid temperature: More than -20°C (-4°F) - Selector lever: Other than P/N position - TCM power supply: More than 11 V - When all of the following conditions are satisfied and this state is maintained for 5.5 seconds: • DTC other than the applicable DTC is not detected. • CVT fluid temperature: More than -20°C (-4°F) • Selector lever: Other than P/N position • Primary pressure - instruction pressure of primary pressure: 1.2 MPa or more - The difference between instruction pressure of primary pressure and 10-msec-ago instruction primary pressure is 0 MPa or more - Primary pressure - instruction pressure of primary pressure: More than 1.2 MPa	• Harness or connector (Primary pressure solenoid valve circuit is open or shorted.) • Primary pressure solenoid valve

DTC CONFIRMATION PROCEDURE

1.PREPARATION BEFORE WORK

If another "DTC CONFIRMATION PROCEDURE" occurs just before, turn ignition switch OFF and wait for at least 10 seconds, then perform the next test.

>> GO TO 2.

2.CHECK DTC DETECTION

1. Start the engine.
2. Drive the vehicle.
3. Maintain the following conditions for 20 seconds or more.

Vehicle speed	: 40 km/h (25 MPH) or more

4. Stop the vehicle.
5. Check the first trip DTC.

Is “P0965”detected?

YES >> Go to TM-153, "Diagnosis Procedure".
NO >> INSPECTION END

Diagnosis Procedure

INFOID:0000000009177609

1.CHECK INTERMITTENT INCIDENT

Refer to GI-49, "Intermittent Incident".

Is the inspection result normal?

YES >> Replace transaxle assembly. Refer to TM-214, "Removal and Installation".
NO >> Repair or replace malfunctioning parts.

P0966 PRESSURE CONTROL SOLENOID B

DTC Logic

INFOID:0000000009177610

DTC DETECTION LOGIC

DTC	CONSULT screen terms (Trouble diagnosis content)	DTC detection condition	Possible causes
P0966	PC SOLENOID B (Pressure Control Solenoid B Control Circuit Low)	When all of the following conditions are satisfied and this state is maintained for 0.48 seconds: • TCM power supply voltage: More than 11 V • TCM judges that solenoid valve circuit is shorted to ground.	• Harness or connector (Primary pressure solenoid valve circuit shorted to ground) • Primary pressure solenoid valve

DTC CONFIRMATION PROCEDURE

1.PREPARATION BEFORE WORK

If another "DTC CONFIRMATION PROCEDURE" occurs just before, turn ignition switch OFF and wait for at least 10 seconds, then perform the next test.

>> GO TO 2.

2.CHECK DTC DETECTION

1. Start the engine and wait for 5 seconds or more.
2. Check the first trip DTC.

Is “P0966” detected?

YES >> Go to TM-154, "Diagnosis Procedure".
NO >> INSPECTION END

Diagnosis Procedure

INFOID:0000000009177611

1.CHECK CIRCUIT BETWEEN TCM AND CVT UNIT

1. Turn ignition switch OFF.
2. Disconnect TCM connector and CVT unit connector.
3. Check continuity between TCM harness connector terminal and ground.

TCM		—	Continuity
Connector	Terminal		
F15	40	Ground	Not existed

Is the inspection result normal?

YES >> GO TO 2.
NO >> Repair or replace damaged parts.

2.CHECK PRIMARY PRESSURE SOLENOID VLAVE CIRCUIT

Check continuity between CVT unit harness connector terminal and ground.

CVT unit		—	Condition	Resistance
Connector	Terminal			
F209	2	Ground	CVT fluid temperature: 20°C (68°F)	5.5 – 7.0 Ω
			CVT fluid temperature: 50°C (122°F)	6.0 – 8.0 Ω
			CVT fluid temperature: 80°C (176°F)	6.5 – 8.5 Ω

Is the inspection result normal?

YES >> Check intermittent incident. Refer to GI-49, "Intermittent Incident".

NO >> There is malfunction of primary pressure solenoid valve circuit. Replace transaxle assembly. Refer to TM-214, "Removal and Installation".

P0967 PRESSURE CONTROL SOLENOID B

DTC Logic

INFOID:0000000009177612

DTC DETECTION LOGIC

DTC	CONSULT screen terms (Trouble diagnosis content)	DTC detection condition	Possible causes
P0967	PC SOLENOID B (Pressure Control Solenoid B Control Circuit High)	When all of the following conditions are satisfied and this state is maintained for 0.2 seconds: • TCM power supply voltage: More than 11 V • P0966 is not detected • TCM judges that solenoid valve circuit is open.	• Harness or connector (Primary pressure solenoid valve circuit open or shorted to power supply) • Primary pressure solenoid valve

DTC CONFIRMATION PROCEDURE

1.PREPARATION BEFORE WORK

If another "DTC CONFIRMATION PROCEDURE" occurs just before, turn ignition switch OFF and wait for at least 10 seconds, then perform the next test.

>> GO TO 2.

2.CHECK DTC DETECTION

1. Start the engine and wait for 5 seconds or more.
2. Check the first trip DTC.

Is “P0967” detected?

YES >> Go to TM-156, "Diagnosis Procedure".
NO >> INSPECTION END

Diagnosis Procedure

INFOID:0000000009177613

1.CHECK CIRCUIT BETWEEN TCM AND CVT UNIT

1. Turn ignition switch OFF.
2. Disconnect TCM connector and CVT unit connector.
3. Check continuity between TCM harness connector terminal and ground.

TCM		CVT unit		Continuity
Connector	Terminal	Connector	Terminal	
F15	40	F46	2	Existed

Is the inspection result normal?

YES >> GO TO 2.
NO >> Repair or replace damaged parts.

2.CHECK PRIMARY PRESSURE SOLENOID VALVE CIRCUIT

Check continuity between CVT unit harness connector terminal and ground.

CVT unit		—	Condition	Resistance
Connector	Terminal			
F209	2	Ground	CVT fluid temperature: 20°C (68°F)	5.5 – 7.0 Ω
			CVT fluid temperature: 50°C (122°F)	6.0 – 8.0 Ω
			CVT fluid temperature: 80°C (176°F)	6.5 – 8.5 Ω

Is the inspection result normal?

YES >> Check intermittent incident. Refer to GI-49, "Intermittent Incident".

NO >> There is malfunction of primary pressure solenoid valve circuit. Replace transaxle assembly. Refer to TM-214, "Removal and Installation".

P2765 INPUT SPEED SENSOR B

DTC Logic

INFOID:0000000009177614

DTC DETECTION LOGIC

DTC	CONSULT screen terms (Trouble diagnosis content)	DTC detection condition	Possible causes
P2765	INPUT SPEED SENSOR B (Input/Turbine Speed Sensor B Circuit)	When 1 is satisfied and any of 2, 3 or 4 is satisfied and this state is maintained for 5 seconds: 1. When all of the following conditions are satisfied: - TCM power supply voltage: More than 11 V - After range change completion, it spends 2 seconds or more. 2. When all of the following conditions are satisfied and this state is maintained for 5 seconds: - Secondary pulley speed: Less than 149 rpm - Primary pulley speed: 1,000 rpm or more 3. When all of the following conditions are satisfied and this state is maintained for 0.5 seconds: - 10-msec-ago secondary pulley speed: 1000 rpm or more - Now secondary pulley speed: 0 rpm 4. When all of the following conditions are satisfied and this state is maintained for 5 seconds: - Range: D or L - Engine speed: 450 rpm or more - Primary pulley speed: 300 rpm or more - Secondary pulley speed: 300 rpm or more - Input speed: 300 rpm or more - The difference between engine speed and primary pulley speed is 1,000 rpm or less - The difference between engine speed and input speed is 1,000 rpm or less - The difference between primary pulley speed and input speed is 1,000 rpm or less - Lock-up command is being given (except for slip lock-up) - DTC other than the applicable DTC is not detected. - When any of following items are satisfied: • Primary pulley speed/secondary pulley speed: More than 2.9 • Primary pulley speed/secondary pulley speed: Less than 0.3	• Harness or connector (Output speed sensor circuit is open or shorted) • Output speed sensor

DTC CONFIRMATION PROCEDURE

CAUTION:

Be careful of the driving speed.

1. PREPARATION BEFORE WORK

If another "DTC CONFIRMATION PROCEDURE" occurs just before, turn ignition switch OFF and wait for at least 10 seconds, then perform the next test.

>> GO TO 2.

2. CHECK DTC DETECTION

1. Start the engine.
2. Drive the vehicle.
3. Maintain the following conditions for 10 seconds or more.

Selector lever	: “D” position
Engine speed	: 1,200 rpm or more
Vehicle speed	: 55 km/h (34 MPH) or more

4. Stop the vehicle.
5. Check the first trip DTC.

Is “P2765” detected?

YES >> Go to TM-159, "Diagnosis Procedure".
NO >> INSPECTION END

Diagnosis Procedure

INFOID:0000000009177615

1. CHECK OUTPUT SPEED SENSOR POWER CIRCUIT

1. Turn ignition switch OFF.
2. Disconnect output speed sensor connector.
3. Turn ignition switch ON.
4. Check voltage between output speed sensor harness connector terminal and ground.

+		–	Voltage
Output speed sensor			
Connector	Terminal		
F23	3	Ground	10 – 16 V

Is the inspection result normal?

YES >> GO TO 2.
NO >> GO TO 6.

2. CHECK OUTPUT SPEED SENSOR GROUND CIRCUIT

Check continuity between output speed sensor harness connector terminal and ground.

Output speed sensor		—	Continuity
Connector	Terminal		
F23	1	Ground	Existed

Is the inspection result normal?

YES >> GO TO 3.
NO >> Repair or replace malfunctioning parts.

3. CHECK CIRCUIT BETWEEN OUTPUT SPEED SENSOR AND TCM (PART 1)

1. Turn ignition switch OFF.
2. Disconnect TCM connector.
3. Check continuity between output speed sensor harness connector terminal and TCM harness connector terminal.

Output speed sensor		TCM		Continuity
Connector	Terminal	Connector	Terminal	
F23	2	F15	34	Existed

Is the inspection result normal?

YES >> GO TO 4.
NO >> Repair or replace malfunctioning parts.

4. CHECK CIRCUIT BETWEEN OUTPUT SPEED SENSOR AND TCM (PART 2)

Check continuity between output speed sensor harness connector terminal and ground.

Output speed sensor		—	Continuity
Connector	Terminal		
F23	2	Ground	Not existed

Is the inspection result normal?

YES >> GO TO 5.
NO >> Repair or replace malfunctioning parts.

5. CHECK TCM INPUT SIGNALS

1. Connect all of disconnected connectors.
2. Lift the vehicle.
3. Start the engine.
4. Check frequency of output speed sensor.

+		–	Condition	Frequency (Approx.)
TCM				
Connector	Terminal			
F15	34	Ground	• Selector lever: “L” position • Vehicle speed: 20 km/h (12 MPH)	200 Hz 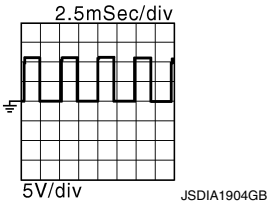

Is the inspection result normal?

YES >> Check intermittent incident. Refer to GI-49, "Intermittent Incident".
NO >> Replace output speed sensor. Refer to TM-203, "Removal and Installation".

6. DETECT MALFUNCTIONING ITEMS

Check the following items:
- Open circuit or short circuit in harness between ignition switch and IPDM E/R. Refer to PG-23, "Wiring Diagram - IGNITION POWER SUPPLY -".
- Open circuit or short circuit in harness between IPDM E/R harness connector terminal 61 and output speed sensor harness connector terminal 3.
- 10A fuse (No.46, located in the IPDM E/R). Refer to PG-81, "Terminal Arrangement".
- IPDM E/R

Is the check result normal?

YES >> Check intermittent incident. Refer to GI-49, "Intermittent Incident".
NO >> Repair or replace malfunctioning parts.

P2813 SELECT SOLENOID

DTC Logic

INFOID:0000000009177616

DTC DETECTION LOGIC

DTC	CONSULT screen terms (Trouble diagnosis content)	DTC detection condition	Possible causes
P2813	SELECT SOLENOID (Select solenoid)	When any of 1, or 2 is satisfied: 1. When all the following conditions are established three times in 1DC - Precondition • DTC other than the applicable DTC is not detected. • Throttle position: More than 6.27 deg. • Vehicle speed: Less than 3 km/h (1 MPH) • CVT fluid temperature: More than 20°C (68°F) • Selector lever: Other than P, N • Turbine speed when performed N → D, N (P) → R: More than 500 rpm • TCM power supply voltage: More than 11 V - Detection time • N → D: 0.4 seconds • N → R: 0.3 seconds • P → R: 0.3 seconds 2. When all of the following conditions are satisfied and this state is maintained for 30 seconds: - The counting of time continues while all of the following conditions are satisfied and stops when the conditions become unsatisfied (the count is maintained). When accumulated time reaches 30 seconds (Clutch is judged as engaged and the count is reset.) • Selector lever: Other than P, N • Vehicle speed: Less than 3 km/h (1 MPH) • Differences between primary pulley speed and secondary speed: Less than 120 rpm • Clutch instructions pressure: 0.95 MPa or more • Differences between turbine speed and input speed: Less than 200 rpm • Turbine speed – speed: More than 450 rpm • DTC other than the applicable DTC is not detected. • TCM power supply voltage: More than 11 V	Select solenoid valve

NOTE:
DC stands for “DRIVING CYCLE” and indicates a series of driving cycle of “Ignition switch OFF → ON → driving → OFF”.

DTC CONFIRMATION PROCEDURE

CAUTION:
Be careful of the driving speed.

1. PREPARATION BEFORE WORK

If another "DTC CONFIRMATION PROCEDURE" occurs just before, turn ignition switch OFF and wait for at least 10 seconds, then perform the next test.

>> GO TO 2.

2. CHECK DTC DETECTION 1

1. Start the engine.
2. Maintain the following conditions. (Keep 30seconds or more after the selector lever shifted.)

Selector lever : N→ D, N → R, P→ R

3. Check the first trip DTC.

Is “P2813”detected?

YES >> Go to TM-162, "Diagnosis Procedure".
NO >> INSPECTION END

Diagnosis Procedure

INFOID:0000000009177617

1. CHECK INTERMITTENT INCIDENT

Refer to GI-49, "Intermittent Incident".

Is the inspection result normal?

YES >> Replace transaxle assembly. Refer to TM-214, "Removal and Installation".
NO >> Repair or replace malfunctioning parts.

P2814 SELECT SOLENOID

DTC Logic

INFOID:0000000009177618

DTC DETECTION LOGIC

DTC	CONSULT screen terms (Trouble diagnosis content)	DTC detection condition	Possible causes
P2814	SELECT SOLENOID (Select solenoid)	When all of the following conditions are satisfied and this state is maintained for 0.48 seconds: • TCM power supply voltage: 11 V or more • TCM judges that solenoid valve circuit is shorted to ground.	• Harness or connector (Select solenoid valve circuit shorted to ground) • Select solenoid valve

DTC CONFIRMATION PROCEDURE

CAUTION:

Be careful of the driving speed.

1. PREPARATION BEFORE WORK

If another "DTC CONFIRMATION PROCEDURE" occurs just before, turn ignition switch OFF and wait for at least 10 seconds, then perform the next test.

>> GO TO 2.

2. CHECK DTC DETECTION

1. Start the engine.
2. Maintain the following conditions. (Keep 5 seconds or more after the selector lever shifted.)

Selector lever : N → D, N → R, P → R

3. Check the first trip DTC.

Is “P2814” detected?

YES >> Go to TM-163, "Diagnosis Procedure".
NO >> INSPECTION END

Diagnosis Procedure

INFOID:0000000009177619

1. CHECK CIRCUIT BETWEEN TCM AND CVT UNIT

1. Turn ignition switch OFF.
2. Disconnect TCM connector and CVT unit connector.
3. Check continuity between TCM harness connector terminal and ground.

TCM		—	Continuity
Connector	Terminal		
F15	37	Ground	Not existed

Is the inspection result normal?

YES >> GO TO 2.
NO >> Repair or replace damaged parts.

2. CHECK SELECT SOLENOID VALVE CIRCUIT

Check continuity between CVT unit harness connector terminal and ground.

CVT unit		—	Condition	Resistance
Connector	Terminal			
F209	4	Ground	CVT fluid temperature: 20°C (68°F)	5.5 – 7.0 Ω
			CVT fluid temperature: 50°C (122°F)	6.0 – 8.0 Ω
			CVT fluid temperature: 80°C (176°F)	6.5 – 8.5 Ω

Is the inspection result normal?

YES >> Check intermittent incident. Refer to GI-49, "Intermittent Incident".
NO >> There is malfunction of select solenoid valve circuit. Replace transaxle assembly. Refer to TM-214, "Removal and Installation".

P2815 SELECT SOLENOID

DTC Logic

INFOID:0000000009177620

DTC DETECTION LOGIC

DTC	CONSULT screen terms (Trouble diagnosis content)	DTC detection condition	Possible causes
P2815	SELECT SOLENOID (Select solenoid)	When all of the following conditions are satisfied and this state is maintained for 0.2 seconds: • TCM power supply voltage: More than 11 V • TCM judges that solenoid valve circuit is open. • P2814 is not detected.	• Harness or connector (Select solenoid valve circuit open or shorted to power supply) • Select solenoid valve

DTC CONFIRMATION PROCEDURE

1.PREPARATION BEFORE WORK

If another "DTC CONFIRMATION PROCEDURE" occurs just before, turn ignition switch OFF and wait for at least 10 seconds, then perform the next test.

>> GO TO 2.

2.CHECK DTC DETECTION

1. Start the engine.
2. Maintain the following conditions. (Keep 5 seconds or more after the selector lever shifted.)

Selector lever : N → D, N → R, P → R

3. Check the first trip DTC.

Is “P2815” detected?

YES >> Go to TM-165, "Diagnosis Procedure".
NO >> INSPECTION END

Diagnosis Procedure

INFOID:0000000009177621

1.CHECK CIRCUIT BETWEEN TCM AND CVT UNIT

1. Turn ignition switch OFF.
2. Disconnect TCM connector and CVT unit connector.
3. Check continuity between TCM harness connector terminal and ground.

TCM		CVT unit		Continuity
Connector	Terminal	Connector	Terminal	
F15	37	F46	4	Existed

Is the inspection result normal?

YES >> GO TO 2.
NO >> Repair or replace damaged parts.

2.CHECK SELECT SOLENOID VALVE CIRCUIT

Check continuity between CVT unit harness connector terminal and ground.

CVT unit		—	Condition	Resistance
Connector	Terminal			
F209	4	Ground	CVT fluid temperature: 20°C (68°F)	5.5 – 7.0 Ω
			CVT fluid temperature: 50°C (122°F)	6.0 – 8.0 Ω
			CVT fluid temperature: 80°C (176°F)	6.5 – 8.5 Ω

Is the inspection result normal?

YES >> Check intermittent incident. Refer to GI-49, "Intermittent Incident".
NO >> There is malfunction of select solenoid valve circuit. Replace transaxle assembly. Refer to TM-214, "Removal and Installation".

MAIN POWER SUPPLY AND GROUND CIRCUIT

Diagnosis Procedure

INFOID:0000000009177622

1. CHECK TCM POWER CIRCUIT (PART 1)

1. Turn ignition switch OFF.
2. Disconnect TCM connector.
3. Check voltage between TCM harness connector terminals and ground.

+		–	Voltage
TCM			
Connector	Terminal		
F15	45	Ground	10 – 16 V
	46		

Is the inspection result normal?

YES >> GO TO 2.
NO >> GO TO 4.

2. CHECK TCM POWER CIRCUIT (PART 2)

Check voltage between TCM harness connector terminals and ground.

+		–	Condition	Voltage
TCM				
Connector	Terminal			
F15	47	Ground	Ignition switch ON	10 – 16 V
			Ignition switch OFF	Approx. 0 V
	48		Ignition switch ON	10 – 16 V
			Ignition switch OFF	Approx. 0 V

Is the inspection result normal?

YES >> GO TO 3.
NO >> GO TO 5.

3. CHECK TCM GROUND CIRCUIT

Check continuity between TCM harness connector terminals and ground.

TCM		—	Continuity
Connector	Terminal		
F15	41	Ground	Existed
	42		

Is the inspection result normal?

YES >> Check intermittent incident. Refer to GI-49, "Intermittent Incident".
NO >> Repair or replace malfunctioning parts.

4. DETECT MALFUNCTION ITEMS (PART 1)

Check the following items:

- Open circuit or short circuit in harness between battery positive terminal and fuse block (J/B). Refer to PG-11, "Wiring Diagram - BATTERY POWER SUPPLY -".
- Open circuit or short circuit in harness between fuse block (J/B) harness connector terminal 2N and TCM harness connector terminal 45, and 46.
- 10A fuse [No.25, located in the fuse block (J/B)]. Refer to PG-81, "Terminal Arrangement".

Is the inspection result normal?

YES >> Check intermittent incident. Refer to GI-49, "Intermittent Incident".

NO >> Repair or replace malfunctioning parts.

5. DETECT MALFUNCTIONING ITEMS (PART 2)

Check the following items:

- Open circuit or short circuit in harness between ignition switch and IPDM E/R. Refer to PG-23, "Wiring Diagram - IGNITION POWER SUPPLY -".
- Open circuit or short circuit in harness between IPDM E/R harness connector terminal 61 and TCM harness connector terminal 47, and 48.
- 10A fuse (No.46, located in the IPDM E/R). Refer to PG-85, "IPDM E/R Terminal Arrangement".
- IPDM E/R

Is the check result normal?

YES >> Check intermittent incident. Refer to GI-49, "Intermittent Incident".
NO >> Repair or replace malfunctioning parts.

SHIFT POSITION INDICATOR CIRCUIT

Component Parts Function Inspection

INFOID:0000000009177623

1. CHECK SHIFT POSITION INDICATOR

1. Start the engine.
2. Shift selector lever.
3. Check that the selector lever position and the shift position indicator on the combination meter are identical.

Is the inspection result normal?

YES >> INSPECTION END
NO >> Go to TM-169, "Diagnosis Procedure".

Diagnosis Procedure

INFOID:0000000009177624

1. CHECK TCM INPUT/OUTPUT SIGNAL

With CONSULT

1. Start the engine.
2. Select “Data Monitor” in “TRANSMISSION”.
3. Select “RANGE”.
4. Shift selector lever.
5. Check that selector lever position, “RANGE” on CONSULT screen, and shift position indicator display on combination meter are identical.

Is the check result normal?

YES >> INSPECTION END
NO-1 (“RANGE” is changed but is not displayed on shift position indicator.>>Check “Self Diagnostic Result” in “TRANSMISSION”.
NO-2 (“RANGE” and shift position indicator are different.)>>Check “Self Diagnostic Result” in “TRANSMISSION”.
NO-3 (Specific “RANGE” is not displayed on shift position indicator.)>>Check “Self Diagnostic Result” in “METER/M&A”.

OVERDRIVE CONTROL SWITCH

Component Function Check

INFOID:0000000009177625

1.CHECK OD OFF INDICATOR LAMP FUNCTION

Check OD OFF indicator lamp turns ON for approx. 2 seconds when ignition switch turns ON.

Is the inspection results normal?

YES >> GO TO 2.
NO >> Go to TM-173, "Diagnosis Procedure".

2.CHECK OVERDRIVE CONTROL SWITCH FUNCTION

1. Shift the selector lever to “D” position.
2. Check that OD OFF indicator lamp turns ON/OFF when overdrive control switch is operated.

Is the inspection results normal?

YES >> INSPECTION END
NO >> Go to TM-170, "Diagnosis Procedure".

Diagnosis Procedure

INFOID:0000000009177626

1.CHECK OVERDRIVE CONTROL SWITCH CIRCUIT

1. Turn ignition switch OFF.
2. Disconnect CVT shift selector connector.
3. Turn ignition switch ON.
4. Check voltage between CVT shift selector harness connector terminals.

CVT shift selector			Voltage (Approx.)
Connector	+	–	
	Terminal		
M78	1	2	Battery voltage

Is the inspection result normal?

YES >> GO TO 2.
NO >> GO TO 4.

2.CHECK CVT SHIFT SELECTOR ASSEMBLY

Check continuity between CVT shift selector connector terminals.

CVT shift selector	Condition	Continuity
Terminal		
1 – 2	Overdrive control switch is depressed.	Existed
	Overdrive control switch is released.	Not existed

Is the inspection result normal?

YES >> Check intermittent incident. Refer to GI-49, "Intermittent Incident".
NO >> GO TO 3.

3.CHECK OVERDRIVE CONTROL SWITCH

1. Remove shift selector handle. Refer to TM-189, "Exploded View".
2. Check overdrive control switch. Refer to TM-171, "Component Inspection".

Is the inspection result normal?

YES >> Replace CVT shift selector assembly. Refer to TM-189, "Removal and Installation".
NO >> Repair or replace malfunctioning parts.

4.CHECK GROUND CIRCUIT

Check continuity between CVT shift selector harness connector terminal and ground.

CVT shift selector		—	Continuity
Connector	Terminal		
M78	2	Ground	Existed

Is the inspection result normal?

YES >> GO TO 5.
NO >> Repair or replace malfunctioning parts.

5. CHECK CIRCUIT BETWEEN CVT SHIFT SELECTOR AND COMBINATION METER (PART 1)

1. Turn ignition switch OFF.
2. Disconnect combination meter connector.
3. Check continuity between CVT shift selector harness connector terminal and combination meter harness connector terminal.

CVT shift selector		Combination meter		Continuity
Connector	Terminal	Connector	Terminal	
M78	1	M24	52	Existed

Is the inspection result normal?

YES >> GO TO 6.
NO >> Repair or replace malfunctioning parts.

6. CHECK CIRCUIT BETWEEN CVT SHIFT SELECTOR AND COMBINATION METER (PART 2)

Check continuity between CVT shift selector harness connector terminal and ground.

CVT shift selector		—	Continuity
Connector	Terminal		
M78	1	Ground	Not existed

Is the inspection result normal?

YES >> GO TO 7.
NO >> Repair or replace malfunctioning parts.

7. CHECK COMBINATION METER INPUT SIGNAL

1. Connect all of disconnected connectors.
2. Turn ignition switch ON.
3. Select “Data Monitor” in “METER/M&A”.
4. Select “O/D OFF SW”.
5. Check that “O/D OFF SW” turns ON/OFF when overdrive control switch is operated. Refer to MWI-24, "Reference Value".

Is the inspection result normal?

YES >> Check intermittent incident. Refer to GI-49, "Intermittent Incident".
NO >> Replace combination meter. Refer to MWI-82, "Removal and Installation".

Component Inspection

INFOID:0000000009177627

1. CHECK OVERDRIVE CONTROL SWITCH

Check continuity between wires of shift selector handle ①.

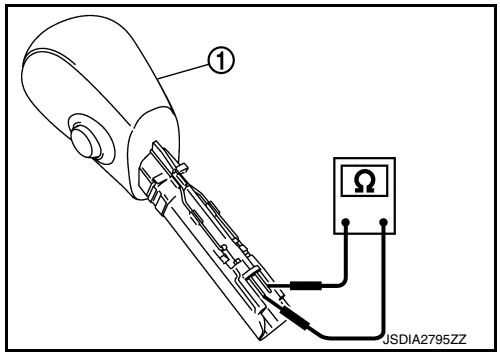

Condition	Continuity
Overdrive control switch is depressed	Existed
Overdrive control switch is released	Not existed

Is the inspection result normal?

YES >> INSPECTION END

NO >> Replace shift selector handle. Refer to TM-189, "Exploded View".

OD OFF INDICATOR LAMP

Component Function Check

INFOID:0000000009177628

1. CHECK OD OFF INDICATOR LAMP FUNCTION

Check OD OFF indicator lamp turns ON for approx. 2 seconds when ignition switch turns ON.

Is the inspection results normal?

YES >> INSPECTION END
NO >> Go to TM-173, "Diagnosis Procedure".

Diagnosis Procedure

INFOID:0000000009177629

1. CHECK DTC (TCM)

With CONSULT

1. Turn ignition switch ON.
2. Check “Self Diagnostic Results” in “TRANSMISSION”.

Is any DTC detected?

YES >> Check DTC detected item. Refer to TM-60, "DTC Index".
NO >> GO TO 2.

2. CHECK DTC (COMBINATION METER)

With CONSULT

Check “Self Diagnostic Results” in “METER/M&A”.

Is any DTC detected?

YES >> Check DTC detected item. Refer to MWI-29, "DTC Index".
NO >> GO TO 3.

3. CHECK COMBINATION METER INPUT/OUTPUT SIGNAL

With CONSULT

1. Shift the selector lever to “D” position.
2. Select “Data Monitor” in “METER/M&A”.
3. Select “O/D OFF IND”.
4. Check that “O/D OFF IND” turns ON/OFF when overdrive control switch is operated. Refer to MWI-24, "Reference Value".

Is the inspection result normal?

YES >> Replace combination meter. Refer to MWI-82, "Removal and Installation".
NO >> GO TO 4.

4. CHECK TCM INPUT/OUTPUT SIGNAL

With CONSULT

1. Select “Data Monitor” in “TCM”.
2. Select “SPORT MODE IND”.
3. Check that “SPORT MODE IND” turns ON/OFF when overdrive control switch is operated. Refer to TM-48, "Reference Value".

Is the inspection result normal?

YES >> Replace combination meter. Refer to MWI-82, "Removal and Installation".
NO >> Check overdrive control switch circuit. Refer to TM-170, "Diagnosis Procedure".

TOW MODE SYSTEM

Component Function Check

INFOID:0000000009177630

1. CHECK TOW MODE SWITCH FUNCTION

Check that TOW mode indicator lamp turns ON/OFF when tow mode switch is operated.

Is the inspection results normal?

YES >> INSPECTION END
NO >> Go to TM-174, "Diagnosis Procedure".

Diagnosis Procedure

INFOID:0000000009177631

1. CHECK DTC (TCM)

With CONSULT

1. Start the engine.
2. Check “Self Diagnostic Results” in “TRANSMISSION”.

Is any DTC detected?

YES >> Check DTC detected item. Refer to TM-60, "DTC Index".
NO >> GO TO 2.

2. CHECK DTC (COMBINATION METER)

With CONSULT

Check “Self Diagnostic Results” in “METER/M&A”.

Is any DTC detected?

YES >> Check DTC detected item. Refer to MWI-29, "DTC Index".
NO >> GO TO 3.

3. CHECK COMBINATION METER INPUT/OUTPUT SIGNAL

With CONSULT

1. Select “Data Monitor” in “METER/M&A”.
2. Select “TOW MODE IND”.
3. Check that “TOW MODE IND” turns ON/OFF when tow mode switch is operated. Refer to MWI-24, "Reference Value".

Is the inspection result normal?

YES >> Replace the combination meter. Refer to MWI-82, "Removal and Installation".
NO >> GO TO 4.

4. CHECK TOW MODE SWITCH CIRCUIT

1. Turn ignition switch OFF.
2. Disconnect tow mode switch connector.
3. Turn ignition switch ON.
4. Check voltage between tow mode switch harness connector terminals.

Tow mode switch			Voltage (Approx.)
Connector	+	–	
	Terminal		
M6	1	4	Battery voltage

Is the inspection result normal?

YES >> GO TO 5.
NO >> GO TO 6.

5. CHECK TOW MODE SWITCH

Check tow mode switch. Refer to TM-175, "Component Inspection".

Is the inspection result normal?

YES >> Check intermittent incident. Refer to GI-49, "Intermittent Incident".

NO >> Repair or replace malfunctioning parts.

6. CHECK TOW MODE SWITCH GROUND CIRCUIT

1. Turn ignition switch OFF.
2. Check continuity between tow mode switch harness connector terminal and ground.

Tow mode switch		—	Continuity
Connector	Terminal		
M6	4	Ground	Existed

Is the inspection result normal?

YES >> GO TO 7.
NO >> Repair or replace malfunctioning parts.

7. CHECK CIRCUIT BETWEEN COMBINATION METER AND TOW MODE SWITCH (PART 1)

1. Disconnect combination meter connector.
2. Check continuity between combination meter harness connector terminal and tow mode switch harness connector terminal.

Combination meter		Tow mode switch		Continuity
Connector	Terminal	Connector	Terminal	
M24	19	M6	1	Existed

Is the inspection result normal?

YES >> GO TO 8.
NO >> Repair or replace malfunctioning parts.

8. CHECK CIRCUIT BETWEEN COMBINATION METER AND TOW MODE SWITCH (PART 2)

Check continuity between combination meter harness connector terminal and ground.

Combination meter		—	Continuity
Connector	Terminal		
M24	19	Ground	Not existed

Is the inspection result normal?

YES >> GO TO 9.
NO >> Repair or replace malfunctioning parts.

9. CHECK COMBINATION METER INPUT/OUTPUT SIGNAL (PART 3)

1. Connect combination meter connector.
2. Turn ignition switch ON.
3. Check voltage between combination meter harness connector terminal and ground.

+		–	Voltage
Combination meter			
Connector	Terminal		
M24	19	Ground	Battery voltage

Is the inspection result normal?

YES >> Check intermittent incident. Refer to GI-49, "Intermittent Incident".
NO >> Replace the combination meter. Refer to MWI-82, "Removal and Installation".

Component Inspection

INFOID:0000000009177632

1. CHECK TOW MODE SWITCH

Check continuity between tow mode switch connector terminals.

TOW mode switch Terminal	Condition	Continuity
1 – 4	Tow mode switch is depressed.	Existed
	Tow mode switch is released.	Not existed

Is the inspection result normal?

YES >> INSPECTION END
NO >> Replace tow mode switch. Refer to TM-194, "Removal and Installation".

SHIFT LOCK SYSTEM

Component Function Check

INFOID:0000000009177637

1. CHECK SHIFT LOCK OPERATION (PART 1)

1. Turn ignition ON.
2. Shift the selector lever to “P” (Park) position.
3. Attempt to shift the selector lever to any other position with the brake pedal released.

Can the selector lever be shifted to any other position?

YES >> Go to TM-177, "Diagnosis Procedure".
NO >> GO TO 2.

2. CHECK SHIFT LOCK OPERATION (PART 2)

Attempt to shift the selector lever to any other position with the brake pedal depressed.

Can the selector lever be shifted to any other position?

YES >> Inspection End.
NO >> Go to TM-177, "Diagnosis Procedure".

Diagnosis Procedure

INFOID:0000000009177638

Regarding Wiring Diagram information, refer to TM-74, "Wiring diagram".

1. CHECK POWER SOURCE

1. Turn ignition switch OFF.
2. Disconnect BCM connector M18.
3. Check voltage between BCM connector M18 terminal 27 and ground while pressing the brake pedal.

BCM		Ground	Condition	Voltage
Connector	Terminal		Brake pedal depressed	Battery voltage
M18	27			

Is the inspection result normal?

YES >> GO TO 3.
NO >> GO TO 2.

2. CHECK STOP LAMPS

Do the stop lamps operate normally?

Is the inspection result normal?

YES >> Check the following:
- Harness between fuse block (J/B) and BCM.
- Fuse block (J/B).

NO >> Refer to TM-74, "Wiring diagram".

3. CHECK HARNESS BETWEEN BCM AND CVT SHIFT SELECTOR

1. Disconnect CVT shift selector connector.
2. Check continuity between BCM connector M80 terminal 108 and CVT shift selector connector M78 terminal 3.

BCM		CVT shift selector		Continuity
Connector	Terminal	Connector	Terminal	
M80	108	M78	3	Yes

3. Check continuity between BCM connector M80 terminal 108 and ground.

BCM		Ground	Continuity
Connector	Terminal		
M80	108		No

Is the inspection result normal?

YES >> GO TO 4.
NO >> Repair or replace harness or connector.

4. CHECK GROUND CIRCUIT (CVT SHIFT SELECTOR)

Check continuity between CVT shift selector connector M78 terminal 4 and ground.

CVT shift selector		Ground	Continuity
Connector	Terminal		
M78	4		Yes

Is the inspection result normal?

YES >> Replace CVT shift selector. Refer to TM-189, "Removal and Installation".
NO >> Repair or replace harness or connector.

Component Inspection (Shift Lock Solenoid)

INFOID:0000000009177639

1. CHECK SHIFT LOCK SOLENOID

Apply voltage to terminals of shift lock solenoid and park position switch (shift selector) connector and check that shift lock solenoid is activated.

CAUTION:
- **Connect the fuse between the terminals when applying the voltage.**
- **Never cause shorting between terminals.**

+ (fuse)	-	Condition	Status
Shift lock solenoid			
Terminal			
3	4	Apply 12 V between terminals 3 and 4 with the park position switch (shift selector) in the "P" (park) position.	Shift lock solenoid operates

Is the inspection result normal?

YES >> Inspection End.
NO >> Replace CVT shift selector. Refer to TM-189, "Removal and Installation".

Component Inspection (Park Position Switch)

INFOID:0000000009177640

1. CHECK PARK POSITION SWITCH (SHIFT SELECTOR)

Apply voltage to terminals of shift lock solenoid and park position switch (shift selector) connector and check that shift lock solenoid is activated.

CAUTION:
- **Connect the fuse between the terminals when applying the voltage.**
- **Never cause shorting between terminals.**

+ (fuse)	-	Condition	Status
Shift lock solenoid			
Terminal			
3	4	Apply 12 V between terminals 3 and 4 with the park position switch (shift selector) in the "P" (park) position.	Shift lock solenoid operates

Is the inspection result normal?

YES >> Inspection End.
NO >> Replace CVT shift selector. Refer to TM-189, "Removal and Installation".

Component Inspection (Stop Lamp Switch)

INFOID:0000000009177641

1. CHECK STOP LAMP SWITCH

Check the continuity between the stop lamp switch connector terminals.

Stop lamp switch		Condition	Continuity
Terminal			
1	2	Depressed brake pedal	Yes
		Released brake pedal	No

Is the inspection result normal?

YES >> Inspection End.
NO >> Replace stop lamp switch. Refer to BR-20, "Exploded View".

SYMPTOM DIAGNOSIS

CVT CONTROL SYSTEM

Symptom Table

INFOID:0000000009177642

- The diagnosis item number indicates the order of check. Start checking in the order from 1.
- Perform diagnoses of symptom table 1 before symptom table 2.

Symptom Table 1

Symptom		Engine system	CAN communication line	Transmission range switch (P0705, P0706)	Input speed sensor (P0717)	Primary speed sensor (P0715)	Secondary speed sensor (P2765)	CVT fluid temperature sensor (P0711, P0712, P0713)	Primary pressure sensor (P084C, P084D)	Secondary pressure sensor (P0841, P0847, P0848)	Torque converter clutch solenoid valve (P0740, P0743, P0744)	Stall test	CVT position	Power supply	Control valve	CVT fluid level and state	Ignition switch and starter
		EC-133	TM-60									TM-87	TM-88	TM-167	TM-214	TM-185	PG-23, STR-5
Shift Shock	Large shock (N→ D position)	1	4	8				3			6		2		9	5	
	Large shock (N→ R position)	1	4	8				3			6		2		9	5	
	Shock is too large for lock-up.	2	3								6		1		5	4	
Slips/Will Not Engage	Vehicle cannot be started from D position.	8	3		5	6	7	9	10	11		4	2	12	13	1	
	Vehicle cannot be started from R position.	8	3		5	6	7	9	10	11		4	2	12	13	1	
	Does not lock-up.	2	6	8	3	4	10	9	11	12	5	7			13	1	
	Does not hold lock-up condition.	2	6	8	3	4	10	9	11	12	5	7			13	1	
	Lock-up is not released.	2	6		3	4					5	7			8	1	
	With selector lever in D position, acceleration is extremely poor.	3	4	5	7	8	9	12	10	11		2	6	13	14	1	
	With selector lever in R position, acceleration is extremely poor.	3	4	5	7	8	9	12	10	11		2	6	13	14	1	
	Slips at lock-up.	2	6	8	3	4	10	9	11	12	5	7			13	1	

Symptom		Engine system	CAN communication line	Transmission range switch (P0705, P0706)	Input speed sensor (P0717)	Primary speed sensor (P0715)	Secondary speed sensor (P2765)	CVT fluid temperature sensor (P0711, P0712, P0713)	Primary pressure sensor (P084C, P084D)	Secondary pressure sensor (P0841, P0847, P0848)	Torque converter clutch solenoid valve (P0740, P0743, P0744)	Stall test	CVT position	Power supply	Control valve	CVT fluid level and state	Ignition switch and starter
		EC-133	TM-60									TM-87	TM-88	TM-167	TM-214	TM-185	PG-23, STR-5
Other	No creep at all.	2	4	3	7	8	9	10	11	12		5	6	13	14	1	
	Vehicle cannot run in all positions.	8		2	5	6	7	9	10	11		3	4	12	13	1	
	With selector lever in D position, driving is not possible.	8		2	5	6	7	9	10	11		3	4	12	13	1	
	With selector lever in R position, driving is not possible.	8		2	5	6	7	9	10	11		3	4	12	13	1	
	Judder occurs during lock-up.	2	6		3	4	5				7				8	1	
	Strange noise in D position.	2	3												4	1	
	Strange noise in R position.	2	3												4	1	
	Strange noise in N position.	2	3												4	1	
	Vehicle does not decelerate by engine brake.	7	3		4	5	6						2		8	1	
	Maximum speed low.	2	3		5	6	7		8	9	11	4			10	1	
	With selector lever in P position, vehicle does not enter parking condition or, with selector lever in another position, parking condition is not cancelled.			1									2				
	Vehicle runs with CVT in P position.			1									3		4	2	
	Vehicle runs with CVT in N position.			1									3		4	2	
	Engine stall.	2	6		3	4			8	9	5	7			10	1	
	Engine stalls when selector lever shifted N → D or R.	2	6		3	4					5				7	1	
	Engine speed does not return to idle.	2	4				3								5	1	
	Does not shift	3	4		5	6	7						2		8	1	

Symptom		Engine system	CAN communication line	Transmission range switch (P0705, P0706)	Input speed sensor (P0717)	Primary speed sensor (P0715)	Secondary speed sensor (P2765)	CVT fluid temperature sensor (P0711, P0712, P0713)	Primary pressure sensor (P084C, P084D)	Secondary pressure sensor (P0841, P0847, P0848)	Torque converter clutch solenoid valve (P0740, P0743, P0744)	Stall test	CVT position	Power supply	Control valve	CVT fluid level and state	Ignition switch and starter
		EC-133	TM-60									TM-87	TM-88	TM-167	TM-214	TM-185	PG-23, STR-5
Other	Engine does not start in N or P position.			3									2				1
	Engine starts in positions other than N or P.			3									2				1

Symptom Table 2

Symptom		Torque converter	Transmission range switch	Oil pump	Forward clutch	Reverse brake	Planetary gear	Bearings	Parking mechanism	Stop lamp switch	Shift lock solenoid	CVT shift selector
		TM-217	TM-213							BR-7	TM-177	TM-189
Shift Shock	Large shock (N→ D position)		2		1							
	Large shock (N→ R position)		2			1						
	Shock is too large for lock-up.	1										

Symptom		Torque converter	Transmission range switch	Oil pump	Forward clutch	Reverse brake	Planetary gear	Bearings	Parking mechanism	Stop lamp switch	Shift lock solenoid	CVT shift selector
		TM-217	TM-213							BR-7	TM-177	TM-189
Slips/Will Not Engage	Vehicle cannot be started from D position.		3	1	2							
	Vehicle cannot be started from R position.		4	1		2			3			
	Does not lock-up.	1	3	2								
	Does not hold lock-up condition.	1	3	2								
	Lock-up is not released.	1		2								
	With selector lever in D position, acceleration is extremely poor.	1	3		2							
	With selector lever in R position, acceleration is extremely poor.	1	4	2		3						
	Slips at lock-up.	1		2								
Other	No creep at all.	1	6	2	4	5	3					
	Vehicle cannot run in all positions.	1		2	4	5	3		6			
	With selector lever in D position, driving is not possible.	1		2	4		3		5			
	With selector lever in R position, driving is not possible.	1		2		4	3		5			
	Judder occurs during lock-up.	1										
	Strange noise in D position.	1		2	4		3	5				
	Strange noise in R position.	1		2		4	3					
	Strange noise in N position.	1		2			3					
	Maximum speed low.	1	5	2	4		3					
	With selector lever in P position, vehicle does not enter parking condition or, with selector lever in another position, parking condition is not cancelled.								1			
	Vehicle runs with CVT in P position.						2		1			
	Vehicle runs with CVT in N position.				2	3	1					
	Engine stall.	1										
	Engine stalls when selector lever shifted N → D or R.	1										
	Does not shift			1								

Symptom		Torque converter	Transmission range switch	Oil pump	Forward clutch	Reverse brake	Planetary gear	Bearings	Parking mechanism	Stop lamp switch	Shift lock solenoid	CVT shift selector
		TM-217	TM-213							BR-7	TM-177	TM-189
Other	When brake pedal is depressed with ignition switch ON, selector lever cannot be shifted from P position to other position.									1	2	3
	When brake pedal is not depressed with ignition switch ON, selector lever can be shifted from P position to other position.									1	2	3

PERIODIC MAINTENANCE

CVT FLUID

Inspection

INFOID:0000000009177643

FLUID LEAKAGE

- Check transaxle surrounding area (oil seal and plug etc.)for fluid leakage.
- If anything is found, repair or replace damaged parts and adjust CVT fluid level. Refer to TM-187, "Adjustment".

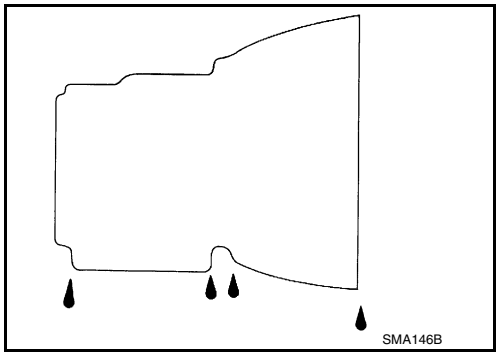

Replacement

INFOID:0000000009177644

CVT fluid	**: Refer to TM-219, "General Specification".**
Fluid capacity	**: Refer to TM-219, "General Specification".**

CAUTION:

- **Always use shop paper. Never use shop cloth.**
- **Replace a drain plug gasket with new ones at the final stage of the operation when installing.**
- **Use caution when looking into the drain hole as there is a risk of dripping fluid entering the eye.**
- **After replacement, always perform CVT fluid leakage check.**

1. Select “Data Monitor” in “TRANSMISSION” using CONSULT.
2. Select “FLUID TEMP” and confirm that the CVT fluid temperature is 40°C (104°F) or less.
3. Check that the selector lever is in the “P” position, then completely engage the parking brake.
4. Lift up the vehicle.
5. Remove the drain plug and drain the CVT fluid from the oil pan. Refer to TM-197, "Exploded View".
6. Install the drain plug to oil pan.
   CAUTION:
   Drain plug gasket use the old one.
7. Remove the overflow plug ① from converter housing.

   ⇦ : Vehicle front

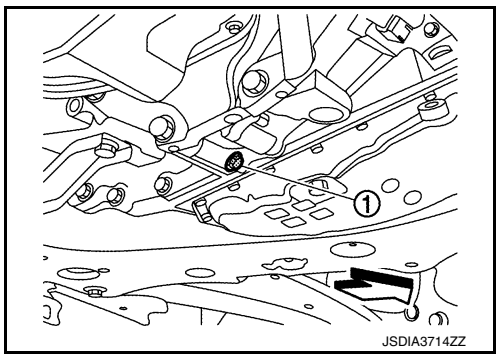

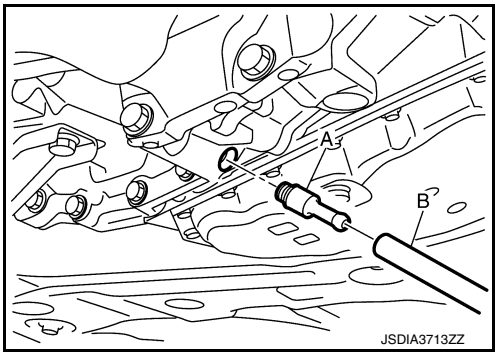

8. Install the charging pipe set (KV311039S0) (A) into the overflow plug hole.
   CAUTION:
   Tighten the charging pipe by hand.
9. Install the ATF changer hose (B) to the charging pipe.
   CAUTION:
   Press the ATF changer hose all the way onto the charging pipe until it stops.
10. Fill approximately 3 liter (3-1/8 US qt, 2-5/8 Imp qt) of the CVT fluid.
11. Remove the ATF changer hose and charging pipe, then install the overflow plug.
    NOTE:
    Perform this work quickly because CVT fluid leaks.
12. Lift down the vehicle.
13. Start the engine.
14. While depressing the brake pedal, shift the selector lever to the entire position from “P” to “L”, and shift it to the “P” position.
    NOTE:
    Hold the lever at each position for 5 seconds.
15. Check that the CONSULT “Data Monitor” in “FLUID TEMP” is 35°C (95°F) to 45°C (113°F).
16. Stop the engine.
17. Lift up the vehicle.
18. Remove the drain plug, and then drain CVT fluid from oil pan.
19. Repeat steps 8 to 18 (one time).
20. Tighten the drain plug to the specified torque. Refer to TM-197, "Exploded View".
21. Remove the overflow plug.
22. Install the charging pipe set (KV311039S0) into the overflow plug hole.
    CAUTION:
    Tighten the charging pipe by hand.
23. Install the ATF changer hose to the charging pipe.
    CAUTION:
    Press the ATF changer hose all the way onto the charging pipe until it stops.
24. Fill approximately 3 liter (3-1/8 US qt, 2-5/8 Imp qt) of the CVT fluid.
25. Remove the ATF changer hose and charging pipe, then install the overflow plug.
    NOTE:
    Perform this work quickly because CVT fluid leaks.
26. Lift down the vehicle.
27. Start the engine.
28. While depressing the brake pedal, shift the selector lever to the entire position from “P” to “L”, and shift it to the “P” position.
    NOTE:
    Hold the lever at each position for 5 seconds.
29. Check that the CONSULT “Data Monitor” in “FLUID TEMP” is 35°C (95°F) to 45°C (113°F).
30. Lift up the vehicle.
31. Remove the overflow plug and confirm that the CVT fluid is drained from the overflow plug hole.
    CAUTION:
    Perform this work with the vehicle idling.
    NOTE:
    If the CVT fluid is not drained, refer to “Adjustment” and refill with the CVT fluid.
32. When the flow of CVT fluid slows to a drip, tighten the overflow plug to the specified torque. Refer to TM-197, "Exploded View".
    CAUTION:
    Never reuse O-ring.
33. Lift down the vehicle.

34. Select “Data Monitor” in “TRANSMISSION” using CONSULT.
35. Select “CONFORM CVTF DETERIORTN”.
36. Select “Erase”.
37. Stop the engine.

Adjustment

INFOID:0000000009177645

CVT fluid	**: Refer to TM-219, "General Specification".**
Fluid capacity	**: Refer to TM-219, "General Specification".**

CAUTION:
- **During adjustment of the CVT fluid level, check CONSULT so that the oil temperature may be maintained from 35 to 45°C (95 to 113°F).**
- **During adjustment of the CVT fluid level, check that the engine speed is maintaining 500 rpm.**
- **Use caution when looking into the drain hole as there is a risk of dripping fluid entering the eye.**

1. Check that the selector lever is in the “P” position, then completely engage the parking brake.
2. Start the engine.
3. Adjust the CVT fluid temperature to be approximately 40°C (104°F).
   NOTE:
   The CVT fluid is largely affected by temperature. Therefore be sure to use CONSULT and check the “FLUID TEMP” under “TRANSMISSION” in “Data Monitor” while adjusting.
4. While depressing the brake pedal, shift the selector lever to the entire position from “P” to “L”, and shift it to the “P” position.
   NOTE:
   Hold the lever at each position for 5 seconds.
5. Lift up the vehicle.
6. Check that there is no CVT fluid leakage.
7. Remove the overflow plug ① from converter housing.

   ⇦ : Vehicle front

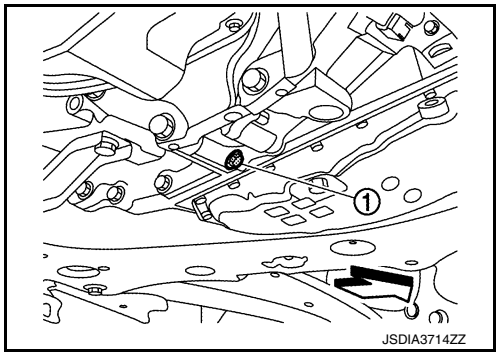

8. Install the charging pipe set (KV311039S0) (A) into the overflow plug hole.
   CAUTION:
   Tighten the charging pipe by hand.
9. Install the ATF changer hose (B) to the charging pipe.
   CAUTION:
   Press the ATF changer hose all the way onto the charging pipe until it stops.
10. Fill approximately 0.5 liter (1/2 US qt, 1/2 Imp qt) of the CVT fluid.
11. Remove the ATF changer hose from the charging pipe, and check that the CVT fluid drains out from the charging pipe. If it does not drain out, perform charging again.
    CAUTION:
    Perform this work with the vehicle idling.

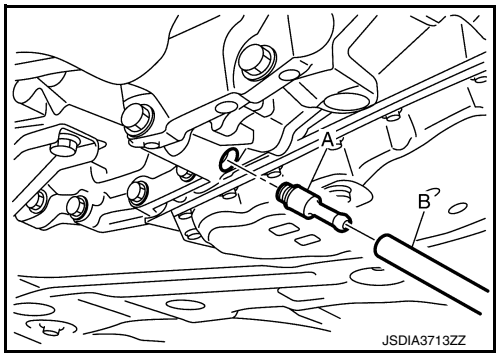

12. When the flow of CVT fluid slows to a drip, remove the charging pipe from the converter housing.
13. Tighten the overflow plug to the specified torque. Refer to TM-197, "Exploded View".
    CAUTION:

Never reuse O-ring.

14. Lift down the vehicle.
15. Stop the engine.

REMOVAL AND INSTALLATION

CVT SHIFT SELECTOR

Exploded View

INFOID:0000000009177646

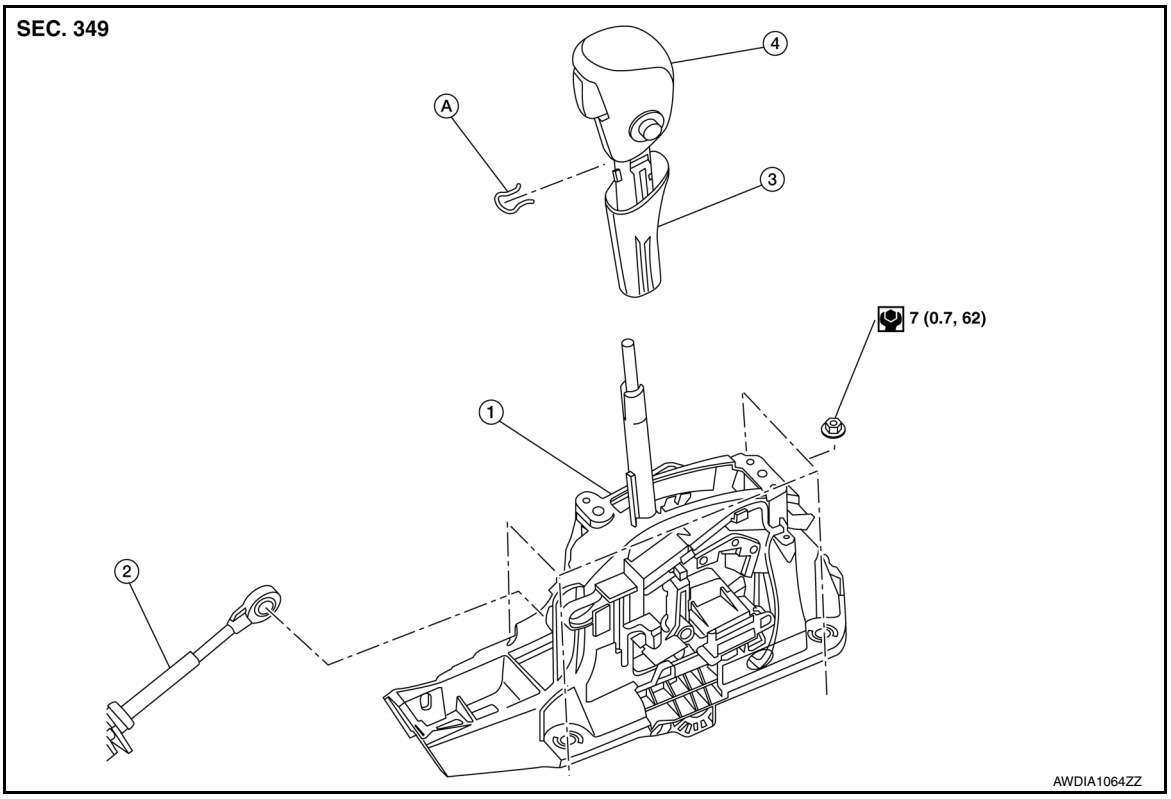

1.	CVT shift selector assembly	2.	Control cable	3.	Shift selector handle cover
4	Shift selector handle	A.	Shift selector handle clip		

Removal and Installation

INFOID:0000000009177647

REMOVAL

1. Apply the parking brake.
   CAUTION:
   Make sure the vehicle cannot move with the parking brake applied.
2. Remove shift lock override button cover (1) using suitable tool, and insert suitable tool into opening to depress the shift lock override button. Move shift selector to "N" position while depressing shift lock override button.
   ⇦: Front

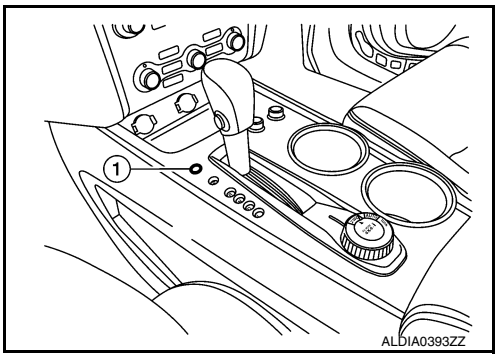

3. Remove the shift selector handle (1).
a. Release the shift selector handle cover (2) using a suitable tool from the base of the shift selector handle (1).
b. Remove the shift selector handle clip (A).
c. Pull upward and remove the shift selector handle (1).

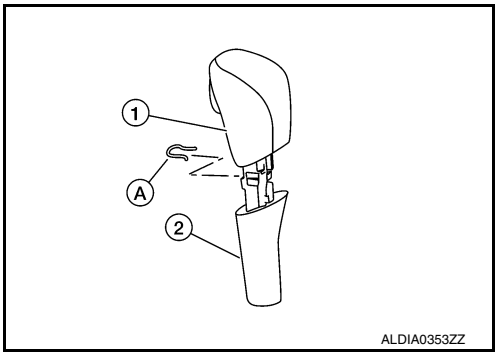

4. Remove center console upper side finisher (LH). Refer to IP-18, "Exploded View".
5. Release center console side finisher (LH/RH) clip and pawls using a suitable tool and remove.
   △: Clip
   ◌: Pawl
   ⇦: Front

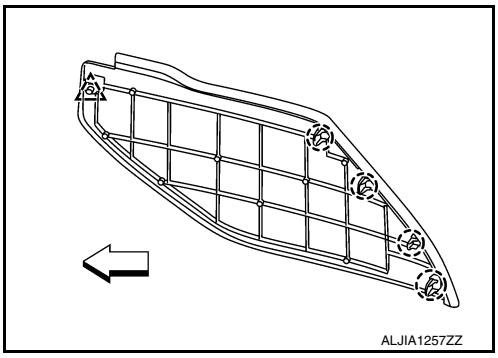

6. Release shift selector finisher clips and pawls using a suitable tool, disconnect the harness connectors and remove. Refer to IP-18, "Exploded View".
7. Release the harness clip, then disconnect the harness connector from shift selector.
8. Remove the control cable from the shift selector assembly. Refer to TM-191, "Removal and Installation".
9. Remove the four shift selector assembly nuts and the shift selector assembly from the vehicle.

INSTALLATION

Installation is in the reverse order of removal.

- When installing control cable (1) to the shift selector assembly (2), check that control cable is fully pressed in until it stops with the ribbed surface (A) facing upward.
  NOTE:
  Apply multi-purpose grease to control cable eye before installation.
- Adjust control cable as necessary. Refer to TM-192, "Inspection and Adjustment".

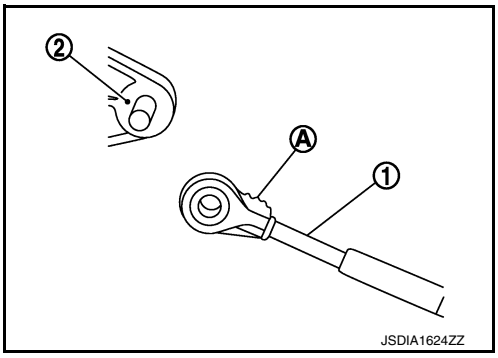

Inspection

INFOID:0000000009177648

INSPECTION

Check the CVT position. If a malfunction is found, adjust the CVT position. Refer to TM-88, "Inspection and Adjustment".

CONTROL CABLE

Exploded View

INFOID:0000000009177649

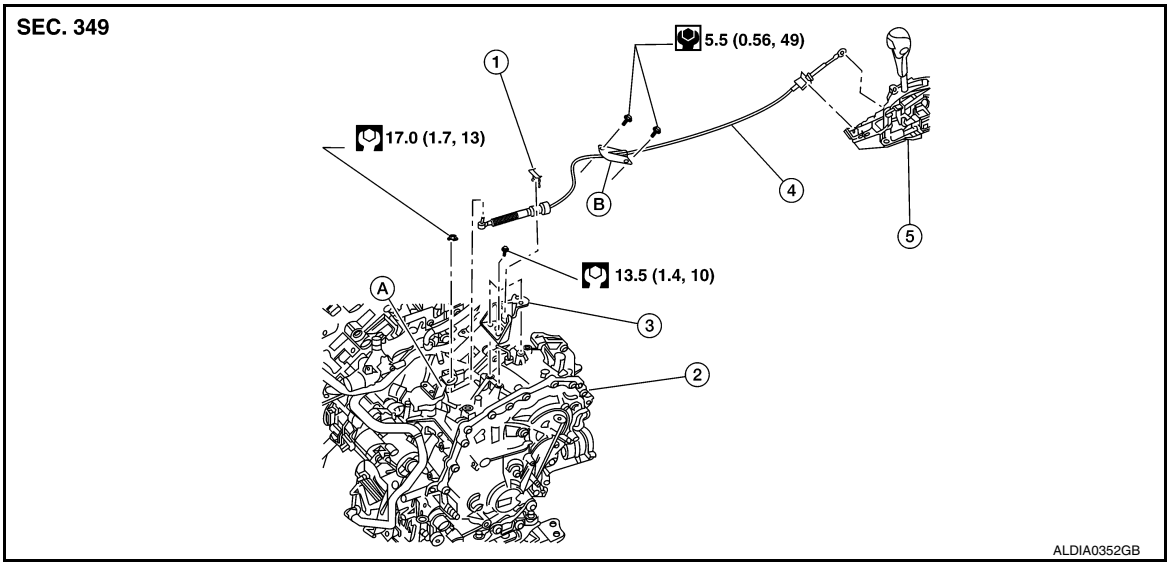

1. Bracket B	2. Lock plate	3. Transaxle assembly
4. Bracket A	5. Control cable	6. CVT shift selector assembly
A: Manual lever	B: Grommet	

Removal and Installation

INFOID:0000000009177650

INSTALLATION

CAUTION:

Always apply the parking brake before performing removal and installation.

1. Remove the front air duct and air cleaner case assembly. Refer to EM-24, "Removal and Installation".
2. Remove the control cable nut from the manual lever.
3. Remove the lock plate (1).

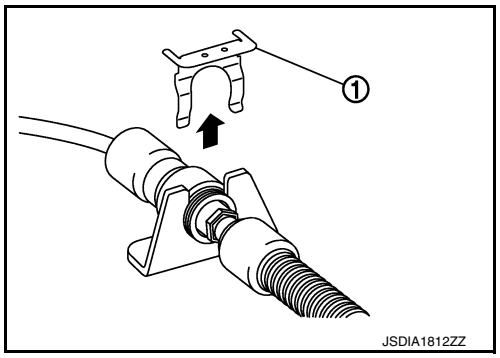

4. Remove center console upper side finisher (LH). Refer to IP-18, "Exploded View".

5. Release center console side finisher (LH/RH) clip and pawls using a suitable tool and remove.
   △: Clip
   ◌: Pawl
   ⇦: Front

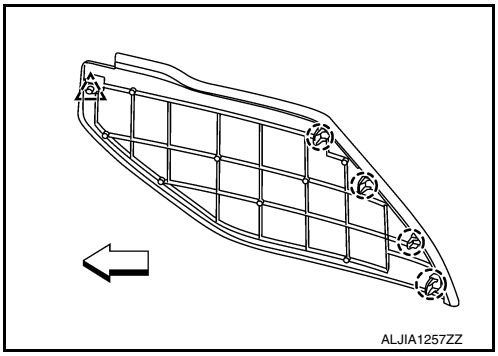

6. Release shift selector finisher clips and pawls using a suitable tool, disconnect the harness connectors and remove. Refer to IP-18, "Exploded View".
7. Remove the control cable from the CVT shift selector assembly.
8. Remove the bolts (1) from the grommet (2).

   (3) : Control cable
   ⇦ : Front

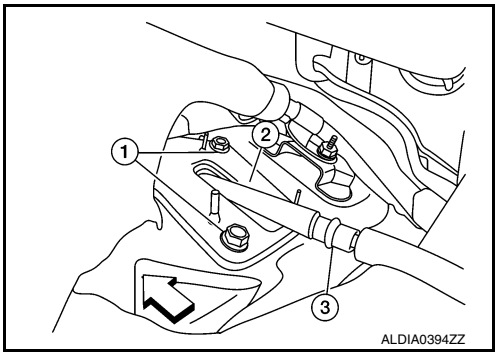

9. Remove the control cable from the vehicle.

INSTALLATION

Installation is in the reverse order of removal.

- Pay attention to the following when connecting the control cable to the CVT shift selector.

1. When connecting the control cable (1) to the CVT shift selector assembly (2), face the grooved surface of the rib (A) up and insert the control cable until it stops.

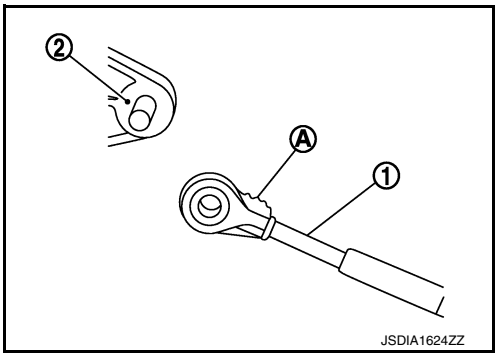

2. Install the socket (A) onto the CVT shift selector.
   CAUTION:
   - **Place the socket onto the CVT shift lever, then fasten it in place from above.**
   - **Check that pulling on the socket does not disconnect it.**

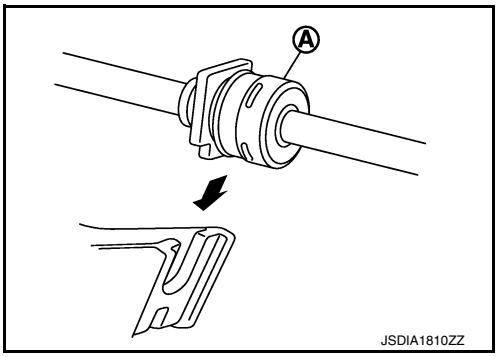

Inspection and Adjustment

INFOID:0000000009177651

INSPECTION AFTER INSTALLATION

Check the CVT position. If a malfunction is found, adjust the CVT position. Refer to TM-190, "Inspection".

TOW MODE SWITCH

Removal and Installation

INFOID:0000000009177652

REMOVAL

1. Remove instrument lower panel (LH). Refer to IP-25, "Removal and Installation".
2. Remove screws (1) from the bracket.
3. Remove tow mode switch.

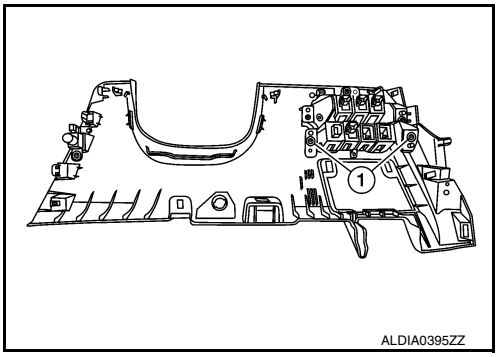

INSTALLATION

Installation is in the reverse order of removal.

TCM

Exploded View

INFOID:0000000009177653

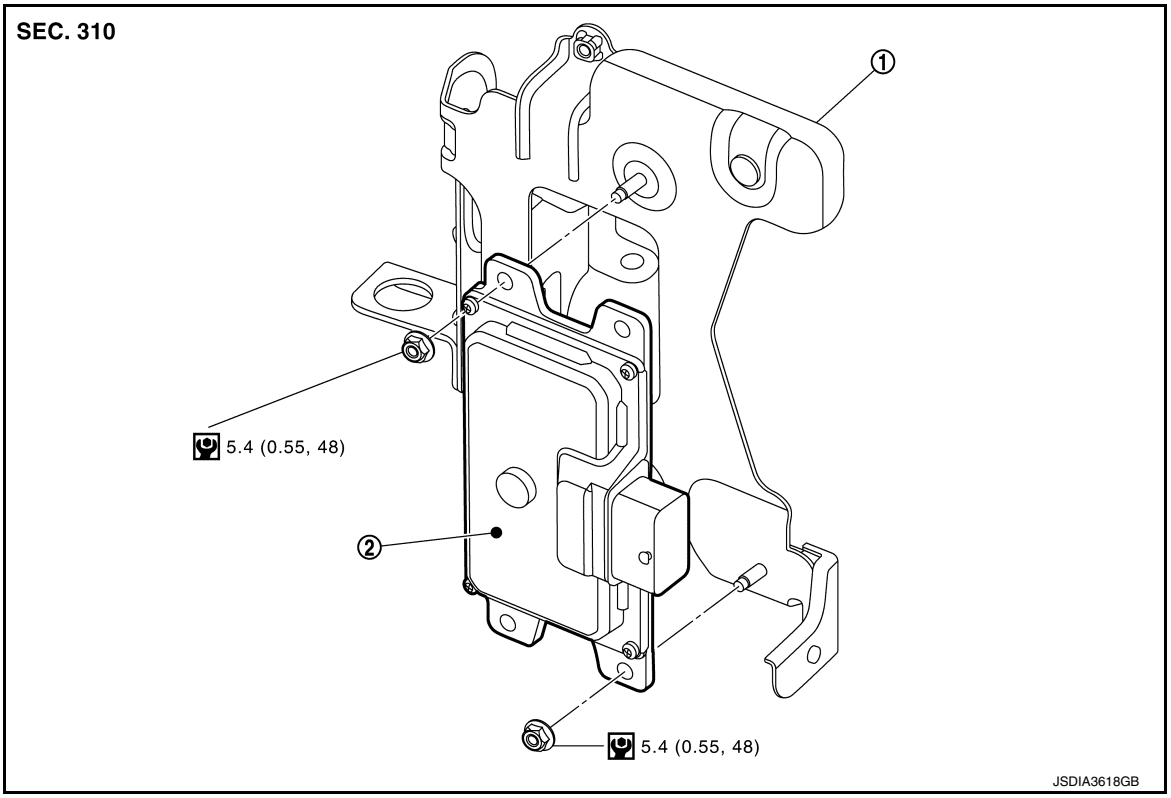

① Bracket ② TCM

: N·m (kg-m, in-lb)

Removal and Installation

INFOID:0000000009177654

CAUTION:

- **To replace TCM, perform " WRITE IP CHARA – REPLACEMENT TCM" of the CONSULT Work Support before removing TCM and save TCM data in CONSULT. Refer to TM-81, "Description".**
- **When replacing TCM, note the “CVTF DETERIORATION DATE” value displayed on CONSULT “CONFORM CVTF DETERIORTN” in MAINTENANCE BOOKLET, before start the operation.**

REMOVAL

1. Remove the front air duct. Refer to EM-24, "Exploded View".
2. Disconnect the negative battery terminal. Refer to PG-90, "Removal and Installation".
3. Disconnect the TCM harness connector.
4. Remove the TCM and bracket as a set.
5. Remove the TCM from the bracket.

INSTALLATION

Installation is the reverse order of removal.

Adjustment

INFOID:0000000009177655

ADJUSTMENT AFTER INSTALLATION

Perform "ADDITIONAL SERVICE WHEN REPLACING TCM". Refer to TM-81, "Description".

AIR BREATHER HOSE

Removal and Installation

INFOID:0000000009177656

REMOVAL

1. Remove the front air duct and air cleaner case assembly. Refer to EM-24, "Removal and Installation".
2. Remove air breather hose.

INSTALLATION

Installation is in the reverse order of removal.

CAUTION:

- **Check that air breather hose is not collapsed or blocked due to folding or bending when installed.**
- **Insert air breather hose (1) to air breather tube (2) all the way to the curve of the tube.**
- **Insert air breather hose to air breather tube so that the paint mark (A) is facing upward.**

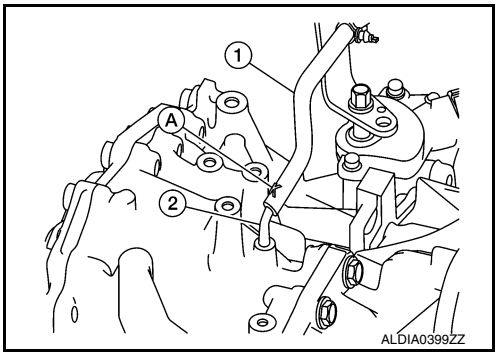

OIL PAN

Exploded View

INFOID:0000000009177657

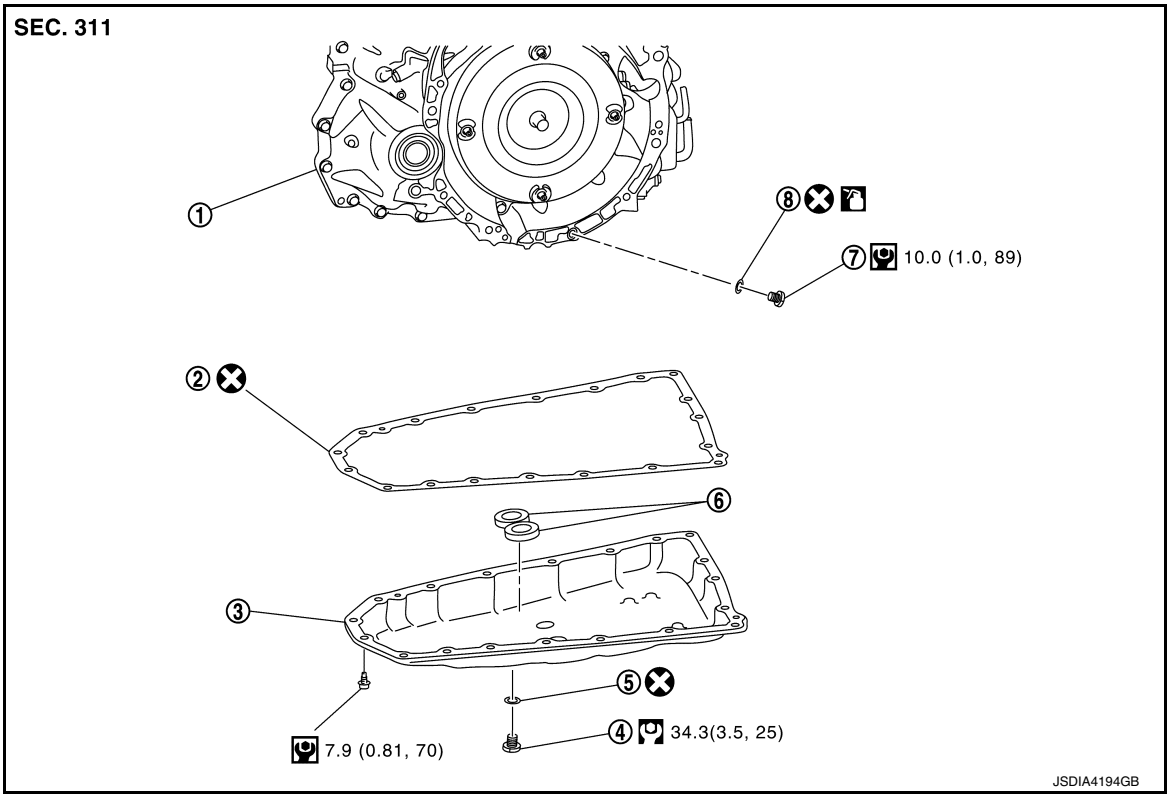

①	Transaxle assembly	②	Oil pan gasket	③	Oil pan
④	Drain plug	⑤	Drain plug gasket	⑥	Magnet
⑦	Overflow plug	⑧	O-ring		

: Always replace after every disassembly.

: N·m (kg-m, ft-lb)

: N·m (kg-m, in-lb)

: Apply CVT fluid

Removal and Installation

INFOID:0000000009177658

REMOVAL

1. Remove drain plug from oil pan and then drain the CVT fluid.
2. Remove drain plug gasket.
   CAUTION:
   Do not reuse drain plug gasket.
3. Remove the oil pan bolts, and then remove the oil pan and oil pan gasket.
   CAUTION:
   Do not reuse oil pan gasket.
4. Remove the magnets from the oil pan.

INSTALLATION

Installation is in the reverse order of removal.

CAUTION:

- **Do not reuse oil pan gasket.**
- **Do not reuse drain plug gasket.**

- **Do not reuse O-ring.**
- **Completely clean the iron powder from the magnet area of oil pan and the magnets.**

Install the oil pan to the transaxle case with the following procedure.

1. Install the oil pan gasket to the oil pan.
   CAUTION:
   Completely wipe out any moisture, oil, and old gasket from the oil pan gasket surface and bolt hole of oil pan and transaxle case.
2. Install the oil pan assembly to the transaxle case, and then temporarily tighten the oil pan bolt.
3. Tighten the oil pan bolts in the order shown to the specified torque.

   ⇦ : Front

4. Tighten the oil pan bolts again clockwise from (1) shown to the specified torque.

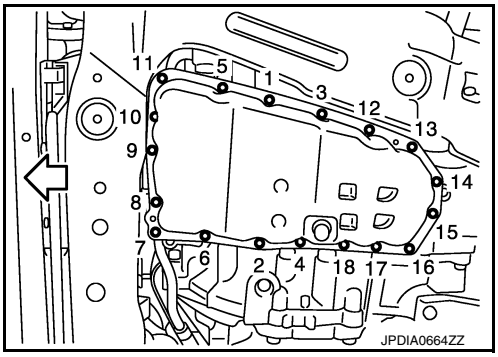

Inspection and Adjustment

INFOID:0000000009177659

INSPECTION AFTER REMOVAL

Check oil pan for foreign material.

- If a large amount of worn material is found, clutch plate may be worn.
- If iron powder is found, bearings, gears, or clutch plates may be worn.
- If aluminum powder is found, bushing may be worn, or chips or burrs of aluminum casting parts may enter.

Check points where wear is found in all cases.

INSPECTION AFTER INSTALLATION

Check for CVT fluid leakage. Refer to TM-185, "Inspection".

INPUT SPEED SENSOR

Exploded View

INFOID:0000000009177660

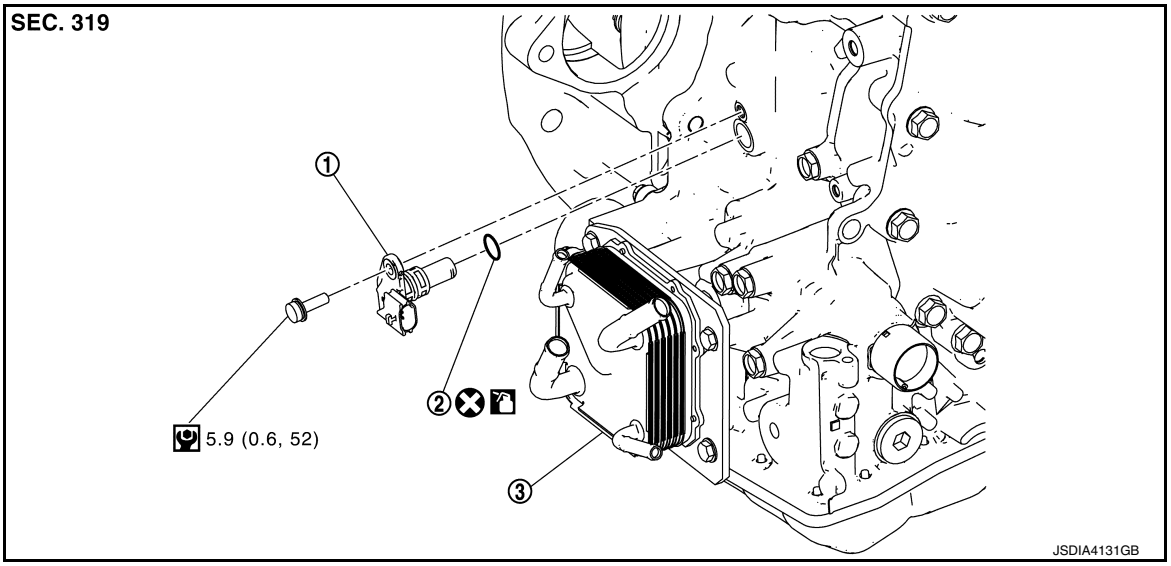

① Input speed sensor ② O-ring ③ Transaxle assembly

: Always replace after every disassembly.

: N·m (kg-m, in-lb)

: Apply CVT fluid

Removal and Installation

INFOID:0000000009177661

REMOVAL

1. Remove the battery tray. Refer to PG-92, "Removal and Installation".
2. Remove the starter motor. Refer to STR-20, "Removal and Installation".
3. Disconnect the harness connector from the input speed sensor (1).
4. Remove the input speed sensor bolt, then the input speed sensor (1).
5. Remove the O-ring (2) from the input speed sensor (1).
   CAUTION:
   Do not reuse O-ring.

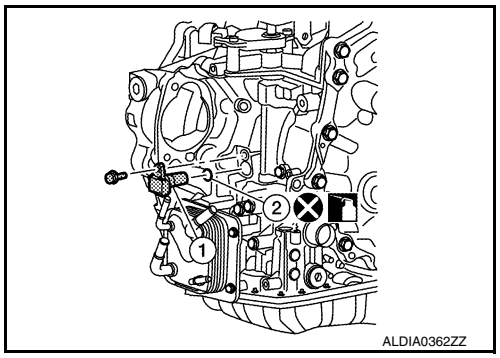

INSTALLATION

Installation is in the reverse order of removal.

CAUTION:

- **Do not reuse O-ring.**
- **Apply Genuine NISSAN CVT Fluid NS-3 to the O-ring.**

Inspection and Adjustment

INFOID:0000000009177662

INSPECTION AFTER INSTALLATION

Check for CVT fluid leakage. Refer to TM-185, "Inspection".

ADJUSTMENT AFTER INSTALLATION

Adjust CVT fluid level. Refer to TM-187, "Adjustment".

PRIMARY SPEED SENSOR

Exploded View

INFOID:0000000009177663

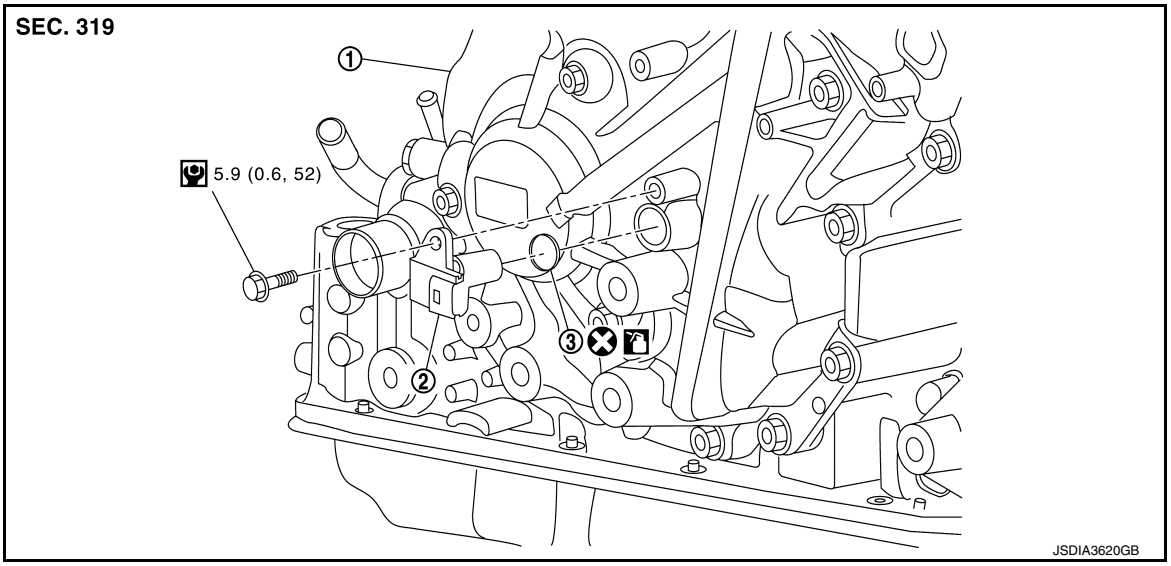

① Transaxle assembly ② Primary speed sensor ③ O-ring

: Always replace after every disassembly.

: N·m (kg-m, in-lb)

: Apply CVT fluid

Removal and Installation

INFOID:0000000009177664

REMOVAL

1. Disconnect the negative battery terminal. Refer to PG-90, "Removal and Installation".
2. Remove the front fender protector side cover (LH). Refer to EXT-28, "FENDER PROTECTOR : Removal and Installation".
3. Disconnect the harness connector from primary speed sensor (1).
4. Remove the primary speed sensor bolt, then the primary speed sensor (1).
5. Remove the O-ring (2) from the primary speed sensor (1).
   CAUTION:
   Do not reuse O-ring.

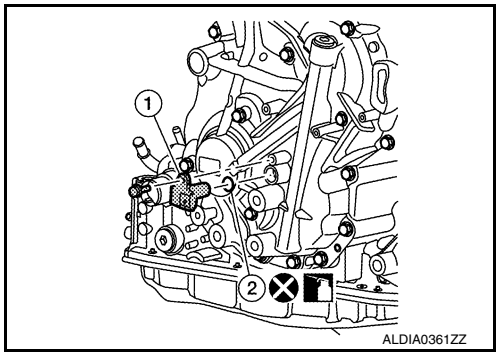

INSTALLATION

Installation is in the reverse order of removal.

CAUTION:

- **Do not reuse O-ring.**
- **Apply Genuine NISSAN CVT Fluid NS-3 to the O-ring.**

Inspection and Adjustment

INFOID:0000000009177665

INSPECTION AFTER INSTALLATION

Check for CVT fluid leakage. Refer to TM-185, "Inspection".

ADJUSTMENT AFTER INSTALLATION

Adjust CVT fluid level. Refer to TM-187, "Adjustment".

OUTPUT SPEED SENSOR

Exploded View

INFOID:0000000009177666

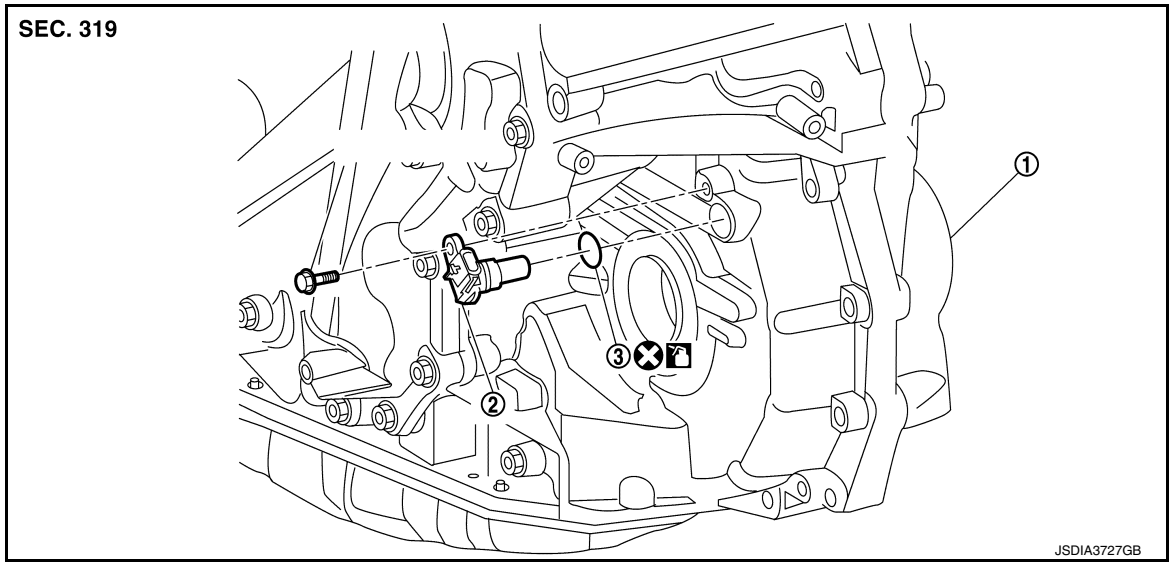

① Transaxle assembly ② Output speed sensor ③ O-ring

⊗ : Always replace after every disassembly.

: N·m (kg-m, in-lb)

: Apply CVT fluid

Removal and Installation

INFOID:0000000009177667

REMOVAL

1. Disconnect the battery negative terminal. Refer to PG-90, "Removal and Installation".
2. Disconnect the harness connector from output speed sensor (1).
3. Remove the output speed sensor bolt, then the output speed sensor (1).
4. Remove the O-ring (2) from the output speed sensor (1).
   CAUTION:
   Do not reuse O-ring.

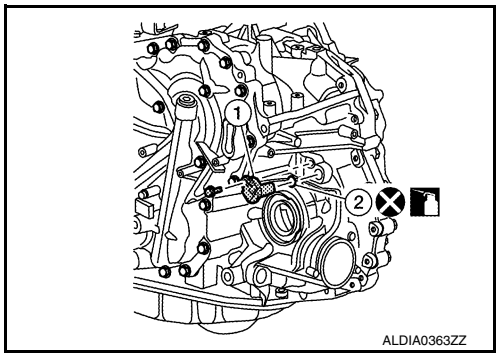

INSTALLATION

Installation is in the reverse order of removal.

CAUTION:

- **Do not reuse O-ring.**
- **Apply Genuine NISSAN CVT Fluid NS-3 to the O-ring.**

Inspection and Adjustment

INFOID:0000000009177668

INSPECTION AFTER INSTALLATION

Check for CVT fluid leakage. Refer to TM-185, "Inspection".

ADJUSTMENT AFTER INSTALLATION

Adjust CVT fluid level. Refer to TM-187, "Adjustment".

DIFFERENTIAL SIDE OIL SEAL

Exploded View

INFOID:0000000009177669

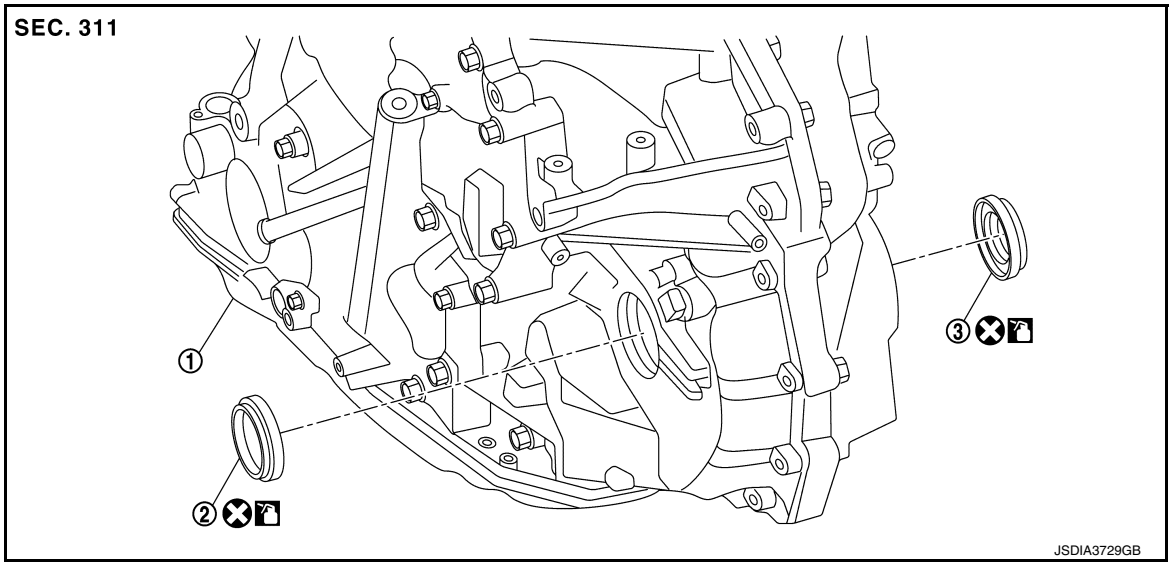

① Transaxle assembly
② Differential side oil seal (left side)
③ Differential side oil seal (right side) (2WD models only)

⊗ : Always replace after every disassembly.
: Apply CVT fluid

Removal and Installation

INFOID:0000000009177670

REMOVAL

1. Remove front drive shaft. Refer to FAX-15, "Removal and Installation (LH)" (LH) or FAX-18, "Removal and Installation (RH)" (RH).
2. Use oil seal remover or a similar means and remove the differential side oil seal.
   CAUTION:
   When removing the differential side oil seal, be careful not to scratch the oil seal mounting surfaces of the transaxle case and converter housing.

INSTALLATION

Installation is in the reverse order of removal.

CAUTION:
- **Do not reuse differential side oil seal.**
- **Apply Genuine NISSAN CVT Fluid NS-3 to differential side oil seals.**
- **When inserting the drive shaft, be sure to use Tool.**

Tool number : KV38107900 (—)

Install each differential side oil seal evenly using Tool so that differential side oil seal protrudes by the dimension (C) and (D) respectfully.

(A) : Differential side oil seal (LH)
(B) : Differential side oil seal (RH)(2WD models only)

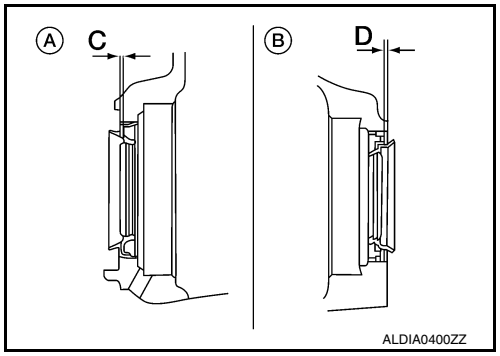

Dimension (C) : Height difference from case end surface is within 0 ± 0.5 mm (0.00 ± 0.020 in).

Dimension (D) : Height difference from case end surface is within 0 ± 0.5 mm (0.00 ± 0.020 in).

NOTE:

The reference is the installation direction of the differential side oil seal.

Drift to be used:

Location	Commercial Service Tools
Transaxle case side	Commercial service tool with outer dia. 56 mm (2.20 in) and inner dia. 50 mm (1.97 in)
Converter housing side	

Inspection and Adjustment

INFOID:0000000009177671

INSPECTION AFTER INSTALLATION

Check for CVT fluid leakage. Refer to TM-185, "Inspection".

ADJUSTMENT AFTER INSTALLATION

Adjust CVT fluid level. Refer to TM-187, "Adjustment".

WATER HOSE

Exploded View

INFOID:0000000009177672

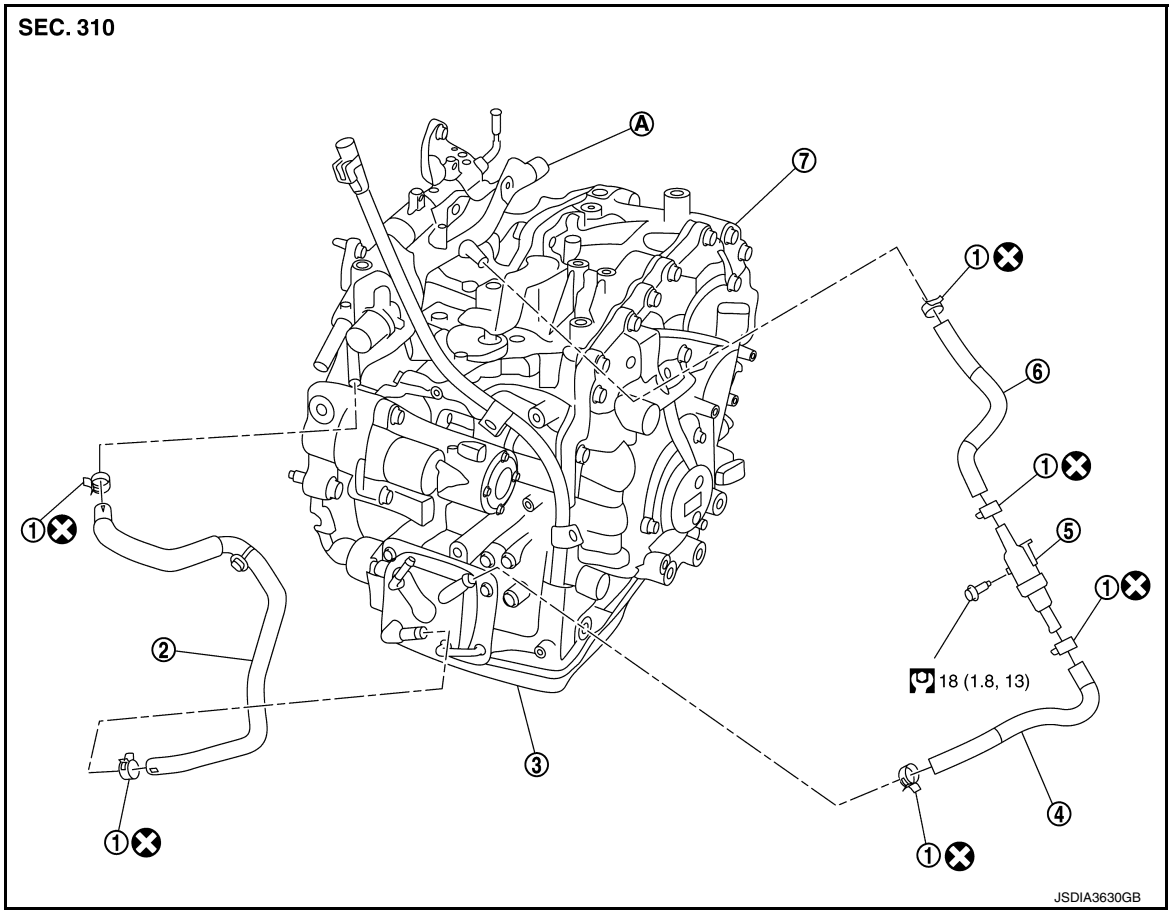

① Hose clamp	② CVT water hose A	③ Transaxle assembly
④ CVT water hose B	⑤ Heater thermostat	⑥ CVT water hose C
⑦ Transaxle assembly		
Ⓐ Water outlet		
✕ : Always replace after every disassembly.		
: N·m (kg-m, ft-lb)		

Removal and Installation

INFOID:0000000009177673

REMOVAL

WARNING:

Do not remove the radiator cap when the engine is hot. Serious burns could occur from high pressure engine coolant escaping from the radiator. Wrap a thick cloth around the cap. Slowly turn it a quarter turn to allow built-up pressure to escape. Carefully remove the cap by turning it all the way.

CAUTION:

Perform this step engine is cold.

NOTE:

When removing components such as hoses, tubes/lines, etc., cap or plug openings to prevent fluid from spilling.

1. Drain engine coolant from radiator. Refer to CO-11, "Changing Engine Coolant".
2. Remove front air duct. Refer to EM-24, "Exploded View".
3. Remove hose clamps, and remove CVT water hose A.

4. Remove hose clamps, and remove CVT water hose B.
5. Remove hose clamps, and remove CVT water hose C.
6. Remove CVT water tube.

INSTALLATION

Installation is in the reverse order of removal.

CAUTION:

- **Do not reuse hose clamp.**
- **Hose clamp should not interfere with the spool or bulge.**

*Refer to the following when installing water hose.

Water hose (1)	Installation side tube (2)	Direction of paint mark	Hose insertion depth
CVT water hose A	Water outlet	Upward	End reaches the 2-stage bulge.
	CVT oil warmer	Frontward	
CVT water hose B	CVT oil warmer	Frontward	
	Heater thermostat	Align with the mark on the heater thermostat side	
CVT water hose C	Heater thermostat	Align with the mark on the heater thermostat side	End reaches the expansion part.
	Water outlet	Upward	End reaches the 2-stage bulge.

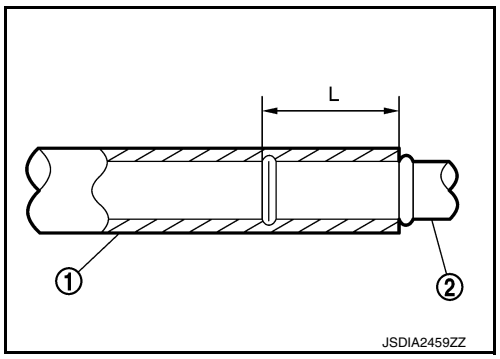

*Refer to the following when installing hose clamps.

Water hose (1)	Installation side tube (2)	Hose clamp (3)	
		Direction of tab	Clamping position*
Water hose A	Water outlet	Downward and 45° rightward	A: 5-7 mm (0.20 - 0.28 in) (L) from hose end.
	CVT oil warmer	Downward	
Water hose B	CVT oil warmer	Forward and 45° downward	B: Align with the paint mark (C) as shown.
	Heater thermostat	Downward	
Water hose C	Heater thermostat	Downward	
	Water outlet	Upward	

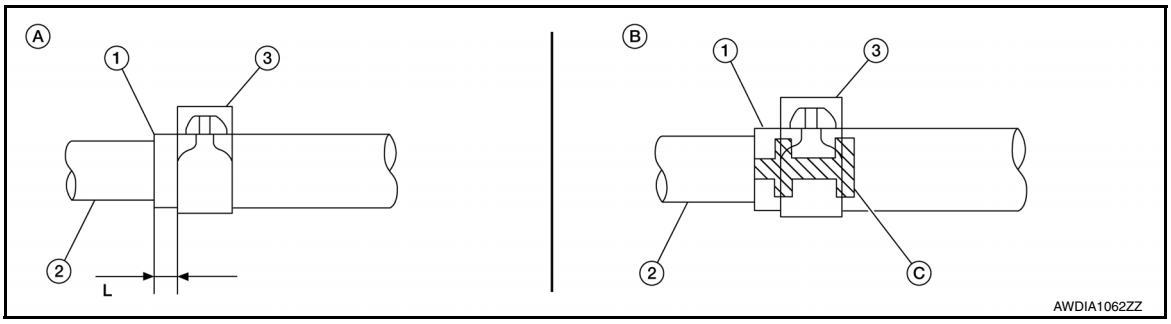

Inspection

INFOID:0000000009177674

INSPECTION AFTER INSTALLATION

Start and warm up the engine. Visually check that there is no leakage of engine coolant and CVT fluid.

CVT FLUID COOLER SYSTEM

Exploded View

INFOID:0000000009177678

COMPONENT PARTS LOCATION

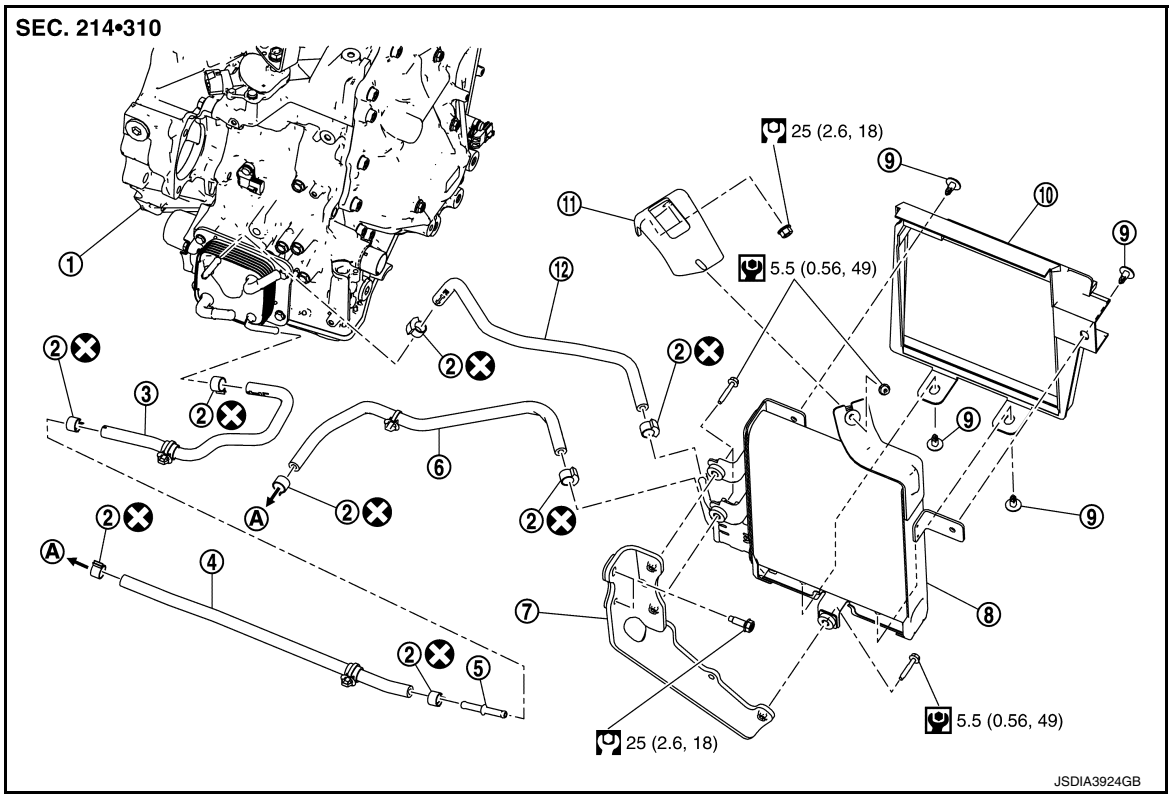

① Transaxle assembly	② Hose clamp	③ CVT fluid cooler hose A
④ CVT fluid cooler hose B	⑤ Connector tube	⑥ CVT fluid cooler hose C
⑦ Bracket	⑧ CVT fluid cooler	⑨ Clip
⑩ Air guide	⑪ Bracket	⑫ CVT fluid cooler hose D
Ⓐ To radiator		

: Always replace after every disassembly.

: N·m (kg-m, ft-lb)

: N·m (kg-m, in-lb)

Removal and Installation

INFOID:0000000009177679

REMOVAL

NOTE:

When removing components such as hoses, tubes/lines, etc., cap or plug openings to prevent fluid from spilling.

1. Drain engine coolant from radiator. Refer to CO-11, "Changing Engine Coolant".
2. Remove front air duct. Refer to EM-24, "Exploded View".
3. Remove hose clamps, and remove CVT fluid cooler hose A.
4. Remove hose clamps, and remove CVT fluid cooler hose B.
5. Remove CVT fluid cooler tube A and CVT fluid cooler tube B.

INSTALLATION

Installation is in the reverse order of removal.

CAUTION:
- **Do not reuse hose clamps.**
- **Hose clamps should not interfere with the spool or bulge.**

*Refer to the following when installing CVT fluid cooler hoses

Hose name (1)	Installation side tube (2)	Direction of paint mark	Hose insertion depth (L)
CVT fluid cooler hose A	CVT oil warmer	Downward	B: End reaches the 2-step bulge.
	Connector tube	Upward	B: End reaches the spool.
CVT fluid cooler hose B	Connector tube	Upward	
	Radiator	Upward	A: End reaches the radius curve end.
CVT fluid cooler hose C	Radiator	Downward	C: Insert the hose until hose touches the radiator.
	CVT fluid cooler	Leftward	A: End reaches the radius curve end.
CVT fluid cooler hose D	CVT fluid cooler	Leftward	
	CVT oil warmer	Frontward	B: End reaches the 2-step bulge

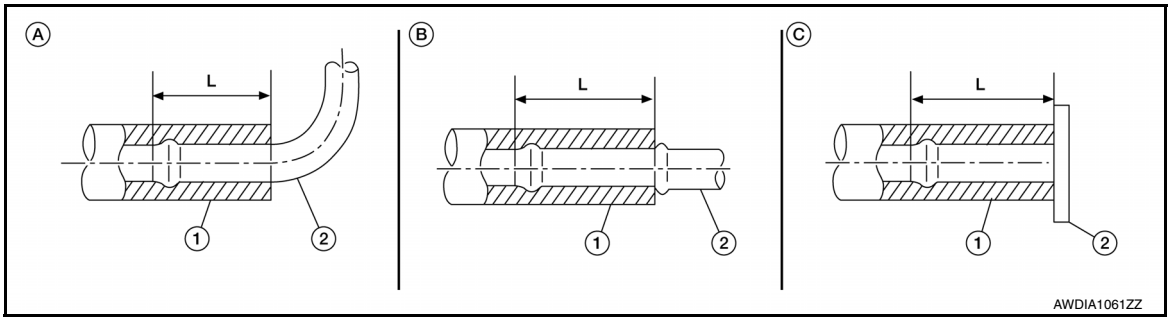

*Refer to the following when installing CVT fluid cooler hoses

Hose name (1)	Installation side tube (2)	Hose clamp (3)	
		Direction of tab	Clamping position
CVT fluid cooler hose A	CVT oil warmer	Downward	B: Align with the paint mark (C) as shown in the figure.
	Connector tube	Downward and 35° backward	A: 3 - 7 mm (0.12 - 0.28 in) (L) from hose end
CVT fluid cooler hose B	Connector tube	Downward and 35° backward	
	Radiator	Upward	
CVT fluid cooler hose C	Radiator	Downward	
	CVT fluid cooler	Leftward	B: Align with the paint mark (C) as shown in the figure.
CVT fluid cooler hose D	CVT fluid cooler	Leftward	
	CVT oil warmer	Frontward	

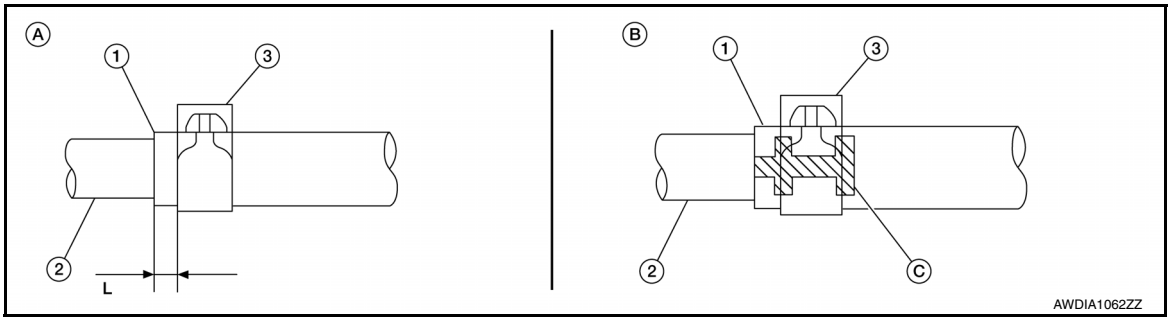

Inspection

INFOID:0000000009177680

INSPECTION AFTER INSTALLATION

Check for CVT fluid leakage. Refer to TM-185, "Inspection".

ADJUSTMENT AFTER INSTALLATION

Adjust CVT fluid level. Refer to TM-187, "Adjustment".

CVT OIL WARMER

Exploded View

INFOID:0000000009177681

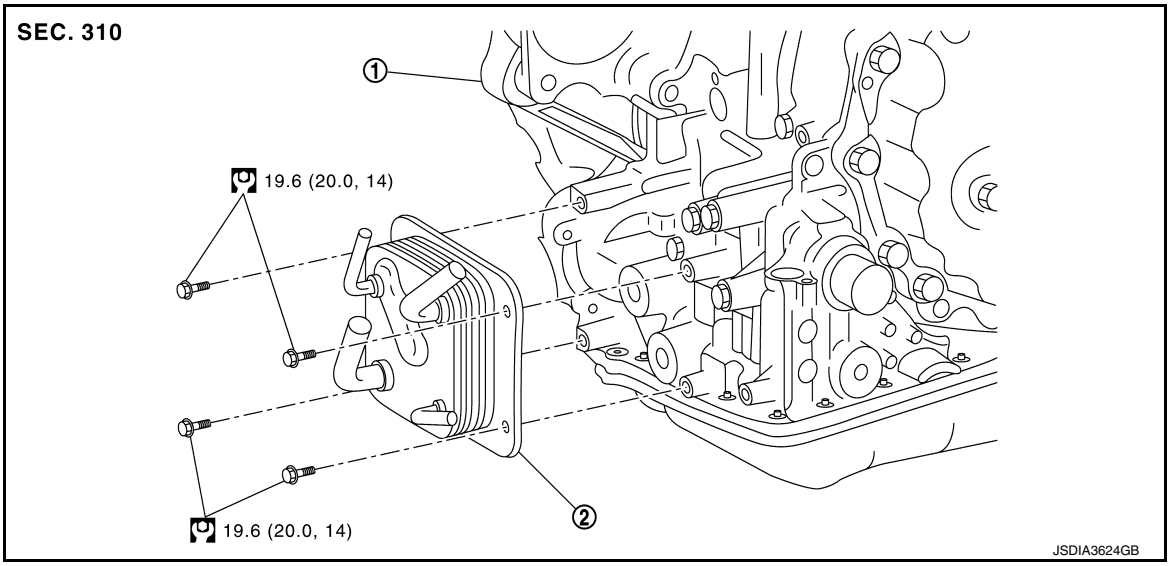

① Transaxle assembly ② CVT oil warmer ③ O-ring

: Always replace after every disassembly.

: N·m (kg-m, ft-lb)

Removal and Installation

INFOID:0000000009177682

REMOVAL

WARNING:

Do not remove the radiator cap when the engine is hot. Serious burns could occur from high pressure coolant escaping from the radiator. Wrap a thick cloth around the cap. Slowly turn it a quarter turn to allow built-up pressure to escape. Carefully remove the cap by turning it all the way.

CAUTION:

Perform this step engine is cold.

NOTE:

When removing components such as hoses, tubes/lines, etc., cap or plug openings to prevent fluid from spilling.

1. Drain engine coolant from radiator. Refer to CO-11, "Changing Engine Coolant".
2. Remove CVT water hose from CVT oil warmer. Refer to TM-206, "Exploded View".
3. Remove CVT fluid cooler hose from CVT oil warmer. Refer to TM-208, "Exploded View".
4. Remove CVT oil warmer.
5. Remove bracket.

INSTALLATION

Installation is in the reverse order of removal.

Inspection

INFOID:0000000009177683

INSPECTION AFTER INSTALLATION

- Check for CVT fluid leakage. Refer to TM-185, "Inspection".
- Start and warm up the engine. Visually check that there is no leakage of engine coolant and CVT fluid.

ADJUSTMENT AFTER INSTALLATION

Adjust CVT fluid level. Refer to TM-187, "Adjustment".

PLUG

Description

INFOID:0000000009177684

Replace the O-ring if oil leaks from the plug.

Exploded View

INFOID:0000000009177685

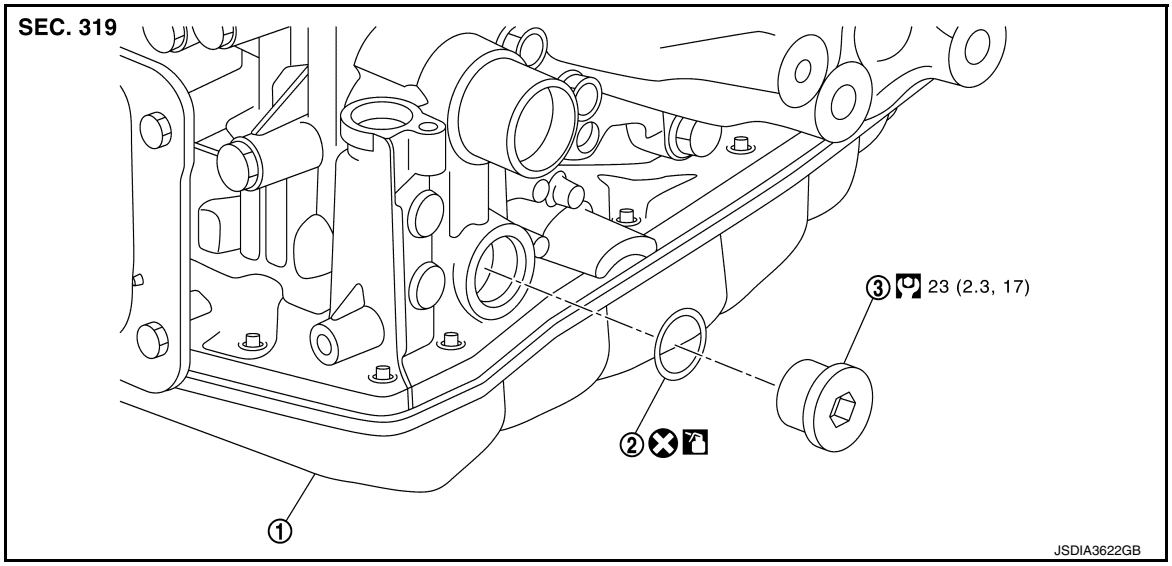

① Transaxle assembly ② O-ring ③ Plug

: Always replace after every disassembly.

: N·m (kg-m, ft-lb)

: Apply CVT fluid

Removal and Installation

INFOID:0000000009177686

NOTE:
Replace the O-rings if oil leaks from the plugs.

REMOVAL

Remove the plugs and O-rings.

INSTALLATION

Installation is in the reverse order of removal.

CAUTION:
- **Do not reuse O-ring.**
- **Apply Genuine NISSAN CVT Fluid NS-3 to O-ring.**

Inspection and Adjustment

INFOID:0000000009177687

INSPECTION AFTER INSTALLATION

Check for CVT fluid leakage. Refer to TM-185, "Inspection".

ADJUSTMENT AFTER INSTALLATION

Adjust CVT fluid level. Refer to TM-187, "Adjustment".

UNIT REMOVAL AND INSTALLATION

TRANSMISSION ASSEMBLY

Exploded View

INFOID:0000000009177688

2WD Models

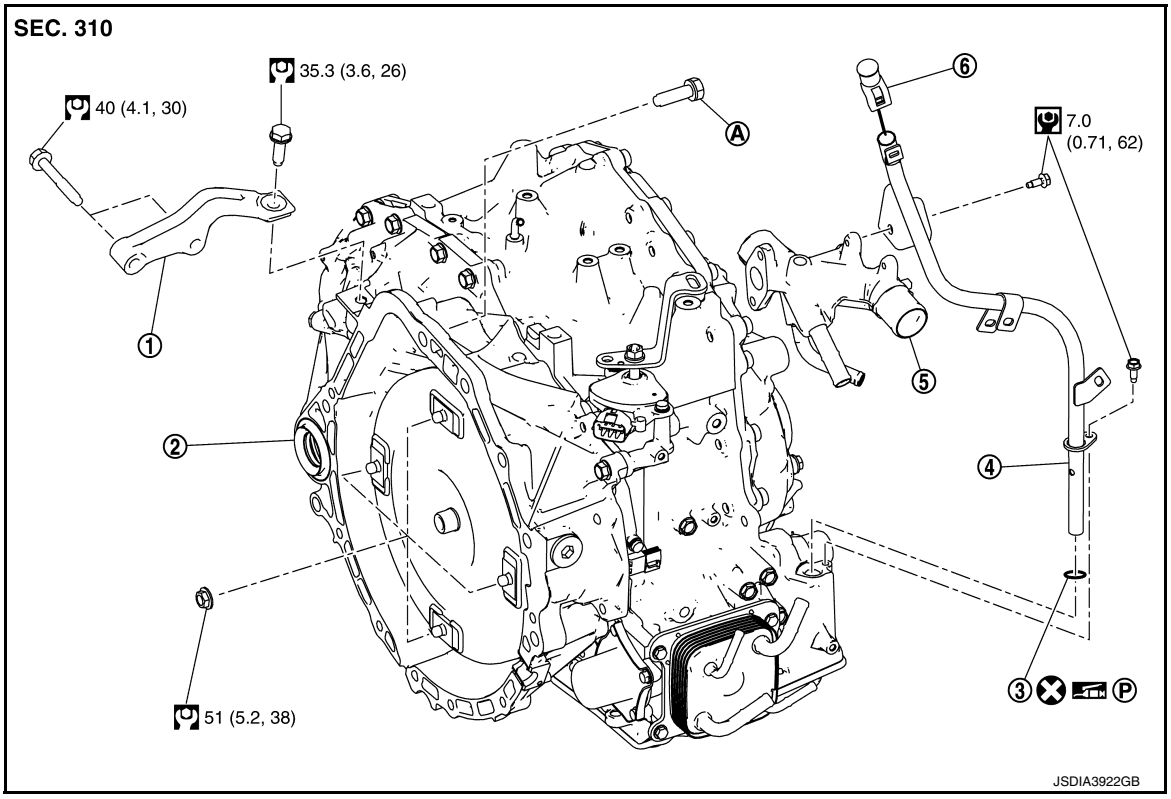

①	Gusset	②	Transaxle assembly	③	O-ring
④	CVT fluid charging pipe	⑤	Water outlet	⑥	CVT fluid charging cap

Ⓐ : For the tightening torque, refer to TM-214, "Removal and Installation".

⊗ : Always replace after every disassembly.

: N·m (kg-m, ft-lb)

: N·m (kg-m, in-lb)

Ⓟ : Apply petroleum jelly

4WD Models

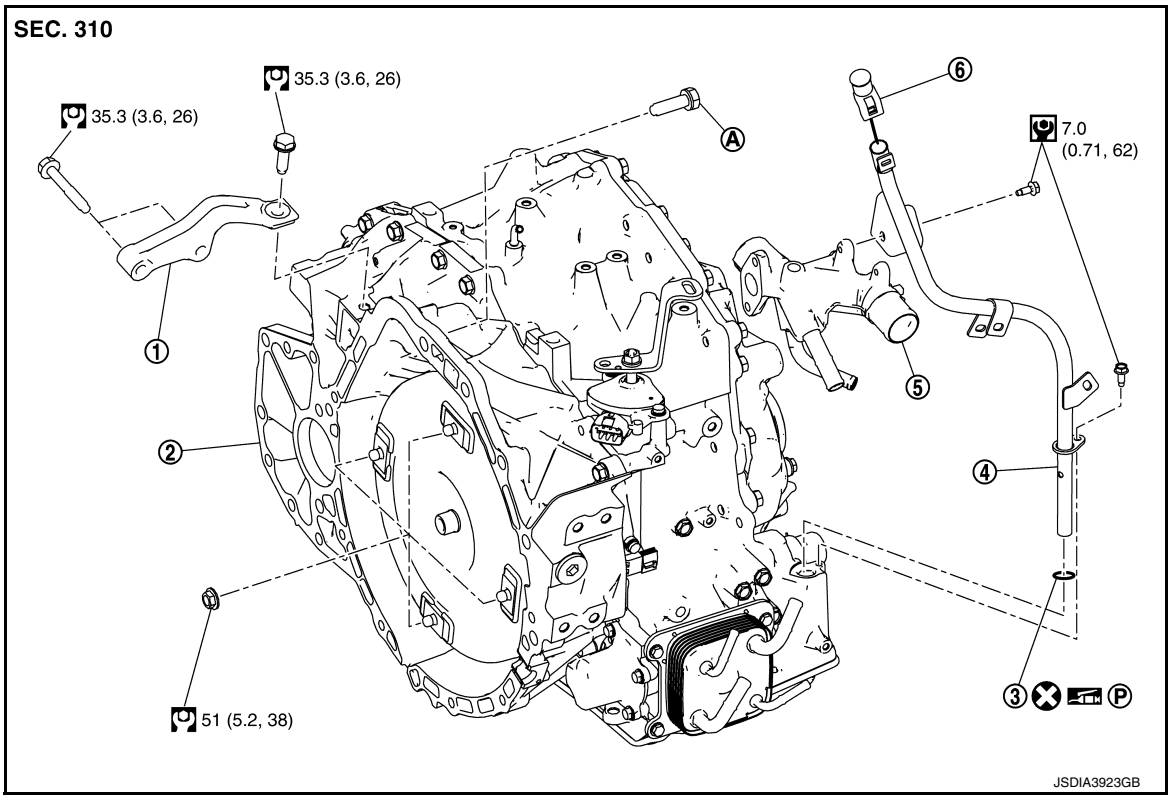

①	Gusset	②	Transaxle assembly	③	O-ring
④	CVT fluid charging pipe	⑤	Water outlet	⑥	CVT fluid charging cap

Ⓐ : For the tightening torque, refer to TM-214, "Removal and Installation".

: Always replace after every disassembly.

: N·m (kg-m, ft-lb)

: N·m (kg-m, in-lb)

Ⓟ : Apply petroleum jelly

Removal and Installation

INFOID:0000000009177689

REMOVAL

WARNING:

Do not remove the radiator cap when the engine is hot. Serious burns could occur from high pressure coolant escaping from the radiator. Wrap a thick cloth around the cap. Slowly turn it a quarter turn to allow built-up pressure to escape. Carefully remove the cap by turning it all the way.

CAUTION:

- **Perform when the engine is cold.**
- **When replacing TCM and transaxle assembly as a set, replace transaxle assembly first and then replace TCM. Refer to TM-81, "Description".**

NOTE:

When removing components such as hoses, tubes/lines, etc., cap or plug openings to prevent fluid from spilling.

1. Remove the engine and transaxle with the front suspension member as a unit. Refer to EM-102, "2WD : Removal and Installation" (2WD) or EM-107, "4WD : Removal and Installation" (4WD).
2. Disconnect the transaxle harness connectors.
3. Disconnect the CVT oil warmer water hoses from engine side. Refer to TM-206, "Removal and Installation".
4. Remove the CVT fluid charging pipe.

5. Remove the transaxle to engine and engine to transaxle bolts.
6. Separate the engine from the transaxle and remove the engine from the front suspension member. Refer to EM-102, "2WD : Removal and Installation" (2WD) or EM-107, "4WD : Removal and Installation" (4WD).
   NOTE:
   Using paint, put matching marks on the drive plate and torque converter when removing the torque converter to drive plate nuts.
7. Remove transmission bracket.
8. Lift the transaxle from the front suspension member.

INSTALLATION

Installation is in the reverse order of removal.

NOTE:

Write down the serial number of the new transaxle assembly.

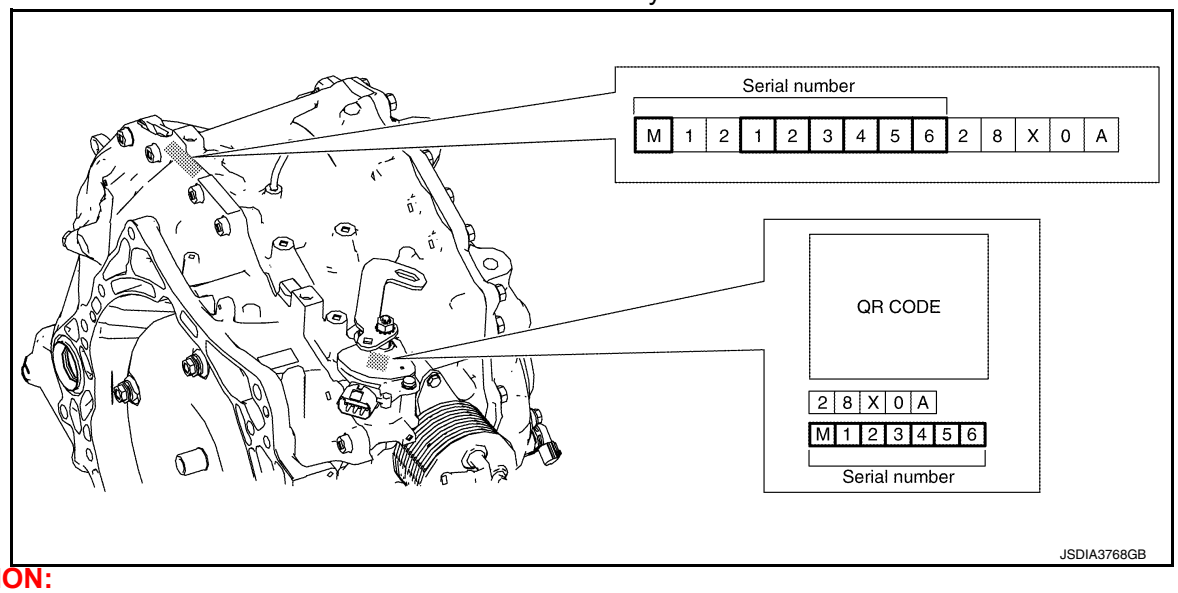

CAUTION:

- **When replacing an engine or transaxle you must make sure any dowels are installed correctly during re-assembly**
- **Improper alignment caused by missing dowels may cause vibration, oil leaks or breakage of drive train components.**
- **Do not reuse O-rings or copper sealing washers.**
- **When turning crankshaft, turn it clockwise as viewed from the front of the engine.**
- **When tightening the nuts for the torque converter while securing the crankshaft pulley bolt, be sure to confirm the tightening torque of the crankshaft pulley bolt. Refer to EM-62, "Removal and Installation".**
- **After converter is installed to drive plate, rotate crankshaft several turns to check that CVT rotates freely without binding.**
- **When installing the CVT to the engine, align the matching mark on the drive plate with the matching mark on the torque converter.**

When installing CVT assembly to the engine assembly, attach the bolts in accordance with the following standard.

Bolt No.	1	2	3	4	5
Number of bolts	1	2	1	1	4
Bolt length "ℓ" mm (in)	55 (2.17)	39 (1.54)	35 (1.38)	50 (1.97)	45 (1.77)
Tightening torque N·m (kg-m, ft-lb)	74.5 (7.6, 55)				50.0 (5.1, 37)

- When installing the drive plate to torque converter nuts, tighten them temporarily. then tighten the nuts to the specified torque.

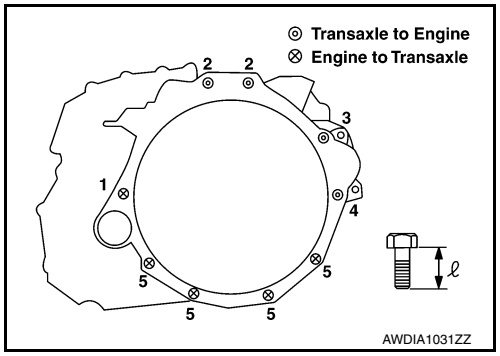

Inspection and Adjustment

INFOID:0000000009177690

INSPECTION BEFORE INSTALLATION

After inserting a torque converter to the CVT, check dimension (A) with in the reference value limit.

B : Scale
C : Straightedge

Dimension (A) : Refer to TM-219, "Torque Converter".

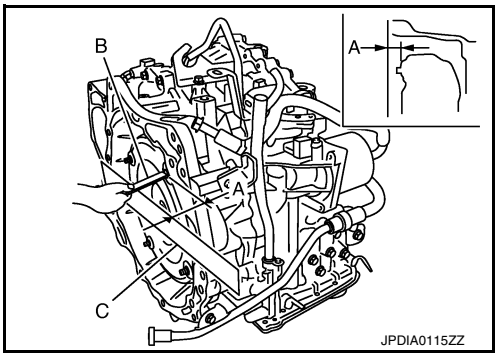

INSPECTION AFTER INSTALLATION

Check the following items:

- CVT fluid leakage, refer to TM-185, "Inspection".
- For CVT position, refer to TM-88, "Inspection and Adjustment".
- Start the engine and check for coolant leakage from the parts which are removed and reinstalled.

ADJUSTMENT AFTER INSTALLATION

- Adjust the CVT fluid level. Refer to TM-187, "Adjustment".
- Perform "ADDITIONAL SERVICE WHEN REPLACE TRANSAXLE ASSEMBLY". Refer to TM-82, "Description".

UNIT DISASSEMBLY AND ASSEMBLY

TORQUE CONVERTER AND CONVERTER HOUSING OIL SEAL

Exploded View

INFOID:0000000009177691

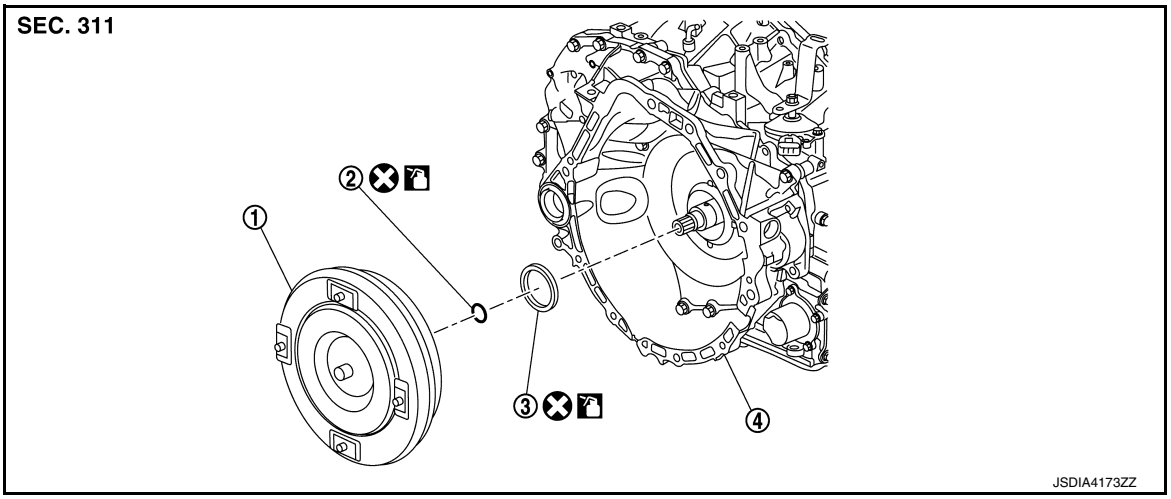

① Torque converter ② O-ring ③ Converter housing oil seal
④ Transaxle assembly
⊗ : Always replace after every disassembly.
: Apply CVT fluid

Disassembly

INFOID:0000000009177692

1. Remove transaxle assembly. Refer to TM-214, "Removal and Installation".
2. Remove torque converter from transaxle assembly.
   CAUTION:
   Do not damage the bushing on the inside of torque converter sleeve when removing torque converter.
3. Remove converter housing oil seal using suitable tool.
   CAUTION:
   Be careful not to scratch converter housing.

Assembly

INFOID:0000000009177693

Assembly is in the reverse order of disassembly.
CAUTION:
Do not reuse converter housing oil seal.
NOTE:
Lubricate converter housing oil seal prior to installation.

- Drive converter housing oil seal ① evenly using a drift (A) (commercial service tool) so that converter housing oil seal protrudes by the dimension (B) respectively.

Unit: mm (in)

Commercial service tool: (A)	Outer diameter: 65 (2.56)
	Inner diameter: 60 (2.36)

② : Transaxle assembly

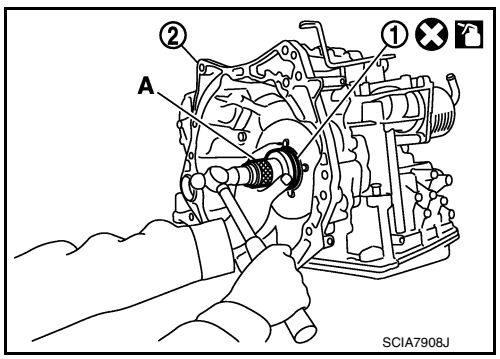

Unit: mm (in)

Dimension (B)	1.0 ± 0.5 (0.039 ± 0.020)

NOTE:
Converter housing oil seal pulling direction is used as the reference.

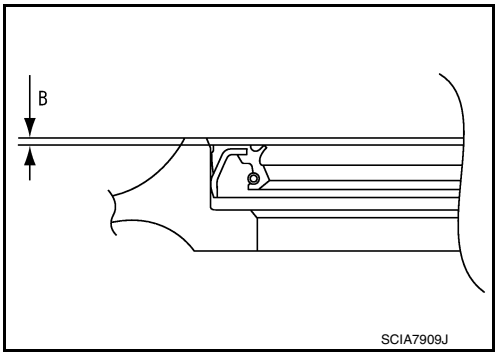

- Attach the pawl Ⓐ of the torque converter to the drive sprocket hole Ⓑ on the transaxle assembly side.

CAUTION:
- **Rotate the torque converter for installing torque converter.**
- **Do not damage the bushing inside the torque converter sleeve when installing the converter housing oil seal.**

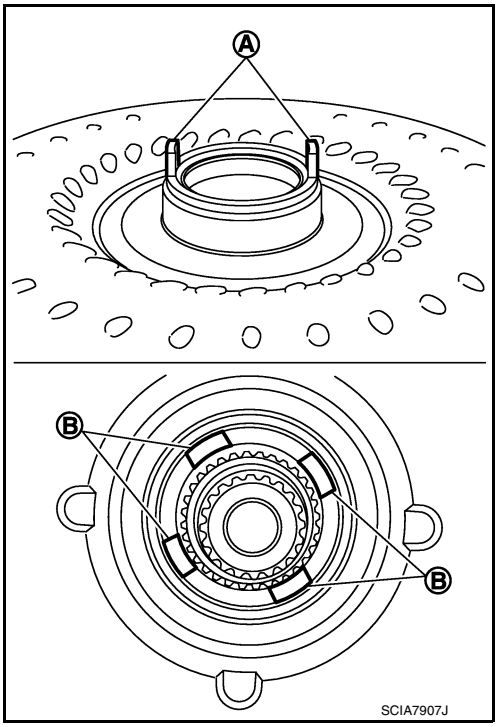

Inspection

INFOID:0000000009177694

INSPECTION AFTER INSTALLATION

- After inserting a torque converter to the CVT, check dimension (A) with in the reference value limit.

B : Scale
C : Straightedge

Dimension (A) : Refer to TM-219, "Torque Converter".

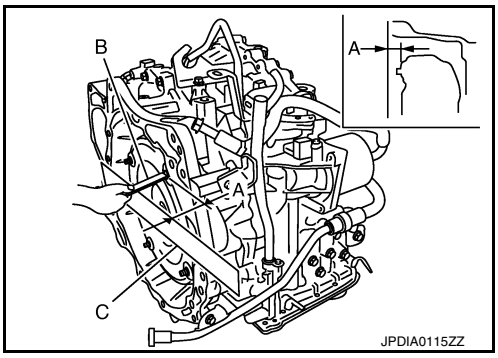

SERVICE DATA AND SPECIFICATIONS (SDS)

SERVICE DATA AND SPECIFICATIONS (SDS)

General Specification

INFOID:0000000009177695

Engine model		VQ35DE	
Drive type		2WD	4WD
Transaxle model		RE0F10E	
Transaxle model code number		3WX0B, 3WX0D	3WX0C, 3WX0E
Transaxle gear ratio	D position	2.413 – 0.383	
	R position	0.745	
	Final drive	5.577	
Recommended fluid		Genuine NISSAN CVT Fluid NS-3*1	
Fluid capacity liter (US qt, Imp qt)		Approx. 8.8 (9-1/4, 7-3/4)*2	

CAUTION:
- **Use only Genuine NISSAN CVT Fluid NS-3. Never mix with other fluid.**
- **Using CVT fluid other than Genuine NISSAN CVT Fluid NS-3 will deteriorate in driveability and CVT durability, and may damage the CVT, which is not covered by the NISSAN new vehicle limited warranty.**

*1: Refer to MA-15, "FOR USA AND CANADA : Fluids and Lubricants" (for USA and Canada) or MA-16, "FOR MEXICO : Fluids and Lubricants" (for Mexico).

*2: The CVT fluid capacity is the reference value.

Shift Characteristics

INFOID:0000000009177696

Unit: rpm

Throttle position	Shift pattern	CVT input speed	
		At 40 km/h (25 MPH)	At 60 km/h (37 MPH)
2/8	“D” position (Normal)	1,440 – 1,600	1,600 – 1,780
	“D” position (OD OFF)	1,690 – 1,870	2,180 – 2,420
	“L” position	2,030 – 2,250	2,860 – 3,180
8/8	“D” position (Normal)	3,620 – 4,020	4,750 – 5,250
	“D” position (OD OFF)	3,620 – 4,020	4,750 – 5,250
	“L” position	3,620 – 4,020	4,750 – 5,250

NOTE:
Lock-up is engaged at the vehicle speed of approximately 18 km/h (12 MPH) to 40 km/h (24 MPH).

Stall Speed

INFOID:0000000009177697

Unit: rpm

Stall speed	2,400 – 2,700

Torque Converter

INFOID:0000000009177698

Unit: mm (in)

Distance “A” between the converter housing and torque converter	14.0 (0.55)

Heater Thermostat

INFOID:0000000009177699

Valve lift	More than 5.0 mm (0.197 in)

Valve opening temperature	Approx. 71°C (160°F)
Minimum valve lift	5.0 mm/Approx. 85°C (0.197 in/Approx. 203°F)