SECTION DLN
DRIVELINE

CONTENTS

TRANSFER: TY21C

PRECAUTION

PRECAUTIONS

Precaution for Supplemental Restraint System (SRS) "AIR BAG" and "SEAT BELT PRE-TENSIONER"

INFOID:0000000012552639

The Supplemental Restraint System such as “AIR BAG” and “SEAT BELT PRE-TENSIONER”, used along with a front seat belt, helps to reduce the risk or severity of injury to the driver and front passenger for certain types of collision. Information necessary to service the system safely is included in the SR and SB section of this Service Manual.

WARNING:

- **To avoid rendering the SRS inoperative, which could increase the risk of personal injury or death in the event of a collision which would result in air bag inflation, it is recommended that all maintenance and repair be performed by an authorized NISSAN/INFINITI dealer.**
- **Improper repair, including incorrect removal and installation of the SRS, can lead to personal injury caused by unintentional activation of the system. For removal of Spiral Cable and Air Bag Module, see the SR section.**
- **Do not use electrical test equipment on any circuit related to the SRS unless instructed to in this Service Manual. SRS wiring harnesses can be identified by yellow and/or orange harnesses or harness connectors.**

PRECAUTIONS WHEN USING POWER TOOLS (AIR OR ELECTRIC) AND HAMMERS

WARNING:

- **When working near the Air Bag Diagnosis Sensor Unit or other Air Bag System sensors with the Ignition ON or engine running, DO NOT use air or electric power tools or strike near the sensor(s) with a hammer. Heavy vibration could activate the sensor(s) and deploy the air bag(s), possibly causing serious injury.**
- **When using air or electric power tools or hammers, always switch the Ignition OFF, disconnect the battery or batteries, and wait at least three minutes before performing any service.**

Precaution for Battery Service

INFOID:0000000012552640

Before disconnecting the battery, lower both the driver and passenger windows. This will prevent any interference between the window edge and the vehicle when the door is opened/closed. During normal operation, the window slightly raises and lowers automatically to prevent any window to vehicle interference. The automatic window function will not work with the battery disconnected.

Precaution for Procedure without Cowl Top Cover

INFOID:0000000012552641

When performing the procedure after removing cowl top cover, cover the lower end of windshield with urethane, etc. to prevent damage to windshield.

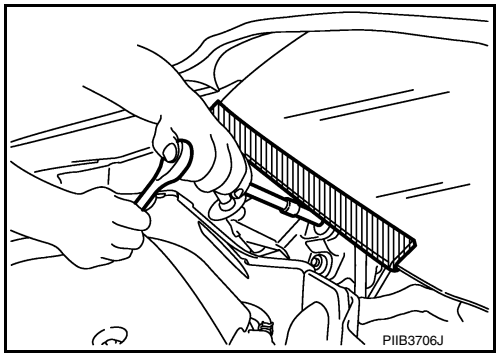

Service Notice or Precautions for Transfer

INFOID:0000000012552642

- After overhaul refill the transfer with new transfer oil.
- Check the oil level or replace the oil only with the vehicle parked on level surface.
- During removal or installation, keep inside of transfer clear of dust or dirt.
- Replace all tires at the same time. Always use tires of the proper size and the same brand and pattern. Fitting improper size and unusual wear tires applies excessive force to vehicle mechanism and can cause longitudinal vibration.
- Disassembly should be done in a clean work area.

- Before proceeding with disassembly, thoroughly clean the transfer. It is important to prevent the internal parts from becoming contaminated by dirt or other foreign matter.
- Check for the correct installation status prior to removal or disassembly. If matching marks are required, be certain they do not interfere with the function of the parts when applied.
- All parts should be carefully cleaned with a general purpose, non-flammable solvent before inspection or reassembly.
- Check appearance of the disassembled parts for damage, deformation, and unusual wear. Replace them with a new one if necessary.
- Gaskets, seals, O-rings and lock nuts should be replaced any time when the transfer is disassembled.
- In principle, tighten bolts or nuts gradually in several steps working diagonally from inside to outside. If tightening sequence is specified, use it.
- Observe the specified torque when assembling.
- Clean and flush the parts sufficiently and blow-dry them.
- Be careful not to damage sliding surfaces and mating surfaces.
- Use lint-free cloth or towels for wiping parts clean. Common shop rags can leave fibers that could interfere with the operation of the transfer.

PREPARATION

PREPARATION

Special Service Tool

INFOID:0000000012552643

The actual shape of the tools may differ from those illustrated here.

Tool number (TechMate No.) Tool name	Description
ST33061000 (J-8107-2) Drift a: 38 mm (1.50 in) dia. b: 28.5 mm (1.122 in) dia. 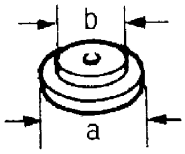 ZZA0810D	Removing ring gear bearing (left) inner race (transfer case side)
KV381054S0 (J-34286) Puller 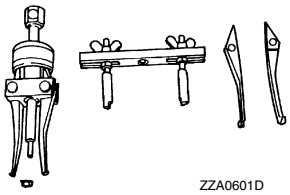 ZZA0601D	Removing ring gear shaft oil seal
ST3127S000 (J-25765-A) Preload gauge 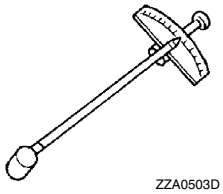 ZZA0503D	Measuring preload torque

Commercial Service Tool

INFOID:0000000012552644

Tool name	Description
Power tool 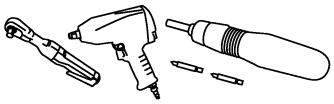 PIIB1407E	Loosening nuts, screws and bolts
Drift a: 52 mm (2.05 in) dia. b: 44 mm (1.73 in) dia. 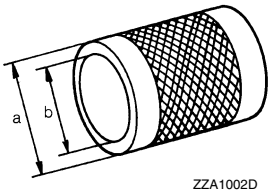 ZZA1002D	Removing gear ring bearing inner race (adapter case side)

Tool name	Description
Drift a: 56.5 mm (2.224 in) dia. b: 48 mm (1.89 in) dia. 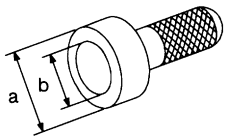 NT115	Installing side oil seal (installing transfer case oil seal)
Drift a: 44 mm (1.73 in) dia. b: 33 mm (1.3 in) dia. 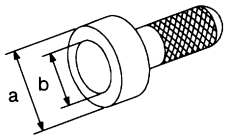 NT115	Installing ring gear shaft oil seal
Puller 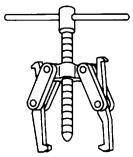 NT077	Removing ring gear bearing (left) inner race (transfer case side)
Drift a: 70 mm (2.76 in) dia. b: 60 mm (2.36 in) dia. 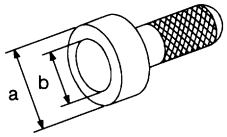 NT115	Installing oil seal (installing pinion bearing seal)
Drift a: 78 mm (3.07 in) dia. b: 68 mm (2.68 in) dia. 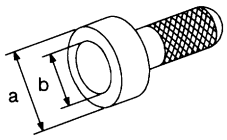 NT115	Installing side oil seal (installing transfer cover oil seal)
Replacer 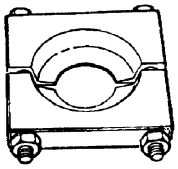 ZZA0700D	• Removing drive pinion • Removing ring gear bearing (left) inner race (transfer cover side)
Drift a: 58 mm (2.28 in) dia. b: 55 mm (2.17 in) dia. 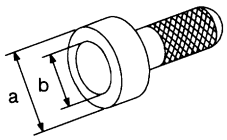 NT115	Installing ring gear bearing (left) inner race (transfer case side)

Tool name	Description
Drift a: 62 mm (2.44 in) dia. b: 58 mm (2.28 in) dia. 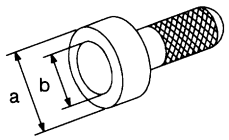 NT115	Installing ring gear bearing (right) inner race (transfer cover side)
Drift a: 73.5 mm (2.894 in) dia. 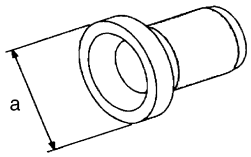 SCIA5338E	Installing ring gear bearing (left) outer race (transfer case side)
Drift a: 87 mm (3.43 in) dia. 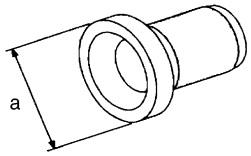 SCIA5338E	Installing ring gear bearing (right) outer race (transfer cover side)
Drift a: 20 mm (0.79 in) dia. 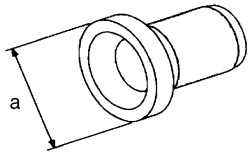 SCIA5338E	Removing drive pinion
Drift a: 50 mm (1.97 in) dia. b: 41 mm (1.61 in) dia. 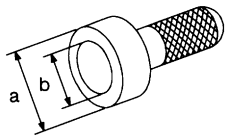 NT115	Installing pinion bearing
Drift a: 40 mm (1.57 in) dia. b: 25 mm (0.98 in) dia. 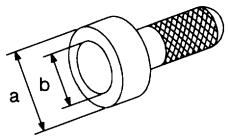 NT115	Installing companion flange

SYSTEM DESCRIPTION

COMPONENT PARTS

Component Parts Location

INFOID:0000000012552645

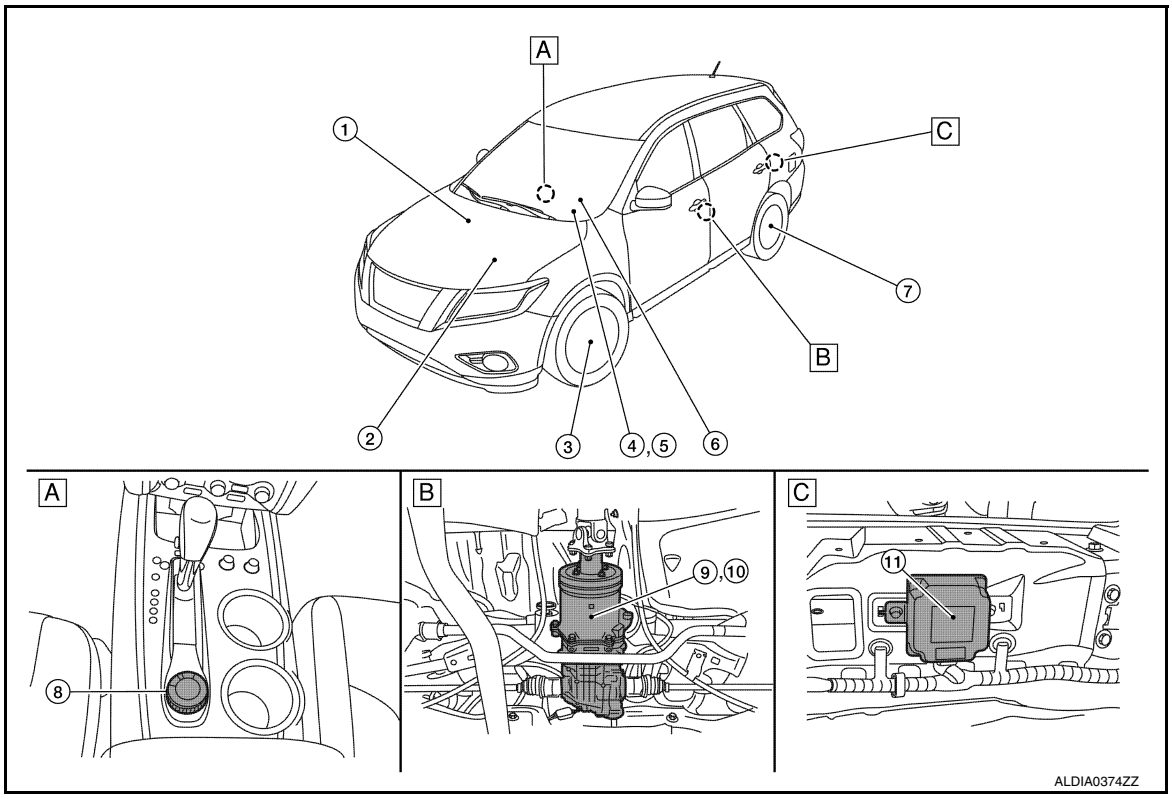

A. Center console area B. Rear final drive assembly C. Inside storage room

No.	Component parts	Reference/Function
1	ABS actuator and electric unit (control unit)	Transmits/receives the signals for control of 4WD system via CAN communication line to/from 4WD control unit. For transmitting/receiving mainly signals, refer to DLN-15, "4WD SYSTEM : System Description". Refer to BRC-11, "Component Parts Location" (Type 1) or BRC-169, "Component Parts Location" (Type 2) for detailed installation location.
2	ECM	Transmits/receives the signals for control of 4WD system via CAN communication line to/from 4WD control unit. For transmitting/receiving mainly signals, refer to DLN-15, "4WD SYSTEM : System Description". Refer to EC-20, "ENGINE CONTROL SYSTEM : Component Parts Location" (USA and Canada) or EC-516, "ENGINE CONTROL SYSTEM : Component Parts Location" (Mexico) for detailed installation location.
3	Front wheel sensor	BRC-13, "Wheel Sensor and Sensor Rotor" (Type 1) or BRC-171, "Wheel Sensor and Sensor Rotor" (Type 2)
4	Combination meter	Transmits/receives the signals for control of 4WD system via CAN communication line to/from 4WD control unit. For transmitting/receiving mainly signals, refer to DLN-15, "4WD SYSTEM : System Description". Refer to MWI-6, "METER SYSTEM : Component Parts Location" for detailed installation location.
5	Vehicle information display	DLN-11, "Vehicle Information Display" • 4WD mode indicator • Torque distribution indicator • 4WD warning indicator

No.	Component parts	Reference/Function
6	Steering angle sensor	Transmits/receives the signals for control of 4WD system via CAN communication line to/from 4WD control unit. For transmitting/receiving mainly signals, refer to DLN-15, "4WD SYSTEM : System Description". Refer to STC-4, "Component Parts Location" for detailed installation location.
7	Rear wheel sensor	BRC-13, "Wheel Sensor and Sensor Rotor" (Type 1) or BRC-171, "Wheel Sensor and Sensor Rotor" (Type 2)
8	4WD shift switch	DLN-11, "4WD Shift Switch"
9	Electric controlled coupling	DLN-11, "Electric Controlled Coupling"
10	4WD solenoid	DLN-11, "4WD Solenoid"
11	4WD control unit	DLN-11, "4WD Control Unit"

4WD Control Unit

INFOID:0000000012552646

- Controls driving force distribution by signals from each sensor from front wheel driving mode (100:0) to 4-wheel driving mode (50:50).
- Front wheel driving conditions is available by fail-safe function if malfunction is detected in 4WD system.
- 4WD actuator relay is integrated with 4WD control unit, and supplies 4WD solenoid with voltage.

4WD Solenoid

INFOID:0000000012552647

Controls electric controlled coupling by command current from 4WD control unit.

Electric Controlled Coupling

INFOID:0000000012552648

Electric controlled coupling is integrated with rear final drive and transmits driving force to rear final drive. For operation, refer to DLN-13, "Operation Description".

4WD Shift Switch

INFOID:0000000012552649

Every time 4WD shift switch is pressed, AUTO mode, 2WD mode and LOCK mode switch each other.

Vehicle Information Display

INFOID:0000000012552650

4WD MODE INDICATOR

4WD mode indicator displays the state of the 4WD mode.

TORQUE DISTRIBUTION INDICATOR

The number of bars shows driving force distributed to each tire.

NOTE:

The driving force distribution may not match actual one. This is not a system malfunction.

4WD WARNING INDICATOR

4WD warning indicator is displayed when there is a malfunction in 4WD system. 4WD warning indicator indicates the vehicle is in fail-safe mode and shifting to front-wheel drive or 4-wheel drive (rear-wheels still have some driving torque).

Condition	4WD warning indicator
4WD system malfunction	4WD ALDIA0417ZZ (Indicator lamp illuminates)
Protection function is activated due to heavy load to electric controlled coupling. (4WD system is not malfunctioning and 4WD system changes to front wheel drive.) When this indication is displayed, refer to DLN-67, "Description".	4WD ALDIA0417ZZ (Indicator lamp blinks rapidly)
Large difference in diameter of front/rear tires When this indication is displayed, refer to DLN-68, "Diagnosis Procedure".	4WD ALDIA0417ZZ (Indicator lamp blinks slowly)
Other than above (system normal)	OFF

CAUTION:

- **4WD warning indicator is displayed due to data reception error, CAN communication error etc.**

STRUCTURE AND OPERATION

Sectional View

INFOID:0000000012552651

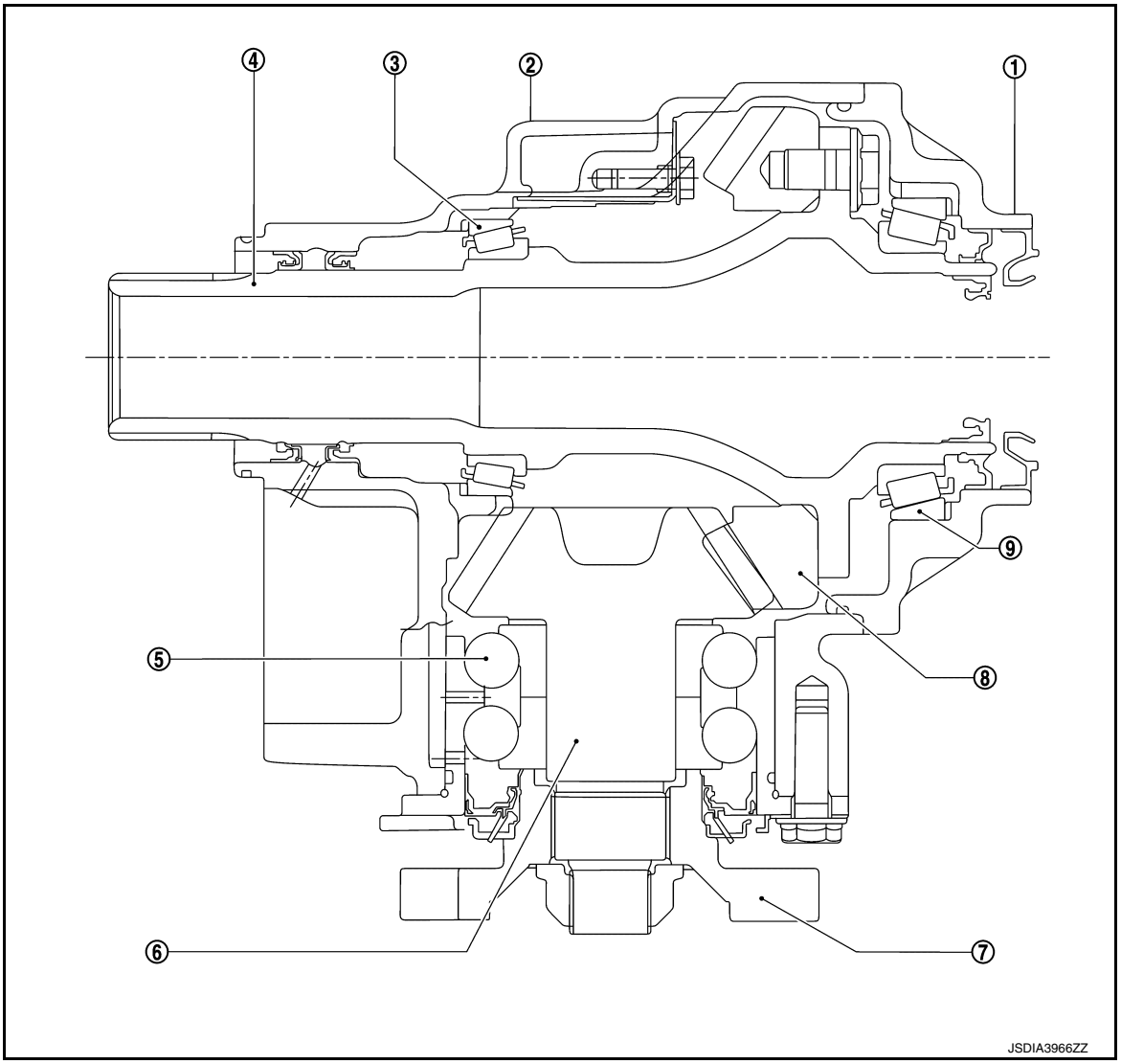

1. Transfer cover
2. Transfer case
3. Ring gear bearing (transfer case side)
4. Ring gear shaft
5. Pinion bearing
6. Drive pinion
7. Companion flange
8. Ring gear
9. Ring gear bearing (transfer cover side)

Operation Description

INFOID:0000000012552652

POWER TRANSFER DIAGRAM

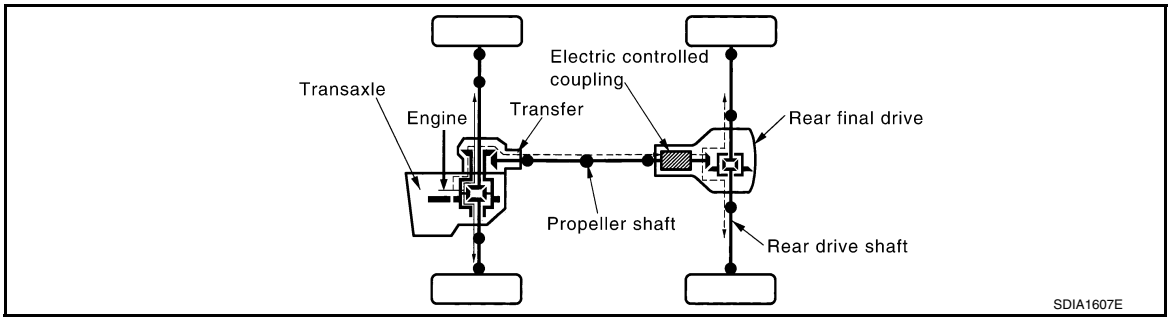

ELECTRIC CONTROLLED COUPLING

1. The 4WD control unit supplies command current to electric controlled coupling (4WD solenoid).
2. The control clutch is engaged by electromagnet and torque is detected in control clutch.
3. The cam operates in response to control clutch torque and applies pressure to main clutch.
4. The main clutch transmits torque to front wheels according to pressing power.

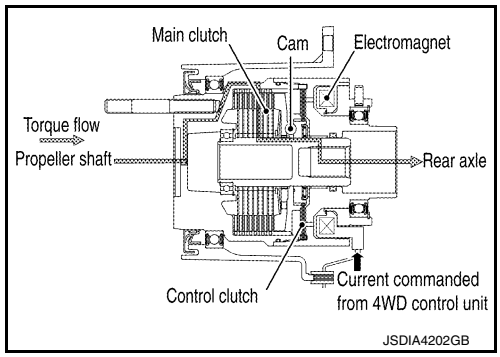

- Transmission torque to the rear wheels is determined according to command current.

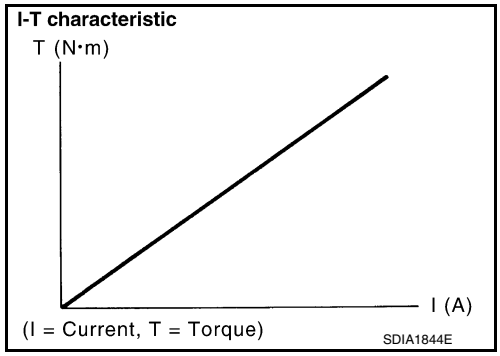

SYSTEM

4WD SYSTEM

4WD SYSTEM : System Description

INFOID:0000000012552653

SYSTEM DIAGRAM

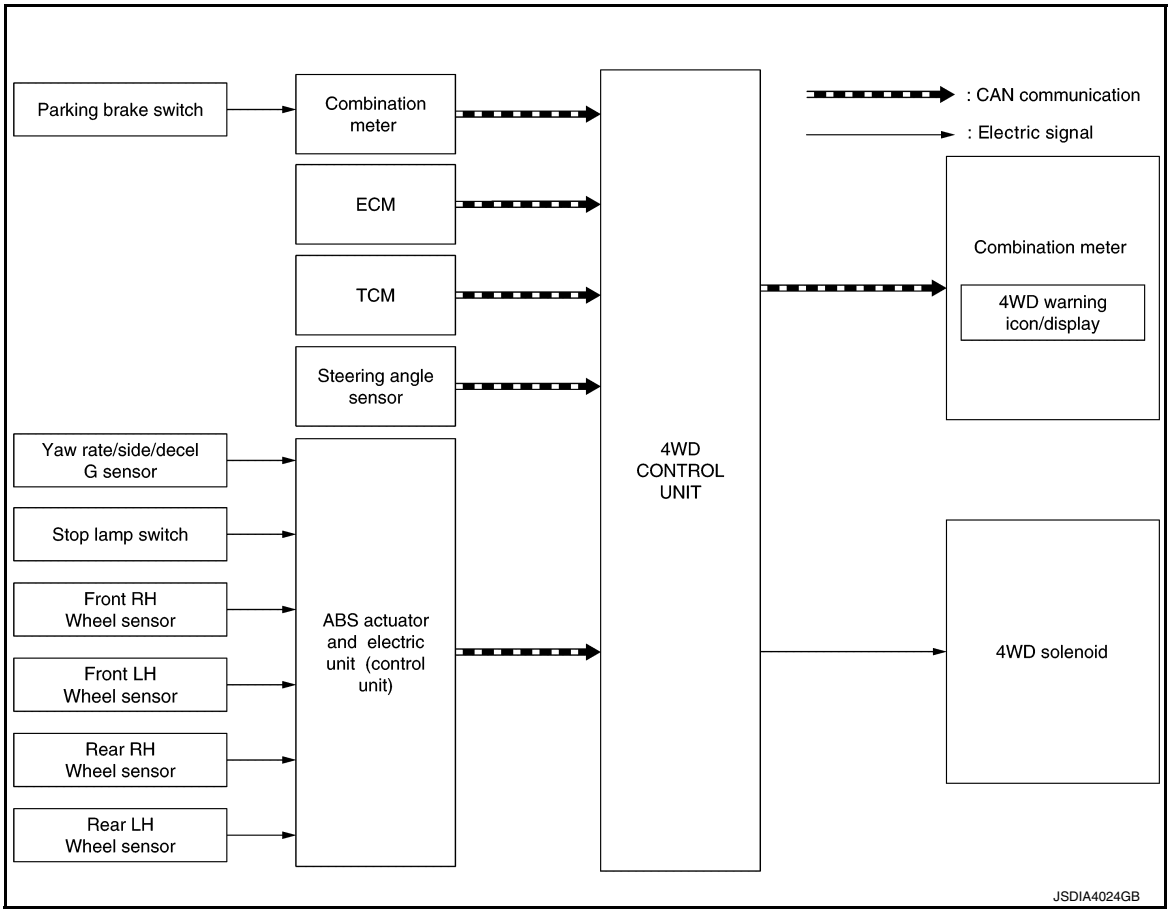

INPUT/OUTPUT SIGNAL

It transmits/receives each signal from the following 4WD control unit via CAN communication line.

Component parts	Function
ABS actuator and electric unit (control unit)	Transmits the following signals via CAN communication to 4WD control unit. • Vehicle speed signal • Stop lamp switch signal (brake signal) • Yaw rate sensor signal • Side G sensor signal • Decel G sensor signal
ECM	Transmits the following signals via CAN communication to 4WD control unit. • Accelerator pedal position signal • Engine speed signal
TCM	Transmits the following signals via CAN communication to 4WD control unit. • Input shaft revolution signal • CVT ratio signal
Combination meter	Transmits conditions of parking brake switch signal via CAN communication to 4WD control unit.
	Receives the following signal via CAN communication from 4WD control unit. • 4WD warning indicator signal
Steering angle sensor	Transmits conditions of steering angle sensor signal via CAN communication to 4WD control unit.

DESCRIPTION

- 4WD controls distribution of drive power between front-wheel drive (100:0) and 4-wheel drive (50:50) conditions according to signals from sensors.
- By receiving the steering angle sensor signal, yaw rate sensor signal, side G sensor signal and decel G sensor signal, vehicle with VDC corrects a torque distribution for front and rear wheels according to a driving operation and a behavior of the vehicle during cornering and improves drivability and safety on a slippery road surface.
- Electronic control allows optimal distribution of torque to front/rear wheels to match road conditions.
- 4WD mode makes possible stable driving possible with no wheel spin, on snowy roads or other slippery surfaces.
- On roads which do not require 4-wheel drive, it contributes to improved fuel economy by driving in conditions close to front-wheel drive.
- Sensor inputs determine the vehicle's turning condition, and tight cornering/braking are controlled by distributing optimum torque to rear wheels.

  NOTE:
  Light tight-corner braking symptom may occur depending on driving condition. This is not malfunction.

4WD SYSTEM : Fail-Safe

INFOID:0000000012552654

- If any malfunction occurs in 4WD electrical system, and control unit detects the malfunction, 4WD warning indicator on information display is displayed to indicate system malfunction.
- When 4WD warning indicator is displayed, vehicle changes to front-wheel drive or shifts to 4-wheel drive (rear-wheels still have some driving torque).

DTC	4WD warning indicator	Possible cause	Vehicle condition
C1201	4WD ALDIA0417ZZ (Indicator lamp illuminates)	Internal malfunction of 4WD control unit	Front-wheel drive or shifts to 4-wheel drive (Rear-wheels still have some driving torque)
C1203		ABS malfunction • Vehicle speed signal error	
C1204		• Internal malfunction of electronic controlled coupling • Malfunction of 4WD solenoid power supply circuit (open or short) • Malfunction of 4WD solenoid command current	
C1205		• Internal malfunction of 4WD control unit • Malfunction of 4WD solenoid power supply circuit (ground short)	
C1209		Malfunction of 4WD shift switch or 4WD shift switch circuit	
C1210		Malfunction of engine control system	
P1804		Internal malfunction of 4WD control unit	
P181F		Writing unit characteristics is incomplete.	
U1000		• CAN communication error • Malfunction of 4WD control unit	
U1010		Malfunction of 4WD control unit	

4WD SYSTEM : Protection Function

INFOID:0000000012552655

4WD system activates its protection function (shuts down 4WD system temporarily) if 4WD system detects high load continuously or the front wheel tire size differs from the rear tire size. (4WD system is automatically restored if 4WD system no longer detects any overload or the tire size difference is eliminated.)

4WD warning indicator	Possible cause	Vehicle condition
4WD ALDIA0417ZZ Quick blinking (Blinking for approximately 1 minute and then turned OFF)	Drive train parts in protection mode. It is not malfunction. (Internal temperature rise of electronic controlled coupling) When this message is displayed, refer to DLN-67, "Description".	Shuts down 4WD system temporarily (Front wheel drive)
4WD ALDIA0417ZZ Slow blinking (Continuing to blink until ignition switch is turned OFF)	Malfunction in each tire or different tire diameter When this message is displayed, refer to DLN-68, "Diagnosis Procedure".	

DIAGNOSIS SYSTEM (4WD CONTROL UNIT)

CONSULT Function

INFOID:0000000012552656

APPLICATION ITEMS

CONSULT can display each diagnostic item using the diagnostic test modes as follows.

Diagnostic test mode	Function
ECU Identification	4WD control unit part number can be read.
Self Diagnostic Result	Self-diagnostic results and freeze frame data can be read and erased quickly.*
Data Monitor	Input/Output data in the 4WD control unit can be read.
Active Test	Diagnostic Test Mode in which CONSULT drives some actuators apart from the 4WD control unit and also shifts some parameters in a specified range.
Work support	This mode enable a technician to adjust some devices faster and more accurately by following the indication on the CONSULT.

*: The following diagnosis information is erased by erasing.
- DTC
- Freeze frame data (FFD)

ECU IDENTIFICATION

4WD control unit part number can be read.

SELF DIAGNOSTIC RESULT

Refer to DLN-23, "DTC Index".

When “PRSNT” is displayed on self-diagnosis result.
- The system is presently malfunctioning.

When “PAST” is displayed on self-diagnosis result.
- System malfunction in the past is detected, but the system is presently normal.

FREEZE FRAME DATA (FFD)

The following vehicle status is recorded when DTC is detected and is displayed.

Freeze Frame Data Item	Description
IGN COUNTER [0 - 39]	The number of times that ignition switch is turned ON after the DTC is detected is displayed. • When “0” is displayed: It indicates that the system is presently malfunctioning. • When except “0” is displayed: It indicates that system malfunction in the past is detected, but the system is presently normal. **NOTE:** Each time when ignition switch is turned OFF to ON, numerical number increases in 1→2→3...38→39. When the operation number of times exceeds 39, the number do not increase and “39” is displayed until self-diagnosis is erased.

DATA MONITOR

NOTE:
The following table includes information (items) inapplicable to this vehicle. For information (items) applicable to this vehicle, refer to CONSULT display items.

Monitor item (Unit)	Remarks
STOP LAMP SW [On/Off]	Stop lamp switch signal status via CAN communication line is displayed.
ENG SPEED SIG [Run/Stop]	Engine status is displayed.
ETS ACTUATOR [On/Off]	Operating condition of 4WD actuator relay (integrated in 4WD control unit) is displayed.
4WD WARN LAMP [On/Off]	Control status of 4WD warning indicator is displayed.
4WD MODE SW [2WD/AUTO/LOCK]	4WD shift switch status is displayed.
4WD MODE MON [2WD/AUTO/LOCK]	Control status of 4WD is displayed.
DIS-TIRE MONI [mm]	Improper size tire installed condition is displayed.

Monitor item (Unit)	Remarks
P BRAKE SW [On/Off]	Parking switch signal status via CAN communication line is displayed.
BATTERY VOLT [V]	Power supply voltage for 4WD control unit
THRTL POS SEN [%]	Throttle opening status is displayed.
ETS SOLENOID [A]	Monitored value of current at 4WD solenoid
FR RH SENSOR [km/h] or [mph]	Wheel speed calculated by front RH wheel sensor signal is displayed.
FR LH SENSOR [km/h] or [mph]	Wheel speed calculated by front LH wheel sensor signal is displayed.
RR RH SENSOR [km/h] or [mph]	Wheel speed calculated by rear RH wheel sensor signal is displayed.
RR LH SENSOR [km/h] or [mph]	Wheel speed calculated by rear LH wheel sensor signal is displayed.

ACTIVE TEST

Use this mode to determine and identify the details of a malfunction based on self-diagnostic results or data monitor. 4WD control unit gives drive signal to actuator with receiving command from CONSULT to check operation of actuator.

Test item	Condition	Description
ETS S/V (Detects 4WD solenoid)	• Vehicle stopped • Engine running • No DTC detected	Change command current value to 4WD solenoid, and then change driving mode. (Monitor value is normal if it is within approx. ±10% of command value.) • Qu: Increase current value in increments of 0.2 A • Qd: Decrease current value in increments of 0.2 A • UP: Increase current value in increments of 0.02 A • DOWN: Decrease current value in increments of 0.02 A

CAUTION:
Never energize continuously for a long time.

WORK SUPPORT

Item	Usage
UNIT CHARACTERISTICS DATA	Display the unit characteristics of electric controlled coupling written to 4WD control unit.
UNIT CHARACTERISTICS WRITE	Writes the unit characteristics of electric controlled coupling to 4WD control unit.

ECU DIAGNOSIS INFORMATION

4WD CONTROL UNIT

Reference Value

INFOID:0000000012552657

VALUES ON THE DIAGNOSIS TOOL

NOTE:

The following table includes information (items) inapplicable to this vehicle. For information (items) applicable to this vehicle, refer to CONSULT display items.

Monitor item	Condition	Value/Status
STOP LAMP SW	Brake pedal: Depressed	On
	Brake pedal: Released	Off
ENG SPEED SIG	Engine stopped (Engine speed: Less than 400 rpm)	Stop
	Engine running (Engine speed: 400 rpm or more)	Run
ETS ACTUATOR	Engine stopped (Ignition switch: ON)	Off
	Engine running	On
4WD WARN LAMP	4WD warning indicator: ON	On
	4WD warning indicator: OFF	Off
4WD MODE SW	4WD shift switch: 2WD	2WD
	4WD shift switch: AUTO	AUTO
	4WD shift switch: LOCK (State of hold of LOCK position)	LOCK
4WD MODE MON	4WD shift switch: 2WD	2WD
	4WD shift switch: AUTO	AUTO
	4WD shift switch: AUTO ⇒ LOCK (State of 4WD indicator lamp turn ON)	AUTO ⇒ LOCK
	4WD shift switch: LOCK ⇒ AUTO (State of LOCK indicator lamp turn ON)	LOCK ⇒ AUTO
DIS-TIRE MONI	Vehicle running with normal size tire installed	0 – 4 mm
	Vehicle running with improper size tire installed (Front/rear tire size difference, wear condition)	4 – 8 mm, 8 – mm
P BRAKE SW	Parking brake operated	On
	Parking brake not operated	Off
BATTERY VOLT	Always	Battery voltage
THRTL POS SEN	When depressing accelerator pedal (Value rises gradually in response to throttle position.)	0 – 100%
ETS SOLENOID	Engine running • At idle speed	Approx. 0.000 A
	Engine running • 3,000 rpm or more constant	Approx. 0.000 – 1.800 A*
FR RH SENSOR	Vehicle stopped	0.00 km/h (0.00 mph)
	Vehicle running **CAUTION:** **Check air pressure of tire under standard condition.**	Nearly matches the speed meter display (±10% or less)
FR LH SENSOR	Vehicle stopped	0.00 km/h (0.00 mph)
	Vehicle running **CAUTION:** **Check air pressure of tire under standard condition.**	Nearly matches the speed meter display (±10% or less)

Monitor item	Condition	Value/Status
RR RH SENSOR	Vehicle stopped	0.00 km/h (0.00 mph)
	Vehicle running **CAUTION:** **Check air pressure of tire under standard condition.**	Nearly matches the speed meter display (±10% or less)
RR LH SENSOR	Vehicle stopped	0.00 km/h (0.00 mph)
	Vehicle running **CAUTION:** **Check air pressure of tire under standard condition.**	Nearly matches the speed meter display (±10%)

*: The values are changed by throttle opening and engine speed.

TERMINAL LAYOUT

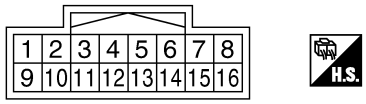

JSDIA0057ZZ

PHYSICAL VALUES

Terminal No. (Wire color)		Description		Condition		Value (Approx.)
+	-	Signal name	Input/ Output			
1 (LG)	Ground	4WD solenoid power supply	Output	Engine speed: At idle		0 V
				Engine speed: 3,000 rpm or more constant		2.5 V*
2 (V)	Ground	4WD solenoid ground	—	Always		0 V
5 (V)	Ground	4WD shift switch (AUTO)	Output	Ignition switch: ON	4WD shift switch: 2WD	Battery voltage
					4WD shift switch: AUTO	0 V
					4WD shift switch: LOCK (State of hold of LOCK position)	0 V
7 (W)	Ground	Ignition switch	Input	Ignition switch: ON		Battery voltage
				Ignition switch: OFF		0 V
8 (L)	—	CAN-H	Input/ Output	—		—
9 (SB)	Ground	Power supply (4WD solenoid)	Input	Always		Battery voltage
10 (B)	Ground	Ground	—	Always		0 V
11 (B)	Ground	Ground	—	Always		0 V
12 (BG)	Ground	4WD shift switch (2WD)	Output	Ignition switch: ON	4WD shift switch: 2WD	0 V
					4WD shift switch: AUTO	Battery voltage
					4WD shift switch: LOCK (State of hold of LOCK position)	Battery voltage

Terminal No. (Wire color)		Description		Condition		Value (Approx.)
+	-	Signal name	Input/ Output			
14 (BR)	Ground	4WD shift switch (LOCK)	Output	Ignition switch: ON	4WD shift switch: 2WD	Battery voltage
					4WD shift switch: AUTO	Battery voltage
					4WD shift switch: LOCK (State of hold of LOCK position)	0 V
15 (Y)	Ground	Power supply (4WD control unit)	Input	Always		Battery voltage
16 (P)	—	CAN-L	Input/ Output	—		—

*: The values are changed by throttle opening and engine speed.

CAUTION:

When using circuit tester to measure voltage for inspection, be sure not to extend forcibly any connector terminals.

Fail-Safe

INFOID:0000000012552658

- If any malfunction occurs in 4WD electrical system, and control unit detects the malfunction, 4WD warning indicator on information display is displayed to indicate system malfunction.
- When 4WD warning indicator is displayed, vehicle changes to front-wheel drive or shifts to 4-wheel drive (rear-wheels still have some driving torque).

DTC	4WD warning indicator	Possible cause	Vehicle condition
C1201	4WD ALDIA0417ZZ (Indicator lamp illuminates)	Internal malfunction of 4WD control unit	Front-wheel drive or shifts to 4-wheel drive (Rear-wheels still have some driving torque)
C1203		ABS malfunction • Vehicle speed signal error	
C1204		• Internal malfunction of electronic controlled coupling • Malfunction of 4WD solenoid power supply circuit (open or short) • Malfunction of 4WD solenoid command current	
C1205		• Internal malfunction of 4WD control unit • Malfunction of 4WD solenoid power supply circuit (ground short)	
C1209		Malfunction of 4WD shift switch or 4WD shift switch circuit	
C1210		Malfunction of engine control system	
P1804		Internal malfunction of 4WD control unit	
P181F		Writing unit characteristics is incomplete.	
U1000		• CAN communication error • Malfunction of 4WD control unit	
U1010		Malfunction of 4WD control unit	

Protection Function

INFOID:0000000012552659

4WD system activates its protection function (shuts down 4WD system temporarily) if 4WD system detects high load continuously or the front wheel tire size differs from the rear tire size. (4WD system is automatically restored if 4WD system no longer detects any overload or the tire size difference is eliminated.)

4WD warning indicator	Possible cause	Vehicle condition
4WD ALDIA0417ZZ Quick blinking (Blinking for approximately 1 minute and then turned OFF)	Drive train parts in protection mode. It is not malfunction. (Internal temperature rise of electronic controlled coupling) When this message is displayed, refer to DLN-67, "Description".	Shuts down 4WD system temporarily (Front wheel drive)
4WD ALDIA0417ZZ Slow blinking (Continuing to blink until ignition switch is turned OFF)	Malfunction in each tire or different tire diameter When this message is displayed, refer to DLN-68, "Diagnosis Procedure".	

DTC Inspection Priority Chart

INFOID:0000000012552660

If some DTCs are displayed at the same time, perform inspections one by one based on the following priority chart.

Priority	Detected items (DTC)
1	• U1000 CAN COMM CIRCUIT • U1010 CONTROL UNIT (CAN)
2	• C1201 CONTROLLER FAILURE • C1205 4WD ACTUATOR RLY
3	• C1204 4WD SOLENOID
4	• C1203 ABS SYSTEM • C1210 ENGINE SIGNAL 1
5	• C1209 MODE SW
6	• P1804 CONTROL UNIT 3
7	• P181F INCOMP CALIBRATION

DTC Index

INFOID:0000000012552661

DTC	Display Item	Reference
C1201	CONTROLLER FAILURE	DLN-45, "DTC Logic"
C1203	ABS SYSTEM	DLN-46, "DTC Logic"
C1204	4WD SOLENOID	DLN-47, "DTC Logic"
C1205	4WD ACTUATOR RLY	DLN-50, "DTC Logic"
C1209	MODE SW	DLN-52, "DTC Logic"
C1210	ENGINE SIGNAL 1	DLN-55, "DTC Logic"
P1804	CONTROL UNIT 3	DLN-56, "DTC Logic"
P181F	INCOMP CALIBRATION	DLN-57, "DTC Logic"
U1000	CAN COMM CIRCUIT	DLN-58, "DTC Logic"
U1010	CONTROL UNIT (CAN)	DLN-59, "DTC Logic"

WIRING DIAGRAM

4WD SYSTEM

Wiring Diagram -With Around View Monitor System-

INFOID:0000000012552662

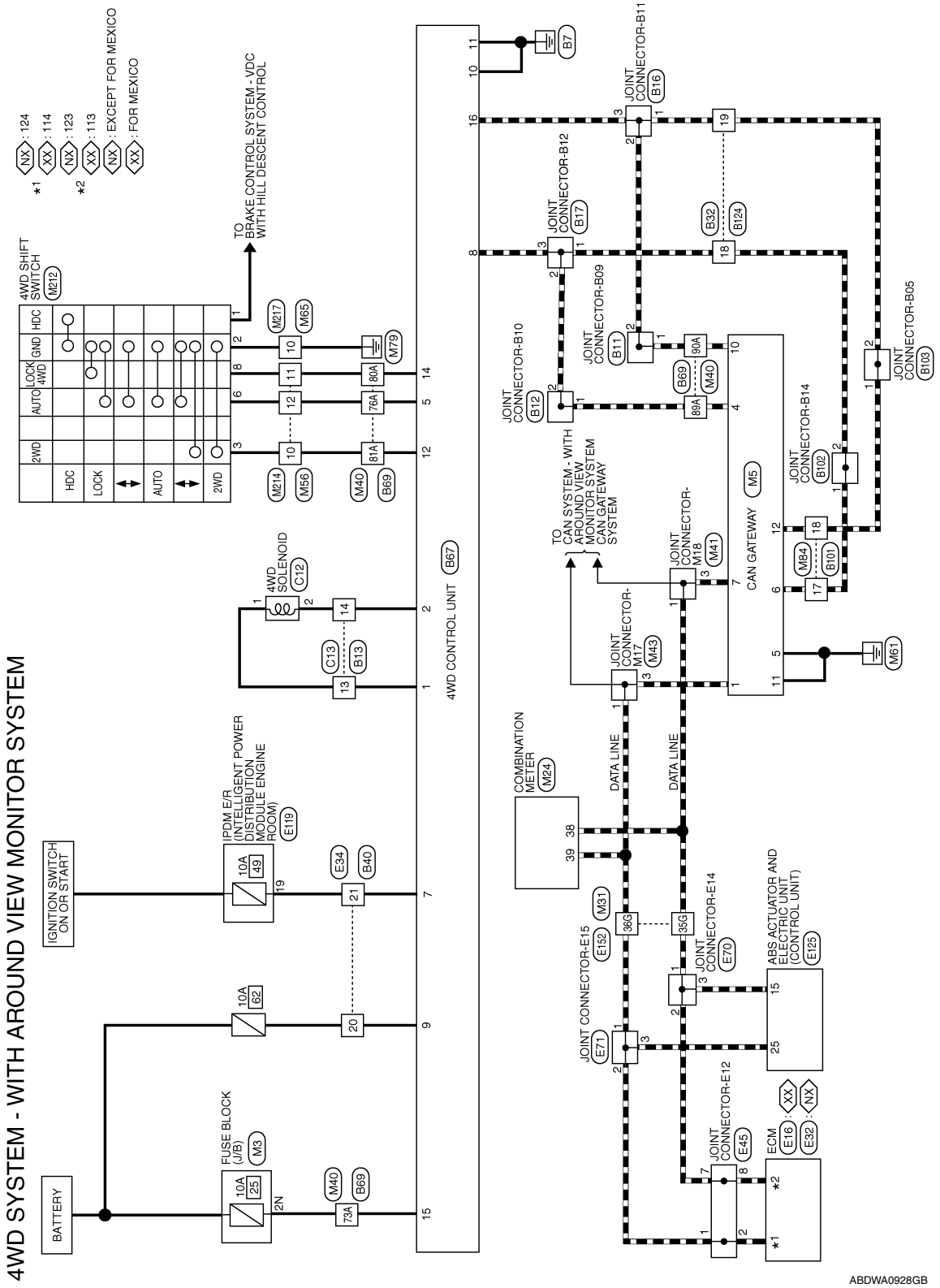

4WD SYSTEM CONNECTORS - WITH AROUND VIEW MONITOR SYSTEM

Connector No.	M3
Connector Name	FUSE BLOCK (J/B)
Connector Color	WHITE

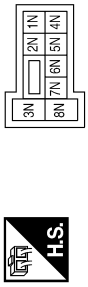

Terminal No.	Color of Wire	Signal Name
2N	BG	–

Connector No.	M5
Connector Name	CAN GATEWAY
Connector Color	WHITE

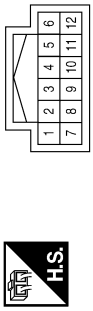

Terminal No.	Color of Wire	Signal Name
1	L	CAN-H
4	L	CAN-H
5	B	GND
6	L	CAN-H
7	P	CAN-L
10	P	CAN-L
11	B	GND
12	P	CAN-L

Connector No.	M24
Connector Name	COMBINATION METER
Connector Color	WHITE

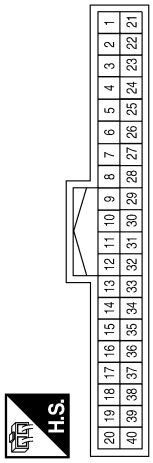

Terminal No.	Color of Wire	Signal Name
38	P	CAN-L
39	L	CAN-H

Connector No.	M31
Connector Name	WIRE TO WIRE
Connector Color	WHITE

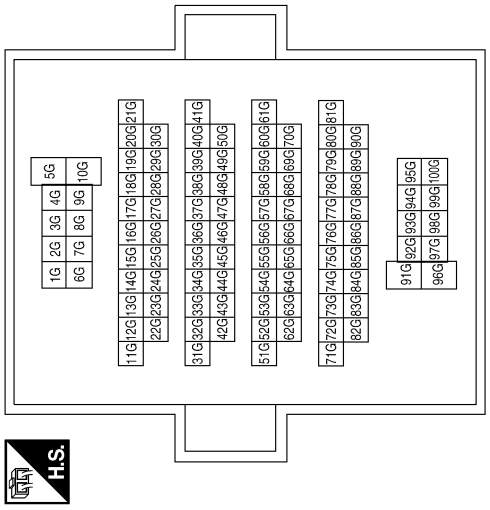

Terminal No	Color of Wire	Signal Name
35G	P	–
36G	L	–

ABDIA1103GB

Connector No.	M40
Connector Name	WIRE TO WIRE
Connector Color	GRAY

H.S.

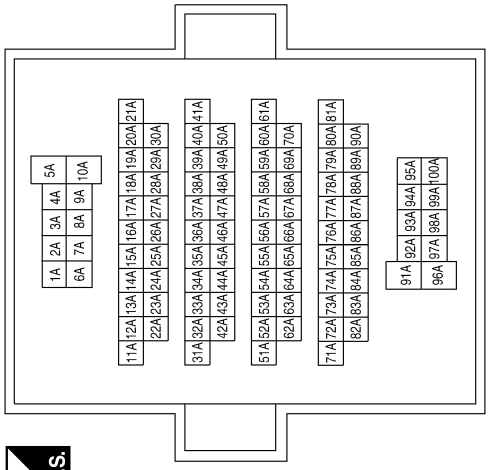

Terminal No.	Color of Wire	Signal Name
73A	BG	–
76A	V	–
80A	BR	–
81A	BG	–
89A	L	–
90A	P	–

Connector No.	M41
Connector Name	JOINT CONNECTOR-M18
Connector Color	WHITE

H.S.

Terminal No.	Color of Wire	Signal Name
1	P	–
3	P	–

Connector No.	M43
Connector Name	JOINT CONNECTOR-M17
Connector Color	WHITE

H.S.

Terminal No.	Color of Wire	Signal Name
1	L	–
3	L	–

Connector No.	M56
Connector Name	WIRE TO WIRE
Connector Color	WHITE

H.S.

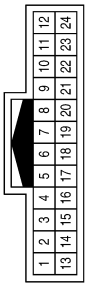

Terminal No.	Color of Wire	Signal Name
10	BG	–
11	BR	–
12	V	–

Connector No.	M65
Connector Name	WIRE TO WIRE
Connector Color	WHITE

H.S.

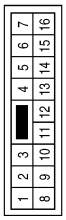

Terminal No.	Color of Wire	Signal Name
10	B	–

ABDIA1104GB

Connector No.	M84
Connector Name	WIRE TO WIRE
Connector Color	WHITE

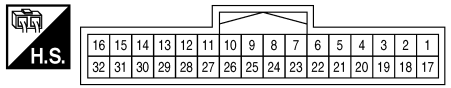

Terminal No.	Color of Wire	Signal Name
17	L	–
18	P	–

Connector No.	M212
Connector Name	4WD SHIFT SWITCH
Connector Color	BLACK

Terminal No.	Color of Wire	Signal Name
1	G	–
2	B	–
3	BG	–
6	V	–
8	BR	–

Connector No.	M214
Connector Name	WIRE TO WIRE
Connector Color	WHITE

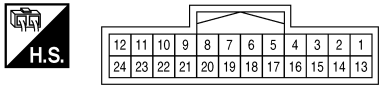

Terminal No.	Color of Wire	Signal Name
10	BG	–
11	BR	–
12	V	–

Connector No.	M217
Connector Name	WIRE TO WIRE
Connector Color	WHITE

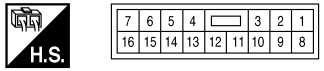

Terminal No.	Color of Wire	Signal Name
10	B	–

Connector No.	E16
Connector Name	ECM (FOR MEXICO)
Connector Color	GRAY

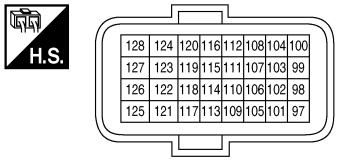

Terminal No.	Color of Wire	Signal Name
113	P	CAN-L
114	L	CAN-H

Connector No.	E32
Connector Name	ECM (EXCEPT FOR MEXICO)
Connector Color	BLACK

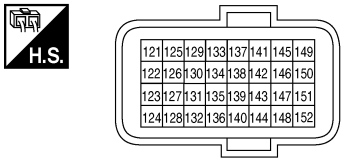

Terminal No.	Color of Wire	Signal Name
123	P	CAN-L
124	L	CAN-H

ABDIA1774GB

Connector No.	E34
Connector Name	WIRE TO WIRE
Connector Color	WHITE

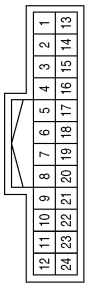

Terminal No.	Color of Wire	Signal Name
20	LG	–
21	SB	–

Connector No.	E45
Connector Name	JOINT CONNECTOR-E12
Connector Color	BLUE

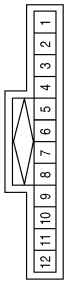

Terminal No.	Color of Wire	Signal Name
1	L	–
2	L	–
7	P	–
8	P	–

Connector No.	E70
Connector Name	JOINT CONNECTOR-E14
Connector Color	BLACK

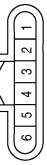

Terminal No.	Color of Wire	Signal Name
1	P	–
2	P	–
3	P	–

Connector No.	E71
Connector Name	JOINT CONNECTOR-E15
Connector Color	BLACK

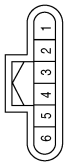

Terminal No.	Color of Wire	Signal Name
1	L	–
2	L	–
3	L	–

Connector No.	E119
Connector Name	IPDM E/R (INTELLIGENT POWER DISTRIBUTION MODULE ENGINE ROOM)
Connector Color	WHITE

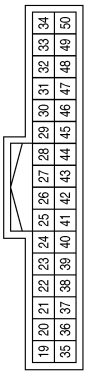

Terminal No.	Color of Wire	Signal Name
19	SB	SUB ECU

Connector No.	E125
Connector Name	ABS ACTUATOR AND ELECTRIC UNIT (CONTROL UNIT) (WITH 4WD SYSTEM)
Connector Color	BLACK

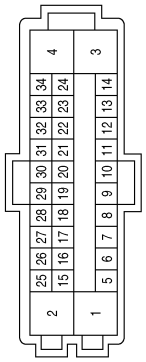

Terminal No.	Color of Wire	Signal Name
15	P	CAN-L
25	L	CAN-H

ABDIA1775GB

Connector No.	E152
Connector Name	WIRE TO WIRE
Connector Color	WHITE

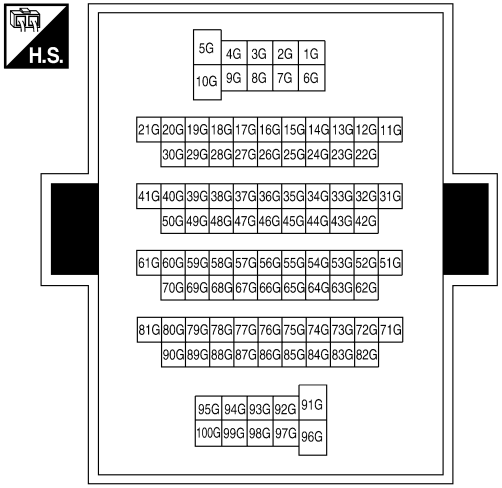

Terminal No.	Color of Wire	Signal Name
35G	P	–
36G	L	–

Connector No.	C12
Connector Name	4WD SOLENOID
Connector Color	GRAY

Terminal No.	Color of Wire	Signal Name
1	SB	–
2	Y	–

Connector No.	C13
Connector Name	WIRE TO WIRE
Connector Color	BLACK

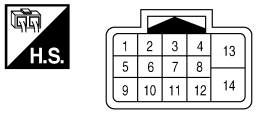

Terminal No.	Color of Wire	Signal Name
13	SB	–
14	Y	–

Connector No.	B11
Connector Name	JOINT CONNECTOR-B09
Connector Color	WHITE

Terminal No.	Color of Wire	Signal Name
1	P	–
2	P	–

Connector No.	B12
Connector Name	JOINT CONNECTOR-B10
Connector Color	WHITE

Terminal No.	Color of Wire	Signal Name
1	L	–
2	L	–

AADIA0443GB

Connector No.	B13
Connector Name	WIRE TO WIRE
Connector Color	BLACK

H.S.

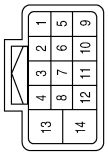

Terminal No.	Color of Wire	Signal Name
13	LG	–
14	V	–

Connector No.	B16
Connector Name	JOINT CONNECTOR-B11
Connector Color	WHITE

H.S.

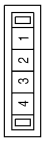

Terminal No.	Color of Wire	Signal Name
1	P	–
2	P	–
3	P	–

Connector No.	B17
Connector Name	JOINT CONNECTOR-B12
Connector Color	WHITE

H.S.

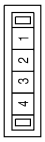

Terminal No.	Color of Wire	Signal Name
1	L	–
2	L	–
3	L	–

Connector No.	B32
Connector Name	WIRE TO WIRE
Connector Color	WHITE

H.S.

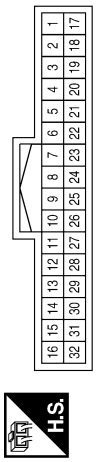

Terminal No.	Color of Wire	Signal Name
18	L	–
19	P	–

Connector No.	B40
Connector Name	WIRE TO WIRE
Connector Color	WHITE

H.S.

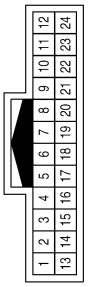

Terminal No.	Color of Wire	Signal Name
20	SB	–
21	W	–

ABDIA1105GB

Connector No.	B67
Connector Name	4WD CONTROL UNIT
Connector Color	WHITE

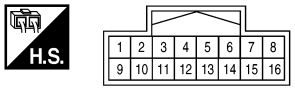

Terminal No.	Color of Wire	Signal Name
1	LG	4WD SOLENOID (+)
2	V	4WD SOLENOID (-)
3	–	–
4	–	–
5	V	AUTO SW
6	–	–
7	W	IGNITION SWITCH
8	L	CAN-H
9	SB	BATTERY (4WD SOLENOID)
10	B	GROUND
11	B	GROUND
12	BG	2WD SW
13	–	–
14	BR	LOCK SW
15	Y	BATTERY (CONTROL UNIT)
16	P	CAN-L

Connector No.	B69
Connector Name	WIRE TO WIRE
Connector Color	GRAY

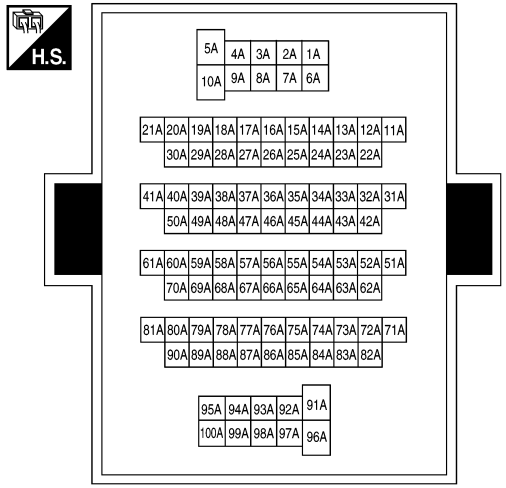

ABDIA1452GB

Terminal No.	Color of Wire	Signal Name
73A	Y	–
76A	V	–
80A	BR	–
81A	BG	–
89A	L	–
90A	P	–

Connector No.	B101
Connector Name	WIRE TO WIRE
Connector Color	WHITE

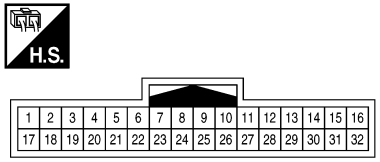

Terminal No.	Color of Wire	Signal Name
17	L	–
18	P	–

Connector No.	B102
Connector Name	JOINT CONNECTOR-B14
Connector Color	WHITE

Terminal No.	Color of Wire	Signal Name
1	L	–
2	L	–

Connector No.	B103
Connector Name	JOINT CONNECTOR-B05
Connector Color	WHITE

Terminal No.	Color of Wire	Signal Name
1	P	–
2	P	–

Connector No.	B124
Connector Name	WIRE TO WIRE
Connector Color	WHITE

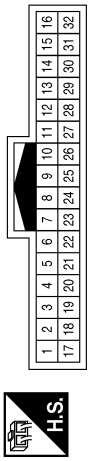

Terminal No.	Color of Wire	Signal Name
18	L	–
19	P	–

ABDIA1495GB

Wiring Diagram -Without Around View Monitor System-

INFOID:0000000012552663

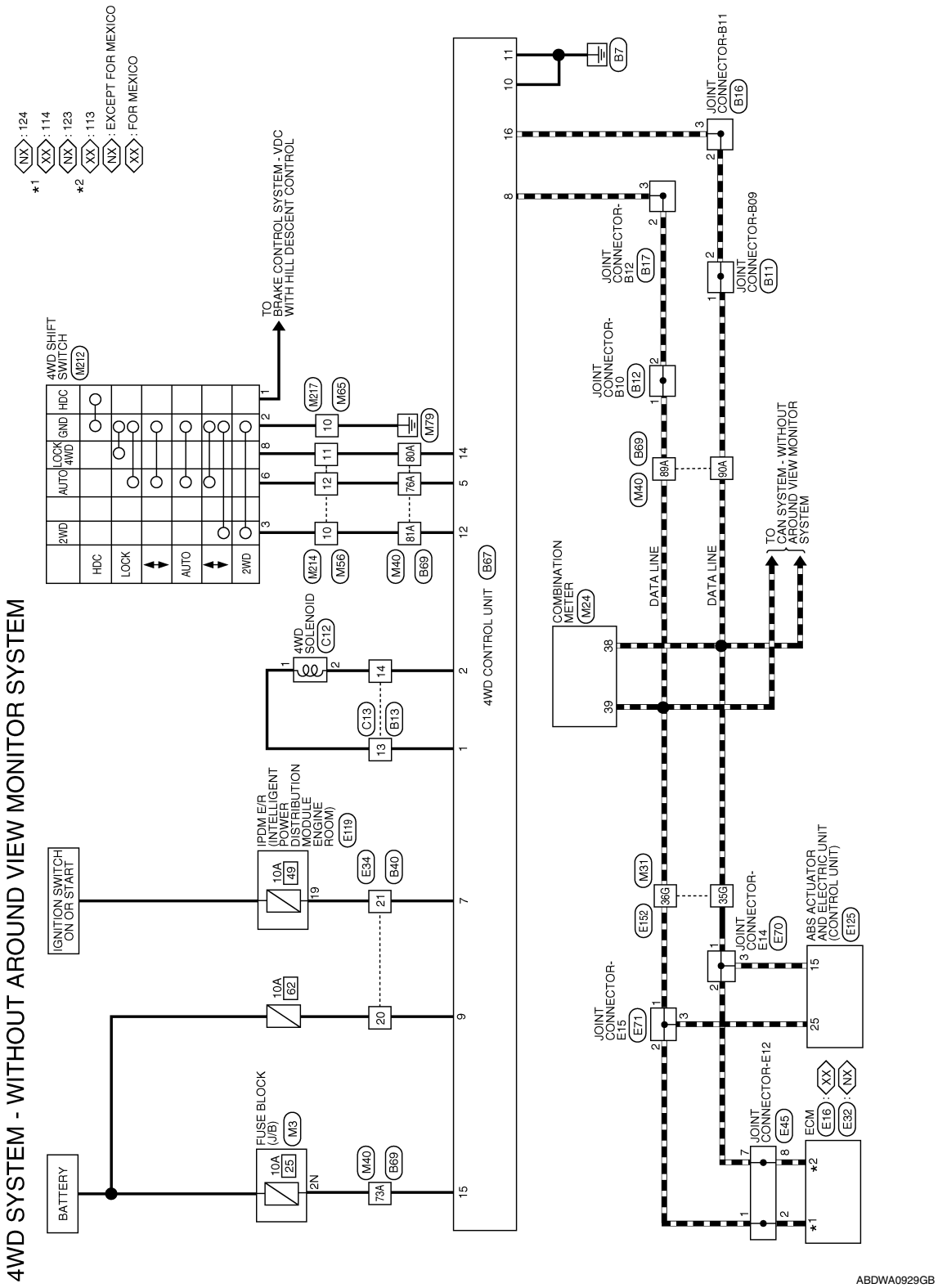

4WD SYSTEM CONNECTORS - WITHOUT AROUND VIEW MONITOR SYSTEM

Connector No.	M3
Connector Name	FUSE BLOCK (J/B)
Connector Color	WHITE

H.S.

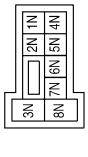

Terminal No.	Color of Wire	Signal Name
2N	BG	–

Connector No.	M24
Connector Name	COMBINATION METER
Connector Color	WHITE

H.S.

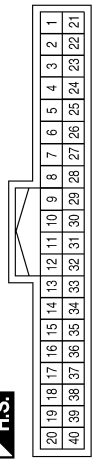

Terminal No.	Color of Wire	Signal Name
38	P	CAN-L
39	L	CAN-H

Connector No.	M31
Connector Name	WIRE TO WIRE
Connector Color	WHITE

H.S.

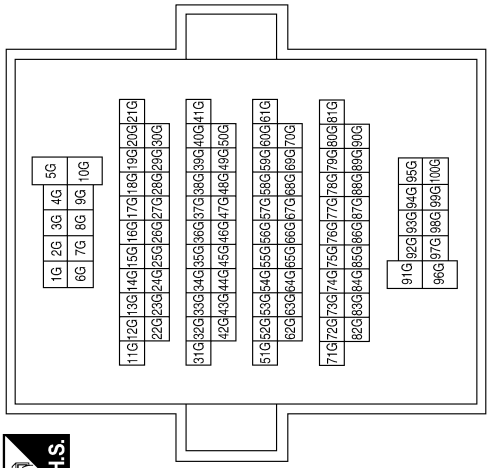

Terminal No.	Color of Wire	Signal Name
35G	P	–
36G	L	–

AADIA0446GB

Connector No.	M40
Connector Name	WIRE TO WIRE
Connector Color	GRAY

H.S.

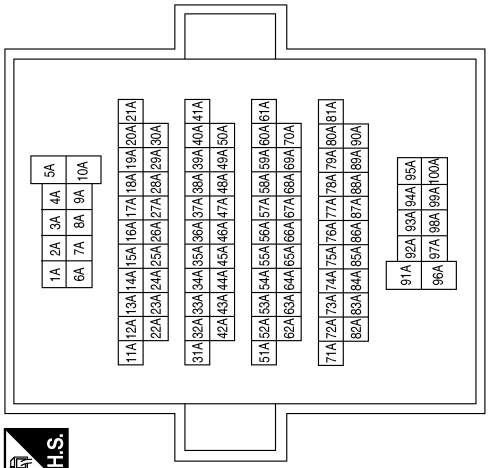

Terminal No.	Color of Wire	Signal Name
73A	BG	–
76A	V	–
80A	BR	–
81A	BG	–
89A	L	–
90A	P	–

Connector No.	M56
Connector Name	WIRE TO WIRE
Connector Color	WHITE

H.S.

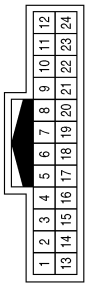

Terminal No.	Color of Wire	Signal Name
10	BG	–
11	BR	–
12	V	–

Connector No.	M65
Connector Name	WIRE TO WIRE
Connector Color	WHITE

H.S.

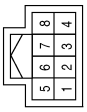

Terminal No.	Color of Wire	Signal Name
10	B	–

Connector No.	M212
Connector Name	4WD SHIFT SWITCH
Connector Color	BLACK

H.S.

Terminal No.	Color of Wire	Signal Name
1	G	–
2	B	–
3	BG	–
6	V	–
8	BR	–

Connector No.	M214
Connector Name	WIRE TO WIRE
Connector Color	WHITE

H.S.

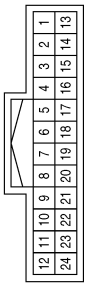

Terminal No.	Color of Wire	Signal Name
10	BG	–
11	BR	–
12	V	–

ABDIA1778GB

Connector No.	M217
Connector Name	WIRE TO WIRE
Connector Color	WHITE

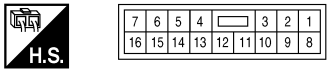

Terminal No.	Color of Wire	Signal Name
10	B	–

Connector No.	E16
Connector Name	ECM (FOR MEXICO)
Connector Color	GRAY

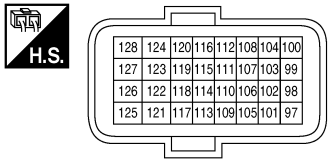

Terminal No.	Color of Wire	Signal Name
113	P	CAN-L
114	L	CAN-H

Connector No.	E32
Connector Name	ECM (EXCEPT FOR MEXICO)
Connector Color	BLACK

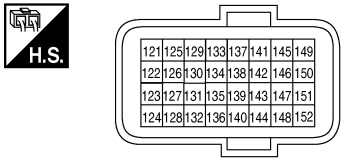

Terminal No.	Color of Wire	Signal Name
123	P	CAN-L
124	L	CAN-H

Connector No.	E34
Connector Name	WIRE TO WIRE
Connector Color	WHITE

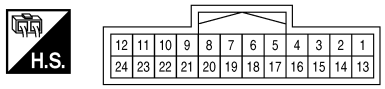

Terminal No.	Color of Wire	Signal Name
20	LG	–
21	SB	–

Connector No.	E45
Connector Name	JOINT CONNECTOR-E12
Connector Color	BLUE

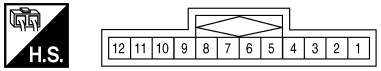

Terminal No.	Color of Wire	Signal Name
1	L	–
2	L	–
7	P	–
8	P	–

Connector No.	E70
Connector Name	JOINT CONNECTOR-E14
Connector Color	BLACK

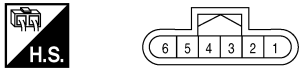

Terminal No.	Color of Wire	Signal Name
1	P	–
2	P	–
3	P	–

AADIA0816GB

Connector No.	E71
Connector Name	JOINT CONNECTOR-E15
Connector Color	BLACK

H.S.

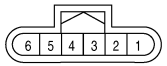

Terminal No.	Color of Wire	Signal Name
1	L	–
2	L	–
3	L	–

Connector No.	E119
Connector Name	IPDM E/R (INTELLIGENT POWER DISTRIBUTION MODULE ENGINE ROOM)
Connector Color	WHITE

H.S.

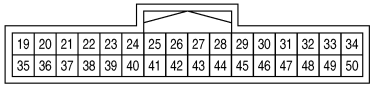

Terminal No.	Color of Wire	Signal Name
19	SB	SUB ECU

Connector No.	E125
Connector Name	ABS ACTUATOR AND ELECTRIC UNIT (CONTROL UNIT) (WITH 4WD SYSTEM)
Connector Color	BLACK

H.S.

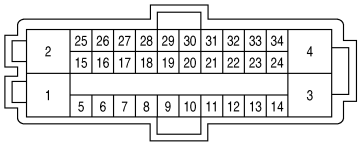

Terminal No.	Color of Wire	Signal Name
15	P	CAN-L
25	L	CAN-H

Connector No.	E152
Connector Name	WIRE TO WIRE
Connector Color	WHITE

H.S.

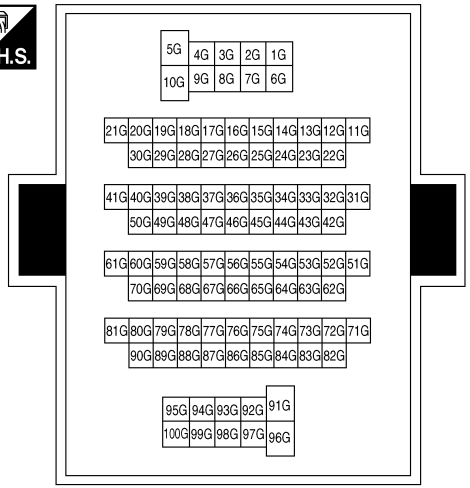

ABDIA1779GB

Terminal No.	Color of Wire	Signal Name
35G	P	–
36G	L	–

Connector No.	C12
Connector Name	4WD SOLENOID
Connector Color	GRAY

H.S.

Terminal No.	Color of Wire	Signal Name
1	SB	–
2	Y	–

Connector No.	C13
Connector Name	WIRE TO WIRE
Connector Color	BLACK

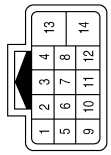

Terminal No.	Color of Wire	Signal Name
13	SB	–
14	Y	–

Connector No.	B11
Connector Name	JOINT CONNECTOR-B09
Connector Color	WHITE

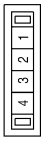

Terminal No.	Color of Wire	Signal Name
1	P	–
2	P	–

Connector No.	B12
Connector Name	JOINT CONNECTOR-B10
Connector Color	WHITE

Terminal No.	Color of Wire	Signal Name
1	L	–
2	L	–

Connector No.	B13
Connector Name	WIRE TO WIRE
Connector Color	BLACK

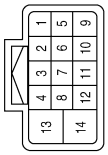

Terminal No.	Color of Wire	Signal Name
13	LG	–
14	V	–

Connector No.	B16
Connector Name	JOINT CONNECTOR-B11
Connector Color	WHITE

Terminal No.	Color of Wire	Signal Name
2	P	–
3	P	–

Connector No.	B17
Connector Name	JOINT CONNECTOR-B12
Connector Color	WHITE

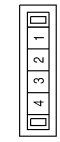

Terminal No.	Color of Wire	Signal Name
2	L	–
3	L	–

ABDIA1108GB

Connector No.	B40
Connector Name	WIRE TO WIRE
Connector Color	WHITE

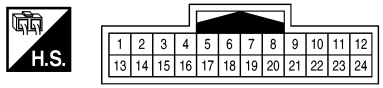

Terminal No.	Color of Wire	Signal Name
20	SB	–
21	W	–

Connector No.	B67
Connector Name	4WD CONTROL UNIT
Connector Color	WHITE

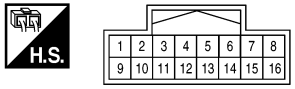

Terminal No.	Color of Wire	Signal Name
1	LG	4WD SOLENOID (+)
2	V	4WD SOLENOID (-)
3	–	–
4	–	–
5	V	AUTO SW
6	–	–
7	W	IGNITION SWITCH
8	L	CAN-H
9	SB	BATTERY (4WD SOLENOID)
10	B	GROUND
11	B	GROUND
12	BG	2WD SW
13	–	–
14	BR	LOCK SW
15	Y	BATTERY (CONTROL UNIT)
16	P	CAN-L

Connector No.	B69
Connector Name	WIRE TO WIRE
Connector Color	GRAY

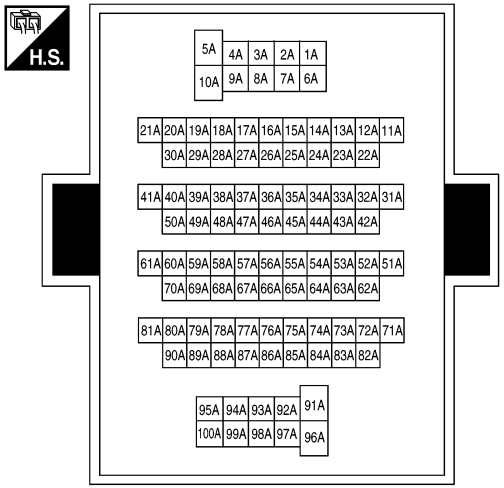

ABDIA1454GB

Terminal No.	Color of Wire	Signal Name
73A	Y	–
76A	V	–
80A	BR	–
81A	BG	–
89A	L	–
90A	P	–

BASIC INSPECTION

DIAGNOSIS AND REPAIR WORK FLOW

Work Flow

INFOID:0000000012552664

DETAILED FLOW

1.INTERVIEW FROM THE CUSTOMER

Clarify customer complaints before inspection. First of all, perform an interview utilizing DLN-41, "Diagnostic Work Sheet" and reproduce symptoms as well as fully understand it. Ask customer about his/her complaints carefully. Check symptoms by driving vehicle with customer, if necessary.

CAUTION:

Customers are not professional. Never guess easily like “maybe the customer means that...,” or “maybe the customer mentions this symptom”.

>> GO TO 2.

2.CHECK SYMPTOM

Reproduce the symptom that is indicated by the customer, based on the information from the customer obtained by interview. Also check that the symptom is not caused by protection function. Refer to DLN-22, "Protection Function".

CAUTION:

When the symptom is caused by normal operation, fully inspect each portion and obtain the understanding of customer that the symptom is not caused by a malfunction.

>> GO TO 3.

3.PERFORM SELF-DIAGNOSIS

With CONSULT

Perform self-diagnosis for “ALL MODE AWD/4WD”.

Is any DTC detected?

YES >> Record or print self-diagnosis results. GO TO 4.
NO >> GO TO 6.

4.RECHECK SYMPTOM

With CONSULT

1. Erase self-diagnostic results for “ALL MODE AWD/4WD”.
2. Perform DTC confirmation procedures for the error detected system.

NOTE:

If some DTCs are detected at the same time, determine the order for performing the diagnosis based on LAN-21, "Trouble Diagnosis Flow Chart".

Is any DTC detected?

YES >> GO TO 5.
NO >> Check harness and connectors based on the information obtained by interview. Refer to GI-47, "Intermittent Incident".

5.REPAIR OR REPLACE ERROR-DETECTED PARTS

- Repair or replace error-detected parts.
- Reconnect part or connector after repairing or replacing.
- When DTC is detected, erase self-diagnostic results for “ALL MODE AWD/4WD”.

>> GO TO 7.

6.IDENTIFY ERROR-DETECTED SYSTEM BY SYMPTOM DIAGNOSIS

Estimate error-detected system based on symptom diagnosis and perform inspection.

Can the error-detected system be identified?

YES >> GO TO 7.
NO >> Check harness and connectors based on the information obtained by interview. Refer to GI-47, "Intermittent Incident".

7. FINAL CHECK

With CONSULT

1. Check the reference value for 4WD control unit.
2. Recheck the symptom and check that symptom is not reproduced on the same conditions.

Is the symptom reproduced?

YES >> GO TO 3.
NO >> INSPECTION END

Diagnostic Work Sheet

INFOID:0000000012552665

Description

- In general, customers have their own criteria for a problem. Therefore, it is important to understand the symptom and status well enough by asking the customer about his/her concerns carefully. To systemize all the information for the diagnosis, prepare the interview sheet referring to the interview points.
- In some cases, multiple conditions that appear simultaneously may cause a DTC to be detected.

Interview sheet sample

Interview sheet					
Customer name	MR/MS	Registration number		Initial year registration	
		Vehicle type		VIN	
Storage date		Engine		Mileage	km (Mile)
Symptom		☐Vehicle does not enter 4WD mode.			
		☐4WD warning indicator is displayed.			
		☐Heavy tight-corner braking symptom occurs			
		☐Noise ☐Vibration			
		☐Others ( )			
First occurrence		☐Recently ☐Others ( )			
Frequency of occurrence		☐Always ☐Under a certain conditions of ☐Sometimes (time(s)/day)			
Climate conditions		☐Irrelevant			
	Weather	☐Fine ☐Cloud ☐Rain ☐Snow ☐Others ( )			
	Temperature	☐Hot ☐Warm ☐Cool ☐Cold ☐Temperature (Approx. °C)			
	Relative humidity	☐High ☐Moderate ☐Low			
Road conditions		☐Urban area ☐Suburb area ☐High way ☐Mounting road (uphill or down hill) ☐Rough road			
Operation conditions, etc.		☐Irrelevant ☐When engine starts ☐During idling ☐During driving ☐During acceleration ☐At constant speed driving ☐During deceleration ☐During cornering (right curve or left curve)			

Interview sheet

Customer name	MR/MS	Registration number		Initial year registration	
		Vehicle type		VIN	
Storage date		Engine		Mileage	km (Mile)
Other conditions					

Memo

ADDITIONAL SERVICE WHEN REPLACING 4WD CONTROL UNIT

Description

INFOID:0000000012552666

When replacing 4WD control unit, unit characteristics writing is required.

Work Procedure

INFOID:0000000012552667

1. PERFORM WRITING UNIT CHARACTERISTICS

Perform writing unit characteristics of electric controlled coupling.

>> Refer to DLN-44, "Work Procedure".

UNIT CHARACTERISTICS WRITING

Description

INFOID:0000000012552668

When replacing 4WD control unit, rear final drive assembly and/or electric controlled coupling, unit characteristics of electric controlled coupling writing is required.

Work Procedure

INFOID:0000000012552669

1. UNIT CHARACTERISTICS WRITING

With CONSULT

1. Confirm the unit characteristics (A) of electric controlled coupling.
   NOTE:
   Unit characteristics is 12-digit alphanumeric.
2. Turn the ignition switch OFF to ON.
3. Select “UNIT CHARACTERISTICS WRITE” in “WORK SUPPORT” for “ALL MODE AWD/4WD”.
4. Input unit characteristics.
5. Select “Start”.
6. Check that “UNIT CHARACTERISTICS WRITE COMPLETED” is displayed.

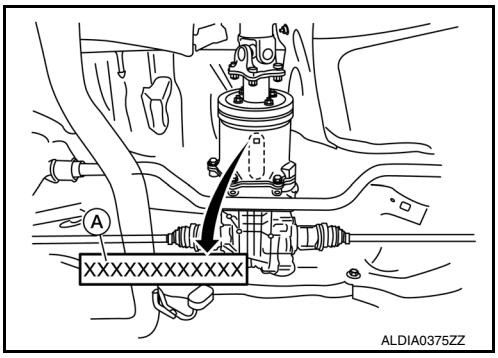

>> WORK END

DTC/CIRCUIT DIAGNOSIS

C1201 4WD CONTROL UNIT

DTC Logic

INFOID:0000000012552670

DTC DETECTION LOGIC

DTC	Display item	Malfunction detected condition	Possible cause
C1201	CONTROLLER FAILURE	Malfunction has occurred inside 4WD control unit.	Internal malfunction of 4WD control unit

DTC CONFIRMATION PROCEDURE

1. PRECONDITIONING

If “DTC CONFIRMATION PROCEDURE” has been previously conducted, always turn ignition switch OFF and wait at least 10 seconds before conducting the next test.

>> GO TO 2.

2. PERFORM DTC CONFIRMATION

With CONSULT
1. Turn the ignition switch OFF to ON.
2. Perform self-diagnosis for “ALL MODE AWD/4WD”.

Is DTC “C1201” detected?

YES >> Proceed to DLN-45, "Diagnosis Procedure".
NO >> INSPECTION END

Diagnosis Procedure

INFOID:0000000012552671

1. PERFORM SELF-DIAGNOSIS

With CONSULT
1. Erase self-diagnostic results for “ALL MODE AWD/4WD”.
2. Turn the ignition switch OFF, and then wait 10 seconds or more.
3. Perform self-diagnosis for “ALL MODE AWD/4WD”.

Is DTC “C1201” detected?

YES >> Replace 4WD control unit. Refer to DLN-72, "Removal and Installation".
NO >> Check 4WD control unit pin terminals for damage or loose connection with harness connector. If any items are damaged, repair or replace error-detected parts.

C1203 ABS ACTUATOR AND ELECTRIC UNIT (CONTROL UNIT)

DTC Logic

INFOID:0000000012552672

DTC DETECTION LOGIC

DTC	Display item	Malfunction detected condition	Possible cause
C1203	ABS SYSTEM	Malfunction related to wheel sensor has been detected by ABS actuator and electric unit (control unit).	ABS malfunction • Vehicle speed signal error

DTC CONFIRMATION PROCEDURE

1.PRECONDITIONING

If “DTC CONFIRMATION PROCEDURE” has been previously conducted, always turn ignition switch OFF and wait at least 10 seconds before conducting the next test.

>> GO TO 2.

2.PERFORM DTC CONFIRMATION

With CONSULT

1. Start the engine and drive at 30 km/h (19 MPH) or more for approximately 1 minute.
2. Perform self-diagnosis for “ALL MODE AWD/4WD”.

Is DTC “C1203” detected?

YES >> Proceed to DLN-46, "Diagnosis Procedure".
NO >> INSPECTION END

Diagnosis Procedure

INFOID:0000000012552673

1.PERFORM ABS ACTUATOR AND ELECTRIC UNIT (CONTROL UNIT) SELF-DIAGNOSIS

With CONSULT

Perform self-diagnosis for “ABS”.

Is any DTC detected?

YES >> Check the DTC. Refer to BRC-47, "DTC Index" (Type 1) or BRC-206, "DTC Index" (Type 2).
NO >> GO TO 2.

2.CHECK TERMINALS AND HARNESS CONNECTORS

Check 4WD control unit pin terminals for damage or loose connection with harness connector.

Is inspection result normal?

YES >> After turning the ignition switch OFF, perform DTC confirmation procedure again. If DTC “C1203” is detected, Replace 4WD control unit. Refer to DLN-72, "Removal and Installation".
NO >> Repair or replace error-detected parts.

C1204 4WD SOLENOID

DTC Logic

INFOID:0000000012552674

DTC DETECTION LOGIC

DTC	Display item	Malfunction detected condition	Possible cause
C1204	4WD SOLENOID	Malfunction related to 4WD solenoid has been detected.	• Internal malfunction of electronic controlled coupling • Malfunction of 4WD solenoid power supply circuit (open or short) • Malfunction of 4WD solenoid command current

DTC CONFIRMATION PROCEDURE

1.PRECONDITIONING

If “DTC CONFIRMATION PROCEDURE” has been previously conducted, always turn ignition switch OFF and wait at least 10 seconds before conducting the next test.

>> GO TO 2.

2.PERFORM DTC CONFIRMATION

With CONSULT

1. Turn the ignition switch OFF to ON.
2. Perform self-diagnosis for “ALL MODE AWD/4WD”.

Is DTC “C1204” detected?

YES >> Proceed to DLN-47, "Diagnosis Procedure".
NO >> INSPECTION END

Diagnosis Procedure

INFOID:0000000012552675

Regarding Wiring Diagram information, refer to DLN-24, "Wiring Diagram -With Around View Monitor System-" or DLN-33, "Wiring Diagram -Without Around View Monitor System-".

1.CHECK 4WD SOLENOID POWER SUPPLY (1)

1. Turn the ignition switch OFF.
2. Disconnect 4WD control unit harness connector.
3. Check the voltage between 4WD control unit harness connector and ground.

4WD control unit		—	Voltage
Connector	Terminal		
B67	9	Ground	Battery voltage

4. Turn the ignition switch ON.
   CAUTION:
   Never start the engine.
5. Check the voltage between 4WD control unit harness connector and ground.

4WD control unit		—	Voltage
Connector	Terminal		
B67	9	Ground	Battery voltage

Is the inspection result normal?

YES >> GO TO 3.

NO >> GO TO 2.

2. CHECK 4WD SOLENOID POWER SUPPLY (2)

1. Turn the ignition switch OFF.
2. Check the 10A fuse (#62)
3. Check the harness for open or short between 4WD control unit harness connector No.9 terminal and 10A fuse (#62).

Is the inspection result normal?

YES >> Perform the trouble diagnosis for power supply circuit. Refer to PG-15, "Wiring Diagram - BATTERY POWER SUPPLY -".
NO >> Repair or replace error-detected parts.

3. CHECK 4WD SOLENOID GROUND

Check the continuity between 4WD control unit harness connector and ground.

4WD control unit		—	Continuity
Connector	Terminal		
B67	10	Ground	Existed
	11		

Is the inspection result normal?

YES >> GO TO 4.
NO >> Repair or replace error-detected parts.

4. CHECK 4WD SOLENOID CIRCUIT (1)

Check the resistance between 4WD control unit harness connector.

4WD control unit			Resistance (Approx.)
Connector	Terminal		
B67	1	2	2.45 Ω

Is the inspection result normal?

YES >> GO TO 7.
NO >> GO TO 5.

5. CHECK 4WD SOLENOID CIRCUIT (2)

1. Remove 4WD solenoid harness connector.
2. Check the continuity between 4WD control unit harness connector and 4WD solenoid harness connector.

4WD control unit		4WD solenoid		Continuity
Connector	Terminal	Connector	Terminal	
B67	1	C12	1	Existed
	2		2	

3. Check the continuity between 4WD control unit harness connector and the ground.

4WD control unit		—	Continuity
Connector	Terminal		
B67	1	Ground	Not existed
	2		

Is the inspection result normal?

YES >> GO TO 6.
NO >> Repair or replace error-detected parts.

6. CHECK 4WD SOLENOID

Check 4WD solenoid. Refer to DLN-49, "Component Inspection".

Is the inspection result normal?

YES >> GO TO 7.
NO >> 4WD solenoid is malfunctioning. Replace electric controlled coupling. Refer to DLN-120, "Removal and Installation".

7. CHECK TERMINALS AND HARNESS CONNECTORS

- Check 4WD control unit pin terminals for damage or loose connection with harness connector.
- Check 4WD solenoid pin terminals for damage or loose connection with harness connector.

Is the inspection result normal?

YES >> Replace 4WD control unit. Refer to DLN-72, "Removal and Installation".
NO >> Repair or replace error-detected parts.

Component Inspection

INFOID:0000000012552676

1. CHECK 4WD SOLENOID

1. Turn the ignition switch OFF.
2. Disconnect 4WD solenoid harness connector.
3. Check the resistance between 4WD solenoid harness connector terminals.

4WD solenoid		Resistance (Approx.)
Terminal		
1	2	2.45 Ω

Is the inspection result normal?

YES >> INSPECTION END
NO >> 4WD solenoid is malfunctioning. Replace electric controlled coupling. Refer to DLN-120, "Removal and Installation".

C1205 4WD ACTUATOR RELAY

DTC Logic

INFOID:0000000012552677

DTC DETECTION LOGIC

DTC	Display item	Malfunction detected condition	Possible cause
C1205	4WD ACTUATOR RLY	Malfunction has been detected from 4WD actuator relay integrated with 4WD control unit, or malfunction related to 4WD solenoid has been detected.	• Internal malfunction of 4WD control unit • Malfunction of 4WD solenoid power supply circuit (ground short)

DTC CONFIRMATION PROCEDURE

1.PRECONDITIONING

If “DTC CONFIRMATION PROCEDURE” has been previously conducted, always turn ignition switch OFF and wait at least 10 seconds before conducting the next test.

>> GO TO 2.

2.PERFORM DTC CONFIRMATION

With CONSULT

1. Turn the ignition switch OFF to ON.
2. Perform self-diagnosis for “ALL MODE AWD/4WD”.

Is DTC “C1205” detected?

YES >> Proceed to DLN-50, "Diagnosis Procedure".
NO >> INSPECTION END

Diagnosis Procedure

INFOID:0000000012552678

Regarding Wiring Diagram information, refer to DLN-24, "Wiring Diagram -With Around View Monitor System-" or DLN-33, "Wiring Diagram -Without Around View Monitor System-".

1.CHECK 4WD SOLENOID CIRCUIT (1)

1. Turn the ignition switch OFF.
2. Disconnect 4WD control unit harness connector.
3. Check the continuity between 4WD control unit harness connector and the ground.

4WD control unit		—	Continuity
Connector	Terminal		
B67	1	Ground	Not existed
	2		

Is the inspection result normal?

YES >> GO TO 4.
NO >> GO TO 2.

2.CHECK 4WD SOLENOID

1. Disconnect 4WD solenoid harness connector.
2. Check the continuity between 4WD solenoid connector and the ground.

4WD solenoid Terminal	—	Continuity
1	Ground	Not existed
2		

Is the inspection result normal?

YES >> GO TO 3.
NO >> 4WD solenoid is malfunctioning. Replace electric controlled coupling. Refer to DLN-120, "Removal and Installation".

3. CHECK 4WD SOLENOID CIRCUIT (2)

Check the continuity between 4WD control unit harness connector and the ground.

4WD control unit		—	Continuity
Connector	Terminal		
B67	1	Ground	Not existed
	2		

Is the inspection result normal?

YES >> GO TO 4.
NO >> Repair or replace damaged parts.

4. CHECK TERMINALS AND HARNESS CONNECTORS

1. Check 4WD control unit pin terminals for damage or loose connection with harness connector.
2. Check 4WD solenoid pin terminals for damage or loose connection with harness connector.

Is the inspection result normal?

YES >> After connecting each harness connector, perform DTC confirmation procedure again. When DTC “C1205” is detected, replace 4WD control unit. Refer to DLN-72, "Removal and Installation".
NO >> Repair or replace damaged parts.

C1209 MODE SW

DTC Logic

INFOID:0000000012552679

DTC DETECTION LOGIC

DTC	Items (CONSULT screen terms)	Diagnostic item is detected when...	Possible cause
C1209	MODE SW	More than two switch inputs are simultaneously detected due to short circuit of 4WD shift switch.	Malfunction of 4WD shift switch or 4WD shift switch circuit.

DTC CONFIRMATION PROCEDURE

1. DTC REPRODUCTION PROCEDURE

With CONSULT

1. Turn the ignition switch OFF to ON.
2. Perform self-diagnosis for “ALL MODE AWD/4WD”.

Is DTC “C1209” detected?

YES >> Proceed to diagnosis procedure. Refer to DLN-52, "Diagnosis Procedure".
NO >> INSPECTION END

Diagnosis Procedure

INFOID:0000000012552680

Regarding Wiring Diagram information, refer to DLN-24, "Wiring Diagram -With Around View Monitor System-" or DLN-33, "Wiring Diagram -Without Around View Monitor System-".

1. CHECK 4WD SHIFT SWITCH

1. Turn the ignition switch OFF.
2. Remove 4WD shift switch.
3. Check the continuity between 4WD shift switch connector terminals.

4WD shift switch				Continuity
Connector	Terminal		Condition	
M212	2	3	4WD shift switch: 2WD	Existed
			Except the above	Not existed
	2	6	4WD shift switch: AUTO	Existed
			Except the above	Not existed
	2	8	4WD shift switch: LOCK	Existed
			Except the above	Not existed

Is the inspection result normal?

YES >> GO TO 2.
NO >> Replace 4WD shift switch. Refer to DLN-73, "Removal and Installation".

2. CHECK 4WD SHIFT SWITCH CIRCUIT (1)

Check the continuity between 4WD shift switch harness connector and ground.

4WD shift switch		Ground	Continuity
Connector	Terminal		
M212	2	Ground	Existed

Is the inspection result normal?

YES >> GO TO 3.

NO >> Repair or replace damaged parts.

3. CHECK 4WD SHIFT SWITCH CIRCUIT (2)

1. Disconnect 4WD control unit harness connector.
2. Check the continuity between 4WD control unit harness connector and 4WD shift switch harness connector.

4WD control unit		4WD shift switch		Continuity
Connector	Terminal	Connector	Terminal	
B67	5	M212	3	Not existed
	5		6	Existed
	5		8	Not existed
	12		3	Existed
	12		6	Not existed
	12		8	Not existed
	14		3	Not existed
	14		6	Not existed
	14		8	Existed

3. Check the continuity between 4WD control unit harness connector and ground.

4WD control unit		Ground	Continuity
Connector	Terminal		
B67	5	Ground	Not existed
	12		
	14		

Is the inspection result normal?

YES >> GO TO 4.
NO >> Repair or replace damaged parts.

4. CHECK 4WD CONTROL UNIT OUTPUT SIGNAL

1. Connect 4WD control unit harness connector.
2. Turn the ignition switch ON.
3. Check the voltage between 4WD shift switch harness connector and ground.

4WD shift switch		Ground	Voltage (Approx.)
Connector	Terminal		
M212	3	Ground	Battery voltage
	6		
	8		

Is the inspection result normal?

YES >> Check each harness connector pin terminal for disconnection.
NO >> Replace 4WD control unit. Refer to DLN-72, "Removal and Installation".

Component Inspection

INFOID:0000000012552681

1. CHECK 4WD SHIFT SWITCH

1. Turn the ignition switch OFF.
2. Remove 4WD shift switch.
3. Check the continuity between 4WD shift switch connector terminals.

4WD shift switch			Continuity
Terminal		Condition	
2	3	4WD shift switch: 2WD	Existed
		Except the above	Not existed
2	6	4WD shift switch: AUTO	Existed
		Except the above	Not existed
2	8	4WD shift switch: LOCK	Existed
		Except the above	Not existed

Is the inspection result normal?

YES >> INSPECTION END
NO >> Replace 4WD shift switch. Refer to DLN-73, "Removal and Installation".

C1210 ECM

DTC Logic

INFOID:0000000012552682

DTC DETECTION LOGIC

DTC	Display item	Malfunction detected condition	Possible cause
C1210	ENGINE SIGNAL 1	Malfunction related to engine signal has been detected.	Malfunction of engine control system

DTC CONFIRMATION PROCEDURE

1.PRECONDITIONING

If “DTC CONFIRMATION PROCEDURE” has been previously conducted, always turn ignition switch OFF and wait at least 10 seconds before conducting the next test.

>> GO TO 2.

2.PERFORM DTC CONFIRMATION

With CONSULT

1. Start the engine and drive at 30 km/h (19 MPH) or more for approximately 1 minute.
2. Perform self-diagnosis for “ALL MODE AWD/4WD”.

Is DTC “C1210” detected?

YES >> Proceed to diagnosis procedure. Refer to DLN-55, "Diagnosis Procedure".
NO >> INSPECTION END

Diagnosis Procedure

INFOID:0000000012552683

1.PERFORM ECM SELF-DIAGNOSIS

With CONSULT

Perform self-diagnosis for “ENGINE”.

Is any DTC detected?

YES >> Check the DTC. Refer to EC-104, "DTC Index" (USA and Canada) or EC-592, "DTC Index" (Mexico).
NO >> GO TO 2.

2.CHECK TERMINALS AND HARNESS CONNECTORS

Check 4WD control unit pin terminals for damage or loose connection with harness connector.

Is inspection result normal?

YES >> After turning the ignition switch OFF, perform DTC confirmation procedure again. If DTC “C1210” is detected, Replace 4WD control unit. Refer to DLN-72, "Removal and Installation".
NO >> Repair or replace error-detected parts.

P1804 4WD CONTROL UNIT

DTC Logic

INFOID:0000000012552684

DTC DETECTION LOGIC

DTC	Display item	Malfunction detected condition	Possible cause
P1804	CONTROL UNIT 3	Malfunction is detected in the memory (EEPROM) system of 4WD control unit.	Internal malfunction of 4WD control unit.

DTC CONFIRMATION PROCEDURE

1.PRECONDITIONING

If “DTC CONFIRMATION PROCEDURE” has been previously conducted, always turn ignition switch OFF and wait at least 10 seconds before conducting the next test.

>> GO TO 2.

2.PERFORM DTC CONFIRMATION

With CONSULT

1. Turn the ignition switch OFF to ON.
2. Perform self-diagnosis for “ALL MODE AWD/4WD”.

Is DTC “P1804” detected?

YES >> Proceed to DLN-56, "Diagnosis Procedure".
NO >> INSPECTION END

Diagnosis Procedure

INFOID:0000000012552685

1.PERFORM SELF-DIAGNOSIS AGAIN

With CONSULT

Perform “DTC CONFIRMATION PROCEDURE” (self-diagnosis) again. Refer to DLN-56, "DTC Logic".

Is DTC “P1804” detected?

YES >> Replace 4WD control unit. Refer to DLN-72, "Removal and Installation".
NO >> Check 4WD control unit pin terminals for damage or loose connection with harness connector. If any items are damaged, repair or replace error-detected parts.

P181F INCOMPLETE CALIBRATION

DTC Logic

INFOID:0000000012552686

DTC DETECTION LOGIC

DTC	Display item	Malfunction detected condition	Possible cause
P181F	INCOMP CALIBRATION	When incomplete writing unit characteristics of rear final drive is detected.	Writing unit characteristics is incomplete.

DTC CONFIRMATION PROCEDURE

1.PRECONDITIONING

If “DTC CONFIRMATION PROCEDURE” has been previously conducted, always turn ignition switch OFF and wait at least 10 seconds before conducting the next test.

>> GO TO 2.

2.PERFORM DTC CONFIRMATION

With CONSULT

1. Turn the ignition switch OFF to ON.
2. Perform self-diagnosis for “ALL MODE AWD/4WD”.

Is DTC “P181F” detected?

YES >> Proceed to DLN-57, "Diagnosis Procedure".
NO >> INSPECTION END

Diagnosis Procedure

INFOID:0000000012552687

1.PERFORM WRITING UNIT CHARACTERISTICS

1. Erase self-diagnostic result for “ALL MODE AWD/4WD”.
2. Perform writing unit characteristics. Refer to DLN-44, "Work Procedure".
3. Turn the ignition switch OFF to ON.
4. Perform self-diagnosis for “ALL MODE AWD/4WD”.

Is any DTC except “P181F” detected?

YES >> Perform trouble diagnosis for detected DTC. Refer to DLN-23, "DTC Index".
NO >> GO TO 2.

2.PERFORM SELF-DIAGNOSIS AGAIN

With CONSULT

Perform “DTC CONFIRMATION PROCEDURE” (self-diagnosis) again. Refer to DLN-23, "DTC Index".

Is DTC “P181F” detected?

YES >> Replace 4WD control unit. Refer to DLN-72, "Removal and Installation".
NO >> Check 4WD control unit pin terminals for damage or loose connection with harness connector. If any items are damaged, repair or replace error-detected parts.

U1000 CAN COMM CIRCUIT

Description

INFOID:0000000012552688

CAN (Controller Area Network) is a serial communication line for real time application. It is an on-vehicle multiplex communication line with high data communication speed and excellent error detection ability. Many electronic control units are equipped onto a vehicle, and each control unit shares information and links with other control units during operation (not independent). In CAN communication, control units are connected with 2 communication lines (CAN-H line, CAN-L line) allowing a high rate of information transmission with less wiring. Each control unit communicate data but selectively reads required data only.

DTC Logic

INFOID:0000000012552689

DTC DETECTION LOGIC

DTC	Display item	Malfunction detected condition	Possible cause
U1000	CAN COMM CIRCUIT	4WD control unit is not transmitting/receiving CAN communication signal for 2 seconds or more.	• CAN communication error • Malfunction of 4WD control unit

DTC CONFIRMATION PROCEDURE

1. PRECONDITIONING

If “DTC CONFIRMATION PROCEDURE” has been previously conducted, always turn ignition switch OFF and wait at least 10 seconds before conducting the next test.

>> GO TO 2.

2. PERFORM DTC CONFIRMATION

With CONSULT

1. Turn the ignition switch OFF to ON.
2. Perform self-diagnosis for “ALL MODE AWD/4WD”.

Is DTC “U1000” detected?

YES >> Proceed to DLN-58, "Diagnosis Procedure".
NO >> INSPECTION END

Diagnosis Procedure

INFOID:0000000012552690

Proceed to LAN-21, "Trouble Diagnosis Flow Chart".

U1010 CONTROL UNIT (CAN)

Description

INFOID:0000000012552691

CAN (Controller Area Network) is a serial communication line for real time application. It is an on-vehicle multiplex communication line with high data communication speed and excellent error detection ability. Many electronic control units are equipped onto a vehicle, and each control unit shares information and links with other control units during operation (not independent). In CAN communication, control units are connected with 2 communication lines (CAN-H line, CAN-L line) allowing a high rate of information transmission with less wiring. Each control unit communicate data but selectively reads required data only.

DTC Logic

INFOID:0000000012552692

DTC DETECTION LOGIC

DTC	Display item	Malfunction detected condition	Possible cause
U1010	CONTROL UNIT (CAN)	Detecting error during the initial diagnosis of CAN controller of 4WD control unit.	Malfunction of 4WD control unit

DTC CONFIRMATION PROCEDURE

1. PRECONDITIONING

If “DTC CONFIRMATION PROCEDURE” has been previously conducted, always turn ignition switch OFF and wait at least 10 seconds before conducting the next test.

>> GO TO 2.

2. PERFORM DTC CONFIRMATION

With CONSULT

1. Turn the ignition switch OFF to ON.
2. Perform self-diagnosis for “ALL MODE AWD/4WD”.

Is DTC “U1010” detected?

YES >> Proceed to DLN-59, "Diagnosis Procedure".
NO >> INSPECTION END

Diagnosis Procedure

INFOID:0000000012552693

1. CHECK 4WD CONTROL UNIT

Check 4WD control unit harness connector for disconnection and deformation.

Is the inspection result normal?

YES >> Replace 4WD control unit. Refer to DLN-72, "Removal and Installation".
NO >> Repair or replace error-detected parts.

POWER SUPPLY AND GROUND CIRCUIT

Diagnosis Procedure

INFOID:0000000012552694

Regarding Wiring Diagram information, refer to DLN-24, "Wiring Diagram -With Around View Monitor System-" or DLN-33, "Wiring Diagram -Without Around View Monitor System-".

1. CHECK 4WD CONTROL UNIT POWER SUPPLY (1)

1. Turn the ignition switch OFF.
2. Disconnect 4WD control unit harness connector.
3. Check the voltage between 4WD control unit harness connector and ground.

4WD control unit		—	Voltage (Approx.)
Connector	Terminal		
B67	7	Ground	0 V

4. Turn the ignition switch ON.
   CAUTION:
   Never start the engine.
5. Check the voltage between 4WD control unit harness connector and ground.

4WD control unit		—	Voltage
Connector	Terminal		
B67	7	Ground	Battery voltage

Is the inspection result normal?

YES >> GO TO 3.
NO >> GO TO 2.

2. CHECK 4WD CONTROL UNIT POWER SUPPLY (2)

1. Turn the ignition switch OFF.
2. Check the 10A fuse (#49).
3. Disconnect IPDM E/R harness connector.
4. Check the continuity between 4WD control unit harness connector and IPDM E/R harness connector.

4WD control unit		IPDM E/R		Continuity
Connector	Terminal	Connector	Terminal	
B67	7	E119	19	Existed

5. Check the continuity between 4WD control unit harness connector and the ground.

4WD control unit		—	Continuity
Connector	Terminal		
B67	7	Ground	Not existed

Is the inspection result normal?

YES >> Perform the trouble diagnosis for ignition power supply circuit. Refer to PG-28, "Wiring Diagram - IGNITION POWER SUPPLY -".
NO >> Repair or replace error-detected parts.

3. CHECK 4WD CONTROL UNIT POWER SUPPLY (3)

1. Turn the ignition switch OFF.
2. Check the voltage between 4WD control unit harness connector and ground.

4WD control unit		—	Voltage
Connector	Terminal		
B67	15	Ground	Battery voltage

3. Turn the ignition switch ON.
   CAUTION:
   Never start the engine.
4. Check the voltage between 4WD control unit harness connector and ground.

4WD control unit		—	Voltage
Connector	Terminal		
B67	15	Ground	Battery voltage

Is the inspection result normal?

YES >> GO TO 5.
NO >> GO TO 4.

4. CHECK 4WD CONTROL UNIT POWER SUPPLY (4)

1. Turn the ignition switch OFF.
2. Check the 10A fuse (#25).
3. Disconnect fuse block (J/B) harness connector.
4. Check the continuity between 4WD control unit harness connector and fuse block (J/B) harness connector.

4WD control unit		Fuse block (J/B)		Continuity
Connector	Terminal	Connector	Terminal	
B67	15	M3	2N	Existed

5. Check the continuity between 4WD control unit harness connector and the ground.

4WD control unit		—	Continuity
Connector	Terminal		
B67	15	Ground	Not existed

Is the inspection result normal?

YES >> Perform the trouble diagnosis for power supply circuit. Refer to PG-15, "Wiring Diagram - BATTERY POWER SUPPLY -".
NO >> Repair or replace error-detected parts.

5. CHECK 4WD SOLENOID POWER SUPPLY (1)

1. Turn the ignition switch OFF.
2. Disconnect 4WD solenoid harness connector.
3. Check the voltage between 4WD control unit harness connector and ground.

4WD control unit		—	Voltage
Connector	Terminal		
B67	9	Ground	Battery voltage

4. Turn the ignition switch ON.
   CAUTION:
   Never start the engine.
5. Check the voltage between 4WD control unit harness connector and ground.

4WD control unit		—	Voltage
Connector	Terminal		
B67	9	Ground	Battery voltage

Is the inspection result normal?

YES >> GO TO 7.
NO >> GO TO 6.

6. CHECK 4WD SOLENOID POWER SUPPLY (2)

1. Turn the ignition switch OFF.
2. Check the 10A fuse (#62)
3. Check the harness for open or short between 4WD control unit harness connector No.9 terminal and 10A fuse (#62).

Is the inspection result normal?

YES >> Perform the trouble diagnosis for power supply circuit. Refer to PG-15, "Wiring Diagram - BATTERY POWER SUPPLY -".
NO >> Repair or replace error-detected parts.

7. CHECK 4WD CONTROL UNIT GROUND

1. Turn the ignition switch OFF.
2. Check the continuity between 4WD control unit harness connector and ground.

4WD control unit		—	Continuity
Connector	Terminal		
B67	10	Ground	Existed
	11		

Is the inspection result normal?

YES >> INSPECTION END
NO >> Repair or replace error-detected parts.

4WD WARNING ICON/DISPLAY

Diagnosis Procedure

INFOID:0000000012552695

1. CHECK POWER SUPPLY AND GROUND CIRCUIT

Perform the trouble diagnosis for power supply and ground circuit. Refer to DLN-60, "Diagnosis Procedure".

Is the inspection result normal?

YES >> GO TO 2.
NO >> Repair or replace the error-detected parts.

2. PERFORM SELF-DIAGNOSIS (4WD CONTROL UNIT)

With CONSULT

Perform self-diagnosis for “ALL MODE AWD/4WD”.

Is any detected?

YES >> Check the DTC. Refer to DLN-23, "DTC Index".
NO >> GO TO 3.

3. PERFORM SELF-DIAGNOSIS (COMBINATION METER)

With CONSULT

Perform self-diagnosis for “METER/M&A”.

Is any detected?

YES >> Check the DTC. Refer to MWI-29, "DTC Index".
NO >> Perform the trouble diagnosis for combination meter power supply circuit. Refer to MWI-61, "COMBINATION METER : Diagnosis Procedure".

SYMPTOM DIAGNOSIS

4WD ERROR IS DISPLAYED ON INFORMATION DISPLAY

Description

INFOID:0000000012552696

4WD warning indicator is displayed on information display after the engine started.

Diagnosis Procedure

INFOID:0000000012552697

1.PERFORM SELF-DIAGNOSIS

With CONSULT
Perform self-diagnosis for “ALL MODE AWD/4WD”.

Is any DTC detected?

YES >> Check the DTC. Refer to DLN-23, "DTC Index".
NO >> GO TO 2.

2.CHECK 4WD WARNING ICON/DISPLAY

Perform the trouble diagnosis of the 4WD warning icon/display. Refer to DLN-63, "Diagnosis Procedure".

Is the inspection result normal?

YES >> Check each harness connector pin terminal for malfunction or disconnection.
NO >> Repair or replace the error-detected parts.

HEAVY TIGHT-CORNER BRAKING SYMPTOM OCCURS

Description

INFOID:0000000012552698

Heavy tight-corner braking symptom occurs when the vehicle is driven and the steering wheel is turned fully to either side after the engine is started.

NOTE:
Light tight-corner braking symptom may occur depending on driving conditions. This is not malfunction.

Diagnosis Procedure

INFOID:0000000012552699

1. PERFORM ECM SELF-DIAGNOSIS

With CONSULT
Perform self-diagnosis for “ENGINE”.

Is any DTC detected?

YES >> Check the DTC. Refer to EC-104, "DTC Index" (USA and Canada) or EC-592, "DTC Index" (Mexico).
NO >> GO TO 2.

2. PERFORM SELF-DIAGNOSIS

With CONSULT
Perform self-diagnosis for “ALL MODE AWD/4WD”.

Is DTC “U1000” detected?

YES >> Proceed to LAN-21, "Trouble Diagnosis Flow Chart".
NO >> GO TO 3.

3. CHECK 4WD SOLENOID

Perform the trouble diagnosis of the 4WD solenoid. Refer to DLN-47, "Diagnosis Procedure".

Is the inspection result normal?

YES >> GO TO 4.
NO >> Repair or replace the error-detected parts.

4. CHECK ELECTRIC CONTROLLED COUPLING

1. Turn the ignition switch OFF.
2. Set the transaxle to neutral. Release the parking brake.
3. Lift up the vehicle.
4. Rotate the propeller shaft by hand.
5. Hold rear wheel of right and left lightly.

Does rear wheel rotate?

YES >> Replace electric controlled coupling for mechanical malfunction (clutch sticking etc.). Refer to DLN-120, "Removal and Installation".
NO >> Check each harness connector pin terminal for disconnection.

VEHICLE DOES NOT ENTER 4WD MODE

Description

INFOID:0000000012552700

Vehicle does not enter 4-wheel drive mode even though 4WD warning indicator is not displayed.

Diagnosis Procedure

INFOID:0000000012552701

1. CHECK 4WD WARNING ICON/DISPLAY

Perform the trouble diagnosis of the 4WD warning icon/display. Refer to DLN-63, "Diagnosis Procedure".

Is the inspection result normal?

YES >> GO TO 2.
NO >> Repair or replace the error-detected parts.

2. CHECK PARKING BRAKE SWITCH SIGNAL

With CONSULT

Check “P BRAKE SW” of CONSULT “DATA MONITOR” for “ALL MODE AWD/4WD”.

Monitor Item	Condition	Status
P BRAKE SW	When the parking brake pedal is operation.	On
	When the parking brake pedal is not operation.	Off

Is the inspection result normal?

YES >> GO TO 3.
NO >> Proceed to BRC-139, "Diagnosis Procedure" (Type 1) or BRC-300, "Diagnosis Procedure" (Type 2).

3. CRUISE TEST

Drive the vehicle for a period of time.

Does any symptom occur?

YES >> Replace electric controlled coupling for mechanical malfunction (mechanical engagement of clutch is not possible). Refer to DLN-120, "Removal and Installation".
NO >> Check each harness connector pin terminal for disconnection.

4WD HIGH TEMP IS DISPLAYED ON INFORMATION DISPLAY

Description

INFOID:0000000012552702

While driving, 4WD warning indicator is quickly blinked on information display and it turns OFF after 1 minute.

- This symptom protects drivetrain parts when a heavy load is applied to the electric controlled coupling and multiple disc clutch temperature increases. Also, optional distribution of torque sometimes becomes rigid before lamp blinks quickly. Both cases are not malfunction. Refer to DLN-22, "Protection Function".
- When this symptom occurs, stop vehicle and allow it to idle for some times. Blinking will stop and system will be restored.

TIRE SIZE INCORRECT IS DISPLAYED ON INFORMATION DISPLAY

Description

INFOID:0000000012552703

While driving, 4WD warning indicator is slowly blinked on information display.

Diagnosis Procedure

INFOID:0000000012552704

1. CHECK TIRE

Check the following.
- Tire pressure
- Wear condition
- Front and rear tire size (There is no difference between front and rear tires.)

Is the inspection result normal?

YES >> GO TO 2.
NO >> Repair or replace error-detected parts. And then, drive the vehicle at speed of 20 km/h (12 MPH) or more for 5 seconds or more. Improper size information is initialized accordingly.

2. CHECK INPUT SIGNAL OF TIRE DIAMETER

With CONSULT
1. Start the engine.
2. Drive at 20 km/h (12 MPH) or more for approximately 4 minutes continually.
3. Check “DIS-TIRE MONI” of CONSULT “DATA MONITOR” for “ALL MODE AWD/4WD”.

Does the item on “DATA MONITOR” indicate “0 - 4 mm”?

YES >> INSPECTION END
NO >> GO TO 3.

3. TERMINAL INSPECTION

Check 4WD control unit harness connector for disconnection.

Is the inspection result normal?

YES >> Replace 4WD control unit. Refer to DLN-72, "Removal and Installation".
NO >> Repair or replace the error-detected parts.

NOISE, VIBRATION AND HARSHNESS (NVH) TROUBLESHOOTING

NVH Troubleshooting Chart

INFOID:0000000012552705

Use the chart below to find the cause of the symptom. The numbers indicate the order of the inspection. If necessary, repair or replace these parts.

Reference		DLN-70, "Inspection"			DLN-77, "Exploded View"	DLN-77, "Exploded View"	DLN-77, "Exploded View"	DLN-84, "Inspection"	DLN-84, "Inspection"
SUSPECTED PARTS (Possible cause)		TRANSFER OIL (Level low)	TRANSFER OIL (Wrong)	TRANSFER OIL (Level too high)	LIQUID GASKET (Damaged)	O-RING (Worn or damaged)	OIL SEAL (Worn or damaged)	GEAR (Worn or damaged)	BEARING (Worn or damaged)
Symptom	Noise	1	2				3	3	3
	Transfer oil leakage		3	1	2	2	2		

PERIODIC MAINTENANCE

TRANSFER OIL

Inspection

INFOID:0000000012552706

TRANSFER OIL LEAKS

Check that oil is not leaking from transfer assembly or around it.

TRANSFER OIL LEVEL

CAUTION:

Do not start engine while checking transfer oil level.

1. Remove filler plug (1) and gasket.

   ⇦ : Front

2. Transfer oil level (A) should be level with bottom of filler plug hole. Add transfer oil if necessary. Refer to MA-17, "FOR USA AND CANADA : Fluids and Lubricants" (United States and Canada) or MA-19, "FOR MEXICO : Fluids and Lubricants" (Mexico).
3. Set a new gasket onto filler plug, and install it in the transfer and tighten to specified torque. Refer to DLN-93, "Exploded View".
   CAUTION:
   Do not reuse gasket.

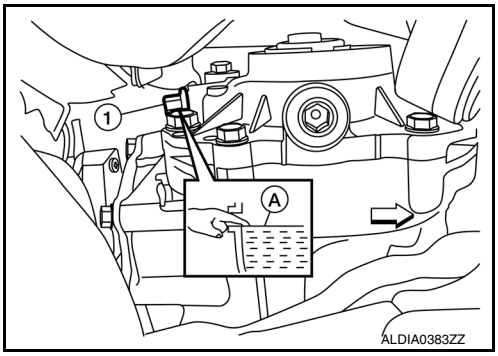

Draining

INFOID:0000000012552707

CAUTION:

Do not start engine while working.

1. Run the vehicle to warm up the transfer unit sufficiently.
2. Stop the engine and remove drain plug (1) and gasket and drain the transfer oil.

   ⇦ : Front

3. Set a new gasket onto filler plug, and install it in the transfer and tighten to specified torque. Refer to DLN-93, "Exploded View".
   CAUTION:
   Do not reuse gasket.

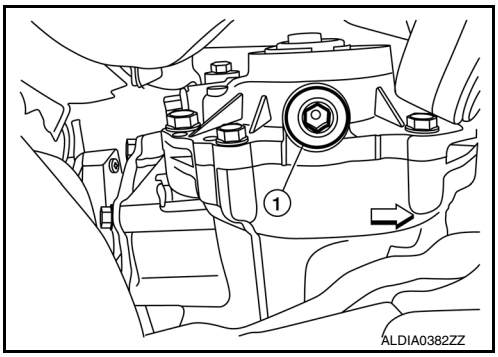

Refilling

INFOID:0000000012552708

CAUTION:

Do not start engine while checking transfer oil level.

1. Remove filler plug (1).
2. Fill with new transfer oil to the specified level near the filler plug hole.

   ⇦ : Front

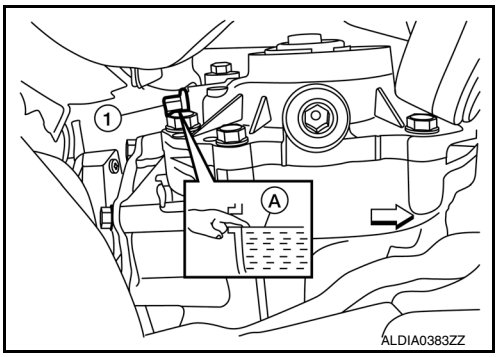

Transfer oil grade and viscosity	**: Refer to MA-17, "FOR USA AND CANADA : Fluids and Lubricants" (United States and Canada) or MA-19, "FOR MEXICO : Fluids and Lubricants" (Mexico).**
Transfer oil capacity	**: Refer to DLN-97, "General Specifications".**

3. Set a new gasket onto filler plug, and install it in the transfer and tighten to specified torque. Refer to DLN-93, "Exploded View".
   CAUTION:
   Do not reuse gasket.

REMOVAL AND INSTALLATION

4WD CONTROL UNIT

Removal and Installation

INFOID:0000000012552709

REMOVAL

1. Disconnect the negative battery terminal. Refer to PG-93, "Exploded View".
2. Remove storage box. Refer to INT-30, "Exploded View".
3. Remove 4WD control unit bolts (⬅).

   ⇦ : Front

4. Disconnect 4WD control unit harness connector.
5. Remove 4WD control unit (1).

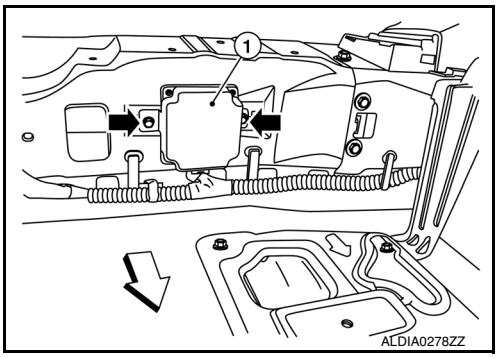

INSTALLATION

Installation is in the reverse order of removal.

- Tighten 4WD control unit bolts to specified torque.

4WD control unit bolts : 10.1 N·m (1.0 kg-m, 7 ft-lb)

CAUTION:

Do not drop or shock 4WD control unit.

Reset electronic systems as necessary. Refer to PG-87, "ADDITIONAL SERVICE WHEN REMOVING BATTERY NEGATIVE TERMINAL : Special Repair Requirement".

4WD SHIFT SWITCH

Removal and Installation

INFOID:0000000012552710

REMOVAL

1. Remove the CVT shift selector finisher. Refer to IP-18, "Exploded View".
2. Remove the 4WD lock switch finisher (1).

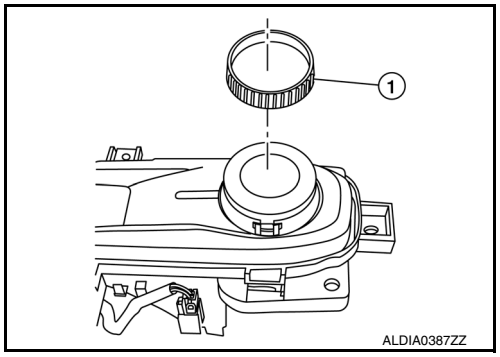

3. Remove the front seat climate control switch bracket screws (1) and the CVT shift selector indicator lamp screws (2). Refer to IP-18, "Exploded View".

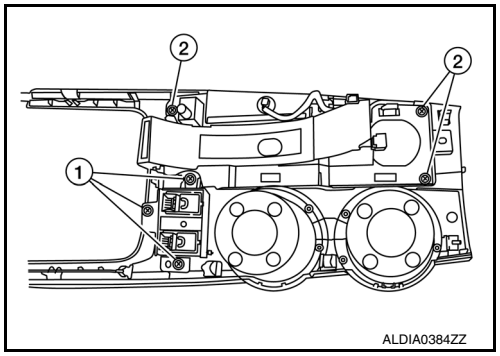

4. Separate the CVT shift selector indicator lamp from the CVT shift selector finisher by pressing down on the pawls.
   ◌: Pawls

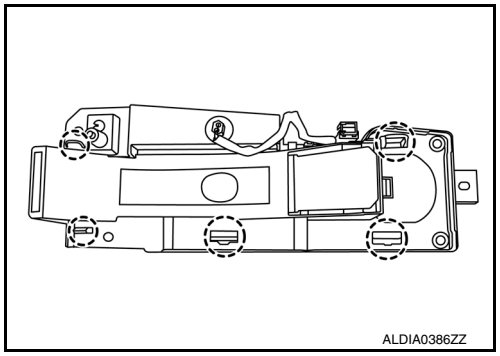

5. Remove the 4WD lock switch from the CVT shift selector indicator lamp.

INSTALLATION

Installation is in the reverse order of removal.

TRANSFER COVER

Removal and Installation

INFOID:0000000012552711

NOTE:
- Replacement on vehicle may cause damage to transfer cover, and may cause a transfer oil leak.
- If transfer cover oil seal requires replacement, remove the transfer assembly from the vehicle before replacing transfer cover oil seal. Refer to DLN-94, "Disassembly".

UNIT REMOVAL AND INSTALLATION

TRANSFER ASSEMBLY

Exploded View

INFOID:0000000012552712

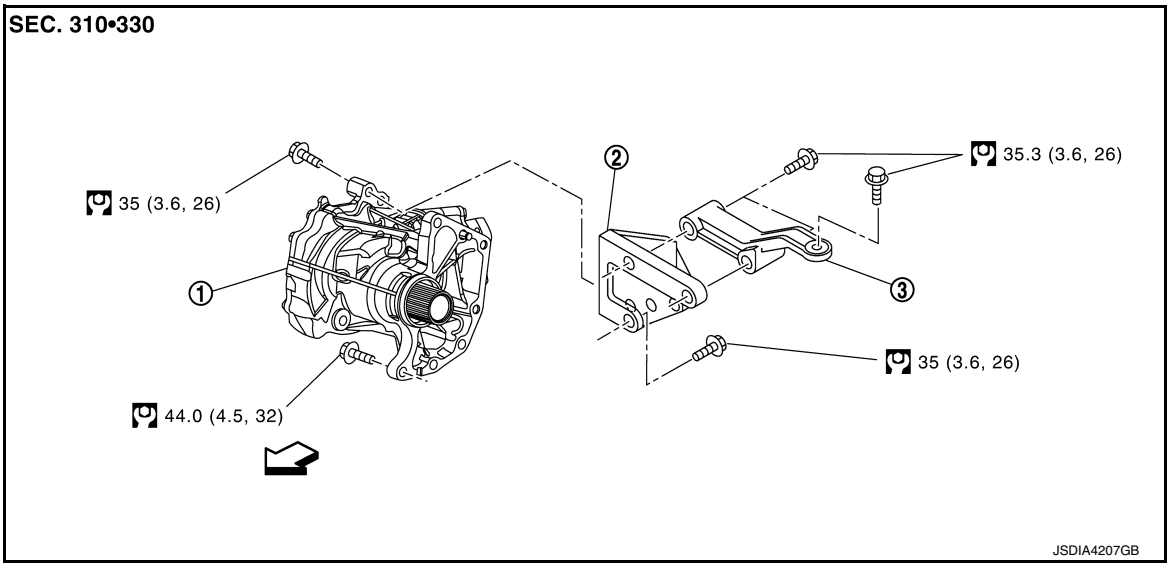

1. Transfer assembly
2. Transfer gusset
3. Rear gusset

⇦: Front

Removal and Installation

INFOID:0000000012552713

NOTE:
When removing components such as hoses, tubes/lines, etc., cap or plug openings to prevent fluid from spilling.

REMOVAL

1. Drain the transfer oil. Refer to DLN-70, "Draining".
2. Remove exhaust manifold (bank 1). Refer to EM-33, "Removal and Installation (bank 1)".
   CAUTION:
   Handle carefully to avoid any shock to three way catalyst.
3. Support transaxle with a suitable jack.
4. Remove the steering gear and linkage. Refer to ST-58, "Removal and Installation - 2WD" (2WD) or ST-60, "Removal and Installation - 4WD" (4WD).
5. Remove rear gusset and transfer gusset.
6. Remove transaxle assembly to transfer assembly bolts.
   CAUTION:
   Be careful not to damage gear ring oil seal inside of CVT.

Bolt No.	(A)	(B)
Quantity	4	2
Bolt length " ℓ " mm (in)	40 (1.57)	40 (1.57)

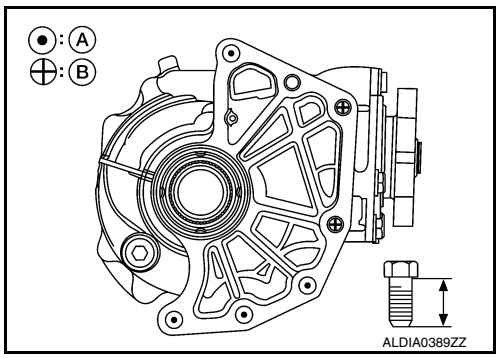

7. Remove transfer assembly from the vehicle.
   CAUTION:
   - **Do not damage air breather hose.**
   - **After removing transfer from transaxle, always replace differential side oil seal of the transaxle side with new one. Refer to TM-218, "Removal and Installation".**

INSTALLATION

Installation is in the reverse order of removal.

- When installing the transfer to the transaxle, install the bolts following the standard below.

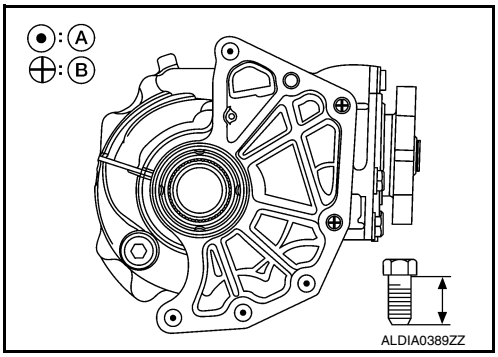

Bolt No.	(A)	(B)
Quantity	4	2
Bolt length “ℓ” mm (in)	40 (1.57)	40 (1.57)

CAUTION:

- **When installing transfer to transaxle, be careful not to damage oil seal of transaxle.**
- **Do not reuse differential side oil seal.**

- Check transfer oil level and check for transfer oil leaks after installation. Refer to DLN-70, "Refilling".

UNIT DISASSEMBLY AND ASSEMBLY

TRANSFER COVER

Exploded View

INFOID:0000000012552714

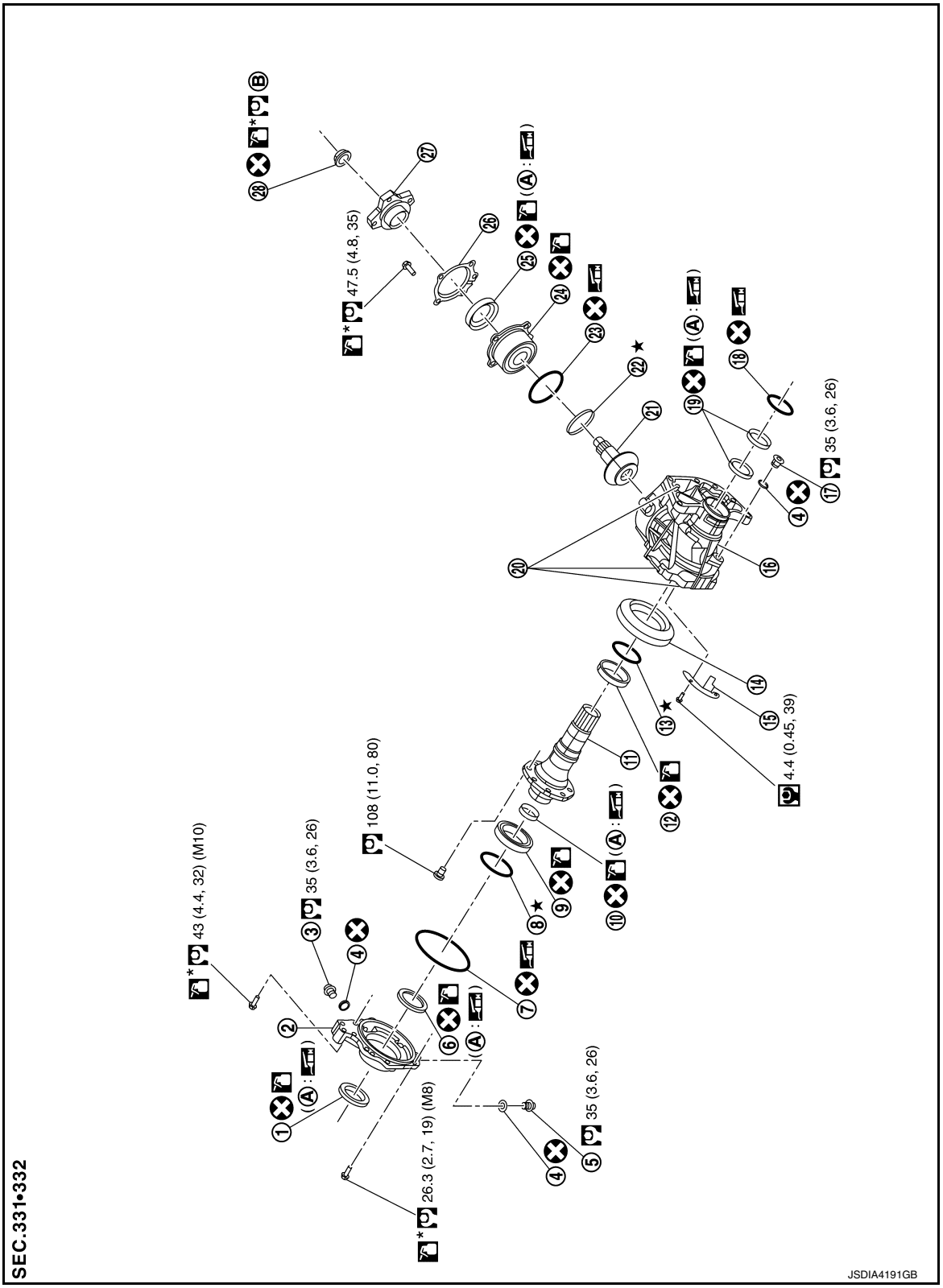

1. Oil seal	2. Transfer cover	3. Filler plug
4. Gasket	5. Drain plug	6. Oil seal
7. O-ring	8. Ring gear bearing adjusting shim (transfer cover side)	9. Ring gear bearing (transfer cover side)
10. Drive shaft oil seal	11. Ring gear shaft	12. Ring gear bearing (transfer case side)
13. Ring gear bearing adjusting shim (transfer case side)	14. Ring gear	15. Baffle plate
16. Transfer case	17. Plug	18. O-ring
19. Oil seal	20. Dowel pin	21. Drive pinion
22. Drive pinion adjusting shim	23. O-ring	24. Pinion bearing assembly
25. Oil seal	26. Dust cover	27. Companion flange
28. Pinion lock nut		
A. Oil seal lip	B. Comply with the assembly procedure when tightening. Refer to DLN-79, "Assembly".	

Disassembly

INFOID:0000000012552715

1. Remove transfer cover bolts (⬅).

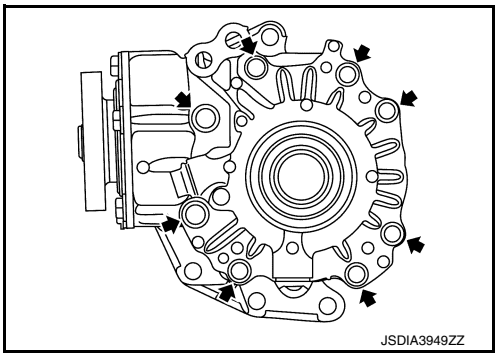

2. Lightly tap transfer cover (1) with a plastic hammer to remove transfer cover.
3. Remove O-ring from transfer cover.
   CAUTION:
   - **Do not use a tool.**
   - **Do not damage transfer cover.**

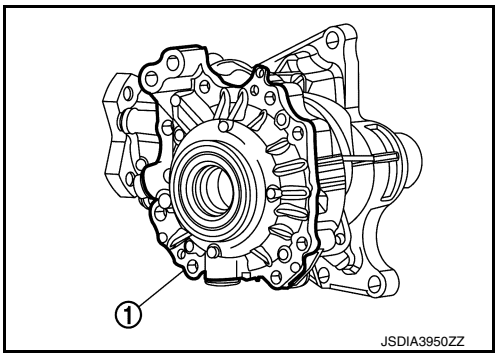

4. Lightly tap the metal part of oil seals (1) with punch from back side of transfer cover to remove oil seals.
   CAUTION:
   When removing, do not damage the transfer cover by scooping it out with a tool.

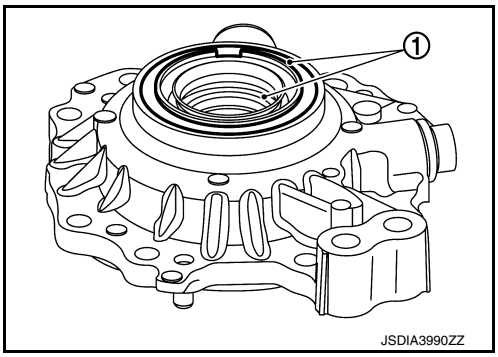

5. Remove the ring gear bearing adjusting shim (transfer cover side) (1) and ring gear bearing outer race (transfer cover side) (2) using a suitable tool.
6. Remove drain plug and gasket.
7. Remove filler plug and gasket.
8. Perform inspection after disassembly. Refer to DLN-80, "Inspection".

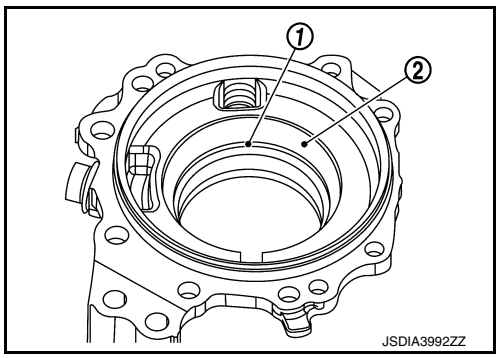

INFOID:0000000012552716

Assembly

1. Select the ring gear bearing adjusting shim (transfer cover side). Refer to DLN-87, "Adjustment".
2. Install the selected ring gear bearing adjusting shim (transfer cover side) (1) and ring gear bearing outer race (transfer cover side) (2) using a suitable tool.
   CAUTION:
   - **Do not reuse ring gear bearing.**
   - **Apply gear oil to the ring gear bearing.**
3. Install gasket onto drain plug and install them to transfer cover.
   CAUTION:
   Do not reuse gasket.

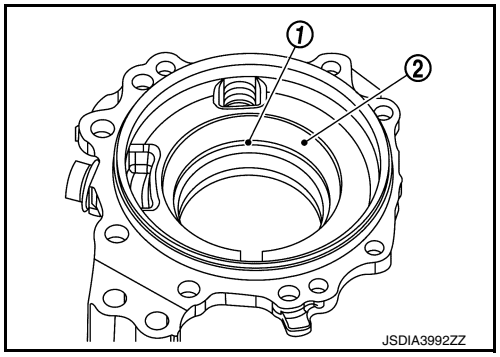

4. Install the transfer cover to the transfer case, and apply anti-corrosive oil onto thread and seats on the bolts. Then tighten bolts to the specified torque.

   (A) : M10 bolt
   (B) : M8 bolt

   NOTE:
   At this timing, O-ring installing to transfer cover is not necessary. Install O-ring after tooth contact is checked.
5. Check backlash, tooth contact, total preload and companion flange runout. Refer to DLN-87, "Adjustment".
   CAUTION:
   Measure the total preload without oil seals of transfer cover and transfer case.

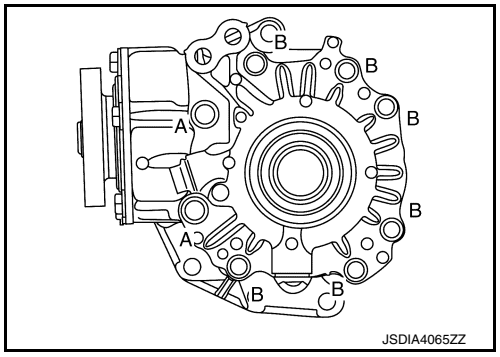

6. Remove transfer cover to install O-ring.
7. Apply multi-purpose grease lightly and evenly onto an O-ring, and install it to the transfer cover.
   CAUTION:
   - **Do not reuse O-ring.**
   - **When installing O-ring, do not use a tool.**
   - **Do not damage O-ring.**
8. Install the transfer cover to the transfer case, and apply anti-corrosive oil onto thread and seats on the bolts. Then tighten bolts to the specified torque.

   (A) : M10 bolt
   (B) : M8 bolt

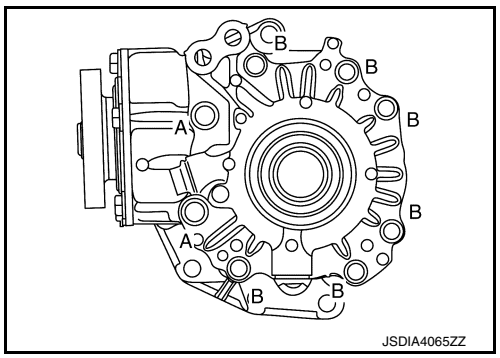

9. Drive the transfer cover oil seals using a suitable tool.

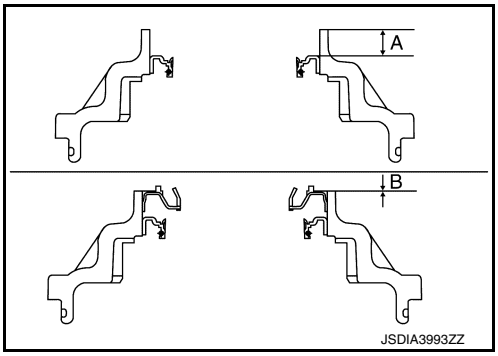

(A) : 10.3 +0.6/-0 mm (0.406 +0.024/-0 in)

(B) : 0 +0.6/-0 mm (0 +0.024/-0 in)

CAUTION:
- **When checking the total preload torque, measure it without the oil seal, then install the oil seal.**
- **Do not reuse the oil seal.**
- **When installing, do not incline oil seal.**
- **Apply multi-purpose grease onto oil seal lips, and gear oil onto the circumference of the oil seal.**

10. Install gasket onto filler plug and install them to transfer cover.

CAUTION:
- **Do not reuse gasket.**
- **Install filler plug after oil is filled.**

Inspection

INFOID:0000000012552717

INSPECTION AFTER DISASSEMBLY

Check items below. If necessary, replace them with new ones.

Transfer cover

Check the bearing mounting surface for wear, cracks and damages.

RING GEAR SHAFT

Exploded View

INFOID:0000000012552718

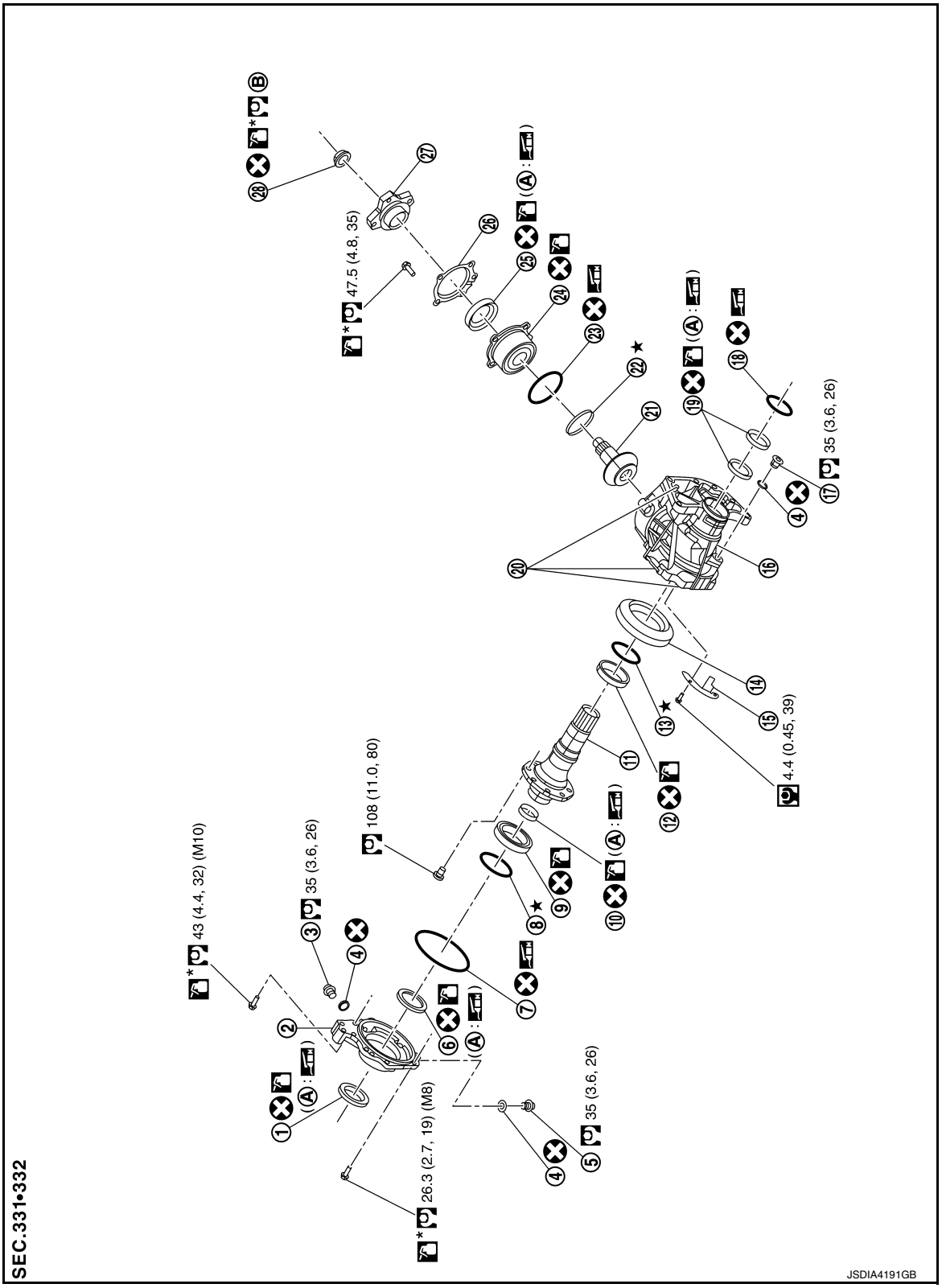

1. Oil seal
2. Transfer cover
3. Filler plug
4. Gasket
5. Drain plug
6. Oil seal

7. O-ring	8. Ring gear bearing adjusting shim (transfer cover side)	9. Ring gear bearing (transfer cover side)
10. Drive shaft oil seal	11. Ring gear shaft	12. Ring gear bearing (transfer case side)
13. Ring gear bearing adjusting shim (transfer case side)	14. Ring gear	15. Baffle plate
16. Transfer case	17. Plug	18. O-ring
19. Oil seal	20. Dowel pin	21. Drive pinion
22. Drive pinion adjusting shim	23. O-ring	24. Pinion bearing assembly
25. Oil seal	26. Dust cover	27. Companion flange
28. Pinion lock nut		
A. Oil seal lip	B. Comply with the assembly procedure when tightening. Refer to DLN-83, "Assembly".	

Disassembly

INFOID:0000000012552719

1. Remove transfer cover assembly. Refer to DLN-78, "Disassembly".
2. Remove ring gear bearing outer race (transfer cover side) and ring gear bearing adjusting shim (transfer cover side) from the transfer cover. Refer to DLN-82, "Disassembly".
3. Remove ring gear shaft assembly from the transfer case.
4. Remove ring gear bearing outer race (transfer case side) and ring gear bearing adjusting shim (transfer case side) from the transfer case. Refer to DLN-94, "Disassembly".
5. Remove ring gear bearing inner race (transfer cover side) from ring gear shaft using suitable tools.

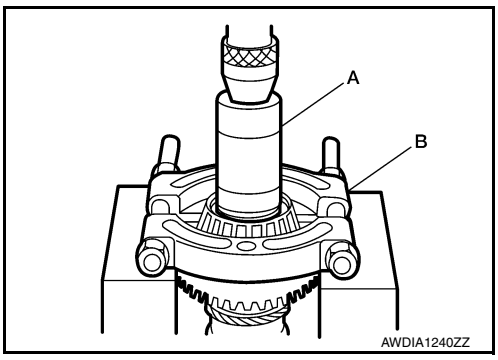

6. Remove ring gear bearing inner race (transfer case side) from ring gear shaft using suitable tool and Tool (A).

Tool number (A) : ST33031000 (J-8107-2)

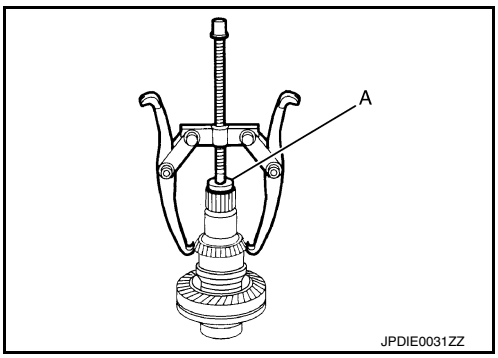

7. Remove the ring gear bolts.
8. Lightly tap ring gear with a plastic hammer to remove ring gear from the ring gear shaft.

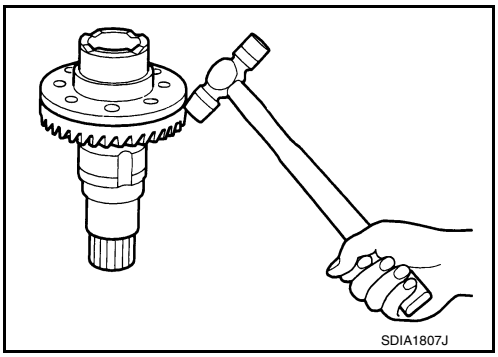

9. Remove drive shaft oil seal from the ring gear shaft using Tool (A).

Tool number (A) : KV381054S0 (J-34286)

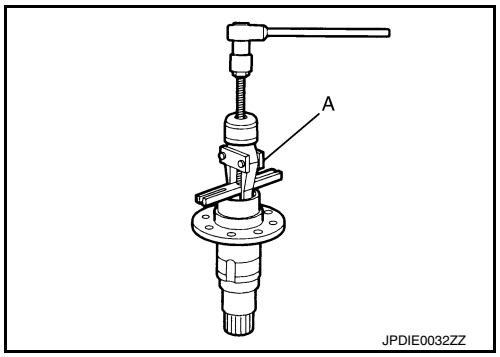

10. Perform inspection after disassembly. Refer to DLN-84, "Inspection".

Assembly

INFOID:0000000012552720

1. Using a suitable tool (A), install drive shaft oil seal (1) within the dimension (L) shown as follows.

(L) : 2.0 +0.6/–0 mm (0.079 +0.024/–0 in)

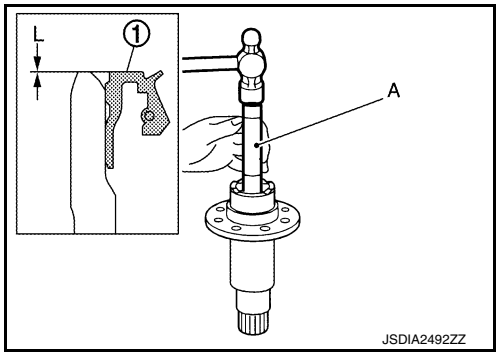

CAUTION:
- **Do not reuse the oil seal.**
- **When installing, do not incline oil seal.**
- **Apply multi-purpose grease onto oil seal lips, and gear oil onto the circumference of the oil seal.**

2. Select ring gear bearing adjusting shim (transfer case side) and ring gear bearing adjusting shim (transfer cover side). Refer to DLN-87, "Adjustment".
3. Assemble the selected ring gear bearing adjusting shim (transfer case side) and ring gear bearing outer race (transfer case side) to transfer case. Refer to DLN-95, "Assembly".
CAUTION:
- **Do not reuse ring gear bearing.**
- **Apply gear oil to the ring gear bearing.**
4. Assemble the selected ring gear bearing adjusting shim (transfer cover side) and ring gear bearing outer race (transfer cover side) to transfer cover. Refer to DLN-83, "Assembly".
CAUTION:
- **Do not reuse ring gear bearing.**
- **Apply gear oil to the ring gear bearing.**
5. Install the ring gear to ring gear shaft, and tighten bolts to the specified torque.
6. Install ring gear bearing inner race (transfer cover side) using a suitable tool (A).
CAUTION:
- **Do not reuse ring gear bearing.**
- **Apply gear oil to the ring gear bearing.**

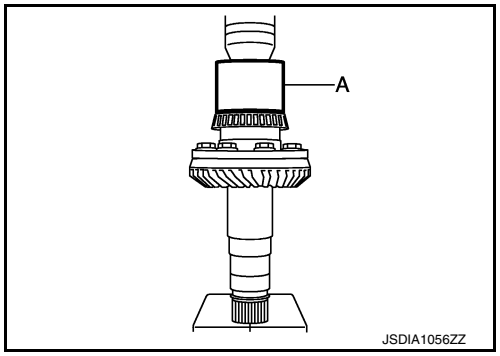

7. Install the ring gear bearing inner race (transfer case side) to ring gear shaft using suitable tool (A).
   CAUTION:
   - **Do not reuse ring gear bearing.**
   - **Apply gear oil to the ring gear bearing.**

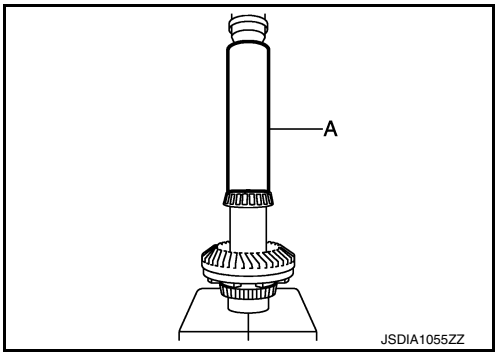

8. Install the ring gear shaft assembly to the transfer case.
   CAUTION:
   Protect transfer case oil seals beforehand from being damaged by the spline of ring gear shaft below method following.

a. Apply multi-purpose grease to spline part as shown.

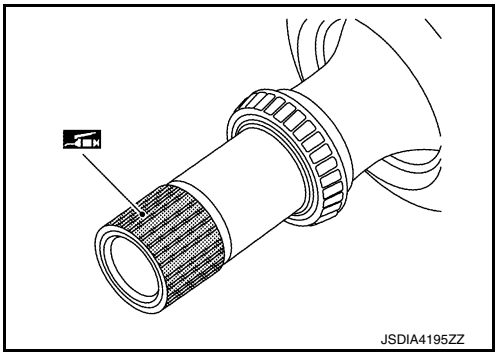

b. Wrap piece of vinyl to spline part only as shown. (A): Limit line
   CAUTION:
   Do not wrap sliding surfaces on oil seal.

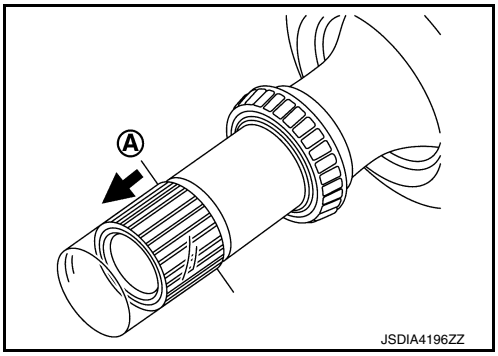

9. Install transfer cover to check and adjust each part. Refer to DLN-79, "Assembly".
   NOTE:
   At this timing, O-ring installing to transfer cover is not necessary. Install O-ring after backlash and tooth contact are checked.
10. Check backlash, tooth contact, total preload and companion flange runout. Refer to DLN-87, "Adjustment".
    CAUTION:
    Measure the total preload without oil seals of transfer cover and transfer case.
11. Reinstall transfer cover for installing O-ring. Refer to DLN-79, "Assembly".
12. After installing transfer case oil seals, remove wrapped vinyl from the spline of ring gear shaft.

Inspection

INFOID:0000000012552721

INSPECTION AFTER DISASSEMBLY

Check items below. If necessary, replace them with new ones.

Gear and Shaft

Check gear face and shaft for wear, cracks, damage, and seizure.

CAUTION:

If malfunction is detected on the ring gear or drive pinion, replace the ring gear and drive pinion as a set.

Bearing

Check for seizure, peeling, wear, corrosion, sticking, unusual noise, roughness in hand turning, and other damage.

CAUTION:

When replacing the bearing, always replace the inner race and outer race as a pair.

Shim

Check for seizure, damage, and unusual wear.

DRIVE PINION

Exploded View

INFOID:0000000012552722

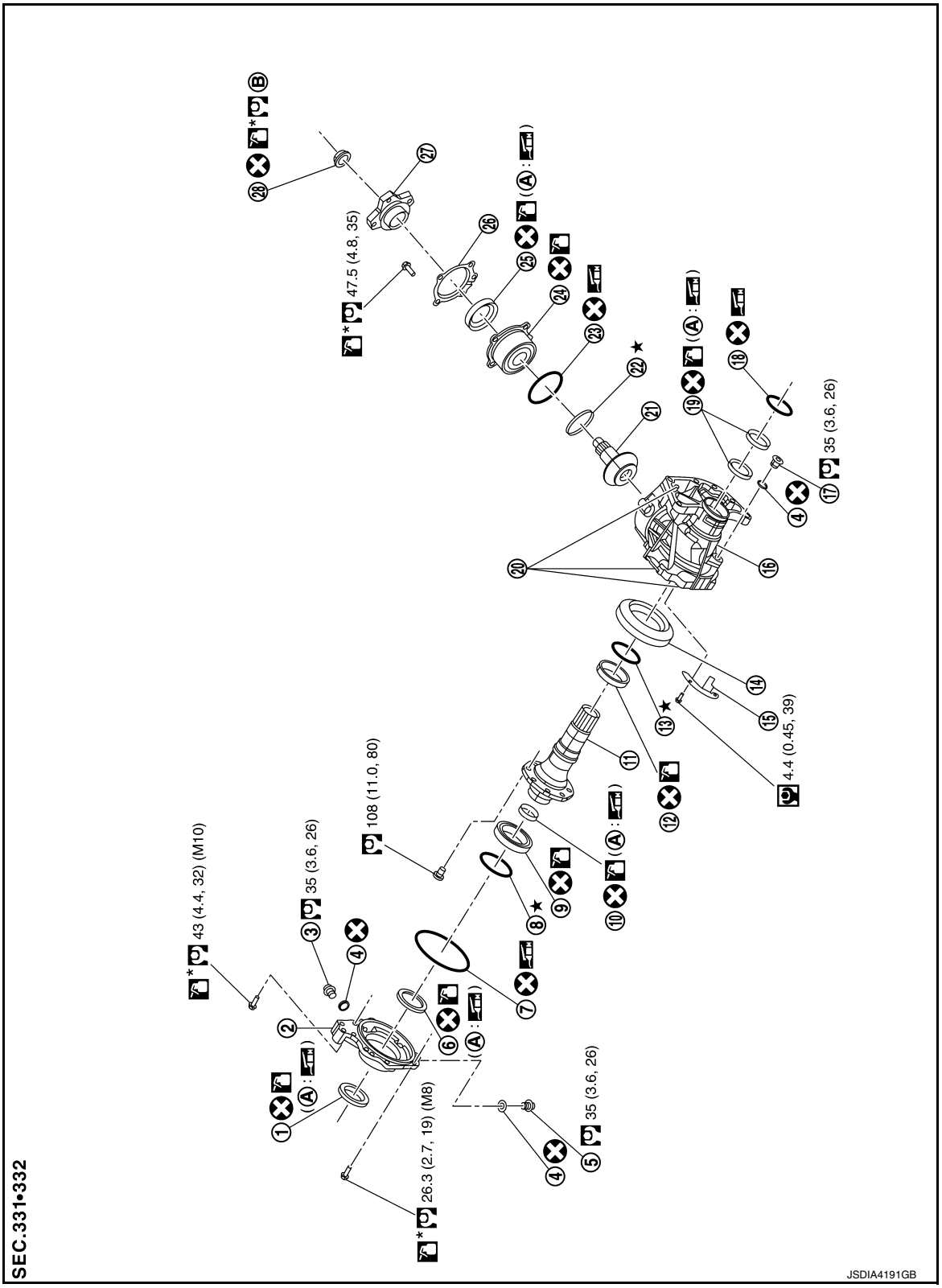

1. Oil seal
2. Transfer cover
3. Filler plug
4. Gasket
5. Drain plug
6. Oil seal

7. O-ring	8. Ring gear bearing adjusting shim (transfer cover side)	9. Ring gear bearing (transfer cover side)
10. Drive shaft oil seal	11. Ring gear shaft	12. Ring gear bearing (transfer case side)
13. Ring gear bearing adjusting shim (transfer case side)	14. Ring gear	15. Baffle plate
16. Transfer case	17. Plug	18. O-ring
19. Oil seal	20. Dowel pin	21. Drive pinion
22. Drive pinion adjusting shim	23. O-ring	24. Pinion bearing assembly
25. Oil seal	26. Dust cover	27. Companion flange
28. Pinion lock nut		
A. Oil seal lip	B. Comply with the assembly procedure when tightening. Refer to DLN-86, "Assembly".	

Disassembly

INFOID:0000000012552723

1. Remove pinion bearing assembly bolts.

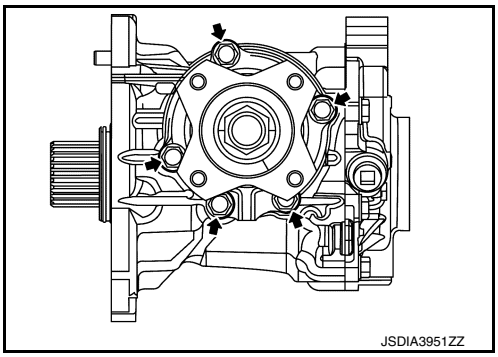

2. Lightly tap companion flange with a plastic hammer to remove drive pinion assembly (1).
3. Remove the O-ring from pinion bearing.
4. Remove the pinion lock nut.

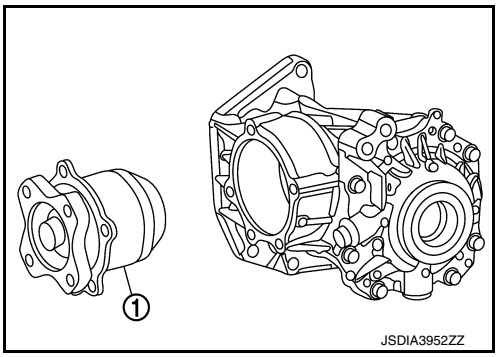

5. Remove drive pinion from pinion bearing assembly using suitable tools (A and B).
6. Remove adjusting shim.
7. Remove companion flange.
8. Remove the dust cover.
9. Remove the oil seal.
10. Perform inspection after disassembly. Refer to DLN-92, "Inspection".

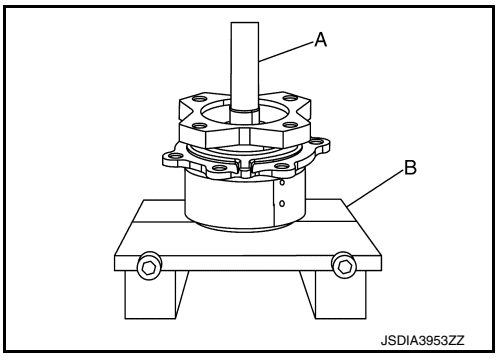

Assembly

INFOID:0000000012552724

1. Select drive pinion adjusting shim. Refer to DLN-87, "Adjustment".
2. Assemble the selected drive pinion adjusting shim to drive pinion.
3. Install the drive pinion to pinion bearing assembly using a suitable tool.

CAUTION:
- **Do not reuse pinion bearing assembly.**
- **Apply gear oil to pinion bearing part.**

4. Install oil seal to pinion bearing assembly using a suitable tool (A).

CAUTION:
- **Do not reuse the oil seal.**
- **When installing, do not incline oil seal.**
- **Apply multi-purpose grease onto oil seal lips, and gear oil onto the circumference of the oil seal.**

5. Install dust cover.

NOTE:
Tighten dust cover together with pinion bearing assembly.

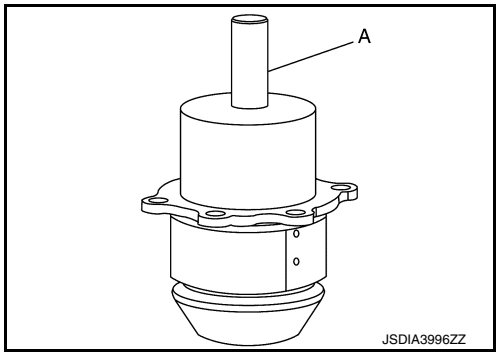

6. Install companion flange (1) to pinion bearing using a suitable tool (A).
7. Apply anti-corrosive oil to the thread and seat of the lock nut, and adjust the pinion lock nut tightening torque and pinion bearing preload torque, using Tool.

Tool number : ST3127S000 (J-25765-A)

a. Install pinion lock nut, and then tighten to the specified torque.

Pinion lock nut tightening torque : 90±9 N·m (9.2±0.92kg-m, 66±7 ft-lb)

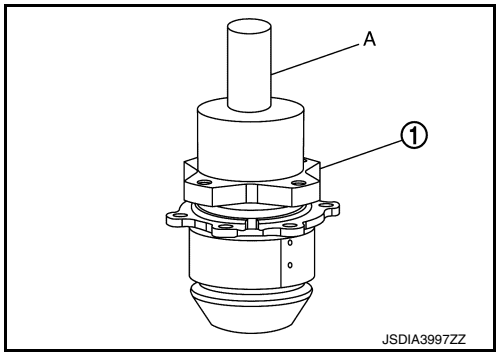

CAUTION:
- **Do not reuse pinion lock nut.**
- **Check that pinion lock nut is seated on the companion flange.**

b. After tightening pinion lock nut to the specified torque, retighten the pinion lock nut by 25 degrees.
c. Measure the pinion bearing preload using Tool.

Tool number : ST3127S000 (J-25765-A)
Pinion bearing preload : Refer to DLN-97, "Preload Torque".

8. Apply multi-purpose grease lightly and evenly onto an O-ring, and install it to the pinion bearing assembly.

CAUTION:
- **Do not reuse O-ring.**
- **When installing O-ring, do not use a tool.**
- **Do not damage O-ring.**

9. Install drive pinion assembly, and apply anti-corrosive oil onto thread and seats on the bolts. Tighten to the specified torque.

NOTE:
Tighten dust cover together with pinion bearing assembly.

10. Check backlash, tooth contact, total preload and companion flange runout. Refer to DLN-87, "Adjustment".

CAUTION:
Measure the total preload without oil seals of transfer cover and transfer case.

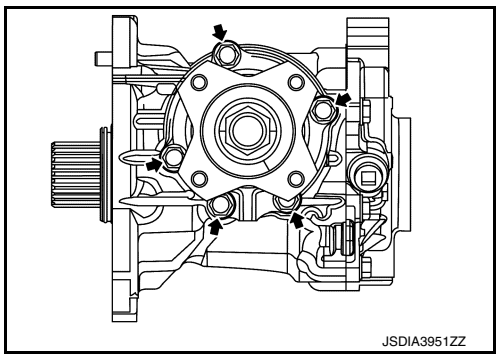

Adjustment

INFOID:0000000012552725

ADJUSTING SHIM SELECTION

Measurement point

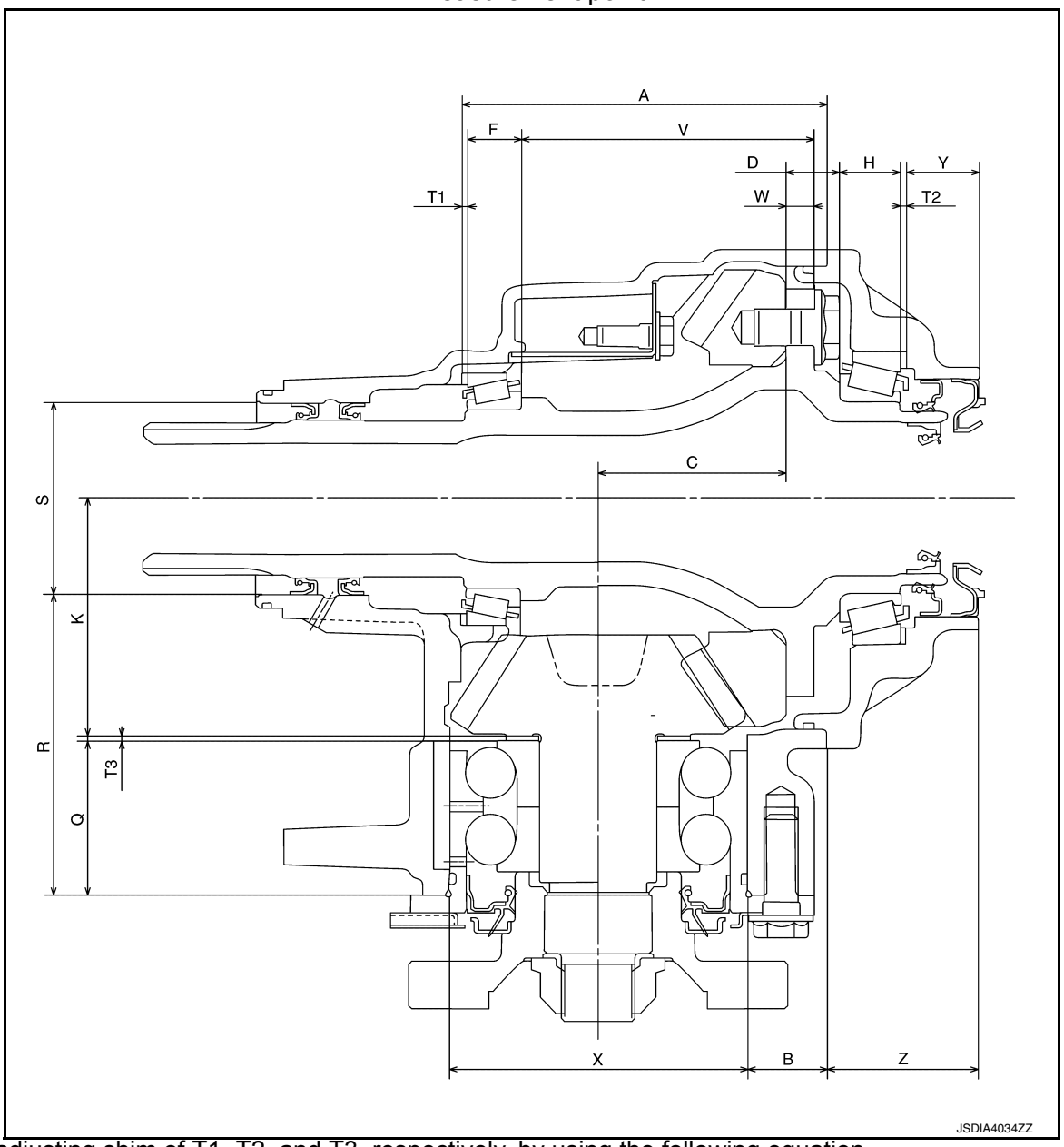

Select adjusting shim of T1, T2, and T3, respectively, by using the following equation.

T1 [Ring gear bearing adjusting shim (transfer case side)]
- T1 = A –(B +X/2) +C +W –V –F –(M/100) +0.071 mm (0.0028 in)

T2 [Ring gear bearing adjusting shim (transfer cover side)]
- T2 = –Y +Z +(B +X/2) –C –D –H +(M/100) +0.071 mm (0.0028 in)

T3 (Drive pinion adjusting shim)
- T3 = –Q +(R +S/2) –K +(O/100)

- Check dimension (M) on the ring gear side face.
  NOTE:
  Dimension “M” indicates the difference between the optimum engagement and standard dimensions in increments of 0.01 mm (0.0004 in) written on the ring gear side face.

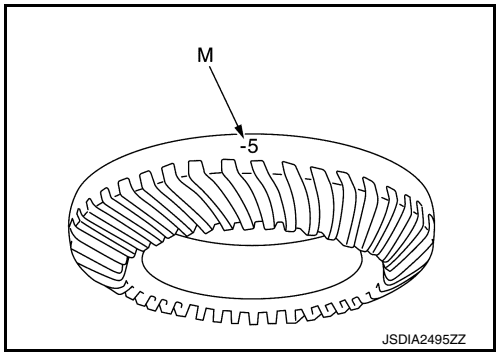

- Check dimension (O) on the gear end of drive pinion.
  NOTE:
  Dimension “O” indicates the difference between the optimum engagement and the standard dimensions in increments of 0.01 mm (0.0004 in) written on the gear end of drive pinion.

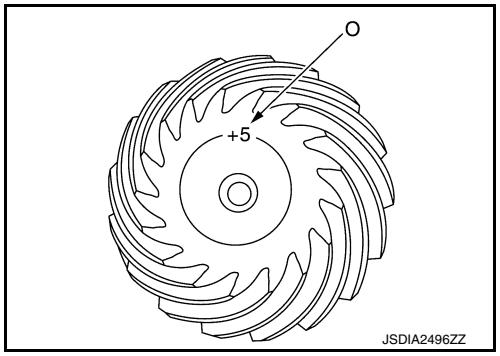

PINION BEARING PRELOAD

CAUTION:
When measuring preload, the rotating speed must be set to 30 rpm.

1. Remove ring gear shaft assembly from the transfer case. Refer to DLN-82, "Disassembly".
2. Rotate the companion flange back and forth from 2 to 3 times to check for unusual noise, binding, sticking, and so on.
3. Rotate the companion flange at least 20 times to check for smooth operation of the bearing.
4. Measure the pinion bearing preload using Tool (A).

Tool number (A)	**: ST3127S000 (J-25765-A)**
Pinion bearing preload	**: Refer to DLN-97, "Preload Torque".**

CAUTION:
Each rotational part should rotate smoothly with the specified gear oil.
- If outside the standard, disassemble the drive pinion assembly to check and adjust each part.

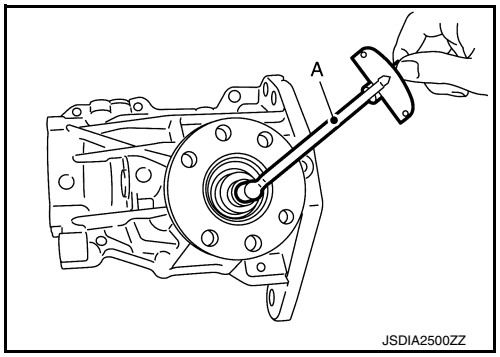

TOTAL PRELOAD

CAUTION:
When measuring preload, the rotating speed must be set to 30 rpm.

1. Measure pinion bearing preload.
   CAUTION:
   Check that the pinion bearing preload is within the standard.
2. Assemble the ring gear shaft assembly to the transfer case. Refer to DLN-83, "Assembly"
3. Install transfer cover to check and adjust each part. Refer to DLN-79, "Assembly".
4. Rotate the companion flange at least 20 times to check for smooth operation of the bearing.

5. Measure the total preload using Tool (A).

Tool number (A)	**: ST3127S000 (J-25765-A)**
Total preload	**: Refer to DLN-97, "Preload Torque".**

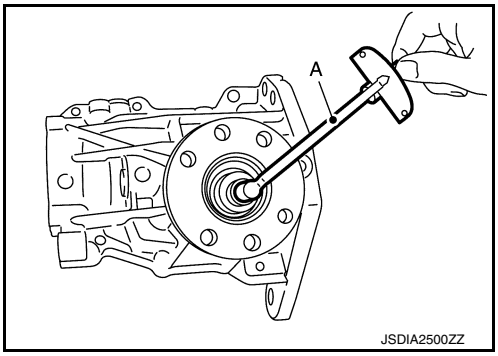

CAUTION:
Each rotational part should rotate smoothly with the specified gear oil.
- If outside the standard, disassemble the transfer assembly to check and adjust each part. Measure it with the transfer case oil seal and transfer cover oil seal removed when measuring total preload after disassembly. Then install transfer case oil seals and transfer cover oil seal.

BACKLASH

1. Install the bolt to the companion flange.
2. Fit a dial indicator onto the bolt (A).
3. Measure the circumference backlash of the companion flange.

Backlash	**: Refer to DLN-97, "Backlash".**

- If outside the standard, disassemble the transfer assembly to check and adjust each part.

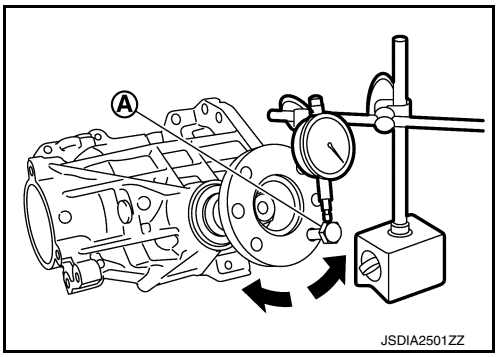

TOOTH CONTACT

1. Remove transfer cover. Refer to DLN-78, "Disassembly".
2. Remove ring gear shaft assembly from transfer case. Refer to DLN-82, "Disassembly".
3. Apply red lead onto the ring gear.
   CAUTION:
   Apply red lead to both faces of 3 to 4 gears at 4 locations evenly spaced on the ring gear.
4. Assemble the ring gear shaft assembly to the transfer case. Refer to DLN-83, "Assembly".
5. Install transfer cover to check and adjust each part. Refer to DLN-79, "Assembly".
   NOTE:
   At this timing, O-ring installing to transfer cover is not necessary. Install O-ring after backlash and tooth contact are checked.
6. Remove the plug from the transfer case.
7. Rotate the companion flange back and forth several times, and check the drive pinion gear to ring gear tooth contact by viewing from the plug hole.

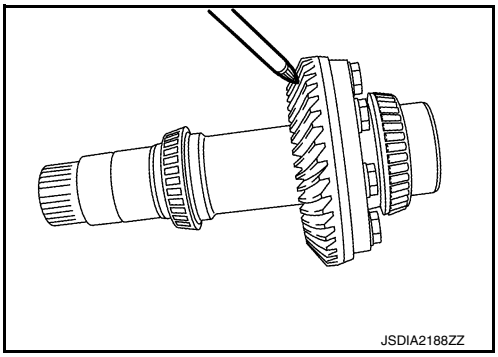

Tooth Contact Judgment Guide

Drive pinion adjusting shim selection value mm(in)		Tooth contact condition: Drive side	Tooth contact condition: Back side	Need for adjustment
Thinner	-0.09 (-0.0035)	Heel side / Toe side	Toe side / Heel side	YES
	-0.06 (-0.0024)			
	-0.03 (-0.0012)			NO
	0			
Thicker	+0.03 (+0.0012)			
	+0.06 (+0.0024)			YES
	+0.09 (+0.0035)			

JSDIA4035GB

8. Follow the procedure below to adjust pinion height (dimension X) if tooth contact is improper. For selecting adjusting shim, refer to the latest parts information.
CAUTION:
If no adjusting shim with the calculated value is available, select the thicker and closest one.

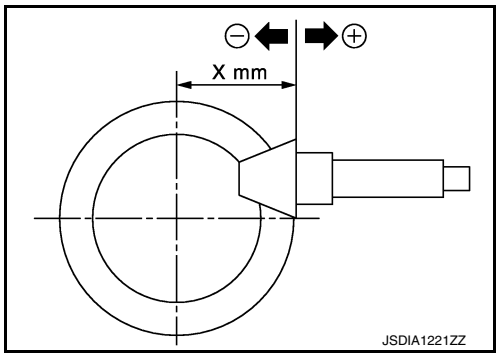

- Thicken the drive pinion adjusting shim to move the drive pinion closer to the ring gear in case of face contact or heel contact.
CAUTION:
Only one adjusting shim can be selected.

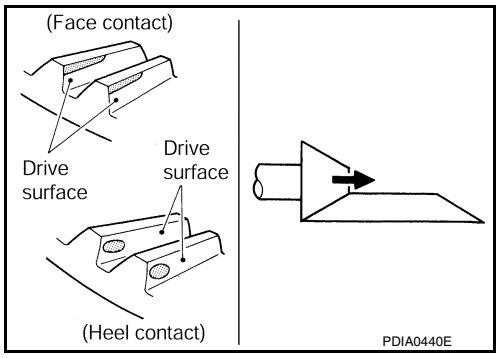

- Thin the drive pinion adjusting shim to move the drive pinion farther from the ring gear in case of flank contact or toe contact.

CAUTION:
Only one adjusting shim can be selected.

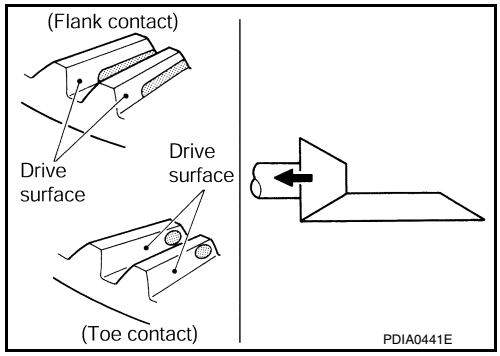

COMPANION FLANGE RUNOUT

1. Fit a dial indicator onto the companion flange face (inner side of the propeller shaft bolt holes).
2. Rotate the companion flange to check for runout.

Companion flange runout : **Refer to DLN-97, "Companion Flange Runout".**

3. Fit a test indicator to the inner side of the companion flange (socket diameter).
4. Rotate the companion flange to check for runout.

Companion flange runout : **Refer to DLN-97, "Companion Flange Runout".**

5. Follow the procedure below to adjust if runout value is outside the repair limit.

a. Check for runout while changing the phase between companion flange and drive pinion in 90° steps. Then search for the minimum point.
b. Replace companion flange if runout value is still outside the limit after the phase has been changed.
c. Adjust assembly status of the pinion bearing and drive pinion, or replace pinion bearing assembly if runout is outside the standard after the companion flange is replaced.

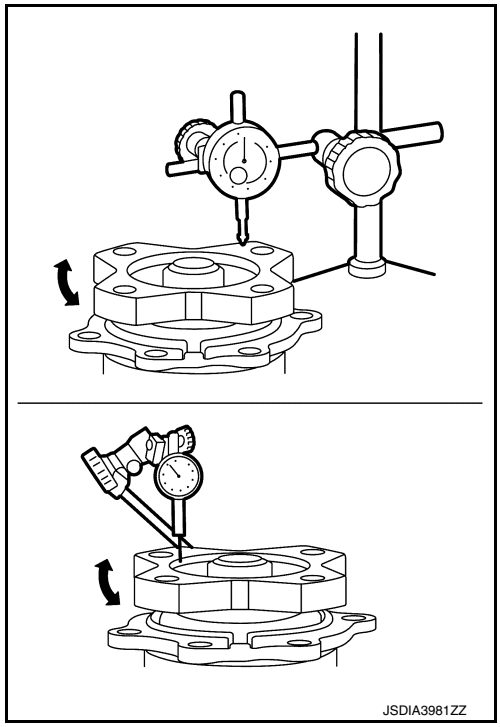

Inspection

INFOID:0000000012552726

INSPECTION AFTER DISASSEMBLY

Check items below. If necessary, replace them with new ones.

Gear and Shaft

Check gear face and shaft for wear, cracks, damage, and seizure.

CAUTION:
Replace ring gear and drive pinion as a set (hypoid gear set) if any malfunction is detected on the ring gear or drive pinion.

Bearing

Check for seizure, peeling, wear, corrosion, sticking, unusual noise, roughness in hand turning, and other damage.

Shim

Check for seizure, damage, and unusual wear.

TRANSFER CASE

Exploded View

INFOID:0000000012552727

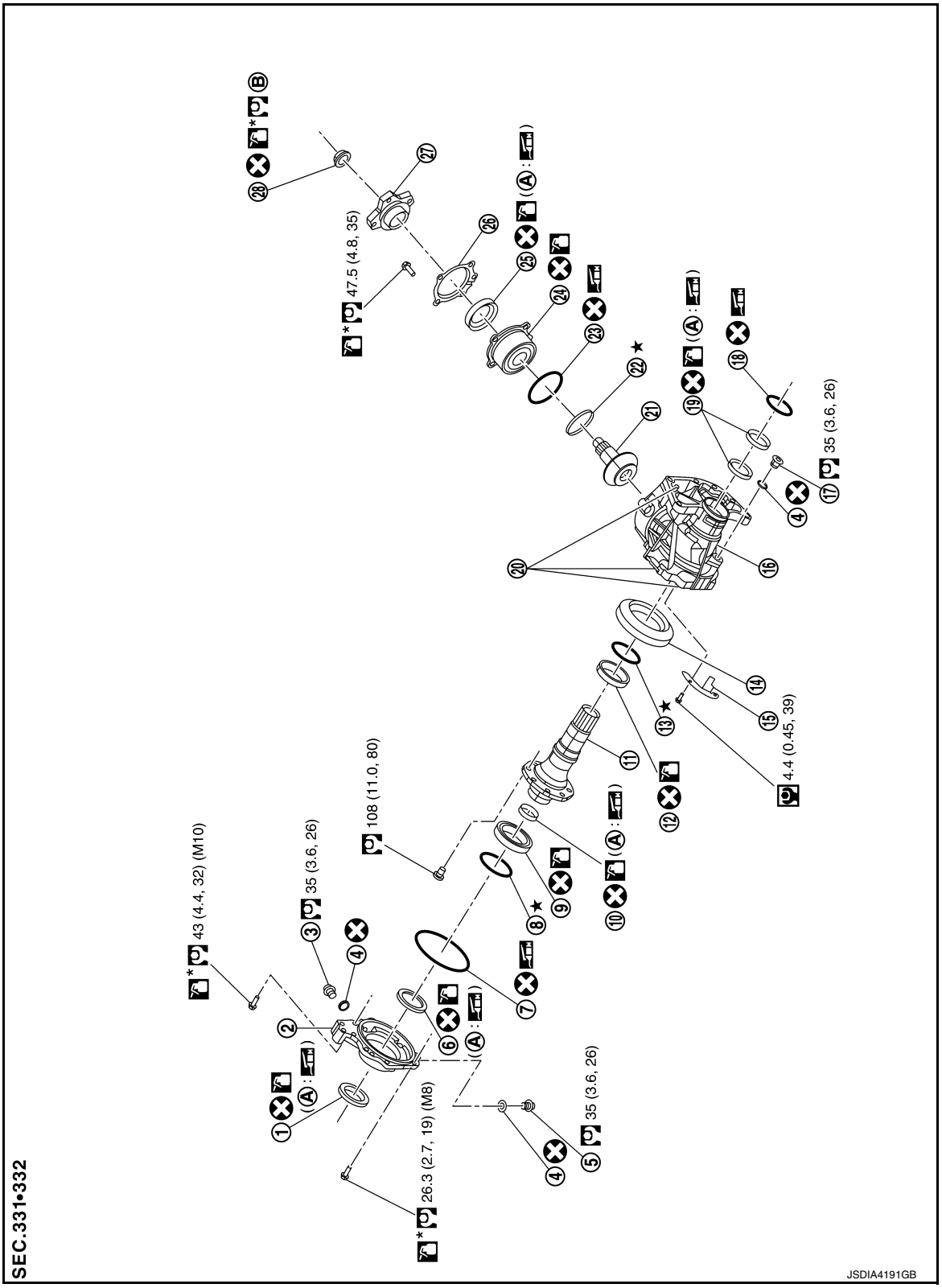

1. Oil seal
2. Transfer cover
3. Filler plug
4. Gasket
5. Drain plug
6. Oil seal

7. O-ring	8. Ring gear bearing adjusting shim (transfer cover side)	9. Ring gear bearing (transfer cover side)
10. Drive shaft oil seal	11. Ring gear shaft	12. Ring gear bearing (transfer case side)
13. Ring gear bearing adjusting shim (transfer case side)	14. Ring gear	15. Baffle plate
16. Transfer case	17. Plug	18. O-ring
19. Oil seal	20. Dowel pin	21. Drive pinion
22. Drive pinion adjusting shim	23. O-ring	24. Pinion bearing assembly
25. Oil seal	26. Dust cover	27. Companion flange
28. Pinion lock nut		
A. Oil seal lip	B. Comply with the assembly procedure when tightening. Refer to DLN-95, "Assembly".	

Disassembly

INFOID:0000000012552728

1. Remove transfer cover. Refer to DLN-78, "Disassembly".
2. Remove ring gear shaft assembly. Refer to DLN-82, "Disassembly".
3. Remove drive pinion assembly. Refer to DLN-86, "Disassembly".
4. Remove O-ring from transfer case.
   CAUTION:
   - **Do not use a tool.**
   - **Do not damage transfer case.**
5. Remove oil seals (1).
   CAUTION:
   Do not damage transfer case.

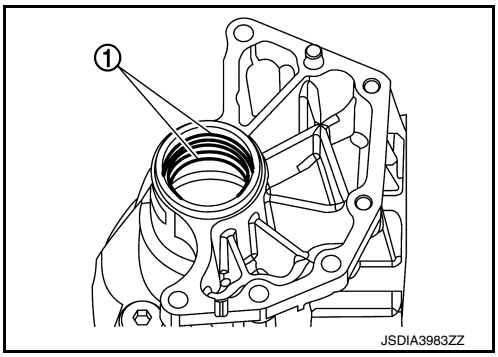

6. Remove baffle plate (1).

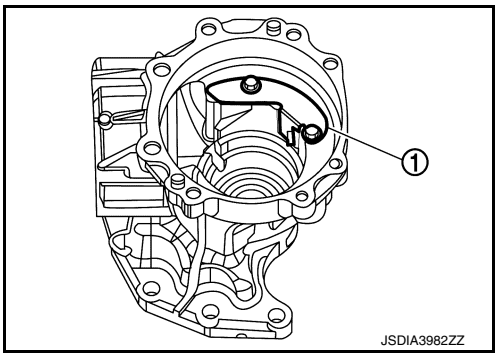

7. Remove the ring gear bearing adjusting shim (transfer case side) (1) and ring gear bearing outer race (transfer case side) (2) by tapping from the 2 cutouts (⬅) on the transfer case.
   CAUTION:
   Do not damage transfer case.
8. Remove plug and gasket.
9. Perform inspection after disassembly. Refer to DLN-96, "Inspection".

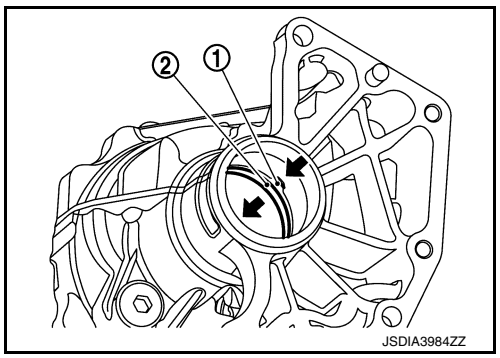

INFOID:0000000012552729

Assembly

1. Select the ring gear bearing adjusting shim (transfer case side). Refer to DLN-87, "Adjustment".
2. Install the selected ring gear bearing adjusting shim (transfer case side) and ring gear bearing outer race (transfer case side) using suitable tool (A).
   CAUTION:
   - **Do not reuse ring gear bearing.**
   - **Apply gear oil to the ring gear bearing.**

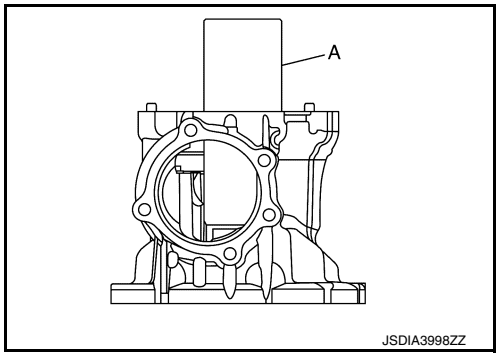

3. Install baffle plate (1).
4. Install ring gear shaft assembly. Refer to DLN-83, "Assembly".
   CAUTION:
   Protect transfer case oil seals beforehand from being damaged by the spline of ring gear shaft.
5. Install drive pinion assembly. Refer to DLN-86, "Assembly".
6. Install transfer cover to check and adjust each part. Refer to DLN-79, "Assembly".
   NOTE:
   At this timing, O-ring installing to transfer cover is not necessary. Install O-ring after backlash and tooth contact are checked.

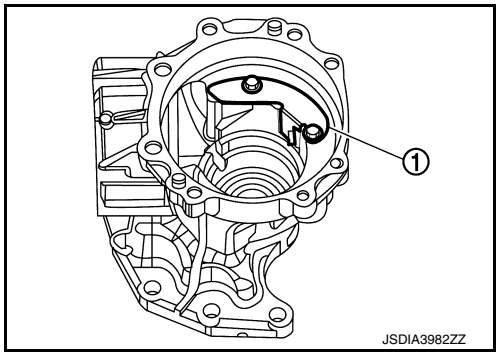

7. Check backlash, tooth contact, total preload and companion flange runout. Refer to DLN-87, "Adjustment".
   CAUTION:
   Measure the total preload without oil seals of transfer cover and transfer case.
8. Reinstall transfer cover for installing O-ring. Refer to DLN-79, "Assembly".
9. Install oil seals using a suitable tool.

   (A) : 24.8 mm (0.976 in)
   (B) : 10.3 mm (0.406 in)

   CAUTION:
   - **When checking the total preload torque, measure it without the oil seal, then install the oil seal.**
   - **Do not reuse the oil seal.**
   - **When installing, do not incline oil seal.**
   - **Apply multi-purpose grease onto oil seal lips, and gear oil onto the circumference of the oil seal.**
   - **Do not damage oil seals by spline of ring gear shaft.**

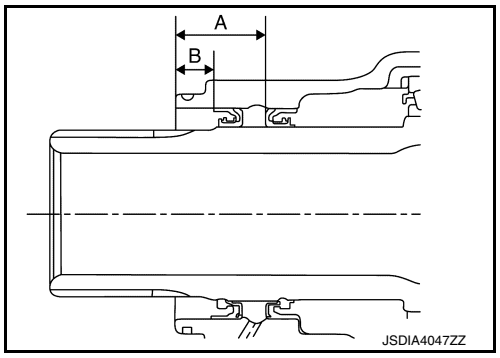

10. After installing oil seals to transfer case, remove wrapped vinyl from the spline of ring gear shaft.
11. Apply multi-purpose grease lightly and evenly onto an O-ring, and install it to the transfer case.

CAUTION:
- **Do not reuse O-ring.**
- **When installing O-ring, do not use a tool.**
- **Do not damage O-ring.**

Inspection

INFOID:0000000012552730

INSPECTION AFTER DISASSEMBLY

Check items below. If necessary, replace them with new ones.

Case

Check the bearing mounting surface for wear, cracks and damages.

SERVICE DATA AND SPECIFICATIONS (SDS)

SERVICE DATA AND SPECIFICATIONS (SDS)

General Specifications

INFOID:0000000012552731

ℓ (US pt, Imp pt)

Applied model		VQ35DE
		CVT
Transfer model		TY21C
Oil Type		MA-17 (United States and Canada) or MA-19 (Mexico)
Oil capacity (Approx.)		0.31(5/8 pt, 1/2 pt)
Gear ratio		0.404
Number of teeth	Ring gear	42
	Drive pinion	17

Preload Torque

INFOID:0000000012552732

Unit: N·m (kg-m, in-lb)

Item		Standard
Pinion bearing preload		0.25 – 1.15 (0.03 – 0.11, 3.0 – 10.0)
Total preload	With all oil seals	P_1 + 0.7 – 1.0 (0.08 – 0.1, 7.0 – 8.0)
	Without oil seals (for transfer cover and transfer case)	P_1 + 0.5 – 0.8 (0.06 – 0.08, 5.0 – 7.0)

Backlash

INFOID:0000000012552733

Unit: mm (in)

Item	Standard
Ring gear to drive pinion	0.16 – 0.21 (0.0063 – 0.0083)

Companion Flange Runout

INFOID:0000000012552734

Unit: mm (in)

Item	Limit
Companion flange face (inner side of the propeller shaft bolt holes)	0.15 (0.0059)
Inside of companion flange (socket diameter)	0.1 (0.004)

PRECAUTION

PRECAUTIONS

Precaution for Supplemental Restraint System (SRS) "AIR BAG" and "SEAT BELT PRE-TENSIONER"

INFOID:0000000012552735

The Supplemental Restraint System such as “AIR BAG” and “SEAT BELT PRE-TENSIONER”, used along with a front seat belt, helps to reduce the risk or severity of injury to the driver and front passenger for certain types of collision. Information necessary to service the system safely is included in the SR and SB section of this Service Manual.

WARNING:

- **To avoid rendering the SRS inoperative, which could increase the risk of personal injury or death in the event of a collision which would result in air bag inflation, it is recommended that all maintenance and repair be performed by an authorized NISSAN/INFINITI dealer.**
- **Improper repair, including incorrect removal and installation of the SRS, can lead to personal injury caused by unintentional activation of the system. For removal of Spiral Cable and Air Bag Module, see the SR section.**
- **Do not use electrical test equipment on any circuit related to the SRS unless instructed to in this Service Manual. SRS wiring harnesses can be identified by yellow and/or orange harnesses or harness connectors.**

PRECAUTIONS WHEN USING POWER TOOLS (AIR OR ELECTRIC) AND HAMMERS

WARNING:

- **When working near the Air Bag Diagnosis Sensor Unit or other Air Bag System sensors with the Ignition ON or engine running, DO NOT use air or electric power tools or strike near the sensor(s) with a hammer. Heavy vibration could activate the sensor(s) and deploy the air bag(s), possibly causing serious injury.**
- **When using air or electric power tools or hammers, always switch the Ignition OFF, disconnect the battery or batteries, and wait at least three minutes before performing any service.**

PREPARATION

PREPARATION

Commercial Service Tool

INFOID:0000000012552736

Tool name	Description
Power tool 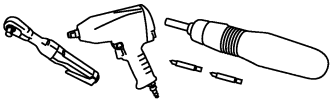 PIIB1407E	Loosening nuts, screws and bolts

SYMPTOM DIAGNOSIS

NOISE, VIBRATION AND HARSHNESS (NVH) TROUBLESHOOTING

NVH Troubleshooting Chart

INFOID:0000000012552737

Use the chart below to find the cause of the symptom. If necessary, repair or replace these parts.

Possible cause and SUSPECTED PARTS		Uneven rotating torque	Center bearing improper installation	Excessive center bearing axial end play	Center bearing mounting (insulator) cracks, damage or deterioration	Excessive joint angle	Rotation imbalance	Excessive runout	DIFFERENTIAL	AXLE AND SUSPENSION	TIRE	ROAD WHEEL	DRIVE SHAFT	BRAKE	STEERING
Reference		DLN-101, "Inspection"	DLN-104, "Inspection"	—	DLN-104, "Inspection"	—	DLN-104, "Inspection"	DLN-101, "Inspection"	DLN-113, "NVH Troubleshooting Chart"	FAX-5, "NVH Troubleshooting Chart", RAX-4, "NVH Troubleshooting Chart", FSU-3, "NVH Troubleshooting Chart", RSU-4, "NVH Troubleshooting Chart"	WT-57, "NVH Troubleshooting Chart"	WT-57, "NVH Troubleshooting Chart"	FAX-5, "NVH Troubleshooting Chart", RAX-4, "NVH Troubleshooting Chart"	BR-6, "NVH Troubleshooting Chart"	ST-42, "NVH Troubleshooting Chart"
Symptom	Noise	×	×	×	×	×	×	×	×	×	×	×	×	×	×
	Shake		×			×				×	×	×	×	×	×
	Vibration	×	×	×	×	×	×	×		×	×		×		×

×: Applicable

BASIC INSPECTION

PROPELLER SHAFT ASSEMBLY

Inspection

INFOID:0000000012552738

APPEARANCE AND NOISE INSPECTION

- Inspect the propeller shaft tube for dents or cracks. If damaged, replace the propeller shaft assembly.
- Check bearings for noise or damage. If damaged, replace as necessary.

PROPELLER SHAFT VIBRATION

NOTE:
If vibration is present at high speed, check propeller shaft runout first, then check mounting between propeller shaft and companion flange.

1. Measure the runout of the propeller shaft tube at several points by rotating the final drive companion flange with your hands.

Propeller shaft runout : Refer toDLN-106, "Propeller Shaft Runout".

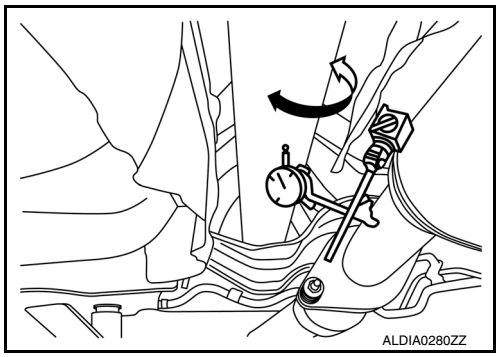

- Propeller shaft runout measuring point (Point "△").

Dimension **(A): 612.0 mm (24.09 in)**
(B): 474.5 mm (18.68 in)

⇦ : Front

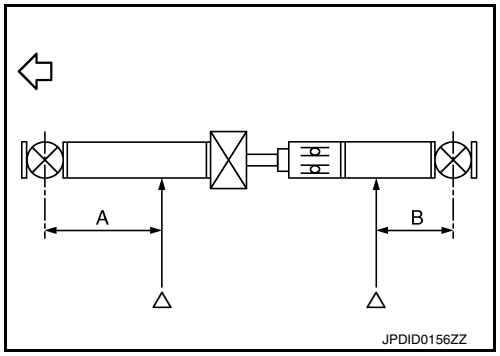

2. If the runout still exceeds specifications, disconnect the propeller shaft at the final drive companion flange; then rotate the companion flange 90°, 180°, 270° and reconnect propeller shaft.
3. Check the runout again. If the runout still exceeds specifications, replace the propeller shaft assembly.
4. After installation, check for vibration by driving the vehicle.

REMOVAL AND INSTALLATION

REAR PROPELLER SHAFT

Exploded View

INFOID:0000000012552739

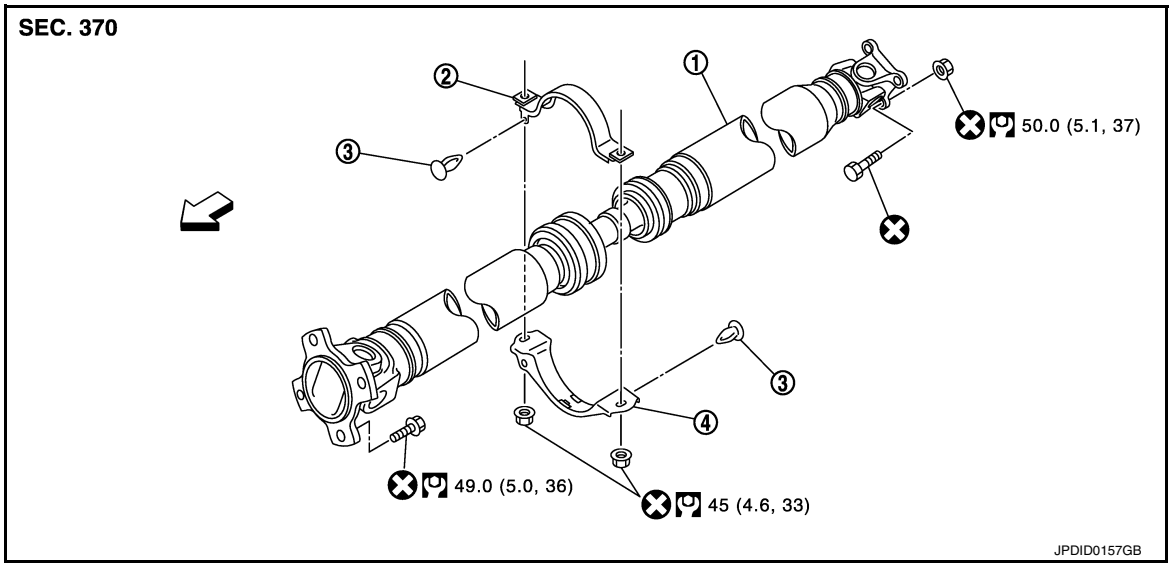

1. Propeller shaft assembly
2. Center bearing bracket (upper)
3. Clip
4. Center bearing bracket (lower)

⇦: Front

Removal and Installation

INFOID:0000000012552740

REMOVAL

1. Move the CVT shift selector to the neutral position, and then release the parking brake.
2. Put matching marks onto propeller shaft flange yokes, final drive torsional damper, and transfer companion flange.
   CAUTION:
   For matching marks, use paint. Do not damage propeller shaft flange yokes, final drive torsional damper or transfer companion flange.

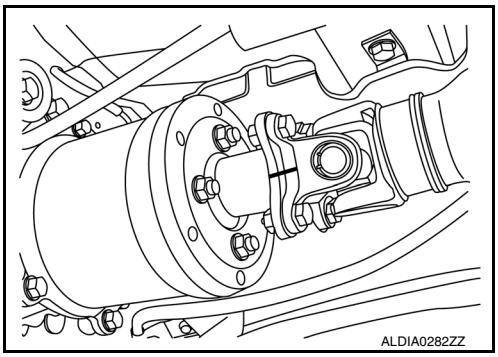

3. Remove front heat insulator.

4. Loosen nuts of center bearing brackets (upper/lower).

   ⇦ : Front

   CAUTION:
   Tighten nuts temporarily.

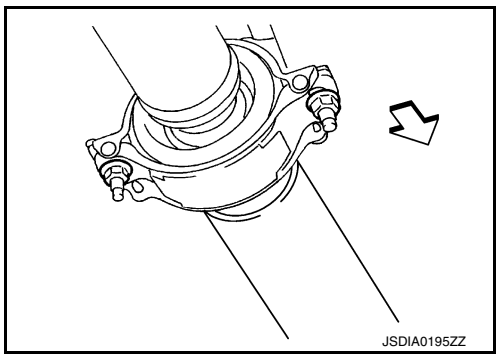

5. Remove propeller shaft assembly bolts and nuts.Refer to DLN-102, "Exploded View".
6. Remove center bearing bracket nuts.
7. Remove propeller shaft assembly.
   CAUTION:
   If constant velocity joint was bent during propeller shaft assembly removal, installation, or transportation, its boot may be damaged. Wrap boot with shop cloth or rubber to protect boot from damage.
8. Remove clips in center bearing bracket (upper/lower).
9. Perform inspection after removal. Refer to DLN-104, "Inspection".

INSTALLATION

Installation is in the reverse order of removal.

- Install center bearing bracket (upper) (1) with its arrow mark (A) facing forward.
- Adjust position of center bearing bracket (upper), center bearing bracket (lower) (2) sliding back and forth to prevent play in thrust direction of center bearing insulator (3). Install center bearing bracket (upper/lower) to vehicle.
- Align matching marks to install propeller shaft assembly to final drive and transfer companion flanges.
- Perform inspection after installation. Refer to DLN-104, "Inspection".

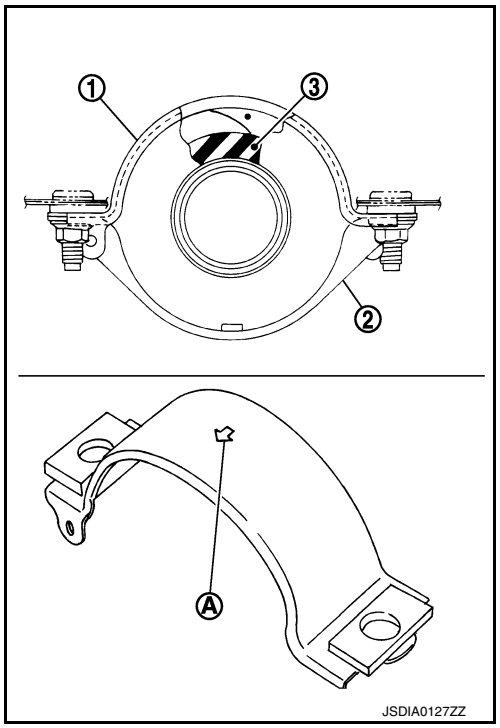

- After tightening the bolts and nuts to the specified torque, check that the bolts (3) on the flange side are tightened as shown.
- Final drive assembly (1)
- Propeller shaft assembly (2)

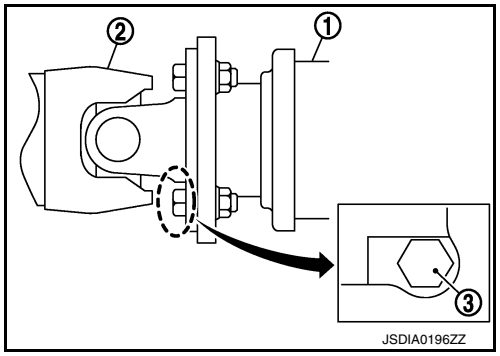

- If propeller shaft assembly or final drive assembly has been replaced, connect them as follows:
- Install propeller shaft (1) while aligning its matching mark (A) with the matching mark (B) of the final drive (2) on the joint as close as possible.
- Tighten bolts and nuts of propeller shaft and final drive to the specified torque.

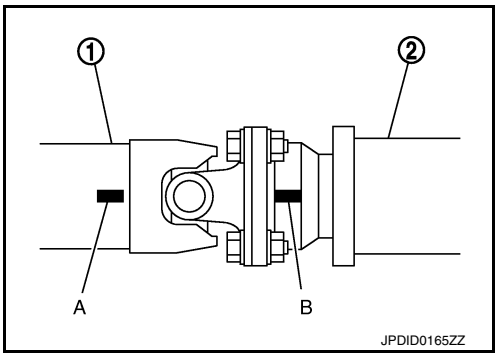

Inspection

INFOID:0000000012552741

INSPECTION AFTER REMOVAL

Appearance

Check propeller shaft for bend and damage. If damage is detected, replace propeller shaft assembly.

Propeller Shaft Runout

Check propeller shaft runout at measuring points with a dial indicator. If runout exceeds specifications, replace propeller shaft assembly.

Propeller shaft runout : Refer to DLN-106, "Propeller Shaft Runout".

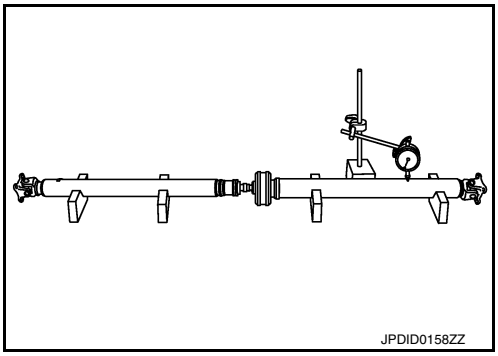

- Propeller shaft runout measuring point (Point "△").

⇦ : Front

Dimension (A) 612.0 mm (24.09 in)
(B) 474.5 mm (18.68 in)

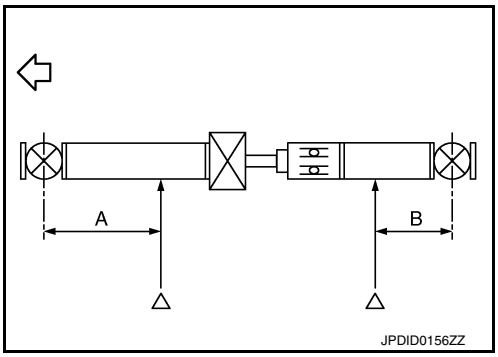

Journal Axial Play

As shown, while fixing yoke on one side, check axial play of joint. If it is outside the standard, replace propeller shaft assembly.

Journal axial play : Refer to DLN-106, "Journal Axial Play".

CAUTION:
Do not disassemble joints.

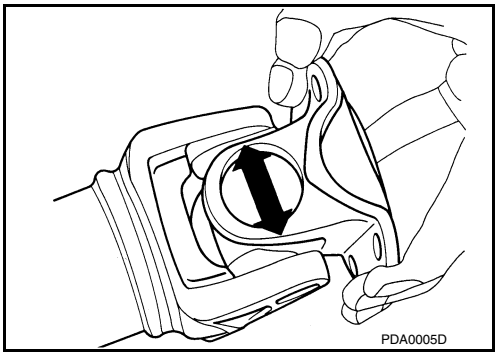

Center Bearing

Check center bearing for noise and damage. If noise or damage is detected, replace propeller shaft assembly.

CAUTION:
Do not disassemble center bearing.

INSPECTION AFTER INSTALLATION

After assembly, perform a driving test to check propeller shaft vibration. If vibration occurs refer to DLN-101, "Inspection".

SERVICE DATA AND SPECIFICATIONS (SDS)

SERVICE DATA AND SPECIFICATIONS (SDS)

General Specifications

INFOID:0000000012552742

Applied model		4WD
		VQ35DE
		CVT
Propeller shaft model		3FCJ-CVJ
Number of joints		3
Type of journal bearings (Non-disassembly type)	1st joint	Shell type
	2nd joint	CVJ type
	3rd joint	Shell type
Coupling method with transfer		Flange type
Coupling method with rear final drive		Flange type
Shaft length	1st (Spider to EDJ joint center)	1,332 mm (52.44 in)
	2nd (EDJ joint center to spider)	946 mm (37.24 in)
Shaft outer diameter	1st	80 mm (3.15 in)
	2nd	70 mm (2.76 in)

Propeller Shaft Runout

INFOID:0000000012552743

Unit: mm (in)

Item	Limit
Propeller shaft runout	0.8 (0.031)

Journal Axial Play

INFOID:0000000012552744

Unit: mm (in)

Item	Standard
Journal axial play	0 (0)

PRECAUTION

PRECAUTIONS

Precaution for Supplemental Restraint System (SRS) "AIR BAG" and "SEAT BELT PRE-TENSIONER"

INFOID:0000000012552745

The Supplemental Restraint System such as “AIR BAG” and “SEAT BELT PRE-TENSIONER”, used along with a front seat belt, helps to reduce the risk or severity of injury to the driver and front passenger for certain types of collision. Information necessary to service the system safely is included in the SR and SB section of this Service Manual.

WARNING:

- **To avoid rendering the SRS inoperative, which could increase the risk of personal injury or death in the event of a collision which would result in air bag inflation, it is recommended that all maintenance and repair be performed by an authorized NISSAN/INFINITI dealer.**
- **Improper repair, including incorrect removal and installation of the SRS, can lead to personal injury caused by unintentional activation of the system. For removal of Spiral Cable and Air Bag Module, see the SR section.**
- **Do not use electrical test equipment on any circuit related to the SRS unless instructed to in this Service Manual. SRS wiring harnesses can be identified by yellow and/or orange harnesses or harness connectors.**

PRECAUTIONS WHEN USING POWER TOOLS (AIR OR ELECTRIC) AND HAMMERS

WARNING:

- **When working near the Air Bag Diagnosis Sensor Unit or other Air Bag System sensors with the Ignition ON or engine running, DO NOT use air or electric power tools or strike near the sensor(s) with a hammer. Heavy vibration could activate the sensor(s) and deploy the air bag(s), possibly causing serious injury.**
- **When using air or electric power tools or hammers, always switch the Ignition OFF, disconnect the battery or batteries, and wait at least three minutes before performing any service.**

Service Notice or Precautions for Rear Final Drive

INFOID:0000000012552746

- Check for the correct installation status prior to removal or disassembly. If matching marks are required, be certain they never interfere with the function of the parts when applied.
- Overhaul should be done in a clean work area, it is preferable to work in dustproof area.
- Before disassembly, using steam or white gasoline, completely remove sand and mud from the exterior of the unit, preventing them from entering into the unit during disassembly or assembly.
- Check appearance of the disassembled parts for damage, deformation, and unusual wear. Replace them with a new one if necessary.
- Seals should be replaced any time when the unit is disassembled.
- In principle, tighten bolts or nuts gradually in several steps working diagonally from inside to outside. If tightening sequence is specified, observe it.
- Clean and flush the parts sufficiently and blow-dry them.
- Be careful not to damage sliding surfaces and mating surfaces.
- When applying sealant, remove the old sealant from the mounting surface; then remove any moisture, oil, and foreign materials from the application and mounting surfaces.
- Always use shop paper for cleaning the inside of components.
- Avoid using cotton gloves or shop rags to prevent entering of lint.
- During assembly, observe the specified tightening torque, and apply new gear oil, petroleum jelly, or multipurpose grease as specified for each vehicle, if necessary.

PREPARATION

PREPARATION

Special Service Tools

INFOID:0000000012552747

The actual shape of the tools may differ from those illustrated here.

Tool number (TechMate No.) Tool name	Description
ST30720000 (J-25405) Drift a: 77 mm (3.03 in) dia. b: 55 mm (2.185 in) dia. 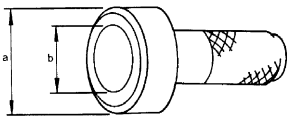 ZZA0811D	Installing front oil seal
KV40105740 (—) Drift a: 57 mm (2.24 in) dia. b: 48 mm (1.89 in) dia. 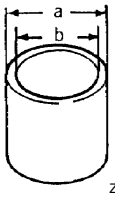 ZZA0832D	Installing side oil seal (cover side)
KV31103000 (J-38982) Drift a: 70 mm (2.76 in) dia. b: 59 mm (2.32 in) dia. c: 49 mm (1.93 in) dia. 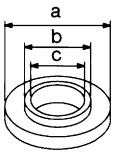 S-NT107	Installing side oil seal (carrier side)
ST35325000 (—) Drift bar 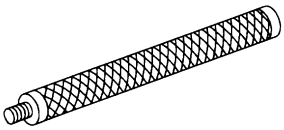 S-NT090	Installing side oil seal (carrier side)

Commercial Service Tools

INFOID:0000000012552748

Tool name	Description
Flange wrench 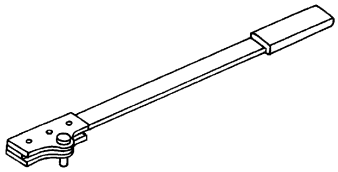 NT771	Removing and installing torsional damper nut
Power tool  PIIB1407E	Loosening nuts, screws and bolts

SYSTEM DESCRIPTION

STRUCTURE AND OPERATION

Sectional View

INFOID:0000000012552749

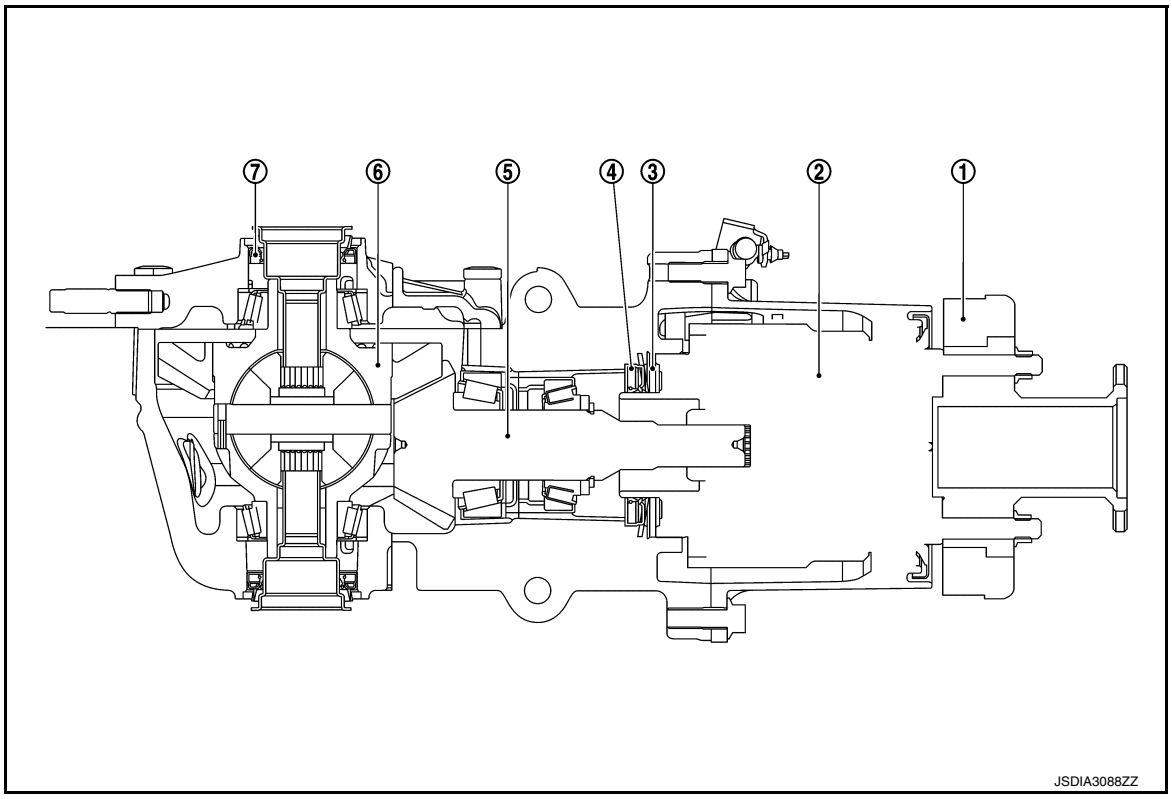

1. Torsional damper
2. Electric controlled coupling
3. Wave washer
4. Front oil seal
5. Drive pinion
6. Differential case
7. Side oil seal

Electric Controlled Coupling

INFOID:0000000012552750

The electric controlled coupling operates as the 4WD system. For the operation, refer to DLN-13, "Operation Description".

BASIC INSPECTION

ADDITIONAL SERVICE WHEN REPLACING REAR FINAL DRIVE ASSEMBLY

Description

INFOID:0000000012552751

When replacing rear final drive assembly, unit characteristics writing is required.

Work Procedure

INFOID:0000000012552752

1.PERFORM WRITING UNIT CHARACTERISTICS

Perform writing unit characteristics of electric controlled coupling.

>> Refer to DLN-44, "Work Procedure".

ADDITIONAL SERVICE WHEN REPLACING ELECTRIC CONTROLLED COUPLING

Description

INFOID:0000000012552753

When replacing electric controlled coupling, unit characteristics writing is required.

Work Procedure

INFOID:0000000012552754

1. PERFORM WRITING UNIT CHARACTERISTICS

Perform writing unit characteristics of electric controlled coupling.

>> Refer to DLN-44, "Work Procedure".

SYMPTOM DIAGNOSIS

NOISE, VIBRATION AND HARSHNESS (NVH) TROUBLESHOOTING

NVH Troubleshooting Chart

INFOID:0000000012552755

Use the chart below to find the cause of the symptom. If necessary, repair or replace these parts.

Possible cause and SUSPECTED PARTS		Gear tooth rough	Gear contact improper	Tooth surfaces worn	Backlash incorrect	Companion flange excessive runout	Gear oil improper	PROPELLER SHAFT	AXLE AND SUSPENSION	TIRE	ROAD WHEEL	DRIVE SHAFT	BRAKE	STEERING
Reference						DLN-133, "Adjustment"	DLN-114, "Inspection"	DLN-100, "NVH Troubleshooting Chart"	FAX-5, "NVH Troubleshooting Chart", RAX-4, "NVH Troubleshooting Chart", FSU-3, "NVH Troubleshooting Chart", RSU-4, "NVH Troubleshooting Chart"	WT-57, "NVH Troubleshooting Chart"	WT-57, "NVH Troubleshooting Chart"	FAX-5, "NVH Troubleshooting Chart", RAX-4, "NVH Troubleshooting Chart"	BR-6, "NVH Troubleshooting Chart"	ST-42, "NVH Troubleshooting Chart"
Symptom	Noise	×	×	×	×	×	×	×	×	×	×	×	×	×

×: Applicable

PERIODIC MAINTENANCE

REAR DIFFERENTIAL GEAR OIL

Inspection

INFOID:0000000012552756

OIL LEAKS

Check that oil is not leaking from final drive assembly or around it.

OIL LEVEL

CAUTION:
Do not start engine while checking oil level.

1. Remove and discard filler plug (1).
   CAUTION:
   Do not reuse filler plug.

   ⇦ : Front

2. Oil level should be level with the bottom of filler plug hole. Add oil if necessary. Refer to MA-17, "FOR USA AND CANADA : Fluids and Lubricants" (United States and Canada) or MA-19, "FOR MEXICO : Fluids and Lubricants" (Mexico).
3. Install filler plug (1) and tighten to specified torque. Refer to DLN-130, "Exploded View".

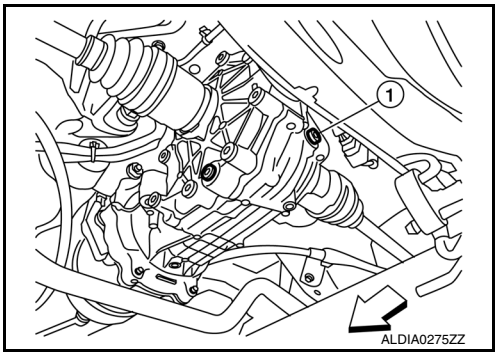

Draining

INFOID:0000000012552757

CAUTION:
Do not start engine while checking oil level.

1. Remove and discard drain plug (1), and drain gear oil.
   CAUTION:
   Do not reuse drain plug.

   ⇦ : Front

2. Install drain plug (1) and tighten to specified torque. Refer to DLN-130, "Exploded View".

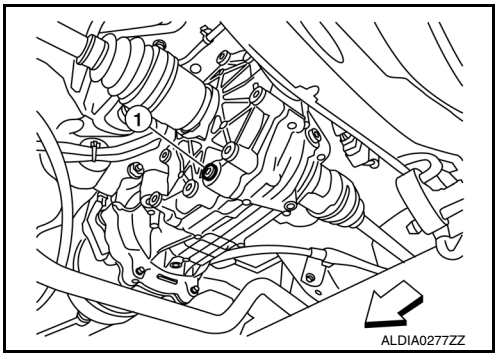

Refilling

INFOID:0000000012552758

CAUTION:
Do not start engine while checking oil level.

1. Remove and discard filler plug (1).
   CAUTION:
   Do not reuse filler plug.

   ⇦ : Front

2. Fill with new oil to the specified level near the filler plug hole.

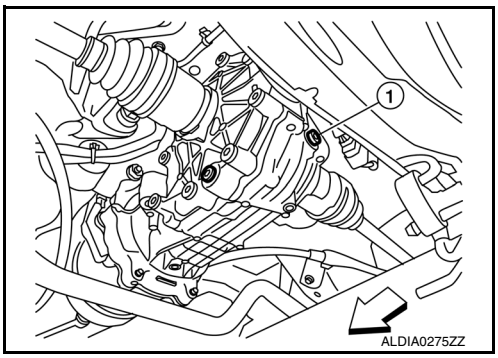

Oil grade and viscosity	**: Refer to MA-17, "FOR USA AND CANADA : Fluids and Lubricants" (United States and Canada) or MA-19, "FOR MEXICO : Fluids and Lubricants" (Mexico).**
Oil capacity	**: Refer to DLN-135, "General Specification".**

3. Install filler plug (1) and tighten to specified torque. Refer to DLN-130, "Exploded View".

REMOVAL AND INSTALLATION

TORSIONAL DAMPER

Exploded View

INFOID:0000000012552759

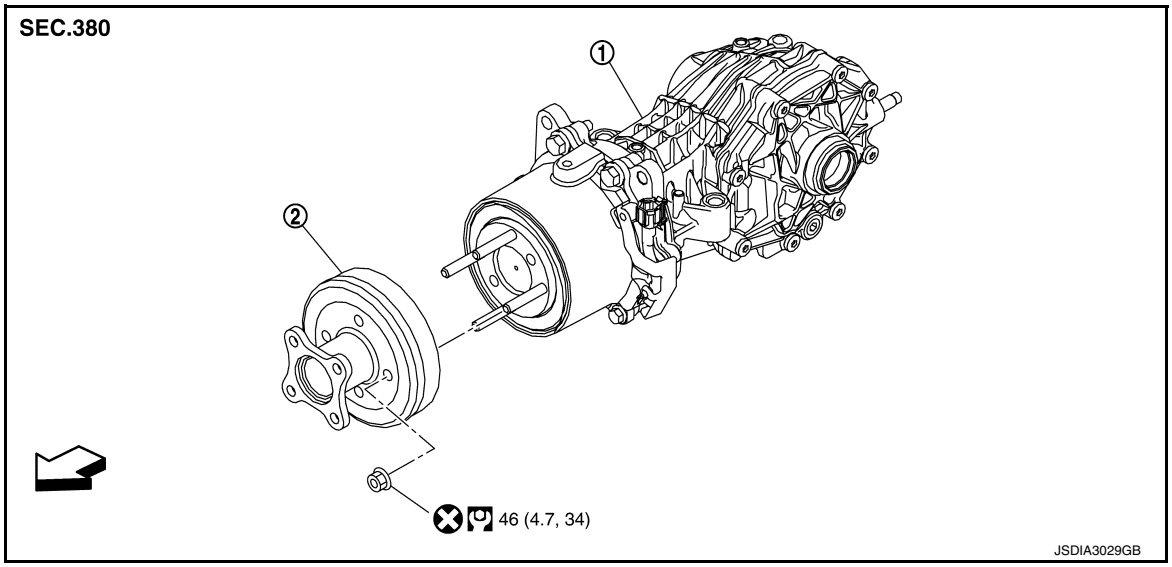

1. Final drive assembly
2. Torsional damper

⇦ Front

Removal and Installation

INFOID:0000000012552760

REMOVAL

1. Remove rear propeller shaft from the torsional damper, and support the end of the propeller shaft. Refer to DLN-102, "Exploded View".
2. Remove torsional damper lock nuts (⬅), using suitable tool.

   ⇦ : Front

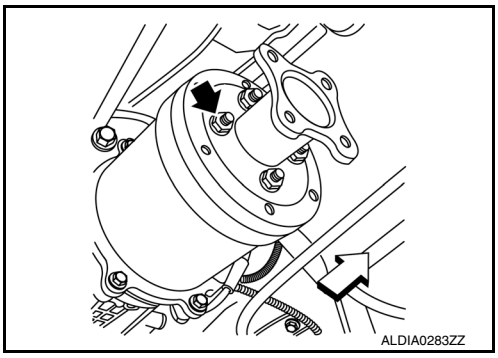

3. Remove torsional damper.

INSTALLATION

1. Install torsional damper. (When torsional damper has been reused.)
   CAUTION:
   Clean the mounting surface.
2. Install torsional damper. (When torsional damper has been replaced.)
   Degrease the mounting surface of electric controlled coupling, according to the following instruction.

1. Spray alcohol on a cotton cloth four times per part.
   CAUTION:
   Always use a new cotton cloth.

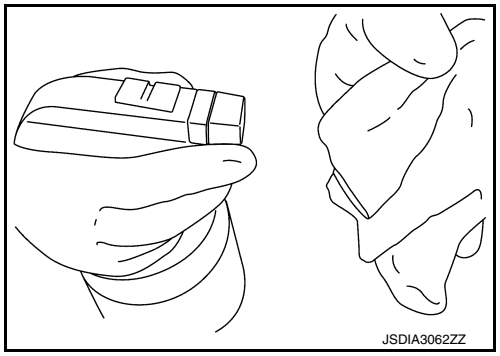

2. Wipe the mounting surface of electric controlled coupling five times.
   CAUTION:
   Complete the work within 180 seconds to prevent alcohol from evaporating.

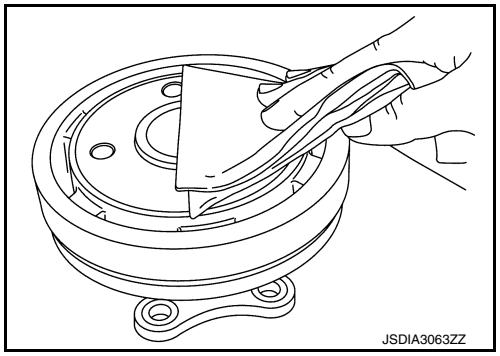

3. Install torsional damper lock nuts, using suitable tool, and tighten to the specified torque.
   CAUTION:
   Do not reuse torsional damper lock nuts.

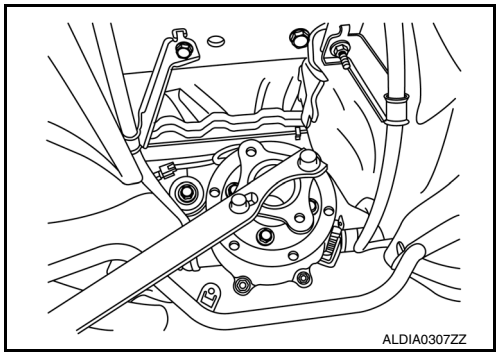

4. Check torsional damper runout as follows:
   - Rotate torsional damper and check for runout on the torsional damper face (inner side of the bolt holes) using a dial indicator (1). Also check for runout on the inner side of the torsional damper using a test indicator (2).

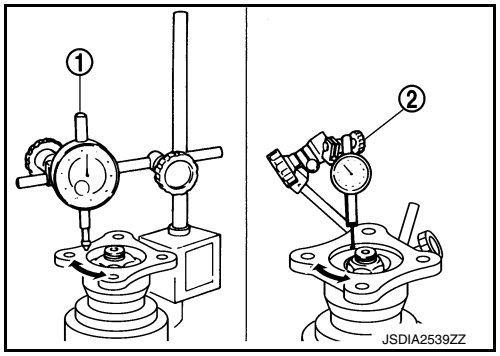

Torsional damper runout	**: Refer to DLN-97, "Companion Flange Runout".**

   - If the runout value is outside the runout limit, follow the procedure below to adjust.
   - Check for runout while changing the phase between the torsional damper and electric controlled coupling by 90° step, and search for the position where the runout value is the minimum.
   - If the runout value is still outside of the runout limit after the phase has been changed, replace the torsional damper.
   - If the runout value is still outside of the runout limit after torsional damper has been replaced, possible cause will be a damaged electric controlled coupling. Repair as necessary. Refer to DLN-120, "Removal and Installation".
5. Install rear propeller shaft. Refer to DLN-102, "Exploded View".

SIDE OIL SEAL

Exploded View

INFOID:0000000012552761

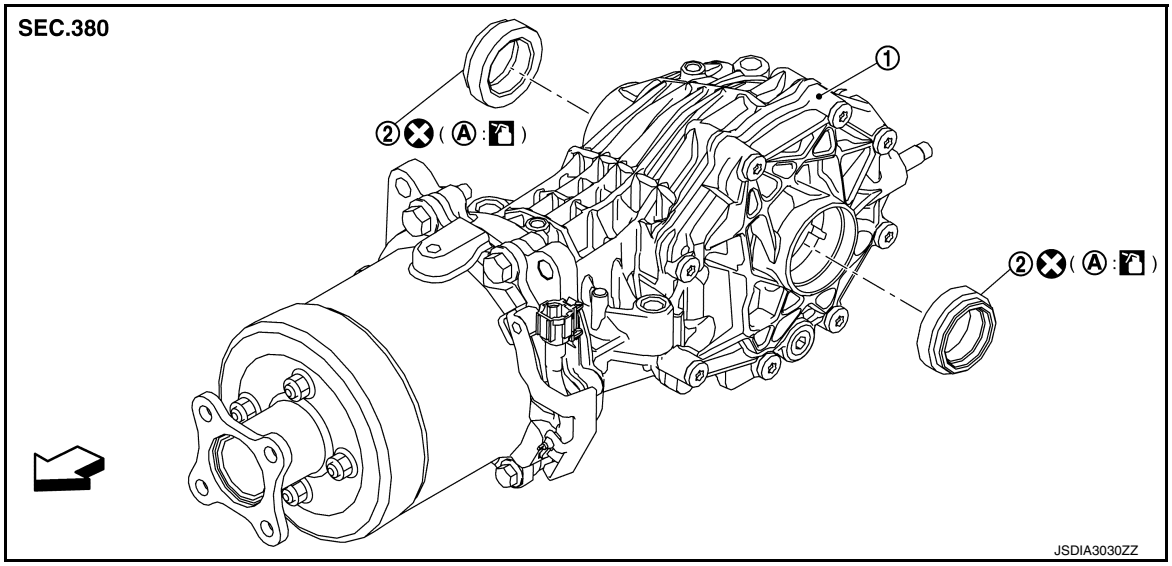

1. Final drive assembly
2. Side oil seal

A. Oil seal lip

⇦ Front

Removal and Installation

INFOID:0000000012552762

REMOVAL

1. Remove rear drive shaft (LH or RH) as necessary. Refer to RAX-9, "Removal and Installation".
2. Remove side oil seal (1), using suitable tool.
   CAUTION:
   Be careful not to damage gear carrier and side cover.

   ⇦ : Front

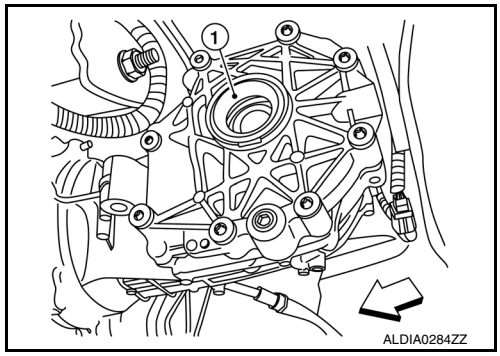

INSTALLATION

1. Install side oil seal (cover side) until it becomes flush with the carrier end, using tool (A).

   ⇦ : Front

   Tool number (A): KV40105740 (—)

   CAUTION:
   - **Do not reuse oil seal.**
   - **When installing, do not incline oil seals.**
   - **Apply gear oil onto side oil seal lip.**

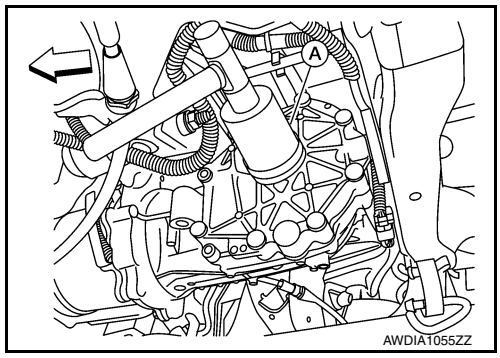

2. Install side oil seal (carrier side) until it becomes flush with the carrier end, using tool (A) and tool (B).

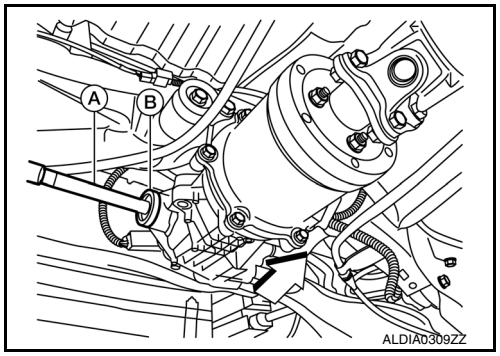

⇦ : Front

Tool number **(A): ST35325000 (—)**
(B): KV31103000 (J-38982)

CAUTION:
- **Do not reuse oil seal.**
- **When installing, do not incline oil seals.**
- **Apply gear oil onto side oil seal lip.**

3. Install rear drive shaft (LH or RH) as necessary. Refer to RAX-9, "Removal and Installation".
4. Check oil level and check for oil leaks. Refer to DLN-114, "Inspection".

ELECTRIC CONTROLLED COUPLING

Exploded View

INFOID:0000000012552763

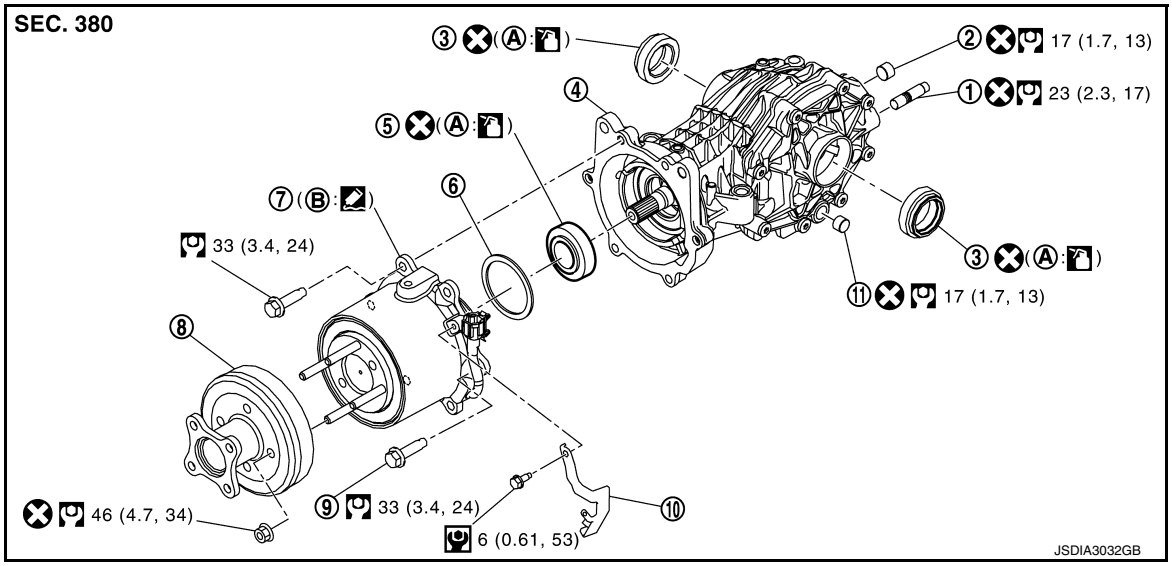

1. Stud bolt	2. Filler plug	3. Side oil seal
4. Final drive assembly	5. Front oil seal	6. Wave washer
7. Electric controlled coupling	8. Torsional damper	9. Reamer bolt
10. Harness bracket	11. Drain plug	A. Oil seal lip
B. Final drive mounting face		

Removal and Installation

INFOID:0000000012552764

NOTE:
When removing components such as hoses, tubes/lines, etc., cap or plug openings to prevent fluid from spilling.

CAUTION:
When replacing rear final drive assembly, perform writing unit characteristics. Refer to DLN-112, "Description".

REMOVAL

1. Move the shift selector to the neutral position, and then release the parking brake.
2. Drain rear differential gear oil. Refer to DLN-114, "Draining".
3. Remove rear propeller shaft from the torsional damper, and support the end of the propeller shaft. Refer to DLN-102, "Exploded View".

CAUTION:
For matching marks, use paint. Do not damage propeller shaft flange yokes, final drive torsional damper or transfer companion flange.

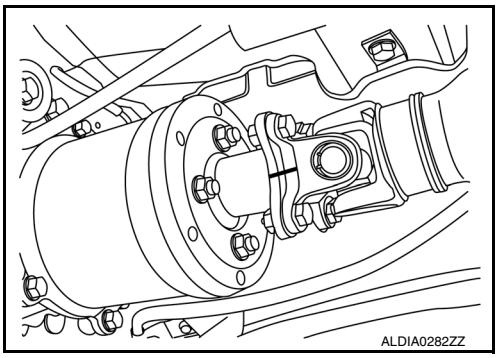

4. Remove the electric controlled coupling breather hose (1).

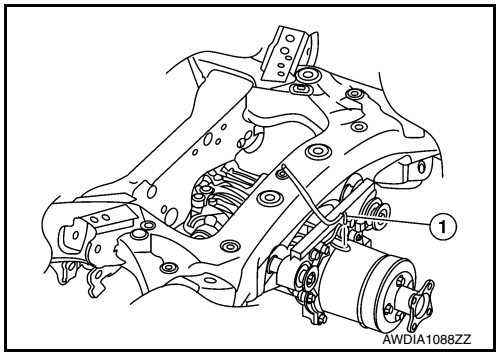

5. Disconnect the electric controlled coupling harness connector and unclip harness from harness bracket.
6. Remove the 6 bolts from the electric controlled coupling.
7. Remove the electric controlled coupling.
   CAUTION:
   Be careful that the wave washer does not fall out or get damaged when removing the electric controlled coupling.

INSTALLATION

Installation is in the reverse order of removal.

CAUTION:
- **Do not reuse hose clamp and breather connector.**
- **Make sure there are no pinched or restricted areas on the breather hose caused by bending or winding when installing it.**
- **Install the hose clamp at the final drive side, with the tab facing to the vehicle front.**
- **Install the hose clamp at the suspension member side, with the tab facing downward.**
- **Use Genuine Silicone RTV or an equivalent. Refer to GI-22, "Recommended Chemical Products and Sealants".**

- Apply liquid gasket (1) to mating surface of coupling cover.
  Use Genuine Silicone RTV or equivalent. Refer to GI-22, "Recommended Chemical Products and Sealants".
  CAUTION:
  - **The width of sealant bend is approximately 3 mm (0.012 in).**

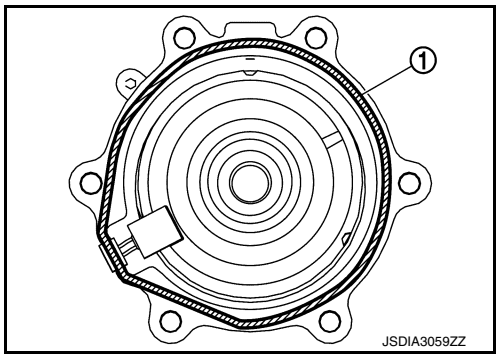

- Install electric controlled coupling to spline of drive pinion inside final drive assembly.
  CAUTION:
  - **Align the pin (A) on electric controlled coupling with the groove (B) of final drive assembly.**
  - **Be careful not to damage center oil seal.**

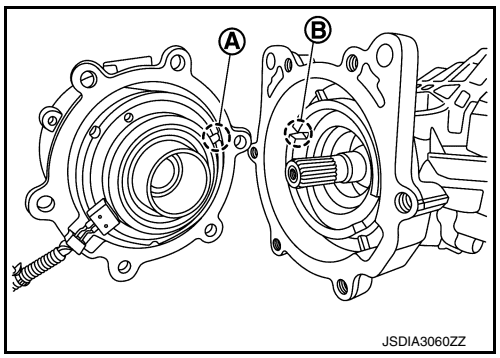

- Press the electric controlled coupling pin to check that it is positioned in the groove of the final drive assembly as shown.
  NOTE:
  If the pin is properly positioned in the groove, then the electric controlled coupling can be pressed into position by the same amount of flection of the wave washer.

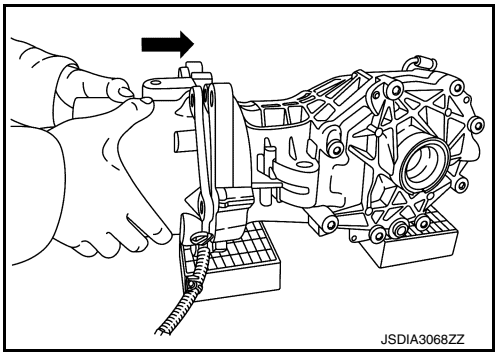

- Temporarily tighten reamer bolts (1) to the positions shown.
  CAUTION:
  - **Do not use tools. Always tighten by hand.**
  - **If reamer bolts cannot be tightened all the way by hand, the electric controlled coupling pin may not be positioned in the groove of the final drive assembly. In this case, remove electric controlled coupling and reinstall it.**

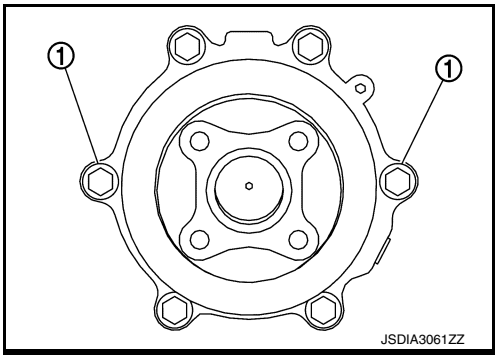

- Install the electric controlled coupling breather hose (1) as shown.
- Install electric controlled coupling breather hose at the coupling side to the metal connector (3) of the coupling (2) all the way to the point shown by the solid arrow (⬅).

  ⇦ : Front

- Install electric controlled coupling breather hose at the suspension member side until dimension (A) as shown.

  (A) : 15 mm (0.59 in)

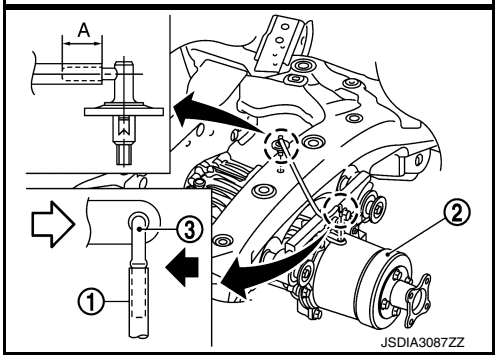

- If resin connector of the electric controlled coupling (1) and metal connector (2) are removed, install them as shown.
- Install the resin connector at the insertion side to the suspension member, facing to the vehicle front.
- Install the metal connector to the coupling cover, facing to the vehicle front.
  CAUTION:
  Do not reuse breather connector and hose clip.

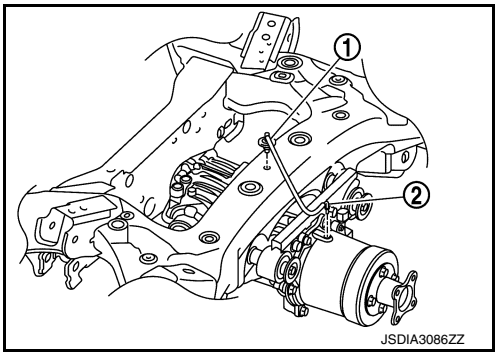

- Remove the old sealant from mating surfaces using a suitable tool before installing.

FRONT OIL SEAL

Exploded View

INFOID:0000000012552765

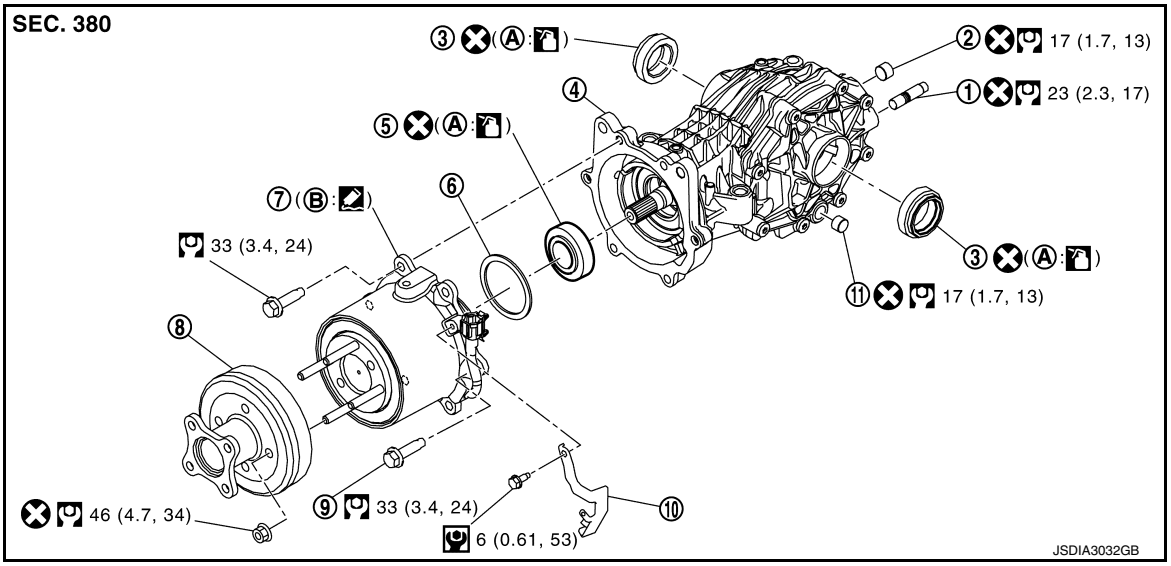

1. Stud bolt	2. Filler plug	3. Side oil seal
4. Final drive assembly	5. Front oil seal	6. Wave washer
7. Electric controlled coupling	8. Torsional damper	9. Reamer bolt
10. Harness bracket	11. Drain plug	A. Oil seal lip
B. Final drive mounting face		

Removal and Installation

INFOID:0000000012552766

REMOVAL

1. Drain rear differential gear oil. Refer to DLN-114, "Draining".
2. Remove the rear propeller shaft from the rear final drive and support the rear propeller shaft with suitable wire. Refer to DLN-102, "Exploded View".
3. Remove torsional damper nuts using suitable tool (A) and remove torsional damper (if necessary).

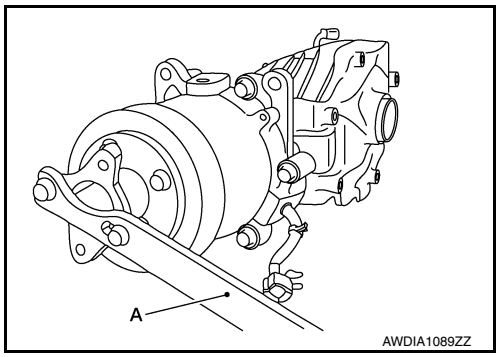

4. Remove the electric controlled coupling. Refer to DLN-120, "Removal and Installation".
5. Remove wave washer.

6. Remove front oil seal (1) from final drive assembly, using a suitable tool.
   CAUTION:
   Do not damage final drive assembly.

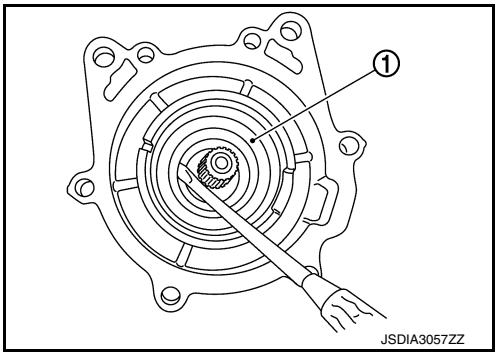

INSTALLATION

1. Install drain plug.
   CAUTION:
   Do not reuse drain plug.
2. Using a Tool (A) install front oil seal (1) as shown.

   Tool number : ST30720000 (J-25405)

   CAUTION:
   - **Do not reuse front oil seal.**
   - **When installing, do not incline front oil seal.**
   - **Apply rear differential gear oil onto front oil seal lip.**
3. Install wave washer to electric controlled coupling.

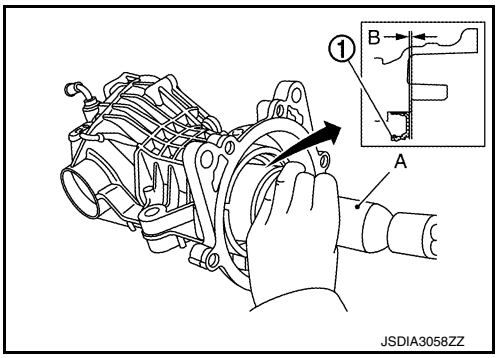

4. Apply liquid gasket (1) to mating surface of coupling cover.
   Use Genuine Silicone RTV or equivalent. Refer to GI-22, "Recommended Chemical Products and Sealants".
   CAUTION:
   - **Remove old gasket adhering to the surfaces. Also remove any moisture, rear differential gear oil, or foreign material adhering to the surfaces.**
   - **The width of sealant bend is approximately 3 mm (0.012 in).**

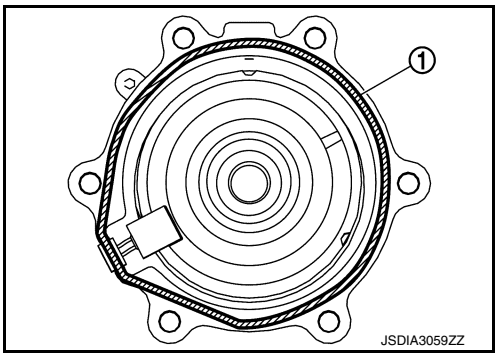

5. Install electric controlled coupling to spline of drive pinion inside final drive assembly.
   CAUTION:
   - **Align the pin (A) on electric controlled coupling with the groove (B) of final drive assembly.**
   - **Be careful not to damage front oil seal.**

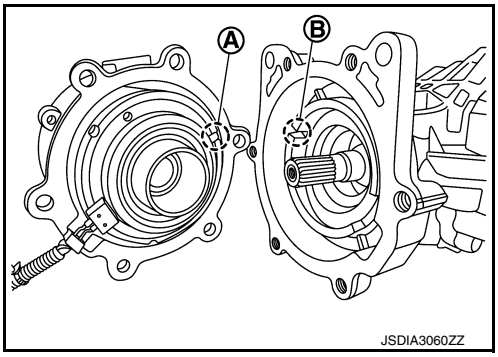

6. Press the electric controlled coupling pin to check that it is positioned in the groove of the final drive assembly as shown.
NOTE:
If the pin is properly positioned in the groove, then the electric controlled coupling can be pressed into position by the same amount of flection of the wave washer.

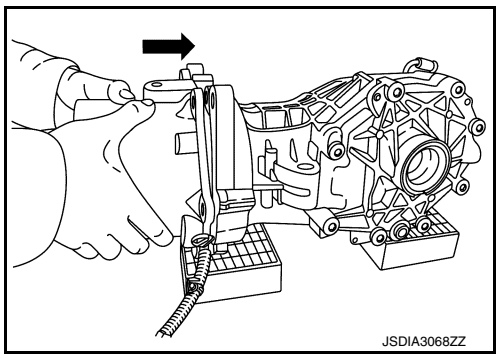

7. Temporarily tighten reamer bolts (1) to the positions shown.
CAUTION:
- **Do not use tools. Always tighten by hand.**
- **If reamer bolts cannot be tightened all the way by hand, the electric controlled coupling pin may not be positioned in the groove of the final drive assembly. In this case, remove electric controlled coupling and reinstall it.**

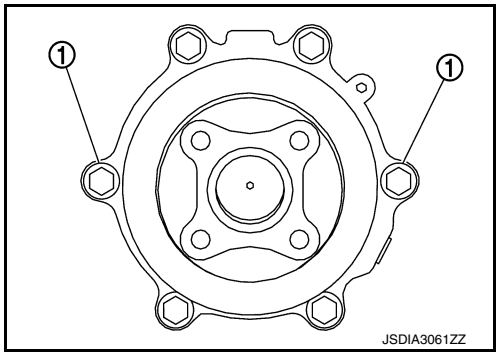

8. Tighten reamer bolts and coupling cover bolts to the specified torque.
9. Install harness bracket, and tighten bolts to the specified torque.
10. Install torsional damper. (When torsional damper has been replaced.)
Degrease the surface of electric controlled coupling, according to the following instruction.
    1. Spray alcohol on a cotton cloth four times per part.
    CAUTION:
    Always use a new cotton cloth.

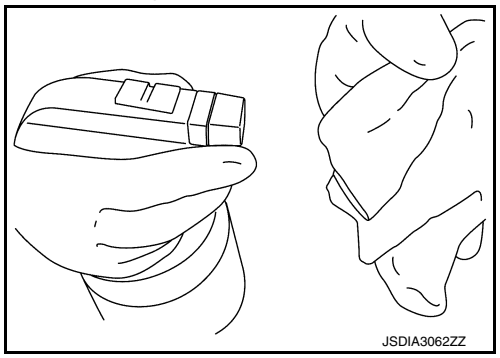

    2. Wipe the surface of electric controlled coupling five times.
    CAUTION:
    Complete the work within 180 seconds to prevent alcohol from evaporating.

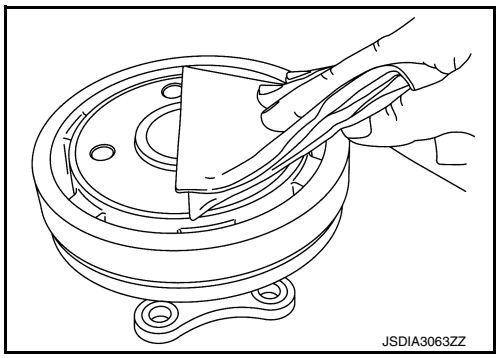

3. Install torsional damper nut, using suitable tool (1) and tighten to the specified torque.
   CAUTION:
   Do not reuse torsional damper nut.

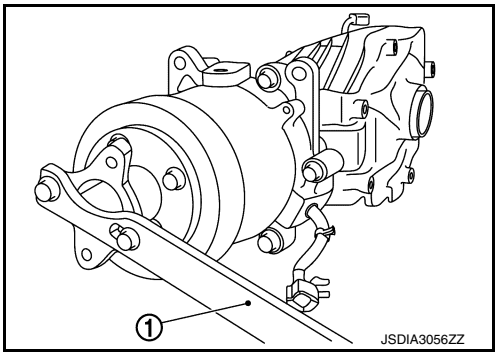

11. Check companion flange runout. Refer to DLN-135, "Companion Flange Runout".
12. When replacing electric controlled coupling, perform writing unit characteristics after installing final drive assembly to the vehicle. Refer to DLN-112, "Description".

UNIT REMOVAL AND INSTALLATION

REAR FINAL DRIVE ASSEMBLY

Exploded View

INFOID:0000000012552767

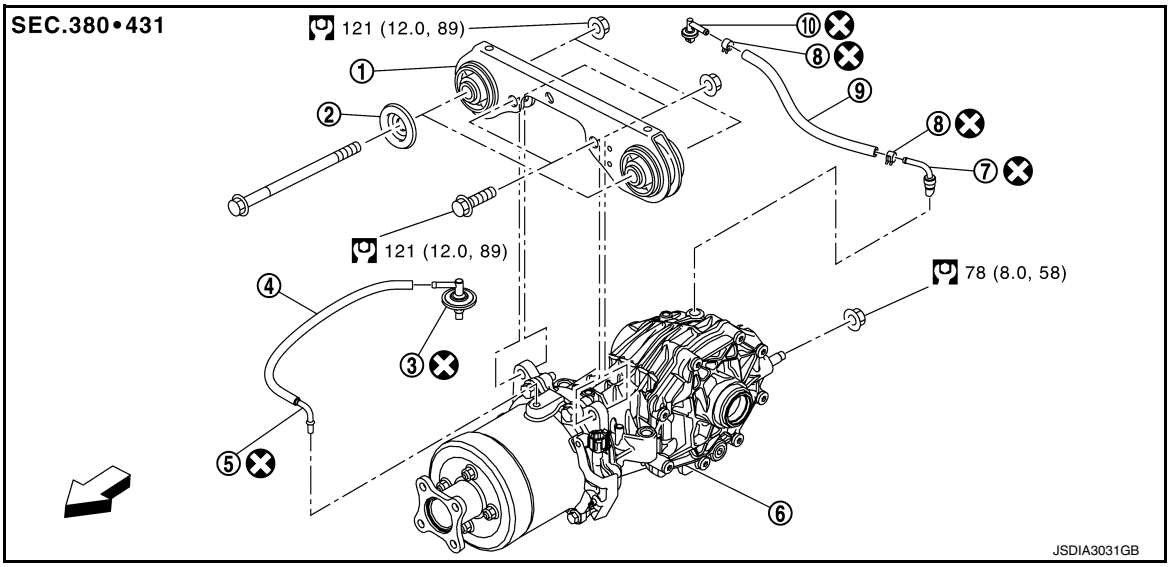

1. Final drive bracket
2. Washer
3. Breather
4. Breather hose
5. Breather tube
6. Final drive assembly
7. Breather tube
8. Hose clamp
9. Breather hose
10. Breather

⇦ Front

Removal and Installation

INFOID:0000000012552768

NOTE:
When removing components such as hoses, tubes/lines, etc., cap or plug openings to prevent fluid from spilling.

REMOVAL

1. Drain rear final drive oil. Refer to DLN-114, "Draining".
2. Remove the rear propeller shaft from the rear final drive and support the rear propeller shaft with suitable wire. Refer to DLN-102, "Removal and Installation".
3. Remove the vehicle spare tire.
4. Remove the rear drive shafts. Refer to RAX-9, "Removal and Installation".
5. Remove rear stabilizer bar. Refer to RSU-15, "Removal and Installation".
6. Remove 4WD harness bracket.
7. Disconnect 4WD harness connector and unclip harness from the final drive bracket.
8. Remove rear final drive breather hose and electric controlled coupling breather hose.
9. Support final drive assembly with a suitable jack.

10. Remove final drive bolts (⬅).

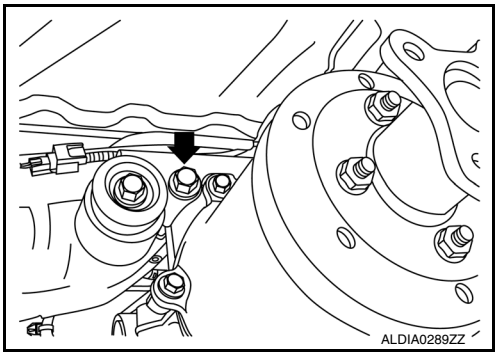

11. Remove rear final drive nut (⬅) at rear suspension member, and remove final drive from vehicle.
NOTE:
If it is necessary to remove the final drive bracket, the fuel tank must be removed first. Refer to FL-13, "Removal and Installation".
CAUTION:
Secure final drive assembly to a suitable jack while removing it.

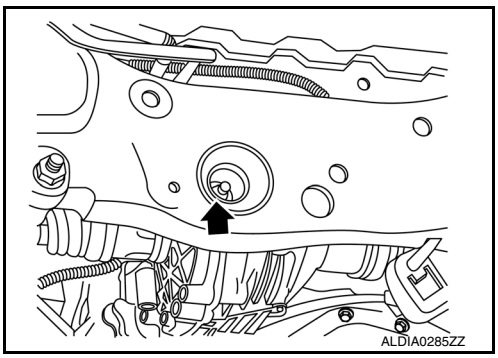

INSTALLATION

Installation is in the reverse order of removal.

- Install the breather hose (1) to breather connector until dimension (A) shown as follows.

(A):

Final drive side	**: 20 mm (0.79 in)**
Suspension member side	**: 20.7 mm (0.815 in)**

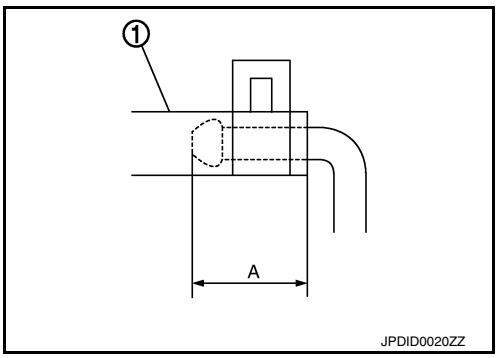

CAUTION:
- **Do not reuse hose clamp and breather connector.**
- **Make sure there are no pinched or restricted areas on the breather hose caused by bending or winding when installing it.**
- **Install the hose clamp at the final drive side, with the tab facing to the vehicle front.**
- **Install the hose clamp at the suspension member side, with the tab facing downward.**

- If remove resin connector (2) and metal connector (3), install breather hose (1), resin connector and metal connector as shown.

- For installation, insert resin connector into the square hole of rear suspension. Install metal connector to rear cover with aiming painted mark (A) to the front of vehicle.

⇦ : Front

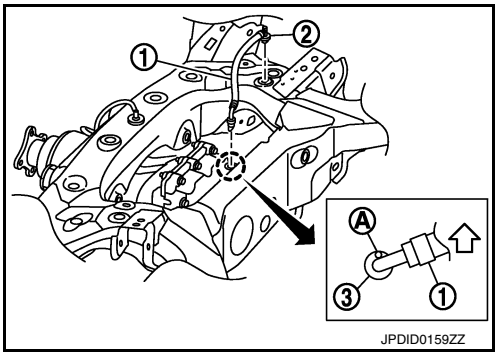

- Install the electric controlled coupling breather hose (1) as shown.
- Install electric controlled coupling breather hose at the coupling side to the metal connector (3) of the coupling (2) all the way to the point shown by the solid arrow (⬅).

⇦ : Front

- Install electric controlled coupling breather hose at the suspension member side until dimension (A) shown as follows.

(A) : 15 mm (0.59 in)

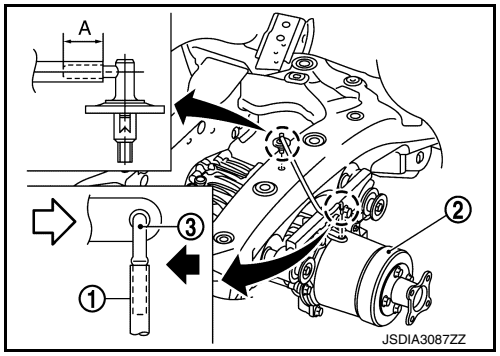

- If remove resin connector of the electric controlled coupling (1) and metal connector (2), install them as shown.
- Install the resin connector at the insertion side to the suspension member, facing to the vehicle front.
- Install the metal connector to the coupling cover, facing to the vehicle front.

CAUTION:
Do not reuse breather connector and hose clip.

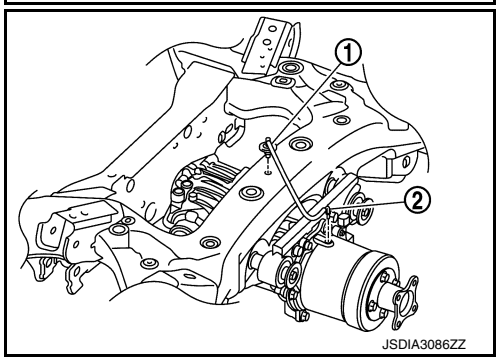

- If remove plug (1) and (2), install them as shown.

⇦ : Front

CAUTION:
Do not reuse breather connector and hose clip.

- When oil leaks while removing final drive assembly, check oil level after the installation. Refer to DLN-114, "Inspection".
- When replacing rear final drive assembly, perform writing unit characteristics. Refer to DLN-111, "Description".

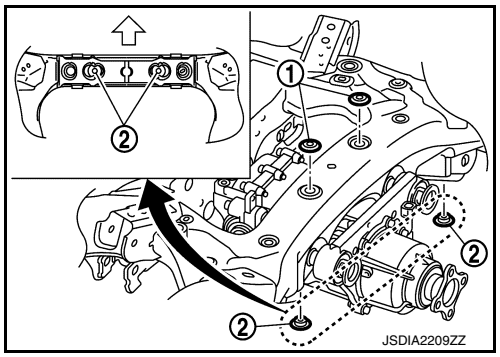

UNIT DISASSEMBLY AND ASSEMBLY

REAR FINAL DRIVE ASSEMBLY

Exploded View

INFOID:0000000012552769

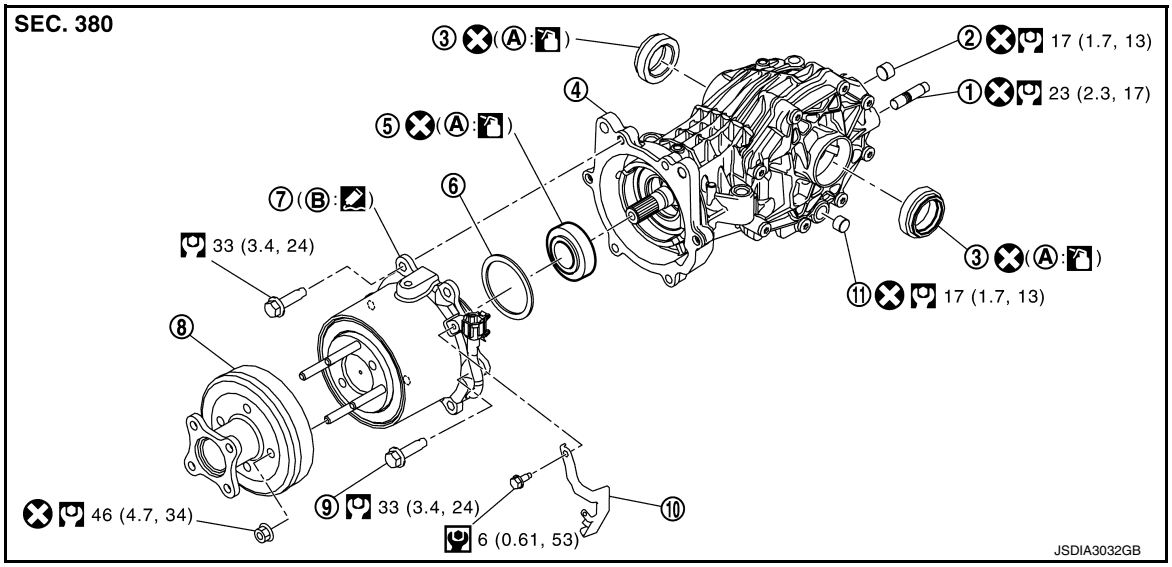

1.	Stud bolt	2.	Filler plug	3.	Side oil seal
4.	Final drive assembly	5.	Front oil seal	6.	Wave washer
7.	Electric controlled coupling	8.	Torsional damper	9.	Reamer bolt
10.	Harness bracket	11.	Drain plug		
A.	Oil seal lip	B.	Final drive mounting face		

: Apply Genuine Silicone RTV or equivalent. Refer to GI-22, "Recommended Chemical Products and Sealants".

Disassembly

INFOID:0000000012552770

1. Remove torsional damper nut, using a suitable tool.
2. Remove torsional damper.
3. Remove harness bracket.
4. Remove electric controlled coupling.
5. Remove wave washer.

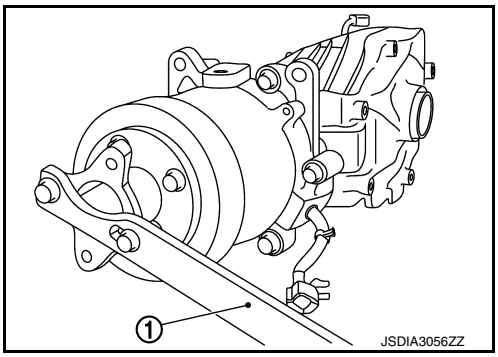

6. Remove front oil seal (1) from final drive assembly, using a oil seal remover.
   CAUTION:
   Do not damage final drive assembly.
7. Remove drain plug and filler plug, if necessary.

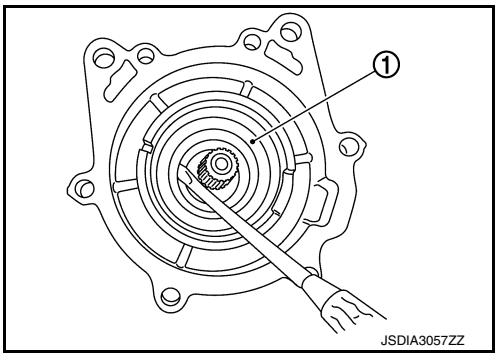

8. Remove side oil seal (1), using a oil seal remover.
   CAUTION:
   Do not damage final drive assembly and side cover.
9. Remove stud bolt from side cover, if necessary.

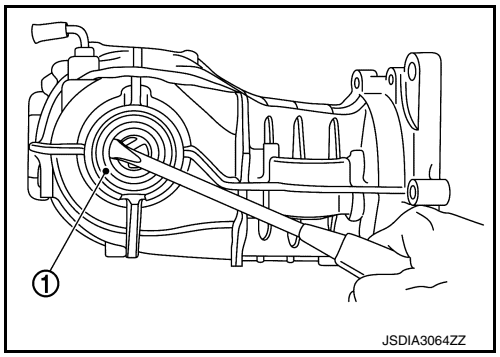

INFOID:0000000012552771

Assembly

1. Install stud bolt to side cover.
   CAUTION:
   Do not reuse stud bolt.
2. Install side oil seal (cover side) until it becomes flush with the carrier end, using Tool (A).

   Tool number (A) : KV40105740 (—)

   CAUTION:
   - **Do not reuse oil seal.**
   - **When installing, do not incline oil seals.**
   - **Apply gear oil onto side oil seal lip.**

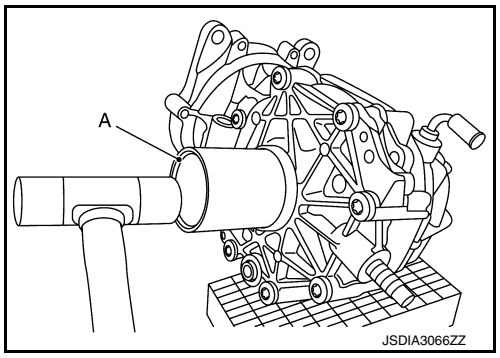

3. Install side oil seal (carrier side) until it becomes flush with the carrier end, using Tools (A and B).

   Tool number (A) : KV31103000 (J-38982)
   Tool number (B) : ST35325000 (—)

   CAUTION:
   - **Do not reuse oil seal.**
   - **When installing, do not incline oil seals.**
   - **Apply gear oil onto side oil seal lip.**

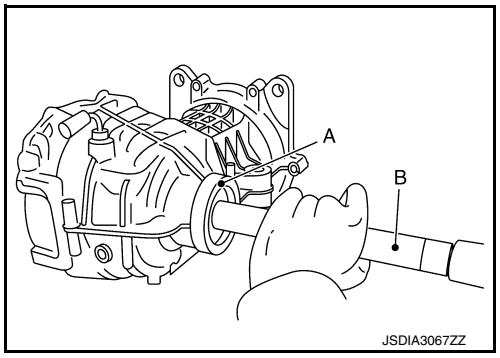

4. Install drain plug.
   CAUTION:
   Do not reuse drain plug.
5. Install filler plug.
   CAUTION:
   Do not reuse filler plug.
6. Install front oil seal (1) using Tool (A) as shown.

   Tool number (A) : ST30720000 (J-25405)
   (B) : 0.5 – 1.2 mm (0.020 – 0.047 in)

   CAUTION:
   - **Do not reuse oil seal.**
   - **When installing, do not incline oil seal.**
   - **Apply gear oil onto side oil seal lip.**
7. Install wave washer to electric controlled coupling.

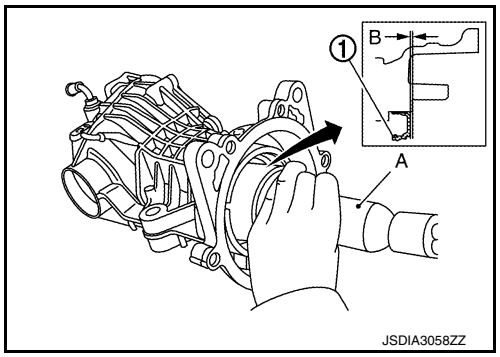

8. Apply liquid gasket (1) to mating surface of coupling cover.
   Use Genuine Silicone RTV or equivalent. Refer to GI-22, "Recommended Chemical Products and Sealants".
   CAUTION:
   - **Remove old gasket adhering to the mounting surfaces. Also remove any moisture, oil, or foreign material adhering to the mounting surfaces.**
   - **The width of sealant bend is approximately 3 mm (0.012 in).**

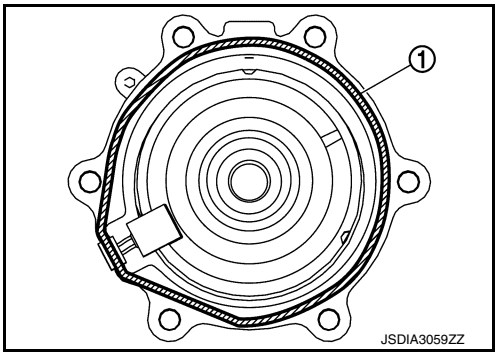

9. Install electric controlled coupling to spline of drive pinion inside final drive assembly.
   CAUTION:
   - **Align the pin (A) on electric controlled coupling with the groove (B) of final drive assembly.**
   - **Be careful not to damage center oil seal.**

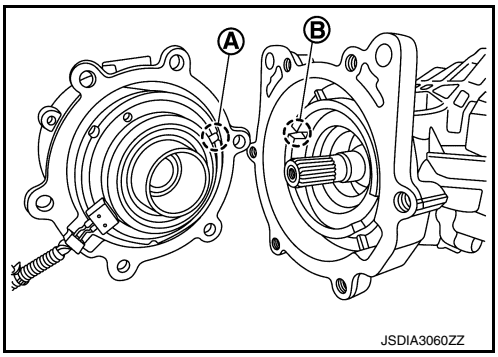

10. Press the electric controlled coupling pin to check that it is positioned in the groove of the final drive assembly as shown.
    NOTE:
    If the pin is properly positioned in the groove, then the electric controlled coupling can be pressed by the same amount of flection of the wave washer.

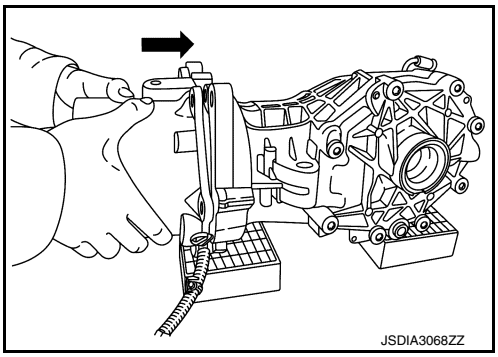

11. Temporarily tighten reamer bolts (1) to the positions shown.
    CAUTION:
    - **Do not use tools. Always tighten by hand.**
    - **If reamer bolts cannot be tightened all the way by hand, the electric controlled coupling pin may not be positioned in the groove of the final drive assembly. In this case, remove electric controlled coupling and reinstall it.**
12. Tighten reamer bolts and coupling cover bolts to the specified torque.
13. Install harness bracket, and tighten bolts to the specified torque.
14. Install torsional damper. (When torsional damper has been reused.)
    CAUTION:
    Clean the mounting surface.

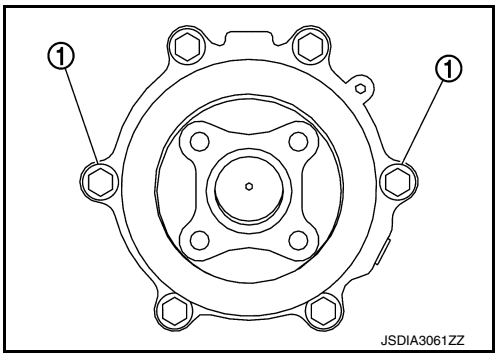

15. Install torsional damper. (When torsional damper has been replaced.)
    Degrease the mounting surface of electric controlled coupling, according to the following instruction.

1. Spray alcohol on a cotton cloth four times per part.
   CAUTION:
   Always use a new cotton cloth.

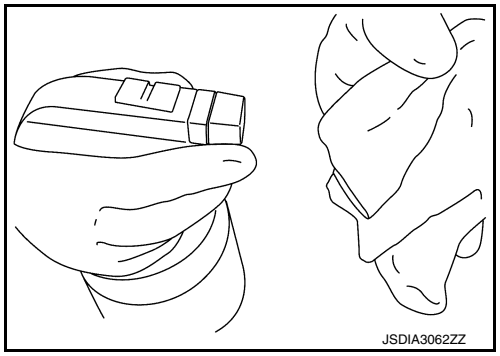

2. Wipe the mounting surface of electric controlled coupling five times.
   CAUTION:
   Complete the work within 180 seconds to prevent alcohol from evaporating.

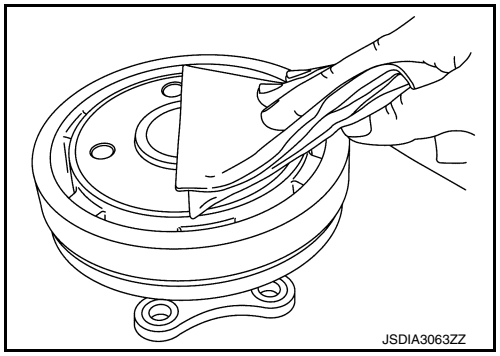

16. Install torsional damper nut, using suitable tool (1) and tighten to the specified torque.
    CAUTION:
    Do not reuse torsional damper nut.
17. Check companion flange runout. Refer to DLN-133, "Adjustment".
18. When oil leaks while removing, check oil level after installation. Refer to DLN-114, "Inspection".
19. When replacing electric controlled coupling, perform writing unit characteristics after installing final drive assembly to the vehicle. Refer to DLN-112, "Description".

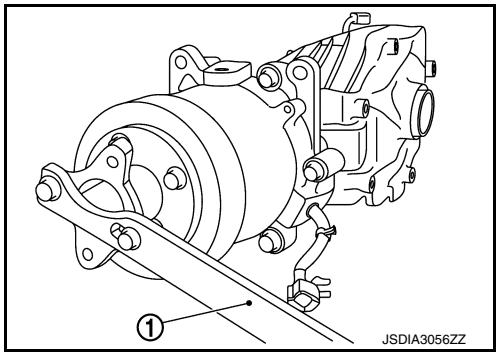

Adjustment

INFOID:0000000012552772

COMPANION FLANGE RUNOUT

Check for companion flange runout as follows:

- For companion flange face, fit a dial indicator (1) onto the companion flange face (inner side of the propeller shaft bolt holes). For inner side of the companion flange, fit a test indicator (2) to the inner side of companion flange (socket diameter).
- Rotate companion flange to check for runout.

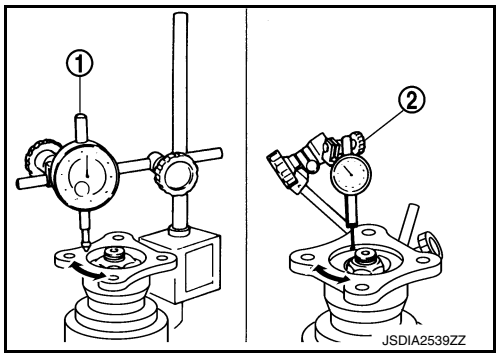

Companion flange runout : **Refer to DLN-135, "Companion Flange Runout".**

- If the runout value is outside the runout limit, follow the procedure below to adjust.
- Check for runout while changing the phase between companion flange and drive pinion by 90° step, and search for the position where the runout is the minimum.
- If the runout value is still outside of the limit after the phase has been changed, replace companion flange.
- If the runout value is still outside of the limit after companion flange has been replaced, possible cause will be an electric controlled coupling.

Inspection

INFOID:0000000012552773

OIL SEAL

- Whenever disassembled, replace.
- If wear, deterioration of adherence (sealing force lips), or damage is detected on the lips, replace them.

COMPANION FLANGE

- Clean up the disassembled parts.
- If any chipped mark [about 0.1 mm, (0.004 in)] or other damage on the contact sides of the lips of the companion flange is found, replace.

SERVICE DATA AND SPECIFICATIONS (SDS)

SERVICE DATA AND SPECIFICATIONS (SDS)

General Specification

INFOID:0000000012552774

Applied model	4WD
	VQ35DE
	CVT
Final drive model	R145K1
Gear ratio	2.466
Number of teeth (Drive gear/Drive pinion)	37/15
Oil capacity (Approx.) ℓ (US pt, Imp pt)	0.5 (1, 7/8)
Number of pinion gears	2

Companion Flange Runout

INFOID:0000000012552775

Unit: mm (in)

Item	Limit
Companion flange face	0.12 (0.0047)
Inner side of the companion flange	0.27 (0.0106)