HEATER & AIR CONDITIONER

SECTION HA

CONTENTS

CONTENTS (Cont'd)

Supplemental Restraint System (SRS) "AIR BAG" and "SEAT BELT PRE-TENSIONER"

NAHA0153

The Supplemental Restraint System such as "AIR BAG" and "SEAT BELT PRE-TENSIONER" used along with a seat belt, helps to reduce the risk or severity of injury to the driver and front passenger for certain types of collision. The SRS system composition which is available to NISSAN MODEL R50 is as follows:

- For a frontal collision
  The Supplemental Restraint System consists of driver air bag module (located in the center of the steering wheel), front passenger air bag module (located on the instrument panel on passenger side), seat belt pre-tensioners, a diagnosis sensor unit, warning lamp, wiring harness and spiral cable.
- For a side collision
  The Supplemental Restraint System consists of side air bag module (located in the outer side of front seat), satellite sensor, diagnosis sensor unit (one of components of air bags for a frontal collision), wiring harness, warning lamp (one of components of air bags for a frontal collision).

Information necessary to service the system safely is included in the **RS section** of this Service Manual.

WARNING:

- **To avoid rendering the SRS inoperative, which could increase the risk of personal injury or death in the event of a collision which would result in air bag inflation, all maintenance must be performed by an authorized NISSAN dealer.**
- **Improper maintenance, including incorrect removal and installation of the SRS, can lead to personal injury caused by unintentional activation of the system. For removal of Spiral Cable and Air Bag Module, see the RS section.**
- **Do not use electrical test equipment on any circuit related to the SRS unless instructed to in this Service Manual. Spiral cable and wiring harnesses covered with yellow insulation tape either just before the harness connectors or for the complete harness are related to the SRS.**

Precautions for Working with HFC-134a (R-134a)

NAHA0154

WARNING:

- **CFC-12 (R-12) refrigerant and HFC-134a (R-134a) refrigerant are not compatible. If the refrigerants are mixed and compressor failure is likely to occur, refer to "CONTAMINATED REFRIGERANT" below. To determine the purity of HFC-134a (R-134a) in the vehicle and recovery tank, use Refrigerant Recovery/Recycling Recharging equipment (ACR4) (J-39500-NI) and Refrigerant Identifier.**
- **Use only specified lubricant for the HFC-134a (R-134a) A/C system and HFC-134a (R-134a) components. If lubricant other than that specified is used, compressor failure is likely to occur.**
- **The specified HFC-134a (R-134a) lubricant rapidly absorbs moisture from the atmosphere. The following handling precautions must be observed:**

a) When removing refrigerant components from a vehicle, immediately cap (seal) the component to minimize the entry of moisture from the atmosphere.

b) When installing refrigerant components to a vehicle, do not remove the caps (unseal) until just before connecting the components. Connect all refrigerant loop components as quickly as possible to minimize the entry of moisture into system.

c) Only use the specified lubricant from a sealed container. Immediately reseal containers of lubricant. Without proper sealing, lubricant will become moisture saturated and should not be used.

d) Avoid breathing A/C refrigerant and lubricant vapor or mist. Exposure may irritate eyes, nose and throat. Remove R-134a from the A/C system, using certified service equipment meeting requirements of SAE J2210 (R-134a recycling equipment), or J2209 (R-134a recovery equipment). If accidental system discharge occurs, ventilate work area before resuming service. Additional health and safety information may be obtained from refrigerant and lubricant manufacturers.

e) Do not allow lubricant (Nissan A/C System Oil Type S) to come in contact with styrofoam parts. Damage may result.

CONTAMINATED REFRIGERANT

NAHA0154S01

If a refrigerant other than pure R-134a is identified in a vehicle, your options are:

- Explain to the customer that environmental regulations prohibit the release of contaminated refrigerant into the atmosphere.
- Explain that recovery of the contaminated refrigerant could damage your service equipment and refrigerant supply.

- Suggest the customer return the vehicle to the location of previous service where the contamination may have occurred.
- If you choose to perform the repair, recover the refrigerant using only **dedicated equipment and containers. Do not recover contaminated refrigerant into your existing service equipment.** If your facility does not have dedicated recovery equipment, you may contact a local refrigerant product retailer for available service. This refrigerant must be disposed of in accordance with all federal and local regulations. In addition, replacement of all refrigerant system components on the vehicle is recommended.
- If the vehicle is within the warranty period, the air conditioner warranty is void. Please contact Nissan Customer Affairs for further assistance.

General Refrigerant Precautions

NAHA0155

WARNING:

- **Do not release refrigerant into the air. Use approved recovery/recycling equipment to capture the refrigerant every time an air conditioning system is discharged.**
- **Always wear eye and hand protection (goggles and gloves) when working with any refrigerant or air conditioning system.**
- **Do not store or heat refrigerant containers above 52°C (125°F).**
- **Do not heat a refrigerant container with an open flame; if container warming is required, place the bottom of the container in a warm pail of water.**
- **Do not intentionally drop, puncture, or incinerate refrigerant containers.**
- **Keep refrigerant away from open flames: poisonous gas will be produced if refrigerant burns.**
- **Refrigerant will displace oxygen, therefore be certain to work in well ventilated areas to prevent suffocation.**
- **Do not pressure test or leak test HFC-134a (R-134a) service equipment and/or vehicle air conditioning systems with compressed air during repair. Some mixtures of air and R-134a have been shown to be combustible at elevated pressures. These mixtures, if ignited, may cause injury or property damage. Additional health and safety information may be obtained from refrigerant manufacturers.**

Precautions for Refrigerant Connection

NAHA0156

A new type refrigerant connection has been introduced to all refrigerant lines except the following location.

- Expansion valve to cooling unit

FEATURES OF NEW TYPE REFRIGERANT CONNECTION

NAHA0156S01

- The O-ring has been relocated. It has also been provided with a groove for proper installation. This eliminates the chance of the O-ring being caught in, or damaged by, the mating part. The sealing direction of the O-ring is now set vertically in relation to the contacting surface of the mating part to improve sealing characteristics.
- The reaction force of the O-ring will not occur in the direction that causes the joint to pull out, thereby facilitating piping connections.

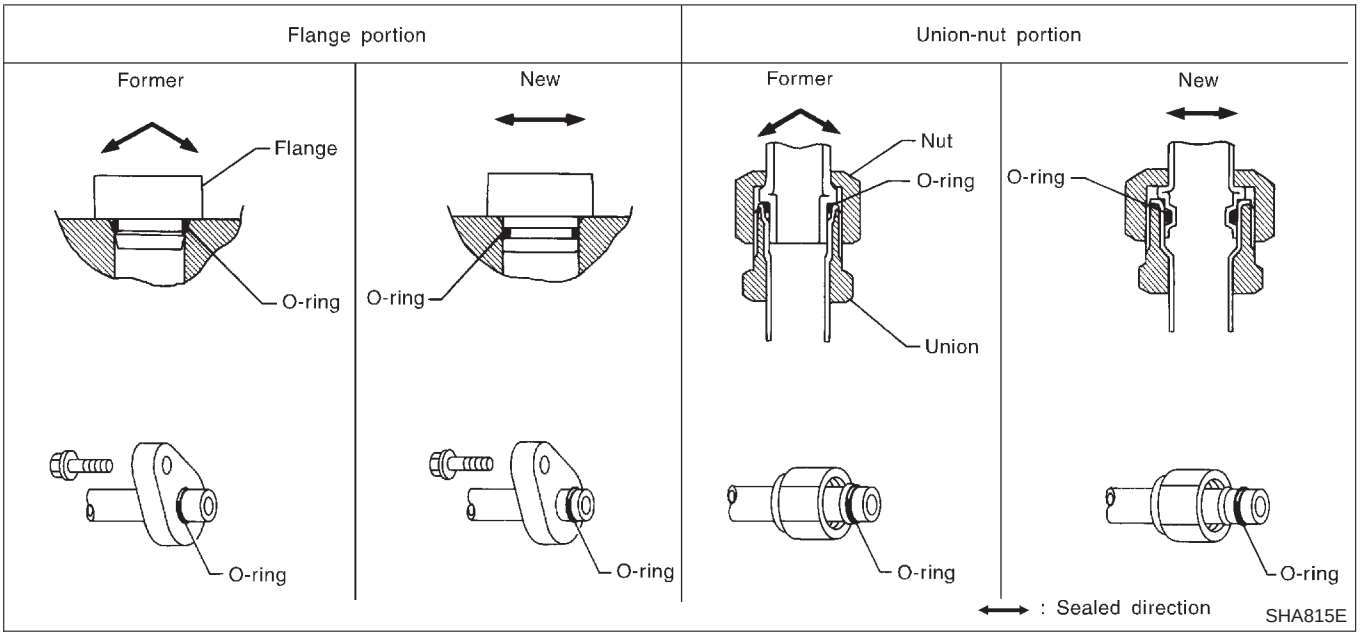

O-RING AND REFRIGERANT CONNECTION

NAHA0156S02

SEC. 271•274•276

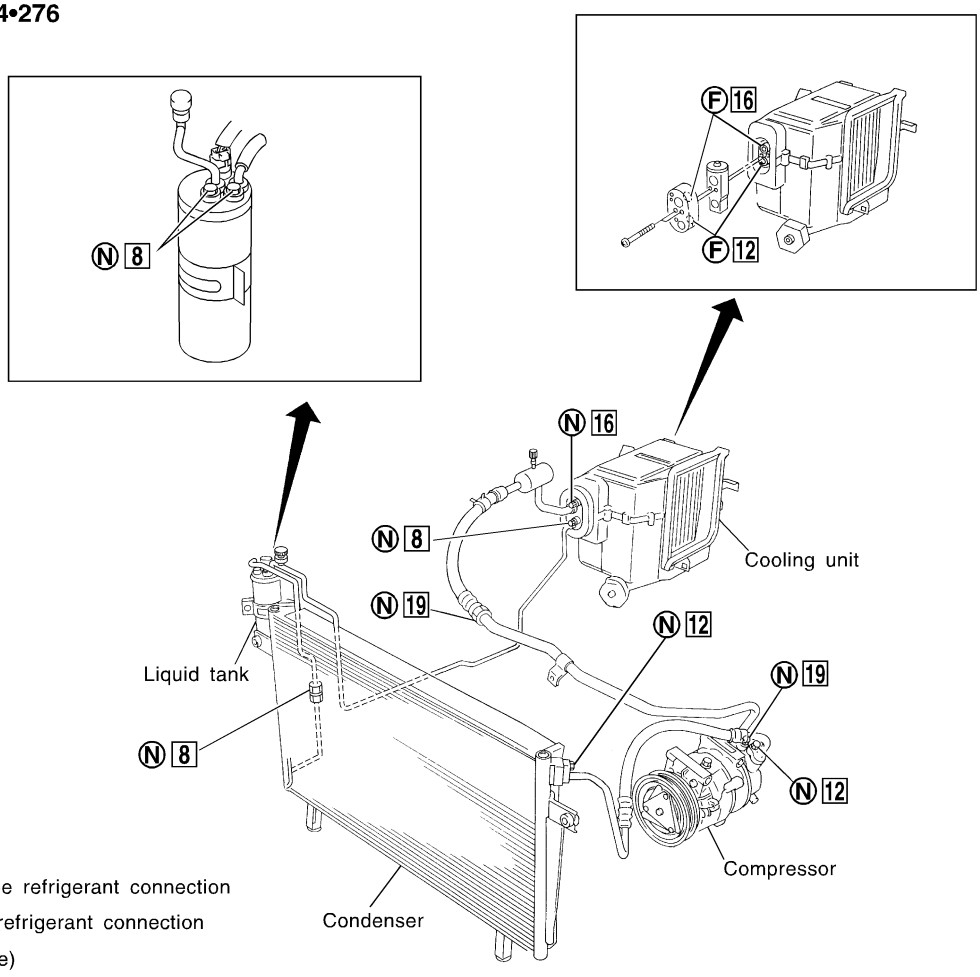

CAUTION:

The new and former refrigerant connections use different O-ring configurations. Do not confuse O-rings since they are not interchangeable. If a wrong O-ring is installed, refrigerant will leak at, or around, the connection.

O-Ring Part Numbers and Specifications

NAHA0156S0201

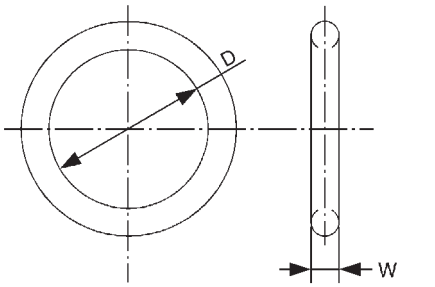

SHA814E

Connection type	O-ring size	Part number	D mm (in)	W mm (in)
New	8	92471 N8210	6.8 (0.268)	1.85 (0.0728)
Former		92470 N8200	6.07 (0.2390)	1.78 (0.0701)
New	12	92472 N8210	10.9 (0.429)	2.43 (0.0957)
Former		92475 71L00	11.0 (0.433)	2.4 (0.094)
New	16	92473 N8210	13.6 (0.535)	2.43 (0.0957)
Former		92475 72L00	14.3 (0.563)	2.3 (0.0906)
New	19	92474 N8210	16.5 (0.650)	2.43 (0.0957)
Former		92477 N8200	17.12 (0.6740)	1.78 (0.0701)

WARNING:

Make sure all refrigerant is discharged into the recycling equipment and the pressure in the system is less than atmospheric pressure. Then gradually loosen the discharge side hose fitting and remove it.

CAUTION:

When replacing or cleaning refrigerant cycle components, observe the following.

- **When the compressor is removed, store it in the same position as it is when mounted on the car. Failure to do so will cause lubricant to enter the low pressure chamber.**
- **When connecting tubes, always use a torque wrench and a back-up wrench.**
- **After disconnecting tubes, immediately plug all openings to prevent entry of dirt and moisture.**
- **When installing an air conditioner in the vehicle, connect the pipes as the final stage of the operation. Do not remove the seal caps of pipes and other components until just before required for connection.**
- **Allow components stored in cool areas to warm to working area temperature before removing seal caps. This prevents condensation from forming inside A/C components.**
- **Thoroughly remove moisture from the refrigeration system before charging the refrigerant.**
- **Always replace used O-rings.**
- **When connecting tube, apply lubricant to circle of the O-rings shown in illustration. Be careful not to apply lubricant to threaded portion.**
  Lubricant name: Nissan A/C System Oil Type S
  Part number: KLH00-PAGS0
- **O-ring must be closely attached to dented portion of tube.**
- **When replacing the O-ring, be careful not to damage O-ring and tube.**
- **Connect tube until you hear it click, then tighten the nut or bolt by hand until snug. Make sure that the O-ring is installed to tube correctly.**
- **After connecting line, conduct leak test and make sure that there is no leakage from connections. When the gas leaking point is found, disconnect that line and replace the O-ring. Then tighten connections of seal seat to the specified torque.**

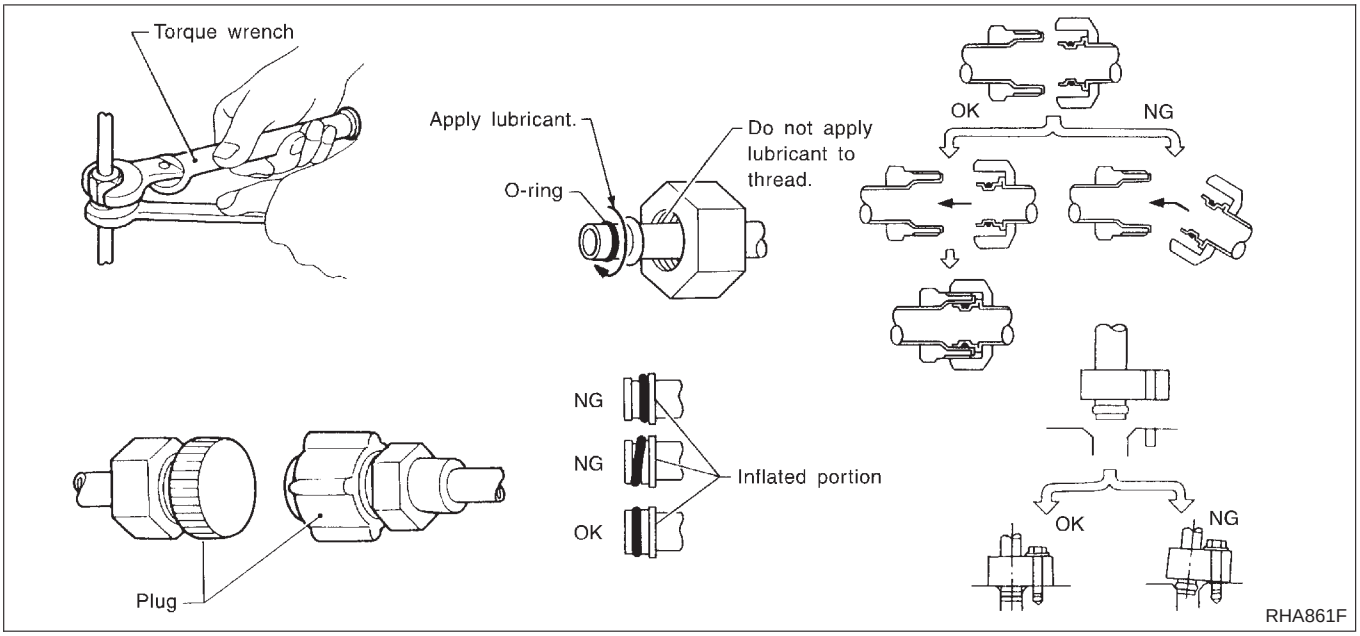

Precautions for Servicing Compressor

NAHA0157

- **Plug all openings to prevent moisture and foreign matter from entering.**
- **When the compressor is removed, store it in the same position as it is when mounted on the car.**
- **When replacing or repairing compressor, follow "Maintenance of Lubricant Quantity in Compressor" exactly. Refer to HA-113.**
- **Keep friction surfaces between clutch and pulley clean. If the surface is contaminated, with lubricant, wipe it off by using a clean waste cloth moistened with thinner.**
- **After compressor service operation, turn the compressor shaft by hand more than five turns in both directions. This will equally distribute lubricant inside the compressor. After the compressor is installed, let the engine idle and operate the compressor for one hour.**
- **After replacing the compressor magnet clutch, apply voltage to the new one and check for normal operation.**

Precautions for Service Equipment

NAHA0158

RECOVERY/RECYCLING EQUIPMENT

NAHA0158S01

Be certain to follow the manufacturers instructions for machine operation and machine maintenance. Never introduce any refrigerant other than that specified into the machine.

ELECTRONIC LEAK DETECTOR

NAHA0158S02

Be certain to follow the manufacturer's instructions for tester operation and tester maintenance.

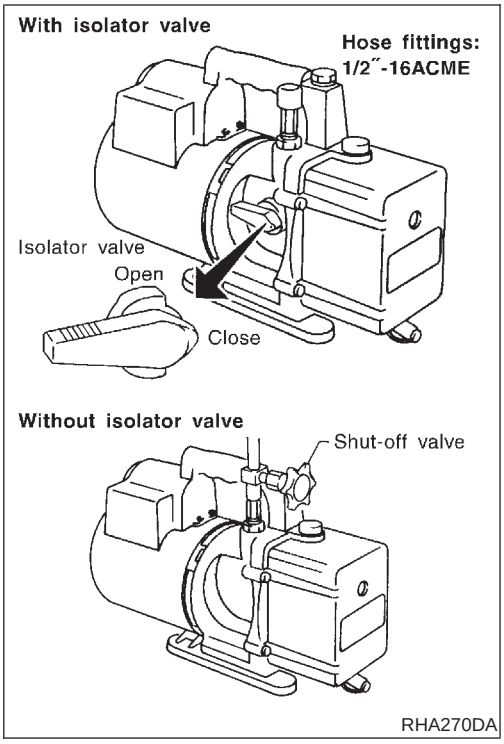

VACUUM PUMP

NAHA0158S03

The lubricant contained inside the vacuum pump is not compatible with the specified lubricant for HFC-134a (R-134a) A/C systems. The vent side of the vacuum pump is exposed to atmospheric pressure. So the vacuum pump lubricant may migrate out of the pump into the service hose. This is possible when the pump is switched off after evacuation (vacuuming) and hose is connected to it.

To prevent this migration, use a manual valve placed near the hose-to-pump connection, as follows.

- Usually vacuum pumps have a manual isolator valve as part of the pump. Close this valve to isolate the service hose from the pump.
- For pumps without an isolator, use a hose equipped with a manual shut-off valve near the pump end. Close the valve to isolate the hose from the pump.
- If the hose has an automatic shut off valve, disconnect the hose from the pump. As long as the hose is connected, the valve is open and lubricating oil may migrate.

Some one-way valves open when vacuum is applied and close under a no vacuum condition. Such valves may restrict the pump's ability to pull a deep vacuum and are not recommended.

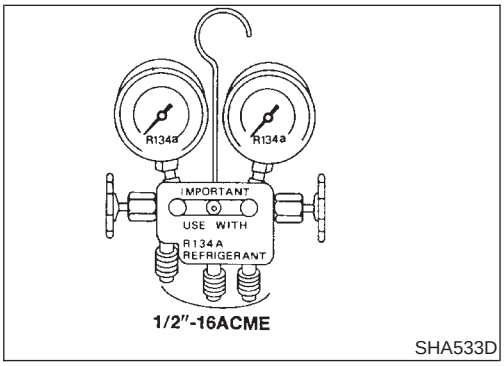

MANIFOLD GAUGE SET

NAHA0158S04

Be certain that the gauge face indicates R-134a or 134a. Be sure the gauge set has 1/2″-16 ACME threaded connections for service hoses. Confirm the set has been used only with refrigerant HFC-134a (R-134a) and specified lubricants.

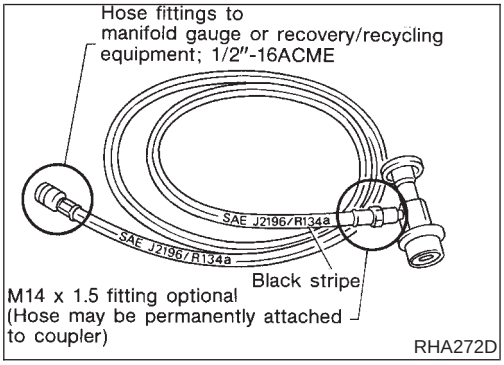

SERVICE HOSES

NAHA0158S05

Be certain that the service hoses display the markings described (colored hose with black stripe). All hoses must include positive shut off devices (either manual or automatic) near the end of the hoses opposite the manifold gauge.

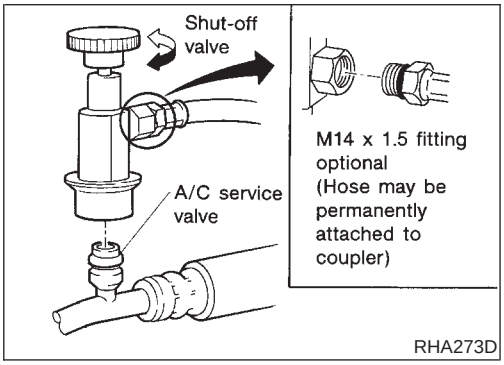

SERVICE COUPLERS

NAHA0158S06

Never attempt to connect HFC-134a (R-134a) service couplers to an CFC-12 (R-12) A/C system. The HFC-134a (R-134a) couplers will not properly connect to the CFC-12 (R-12) system. However, if an improper connection is attempted, discharging and contamination may occur.

Shut-off valve rotation	A/C service valve
Clockwise	Open
Counterclockwise	Close

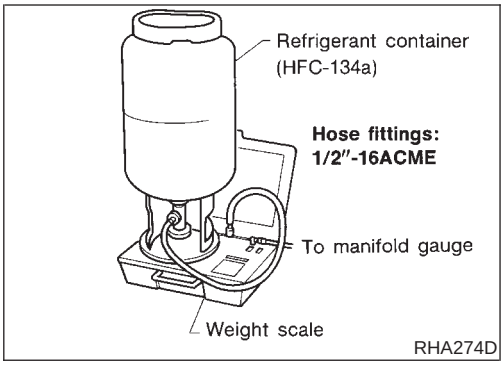

REFRIGERANT WEIGHT SCALE

NAHA0158S07

Verify that no refrigerant other than HFC-134a (R-134a) and specified lubricants have been used with the scale. If the scale controls refrigerant flow electronically, the hose fitting must be 1/2″-16 ACME.

CALIBRATING ACR4 WEIGHT SCALE

NAHA0158S08

Calibrate the scale every three months.
To calibrate the weight scale on the ACR4 (J-39500-NI):

1. Press **Shift/Reset** and **Enter** at the same time.
2. Press **8787**. "**A1**" will be displayed.
3. Remove all weight from the scale.
4. Press **0**, then press **Enter**. "**0.00**" will be displayed and change to "**A2**".
5. Place a known weight (dumbbell or similar weight), between 4.5 and 8.6 kg (10 and 19 lb) on the center of the weight scale.
6. Enter the known weight using four digits. (Example 10 lb = 10.00, 10.5 lb = 10.50)
7. Press **Enter** — the display returns to the vacuum mode.
8. Press **Shift/Reset** and **Enter** at the same time.
9. Press **6** — the known weight on the scale is displayed.
10. Remove the known weight from the scale. "**0.00**" will be displayed.
11. Press **Shift/Reset** to return the ACR4 to the program mode.

CHARGING CYLINDER

NAHA0158S09

Using a charging cylinder is not recommended. Refrigerant may be vented into air from cylinder's top valve when filling the cylinder with refrigerant. Also, the accuracy of the cylinder is generally less than that of an electronic scale or of quality recycle/recharge equipment.

Wiring Diagrams and Trouble Diagnoses

NAHA0159

When you read wiring diagrams, refer to the following:

- GI-11, "HOW TO READ WIRING DIAGRAMS"
- EL-10, "Wiring Diagram — POWER —".

When you perform trouble diagnoses, refer to the following:

- GI-33, "HOW TO FOLLOW TROUBLE DIAGNOSES"
- GI-23, "HOW TO PERFORM EFFICIENT DIAGNOSIS FOR AN ELECTRICAL INCIDENT"

Special Service Tools

NAHA0160

The actual shapes of Kent-Moore tools may differ from those of special service tools illustrated here.

Tool number (Kent-Moore No.) Tool name	Description
KV99106100 (J-41260) Clutch disc wrench	Removing center bolt 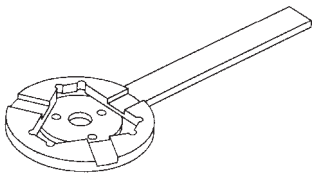 NT232 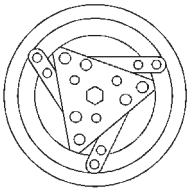 When replacing the magnet clutch in the above compressor, use a clutch disc wrench with the pin side on the clutch disc to remove it. 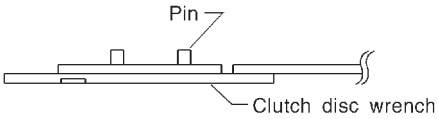 NT378
KV99232340 (J-38874) or KV992T0001 (—) Clutch disc puller	Removing clutch disc 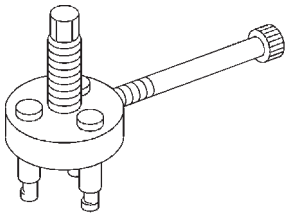 NT376
KV99106200 (J-41261) Pulley installer	Installing pulley 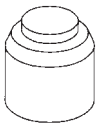 NT235

HFC-134a (R-134a) Service Tools and Equipment

=NAHA0161

Never mix HFC-134a refrigerant and/or its specified lubricant with CFC-12 (R-12) refrigerant and/or its lubricant.

Separate and non-interchangeable service equipment must be used for handling each type of refrigerant/lubricant.

Refrigerant container fittings, service hose fittings and service equipment fittings (equipment which handles refrigerant and/or lubricant) are different between CFC-12 (R-12) and HFC-134a (R-134a). This is to avoid mixed use of the refrigerants/lubricant.

Adapters that convert one size fitting to another must never be used: refrigerant/lubricant contamination will occur and compressor failure will result.

Tool number (Kent-Moore No.) Tool name	Description	
HFC-134a (R-134a) refrigerant	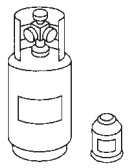 NT196	Container color: Light blue Container marking: HFC-134a (R-134a) Fitting size: Thread size ● Large container 1/2″-16 ACME
KLH00-PAGS0 (—) Nissan A/C System Oil Type S	 NT197	Type: Poly alkylene glycol oil (PAG), type S Application: HFC-134a (R-134a) swash plate (piston) compressors (Nissan only) Lubricity: 40 mℓ (1.4 US fl oz, 1.4 Imp fl oz)
(J-39500-NI) Recovery/Recycling Recharging equipment (ACR4)	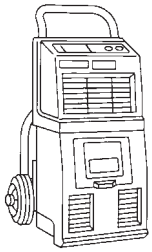 NT195	Function: Refrigerant Recovery and Recycling and Recharging
(J-41995) Electrical leak detector	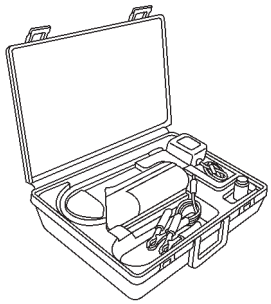 AHA281A	Power supply: ● DC 12V (Cigarette lighter)

HFC-134a (R-134a) Service Tools and Equipment (Cont'd)

Tool number (Kent-Moore No.) Tool name	Description	
(J-39183) Manifold gauge set (with hoses and couplers)	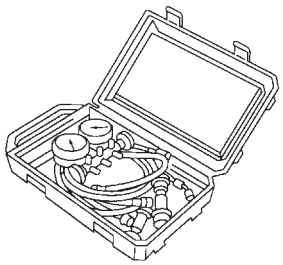 NT199	Identification: ● The gauge face indicates R-134a. Fitting size: Thread size ● 1/2″-16 ACME
Service hoses ● High side hose (J-39501-72) ● Low side hose (J-39502-72) ● Utility hose (J-39476-72)	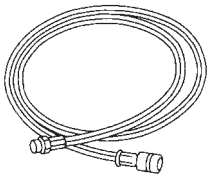 NT201	Hose color: ● Low hose: Blue with black stripe ● High hose: Red with black stripe ● Utility hose: Yellow with black stripe or green with black stripe Hose fitting to gauge: ● 1/2″-16 ACME
Service couplers ● High side coupler (J-39500-20) ● Low side coupler (J-39500-24)	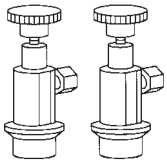 NT202	Hose fitting to service hose: ● M14 x 1.5 fitting is optional or permanently attached.
(J-39650) Refrigerant weight scale	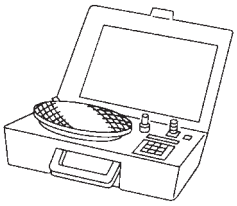 NT200	For measuring of refrigerant Fitting size: Thread size ● 1/2″-16 ACME
(J-39649) Vacuum pump (Including the isolator valve)	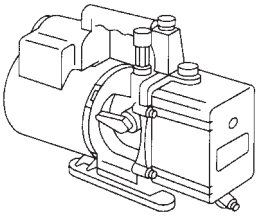 NT203	Capacity: ● Air displacement: 4 CFM ● Micron rating: 20 microns ● Oil capacity: 482 g (17 oz) Fitting size: Thread size ● 1/2″-16 ACME

COMMERCIAL SERVICE TOOL

NAHA0161S01

Tool name	Description
Refrigerant identifier equipment	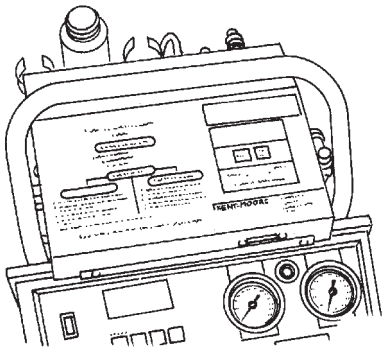 NT765 For checking refrigerant purity and for system contamination

Refrigeration System

REFRIGERATION CYCLE

NAHA0162

Refrigerant Flow

NAHA0162S01

The refrigerant flows in the standard pattern, that is, through the compressor, the condenser, the liquid tank, through the evaporator, and back to the compressor. The refrigerant evaporation through the evaporator coil is controlled by an externally equalized expansion valve, located inside the evaporator case.

Freeze Protection

NAHA0162S02

Under normal operating conditions, when the A/C is switched ON, the compressor runs continuously, and the evaporator pressure, and therefore temperature, is controlled by the V-6 variable displacement compressor to prevent freeze up.

Refrigerant System Protection

NAHA0162S03

Dual-pressure Switch

NAHA0162S0301

The refrigerant system is protected against excessively high or low pressures by the dual-pressure switch, located on the liquid tank. If the system pressure rises above, or falls below the specifications, the dual-pressure switch opens to interrupt the compressor operation.

Pressure Relief Valve

NAHA0162S0302

The refrigerant system is also protected by a pressure relief valve, located in the rear head of the compressor. When the pressure of refrigerant in the system increases to an abnormal level [more than 3,727 kPa (38 kg/cm^2, 540 psi)], the release port on the pressure relief valve automatically opens and releases refrigerant into the atmosphere.

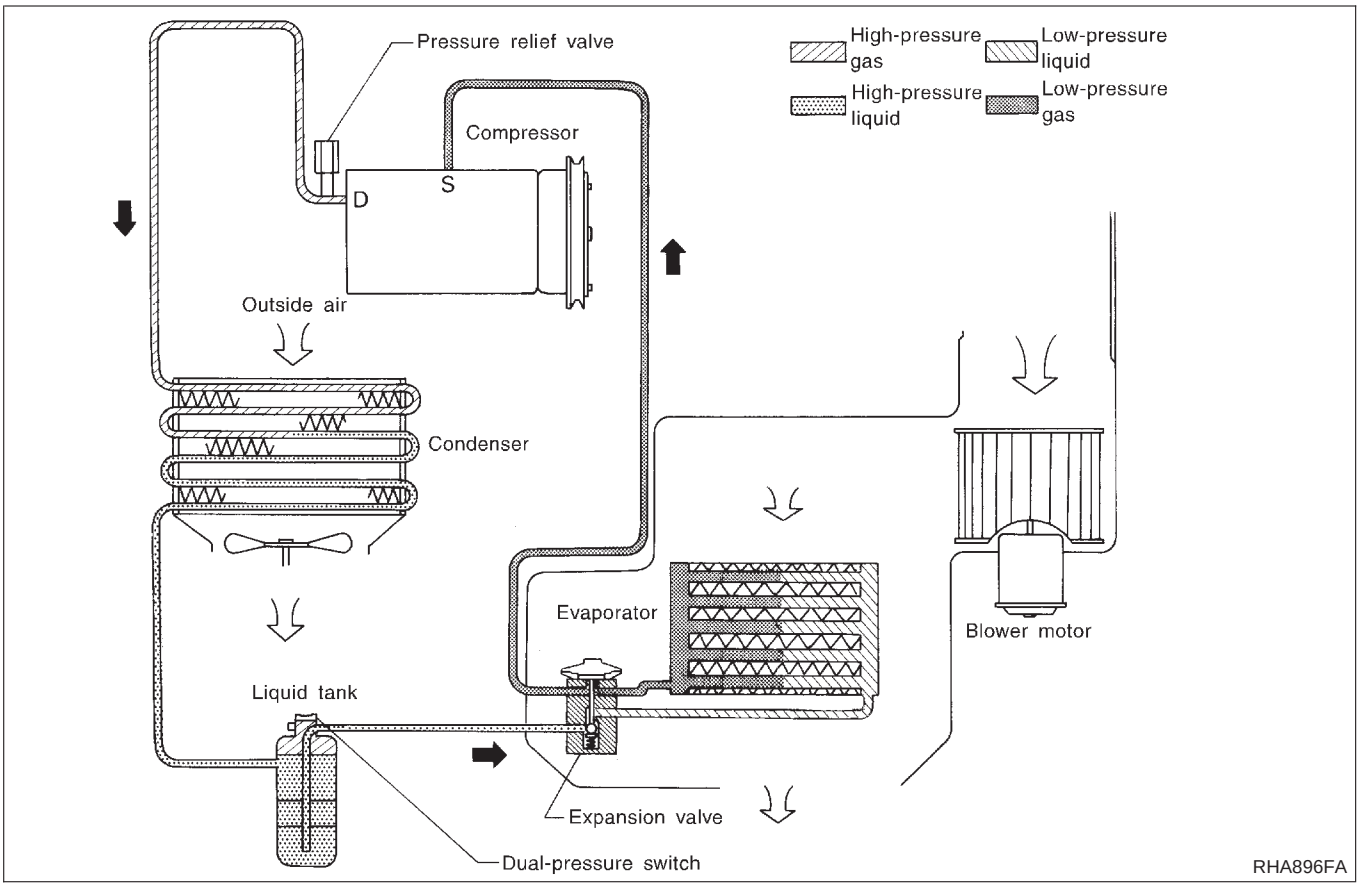

V-6 Variable Displacement Compressor

GENERAL INFORMATION

=NAHA0163

1. The V-6 variable compressor differs from previous units. The vent temperatures of the V-6 variable compress do not drop too far below 5°C (41°F) when:
- evaporator intake air temperature is less than 20°C (68°F)
- engine is running at speeds less than 1,500 rpm.

   This is because the V-6 compressor provides a means of “capacity” control.
2. The V-6 variable compressor provides refrigerant control under varying conditions. During cold winters, it may not produce high refrigerant pressure discharge (compared to previous units) when used with air conditioning systems.
3. A “clanking” sound may occasionally be heard during refrigerant charge. The sound indicates that the tilt angle of the swash plate has changed and is not a problem.
4. For air conditioning systems with the V-6 compressor, the clutch remains engaged unless: the system main switch, fan switch or ignition switch is turned OFF. When ambient (outside) temperatures are low or when the amount of refrigerant is insufficient, the clutch is disengaged to protect the compressor.
5. A constant range of suction pressure is maintained when engine speed is greater than a certain value. It normally ranges from 147 to 177 kPa (1.5 to 1.8 kg/cm^2, 21 to 26 psi) under varying conditions.
   In previous compressors, however, suction pressure was reduced with increases in engine speed.

DESCRIPTION

=NAHA0164

General

NAHA0164S01

The variable compressor is basically a swash plate type that changes piston stroke in response to the required cooling capacity.

The tilt of the swash plate allows the piston's stroke to change so that refrigerant discharge can be continuously changed from 14.5 to 184 cm^3 (0.885 to 11.228 cu in).

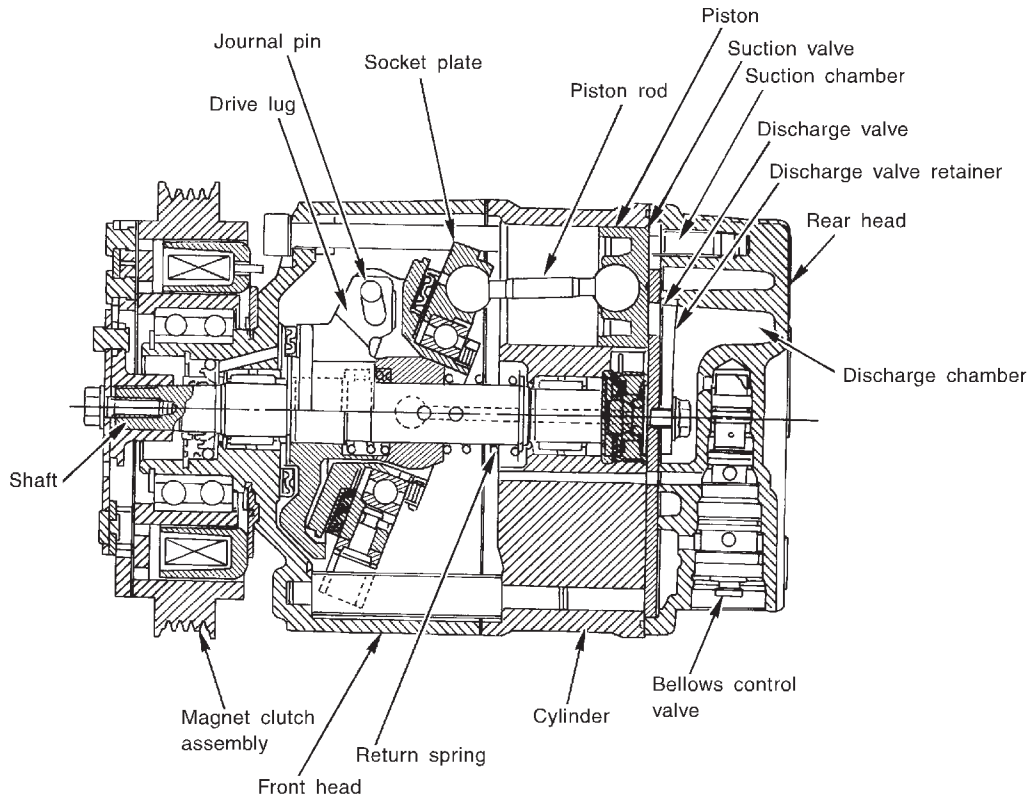

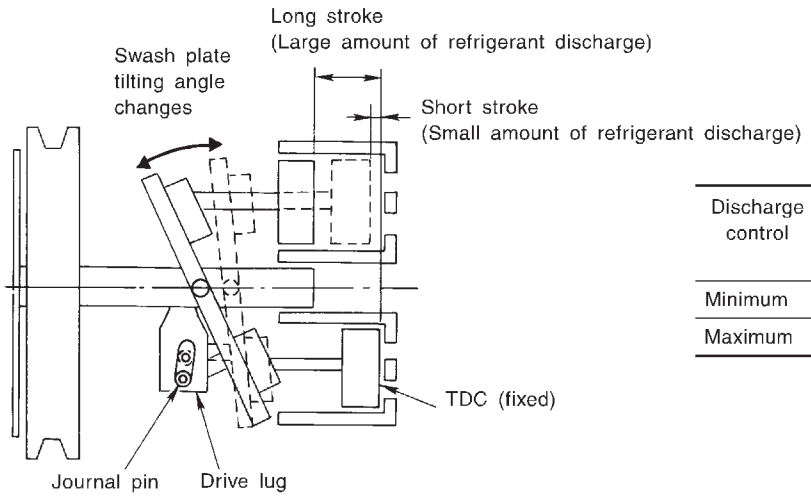

Discharge control	Discharge capacity cm^3 (cu in)/rev.	Piston stroke length mm (in)
Minimum	14.5 (0.885)	2.3 (0.091)
Maximum	184 (11.228)	28.6 (1.126)

RHA037DD

Operation

=NAHA0164S02

1. Operation Control Valve

NAHA0164S0201

Operation control valve is located in the suction port (low-pressure) side, and opens or closes in response to changes in refrigerant suction pressure.
Operation of the valve controls the internal pressure of the crankcase.
The angle of the swash plate is controlled between the crankcase's internal pressure and the piston cylinder pressure.

2. Maximum Cooling

NAHA0164S0202

Refrigerant pressure on the low-pressure side increases with an increase in heat loads.
When this occurs, the control valve's bellows compress to open the low-pressure side valve and close the high-pressure side valve.
This causes the following pressure changes:

- the crankcase's internal pressure to equal the pressure on the low-pressure side;
- the cylinder's internal pressure to be greater than the crankcase's internal pressure.

Under this condition, the swash plate is set to the maximum stroke position.

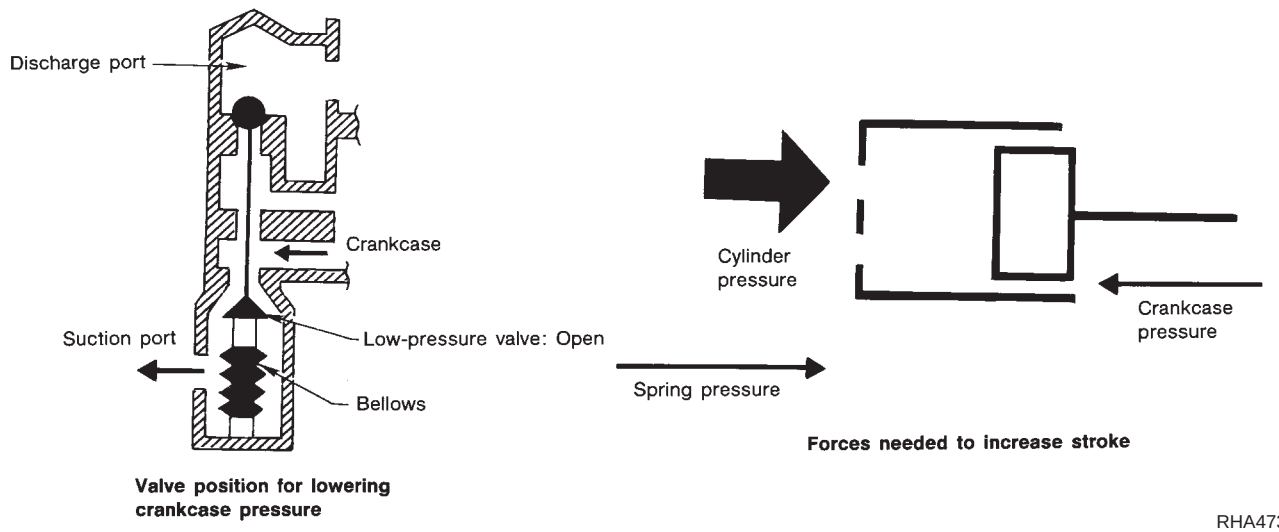

3. Capacity Control

=NAHA0164S0203

- Refrigerant pressure on suction side is low during high speed driving or when ambient or interior temperature is low.
- The bellows expands when refrigerant pressure on the suction pressure side drops below approximately 177 kPa (1.8 kg/cm^2, 26 psi).
  Since suction pressure is low, it makes the suction port close and the discharge port open. Thus, crankcase pressure becomes high as high pressure enters the crankcase.
- The force acts around the journal pin near the swash plate, and is generated by the pressure difference before and behind the piston.
  The drive lug and journal pin are located where the piston generates the highest pressure. Piston pressure is between suction pressure Ps and discharge pressure Pd, which is near suction pressure Ps. If crankcase pressure Pc rises due to capacity control, the force around the journal pin makes the swash plate angle decrease and also the piston stroke decrease. In other words, crankcase pressure increase triggers pressure difference between the piston and the crankcase. The pressure difference changes the angle of the swash plate.

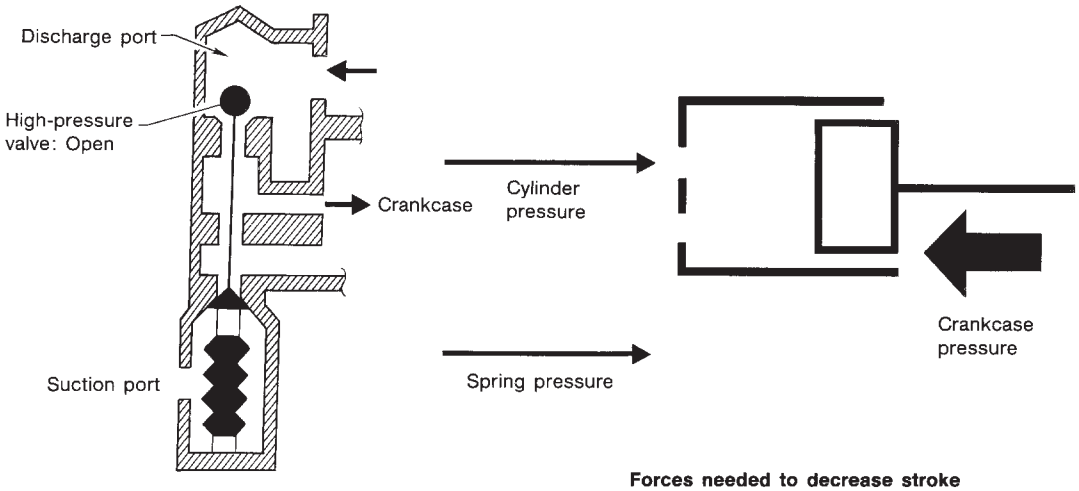

Valve position for raising crankcase pressure

Forces needed to decrease stroke

RHA474C

FICD CONTROL SYSTEM

=NAHA0165

General

NAHA0165S01

With the variable displacement compressor, the compressor power requirements differ from when the ambient temperature is high and maximum cooling effect is required (i.e., when refrigerating load is large and the tilt angle of the compressor swash plate is large) to when the ambient temperature is low and less cooling effect is required (i.e., when refrigerating load is small and the tilt angle of the swash plate is small). To correspond correctly to this change in compressor power requirements, it is also necessary to control the operation of the IACV-FICD according to the refrigerating load. Thus, an ambient air temperature switch is provided on the front face of the condenser so that the IACV-FICD can be controlled depending on the ambient temperature.

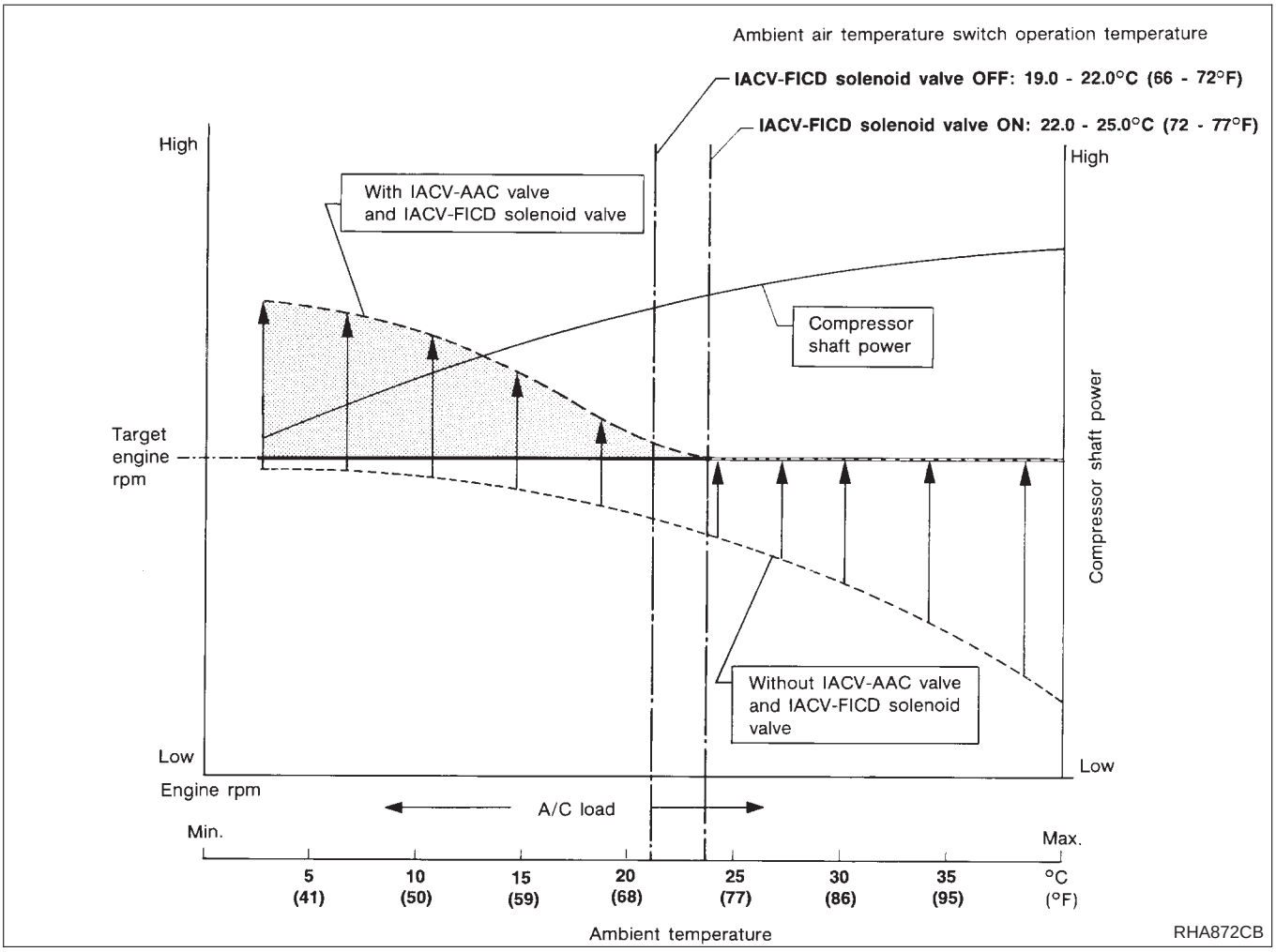

Operation

=NAHA0165S02

When the air conditioner is OFF, the ECM detects the load applied to the engine, and controls the IACV-AAC valve to adjust the engine idling speed to the appropriate rpm by supplying additional air from the IACV-AAC valve.

When the air conditioner is ON (A/C relay is ON), and when the ambient air temperature switch is ON [this switch turns ON automatically when the ambient temperature rises to approx. 25.0°C (77°F) or higher], the IACV-FICD solenoid valve is energized and additional air is supplied to the engine.

If the appropriate engine speed is not reached, the IACV-AAC valve supplies the additional air required to increase the engine rpm.

If the ambient air temperature switch is OFF [this switch turns OFF when the ambient temperature is below 19.0°C (66°F)] even when the air conditioner is ON (A/C relay is ON), the IACV-FICD solenoid valve is deenergized, and the idling speed is controlled so that the appropriate rpm can be achieved by operation of the IACV-AAC valve only.

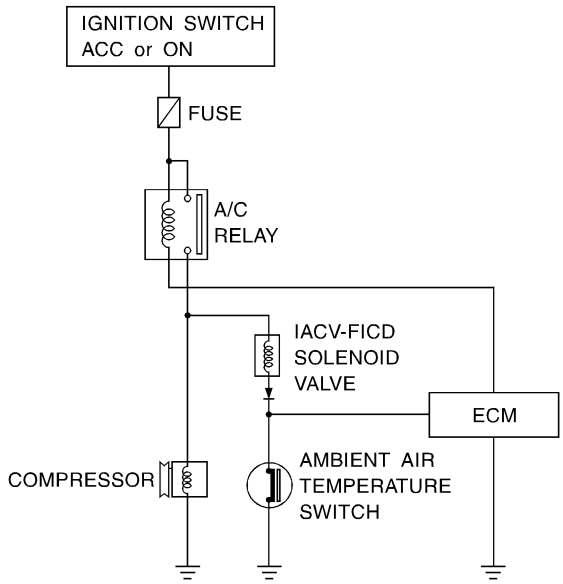

Ambient temperature °C (°F)	Ambient air temperature switch	IACV-FICD solenoid valve
Below 19.0 - 22.0 (66 - 72)	OFF	OFF
Above 22.0 - 25.0 (72 - 77)	ON	ON

Idle speed: (rpm) Refer to EC section.

RHA873CC

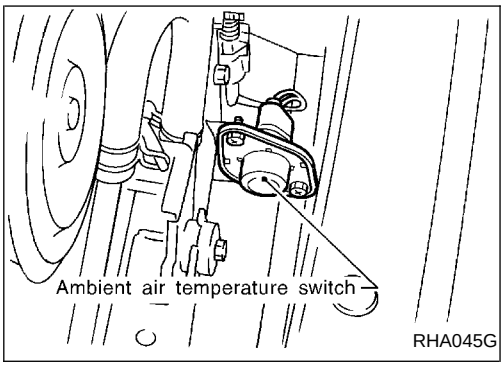

Component Layout

NAHA0166

SEC. 270•271•272•273

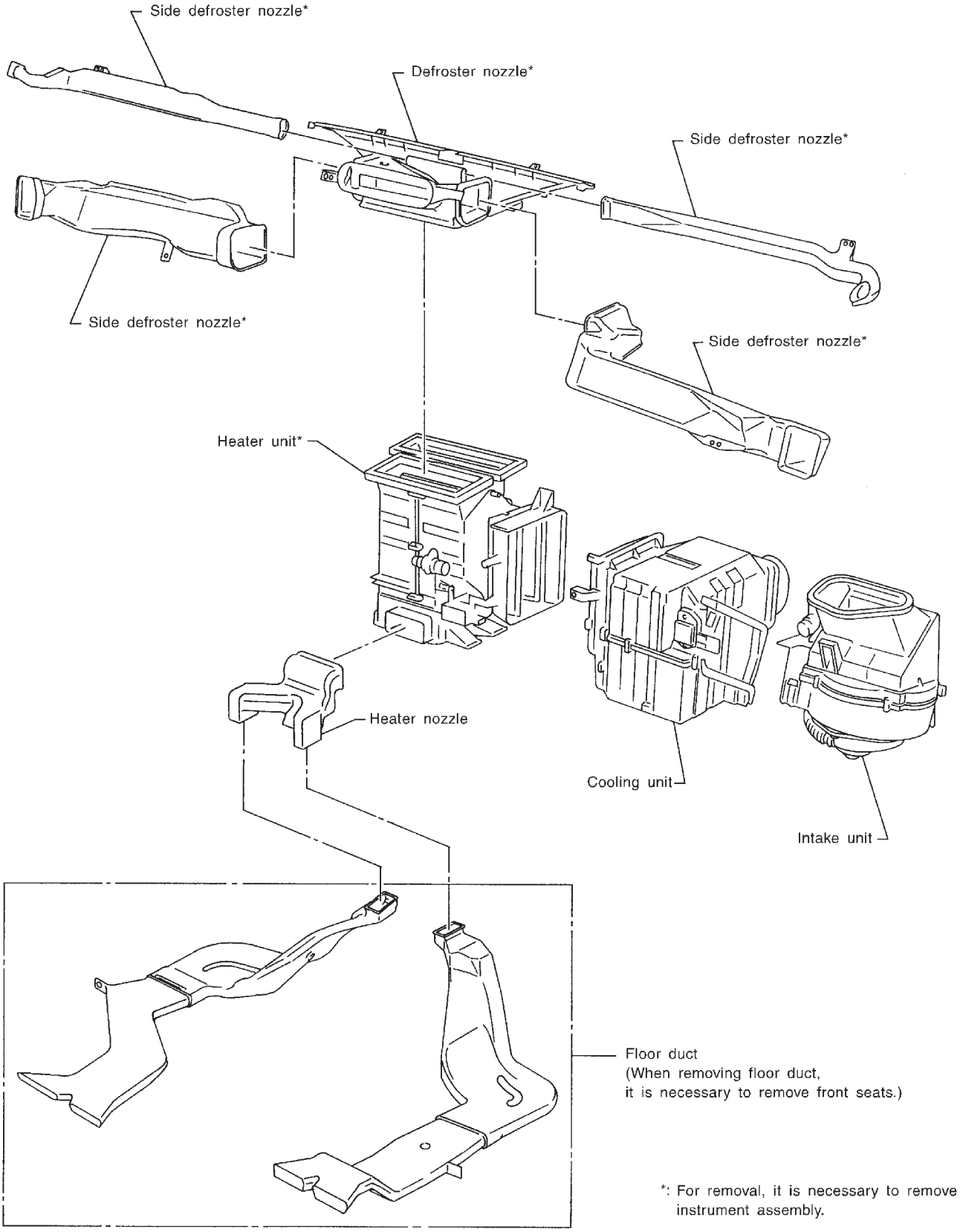

*: For removal, it is necessary to remove instrument assembly.

RHA451G

Introduction

NAHA0167

AIR CONDITIONER LAN SYSTEM OVERVIEW CONTROL SYSTEM

NAHA0167S01

The LAN system consists of auto amp., mode door motor and air mix door motor.
A configuration of these components is shown in the diagram below.

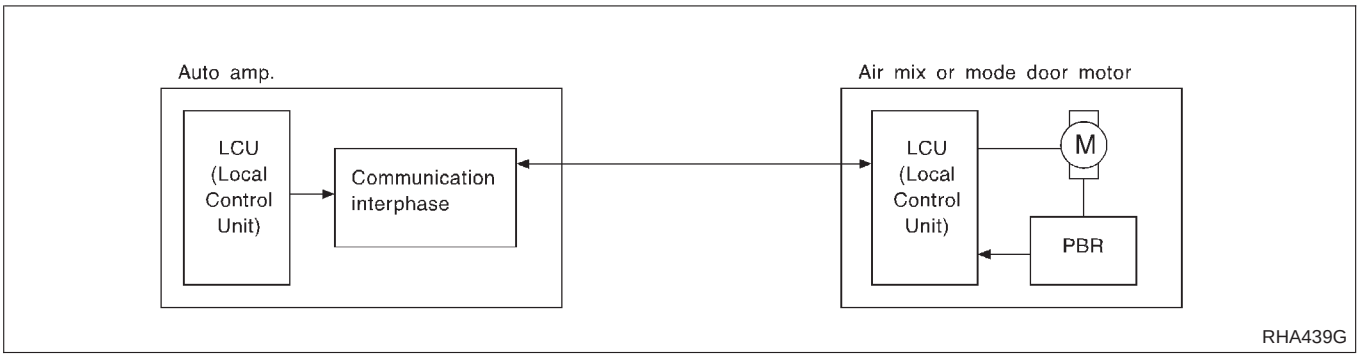

Features

NAHA0168

SYSTEM CONSTRUCTION (LAN)

NAHA0168S01

A small network is constructed between the auto amplifier, mode door motor and air mix door motor. The auto amplifier and motors are connected by data transmission lines and motor power supply lines. The LAN network is built through the ground circuits of the two motors.
Addresses, motor opening angle signals, motor stop signals and error checking messages are all transmitted through the data transmission lines connecting the auto amplifier and two motors.
The following functions are contained in LCUs built into the mode door motor and the air mix door motor.

- Address
- Motor opening angle signals
- Data transmission
- Motor stop and drive decision
- Opening angle sensor (PBR function)
- Comparison
- Decision (Auto amplifier indicated value and motor opening angle comparison)

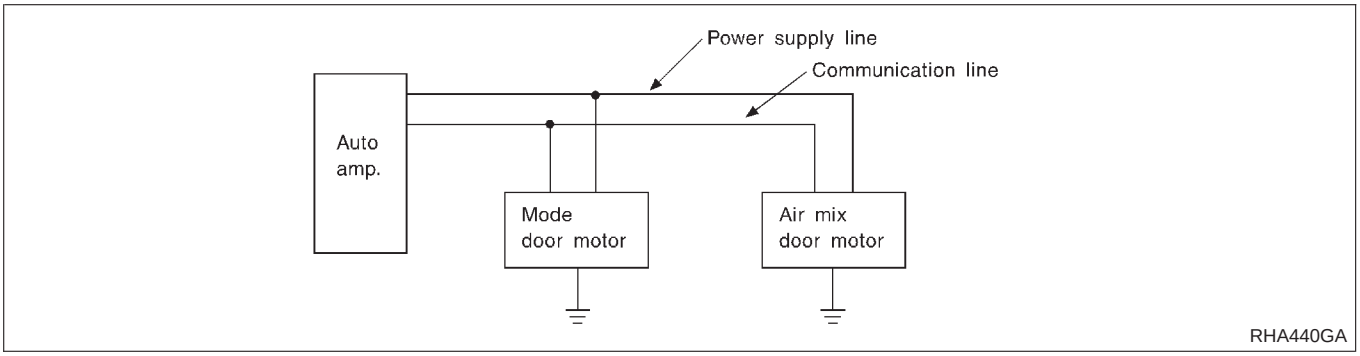

Operation

NAHA0168S0101

The auto amplifier receives data from each of the sensors. The amplifier sends mode door and air mix door opening angle data to the mode door motor LCU and air mix door motor LCU.
The mode door motor and air mix door motor read their respective signals according to the address signal. Opening angle indication signals received from the auto amplifier and each of the motor position sensors are compared by the LCUs in each motor with the existing decision and opening angles. Subsequently, HOT/COLD or DEFROST/VENT operation is selected. The new selection data is returned to the auto amplifier.

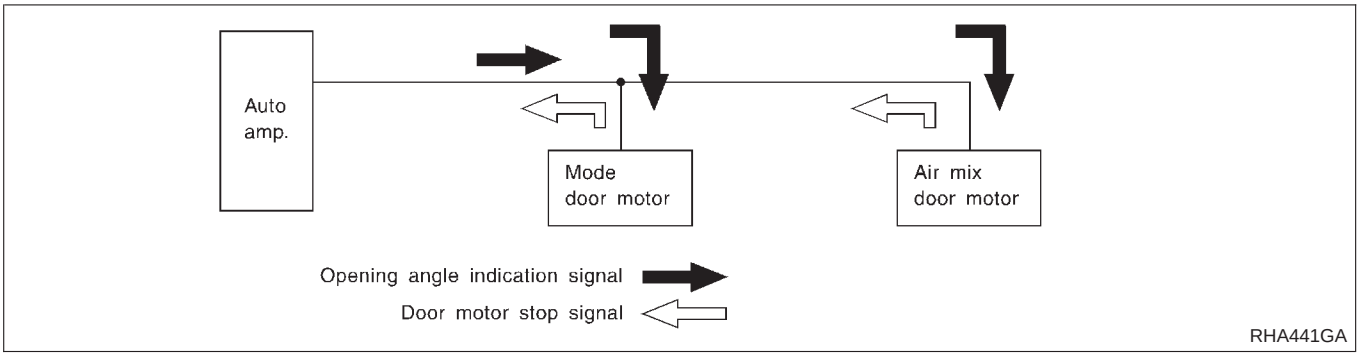

Transmission Data and Transmission Order

NAHA0168S0102

Amplifier data is transmitted consecutively to each of the door motors following the form shown in figure below.
Start: Initial compulsory signal sent to each of the door motors.
Address: Data sent from the auto amplifier is selected according to data-based decisions made by the mode door motor and air mix door motor.
If the addresses are identical, the opening angle data and error check signals are received by the door motor LCUs. The LCUs then make the appropriate error decision. If the opening angle data is normal, door control begins.
If an error exists, the received data is rejected and corrected data received. Finally, door control is based upon the corrected opening angle data.
Opening angle: Data that shows the indicated door opening angle of each door motor.
Error check: Procedure by which sent and received data is checked for errors. Error data is then compiled. The error check prevents corrupted data from being used by the mode door motor and air mix door motor. Error data can be related to the following problems.

- Abnormal electrical frequency
- Poor electrical connections
- Signal leakage from transmission lines
- Signal level fluctuation

Stop signal: At the end of each transmission, a stop operation, in-operation, or internal problem message is delivered to the auto amplifier. This completes one data transmission and control cycle.

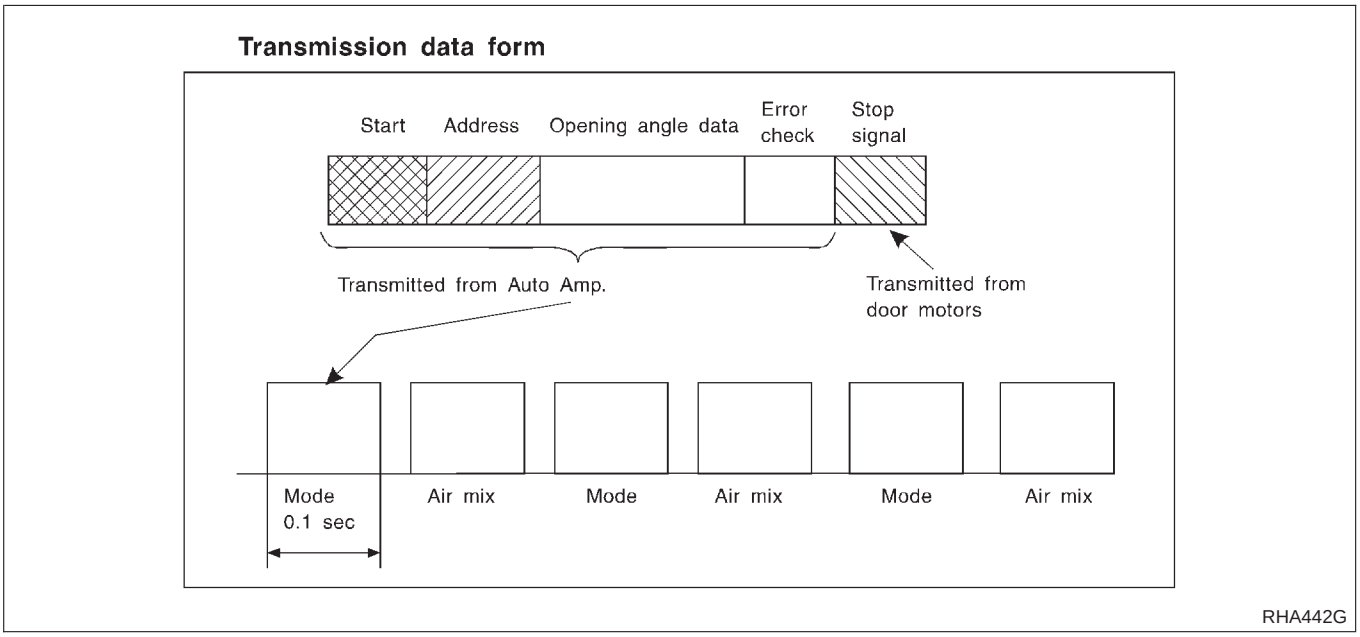

Air Mix Door Control (Automatic Temperature Control)

NAHA0168S0103

The air mix door is automatically controlled so that in-vehicle temperature is maintained at a predetermined value by: The temperature setting, ambient temperature, in-vehicle temperature and amount of sunload.

Fan Speed Control

NAHA0168S0104

Blower speed is automatically controlled based on temperature setting, ambient temperature, in-vehicle temperature, intake temperature, amount of sunload and air mix door position.
With FAN switch set to "AUTO", the blower motor starts to gradually increase air flow volume.
When engine coolant temperature is low, the blower motor operation is delayed to prevent cool air from flowing.

Intake Door Control

NAHA0168S0105

The intake doors are automatically controlled by: The temperature setting, ambient temperature, in-vehicle temperature, intake temperature, amount of sunload and ON-OFF operation of the compressor.

Outlet Door Control

NAHA0168S0106

The outlet door is automatically controlled by: The temperature setting, ambient temperature, in-vehicle temperature, intake temperature and amount of sunload.

Magnet Clutch Control

NAHA0168S0107

The ECM controls compressor operation using input signals from the throttle position sensor and auto amplifier.

Self-diagnostic System

NAHA0168S0108

The self-diagnostic system is built into the auto amplifier (LCU) to quickly locate the cause of problems.

Overview of Control System

=NAHA0169

The control system consists of input sensors, switches, the automatic amplifier (microcomputer) and outputs. The relationship of these components is shown in the diagram below:

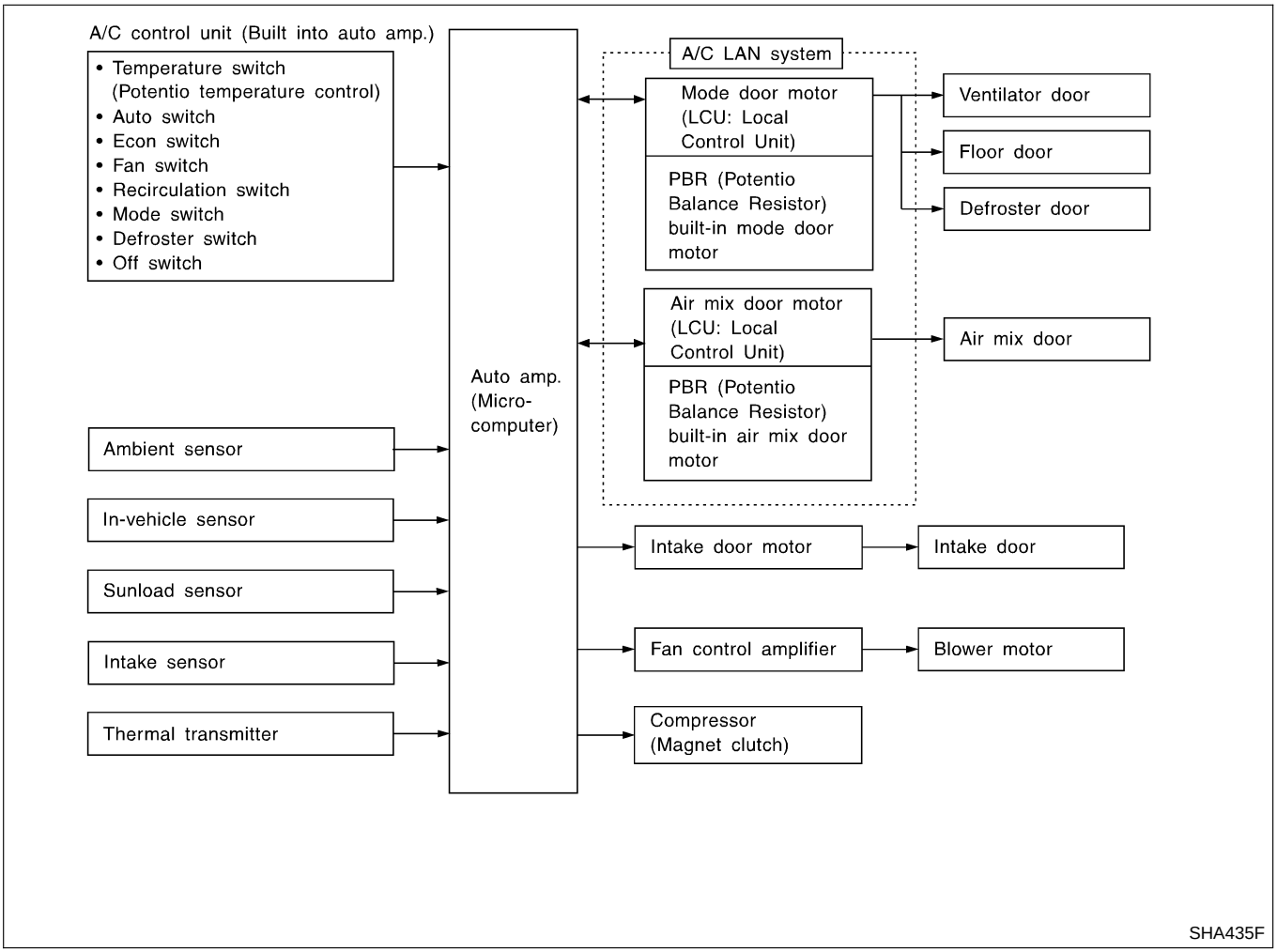

Control Operation

NAHA0170

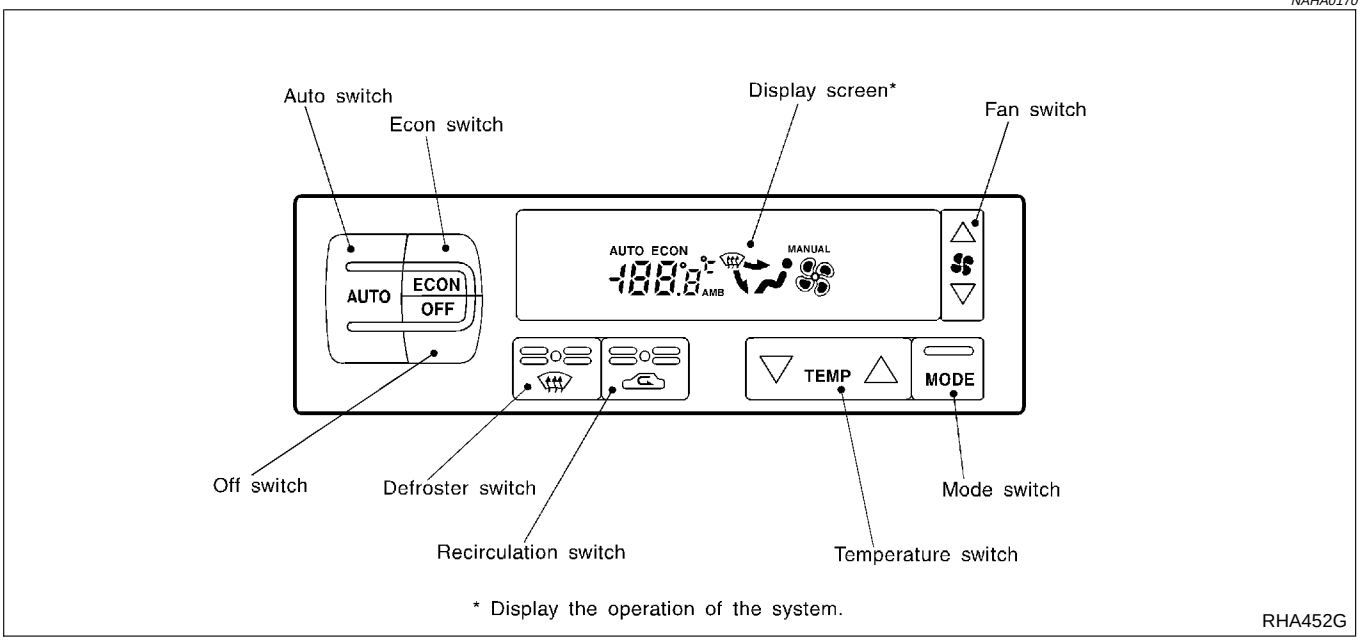

DISPLAY SCREEN

NAHA0170S01

Displays the operational status of the system.

AUTO SWITCH

NAHA0170S02

The compressor, intake doors, air mix door, outlet doors, and blower speed are automatically controlled so that the in-vehicle temperature will reach, and be maintained at the set temperature selected by the operator.

ECON SWITCH

NAHA0170S03

By pressing the ECON switch, the display should indicate ECON and the compressor always turns OFF. With the compressor OFF, the system will not remove heat (cool) or de-humidify. The system will maintain the in-vehicle temperature at the set temperature when the set temperature is above the ambient (outside) temperature. The system will set the intake doors to the outside air position.

TEMPERATURE SWITCH (POTENTIO TEMPERATURE CONTROL)

NAHA0170S04

Increases or decreases the set temperature.

OFF SWITCH

NAHA0170S05

The compressor and blower are OFF, the intake doors are set to the outside air position, and the air outlet doors are set to the foot (80% foot and 20% defrost) position.

FAN SWITCH

NAHA0170S06

Manual control of the blower speed. Four speeds are available for manual control (as shown on the display screen):
low , medium low , medium high , high

RECIRCULATION (REC) SWITCH

NAHA0170S07

OFF position: Outside air is drawn into the passenger compartment.
ON position: Interior air is recirculated inside the vehicle.

DEFROSTER (DEF) SWITCH

NAHA0170S08

Positions the air outlet doors to the defrost position. Also positions the intake doors to the outside air position.

MODE SWITCH

NAHA0170S09

Controls the air discharge outlets.

Discharge Air Flow

NAHA0171

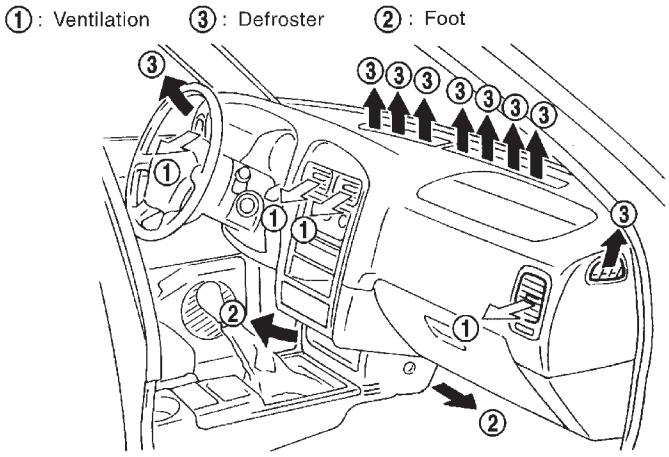

Floor

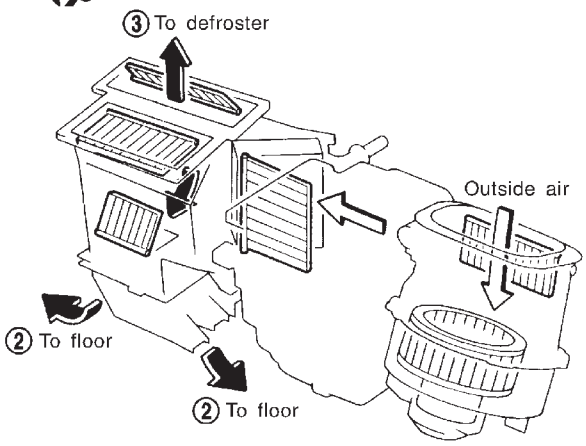

Ventilation
(switch "ON")

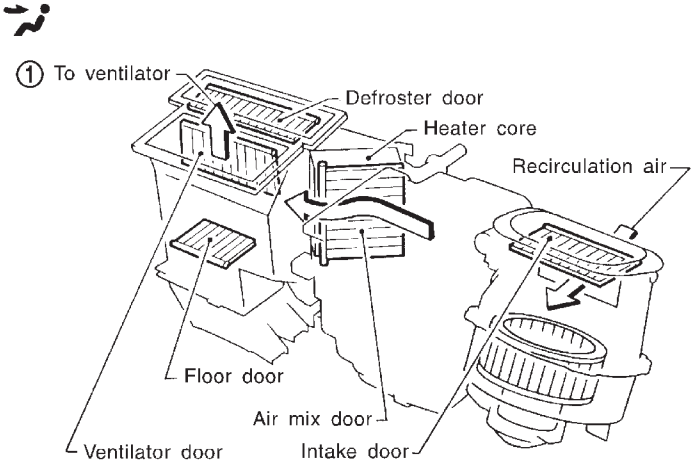

Floor and defroster

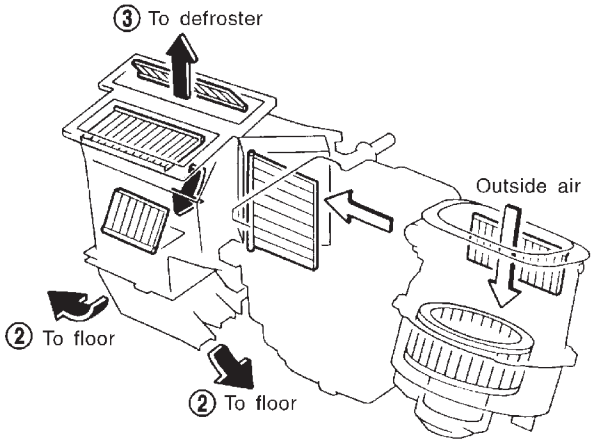

Bi-level
(switch "OFF")

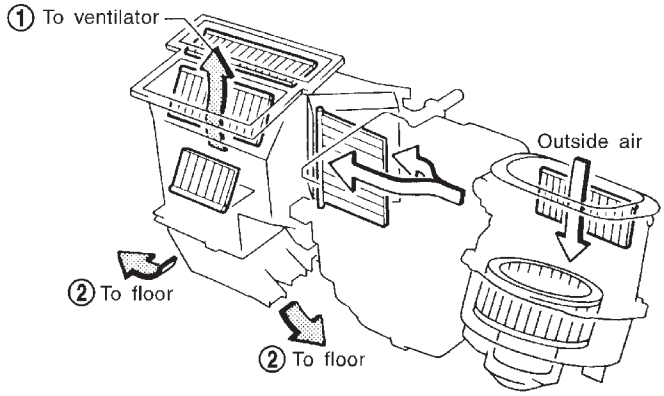

Defroster

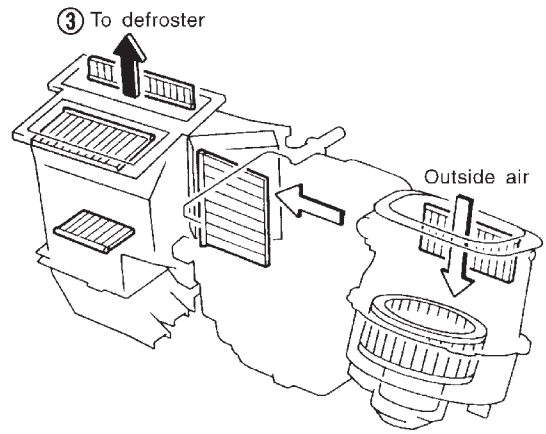

: Air passed through heater core

: Mixed air (+)

: Air not passed through heater core

RHA043G

System Description

NAHA0246

SWITCHES AND THEIR CONTROL FUNCTIONS

NAHA0246S01

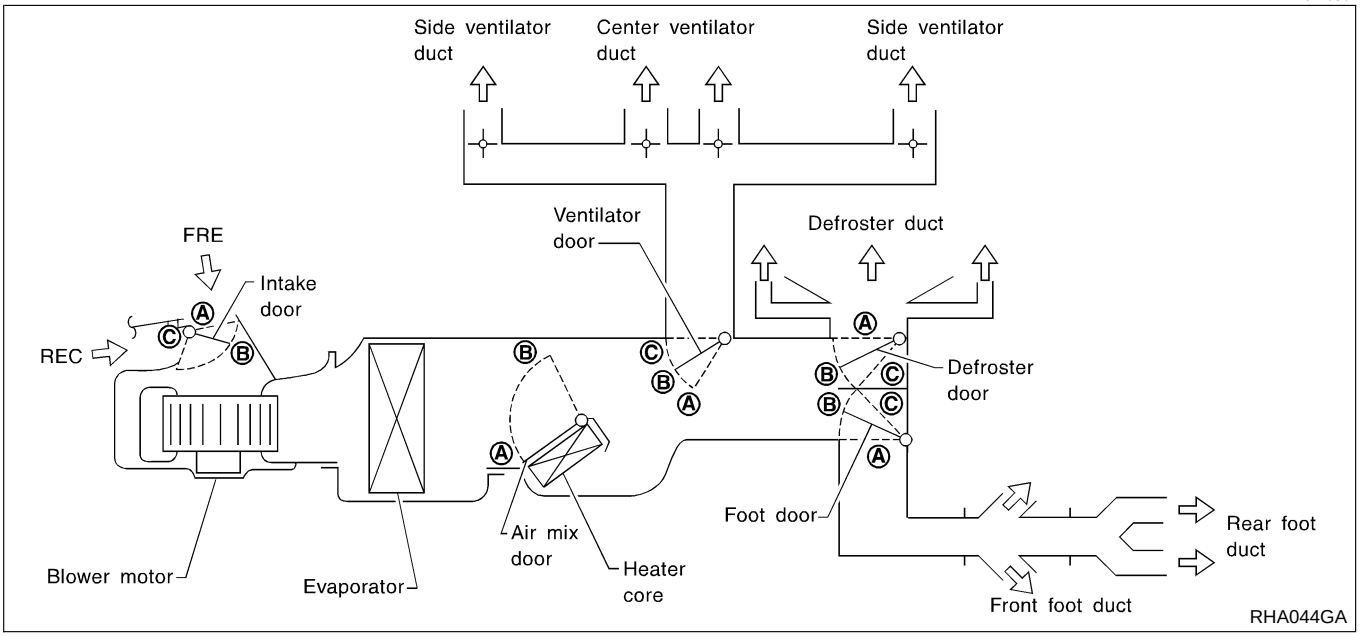

Position or switch	MODE SW				DEF SW		AUTO SW	ECON SW	REC SW		Temperature SW		
	VENT	B/L	FOOT	D/F	ON	OFF			ON	OFF	▼ TEMP ▲		
							AUTO	ECON					
Door											18.0°C (65°F)	—	32.0°C (85°F)
Ventilator door	A	B	C	C	C	—	AUTO	AUTO	—		—		
Foot door	A	B	C	C	A				—		—		
Defroster door	A	A	B	C	C				—		—		
Air mix door	—				—				—		A	AUTO	B
Intake door	—				C				A	AUTO*1	—		

*1: Automatically controlled when REC switch is OFF.

Component Location

ENGINE COMPARTMENT

NAHA0172

NAHA0172S01

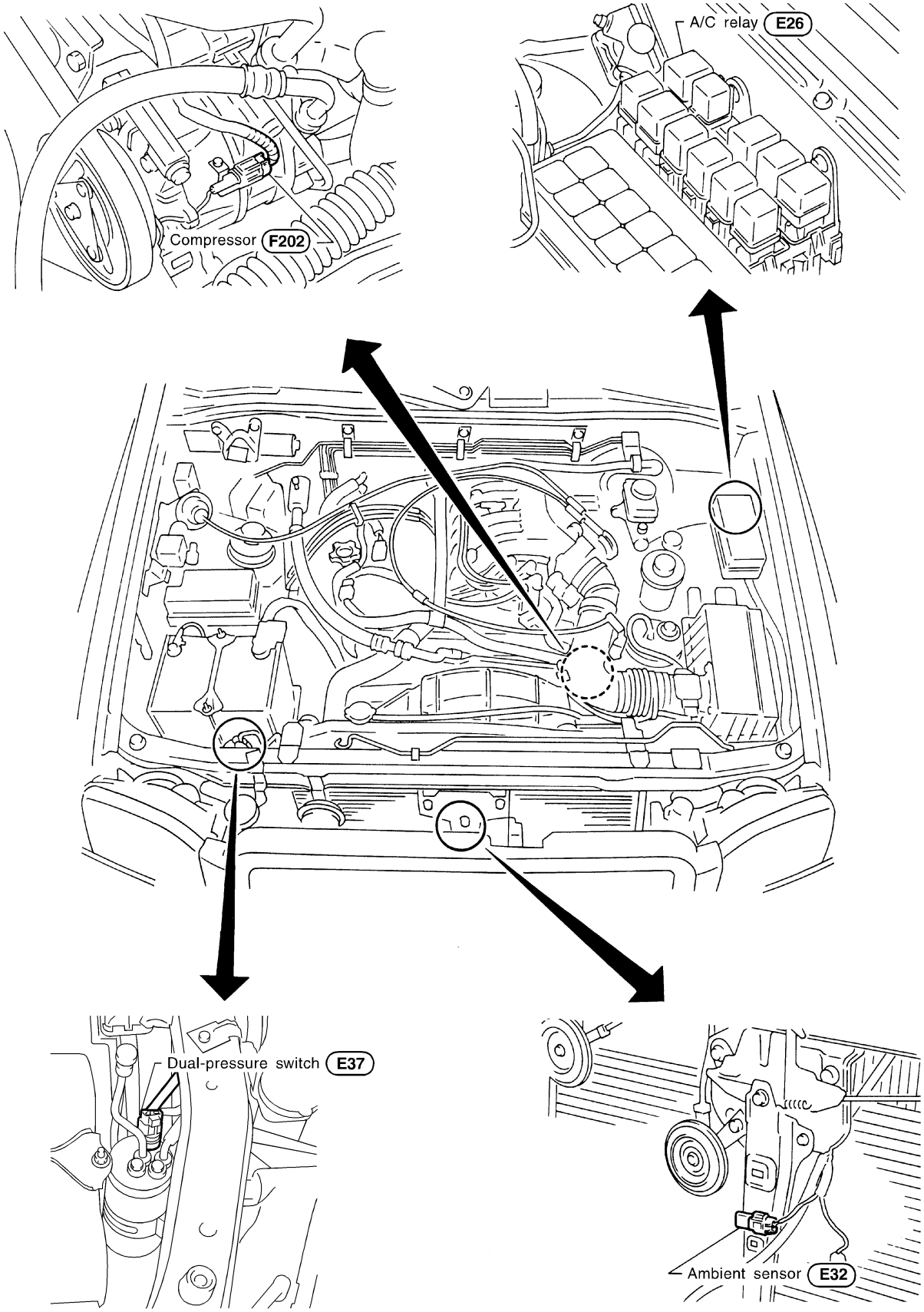

SHA282F

PASSENGER COMPARTMENT

NAHA0172S02

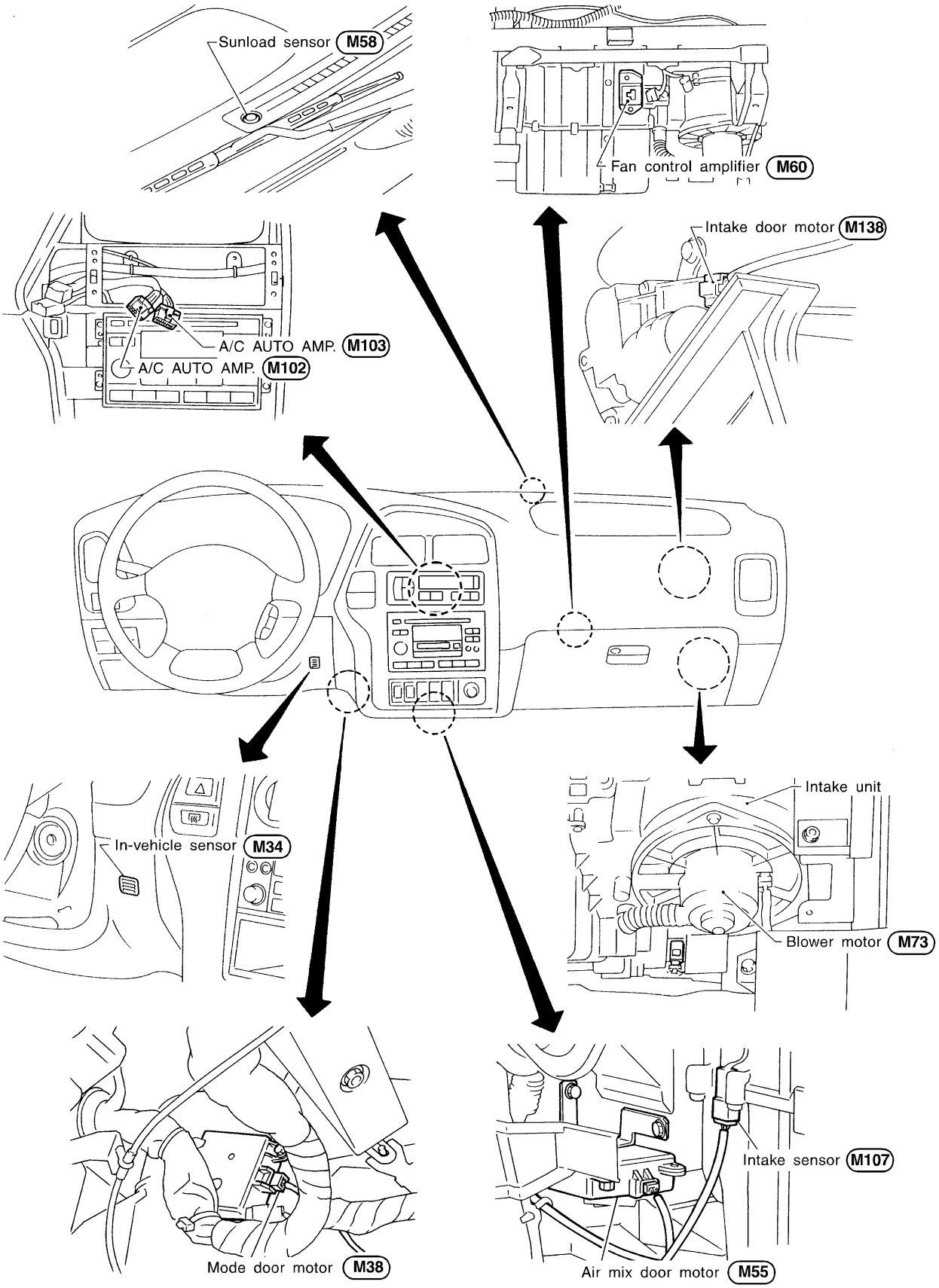

RHA498GB

Circuit Diagram

NAHA0173

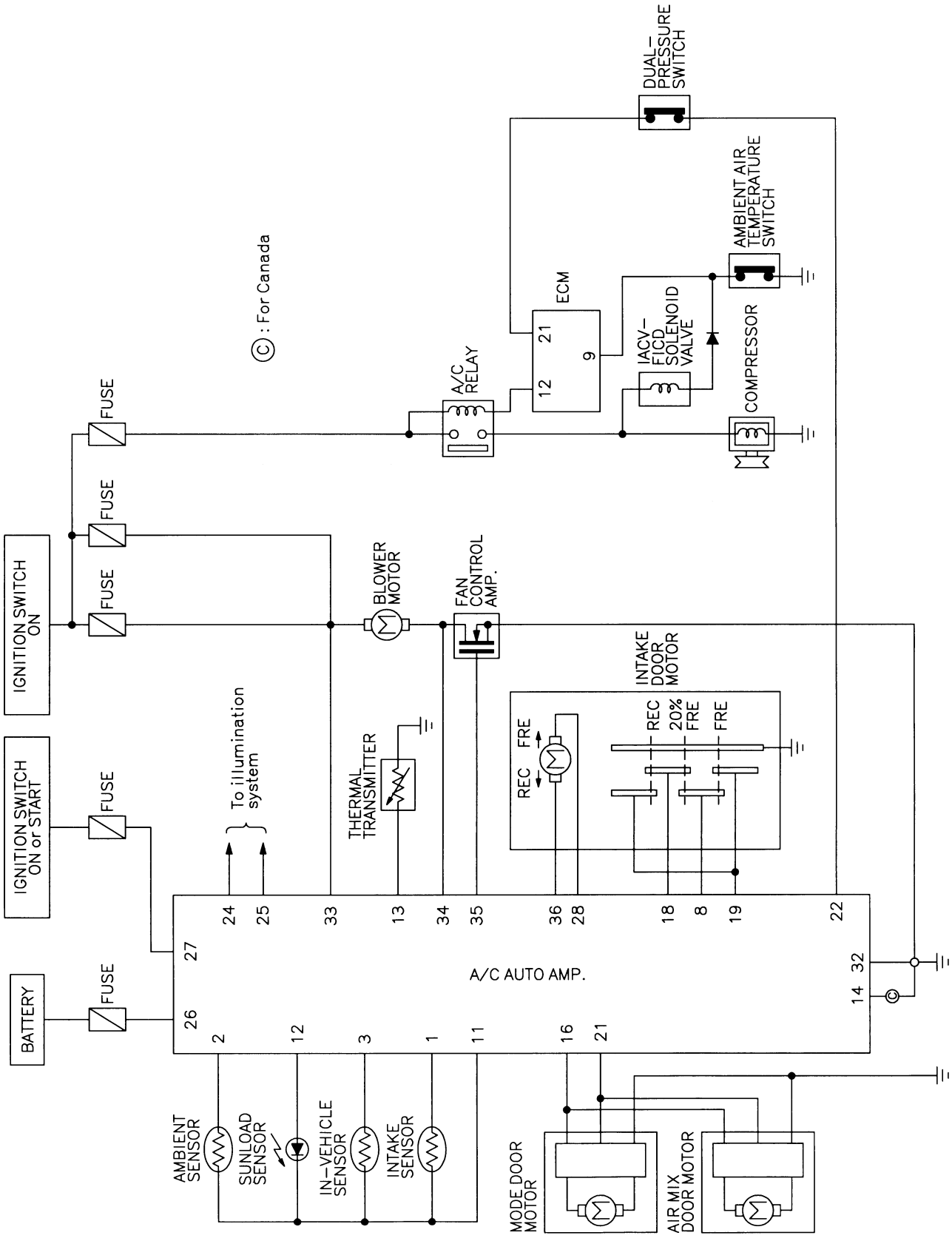

MHA874A

Wiring Diagram — A/C, A —

NAHA0174

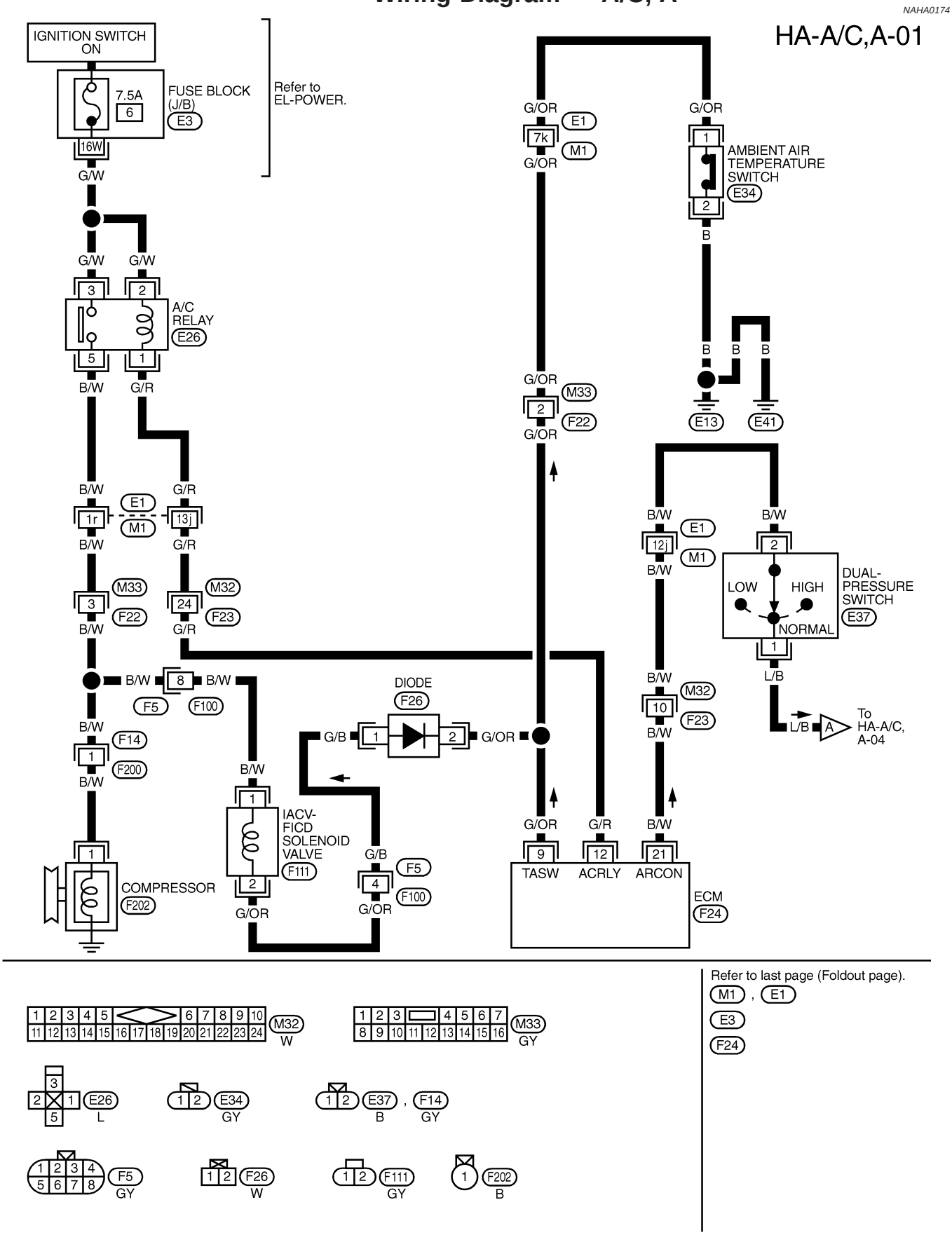

Refer to last page (Foldout page).
M1 , E1
E3
F24

MHA875A

HA-A/C,A-02

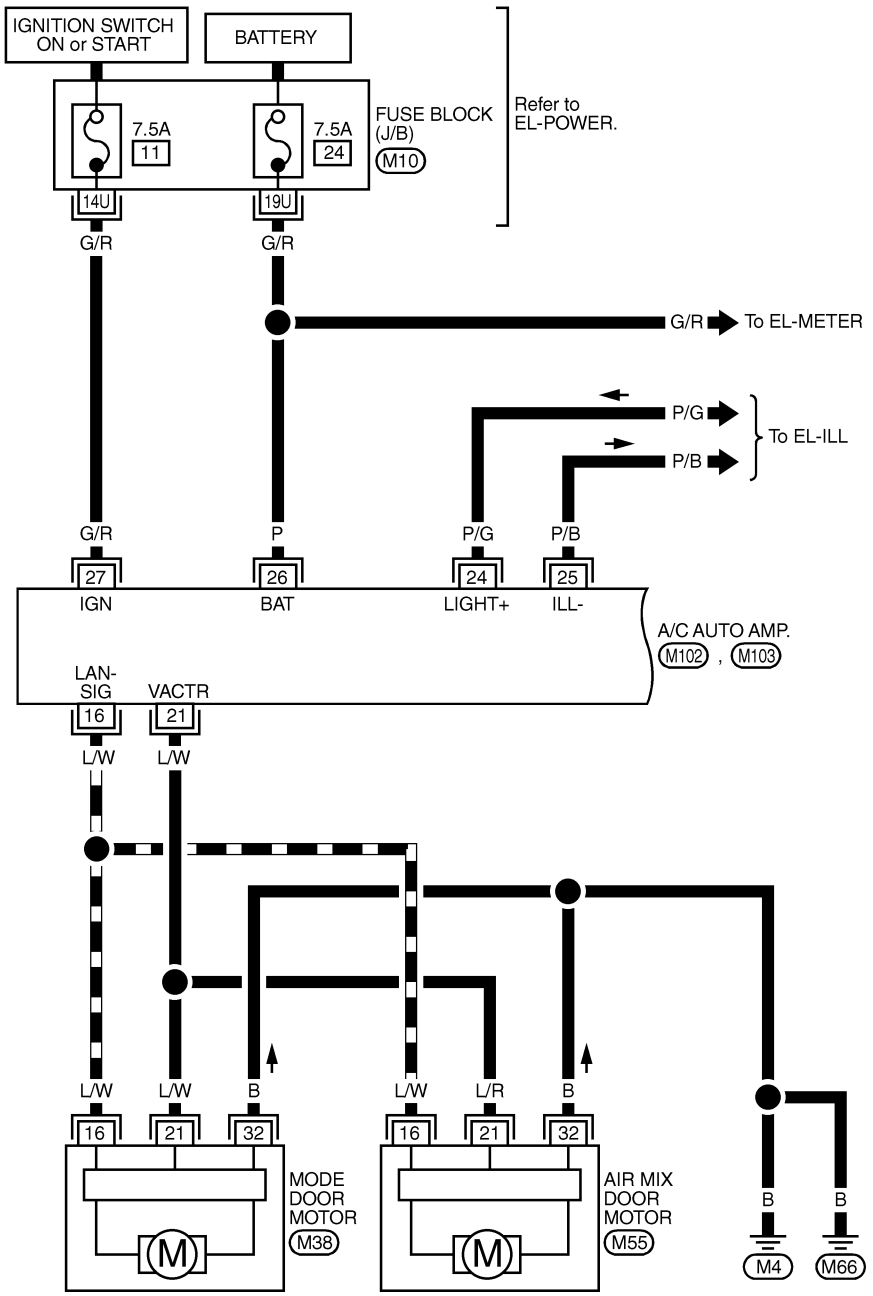

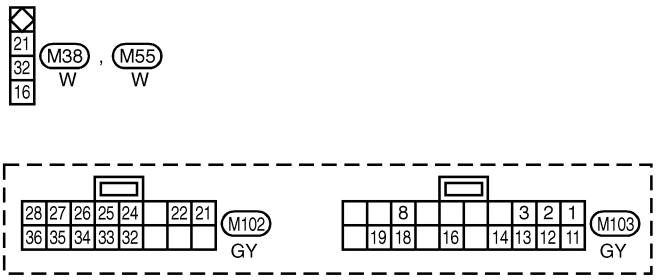

Refer to last page (Foldout page).
M10

MHA876A

HA-A/C,A-03

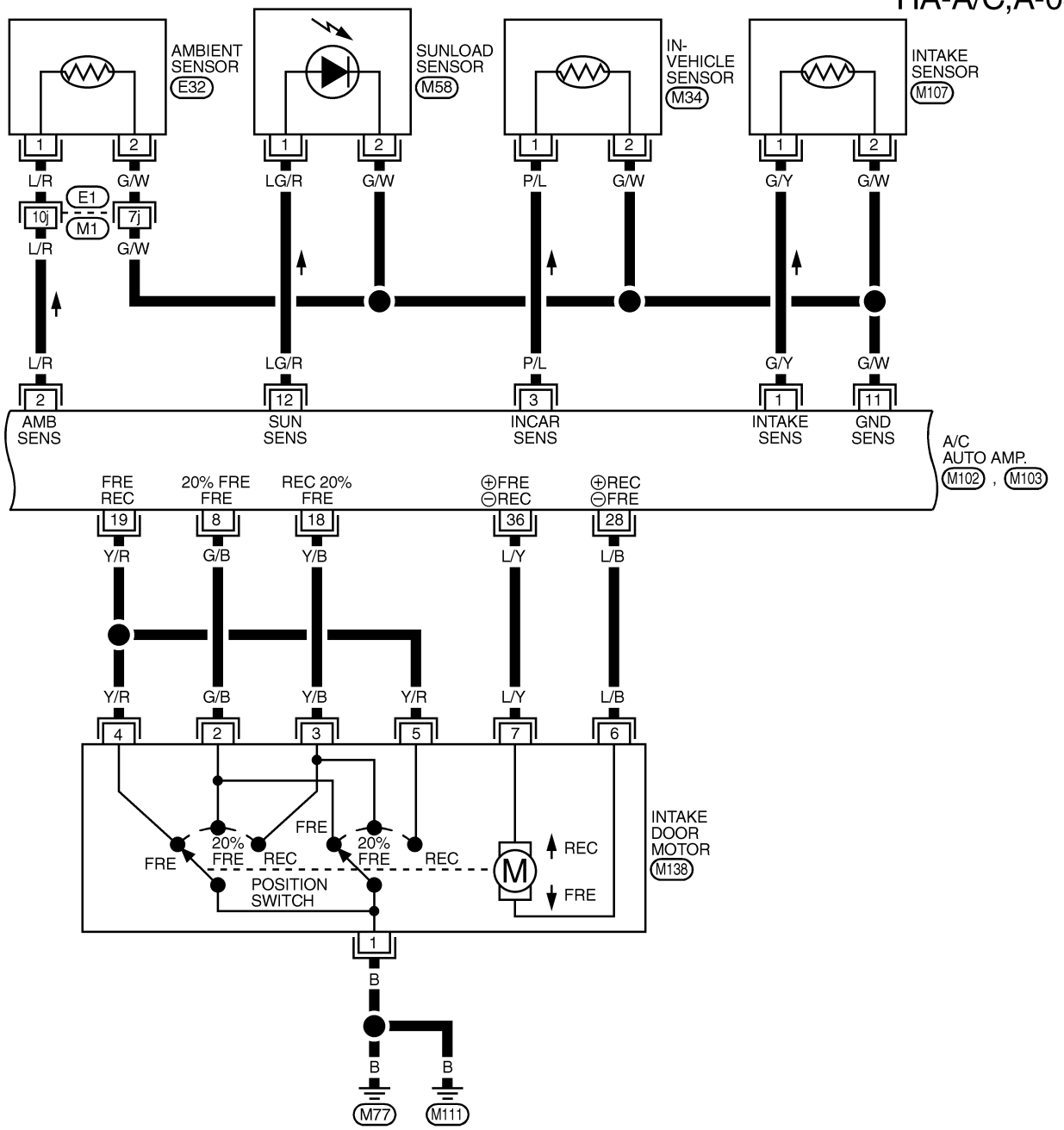

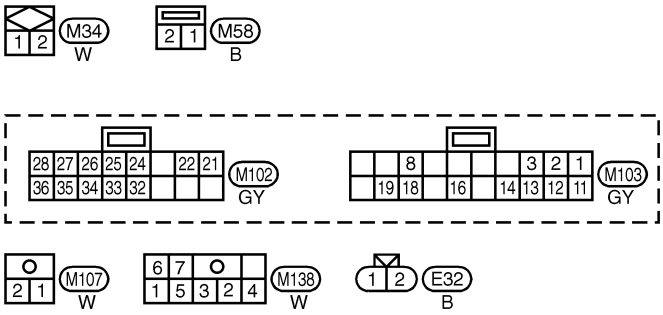

Refer to last page (Foldout page).
M1 , E1

MHA884A

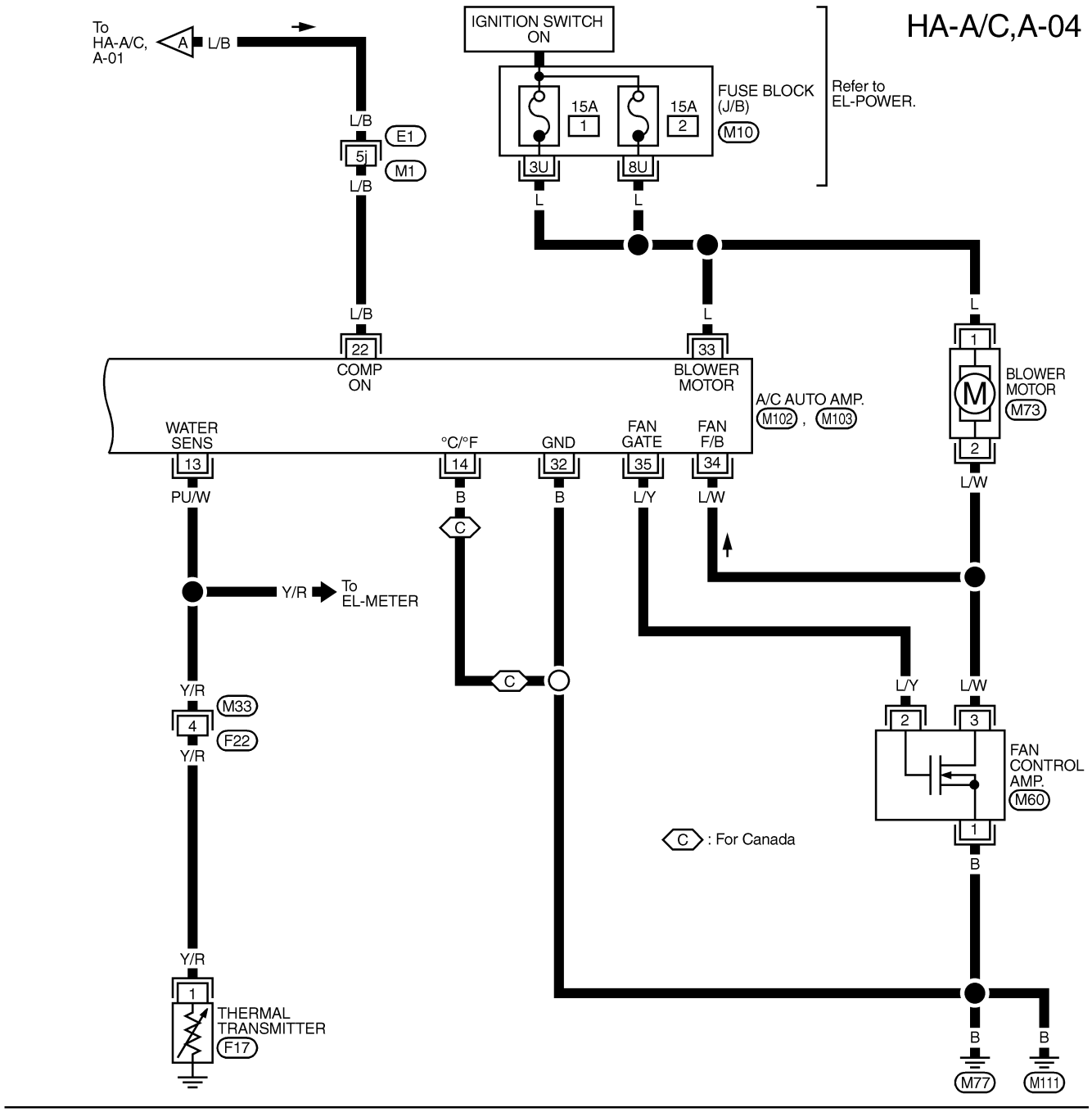

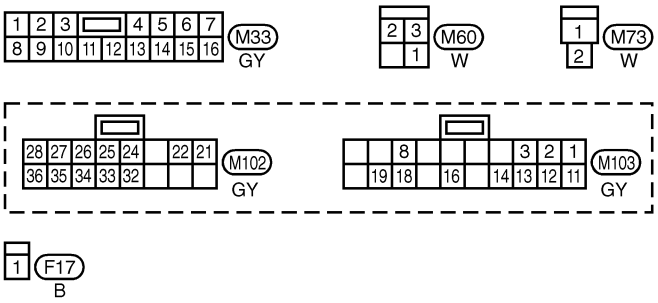

Refer to last page (Foldout page).
M1 , E1
M10

MHA878A

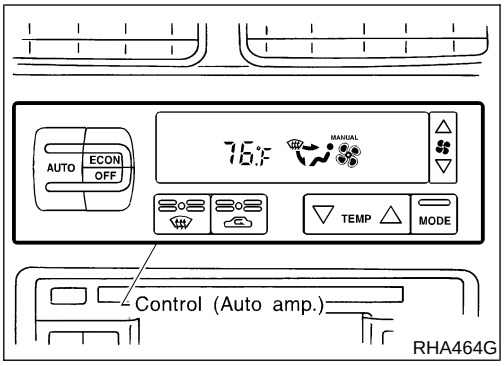

Auto Amp. Terminals and Reference Value

NAHA0175

INSPECTION OF AUTO AMP.

NAHA0175S01

- Measure voltage between each terminal and body ground by following “AUTO AMP. INSPECTION TABLE”.

- Pin connector terminal layout

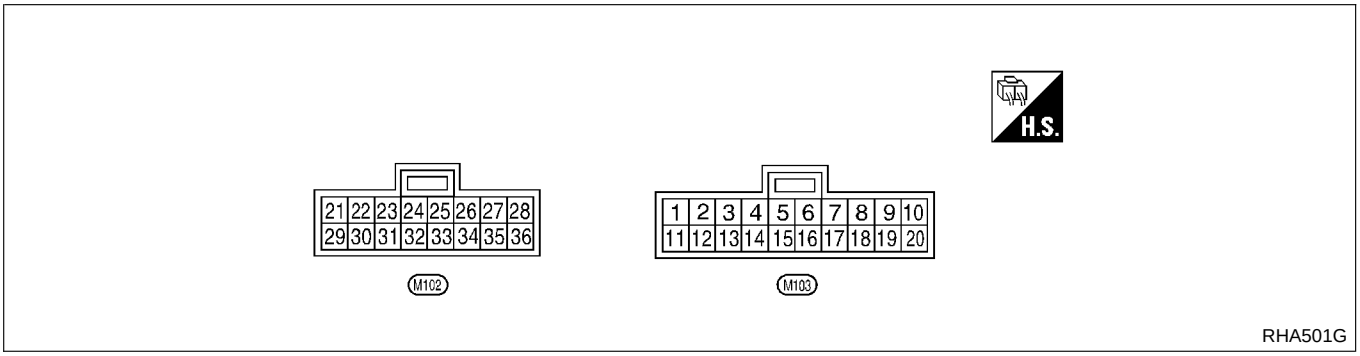

AUTO AMP. INSPECTION TABLE

NAHA0175S02

TERMINAL NO.	ITEM	CONDITION			Voltage V
1	Intake sensor	—			—
2	Ambient sensor	—			—
3	In-vehicle sensor	—			—
8	Intake door position switch	ON	Intake door position	FRESH or 20% FRESH	Approximately 0
				RECIRCULATION	Approximately 4.6
11	Sensor ground		—		Approximately 0
12	Sunload sensor	—			—
13	Thermal transmitter		Engine coolant temperature	Approximately 40°C (104°F)	Approximately 10.8
				Approximately 55°C (131°F)	Approximately 9.9
				Approximately 60°C (140°F)	Approximately 9.5
14	Ground (for Canada)		—		Approximately 0
16	A/C LAN signal		—		Approximately 5.5
18	Intake door position switch	ON	Intake door position	20% FRE or RECIRCULATION	Approximately 0
				FRESH	Approximately 4.6
19	Intake door position switch		Intake door position	RECIRCULATION or FRESH	Approximately 0
				20% FRE	Approximately 4.7
21	Power supply for mode door motor and air mix door motor		—		Approximately 12

TERMINAL NO.	ITEM	CONDITION			Voltage V
22	Compressor ON signal		Compressor	ON	Approximately 0
				OFF	Approximately 4.6
26	Power supply for BAT	OFF	—		BATTERY VOLTAGE
27	Power supply for IGN	ON	—		Approximately 12
28	Power supply for intake door motor		Intake door position	RECIRC	Approximately 12
				FRESH	Approximately 0
32	Ground		—		Approximately 0
33	Power source for A/C		Ignition voltage feed back		Approximately 12
34	Blower motor feed back		Fan speed: Low		Approximately 7 - 10
35	Fan control AMP. control signal		Fan speed	Low, Middle low or Middle high	Approximately 2.5 - 3.0
				High	Approximately 9 - 10
36	Power supply for intake door motor		Intake door position	RECIRC	Approximately 0
				FRESH	Approximately 12

Self-diagnosis

=NAHA0176

INTRODUCTION AND GENERAL DESCRIPTION

NAHA0176S01

The self-diagnostic system diagnoses sensors, door motors, blower motor, etc. by system line. Refer to applicable sections (items) for details. Shifting from normal control to the self-diagnostic system is accomplished by starting the engine (turning the ignition switch from “OFF” to “ON”) and pressing “ OFF ” switch for at least 5 seconds. The “ OFF ” switch must be pressed within 5 seconds after starting the engine (ignition switch is turned “ON”). This system will be canceled by either pressing AUTO (AUTO) switch or turning the ignition switch “OFF”. Shifting from one step to another is accomplished by means of pushing ▲ (HOT) or ▼ (COLD) switch, as required.
Additionally shifting from STEP 5 to AUXILIARY MECHANISM is accomplished by means of pushing ✣ (fan) UP switch.

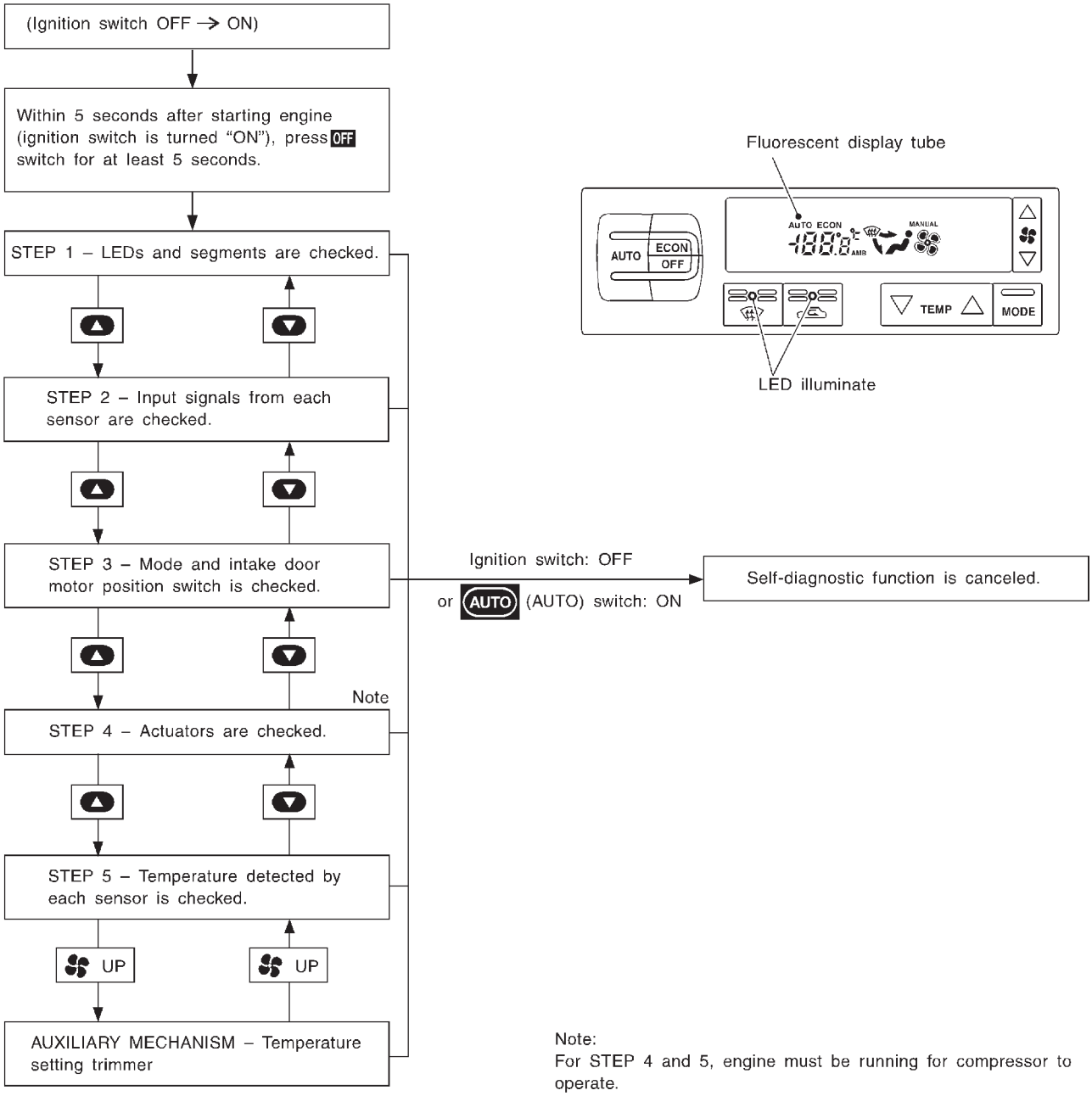

RHA453G

STEP-BY-STEP PROCEDURE

=NAHA0176S02

1	SET IN SELF-DIAGNOSTIC MODE
1. Turn ignition switch ON. 2. Set in self-diagnostic mode as follows. Within 5 seconds after starting engine (ignition switch is turned "ON".), press OFF switch for at least 5 seconds.	
▶	GO TO 2.

2	STEP 1 - ALL LEDs AND SEGMENT ARE CHECKED
Do all LEDs and segments illuminate?	

Display malfunction

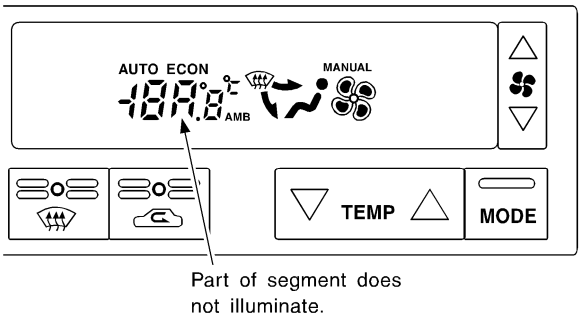

RHA454G

Yes or No

Yes	▶	GO TO 3.
No	▶	Malfunctioning OFF switch, LED or fluorescent display tube. Replace A/C auto amp.

3	CHECK TO ADVANCE SELF-DIAGNOSIS STEP 2
1. Press ▲ (HOT) switch. 2. Advance to self-diagnosis STEP 2?	

Yes or No

Yes	▶	GO TO 4.
No	▶	Malfunctioning ▲ (HOT) switch. Replace A/C auto amp.

4	CHECK TO RETURN SELF-DIAGNOSIS STEP 1
1. Press ▼ (COLD) switch. 2. Return to self-diagnosis STEP 1?	

Yes or No

Yes	▶	GO TO 5.
No	▶	Malfunctioning ▼ (COLD) switch. Replace A/C auto amp.

5	STEP 2 - SENSOR CIRCUITS ARE CHECKED FOR OPEN OR SHORT CIRCUIT

Press ▲ (HOT) switch.
Does code No. 20 appear on the display?

Display (when all sensors are in good order)

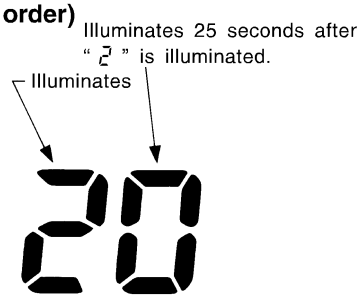

RHA970DB

Yes or No

Yes	▶	GO TO 6.
No	▶	GO TO 13.

6	STEP 3 - MODE DOOR AND INTAKE DOOR POSITIONS ARE CHECKED

Press ▲ (HOT) switch.
Does code No. 30 appear on the display?

Display (when all doors are in good order)

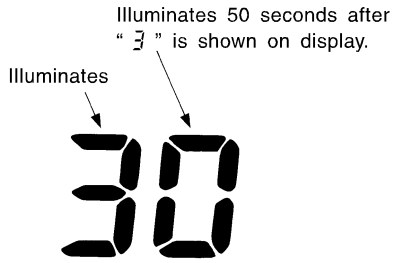

RHA869DD

Yes or No

Yes	▶	GO TO 7.
No	▶	GO TO 14.

7	STEP 4 - OPERATION OF EACH ACTUATOR IS CHECKED
Press ▲ (HOT) switch. Engine running. Press DEF switch, code No. of each actuator test is indicated on the display. 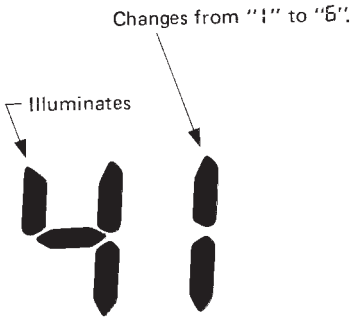 RHA495A	
▶	GO TO 8.

8	CHECK ACTUATORS

Refer to the following chart and confirm discharge air flow, air temperature, blower motor voltage and compressor operation.

Checks must be made visually, by listening to any noise, or by touching air outlets with your hand, etc. for improper operation.

Code No.	Actuator test pattern				
	Mode door	Intake door	Air mix door	Blower motor	Compressor
41	VENT	REC	Full Cold	4 - 5V	ON
42	B/L	REC	Full Cold	9 - 11V	ON
43	B/L	20% FRE	Full Hot	7 - 9V	OFF
44	FOOT	FRE	Full Hot	7 - 9V	OFF
45	D/F	FRE	Full Hot	7 - 9V	ON
46	DEF	FRE	Full Hot	10 - 12V	ON

MTBL0200

Discharge air flow

Mode control knob	Air outlet/distribution		
	Face	Foot	Defroster
	100%		
	60%	40%	
		80%	20%
		60%	40%
			100%

MTBL0044

OK or NG

OK	▶	GO TO 9.
NG	▶	• Air outlet does not change. Go to "Mode Door Motor" (HA-54). • Intake door does not change. Go to "Intake Door Motor" (HA-64). • Blower motor operation is malfunctioning. Go to "Blower Motor" (HA-71). • Magnet clutch does not engage. Go to "Magnet Clutch" (HA-79). • Discharge air temperature does not change. Go to "Air Mix Door Motor" (HA-60).

9	STEP 5 - TEMPERATURE OF EACH SENSOR IS CHECKED

Press ▲ (HOT) switch.
Code No. 5 appears on the display.

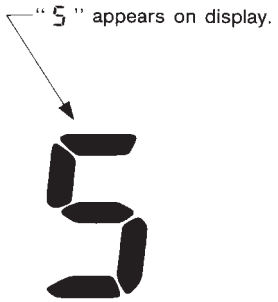

RHA492A

	▶	GO TO 10.

10	CHECK AMBIENT SENSOR

Press (DEF) switch one time, temperature detected by ambient sensor is indicated on the display.
ECON shown in display indicates negative temperature reading.
NOTE:
If temperature shown on display greatly differs from actual temperature, check sensor circuit first, then inspect sensor.

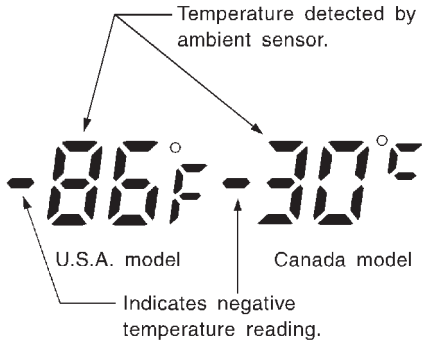

RHA499G

OK or NG

OK	▶	GO TO 11.
NG	▶	Go to Ambient Sensor Circuit (HA-97).

11	CHECK IN-VEHICLE SENSOR

Press (DEF) switch the second time, temperature detected by in-vehicle sensor is indicated on the display screen. ECON shown in display indicates negative temperature reading.

NOTE:

If temperature shown on display greatly differs from actual temperature, check sensor circuit first, then inspect sensor.

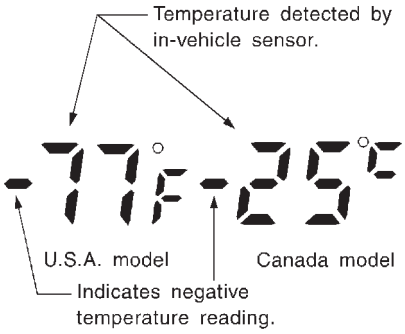

RHA500G

OK or NG

OK	▶	GO TO 12.
NG	▶	Go to In-vehicle Sensor Circuit (HA-101).

12	CHECK INTAKE SENSOR

Press (DEF) switch the third time, temperature detected by intake sensor is indicated on the display.

NOTE:

If temperature shown on display greatly differs from actual temperature, check sensor circuit first, then inspect sensor.

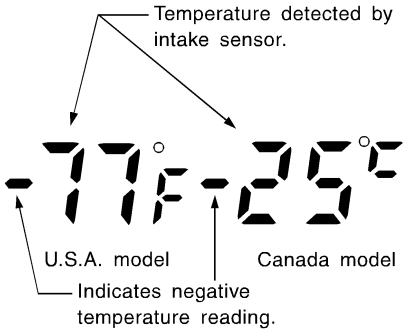

RHA500GB

OK or NG

OK	▶	1. Press (DEF) switch the fourth time. Display returns to original presentation 5. 2. Turn ignition switch OFF or (AUTO) switch ON. 3. END
NG	▶	Go to Intake Sensor Circuit (HA-108).

13	CHECK MALFUNCTIONING SENSOR

Refer to the following chart for malfunctioning code No.
(If two or more sensors malfunction, corresponding code Nos. blink respectively two times.)

Code No.	Malfunctioning sensor (including circuits)	Reference page
21	Ambient sensor	*2
-21		
22	In-vehicle sensor	*3
-22		
24	Intake sensor	*4
-24		
25	Sunload sensor*1	*5
-25		
26	Air mix door motor (LCU) PBR	*6
-26		

MTBL0083

***1: Conduct self-diagnosis STEP 2 under sunshine.**
When conducting indoors, aim a light (more than 60W) at sunload sensor, otherwise Code No. 25 will indicate despite that sunload sensor is functioning properly.
*2: HA-97
*3: HA-101
*4: HA-108
*5: HA-104
*6: HA-110

Display (when sensor malfunctions)

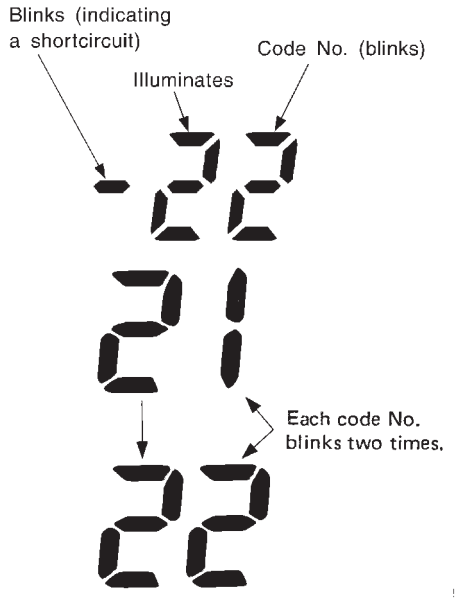

RHA455G

RHA501A

▶	INSPECTION END

14	CHECK MALFUNCTIONING DOOR MOTOR POSITION SWITCH

Mode or (and) intake door motor position switch(es) is (are) malfunctioning.
(If two or more mode or intake doors are out of order, corresponding code numbers blink respectively two times.)

Code No. *1 *2	Mode or intake door position		Reference page
31	VENT	Mode door motor	*3
32	B/L		
34	FOOT		
35	D/F		
36	DEF		
37	FRE	Intake door motor	*4
38	20% FRE		
39	REC		

MTBL0514

*1: If mode door motor harness connector is disconnected, the following display pattern will appear.
31 → 32 → 34 → 35 → 36 → Return to 31
*2: If intake door motor harness connector is disconnected, the following display pattern will appear.
37 → 38 → 39 → Return to 37
*3: HA-54
*4: HA-64

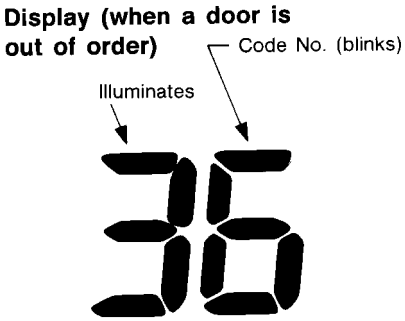

RHA168DA

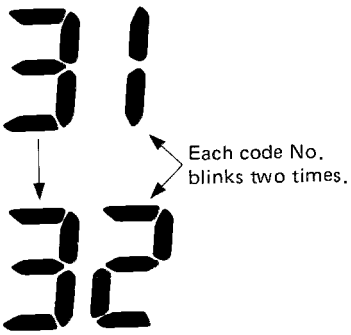

RHA498A

▶	INSPECTION END

AUXILIARY MECHANISM: TEMPERATURE SETTING TRIMMER

=NAHA0176S03

The trimmer compensates for differences in range of ±3°C (±6°F) between temperature setting (displayed digitally) and temperature felt by driver.
Operating procedures for this trimmer are as follows:

- Begin Self-diagnosis STEP 5 mode.
- Press (fan) UP switch to set system in auxiliary mode.
- Display shows "61" in auxiliary mechanism.
  It takes approximately 3 seconds.
- Press either (HOT) or (COLD) switch as desired. Temperature will change at a rate of 0.5°C (1°F) each time a switch is pressed.

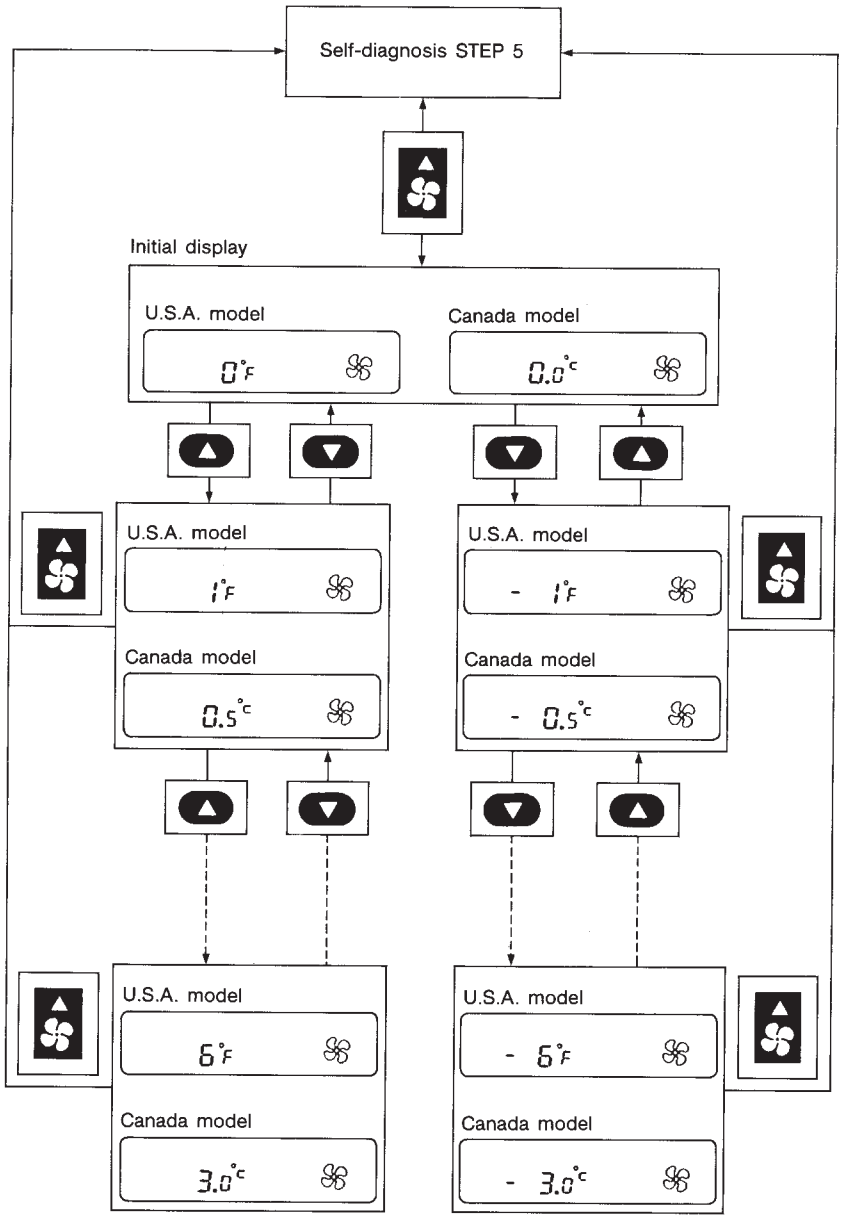

SHA197E

When battery cable is disconnected, trimmer operation is canceled. Temperature set becomes that of initial condition, i.e. 0°C (0°F).

How to Perform Trouble Diagnoses for Quick and Accurate Repair

=NAHA0177

WORK FLOW

NAHA0177S01

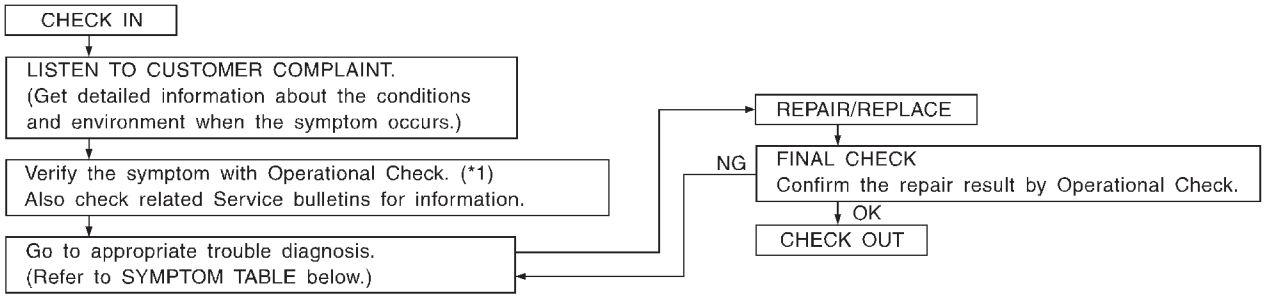

SHA900E

*1: Operational Check (HA-49)

SYMPTOM TABLE

NAHA0177S02

Symptom	Reference Page	
• A/C system does not come on.	• Go to Trouble Diagnosis Procedure for A/C system.	HA-52
• Air outlet does not change. • Mode door motor does not operate normally.	• Go to Trouble Diagnosis Procedure for Mode Door Motor. (LAN)	HA-54
• Discharge air temperature does not change. • Air mix door motor does not operate normally.	• Go to Trouble Diagnosis Procedure for Air Mix Door Motor. (LAN)	HA-60
• Intake door does not change. • Intake door motor does not operate normally.	• Go to Trouble Diagnosis Procedure for Intake Door Motor.	HA-64
• Blower motor operation is malfunctioning. • Blower motor operation is malfunctioning under out of starting fan speed control.	• Go to Trouble Diagnosis Procedure for Blower Motor.	HA-71
• Magnet clutch does not engage.	• Go to Trouble Diagnosis Procedure for Magnet Clutch.	HA-79
• Insufficient cooling.	• Go to Trouble Diagnosis Procedure for Insufficient Cooling.	HA-85
• Insufficient heating.	• Go to Trouble Diagnosis Procedure for Insufficient Heating.	HA-93
• Noise.	• Go to Trouble Diagnosis Procedure for Noise.	HA-94
• Self-diagnosis can not be performed.	• Go to Trouble Diagnosis Procedure for Self-diagnosis.	HA-95
• Memory function does not operate.	• Go to Trouble Diagnosis Procedure for Memory Function.	HA-96
• ECON mode does not operate.	• Go to Trouble Diagnosis Procedure for ECON (ECONOMY) — mode.	HA-97

Operational Check

NAHA0178

The purpose of the operational check is to confirm that the system operates properly.

CONDITIONS:

NAHA0178S01

- **Engine running and at normal operating temperature.**

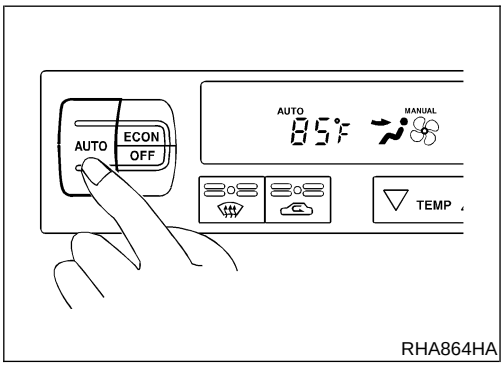

RHA864HA

PROCEDURE:

NAHA0178S02

1. Check Memory Function

NAHA0178S0201

1. Set the temperature 85°F or 32°C.
2. Press OFF switch.
3. Turn the ignition off.
4. Turn the ignition on.
5. Press the AUTO switch.
6. Confirm that the set temperature remains at previous temperature.
7. Press OFF switch.

If NG, go to trouble diagnosis procedure for memory function (HA-96).
If OK, continue with next check.

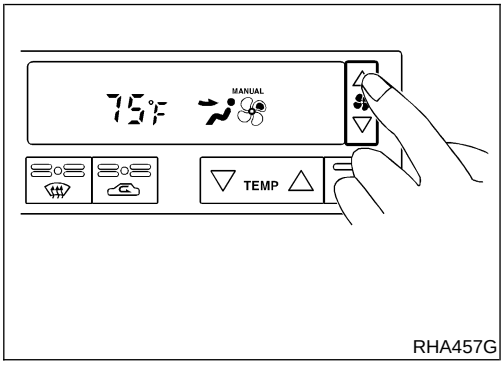

RHA457G

2. Check Blower

NAHA0178S0202

1. Press fan switch (up side) one time.
   Blower should operate on low speed.
   The fan symbol should have one blade lit .
2. Press fan switch (up side) one more time, and continue checking blower speed and fan symbol until all speeds are checked.
3. Leave blower on MAX speed .

If NG, go to trouble diagnosis procedure for blower motor (HA-71).
If OK, continue with next check.

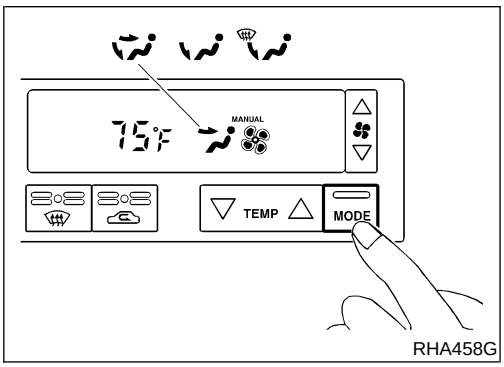

RHA458G

3. Check Discharge Air

NAHA0178S0203

1. Press mode switch four times and DEF button.
2. Each position indicator should change shape.

Discharge air flow

Mode control knob	Air outlet/distribution		
	Face	Foot	Defroster
	100%	–	–
	60%	40%	–
	–	80%	20%
	–	60%	40%
	–	–	100%

RHA654F

3. Confirm that discharge air comes out according to the air distribution table at left.
   Refer to "Discharge Air Flow" (HA-27).

NOTE:
Confirm that the compressor clutch is engaged (visual inspection) and intake door position is at FRESH when the DEF is selected.

Intake door position is checked in the next step.
If NG, go to trouble diagnosis procedure for mode door motor (HA-54).
If OK, continue with next check.

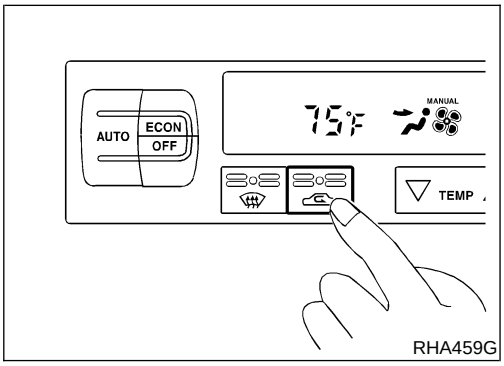

RHA459G

4. Check Recirculation

NAHA0178S0204

1. Press REC switch.
   Recirculation indicator should illuminate.
2. Listen for intake door position change (you should hear blower sound change slightly).

If NG, go to trouble diagnosis procedure for intake door (HA-64).
If OK, continue with next check.

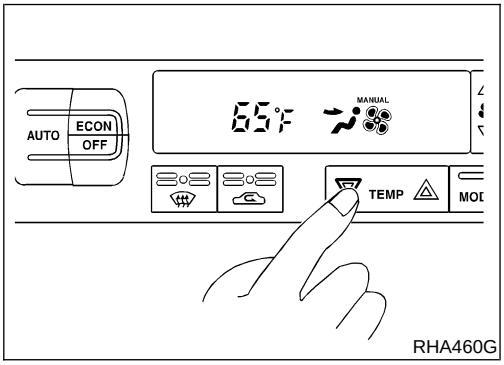

RHA460G

5. Check Temperature Decrease

NAHA0178S0205

1. Press the temperature decrease button until 18°C (65°F) is displayed.
2. Check for cold air at discharge air outlets.

If NG, go to trouble diagnosis procedure for insufficient cooling (HA-85).
If OK, continue with next check.

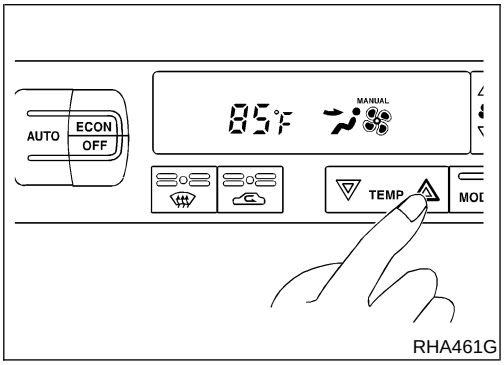

RHA461G

6. Check Temperature Increase

NAHA0178S0206

1. Press the temperature increase button until 32°C (85°F) is displayed.
2. Check for hot air at discharge air outlets.

If NG, go to trouble diagnosis procedure for insufficient heating (HA-93).
If OK, continue with next check.

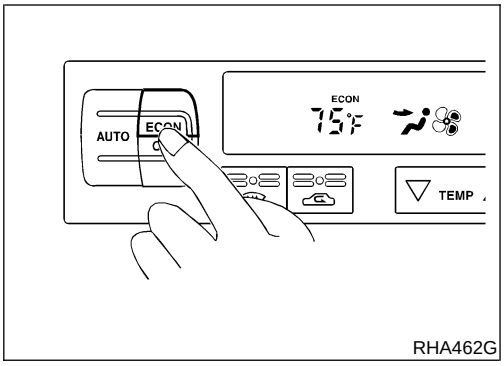

RHA462G

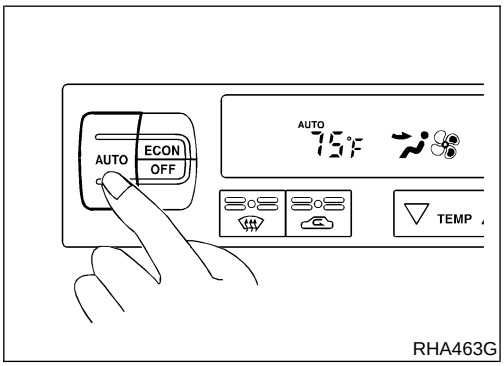

RHA463G

7. Check ECON (Economy) Mode

NAHA0178S0207

1. Set the temperature 75°F or 25°C.
2. Press ECON switch.
3. Display should indicate ECON (no AUTO).
   Confirm that the compressor clutch is not engaged (visual inspection).
   (Discharge air and blower speed will depend on ambient, in-vehicle and set temperatures.)

If NG, go to trouble diagnosis procedure for ECON (Economy) mode (HA-97).
If OK, continue with next check.

8. Check AUTO Mode

NAHA0178S0208

1. Press AUTO switch.
2. Display should indicate AUTO (no ECON).
   Confirm that the compressor clutch engages (audio or visual inspection).
   (Discharge air and blower speed will depend on ambient, in-vehicle and set temperatures.)

If NG, go to trouble diagnosis procedure for A/C system (HA-52), then if necessary, trouble diagnosis procedure for magnet clutch (HA-79).

If all operational check are OK (symptom can not be duplicated), go to "Incident Simulation Tests" (GI-24) and perform tests as outlined to simulate driving conditions environment. If symptom appears, refer to "Symptom Table" (HA-48) and perform applicable trouble diagnosis procedures.

A/C System

TROUBLE DIAGNOSIS PROCEDURE FOR A/C SYSTEM

=NAHA0179

SYMPTOM:

- **A/C system does not come on.**

INSPECTION FLOW

1. Confirm symptom by performing the following operational check.

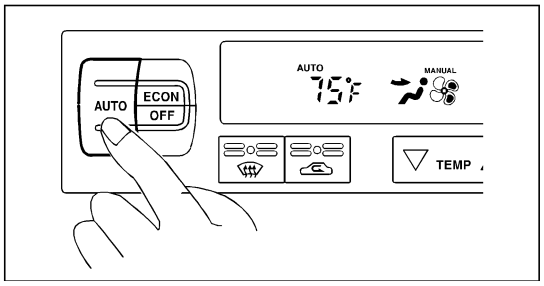

OPERATIONAL CHECK – AUTO mode

a. Press AUTO switch.
b. Display should indicate AUTO (not ECON).
Confirm that the compressor clutch engages (audio or visual inspection).
(Discharge air and blower speed will depend on ambient, in-vehicle and set temperatures.)

If OK (symptom cannot be duplicated), perform complete operational check (*2).
If NG (symptom is confirmed), continue with STEP-2 following.

2. Check for any service bulletins. → 3. Check Main Power Supply and Ground Circuit. (*1)
OK ↓
4. Replace auto amp.

SHA888EB

*1: HA-52 *2: HA-49

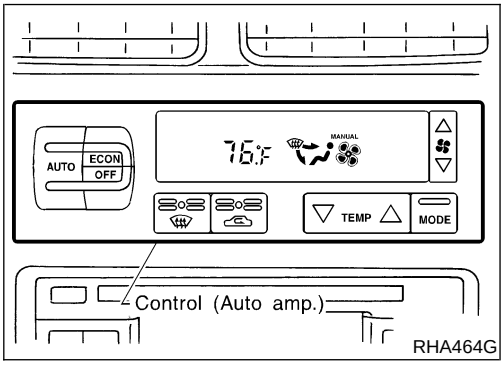

MAIN POWER SUPPLY AND GROUND CIRCUIT CHECK

NAHA0180

Component Description

NAHA0180S01

Automatic Amplifier (Auto Amp.)

NAHA0180S0101

The auto amplifier has a built-in microcomputer which processes information sent from various sensors needed for air conditioner operation. The air mix door motor, mode door motor, intake door motor, blower motor and compressor are then controlled.
The auto amplifier is unitized with control mechanisms. Signals from various switches and Potentio Temperature Control (PTC) are directly entered into auto amplifier.
Self-diagnostic functions are also built into auto amplifier to provide quick check of malfunctions in the auto air conditioner system.

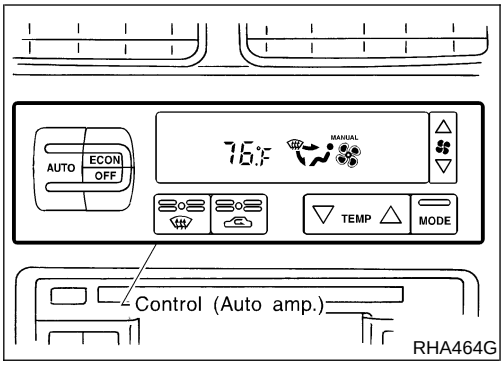

RHA464G

Potentio Temperature Control (PTC)

NAHA0180S0102

The PTC is built into the A/C auto amp. It can be set at an interval of 0.5°C (1.0°F) in the 18°C (65°F) to 32°C (85°F) temperature range by pushing the temperature button. The set temperature is digitally displayed.

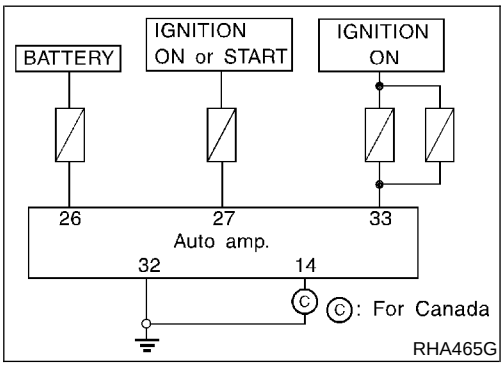

RHA465G

DIAGNOSTIC PROCEDURE

NAHA0181

SYMPTOM:

- **A/C system does not come on.**

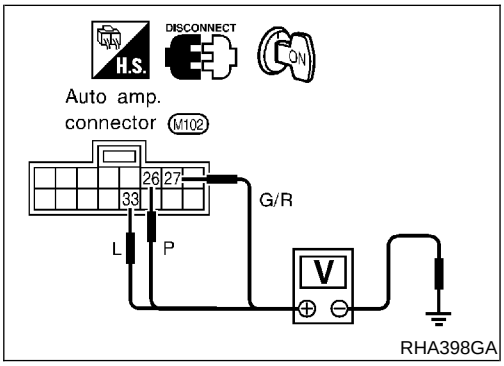

RHA398GA

Auto Amp. Check

NAHA0181S01

Check power supply circuit for auto amp. with ignition switch ON. Measure voltage across terminal Nos. 26, 27, 33 and body ground.

Voltmeter terminal		Voltage
(+)	(−)	
26	Body ground	Approx. 12V
27		
33		

Check body ground circuit for auto amp. with ignition switch OFF. Check for continuity between terminal Nos. 32, 14 and body ground.

Ohmmeter terminal		Continuity
(+)	(−)	
32	Body ground	Yes
14 (Canada only)		

If OK, check auto amp. ground circuit, see below.

- If NG, check 7.5A fuses (Nos. 11 and 24, located in the fuse block) and 15A fuses (Nos. 1 and 2, located in the fuse block).
- If fuses are OK, check for open circuit in wiring harness. Repair or replace as necessary.
- If fuses are NG, replace fuse and check wiring harness for short circuit. Repair or replace as necessary.

NOTE:

If OK, replace auto amp.
If NG, repair or replace harness.

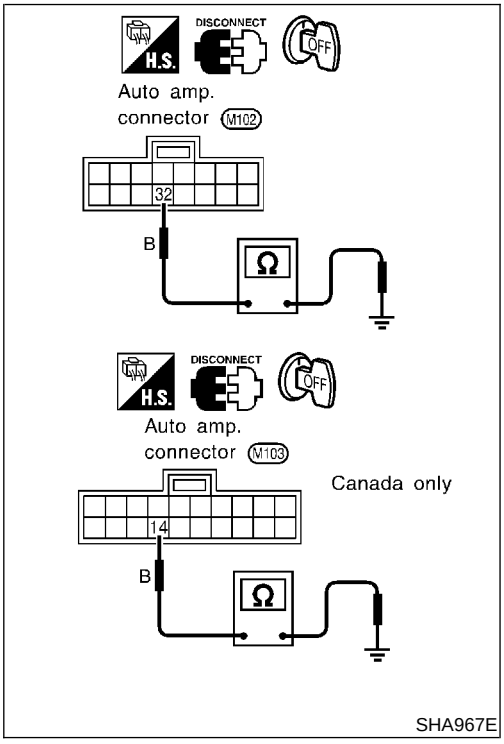

SHA967E

Mode Door Motor

TROUBLE DIAGNOSIS PROCEDURE FOR MODE DOOR MOTOR (LAN)

=NAHA0182

SYMPTOM:

- **Air outlet does not change.**
- **Mode door motor does not operate normally.**

INSPECTION FLOW

1. Confirm symptom by performing the following operational check.

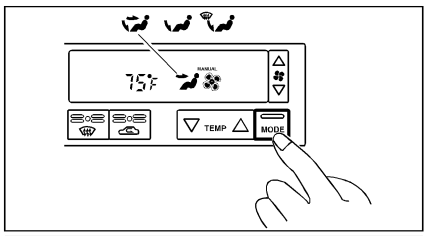

OPERATIONAL CHECK – Discharge air

a. Press mode switch four times and DEF button.
b. Each position indicator should change shape.

Discharge air flow

Mode control knob	Air outlet/distribution		
	Face	Foot	Defroster
	100%	–	–
	60%	40%	–
	–	80%	20%
	–	60%	40%
	–	–	100%

c. Confirm that discharge air comes out according to the air distribution table at left.
Refer to "Discharge Air Flow" (*1).

NOTE:

- **If OK (symptom cannot be duplicated), perform complete operational check (*2).**
  If NG (symptom is confirmed), continue with STEP-2 following.
- **Confirm that the compressor clutch is engaged (visual inspection) and intake door position is at FRESH when DEF is selected.**
  Intake door position is checked in the next step.

2. Check for any service bulletins. → 3. Perform self-diagnosis STEP-1. (*3)
3. Perform self-diagnosis STEP-1. (*3) — OK → 4. Perform self-diagnosis STEP-2. (*4); NG → Go to appropriate malfunctioning sensor circuit. (*9)
4. Perform self-diagnosis STEP-2. (*4) — OK → 5. Perform self-diagnosis STEP-3. (*4); NG → Go to appropriate malfunctioning sensor circuit. (*9)
5. Perform self-diagnosis STEP-3. (*4) — NG → Go to DIAGNOSTIC PROCEDURE FOR MODE DOOR MOTOR AND AIR MIX DOOR MOTOR CIRCUIT. (*10); OK → 6. Perform self-diagnosis STEP-4. (*4)
6. Perform self-diagnosis STEP-4. (*4) — NG → Check mode door control linkage. (*11) — NG → Repair or adjust control linkage.; OK **[Cause cannot be confirmed by self-diagnosis.]** → 7. Check ambient sensor circuit. (*5)
7. Check ambient sensor circuit. (*5) — OK → 8. Check in-vehicle sensor circuit. (*6)
8. Check in-vehicle sensor circuit. (*6) — OK → 9. Check sunload sensor circuit. (*7)
9. Check sunload sensor circuit. (*7) — OK → 10. Check intake sensor circuit. (*14)
10. Check intake sensor circuit. (*14) — OK → 11. Check air mix door motor PBR circuit. (*8)
11. Check air mix door motor PBR circuit. (*8) — OK → If the symptom still exists, perform a complete operational check (*12) and check for other symptoms. [Refer to symptom table, (*13).] Does another symptom exist?
   - Yes → Go to Trouble Diagnosis for related symptoms. **[Another symptom exists.]**
   - No → Replace auto amp. → INSPECTION END

SHA245F

*1: HA-27
*2: HA-49
*3: HA-38
*4: HA-39
*5: HA-97
*6: HA-101
*7: HA-104
*8: HA-110
*9: STEP-BY-STEP PROCEDURE (HA-39), see No. 13.
*10: HA-56
*11: HA-59
*12: HA-49
*13: HA-48
*14: HA-108

SYSTEM DESCRIPTION

=NAHA0183

Component Parts

NAHA0183S01

Mode door control system components are:

1) Auto amp.
2) Mode door motor (LCU)
3) In-vehicle sensor
4) Ambient sensor
5) Sunload sensor
6) Intake sensor

System Operation

NAHA0183S02

The auto amplifier receives data from each of the sensors. The amplifier sends mode door and air mix door opening angle data to the mode door motor LCU and air mix door motor LCU.
The mode door motor and air mix door motor read their respective signals according to the address signal. Opening angle indication signals received from the auto amplifier and each of the motor position sensors are compared by the LCUs in each motor with the existing decision and opening angles. Subsequently, HOT/COLD or DEFROST/VENT operation is selected. The new selection data is returned to the auto amplifier.

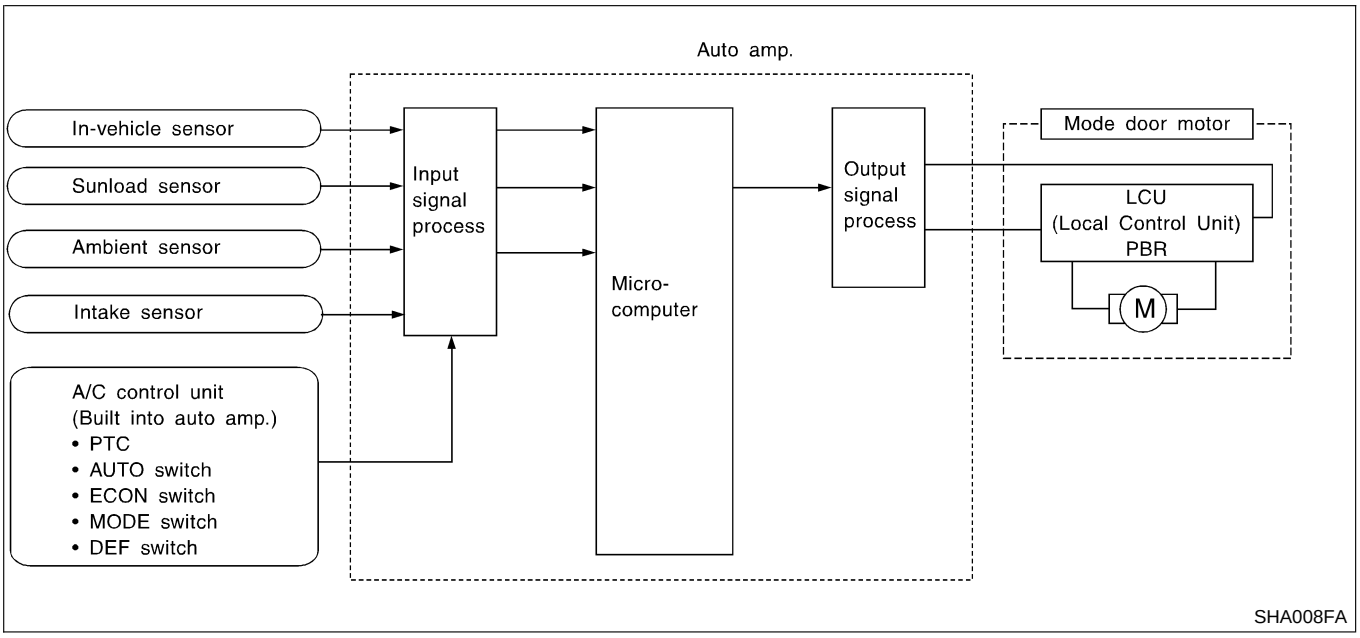

Mode Door Control Specification

NAHA0183S03

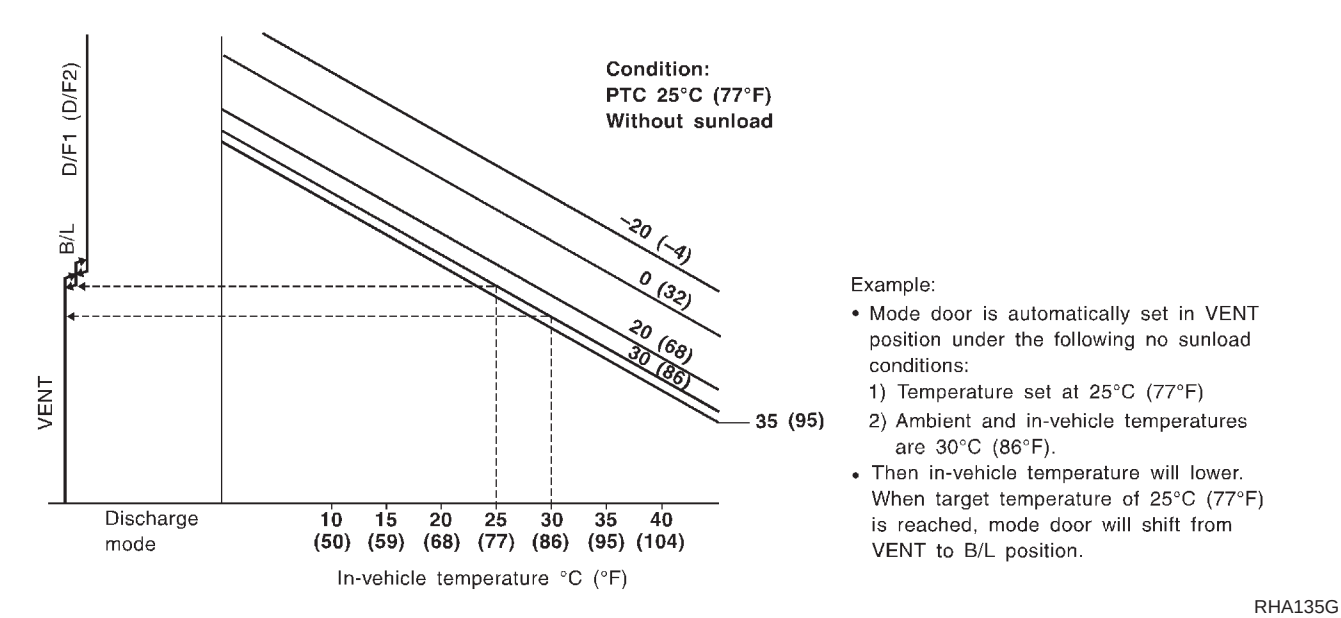

RHA135G

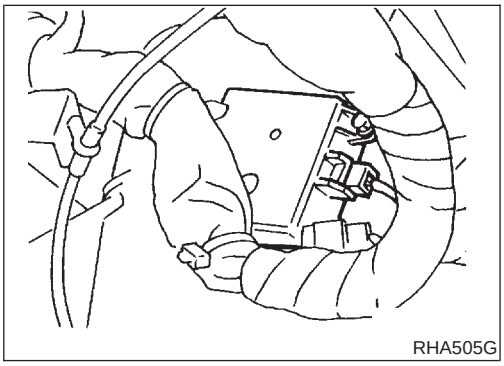

RHA505G

COMPONENT DESCRIPTION

NAHA0184

The mode door motor is attached to the heater unit. It rotates so that air is discharged from the outlet set by the auto amplifier. Motor rotation is conveyed to a link which activates the mode door.

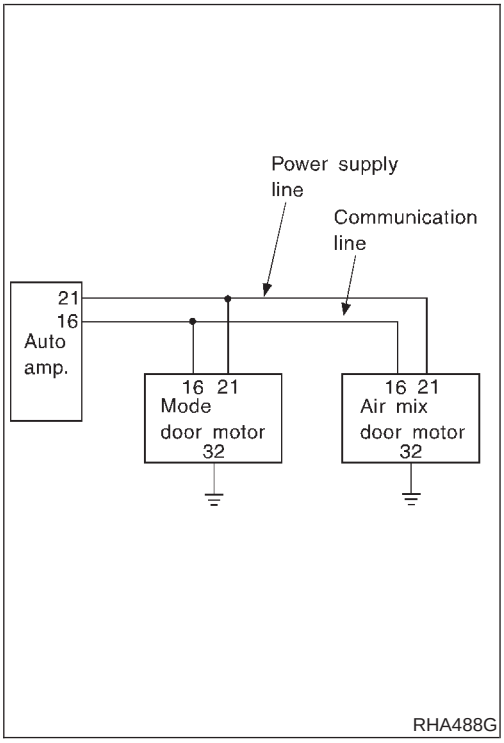

RHA488G

DIAGNOSTIC PROCEDURE FOR MODE DOOR MOTOR AND AIR MIX DOOR MOTOR CIRCUIT

NAHA0185

SYMPTOM: Mode door motor and/or air mix door motor does not operate normally.

1	CHECK POWER SUPPLY FOR AUTO AMP. (LCU) SIDE

Do approx. 12 volts exist between auto amp. (LCU) harness terminal No. 21 and body ground?

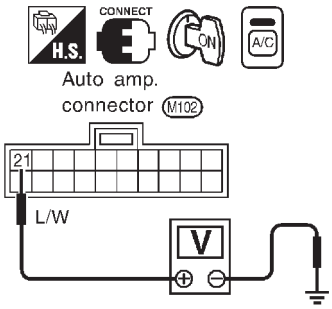

SHA966E

NOTE:
If the result is NG or No after checking circuit continuity, repair harness or connector.

Yes or No

Yes	▶	GO TO 2.
No	▶	Replace auto amp. (LCU).

2	CHECK SIGNAL FOR AUTO AMP. (LCU) SIDE

Do approx. 5.5 volts exist between auto amp. (LCU) terminal No. 16 and body ground?

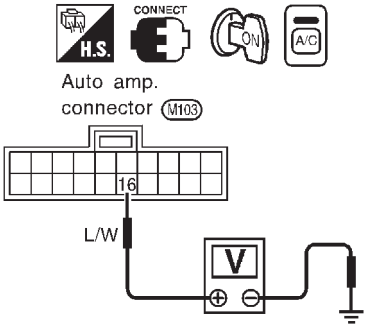

SHA965E

NOTE:
If the result is NG or No after checking circuit continuity, repair harness or connector.

Yes or No

Yes	▶	GO TO 3.
No	▶	Replace auto amp. (LCU).

3	CHECK POWER SUPPLY FOR MOTOR SIDE

Do approx. 12 volts exist between door motor (LCU) harness terminal No. 21 and body ground?

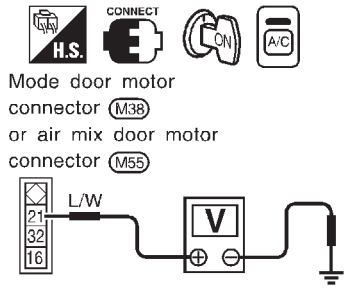

RHA489G

Yes or No

Yes	▶	GO TO 4.
No	▶	Repair harness or connector.

4	CHECK SIGNAL FOR MOTOR SIDE

Do approx. 5.5 volts exist between door motor (LCU) terminal No. 16 and body ground?

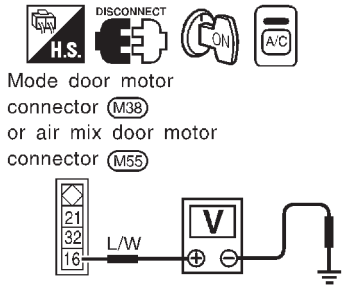

RHA490G

Yes or No

Yes	▶	GO TO 5.
No	▶	Repair harness or connector.

5	CHECK MOTOR GROUND CIRCUIT

Does continuity exist between door motor (LCU) harness terminal No. 32 and body ground?

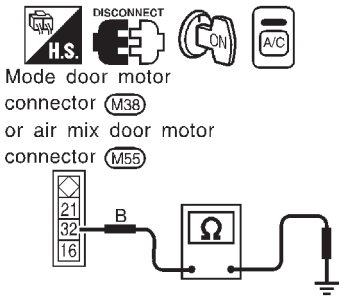

RHA491G

Yes or No

Yes	▶	GO TO 6.
No	▶	Repair harness or connector.

6	CHECK MOTOR OPERATION	
Disconnect and reconnect the motor connector and confirm the motor operation.		
OK or NG		
OK (Return to operate normally)	▶	Poor contacting the motor connector
NG (Does not operate normally)	▶	GO TO 7.

7	CHECK MODE DOOR MOTOR OPERATION	
1. Disconnect the mode door motor and air mix door motor connector. 2. Reconnect the mode door motor and confirm the motor operation.		
OK or NG		
OK (Mode door motor operates normally)	▶	Replace the air mix door motor.
NG (Mode door motor does not operate normally)	▶	GO TO 8.

8	CHECK AIR MIX DOOR MOTOR OPERATION	
1. Disconnect the mode door motor connector. 2. Reconnect the air mix door motor and confirm the air mix door motor operation.		
OK or NG		
OK (Air mix door motor operates normally)	▶	Replace mode door motor.
NG (Air mix door motor does not operate normally)	▶	Replace auto amp.

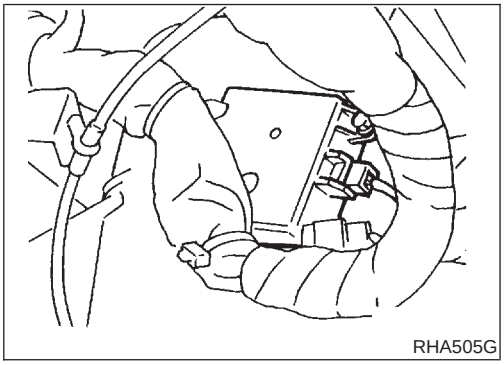
RHA505G

CONTROL LINKAGE ADJUSTMENT

NAHA0186

Mode Door

NAHA0186S01

1. Install mode door motor on heater unit and connect it to main harness.
2. Set up code No. in Self-diagnosis STEP 4. Refer to HA-39.
3. Move side link by hand and hold mode door in DEF mode.
4. Attach mode door motor rod to side link rod holder.
5. Make sure mode door operates properly when changing from code No. 41 to 46 by pushing DEF switch.

41	42	43	44	45	46
VENT	B/L	B/L	FOOT	D/F	DEF

Air Mix Door Motor

TROUBLE DIAGNOSIS PROCEDURE FOR AIR MIX DOOR (LAN)

=NAHA0187

SYMPTOM:

- **Discharge air temperature does not change.**
- **Air mix door motor does not operate.**

INSPECTION FLOW

1. Confirm symptom by performing the following operational check.

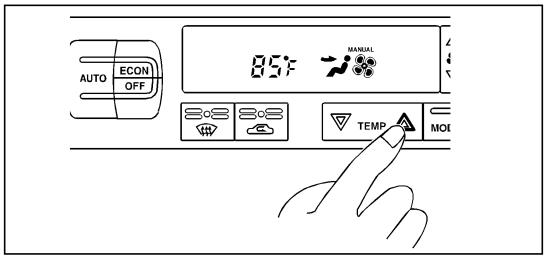

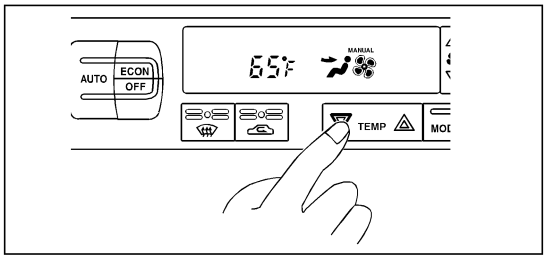

OPERATIONAL CHECK

Temperature increase

a. Press the temperature increase button until 32°C (85°F) is displayed.
b. Check for hot air at discharge air outlets.

Temperature decrease

a. Press the temperature decrease button until 18°C (65°F) is displayed.
b. Check for cold air at discharge air outlets.

If OK (symptom cannot be duplicated), perform complete operational check (*10).
If NG (symptom is confirmed), continue with STEP-2 following.

2. Check for any service bulletins. → 3. Perform self-diagnosis STEP-1. (*1)

OK

4. Perform self-diagnosis STEP-2. (*15) — NG → Go to appropriate malfunctioning sensor circuit. (*6)

OK

5. Perform self-diagnosis STEP-4. (*15) — NG → Check air mix door control linkage. (*8) → NG → Repair or adjust control linkage. (*9) → OK → Go to DIAGNOSTIC PROCEDURE FOR MODE DOOR MOTOR AND AIR MIX DOOR MOTOR CIRCUIT. (*7)

OK **[Cause cannot be confirmed by self-diagnosis.]**

6. Check ambient sensor circuit. (*2)

OK

7. Check in-vehicle sensor circuit. (*3)

OK

8. Check sunload sensor circuit. (*4)

OK

9. Check intake sensor circuit. (*14)

OK

10. Check air mix door motor PBR circuit. (*5)

OK

If the symptom still exists, perform a complete operational check (*12) and check for other symptoms. [Refer to symptom table, (*13).] Does another symptom exist?

Yes → Go to Trouble Diagnosis for related symptom.

Another symptom exists.

No → Replace auto amp. → INSPECTION END

SHA246F

*1: HA-38
*2: HA-97
*3: HA-101
*4: HA-104
*5: HA-110
*6: STEP-BY-STEP PROCEDURE (HA-39), see No. 13.
*7: HA-56
*8: HA-62
*9: HA-62
*10: HA-49
*12: HA-49
*13: HA-48
*14: HA-108
*15: HA-39

SYSTEM DESCRIPTION

=NAHA0188

Component Parts

NAHA0188S01

Air mix door control system components are:

1) Auto amp.
2) Air mix door motor (LCU)
3) In-vehicle sensor
4) Ambient sensor
5) Sunload sensor
6) Intake sensor

System Operation

NAHA0188S02

The auto amplifier receives data from each of the sensors. The amplifier sends air mix door and mode door opening angle data to the air mix door motor LCU and mode door motor LCU.
The air mix door motor and mode door motor read their respective signals according to the address signal. Opening angle indication signals received from the auto amplifier and each of the motor position sensors are compared by the LCUs in each motor with the existing decision and opening angles. Subsequently, HOT/COLD or DEFROST/VENT operation is selected. The new selection data is returned to the auto amplifier.

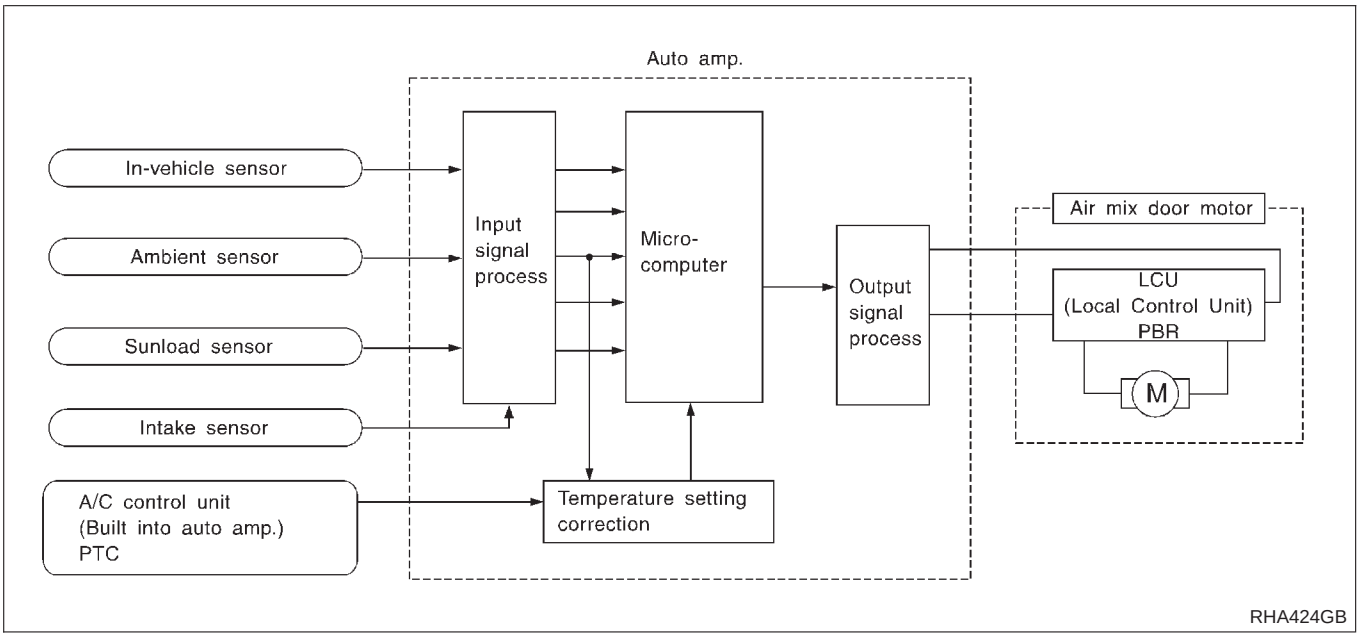

Air Mix Door Control Specification

NAHA0188S03

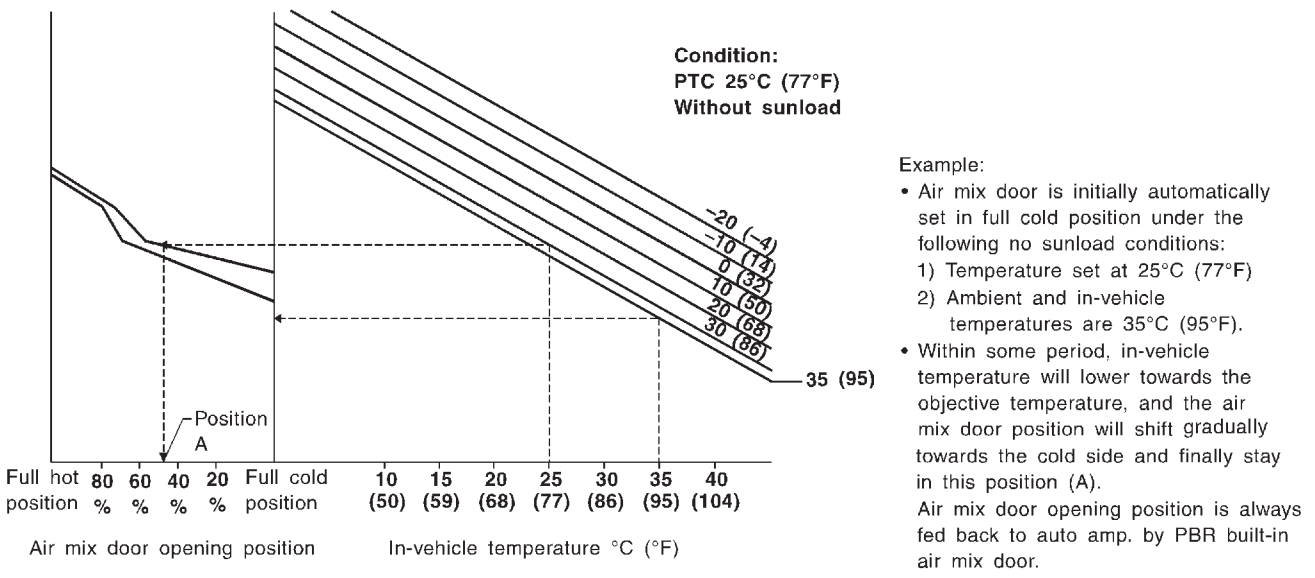

Example:
- Air mix door is initially automatically set in full cold position under the following no sunload conditions:
  1) Temperature set at 25°C (77°F)
  2) Ambient and in-vehicle temperatures are 35°C (95°F).
- Within some period, in-vehicle temperature will lower towards the objective temperature, and the air mix door position will shift gradually towards the cold side and finally stay in this position (A).

Air mix door opening position is always fed back to auto amp. by PBR built-in air mix door.

RHA137G

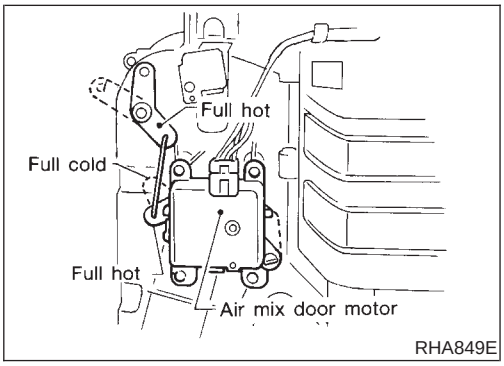

RHA849E

COMPONENT DESCRIPTION

NAHA0189

The air mix door motor is attached to the heater unit. It rotates so that the air mix door is opened or closed to a position set by the auto amplifier. Motor rotation is then conveyed through a shaft and the air mix door position is then fed back to the auto amplifier by PBR built-in air mix door motor.

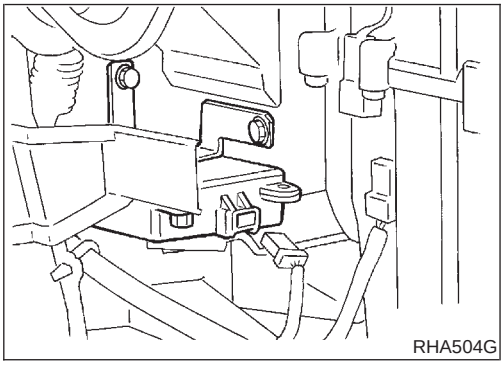

RHA504G

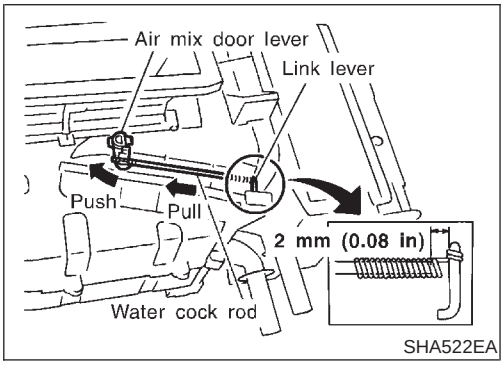

SHA522EA

CONTROL LINKAGE ADJUSTMENT

NAHA0190

Air Mix Door (Water Cock)

NAHA0190S01

1. Install air mix door motor on heater unit and connect it to main harness.
2. Set up code No. 41 in Self-diagnosis STEP 4. Refer to HA-38.
3. Move air mix door lever by hand and hold it in full cold position.
4. Attach air mix door lever to rod holder.
5. Make sure air mix door operates properly when changing from code No. 41 to 46 by pushing DEF switch.

41	42	43	44	45	46
Full cold		Full hot			

6. Set up code No. 41 in Self-diagnosis STEP 4.
7. Attach water cock rod to air mix door lever and secure with clip.
8. Rotate air mix door lever (CLOCKWISE completely) and hold water cock rod and link lever in the full cold position.
9. Attach water cock rod to link lever and secure with clip (white mark on cable housing should be centered under the retaining clip).

10. Check that water cock operates properly when changing from code No. 41 to 46 by pushing DEF switch. (After several cycles, water cock lever should be midpoint of plate opening when code No. 41 is set.)

Intake Door Motor

TROUBLE DIAGNOSIS PROCEDURE FOR INTAKE DOOR

=NAHA0191

SYMPTOM:

- **Intake door does not change.**
- **Intake door motor does not operate normally.**

INSPECTION FLOW

1. Confirm symptom by performing the following operational check.

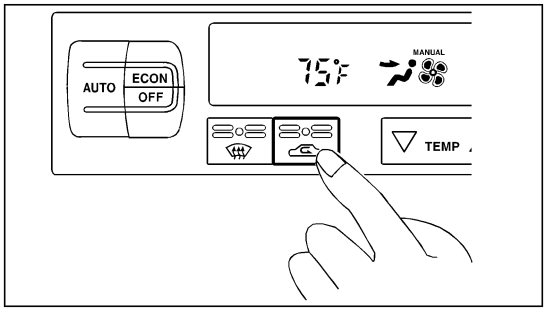

OPERATIONAL CHECK – Recirculation

a. Press REC switch.
Recirculation indicator should illuminate.
b. Listen for intake door position change (you should hear blower sound change slightly).

If OK (symptom cannot be duplicated), perform complete operational check (*9).
If NG (symptom is confirmed), continue with STEP-2 following.

2. Check for any service bulletins.

3. Perform self-diagnosis STEP-1. (*1)

OK

4. Perform self-diagnosis STEP-2. (*10)

NG → Go to appropriate malfunctioning sensor circuit. (*6)

OK

5. Perform self-diagnosis STEP-4. (*10)

NG → Check intake door control linkage. (*8)

NG → Repair or adjust control linkage.

OK → Go to Intake Door Motor Circuit. (*7)

OK

[Cause cannot be confirmed by self-diagnosis.]

6. Check ambient sensor circuit. (*2)

OK

7. Check in-vehicle sensor circuit. (*3)

OK

8. Check sunload sensor circuit. (*4)

OK

9. Check intake sensor circuit. (*13)

OK

10. Check air mix door motor PBR circuit. (*5)

OK

If the symptom still exists, perform a complete operational check (*11) and check for other symptoms. [Refer to symptom table, (*12).] Does another symptom exist?

No → Replace auto amp. → INSPECTION END

Yes → Follow the instruction in the "system table".

Another symptom exists.

SHA247F

*1: HA-38
*2: HA-97
*3: HA-101
*4: HA-104
*5: HA-110
*6: STEP-BY-STEP PROCEDURE (HA-39), see No. 13.
*7: HA-66
*8: HA-70
*9: HA-49
*10: HA-39
*11: HA-49
*12: HA-48
*13: HA-108

SYSTEM DESCRIPTION

=NAHA0192

Component Parts

NAHA0192S01

Intake door control system components are:

1) Auto amp.
2) Intake door motor
3) A/C LAN system (PBR built-in mode motor and air mix door motor)
4) In-vehicle sensor
5) Ambient sensor
6) Sunload sensor
7) Intake sensor

System Operation

NAHA0192S02

The intake door control determines intake door position based on the ambient temperature, the intake air temperature and the in-vehicle temperature. When the ECON, DEFROST, or OFF switches are pushed, the auto amplifier sets the intake door at the "Fresh" position.

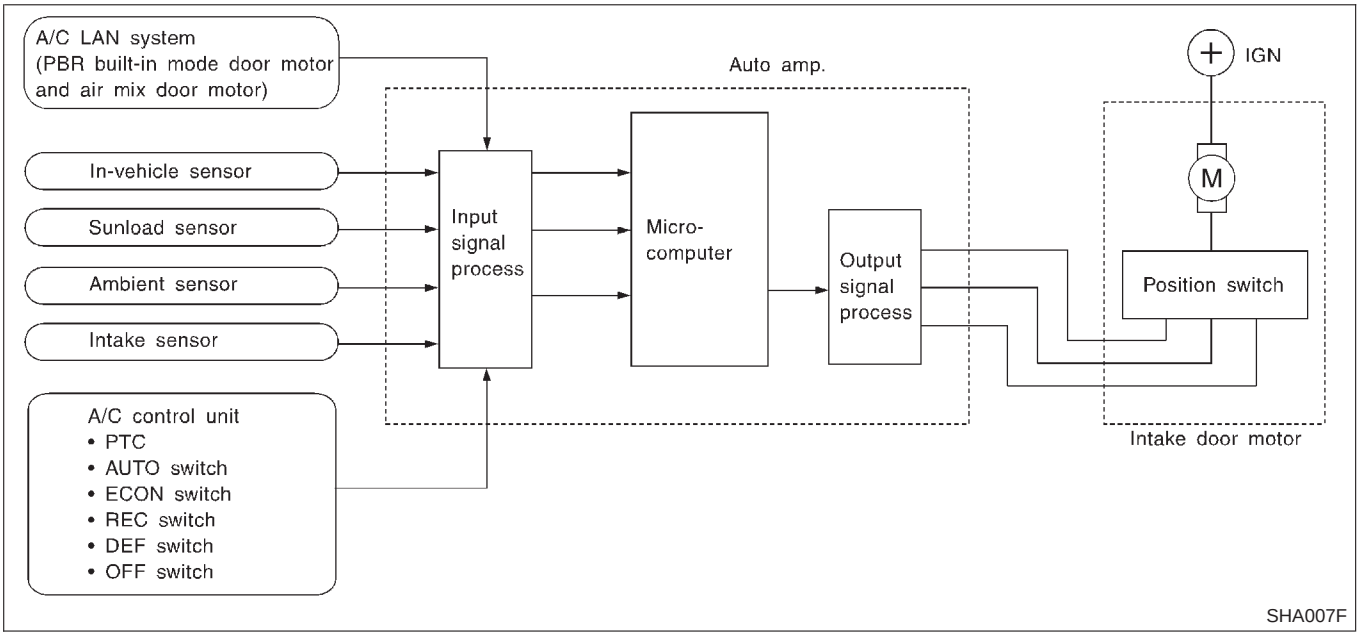

Intake Door Control Specification

NAHA0192S03

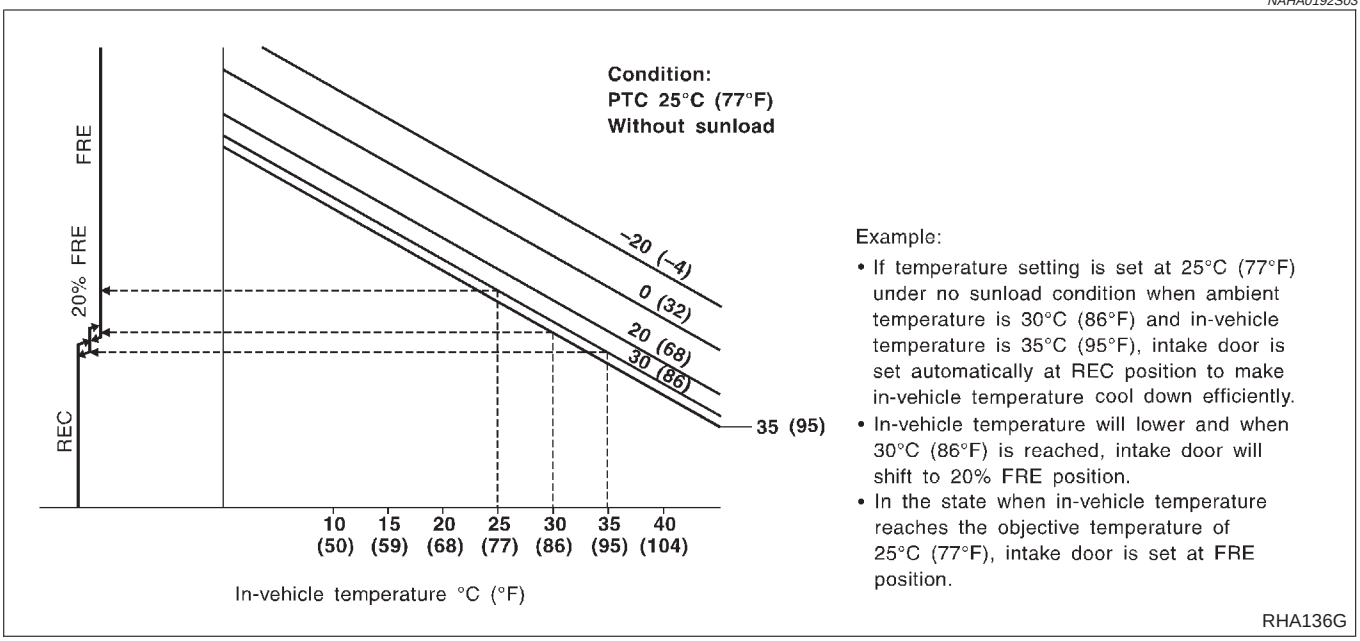

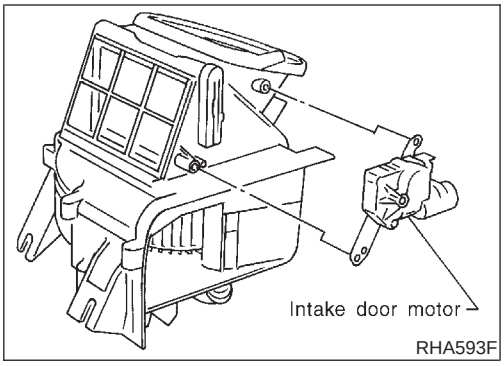

COMPONENT DESCRIPTION

NAHA0193

The intake door motor is attached to the intake unit. It rotates so that air is drawn from inlets set by the auto amplifier. Motor rotation is conveyed to a lever which activates the intake door.

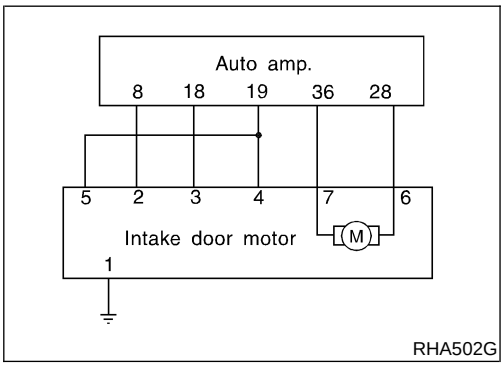

DIAGNOSTIC PROCEDURE

NAHA0194

SYMPTOM: Intake door motor does not operate normally.

1	CHECK BODY GROUND CIRCUIT FOR INTAKE DOOR MOTOR	
Does continuity exist between intake door harness terminal No. 1 and body ground?		
Yes or No		
Yes	▶	GO TO 2.
No	▶	Repair harness or connector.

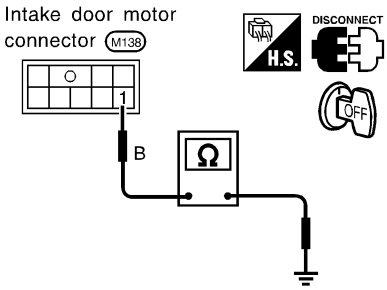

2	CHECK FOR AUTO AMP. OUTPUT

Set up Self-diagnosis STEP 4.
Measure voltage across auto amp. harness terminals and body ground.

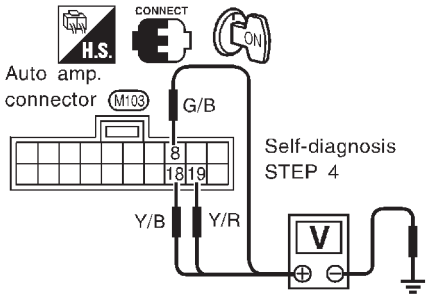

RHA493G

Code No.	Terminals No. (+)	Terminals No. (–)	Condition	Voltage V
41	8	Body ground	REC	5
42	18 or 19			0
43	19		20% FRE	5
	8 or 18			0
44	18		FRE	5
45				
46	8 or 19			0

0V: Approx. 0V
5V: Approx. 5V

MTBL0076

OK or NG

OK	▶	INSPECTION END
NG	▶	GO TO 3.

3	CHECK CIRCUIT CONTINUITY BETWEEN EACH TERMINAL ON AUTO AMP. AND ON INTAKE DOOR MOTOR

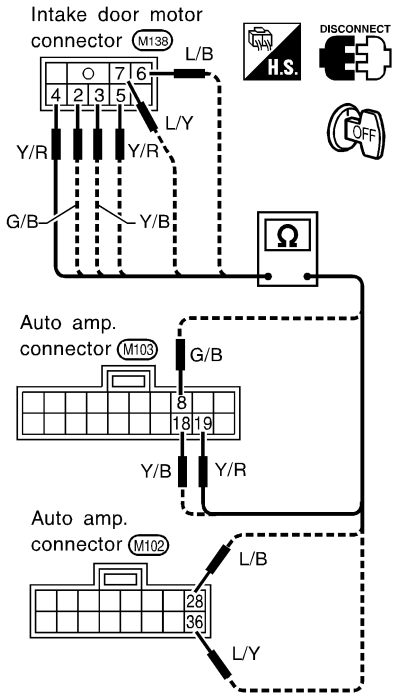

RHA494GB

Terminal No.		Continuity
Auto amp.	Intake door motor	
(19)	(4)	Yes
(8)	(2)	
(18)	(3)	
(19)	(5)	
(28)	(6)	
(36)	(7)	

MTBL0077

Continuity should exist.
If OK, check harness for short.

OK or NG

OK	▶	GO TO 4.
NG	▶	Repair harness or connector.

4	CHECK FOR AUTO AMP. OUTPUT

Set up Self-diagnosis STEP 4.
Measure voltage across auto amp. harness terminals and body ground.

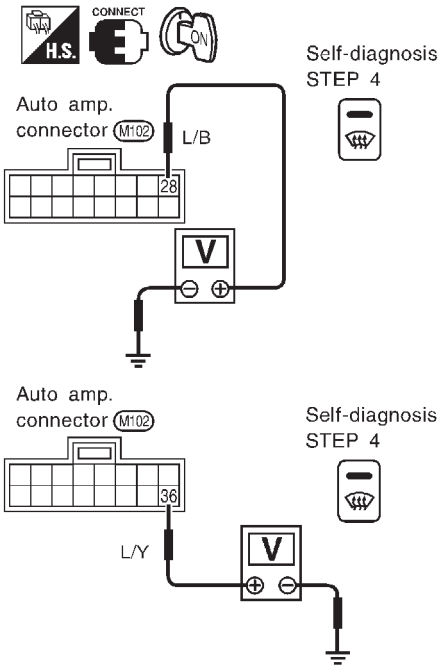

RHA506G

Code No.	Terminals No. (+)	Terminals No. (–)	Condition	Voltage V
41 42	28	Body ground	REC	12
	36			0
44 45 46	28		FRE	0
	36			12

0V: Approx. 0V
12V: Approx. 12V

MTBL0078

OK or NG

OK	▶	Replace intake door motor.
NG	▶	Replace auto amp.

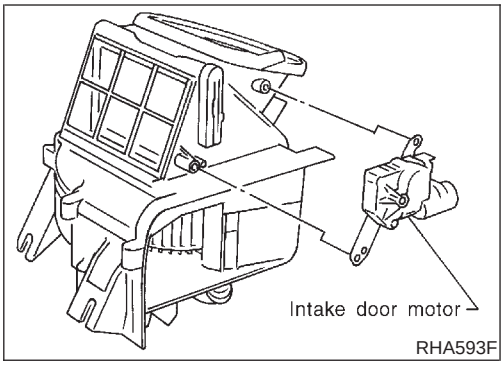

CONTROL LINKAGE ADJUSTMENT

=NAHA0195

Intake Door

NAHA0195S01

1. Install intake door motor on intake unit and connect it to main harness.
2. Set up code No. 41 in Self-diagnosis STEP 4. Refer to HA-39.
3. Move intake door link by hand and hold it in REC position.
4. Attach intake door lever to rod holder.
5. Make sure intake door operates properly when changing from code No. 41 to 46 by pushing DEF switch.

41	42	43	44	45	46
REC		20% FRE	FRE		

Blower Motor

TROUBLE DIAGNOSIS PROCEDURE FOR BLOWER MOTOR

=NAHA0196

SYMPTOM:

- **Blower motor operation is malfunctioning.**
- **Blower motor operation is malfunctioning under out of starting fan speed control.**

INSPECTION FLOW

1. Confirm symptom by performing the following operational check.

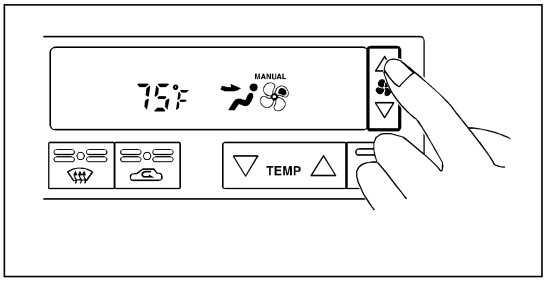

OPERATIONAL CHECK – Blower
a. Press fan switch (up side) one time.
Blower should operate on low speed.
The fan symbol should have one blade lit.
b. Press fan switch (up side) one more time, and continue checking blower speed and fan symbol until all speeds are checked.
c. Leave blower on MAX speed.
If OK (symptom cannot be duplicated), perform complete operational check (*12).
If NG (symptom is confirmed), continue with STEP-2 following.

2. Check for any service bulletins. → 3. Perform self-diagnosis STEP-1. (*1)

OK ↓

4. Perform self-diagnosis STEP-2. (*9)
Code No. 20 should be displayed after approx. 4 second.
NG → Go to appropriate malfunctioning sensor circuit. (*6)

OK ↓

5. Perform self-diagnosis STEP-4. (*9)
Does blower motor speed change according to each code No.?
No → Go to Blower Motor Circuit. (*7)

Code No.	41	42	43	44	45	46
Blower motor speed	Low	Middle high	Middle low			High

Yes ↓

6. Is engine coolant temperature below 50°C (122°F) and ambient temperature below 15°C (59°F)?
No → Blower motor operation is normal.

Yes ↓

7. Is blower motor operating under starting blower speed control?
No → Go to Blower Motor Circuit. (*8) → OK → Check thermal transmitter control circuit. Refer to EL-(*14), "Electrical Component Inspection".

Yes **[Cause cannot be confirmed by self-diagnosis.]** ↓

8. Check ambient sensor circuit. (*2)

OK ↓

9. Check in-vehicle sensor circuit. (*3)

OK ↓

10. Check sunload sensor circuit. (*4)

OK ↓

11. Check intake sensor circuit. (*13)

OK ↓

12. Check air mix door motor PBR circuit. (*5)

OK ↓

If the symptom still exists, perform a complete operational check (*10) and check for other symptoms. [Refer to symptom table, (*11).] Does another symptom exist?
Yes → Go to Trouble Diagnosis for related symptom.
Another symptom exists.

No ↓

Replace auto amp. → INSPECTION END

SHA248FB

*1: HA-38
*2: HA-97
*3: HA-101
*4: HA-104
*5: HA-110
*6: STEP-BY-STEP PROCEDURE (HA-39), see No. 13.
*7: HA-73
*8: HA-73
*9: HA-39
*10: HA-49
*11: HA-48
*12: HA-49
*13: HA-108
*14: EL-95

SYSTEM DESCRIPTION

=NAHA0197

Component parts

NAHA0197S01

Fan speed control system components are:

1) Auto amp.
2) Fan control amp.
3) A/C LAN system (PBR built-in mode door motor and air mix door motor)
4) In-vehicle sensor
5) Ambient sensor
6) Sunload sensor
7) Intake sensor

System Operation

NAHA0197S02

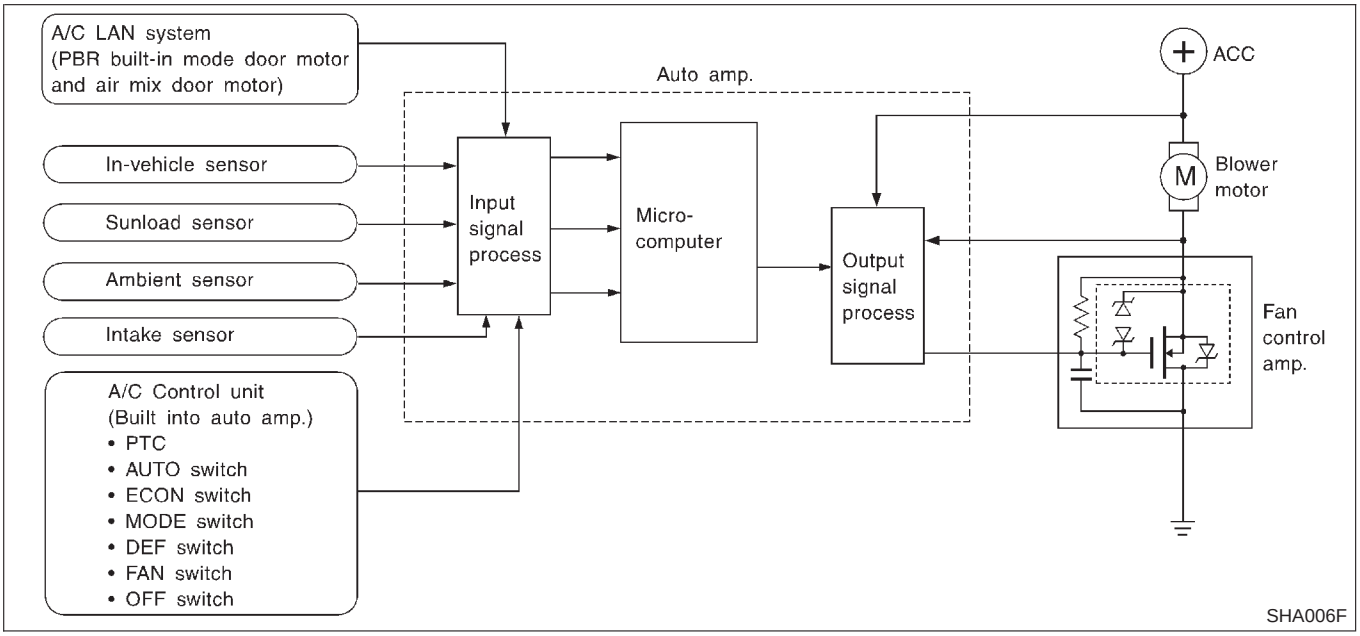

Automatic Mode

NAHA0197S03

In the automatic mode, the blower motor speed is calculated by the automatic amplifier based on inputs from the PBR, in-vehicle sensor, sunload sensor, intake sensor and ambient sensor. The blower motor applied voltage ranges from approximately 5 volts (lowest speed) to 12 volts (highest speed).

The control blower speed (in the range of 5 to 12V), the automatic amplifier supplies a gate voltage to the fan control amplifier. Based on this voltage, the fan control amplifier controls the voltage supplied to the blower motor.

Starting Fan Speed Control

NAHA0197S04

Start Up From "COLD SOAK" Condition (Automatic mode)

NAHA0197S0401

In a cold start up condition where the engine coolant temperature is below 50°C (122°F), the blower will not operate for a short period of time (up to 126 seconds). The exact start delay time varies depending on the ambient and engine coolant temperature.

In the most extreme case (very low ambient) the blower starting delay will be 126 seconds as described above. After this delay, the blower will operate at low speed until the engine coolant temperature rises above 55°C (131°F), at which time the blower speed will increase to the objective speed.

Start Up From Normal or "HOT SOAK" Condition (Automatic mode)

NAHA0197S0402

The blower will begin operation momentarily after the AUTO button is pushed. The blower speed will gradually rise to the objective speed over a time period of 3 seconds or less (actual time depends on the objective blower speed).

Blower Speed Compensation

NAHA0197S05

Sunload

NAHA0197S0501

When the in-vehicle temperature and the set temperature are very close, the blower will be operating at low speed. The low speed will vary depending on the sunload. During conditions of high sunload, the blower low speed is "normal" low speed (approx. 6V). During low or no sunload conditions, the low speed will drop to "low" low speed (approx. 5V).

Ambient

NAHA0197S0502

When the ambient temperature is in the "moderate" range [10 - 15°C (50 - 59°F)], the computed blower voltage will be compensated (reduced) by up to 3.5V (depending on the blower speed). In the "extreme" ambient ranges [below 0°C (32°F) and above 20°C (68°F)] the computed objective blower voltage is not compensated at all. In the ambient temperature ranges between "moderate" and "extreme" [0 - 10°C (32 - 50°F) and 15 - 20°C (59 - 68°F)], the amount of compensation (for a given blower speed) varies depending on the ambient temperature.

Fan Speed Control Specification

NAHA0197S06

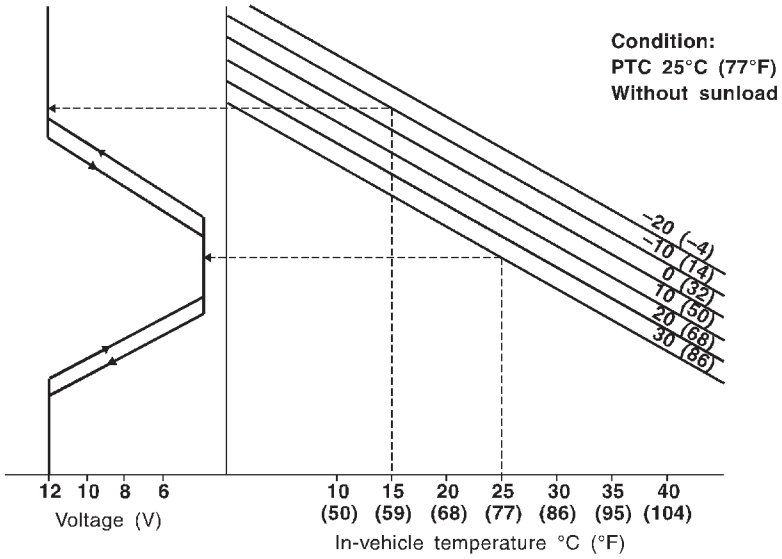

Example:
- If temperature setting is set at 25°C (77°F) under no sunload condition when ambient temperature is −10°C (14°F) and in-vehicle temperature is 15°C (59°F), blower motor voltage is approx. 12 volts.
- When ambient temperature is 30°C (86°F) and in-vehicle temperature is reduced to 25°C (77°F) under the same condition above, blower motor voltage is approx. 5 volts.

RHA138G

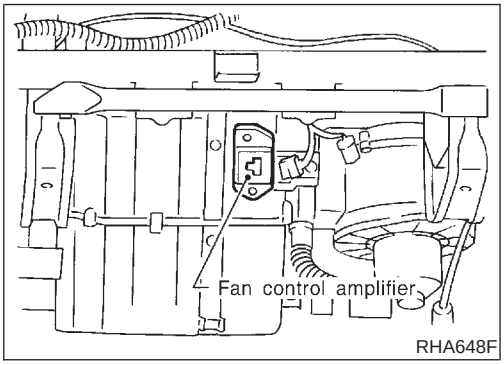

RHA648F

COMPONENT DESCRIPTION

NAHA0198

Fan Control Amplifier

NAHA0198S01

The fan control amplifier is located on the cooling unit. The fan control amp. receives a gate voltage from the auto amp. to steplessly maintain the blower fan motor voltage in the 5 to 12 volt range (approx.).

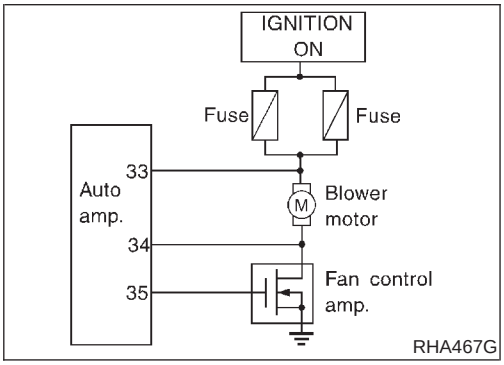

RHA467G

DIAGNOSTIC PROCEDURE

NAHA0199

SYMPTOM: Blower motor operation is malfunctioning under Starting Fan Speed Control.

1	CHECK POWER SUPPLY FOR FAN CONTROL AMP.

Disconnect fan control amp. harness connector.
Do approx. 12 volts exist between fan control amp. harness terminal No. 3 and body ground?

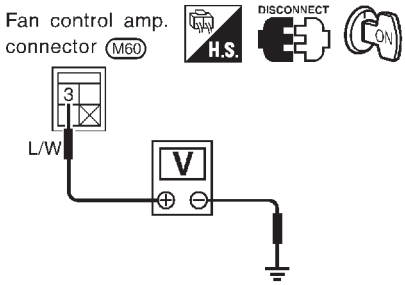

RHA480G

Yes or No

Yes	▶	GO TO 2.
No	▶	GO TO 8.

2	CHECK BODY GROUND CIRCUIT FOR FAN CONTROL AMP.

Does continuity exist between fan control amp. harness terminal No. 1 and body ground?

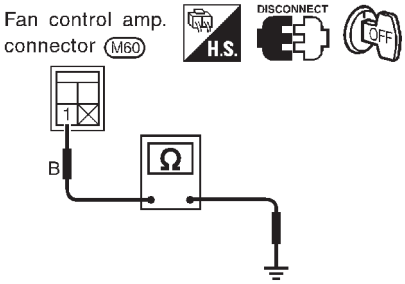

RHA089G

Yes or No

Yes	▶	Reconnect fan control amp. harness connector. And GO TO 3.
No	▶	Repair harness or connector.

3	CHECK FOR AUTO AMP. OUTPUT

Set up Self-diagnosis STEP 4.
Measure voltage across fan control amp. harness terminal No. 2 and body ground.

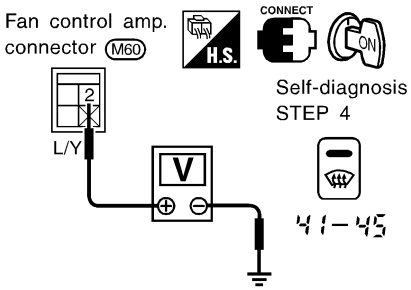

RHA481GC

Code No.	Terminal No.		Voltage
	(+)	(–)	
41 – 45	(2)	Body ground	Approx. 2.5 - 3V

MTBL0515

OK or NG

OK	▶	GO TO 5.
NG	▶	• The result is less than 2.5V: Replace fan control amp. • The result is more than 3.0V: GO TO 4.

4	CHECK FAN CONTROL AMP.

Refer to HA-78.

OK or NG

OK	▶	GO TO 5.
NG	▶	1. Replace fan control amp. 2. Go to "STEP-BY-STEP PROCEDURE", HA-39 and perform self-diagnosis STEP 4. Confirm that blower motor operation is normal.

5	CHECK FAN CONTROL AMP. CIRCUIT BETWEEN FAN CONTROL AMP. AND AUTO AMP. (LCU)

1. Disconnect auto amp. (LCU) and fan control amp. harness connector.
2. Check circuit continuity between auto amp. (LCU) harness terminal No. 35 and fan control amp. harness terminal No. 2.

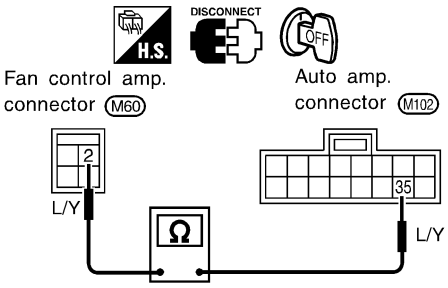

RHA901H

Continuity should exist.
If OK, check harness for short.

OK or NG

OK	▶	GO TO 6.
NG	▶	Repair harness or connector.

6	CHECK FAN FEED BACK CIRCUIT

Reconnect auto amp. (LCU) harness connector.
Do approx. 12 volts exist between auto amp. (LCU) harness terminal No. 33 and body ground?

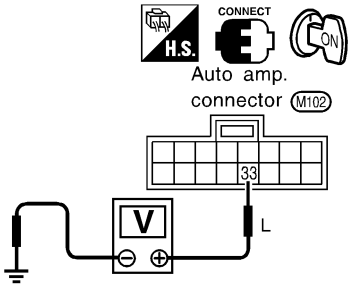

RHA902H

Yes or No

Yes	▶	GO TO 7.
No	▶	Check power supply circuit and 15A fuses (Nos. 1 and 2, located in the fuse block). Refer to EL-14, "Wiring Diagram — POWER —". ● If OK, check for open circuit in wiring harness. Repair or replace as necessary. ● If NG, replace fuse and check wiring harness for short circuit. Repair or replace as necessary.

7	CHECK POWER SUPPLY FOR AUTO AMP.

Do approx. 12 volts exist between auto amp. harness terminal No. 34 and body ground?

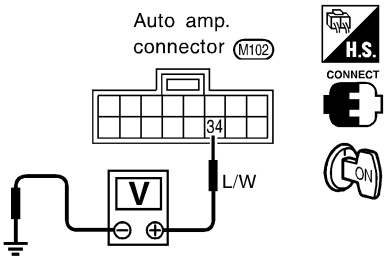

RHA903H

Yes or No

Yes	▶	1. Replace auto amp. 2. Go to self-diagnosis step-by-step procedure (HA-39) and perform self-diagnosis STEP-4. Confirm that blower motor operation is normal.
No	▶	GO TO 10.

8	CHECK POWER SUPPLY FOR BLOWER MOTOR

Disconnect blower motor harness connector.
Do approx. 12 volts exist between blower motor harness terminal No. 1 and body ground?

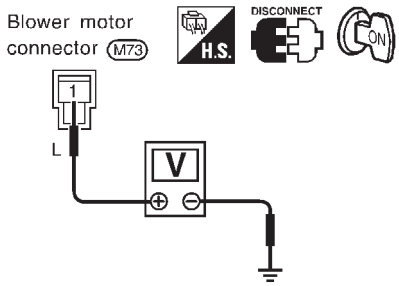

RHA091G

Yes or No

Yes	▶	GO TO 9.
No	▶	**Check power supply circuit and 15A fuses (Nos. 1 and 2, located in the fuse block).** ● If OK, check for open circuit in wiring harness. Repair or replace as necessary. ● If NG, replace fuse and check wiring harness for short circuit. Repair or replace as necessary.

9	CHECK CIRCUIT CONTINUITY BETWEEN BLOWER MOTOR AND FAN CONTROL AMP.

Disconnect blower motor connector and auto amp. (LCU) connector.
Check circuit continuity between blower motor harness terminal No. 2 and fan control amp. harness terminal No. 3.

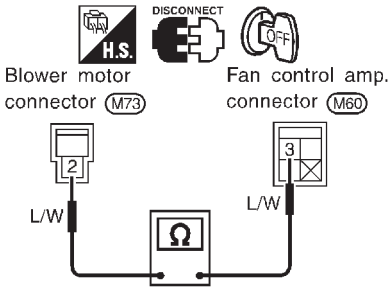

RHA472G

OK or NG

OK	▶	**Check blower motor. (Refer to HA-78.)** 1. If NG, replace blower motor. 2. Go to self-diagnosis step-by-step procedure (HA-39) and perform self-diagnosis STEP-4. Confirm that blower motor operation is normal.
NG	▶	Repair harness or connector.

10	CHECK BLOWER MOTOR CIRCUIT BETWEEN BLOWER MOTOR AND AUTO AMP. (LCU)

Check circuit continuity between blower motor harness terminal No. 2 and auto amp. (LCU) harness terminal No. 34.

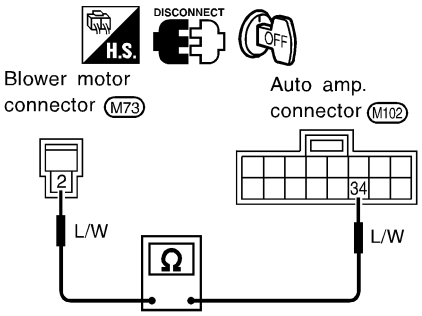

RHA904H

Continuity should exist.

OK or NG

OK	▶	Check harness for short.
NG	▶	Repair harness or connector.

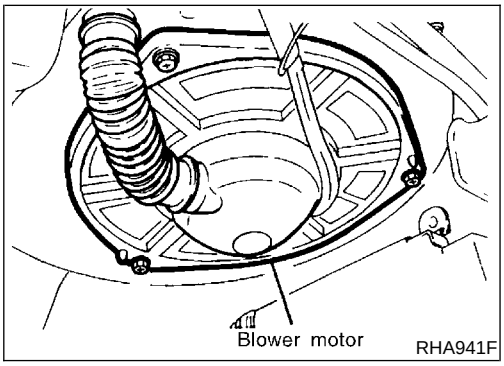

RHA941F

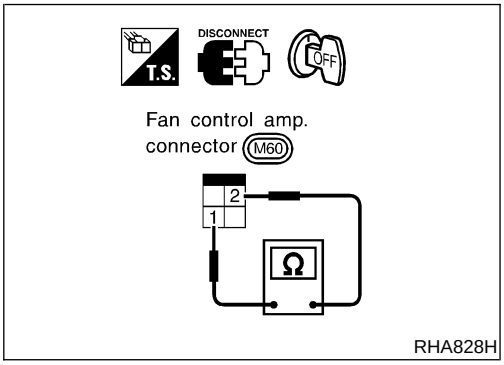

RHA828H

COMPONENT INSPECTION

NAHA0200

Blower Motor

NAHA0200S01

Confirm smooth rotation of the blower motor.

- Ensure that there are no foreign particles inside the intake unit.

Fan Control Amp.

NAHA0200S02

Check continuity between terminals.

Terminal Nos.	continuity
1 - 2	Yes

Magnet Clutch

TROUBLE DIAGNOSIS PROCEDURE FOR MAGNET CLUTCH

=NAHA0201

SYMPTOM:

- **Magnet clutch does not engage.**

INSPECTION FLOW

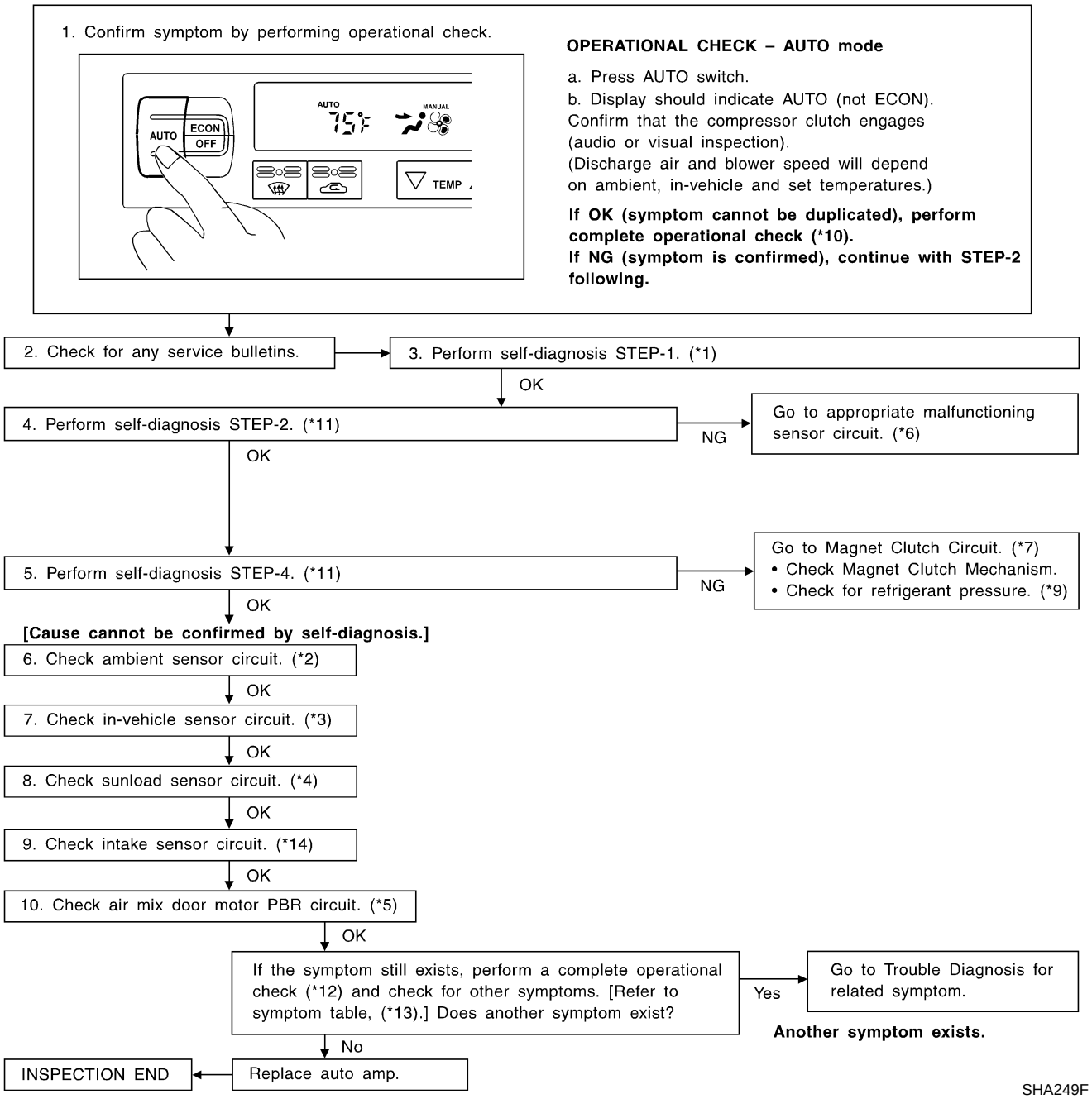

*1: STEP-BY-STEP PROCEDURE (HA-38)
*2: HA-97
*3: HA-101
*4: HA-104
*5: HA-110
*6: STEP-BY-STEP PROCEDURE (HA-39), see No. 13.
*7: HA-80
*8: HA-116
*9: HA-121
*10: HA-49
*11: HA-39
*12: HA-49
*13: HA-48
*14: HA-108

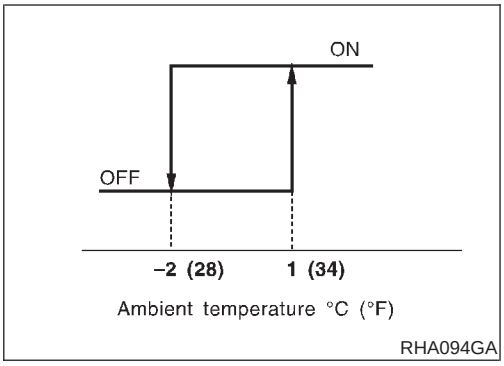

SYSTEM DESCRIPTION

=NAHA0202

Auto amplifier controls compressor operation by ambient temperature and signal from ECM.

Low Temperature Protection Control

NAHA0202S01

Auto amplifier will turn the compressor "ON" or "OFF" as determined by a signal detected by ambient sensor.
When ambient temperatures are greater than 1°C (34°F), the compressor turns "ON". The compressor turns "OFF" when ambient temperatures are less than −2°C (28°F).

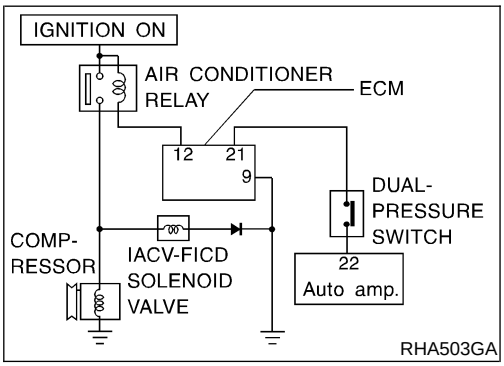

DIAGNOSTIC PROCEDURE

NAHA0203

SYMPTOM: Magnet clutch does not engage when AUTO switch is ON.

1	CHECK POWER SUPPLY FOR COMPRESSOR
Disconnect compressor harness connector. Do approx. 12 volts exist between compressor harness terminal No. 1 and body ground?	

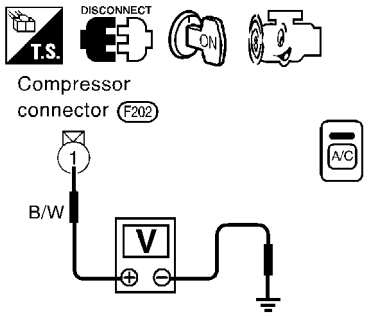

Yes or No

Yes ▶	**Check magnet clutch coil.** 1. If NG, replace magnet clutch. Refer to HA-116. 2. Go to self-diagnosis step-by-step procedure (HA-39) and perform self-diagnosis STEP-4. Confirm that magnet clutch operation is normal.
No ▶	Disconnect A/C relay. And GO TO 2.

2	CHECK CIRCUIT CONTINUITY BETWEEN A/C RELAY AND COMPRESSOR

Check circuit continuity between A/C relay harness terminal No. 5 and compressor harness terminal No. 1.

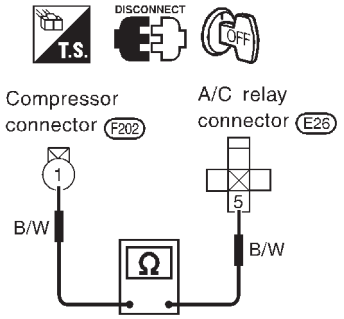

RHA748FB

Continuity should exist.
If OK, check harness for short.

OK or NG

OK	▶	GO TO 3.
NG	▶	Repair harness or connector.

3	CHECK POWER SUPPLY FOR A/C RELAY

Disconnect A/C relay.
Do approx. 12 volts exist between A/C relay harness terminal Nos. 2, 3 and body ground?

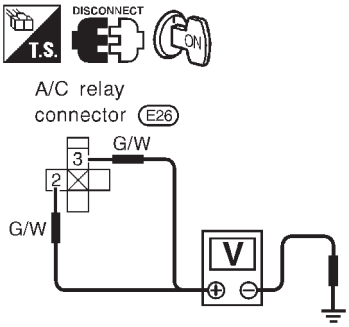

RHA614F

Yes or No

Yes	▶	GO TO 4.
No	▶	Check power supply circuit and 7.5A (No. 6) fuse at fuse block. Refer to EL-14, "Wiring Diagram — POWER —". ● If OK, check for open circuit in wiring harness. Repair or replace as necessary. ● If NG, replace fuse and check wiring harness for short circuit. Repair or replace as necessary.

4	CHECK A/C RELAY AFTER DISCONNECTING IT

Refer to HA-84.

OK or NG

OK	▶	Reconnect A/C relay. And GO TO 5.
NG	▶	1. Replace A/C relay. 2. Go to self-diagnosis step-by-step procedure (HA-39) and perform self-diagnosis STEP-4. Confirm that magnet clutch operation is normal.

5	CHECK COIL SIDE CIRCUIT OF A/C RELAY

Do approx. 12 volts exist between ECM harness terminal No. 12 and body ground?

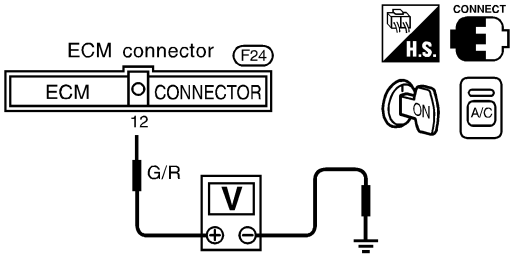

RHA482GB

Yes or No

Yes	▶	GO TO 6.
No	▶	Disconnect A/C relay. Disconnect ECM harness connector. GO TO 10.

6	CHECK VOLTAGE FOR ECM

Do approx. 12 volts exist between ECM harness terminal No. 21 and body ground?

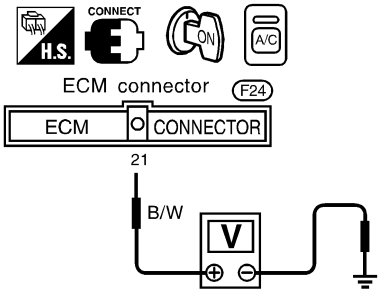

RHA701FC

Yes or No

Yes	▶	Disconnect ECM harness connector. Disconnect dual-pressure switch harness connector. GO TO 7.
No	▶	Check ECM. Refer to EC-127, EC-581, "ECM Terminals and Reference Value".

7	CHECK CIRCUIT CONTINUITY BETWEEN ECM AND DUAL-PRESSURE SWITCH

Check circuit continuity between ECM harness terminal No. 21 and dual-pressure switch harness terminal No. 2.

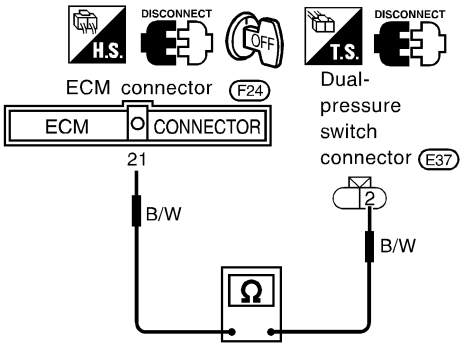

RHA585FB

Continuity should exist.
If OK, check harness for short.

OK or NG

OK	▶	GO TO 8.
NG	▶	1. Repair harness or connector. 2. Go to self-diagnosis step-by-step procedure (HA-39) and perform self-diagnosis STEP-4. Confirm that magnet clutch operation is normal.

8	CHECK DUAL-PRESSURE SWITCH

Refer to HA-84.

OK or NG

OK	▶	Disconnect A/C switch harness connector. And GO TO 9.
NG	▶	Replace dual-pressure switch.

9	CHECK DUAL-PRESSURE SWITCH CIRCUIT BETWEEN DUAL-PRESSURE AND AUTO AMP. (LCU)

Check circuit continuity between auto amp. harness terminal No. 22 and dual-pressure switch terminal No. 1.

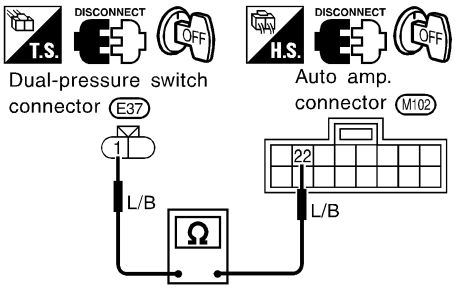

SHA303F

Continuity should exist.
If OK, check harness for short.

OK or NG

OK	▶	1. Replace auto amp. 2. Go to self-diagnosis step-by-step procedure (HA-39) and perform self-diagnosis STEP-4. Confirm that magnet clutch operation is normal.
NG	▶	Repair harness or connector.

10	CHECK CIRCUIT CONTINUITY BETWEEN A/C RELAY AND ECM

Check circuit continuity between A/C relay harness terminal No. 1 and ECM harness terminal No. 12.

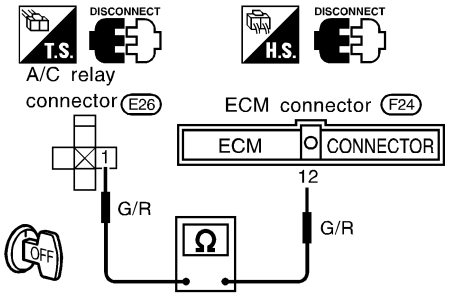

RHA474GA

Continuity should exist.

OK or NG

OK	▶	Check harness for short.
NG	▶	Repair harness or connector.

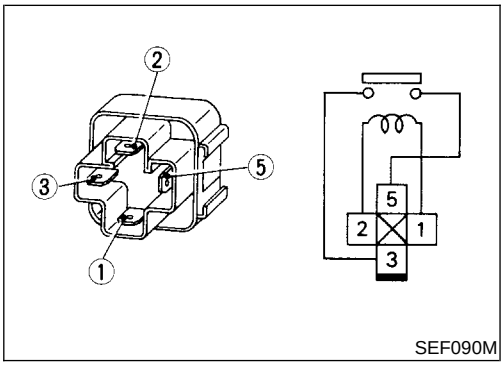

SEF090M

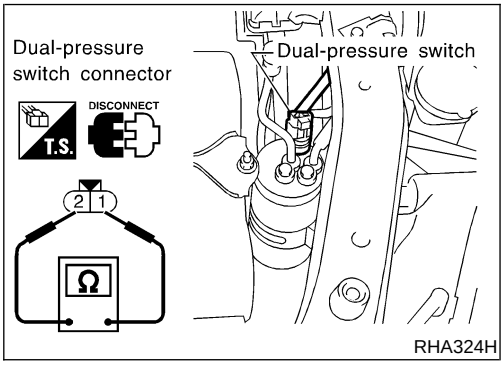

RHA324H

COMPONENT INSPECTION

NAHA0204

A/C Relay

NAHA0204S01

Check continuity between terminal Nos. 3 and 5.

Conditions	Continuity
12V direct current supply between terminal Nos. 1 and 2	Yes
No current supply	No

If NG, replace relay.

Dual-pressure Switch

NAHA0204S02

	ON kPa (kg/cm^2, psi)	OFF kPa (kg/cm^2, psi)
Low-pressure side	Increasing to 157 - 216 (1.6 - 2.2, 23 - 31)	Decreasing to 157 - 196 (1.6 - 2.0, 23 - 28)
High-pressure side	Decreasing to 1,863 - 2,256 (19 - 23, 270 - 327)	Increasing to 2,452 - 2,844 (25 - 29, 356 - 412)

Insufficient Cooling

TROUBLE DIAGNOSIS PROCEDURE FOR INSUFFICIENT COOLING

=NAHA0205

SYMPTOM:

- **Insufficient cooling**

INSPECTION FLOW

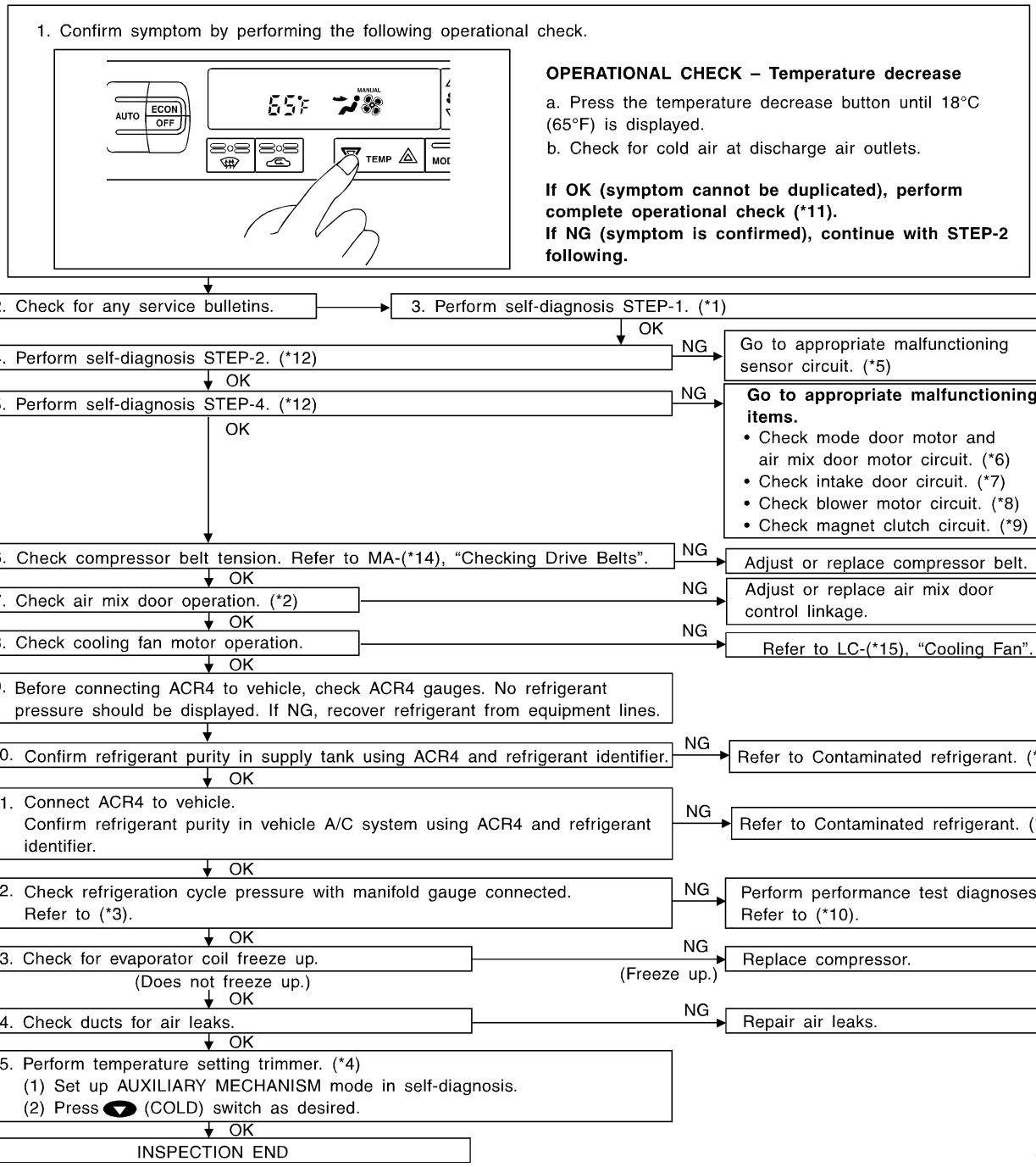

*1: HA-38	*6: HA-55	*11: HA-49
*2: HA-62	*7: HA-65	*12: HA-39
*3: HA-88	*8: HA-72	*13: HA-3
*4: HA-47	*9: HA-80	*14: MA-15
*5: STEP-BY-STEP PROCEDURE (HA-39), see No. 13.	*10: HA-86	*15: EC-54

PERFORMANCE TEST DIAGNOSES

NAHA0206

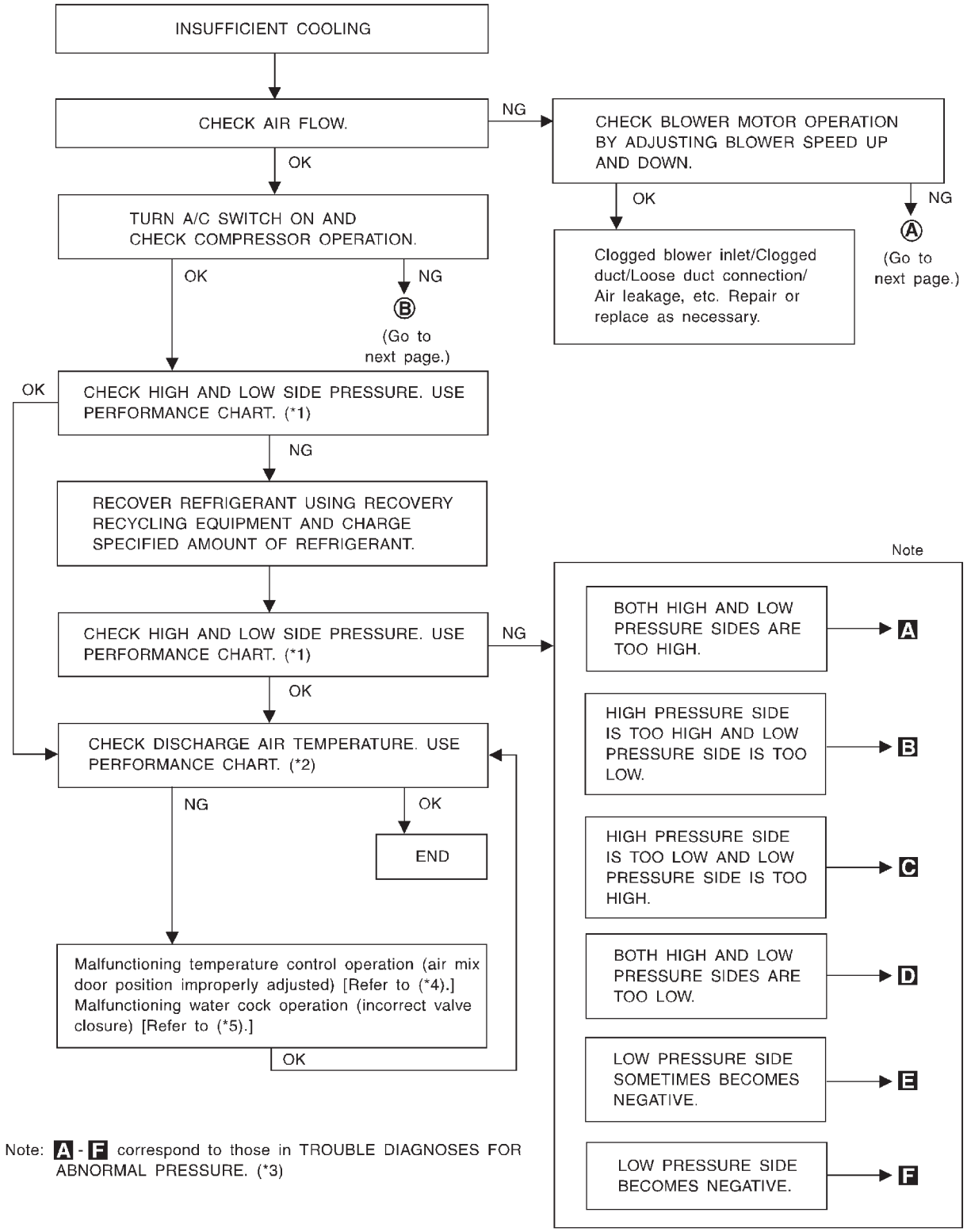

SHA893E

*1: HA-88
*2: HA-88
*3: HA-88
*4: HA-62
*5: HA-62

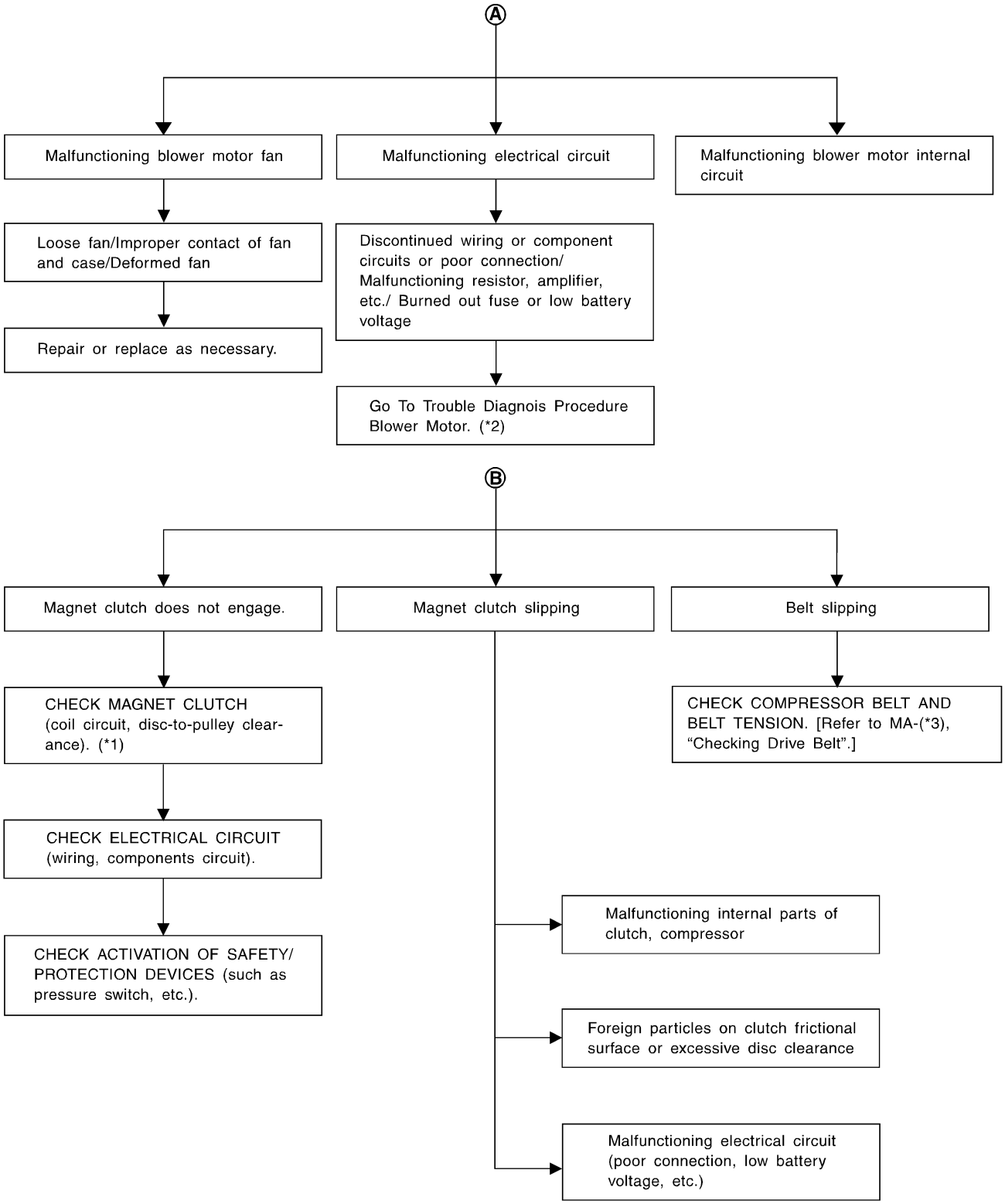

SHA329F

*1: HA-116 *2: HA-71 *3: MA-15

PERFORMANCE CHART

NAHA0207

Test Condition

NAHA0207S01

Testing must be performed as follows:

Vehicle location	Indoors or in the shade (in a well-ventilated place)
Doors	Closed
Door window	Open
Hood	Open
TEMP.	Max. COLD
Mode switch	(Ventilation) set
REC switch	(Recirculation) set
(blower) speed	Max. speed set
Engine speed	Idle speed
Operate the air conditioning system for 10 minutes before taking measurements.	

Test Reading

NAHA0207S02

Recirculating-to-discharge Air Temperature Table

NAHA0207S0201

Inside air (Recirculating air) at blower assembly inlet		Discharge air temperature at center ventilator °C (°F)
Relative humidity %	Air temperature °C (°F)	
50 - 60	25 (77)	6.0 - 9.0 (43 - 48)
	30 (86)	10.0 - 13.6 (50 - 56)
	35 (95)	15.2 - 19.5 (59 - 67)
	40 (104)	22.5 - 27.1 (73 - 81)
60 - 70	25 (77)	9.0 - 12.2 (48 - 54)
	30 (86)	13.6 - 17.2 (56 - 63)
	35 (95)	19.5 - 23.7 (67 - 75)
	40 (104)	27.1 - 32.3 (81 - 90)

Ambient Air Temperature-to-operating Pressure Table

NAHA0207S0202

Ambient air		High-pressure (Discharge side) kPa (kg/cm^2, psi)	Low-pressure (Suction side) kPa (kg/cm^2, psi)
Relative humidity %	Air temperature °C (°F)		
50 - 70	25 (77)	1,226 - 1,638 (12.5 - 16.7, 178 - 237)	172 - 250 (1.75 - 2.55, 25 - 36)
	30 (86)	1,422 - 1,883 (14.5 - 19.2, 206 - 273)	196 - 275 (2.0 - 2.8, 28 - 40)
	35 (95)	1,657 - 2,187 (16.9 - 22.3, 240 - 317)	231 - 309 (2.35 - 3.15, 33 - 45)
	40 (104)	1,922 - 2,501 (19.6 - 25.5, 279 - 363)	280 - 373 (2.85 - 3.8, 41 - 54)

TROUBLE DIAGNOSES FOR ABNORMAL PRESSURE

NAHA0208

Whenever system's high and/or low side pressure is abnormal, diagnose using a manifold gauge. The marker above the gauge scale in the following tables indicates the standard (normal) pressure range. Since the standard (normal) pressure, however, differs from vehicle to vehicle, refer to HA-88 ("Ambient air temperature-to-operating pressure table").

Both High- and Low-pressure Sides are Too High.

NAHA0208S01

Gauge indication	Refrigerant cycle	Probable cause	Corrective action
Both high- and low-pressure sides are too high. A 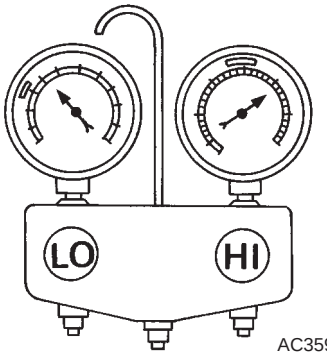 AC359A	● Pressure is reduced soon after water is splashed on condenser.	Excessive refrigerant charge in refrigeration cycle	Reduce refrigerant until specified pressure is obtained.
	Air suction by cooling fan is insufficient.	Insufficient condenser cooling performance ↓ 1. Condenser fins are clogged. 2. Improper fan rotation of cooling fan	● Clean condenser. ● Check and repair cooling fan as necessary.
	● Low-pressure pipe is not cold. ● When compressor is stopped high-pressure value quickly drops by approximately 196 kPa (2 kg/cm^2, 28 psi). It then decreases gradually thereafter.	Poor heat exchange in condenser (After compressor operation stops, high pressure decreases too slowly.) ↓ Air in refrigeration cycle	Evacuate repeatedly and recharge system.
	Engine tends to overheat.	Engine cooling systems malfunction.	Check and repair each engine cooling system.
	● An area of the low-pressure pipe is colder than areas near the evaporator outlet. ● Plates are sometimes covered with frost.	● Excessive liquid refrigerant on low-pressure side ● Excessive refrigerant discharge flow ● Expansion valve is open a little compared with the specification. ↓ 1. Improper thermal valve installation 2. Improper expansion valve adjustment	Replace expansion valve.

High-pressure Side is Too High and Low-pressure Side is Too Low.

NAHA0208S02

Gauge indication	Refrigerant cycle	Probable cause	Corrective action
High-pressure side is too high and low-pressure side is too low. B 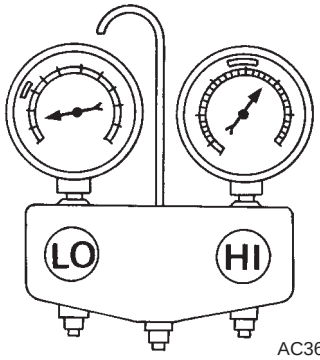 AC360A	Upper side of condenser and high-pressure side are hot, however, liquid tank is not so hot.	High-pressure tube or parts located between compressor and condenser are clogged or crushed.	● Check and repair or replace malfunctioning parts. ● Check lubricant for contamination.

High-pressure Side is Too Low and Low-pressure Side is Too High.

NAHA0208S03

Gauge indication	Refrigerant cycle	Probable cause	Corrective action
High-pressure side is too low and low-pressure side is too high. C 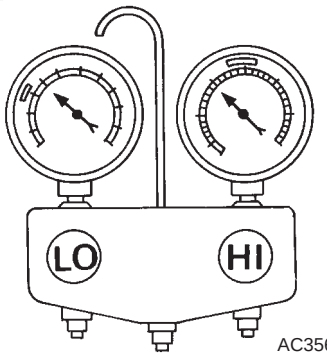 AC356A	High and low-pressure sides become equal soon after compressor operation stops.	Compressor pressure operation is improper. ↓ Damaged inside compressor packings	Replace compressor.
	No temperature difference between high and low-pressure sides	Compressor pressure operation is improper. ↓ Damaged inside compressor packings.	Replace compressor.

Both High- and Low-pressure Sides are Too Low.

NAHA0208S04

Gauge indication	Refrigerant cycle	Probable cause	Corrective action
Both high- and low-pressure sides are too low. **D** 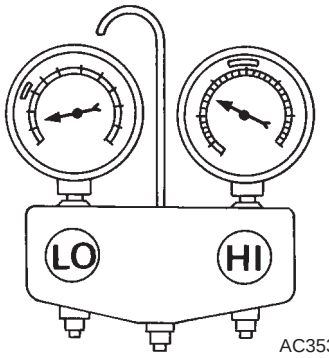 AC353A	• There is a big temperature difference between receiver drier outlet and inlet. Outlet temperature is extremely low. • Liquid tank inlet and expansion valve are frosted.	Compressor discharge capacity does not change. (Compressor stroke is set at maximum.)	• Replace liquid tank. • Check lubricant for contamination.
	• Temperature of expansion valve inlet is extremely low as compared with areas near liquid tank. • Expansion valve inlet may be frosted. • Temperature difference occurs somewhere in high-pressure side	High-pressure pipe located between receiver drier and expansion valve is clogged.	• Check and repair malfunctioning parts. • Check lubricant for contamination.
	• Expansion valve and liquid tank are warm or only cool when touched.	Low refrigerant charge ↓ Leaking fittings or components	Check refrigerant for leaks. Refer to "Checking Refrigerant Leaks", HA-121.
	There is a big temperature difference between expansion valve inlet and outlet while the valve itself is frosted.	Expansion valve closes a little compared with the specification. ↓ 1. Improper expansion valve adjustment 2. Malfunctioning thermal valve 3. Outlet and inlet may be clogged.	• Remove foreign particles by using compressed air. • Check lubricant for contamination.
	An area of the low-pressure pipe is colder than areas near the evaporator outlet.	Low-pressure pipe is clogged or crushed.	• Check and repair malfunctioning parts. • Check lubricant for contamination.
	Air flow volume is not enough or is too low.	Evaporator is frozen. ↓ Compressor discharge capacity does not change. (Compressor stroke is set at maximum length.)	Replace compressor.

Low-pressure Side Sometimes Becomes Negative.

NAHA0208S05

Gauge indication	Refrigerant cycle	Probable cause	Corrective action
Low-pressure side sometimes becomes negative. E 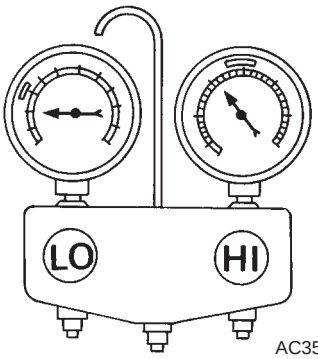 AC354A	• Air conditioning system does not function and does not cyclically cool the compartment air. • The system constantly functions for a certain period of time after compressor is stopped and restarted.	Refrigerant does not discharge cyclically. ↓ Moisture is frozen at expansion valve outlet and inlet. ↓ Water is mixed with refrigerant.	• Drain water from refrigerant or replace refrigerant. • Replace liquid tank.

Low-pressure Side Becomes Negative.

NAHA0208S06

Gauge indication	Refrigerant cycle	Probable cause	Corrective action
Low-pressure side becomes negative. F 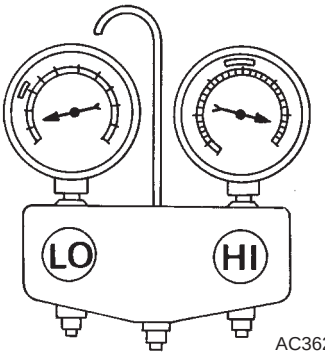 AC362A	Liquid tank or front/rear side of expansion valve's pipe is frosted or dewed.	High-pressure side is closed and refrigerant does not flow. ↓ Expansion valve or liquid tank is frosted.	Leave the system at rest until no frost is present. Start it again to check whether or not the problem is caused by water or foreign particles. • If water is the cause, initially cooling is okay. Then the water freezes causing a blockage. Drain water from refrigerant or replace refrigerant. • If due to foreign particles, remove expansion valve and remove the particles with dry and compressed air (not shop air). • If either of the above methods cannot correct the problem, replace expansion valve. • Replace liquid tank. • Check lubricant for contamination.

Insufficient Heating

TROUBLE DIAGNOSIS PROCEDURE FOR INSUFFICIENT HEATING

=NAHA0209

SYMPTOM:

- **Insufficient heating**

INSPECTION FLOW

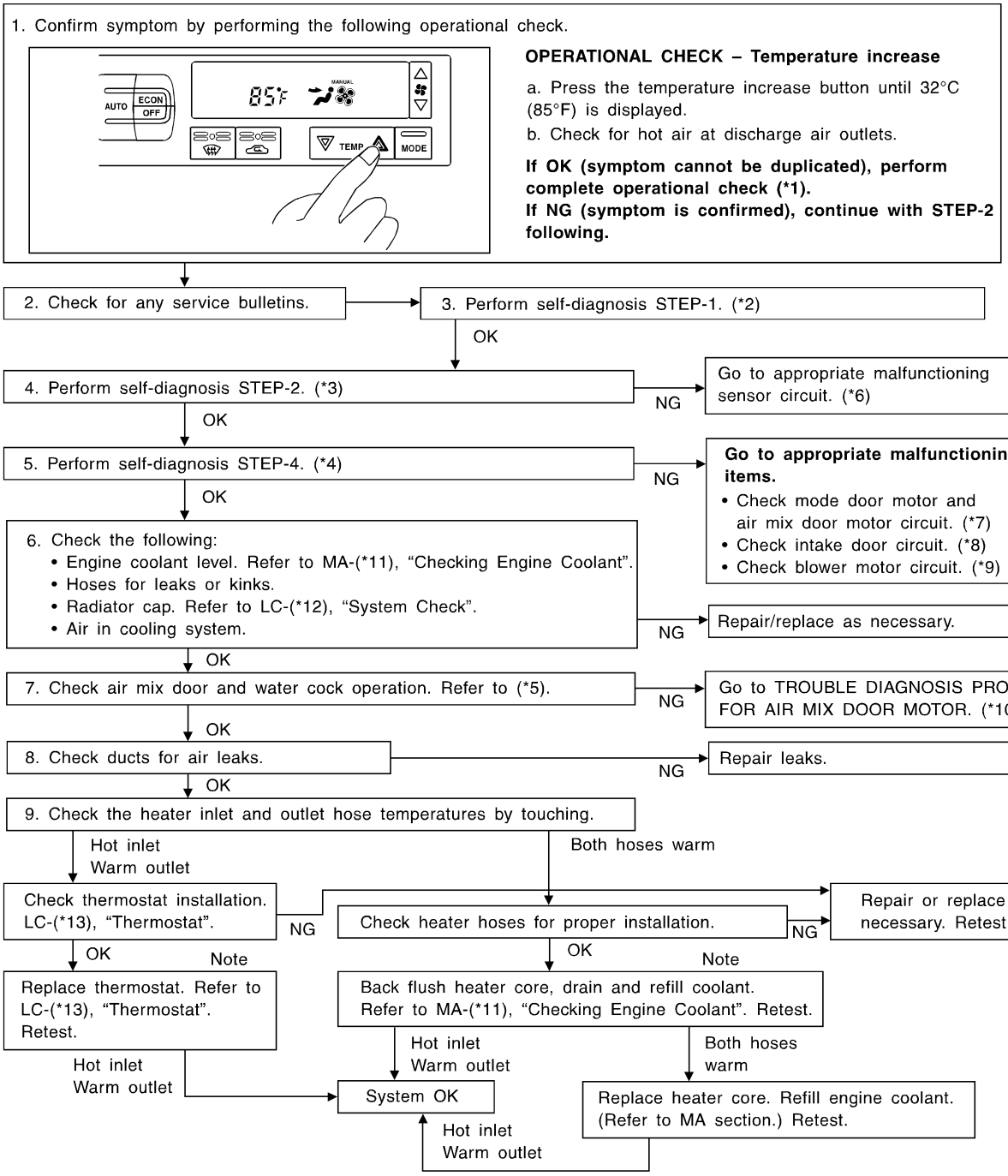

*1: HA-49
*2: HA-38
*3: HA-39
*4: HA-39
*5: HA-62
*6: STEP-BY-STEP PROCEDURE (HA-39), see No. 13.
*7: HA-56
*8: HA-66
*9: HA-73
*10: HA-60
*11: MA-16
*12: LC-8
*13: LC-11

Noise

TROUBLE DIAGNOSIS PROCEDURE FOR NOISE

=NAHA0210

SYMPTOM:

- **Noise**

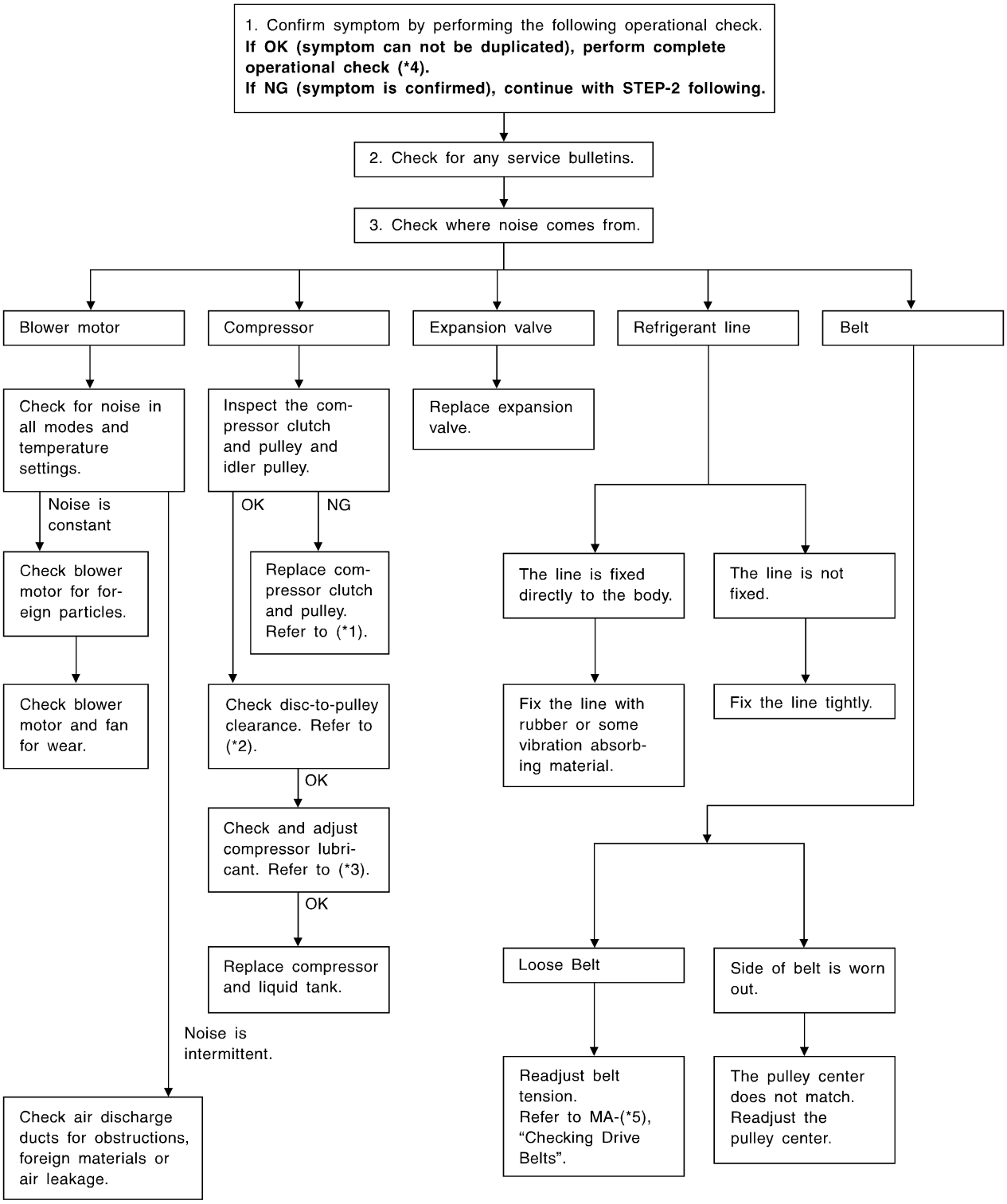

SHA331F

*1: HA-116
*2: HA-118
*3: HA-113
*4: HA-49
*5: MA-15

Self-diagnosis

TROUBLE DIAGNOSIS PROCEDURE FOR SELF-DIAGNOSIS

=NAHA0211

SYMPTOM:

- **Self-diagnosis cannot be performed.**

INSPECTION FLOW

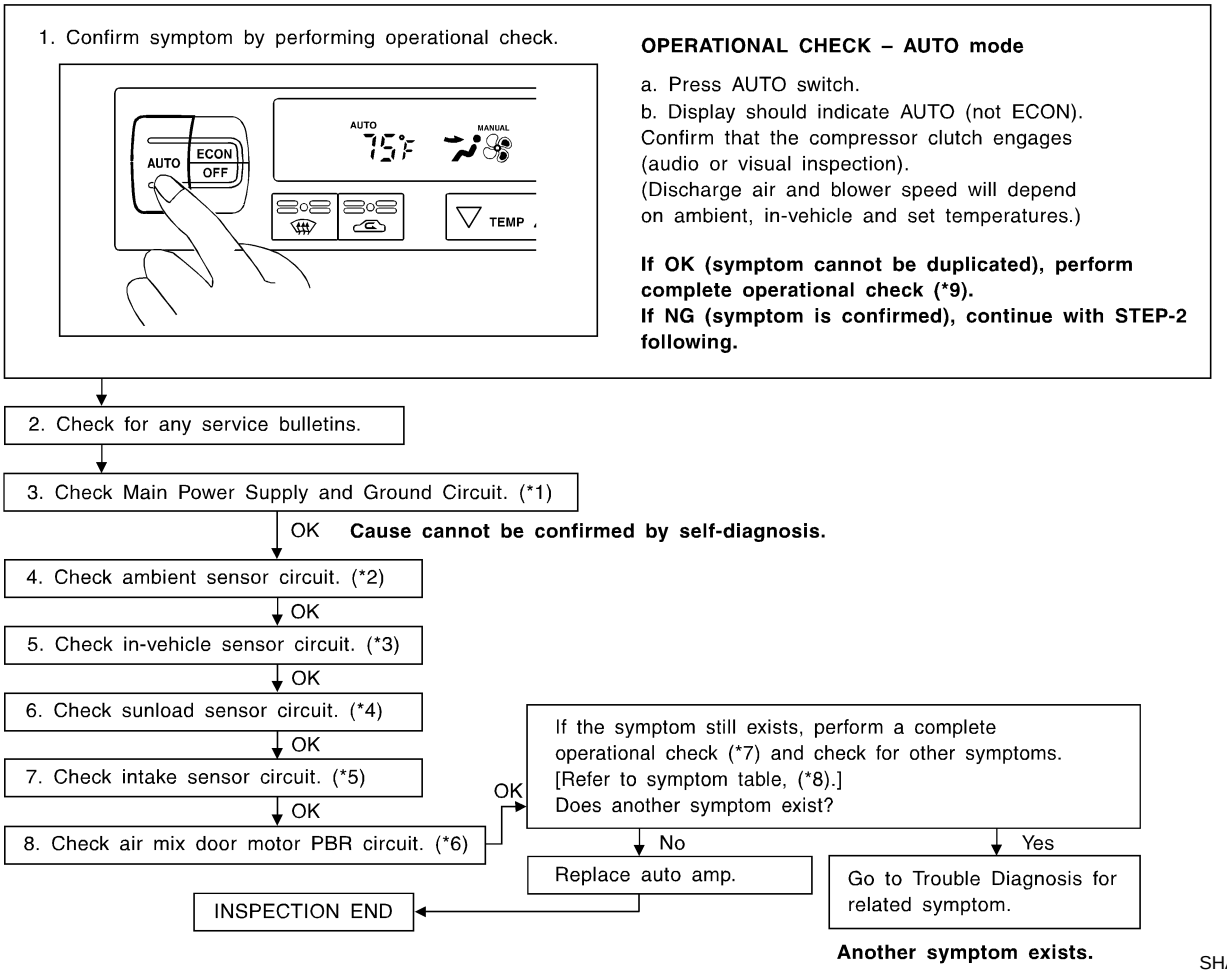

SHA250F

*1: HA-52
*2: HA-97
*3: HA-101
*4: HA-104
*5: HA-108
*6: HA-110
*7: HA-49
*8: HA-48
*9: HA-49

Memory Function

TROUBLE DIAGNOSIS PROCEDURE FOR MEMORY FUNCTION

=NAHA0212

SYMPTOM:

- **Memory function does not operate.**

INSPECTION FLOW

1. Confirm symptom by performing the following operational check.

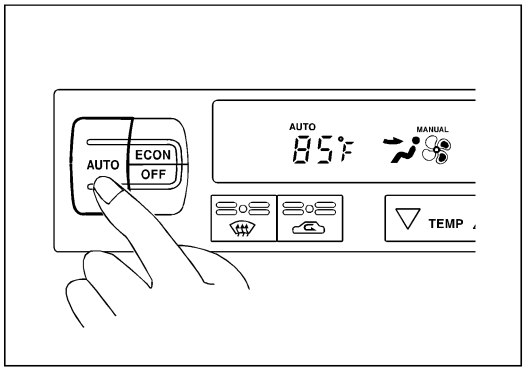

OPERATIONAL CHECK – Memory function

a. Set the temperature 85°F or 32°C.
b. Press OFF switch.
c. Turn the ignition off.
d. Turn the ignition on.
e. Press the AUTO switch.
f. Confirm that the set temperature remains at previous temperature.
g. Press OFF switch.

If OK (symptom cannot be duplicated), perform complete operational check (*2).
If NG (symptom is confirmed), continue with STEP-2 following.

2. Check for any service bulletins.

3. Check Main Power Supply and Ground Circuit. (*1)

OK

4. Replace auto amp.

5. FINAL CHECK
   Go to self-diagnosis step-by-step procedure (*3) and perform self-diagnosis STEP-2.
   Confirm that code No. 20 is displayed.

RHA885H

*1: HA-52 *2: HA-49 *3: HA-39

ECON (ECONOMY) Mode

TROUBLE DIAGNOSIS PROCEDURE FOR ECON (ECONOMY) MODE

=NAHA0213

SYMPTOM:

- **ECON mode does not operate.**

INSPECTION FLOW

1. Confirm symptom by performing the following operational check.

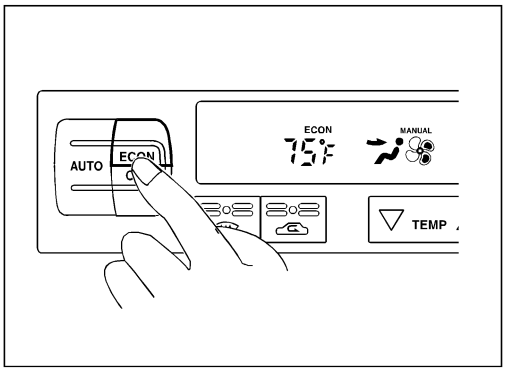

OPERATIONAL CHECK – ECON (ECONOMY) mode

a. Set the temperature 75°F or 25°C.
b. Press ECON switch.
c. Display should indicate ECON (not AUTO).
Confirm that the compressor clutch is not engaged (visual inspection).
(Discharge air and blower speed will depend on ambient, in-vehicle and set temperatures.)

If OK (symptom cannot be duplicated), perform complete operational check (*2).
If NG (symptom is confirmed), continue with STEP-2 following.

2. Check for any service bulletins.

3. Check Main Power Supply and Ground Circuit. (*1)

OK

4. Replace auto amp.

5. FINAL CHECK
Go to self-diagnosis step-by-step procedure (*3) and perform self-diagnosis STEP-2.
Confirm that code No. 20 is displayed.

SHA920EA

*1: HA-52 *2: HA-49 *3: HA-39

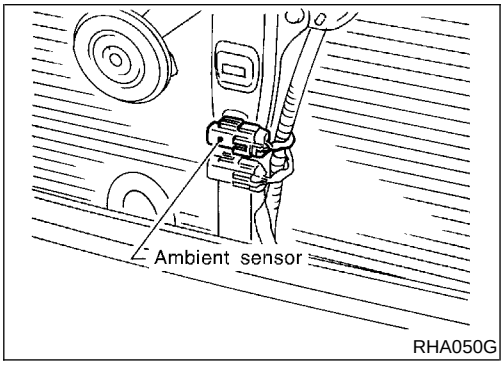

RHA050G

Ambient Sensor Circuit

COMPONENT DESCRIPTION

NAHA0214

The ambient sensor is located on hood lock stay. It detects ambient temperature and converts it into a resistance value which is then input into the auto amplifier.

AMBIENT TEMPERATURE INPUT PROCESS

NAHA0215

The automatic amplifier includes a "processing circuit" for the ambient sensor input. However, when the temperature detected by the ambient sensor increases quickly, the processing circuit retards the auto amp. function. It only allows the auto amp. to recognize an ambient temperature increase of 0.33°C (0.6°F) per 100 seconds. As an example, consider stopping for a cup of coffee after high speed driving. Although the actual ambient temperature has not changed, the temperature detected by the ambient sensor will increase. This is because the heat from the engine compartment can radiate to the front grille area, location of the ambient sensor.

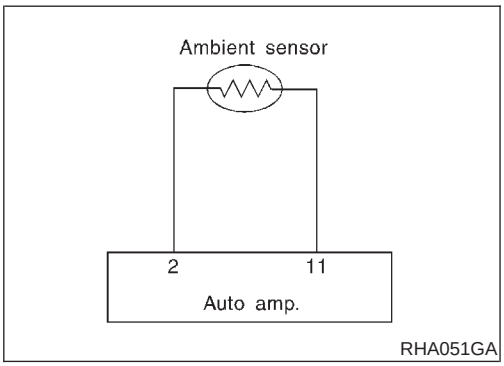

DIAGNOSTIC PROCEDURE

NAHA0216

SYMPTOM: Ambient sensor circuit is open or shorted. (21 or –21 is indicated on the display as a result of conducting Self-diagnosis STEP 2.)

1	CHECK VOLTAGE BETWEEN AMBIENT SENSOR HARNESS CONNECTOR AND BODY GROUND

Disconnect ambient sensor harness connector.
Do approx. 5 volts exist between ambient sensor harness terminal No. 1 and body ground?

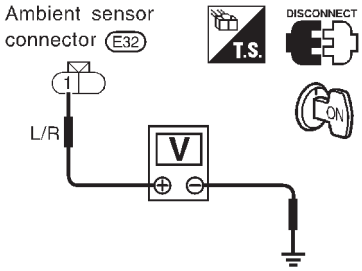

Yes or No

Yes	▶	GO TO 2.
No	▶	GO TO 4.

2	CHECK AMBIENT SENSOR CIRCUIT BETWEEN AMBIENT SENSOR AND AUTO AMP. (LCU)

1. Disconnect auto amp. (LCU) harness connector.
2. Check circuit continuity between ambient sensor harness terminal No. 2 and auto amp. (LCU) harness terminal No. 11.

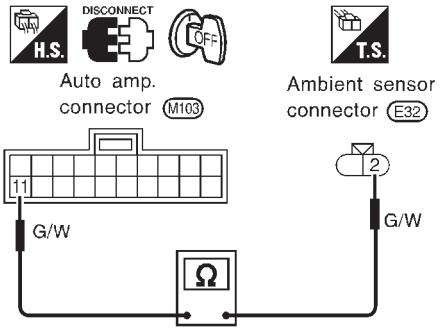

RHA475G

Continuity should exist.
If OK, check harness for short.

OK or NG

OK	▶	GO TO 3.
NG	▶	Repair harness or connector.

3	CHECK AMBIENT SENSOR

Refer to HA-100.

OK or NG

OK	▶	1. Replace auto amp. (LCU). 2. Go to self-diagnosis step-by-step procedure (HA-39) and perform self-diagnosis STEP-2. Confirm that code No. 20 is displayed.
NG	▶	Replace ambient sensor.

4	CHECK AMBIENT SENSOR CIRCUIT BETWEEN AMBIENT SENSOR AND AUTO AMP. (LCU)

1. Disconnect auto amp. (LCU) harness connector.
2. Check circuit continuity between ambient sensor harness terminal No. 1 and auto amp. (LCU) harness terminal No. 2.

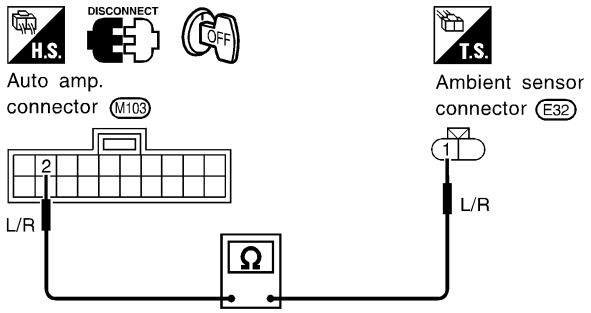

RHA906H

Continuity should exist.
If OK, check harness for short.

OK or NG

OK	▶	1. Replace auto amp. (LCU). 2. Go to self-diagnosis step-by-step procedure (HA-39) and perform self-diagnosis STEP-2. Confirm that code No. 20 is displayed.
NG	▶	Repair harness or connector.

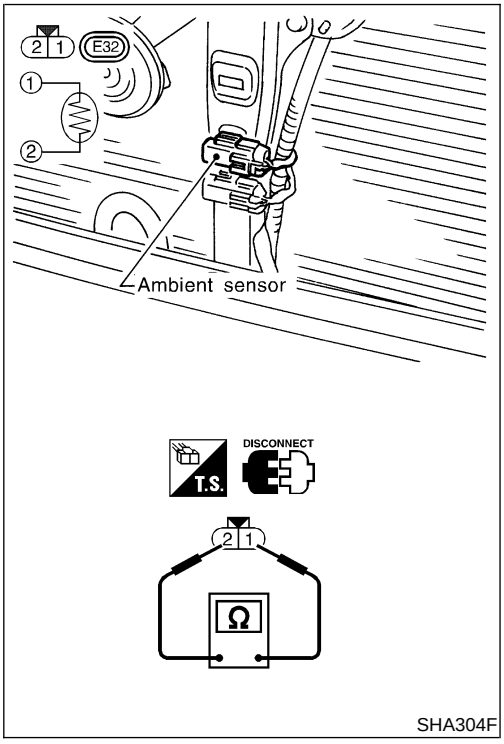

SHA304F

COMPONENT INSPECTION

NAHA0217

Ambient Sensor

NAHA0217S01

After disconnecting ambient sensor harness connector, measure resistance between terminals 2 and 1 at sensor harness side, using the table below.

Temperature °C (°F)	Resistance kΩ
−15 (5)	12.73
−10 (14)	9.92
−5 (23)	7.80
0 (32)	6.19
5 (41)	4.95
10 (50)	3.99
15 (59)	3.24
20 (68)	2.65
25 (77)	2.19
30 (86)	1.81

Temperature °C (°F)	Resistance kΩ
35 (95)	1.51
40 (104)	1.27
45 (113)	1.07

If NG, replace ambient sensor.

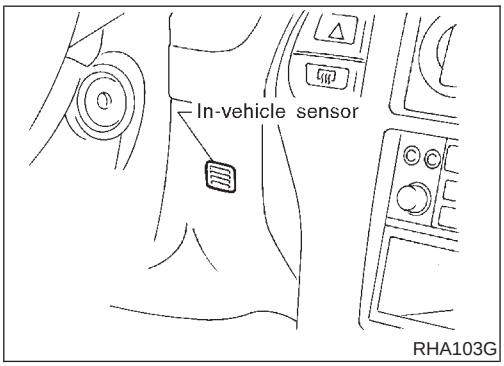

RHA103G

In-vehicle Sensor Circuit

COMPONENT DESCRIPTION

NAHA0218

In-vehicle sensor

NAHA0218S01

The in-vehicle sensor is located on instrument lower panel. It converts variations in temperature of compartment air drawn from the aspirator into a resistance value. It is then input into the auto amplifier.

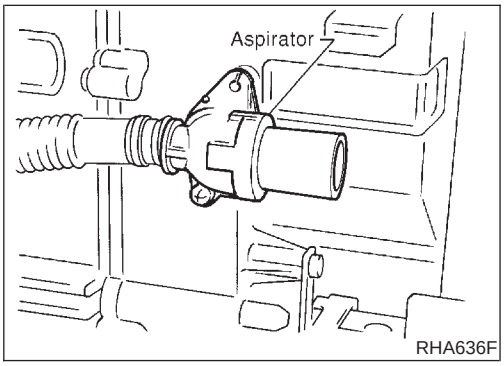

RHA636F

Aspirator

NAHA0218S02

The aspirator is located in front of heater unit. It produces vacuum pressure due to air discharged from the heater unit, continuously taking compartment air in the aspirator.

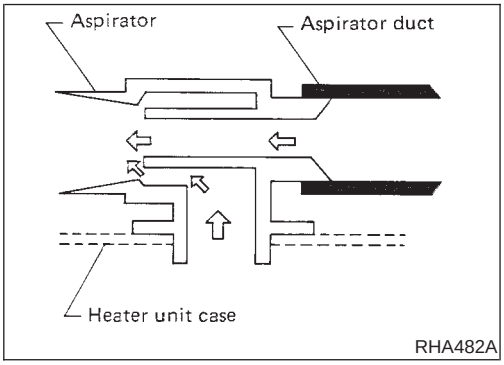

RHA482A

DIAGNOSTIC PROCEDURE

NAHA0219

SYMPTOM: In-vehicle sensor circuit is open or shorted. (22 or –22 is indicated on the display as a result of conducting Self-diagnosis STEP 2.)

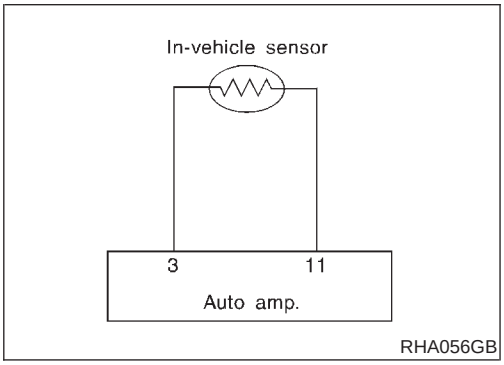

RHA056GB

1	CHECK IN-VEHICLE SENSOR CIRCUIT BETWEEN IN-VEHICLE SENSOR AND BODY GROUND

Disconnect in-vehicle sensor harness connector.
Do approx. 5 volts exist between in-vehicle sensor harness terminal No. 1 and body ground?

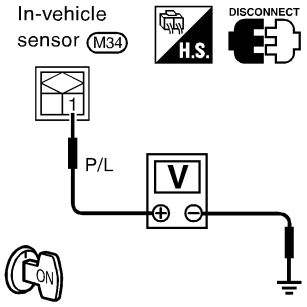

RHA579H

Yes or No

Yes	▶	GO TO 2.
No	▶	GO TO 4.

2	CHECK IN-VEHICLE SENSOR CIRCUIT BETWEEN IN-VEHICLE SENSOR AND AUTO AMP. (LCU)

1. Disconnect auto amp. (LCU) harness connector.
2. Check circuit continuity between in-vehicle sensor harness terminal No. 2 and auto amp. (LCU) harness terminal No. 11.

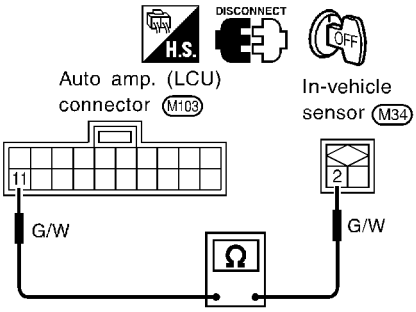

RHA478G

Continuity should exist.
If OK, check harness for short.

OK or NG

OK	▶	GO TO 3.
NG	▶	Repair harness or connector.

3	CHECK IN-VEHICLE SENSOR
Refer to HA-104.	
OK or NG	
OK ▶	1. Replace auto amp. 2. Go to self-diagnosis step-by-step procedure (HA-39) and perform self-diagnosis STEP-2. Confirm that code No. 20 is displayed.
NG ▶	1. Replace in-vehicle sensor. 2. Go to self-diagnosis step-by-step procedure (HA-39) and perform self-diagnosis STEP-2. Confirm that code No. 20 is displayed.

4	CHECK IN-VEHICLE SENSOR CIRCUIT BETWEEN AMBIENT SENSOR AND AUTO AMP. (LCU)
1. Disconnect auto amp. (LCU) harness connector. 2. Check circuit continuity between in-vehicle sensor harness terminal No. 1 and auto amp. (LCU) harness terminal No. 3.	

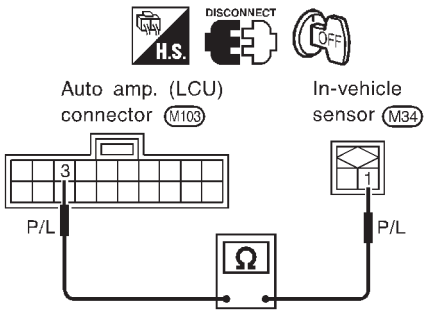

RHA479G

Continuity should exist.
If OK, check harness for short.

OK or NG	
OK ▶	1. Replace auto amp. (LCU). 2. Go to self-diagnosis step-by-step procedure (HA-39) and perform self-diagnosis STEP-2. Confirm that code No. 20 is displayed.
NG ▶	Repair harness or connector.

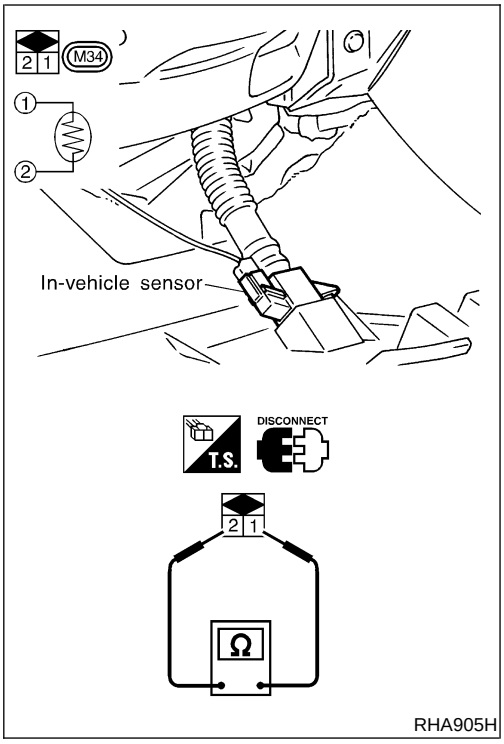

COMPONENT INSPECTION

NAHA0220

In-vehicle Sensor

NAHA0220S01

After disconnecting in-vehicle sensor harness connector, measure resistance between terminals 1 and 2 at sensor harness side, using the table below.

Temperature °C (°F)	Resistance kΩ
−15 (5)	12.73
−10 (14)	9.92
−5 (23)	7.80
0 (32)	6.19
5 (41)	4.95
10 (50)	3.99
15 (59)	3.24
20 (68)	2.65
25 (77)	2.19
30 (86)	1.81
35 (95)	1.51
40 (104)	1.27
45 (113)	1.07

If NG, replace in-vehicle sensor.

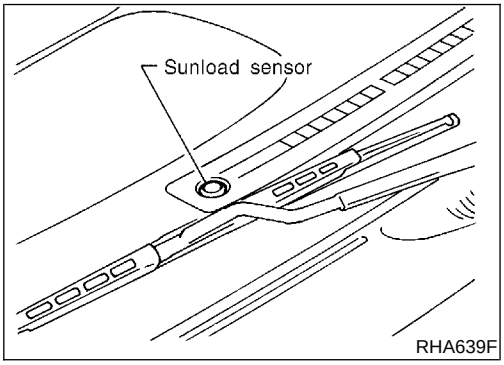

Sunload Sensor Circuit

COMPONENT DESCRIPTION

NAHA0221

The sunload sensor is located on the right defroster grille. It detects sunload entering through windshield by means of a photo diode. The sensor converts the sunload into a current value which is then input into the auto amplifier.

SUNLOAD INPUT PROCESS

NAHA0222

The auto amp. also includes a processing circuit which "average" the variations in detected sunload over a period of time. This prevents drastic swings in the ATC system operation due to small or quick variations in detected sunload.

For example, consider driving along a road bordered by an occasional group of large trees. The sunload detected by the sunload sensor will vary whenever the trees obstruct the sunlight. The processing circuit averages the detected sunload over a period of time, so that the (insignificant) effect of the trees momentarily

obstructing the sunlight does not cause any change in the ATC system operation. On the other hand, shortly after entering a long tunnel, the system will recognize the change in sunload, and the system will react accordingly.

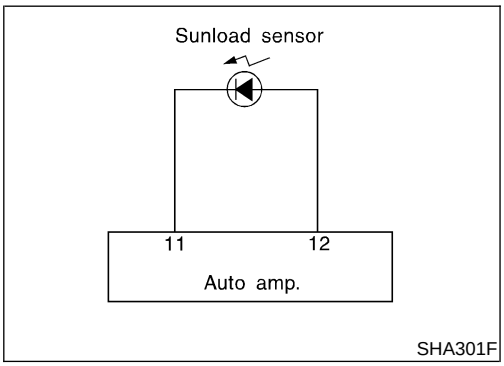

DIAGNOSTIC PROCEDURE

NAHA0223

SYMPTOM: Sunload sensor circuit is open or shorted. (25 or –25 is indicated on the display as a result of conducting Self-diagnosis STEP 2.)

1	CHECK SUNLOAD SENSOR CIRCUIT BETWEEN SUNLOAD SENSOR AND BODY GROUND

Disconnect sunload sensor harness connector.
Do approx. 5 volts exist between sunload sensor harness terminal No. 1 and body ground?

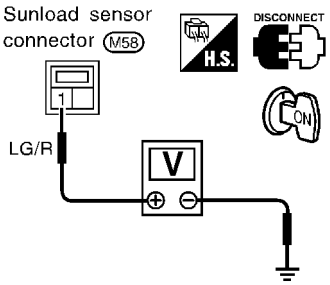

Yes or No

Yes	▶	GO TO 2.
No	▶	GO TO 4.

2	CHECK SUNLOAD SENSOR CIRCUIT BETWEEN SUNLOAD SENSOR AND AUTO AMP. (LCU)

1. Disconnect auto amp. (LCU) harness connector.
2. Check circuit continuity between sunload sensor harness terminal No. 2 and auto amp. (LCU) harness terminal No. 11.

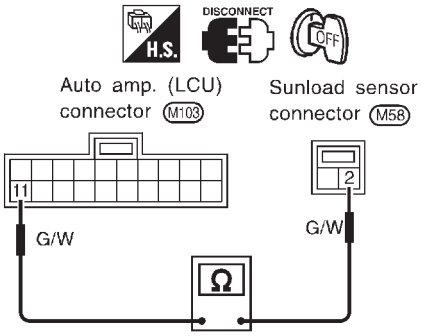

RHA483G

Continuity should exist.
If OK, check harness for short.

OK or NG

OK	▶	GO TO 3.
NG	▶	Repair harness or connector.

3	CHECK SUNLOAD SENSOR

Refer to HA-107.

OK or NG

OK	▶	1. Replace auto amp. (LCU). 2. Go to self-diagnosis step-by-step procedure (HA-39) and perform self-diagnosis STEP-2. Confirm that code No. 20 is displayed.
NG	▶	1. Replace sunload sensor. 2. Go to self-diagnosis step-by-step procedure (HA-39) and perform self-diagnosis STEP-2. Confirm that code No. 20 is displayed.

4	CHECK SUNLOAD SENSOR CIRCUIT BETWEEN SUNLOAD SENSOR AND AUTO AMP. (LCU)

1. Disconnect auto amp. (LCU) harness connector.
2. Check circuit continuity between sunload sensor harness terminal No. 1 and auto amp. (LCU) harness terminal No. 12.

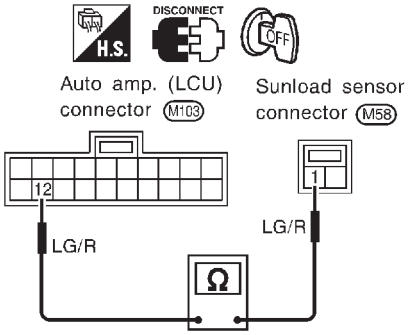

RHA484G

Continuity should exist.
If OK, check harness for short.

OK or NG

OK ▶	1. Replace auto amp. 2. Go to self-diagnosis step-by-step procedure (HA-39) and perform self-diagnosis STEP-2. Confirm that code No. 20 is displayed.
NG ▶	Repair harness or connector.

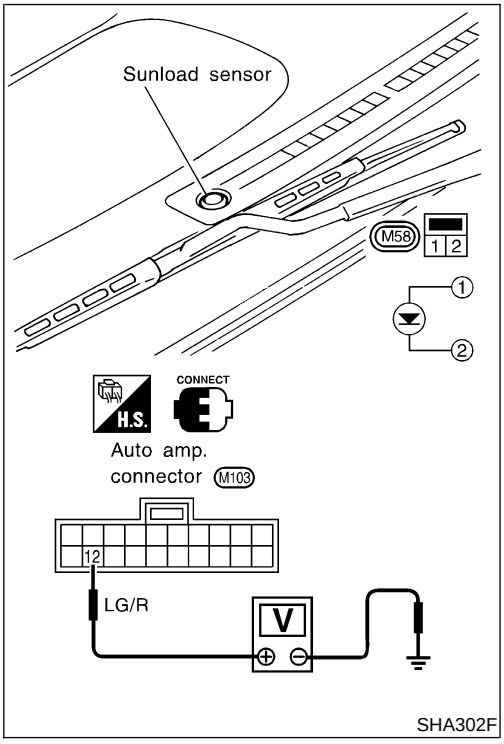

SHA302F

COMPONENT INSPECTION

NAHA0224

Sunload Sensor

NAHA0224S01

Measure voltage between auto amp. terminal No. 12 and body ground.
If NG, replace sunload sensor.

- **When checking sunload sensor, select a place where sun shines directly on it.**

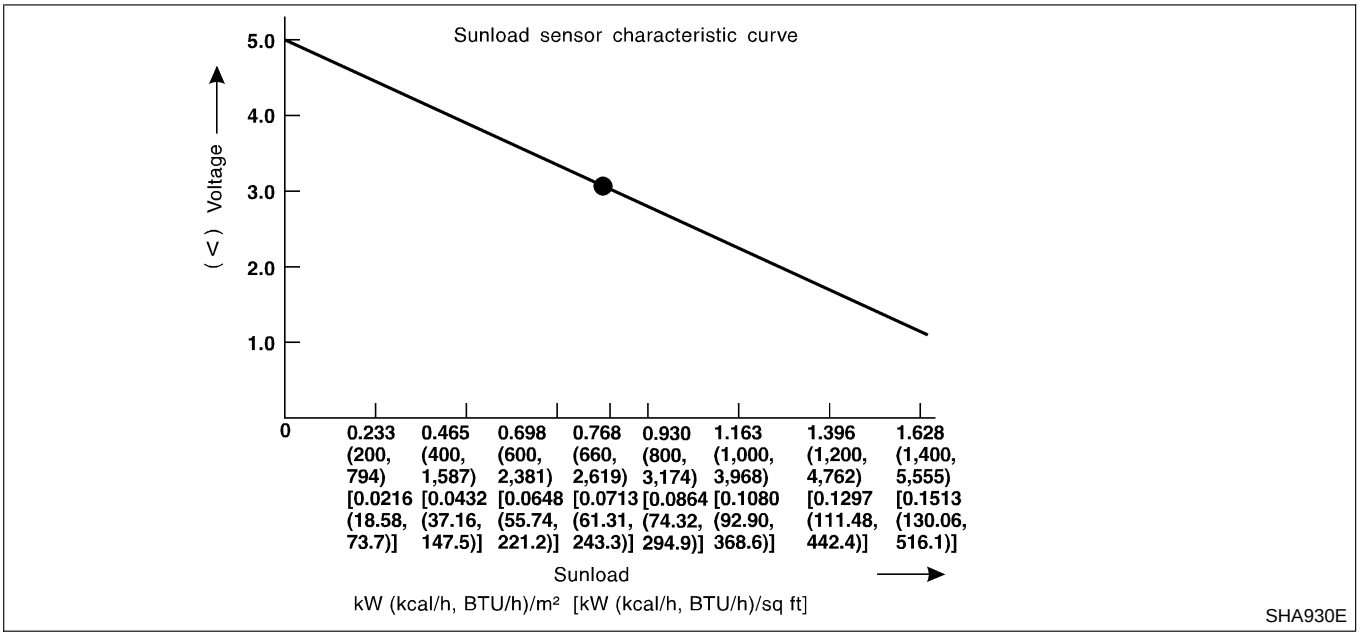

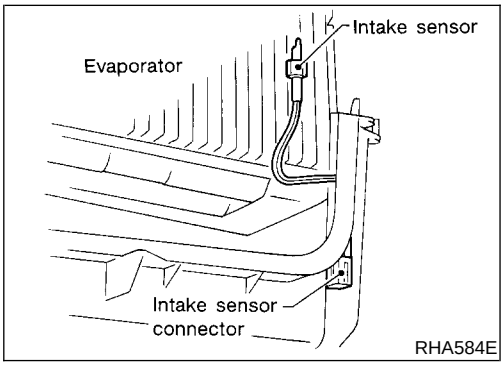

Intake Sensor Circuit

COMPONENT DESCRIPTION

NAHA0225

Intake Sensor

NAHA0225S01

The intake sensor is located on the cooling unit. It converts temperature of air after it passes through the evaporator into a resistance value which is then input to the auto amp.

After disconnecting intake sensor harness connector, measure resistance between terminals 1 and 2 at sensor harness side, using the table below.

Temperature °C (°F)	Resistance kΩ
−15 (5)	12.73
−10 (14)	9.92
−5 (23)	7.80
0 (32)	6.19
5 (41)	4.95
10 (50)	3.99
15 (59)	3.24
20 (68)	2.65
25 (77)	2.19
30 (86)	1.81
35 (95)	1.51
40 (104)	1.27
45 (113)	1.07

If NG, replace intake sensor.

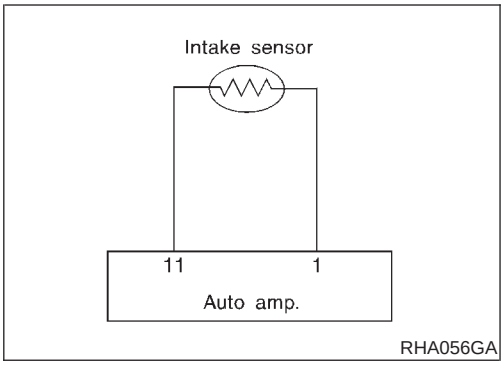

DIAGNOSTIC PROCEDURE

NAHA0226

SYMPTOM: Intake sensor circuit is open or shorted. (24 or –24 is indicated on the display as a result of conducting Self-diagnosis STEP 2.)

1	CHECK INTAKE SENSOR CIRCUIT BETWEEN INTAKE SENSOR AND BODY GROUND	
Disconnect intake sensor harness connector. Do approx. 5 volts exist between intake sensor harness terminal No. 2 and body ground? 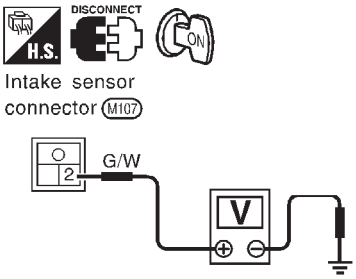 		
Yes or No		
Yes	▶	GO TO 2.
No	▶	GO TO 4.

2	CHECK INTAKE SENSOR CIRCUIT BETWEEN INTAKE SENSOR AND AUTO AMP. (LCU)	
1. Disconnect auto amp. (LCU) harness connector. 2. Check circuit continuity between intake sensor harness terminal No. 2 and auto amp. (LCU) harness terminal No. 11. 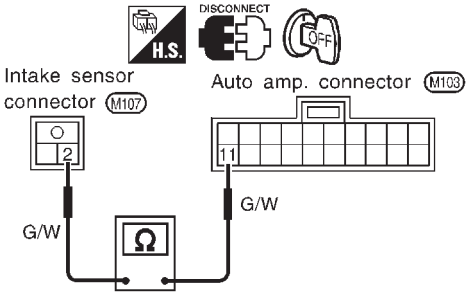 **Continuity should exist.** If OK, check harness for short.		
OK or NG		
OK	▶	GO TO 3.
NG	▶	Repair harness or connector.

3	CHECK INTAKE SENSOR	
Refer to HA-108.		
	OK or NG	
OK	▶	1. Replace auto amp. 2. Go to self-diagnosis step-by-step procedure (HA-39) and perform self-diagnosis STEP-2. Confirm that code No. 20 is displayed.
NG	▶	1. Replace intake sensor. 2. Go to self-diagnosis step-by-step procedure (HA-39) and perform self-diagnosis STEP-2. Confirm that code No. 20 is displayed.

4	CHECK INTAKE SENSOR CIRCUIT BETWEEN AMBIENT SENSOR AND AUTO AMP. (LCU)	
1. Disconnect auto amp. (LCU) harness connector. 2. Check circuit continuity between intake sensor harness terminal No. 1 and auto amp. (LCU) harness terminal No. 1. 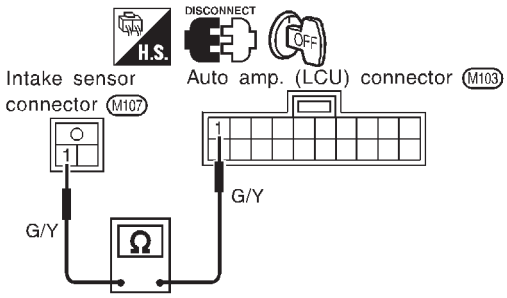 RHA497G **Continuity should exist.** If OK, check harness for short.		
	OK or NG	
OK	▶	1. Replace auto amp. 2. Go to self-diagnosis step-by-step procedure (HA-39) and perform self-diagnosis STEP-2. Confirm that code No. 20 is displayed.
NG	▶	Repair harness or connector.

Air Mix Door Motor PBR Circuit

DIAGNOSTIC PROCEDURE

NAHA0227

For description of mode door motor and air mix door motor circuit, refer to HA-61.

SYMPTOM: If PBR circuit is open or shorted. (–26 or 26 is indicated on the display as a result of conducting Self-diagnosis STEP 2.)

Perform diagnostic procedure for mode door motor and air mix door motor. Refer to HA-56.

HFC-134a (R-134a) Service Procedure

NAHA0228

SETTING OF SERVICE TOOLS AND EQUIPMENT

NAHA0228S01

Discharging Refrigerant

NAHA0228S0101

WARNING:

Avoid breathing A/C refrigerant and lubricant vapor or mist. Exposure may irritate eyes, nose and throat. Remove HFC-134a (R-134a) from A/C system using certified service equipment meeting requirements of SAE J2210 (R-134a recycling equipment) or J2209 (R-134a recovery equipment). If accidental system discharge occurs, ventilate work area before resuming service. Additional health and safety information may be obtained from refrigerant and lubricant manufacturers.

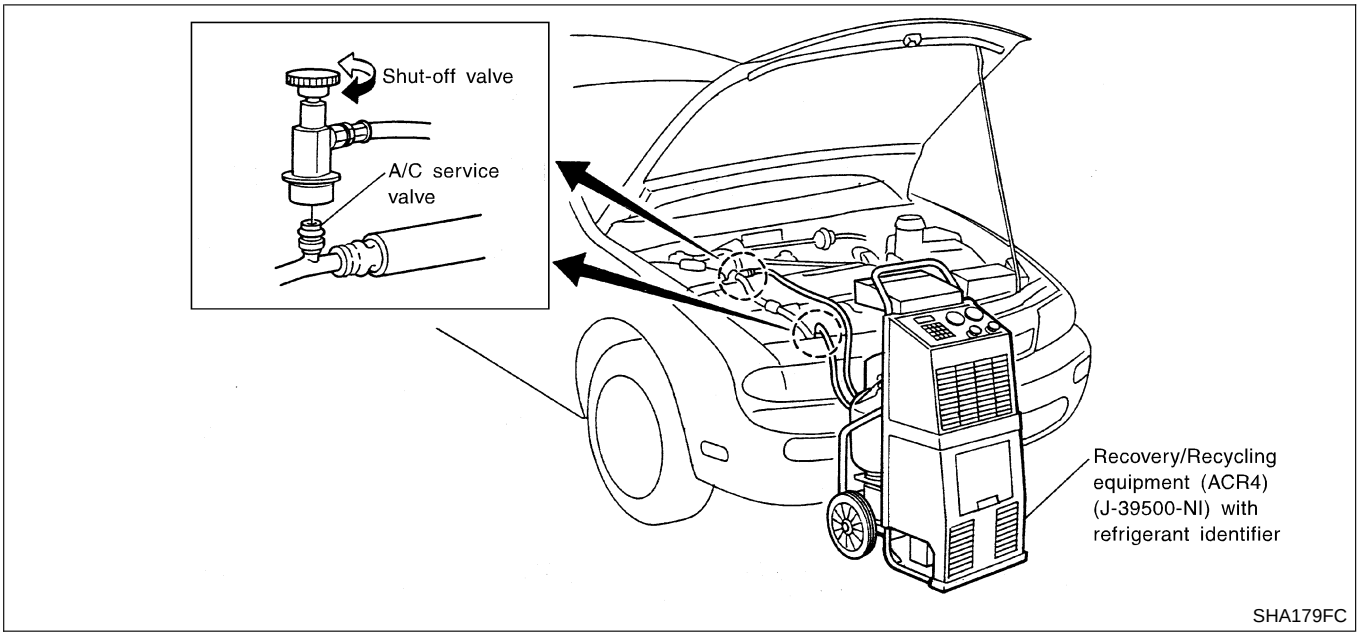

Evacuating System and Charging Refrigerant

NAHA0228S0102

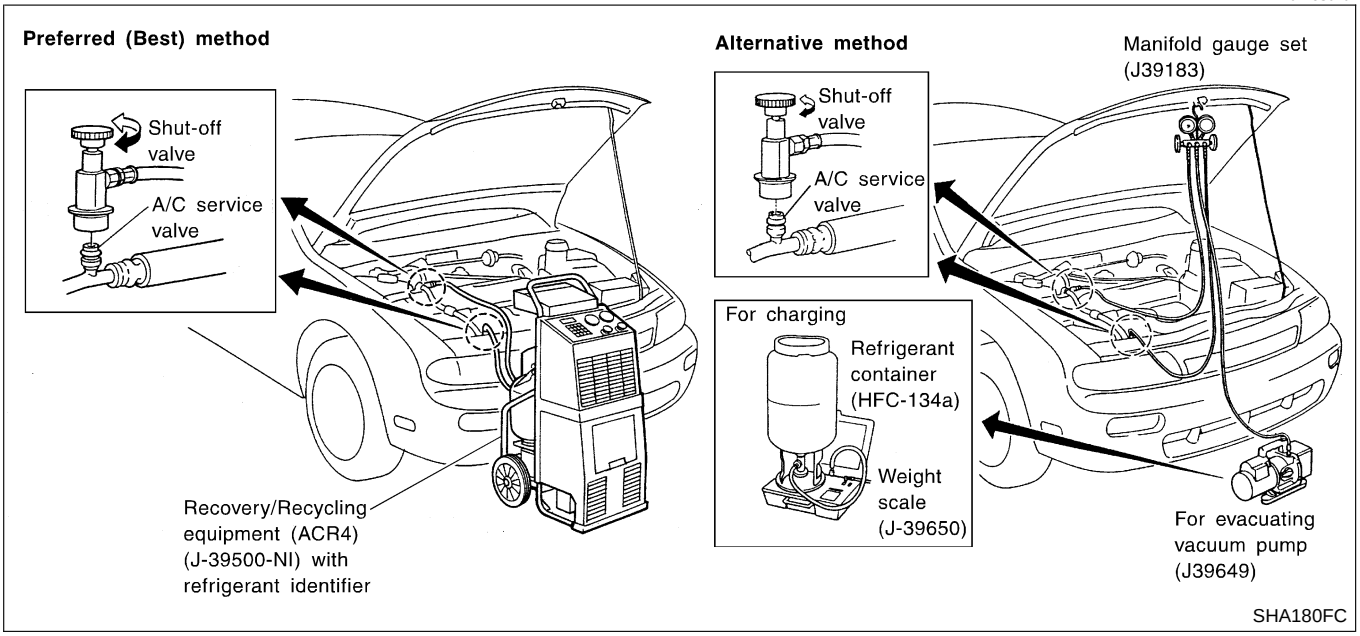

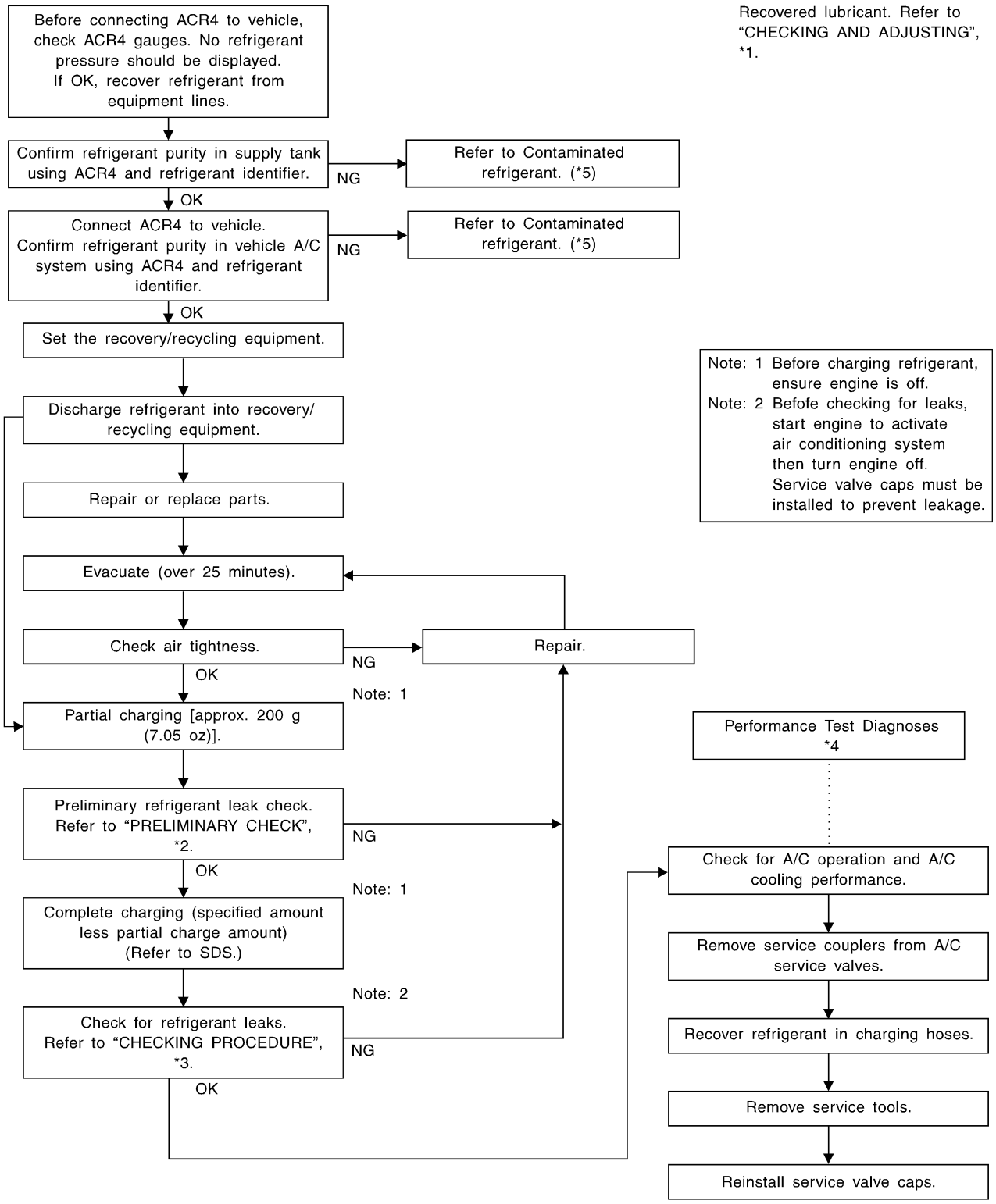

*1: HA-113
*2: HA-121
*3: HA-122
*4: HA-86
*5: HA-3

Maintenance of Lubricant Quantity in Compressor

NAHA0229

The lubricant in the compressor circulates through the system with the refrigerant. Add lubricant to compressor when replacing any component or after a large gas leakage occurred. It is important to maintain the specified amount.
If lubricant quantity is not maintained properly, the following malfunctions may result:

- Lack of lubricant: May lead to a seized compressor
- Excessive lubricant: Inadequate cooling (thermal exchange interference)

LUBRICANT

NAHA0229S01

Name: Nissan A/C System Oil Type S
Part number: KLH00-PAGS0

CHECKING AND ADJUSTING

NAHA0229S02

Adjust the lubricant quantity according to the test group shown below.

1	CHECK LUBRICANT RETURN OPERATION	
Can lubricant return operation be performed? ● A/C system works properly. ● There is no evidence of a large amount of lubricant leakage.		
	Yes or No	
Yes	▶	GO TO 2.
No	▶	GO TO 3.

2	PERFORM LUBRICANT RETURN OPERATION, PROCEEDING AS FOLLOWS:	
1. Start engine, and set the following conditions: ● **Test condition** **Engine speed: Idling to 1,200 rpm** **A/C or AUTO switch: ON** **Blower speed: Max. position** **Temp. control: Optional [Set so that intake air temperature is 25 to 30°C (77 to 86°F).]** 2. **Next item is for V-5 or V-6 compressor. Connect the manifold gauge, and check that the high pressure side pressure is 588 kPa (6 kg/cm^2, 85 psi) or higher.** **If less than the reference level, attach a cover to the front face of the condenser to raise the pressure.** 3. Perform lubricant return operation for about 10 minutes. 4. Stop engine. **CAUTION:** **If excessive lubricant leakage is noted, do not perform the lubricant return operation.**		
OK	▶	GO TO 3.

3	CHECK COMPRESSOR	
Should the compressor be replaced?		
	Yes or No	
Yes	▶	Go to “Lubricant Adjustment Procedure for Compressor Replacement”, (HA-114).
No	▶	GO TO 4.

4	CHECK ANY PART	
Is there any part to be replaced? (Evaporator, condenser, liquid tank or in case there is evidence of a large amount of lubricant leakage.)		
	Yes or No	
Yes	▶	Go to "Lubricant Adjusting Procedure for Components Replacement Except Compressor", (HA-114).
No	▶	Carry out the A/C performance test.

Lubricant Adjusting Procedure for Components Replacement Except Compressor

NAHA0229S0201

After replacing any of the following major components, add the correct amount of lubricant to the system.

Amount of lubricant to be added

Part replaced	Lubricant to be added to system	Remarks
	Amount of lubricant mℓ (US fl oz, Imp fl oz)	
Evaporator	75 (2.5, 2.6)	—
Condenser	75 (2.5, 2.6)	—
Liquid tank	5 (0.2, 0.2)	Add if compressor is not replaced. *1
In case of refrigerant leak	30 (1.0, 1.1)	Large leak
	—	Small leak *2

*1: If compressor is replaced, addition of lubricant is included in the table.

*2: If refrigerant leak is small, no addition of lubricant is needed.

Lubricant Adjusting Procedure for Compressor Replacement

NAHA0229S0202

1. Before connecting ACR4 to vehicle, check ACR4 gauges. No refrigerant pressure should be displayed. If NG, recover refrigerant from equipment lines.
2. Connect ACR4 to vehicle. Confirm refrigerant purity in supply tank using ACR4 and refrigerant identifier. If NG, refer to "CONTAMINATED REFRIGERANT", HA-3.
3. Confirm refrigerant purity in vehicle A/C system using ACR4 and refrigerant identifier. If NG, refer to "CONTAMINATED REFRIGERANT", HA-3.
4. Discharge refrigerant into the refrigerant recovery/recycling equipment. Measure lubricant discharged into the recovery/recycling equipment.
5. Remove the drain plug of the "old" (removed) compressor. Drain the lubricant into a graduated container and record the amount of drained lubricant.
6. Remove the drain plug and drain the lubricant from the "new" compressor into a separate, clean container.
7. Measure an amount of new lubricant installed equal to amount drained from "old" compressor. Add this lubricant to "new" compressor through the suction port opening.
8. Measure an amount of new lubricant equal to the amount recovered during discharging. Add this lubricant to "new" compressor through the suction port opening.
9. Torque the drain plug.

   18 - 19 N·m (1.8 - 1.9 kg-m, 13 - 14 ft-lb)

10. If the liquid tank also needs to be replaced, add an additional 5 mℓ (0.2 US fl oz, 0.2 Imp fl oz) of lubricant at this time.
Do not add this 5 mℓ (0.2 US fl oz, 0.2 Imp fl oz) of lubricant if only replacing the compressor.

Lubricant adjusting procedure for compressor replacement

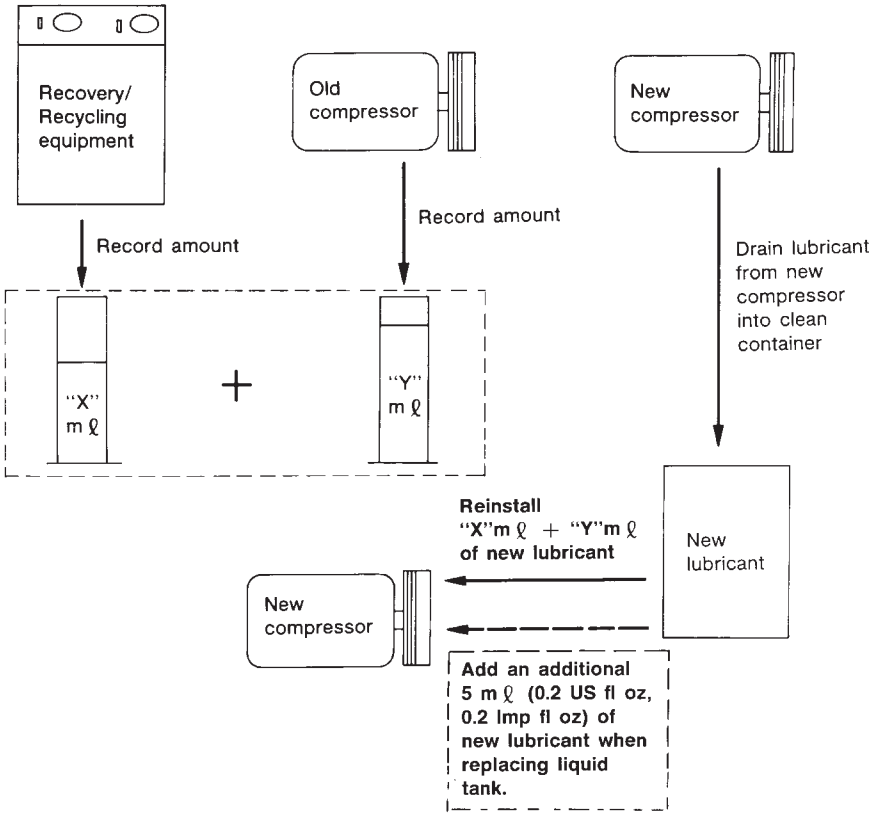

RHA065DD

Compressor

REMOVAL AND INSTALLATION

NAHA0230

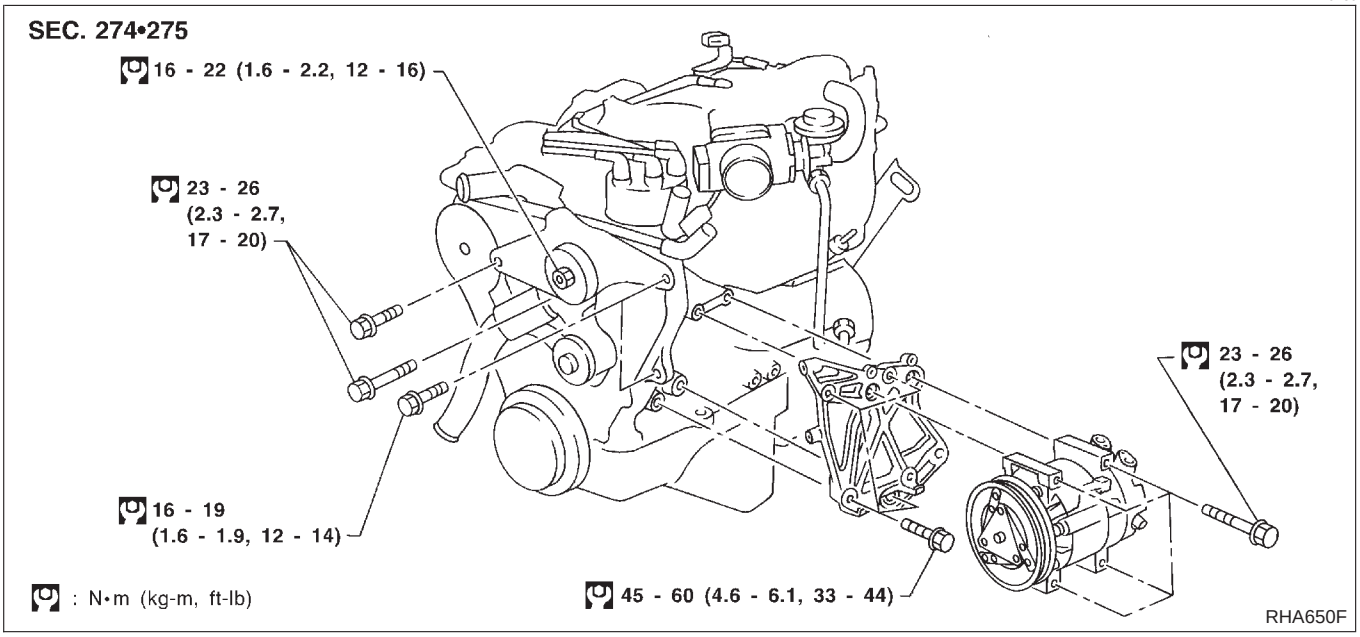

Compressor Clutch

OVERHAUL

NAHA0231

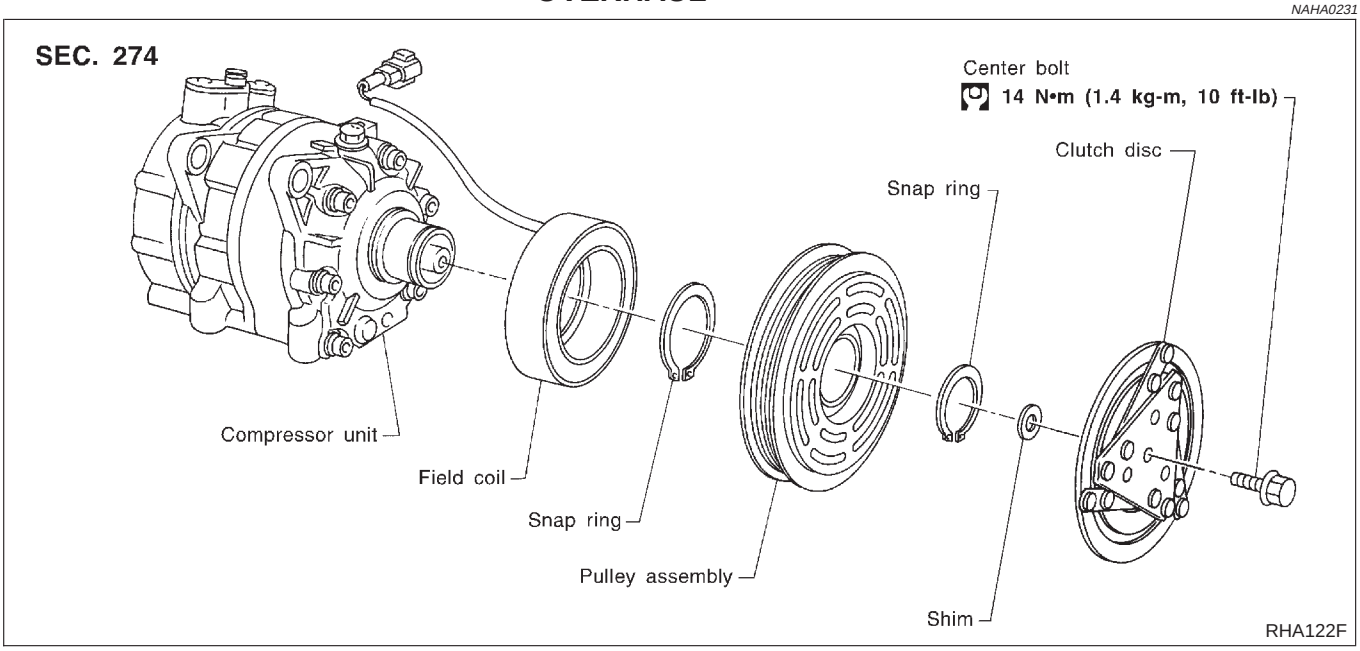

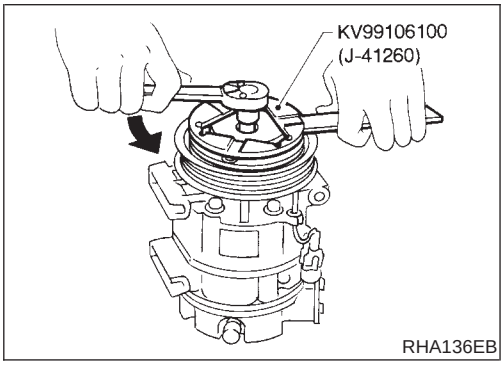

REMOVAL

NAHA0232

- When removing center bolt, hold clutch disc with clutch disc wrench.

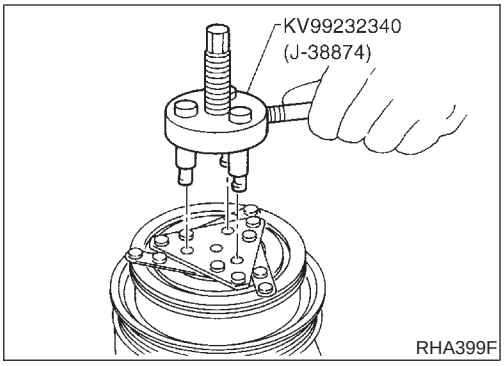

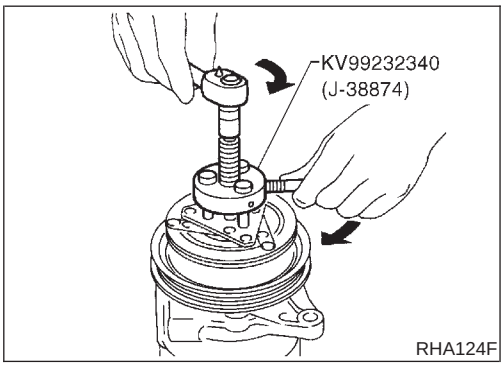

- Remove the clutch disc using the clutch disc puller.
  Insert the holder's three pins into the holes in the clutch disc. Rotate the holder clockwise to hook it onto the plate. Then, tighten the center bolt to remove the clutch disc.
  After removing the clutch disc, remove the shims from either the drive shaft or the clutch disc.

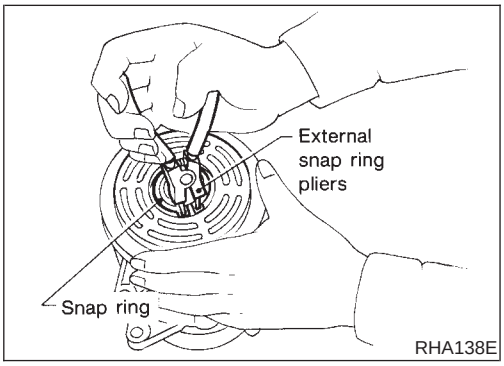

- Remove the snap ring using external snap ring pliers.

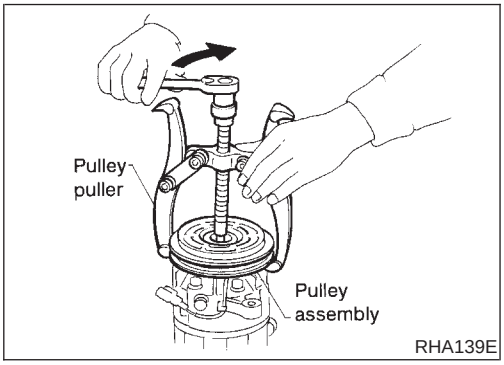

- Pulley removal
  Position the center pulley puller on the end of the drive shaft, and remove the pulley assembly using any commercially available pulley puller.
  To prevent the pulley groove from being deformed, the puller claws should be positioned onto the edge of the pulley assembly.

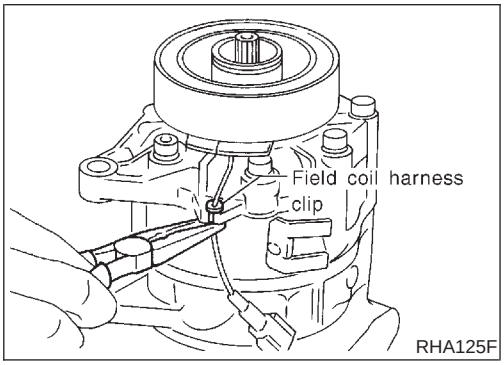

- Remove the field coil harness clip using a pair of pliers.

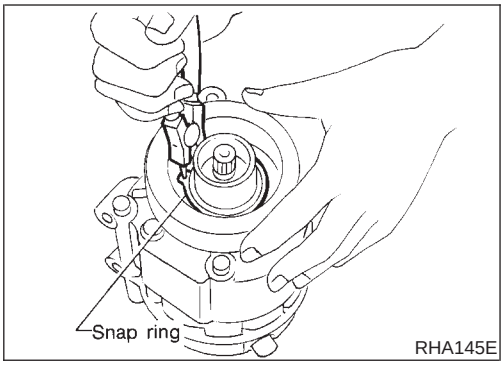

- Remove the snap ring using external snap ring pliers.

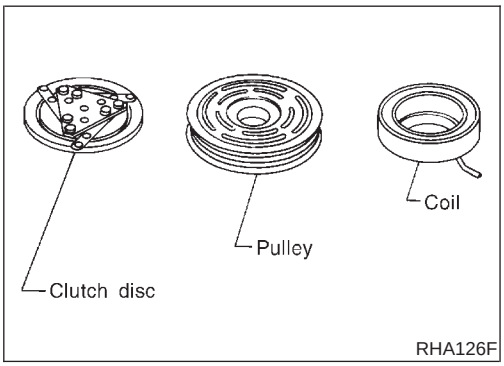

INSPECTION

NAHA0233

Clutch Disc

NAHA0233S01

If the contact surface shows signs of damage due to excessive heat, replace clutch disc and pulley.

Pulley

NAHA0233S02

Check the appearance of the pulley assembly. If the contact surface of pulley shows signs of excessive grooving, replace clutch disc and pulley. The contact surfaces of the pulley assembly should be cleaned with a suitable solvent before reinstallation.

Coil

NAHA0233S03

Check coil for loose connection or cracked insulation.

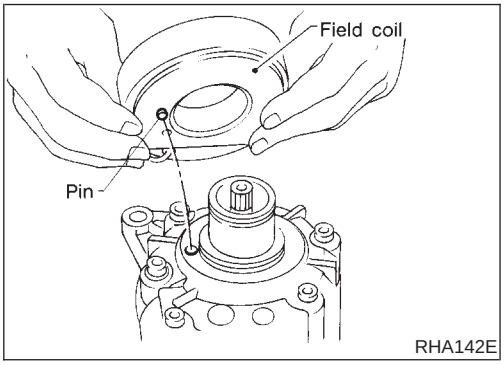

INSTALLATION

NAHA0234

- Install the field coil.
  Be sure to align the coil's pin with the hole in the compressor's front head.
- Install the field coil harness clip using a screwdriver.

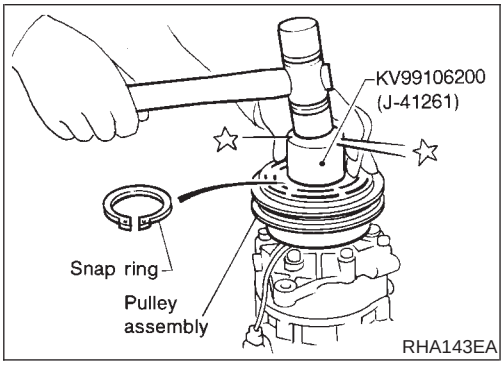

- Install the pulley assembly using the installer and a hand press, and then install the snap ring using snap ring pliers.

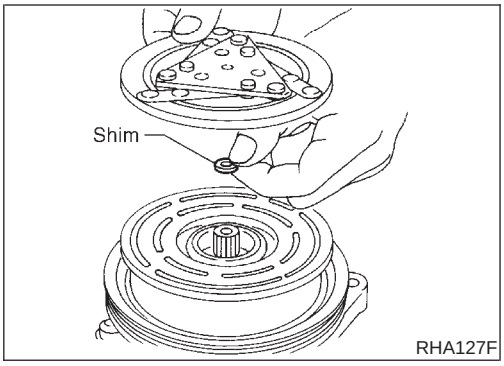

- Install the clutch disc on the drive shaft, together with the original shim(s). Press the clutch disc down by hand.

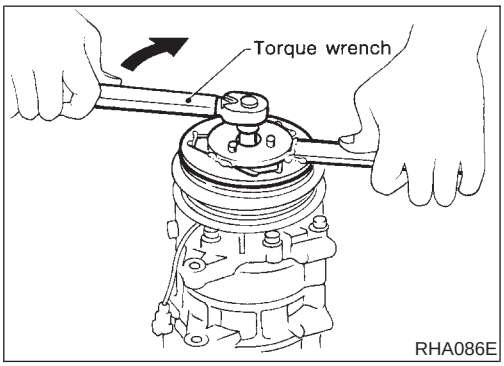

- Using the holder to prevent clutch disc rotation, tighten the bolt to 14 N·m (1.4 kg-m, 10 ft-lb) torque.
  After tightening the bolt, check that the pulley rotates smoothly.

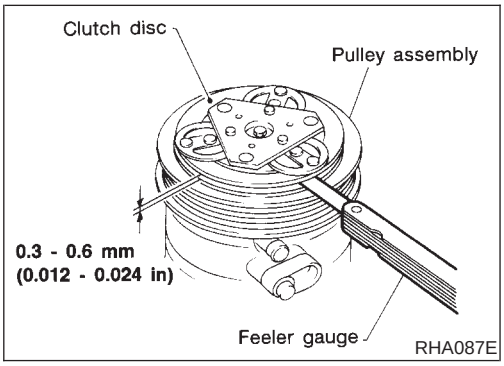

- Check clearance around the entire periphery of clutch disc.
  Disc-to-pulley clearance:
  0.3 - 0.6 mm (0.012 - 0.024 in)
  If the specified clearance is not obtained, replace adjusting spacer and readjust.

Break-in Operation

NAHA0234S01

When replacing compressor clutch assembly, always carry out the break-in operation. This is done by engaging and disengaging the clutch about thirty times. Break-in operation raises the level of transmitted torque.

Refrigerant Lines

REMOVAL AND INSTALLATION

=NAHA0235

- Refer to page HA-4 regarding “Precautions for Refrigerant Connection”.

SEC. 271•274•276

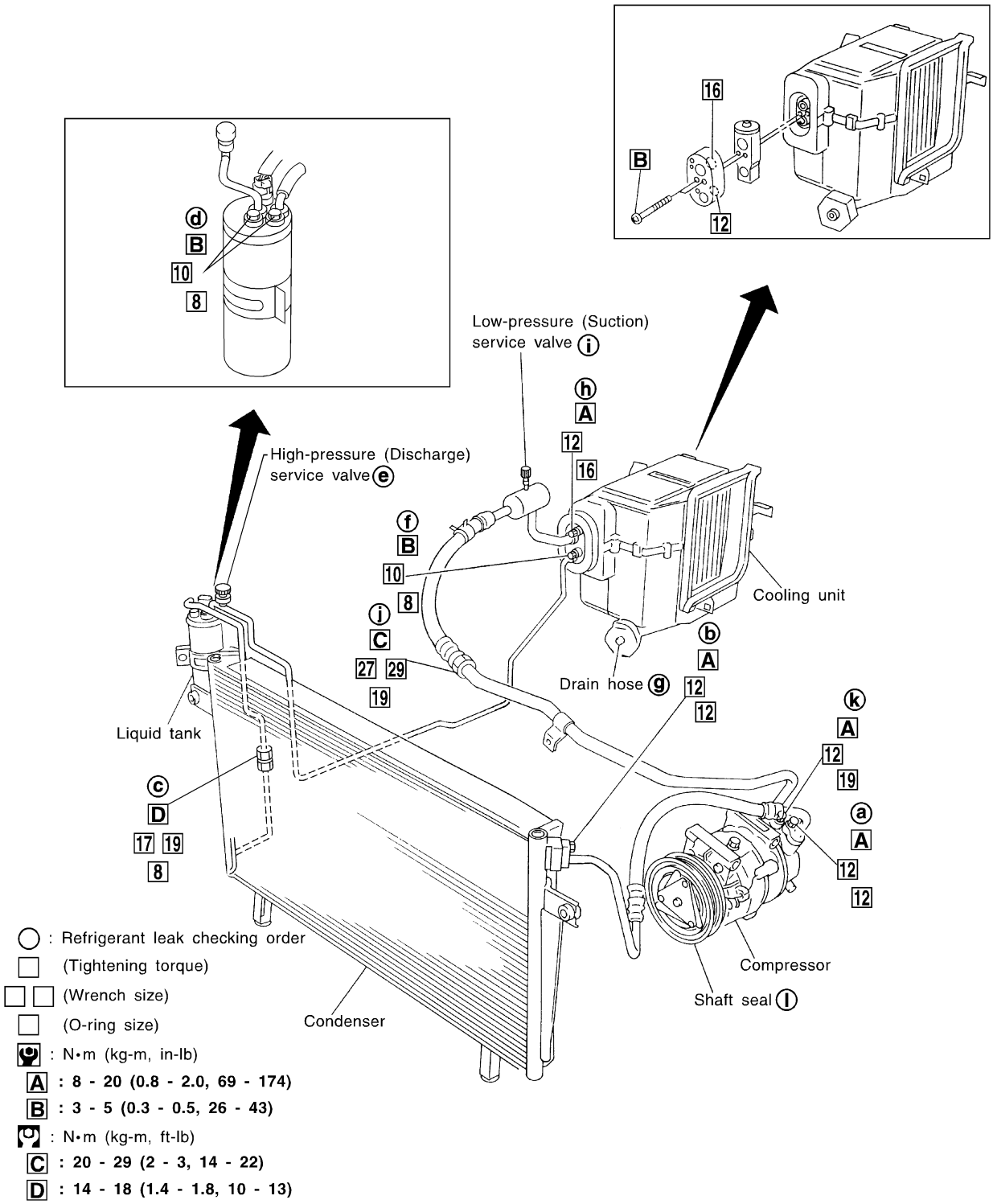

SHA305FB

CHECKING REFRIGERANT LEAKS

NAHA0236

Preliminary Check

NAHA0236S01

Perform a visual inspection of all refrigeration parts, fittings, hoses, and components for signs of A/C lubricant leakage, damage and corrosion. Take note of the areas with A/C lubricant leakage to allow extra time in these areas with electronic leak detector.

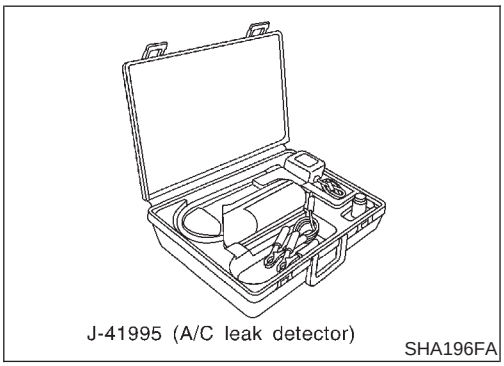

Precautions for Handling Leak Detector

NAHA0236S02

When performing a refrigerant leak check, use a J-41995 A/C leak detector or equivalent. Ensure that the instrument is calibrated and set properly per the operating instructions.

The leak detector is a delicate device. In order to use the leak detector properly, read the operating instructions and perform any specified maintenance.

Other gases in the work area or substances on the A/C components, for example, anti-freeze, windshield washer fluid, solvents and lubricants, may falsely trigger the leak detector. Make sure the surfaces to be checked are clean. Clean with a dry cloth or blow off with shop air. Do not allow the sensor tip of the detector to contact with any substance. This can also cause false readings and may damage the detector.

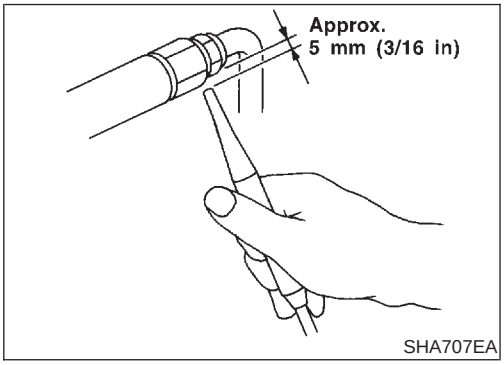

1. Position probe approximately 5 mm (3/16 in) away from point to be checked.

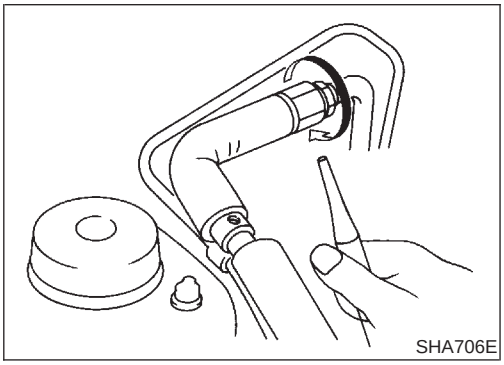

2. When testing, circle each fitting completely with probe.

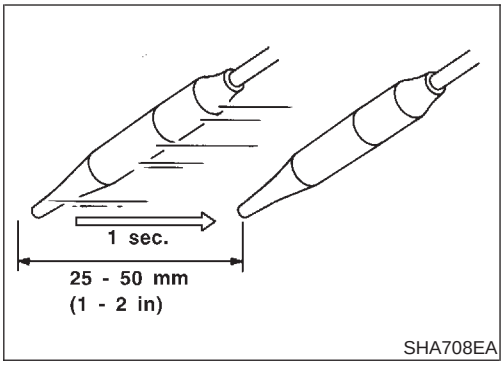

3. Move probe along component approximately 25 to 50 mm (1 to 2 in)/sec.

Checking Procedure

NAHA0236S03

To prevent inaccurate or false readings, make sure there is no refrigerant vapor, shop chemicals, or cigarette smoke in the vicinity of the vehicle. Perform the leak test in calm area (low air/wind movement) so that the leaking refrigerant is not dispersed.

1. Turn engine off.
2. Connect a suitable A/C manifold gauge set to the A/C service ports.
3. Check if the A/C refrigerant pressure is at least 345 kPa (3.52 kg/cm^2, 50 psi) above 16°C (61°F). If less than specification, recover/evacuate and recharge the system with the specified amount of refrigerant.

NOTE:
At temperatures below 16°C (61°F), leaks may not be detected since the system may not reach 345 kPa (3.52 kg/cm^2, 50 psi).

4. Conduct the leak test from the high side (compressor discharge **a** to evaporator inlet **f**) to the low side (evaporator drain hose **g** to shaft seal **l**). Refer to HA-120. Perform a leak check for the following areas carefully. Clean the component to be checked and move the leak detector probe completely around the connection/component.

- **Compressor**
  Check the fitting of high and low pressure hoses, relief valve and shaft seal.
- **Liquid tank**
  Check the pressure switch, tube fitting, weld seams and the fusible plug mount.
- **Service valves**
  Check all around the service valves. Ensure service valve caps are secured on the service valves (to prevent leaks).

NOTE:
After removing A/C manifold gauge set from service valves, wipe any residue from valves to prevent any false readings by leak detector.

- **Cooling unit (Evaporator)**
  With engine OFF, turn blower fan on "High" for at least 15 seconds to dissipate any refrigerant trace in the cooling unit. Wait a minimum of 10 minutes accumulation time (refer to the manufacturer's recommended procedure for actual wait time) before inserting the leak detector probe into the drain hose. Keep the probe inserted for at least ten seconds. Use caution not to contaminate the ptobe tip with water or dirt that may be in the drain hose.

5. If a leak detector detects a leak, verify at least once by blowing compressed air into area of suspected leak, then repeat check as outlined above.
6. Do not stop when one leak is found. Continue to check for additional leaks at all system components.
   If no leaks are found, perform steps 7 - 10.
7. Start engine.
8. Set the heater A/C control as follows:
1) A/C switch ON.
2) Face mode
3) Recirculation switch ON
4) Max cold temperature
5) Fan speed high
9. Run engine at 1,500 rpm for at least 2 minutes.
10. Turn engine off and perform leak check again following steps 4 through 6 above.

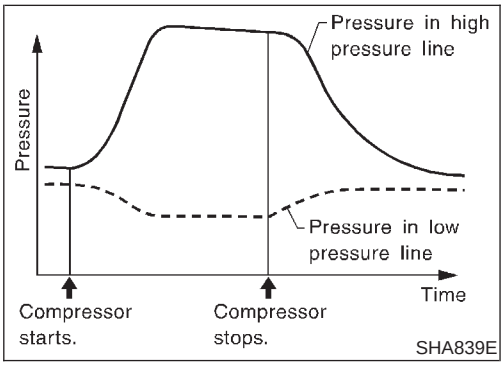

Refrigerant leaks should be checked immediately after stopping the engine. Begin with the leak detector at the compressor. The pressure on the high pressure side will gradually drop after refrigerant circulation stops and pressure on the low pressure side will gradually rise, as shown in the graph. Some leaks are more easily detected when pressure is high.

11. Before connecting ACR4 to vehicle, check ACR4 gauges. No refrigerant pressure should be displayed. If pressure is displayed, recover refrigerant from equipment lines and then check refrigerant purity.
12. Confirm refrigerant purity in supply tank using ACR4 and refrigerant identifier.
13. Confirm refrigerant purity in vehicle A/C system using ACR4 and refrigerant identifier.
14. Discharge A/C system using approved refrigerant recovery equipment. Repair the leaking fitting or component as necessary.
15. Evacuate and recharge A/C system and perform the leak test to confirm no refrigerant leaks.
16. Conduct A/C performance test to ensure system works properly.

Belt

TENSION ADJUSTMENT

NAHA0237

- **Refer to MA-15, “Checking Drive Belts”.**

Fast Idle Control Device (FICD)

INSPECTION

NAHA0238

- **Refer to HA-19.**

Auto

COMPRESSOR

NAHA0241

Model		CALSONIC make V-6
Type		V-6 variable displacement
Displacement cm^3 (cu in)/rev.	Max.	184 (11.228)
	Min.	14.5 (0.885)
Cylinder bore x stroke mm (in)		37 (1.46) x [2.3 - 28.6 (0.091 - 1.126)]
Direction of rotation		Clockwise (viewed from drive end)
Drive belt		Poly V

LUBRICANT

NAHA0242

Model		CALSONIC make V-6
Name		Nissan A/C System Oil Type S
Part number*		KLH00-PAGS0
Capacity mℓ (US fl oz, Imp fl oz)	Total in system	200 (6.8, 7.0)
	Compressor (Service part) charging amount	200 (6.8, 7.0)

*: Always check with the Parts Department for the latest parts information.

REFRIGERANT

NAHA0243

Type	HFC-134a (R-134a)
Capacity kg (lb)	0.60 - 0.70 (1.32 - 1.54)

ENGINE IDLING SPEED (WHEN A/C IS ON)

NAHA0244

- **Refer to EC-588, “Idle Speed and Ignition Timing”.**

BELT TENSION

NAHA0245

- **Refer to MA-15, “Checking Drive Belts”.**

Supplemental Restraint System (SRS) "AIR BAG" and "SEAT BELT PRE-TENSIONER"

NAHA0060

The Supplemental Restraint System such as "AIR BAG" and "SEAT BELT PRE-TENSIONER" used along with a seat belt, helps to reduce the risk or severity of injury to the driver and front passenger for certain types of collision. The SRS system composition which is available to NISSAN MODEL R50 is as follows:

- For a frontal collision
  The Supplemental Restraint System consists of driver air bag module (located in the center of the steering wheel), front passenger air bag module (located on the instrument panel on passenger side), seat belt pre-tensioners, a diagnosis sensor unit, warning lamp, wiring harness and spiral cable.
- For a side collision
  The Supplemental Restraint System consists of side air bag module (located in the outer side of front seat), satellite sensor, diagnosis sensor unit (one of components of air bags for a frontal collision), wiring harness, warning lamp (one of components of air bags for a frontal collision).

Information necessary to service the system safely is included in the **RS section** of this Service Manual.

WARNING:

- **To avoid rendering the SRS inoperative, which could increase the risk of personal injury or death in the event of a collision which would result in air bag inflation, all maintenance must be performed by an authorized NISSAN dealer.**
- **Improper maintenance, including incorrect removal and installation of the SRS, can lead to personal injury caused by unintentional activation of the system. For removal of Spiral Cable and Air Bag Module, see the RS section.**
- **Do not use electrical test equipment on any circuit related to the SRS unless instructed to in this Service Manual. Spiral cable and wiring harnesses covered with yellow insulation tape either just before the harness connectors or for the complete harness are related to the SRS.**

Precautions for Working with HFC-134a (R-134a)

NAHA0061

WARNING:

- **CFC-12 (R-12) refrigerant and HFC-134a (R-134a) refrigerant are not compatible. If the refrigerants are mixed and compressor failure is likely to occur, refer to "CONTAMINATED REFRIGERANT" below. To determine the purity of HFC-134a (R-134a) in the vehicle and recovery tank, use Refrigerant Recovery/Recycling Recharging equipment (ACR4) (J-39500-NI) and Refrigerant Identifier.**
- **Use only specified lubricant for the HFC-134a (R-134a) A/C system and HFC-134a (R-134a) components. If lubricant other than that specified is used, compressor failure is likely to occur.**
- **The specified HFC-134a (R-134a) lubricant rapidly absorbs moisture from the atmosphere. The following handling precautions must be observed:**

a) When removing refrigerant components from a vehicle, immediately cap (seal) the component to minimize the entry of moisture from the atmosphere.

b) When installing refrigerant components to a vehicle, do not remove the caps (unseal) until just before connecting the components. Connect all refrigerant loop components as quickly as possible to minimize the entry of moisture into system.

c) Only use the specified lubricant from a sealed container. Immediately reseal containers of lubricant. Without proper sealing, lubricant will become moisture saturated and should not be used.

d) Avoid breathing A/C refrigerant and lubricant vapor or mist. Exposure may irritate eyes, nose and throat. Remove R-134a from the A/C system, using certified service equipment meeting requirements of SAE J2210 (R-134a recycling equipment), or J2209 (R-134a recovery equipment). If accidental system discharge occurs, ventilate work area before resuming service. Additional health and safety information may be obtained from refrigerant and lubricant manufacturers.

e) Do not allow lubricant (Nissan A/C System Oil Type S) to come in contact with styrofoam parts. Damage may result.

CONTAMINATED REFRIGERANT

NAHA0061S01

If a refrigerant other than pure R-134a is identified in a vehicle, your options are:

- Explain to the customer that environmental regulations prohibit the release of contaminated refrigerant into the atmosphere.
- Explain that recovery of the contaminated refrigerant could damage your service equipment and refrigerant supply.

- Suggest the customer return the vehicle to the location of previous service where the contamination may have occurred.
- If you choose to perform the repair, recover the refrigerant using only **dedicated equipment and containers. Do not recover contaminated refrigerant into your existing service equipment.** If your facility does not have dedicated recovery equipment, you may contact a local refrigerant product retailer for available service. This refrigerant must be disposed of in accordance with all federal and local regulations. In addition, replacement of all refrigerant system components on the vehicle is recommended.
- If the vehicle is within the warranty period, the air conditioner warranty is void. Please contact Nissan Customer Affairs for further assistance.

General Refrigerant Precautions

NAHA0062

WARNING:

- **Do not release refrigerant into the air. Use approved recovery/recycling equipment to capture the refrigerant every time an air conditioning system is discharged.**
- **Always wear eye and hand protection (goggles and gloves) when working with any refrigerant or air conditioning system.**
- **Do not store or heat refrigerant containers above 52°C (125°F).**
- **Do not heat a refrigerant container with an open flame; if container warming is required, place the bottom of the container in a warm pail of water.**
- **Do not intentionally drop, puncture, or incinerate refrigerant containers.**
- **Keep refrigerant away from open flames: poisonous gas will be produced if refrigerant burns.**
- **Refrigerant will displace oxygen, therefore be certain to work in well ventilated areas to prevent suffocation.**
- **Do not pressure test or leak test HFC-134a (R-134a) service equipment and/or vehicle air conditioning systems with compressed air during repair. Some mixtures of air and R-134a have been shown to be combustible at elevated pressures. These mixtures, if ignited, may cause injury or property damage. Additional health and safety information may be obtained from refrigerant manufacturers.**

Precautions for Refrigerant Connection

NAHA0063

A new type refrigerant connection has been introduced to all refrigerant lines except the following portion.

- Expansion valve to cooling unit

FEATURES OF NEW TYPE REFRIGERANT CONNECTION

NAHA0063S01

- The O-ring has been relocated. It has also been provided with a groove for proper installation. This eliminates the chance of the O-ring being caught in, or damaged by, the mating part. The sealing direction of the O-ring is now set vertically in relation to the contacting surface of the mating part to improve sealing characteristics.
- The reaction force of the O-ring will not occur in the direction that causes the joint to pull out, thereby facilitating piping connections.

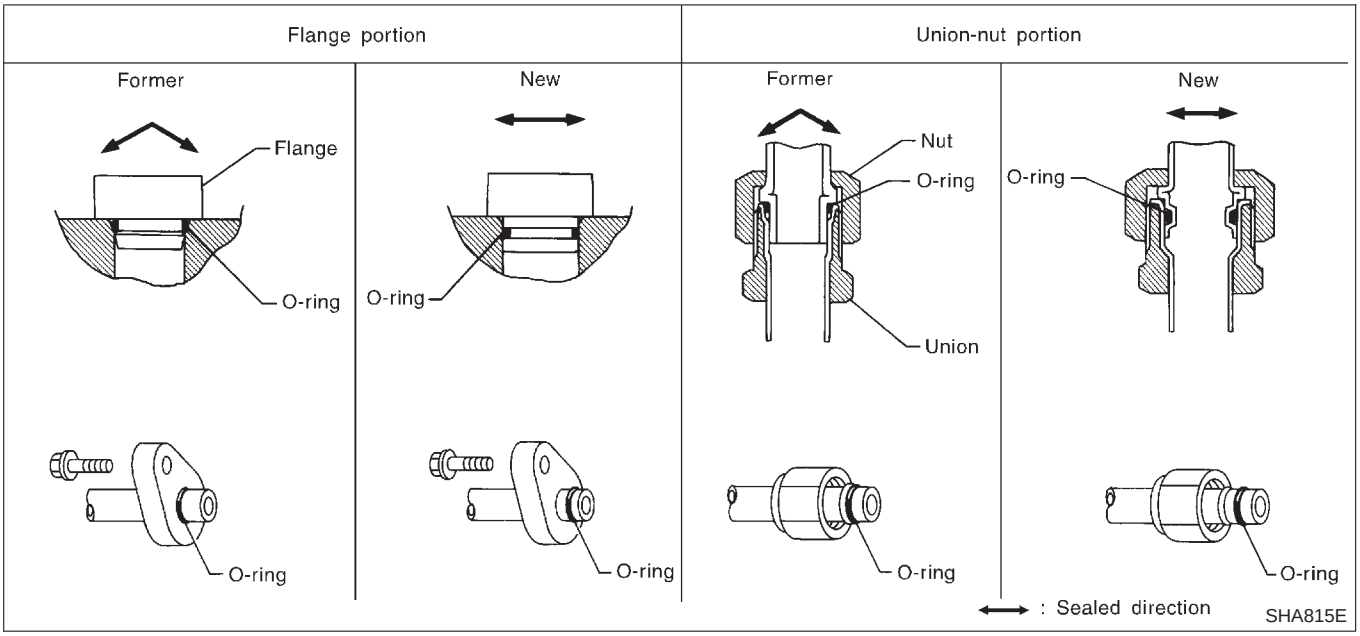

O-RING AND REFRIGERANT CONNECTION

NAHA0063S02

SEC. 271•274•276

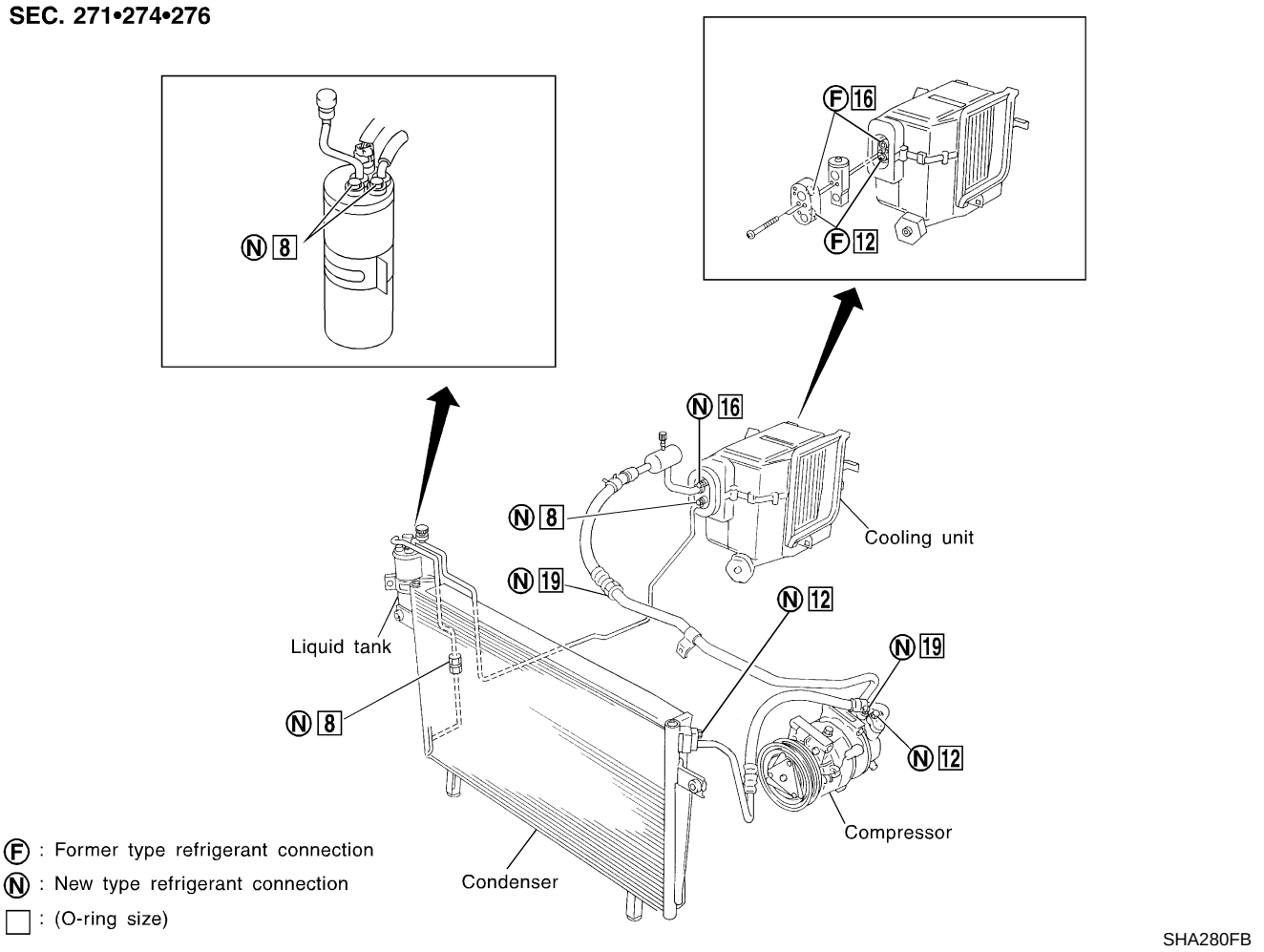

CAUTION:

The new and former refrigerant connections use different O-ring configurations. Do not confuse O-rings since they are not interchangeable. If a wrong O-ring is installed, refrigerant will leak at, or around, the connection.

O-Ring Part Numbers and Specifications

NAHA0063S0201

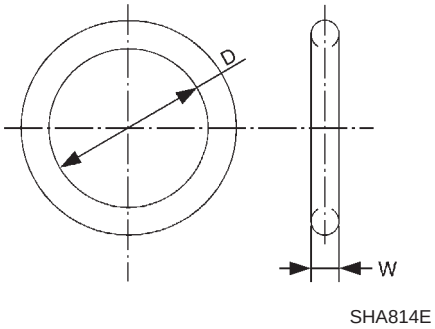

Connection type	O-ring size	Part number	D mm (in)	W mm (in)
New	8	92471 N8210	6.8 (0.268)	1.85 (0.0728)
Former		92470 N8200	6.07 (0.2390)	1.78 (0.0701)
New	12	92472 N8210	10.9 (0.429)	2.43 (0.0957)
Former		92475 71L00	11.0 (0.433)	2.4 (0.094)
New	16	92473 N8210	13.6 (0.535)	2.43 (0.0957)
Former		92475 72L00	14.3 (0.563)	2.3 (0.0906)
New	19	92474 N8210	16.5 (0.650)	2.43 (0.0957)
Former		92477 N8200	17.12 (0.6740)	1.78 (0.0701)

WARNING:

Make sure all refrigerant is discharged into the recycling equipment and the pressure in the system is less than atmospheric pressure. Then gradually loosen the discharge side hose fitting and remove it.

CAUTION:

When replacing or cleaning refrigerant cycle components, observe the following.

- **When the compressor is removed, store it in the same position as it is when mounted on the car. Failure to do so will cause lubricant to enter the low pressure chamber.**
- **When connecting tubes, always use a torque wrench and a back-up wrench.**
- **After disconnecting tubes, immediately plug all openings to prevent entry of dirt and moisture.**
- **When installing an air conditioner in the vehicle, connect the pipes as the final stage of the operation. Do not remove the seal caps of pipes and other components until just before required for connection.**
- **Allow components stored in cool areas to warm to working area temperature before removing seal caps. This prevents condensation from forming inside A/C components.**
- **Thoroughly remove moisture from the refrigeration system before charging the refrigerant.**
- **Always replace used O-rings.**
- **When connecting tube, apply lubricant to circle of the O-rings shown in illustration. Be careful not to apply lubricant to threaded portion.**
  Lubricant name: Nissan A/C System Oil Type S
  Part number: KLH00-PAGS0
- **O-ring must be closely attached to dented portion of tube.**
- **When replacing the O-ring, be careful not to damage O-ring and tube.**
- **Connect tube until you hear it click, then tighten the nut or bolt by hand until snug. Make sure that the O-ring is installed to tube correctly.**
- **After connecting line, conduct leak test and make sure that there is no leakage from connections. When the gas leaking point is found, disconnect that line and replace the O-ring. Then tighten connections of seal seat to the specified torque.**

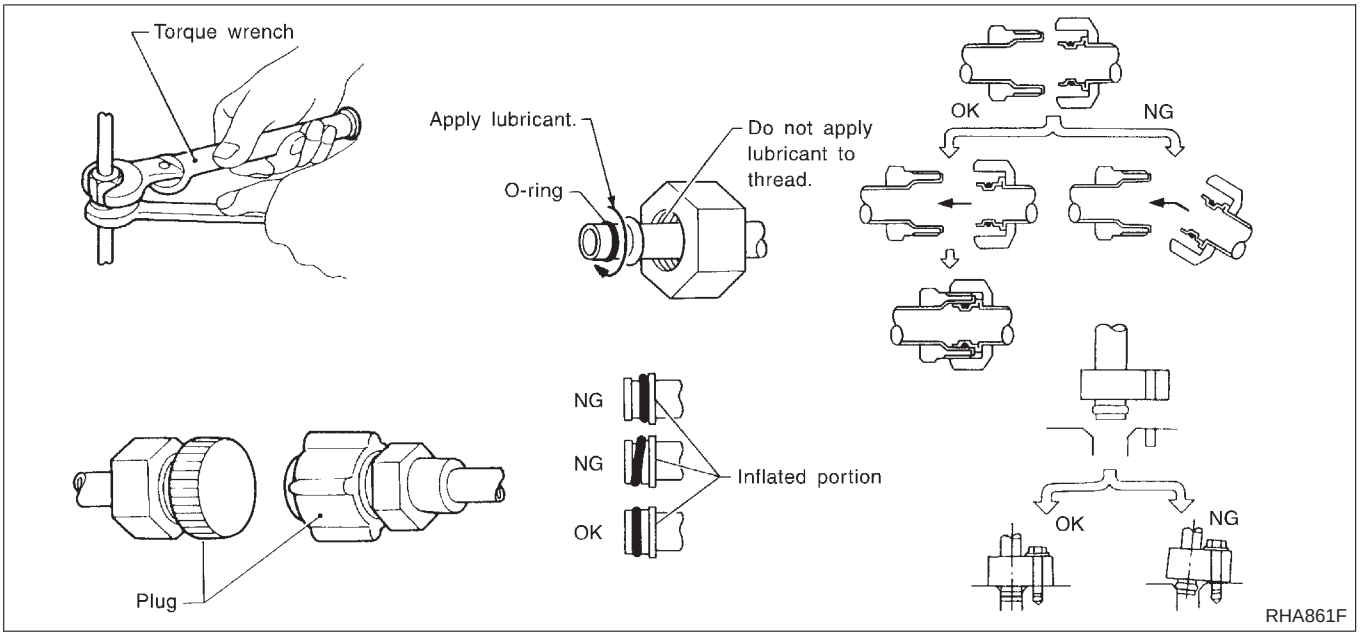

Precautions for Servicing Compressor

NAHA0064

- **Plug all openings to prevent moisture and foreign matter from entering.**
- **When the compressor is removed, store it in the same position as it is when mounted on the car.**
- **When replacing or repairing compressor, follow "Maintenance of Lubricant Quantity in Compressor" exactly. Refer to HA-194.**
- **Keep friction surfaces between clutch and pulley clean. If the surface is contaminated, with lubricant, wipe it off by using a clean waste cloth moistened with thinner.**
- **After compressor service operation, turn the compressor shaft by hand more than five turns in both directions. This will equally distribute lubricant inside the compressor. After the compressor is installed, let the engine idle and operate the compressor for one hour.**
- **After replacing the compressor magnet clutch, apply voltage to the new one and check for normal operation.**

Precautions for Service Equipment

NAHA0065

RECOVERY/RECYCLING EQUIPMENT

NAHA0065S01

Follow the manufacturer's instructions for machine operation and machine maintenance. Never introduce any refrigerant other than that specified into the machine.

ELECTRONIC LEAK DETECTOR

NAHA0065S02

Follow the manufacture's instructions for tester operation and tester maintenance.

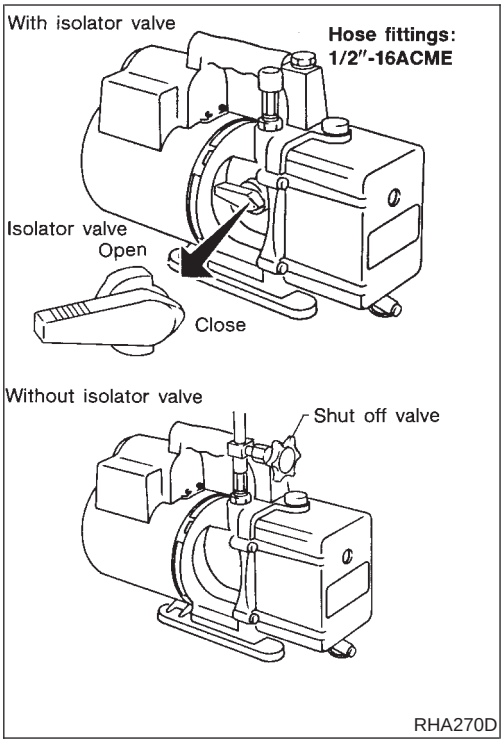

VACUUM PUMP

NAHA0065S03

The lubricant contained inside the vacuum pump is not compatible with the specified lubricant for HFC-134a (R-134a) A/C systems. The vent side of the vacuum pump is exposed to atmospheric pressure. So the vacuum pump lubricant may migrate out of the pump into the service hose. This is possible when the pump is switched off after evacuation (vacuuming) and hose is connected to it.

To prevent this migration, use a manual valve situated near the hose-to-pump connection, as follows.

- Usually vacuum pumps have a manual isolator valve as part of the pump. Close this valve to isolate the service hose from the pump.
- For pumps without an isolator, use a hose equipped with a manual shut-off valve near the pump end. Close the valve to isolate the hose from the pump.
- If the hose has an automatic shut off valve, disconnect the hose from the pump: as long as the hose is connected, the valve is open and lubricating oil may migrate.

Some one-way valves open when vacuum is applied and close under a no vacuum condition. Such valves may restrict the pump's ability to pull a deep vacuum and are not recommended.

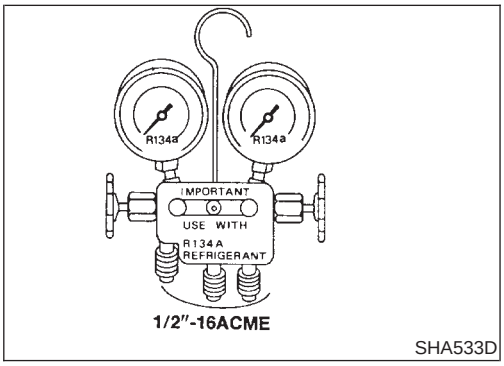

MANIFOLD GAUGE SET

NAHA0065S04

Be certain that the gauge face indicates R-134a or 134a. Make sure the gauge set has 1/2″-16 ACME threaded connections for service hoses. Confirm the set has been used only with refrigerant HFC-134a (R-134a) along with specified lubricant.

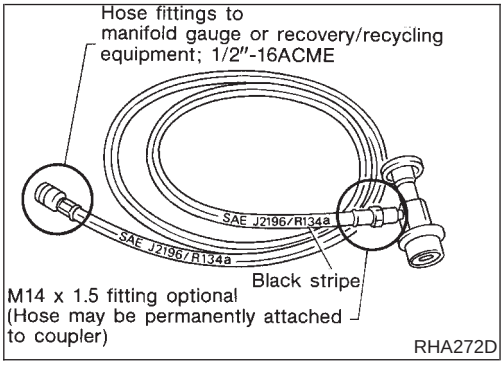

SERVICE HOSES

NAHA0065S05

Be certain that the service hoses display the markings described (colored hose with black stripe). All hoses must include positive shut off devices (either manual or automatic) near the end of the hoses opposite the manifold gauge.

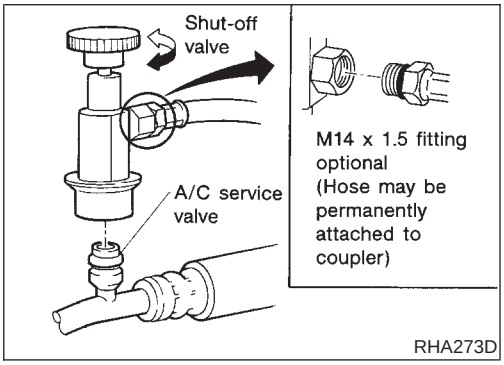

SERVICE COUPLERS

NAHA0065S06

Never attempt to connect HFC-134a (R-134a) service couplers to an CFC-12 (R-12) A/C system. The HFC-134a (R-134a) couplers will not properly connect to the CFC-12 (R-12) system. However, if an improper connection is attempted, discharging and contamination may occur.

Shut-off valve rotation	A/C service valve
Clockwise	Open
Counterclockwise	Close

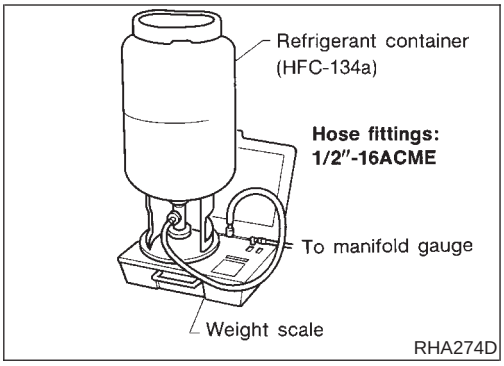

REFRIGERANT WEIGHT SCALE

NAHA0065S07

Verify that no refrigerant other than HFC-134a (R-134a) and specified lubricants have been used with the scale. If the scale controls refrigerant flow electronically, the hose fitting must be 1/2″-16 ACME.

CALIBRATING ACR4 WEIGHT SCALE

NAHA0065S09

Calibrate the scale every three months.

To calibrate the weight scale on the ACR4 (J-39500-NI):

1. Press **Shift/Reset** and **Enter** at the same time.
2. Press **8787**. "**A1**" will be displayed.
3. Remove all weight from the scale.
4. Press **0**, then press **Enter**. "**0.00**" will be displayed and change to "**A2**".
5. Place a known weight (dumbbell or similar weight), between 4.5 and 8.6 kg (10 and 19 lb) on the center of the weight scale.
6. Enter the known weight using four digits. (Example 10 lb = 10.00, 10.5 lb = 10.50)
7. Press **Enter** — the display returns to the vacuum mode.
8. Press **Shift/Reset** and **Enter** at the same time.
9. Press **6** — the known weight on the scale is displayed.
10. Remove the known weight from the scale. "**0.00**" will be displayed.
11. Press **Shift/Reset** to return the ACR4 to the program mode.

CHARGING CYLINDER

NAHA0065S08

Using a charging cylinder is not recommended. Refrigerant may be vented into air from cylinder's top valve when filling the cylinder with refrigerant. Also, the accuracy of the cylinder is generally less than that of an electronic scale or of quality recycle/recharge equipment.

Wiring Diagrams and Trouble Diagnoses

NAHA0066

When you read wiring diagrams, refer to the following:

- GI-11, "HOW TO READ WIRING DIAGRAMS"
- EL-10, "Wiring Diagram — POWER —"

When you perform trouble diagnoses, refer to the following:

- GI-33, "HOW TO FOLLOW TROUBLE DIAGNOSES"
- GI-23, "HOW TO PERFORM EFFICIENT DIAGNOSIS FOR AN ELECTRICAL INCIDENT"

Special Service Tools

NAHA0067

The actual shapes of Kent-Moore tools may differ from those of special service tools illustrated here.

Tool number (Kent-Moore No.) Tool name	Description
KV99106100 (J-41260) Clutch disc wrench	Removing center bolt 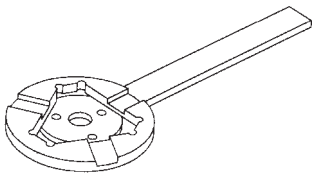 NT232 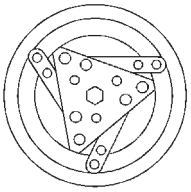 When replacing the magnet clutch in the above compressor, use a clutch disc wrench with the pin side on the clutch disc to remove it. 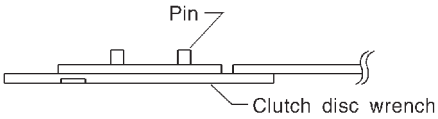 NT378
KV99232340 (J-38874) or KV992T0001 (—) Clutch disc puller	Removing clutch disc 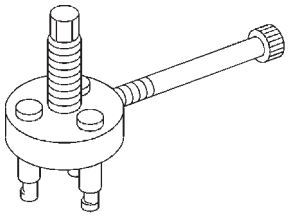 NT376
KV99106200 (J-41261) Pulley installer	Installing pulley 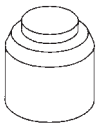 NT235

HFC-134a (R-134a) Service Tools and Equipment

=NAHA0068

Never mix HFC-134a refrigerant and/or its specified lubricant with CFC-12 (R-12) refrigerant and/or its lubricant.

Separate and non-interchangeable service equipment must be used for handling each type of refrigerant/lubricant.

Refrigerant container fittings, service hose fittings and service equipment fittings (equipment which handles refrigerant and/or lubricant) are different between CFC-12 (R-12) and HFC-134a (R-134a). This is to avoid mixed use of the refrigerants/lubricant.

Adapters that convert one size fitting to another must never be used: refrigerant/lubricant contamination will occur and compressor failure will result.

Tool number (Kent-Moore No.) Tool name	Description	
HFC-134a (R-134a) refrigerant	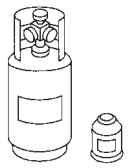 NT196	Container color: Light blue Container marking: HFC-134a (R-134a) Fitting size: Thread size ● Large container 1/2″-16 ACME
KLH00-PAGS0 (—) Nissan A/C System Oil Type S	 NT197	Type: Poly alkylene glycol oil (PAG), type S Application: HFC-134a (R-134a) swash plate (piston) compressors (Nissan only) Lubricity: 40 mℓ (1.4 US fl oz, 1.4 Imp fl oz)
(J-39500-NI) Recovery/Recycling Recharging equipment (ACR4)	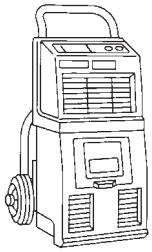 NT195	Function: Refrigerant Recovery and Recycling and Recharging
(J-41995) Electrical leak detector	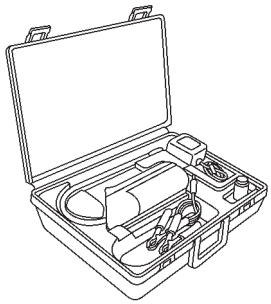 AHA281A	Power supply: ● DC 12V (Cigarette lighter)

Tool number (Kent-Moore No.) Tool name	Description	
(J-39183) Manifold gauge set (with hoses and couplers)	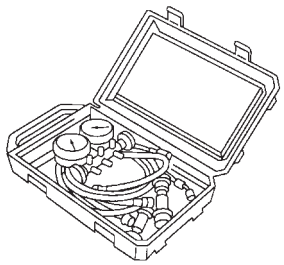 NT199	Identification: ● The gauge face indicates R-134a. Fitting size: Thread size ● 1/2″-16 ACME
Service hoses ● High side hose (J-39501-72) ● Low side hose (J-39502-72) ● Utility hose (J-39476-72)	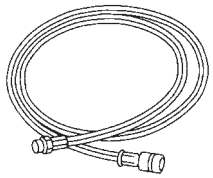 NT201	Hose color: ● Low hose: Blue with black stripe ● High hose: Red with black stripe ● Utility hose: Yellow with black stripe or green with black stripe Hose fitting to gauge: ● 1/2″-16 ACME
Service couplers ● High side coupler (J-39500-20) ● Low side coupler (J-39500-24)	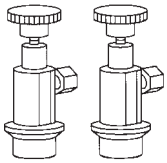 NT202	Hose fitting to service hose: ● M14 x 1.5 fitting is optional or permanently attached.
(J-39650) Refrigerant weight scale	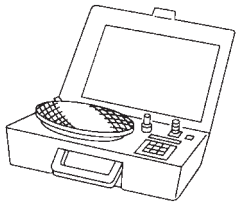 NT200	For measuring of refrigerant Fitting size: Thread size ● 1/2″-16 ACME
(J-39649) Vacuum pump (Including the isolator valve)	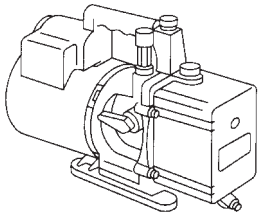 NT203	Capacity: ● Air displacement: 4 CFM ● Micron rating: 20 microns ● Oil capacity: 482 g (17 oz) Fitting size: Thread size ● 1/2″-16 ACME

COMMERCIAL SERVICE TOOL

NAHA0068S01

Tool name	Description
Refrigerant identifier equipment	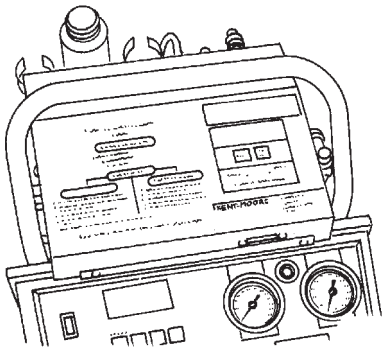 NT765 For checking refrigerant purity and for system contamination

Refrigeration System

REFRIGERATION CYCLE

NAHA0069

Refrigerant Flow

NAHA0069S01

The refrigerant flows in the standard pattern, that is, through the compressor, the condenser, the liquid tank, through the evaporator, and back to the compressor. The refrigerant evaporation through the evaporator coil is controlled by an externally equalized expansion valve, located inside the evaporator case.

Freeze Protection

NAHA0069S02

Under normal operating conditions, when the A/C is switched on, the compressor runs continuously, and the evaporator pressure, and therefore temperature, is controlled by the V-6 variable displacement compressor to prevent freeze up.

Refrigerant System Protection

NAHA0069S03

Dual-pressure Switch

NAHA0069S0301

The refrigerant system is protected against excessively high or low pressures by the dual-pressure switch, located on the liquid tank. If the system pressure rises above, or falls below the specifications, the dual-pressure switch opens to interrupt the compressor operation.

Pressure Relief Valve

NAHA0069S0302

The refrigerant system is also protected by a pressure relief valve, located in the rear head of the compressor. When the pressure of refrigerant in the system increases to an abnormal level [more than 3,727 kPa (38 kg/cm^2, 540 psi)], the release port on the pressure relief valve automatically opens and releases refrigerant into the atmosphere.

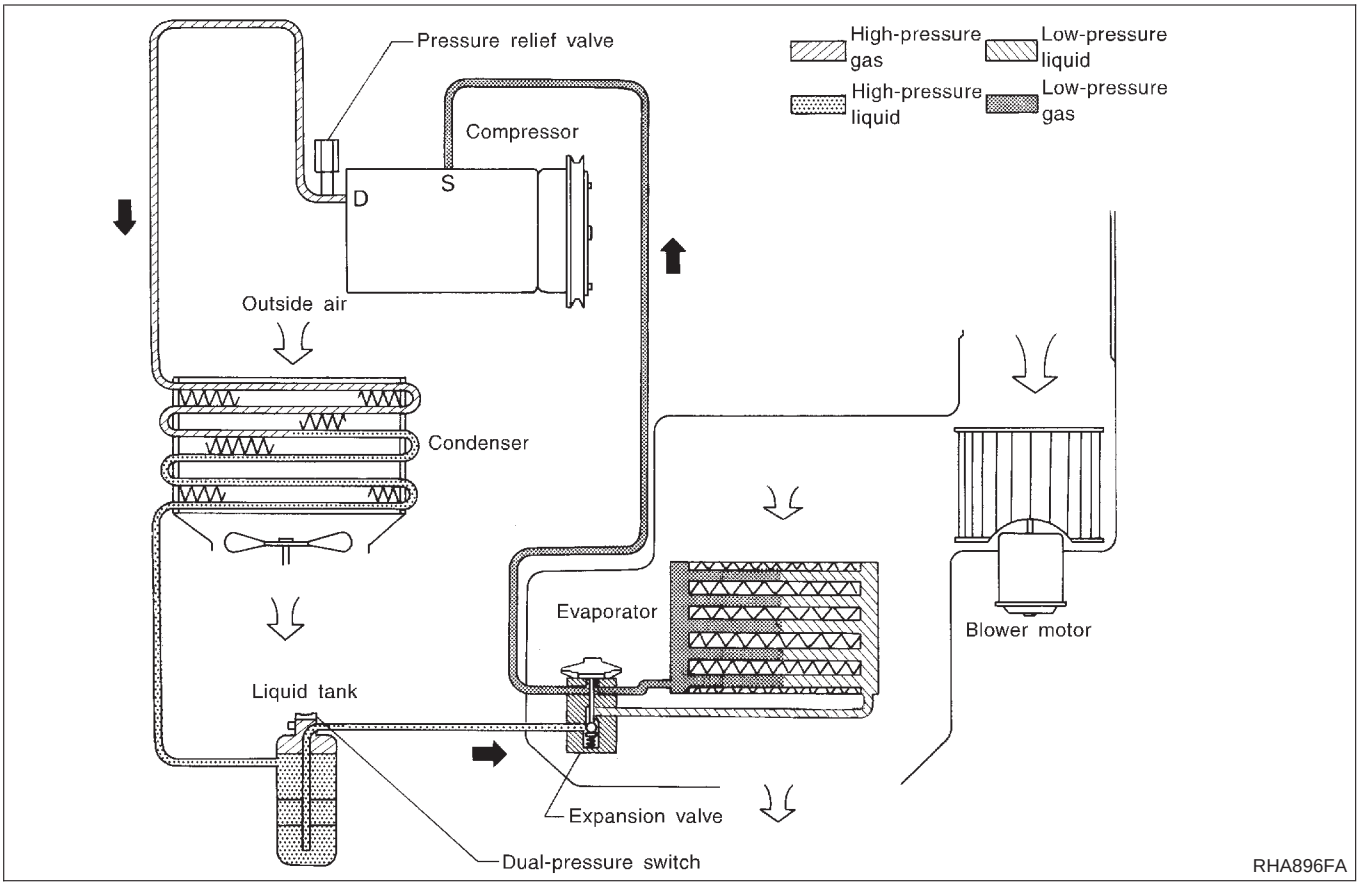

V-6 Variable Displacement Compressor

GENERAL INFORMATION

=NAHA0070

1. The V-6 variable compressor differs from previous units. The vent temperatures of the V-6 variable compress do not drop too far below 5°C (41°F) when:
   - evaporator intake air temperature is less than 20°C (68°F)
   - engine is running at speeds less than 1,500 rpm.

   This is because the V-6 compressor provides a means of “capacity” control.
2. The V-6 variable compressor provides refrigerant control under varying conditions. During cold winters, it may not produce high refrigerant pressure discharge (compared to previous units) when used with air conditioning systems.
3. A “clanking” sound may occasionally be heard during refrigerant charge. The sound indicates that the tilt angle of the swash plate has changed and is not a problem.
4. For air conditioning systems with the V-6 compressor, the clutch remains engaged unless: the system main switch, fan switch or ignition switch is turned OFF. When ambient (outside) temperatures are low or when the amount of refrigerant is insufficient, the clutch is disengaged to protect the compressor.
5. A constant range of suction pressure is maintained when engine speed is greater than a certain value. It normally ranges from 147 to 177 kPa (1.5 to 1.8 kg/cm^2, 21 to 26 psi) under varying conditions.
   In previous compressors, however, suction pressure was reduced with increases in engine speed.

DESCRIPTION

=NAHA0132

General

NAHA0132S01

The variable compressor is basically a swash plate type that changes piston stroke in response to the required cooling capacity.
The tilt of the swash plate allows the piston's stroke to change so that refrigerant discharge can be continuously changed from 14.5 to 184 cm^3 (0.885 to 11.228 cu in).

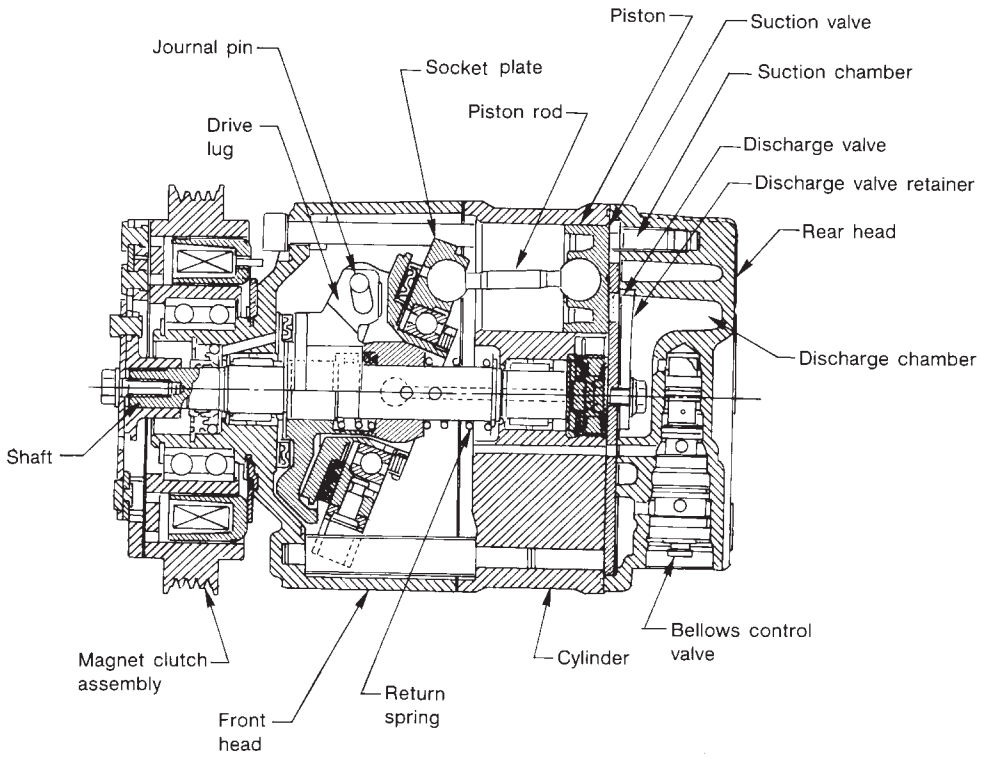

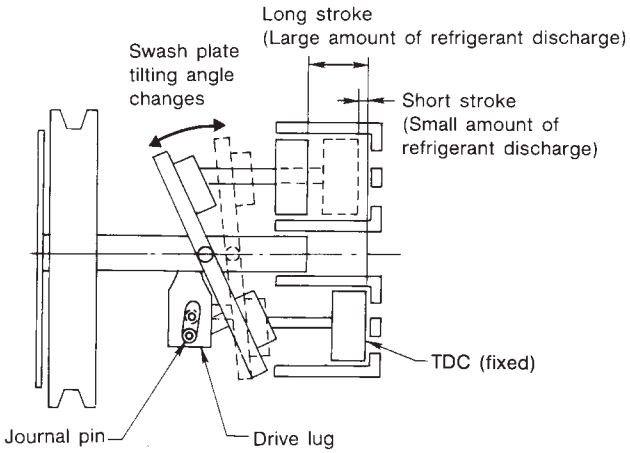

Discharge control	Discharge capacity cm^3 (cu in)/rev.	Piston stroke length mm (in)
Minimum	14.5 (0.885)	2.3 (0.091)
Maximum	184 (11.228)	28.6 (1.126)

RHA037DB

Operation

=NAHA0132S02

1. Operation Control Valve

NAHA0132S0201

Operation control valve is located in the suction port (low-pressure) side, and opens or closes in response to changes in refrigerant suction pressure.
Operation of the valve controls the internal pressure of the crankcase.
The angle of the swash plate is controlled between the crankcase's internal pressure and the piston cylinder pressure.

2. Maximum Cooling

NAHA0132S0202

Refrigerant pressure on the low-pressure side increases with an increase in heat loads.
When this occurs, the control valve's bellows compress to open the low-pressure side valve and close the high-pressure side valve.
This causes the following pressure changes:
- the crankcase's internal pressure to equal the pressure on the low-pressure side;
- the cylinder's internal pressure to be greater than the crankcase's internal pressure.

Under this condition, the swash plate is set to the maximum stroke position.

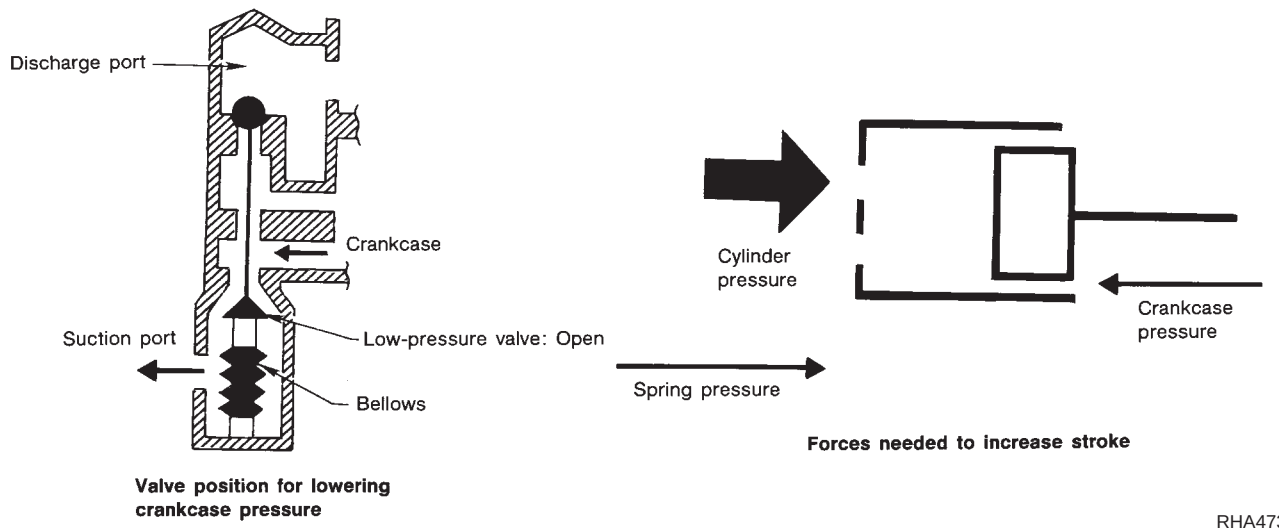

RHA473C

3. Capacity Control

=NAHA0132S0203

- Refrigerant pressure on suction side is low during high speed driving or when ambient or interior temperature is low.
- The bellows expands when refrigerant pressure on the suction pressure side drops below approximately 177 kPa (1.8 kg/cm^2, 26 psi).
  Since suction pressure is low, it makes the suction port close and the discharge port open. Thus, crankcase pressure becomes high as high pressure enters the crankcase.
- The force acts around the journal pin near the swash plate, and is generated by the pressure difference before and behind the piston.
  The drive lug and journal pin are located where the piston generates the highest pressure. Piston pressure is between suction pressure Ps and discharge pressure Pd, which is near suction pressure Ps. If crankcase pressure Pc rises due to capacity control, the force around the journal pin makes the swash plate angle decrease and also the piston stroke decrease. In other words, crankcase pressure increase triggers pressure difference between the piston and the crankcase. The pressure difference changes the angle of the swash plate.

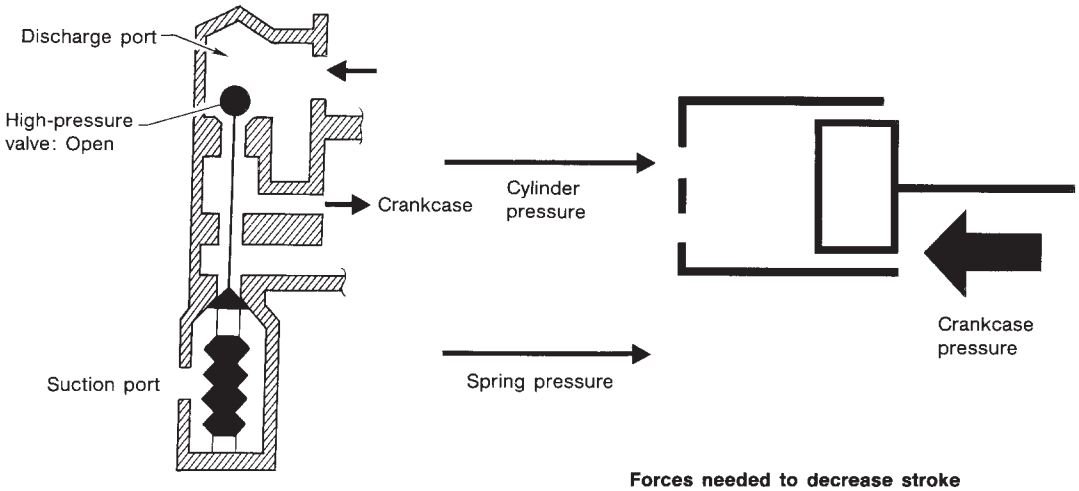

Valve position for raising crankcase pressure

Forces needed to decrease stroke

RHA474C

FICD CONTROL SYSTEM

=NAHA0133

General

NAHA0133S01

With the variable displacement compressor, the compressor power requirements differ from when the ambient temperature is high and maximum cooling effect is required (i.e., when refrigerating load is large and the tilt angle of the compressor swash plate is large) to when the ambient temperature is low and less cooling effect is required (i.e., when refrigerating load is small and the tilt angle of the swash plate is small). To correspond correctly to this change in compressor power requirements, it is also necessary to control the operation of the IACV-FICD according to the refrigerating load. Thus, an ambient air temperature switch is provided on the front face of the condenser so that the IACV-FICD can be controlled depending on the ambient temperature.

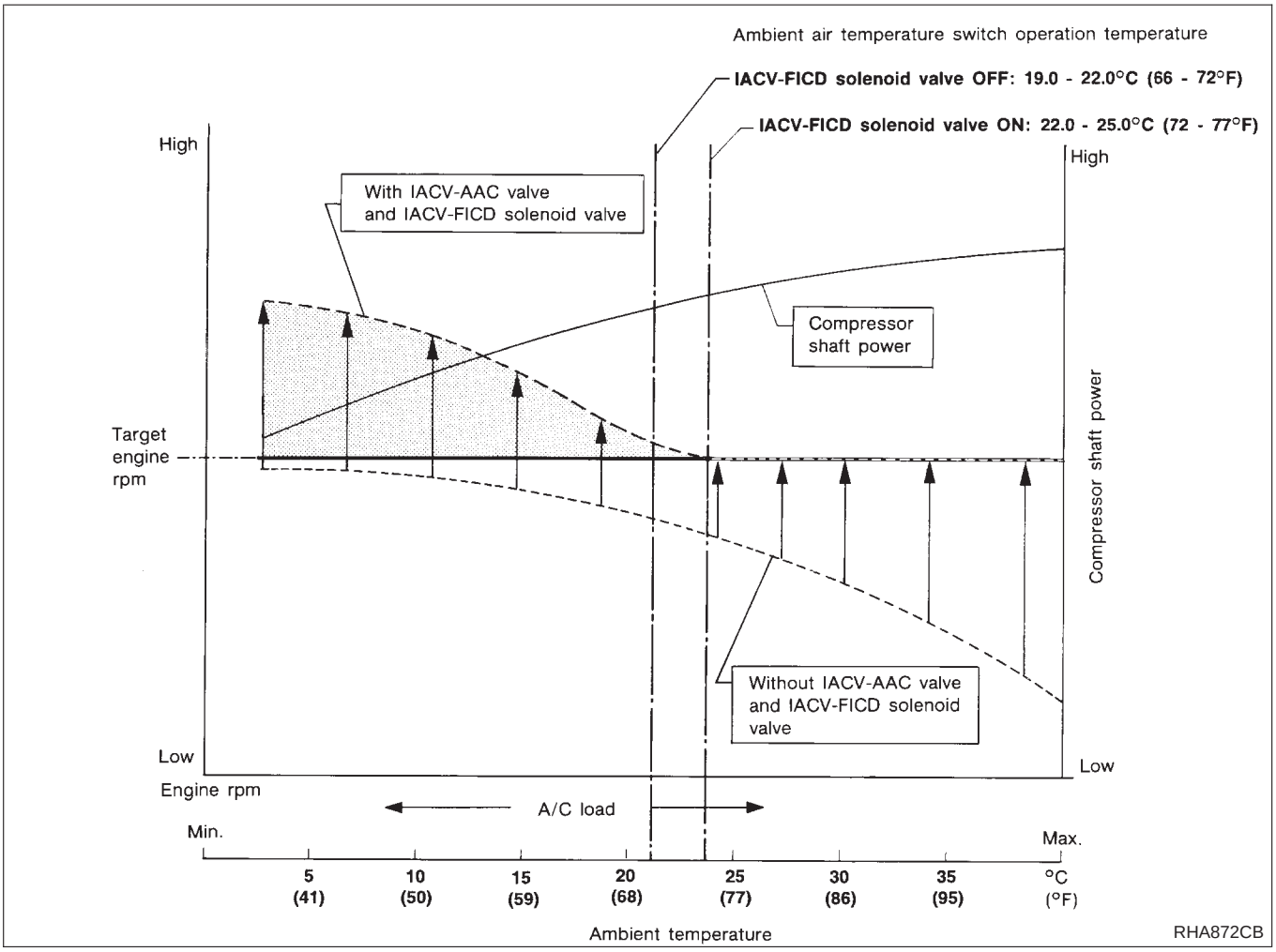

Operation

=NAHA0133S02

When the air conditioner is OFF, the ECM detects the load applied to the engine, and controls the IACV-AAC valve to adjust the engine idling speed to the appropriate rpm by supplying additional air from the IACV-AAC valve.

When the air conditioner is ON (A/C relay is ON), and when the ambient air temperature switch is ON [this switch turns ON automatically when the ambient temperature rises to approx. 25.0°C (77°F) or higher], the IACV-FICD solenoid valve is energized and additional air is supplied to the engine.

If the appropriate engine speed is not reached, the IACV-AAC valve supplies the additional air required to increase the engine rpm.

If the ambient air temperature switch is OFF [this switch turns OFF when the ambient temperature is below 19.0°C (66°F)] even when the air conditioner is ON (A/C relay is ON), the IACV-FICD solenoid valve is deenergized, and the idling speed is controlled so that the appropriate rpm can be achieved by operation of the IACV-AAC valve only.

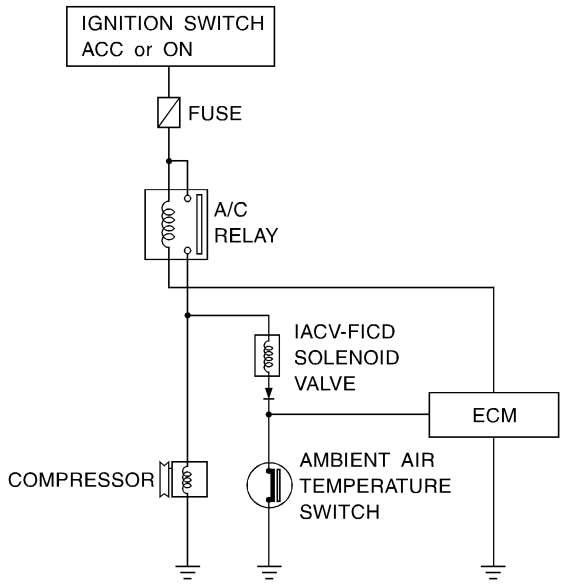

Ambient temperature °C (°F)	Ambient air temperature switch	IACV-FICD solenoid valve
Below 19.0 - 22.0 (66 - 72)	OFF	OFF
Above 22.0 - 25.0 (72 - 77)	ON	ON

Idle speed: (rpm) Refer to EC section.

RHA873CC

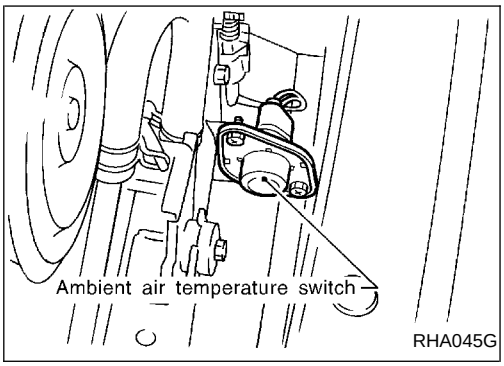

RHA045G

Component Layout

NAHA0071

SEC. 270•271•272•273

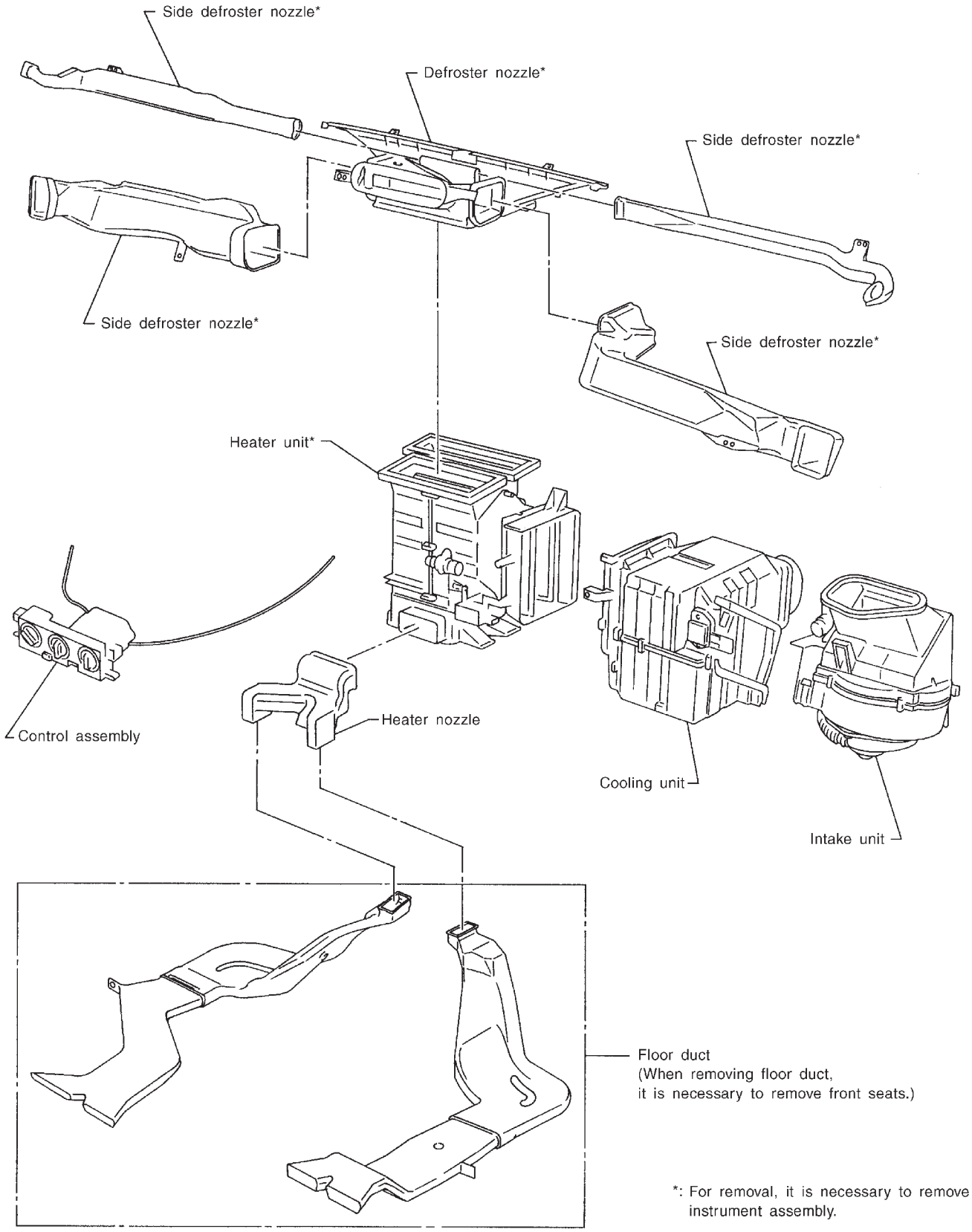

*: For removal, it is necessary to remove instrument assembly.

RHA573F

Control Operation

NAHA0072

Manual air conditioner

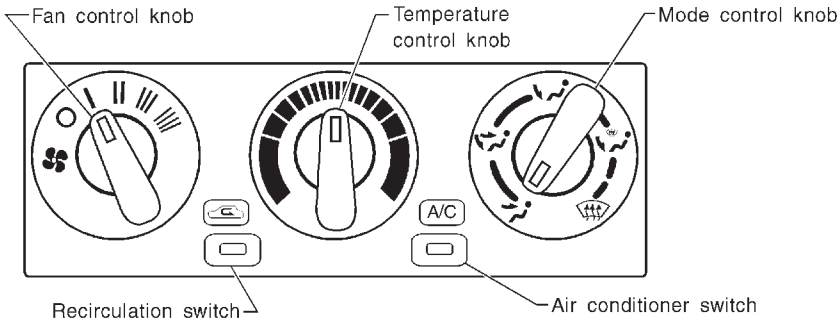

RHA606F

FAN CONTROL KNOB

NAHA0072S01

This knob turns the fan ON and OFF, and controls fan speed.

MODE CONTROL KNOB

NAHA0072S02

This knob controls the outlet air flow.
In “DEF” or “D/F” mode, the intake door is set to “FRESH”.

TEMPERATURE CONTROL KNOB

NAHA0072S03

This knob allows adjustment of the temperature of the outlet air.

RECIRCULATION (REC) SWITCH

NAHA0072S04

OFF position: Outside air is drawn into the passenger compartment.
ON position: Interior air is recirculated inside the vehicle. The indicator lamp will also light.

AIR CONDITIONER SWITCH

NAHA0072S05

The air conditioner switch controls the A/C system. When the switch is depressed with the fan ON, the compressor will turn ON. The indicator lamp will also light.
The air conditioner cooling function operates only when the engine is running.

Discharge Air Flow

NAHA0073

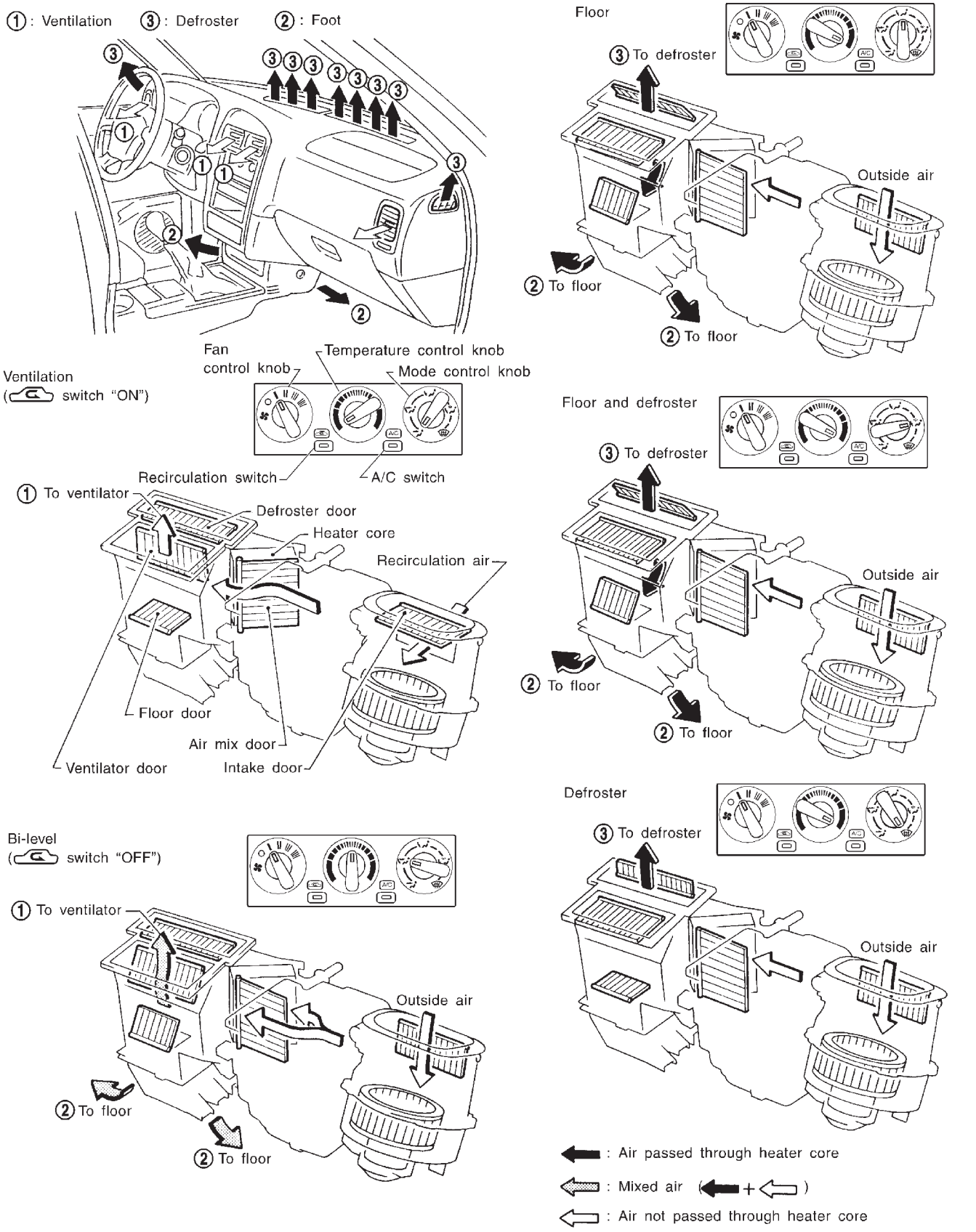

SHA963E

System Description

SWITCHES AND THEIR CONTROL FUNCTIONS

NAHA0074

NAHA0074S01

Knob/Switch		Knob/Switch position							Air outlet	Intake air	Compressor
		A/C									
A/C		○							—	—	ON*1
Mode			○						VENT	—	—
				○					B/L	—	—
					○				FOOT	—	—
						○			D/F	FRE	—
							○		DEF	FRE	—
								○	—	REC*2	—

*1: Compressor is operated by dual-pressure switch.

*2: In DEF and D/F modes, REC switch is canceled.

Component Location

NAHA0085

ENGINE COMPARTMENT

NAHA0085S01

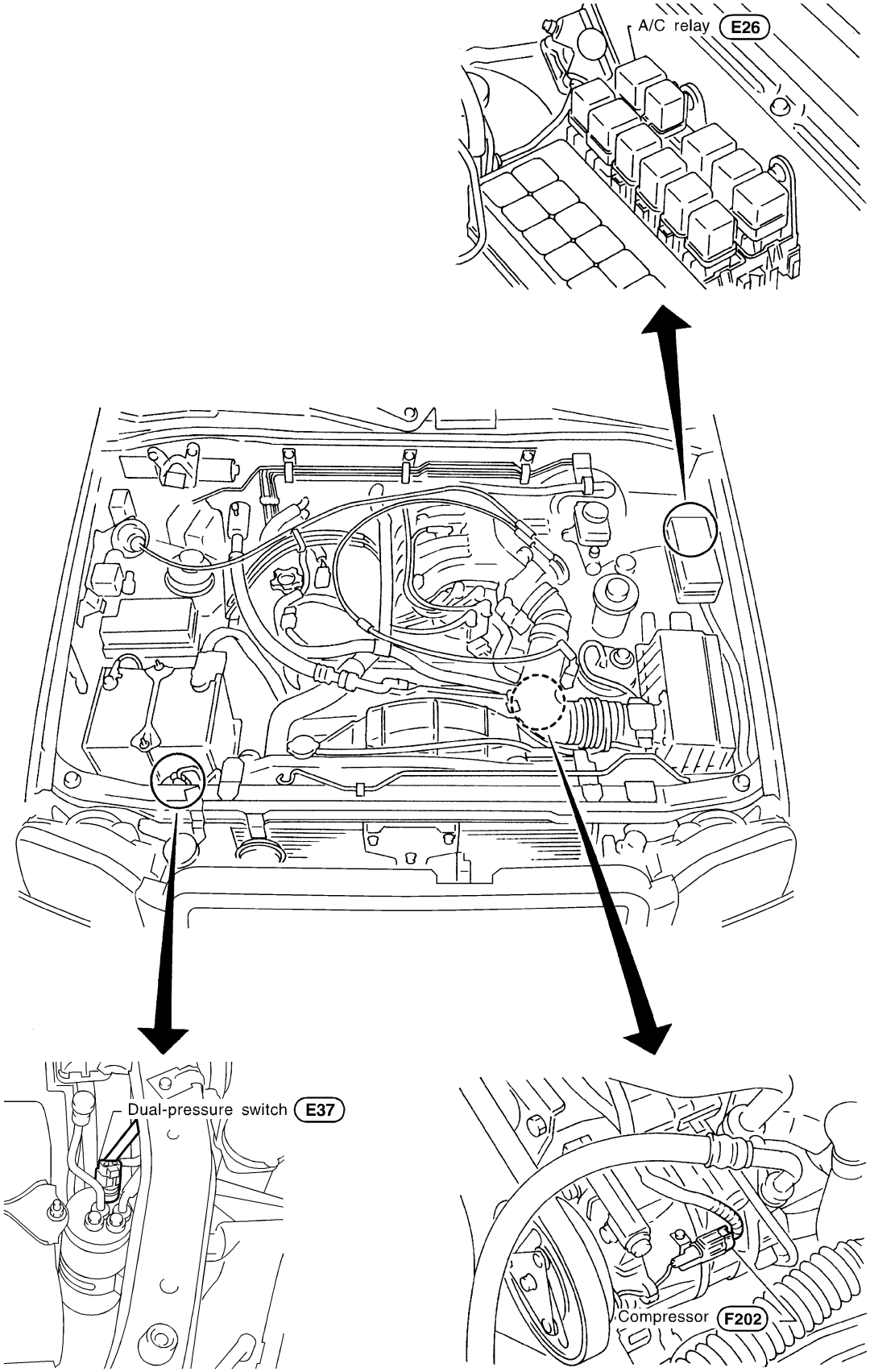

RHA326H

PASSENGER COMPARTMENT

NAHA0085S02

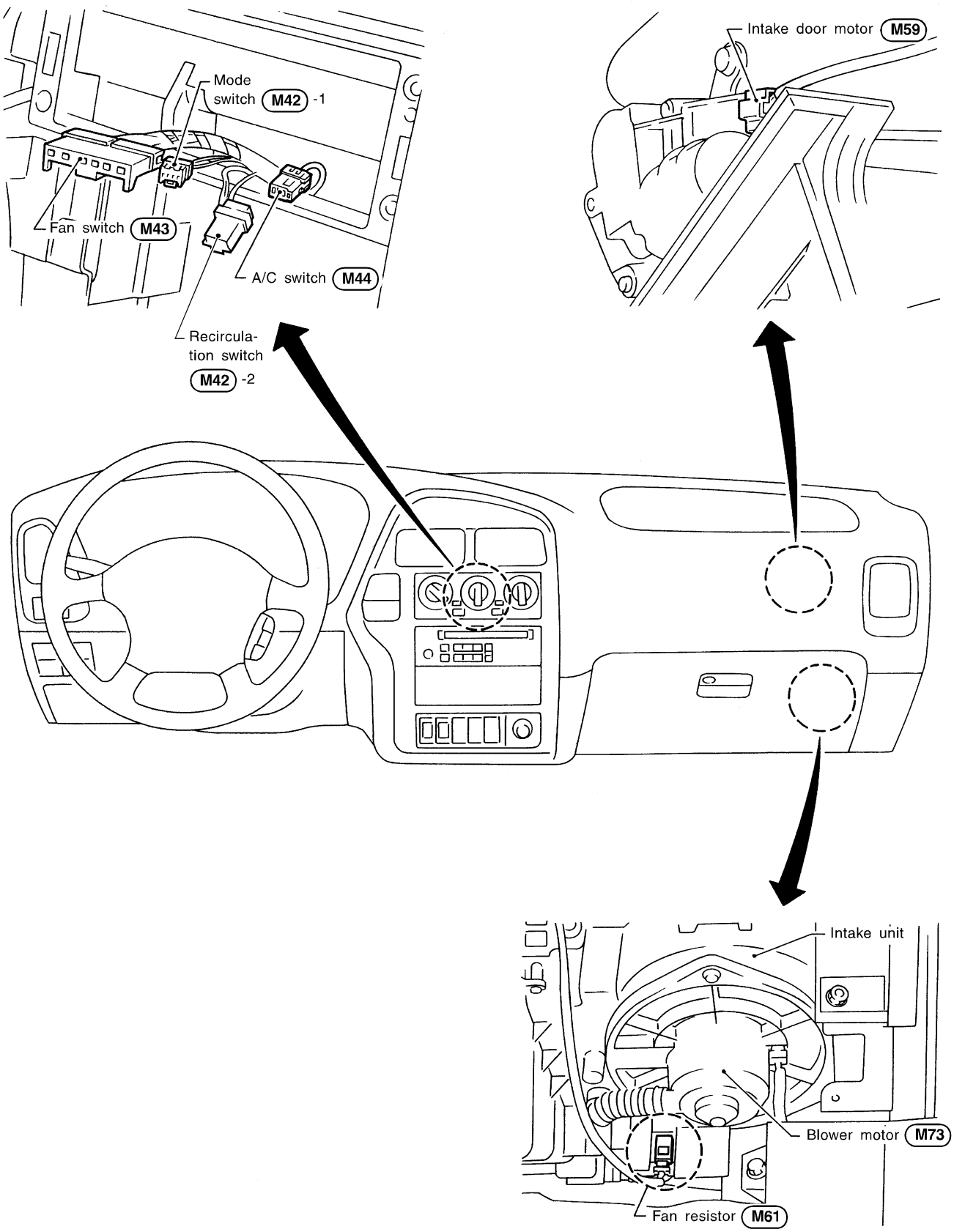

SHA265F

Wiring Diagram — HEATER —

NAHA0086

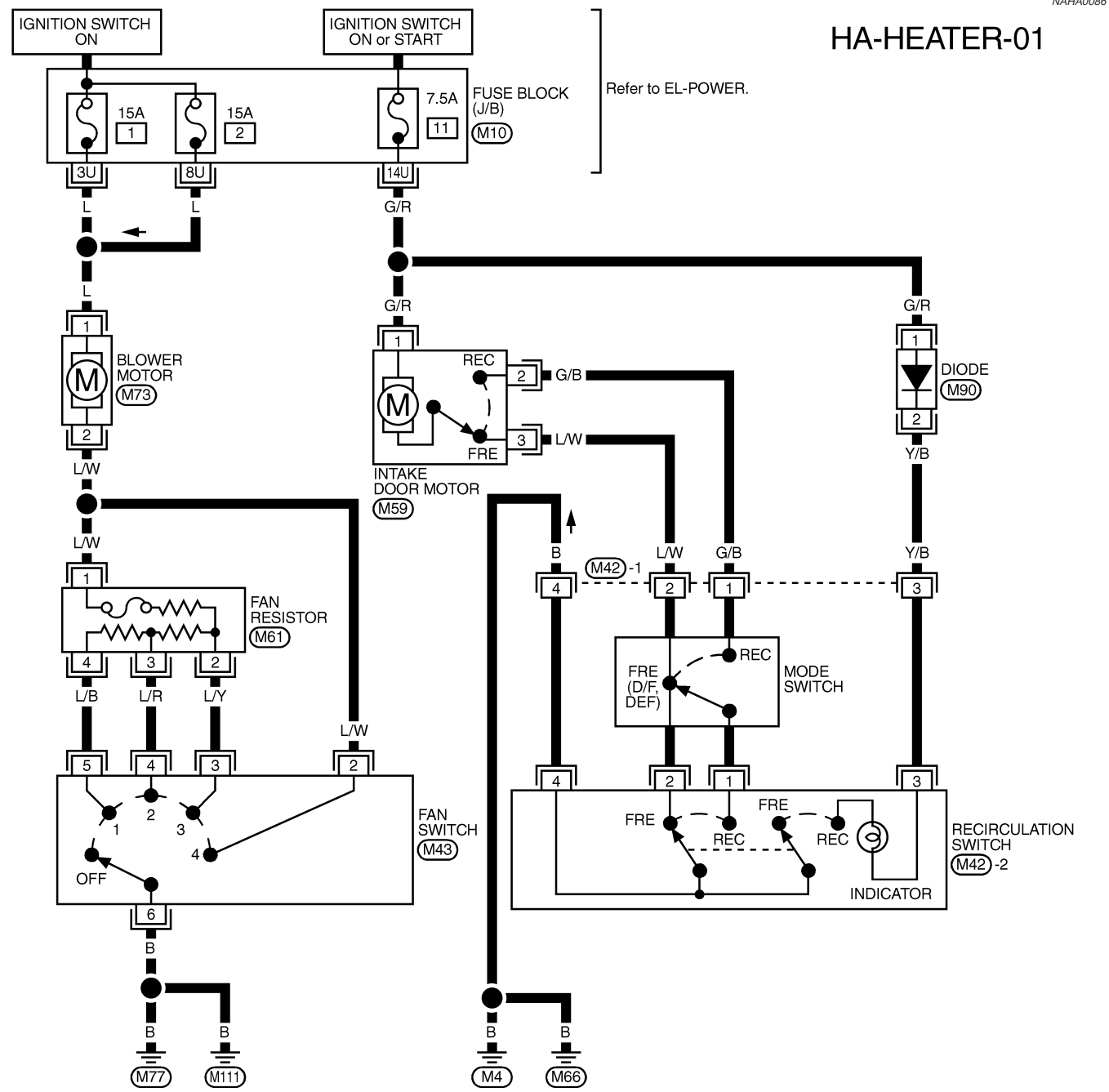

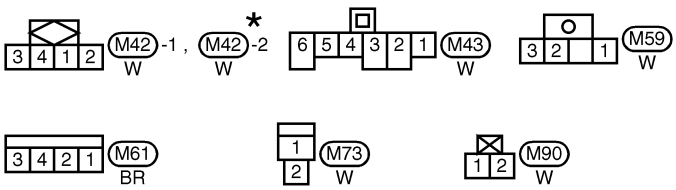

* : This connector is not shown in "HARNESS LAYOUT" of EL section.

Refer to last page (Foldout page).
M10

MHA886A

Circuit Diagram — Air Conditioner

NAHA0087

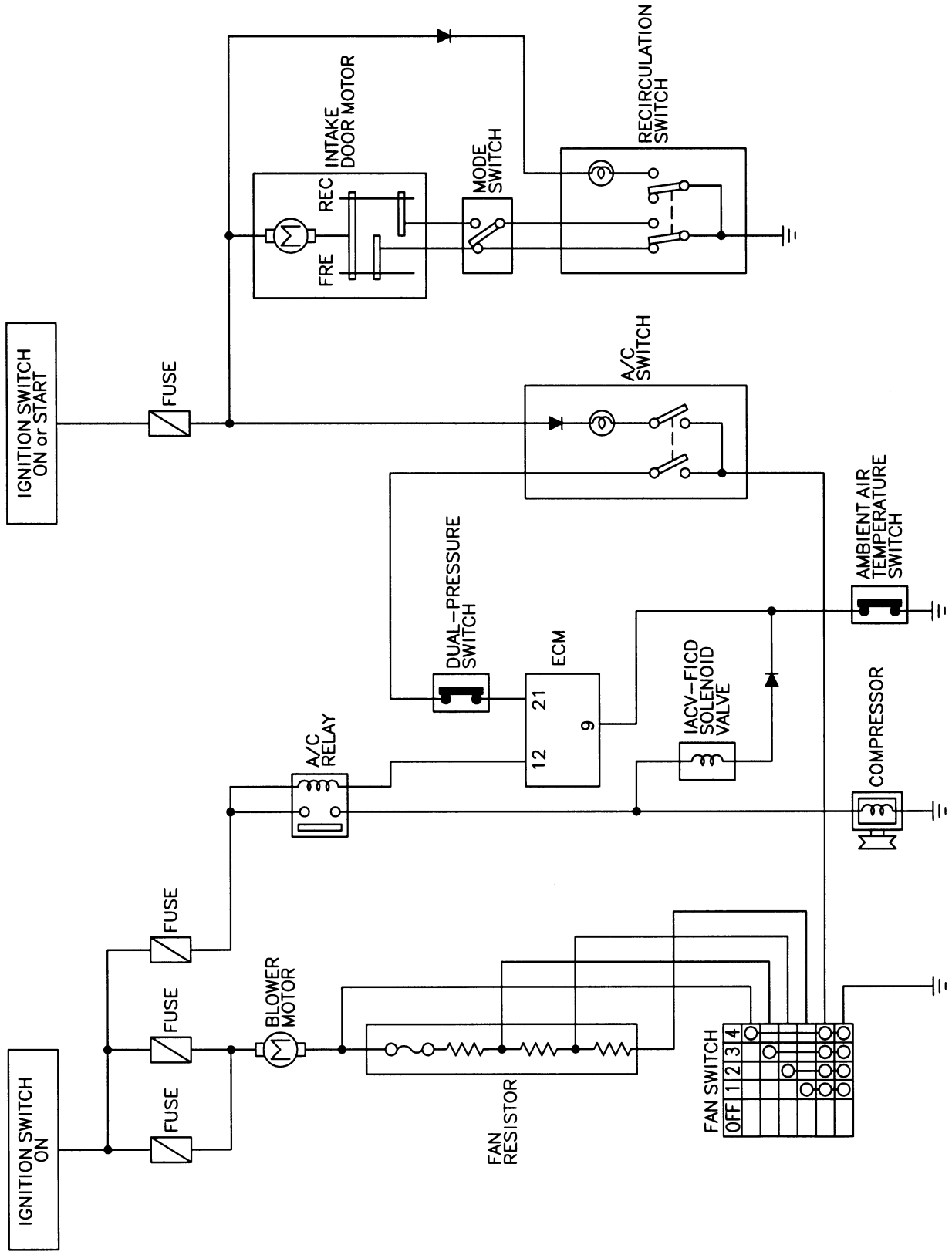

MHA887A

Wiring Diagram — A/C, M —

NAHA0088

HA-A/C,M-01

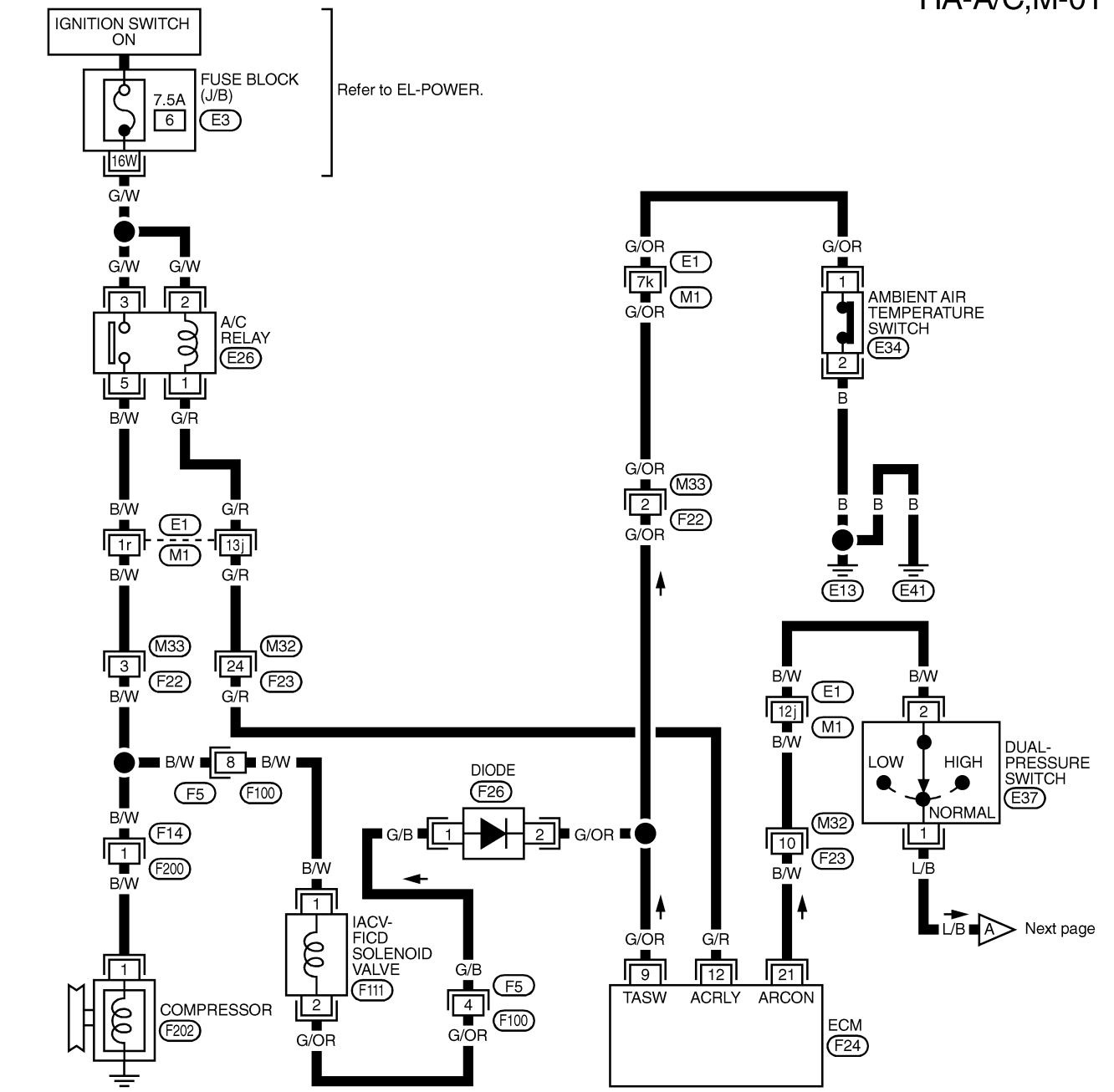

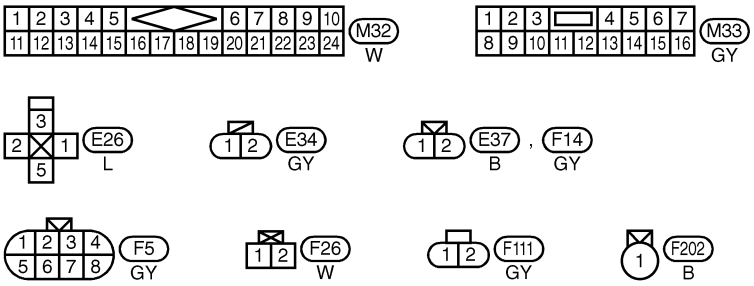

Refer to last page (Foldout page).
M1 , E1
E3
F24

MHA888A

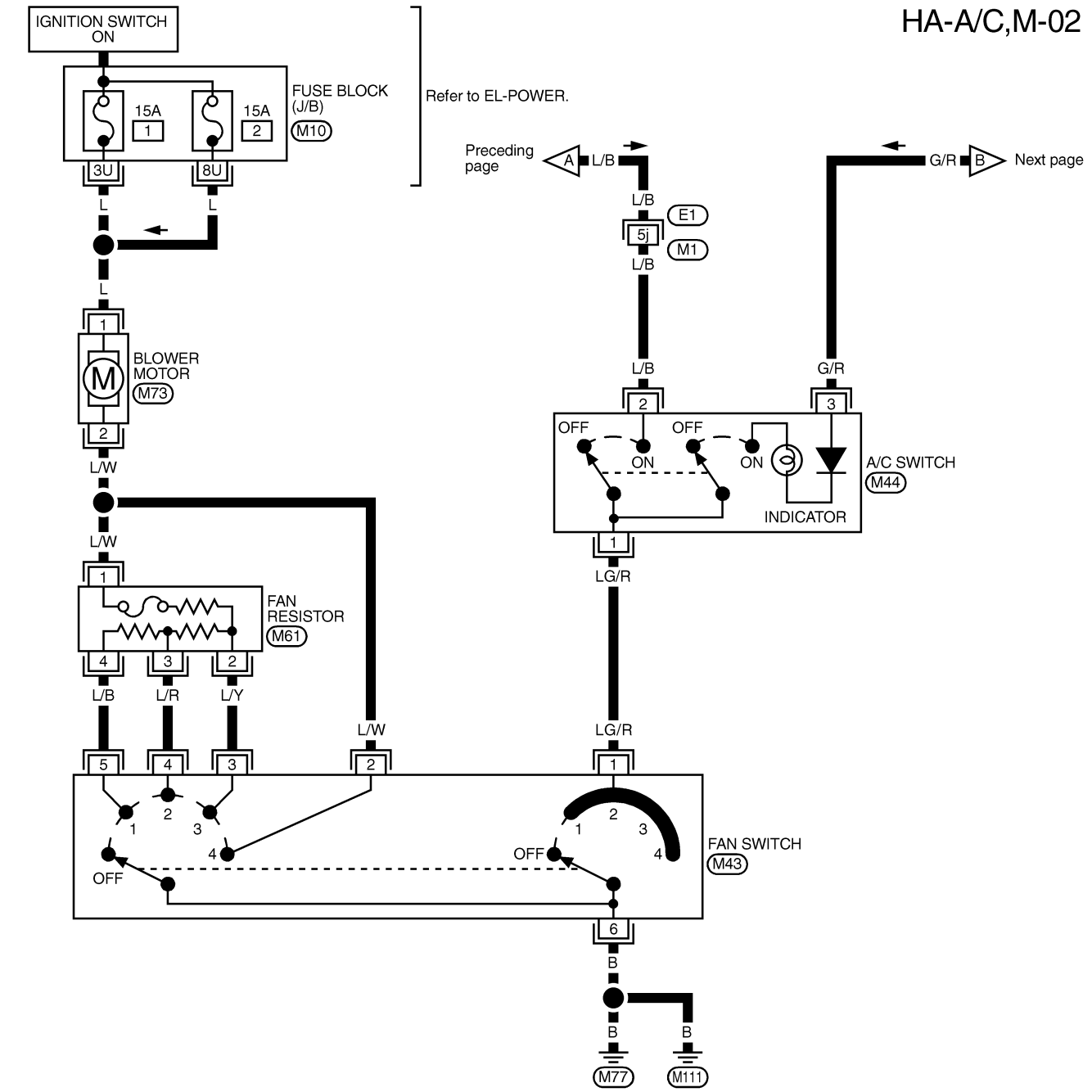

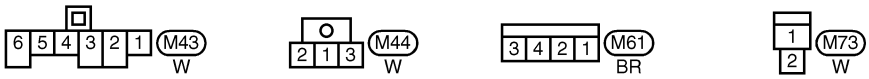

Refer to last page (Foldout page).
M1 , E1
M10

MHA889A

HA-A/C,M-03

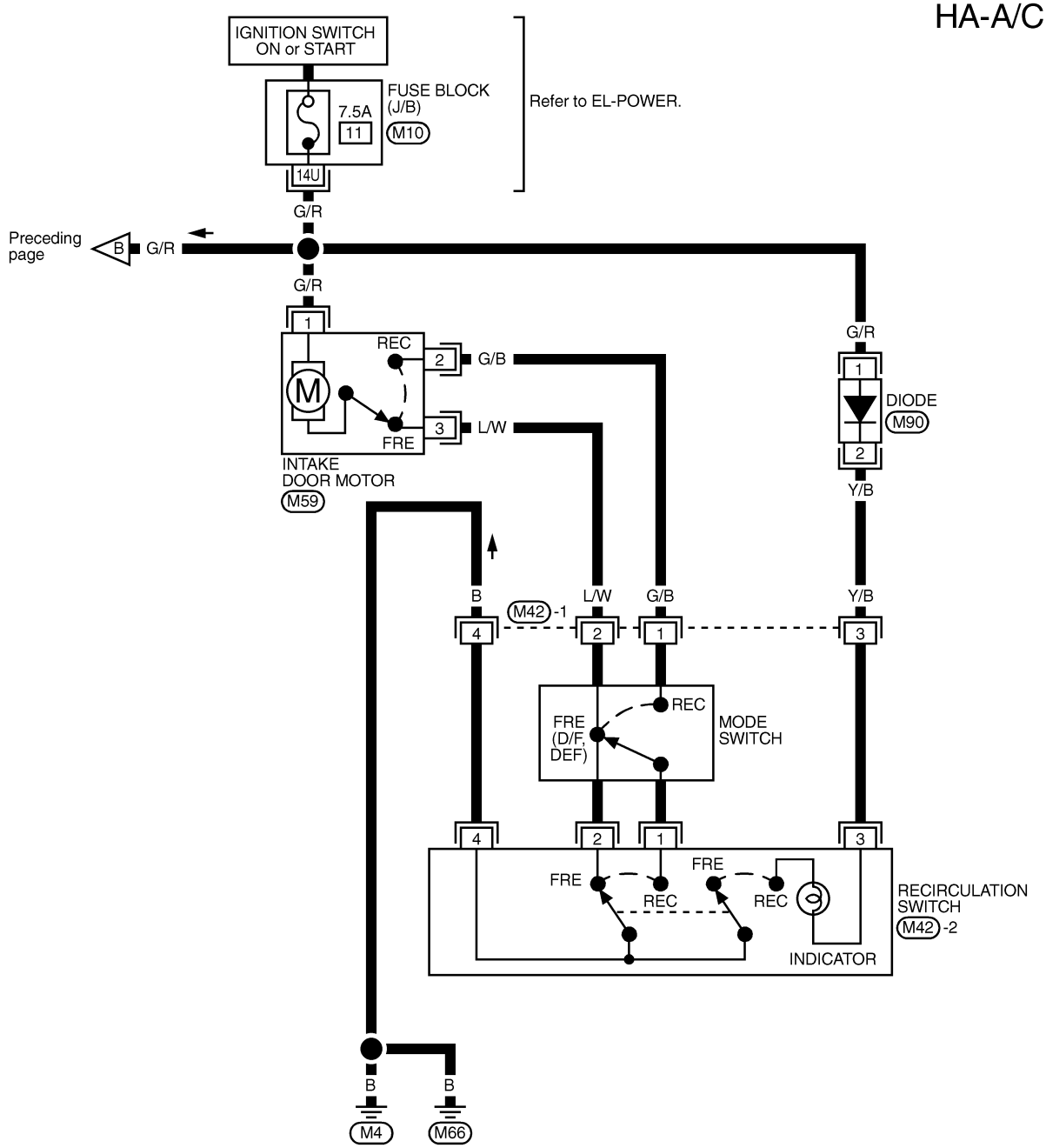

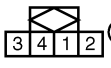

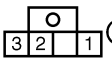

* : This connector is not shown in "HARNESS LAYOUT" of EL section.

Refer to last page (Foldout page).
M10

MHA892A

How to Perform Trouble Diagnoses for Quick and Accurate Repair

NAHA0075

WORK FLOW

NAHA0075S01

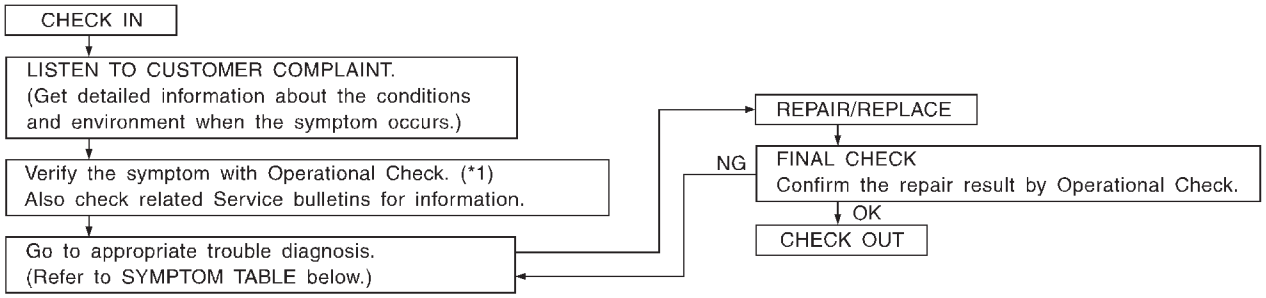

SHA900E

*1: HA-156

SYMPTOM TABLE

NAHA0075S02

Symptom	Reference page	
• Intake door does not change in VENT, B/L or FOOT mode.	• Go to Trouble Diagnosis Procedure for Intake Door.	HA-158
• Blower motor does not rotate at all.	• Go to Trouble Diagnosis Procedure for Blower Motor.	HA-165
• Insufficient cooling.	• Go to Trouble Diagnosis Procedure for Insufficient cooling.	HA-172
• Insufficient heating.	• Go to Trouble Diagnosis Procedure for Insufficient heating.	HA-180
• Air outlet does not change.	• Go to Trouble Diagnosis Procedure for Air Outlet.	HA-182
• Magnet clutch does not engage when A/C switch and fan switch are ON.	• Go to Trouble Diagnosis Procedure for Magnet Clutch.	HA-184
• Noise	• Go to Trouble Diagnosis Procedure for Noise.	HA-191

Operational Check

=NAHA0076

The purpose of the operational check is to confirm that the system operates as it should. The systems which are checked are the blower, mode (discharge air), intake air, temperature decrease, temperature increase.

CONDITIONS:

NAHA0076S01

Engine running at normal operating temperature.

PROCEDURE:

NAHA0076S02

1. Check Blower

NAHA0076S0201

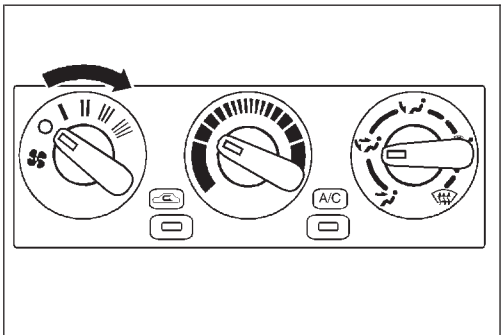

RHA652F

1. Turn fan control knob to 1-speed.
   Blower should operate on 1-speed.
2. Then turn fan control knob to 2-speed.
3. Continue checking blower speed until all four speeds are checked.
4. Leave blower on 4-speed.

2. Check Discharge Air

NAHA0076S0202

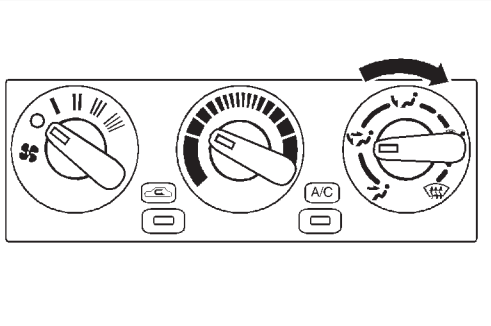

RHA653F

1. Turn mode control knob.

Discharge air flow

Mode control knob	Air outlet/distribution		
	Face	Foot	Defroster
	100%	–	–
	60%	40%	–
	–	80%	20%
	–	60%	40%
	–	–	100%

RHA654F

2. Confirm that discharge air comes out according to the air distribution table at left.
   Refer to “Discharge Air Flow” in “DESCRIPTION” (HA-146).

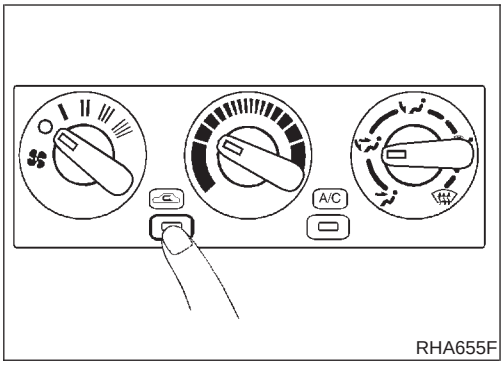

RHA655F

3. Check Recirculation

NAHA0076S0203

1. Press recirculation switch.
   Recirculation indicator should light.
2. Listen for intake door position change (you should hear blower sound change slightly).

NOTE:
Confirm that the RECIRCULATION (REC) switch is canceled in the DEF ( ) and D/F ( ) mode.

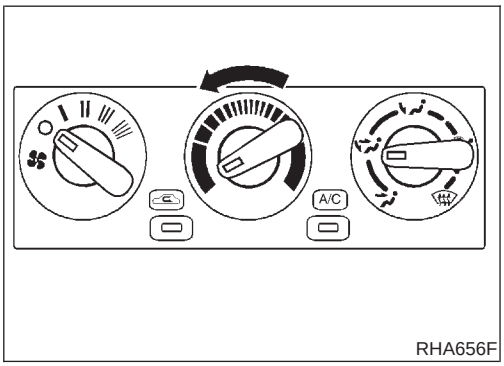

RHA656F

4. Check Temperature Decrease

NAHA0076S0204

1. Turn temperature control knob to full cold.
2. Check for cold air at discharge air outlets.

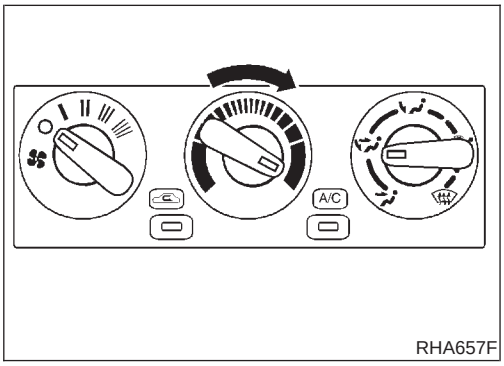

RHA657F

5. Check Temperature Increase

NAHA0076S0205

1. Turn temperature control knob to full hot.
2. Check for hot air at discharge air outlets.

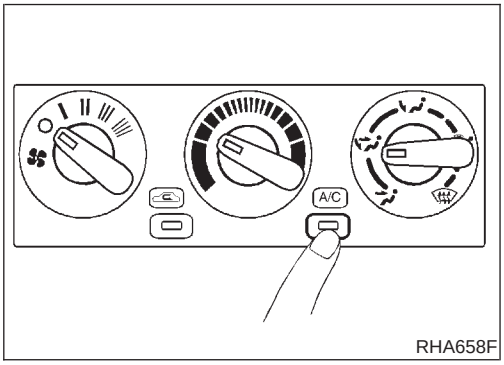

RHA658F

6. Check Air Conditioner Switch

NAHA0076S0206

Turn fan control knob to the desired (1 to 4-speed) position and push the air conditioner switch to turn ON the air conditioner.
The indicator light should come on when air conditioner is ON.

Intake Door

TROUBLE DIAGNOSIS PROCEDURE FOR INTAKE DOOR

=NAHA0135

Symptom:

- **Intake door does not change in VENT, B/L or FOOT mode.**

Inspection Flow

1. Confirm symptom by performing the following operational check.

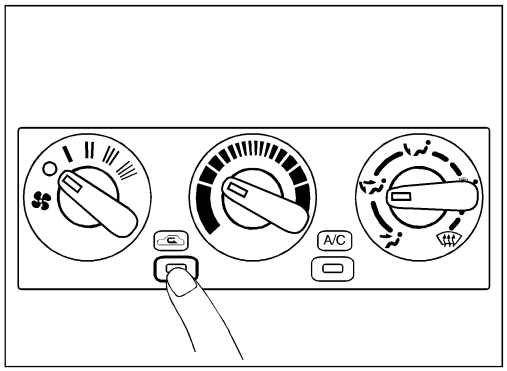

OPERATIONAL CHECK – Recirculation

1) Press recirculation switch.
   Recirculation indicator should light.
2) Listen for intake door position change (you should hear blower sound change slightly).

NOTE:
Confirm that the RECIRCULATION (REC) switch is canceled in the DEF ( ) and D/F ( ) mode.

2. Check for any service bulletins.

3. Check intake door motor circuit. (*1)

OK

If the symptom still exist, perform a complete operational check (*2) and check for other symptoms.
[Refer to symptom table, (*3).]
Does another symptom exist?

Yes → Go to Trouble Diagnosis for related symptom.
[Another symptom exists.]

→ INSPECTION END

SHA260F

*1: HA-160 *2: HA-156 *3: HA-155

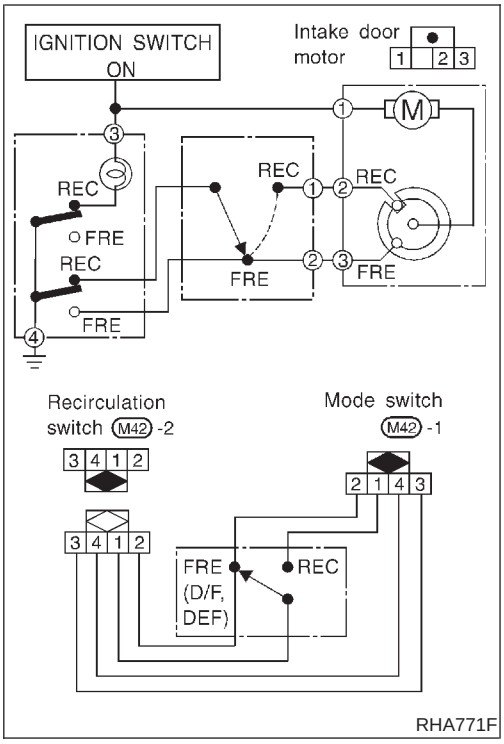

RHA771F

SYSTEM DESCRIPTION

NAHA0136

Intake Door Motor

NAHA0136S01

The intake door motor is installed on the intake unit. Using a link it opens and closes the intake door.

When RECIRCULATION switch is at REC (except DEF and D/F modes), the ground line of the motor is switched from intake door motor terminal 3 to 2. This starts the motor because the position switch contacts built into it make current flow. When RECIRCULATION switch is at FRE (except DEF and D/F modes), the ground line is switched from intake door motor terminal 2 to 3. The contacts turn along with the motor. When they reach the non-current flow position, the motor will stop. The motor always turns in the same direction.

RECIRCULATION switch is canceled by MODE switch in DEF and D/F modes.

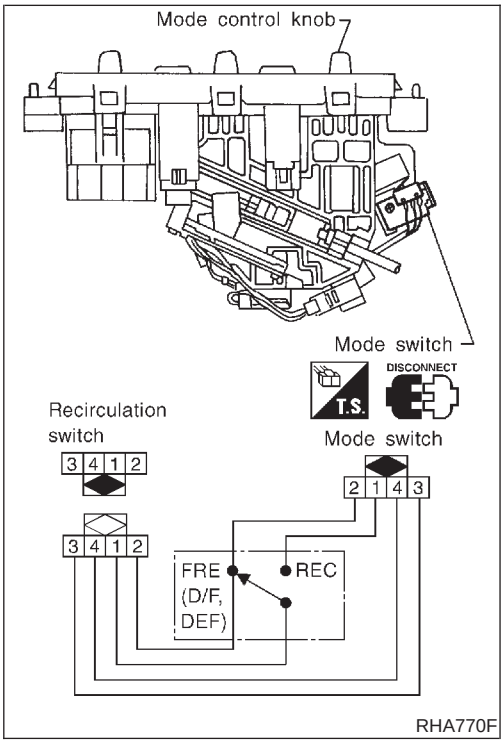

RHA770F

ELECTRICAL COMPONENTS INSPECTION

NAHA0137

Mode Switch

NAHA0137S01

Check continuity between terminals at each switch position.

Terminal No.		Mode control knob condition	Continuity
Mode switch (+)	Recirculation switch connector (−)		
1	1	VENT, B/L, FOOT	Yes
		D/F, DEF	No
2	1	VENT, B/L, FOOT	No
		D/F, DEF	Yes
2	2	All	Yes
3	3	All	Yes
3	3	All	Yes

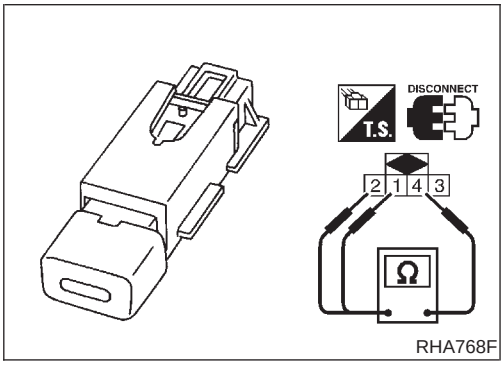

RHA768F

Recirculation Switch

NAHA0137S02

Check continuity between terminals at each switch position.

Terminal No.		Recirculation switch condition	Continuity
(+)	(−)		
1	4	REC	Yes
		FRE	No
2	4	REC	No
		FRE	Yes

INTAKE DOOR MOTOR CIRCUIT

=NAHA0090

SYMPTOM:

- **Intake door does not change in VENT, B/L or FOOT mode.**

1	CHECK POWER SUPPLY FOR INTAKE DOOR MOTOR

Disconnect intake door motor harness connector.
Do approx. 12 volts exist between intake door motor harness terminal No. 1 and body ground?

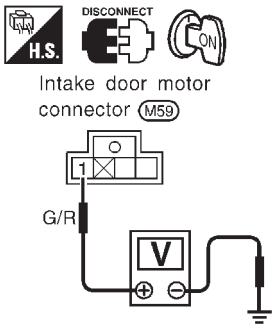

RHA350FA

Yes or No

Yes	▶	GO TO 2.
No	▶	Check 7.5A (No. 11) fuse at fuse block. (Refer to EL-14, "Wiring Diagram — POWER —".)

2	CHECK GROUND CIRCUIT FOR INTAKE DOOR MOTOR

Check continuity between intake door motor harness terminals and body ground.

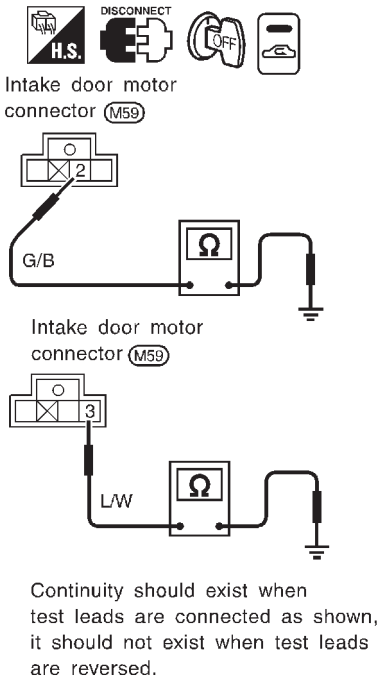

RHA580F

Recirculation switch condition	Terminal No. (+)	Terminal No. (–)	Continuity
REC	(2)	Body ground	Yes
	(3)		No
FRE	(2)		No
	(3)		Yes

MTBL0033

OK or NG

OK	▶	GO TO 3.
NG	▶	Disconnect mode switch harness connector. GO TO 4.

3	CHECK INTAKE DOOR LINKAGE

Refer to Control Linkage Adjustment.
(HA-164)

OK or NG

OK	▶	Replace intake door motor.
NG	▶	Repair or adjust.

4	CHECK CONTINUITY BETWEEN MODE SWITCH AND INTAKE DOOR MOTOR

Check circuit continuity between mode switch harness terminal No. 1 (2) and intake door motor harness terminal No. 2 (3).

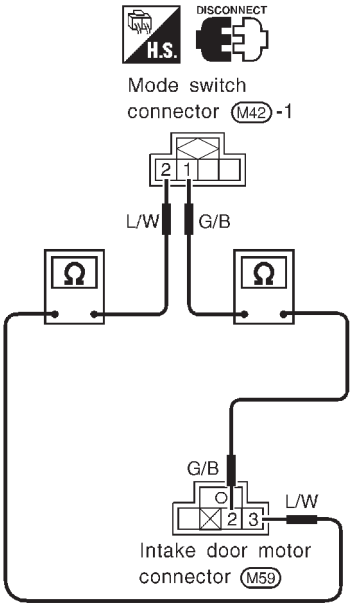

RHA581F

Continuity should exist.
If OK, check harness for short.

OK or NG

OK	▶	GO TO 5.
NG	▶	Repair harness or connector.

5	CHECK MODE SWITCH

(Refer to Electrical Components Inspection.)
(HA-159)

OK or NG

OK	▶	GO TO 6.
NG	▶	Replace mode switch.

6	CHECK CIRCUIT CONTINUITY BETWEEN MODE SWITCH AND RECIRCULATION SWITCH

Check circuit continuity between mode switch harness terminal No. 4 and recirculation switch harness terminal No. 4.

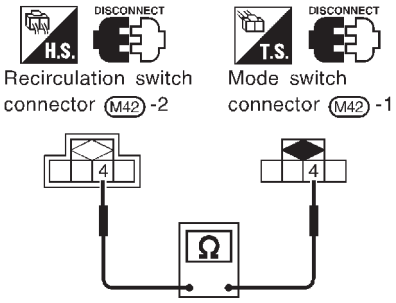

RHA769FB

Continuity should exist.
If OK, check harness for short.

OK or NG

OK	▶	GO TO 7.
NG	▶	Replace mode switch.

7	CHECK GROUND CIRCUIT FOR MODE SWITCH

Check circuit continuity between mode switch harness terminal No. 4 and body ground.

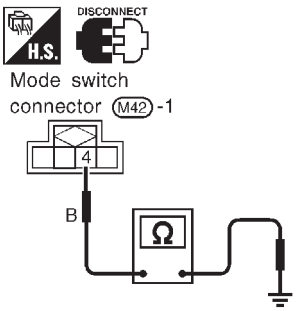

RHA582F

Continuity should exist.
If OK, check harness for short.

OK or NG

OK	▶	GO TO 8.
NG	▶	Repair harness or connector.

8	CHECK RECIRCULATION SWITCH

(Refer to Electrical Components Inspection.)
(HA-159)

OK or NG

OK	▶	INSPECTION END
NG	▶	Replace recirculation switch.

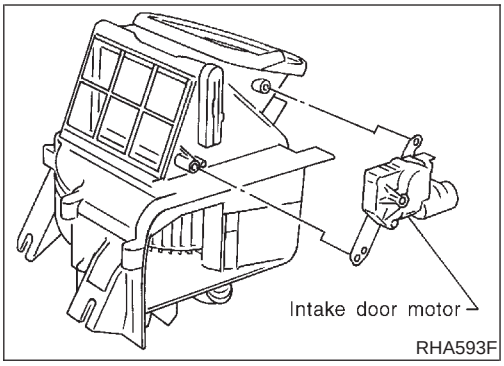

CONTROL LINKAGE ADJUSTMENT

NAHA0093

Intake Door Motor

NAHA0093S04

1. Install intake door motor on intake unit.
   Ensure that the intake door motor lever is fitted into the slit portion of intake door link.
2. Connect the intake door motor harness connector.
3. Turn ignition switch to ON.
4. Check that intake door operates properly when RECIRCULATION switch is turned ON and OFF.

Blower Motor

TROUBLE DIAGNOSIS PROCEDURE FOR BLOWER MOTOR

=NAHA0138

Symptom:

- **Blower motor does not rotate at all.**

Inspection Flow

1. Confirm symptom by performing the following operational check.

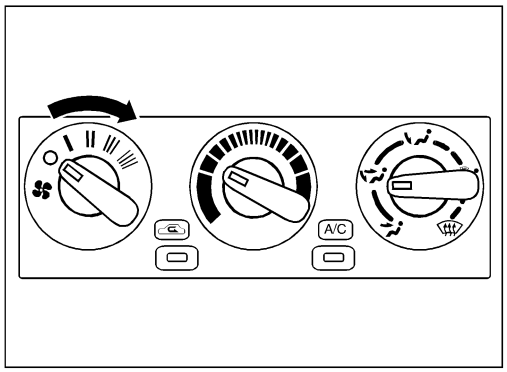

OPERATIONAL CHECK – Blower motor

1) Turn fan control knob to 1-speed.
   Blower should operate on 1-speed.
2) Then turn fan control knob to 2-speed.
3) Continue checking blower speed until all four speeds are checked.
4) Leave blower on 4-speed.

2. Check for any service bulletins.

3. Check blower motor circuit. (*1)

OK

If the symptom still exist, perform a complete operational check (*2) and check for other symptoms.
[Refer to symptom table, (*3).]
Does another symptom exist?

Yes → Go to Trouble Diagnosis for related symptom.
[Another symptom exists.]

→ INSPECTION END

SHA261F

*1: HA-167 *2: HA-156 *3: HA-155

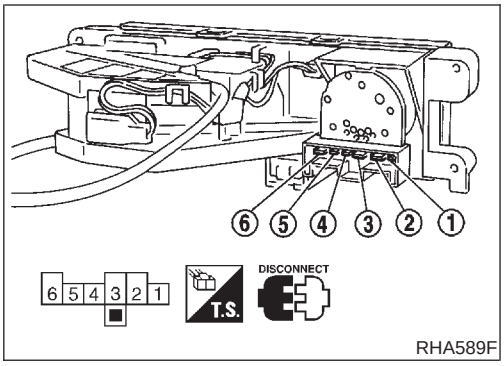

ELECTRICAL COMPONENTS INSPECTION

=NAHA0139

Fan Switch

NAHA0139S01

Check continuity between terminals at each switch position.

KNOB POSITION	Continuity between terminals
OFF	No continuity
1	5 — 1 — 6
2	4 — 1 — 6
3	3 — 1 — 6
4	2 — 1 — 6

Blower Motor

NAHA0139S02

Confirm smooth rotation of the blower motor.

- Ensure that there are no foreign particles inside the intake unit.

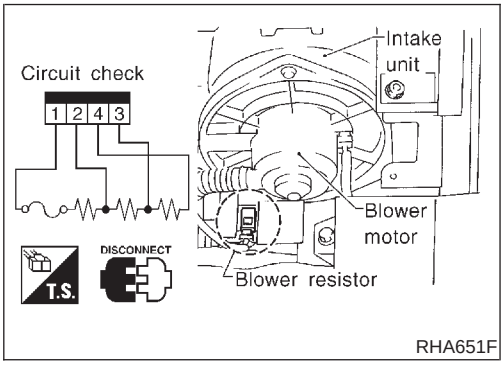

Blower Resistor

NAHA0139S03

Check resistance between terminals.

Terminal No.		Resistance
(+)	(−)	
3	1	Approx. 1.4 - 1.6Ω
4		Approx. 2.5 - 2.8Ω
2		Approx. 0.5 - 0.6Ω

BLOWER MOTOR CIRCUIT

=NAHA0089

SYMPTOM:

- **Blower motor does not rotate.**

Test group No.	INCIDENT
1	Fan fails to rotate.
2	Fan does not rotate at 1-speed.
3	Fan does not rotate at 2-speed.
4	Fan does not rotate at 3-speed.
5	Fan does not rotate at 4-speed.

1	**DIAGNOSTIC PROCEDURE**	
Check if blower motor rotates properly at each fan speed. Conduct checks as per table at above.		
1	▶	GO TO 2.
2, 3, 4	▶	GO TO 8.
5	▶	GO TO 10.

2	**CHECK POWER SUPPLY FOR BLOWER MOTOR**	
1. Disconnect blower motor harness connector. 2. Do approx. 12 volts exist between blower motor harness terminal No. 1 and body ground?		

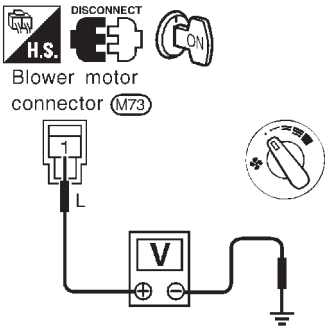

RHA343FA

Yes or No

Yes	▶	GO TO 3.
No	▶	Check 15A (Nos. 1 and No. 2) fuses at fuse block. (Refer to EL-14, "Wiring Diagram — POWER".)

3	CHECK CIRCUIT CONTINUITY FOR BLOWER MOTOR

1. Turn fan control knob to any position except OFF.
2. Check circuit continuity between blower motor harness terminal No. 2 and body ground.

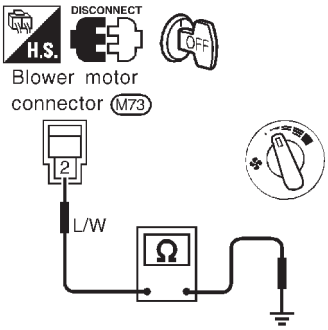

RHA344FA

Continuity should exist.

OK or NG

OK	▶	GO TO 4.
NG	▶	Reconnect blower motor harness connector. GO TO 5.

4	CHECK BLOWER MOTOR

(Refer to Electrical Components Inspection.)
(HA-166)

OK or NG

OK	▶	INSPECTION END
NG	▶	Replace blower motor.

5	CHECK BLOWER MOTOR CIRCUIT BETWEEN BLOWER MOTOR AND RESISTOR

Do approx. 12 volts exist between resistor harness terminal No. 1 and body ground?

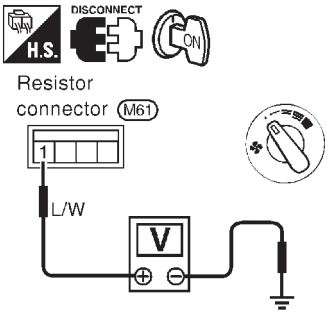

RHA575F

Yes or No

Yes	▶	Disconnect fan switch harness connector. GO TO 7.
No	▶	Disconnect blower motor and resistor harness connectors. GO TO 6.

6	CHECK CIRCUIT CONTINUITY BETWEEN BLOWER MOTOR AND RESISTOR

Check circuit continuity between blower motor harness terminal No. 2 and resistor harness terminal No. 1.

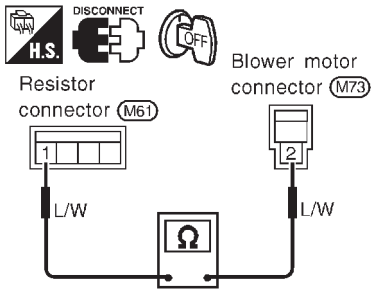

RHA576F

Continuity should exist.

OK or NG

OK	▶	Check harness for short.
NG	▶	Repair harness or connector.

7	CHECK GROUND CIRCUIT FOR FAN SWITCH

Check circuit continuity between fan switch harness terminal No. 6 and body ground.

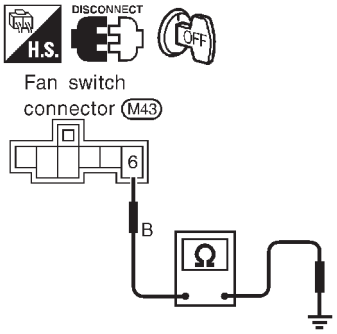

RHA577F

OK or NG

OK	▶	GO TO 8.
NG	▶	Repair harness or connector.

8	CHECK RESISTOR AFTER DISCONNECTING IT

(Refer to Electrical Components Inspection.)
(HA-166)

OK or NG

OK	▶	GO TO 9.
NG	▶	Replace resistor.

9	CHECK RESISTOR HARNESS CONNECTOR

Reconnect resistor harness connector.

OK or NG

1	▶	GO TO 12.
2, 3, 4	▶	GO TO 10.

10	CHECK FAN SWITCH CIRCUIT

Do approx. 12 volts exist between each fan switch harness terminal and body ground?

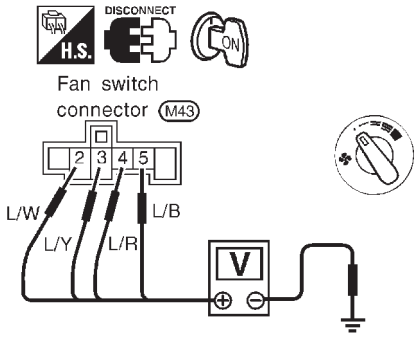

RHA578F

Test group No.	Terminal No. (+)	Terminal No. (–)	Voltage
2	(5)	Body ground	Approx. 12V
3	(4)		
4	(3)		
5	(2)		

MTBL0310

Yes or No

Yes	▶	GO TO 12.
No	▶	GO TO 11.

11	CHECK CIRCUIT CONTINUITY BETWEEN FAN SWITCH AND RESISTOR

Check circuit continuity between fan switch harness terminal and resistor harness terminal.

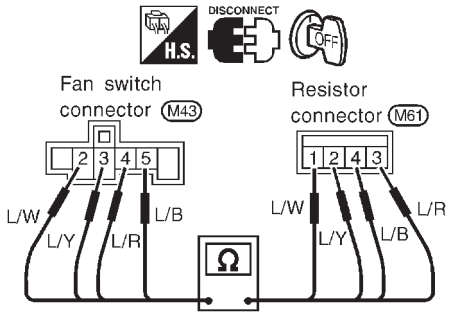

RHA579F

Terminal No.		Continuity
Fan Switch	Resistor	
(2)	(1)	Yes
(3)	(2)	
(4)	(3)	
(5)	(4)	

MTBL0032

Continuity should exist.

OK or NG

OK	▶	Check harness for short.
NG	▶	Repair harness or connector.

12	CHECK FAN SWITCH AFTER DISCONNECTING IT

(Refer to Electrical Components Inspection.)
(HA-166)

OK or NG

OK	▶	INSPECTION END
NG	▶	Replace fan switch.

Insufficient Cooling

TROUBLE DIAGNOSIS PROCEDURE FOR INSUFFICIENT COOLING

=NAHA0150

Symptom:

- **Insufficient Cooling.**

Inspection Flow

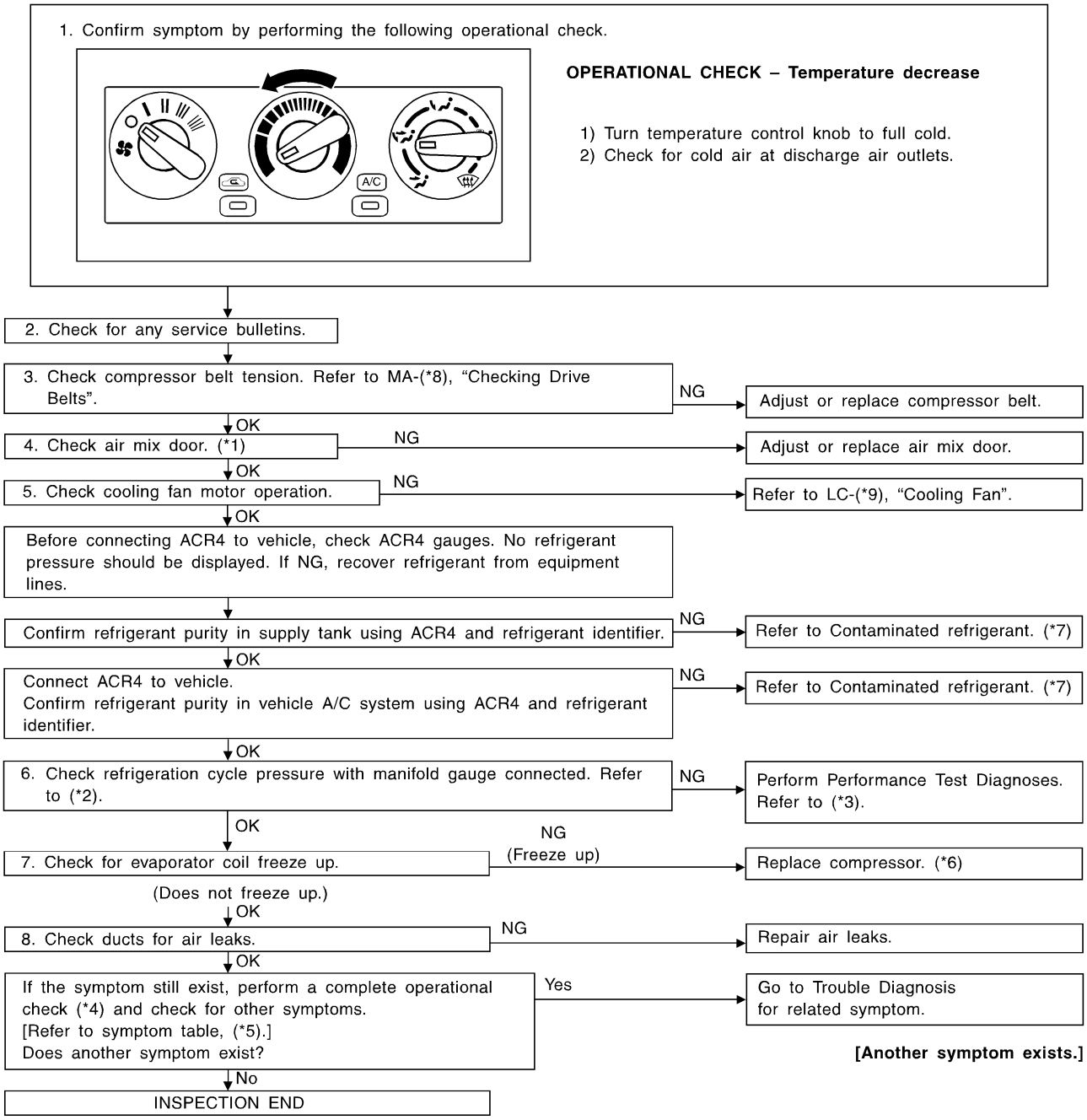

SHA262FA

*1: HA-181	*4: HA-156	*7: HA-126
*2: HA-175	*5: HA-155	*8: MA-15
*3: HA-173	*6: HA-197	*9: LC-16

PERFORMANCE TEST DIAGNOSES

NAHA0082

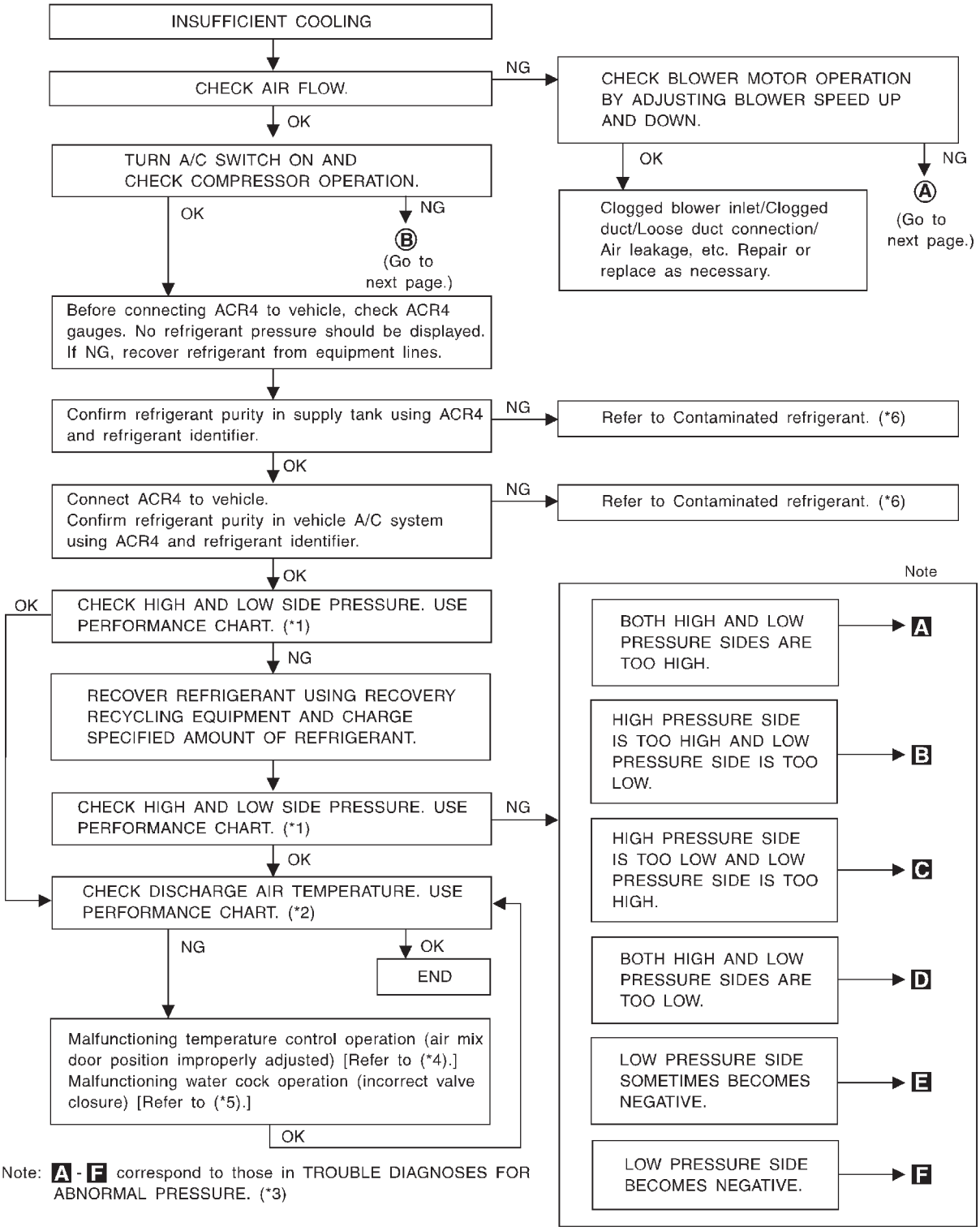

Note: A - F correspond to those in TROUBLE DIAGNOSES FOR ABNORMAL PRESSURE. (*3)

SHA194F

*1: HA-175
*2: HA-175
*3: HA-175
*4: HA-181
*5: HA-181
*6: HA-126

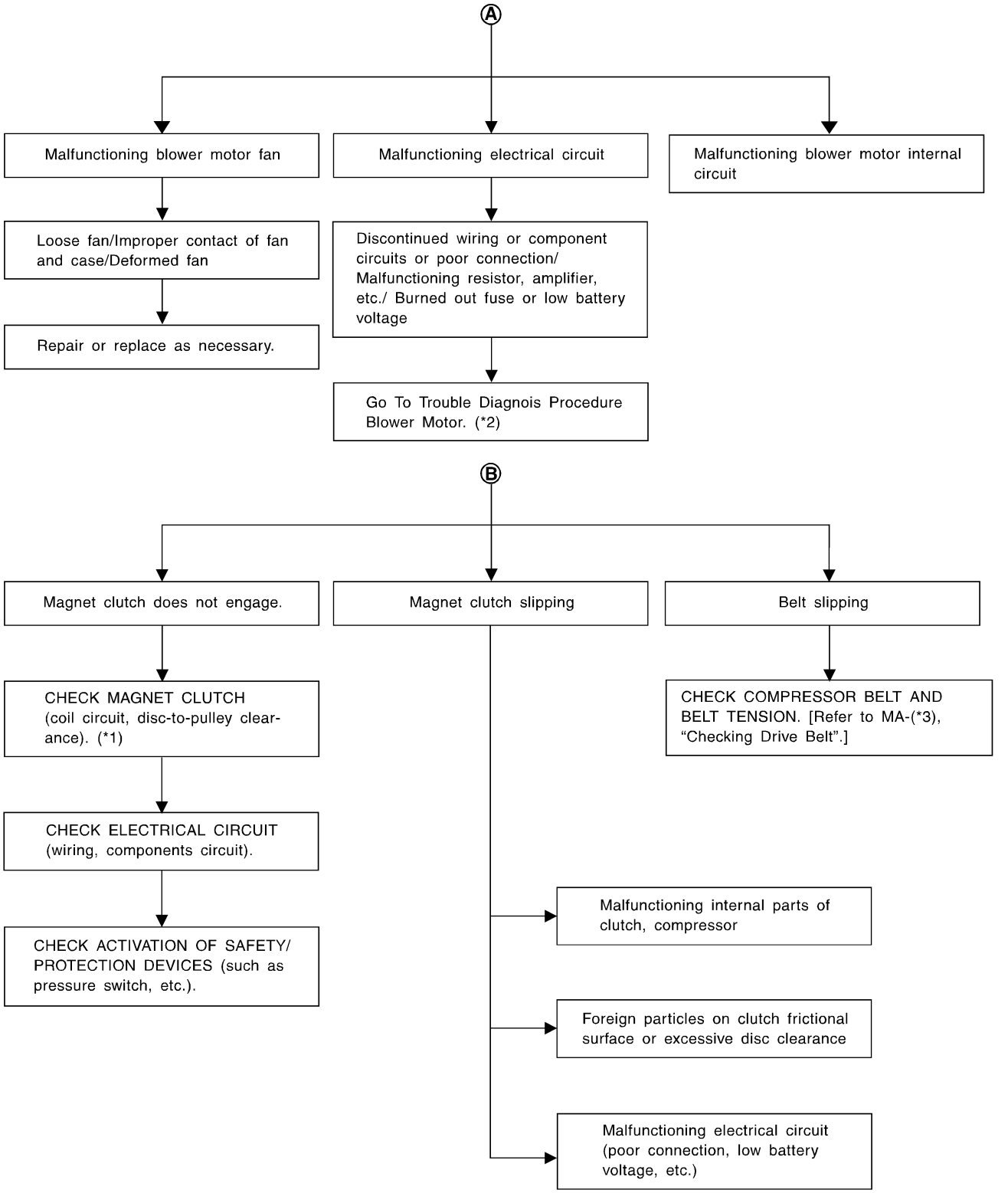

*1: HA-199 *2: HA-165 *3: MA-15

PERFORMANCE CHART

=NAHA0083

Test Condition

NAHA0083S01

Testing must be performed as follows:

Vehicle location	Indoors or in the shade (in a well-ventilated place)
Doors	Closed
Door windows	Open
Hood	Open
TEMP.	Max. COLD
Discharge Air	Face (Ventilation) set
REC switch	(Recirculation) set
FAN speed	High speed
Engine speed	Idle speed
Operate the air conditioning system for 10 minutes before taking measurements.	

Test Reading

NAHA0083S02

Recirculating-to-discharge Air Temperature Table

NAHA0083S0201

Inside air (Recirculating air) at blower assembly inlet		Discharge air temperature at center ventilator °C (°F)
Relative humidity %	Air temperature °C (°F)	
50 - 60	25 (77)	6.0 - 9.0 (43 - 48)
	30 (86)	10.0 - 13.6 (50 - 56)
	35 (95)	15.2 - 19.5 (59 - 67)
	40 (104)	22.5 - 27.1 (73 - 81)
60 - 70	25 (77)	9.0 - 12.2 (48 - 54)
	30 (86)	13.6 - 17.2 (56 - 63)
	35 (95)	19.5 - 23.7 (67 - 75)
	40 (104)	27.1 - 32.3 (81 - 90)

Ambient Air Temperature-to-operating Pressure Table

NAHA0083S0202

Ambient air		High-pressure (Discharge side) kPa (kg/cm^2, psi)	Low-pressure (Suction side) kPa (kg/cm^2, psi)
Relative humidity %	Air temperature °C (°F)		
50 - 70	25 (77)	1,226 - 1,638 (12.5 - 16.7, 178 - 237)	172 - 250 (1.75 - 2.55, 25 - 36)
	30 (86)	1,422 - 1,883 (14.5 - 19.2, 206 - 273)	196 - 275 (2.0 - 2.8, 28 - 40)
	35 (95)	1,657 - 2,187 (16.9 - 22.3, 240 - 317)	231 - 309 (2.35 - 3.15, 33 - 45)
	40 (104)	1,922 - 2,501 (19.6 - 25.5, 279 - 363)	280 - 373 (2.85 - 3.8, 41 - 54)

TROUBLE DIAGNOSES FOR ABNORMAL PRESSURE

NAHA0084

Whenever system's high and/or low side pressure is abnormal, diagnose using a manifold gauge. The marker above the gauge scale in the following tables indicates the standard (normal) pressure range. Since the standard (normal) pressure, however, differs from vehicle to vehicle, refer to HA-175 ("Ambient air temperature-to-operating pressure table").

Both High- and Low-pressure Sides are Too High.

NAHA0084S01

Gauge indication	Refrigerant cycle	Probable cause	Corrective action
Both high- and low-pressure sides are too high. A 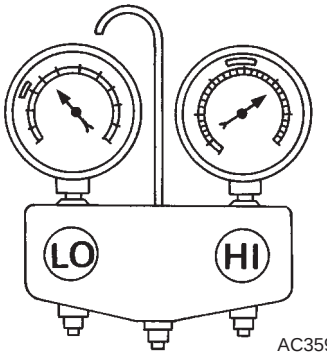 AC359A	● Pressure is reduced soon after water is splashed on condenser.	Excessive refrigerant charge in refrigeration cycle	Reduce refrigerant until specified pressure is obtained.
	Air suction by cooling fan is insufficient.	Insufficient condenser cooling performance ↓ 1. Condenser fins are clogged. 2. Improper fan rotation of cooling fan	● Clean condenser. ● Check and repair cooling fan as necessary.
	● Low-pressure pipe is not cold. ● When compressor is stopped high-pressure value quickly drops by approximately 196 kPa (2 kg/cm^2, 28 psi). It then decreases gradually thereafter.	Poor heat exchange in condenser (After compressor operation stops, high pressure decreases too slowly.) ↓ Air in refrigeration cycle	Evacuate repeatedly and recharge system.
	Engine tends to overheat.	Engine cooling systems malfunction.	Check and repair each engine cooling system.
	● An area of the low-pressure pipe is colder than areas near the evaporator outlet. ● Plates are sometimes covered with frost.	● Excessive liquid refrigerant on low-pressure side ● Excessive refrigerant discharge flow ● Expansion valve is open a little compared with the specification. ↓ 1. Improper thermal valve installation 2. Improper expansion valve adjustment	Replace expansion valve.

High-pressure Side is Too High and Low-pressure Side is Too Low.

NAHA0084S02

Gauge indication	Refrigerant cycle	Probable cause	Corrective action
High-pressure side is too high and low-pressure side is too low. B 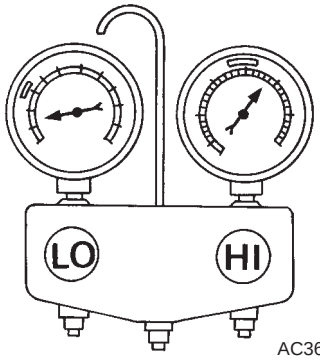 AC360A	Upper side of condenser and high-pressure side are hot, however, liquid tank is not so hot.	High-pressure tube or parts located between compressor and condenser are clogged or crushed.	● Check and repair or replace malfunctioning parts. ● Check lubricant for contamination.

High-pressure Side is Too Low and Low-pressure Side is Too High.

NAHA0084S03

Gauge indication	Refrigerant cycle	Probable cause	Corrective action
High-pressure side is too low and low-pressure side is too high. C 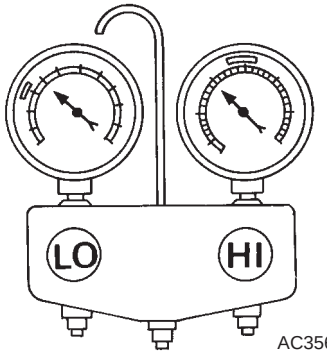 AC356A	High and low-pressure sides become equal soon after compressor operation stops.	Compressor pressure operation is improper. ↓ Damaged inside compressor packings	Replace compressor.
	No temperature difference between high and low-pressure sides	Compressor pressure operation is improper. ↓ Damaged inside compressor packings.	Replace compressor.

Both High- and Low-pressure Sides are Too Low.

NAHA0084S04

Gauge indication	Refrigerant cycle	Probable cause	Corrective action
Both high- and low-pressure sides are too low. D 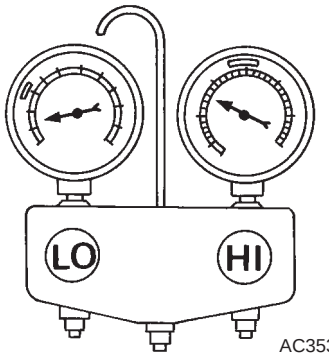 AC353A	• There is a big temperature difference between receiver drier outlet and inlet. Outlet temperature is extremely low. • Liquid tank inlet and expansion valve are frosted.	Compressor discharge capacity does not change. (Compressor stroke is set at maximum.)	• Replace liquid tank. • Check lubricant for contamination.
	• Temperature of expansion valve inlet is extremely low as compared with areas near liquid tank. • Expansion valve inlet may be frosted. • Temperature difference occurs somewhere in high-pressure side	High-pressure pipe located between receiver drier and expansion valve is clogged.	• Check and repair malfunctioning parts. • Check lubricant for contamination.
	• Expansion valve and liquid tank are warm or only cool when touched.	Low refrigerant charge ↓ Leaking fittings or components	Check refrigerant for leaks. Refer to "Checking Refrigerant Leaks", HA-202.
	There is a big temperature difference between expansion valve inlet and outlet while the valve itself is frosted.	Expansion valve closes a little compared with the specification. ↓ 1. Improper expansion valve adjustment 2. Malfunctioning thermal valve 3. Outlet and inlet may be clogged.	• Remove foreign particles by using compressed air. • Check lubricant for contamination.
	An area of the low-pressure pipe is colder than areas near the evaporator outlet.	Low-pressure pipe is clogged or crushed.	• Check and repair malfunctioning parts. • Check lubricant for contamination.
	Air flow volume is not enough or is too low.	Evaporator is frozen. ↓ Compressor discharge capacity does not change. (Compressor stroke is set at maximum length.)	Replace compressor.

Low-pressure Side Sometimes Becomes Negative.

NAHA0084S05

Gauge indication	Refrigerant cycle	Probable cause	Corrective action
Low-pressure side sometimes becomes negative. **E** 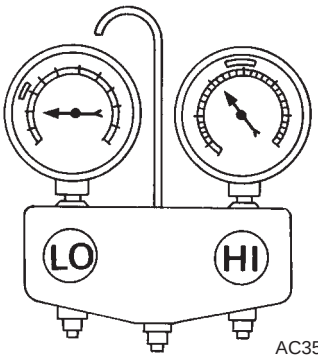 AC354A	• Air conditioning system does not function and does not cyclically cool the compartment air. • The system constantly functions for a certain period of time after compressor is stopped and restarted.	Refrigerant does not discharge cyclically. ↓ Moisture is frozen at expansion valve outlet and inlet. ↓ Water is mixed with refrigerant.	• Drain water from refrigerant or replace refrigerant. • Replace liquid tank.

Low-pressure Side Becomes Negative.

NAHA0084S06

Gauge indication	Refrigerant cycle	Probable cause	Corrective action
Low-pressure side becomes negative. **F** 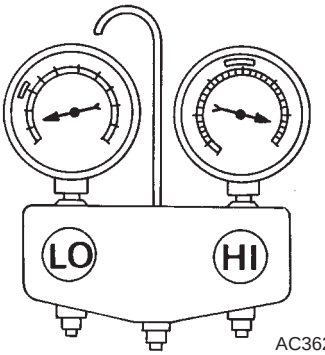 AC362A	Liquid tank or front/rear side of expansion valve's pipe is frosted or dewed.	High-pressure side is closed and refrigerant does not flow. ↓ Expansion valve or liquid tank is frosted.	Leave the system at rest until no frost is present. Start it again to check whether or not the problem is caused by water or foreign particles. • If water is the cause, initially cooling is okay. Then the water freezes causing a blockage. Drain water from refrigerant or replace refrigerant. • If due to foreign particles, remove expansion valve and remove particles with dry and compressed air (not shop air). • If either of the above methods cannot correct the problem, replace expansion valve. • Replace liquid tank. • Check lubricant for contamination.

Insufficient Heating

TROUBLE DIAGNOSIS PROCEDURE FOR INSUFFICIENT HEATING

=NAHA0140

Symptom:

- **Insufficient Heating.**

Inspection Flow

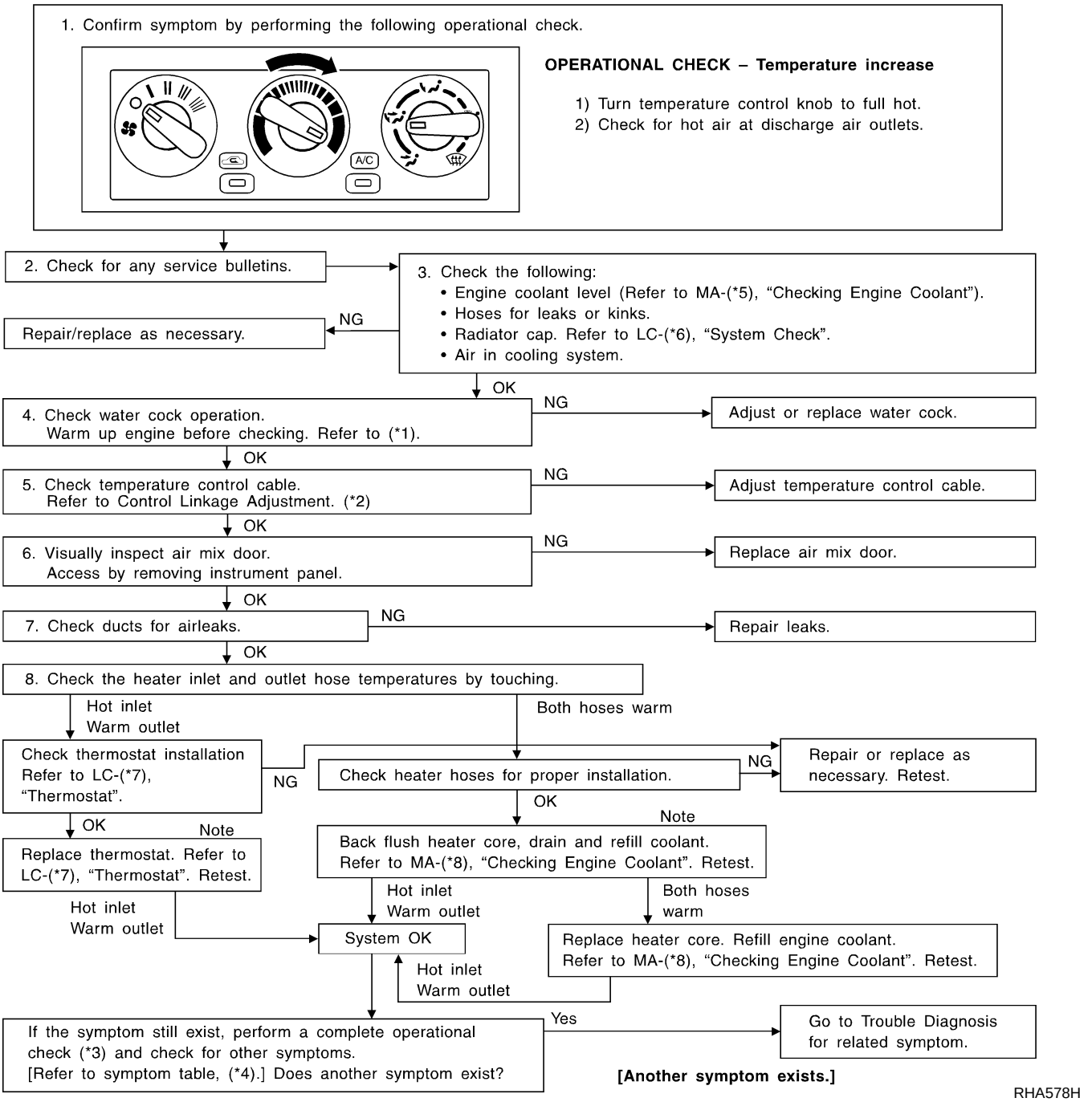

*1: HA-181
*2: HA-181
*3: HA-156
*4: HA-155
*5: MA-16
*6: LC-8
*7: LC-11
*8: MA-16

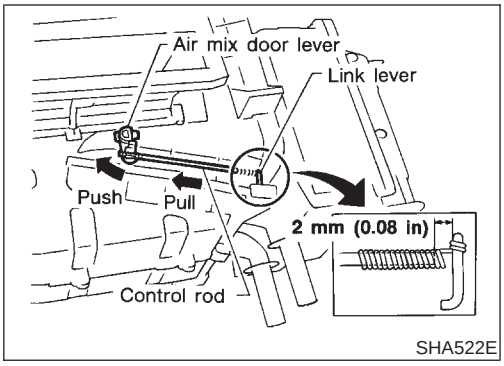

CONTROL LINKAGE ADJUSTMENT

NAHA0141

Water Cock Control Rod

NAHA0141S01

- **When adjusting water cock control rod, first disconnect temperature control cable from air mix door lever and then adjust control rod. Reconnect temperature control cable and readjust it. (Refer to TEMPERATURE CONTROL CABLE.)**

1. Push air mix door lever in direction of arrow.
2. Pull control rod of water cock in direction of arrow so as to make clearance of about 2 mm (0.08 in) between ends of rod and link lever and connect the rod to door lever.

After connecting control rod, check it operates properly.

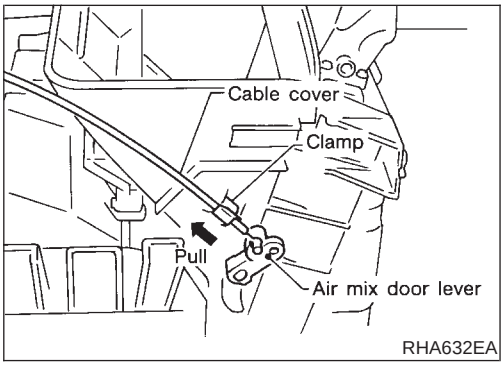

Temperature Control Cable

NAHA0141S02

1. Move the temperature control knob to the full hot position.
2. Set the air mix door lever in the full hot position.
3. Pull on the cable cover in the direction of the arrow, then clamp it.

After positioning control cable, check that it operates properly.

Air Outlet

TROUBLE DIAGNOSIS PROCEDURE FOR AIR OUTLET

=NAHA0142

Symptom:

- **Air outlet does not change.**

Inspection Flow

1. Confirm symptom by performing the following operational check.

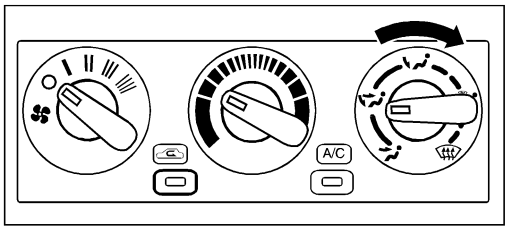

OPERATIONAL CHECK – Discharge air.

1) Turn mode control knob.

2) Confirm that discharge air comes out according to the air distribution table at left.
Refer to "Discharge Air Flow" in "DESCRIPTION" (*4).

Discharge air flow

Mode control knob	Air outlet/distribution		
	Face	Foot	Defroster
	100%	–	–
	60%	40%	–
	–	80%	20%
	–	60%	40%
	–	–	100%

2. Check for any service bulletins.

3. Check mode control cable. (*1)

OK

If the symptom still exist, perform a complete operational check (*2) and check for other symptoms.
[Refer to symptom table, (*3).]
Does another symptom exist?

Yes → Go to Trouble Diagnosis for related symptom.
[Another symptom exists.]

No → INSPECTION END

SHA263F

*1: HA-183
*2: HA-156
*3: HA-155
*4: HA-146

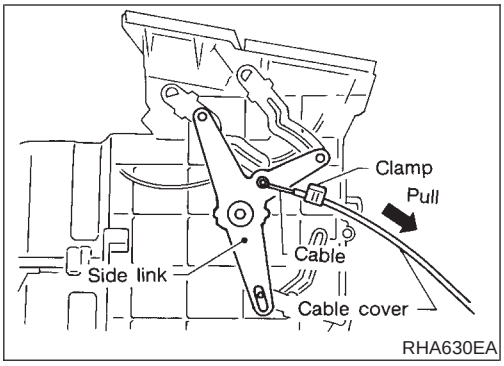

CONTROL LINKAGE ADJUSTMENT

NAHA0151

Mode Control Cable

NAHA0151S01

1. Turn the mode control knob to the DEF position.
2. Set the side link in the DEF position by hand.
3. Pull on the cable cover in the direction of the arrow, then clamp it.

After positioning control cable, check that it operates properly.

Magnet Clutch

TROUBLE DIAGNOSIS PROCEDURE FOR MAGNET CLUTCH

=NAHA0119

Symptom:

- **Magnet clutch does not operate when A/C switch and fan switch are ON.**

Inspection Flow

1. Confirm symptom by performing the following operational check.

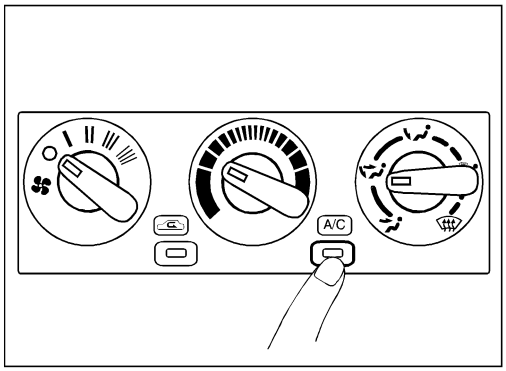

OPERATIONAL CHECK – A/C switch

Turn fan control knob to the desired (1 to 4-speed) position and push the air conditioner switch to turn ON the air conditioner. The indicator light should come on when air conditioner is ON.

2. Check for any service bulletins.

3. Check compressor belt tension.
   Refer to MA-(*5), "Checking Drive Belts".
   - NG → Adjust or replace compressor belt.
   - OK ↓

4. Check refrigerant.
   Connect manifold gauge then check system pressure.
   - NG → Check for refrigerant leaks. Refer to (*1).
   - OK ↓

5. Check magnet clutch circuit. (*2)
   - OK ↓

If the symptom still exist, perform a complete operational check (*3) and check for other symptoms.
[Refer to symptom table, (*4).]
Does another symptom exist?

- Yes → Go to Trouble Diagnosis for related symptom. **[Another symptom exists.]**
- No → INSPECTION END

SHA264FA

*1: HA-202
*2: HA-185
*3: HA-156
*4: HA-155
*5: MA-15

MAGNET CLUTCH CIRCUIT

=NAHA0091

SYMPTOM:

- **Magnet clutch does not engage when A/C switch and fan switch are ON.**

1	CHECK POWER SUPPLY FOR COMPRESSOR

Disconnect compressor harness connector.
Do approx. 12 volts exist between compressor harness terminal No. 1 and body ground?

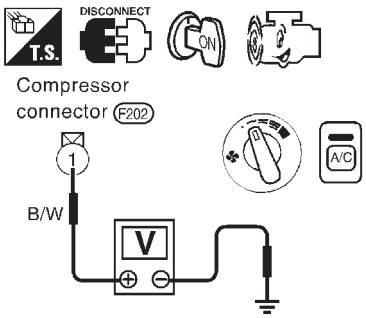

RHA747FA

Yes or No

Yes	▶	GO TO 2.
No	▶	Disconnect A/C relay. GO TO 3.

2	CHECK MAGNET CLUTCH COIL

OK or NG

NG	▶	Replace magnet clutch. Refer to HA-197.

3	CHECK CIRCUIT CONTINUITY BETWEEN A/C RELAY AND COMPRESSOR

Check circuit continuity between A/C relay harness terminal No. 5 and compressor harness terminal No. 1.

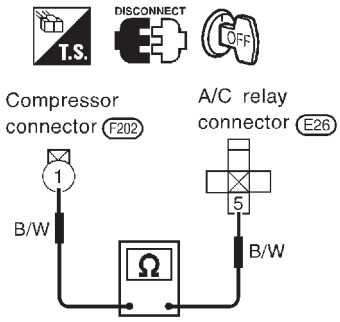

RHA748FA

Continuity should exist.
If OK, check harness for short.

OK or NG

OK	▶	GO TO 4.
NG	▶	Repair harness or connector.

4	CHECK POWER SUPPLY FOR A/C RELAY

Disconnect A/C relay.
Do approx. 12 volts exist between A/C relay harness terminal Nos. 2, 3 and body ground?

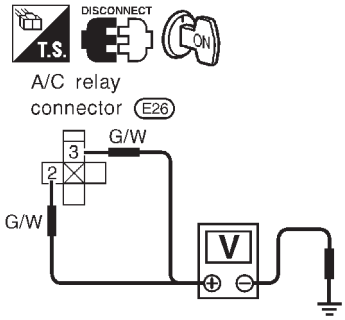

RHA583F

Yes or No

Yes	▶	GO TO 5.
No	▶	Check power supply circuit and 7.5A (No. 6) fuse at fuse block. Refer to EL-14, "Wiring Diagram — POWER —".

5	CHECK A/C RELAY AFTER DISCONNECTING IT

Refer to HA-190.

OK or NG

OK	▶	Reconnect A/C relay. GO TO 6.
NG	▶	Replace A/C relay.

6	CHECK COIL SIDE CIRCUIT OF A/C RELAY

Do approx. 12 volts exist between ECM harness terminal No. 12 and body ground?

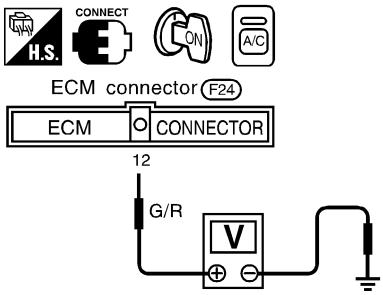

SHA936EB

Yes or No

Yes	▶	GO TO 8.
No	▶	Disconnect A/C relay. Disconnect ECM harness connector. GO TO 7.

7	CHECK CIRCUIT CONTINUITY BETWEEN A/C RELAY AND ECM

Check circuit continuity between A/C relay harness terminal No. 1 and ECM harness terminal No. 12.

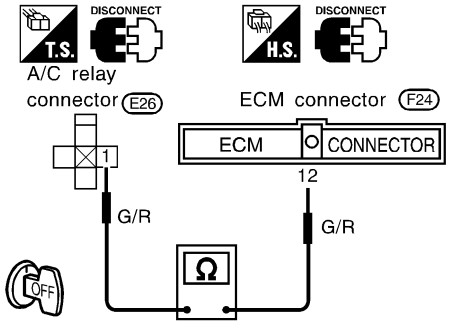

SHA937EA

Continuity should exist.

OK or NG

OK	▶	Check harness for short.
NG	▶	Repair harness or connector.

8	CHECK VOLTAGE FOR ECM

Do approx. 12 volts exist between ECM harness terminal No. 21 and body ground?

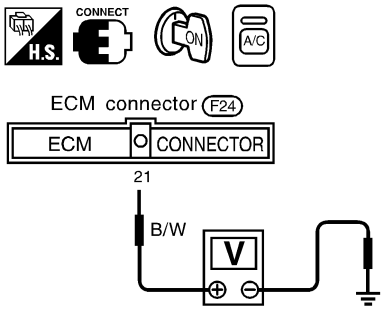

RHA701FD

Yes or No

Yes	▶	Disconnect ECM harness connector. Disconnect dual-pressure switch harness connector. GO TO 9.
No	▶	Check ECM. Refer to EC-127, EC-581, "ECM Terminals and Reference Value".

9	CHECK CIRCUIT CONTINUITY BETWEEN ECM AND DUAL-PRESSURE SWITCH

Check circuit continuity between ECM harness terminal No. 21 and dual-pressure switch harness terminal No. 2.

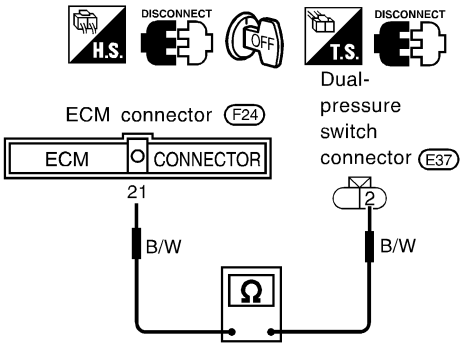

RHA585FC

Continuity should exist.
If OK, check harness for short.

OK or NG

OK	▶	GO TO 10.
NG	▶	Repair harness or connector.

10	CHECK DUAL-PRESSURE SWITCH

Refer to HA-190.

OK or NG

OK	▶	Disconnect A/C switch harness connector. GO TO 11.
NG	▶	Replace dual-pressure switch.

11	CHECK CIRCUIT CONTINUITY BETWEEN DUAL-PRESSURE SWITCH AND A/C SWITCH

Check circuit continuity between dual-pressure switch harness terminal No. 1 and A/C switch harness terminal No. 2.

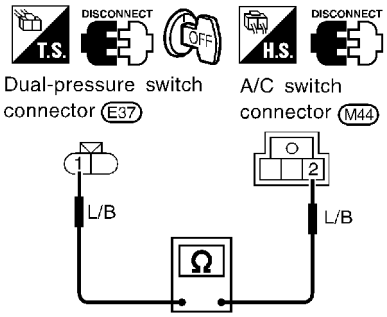

RHA586FB

Continuity should exist.
If OK, check harness for short.

OK or NG

OK	▶	GO TO 12.
NG	▶	Repair harness or connector.

12	CHECK A/C SWITCH

Refer to HA-190.

OK or NG

OK	▶	Disconnect fan switch harness connector. GO TO 13.
NG	▶	Replace A/C switch.

13	CHECK CIRCUIT CONTINUITY BETWEEN A/C SWITCH AND FAN SWITCH

Check circuit continuity between A/C switch harness terminal No. 1 and fan switch harness terminal No. 1.

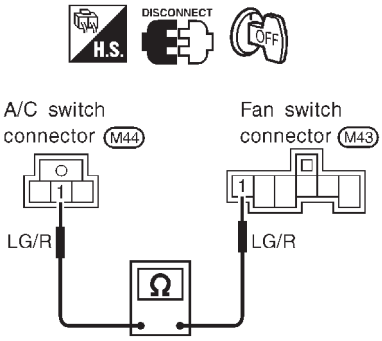

RHA617F

Continuity should exist.
If OK, check harness for short.

OK or NG

OK	▶	GO TO 14.
NG	▶	Repair harness or connector.

14	CHECK BODY GROUND CIRCUIT FOR FAN SWITCH

Does continuity exist between fan switch harness terminal No. 6 and body ground?

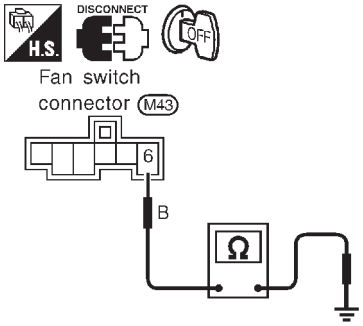

RHA588F

Yes or No

Yes	▶	GO TO 15.
No	▶	Repair harness or connector.

15	CHECK FAN SWITCH

Refer to HA-166.

OK or NG

OK	▶	INSPECTION END
NG	▶	Replace fan switch.

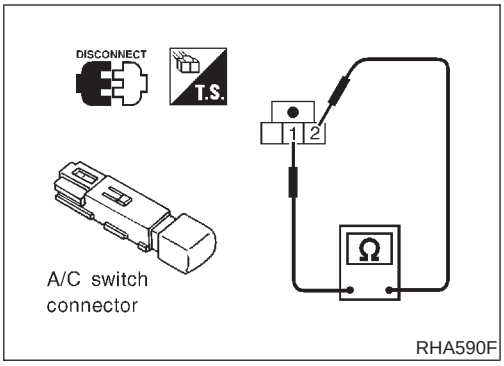

RHA590F

ELECTRICAL COMPONENTS INSPECTION

=NAHA0092

A/C Switch

NAHA0092S04

Check continuity between terminals at each switch position.

Switch condition	Terminal No.		Continuity
A/C	(+)	(−)	
ON	2	1	Yes
OFF			No

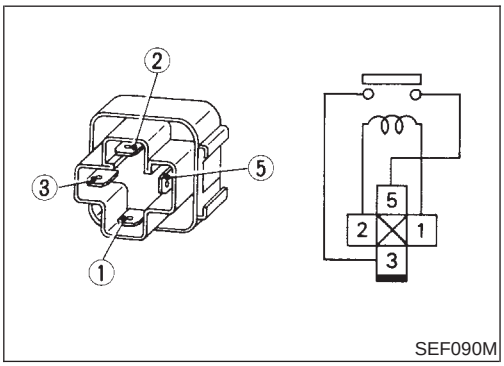

SEF090M

A/C Relay

NAHA0092S07

Check continuity between terminal Nos. 3 and 5.

Conditions	Continuity
12V direct current supply between terminal Nos. 1 and 2	Yes
No current supply	No

If NG, replace relay.

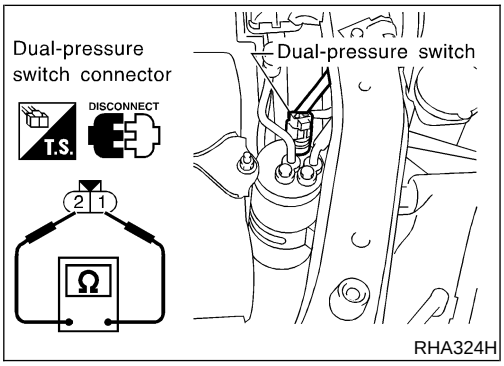

RHA324H

Dual-pressure Switch

NAHA0092S08

	ON kPa (kg/cm^2, psi)	OFF kPa (kg/cm^2, psi)
Low-pressure side	Increasing to 157 - 216 (1.6 - 2.2, 23 - 31)	Decreasing to 157 - 196 (1.6 - 2.0, 23 - 28)
High-pressure side	Decreasing to 1,863 - 2,256 (19 - 23, 270 - 327)	Increasing to 2,452 - 2,844 (25 - 29, 356 - 412)

Noise

TROUBLE DIAGNOSIS PROCEDURE FOR NOISE

=NAHA0080

Symptom:

- **Noise**

Inspection Flow

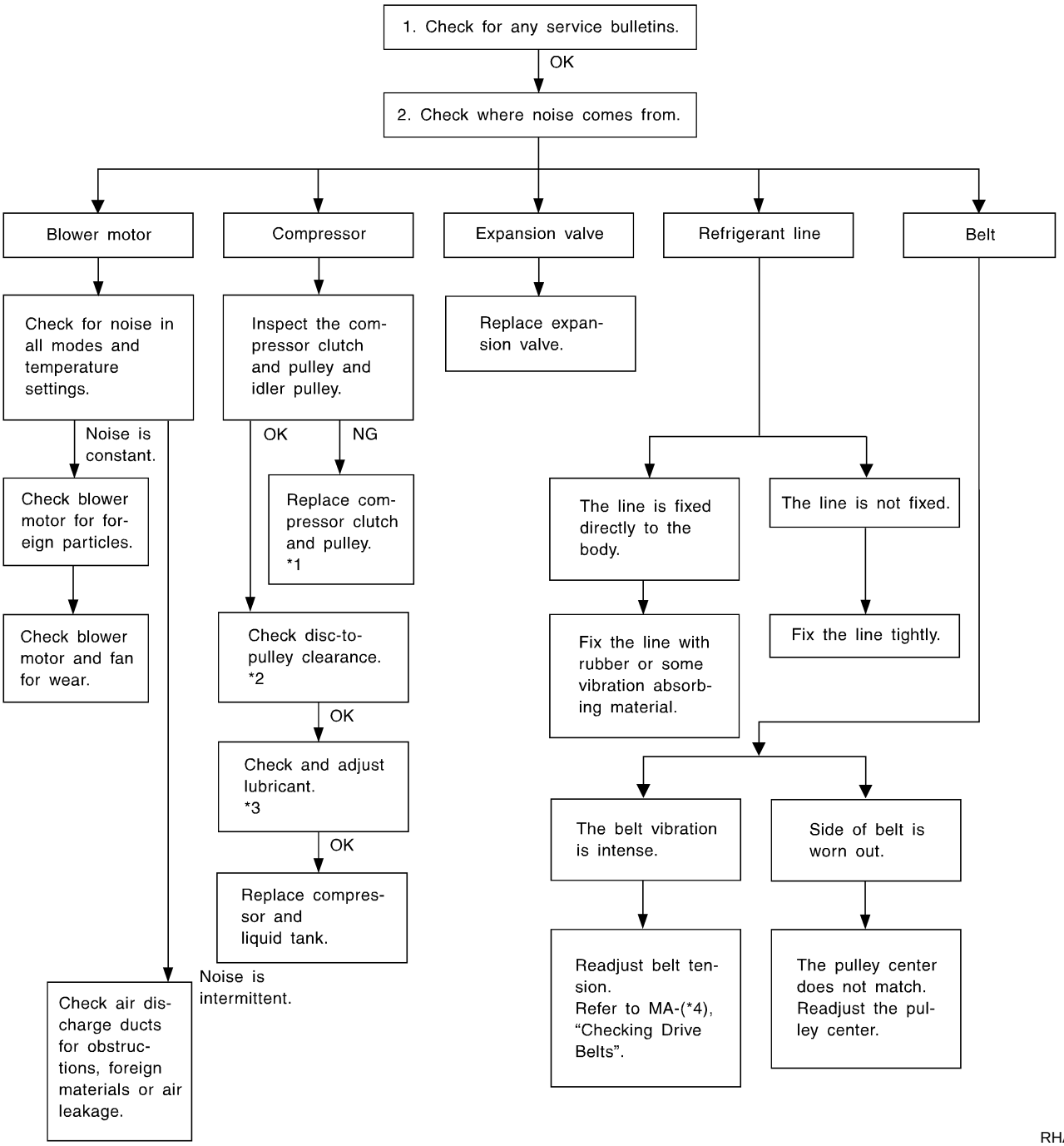

RHA586H

*1: HA-199
*2: HA-199
*3: HA-194
*4: MA-15

HFC-134a (R-134a) Service Procedure

NAHA0094

SETTING OF SERVICE TOOLS AND EQUIPMENT

NAHA0094S01

Discharging Refrigerant

NAHA0094S0101

WARNING:

Avoid breathing A/C refrigerant and lubricant vapor or mist. Exposure may irritate eyes, nose and throat. Remove HFC-134a (R-134a) from A/C system using certified service equipment meeting requirements of SAE J2210 (R-134a recycling equipment) or J2209 (R-134a recovery equipment). If accidental system discharge occurs, ventilate work area before resuming service. Additional health and safety information may be obtained from refrigerant and lubricant manufacturers.

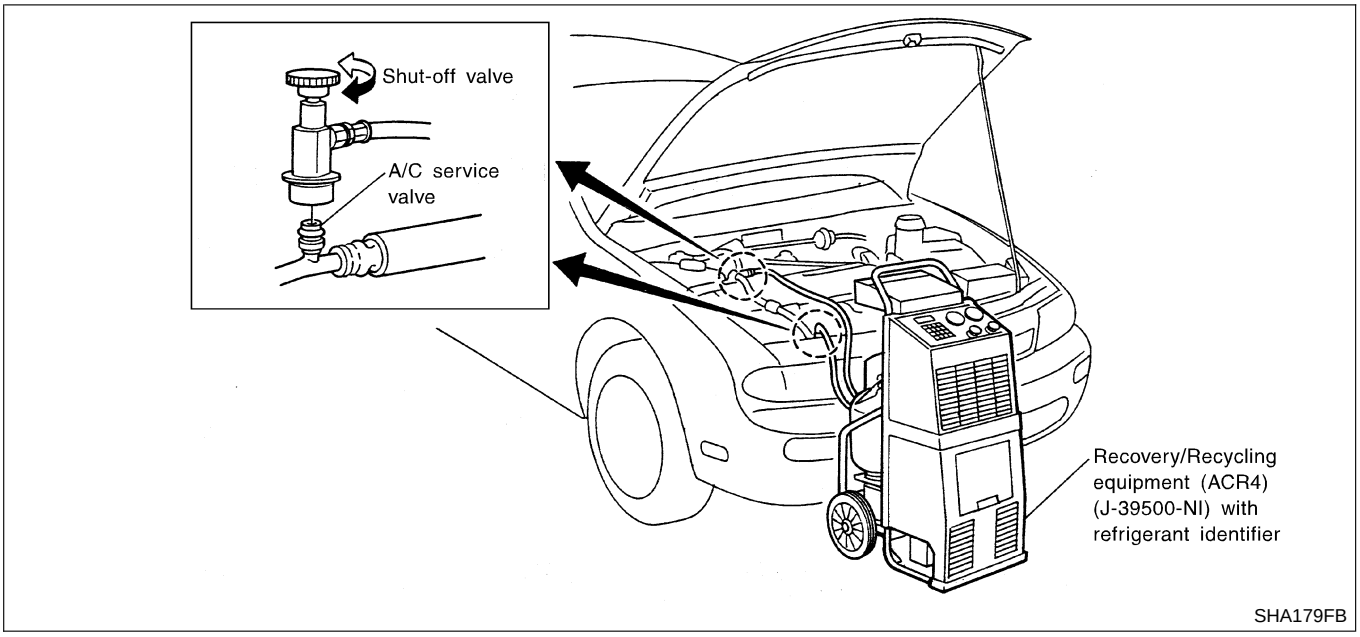

Evacuating System and Charging Refrigerant

NAHA0094S0102

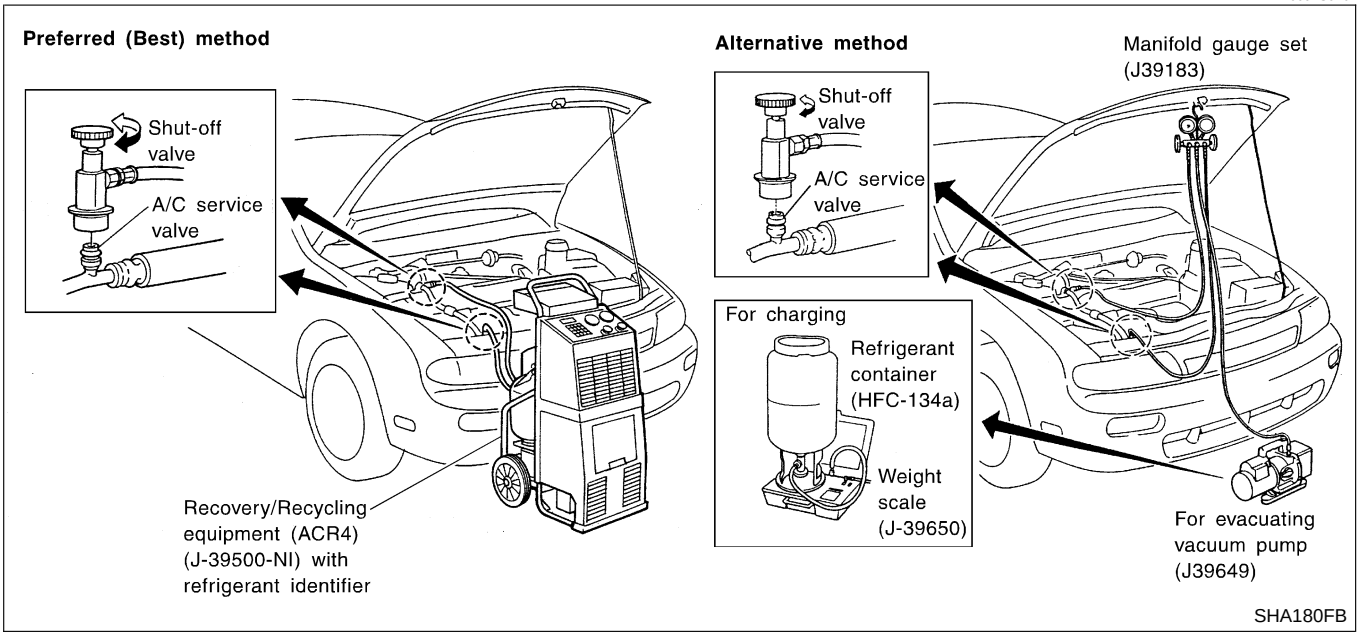

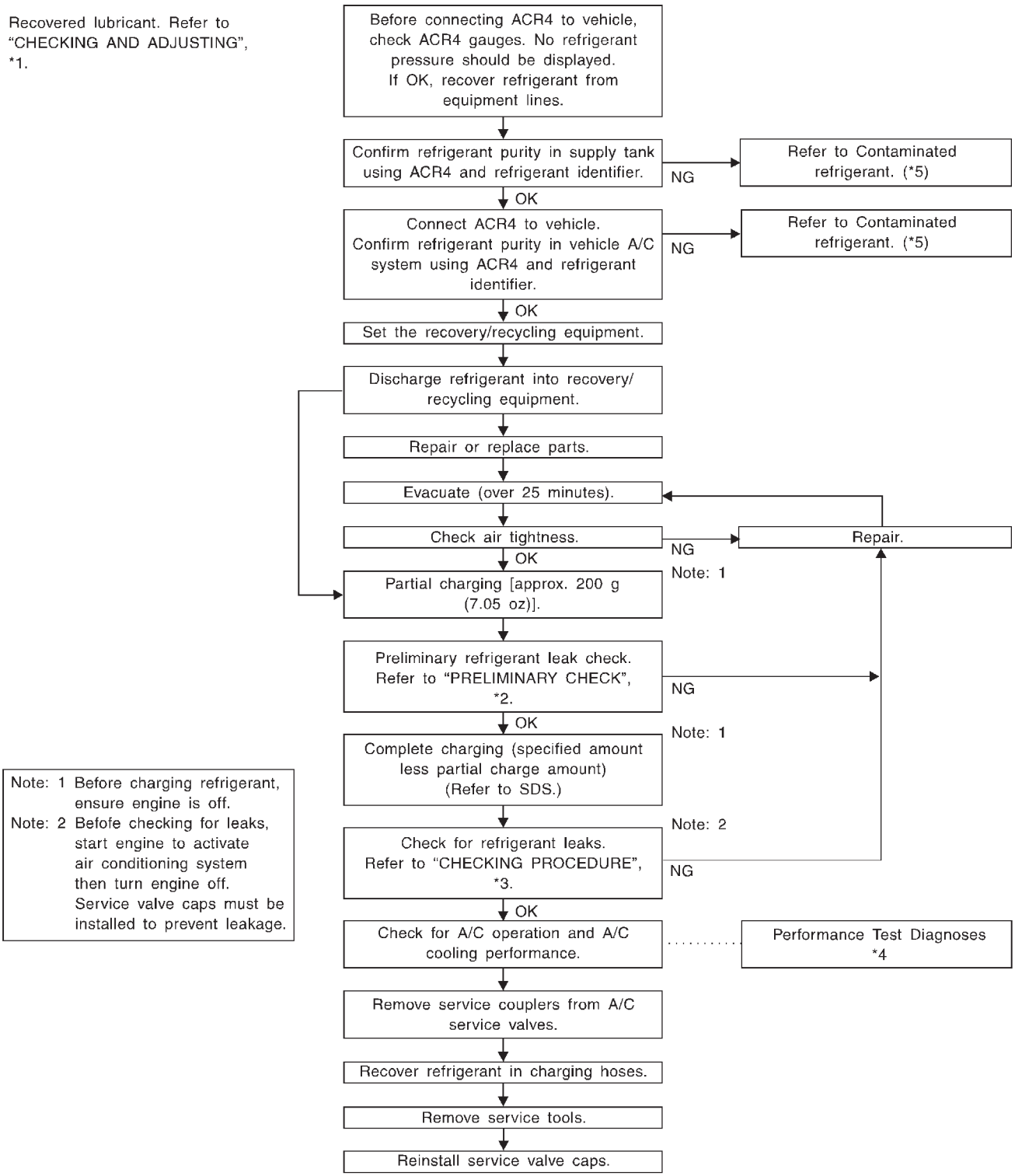

SHA193F

*1: HA-194
*2: HA-203
*3: HA-203
*4: HA-173
*5: HA-126

Maintenance of Lubricant Quantity in Compressor

NAHA0095

The lubricant in the compressor circulates through the system with the refrigerant. Add lubricant to compressor when replacing any component or after a large gas leakage occurred. It is important to maintain the specified amount.
If lubricant quantity is not maintained properly, the following malfunctions may result:

- Lack of lubricant: May lead to a seized compressor
- Excessive lubricant: Inadequate cooling (thermal exchange interference)

LUBRICANT

NAHA0095S01

Name: Nissan A/C System Oil Type S
Part number: KLH00-PAGS0

CHECKING AND ADJUSTING

NAHA0095S02

Adjust the lubricant quantity according to the test group shown below.

1	LUBRICANT RETURN OPERATION	
Can lubricant return operation be performed? ● A/C system works properly. ● There is no evidence of a large amount of lubricant leakage.		
	Yes or No	
Yes	▶	GO TO 2.
No	▶	GO TO 3.

2	PERFORM LUBRICANT RETURN OPERATION, PROCEEDING AS FOLLOWS	
1. Start engine, and set the following conditions: ● **Test condition** **Engine speed: Idling to 1,200 rpm** **A/C or AUTO switch: ON** **Blower speed: Max. position** **Temp. control: Optional [Set so that intake air temperature is 25 to 30°C (77 to 86°F).]** 2. **Next item is for V-5 or V-6 compressor. Connect the manifold gauge, and check that the high pressure side pressure is 588 kPa (6 kg/cm^2, 85 psi) or higher.** **If less than the reference level, attach a cover to the front face of the condenser to raise the pressure.** 3. Perform lubricant return operation for about 10 minutes. 4. Stop engine. **CAUTION:** **If excessive lubricant leakage is noted, do not perform the lubricant return operation.**		
	▶	GO TO 3.

3	CHECK COMPRESSOR	
Should the compressor be replaced?		
	Yes or No	
Yes	▶	GO TO HA-195.
No	▶	GO TO 4.

4	CHECK ANY PART	
Is there any part to be replaced? (Evaporator, condenser, liquid tank or in case there is evidence of a large amount of lubricant leakage.)		
	Yes or No	
Yes	▶	GO TO HA-195.
No	▶	Carry out the A/C performance test.

Lubricant Adjusting Procedure for Components Replacement Except Compressor

NAHA0095S0201

After replacing any of the following major components, add the correct amount of lubricant to the system.

Amount of lubricant to be added

Part replaced	Lubricant to be added to system	Remarks
	Amount of lubricant mℓ (US fl oz, Imp fl oz)	
Evaporator	75 (2.5, 2.6)	—
Condenser	75 (2.5, 2.6)	—
Liquid tank	5 (0.2, 0.2)	Add if compressor is not replaced. *1
In case of refrigerant leak	30 (1.0, 1.1)	Large leak
	—	Small leak *2

*1: If compressor is replaced, addition of lubricant is included in the table.
*2: If refrigerant leak is small, no addition of lubricant is needed.

Lubricant Adjustment Procedure for Compressor Replacement

NAHA0095S0202

1. Before connecting ACR4 to vehicle, check ACR4 gauges. No refrigerant pressure should be displayed. If OK, recover refrigerant from equipment lines.
2. Confirm refrigerant purity in supply tank using ACR4 and refrigerant identifier. If NG, refer to "CONTAMINATED REFRIGERANT", HA-126.
3. Connect ACR4 to vehicle. Confirm refrigerant purity in vehicle A/C system using ACR4 and refrigerant identifier. If NG, refer to "CONTAMINATED REFRIGERANT", HA-126.
4. Discharge refrigerant into the refrigerant recovery/recycling equipment. Measure lubricant discharged into the recovery/recycling equipment.
5. Remove the drain plug of the "old" (removed) compressor. Drain the lubricant into a graduated container and record the amount of drained lubricant.
6. Remove the drain plug and drain the lubricant from the "new" compressor into a separate, clean container.
7. Measure an amount of new lubricant installed equal to amount drained from "old" compressor. Add this lubricant to "new" compressor through the suction port opening.
8. Measure an amount of new lubricant equal to the amount recovered during discharging. Add this lubricant to "new" compressor through the suction port opening.
9. Torque the drain plug.

   V-6 compressor:

   18 - 19 N·m (1.8 - 1.9 kg-m, 13 - 14 ft-lb)

10. If the liquid tank also needs to be replaced, add an additional 5 mℓ (0.2 US fl oz, 0.2 Imp fl oz) of lubricant at this time.
Do not add this 5 mℓ (0.2 US fl oz, 0.2 Imp fl oz) of lubricant if only replacing the compressor.

Lubricant adjusting procedure for compressor replacement

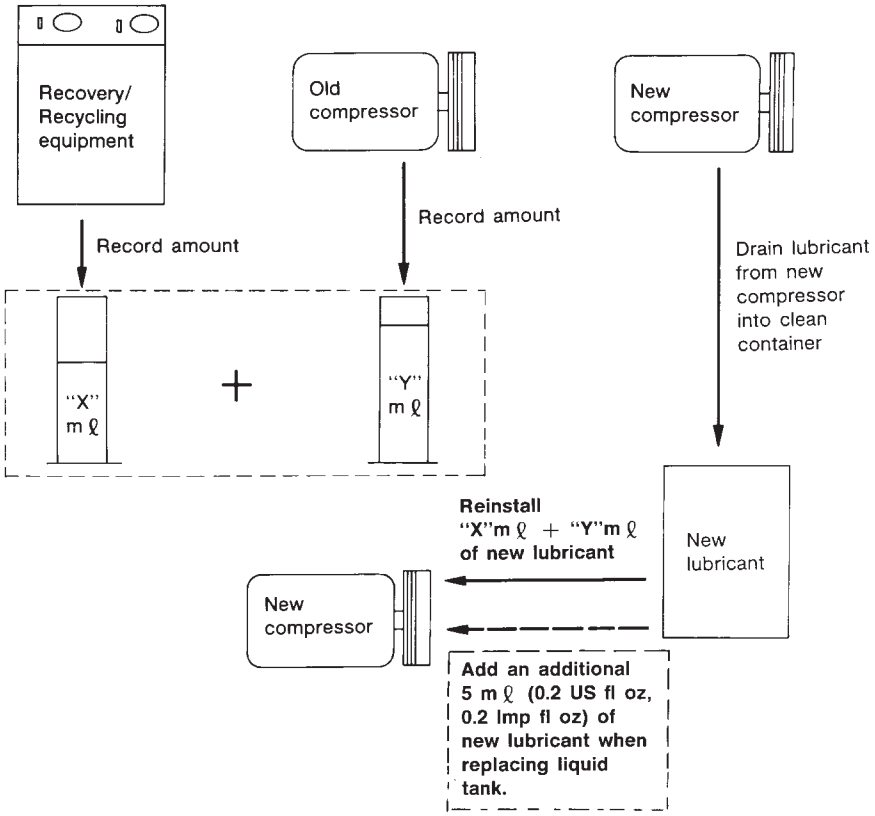

RHA065DD

Compressor

REMOVAL AND INSTALLATION

NAHA0096

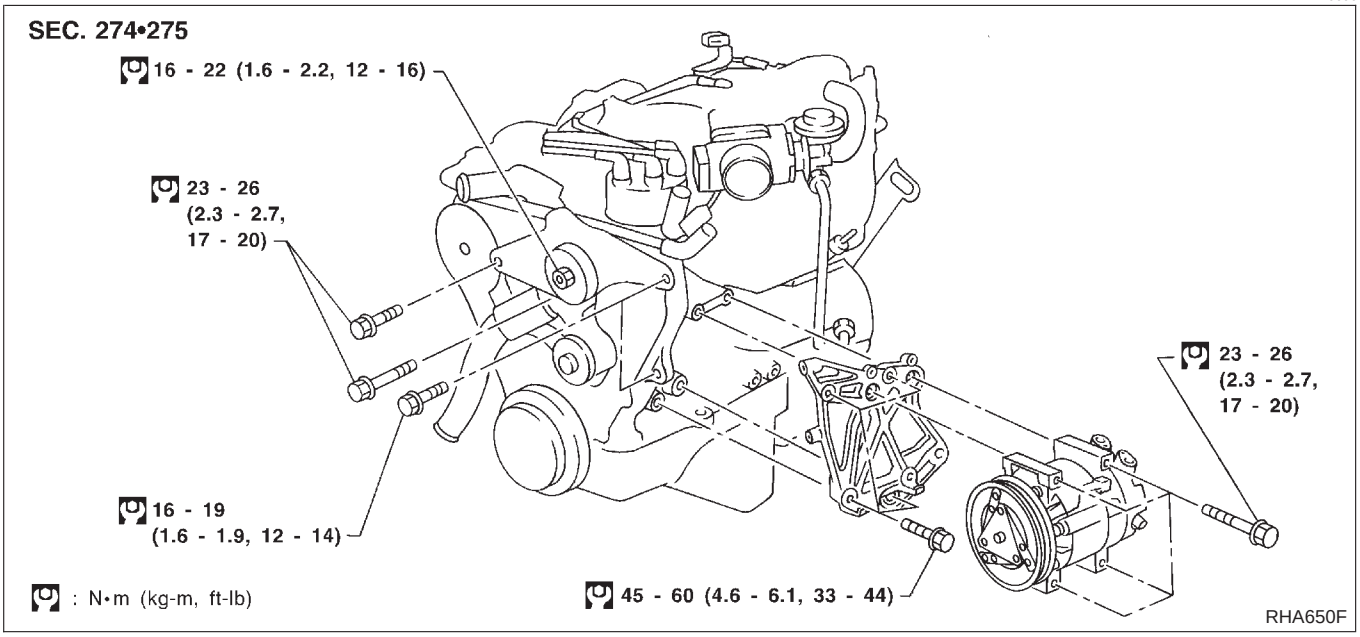

Compressor Clutch

OVERHAUL

NAHA0097

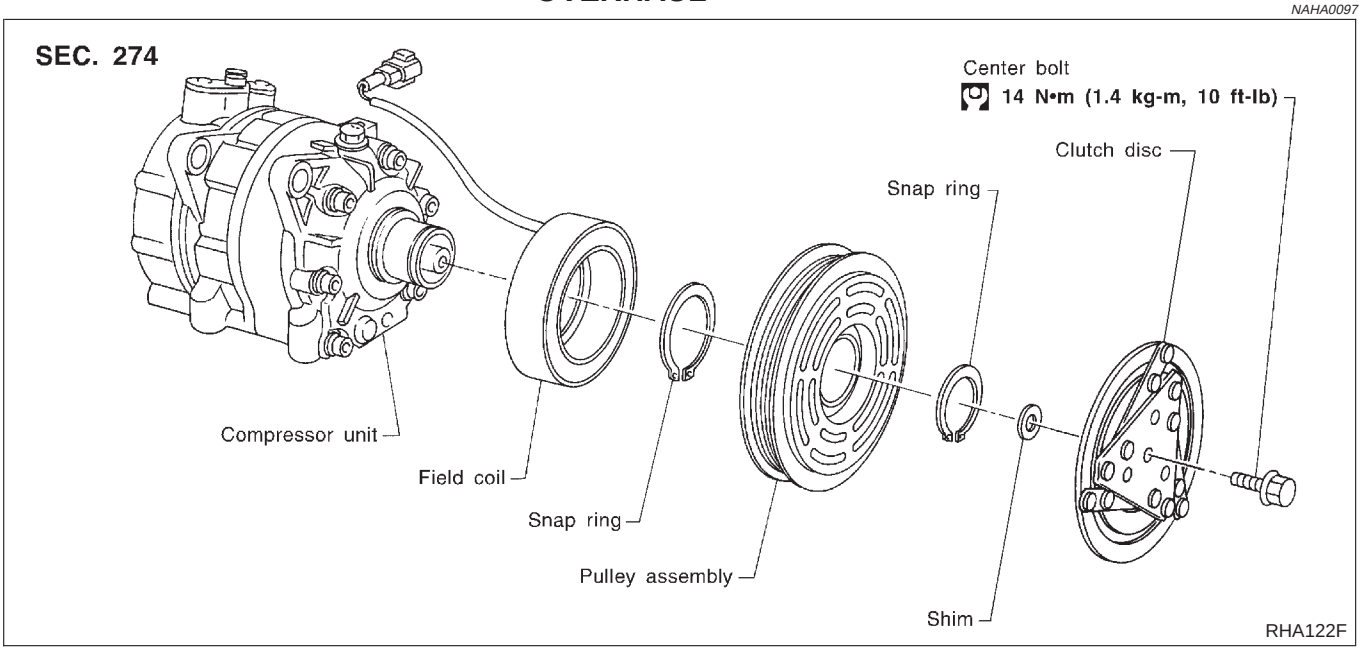

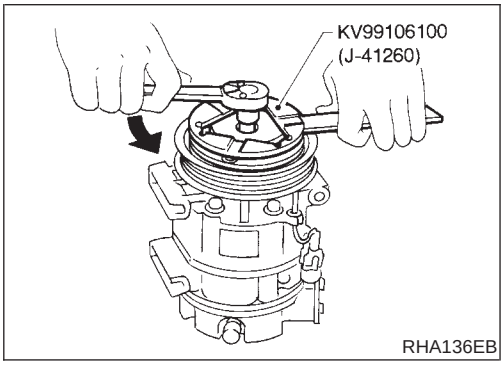

REMOVAL

NAHA0098

- When removing center bolt, hold clutch disc with clutch disc wrench.

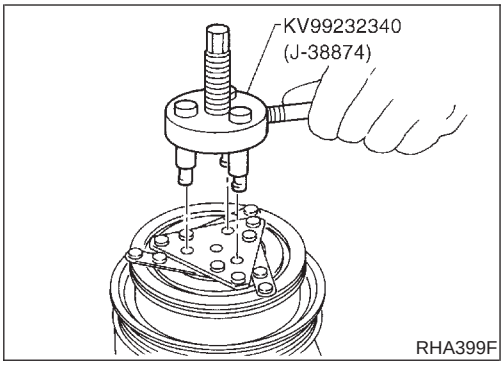

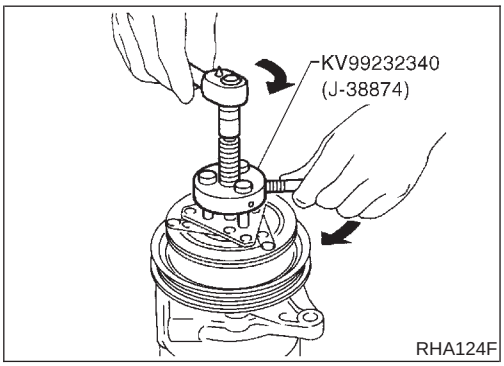

- Remove the clutch disc using the clutch disc puller.
  Insert the holder's three pins into the holes in the clutch disc. Rotate the holder clockwise to hook it onto the plate. Then, tighten the center bolt to remove the clutch disc.
  After removing the clutch disc, remove the shims from either the drive shaft or the clutch disc.

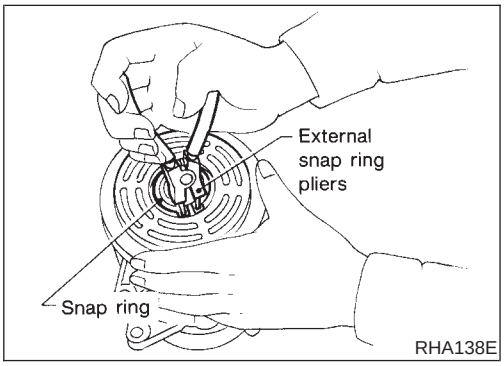

- Remove the snap ring using external snap ring pliers.

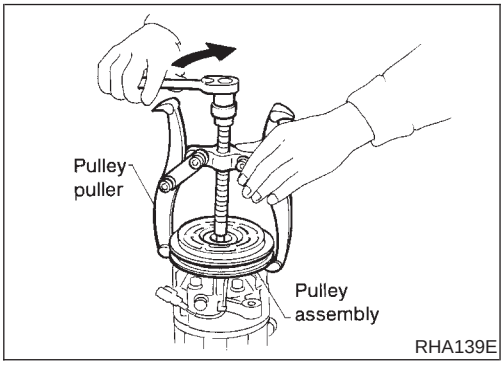

- Pulley removal
  Position the center pulley puller on the end of the drive shaft, and remove the pulley assembly using any commercially available pulley puller.
  To prevent the pulley groove from being deformed, the puller claws should be positioned onto the edge of the pulley assembly.

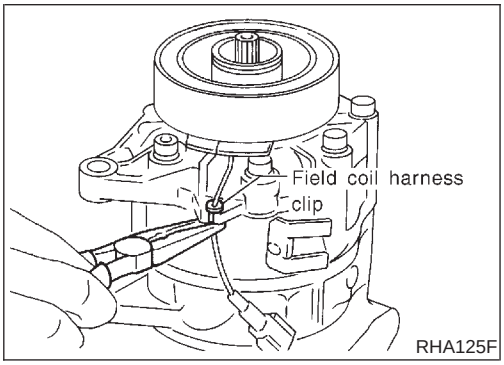

- Remove the field coil harness clip using a pair of pliers.

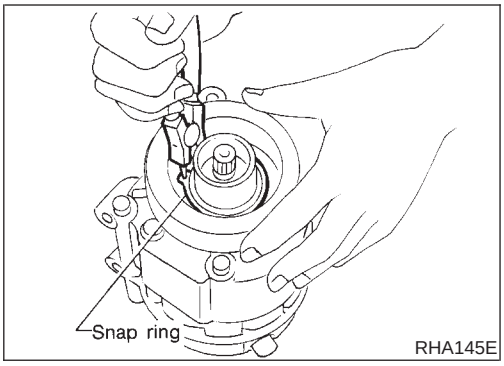

RHA145E

- Remove the snap ring using external snap ring pliers.

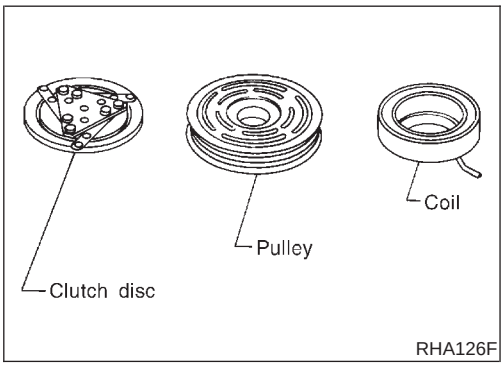

RHA126F

INSPECTION

NAHA0099

Clutch Disc

NAHA0099S01

If the contact surface shows signs of damage due to excessive heat, replace clutch disc and pulley.

Pulley

NAHA0099S02

Check the appearance of the pulley assembly. If the contact surface of pulley shows signs of excessive grooving, replace clutch disc and pulley. The contact surfaces of the pulley assembly should be cleaned with a suitable solvent before reinstallation.

Coil

NAHA0099S03

Check coil for loose connection or cracked insulation.

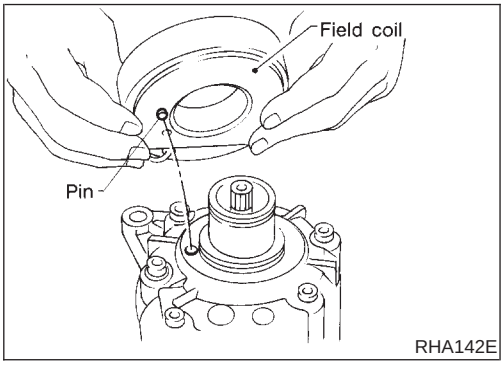

RHA142E

INSTALLATION

NAHA0100

- Install the field coil.
  Be sure to align the coil's pin with the hole in the compressor's front head.
- Install the field coil harness clip using a screwdriver.

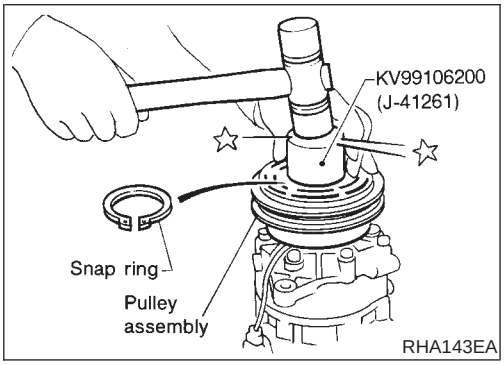

RHA143EA

- Install the pulley assembly using the installer and a hand press, and then install the snap ring using snap ring pliers.

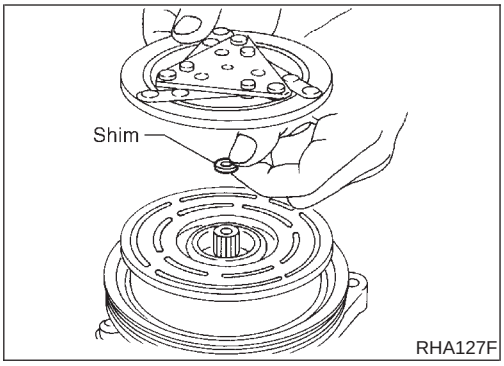

- Install the clutch disc on the drive shaft, together with the original shim(s). Press the clutch disc down by hand.

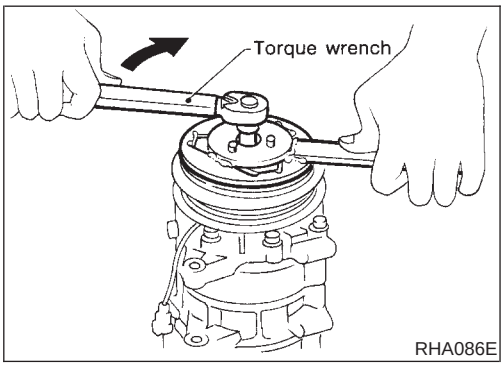

- Using the holder to prevent clutch disc rotation, tighten the bolt to 14 N·m (1.4 kg-m, 10 ft-lb) torque.
  After tightening the bolt, check that the pulley rotates smoothly.

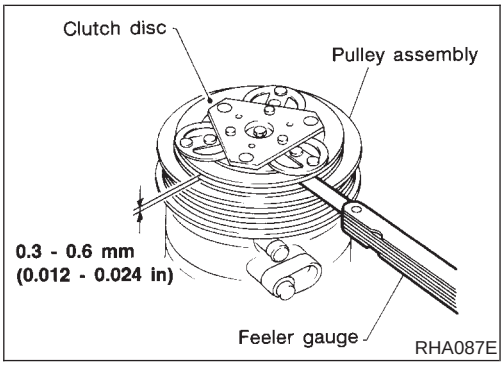

- Check clearance around the entire periphery of clutch disc.
  Disc-to-pulley clearance:
  0.3 - 0.6 mm (0.012 - 0.024 in)
  If the specified clearance is not obtained, replace adjusting spacer and readjust.

Break-in Operation

NAHA0100S01

When replacing compressor clutch assembly, always carry out the break-in operation. This is done by engaging and disengaging the clutch about thirty times. Break-in operation raises the level of transmitted torque.

Refrigerant Lines

REMOVAL AND INSTALLATION

=NAHA0101

- Refer to page HA-127 regarding “Precautions for Refrigerant Connection”.

SEC. 271•274•276

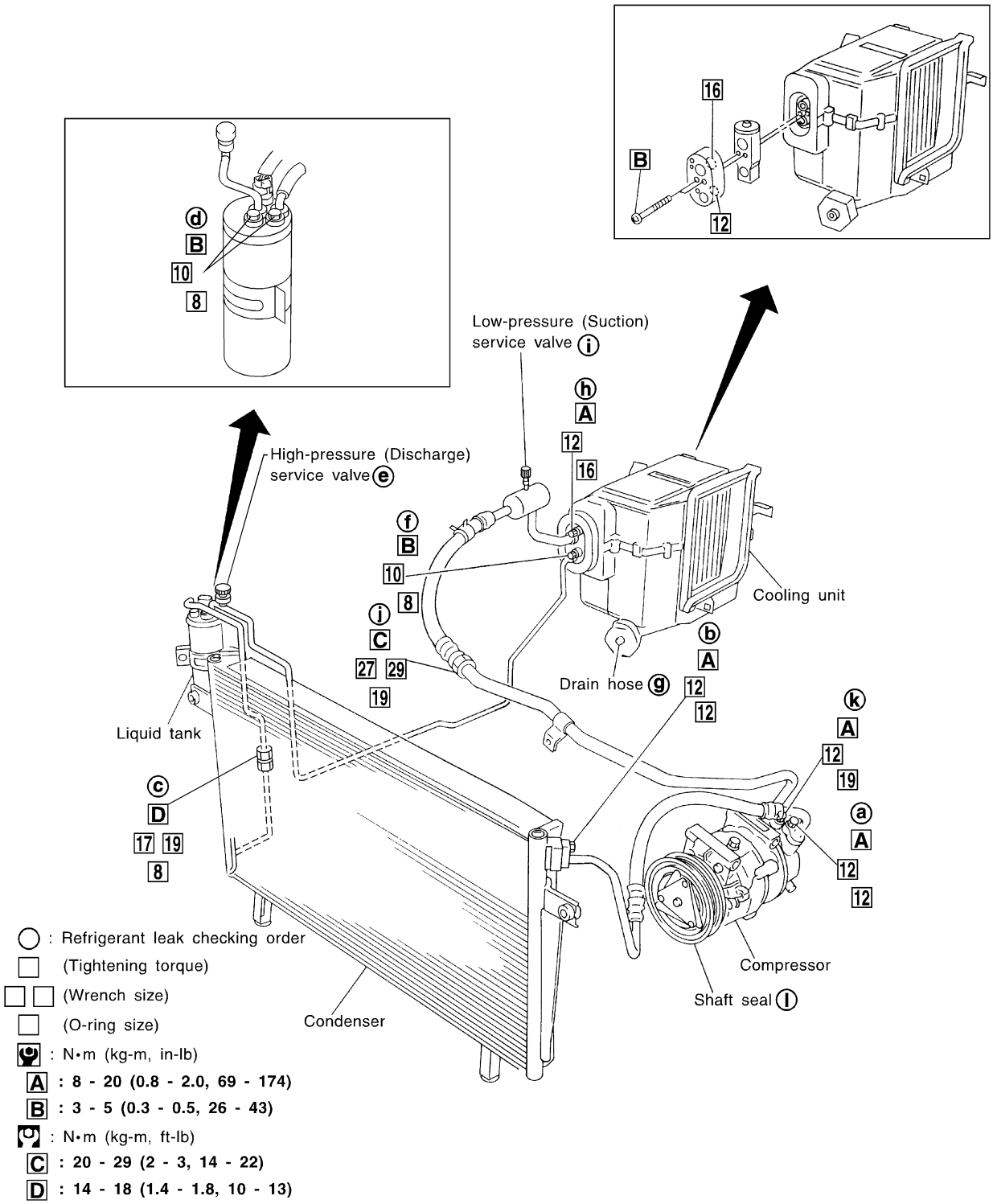

SHA305FB

CHECKING REFRIGERANT LEAKS

=NAHA0102

Preliminary Check

NAHA0102S01

Perform a visual inspection of all refrigeration parts, fittings, hoses, and components for signs of A/C lubricant leakage, damage and corrosion. Take note of the areas with A/C lubricant leakage to allow extra time in these areas with electronic leak detector.

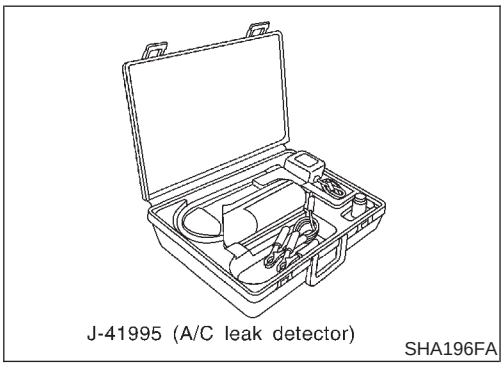

Precautions for Handling Leak Detector

NAHA0102S02

When performing a refrigerant leak check, use a J-41995 A/C leak detector or equivalent. Ensure that the instrument is calibrated and set properly per the operating instructions.

The leak detector is a delicate device. In order to use the leak detector properly, read the operating instructions and perform any specified maintenance.

Other gases in the work area or substances on the A/C components, for example, anti-freeze, windshield washer fluid, solvents and lubricants, may falsely trigger the leak detector. Make sure the surfaces to be checked are clean. Clean with a dry cloth or blow off with shop air. Do not allow the sensor tip of the detector to contact with any substance. This can also cause false readings and may damage the detector.

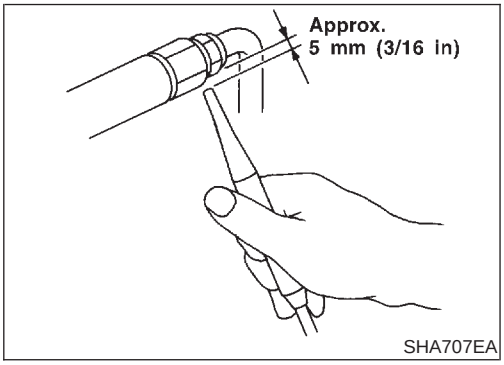

1. Position probe approximately 5 mm (3/16 in) away from point to be checked.

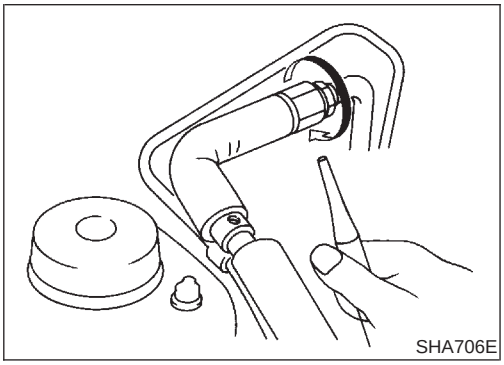

2. When testing, circle each fitting completely with probe.

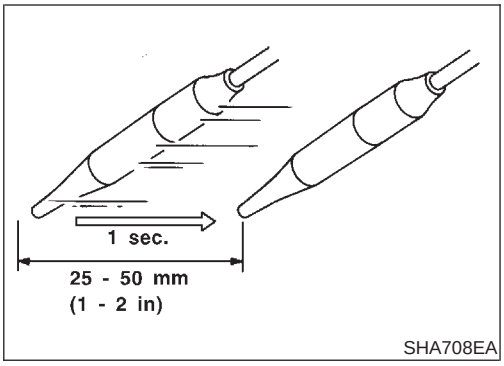

SHA708EA

3. Move probe along component approximately 25 to 50 mm (1 to 2 in)/sec.

Checking Procedure

NAHA0102S03

To prevent inaccurate or false readings, make sure there is no refrigerant vapor, shop chemicals, or cigarette smoke in the vicinity of the vehicle. Perform the leak test in calm area (low air/wind movement) so that the leaking refrigerant is not dispersed.

1. Turn engine off.
2. Connect a suitable A/C manifold gauge set to the A/C service ports.
3. Check if the A/C refrigerant pressure is at least 345 kPa (3.52 kg/cm^2, 50 psi) above 16°C (61°F). If less than specification, recover/evacuate and recharge the system with the specified amount of refrigerant.

NOTE:
At temperatures below 16°C (61°F), leaks may not be detected since the system may not reach 345 kPa (3.52 kg/cm^2, 50 psi).

4. Conduct the leak test from the high side (compressor discharge **a** to evaporator inlet **f**) to the low side (evaporator drain hose **g** to shaft seal **l**). Refer to HA-201. Perform a leak check for the following areas carefully. Clean the component to be checked and move the leak detector probe completely around the connection/component.

- **Compressor**
  Check the fitting of high and low pressure hoses, relief valve and shaft seal.
- **Liquid tank**
  Check the pressure switch, tube fitting, weld seams and the fusible plug mount.
- **Service valves**
  Check all around the service valves. Ensure service valve caps are secured on the service valves (to prevent leaks).

NOTE:
After removing A/C manifold gauge set from service valves, wipe any residue from valves to prevent any false readings by leak detector.

- **Cooling unit (Evaporator)**
  With engine OFF, turn blower fan on "High" for at least 15 seconds to dissipate any refrigerant trace in the cooling unit. Wait a minimum of 10 minutes accumulation time (refer to the manufacturer's recommended procedure for actual wait time) before inserting the leak detector probe into the drain hose. Keep the probe inserted for at least ten seconds. Use caution not to contaminate the ptobe tip with water or dirt that may be in the drain hose.

5. If a leak detector detects a leak, verify at least once by blowing compressed air into area of suspected leak, then repeat check as outlined above.
6. Do not stop when one leak is found. Continue to check for additional leaks at all system components.
   If no leaks are found, perform steps 7 - 10.
7. Start engine.
8. Set the heater A/C control as follows:
1) A/C switch ON.
2) Face mode
3) Recirculation switch ON
4) Max cold temperature
5) Fan speed high
9. Run engine at 1,500 rpm for at least 2 minutes.
10. Turn engine off and perform leak check again following steps 4 through 6 above.

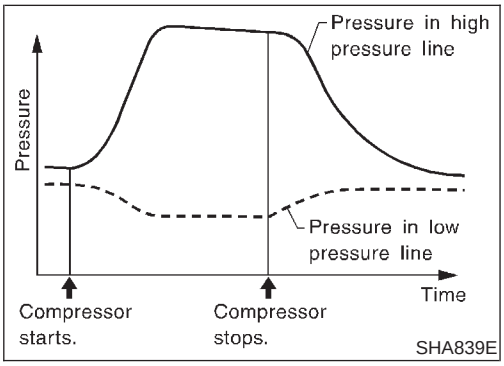

Refrigerant leaks should be checked immediately after stopping the engine. Begin with the leak detector at the compressor. The pressure on the high pressure side will gradually drop after refrigerant circulation stops and pressure on the low pressure side will gradually rise, as shown in the graph. Some leaks are more easily detected when pressure is high.

11. Before connecting ACR4 to vehicle, check ACR4 gauges. No refrigerant pressure should be displayed. If pressure is displayed, recover refrigerant from equipment lines and then check refrigerant purity.
12. Confirm refrigerant purity in supply tank using ACR4 and refrigerant identifier.
13. Confirm refrigerant purity in vehicle A/C system using ACR4 and refrigerant identifier.
14. Discharge A/C system using approved refrigerant recovery equipment. Repair the leaking fitting or component as necessary.
15. Evacuate and recharge A/C system and perform the leak test to confirm no refrigerant leaks.
16. Conduct A/C performance test to ensure system works properly.

Belt

TENSION ADJUSTMENT

NAHA0103

- **Refer to MA-15, “Checking Drive Belts”.**

Fast Idle Control Device (FICD)

INSPECTION

NAHA0104

- **Refer to HA-142.**

Manual

COMPRESSOR

NAHA0105

Model		CALSONIC make V-6
Type		V-6 variable displacement
Displacement cm^3 (cu in)/rev.	Max.	184 (11.228)
	Min.	14.5 (0.885)
Cylinder bore x stroke mm (in)		37 (1.46) x [2.3 - 28.6 (0.091 - 1.126)]
Direction of rotation		Clockwise (viewed from drive end)
Drive belt		Poly V

LUBRICANT

NAHA0106

Model		CALSONIC make V-6
Name		Nissan A/C System Oil Type S
Part number*		KLH00-PAGS0
Capacity mℓ (US fl oz, Imp fl oz)	Total in system	200 (6.8, 7.0)
	Compressor (Service part) charging amount	200 (6.8, 7.0)

*: Always check with the Parts Department for the latest parts information.

REFRIGERANT

NAHA0107

Type	HFC-134a (R-134a)
Capacity kg (lb)	0.60 - 0.70 (1.32 - 1.54)

ENGINE IDLING SPEED (WHEN A/C IS ON)

NAHA0108

- Refer to EC-588, “Idle Speed and Ignition Timing”.

BELT TENSION

NAHA0109

- Refer to MA-15, “Checking Drive Belts”.