ENGINE MECHANICAL

SECTION EM

CONTENTS

CONTENTS (Cont'd)

Parts Requiring Angular Tightening

NAEM0001

- Use an angle wrench for the final tightening of the following engine parts:

a) Cylinder head bolts
b) Main bearing cap bolts
c) Connecting rod cap bolts
d) Crankshaft pulley bolt

- Do not use a torque value for final tightening.
- The torque value for these parts are for a preliminary step.
- Ensure thread and seat surfaces are clean and coated with engine oil.

Liquid Gasket Application Procedure

NAEM0002

1. **Use a scraper to remove all traces of old liquid gasket from mating surfaces and grooves. Also, completely clean any oil from these areas.**
2. **Apply a continuous bead of liquid gasket to mating surfaces. (Use Genuine RTV silicone sealant Part No. 999MP-A7007 or equivalent.)**

- Be sure liquid gasket diameter is as specified.

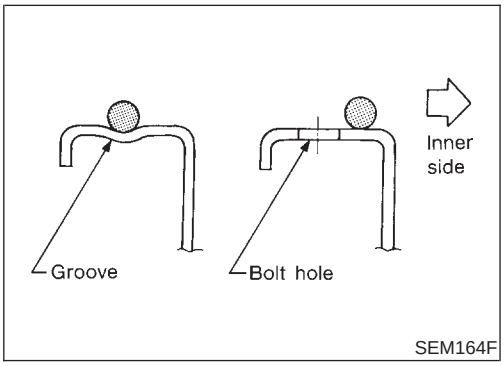

SEM164F

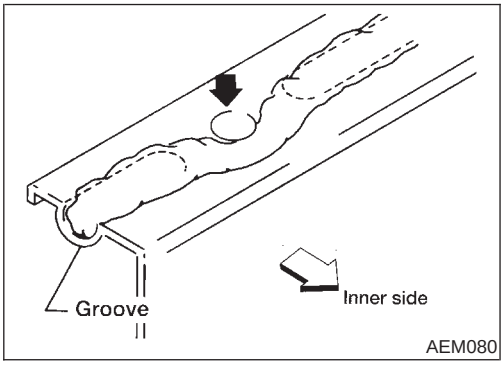

AEM080

3. **Apply liquid gasket around the inner side of bolt holes (unless otherwise specified).**
4. **Assembly should be done within 5 minutes after coating.**
5. **Wait at least 30 minutes before refilling engine oil and engine coolant.**

Special Service Tools

NAEM0003

The actual shapes of Kent-Moore tools may differ from those of special service tools illustrated here.

Tool number (Kent-Moore No.) Tool name	Description	
ST0501S000 (—) Engine stand assembly 1 ST05011000 (—) Engine stand 2 ST05012000 (—) Base	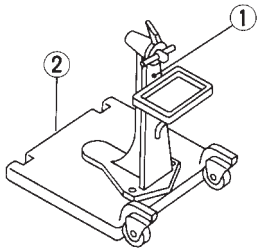 NT042	Disassembling and assembling
KV10106500 (—) Engine stand shaft	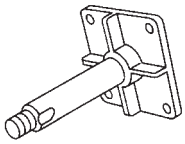 NT028	
KV10117000 (J41262) Engine sub-attachment	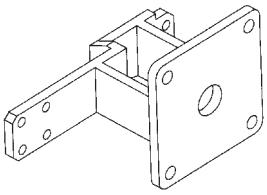 NT373	KV10117000 has been replaced with KV10117001 (KV10117000 is no longer in production, but it is usable).
KV10117001 (—) Engine sub-attachment	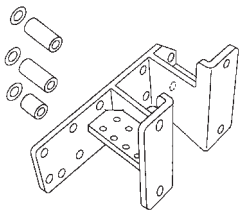 NT372	Installing on the cylinder block
ST10120000 (J24239-01) Cylinder head bolt wrench	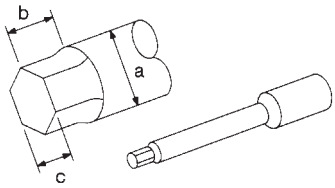 NT583	Loosening and tightening cylinder head bolt **a: 13 (0.51) dia.** **b: 12 (0.47)** **c: 10 (0.39)** Unit: mm (in)
KV10116200 (J26336-A) Valve spring compressor 1 KV10115900 (J26336-20) Attachment	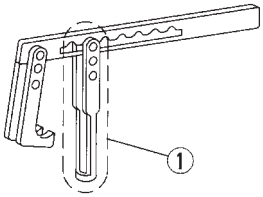 NT022	Disassembling valve mechanism

Tool number (Kent-Moore No.) Tool name	Description	
(J39386) Valve oil seal drift	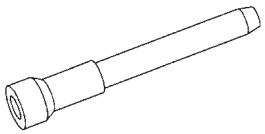 NT024	Installing valve oil seal
KV101151S0 (J38972) Lifter stopper set 1 KV10115110 (J38972-1) Camshaft pliers 2 KV10115120 (J38972-2) Lifter stopper	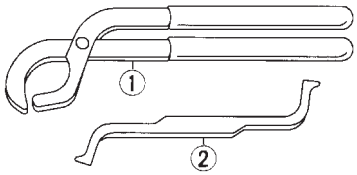 NT041	Changing shims
EM03470000 (J8037) Piston ring compressor	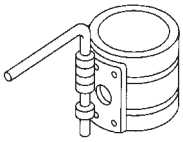 NT044	Installing piston assembly into cylinder bore
ST16610001 (J23907) Pilot bushing puller	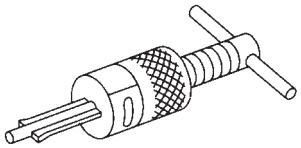 NT045	Removing crankshaft pilot bushing
KV10111100 (J37228) Seal cutter	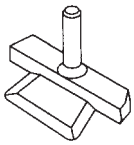 NT046	Removing steel oil pan and rear timing chain case
WS39930000 (—) Tube presser	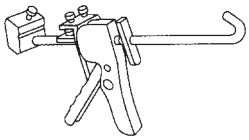 NT052	Pressing the tube of liquid gasket
KV10112100 (BT8653-A) Angle wrench	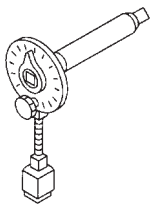 NT014	Tightening bolts for bearing cap, cylinder head, etc.

Special Service Tools (Cont'd)

Tool number (Kent-Moore No.) Tool name	Description	
KV10117100 (J3647-A) Heated oxygen sensor wrench	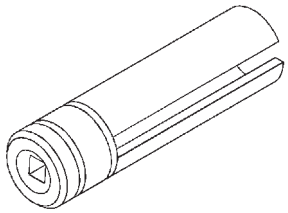 NT379	Loosening or tightening heated oxygen sensor **For 22 mm (0.87 in) hexagon nut**
KV10114400 (J38365) Heated oxygen sensor wrench	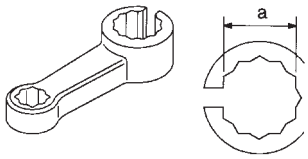 NT636	Loosening or tightening rear heated oxygen sensor **a: 22 mm (0.87 in)**
KV10117700 (J44716) Ring gear stopper	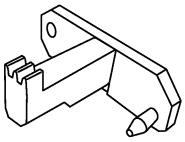 NT822	Removing and installing crankshaft pulley

Commercial Service Tools

NAEM0004

Tool number (Kent-Moore No.) Tool name	Description	
Spark plug wrench	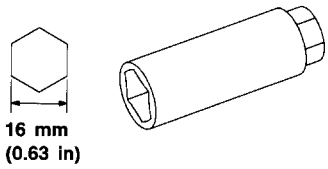 NT047	Removing and installing spark plug
Valve seat cutter set	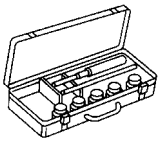 NT048	Finishing valve seat dimensions
Piston ring expander	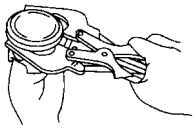 NT030	Removing and installing piston ring
Valve guide drift	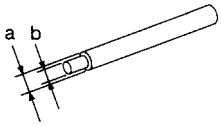 NT015	Removing and installing valve guide **Intake & Exhaust:** **a = 9.5 mm (0.374 in) dia.** **b = 5.5 mm (0.217 in) dia.**

Tool number (Kent-Moore No.) Tool name	Description	
Valve guide reamer	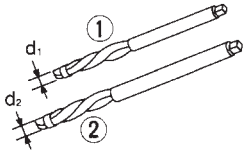 NT016	Reaming valve guide 1 or hole for oversize valve guide 2 **Intake & Exhaust:** **d_1 = 6.0 mm (0.236 in) dia.** **d_2 = 10.2 mm (0.402 in) dia.**
(J-43897-18) (J-43897-12) Oxygen sensor thread cleaner	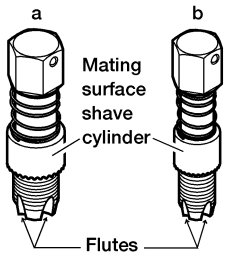 AEM488	Reconditioning the exhaust system threads before installing a new oxygen sensor (Use with anti-seize lubricant shown below.) **a = J-43897-18 (18 mm dia.) for zirconia oxygen sensor** **b = J-43897-12 (12 mm dia.) for titania oxygen sensor**
Anti-seize lubricant (Permatex 133AR or equivalent meeting MIL specification MIL-A-907)	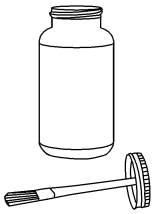 AEM489	Lubricating oxygen sensor thread cleaning tool when reconditioning exhaust system threads

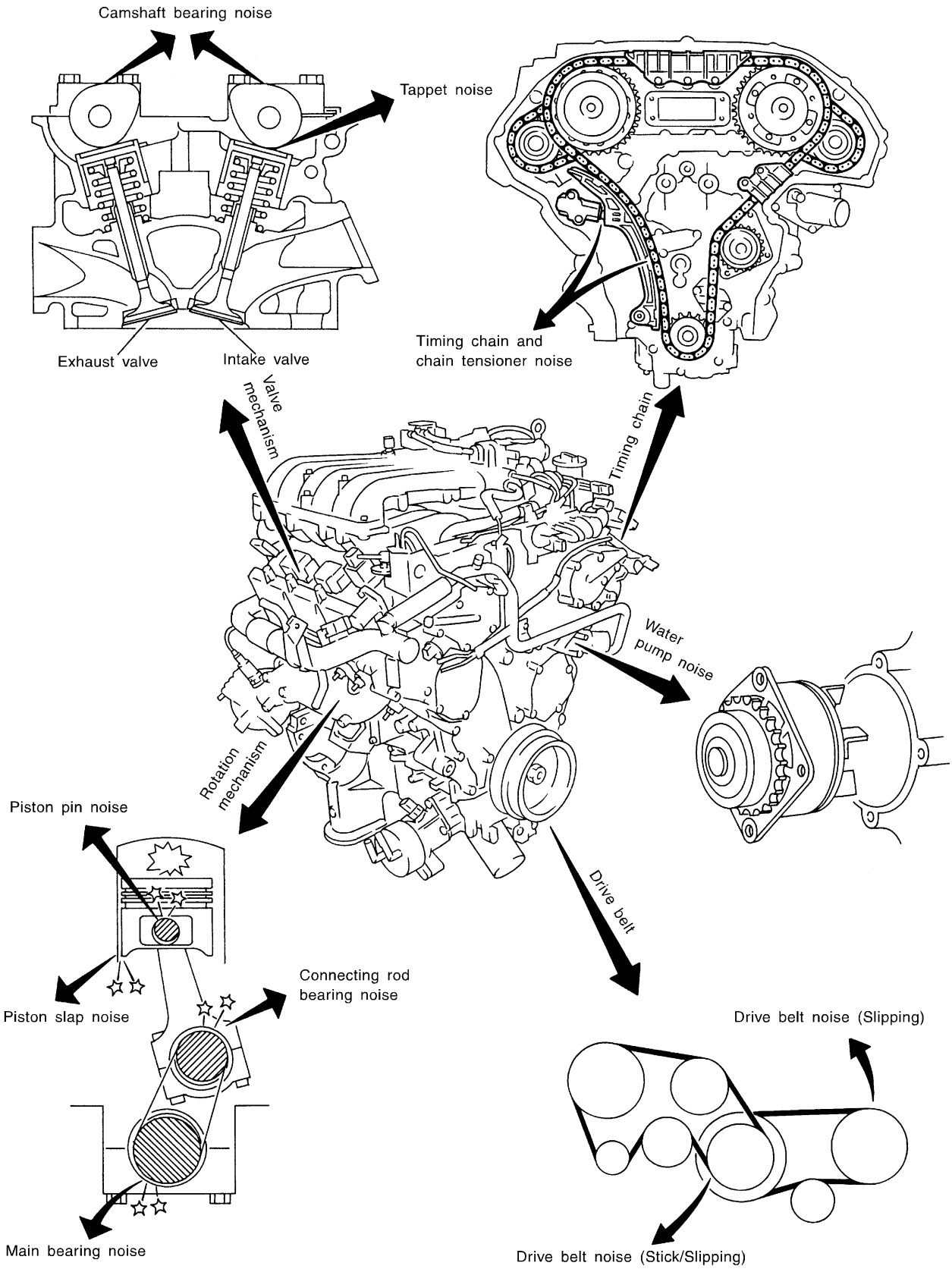
Camshaft bearing noise
Tappet noise
Exhaust valve
Intake valve
Timing chain and
chain tensioner noise
Valve
mechanism
Timing chain
Water
pump noise
Rotation
mechanism
Piston pin noise
Drive belt
Connecting rod
bearing noise
Piston slap noise
Drive belt noise (Slipping)
Main bearing noise
Drive belt noise (Stick/Slipping)

SEM472G

NVH Troubleshooting — Engine Noise

NAEM0005S01

Use the chart below to help you find the cause of the symptom.

1. Locate the area where noise occurs.
2. Confirm the type of noise.
3. Specify the operating condition of engine.
4. Check specified noise source.

If necessary, repair or replace these parts.

Location of noise	Type of noise	Operating condition of engine						Source of noise	Check item	Reference page
		Before warm-up	After warm-up	When starting	When idling	When racing	While driving			
Top of engine Rocker cover Cylinder head	Ticking or clicking	C	A	—	A	B	—	Tappet noise	Valve clearance	EM-55
	Rattle	C	A	—	A	B	C	Camshaft bearing noise	Camshaft journal clearance Camshaft runout	EM-43, 43
Crankshaft pulley Cylinder block (Side of engine) Oil pan	Slap or knock	—	A	—	B	B	—	Piston pin noise	Piston and piston pin clearance Connecting rod bushing clearance	EM-64, 71
	Slap or rap	A	—	—	B	B	A	Piston slap noise	Piston-to-bore clearance Piston ring side clearance Piston ring end gap Connecting rod bend and torsion	EM-65, 65, 66, 67
	Knock	A	B	C	B	B	B	Connecting rod bearing noise	Connecting rod bushing clearance (Small end) Connecting rod bearing clearance (Big end)	EM-71, 70
	Knock	A	B	—	A	B	C	Main bearing noise	Main bearing oil clearance Crankshaft runout	EM-68, 68
Front of engine Timing chain cover	Tapping or ticking	A	A	—	B	B	B	Timing chain and chain tensioner noise	Timing chain cracks and wear Timing chain tensioner operation	EM-29, 20
Front of engine	Squeaking or fizzing	A	B	—	B	—	C	Other drive belts (Sticking or slipping)	Drive belts deflection	MA section (“Checking Drive Belts”, “ENGINE MAINTENANCE”)
	Creaking	A	B	A	B	A	B	Other drive belts (Slipping)	Idler pulley bearing operation	
	Squall Creak	A	B	—	B	A	B	Water pump noise	Water pump operation	LC section (“Water Pump Inspection”, “ENGINE COOLING SYSTEM”)

A: Closely related B: Related C: Sometimes related —: Not related

Removal and Installation

NAEM0006

SEC. 111•140•148•163•164•220•223

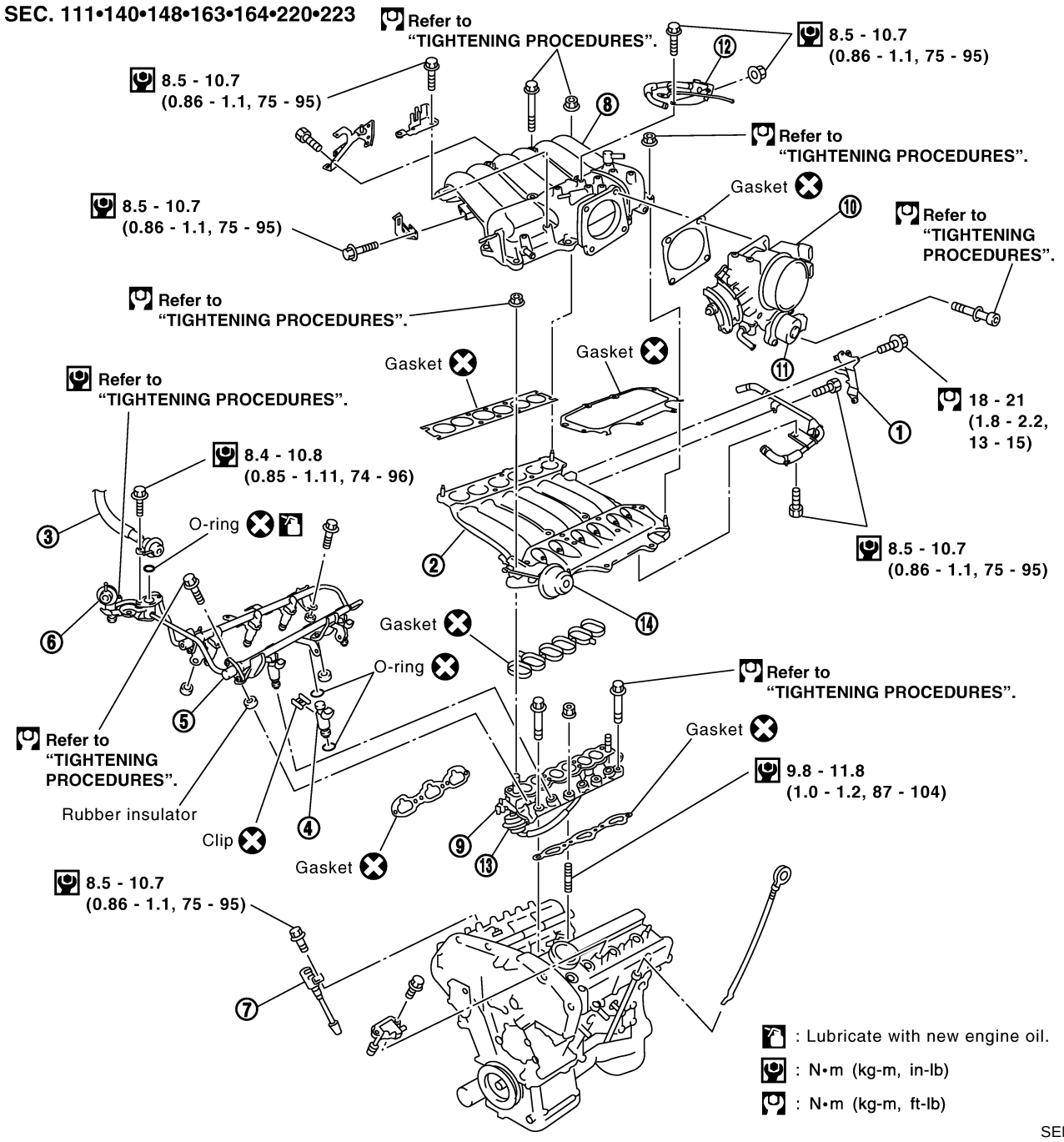

1. Intake manifold collector support
2. Lower intake manifold collector
3. Fuel damper and fuel feed hose assembly
4. Injector
5. Fuel tube assembly
6. Fuel pressure regulator
7. Ignition coil with power transistor
8. Upper intake manifold collector
9. Intake manifold
10. Throttle body
11. IACV-AAC valve
12. EVAP canister purge volume control solenoid valve
13. Swirl control valve
14. Variable induction air control valve control actuator (A/T)

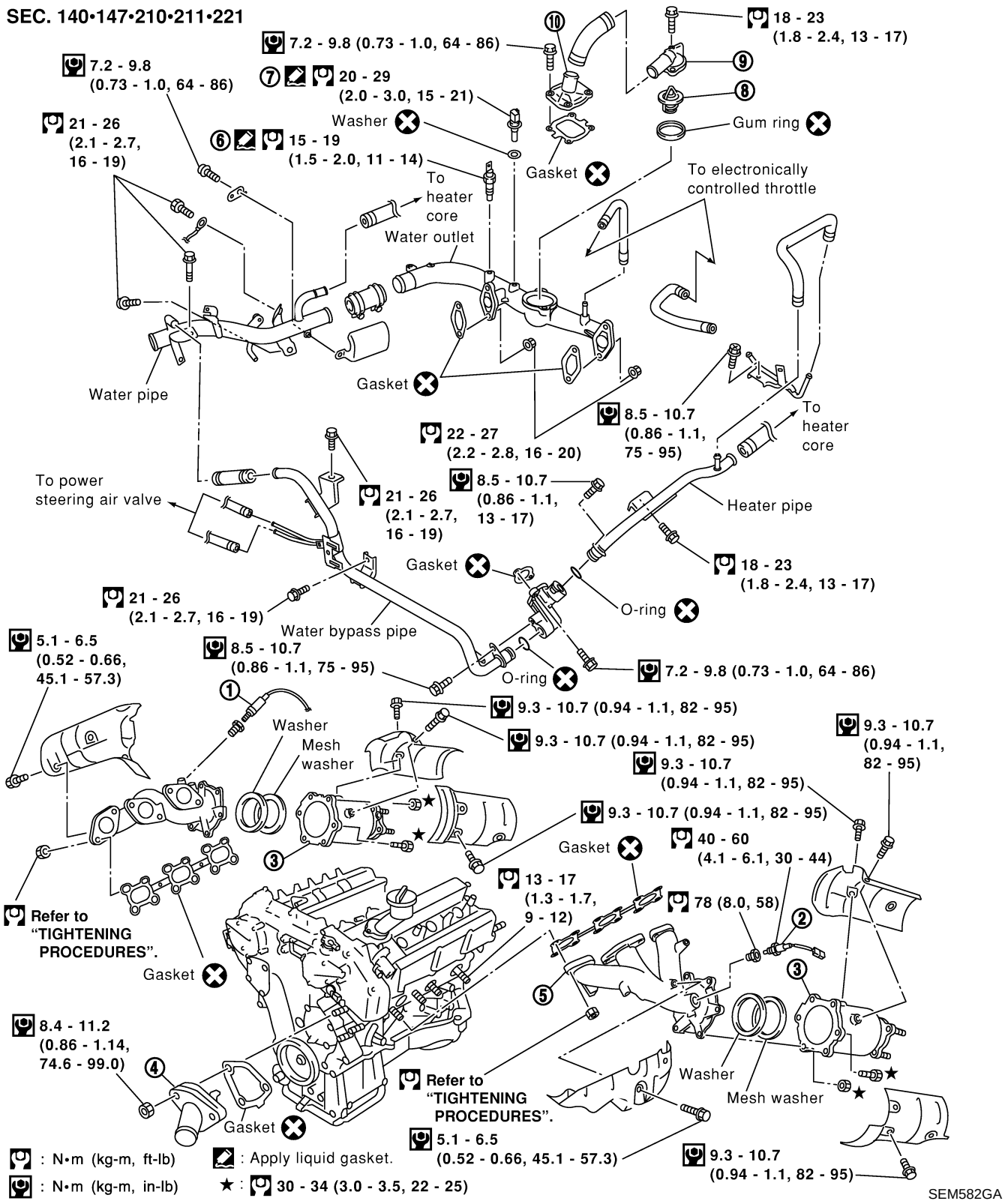

1. Heated oxygen sensor 1 (front) (bank 1)
2. Heated oxygen sensor 1 (front) (bank 2)
3. TWC (manifold)
4. Thermostat with water inlet
5. Exhaust manifold
6. Thermal transmitter
7. Engine coolant temperature
8. Water control valve
9. Water outlet housing
10. Cylinder block water outlet

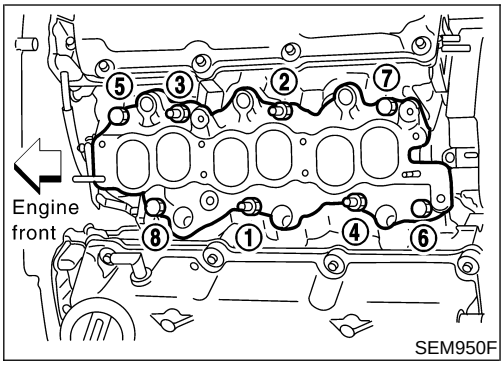

TIGHTENING PROCEDURES

NAEM0006S01

Intake Manifold

NAEM0006S0101

- **Tighten in numerical order shown in the figure.**

1. Tighten all bolts and nuts to 5 to 10 N·m (0.5 to 1.0 kg-m, 44 to 86 in-lb).
2. Finally tighten all bolts and nuts to 26 to 31 N·m (2.7 to 3.2 kg-m, 20 to 23 ft-lb).

- Tighten all bolts and nuts to the final torque, evenly dividing the tightening into at least five steps.

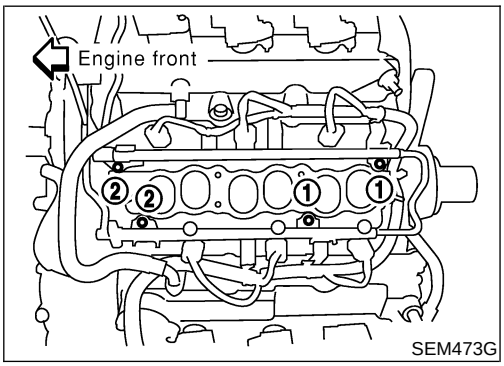

Fuel Tube

NAEM0006S0102

- **Tighten in numerical order shown in the figure.**

1. Tighten all bolts to 9.3 to 10.8 N·m (0.95 to 1.1 kg-m, 83 to 95 in-lb).
2. Then tighten all bolts to 21 to 26 N·m (2.1 to 2.7 kg-m, 15 to 20 ft-lb).

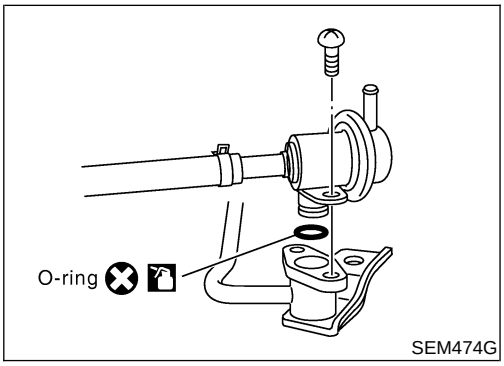

Fuel Pressure Regulator

NAEM0006S0103

Tighten fuel pressure regulator to 2.9 to 3.8 N·m (0.3 to 0.39 kg-m, 26.0 to 33.9 in-lb).

- **Tighten screws evenly several times to have the fuel pressure regulator tightened at the specified torque.**
- **Always replace O-ring with new ones.**
- **Lubricate O-ring with new engine oil.**

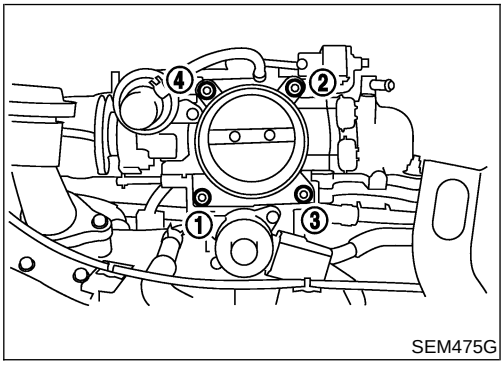

Throttle Body

NAEM0006S0105

- **Tighten in numerical order shown in the figure.**

1. Tighten all bolts to 8.8 to 10.8 N·m (0.9 to 1.1 kg-m, 79 to 95 in-lb).
2. Then tighten all bolts to 18 to 21 N·m (1.8 to 2.2 kg-m, 13 to 15 ft-lb).

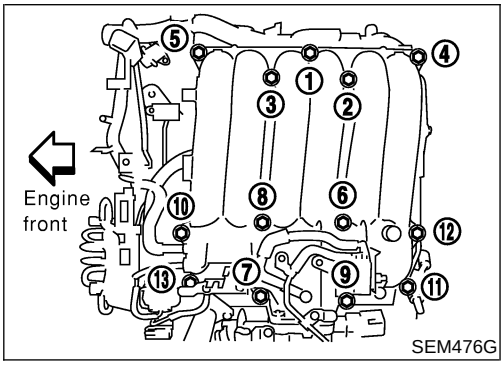

Upper Intake Manifold Collector

NAEM0006S0107

Tighten bolts and nuts to 18 to 21 N·m (1.8 to 2.2 kg-m, 13 to 15 ft-lb) in numerical order shown in the figure.

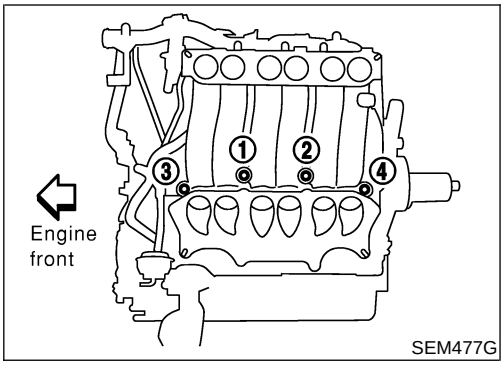

Lower Intake Manifold Collector

NAEM0006S0108

Tighten bolts and nuts to 18 to 21 N·m (1.8 to 2.2 kg-m, 13 to 15 ft-lb) in numerical order shown in the figure.

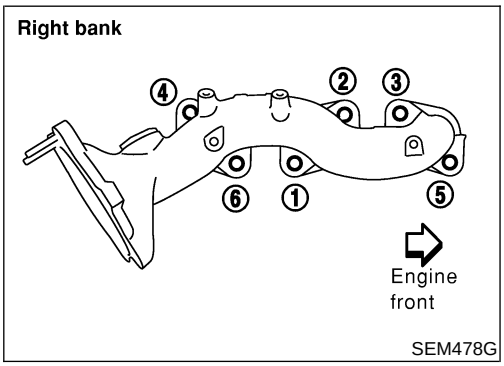

Exhaust Manifold

NAEM0006S0109

Tighten nuts to 28 to 32 N·m (2.9 to 3.3 kg-m, 21 to 24 ft-lb) in numerical order shown in the figure.

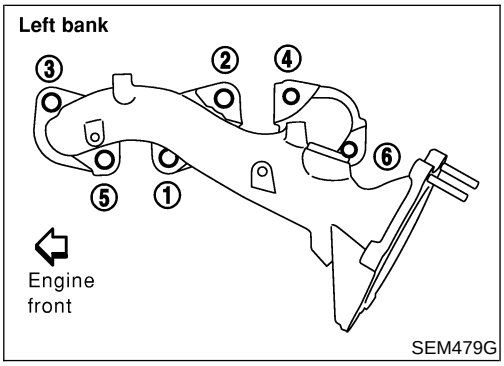

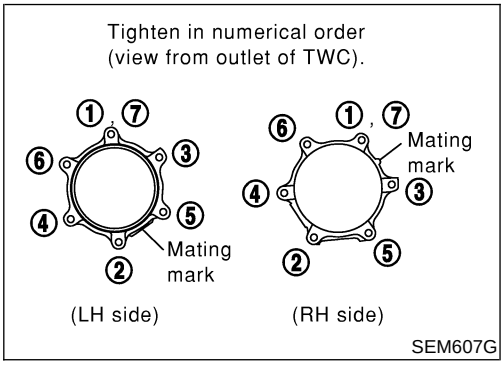

TWC (Manifold)

NAEM0006S0110

- Align the mating mark as shown for locating exhaust flange.

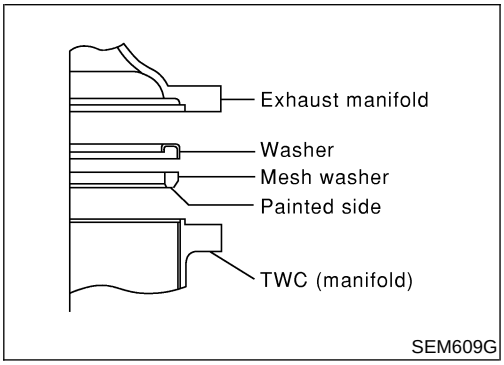

- Install washer and mesh washer as shown.

MEASUREMENT OF COMPRESSION PRESSURE

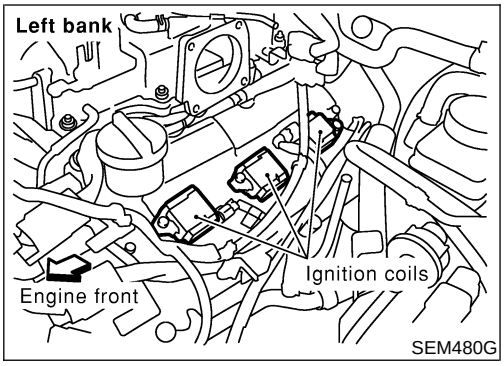

SEM480G

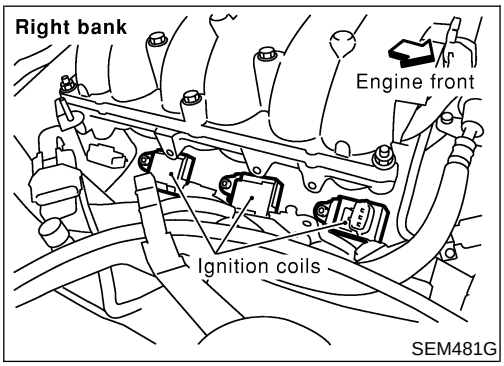

SEM481G

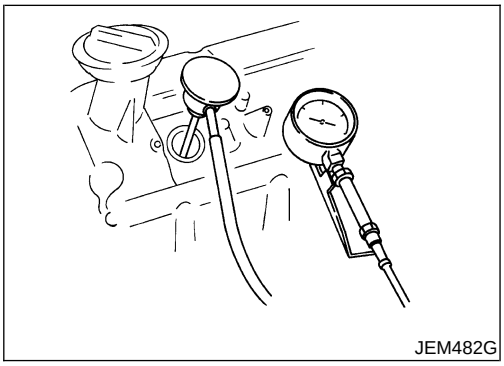
JEM482G

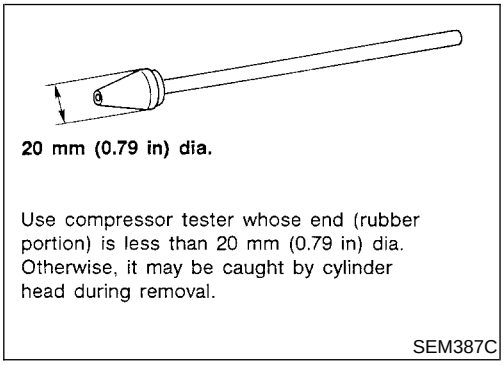

SEM387C

1. Warm up engine.
2. Turn ignition switch OFF.
3. Release fuel pressure.
   Refer to EC-40, “Fuel Pressure Release”.
4. Remove engine cover and throttle wire.
5. Remove air duct with air cleaner case.
6. Remove harness connectors and harness brackets around ignition coils.
7. Remove throttle body.
8. Disconnect ignition coil with power transistor harness connectors, then remove ignition coils.
9. Remove all spark plugs.

- Clean area around plug with compressed air before removing the spark plug.

10. Attach a compression tester to No. 1 cylinder.
11. Depress accelerator pedal fully to keep throttle valve wide open.
12. Crank engine and record highest gauge indication.
13. Repeat the measurement on each cylinder as shown above.

- **Always use a fully-charged battery to obtain specified engine speed.**

Unit: kPa (kg/cm^2, psi)/rpm

Standard	Minimum	Difference limit between cylinders
1,275 (13.0, 185)/300	981 (10.0, 142)/300	98 (1.0, 14)/300

14. If compression in one or more cylinders is low:

a. Pour a small amount of engine oil into cylinders through spark plug holes.
b. Retest compression.

- **If adding oil helps compression, piston rings may be worn or damaged. If so, replace piston rings after checking piston.**
- **If pressure stays low, a valve may be sticking or seating improperly. Inspect and repair valve and valve seat. (Refer to SDS, EM-77 and EM-80.) If valve or valve seat is damaged excessively, replace them.**
- **If compression stays low in two cylinders that are next to each other:**

a) The cylinder head gasket may be leaking, or
b) Both cylinders may have valve component damage. Inspect and repair as necessary.

15. Install parts in reverse order of removal.
16. Perform “Self-diagnosis Procedure” referring to EC-74, “How to Erase DTC” if any DTC appears.

Components

NAEM0008

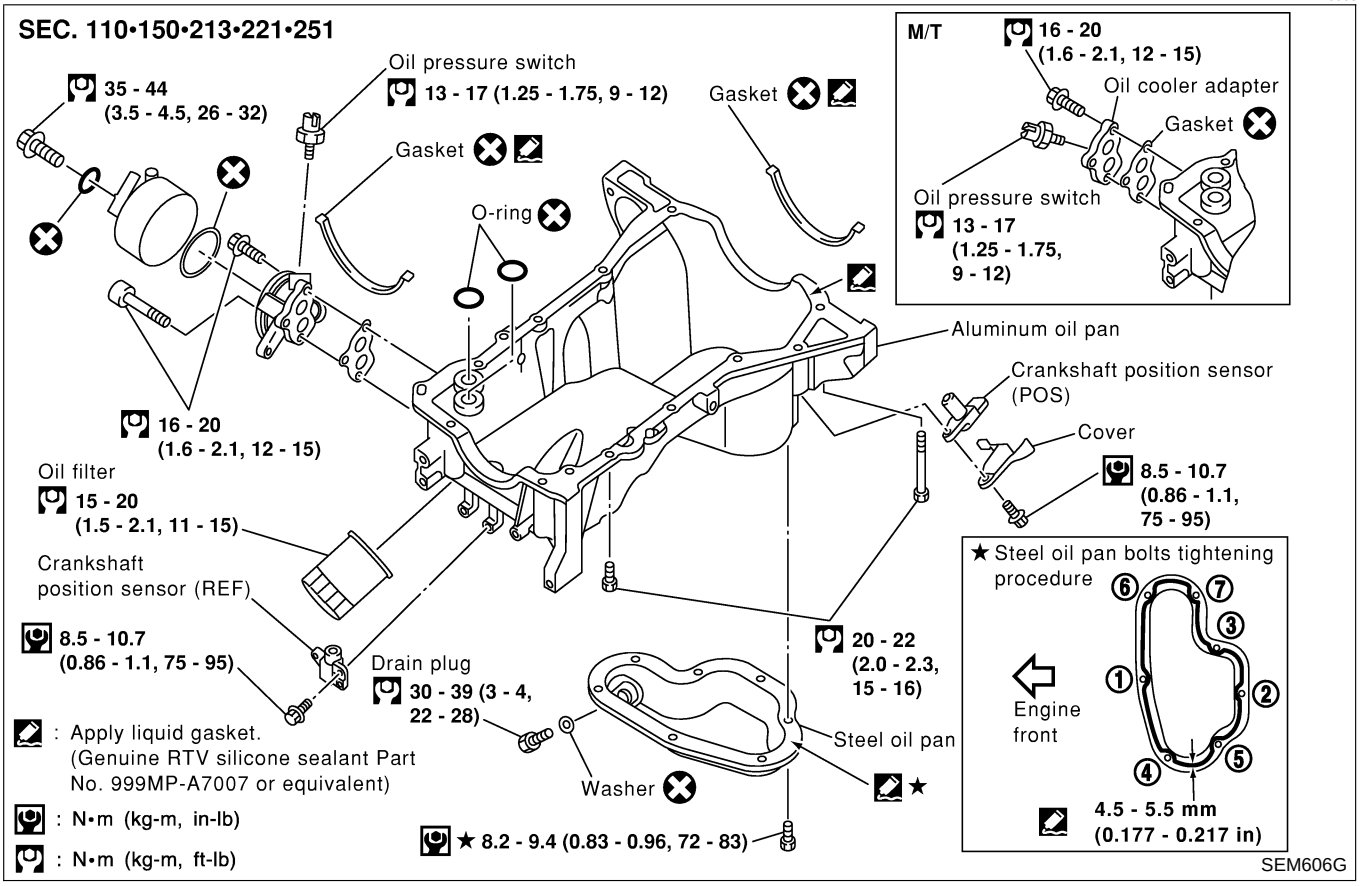

Removal

NAEM0009

WARNING:

- **Place vehicle on a flat and solid surface.**
- **You should not remove oil pan until exhaust system and cooling system have completely cooled off.**
  Otherwise, you may burn yourself and/or fire may break out in the fuel line.
- **When removing front engine mounting nuts, lift up slightly engine for safety work.**

CAUTION:

When removing the aluminum oil pan from engine, first remove the crankshaft position sensors (POS and REF) from the assembly.
Be careful not to damage sensor edges and signal plate teeth.

1. Remove front RH and LH wheels.
2. Remove battery.
3. Remove oil level gauge.
4. Remove engine undercover.
5. Remove suspension member stay.
6. Drain engine coolant from radiator drain plug.
7. Disconnect A/T oil cooler hoses. (A/T)
8. Drain engine oil.

9. Remove the crankshaft position sensors (REF and POS).
10. Remove drive belts and idler pulley with bracket.
11. Remove power steering oil pump, then put it aside holding with a suitable wire.
12. Remove alternator.

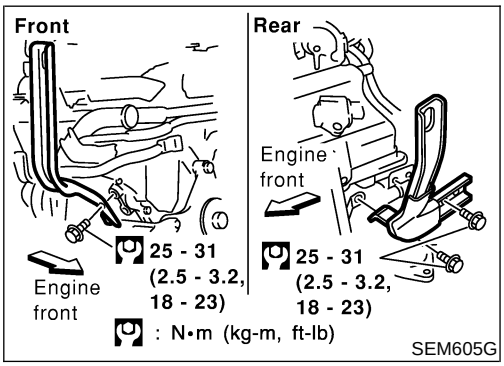

13. Install engine slingers.
14. Remove front propeller shaft. (4WD)
    Refer to PD-8, "Removal and Installation".
15. Remove exhaust front tube heat insulators, then remove rear heat oxygen sensors.
16. Remove exhaust front tube from both sides.
    Refer to FE-8, "Removal and Installation".
17. Remove front final drive. (4WD)
    Refer to PD-19, "Removal and Installation".
18. Remove starter motor.
19. Disconnect oil pressure switch harness connector.
20. Loosen and disconnect the bolts fixing the steering column assembly lower joint and the power steering gear.

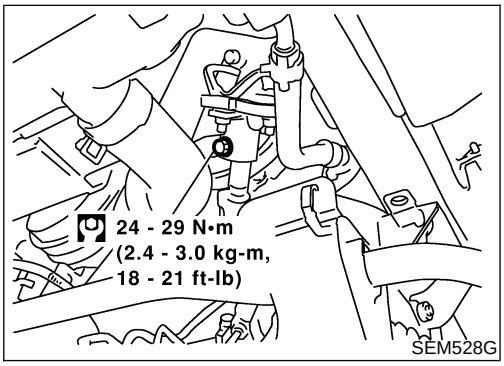

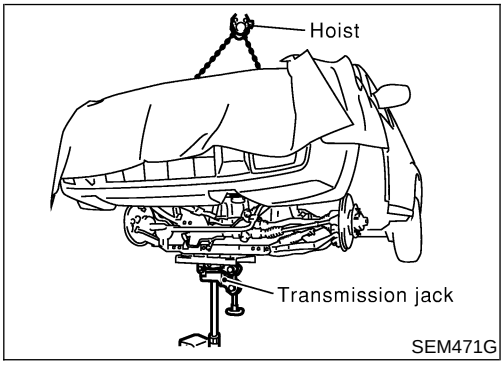

21. Set a suitable transmission jack under the front suspension member and hoist engine with engine slingers.

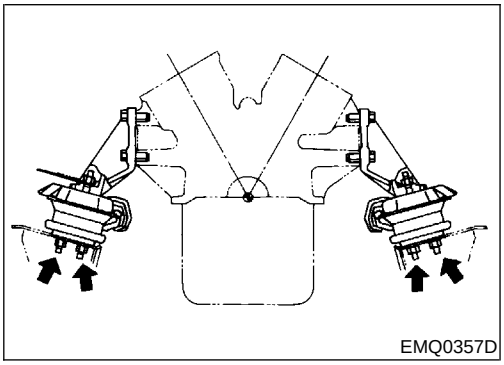

22. Remove front engine mounting nuts from both sides.

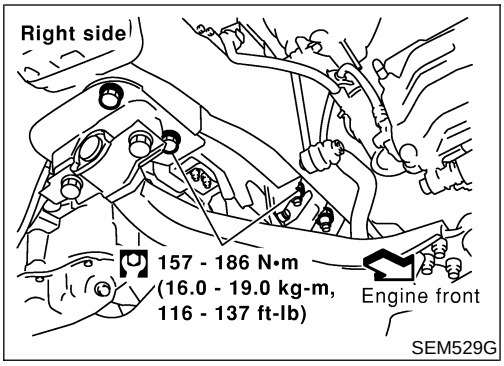

23. Remove front suspension member bolts.
24. Lower the transmission jack carefully to secure clearance between the oil pan and suspension member.
25. Remove A/T oil cooler tube. (A/T)
26. Remove water hose and tube. (A/T)

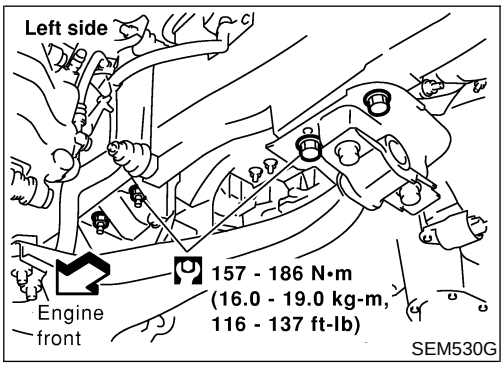

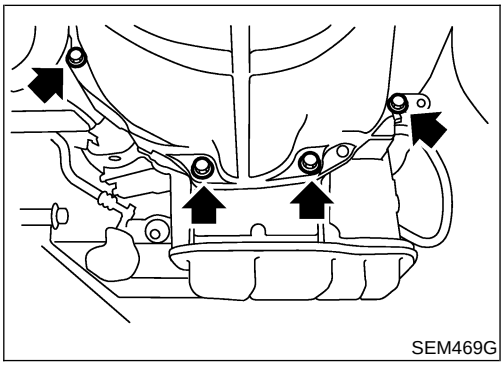

27. Remove the four engine-to-transmission bolts.

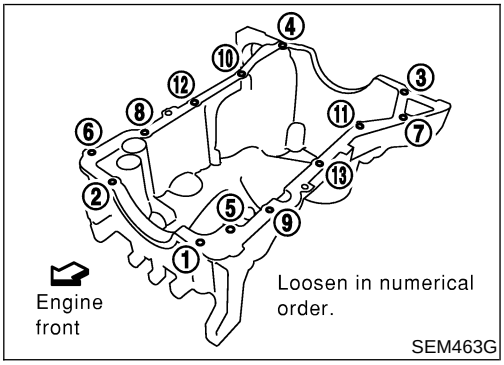

28. Remove aluminum oil pan bolts in numerical order.

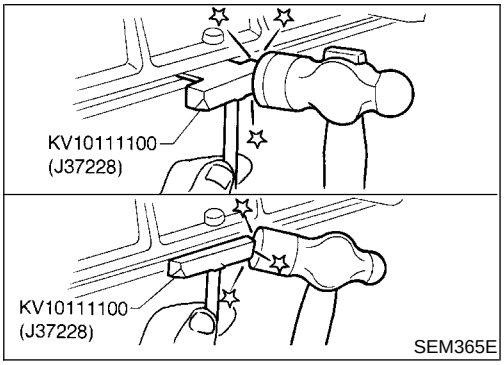

29. Remove aluminum oil pan.

a. Insert tool between aluminum oil pan and cylinder block.

- **Be careful not to damage aluminum mating surface.**
- **Do not insert screwdriver, or oil pan flange will be deformed.**

b. Slide tool by tapping its side with a hammer.

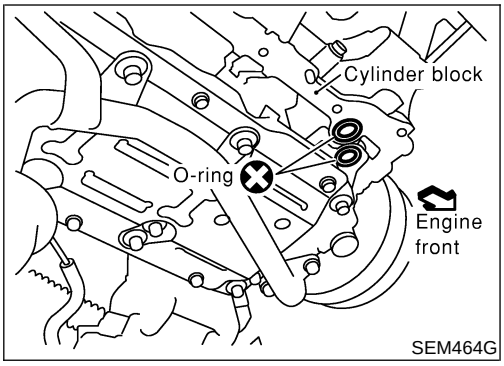

30. Remove O-rings from cylinder block and oil pump body.

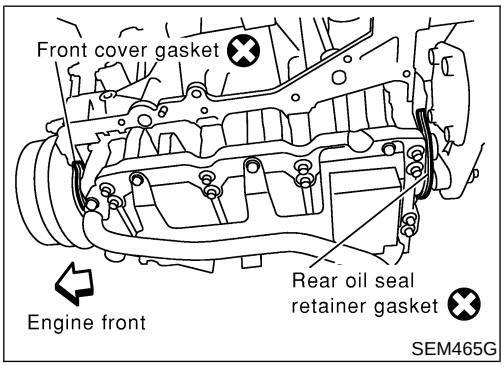

31. Remove front cover gasket and rear oil seal retainer gasket.

Installation

NAEM0010

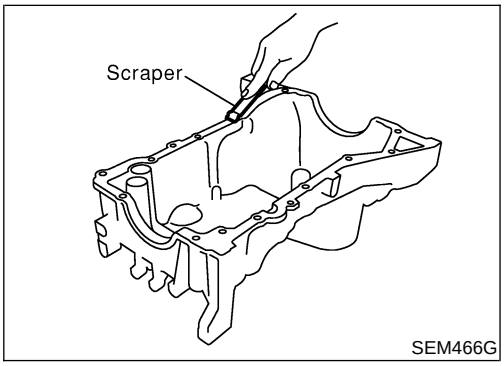

1. Before installing oil pan, remove old liquid gasket from mating surface using a scraper.

- **Also remove old liquid gasket from mating surface of cylinder block.**
- **Remove old liquid gasket from the bolt hole and thread.**

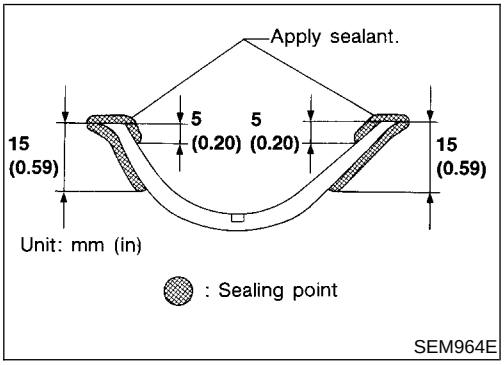

2. Apply sealant to front cover gasket and rear oil seal retainer gasket.

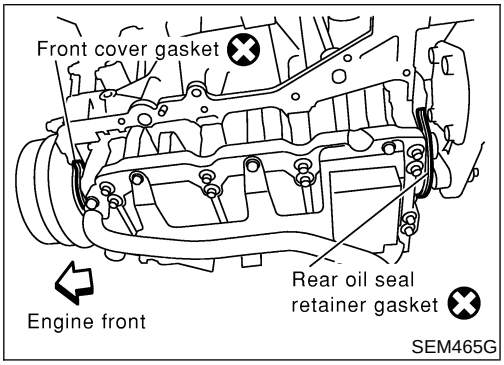

3. Install front cover gasket and rear oil seal retainer gasket.

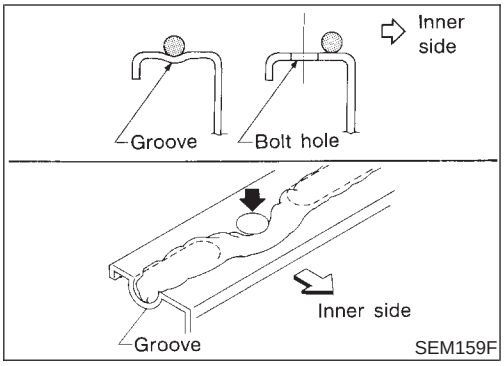

4. Apply a continuous bead of liquid gasket to mating surface of aluminum oil pan.
- **Use Genuine RTV silicone sealant Part No. 999MP-A7007 or equivalent.**

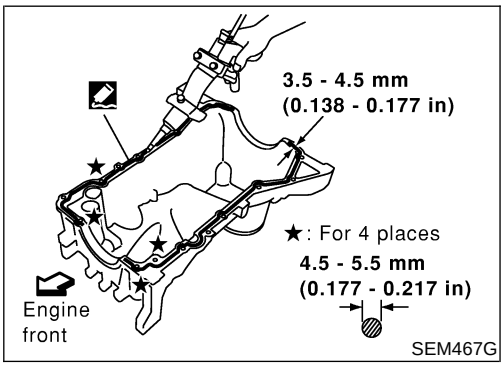

5. Apply liquid gasket to inner sealing surface as shown in figure.
- **Be sure liquid gasket is 4.0 to 5.0 mm (0.157 to 0.197 in) or 4.5 to 5.5 mm (0.177 to 0.217 in) wide.**
- **Attaching should be done within 5 minutes after coating.**

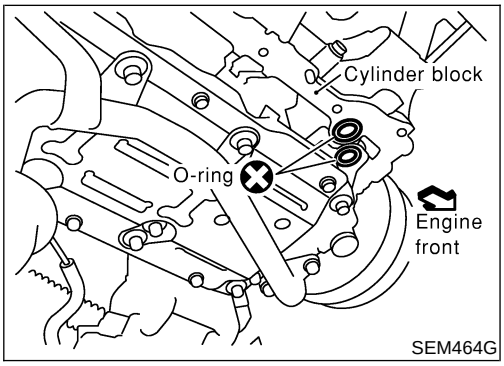

6. Install O-rings, cylinder block and oil pump body.

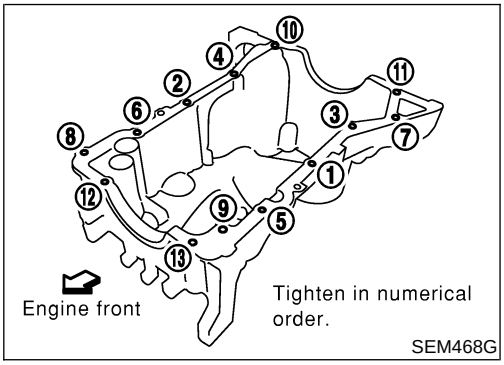

7. Install aluminum oil pan.
- Tighten bolts in numerical order.
- **Wait at least 30 minutes before refilling engine oil.**

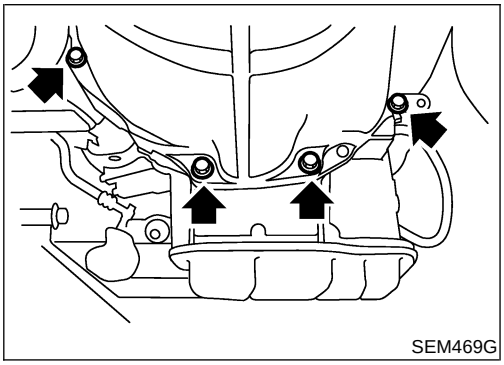

8. Install the four engine-to-transmission bolts. For tightening torque, refer to AT-278 or MT-12, "Installation".
9. Reinstall in the revrse order of removal.

Components

NAEM0011

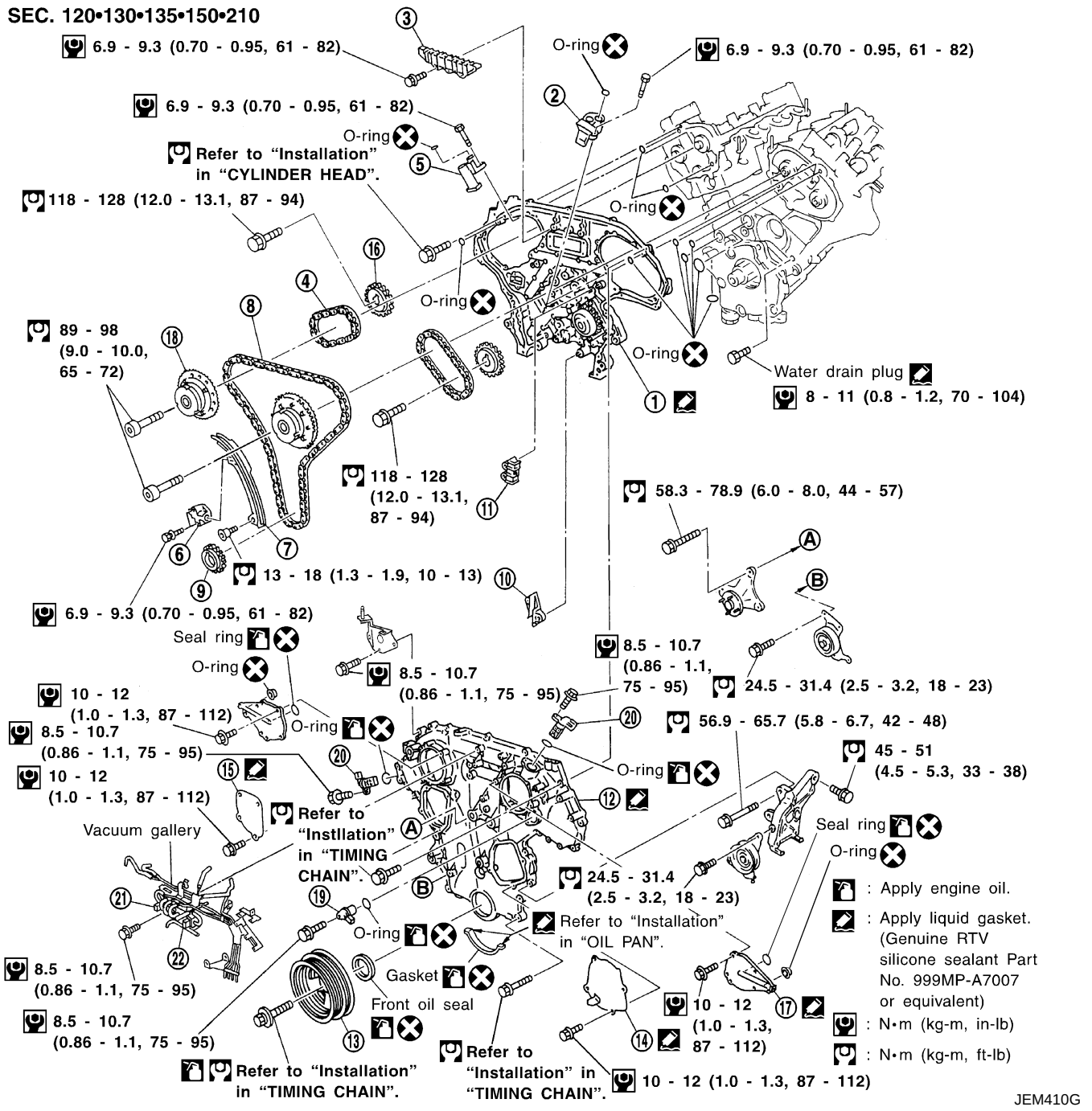

1. Rear timing chain case
2. Left camshaft chain tensioner
3. Internal guide
4. Timing chain (Secondary)
5. Right camshaft chain tensioner
6. Timing chain tensioner
7. Slack guide
8. Timing chain (Primary)
9. Crankshaft sprocket
10. Lower tension guide
11. Upper tension guide
12. Front timing chain case
13. Crankshaft pulley
14. Water pump cover
15. Chain tensioner cover
16. Exhaust camshaft sprocket
17. CVTC cover
18. Intake camshaft sprocket
19. PHASE sensor
20. CVTC sensor
21. Variable induction air control valve control solenoid valve (A/T)
22. Swirl control valve control solenoid valve

POSITION FOR APPLYING LIQUID GASKET

=NAEM0011S01

Refer to "Installation" in "OIL PAN", EM-18.

- **Before installation, wipe off the protruding sealant.**

Front timing chain case

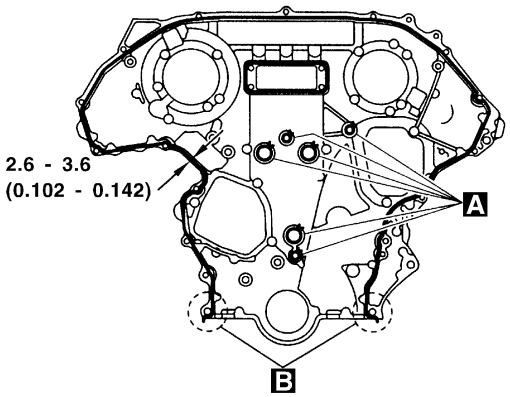

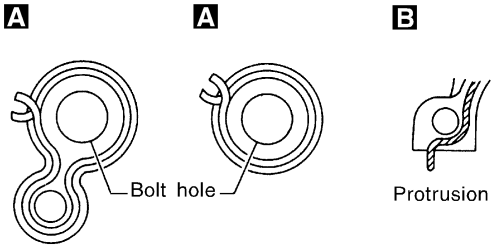

Sealant protrusion away from bolt hole

Rear timing chain case

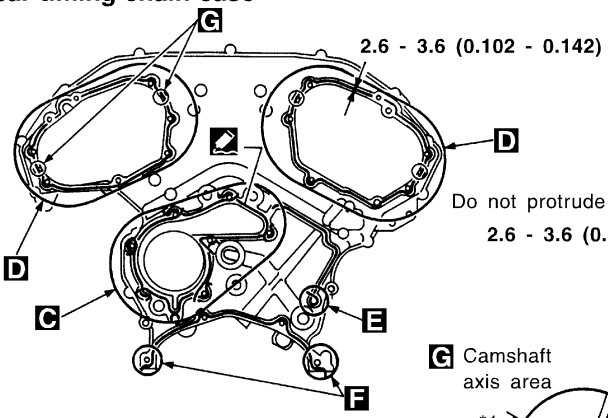

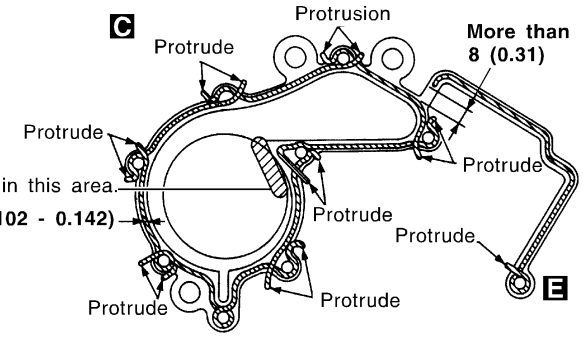

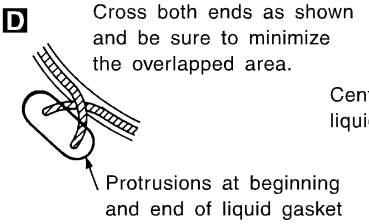

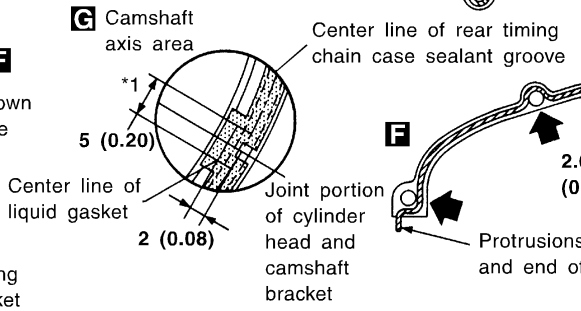

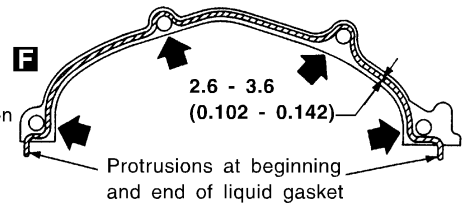

*1: Apply liquid gasket to the chamfered surface between camshaft bracket and cylinder head.

Camshaft bracket

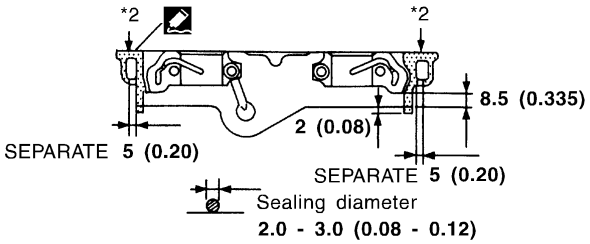

*2: Remove the protruding sealant from front face.
(Remove the hardened sealant from surface only.)

Rocker cover

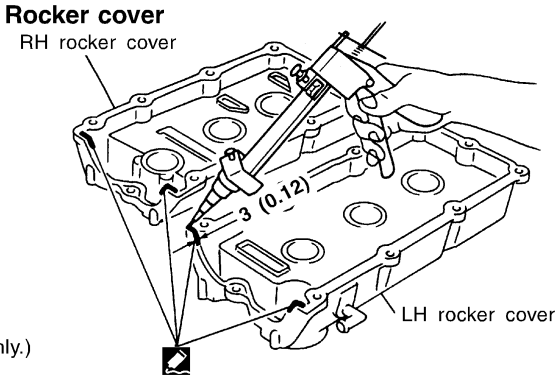

Unit: mm (in)

SEM411G

CAUTION:

- **After removing timing chain, do not turn crankshaft and camshaft separately, or valves will strike piston heads.**
- **When installing camshafts, chain tensioners, oil seals, or other sliding parts, lubricate contacting surfaces with new engine oil.**
- **Apply new engine oil to bolt threads and seat surfaces when installing camshaft sprockets and crankshaft pulley.**
- **Before disconnecting fuel hose, release fuel pressure. Refer to EC-40, "Fuel Pressure Release".**
- **Be careful not to damage sensor edges.**
- **Do not spill engine coolant on drive belts.**

Removal

NAEM0012

1. Release fuel pressure.
   Refer to EC-40, "Fuel Pressure Release".
2. Remove battery.
3. Remove radiator.
   Refer to LC-20, "REMOVAL AND INSTALLATION".
4. Drain engine oil.
5. Remove drive belts and idler pulley with brackets.
6. Remove cooling fan with bracket.
7. Remove engine cover.
8. Remove air duct with air cleaner case, collector, blow-by hose, vacuum hoses, fuel hoses, water hoses, wires, harnesses, connectors and so on.
9. Remove the air compressor, and tie it down using rope or the like to keep it from interfering.
10. Remove the power steering oil pump and reservoir tank. Tie them down using rope or the like to keep them from interfering.
11. Remove alternator.
12. Remove the following.

- Vacuum gallery
- Water bypass pipe
- Brackets

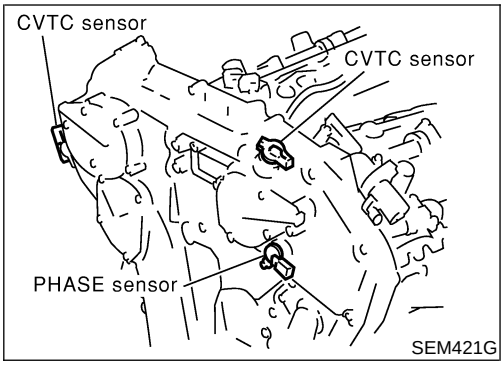

13. Remove camshaft position sensor (PHASE), CVTC sensors and crankshaft position sensor (REF).
- Avoid impact such as dropping.
- Do not disassemble the components.
- Do not place them on areas where iron powder may adhere.
- Keep away from the objects susceptible to magnetism.

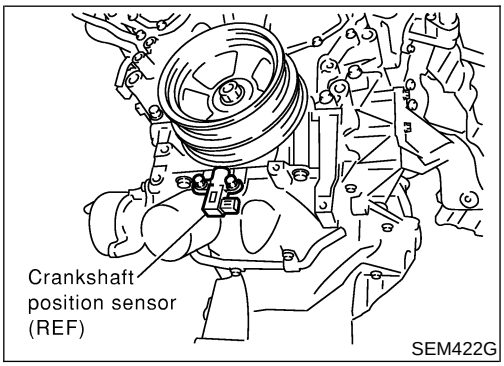

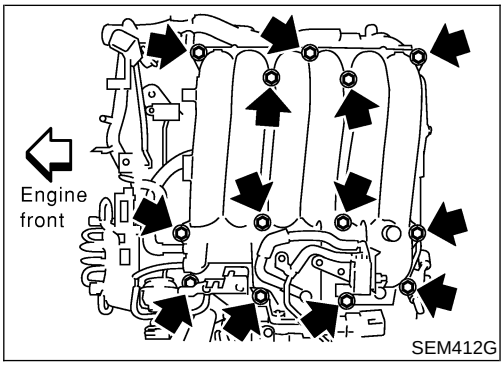

14. Remove upper intake manifold collector in reverse order of installation. Refer to EM-12, "Upper Intake Manifold Collector".

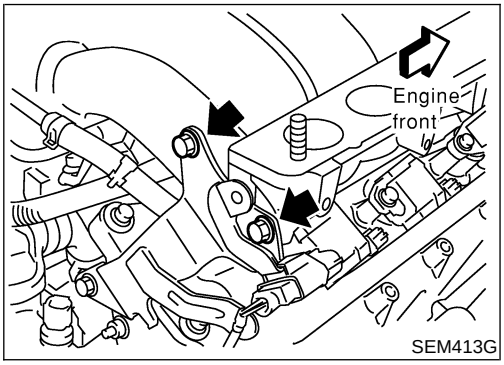

15. Remove intake manifold collector support bolts.

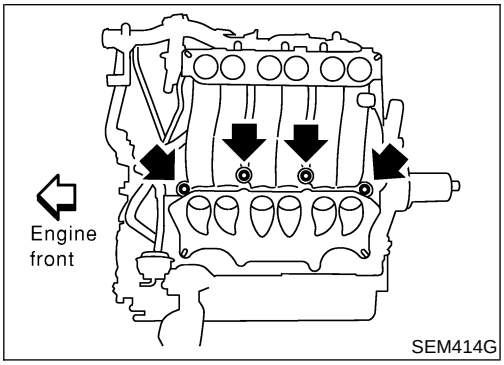

16. Remove lower intake manifold collector in reverse order of installation. Refer to EM-13, "Lower Intake Manifold Collector".

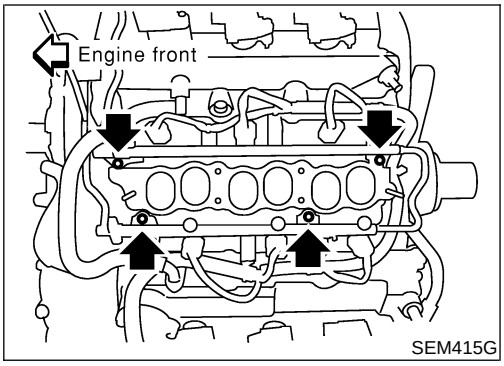

17. Disconnect injector harness connectors.
18. Remove fuel tube assembly in reverse order of installation. Refer to EM-12, "Fuel Tube".

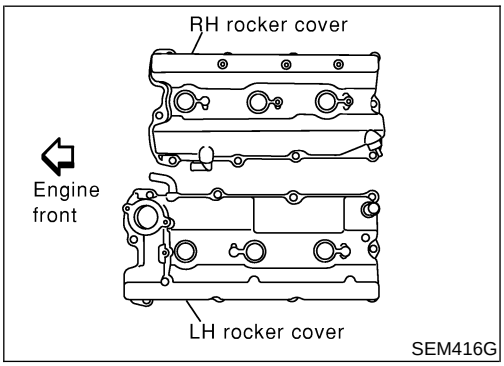

19. Remove ignition coils.
20. Remove RH and LH rocker covers from cylinder head.

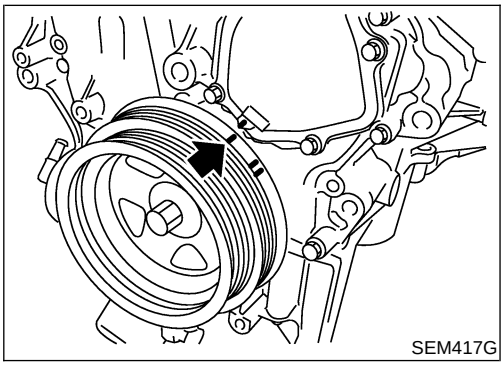

21. Set No. 1 piston at TDC on the compression stroke by rotating crankshaft.
- Align pointer with TDC mark on crankshaft pulley.

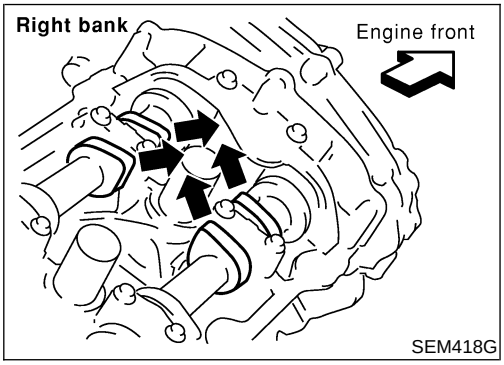

- Check that intake and exhaust cam nose on No. 1 cylinder are installed as shown left.
  If not, turn the crankshaft one revolution (360°) and align as above.

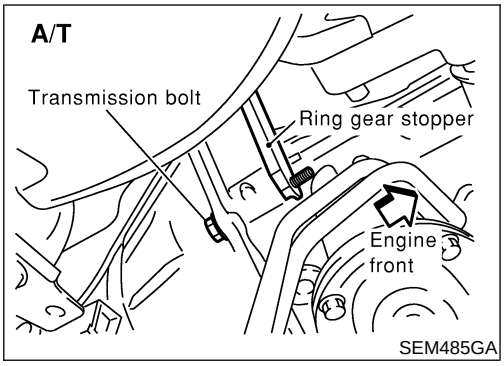

22. Remove starter motor, and set ring gear stopper using the mounting bolt hole.

- **Be careful not to damage the signal plate teeth.**

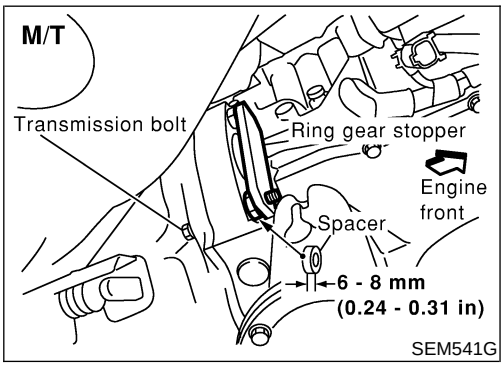

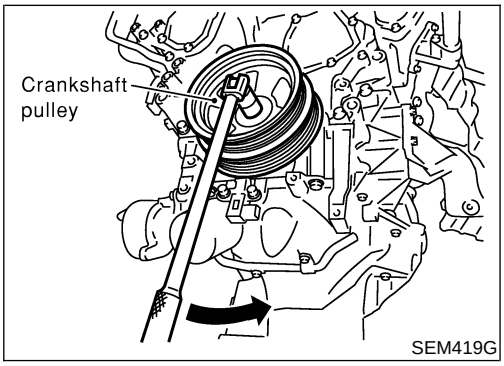

23. Loosen the crankshaft pulley bolt.

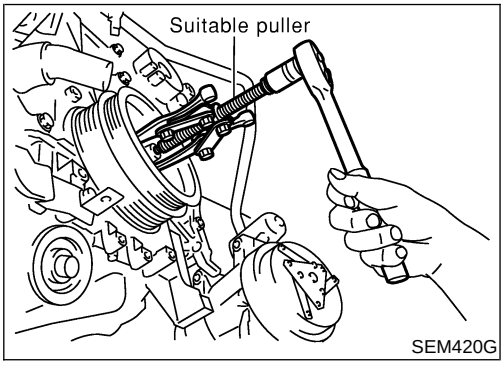

24. Remove crankshaft pulley with a suitable puller.
25. Remove aluminum oil pan.
    Refer to EM-15, "Removal".
26. Temporarily install the suspension member bolts and engine mounting nuts.

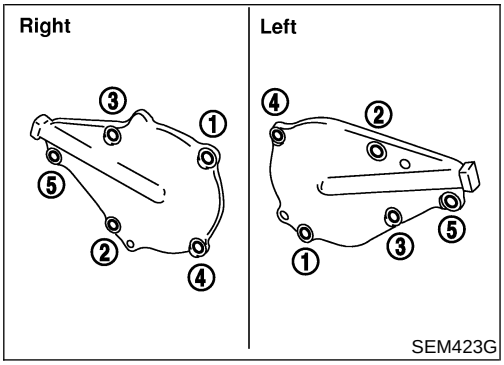

27. Remove CVTC covers.

- **Loosen bolts in numerical order as shown in the figure.**
- In the cover, the shaft is engaged with the center hole of the intake cam sprocket. Remove it straight out until the engagement comes off.

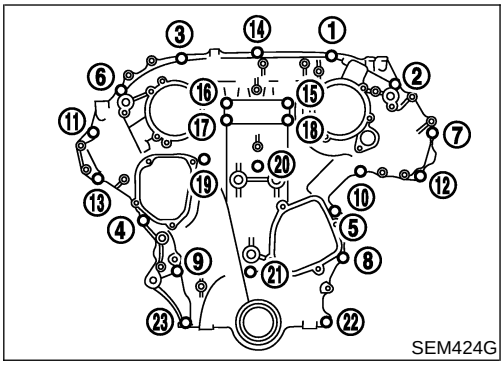

28. Remove front timing chain case bolts.
- **Loosen bolts in numerical order as shown in the figure.**

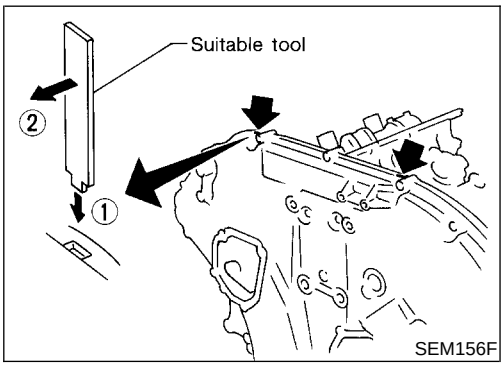

29. Remove front timing chain case.
- **Do not scratch sealing surfaces.**

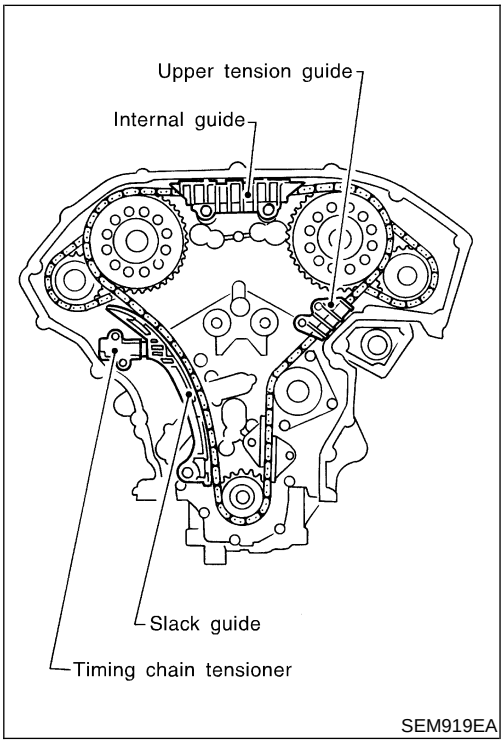

30. Remove internal chain guide.
31. Remove upper tension guide.
32. Remove timing chain tensioner and slack guide.

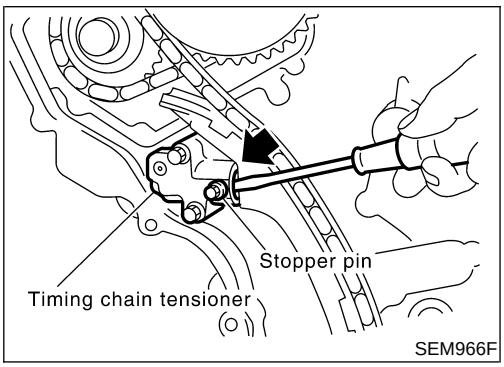

- Remove timing chain tensioner. (Push piston and insert a suitable pin into pinhole.)

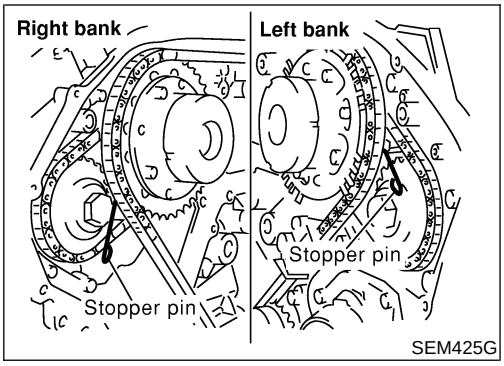

33. Attach a suitable stopper pin to RH and LH camshaft chain tensioners.

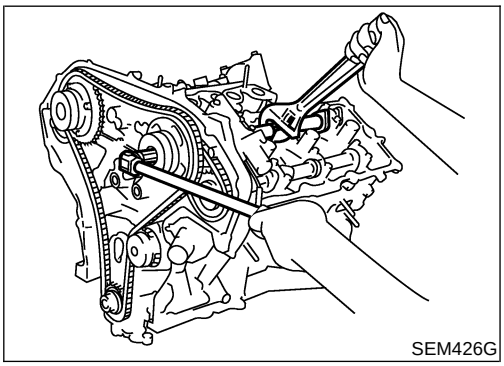

34. Remove intake and exhaust camshaft sprocket bolts.
- **Apply paint to timing chain and camshaft sprockets for alignment during installation.**
- **Secure the hexagonal head of the camshaft using a spanner to loosen mounting bolts.**

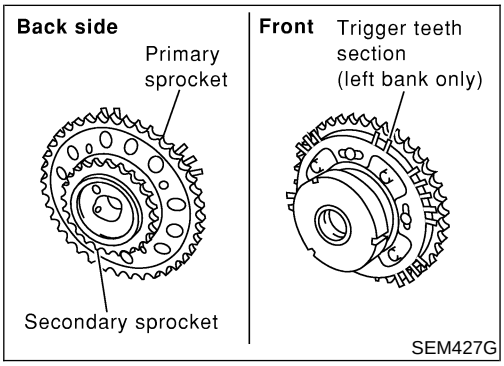

35. Remove primary and secondary timing chains along with the camshaft sprockets.
- Do not disassemble the intake camshaft sprocket.
- Avoid damaging the signal mark protrusion area at the front of the left bank intake camshaft sprocket. Keep it away from magnetized objects.

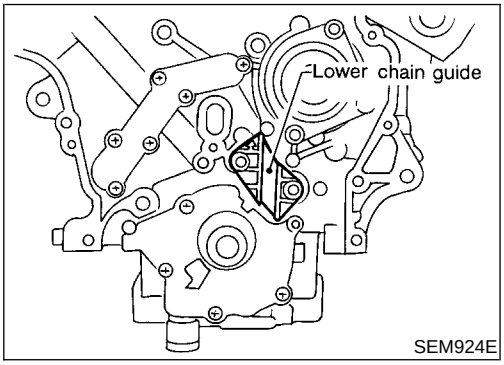

36. Remove lower chain guide.
37. Remove crankshaft sprocket.

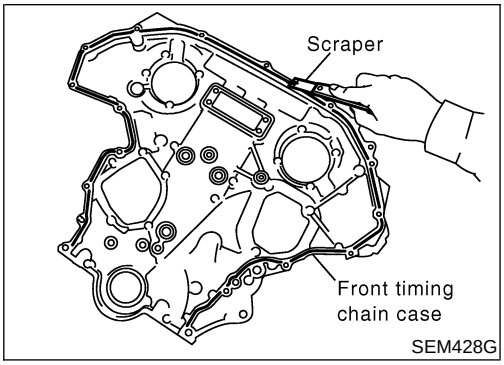

38. Use a scraper to remove all traces of liquid gasket from front timing chain case.

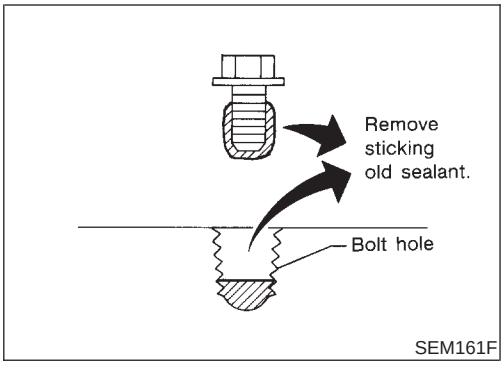

- **Remove old liquid gasket from the bolt hole and thread.**

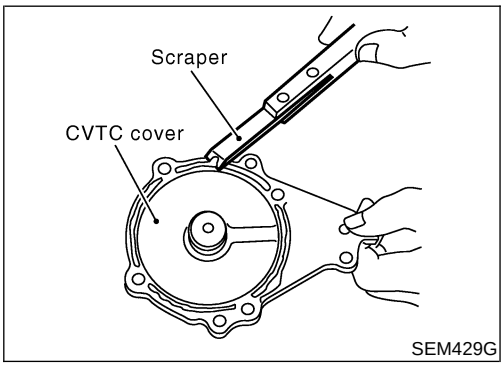

39. Use a scraper to remove all traces of liquid gasket from CVTC cover.

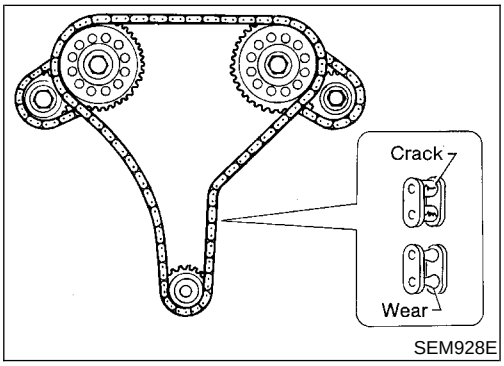

Inspection

NAEM0013

Check for cracks and excessive wear at roller links. Replace chain if necessary.

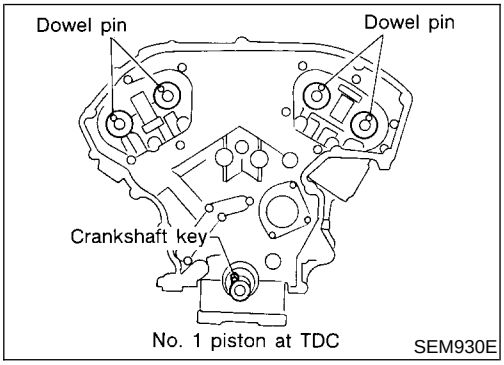

Installation

NAEM0014

1. Position crankshaft so that No. 1 piston is set at TDC on compression stroke.

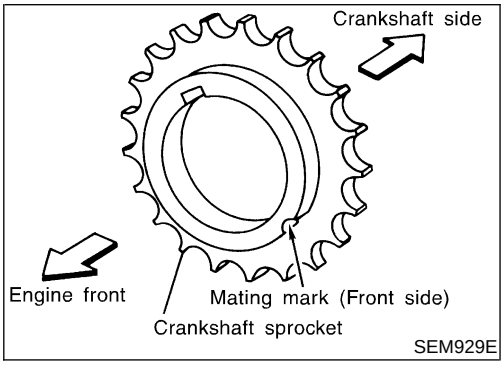

2. Install crankshaft sprocket on crankshaft.

- **Make sure that mating marks on crankshaft sprocket face front of engine.**

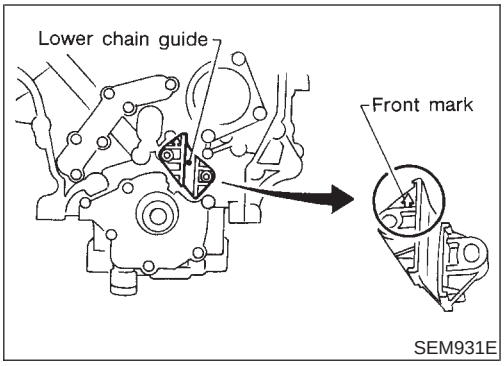

3. Install lower chain guide on dowel pin, with front mark on the guide facing upside.

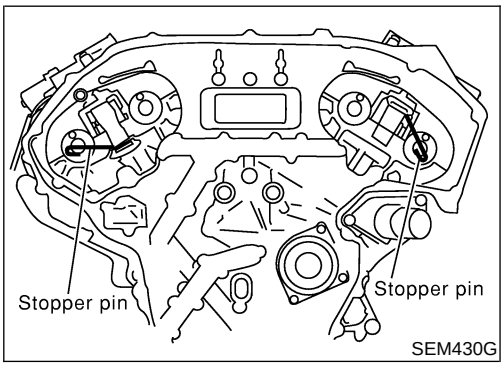

4. Press and shrink the secondary chain tensioner sleeve, and fix it using stopper pins.

- Lubricate threads and seat surfaces of camshaft sprocket bolts with new engine oil.

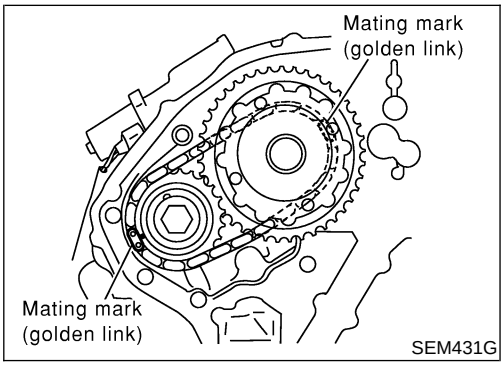

5. Install secondary timing chain and sprocket to one of the banks (Right bank shown in the figure) as described below.

a. Align mating marks (golden links) on secondary timing chain with those (punched marks) on the intake and exhaust sprockets.

b. Align camshaft knock pins with the sprocket groove and hole.

- Because camshaft sprocket mounting bolts are tightened in step 7, perform manual tightening to the extent necessary to keep camshaft knock pin from dislocating.

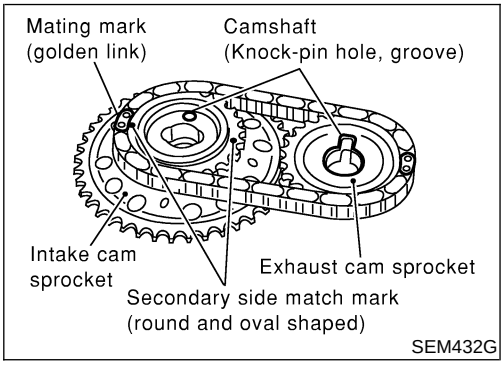

- Matching marks of the intake sprocket are on the back side of the secondary sprockets. There are two types of the marks; round and oval types, which should be used for right and left banks respectively.

  Right bank: Round

  Left bank: Oval

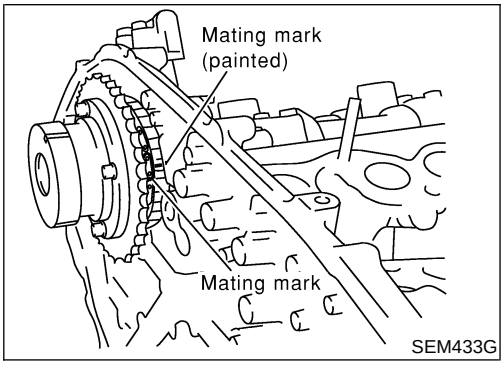

- It may be difficult to visually check the dislocation of mating marks during and after installation. To make the matching easier, make a mating mark on the sprocket teeth in advance using paint.

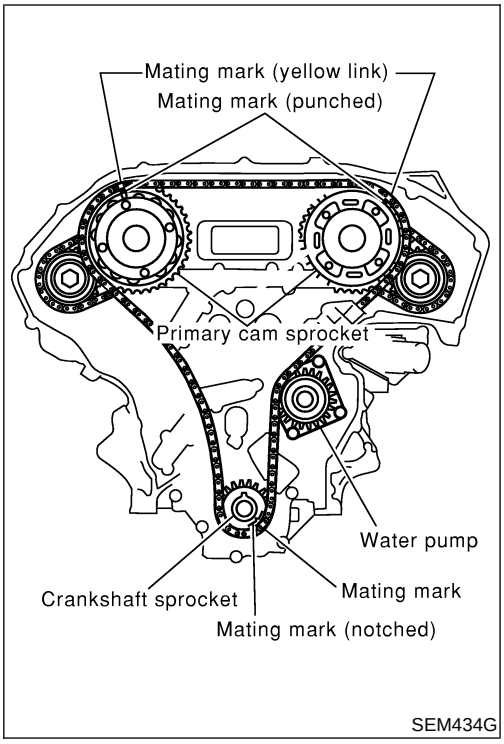

6. Install secondary timing chain and sprocket to the other bank. Install primary timing chain at the same time.
- Installation of the secondary timing chain follows the procedure described in step 5.
- Install primary timing chain so that mating mark (punched) on camshaft sprocket is aligned with that (yellow link) on the timing chain, and mating mark (notched) on crankshaft sprocket is aligned with that on the timing chain, respectively.
- When it is difficult to align mating marks of the primary timing chain with each sprocket, gradually turn the camshaft hexagonal head using a spanner so it is aligned with the mating mark.
- During alignment, be careful to prevent dislocation of mating marks on the secondary timing chain.

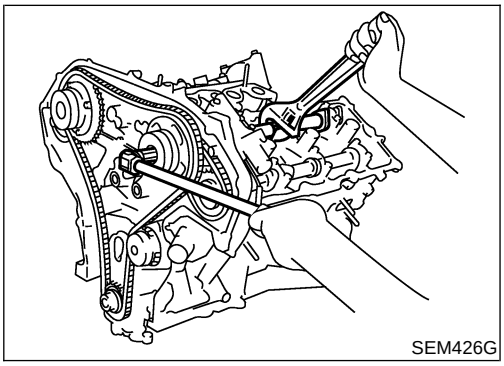

7. After confirming the mating marks are aligned, tighten the camshaft sprocket mounting bolts.
- Secure the camshaft hexagonal head using a spanner to tighten mounting bolts.

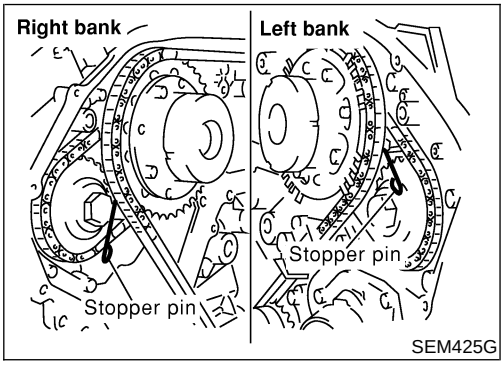

8. Pull out the stopper pin from the secondary timing chain tensioner.

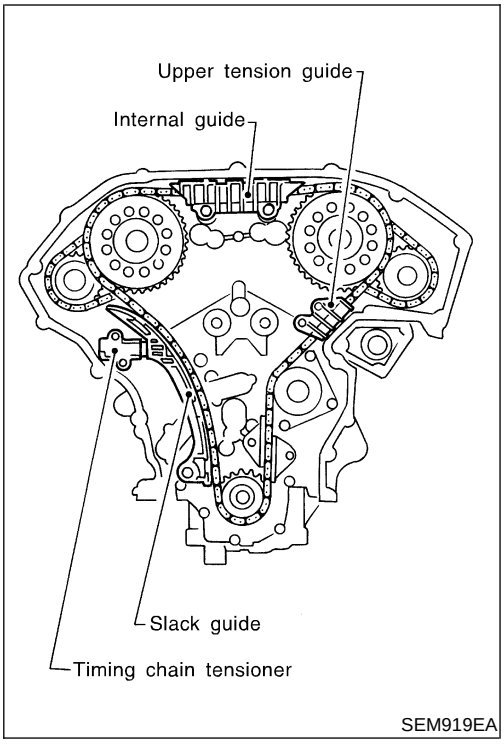

9. Install internal guide.
10. Install upper tension guide and slack guide.

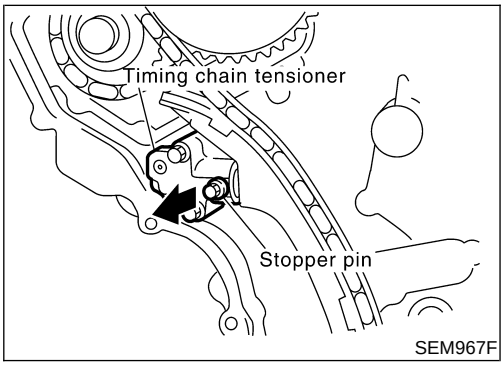

11. Install timing chain tensioner, then remove the stopper pin.

- **When installing the timing chain tensioner, engine oil should be applied to the oil hole and tensioner.**

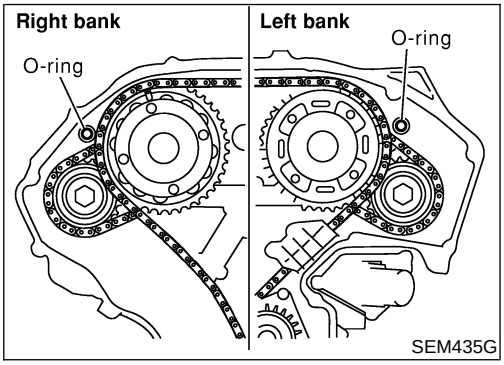

12. Install O-rings on rear timing chain case.
13. Apply liquid gasket to front timing chain case.

- Refer to "POSITION FOR APPLYING LIQUID GASKET", EM-21.
- **Before installation, wipe off the protruding sealant.**

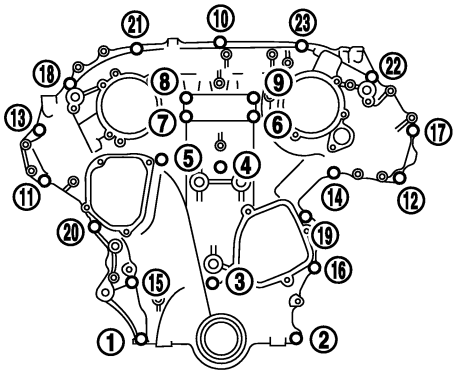

① - ② 8 mm dia. bolts
25.5 - 31.4 N•m
(2.6 - 3.2 kg-m, 18.8 - 23.1 ft-lb)
③ - ㉓ 6 mm dia. bolts
11.8 - 13.7 N•m
(1.2 - 1.4 kg-m, 8.7 - 10.1 ft-lb)

SEM436G

14. Install rear case pin into dowel pin hole on front timing chain case.
15. Tighten bolts to the specified torque in order shown in the figure.

- **Leave the bolts unattended for 30 minutes or more after tightening.**

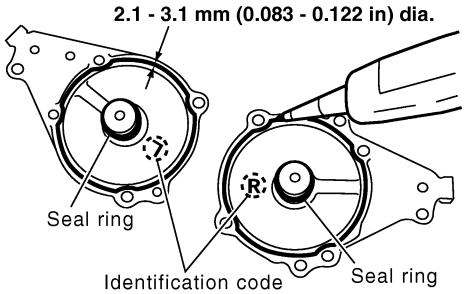

SEM437G

16. Install CVTC cover.

a. Install O-rings at front timing chain case.
b. Install seal ring at CVTC covers.
c. Apply liquid gasket to CVTC covers.
Use genuine RTV silicone sealant Part No. 999MP-A7007 or equivalent.

- Being careful not to move the seal ring from the installation groove, align the dowel pins on the chain case with the holes to install the CVTC cover.

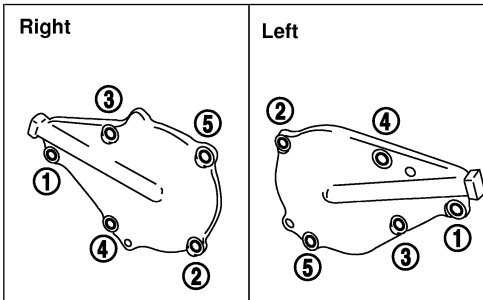

SEM438G

- Tighten in numerical order as shown in the figure.

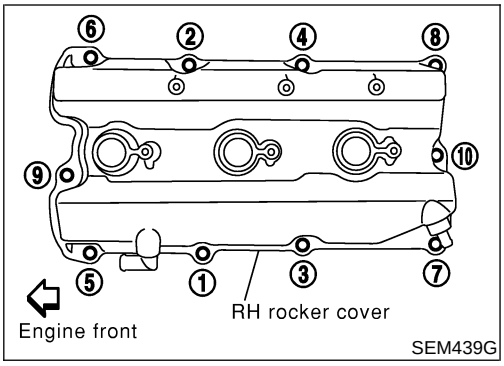

17. Install RH and LH rocker covers.
    Rocker cover tightening procedure:
- **Tighten in numerical order as shown in the figure.**

a. Tighten bolts 1 to 10 in that order to 6.9 to 8.8 N·m (0.7 to 0.9 kg-m, 61 to 78 in-lb).
b. Then tighten bolts 1 to 10 as indicated in figure to 6.9 to 8.8 N·m (0.7 to 0.9 kg-m, 61 to 78 in-lb).

18. Hang engine using the right and left side engine slingers with a suitable hoist.
19. Set a suitable transmission jack under the suspension member.
20. Remove right and left side engine mounting nuts.
21. Remove right and left side suspension member bolts.
22. Install aluminum oil pan. Refer to EM-18, "Installation".
23. Set ring gear stopper using the mounting bolt hole.
- Be careful not to damage the signal plate teeth.

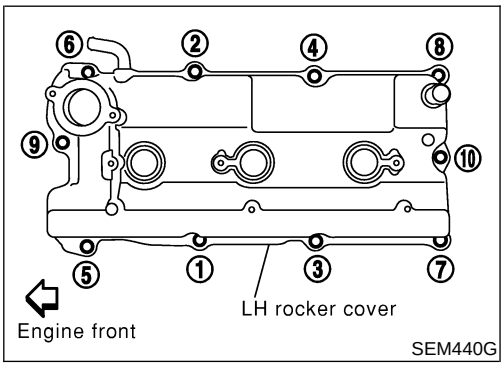

24. Install crankshaft pulley to crankshaft.
- Align pointer with TDC mark on crankshaft pulley.

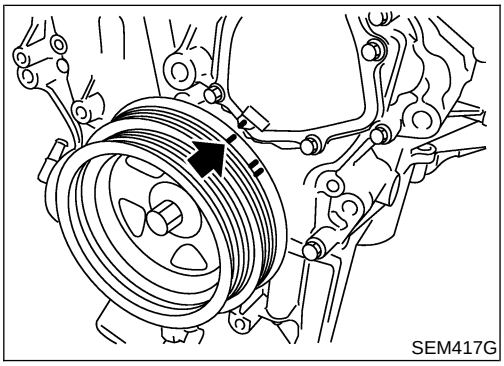

25. Install crankshaft pulley bolt.
- **Lubricate thread and seat surface of the bolt with new engine oil.**

a. Tighten to 39 to 49 N·m (4.0 to 5.0 kg-m, 29 to 36 ft-lb).
b. Put a paint mark on the crankshaft pulley.

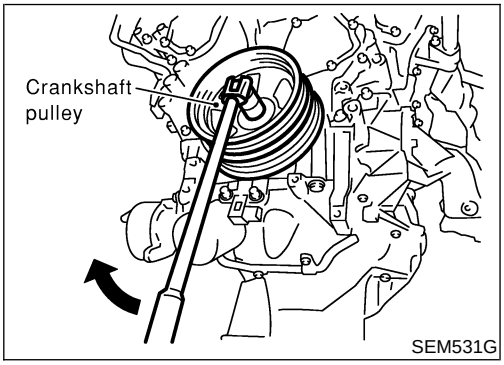

c. Again tighten by turning 60° to 66°, about the angle from one hexagon bolt head corner to another.

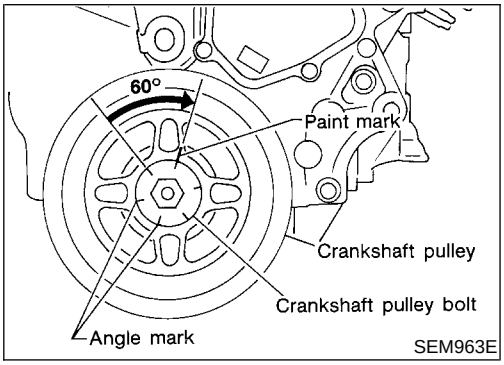

26. Install camshaft position sensor (PHASE), crankshaft position sensors (REF)/(POS) and CVTC sensors.
27. Reinstall removed parts in the reverse order of removal.
- When installing fuel tube and intake manifold collectors, refer to EM-12, "TIGHTENING PROCEDURES".
- **After starting engine, keep idling for three minutes. Then rev engine up to 3,000 rpm under no load to purge air from the high-pressure chamber of the chain tensioners. The engine may produce a rattling noise. This indicates that**

air still remains in the chamber and is not a matter of concern.

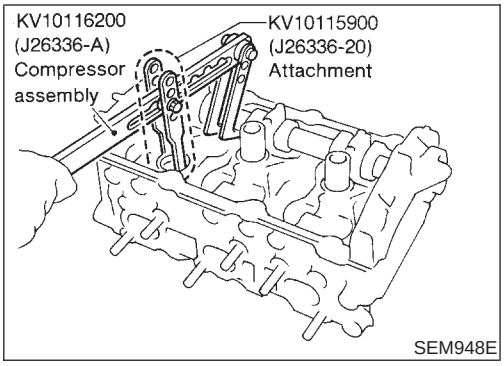

Replacement

NAEM0015

CAUTION:

When removing the oil pans, oil pump assembly and timing chain from engine, first remove the camshaft position sensor (PHASE), CVTC sensor and the crankshaft position sensors (REF)/(POS) from the assembly.
Be careful not to damage sensor edges.

VALVE OIL SEAL

NAEM0015S01

1. Remove timing chain. Refer to “Removal, EM-23.
2. Remove camshaft brackets and camshaft. Refer to “Disassembly”, EM-42.
3. Remove valve lifters and shims.
4. Remove valve spring with Tool.
5. Reinstall any parts removed in reverse order of removal.
   Before removing valve spring, fix valve as follows.
   Method A:
   Piston concerned should be set at TDC to prevent valve from falling.

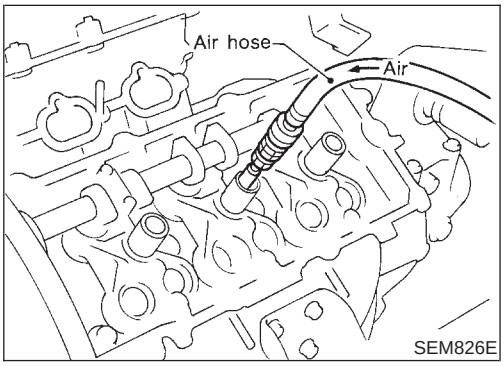

Method B:
Remove spark plug, then install air hose adapter into spark plug hole and apply air pressure to hold valves in place. Apply a pressure of 490 kPa (5 kg/cm^2, 71 psi).

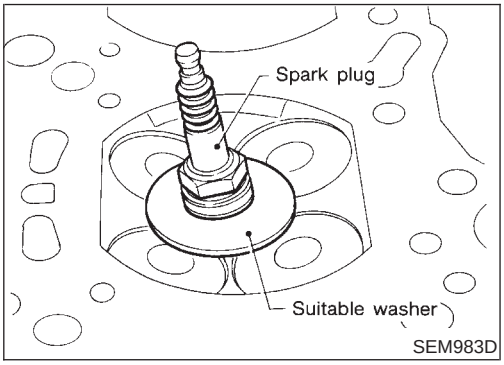

Method C:
Install spark plug with suitable washer into spark plug hole from combustion chamber side.

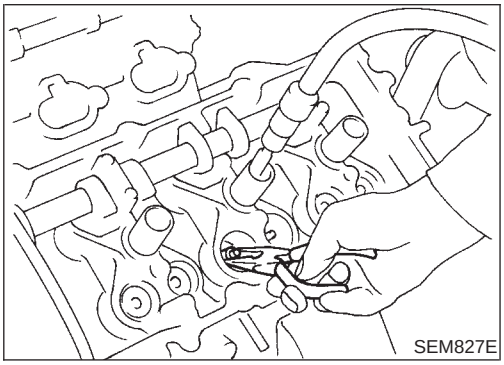

6. Remove valve oil seal.

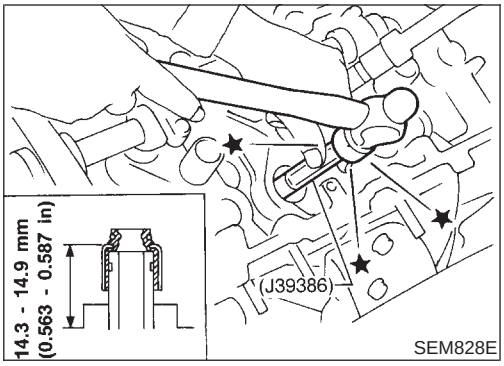

SEM828E

7. Apply engine oil to new valve oil seal and install it with Tool.

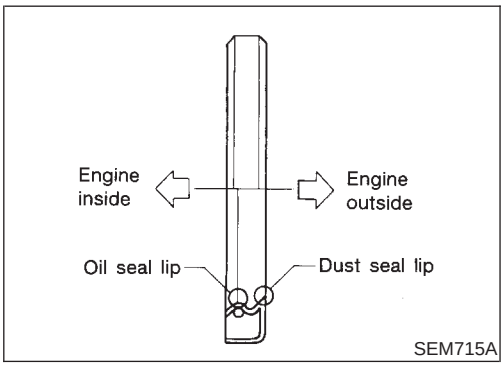

SEM715A

OIL SEAL INSTALLATION DIRECTION

NAEM0015S02

- Install new oil seal in the direction shown in the figure.

FRONT OIL SEAL

NAEM0015S03

1. Remove the following parts:
- Engine undercover
- Suspension member stay
- Drive belts
- Crankshaft position sensor (REF)

  Be careful not to damage sensor edge.
- Crankshaft pulley
- Radiator
- Cooling fan

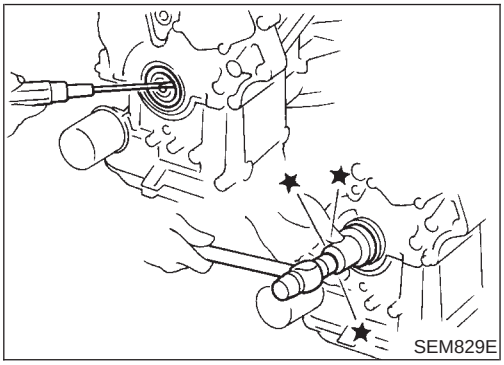
SEM829E

2. Remove front oil seal using a suitable tool.
   Be careful not to scratch front cover.
3. Apply engine oil to new oil seal and install it using a suitable tool.

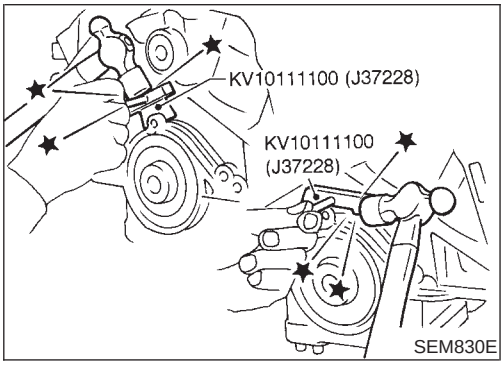

SEM830E

REAR OIL SEAL

NAEM0015S04

1. Remove transmission. Refer to MT-10 or AT-277, "Removal".
2. Remove flywheel or drive plate.
3. Remove oil pan. Refer to EM-15.
4. Remove rear oil seal retainer.

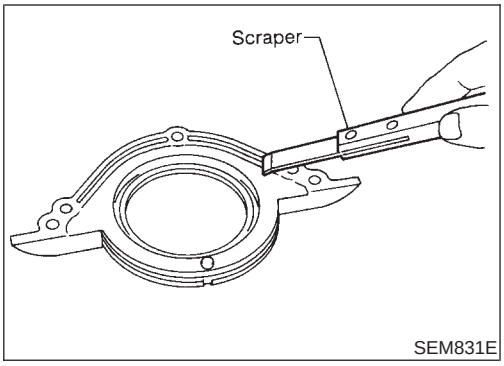

5. Remove old liquid gasket using scraper.
- **Remove old liquid gasket from the bolt hole and thread.**

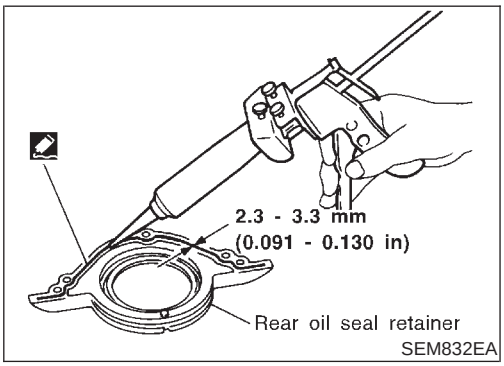

6. Apply liquid gasket to rear oil seal retainer.

Components

NAEM0016

SEC. 111•118•130•140•220

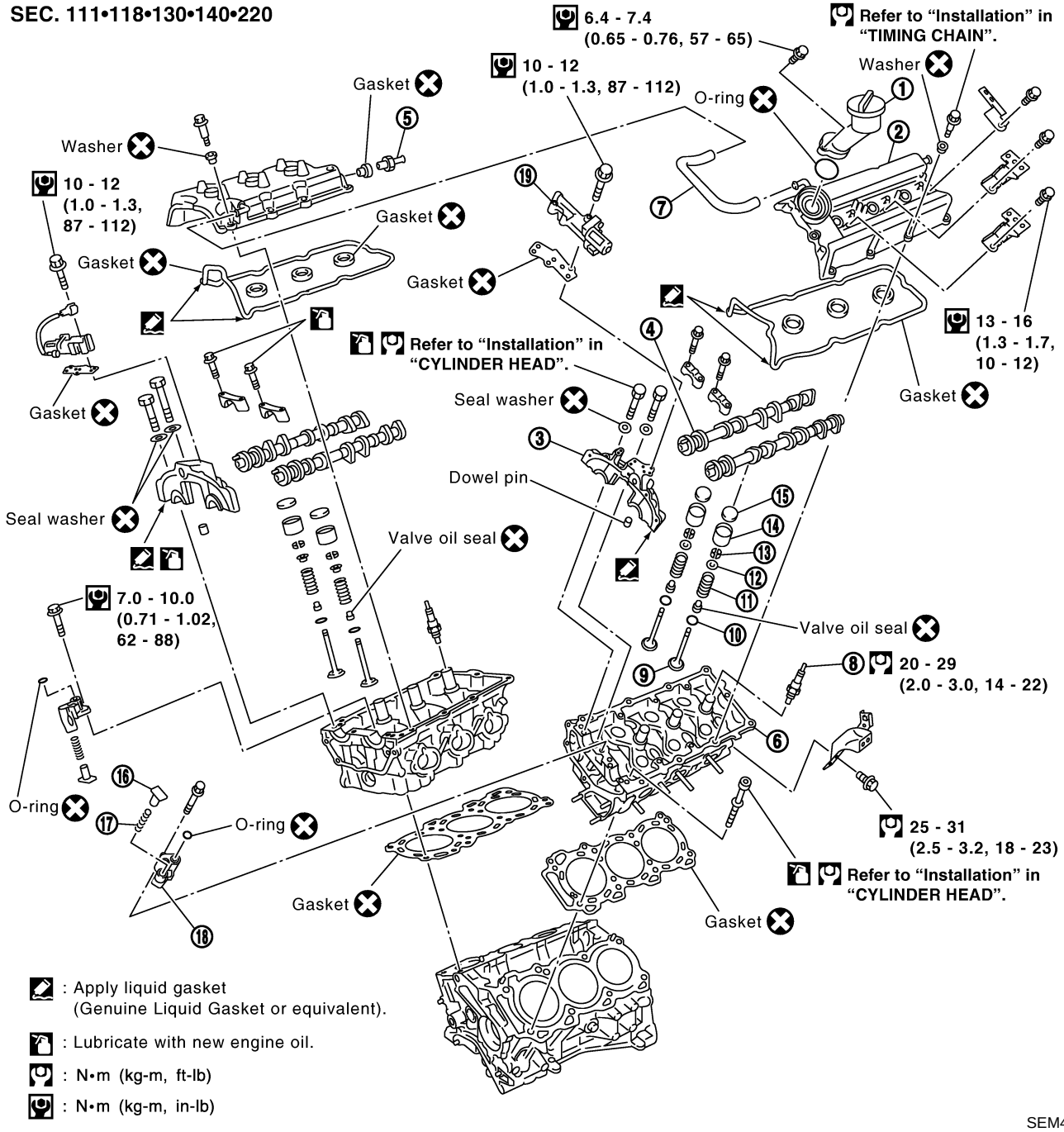

SEM441GA

1. Oil filler cap
2. Rocker cover
3. Camshaft bracket
4. Camshaft
5. PCV valve
6. Cylinder head
7. Blow-by hose
8. Spark plug
9. Valve
10. Valve spring seat
11. Valve spring
12. Valve spring retainer
13. Valve collet
14. Valve lifter
15. Shim
16. Chain tensioner
17. Spring
18. Tensioner sleeve
19. CVTC valve

CAUTION:

- **When installing camshafts, chain tensioners, oil seals, or other sliding parts, lubricate contacting surfaces with new engine oil.**
- **Apply new engine oil to threads and seat surfaces when installing cylinder head, camshaft sprocket, crankshaft pulley, and camshaft bracket.**
- **Attach tags to valve lifters so as not to mix them up.**

Removal

NAEM0017

1. Remove engine from vehicle. Refer to EM-58, "Removal and Installation".
2. Remove exhaust manifolds in reverse order of installation. Refer to EM-13, "Exhaust Manifold".
3. Place engine on a work stand.
4. Remove aluminum oil pan. Refer to EM-15, "Removal".
5. Remove timing chain. Refer to EM-23, "Removal".

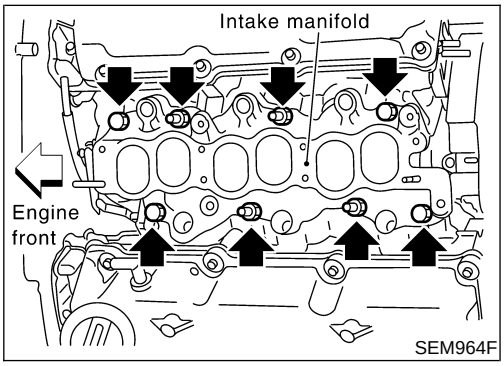

6. Remove intake manifold in reverse order of installation. Refer to "TIGHTENING PROCEDURES", EM-12.
7. Remove water outlet.

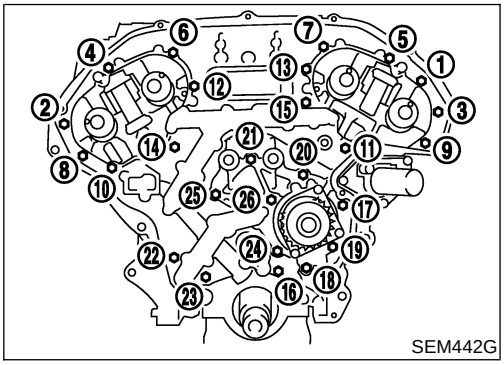

8. Remove rear timing chain case bolts.
- Loosen in numerical order as shown in the figure.

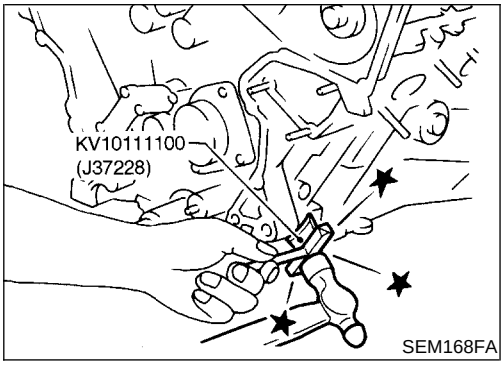

9. Remove rear timing chain case.

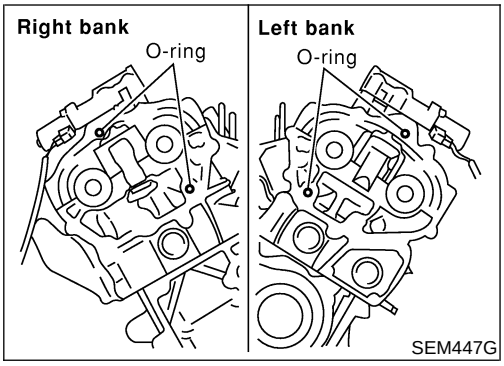

10. Remove O-rings to cylinder head.

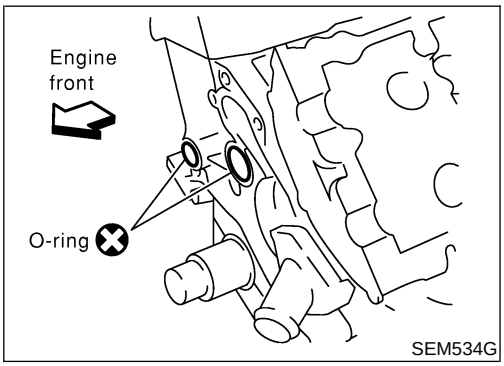

11. Remove O-rings to cylinder block.

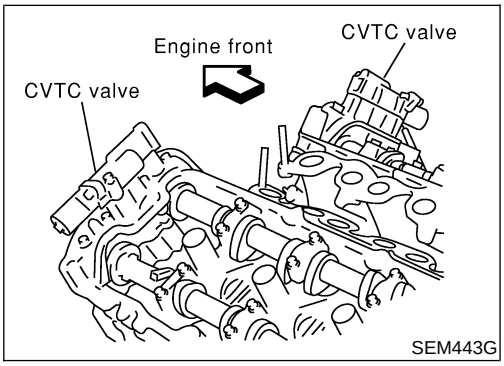

12. Remove CVTC valves.

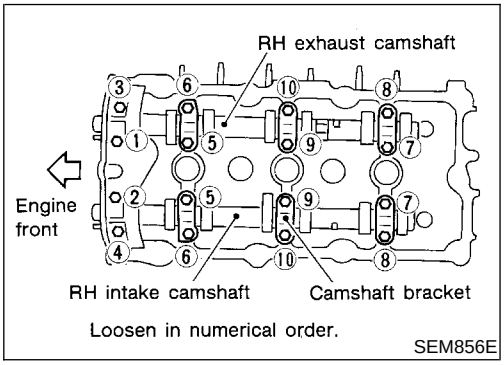

13. Remove intake and exhaust camshafts and camshaft brackets.

- Equally loosen camshaft bracket bolts in several steps in the numerical order shown in the figure.

  For reinstallation, be sure to put marks on camshaft bracket before removal.

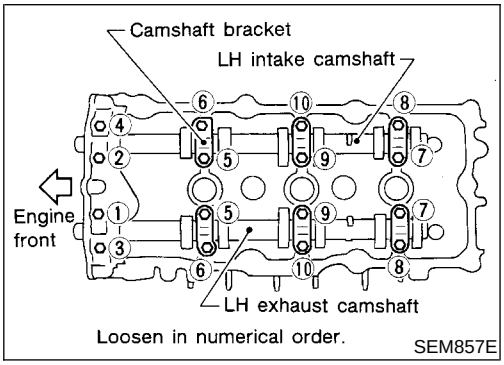

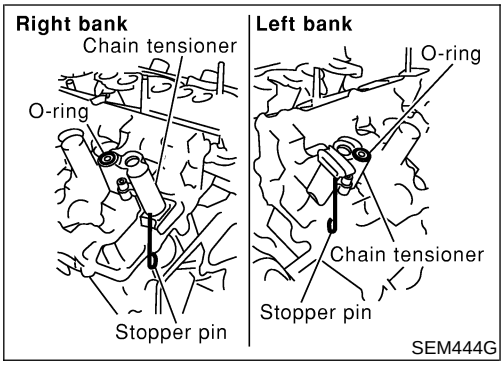

14. Remove RH and LH camshaft chain tensioners from cylinder head.

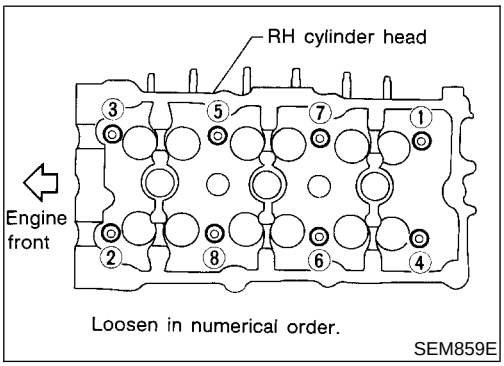

15. Remove cylinder head bolts.
- **Cylinder head bolts should be loosened in two or three steps.**
- **A warped or cracked cylinder head could result from removing in incorrect order.**

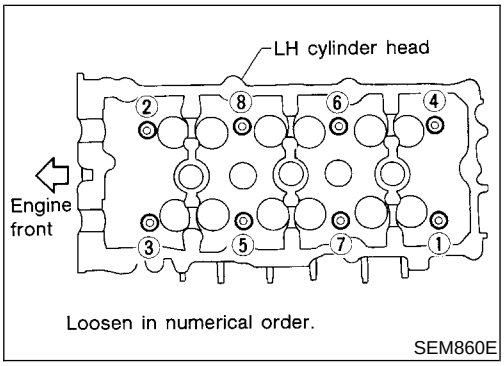

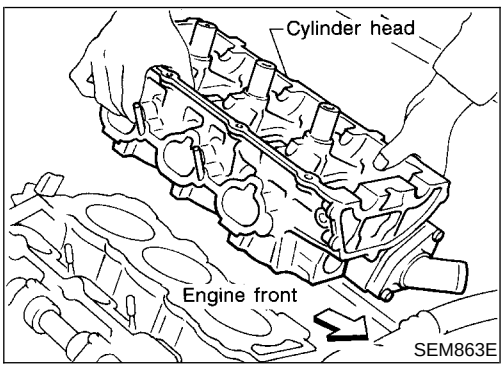

16. Remove cylinder head.

Disassembly

NAEM0043

Remove valve component parts.
Refer to EM-36, "VALVE OIL SEAL".

- Check the clearance before removing the valve guide. Refer to EM-44, "VALVE GUIDE CLEARANCE".

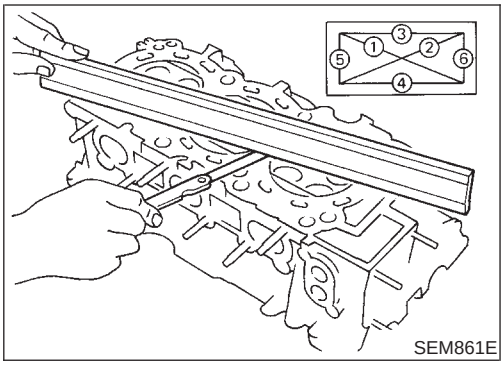

SEM861E

Inspection

NAEM0019

CYLINDER HEAD DISTORTION

NAEM0019S01

Clean surface of cylinder head.
Use a reliable straightedge and feeler gauge to check the flatness of cylinder head surface.
Check along six positions shown in the figure.

Head surface flatness: Limit 0.1 mm (0.004 in)

If beyond the specified limit, resurface or replace it.
The limit for cylinder head resurfacing is determined by the cylinder block resurfacing.

Resurfacing limit:
Amount of cylinder head resurfacing is "A".
Amount of cylinder block resurfacing is "B".
The maximum limit : A + B = 0.2 mm (0.008 in)

After resurfacing cylinder head, check that camshaft rotates freely by hand. If resistance is felt, cylinder head must be replaced.

Nominal cylinder head height:
126.3 - 126.5 mm (4.972 - 4.980 in)

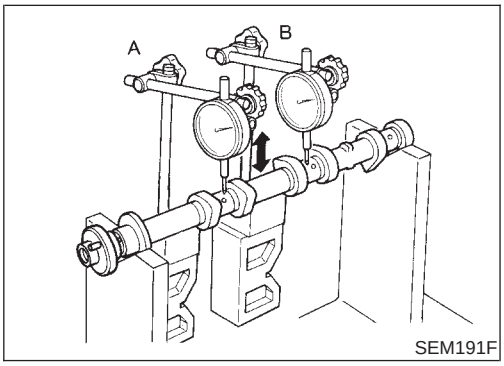

SEM191F

CAMSHAFT VISUAL CHECK

NAEM0019S02

Check camshaft for scratches, seizure and wear.

CAMSHAFT RUNOUT

NAEM0019S03

1. Measure camshaft runout at A and B as shown in the figure.
   Runout (Total indicator reading):
   Limit 0.05 mm (0.0020 in)
2. If it exceeds the limit, replace camshaft.

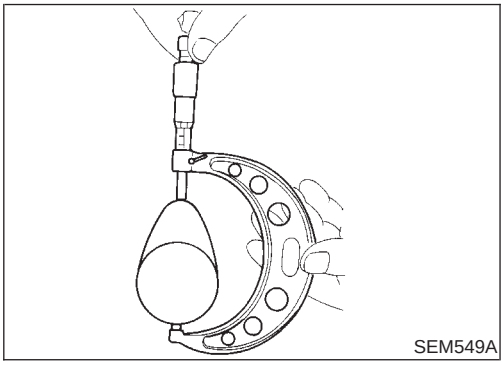
SEM549A

CAMSHAFT CAM HEIGHT

NAEM0019S04

1. Measure camshaft cam height.
   Standard cam height:
   Intake and exhaust
   44.465 - 44.655 mm (1.7506 - 1.7581 in)
   Cam wear limit:
   0.2 mm (0.008 in)
2. If wear is beyond the limit, replace camshaft.

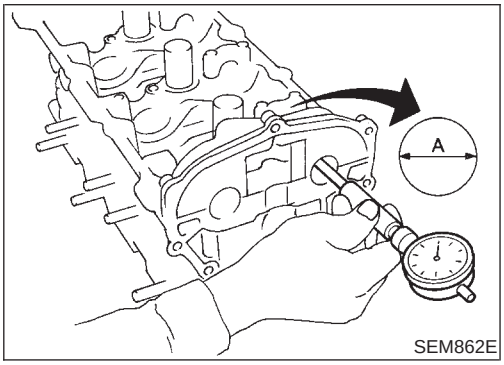

SEM862E

CAMSHAFT JOURNAL CLEARANCE

NAEM0019S05

1. Install camshaft bracket and tighten bolts to the specified torque.
2. Measure inner diameter "A" of camshaft bearing.
   Standard inner diameter:
   No. 1: 26.000 - 26.021 mm (1.0236 - 1.0244 in)
   No. 2, 3, 4: 23.500 - 23.521 mm (0.9252 - 0.9260 in)

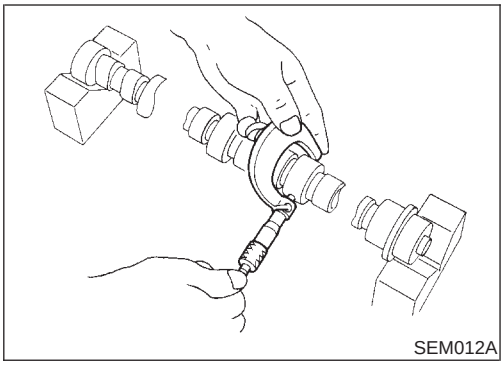
SEM012A

3. Measure outer diameter of camshaft journal.
   Standard outer diameter:
   No. 1: 25.935 - 25.955 mm (1.0211 - 1.0218 in)
   No. 2, 3, 4: 23.445 - 23.465 mm (0.9230 - 0.9238 in)
4. If clearance exceeds the limit, replace camshaft and/or cylinder head.
   Camshaft journal clearance:
   Standard
   No. 1: 0.045 - 0.086 mm (0.0018 - 0.0034 in)
   No. 2, 3, 4: 0.035 - 0.076 mm (0.0014 - 0.0030 in)
   Limit
   0.15 mm (0.0059 in)

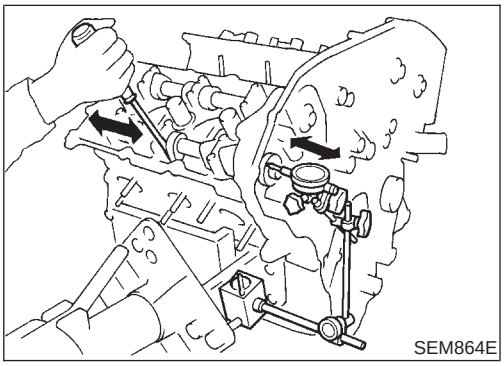
SEM864E

CAMSHAFT END PLAY

NAEM0019S06

1. Install camshaft in cylinder head.
2. Measure camshaft end play.
   Camshaft end play:
   Standard
   0.115 - 0.188 mm (0.0045 - 0.0074 in)
   Limit
   0.24 mm (0.0094 in)

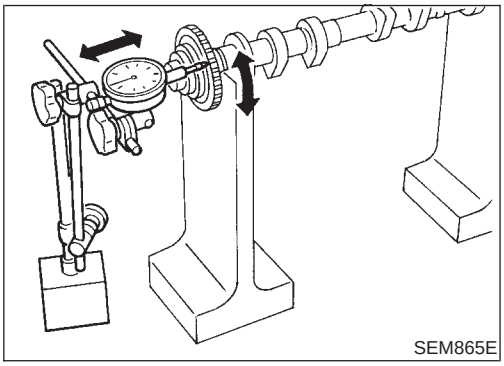
SEM865E

CAMSHAFT SPROCKET RUNOUT

NAEM0019S07

1. Install sprocket on camshaft.
2. Measure camshaft sprocket runout.
   Runout (Total indicator reading):
   Less than 0.15 mm (0.0059 in)
3. If it exceeds the limit, replace camshaft sprocket.

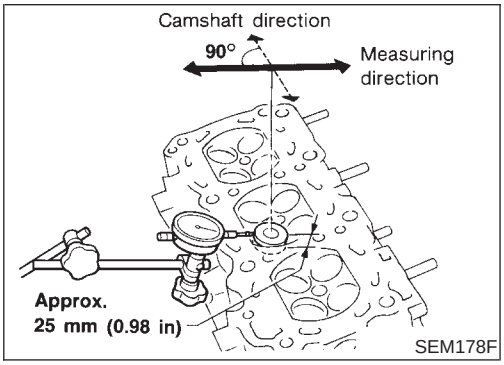

SEM178F

VALVE GUIDE CLEARANCE

NAEM0019S08

1. Measure valve deflection as shown in the figure. (Valve and valve guide mostly wear in this direction.)
   Valve deflection limit (Dial gauge reading):
   Intake 0.24 mm (0.0094 in)
   Exhaust 0.28 mm (0.0110 in)

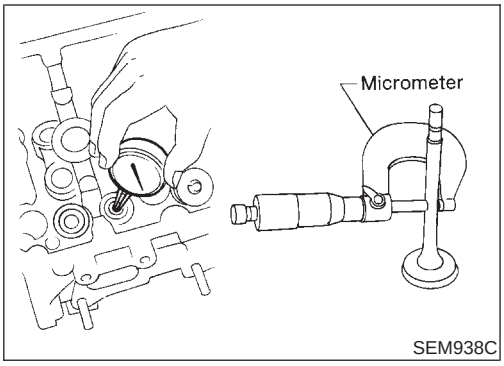

SEM938C

2. If it exceeds the limit, check valve to valve guide clearance.
a. Measure valve stem diameter and valve guide inner diameter.
b. Check that clearance is within specification.

Valve to valve guide clearance limit:
Intake 0.08 mm (0.0031 in)
Exhaust 0.1 mm (0.004 in)

c. If it exceeds the limit, replace valve or valve guide.

VALVE GUIDE REPLACEMENT

NAEM0019S09

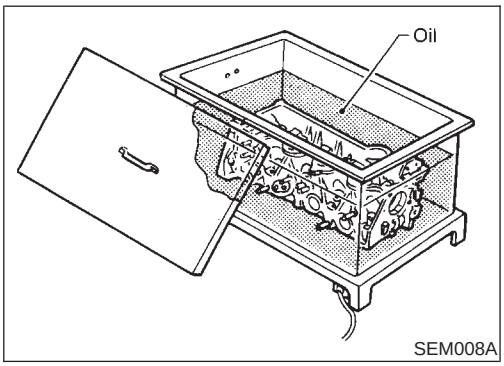

SEM008A

1. To remove valve guide, heat cylinder head to 110 to 130°C (230 to 266°F) by soaking in heated oil.

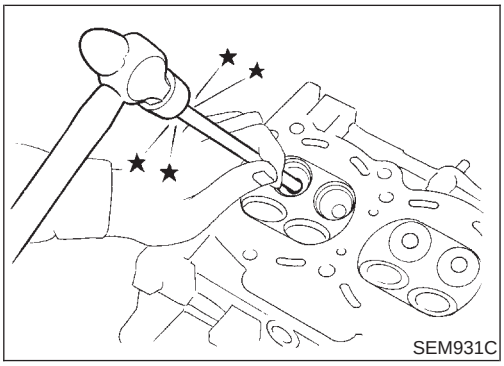
SEM931C

2. Drive out valve guide with a press [under a 20 kN (2 ton, 2.2 US ton, 2.0 Imp ton) pressure] or hammer and suitable tool.

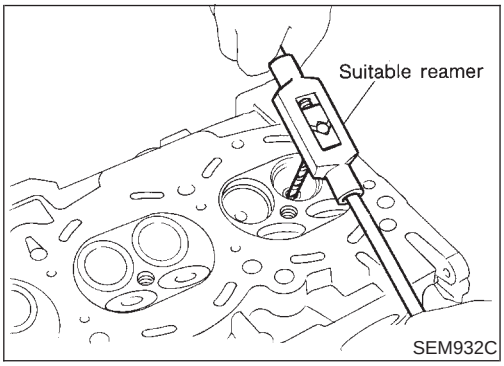

SEM932C

3. Ream cylinder head valve guide hole.

Valve guide hole diameter (for service parts):
10.175 - 10.196 mm (0.4006 - 0.4014 in)

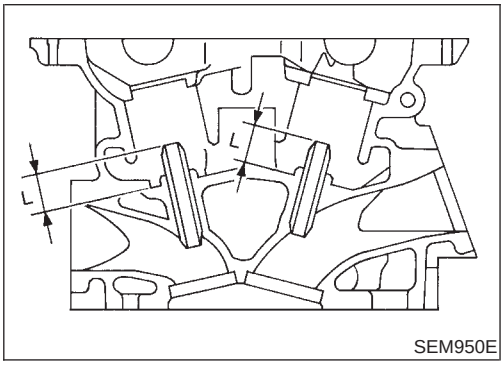

SEM950E

4. Heat cylinder head to 110 to 130°C (230 to 266°F) and press service valve guide onto cylinder head.

Projection "L":
12.6 - 12.8 mm (0.496 - 0.504 in)

5. Ream valve guide.

Finished size:
6.000 - 6.018 mm (0.2362 - 0.2369 in)

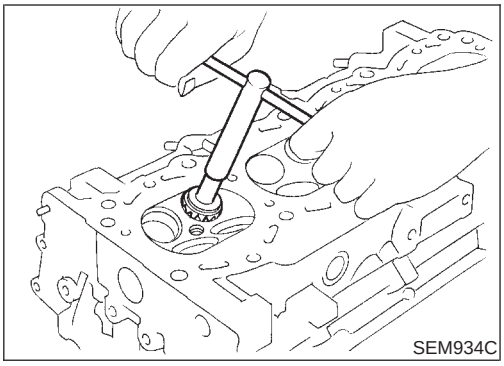
SEM934C

VALVE SEATS

NAEM0019S10

Check valve seats for any evidence of pitting at valve contact surface, and reseat or replace if it has worn out excessively.

- **Before repairing valve seats, check valve and valve guide for wear. If they have worn, replace them. Then correct valve seat.**
- **Use both hands to cut uniformly.**

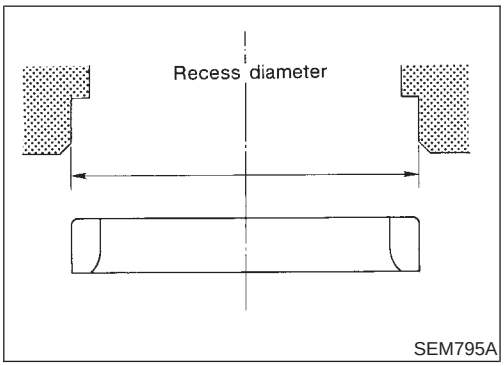

SEM795A

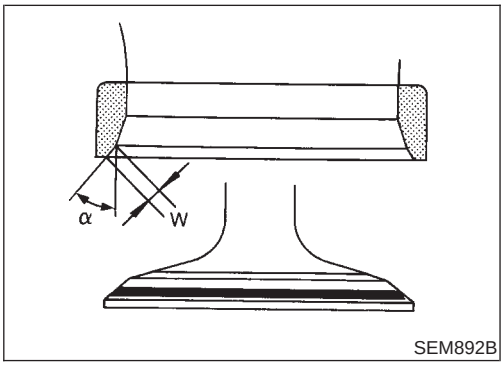

SEM892B

REPLACING VALVE SEAT FOR SERVICE PARTS

NAEM0019S11

1. Bore out old seat until it collapses. Boring should not continue beyond the bottom face of the seat recess in cylinder head. Set the machine depth stop to ensure this.
2. Ream cylinder head recess for service valve seat.

   Oversize [0.5 mm (0.020 in)]:

   Intake 38.500 - 38.516 mm (1.5157 - 1.5164 in)

   Exhaust 32.700 - 32.716 mm (1.2874 - 1.2880 in)

   Be sure to ream in circles concentric to the valve guide center.
   This will enable valve seat to fit correctly.
3. Heat cylinder head to 110 to 130°C (230 to 266°F) by soaking in heated oil.
4. Press fit valve seat until it seats on the bottom.
5. Cut or grind valve seat using suitable tool to the specified dimensions as shown in SDS (EM-80).
6. After cutting, lap valve seat with abrasive compound.
7. Check valve seating condition.

   Seat face angle "α": 45°

   Contacting width "W":

   Intake 1.09 - 1.31 mm (0.0429 - 0.0516 in)

   Exhaust 1.29 - 1.51 mm (0.0508 - 0.0594 in)

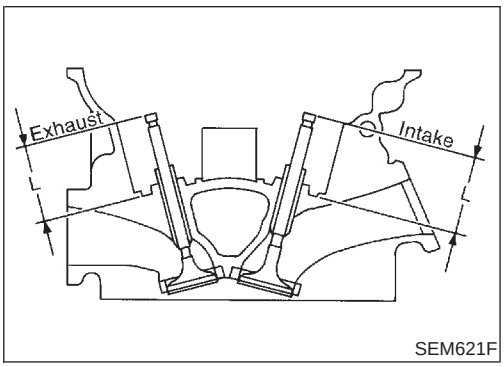

SEM621F

8. Use a depth gauge to measure the distance between the mounting surface of the cylinder head spring seat and the valve stem end. If the distance is shorter than specified, repeat step 5 above to adjust it. If it is longer, replace the valve seat with a new one.

   Valve seat resurface limit "L":

   Intake 41.07 - 41.67 mm (1.6169 - 1.6405 in)

   Exhaust 41.00 - 41.60 mm (1.6142 - 1.6378 in)

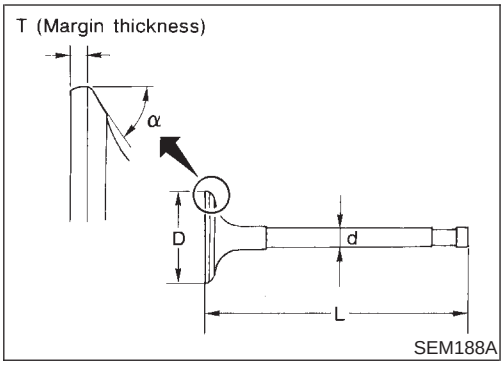

SEM188A

VALVE DIMENSIONS

NAEM0019S12

Check dimensions of each valve. For dimensions, refer to SDS (EM-77).

When valve head has been worn down to 0.5 mm (0.020 in) in margin thickness, replace valve.

Grinding allowance for valve stem tip is 0.2 mm (0.008 in) or less.

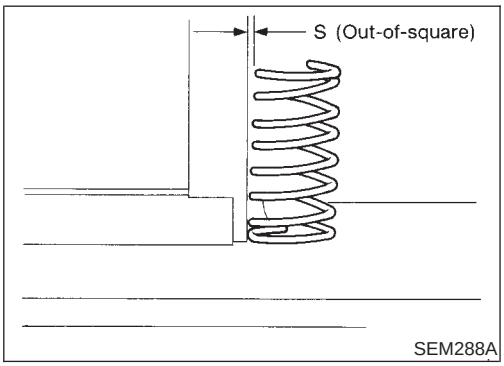

SEM288A

VALVE SPRING

NAEM0019S13

Squareness

NAEM0019S1301

1. Measure dimension "S".

   Out-of-square "S":

   Less than 2.0 mm (0.079 in)

2. If it exceeds the limit, replace spring.

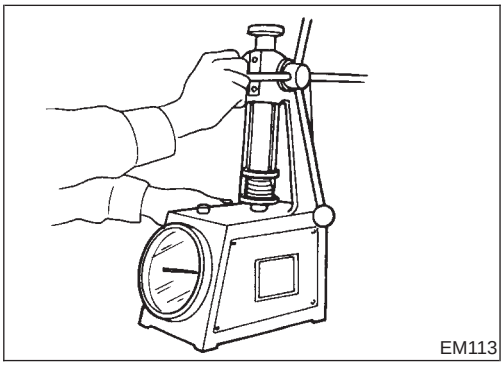
EM113

Pressure

NAEM0019S1302

Check valve spring pressure at specified spring height.

Pressure:

Standard

202 N (20.6 kg, 45.4 lb) at height 37.0 mm (1.457 in)

Limit

More than 436 N (44.5 kg, 98.1 lb) at height 28.2 mm (1.110 in)

If it exceeds the limit, replace spring.

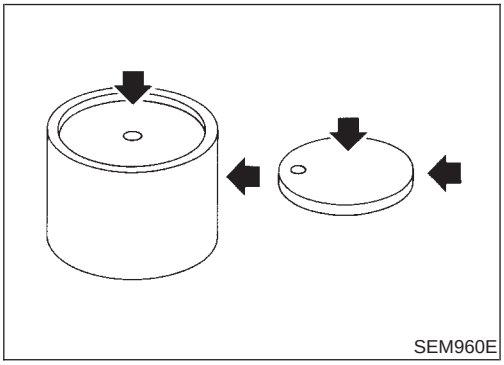
SEM960E

VALVE LIFTER

NAEM0019S14

1. Check contact and sliding surfaces for wear or scratches.

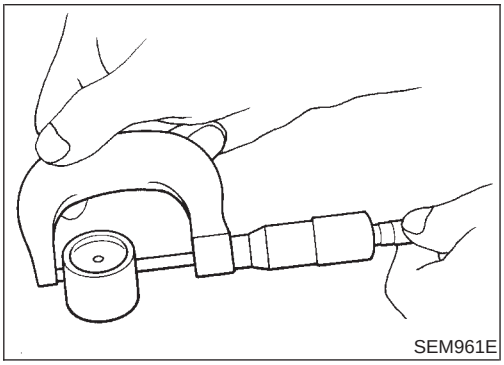
SEM961E

2. Check diameter of valve lifter and valve lifter guide bore.

   Valve lifter outer diameter:

   34.960 - 34.975 mm (1.3764 - 1.3770 in)

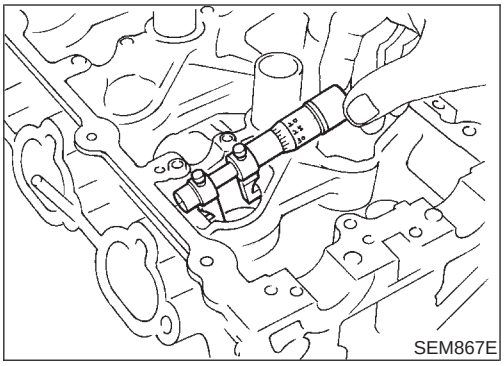

Lifter guide bore diameter:
35.000 - 35.021 mm (1.3780 - 1.3788 in)

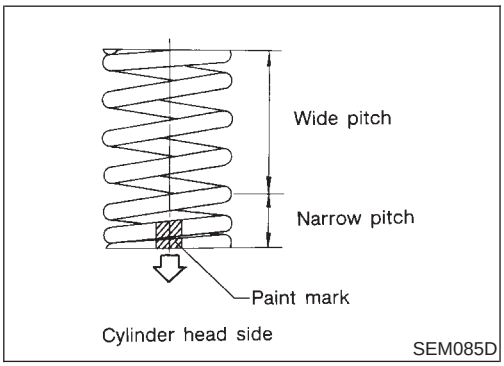

Assembly

NAEM0020

1. Install valve component parts.

- **Always use new valve oil seal. Refer to "VALVE OIL SEAL", EM-36.**
- **Before installing valve oil seal, install valve spring seat.**
- **Install valve spring (uneven pitch type) with its narrow pitch side toward cylinder head side (paint mark).**
- After installing valve component parts, tap valve stem tip with plastic hammer to assure a proper fit.

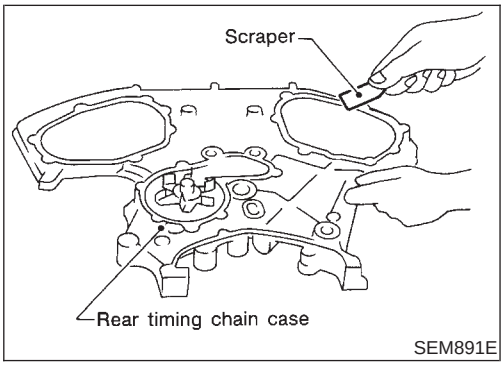

Installation

NAEM0021

1. Before installing rear timing chain case, remove old liquid gasket from mating surface using a scraper.

- Also remove old liquid gasket from mating surface of cylinder block.

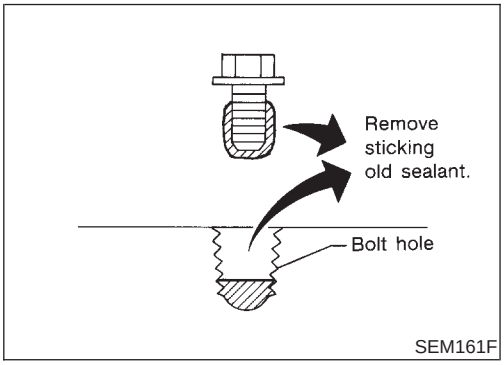

- **Remove old liquid gasket from the bolt hole and thread.**

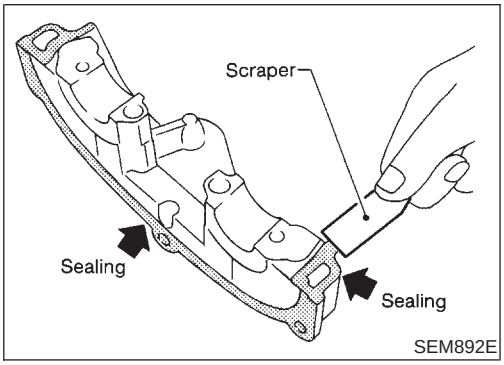

2. Before installing cam bracket, remove old liquid gasket from mating surface using a scraper.

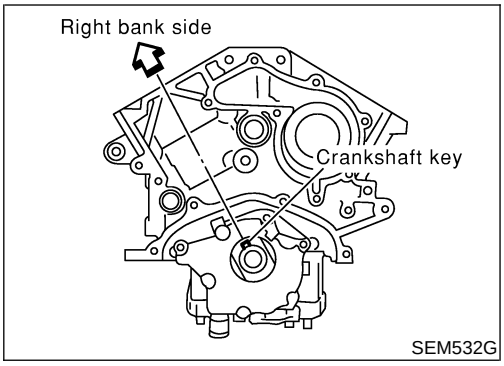

3. Before installing the cylinder head gasket, be sure that No. 1 cylinder is at TDC.
- At this time, the crankshaft key should face toward the right bank.

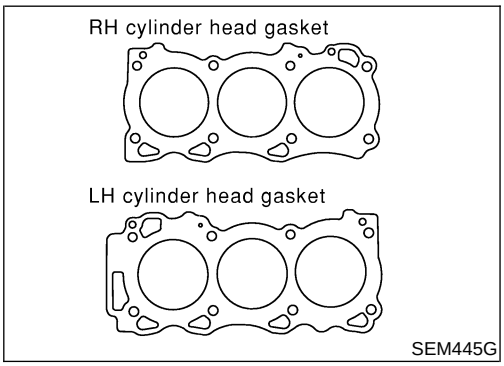

4. Install cylinder heads with new gaskets.
- **Do not rotate crankshaft and camshaft separately, or valves will strike piston heads.**

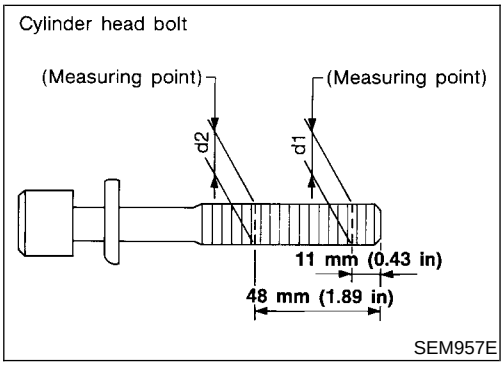

CAUTION:

Cylinder head bolts are tightened by plastic zone tightening method. Whenever the size difference between d1 and d2 exceeds the limit, replace them with new ones.

Limit (d1 - d2):

0.11 mm (0.0043 in)

- **Lubricate threads and seat surfaces of the bolts with new engine oil.**

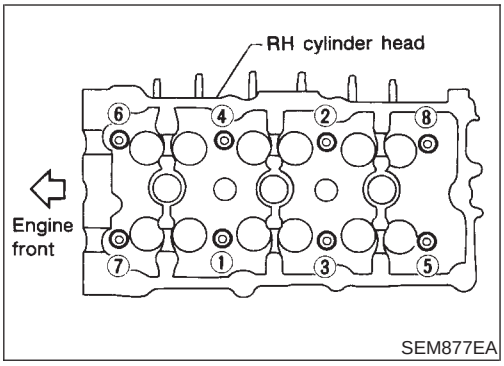

5. Install cylinder head outside bolts.

- **Tightening procedure:**

a. **Tighten all bolts to 98 N·m (10 kg-m, 72 ft-lb).**
b. **Completely loosen all bolts.**
c. **Tighten all bolts to 34 to 44 N·m (3.5 to 4.5 kg-m, 25 to 33 ft-lb).**
d. **Turn all bolts 90 to 95 degrees clockwise.**
e. **Turn all bolts 90 to 95 degrees clockwise.**

- **Tighten in numerical order shown in the figure.**

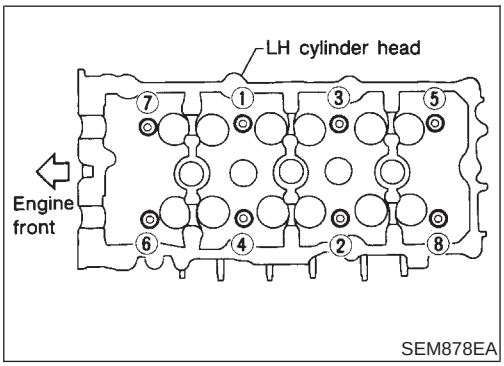

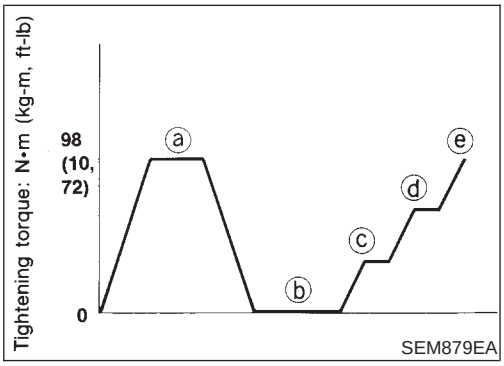

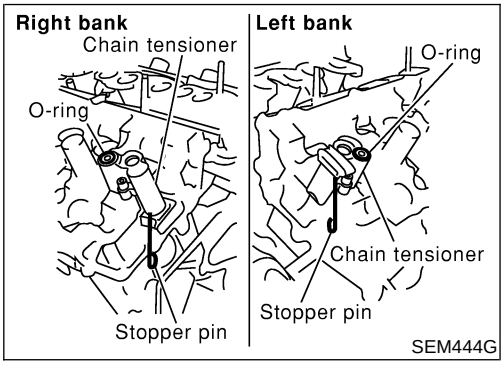

6. Install camshaft chain tensioners on both sides of cylinder head.

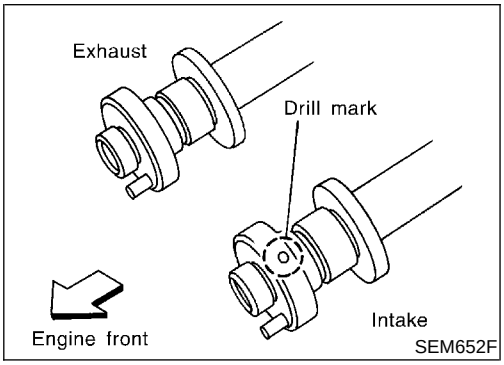

7. Install exhaust and intake camshafts and camshaft brackets.

- **Intake camshaft has a drill mark on camshaft sprocket mounting flange. Install it on the intake side.**

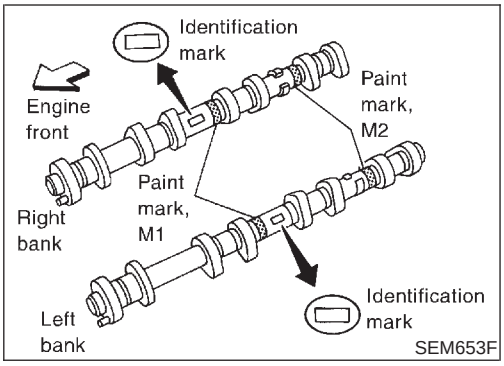

- **Identification marks are present on camshafts.**

Bank	INT/EXH	ID mark	Drill mark	Paint mark	
				M1	M2
RH	INT	R3	Yes	Yes	No
	EXH	R3	No	No	Yes
LH	INT	L3	Yes	Yes	No
	EXH	L3	No	No	Yes

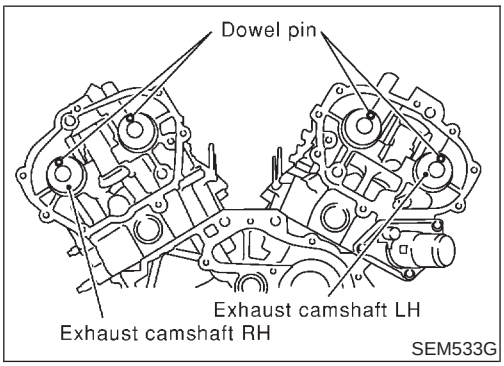

- **Position camshaft**
  RH exhaust camshaft dowel pin at about 10 o'clock
  LH exhaust camshaft dowel pin at about 2 o'clock

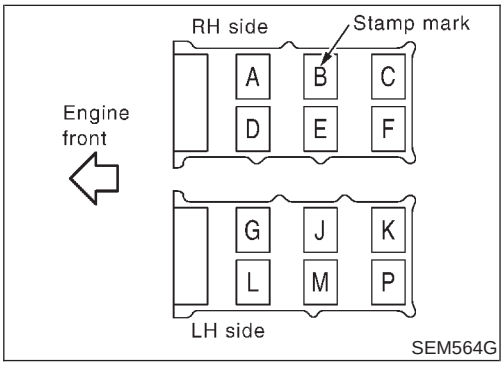

8. Before installing camshaft brackets, apply sealant to mating surface of No. 1 journal head.

- **Use Genuine RTV silicone sealant Part No. 999MP-A7007 or equivalent.**
- **Refer to "POSITION FOR APPLYING LIQUID GASKET", EM-21.**
- **Install camshaft brackets in their original positions.**
  Align stamp mark as shown in the figure.
- **If any part of valve assembly or camshaft is replaced, check valve clearance according to reference data.**
  After completing assembly check valve clearance. Refer to "Checking" and "Adjusting" in "VALVE CLEARANCE", EM-53 and 55.

  Reference data valve clearance (Cold):

  Intake

  0.26 - 0.34 mm (0.010 - 0.013 in)

  Exhaust

  0.29 - 0.37 mm (0.011 - 0.015 in)
- **Lubricate threads and seat surfaces of camshaft bracket bolts with new engine oil before installing them.**

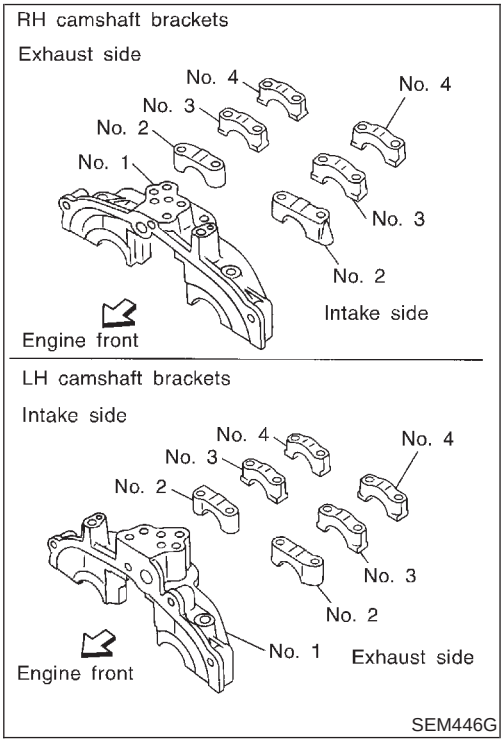

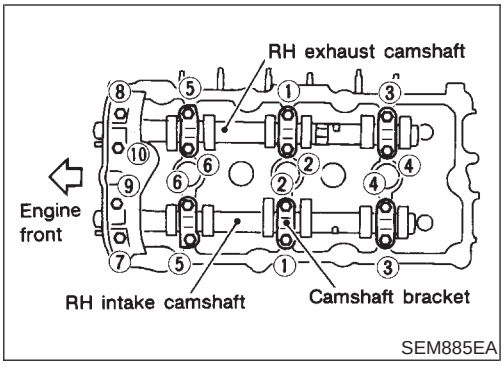

- Tighten the camshaft brackets in the following steps.

Step	Tightening torque	Tightening order
1	1.96 N·m (0.2 kg-m, 17 in-lb)	Tighten in the order of 7 to 10, then tighten 1 to 6.
2	5.88 N·m (0.6 kg-m, 52 in-lb)	Tighten in the numerical order.
3	9.02 - 11.8 N·m (0.92 - 1.20 kg-m, 79.9 - 104.2 in-lb)	Tighten in the numerical order.

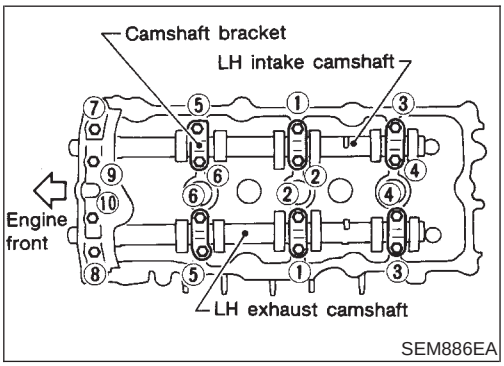

9. Install CVTC valves.

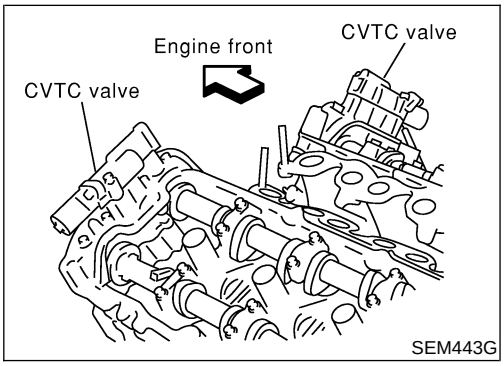

10. Install O-rings to cylinder block.

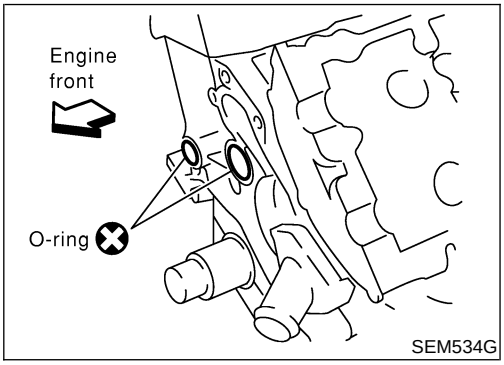

11. Install O-rings to cylinder head.

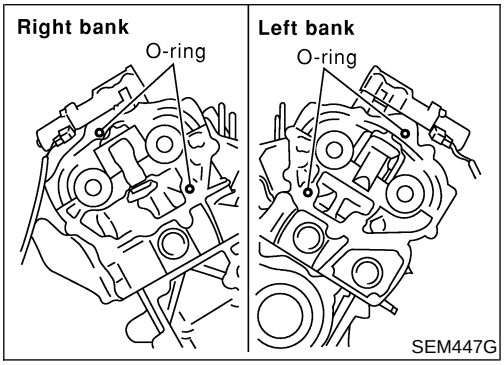

12. Apply sealant to the hatched portion of rear timing chain case.
- Apply continuous bead of liquid gasket to mating surface of rear timing chain case.
  Refer to "POSITION FOR APPLYING LIQUID GASKET", EM-21.
- **Before installation, wipe off the protruding sealant.**

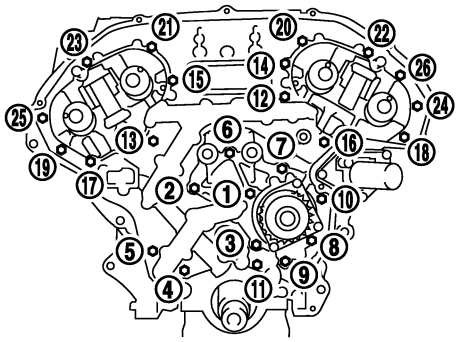

12 - 13 N•m
(1.2 - 1.4 kg-m, 9 - 10 ft-lb)

SEM448G

13. Align rear timing chain case with dowel pins, then install on cylinder head and block.
14. Tighten rear chain case bolts.
a. Tighten bolts in numerical order shown in the figure.
b. Repeat above step a.
15. Reinstall all removed parts in reverse order of removal.

Valve Clearance

NAEM0022

CHECKING

NAEM0022S01

Check valve clearance while engine is cold and not running.

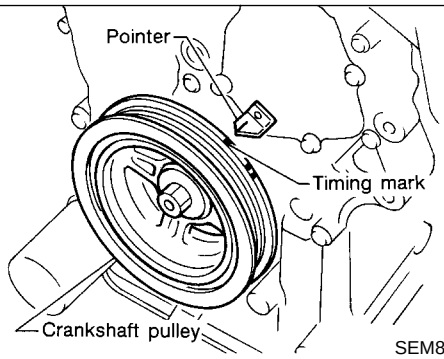

SEM868E

1. Remove engine cover.
2. Remove air duct with air cleaner case, collectors, hoses, wires, harnesses, connectors and so on.
3. Remove intake manifold collectors.
4. Remove ignition coils and spark plugs.
5. Remove RH and LH rocker covers.
6. Set No. 1 cylinder at TDC on its compression stroke.
- Align pointer with TDC mark on crankshaft pulley.

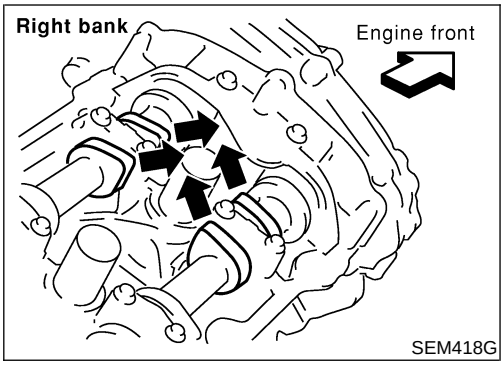

- Check that valve lifters on No. 1 cylinder are loose and valve lifters on No. 4 are tight.
  If not, turn crankshaft one revolution (360°) and align as above.

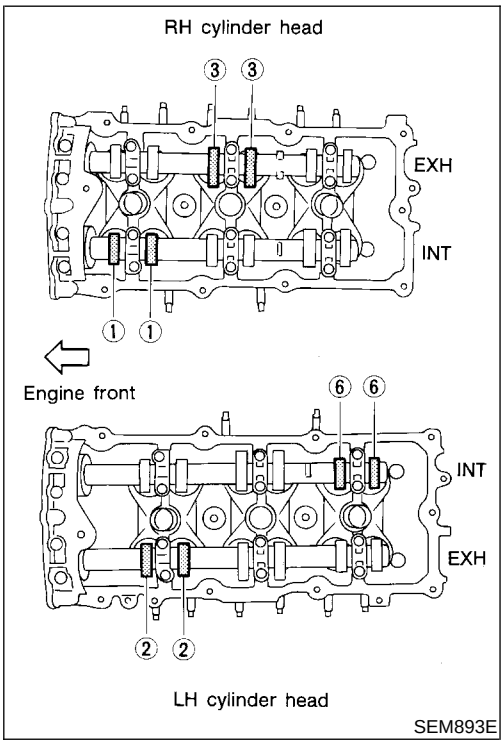

7. Check only those valves shown in the figure.

Crank position	Valve											
	No. 1		No. 2		No. 3		No. 4		No. 5		No. 6	
	INT	EXH	INT	EXH	INT	EXH	INT	EXH	INT	EXH	INT	EXH
No. 1 TDC	○			○		○					○	

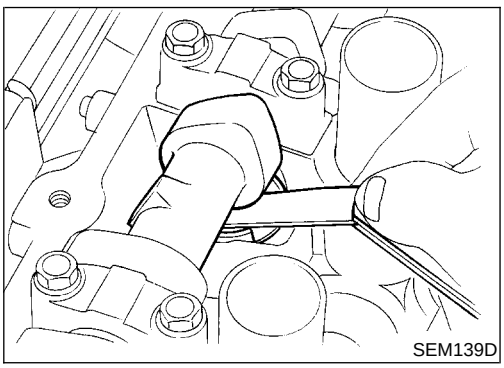

- Using a feeler gauge, measure clearance between valve lifter and camshaft.
- Record any valve clearance measurements which are out of specification. They will be used later to determine the required replacement adjusting shim.

Valve clearance for checking (Cold):

Intake

0.26 - 0.34 mm (0.010 - 0.013 in)

Exhaust

0.29 - 0.37 mm (0.011 - 0.015 in)

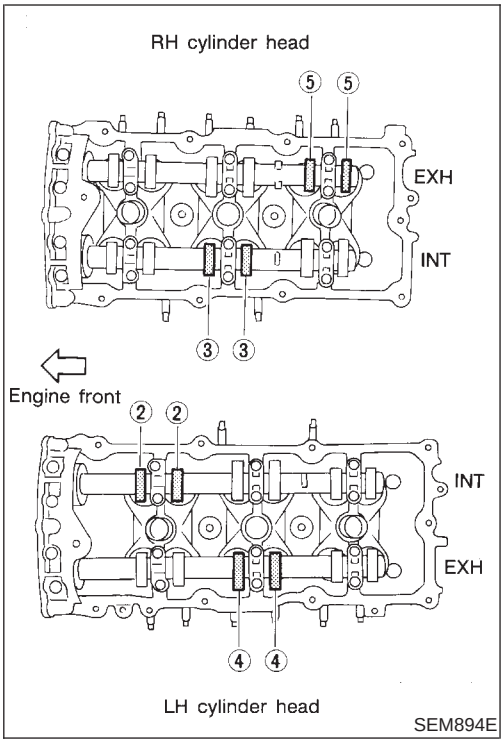

8. Turn crankshaft 240° and align as above.
9. Set No. 3 cylinder at TDC on its compression stroke.
10. Check only those valves shown in the figure.

Crank position	Valve											
	No. 1		No. 2		No. 3		No. 4		No. 5		No. 6	
	INT	EXH	INT	EXH	INT	EXH	INT	EXH	INT	EXH	INT	EXH
No. 3 TDC			○		○			○		○		

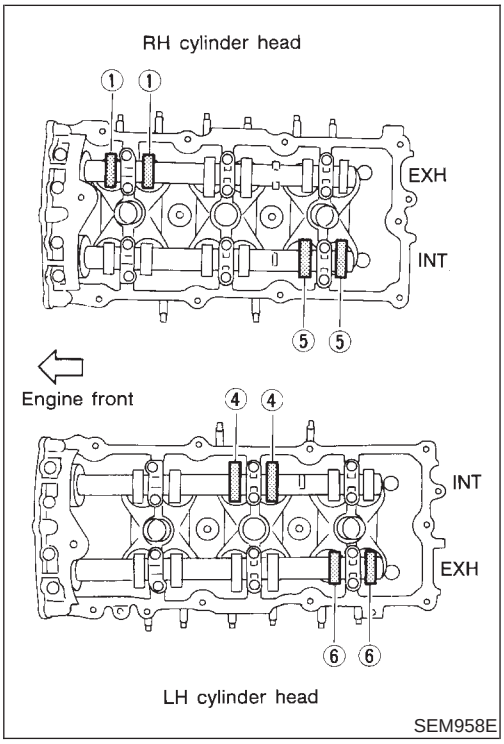

11. Turn crankshaft 240° and align as above.
12. Set No. 5 cylinder at TDC on its compression stroke.
13. Check only those valves shown in the figure.

Crank position	Valve											
	No. 1		No. 2		No. 3		No. 4		No. 5		No. 6	
	INT	EXH	INT	EXH	INT	EXH	INT	EXH	INT	EXH	INT	EXH
No. 5 TDC		○					○		○			○

14. If all valve clearances are within specification, install the following parts. If they are out of specification, adjust the valve clearances.

- Intake manifold collectors
- RH and LH rocker covers
- All spark plugs
- All ignition coils

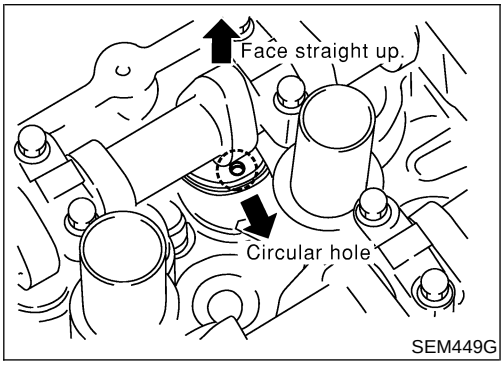

ADJUSTING

NAEM0022S02

Adjust valve clearance while engine is cold.

1. Turn crankshaft, to position cam lobe on camshaft of valve that must be adjusted upward.
2. Thoroughly wipe off engine oil around adjusting shim using a rag.
3. Using a extra-fine screwdriver, turn the round hole of the adjusting shim in the direction of the arrow.

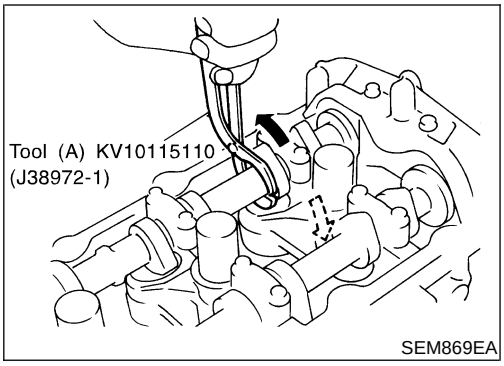

4. Place Tool (A) around camshaft as shown in figure.
   Before placing Tool (A), rotate notch toward center of cylinder head (See figure.), to simplify shim removal later.

CAUTION:

Be careful not to damage cam surface with Tool (A).

5. Rotate Tool (A) (See figure.) so that valve lifter is pushed down.

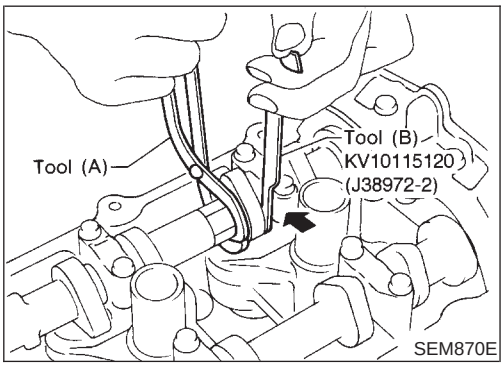

6. Place Tool (B) between camshaft and the edge of the valve lifter to retain valve lifter.

CAUTION:

- **Tool (B) must be placed as close to camshaft bracket as possible.**
- **Be careful not to damage cam surface with Tool (B).**

7. Remove Tool (A).

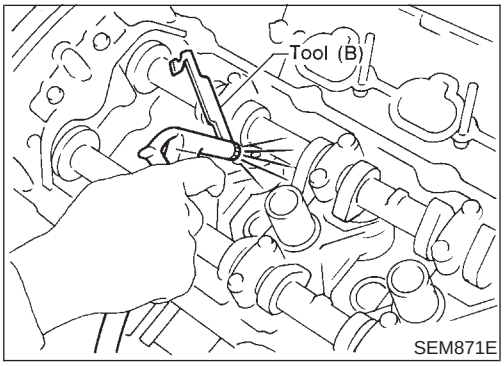

8. Blow air into the hole to separate adjusting shim from valve lifter.

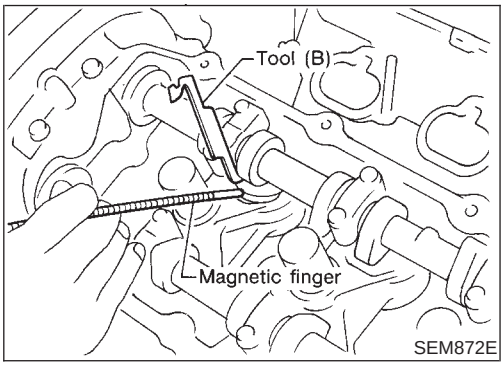

9. Remove adjusting shim using a small screwdriver and a magnetic finger.
10. Determine replacement adjusting shim size following formula.

- Using a micrometer determine thickness of removed shim.
- Calculate thickness of new adjusting shim so valve clearance comes within specified values.
  R = Thickness of removed shim
  N = Thickness of new shim
  M = Measured valve clearance

  Intake:

  N = R + [M − 0.30 mm (0.0118 in)]

  Exhaust:

  N = R + [M − 0.33 mm (0.0130 in)]

  Shims are available in 64 sizes from 2.32 mm (0.0913 in) to 2.95 mm (0.1161 in), in steps of 0.01 mm (0.0004 in).
- Select new shim with thickness as close as possible to calculated value.

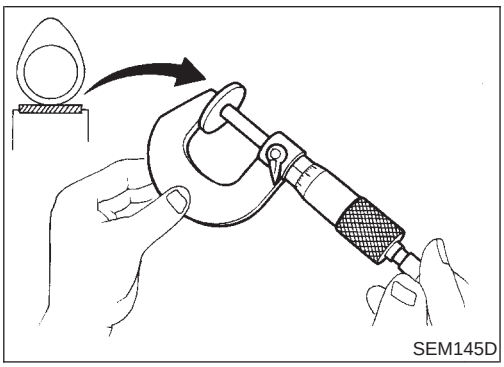

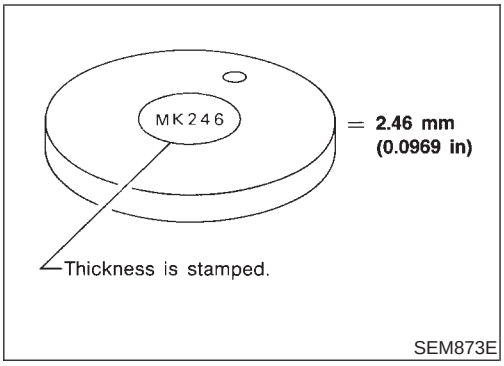

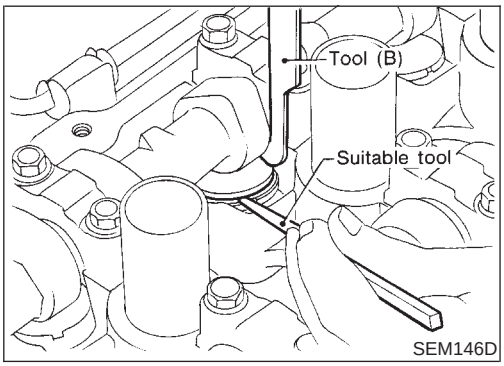

11. Install new shim using a suitable tool.

- **Install with the surface on which the thickness is stamped facing down.**

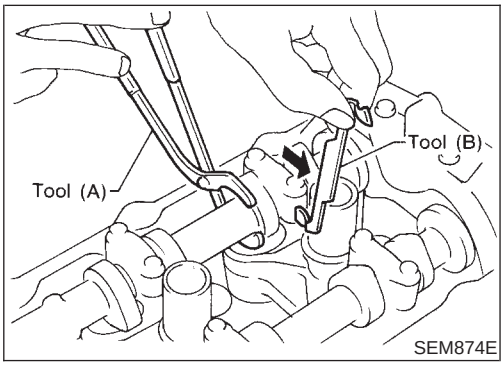

12. Place Tool (A) as mentioned in steps 2 and 3.
13. Remove Tool (B).
14. Remove Tool (A).
15. Recheck valve clearance.

Valve clearance:

Unit: mm (in)

	Cold	Hot* (reference data)
Intake	0.26 - 0.34 (0.010 - 0.013)	0.304 - 0.416 (0.012 - 0.016)
Exhaust	0.29 - 0.37 (0.011 - 0.015)	0.308 - 0.432 (0.012 - 0.017)

*: Approximately 80°C (176°F)

Removal and Installation

NAEM0042

WARNING:

- **Situate vehicle on a flat and solid surface.**
- **Place chocks at front and back of rear wheels.**
- **Do not remove engine until exhaust system has completely cooled off. Otherwise, you may burn yourself and/or fire may break out in fuel line.**
- **For safety during subsequent steps, the tension of wires should be slackened against the engine.**
- **Before disconnecting fuel hose, release fuel pressure from fuel line.**
  Refer to EC-40, "Fuel Pressure Release".
- **Before removing front axle from transmission, place safety stands under designated front supporting points. Refer to GI section for lifting points and towing.**
- **Be sure to hoist engine and transmission in a safe manner.**
- **For engines not equipped with engine slingers, attach proper slingers and bolts described in PARTS CATALOG.**

CAUTION:

- **When lifting engine, be careful not to strike adjacent parts, especially accelerator wire casing, brake lines, and brake master cylinder.**
- **In hoisting the engine, always use engine slingers in a safe manner.**
- **Before separating engine and transmission, remove crankshaft position sensor (POS) from the assembly.**
- **Always take extra care not to damage edge of crankshaft position sensor (POS), or ring gear teeth.**

REMOVAL

Front Engine Mounting

NAEM0042S01

NAEM0042S0101

SEC. 112

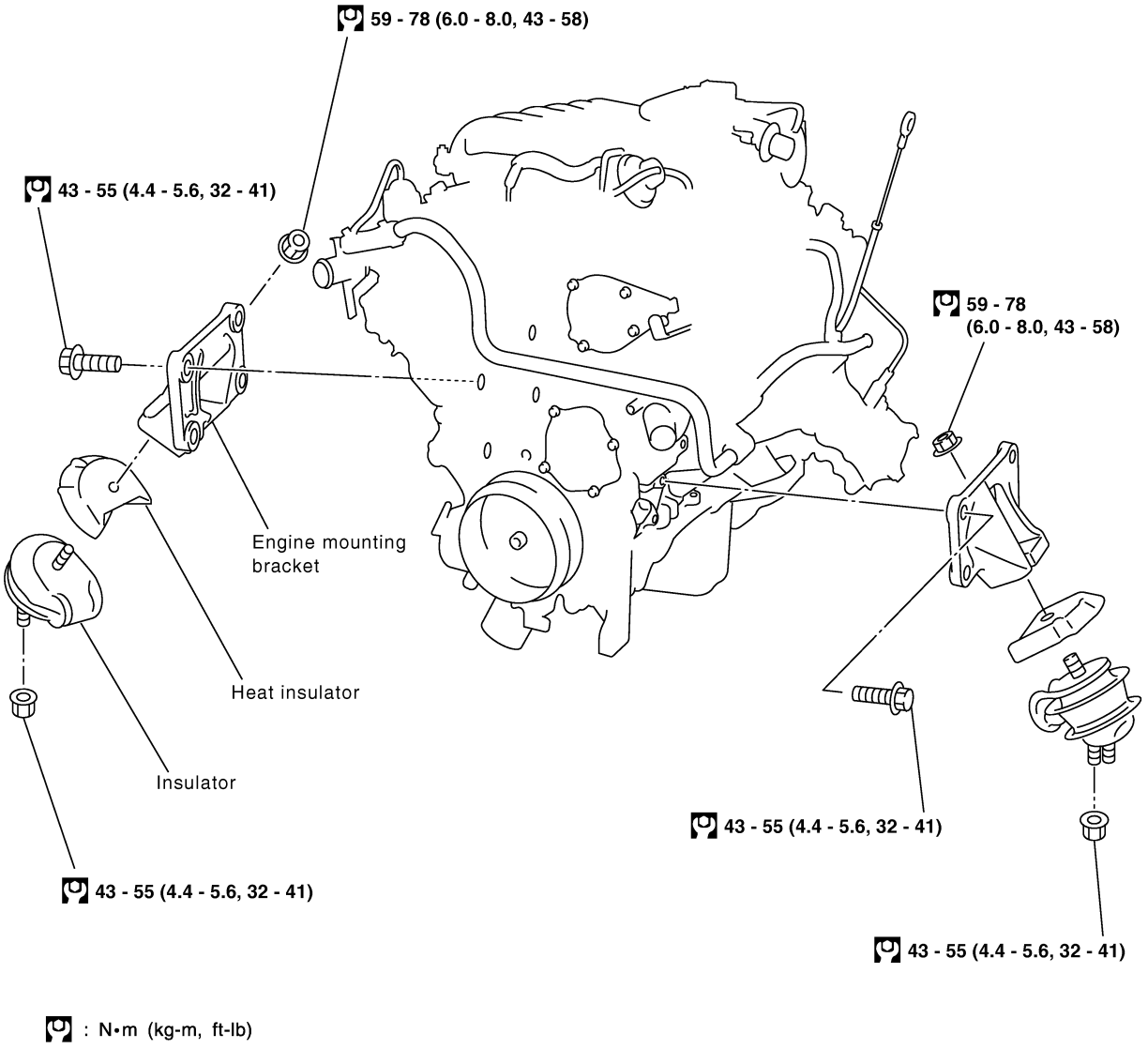

SEM458G

Rear Engine Mounting

NAEM0042S0102

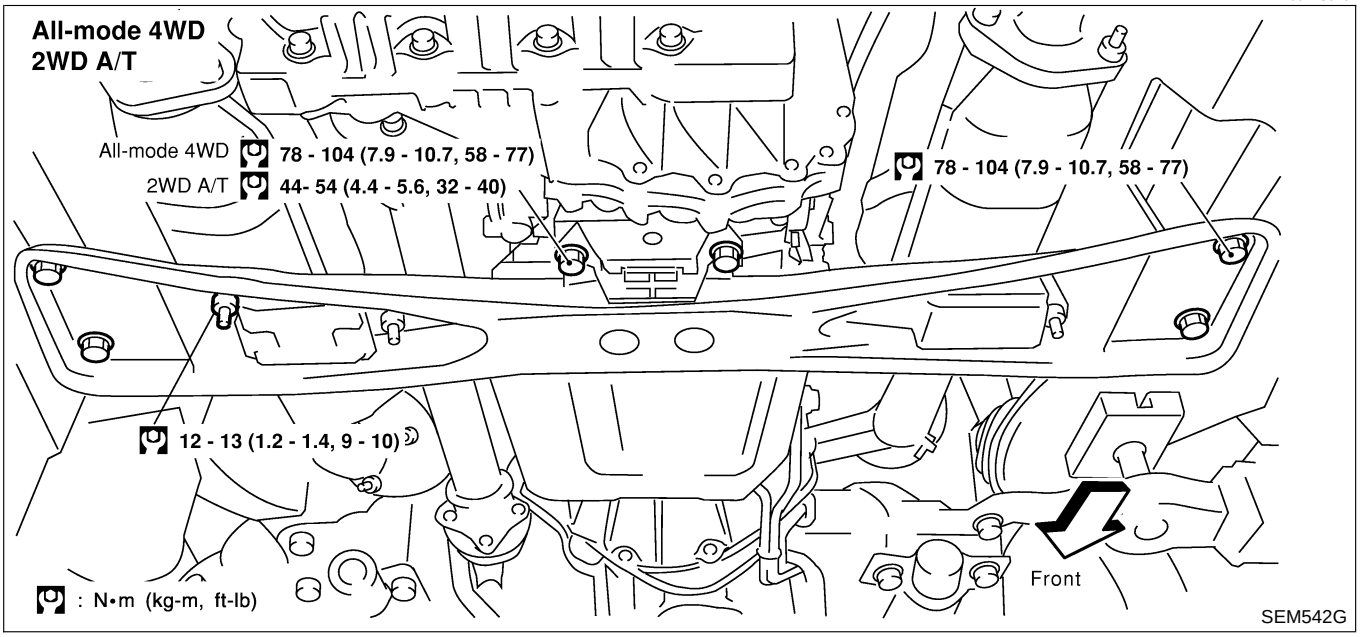

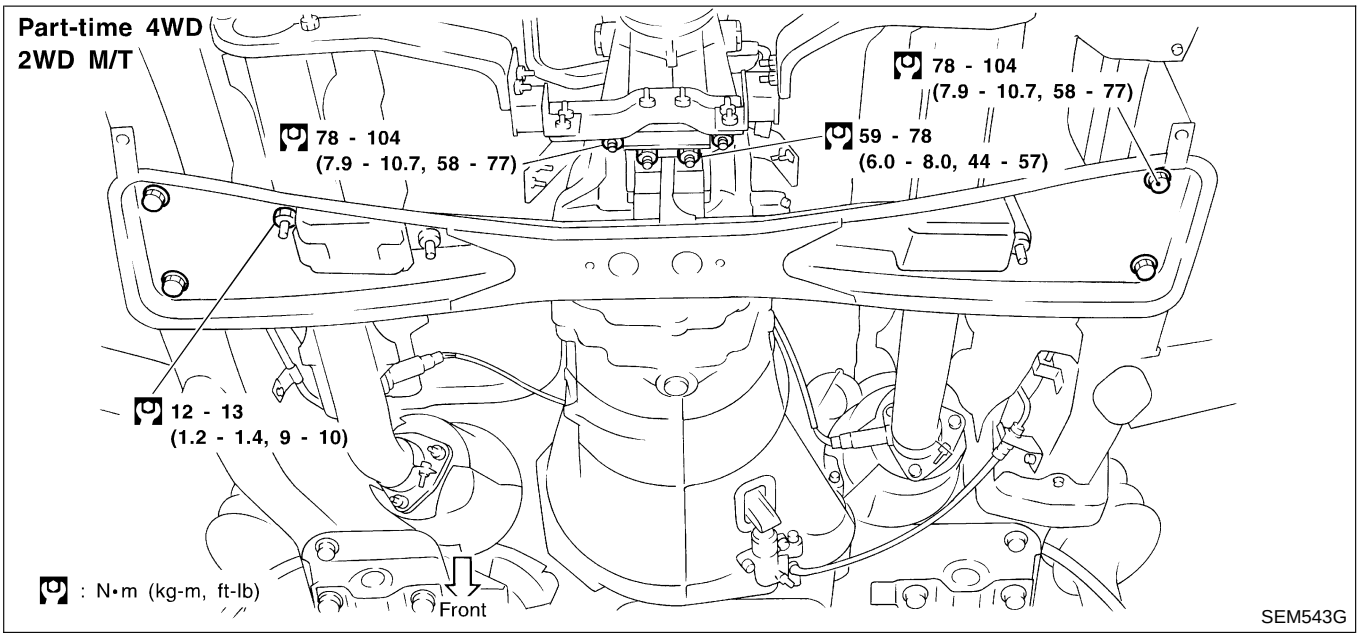

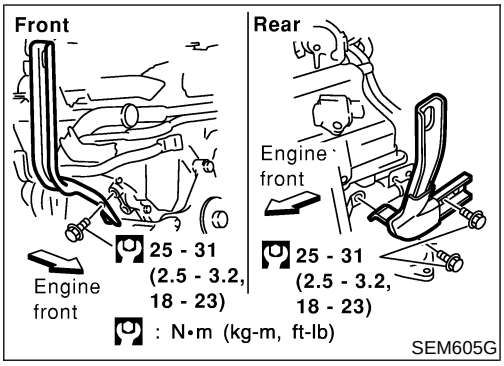

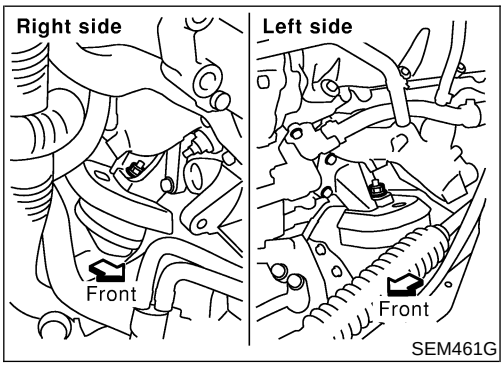

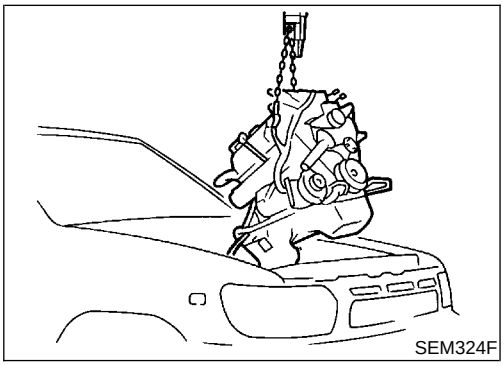

1. Release fuel pressure.
   Refer to EC-40, "Fuel pressure release".
2. Remove engine hood and front RH and LH wheels.
3. Remove engine undercover and suspension member stay.
4. Drain coolant from radiator.
5. Remove the following parts.
   - Radiator shroud
   - Radiator
   - Cooling fan
   - Drive belts
   - Battery
   - Engine cover
   - Throttle wires
6. Air duct with air cleaner case.
7. Disconnect vacuum hoses, fuel hoses, heater hoses, EVAP canister hoses, harnesses, connectors and so on.
8. Remove air conditioner compressor from bracket, then put it aside holding with a suitable wire.
9. Remove power steering oil pump and reservoir tank with bracket, then put it aside holding with a suitable wire.
10. Remove alternator.
11. Remove exhaust front tube heat insulators, then remove rear heated oxygen sensors.
12. Remove exhaust front and rear tubes.
    Refer to FE-8, "Removal and Installation".
13. Remove transmission.
    Refer to AT-277, MT-10, "Removal".
14. Remove TWC (manifold) heat insulators, then remove TWC (manifold).
15. Install engine slingers.
16. Hoist engine with engine slingers and remove front engine mounting nuts.
17. Remove engine from vehicle.

INSTALLATION

NAEM0042S02

Installation is in the reverse order of removal.

Components

NAEM0024

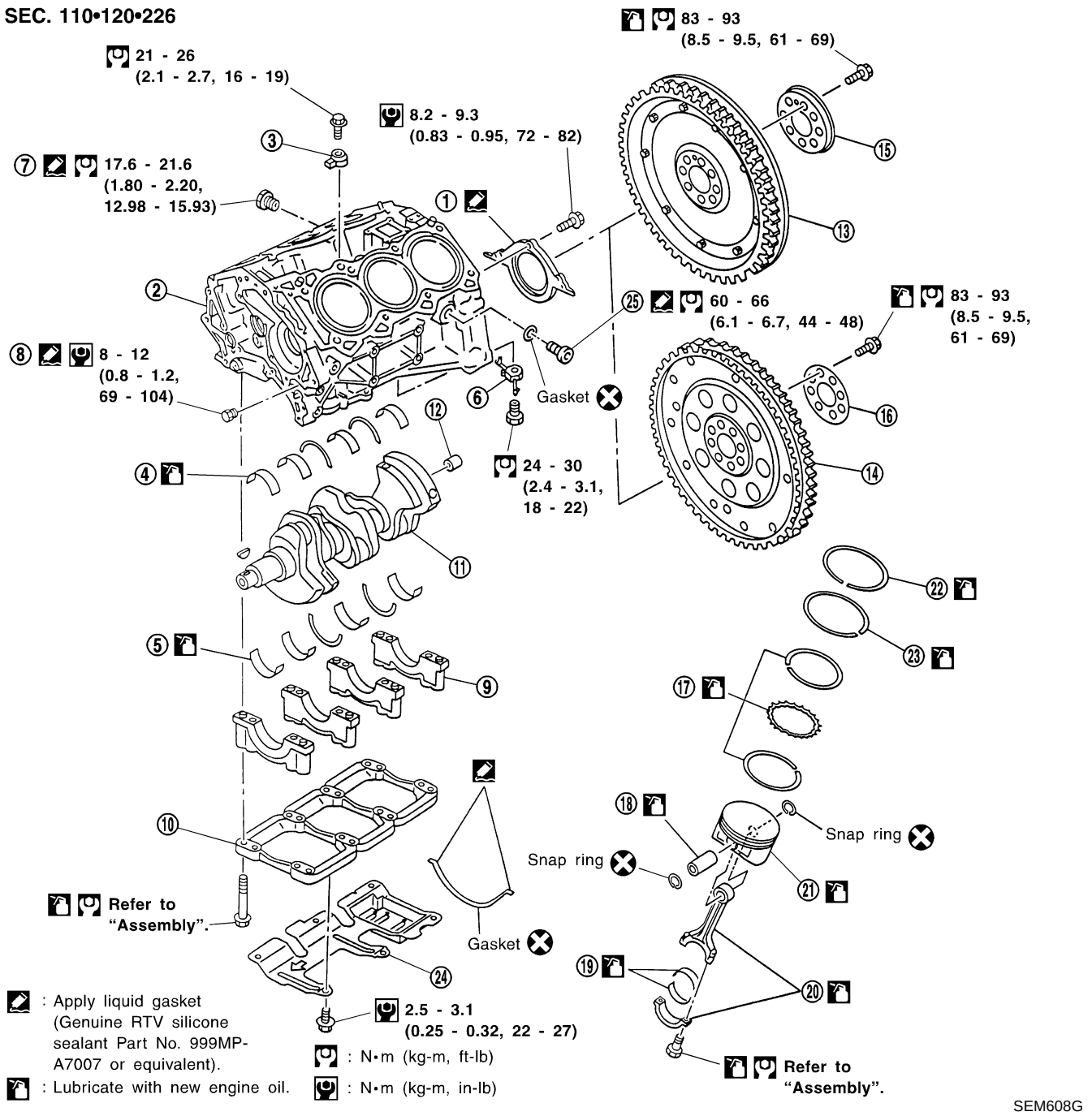

1. Rear oil seal retainer
2. Cylinder block
3. Knock sensor
4. Upper main bearing
5. Lower main bearing
6. Oil jet
7. Water drain plug (RH side)
8. Water drain plug (Water pump side)
9. Main bearing cap
10. Main bearing beam
11. Crankshaft
12. Pilot bushing or pilot converter
13. Flywheel with signal plate (M/T models)
14. Drive plate with signal plate (A/T model)
15. Flywheel reinforce plate
16. Drive plate reinforce plate
17. Oil ring
18. Piston pin
19. Connecting rod bearing
20. Connecting rod
21. Piston
22. Top ring
23. 2nd ring
24. Baffle plate
25. Water drain plug (LH side)

CYLINDER BLOCK HEATER

NAEM0024S02

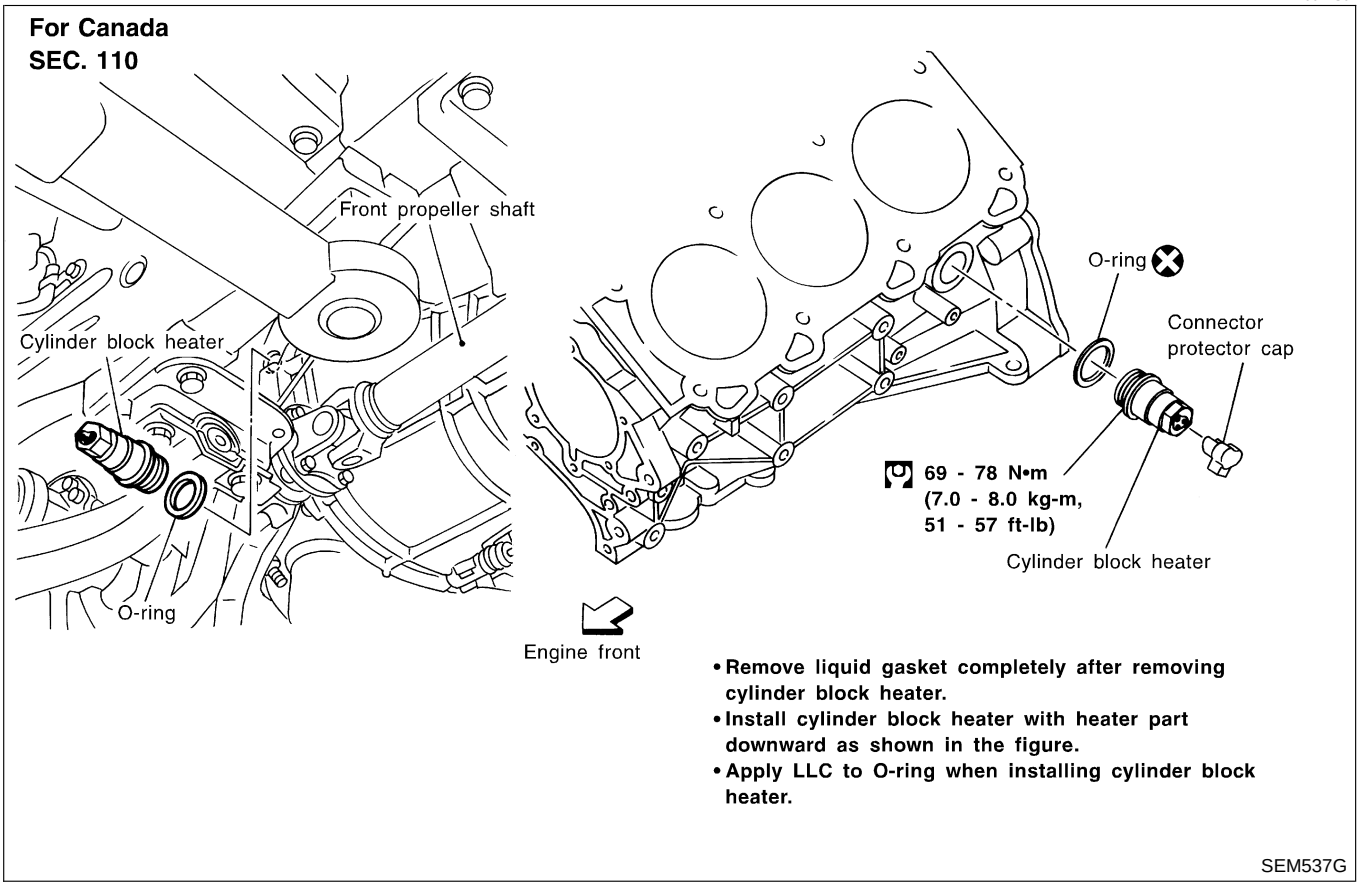

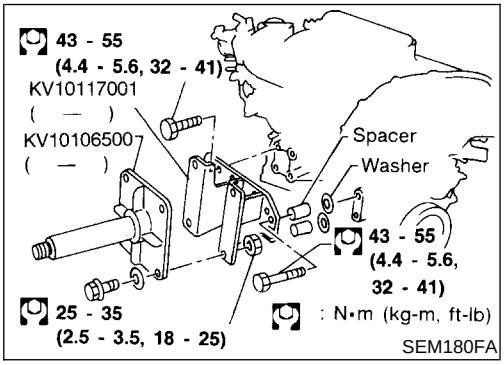

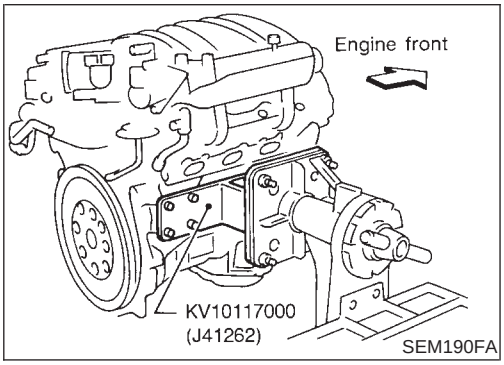

Removal and Installation

NAEM0025

CAUTION:

- **When installing bearings, pistons, or other sliding parts, lubricate contacting surfaces with new engine oil.**
- **Place removed parts such as bearings and bearing caps in their proper order and direction.**
- **When installing connecting rod nuts, and main bearing cap bolts, apply new engine oil to threads and seating surfaces.**
- **Do not allow any magnetic materials to contact the signal plate teeth of flywheel or drive plate.**

Disassembly

NAEM0026

PISTON, CRANKSHAFT AND OIL JET

NAEM0026S01

1. Remove engine. Refer to "Removal and Installation", EM-58.
2. Place engine on a work stand.
3. Drain coolant and oil.
4. Remove oil pan. Refer to "Removal", EM-15.
5. Remove timing chain. Refer to "Removal", EM-23.
6. Remove cylinder head. Refer to "Removal", EM-23.

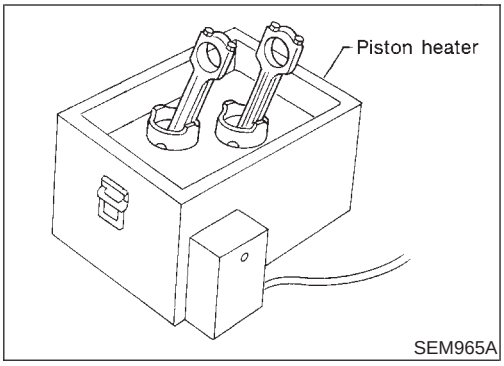

7. Remove pistons with connecting rods.
- When disassembling piston and connecting rod, remove snap ring first, then heat piston to 60 to 70°C (140 to 158°F).

8. Remove rear oil seal retainer.

CAUTION:
- **When piston rings are not replaced, make sure that piston rings are mounted in their original positions.**
- **When replacing piston rings, if there is no punchmark, install with either side up.**

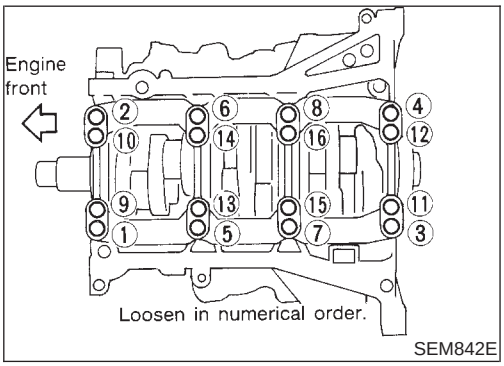

9. Loosen bolts in numerical order as shown and remove main bearing beam, bearing cap and crankshaft.
- **Before removing bearing beam and bearing cap, measure crankshaft end play. Refer to EM-72.**
- **Bolts should be loosened in two or three steps.**

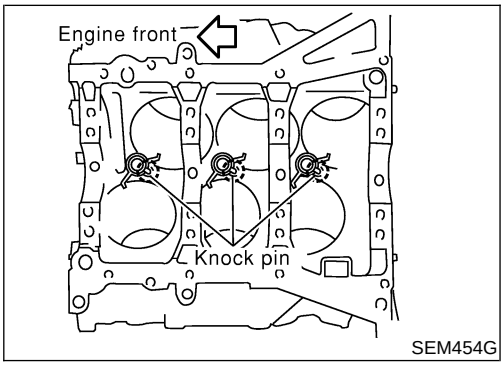

10. Remove oil jets.

Inspection

PISTON AND PISTON PIN CLEARANCE

NAEM0027

NAEM0027S01

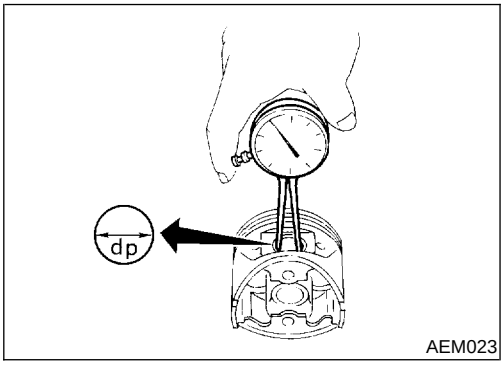

1. Measure inner diameter of piston pin hole "dp".

Standard diameter "dp":
Grade No. 0
21.993 - 21.999 mm (0.8659 - 0.8661 in)
Grade No. 1
21.999 - 22.005 mm (0.8661 - 0.8663 in)

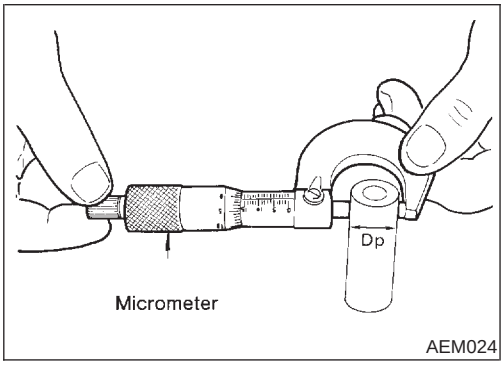

2. Measure outer diameter of piston pin "Dp".

Standard diameter "Dp":
Grade No. 0
21.989 - 21.995 mm (0.8657 - 0.8659 in)
Grade No. 1
21.995 - 22.001 mm (0.8659 - 0.8662 in)

3. Calculate interference fit of piston pin to piston.

Dp − dp = 0.002 - 0.006 mm (0.0001 - 0.0002 in)

If it exceeds the above value, replace piston assembly with pin.

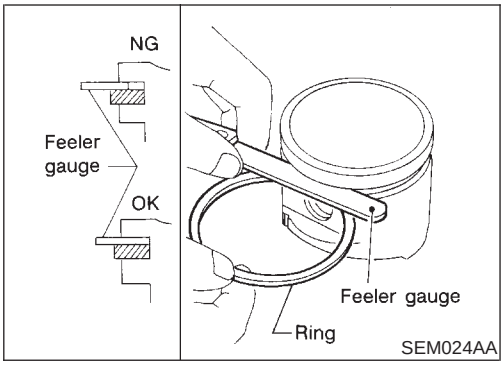

PISTON RING SIDE CLEARANCE

NAEM0027S02

Side clearance:

Top ring

0.040 - 0.080 mm (0.0016 - 0.0031 in)

2nd ring

0.030 - 0.070 mm (0.0012 - 0.0028 in)

Oil ring

0.015 - 0.050 mm (0.0006 - 0.0020 in)

Max. limit of side clearance:

Top ring 0.11 mm (0.0043 in)

2nd ring 0.1 mm (0.004 in)

If out of specification, replace piston ring. If clearance exceeds maximum limit with new ring, replace piston.

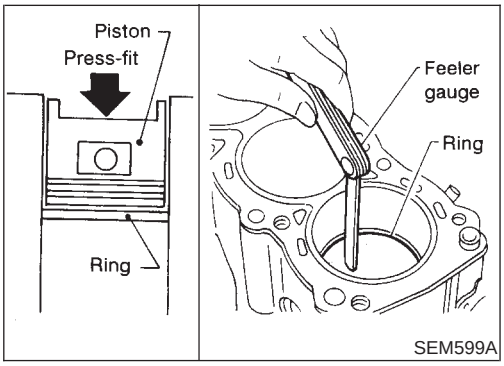

PISTON RING END GAP

NAEM0027S03

End gap:

Top ring 0.23 - 0.33 mm (0.0091 - 0.0130 in)

2nd ring 0.33 - 0.48 mm (0.0130- 0.0189 in)

Oil ring 0.20 - 0.80 mm (0.0079 - 0.0315 in)

Max. limit of ring gap:

Top ring 0.54 mm (0.0213 in)

2nd ring 0.80 mm (0.0315 in)

Oil ring 0.95 mm (0.0374 in)

If out of specification, replace piston ring. If gap still exceeds the limit even with a new ring, do the following. Rebore cylinder and use oversized piston and piston rings.

Refer to SDS (EM-83).

- When replacing the piston, check the cylinder block surface for scratches or seizure. If scratches or seizure is found, hone or replace the cylinder block.

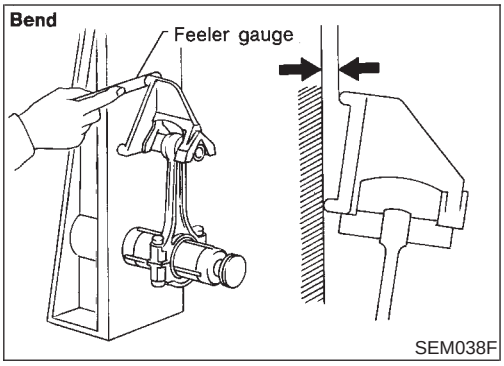

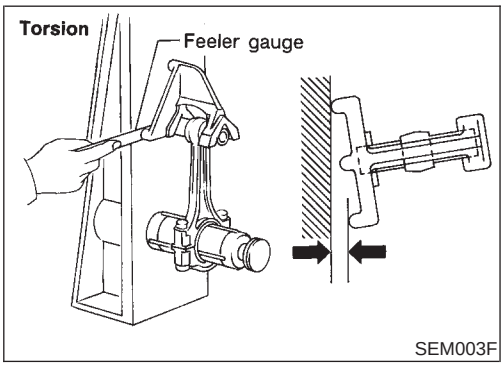

CONNECTING ROD BEND AND TORSION

NAEM0027S04

Bend:

Limit 0.15 mm (0.0059 in)
per 100 mm (3.94 in) length

Torsion:

Limit 0.30 mm (0.0118 in)
per 100 mm (3.94 in) length

If it exceeds the limit, replace connecting rod assembly.

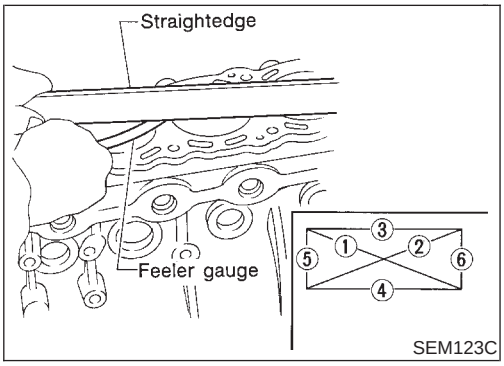

CYLINDER BLOCK DISTORTION AND WEAR

NAEM0027S05

- Clean upper surface of cylinder block.
  Use a reliable straightedge and feeler gauge to check the flatness of cylinder block surface.
  Check along six positions shown in the figure.

  Distortion limit: 0.10 mm (0.0039 in)

- If out of specification, resurface it. The limit for cylinder block resurfacing is determined by cylinder head resurfacing in engine.
  Resurfacing limit:
  Amount of cylinder head resurfacing is "A".
  Amount of cylinder block resurfacing is "B".

  The maximum limit is as follows:

  A + B = 0.2 mm (0.008 in)

  Nominal cylinder block height from crankshaft center:

  214.95 - 215.05 mm (8.4626 - 8.4665 in)

  Refer to SDS (EM-82).

- If necessary, replace cylinder block.

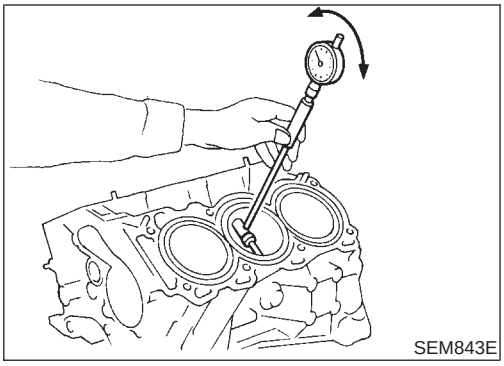

PISTON-TO-BORE CLEARANCE

NAEM0027S06

1. Using a bore gauge, measure cylinder bore for wear, out-of-round and taper.

Cylinder bore inner diameter

Grade No.	Standard inner diameter	Wear limit
No. 1	95.500 - 95.510 mm (3.7598 - 3.7602 in)	0.20 mm (0.0079 in)
No. 2	95.510 - 95.520 mm (3.7602 - 3.7606 in)	
No. 3	95.520 - 95.530 mm (3.7606 - 3.7610 in)	

If it exceeds the limit, rebore all cylinders. Replace cylinder block if necessary.

Out-of-round (X − Y):
Limit 0.015 mm (0.0006 in)
Taper (A − B − C):
Limit 0.015 mm (0.0006 in)

2. Check for scratches and seizure. If seizure is found, hone it.

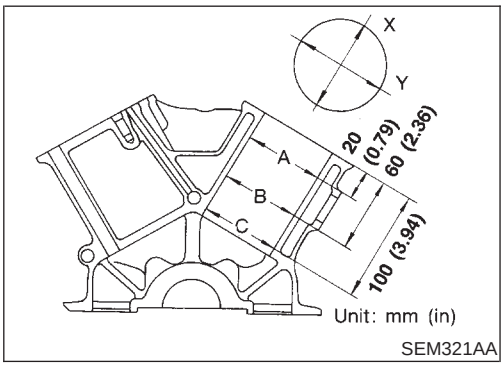

- **If both cylinder block and piston are replaced with new ones, select piston of the same grade number punched on cylinder block rear position. These numbers are punched in either Arabic or Roman numerals.**

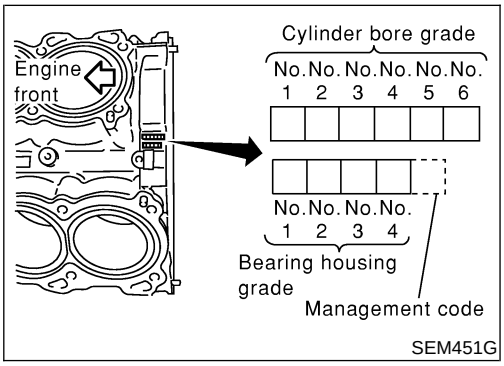

3. Measure piston skirt diameter.
   Piston diameter "A": Refer to SDS (EM-83).
   Measuring point "a" (Distance from the top):
   41.0 mm (1.61 in)
4. Check that piston-to-bore clearance is within specification.
   Piston-to-bore clearance "B":
   0.010 - 0.030 mm (0.0004 - 0.0012 in)
5. Determine piston oversize according to amount of cylinder wear.
   Oversize pistons are available for service.
   Refer to SDS (EM-83).
6. Cylinder bore size is determined by adding piston-to-bore clearance to piston diameter "A".
   Rebored size calculation: D = A + B − C
   where,
   D: Bored diameter
   A: Piston diameter as measured
   B: Piston-to-bore clearance
   C: Honing allowance 0.02 mm (0.0008 in)
7. Install main bearing caps, and tighten to the specified torque. Otherwise, cylinder bores may be distorted in final assembly.

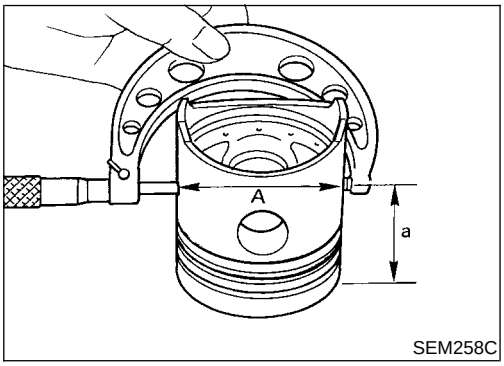

8. Cut cylinder bores.
- **When any cylinder needs boring, all other cylinders must also be bored.**
- **Do not cut too much out of cylinder bore at a time. Cut only 0.05 mm (0.0020 in) or so in diameter at a time.**
9. Hone cylinders to obtain specified piston-to-bore clearance.
10. Measure finished cylinder bore for out-of-round and taper.
- **Measurement should be done after cylinder bore cools down.**

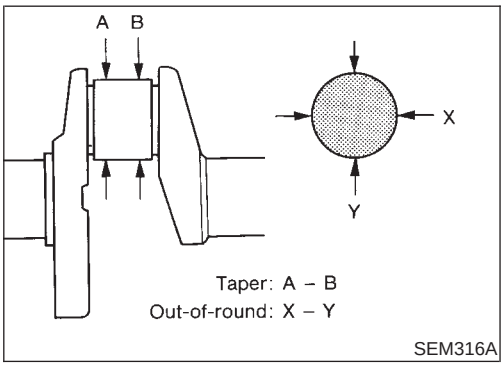

CRANKSHAFT

NAEM0027S07

1. Check crankshaft main and pin journals for score, wear or cracks.
2. With a micrometer, measure journals for taper and out-of-round.

Out-of-round (X – Y):
Standard
0.002 mm (0.0001 in)
Taper (A – B):
Standard
0.002 mm (0.0001 in)

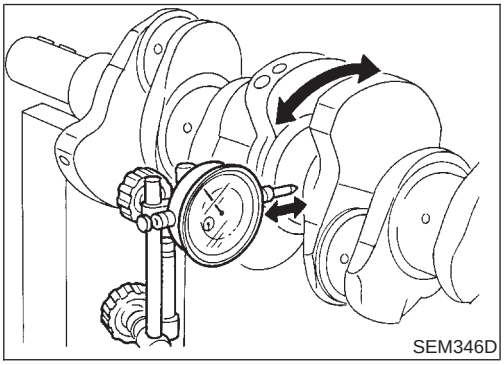

3. Measure crankshaft runout.

Runout (Total indicator reading):
Limit 0.10 mm (0.0039 in)

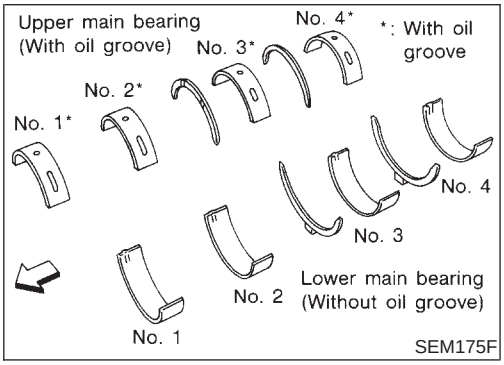

BEARING CLEARANCE

NAEM0027S08

- Use either of the following two methods, however, method "A" gives more reliable results and is preferable.

Method A (Using bore gauge & micrometer)

Main bearing

NAEM0027S0801

1. Set main bearings in their proper positions on cylinder block and main bearing cap.

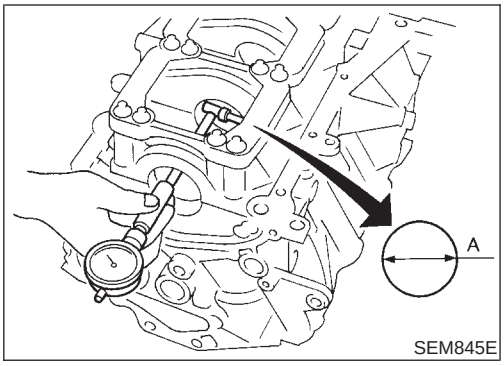

2. Install main bearing cap and bearing beam to cylinder block. **Tighten all bolts in correct order.**
3. Measure inner diameters "A" of each main bearing.

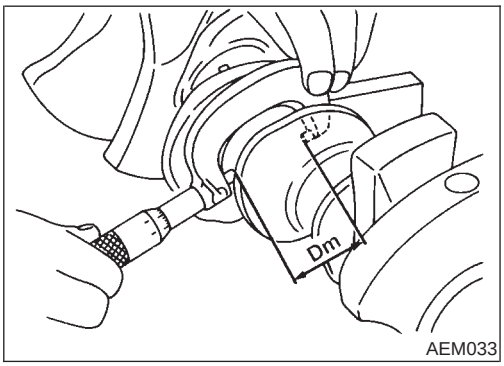

4. Measure outer diameters "Dm" of each crankshaft main journal.
5. Calculate main bearing clearance.
   Main bearing clearance = A − Dm
   Standard: 0.035 - 0.045 mm (0.0014 - 0.0018 in)
   Limit: 0.065 mm (0.0026 in)

- If it exceeds the limit, replace bearing.
- If clearance cannot be adjusted using any standard bearing grade, grind crankshaft journal and use undersized bearing.

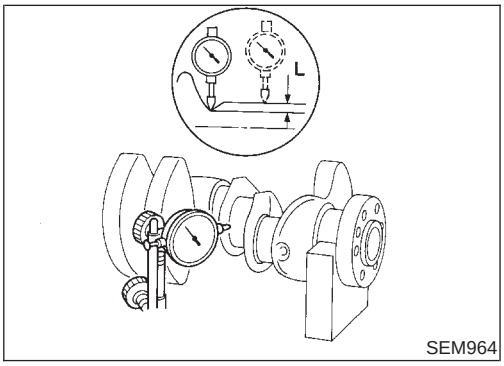

a. When grinding crankshaft journal, confirm that "L" dimension in fillet roll is more than the specified limit.
   "L": 0.1 mm (0.004 in)
b. Refer to SDS for grinding crankshaft and available service parts.

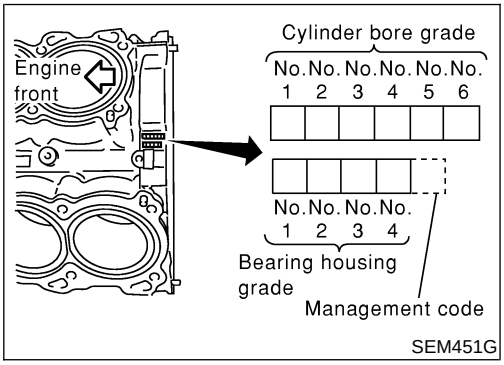

6. If crankshaft or cylinder block is replaced with a new one, select thickness of main bearings as follows:
a. Grade number of each cylinder block main journal is punched on the respective cylinder block. These numbers are punched in either Arabic or Alphabet. Refer to SDS, EM-82.
   If measured diameter is out of grade punched, decide suitable grade using table in SDS.

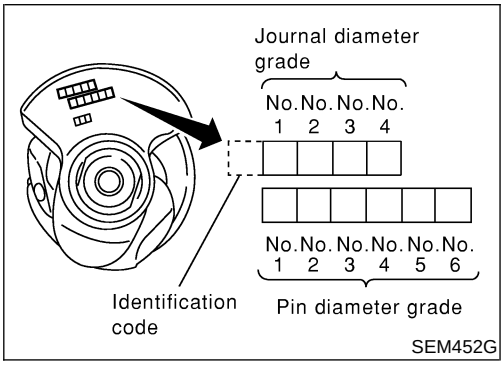

b. Grade number of each crankshaft main journal is punched on the respective crankshaft. These numbers are punched in either Arabic or Alphabet. Refer to SDS, EM-85.
   If measured diameter is out of grade punched, decide suitable grade using table in SDS.
c. Select main bearing with suitable thickness according to the following table.
   Refer to "SDS", EM-86, for available main bearings.

Main bearing selection table

Crankshaft main journal: Mark	Axle diameter	Cylinder block main journal: Mark	A	B	C	D	E	F	G	H	J	K	L	M	N	P	R	S	T	U	V	W	X	Y	4	7
		Hole diameter	63.993 - 63.994	63.994 - 63.995	63.995 - 63.996	63.996 - 63.997	63.997 - 63.998	63.998 - 63.999	63.999 - 64.000	64.000 - 64.001	64.001 - 64.002	64.002 - 64.003	64.003 - 64.004	64.004 - 64.005	64.005 - 64.006	64.006 - 64.007	64.007 - 64.008	64.008 - 64.009	64.009 - 64.010	64.010 - 64.011	64.011 - 64.012	64.012 - 64.013	64.013 - 64.014	64.014 - 64.015	64.015 - 64.016	64.016 - 64.017
A	59.975 - 59.974		0	0	0	01	01	01	1	1	1	12	12	12	2	2	2	23	23	23	3	3	3	34	34	34
B	59.974 - 59.973		0	0	01	01	01	1	1	1	12	12	12	2	2	2	23	23	23	3	3	3	34	34	34	4
C	59.973 - 59.972		0	01	01	01	1	1	1	12	12	12	2	2	2	23	23	23	3	3	3	34	34	34	4	4
D	59.972 - 59.971		01	01	01	1	1	1	12	12	12	2	2	2	23	23	23	3	3	3	34	34	34	4	4	4
E	59.971 - 59.970		01	01	1	1	1	12	12	12	2	2	2	23	23	23	3	3	3	34	34	34	4	4	4	45
F	59.970 - 59.969		01	1	1	1	12	12	12	2	2	2	23	23	23	3	3	3	34	34	34	4	4	4	45	45
G	59.969 - 59.968		1	1	1	12	12	12	2	2	2	23	23	23	3	3	3	34	34	34	4	4	4	45	45	45
H	59.968 - 59.967		1	1	12	12	12	2	2	2	23	23	23	3	3	3	34	34	34	4	4	4	45	45	45	5
J	59.967 - 59.966		1	12	12	12	2	2	2	23	23	23	3	3	3	34	34	34	4	4	4	45	45	45	5	5
K	59.966 - 59.965		12	12	12	2	2	2	23	23	23	3	3	3	34	34	34	4	4	4	45	45	45	5	5	5
L	59.965 - 59.964		12	12	2	2	2	23	23	23	3	3	3	34	34	34	4	4	4	45	45	45	5	5	5	56
M	59.964 - 59.963		12	2	2	2	23	23	23	3	3	3	34	34	34	4	4	4	45	45	45	5	5	5	56	56
N	59.963 - 59.962		2	2	2	23	23	23	3	3	3	34	34	34	4	4	4	45	45	45	5	5	5	56	56	56
P	59.962 - 59.961		2	2	23	23	23	3	3	3	34	34	34	4	4	4	45	45	45	5	5	5	56	56	56	6
R	59.961 - 59.960		2	23	23	23	3	3	3	34	34	34	4	4	4	45	45	45	5	5	5	56	56	56	6	6
S	59.960 - 59.959		23	23	23	3	3	3	34	34	34	4	4	4	45	45	45	5	5	5	56	56	56	6	6	6
T	59.959 - 59.958		23	23	3	3	3	34	34	34	4	4	4	45	45	45	5	5	5	56	56	56	6	6	6	67
U	59.958 - 59.957		23	3	3	3	34	34	34	4	4	4	45	45	45	5	5	5	56	56	56	6	6	6	67	67
V	59.957 - 59.956		3	3	3	34	34	34	4	4	4	45	45	45	5	5	5	56	56	56	6	6	6	67	67	67
W	59.956 - 59.955		3	3	34	34	34	4	4	4	45	45	45	5	5	5	56	56	56	6	6	6	67	67	67	7
X	59.955 - 59.954		3	34	34	34	4	4	4	45	45	45	5	5	5	56	56	56	6	6	6	67	67	67	7	7
Y	59.954 - 59.953		34	34	34	4	4	4	45	45	45	5	5	5	56	56	56	6	6	6	67	67	67	7	7	7
4	59.953 - 59.952		34	34	4	4	4	45	45	45	5	5	5	56	56	56	6	6	6	67	67	67	7	7	7	
7	59.952 - 59.951		34	4	4	4	45	45	45	5	5	5	56	56	56	6	6	6	67	67	67	7	7	7		

SEM280G

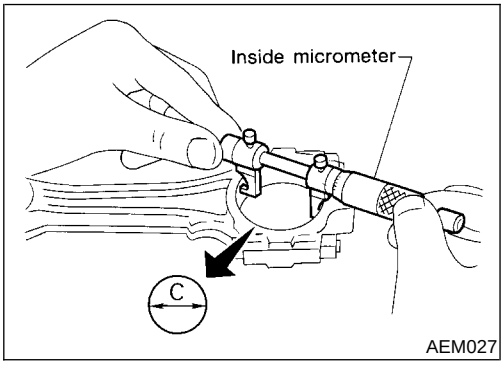

AEM027

Connecting Rod Bearing (Big end)

NAEM0027S0802

1. Install connecting rod bearing to connecting rod and cap.
2. Install connecting rod cap to connecting rod.
   Tighten bolts to the specified torque.
3. Measure inner diameter "C" of connecting rod.

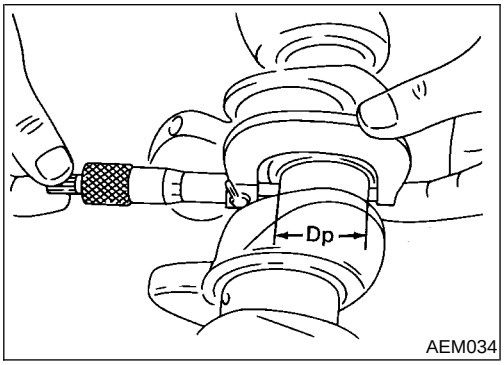

AEM034

4. Measure outer diameter "Dp" of each crankshaft pin journal.
5. Calculate connecting rod bearing clearance.
   Connecting rod bearing clearance = C − Dp
   Standard: 0.034 - 0.059 mm (0.0013 - 0.0023 in)
   Limit: 0.070 mm (0.0028 in)
6. If it exceeds the limit, replace bearing.
7. If clearance cannot be adjusted within the standard of any bearing, grind crankshaft journal and use undersized bearing. Refer to "BEARING CLEARANCE — Main bearing", EM-68.

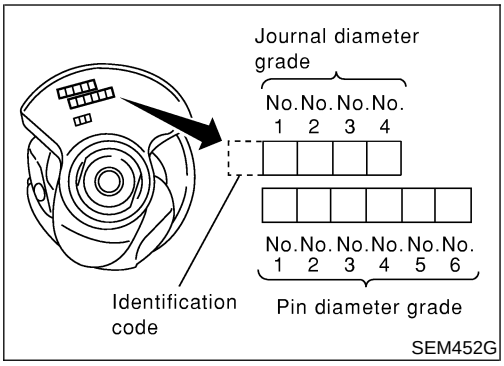

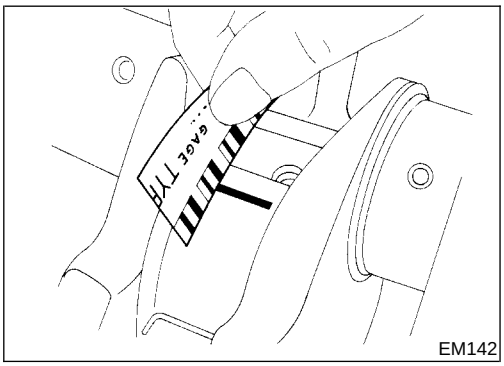

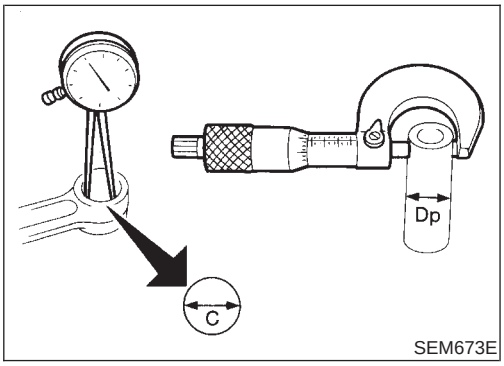

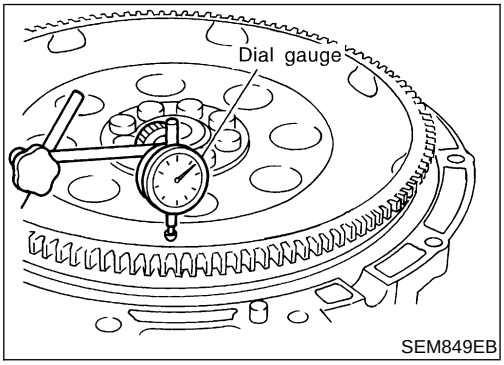

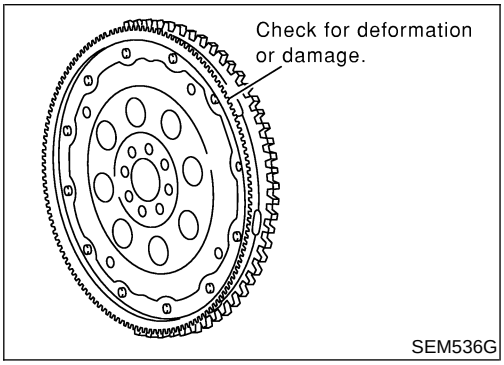

8. If crankshaft is replaced with a new one, select connecting rod bearing according to the following table.
   Connecting rod bearing grade number (Identification color):
   These numbers are punched in either Arabic or Roman numerals.

Crankshaft pin journal grade number	Connecting rod bearing grade number
0	0 (Black)
1	1 (Brown)
2	2 (Green)

Method B (Using plastigage)

CAUTION:

- **Do not turn crankshaft or connecting rod while plastigage is being inserted.**
- **When bearing clearance exceeds the specified limit, ensure that the proper bearing has been installed. If incorrect bearing clearance exists, use a thicker or undersized main bearing to ensure specified clearance.**

CONNECTING ROD BUSHING CLEARANCE (SMALL END)

NAEM0027S09

1. Measure inner diameter "C" of bushing.
2. Measure outer diameter "Dp" of piston pin.
3. Calculate connecting rod bushing clearance.
   Connecting rod bushing clearance = C − Dp
   Standard: 0.005 - 0.017 mm (0.0002 - 0.0007 in)
   Limit: 0.030 mm (0.0012 in)
   If it exceeds the limit, replace connecting rod assembly or connecting rod bushing and/or piston set with pin.

FLYWHEEL/DRIVE PLATE RUNOUT

NAEM0027S11

Runout (Total indicator reading):
Flywheel (M/T model)
Less than 0.15 mm (0.0059 in)
Drive plate (A/T model)
Less than 0.15 mm (0.0059 in)

CAUTION:

- **The signal plate is built into the flywheel assembly. Be careful not to damage the signal plate, especially the teeth.**
- **Check the drive plate and signal plate for deformation or cracks.**
- **Never place the flywheel assembly with the signal plate facing down.**
- **Keep any magnetized objects away from the signal plate.**
- **Do not allow any magnetic materials to contact the signal plate teeth.**
- **Do not surface flywheel. Replace as necessary.**

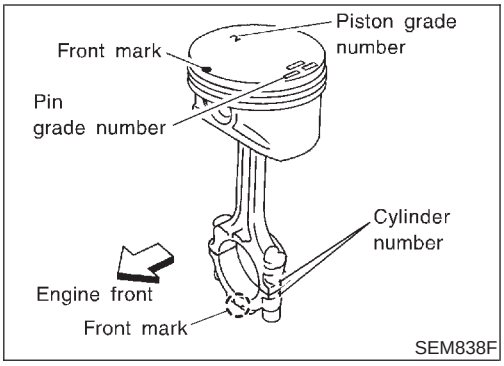

Assembly

NAEM0028

PISTON

NAEM0028S01

1. Install new snap ring on one side of piston pin hole.
2. Heat piston to 60 to 70°C (140 to 158°F) and assemble piston, piston pin, connecting rod and new snap ring.

- **Align the direction of piston and connecting rod.**
- **Numbers stamped on connecting rod and cap correspond to each cylinder.**
- **After assembly, make sure connecting rod swings smoothly.**

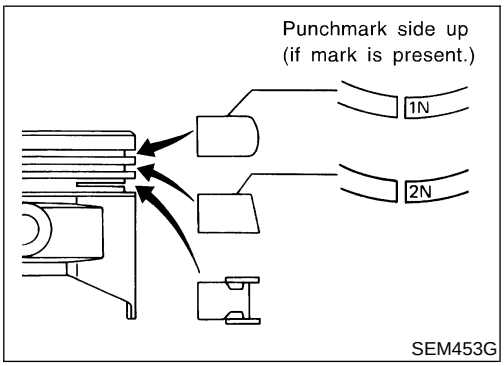

3. Set piston rings as shown.

CAUTION:

- **When piston rings are not replaced, make sure that piston rings are mounted in their original positions.**
- **When replacing piston rings, these without punchmarks, present, piston rings can be mounted with either side up.**

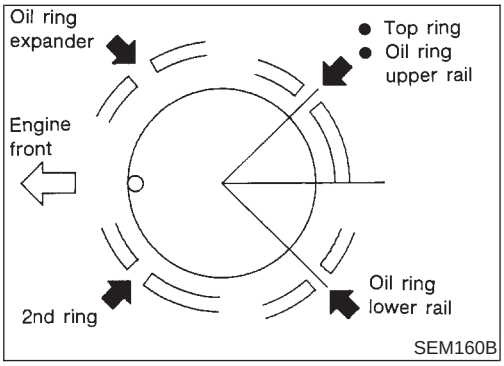

- **Align piston rings so that end gaps are positioned as shown in the figure.**

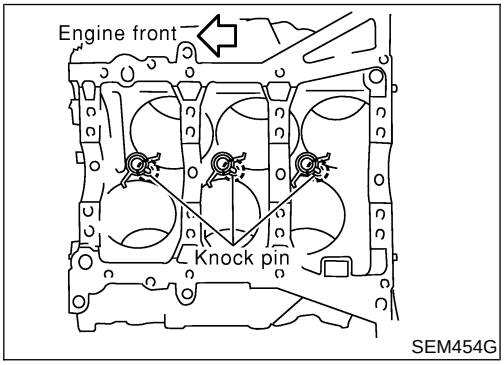

OIL JET

NAEM0028S05

1. Install oil jets.

- Insert oil jet knock pin into the cylinder block knock pin hole, and tighten the mounting bolts.

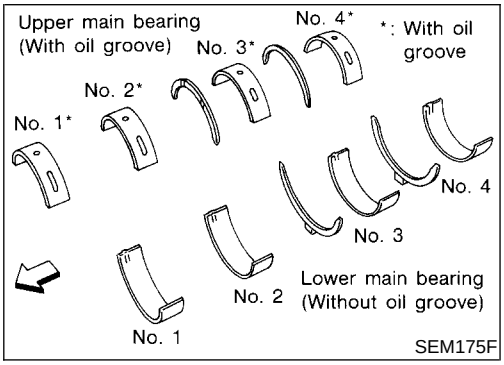

CRANKSHAFT

NAEM0028S02

1. Set main bearings in their proper positions on cylinder block and main bearing beam.

- **Confirm that correct main bearings are used. Refer to "Inspection" of this section.**

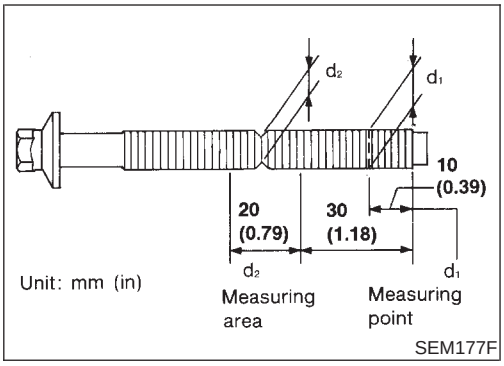

SEM177F

2. Instructions for re-use of main bearing cap bolts.

- **A plastic zone tightening method is used for tightening main bearing cap bolts. Measure d1 and d2 as shown in the figure.**
  d2: Select minimum diameter in the measuring area.
  If the difference between d1 and d2 exceeds the limit, replace the bolts with new ones.
  Limit (d1 - d2): 0.11 mm (0.0043 in)

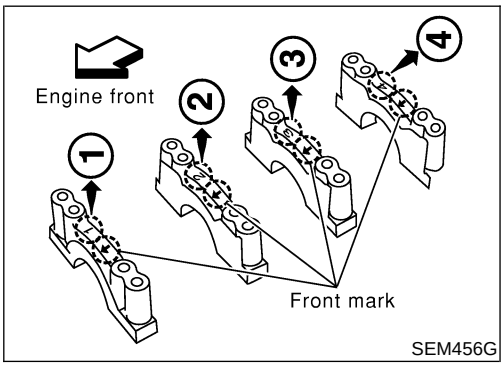

SEM456G

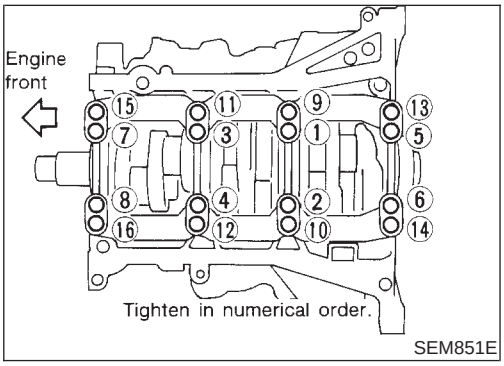

SEM851E

3. After installing crankshaft, main bearing cap, main bearing beam and bearing cap bolts, tighten bearing cap bolts in numerical order as shown.

- **Make sure that the front mark on the main bearing beam faces the front of the engine.**
- **Tightening procedure**

a) **Tighten all bolts to 32 to 38 N·m (3.3 to 3.9 kg-m, 24 to 28 ft-lb).**

b) **Turn all bolts 90 to 95 degrees clockwise with angle wrench.**

- **Prior to tightening bearing cap bolts, place bearing beam in its proper position by shifting crankshaft in the axial direction.**
- **After securing bearing cap bolts, make sure crankshaft turns smoothly by hand.**
- **Lubricate threads and seat surfaces of the bolts with new engine oil.**

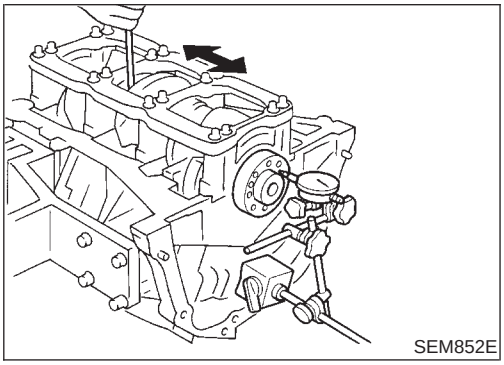
SEM852E

4. Measure crankshaft end play.

Crankshaft end play:
Standard
0.10 - 0.25 mm (0.0039 - 0.0098 in)
Limit
0.30 mm (0.0118 in)

If beyond the limit, replace bearing with a new one.

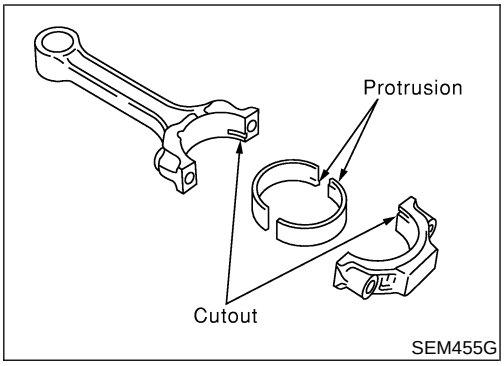

5. Install connecting rod bearings in connecting rods and connecting rod caps.
- **Confirm that correct bearings are used.**

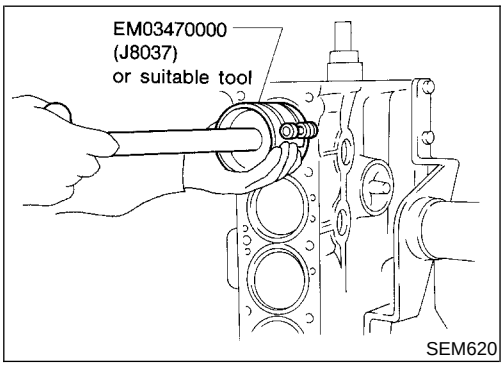

6. Install pistons with connecting rods.

a. Install them into corresponding cylinders with Tool.
- **Be careful not to scratch cylinder wall with the connecting rod.**
- **Arrange so that front mark on piston head faces toward engine front.**

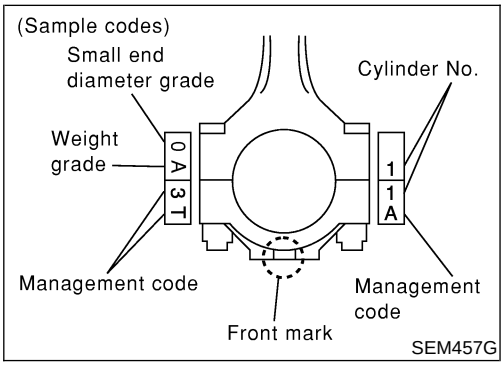

b. Install connecting rod caps.
- **Lubricate threads and seat surfaces with new engine oil.**
- Install so that the cylinder number stamped on the connecting rod agrees with that stamped on cap side.
- Make sure that front mark on the connecting rod cap faces the front of the engine.

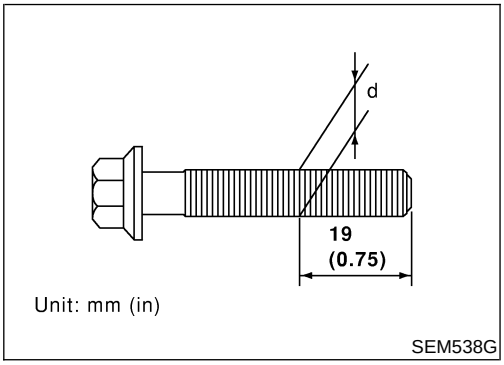

c. Re-use connecting rod cap bolts as follows.
- Make sure that the bolts can be smoothly screwed-in to the end manually.
- If not, measure the outer diameter "d" shown in the figure.

Outer diameter "d" of connecting rod cap bolt:

Standard

7.90 - 8.00 mm (0.3110 - 0.3150 in)

Limit

7.75 mm (0.3051 in)

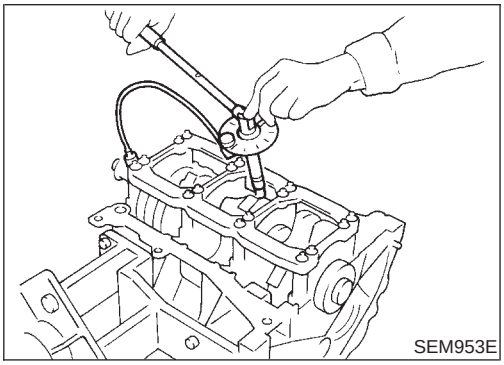

d. Tighten connecting rod cap bolts to the specified torque.

Connecting rod cap bolt:

(1) Tighten nuts to 19 to 21 N·m (1.9 to 2.1 kg-m, 14 to 15 ft-lb).

(2) Turn nuts 90 to 95 degrees clockwise with angle wrench.

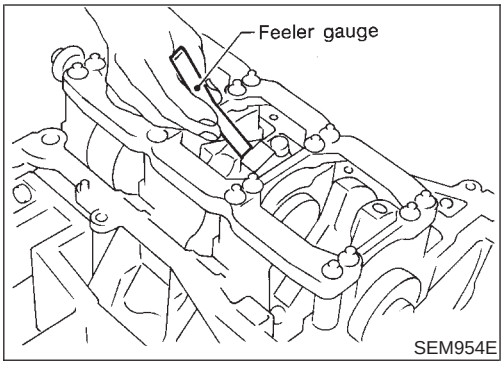

7. Measure connecting rod side clearance.

   Connecting rod side clearance:

   Standard

   0.20 - 0.35 mm (0.0079 - 0.0138 in)

   Limit

   0.40 mm (0.0157 in)

   If beyond the limit, replace connecting rod and/or crankshaft.
8. Install rear oil seal retainer.

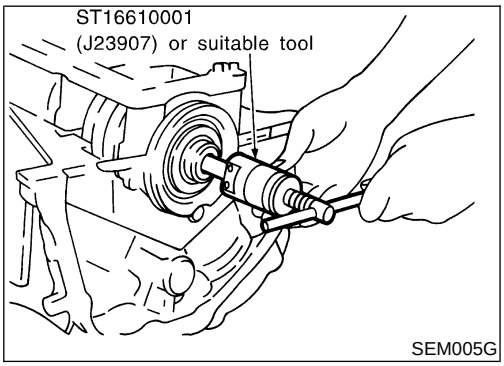

REPLACEMENT OF PILOT BUSHING (M/T) OR PILOT CONVERTER (A/T)

NAEM0028S04

1. Remove pilot bushing or pilot converter using tool or suitable tool.

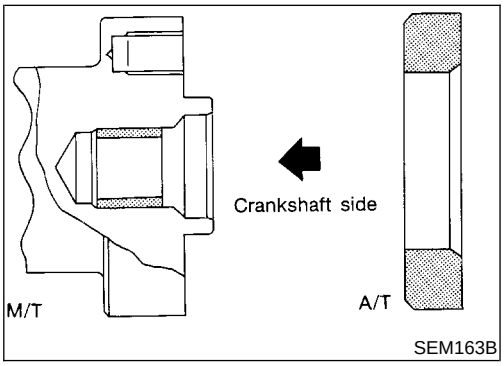

2. Install pilot bushing or pilot converter as shown.

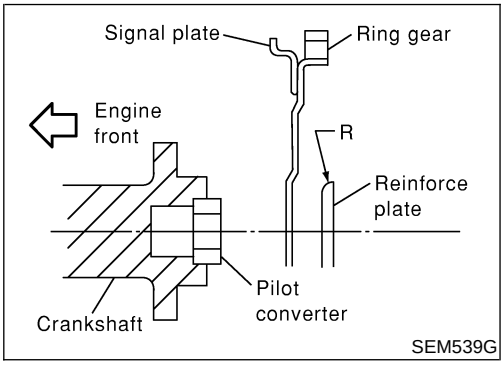

FLYWHEEL/DRIVE PLATE

NAEM0028S06

Install drive plate.

- Install the drive plate and reinforce plate in the direction shown in the figure.
- Secure the crankshaft using a ring gear stopper.
- Tighten the installation bolts crosswise over several times.

General Specifications

NAEM0029

Cylinder arrangement		V-6
Displacement cm^3 (cu in)		3,498 (213.45)
Bore and stroke mm (in)		95.5 x 81.4 (3.760 x 3.205)
Valve arrangement		DOHC
Firing order		1-2-3-4-5-6
Number of piston rings	Compression	2
	Oil	1
Number of main bearings		4
Compression ratio		10.0

Compression Pressure

NAEM0030

Unit: kPa (kg/cm^2, psi)/300 rpm

Compression pressure	Standard	1,275 (13.0, 185)
	Minimum	981 (10.0, 142)
	Differential limit between cylinders	98 (1.0, 14)
Cylinder number	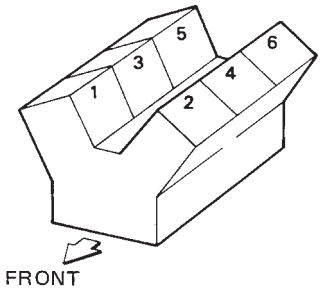 SEM713A	

Cylinder Head

NAEM0031

Unit: mm (in)

	Standard	Limit
Head surface distortion	Less than 0.03 (0.0012)	0.1 (0.004)

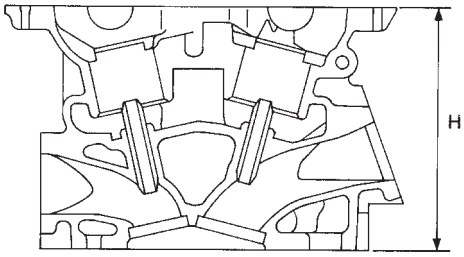

Nominal cylinder head height:
H = 126.3 - 126.5 mm (4.972 - 4.980 in)

SEM949E

Valve

NAEM0032

VALVE

NAEM0032S01

Unit: mm (in)

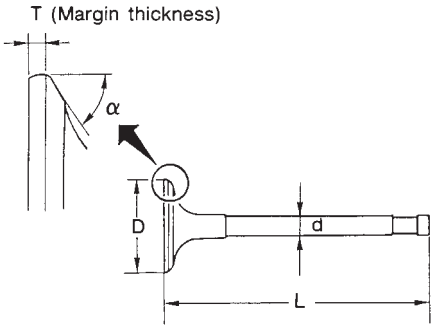

SEM188

Valve head diameter “D”	Intake	37.0 - 37.3 (1.4567 - 1.4685)
	Exhaust	31.2 - 31.5 (1.228 - 1.240)
Valve length “L”	Intake	96.12 - 96.62 (3.7842 - 3.8039)
	Exhaust	93.65 - 94.15 (3.6870 - 3.7067)
Valve stem diameter “d”	Intake	5.965 - 5.980 (0.2348 - 0.2354)
	Exhaust	5.945 - 5.960 (0.2341 - 0.2346)
Valve seat angle “α”	Intake	45°15′ - 45°45′
	Exhaust	
Valve margin “T”	Intake	1.15 - 1.45 (0.0453 - 0.0571)
	Exhaust	1.45 - 1.75 (0.0571 - 0.0689)
Valve margin “T” limit		More than 0.5 (0.020)
Valve stem end surface grinding limit		Less than 0.2 (0.008)

VALVE CLEARANCE

NAEM0032S02

Unit: mm (in)

	Cold	Hot* (reference data)
Intake	0.26 - 0.34 (0.010 - 0.013)	0.304 - 0.416 (0.012 - 0.016)
Exhaust	0.29 - 0.37 (0.011 - 0.015)	0.308 - 0.432 (0.012 - 0.017)

*: Approximately 80°C (176°F)

AVAILABLE SHIMS

NAEM0032S03

Thickness mm (in)	Identification mark
2.32 (0.0913)	232
2.33 (0.0917)	233
2.34 (0.0921)	234
2.35 (0.0925)	235
2.36 (0.0929)	236
2.37 (0.0933)	237
2.38 (0.0937)	238
2.39 (0.0941)	239
2.40 (0.0945)	240
2.41 (0.0949)	241

Thickness mm (in)	Identification mark
2.42 (0.0953)	242
2.43 (0.0957)	243
2.44 (0.0961)	244
2.45 (0.0965)	245
2.46 (0.0969)	246
2.47 (0.0972)	247
2.48 (0.0976)	248
2.49 (0.0980)	249
2.50 (0.0984)	250
2.51 (0.0988)	251
2.52 (0.0992)	252
2.53 (0.0996)	253
2.54 (0.1000)	254
2.55 (0.1004)	255
2.56 (0.1008)	256
2.57 (0.1012)	257
2.58 (0.1016)	258
2.59 (0.1020)	259
2.60 (0.1024)	260
2.61 (0.1028)	261
2.62 (0.1031)	262
2.63 (0.1035)	263
2.64 (0.1039)	264
2.65 (0.1043)	265
2.66 (0.1047)	266
2.67 (0.1051)	267
2.68 (0.1055)	268
2.69 (0.1059)	269
2.70 (0.1063)	270
2.71 (0.1067)	271
2.72 (0.1071)	272
2.73 (0.1075)	273
2.74 (0.1079)	274
2.75 (0.1083)	275
2.76 (0.1087)	276
2.77 (0.1091)	277
2.78 (0.1094)	278
2.79 (0.1098)	279
2.80 (0.1102)	280
2.81 (0.1106)	281

Thickness mm (in)	Identification mark
2.82 (0.1110)	282
2.83 (0.1114)	283
2.84 (0.1118)	284
2.85 (0.1122)	285
2.86 (0.1126)	286
2.87 (0.1130)	287
2.88 (0.1134)	288
2.89 (0.1138)	289
2.90 (0.1142)	290
2.91 (0.1146)	291
2.92 (0.1150)	292
2.93 (0.1154)	293
2.94 (0.1157)	294
2.95 (0.1161)	295

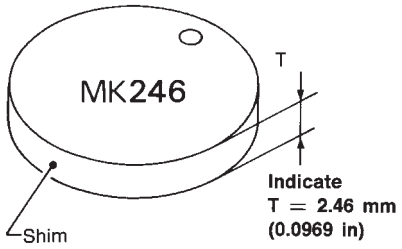

SEM966E

VALVE SPRING

NAEM0032S04

Free height mm (in)		47.10 (1.8543)
Pressure N (kg, lb) at height mm (in)	Standard	202 (20.6, 45.4) at 37.0 (1.457)
	Limit	436 (44.5, 98.1) at 28.2 (1.110)
Out-of-square mm (in)		Less than 2.0 (0.079)

VALVE LIFTER

NAEM0032S05

Unit: mm (in)

Valve lifter outer diameter	34.960 - 34.975 (1.3764 - 1.3770)
Lifter guide inner diameter	35.000 - 35.021 (1.3780 - 1.3788)
Clearance between lifter and lifter guide	0.025 - 0.061 (0.0010 - 0.0024)

VALVE GUIDE

NAEM0032S06

Unit: mm (in)

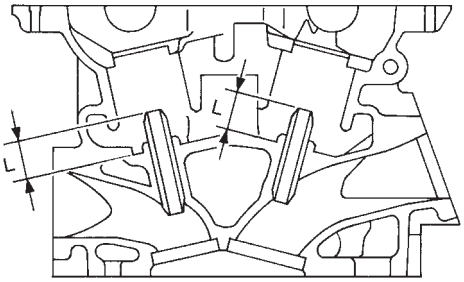

SEM950E

		Standard	Service
Valve guide	Outer diameter	10.023 - 10.034 (0.3946 - 0.3950)	10.223 - 10.234 (0.4025 - 0.4029)
Valve guide	Inner diameter (Finished size)	6.000 - 6.018 (0.2362 - 0.2369)	
Cylinder head valve guide hole diameter		9.975 - 9.996 (0.3927 - 0.3935)	10.175 - 10.196 (0.4006 - 0.4014)
Interference fit of valve guide		0.027 - 0.059 (0.0011 - 0.0023)	
		Standard	Max. tolerance
Stem to guide clearance	Intake	0.020 - 0.053 (0.0008 - 0.0021)	0.08 (0.0031)
	Exhaust	0.040 - 0.073 (0.0016 - 0.0029)	0.1 (0.004)
Valve deflection limit	Intake	—	0.24 (0.0094)
	Exhaust	—	0.28 (0.0110)
Projection length "L"		12.6 - 12.8 (0.496 - 0.504)	

Valve Seat

NAEM0033

Unit: mm (in)

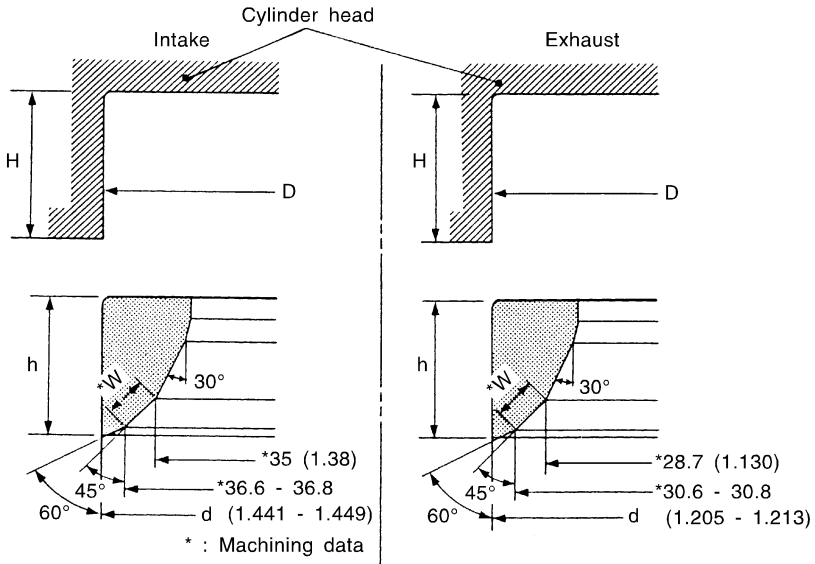

Contacting width (W); 1.09 - 1.31 (0.0429 - 0.0516)

Contacting width (W); 1.29 - 1.51 (0.0508 - 0.0594)

SEM021EB

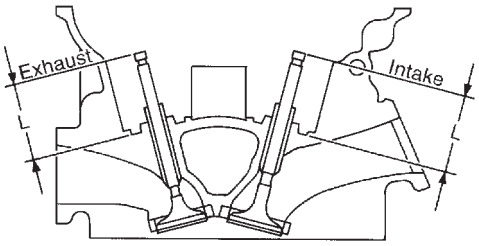

SEM621F

		Standard	Service
Cylinder head seat recess diameter (D)	Intake	38.000 - 38.016 (1.4961 - 1.4967)	38.500 - 38.516 (1.5157 - 1.5164)
	Exhaust	32.200 - 32.216 (1.2677 - 1.2683)	32.700 - 32.716 (1.2874 - 1.2880)
Valve seat interference fit	Intake	0.081 - 0.113 (0.0032 - 0.0044)	
	Exhaust	0.064 - 0.096 (0.0025 - 0.0038)	
Valve seat outer diameter (d)	Intake	38.097 - 38.113 (1.4999 - 1.5005)	38.597 - 38.613 (1.5196 - 1.5202)
	Exhaust	32.280 - 32.296 (1.2709 - 1.2715)	32.780 - 32.796 (1.2905 - 1.2912)
Height (h)	Intake	5.9 - 6.0 (0.232 - 0.236)	5.05 - 5.15 (0.1988 - 0.2028)
	Exhaust	5.9 - 6.0 (0.232 - 0.236)	4.95 - 5.05 (0.1949 - 0.1988)
Depth (H)		5.9 - 6.1 (0.232 - 0.240)	
Depth (L)	Intake	41.07 - 41.67 (1.6169 - 1.6405)	
	Exhaust	41.00 - 41.60 (1.6142 - 1.6378)	

Camshaft and Camshaft Bearing

NAEM0034

Unit: mm (in)

	Standard	Limit
Camshaft journal to bearing clearance	No. 1 0.045 - 0.086 (0.0018 - 0.0034) No. 2, 3, 4 0.035 - 0.076 (0.0014 - 0.0030)	0.15 (0.0059)
Inner diameter of camshaft bearing	No. 1 26.000 - 26.021 (1.0236 - 1.0244) No. 2, 3, 4 23.500 - 23.521 (0.9252 - 0.9260)	—
Outer diameter of camshaft journal	No. 1 25.935 - 25.955 (1.0211 - 1.0218) No. 2, 3, 4 23.445 - 23.465 (0.9230 - 0.9238)	—
Camshaft runout [TIR*]	Less than 0.02 (0.0008)	0.05 (0.0020)
Camshaft sprocket runout [TIR*]	Less than 0.15 (0.0059)	—
Camshaft end play	0.115 - 0.188 (0.0045 - 0.0074)	0.24 (0.0094)

*: Total indicator reading

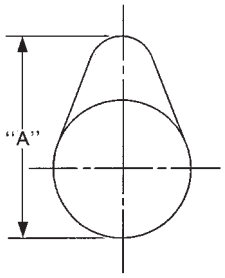

EM671

Cam height "A"	Intake and exhaust	44.465 - 44.655 (1.7506 - 1.7581)
Wear limit of cam height		0.2 (0.008)
Valve timing		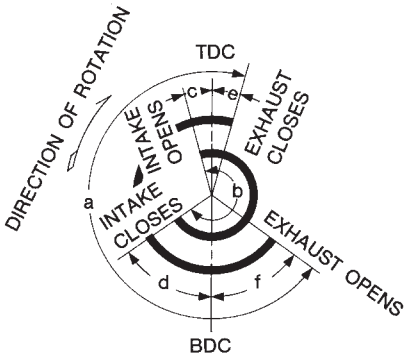

Unit: degree

a	b	c	d	e	f
232	230	–3	53	6	46

Cylinder Block

NAEM0035

Unit: mm (in)

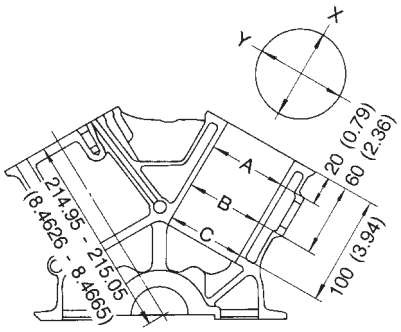

SEM022EA

Surface flatness	Standard			Less than 0.03 (0.0012)
	Limit			0.10 (0.0039)
Cylinder bore	Inner diameter	Standard	Grade No. 1	95.500 - 95.510 (3.7598 - 3.7602)
			Grade No. 2	95.510 - 95.520 (3.7602 - 3.7606)
			Grade No. 3	95.520 - 95.530 (3.7606 - 3.7610)
		Wear limit		0.20 (0.0079)
Out-of-round (X − Y)				Less than 0.015 (0.0006)
Taper (A − B − C)				Less than 0.015 (0.0006)

Main journal inner diameter grade (Without bearing)	Grade No. A	63.993 - 63.994 (2.5194 - 2.5194)
	Grade No. B	63.994 - 63.995 (2.5194 - 2.5195)
	Grade No. C	63.995 - 63.996 (2.5195 - 2.5195)
	Grade No. D	63.996 - 63.997 (2.5195 - 2.5196)
	Grade No. E	63.997 - 63.998 (2.5196 - 2.5196)
	Grade No. F	63.998 - 63.999 (2.5196 - 2.5196)
	Grade No. G	63.999 - 64.000 (2.5196 - 2.5197)
	Grade No. H	64.000 - 64.001 (2.5197 - 2.5197)
	Grade No. J	64.001 - 64.002 (2.5197 - 2.5198)
	Grade No. K	64.002 - 64.003 (2.5198 - 2.5198)
	Grade No. L	64.003 - 64.004 (2.5198 - 2.5198)
	Grade No. M	64.004 - 64.005 (2.5198 - 2.5199)
	Grade No. N	64.005 - 64.006 (2.5199 - 2.5199)
	Grade No. P	64.006 - 64.007 (2.5199 - 2.5200)
	Grade No. R	64.007 - 64.008 (2.5200 - 2.5200)
	Grade No. S	64.008 - 64.009 (2.5200 - 2.5200)
	Grade No. T	64.009 - 64.010 (2.5200 - 2.5201)
	Grade No. U	64.010 - 64.011 (2.5201 - 2.5201)
	Grade No. V	64.011 - 64.012 (2.5201 - 2.5202)
	Grade No. W	64.012 - 64.013 (2.5202 - 2.5202)
	Grade No. X	64.013 - 64.014 (2.5202 - 2.5202)
	Grade No. Y	64.014 - 64.015 (2.5202 - 2.5203)
	Grade No. 4	64.015 - 64.016 (2.5203 - 2.5203)
	Grade No. 7	64.016 - 64.017 (2.5203 - 2.5203)
Difference in inner diameter between cylinders	Standard	Less than 0.03 (0.0012)

Piston, Piston Ring and Piston Pin

NAEM0036

AVAILABLE PISTON

NAEM0036S01

Unit: mm (in)

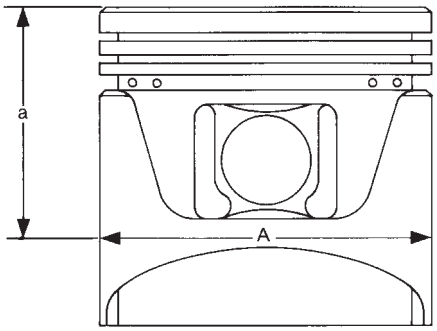

SEM882E

Piston skirt diameter "A"	Standard	Grade No. 1	95.480 - 95.490 (3.7590 - 3.7594)
		Grade No. 2	95.490 - 95.500 (3.7594 - 3.7598)
		Grade No. 3	95.500 - 95.510 (3.7598 - 3.7602)
		0.20 (0.0079) oversize (Service)	95.680 - 95.710 (3.7669 - 3.7681)
"a" dimension			41.0 (1.614)
Piston pin hole diameter		Grade No. 0	21.993 - 21.999 (0.8659 - 0.8661)
		Grade No. 1	21.999 - 22.005 (0.8661 - 0.8663)
Piston clearance to cylinder block			0.010 - 0.030 (0.0004 - 0.0012)

PISTON RING

=NAEM0036S02

Unit: mm (in)

		Standard	Limit
Side clearance	Top	0.040 - 0.080 (0.0016 - 0.0031)	0.11 (0.0043)
	2nd	0.030 - 0.070 (0.0012 - 0.0028)	0.1 (0.004)
	Oil ring	0.015 - 0.050 (0.0006 - 0.0020)	—
End gap	Top	0.23 - 0.33 (0.0091 - 0.0130)	0.54 (0.0213)
	2nd	0.33 - 0.48 (0.0130 - 0.0189)	0.80 (0.0315)
	Oil (rail ring)	0.20 - 0.80 (0.0079 - 0.0315)	0.95 (0.0374)

PISTON PIN

NAEM0036S03

Unit: mm (in)

Piston pin outer diameter	Grade No. 0	21.989 - 21.995 (0.8657 - 0.8659)
	Grade No. 1	21.995 - 22.001 (0.8659 - 0.8662)
Interference fit of piston pin to piston		0.002 - 0.006 (0.0001 - 0.0002)
Piston pin to connecting rod bushing clearance	Standard	0.005 - 0.017 (0.0002 - 0.0007)
	Limit	0.030 (0.0012)

*: Values measured at ambient temperature of 20°C (68°F)

Connecting Rod

NAEM0037

Unit: mm (in)

Center distance		144.15 - 144.25 (5.6752 - 5.6791)
Bend [per 100 (3.94)]	Limit	0.15 (0.0059)
Torsion [per 100 (3.94)]	Limit	0.30 (0.0118)
Connecting rod small end inner diameter		23.980 - 24.000 (0.9441 - 0.9449)
Piston pin bushing inner diameter*	Grade No. 0	22.000 - 22.006 (0.8661 - 0.8664)
	Grade No. 1	22.006 - 22.012 (0.8664 - 0.8666)
Connecting rod big end inner diameter		55.000 - 55.013 (2.1654 - 2.1659)
Side clearance	Standard	0.20 - 0.35 (0.0079 - 0.0138)
	Limit	0.40 (0.0157)

*: After installing in connecting rod

Crankshaft

NAEM0038

Unit: mm (in)

Main journal dia. “Dm” grade	Grade No. A	59.975 - 59.974 (2.3612 - 2.3612)
	Grade No. B	59.974 - 59.973 (2.3612 - 2.3611)
	Grade No. C	59.973 - 59.972 (2.3611 - 2.3611)
	Grade No. D	59.972 - 59.971 (2.3611 - 2.3611)
	Grade No. E	59.971 - 59.970 (2.3611 - 2.3610)
	Grade No. F	59.970 - 59.969 (2.3610 - 2.3610)
	Grade No. G	59.969 - 59.968 (2.3610 - 2.3609)
	Grade No. H	59.968 - 59.967 (2.3609 - 2.3609)
	Grade No. J	59.967 - 59.966 (2.3609 - 2.3609)
	Grade No. K	59.966 - 59.965 (2.3609 - 2.3608)
	Grade No. L	59.965 - 59.964 (2.3608 - 2.3608)
	Grade No. M	59.964 - 59.963 (2.3608 - 2.3607)
	Grade No. N	59.963 - 59.962 (2.3607 - 2.3607)
	Grade No. P	59.962 - 59.961 (2.3607 - 2.3607)
	Grade No. R	59.961 - 59.960 (2.3607 - 2.3606)
	Grade No. S	59.960 - 59.959 (2.3606 - 2.3606)
	Grade No. T	59.959 - 59.958 (2.3606 - 2.3605)
	Grade No. U	59.958 - 59.957 (2.3605 - 2.3605)
	Grade No. V	59.957 - 59.956 (2.3605 - 2.3605)
	Grade No. W	59.956 - 59.955 (2.3605 - 2.3604)
	Grade No. X	59.955 - 59.954 (2.3604 - 2.3604)
	Grade No. Y	59.954 - 59.953 (2.3604 - 2.3603)
	Grade No. 4	59.953 - 59.952 (2.3603 - 2.3603)
	Grade No. 7	59.952 - 59.951 (2.3603 - 2.3603)
Pin journal dia. “Dp”	Grade No. 0	51.968 - 51.974 (2.0460 - 2.0462)
	Grade No. 1	51.962 - 51.968 (2.0457 - 2.0460)
	Grade No. 2	51.956 - 51.962 (2.0445 - 2.0457)
Center distance “r”		40.36 - 40.44 (1.5890 - 1.5921)
Out-of-round (X − Y)	Standard	Less than 0.002 (0.0001)
Taper (A − B)	Standard	Less than 0.002 (0.0001)
Runout [TIR*]	Limit	Less than 0.10 (0.0039)
Free end play	Standard	0.10 - 0.25 (0.0039 - 0.0098)
	Limit	0.30 (0.0118)

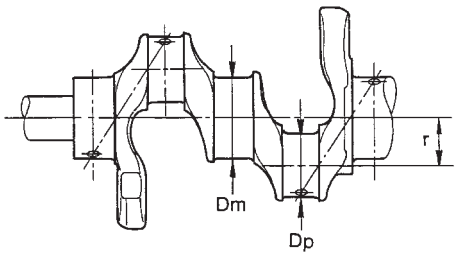

SEM645

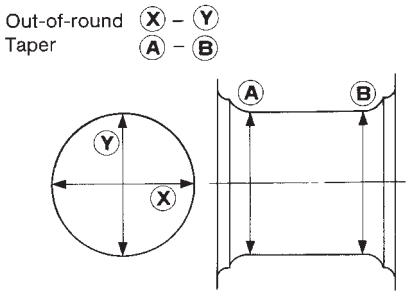

EM715

*: Total indicator reading

Available Main Bearing

NAEM0039

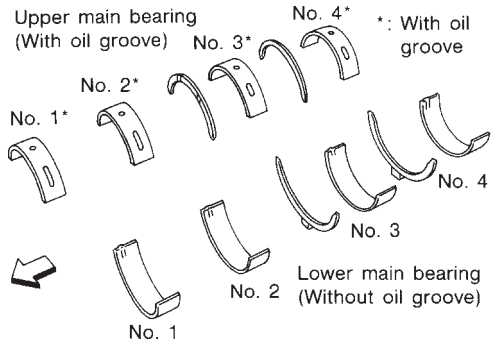

SEM175F

Grade number		Thickness "T" mm (in)	Width "W" mm (in)	Identification color (UPR/LWR)	Remarks
0		2.000 - 2.003 (0.0787 - 0.0789)	19.9 - 20.1 (0.783 - 0.791)	Black	Grade is the same for upper and lower bearings.
1		2.003 - 2.006 (0.0789 - 0.0790)		Brown	
2		2.006 - 2.009 (0.0790 - 0.0791)		Green	
3		2.009 - 2.012 (0.0791 - 0.0792)		Yellow	
4		2.012 - 2.015 (0.0792 - 0.0793)		Blue	
5		2.015 - 2.018 (0.0793 - 0.0794)		Pink	
6		2.018 - 2.021 (0.0794 - 0.0796)		Purple	
7		2.021 - 2.024 (0.0796 - 0.0797)		White	
01	UPP	2.003 - 2.006 (0.0789 - 0.0790)		Brown/Black	Grade is different for upper and lower bearings.
	LWR	2.000 - 2.003 (0.0787 - 0.0789)			
12	UPR	2.006 - 2.009 (0.0790 - 0.0791)		Green/Brown	
	LWR	2.003 - 2.006 (0.0789 - 0.0790)			
23	UPR	2.009 - 2.012 (0.0791 - 0.0792)		Yellow/Green	
	LWR	2.006 - 2.009 (0.0790 - 0.0791)			
34	UPR	2.012 - 2.015 (0.0792 - 0.0793)		Blue/Yellow	
	LWR	2.009 - 2.012 (0.0791 - 0.0792)			
45	UPR	2.015 - 2.018 (0.0793 - 0.0794)		Pink/Blue	
	LWR	2.012 - 2.015 (0.0792 - 0.0793)			
56	UPR	2.018 - 2.021 (0.0794 - 0.0796)		Purple/Pink	
	LWR	2.015 - 2.018 (0.0793 - 0.0794)			
67	UPR	2.021 - 2.024 (0.0796 - 0.0797)		White/Purple	
	LWR	2.018 - 2.021 (0.0794 - 0.0796)			

UNDERSIZE

NAEM0039S01

Unit: mm (in)

	Thickness	Main journal diameter "Dm"
0.25 (0.0098)	2.132 - 2.140 (0.0839 - 0.0843)	Grind so that bearing clearance is the specified value.

Available Connecting Rod Bearing

NAEM0040

CONNECTING ROD BEARING

NAEM0040S01

Grade number	Thickness "T" mm (in)	Identification color (mark)
0	1.500 - 1.503 (0.0591 - 0.0592)	Black
1	1.503 - 1.506 (0.0592 - 0.0593)	Brown
2	1.506 - 1.509 (0.0593 - 0.0594)	Green

UNDERSIZE

NAEM0040S02

Unit: mm (in)

	Thickness	Crank pin journal diameter "Dp"
0.25 (0.0098)	1.626 - 1.634 (0.0640 - 0.0643)	Grind so that bearing clearance is the specified value.

Miscellaneous Components

NAEM0041

Unit: mm (in)

Flywheel runout [TIR]*	Less than 0.15 (0.0059)
Drive plate runout [TIR]*	Less than 0.15 (0.0059)

*: Total indicator reading

BEARING CLEARANCE

NAEM0041S01

Unit: mm (in)

Main bearing clearance	Standard	0.035 - 0.045 (0.0014 - 0.0018)
	Limit	0.065 (0.0026)
Connecting rod bearing clearance	Standard	0.034 - 0.059 (0.0013 - 0.0023)
	Limit	0.070 (0.0028)

NOTES