SECTION EC
ENGINE CONTROL SYSTEM

CONTENTS

VQ35DE FOR USA AND CANADA

VQ35DE FOR MEXICO

PRECAUTION

PRECAUTIONS

Precaution for Supplemental Restraint System (SRS) "AIR BAG" and "SEAT BELT PRE-TENSIONER"

INFOID:0000000011148433

The Supplemental Restraint System such as “AIR BAG” and “SEAT BELT PRE-TENSIONER”, used along with a front seat belt, helps to reduce the risk or severity of injury to the driver and front passenger for certain types of collision. Information necessary to service the system safely is included in the SR and SB section of this Service Manual.

WARNING:

- **To avoid rendering the SRS inoperative, which could increase the risk of personal injury or death in the event of a collision which would result in air bag inflation, all maintenance must be performed by an authorized NISSAN/INFINITI dealer.**
- **Improper maintenance, including incorrect removal and installation of the SRS, can lead to personal injury caused by unintentional activation of the system. For removal of Spiral Cable and Air Bag Module, see the SR section.**
- **Do not use electrical test equipment on any circuit related to the SRS unless instructed to in this Service Manual. SRS wiring harnesses can be identified by yellow and/or orange harnesses or harness connectors.**

PRECAUTIONS WHEN USING POWER TOOLS (AIR OR ELECTRIC) AND HAMMERS

WARNING:

- **When working near the Airbag Diagnosis Sensor Unit or other Airbag System sensors with the Ignition ON or engine running, DO NOT use air or electric power tools or strike near the sensor(s) with a hammer. Heavy vibration could activate the sensor(s) and deploy the air bag(s), possibly causing serious injury.**
- **When using air or electric power tools or hammers, always switch the Ignition OFF, disconnect the battery and wait at least three minutes before performing any service.**

On Board Diagnostic (OBD) System of Engine and CVT

INFOID:0000000011148434

The ECM has an on board diagnostic system. It will illuminate the malfunction indicator lamp (MIL) to warn the driver of a malfunction causing emission deterioration.

CAUTION:

- **Always to turn the ignition switch OFF and disconnect the negative battery cable before any repair or inspection work. The open/short circuit of related switches, sensors, solenoid valves, etc. will cause the MIL to illuminate.**
- **Always to connect and lock the connectors securely after work. A loose (unlocked) connector will cause the MIL to illuminate due to the open circuit. (Be sure the connector is free from water, grease, dirt, bent terminals, etc.)**
- **Certain systems and components, especially those related to OBD, may use a new style slide-locking type harness connector. For description and how to disconnect, refer to PG-10, "Harness Connector".**
- **Always route and secure the harnesses properly after work. The interference of the harness with a bracket, etc. may cause the MIL to illuminate due to the short circuit.**
- **Always to connect rubber tubes properly after work. A misconnected or disconnected rubber tube may cause the MIL to illuminate due to the malfunction of the EVAP system or fuel injection system, etc.**
- **Always to erase the unnecessary malfunction information (repairs completed) from the ECM and TCM (Transmission control module) before returning the vehicle to the customer.**

General Precautions

INFOID:0000000011148435

- **Always use a 12 volt battery as power source.**
- **Never attempt to disconnect battery cables while engine is running.**
- **Before connecting or disconnecting the ECM harness connector, turn ignition switch OFF and disconnect negative battery cable. Failure to do so may damage the ECM because battery voltage is applied to ECM even if ignition switch is turned OFF.**
- **Before removing parts, turn ignition switch OFF and then disconnect battery ground cable.**

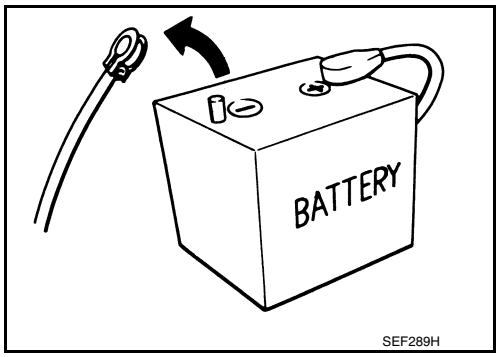

- **Never disassemble ECM.**
- **If a battery cable is disconnected, the memory will return to the ECM value.**
  The ECM will now start to self-control at its initial value. Thus, engine operation can vary slightly in this case. However, this is not an indication of a malfunction. Never replace parts because of a slight variation.
- **If the battery is disconnected, the following emission-related diagnostic information will be lost within 24 hours.**
- **Diagnostic trouble codes**
- **1st trip diagnostic trouble codes**
- **Freeze frame data**
- **1st trip freeze frame data**
- **System readiness test (SRT) codes**
- **Test values**
- **When connecting or disconnecting pin connectors into or from ECM, never damage pin terminals (bends or break).**
  Check that there are not any bends or breaks on ECM pin terminal, when connecting pin connectors.
- **Securely connect ECM harness connectors.**
  A poor connection can cause an extremely high (surge) voltage to develop in coil and condenser, thus resulting in damage to ICs.
- **Keep engine control system harness at least 10 cm (4 in) away from adjacent harness, to prevent engine control system malfunctions due to receiving external noise, degraded operation of ICs, etc.**
- **Keep engine control system parts and harness dry.**
- **Before replacing ECM, perform ECM Terminals and Reference Value inspection and check ECM functions properly. Refer to EC-85, "Reference Value".**
- **Handle mass air flow sensor carefully to avoid damage.**
- **Never clean mass air flow sensor with any type of detergent.**
- **Never disassemble electric throttle control actuator.**
- **Even a slight leakage in the air intake system can cause serious incidents.**
- **Never shock or jar the camshaft position sensor (PHASE), crankshaft position sensor (POS).**

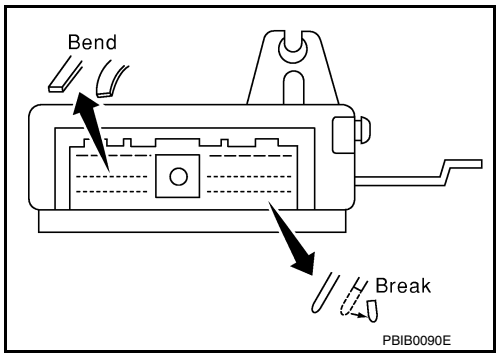

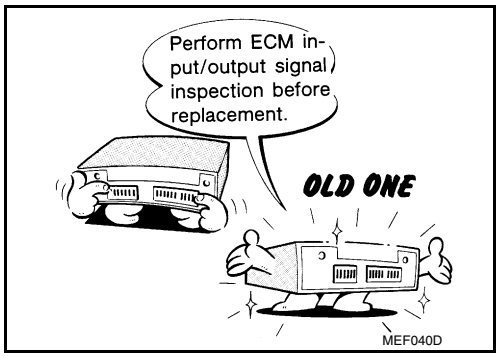

- **After performing each TROUBLE DIAGNOSIS, perform DTC Confirmation Procedure or Component Function Check.**
  The DTC should not be displayed in the DTC Confirmation Procedure if the repair is completed. The Component Function Check should be a good result if the repair is completed.

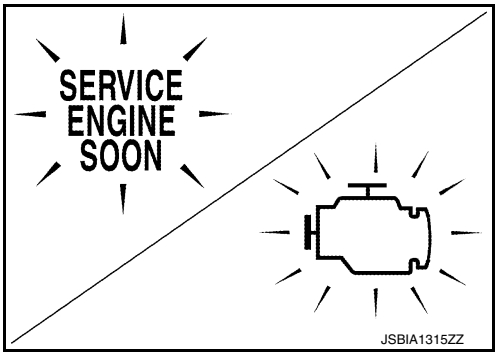

- **When measuring ECM signals with a circuit tester, never allow the two tester probes to contact.**
  Accidental contact of probes will cause a short circuit and damage the ECM power transistor.

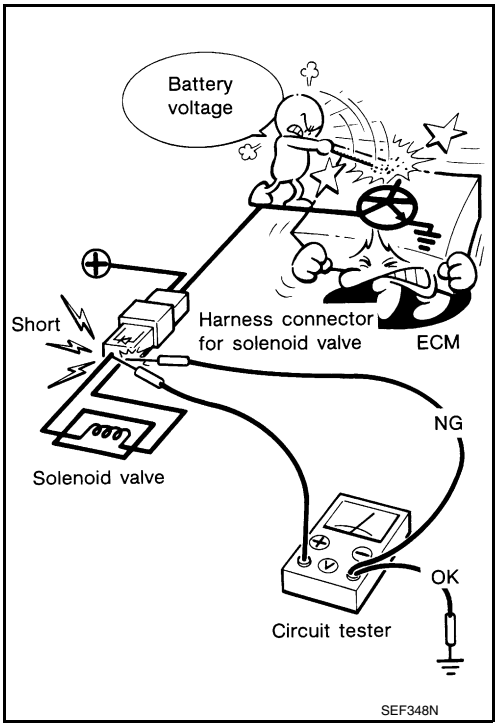

- **B1 indicates bank 1, B2 indicates bank 2 as shown in the figure.**
- **Never operate fuel pump when there is no fuel in lines.**
- **Tighten fuel hose clamps to the specified torque.**

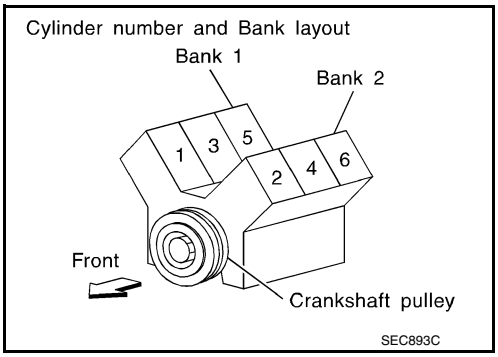

- **Never depress accelerator pedal when starting.**
- **Immediately after starting, never rev up engine unnecessarily.**
- **Never rev up engine just prior to shutdown.**

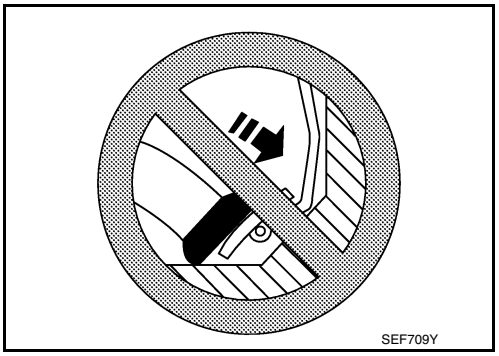

- **When installing C.B. ham radio or a mobile phone, be sure to observe the following as it may adversely affect electronic control systems depending on installation location.**
  - **Keep the antenna as far as possible from the electronic control units.**
  - **Keep the antenna feeder line more than 20 cm (8 in) away from the harness of electronic controls.**
    Never let them run parallel for a long distance.
  - **Adjust the antenna and feeder line so that the standing-wave ratio can be kept smaller.**
  - **Be sure to ground the radio to vehicle body.**

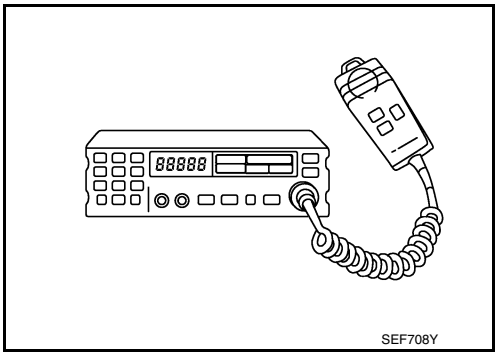

PREPARATION

PREPARATION

Special Service Tools

INFOID:0000000011148436

The actual shapes of TechMate tools may differ from those of special service tools illustrated here.

Tool number (TechMate No.) Tool name	Description
(J-44321) Fuel pressure gauge kit 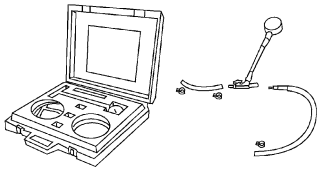 LEC642	Checks fuel pressure
(J-44321-6) Fuel pressure adapter 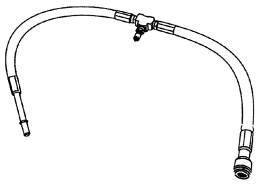 LBIA0376E	Connects fuel pressure gauge to quick connector type fuel lines

Commercial Service Tools

INFOID:0000000011148437

Tool name (TechMate No.)	Description
(J-45488) Quick connector release 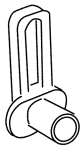 PBIC0198E	Removes fuel tube quick connectors in engine room
Leak detector i.e.: (J-41416) 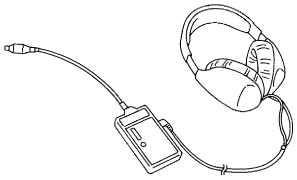 S-NT703	Locates the EVAP leakage
EVAP service port adapter i.e.: (J-41413-OBD) 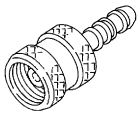 S-NT704	Applies positive pressure through EVAP service port

Tool name (TechMate No.)	Description
Fuel filler cap adapter i.e.: (MLR-8382)  S-NT815	Checks fuel tank vacuum relief valve opening pressure
Socket wrench 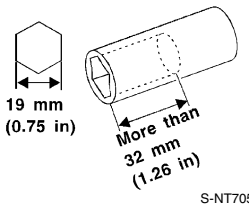 S-NT705	Removes and installs engine coolant temperature sensor. Refer to CO-26, "Exploded View".

SYSTEM DESCRIPTION

COMPONENT PARTS

ENGINE CONTROL SYSTEM

ENGINE CONTROL SYSTEM : Component Parts Location

INFOID:0000000011148438

ENGINE ROOM

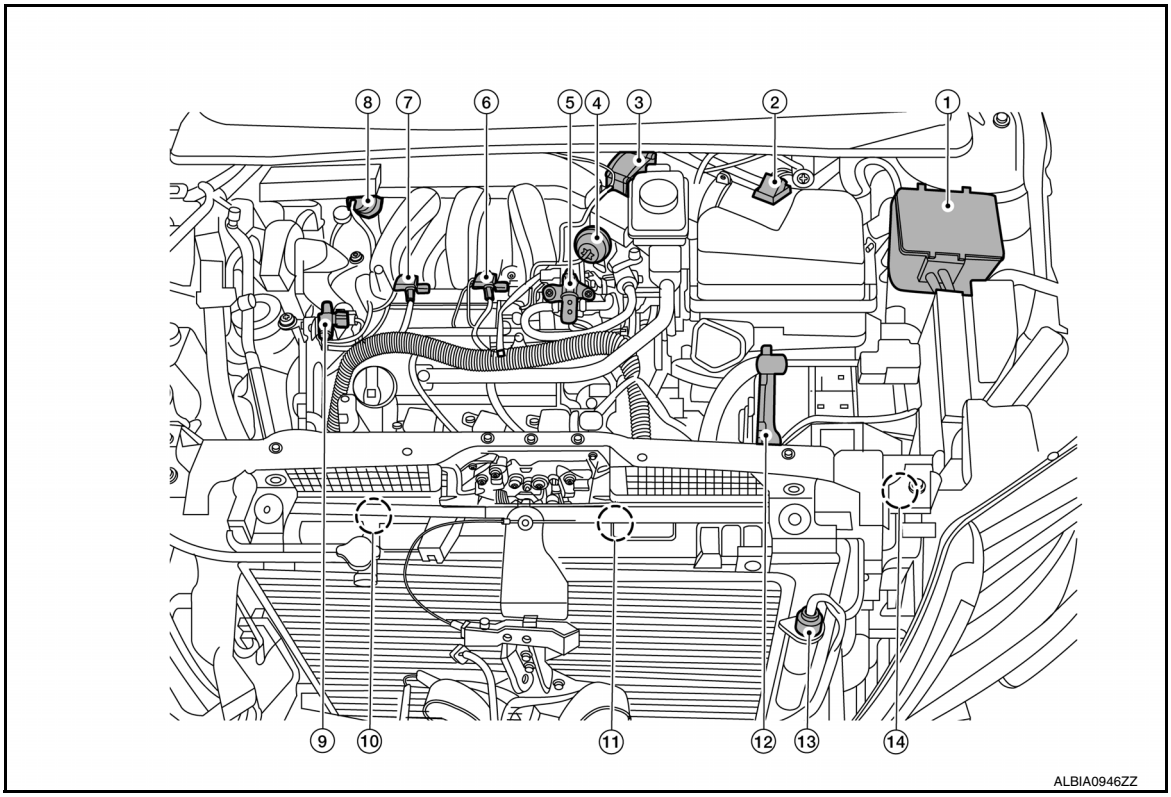

No.	Component	Function
①	IPDM E/R	IPDM E/R activates the internal control circuit to perform the relay ON-OFF control according to the input signals from various sensors and the request signals received from control units via CAN communication. Refer to PCS-4, "Component Parts Location" for detailed installation location.
②	Mass air flow sensor (with intake air temperature sensor)	EC-33, "Mass Air Flow Sensor (With Intake Air Temperature Sensor)"
③	Electric throttle control actuator	EC-27, "Electric Throttle Control Actuator"
④	Power valve actuator 2	EC-34, "Power Valve Actuator 1 and 2"
⑤	EVAP canister purge volume control solenoid valve	EC-29, "EVAP Canister Purge Volume Control Solenoid Valve"
⑥	VIAS control solenoid valve 2	EC-34, "VIAS Control Solenoid Valve 1 and 2"
⑦	VIAS control solenoid valve 1	EC-34, "VIAS Control Solenoid Valve 1 and 2"
⑧	Power valve actuator 1	EC-34, "Power Valve Actuator 1 and 2"
⑨	Electronic controlled engine mount control solenoid valve	EC-27, "Electronic Controlled Engine Mount"
⑩	Cooling fan motor-2	EC-26, "Cooling Fan Motor & Cooling Fan Control Module"
⑪	Cooling fan motor-1	EC-26, "Cooling Fan Motor & Cooling Fan Control Module"
⑫	ECM	EC-26, "ECM"

No.	Component	Function
⑬	Refrigerant pressure sensor	EC-34, "Refrigerant Pressure Sensor" Refer to HAC-11, "FRONT AUTOMATIC AIR CONDITIONING SYSTEM : Component Parts Location" for detailed installation location.
⑭	Battery current sensor (with battery temperature sensor)*	EC-25, "Battery Current Sensor (With Battery Temperature Sensor)"

*: Not used for engine control system.

ENGINE

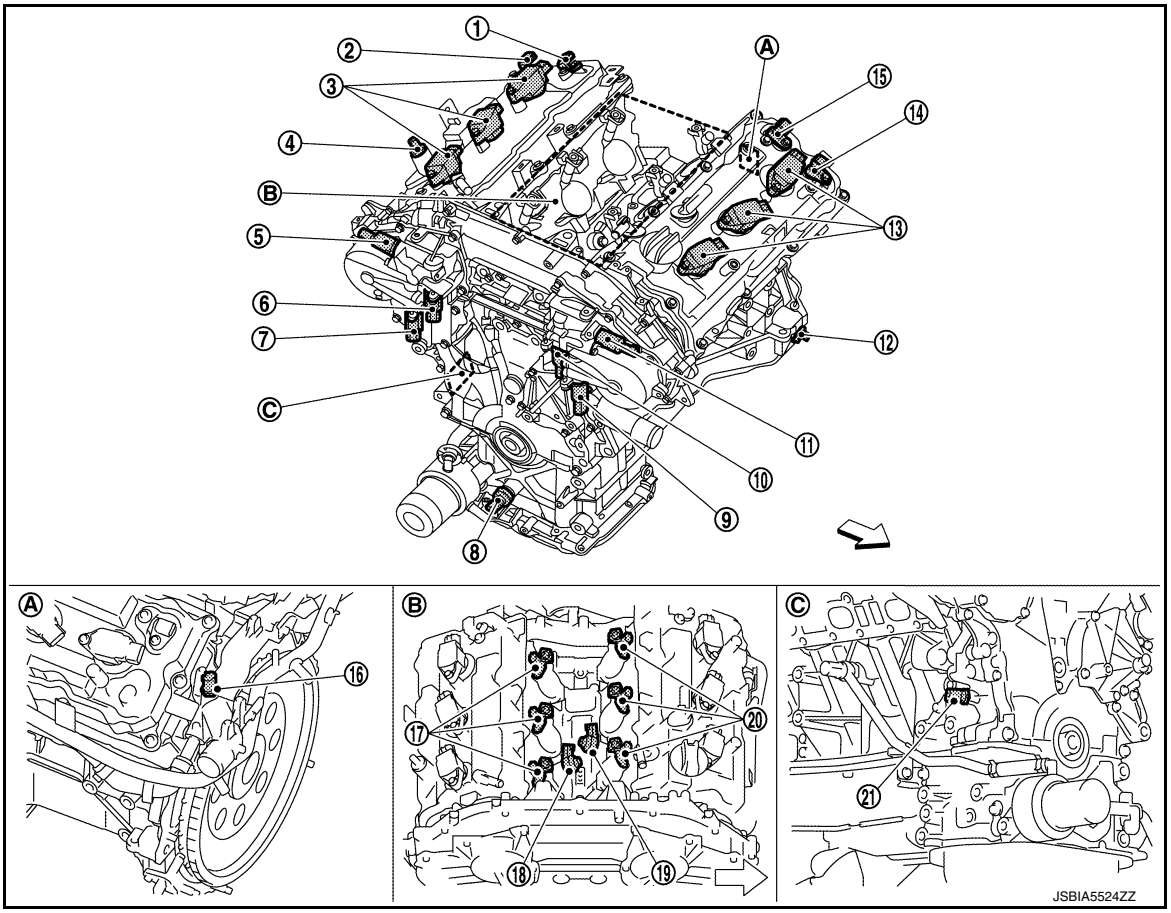

Ⓐ Engine rear upper-left Ⓑ Engine top center Ⓒ Engine front lower-right

⇦ : Vehicle front

No.	Component	Function
①	Camshaft position sensor (PHASE) (bank 1)	EC-25, "Camshaft Position Sensor (PHASE)"
②	Exhaust valve timing control position sensor (bank 1)	EC-32, "Exhaust Valve Timing Control Position Sensor"
③	Ignition coil (with power transistor) (bank 1)	EC-31, "Ignition Coil (With Power Transistor)"
④	PCV valve	EC-35, "Positive Crankcase Ventilation (PCV)"
⑤	Intake valve timing intermediate lock control solenoid valve (bank 1)	EC-32, "Intake Valve Timing Intermediate Lock Control Solenoid Valve"
⑥	Intake valve timing control solenoid valve (bank 1)	EC-31, "Intake Valve Timing Control Solenoid Valve"
⑦	Exhaust valve timing control solenoid valve (bank 1)	EC-32, "Exhaust Valve Timing Control Solenoid Valve"
⑧	Engine oil pressure sensor	EC-28, "Engine Oil Pressure Sensor"

No.	Component	Function
⑨	Exhaust valve timing control solenoid valve (bank 2)	EC-32, "Exhaust Valve Timing Control Solenoid Valve"
⑩	Intake valve timing control solenoid valve (bank 2)	EC-31, "Intake Valve Timing Control Solenoid Valve"
⑪	Intake valve timing intermediate lock control solenoid valve (bank 2)	EC-32, "Intake Valve Timing Intermediate Lock Control Solenoid Valve"
⑫	Crankshaft position sensor (POS)	EC-26, "Crankshaft Position Sensor (POS)"
⑬	Ignition coil (with power transistor) (bank 2)	EC-31, "Ignition Coil (With Power Transistor)"
⑭	Exhaust valve timing control position sensor (bank 2)	EC-32, "Exhaust Valve Timing Control Position Sensor"
⑮	Camshaft position sensor (PHASE) (bank 2)	EC-25, "Camshaft Position Sensor (PHASE)"
⑯	Engine coolant temperature sensor	EC-28, "Engine Coolant Temperature Sensor"
⑰	Fuel injector (bank 1)	EC-30, "Fuel Injector"
⑱	Knock sensor (bank 1)	EC-32, "Knock Sensor"
⑲	Knock sensor (bank 2)	EC-32, "Knock Sensor"
⑳	Fuel injector (bank 2)	EC-30, "Fuel Injector"
㉑	Engine oil temperature sensor	EC-28, "Engine Oil Temperature Sensor"

EXHAUST

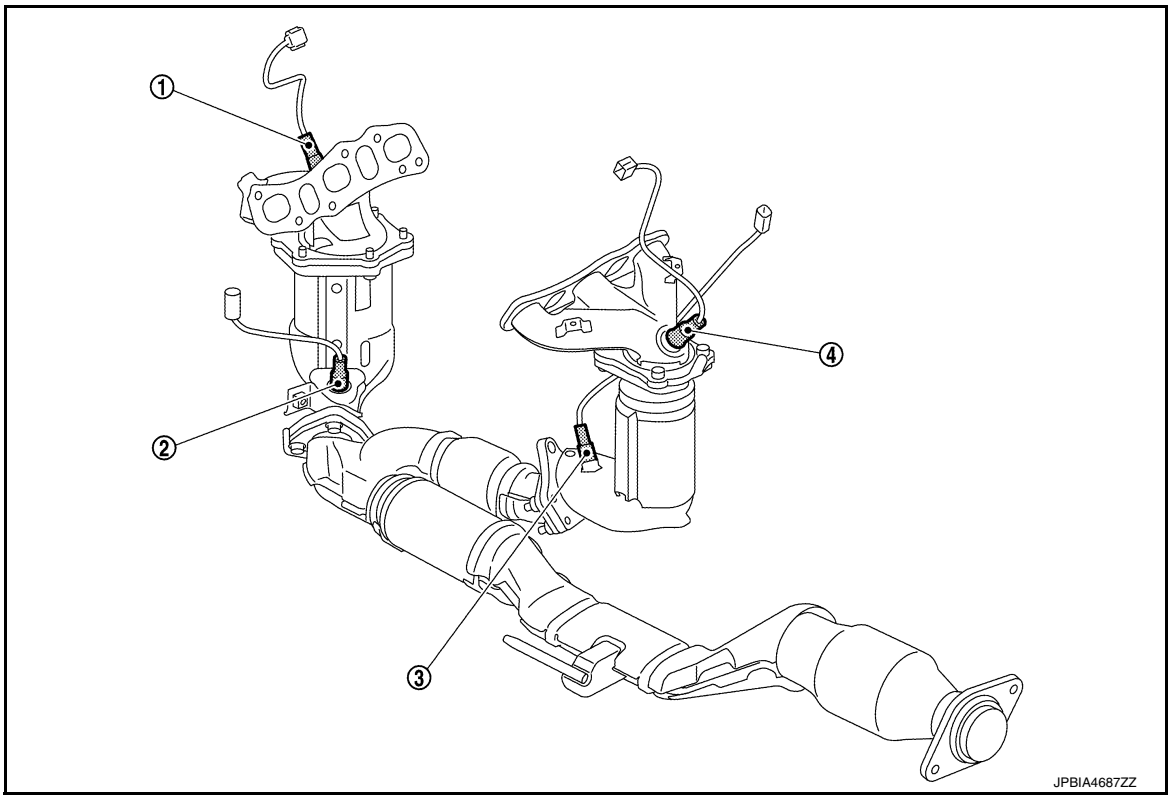

No.	Component	Function
①	Air fuel ratio (A/F) sensor 1 (bank 2)	EC-24, "Air Fuel Ratio (A/F) Sensor 1"
②	Heated oxygen sensor 2 (bank 2)	EC-31, "Heated Oxygen Sensor 2"
③	Heated oxygen sensor 2 (bank 1)	EC-31, "Heated Oxygen Sensor 2"
④	Air fuel ratio (A/F) sensor 1 (bank 1)	EC-24, "Air Fuel Ratio (A/F) Sensor 1"

BODY

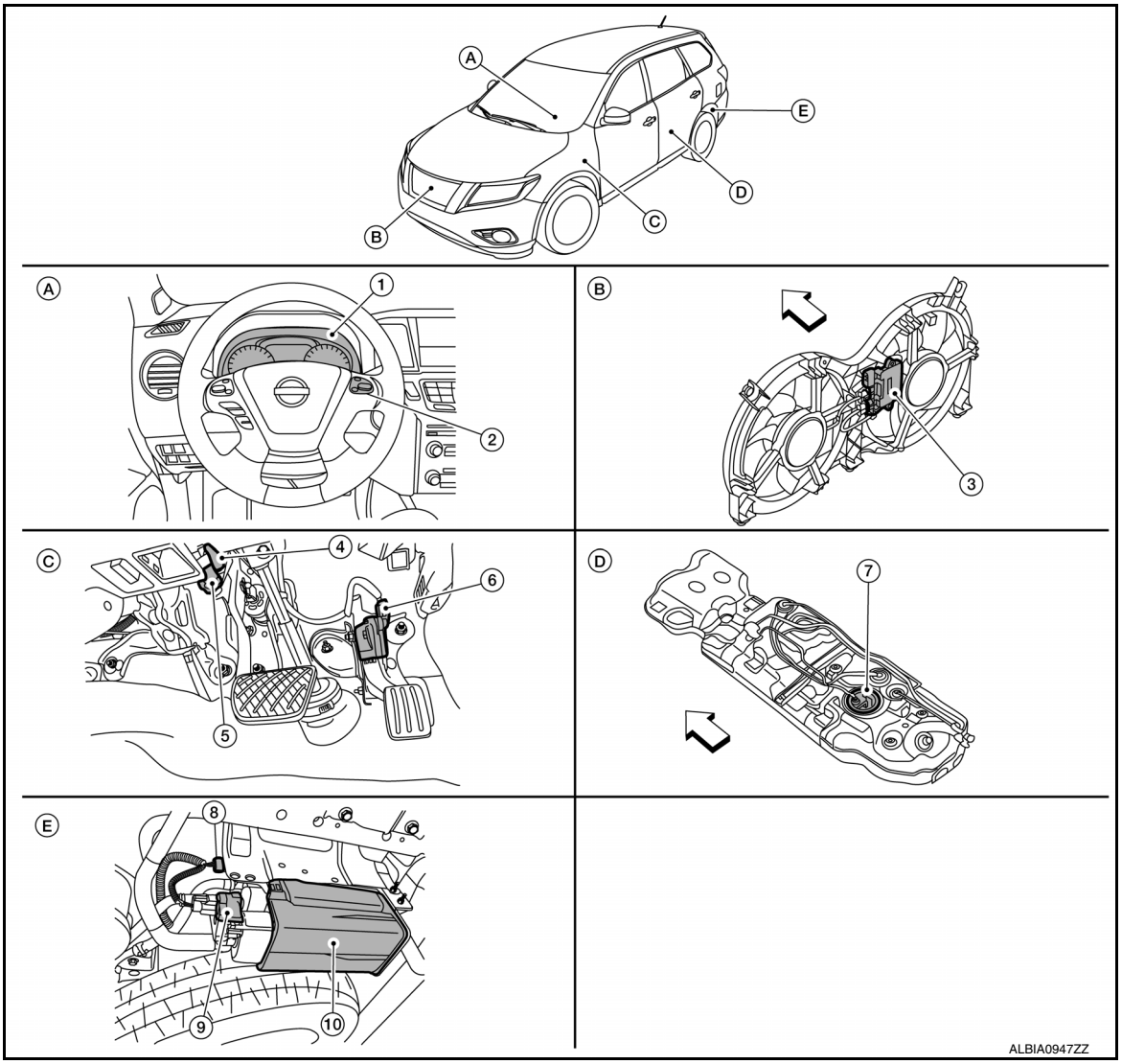

Ⓐ Instrument panel periphery (driver side)
Ⓑ Front side of engine room (cooling fan assembly)
Ⓒ Pedal periphery
Ⓓ Under of rear seat (fuel tank)
Ⓔ Under the spare tire housing
⇦ : Vehicle front

No.	Component		Function
①	Combination meter	Malfunction indicator lamp (MIL)	EC-33, "Malfunction Indicator Lamp (MIL)"
		Information display	The operation mode of the ASCD is indicated on the information display in the combination meter. ECM transmits the status signal to the combination meter via CAN communication according to ASCD operation.
②	ASCD steering switch		EC-25, "ASCD Steering Switch"
③	Cooling fan control module		EC-26, "Cooling Fan Motor & Cooling Fan Control Module"
④	Stop lamp switch		EC-34, "Stop Lamp Switch & Brake Pedal Position Switch"
⑤	Brake pedal position switch		EC-34, "Stop Lamp Switch & Brake Pedal Position Switch"
⑥	Accelerator pedal position sensor		EC-24, "Accelerator Pedal Position Sensor"

No.	Component	Function
⑦	Fuel level sensor unit and fuel pump (with fuel tank temperature sensor)	EC-30, "Fuel Level Sensor Unit and Fuel Pump (With Fuel Tank Temperature Sensor)" Refer to FL-6, "Exploded View" for detailed installation location.
⑧	EVAP control system pressure sensor	EC-29, "EVAP Control System Pressure Sensor"
⑨	EVAP canister vent control valve	EC-29, "EVAP Canister Vent Control Valve"
⑩	EVAP canister	EC-29, "EVAP Canister"

Accelerator Pedal Position Sensor

INFOID:0000000011148439

The accelerator pedal position sensor is installed on the upper end of the accelerator pedal assembly. The sensor detects the accelerator position and sends a signal to the ECM.

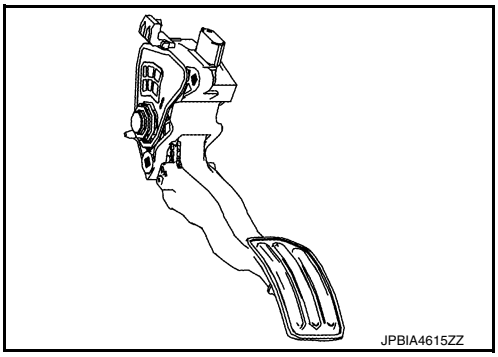

Accelerator pedal position sensor has two sensors. These sensors are a kind of potentiometers which transform the accelerator pedal position into output voltage, and emit the voltage signal to the ECM. In addition, these sensors detect the opening and closing speed of the accelerator pedal and feed the voltage signals to the ECM. The ECM judges the current opening angle of the accelerator pedal from these signals and controls the throttle control motor based on these signals.
Idle position of the accelerator pedal is determined by the ECM receiving the signal from the accelerator pedal position sensor. The ECM uses this signal for the engine operation such as fuel cut.

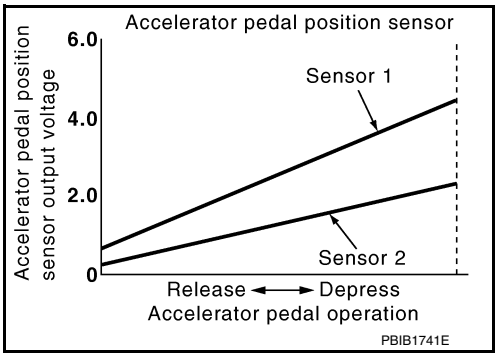

Air Fuel Ratio (A/F) Sensor 1

INFOID:0000000011148440

DESCRIPTION

The air fuel ratio (A/F) sensor 1 is a planar one-cell limit current sensor. The sensor element of the A/F sensor 1 is composed an electrode layer, which transports ions. It has a heater in the element.
The sensor is capable of precise measurement λ = 1, but also in the lean and rich range. Together with its control electronics, the sensor outputs a clear, continuous signal throughout a wide λ range.
The exhaust gas components diffuse through the diffusion layer at the sensor cell. An electrode layer is applied voltage, and this current relative oxygen density in lean. Also this current relative hydrocarbon density in rich.

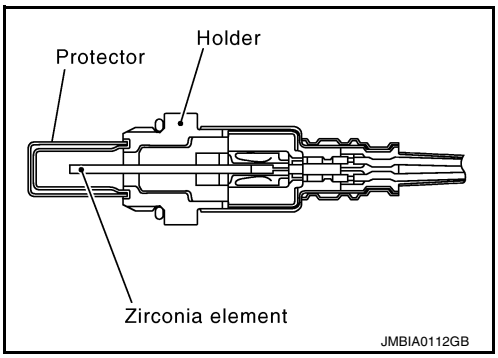

Therefore, the A/F sensor 1 is able to indicate air fuel ratio by this electrode layer of current. In addition, a heater is integrated in the sensor to ensure the required operating temperature of approximately 800°C (1,472°F).

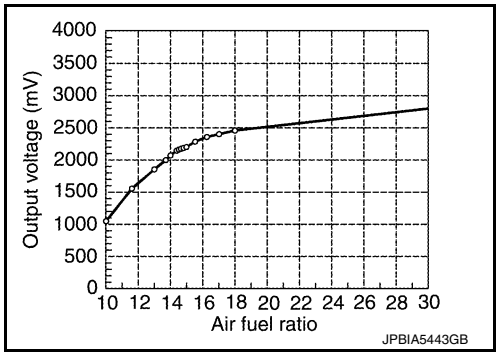

A/F SENSOR 1 HEATER

A/F sensor 1 heater is integrated in the sensor.
The ECM performs ON/OFF duty control of the A/F sensor 1 heater corresponding to the engine operating condition to keep the temperature of A/F sensor 1 element within the specified range.

ASCD Steering Switch

INFOID:0000000011148441

ASCD steering switch has variant values of electrical resistance for each button. ECM reads voltage variation of switch, and determines which button is operated.

Battery Current Sensor (With Battery Temperature Sensor)

INFOID:0000000011148442

BATTERY CURRENT SENSOR

The battery current sensor is installed to the battery cable at the negative terminal. The sensor measures the charging/discharging current of the battery.

BATTERY TEMPERATURE SENSOR

Battery temperature sensor is integrated in battery current sensor.
The sensor measures temperature around the battery.
The electrical resistance of the thermistor decreases as temperature increases.
<Reference data>

Temperature [°C (°F)]	Voltage* (V)	Resistance (kΩ)
25 (77)	3.333	1.9 - 2.1
90 (194)	0.969	0.222 - 0.258

*: These data are reference values and are measured between battery temperature sensor signal terminal and sensor ground.

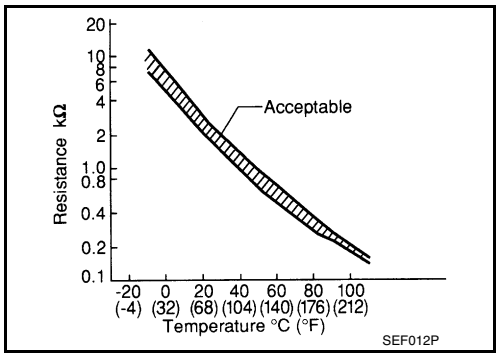

Camshaft Position Sensor (PHASE)

INFOID:0000000011148443

The camshaft position sensor (PHASE) senses the retraction of intake camshaft to identify a particular cylinder. The camshaft position sensor (PHASE) senses the piston position.
When the crankshaft position sensor (POS) system becomes inoperative, the camshaft position sensor (PHASE) provides various controls of engine parts instead, utilizing timing of cylinder identification signals.
The sensor consists of a permanent magnet and Hall IC.
When engine is running, the high and low parts of the teeth cause the gap with the sensor to change.
The changing gap causes the magnetic field near the sensor to change.
Due to the changing magnetic field, the voltage from the sensor changes.

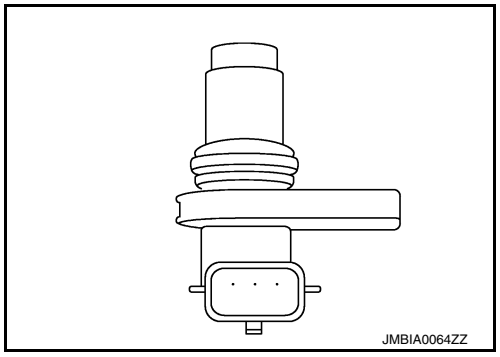

ECM receives the signals as shown in the figure.

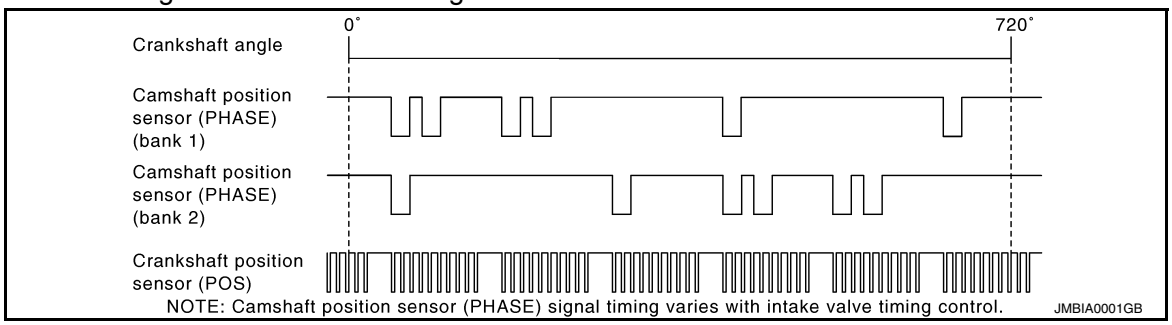

Cooling Fan Motor & Cooling Fan Control Module

INFOID:0000000011148444

COOLING FAN MOTOR

Cooling fan motor receives cooling fan motor operating voltage from cooling fan control module. The revolution speed of cooling fan motor is controlled by duty cycle of the voltage.

COOLING FAN CONTROL MODULE

Cooling fan control module receives ON/OFF pulse duty signal from IPDM E/R. Corresponding to this ON/OFF pulse duty signal, cooling fan control module sends cooling fan motor operating voltage to cooling fan motor. The revolution speed of cooling fan motor is controlled by duty cycle of the voltage.

Crankshaft Position Sensor (POS)

INFOID:0000000011148445

The crankshaft position sensor (POS) is located on the oil pan facing the gear teeth (cogs) of the signal plate. It detects the fluctuation of the engine revolution.
The sensor consists of a permanent magnet and Hall IC.
When the engine is running, the high and low parts of the teeth cause the gap with the sensor to change.
The changing gap causes the magnetic field near the sensor to change.
Due to the changing magnetic field, the voltage from the sensor changes.
The ECM receives the voltage signal and detects the fluctuation of the engine revolution.

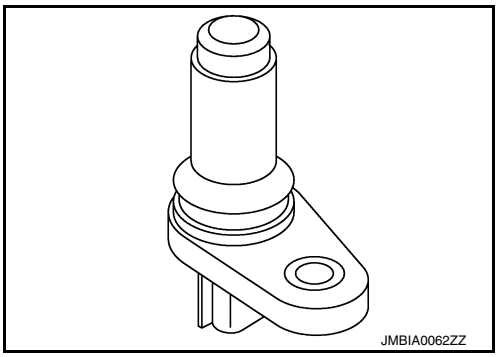

ECM receives the signals as shown in the figure.

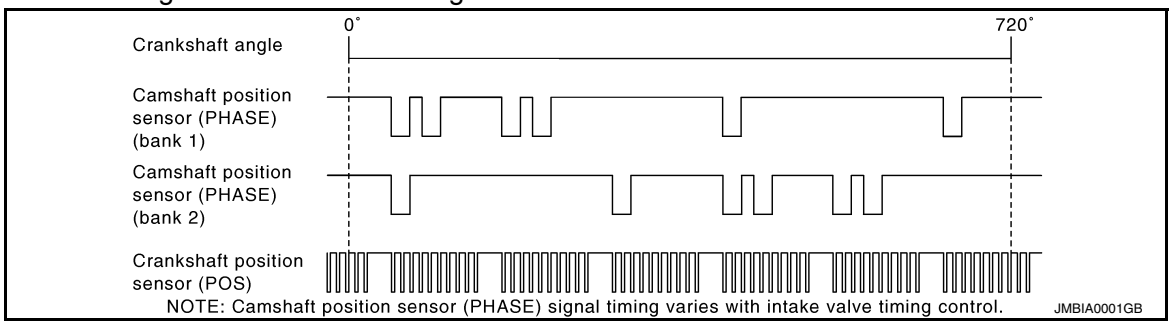

ECM

INFOID:0000000011148446

- ECM (Engine Control Module) controls the engine.

- ECM consists of a microcomputer and connectors for signal input and output and for power supply.
- Battery voltage is supplied to the ECM even when the ignition switch is turned OFF for the ECM memory function of the DTC memory, the air-fuel ratio feedback compensation value memory, the idle air volume learning value memory, etc.

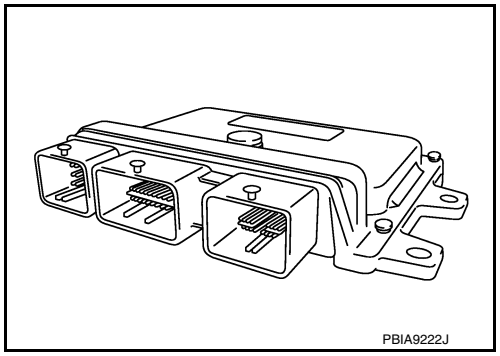

Electric Throttle Control Actuator

INFOID:0000000011148447

OUTLINE

Electric throttle control actuator consists of throttle body, throttle valve, throttle control motor and throttle position sensor.

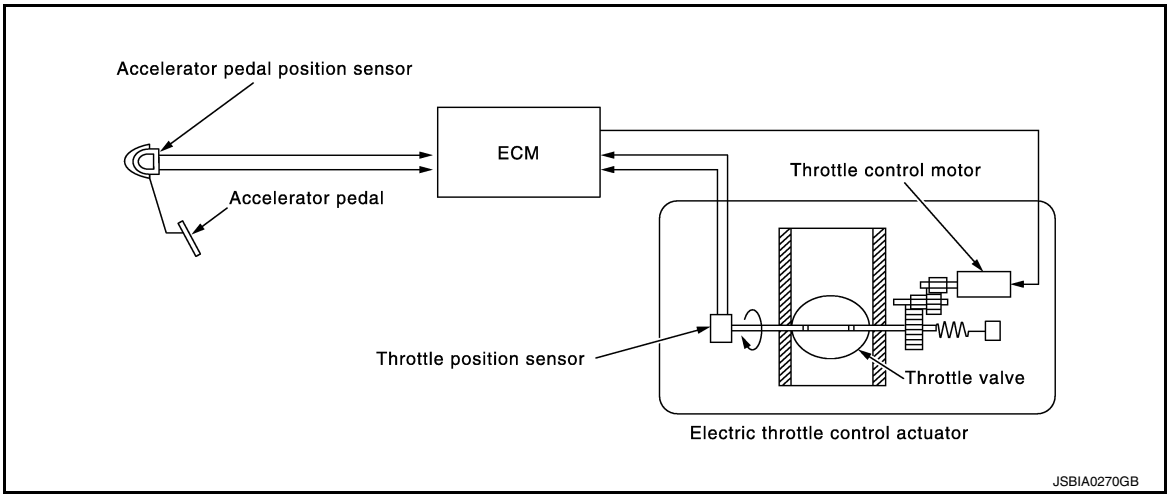

THROTTLE CONTROL MOTOR

The throttle control motor is operated by the ECM and it opens and closes the throttle valve.
The current opening angle of the throttle valve is detected by the throttle position sensor and it provides feedback to the ECM to control the throttle control motor to make the throttle valve opening angle properly in response to driving condition.

THROTTLE POSITION SENSOR

The throttle position sensor responds to the throttle valve movement.
The throttle position sensor has two sensors. These sensors are a kind of potentiometers which transform the throttle valve position into output voltage, and emit the voltage signal to the ECM. In addition, these sensors detect the opening and closing speed of the throttle valve and feed the voltage signals to the ECM. The ECM judges the current opening angle of the throttle valve from these signals and the ECM controls the throttle control motor to make the throttle valve opening angle properly in response to driving condition.

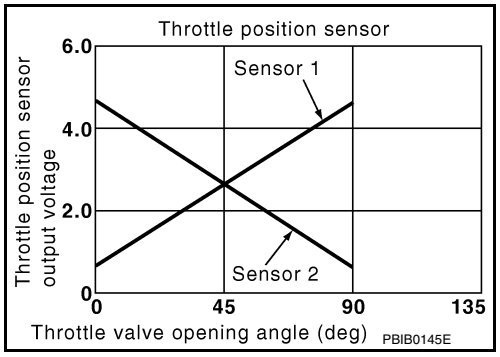

Electronic Controlled Engine Mount

INFOID:0000000011148448

In the idle range, ECM turns OFF the electronically-controlled engine mount control solenoid valve and applies manifold pressure to the electronically-controlled engine mount. This decreases damping force of the electronically-controlled engine mount and absorbs vibrations traveling from the engine to the body for improving the quietness.

In the driving range, ECM turns ON the electronically-controlled engine mount control solenoid valve and cuts manifold pressure applied on the electronically-controlled engine mount. This increases damping force of the electronically-controlled engine mount and reduces vibrations generated during driving.

Engine Coolant Temperature Sensor

INFOID:0000000011148449

The engine coolant temperature sensor is used to detect the engine coolant temperature. The sensor modifies a voltage signal from the ECM. The modified signal returns to the ECM as the engine coolant temperature input. The sensor uses a thermistor which is sensitive to the change in temperature. The electrical resistance of the thermistor decreases as temperature increases.

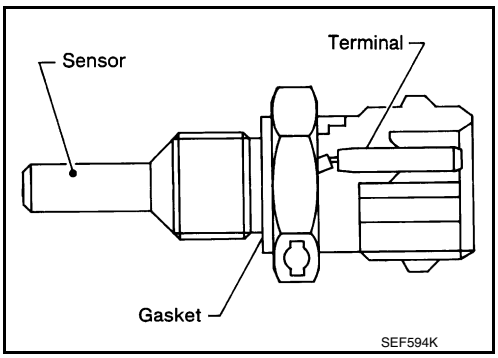

<Reference data>

Engine coolant temperature [°C (°F)]	Voltage* (V)	Resistance (kΩ)
–10 (14)	4.4	7.0 - 11.4
20 (68)	3.5	2.37 - 2.63
50 (122)	2.2	0.68 - 1.00
90 (194)	0.9	0.236 - 0.260

*: These data are reference values and are measured between ECM terminals.

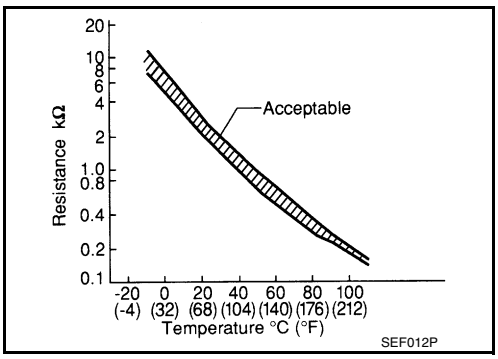

Engine Oil Pressure Sensor

INFOID:0000000011148450

The engine oil pressure (EOP) sensor is detects engine oil pressure and transmits a voltage signal to the ECM.

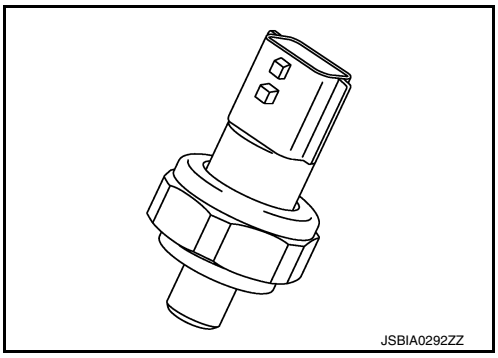

Engine Oil Temperature Sensor

INFOID:0000000011148451

The engine oil temperature sensor is used to detect the engine oil temperature. The sensor modifies a voltage signal from the ECM. The modified signal returns to the ECM as the engine oil temperature input. The sensor uses a thermistor which is sensitive to the change in temperature. The electrical resistance of the thermistor decreases as temperature increases.

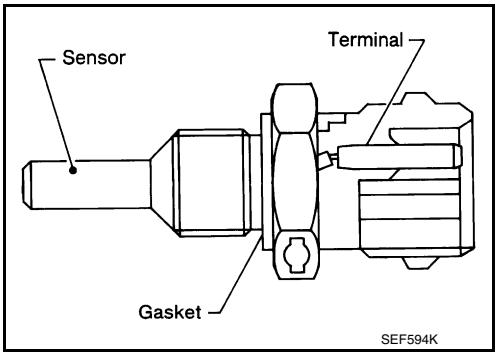

<Reference data>

Engine oil temperature [°C (°F)]	Voltage* (V)	Resistance (kΩ)
–10 (14)	4.4	7.0 - 11.4
20 (68)	3.5	2.37 - 2.63
50 (122)	2.2	0.68 - 1.00
90 (194)	0.9	0.236 - 0.260
110 (230)	0.6	0.143 - 0.153

*: These data are reference values and are measured between ECM terminals.

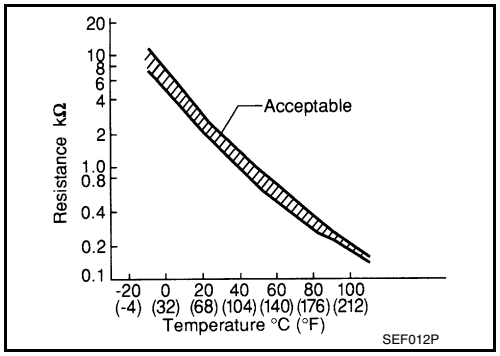

EVAP Canister

INFOID:0000000011148452

The fuel vapor in the sealed fuel tank is led into the EVAP canister which contains activated carbon and the vapor is stored there when the engine is not operating or when refueling to the fuel tank.
For details, refer to EC-49, "EVAPORATIVE EMISSION SYSTEM : System Description".

EVAP Canister Purge Volume Control Solenoid Valve

INFOID:0000000011148453

The EVAP canister purge volume control solenoid valve is used to control the flow rate of fuel vapor from the EVAP canister. The EVAP canister purge volume control solenoid valve is moved by ON/OFF pulses from the ECM. The longer the ON pulse, the greater the amount of fuel vapor that will flow through the valve.

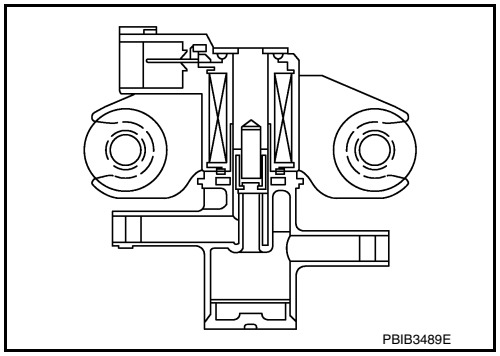

EVAP Canister Vent Control Valve

INFOID:0000000011148454

The EVAP canister vent control valve is located on the EVAP canister and is used to seal the canister vent.
This solenoid valve responds to signals from the ECM. When the ECM sends an ON signal, the coil in the solenoid valve is energized. A plunger will then move to seal the canister vent. The ability to seal the vent is necessary for the on board diagnosis of other evaporative emission control system components.
This solenoid valve is used only for diagnosis, and usually remains opened.
When the vent is closed, under normal purge conditions, the evaporative emission control system is depressurized and allows “EVAP Control System” diagnosis.

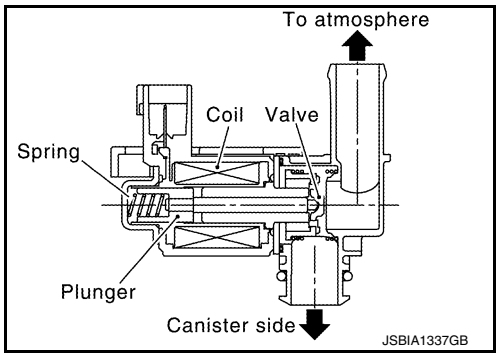

EVAP Control System Pressure Sensor

INFOID:0000000011148455

The EVAP control system pressure sensor detects pressure in the purge line. The sensor output voltage to the ECM increases as pressure increases.

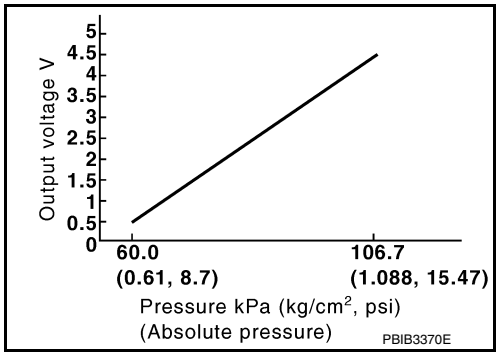

Fuel Injector

INFOID:0000000011148456

The fuel injector is a small, precise solenoid valve. When the ECM supplies a ground to the fuel injector circuit, the coil in the fuel injector is energized. The energized coil pulls the ball valve back and allows fuel to flow through the fuel injector into the intake manifold. The amount of fuel injected depends upon the injection pulse duration. Pulse duration is the length of time the fuel injector remains open. The ECM controls the injection pulse duration based on engine fuel needs.

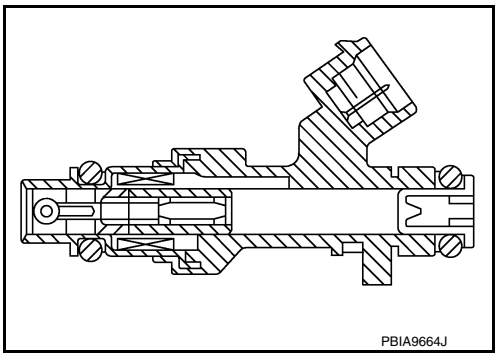

Fuel Level Sensor Unit and Fuel Pump (With Fuel Tank Temperature Sensor)

INFOID:0000000011148457

FUEL PUMP

The ECM activates the fuel pump for 1 second after the ignition switch is turned ON to improve engine start ability. If the ECM receives an engine speed signal from the camshaft position sensor (PHASE), it knows that the engine is rotating, and causes the pump to operate. If the engine speed signal is not received when the ignition switch is ON, the engine stalls. The ECM stops pump operation and prevents battery discharging, thereby improving safety. The ECM does not directly drive the fuel pump. It sends the control signal to the fuel pump control module, which in turn controls the fuel pump.

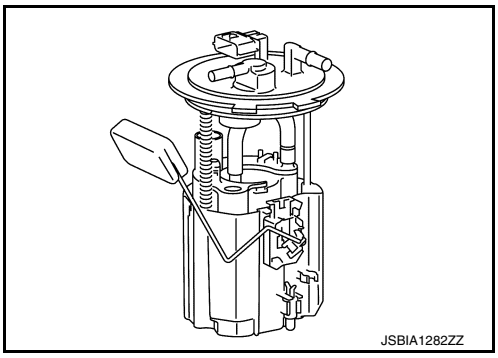

Condition	Fuel pump operation
Ignition switch is turned to ON.	Operates for 1 second.
Engine running and cranking	Operates.
When engine is stopped	Stops in 1.5 seconds.
Except as shown above	Stops.

FUEL LEVEL SENSOR

The fuel level sensor is mounted in the fuel level sensor unit.
The sensor detects a fuel level in the fuel tank and transmits a signal to the combination meter. The combination meter sends the fuel level sensor signal to the ECM via the CAN communication line.
It consists of two parts, one is mechanical float and the other is variable resistor. Fuel level sensor output voltage changes depending on the movement of the fuel mechanical float.

FUEL TANK TEMPERATURE SENSOR

The fuel tank temperature sensor is used to detect the fuel temperature inside the fuel tank. The sensor modifies a voltage signal from the ECM. The modified signal returns to the ECM as the fuel temperature input. The sensor uses a thermistor which is sensitive to the change in temperature. The electrical resistance of the thermistor decreases as temperature increases.

<Reference data>

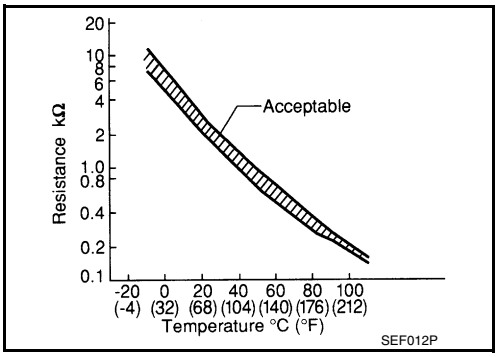

Fluid temperature [°C (°F)]	Voltage* (V)	Resistance (kΩ)
20 (68)	3.5	2.3 - 2.7
50 (122)	2.2	0.79 - 0.90

*: These data are reference values and are measured between ECM terminals 95 (Fuel tank temperature sensor) and ground.

Heated Oxygen Sensor 2

INFOID:0000000011148458

DESCRIPTION

The heated oxygen sensor 2, after three way catalyst (manifold), monitors the oxygen level in the exhaust gas.
Even if switching characteristics of the air fuel ratio (A/F) sensor 1 are shifted, the air fuel ratio is controlled to stoichiometric, by the signal from the heated oxygen sensor 2.
This sensor is made of ceramic zirconia. The zirconia generates voltage from approximately 1 V in richer conditions to 0 V in leaner conditions.
Under normal conditions the heated oxygen sensor 2 is not used for engine control operation.

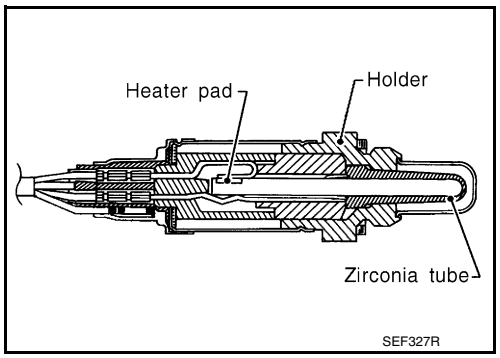

HEATED OXYGEN SENSOR 2 HEATER

Heated oxygen sensor 2 heater is integrated in the sensor.
The ECM performs ON/OFF control of the heated oxygen sensor 2 heater corresponding to the engine speed, amount of intake air and engine coolant temperature.

Engine speed	Heated oxygen sensor 2 heater
Above 3,600 rpm	OFF
Below 3,600 rpm after the following conditions are met. • Engine: After warming up • Keeping the engine speed between 3,500 and 4,000 rpm for 1 minute and at idle for 1 minute under no load	ON

Ignition Coil (With Power Transistor)

INFOID:0000000011148459

The ignition signal from the ECM is sent to and amplified by the power transistor. The power transistor turns ON and OFF the ignition coil primary circuit. This ON/OFF operation induces the proper high voltage in the coil secondary circuit.

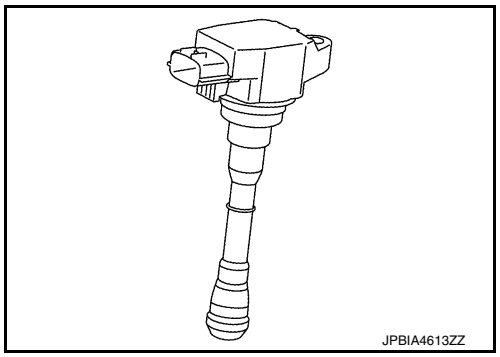

Intake Valve Timing Control Solenoid Valve

INFOID:0000000011148460

Intake valve timing control solenoid valve is activated by ON/OFF pulse duty (ratio) signals from the ECM.
The intake valve timing control solenoid valve changes the oil amount and direction of flow through intake valve timing control unit or stops oil flow.
The longer pulse width advances valve angle.
The shorter pulse width retards valve angle.
When ON and OFF pulse widths become equal, the solenoid valve stops oil pressure flow to fix the intake valve angle at the control position.

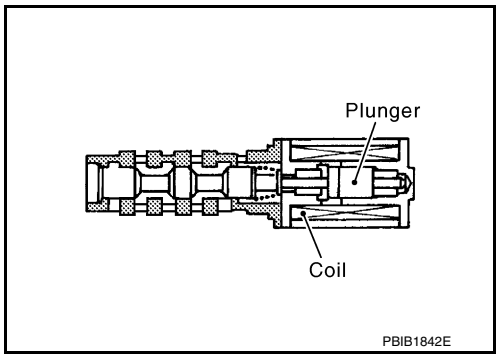

Intake Valve Timing Intermediate Lock Control Solenoid Valve

INFOID:0000000011491946

Intake valve timing intermediate lock control solenoid valve is activated by ON/OFF signals from the ECM.
The intake valve timing intermediate lock control solenoid valve opens/closes the path of oil pressure acting on the lock pin in the camshaft sprocket (INT).

- When the solenoid valve becomes ON, oil pressure to the lock pin is trained to perform intermediate lock.
- When the solenoid valve becomes OFF, oil pressure is acted on the lock pin to release the intermediate lock.

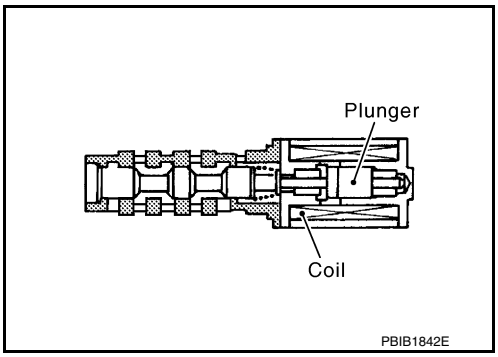

Exhaust Valve Timing Control Position Sensor

INFOID:0000000011491947

Exhaust valve timing control position sensor detects the protrusion of the signal plate installed to the exhaust camshaft front end.
This sensor signal is used for sensing a position of the exhaust camshaft.
The sensor consists of a permanent magnet and Hall IC.
When engine is running, the high and low parts of the teeth cause the gap with the sensor to change.
The changing gap causes the magnetic field near the sensor to change.
Due to the changing magnetic field, the voltage from the sensor changes.

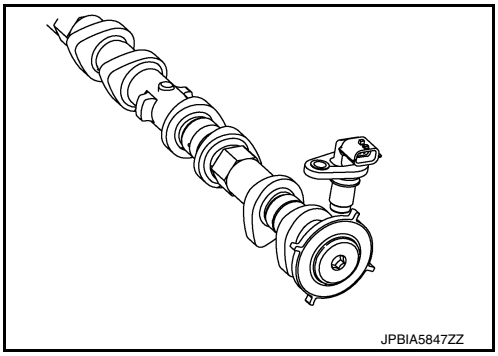

Exhaust Valve Timing Control Solenoid Valve

INFOID:0000000011491948

Exhaust valve timing control solenoid valve is activated by ON/OFF pulse duty (ratio) signals from the ECM.
The exhaust valve timing control solenoid valve changes the oil amount and direction of flow through exhaust valve timing control unit or stops oil flow.
The longer pulse width retards valve angle.
The shorter pulse width advances valve angle.
When ON and OFF pulse widths become equal, the solenoid valve stops oil pressure flow to fix the exhaust valve angle at the control position.

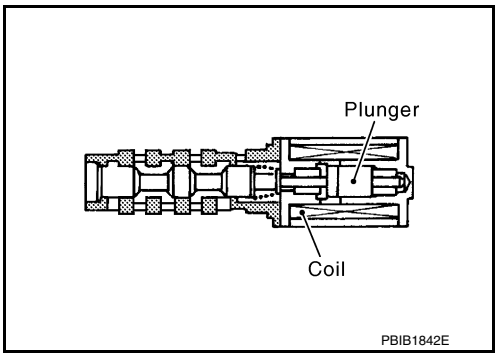

Knock Sensor

INFOID:0000000011148461

The knock sensor is attached to the cylinder block. It senses engine knocking using a piezoelectric element. A knocking vibration from the cylinder block is sensed as vibrational pressure. This pressure is converted into a voltage signal and sent to the ECM.

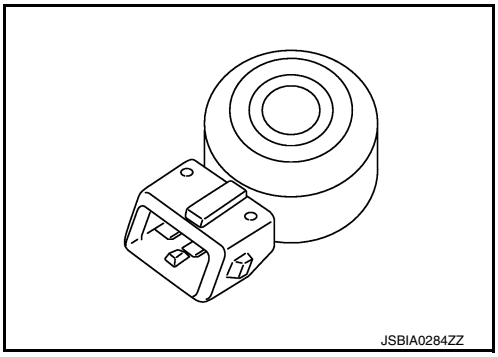

Malfunction Indicator Lamp (MIL)

INFOID:0000000011148462

Malfunction Indicator lamp (MIL) is located on the combination meter.
MIL will illuminate when the ignition switch is turned ON without the engine running. This is a bulb check.
When the engine is started, MIL should turn OFF. If the MIL remains illuminated, the on board diagnostic system has detected an engine system malfunction.
For details, refer to EC-69, "DIAGNOSIS DESCRIPTION : Malfunction Indicator Lamp (MIL)".

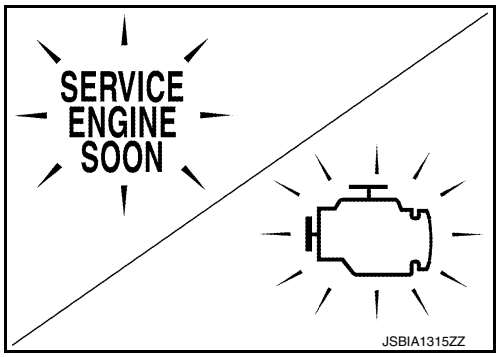

Mass Air Flow Sensor (With Intake Air Temperature Sensor)

INFOID:0000000011148463

MASS AIR FLOW SENSOR

The mass air flow sensor ① is placed in the stream of intake air. It measures the intake flow rate by measuring a part of the entire intake flow. The mass air flow sensor controls the temperature of the heater in sensing element to a certain amount.
The temperature distribution around the heater changes according to the increase in intake air volume. The change is detected by a thermistor and the air volume data is sent to ECM by the MAF sensor.

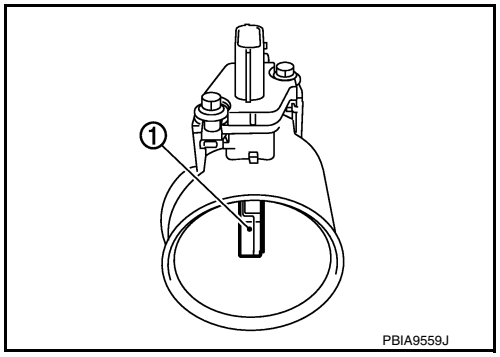

INTAKE AIR TEMPERATURE SENSOR

The intake air temperature sensor is built-into mass air flow sensor. The sensor detects intake air temperature and transmits a signal to the ECM.
The temperature sensing unit uses a thermistor which is sensitive to the change in temperature.

<Reference data>

Intake air temperature [°C (°F)]	Voltage* (V)
25 (77)	1.9 – 2.1
80 (176)	3.2 – 3.4

*: These data are reference values on the diagnosis tool.

Oil Pressure Warning Lamp

INFOID:0000000011148464

Oil pressure warning lamp is located on the combination meter.
It indicates the low pressure of the engine oil and the malfunction of the engine oil pressure system.
Combination meter turns the oil pressure warning lamp ON/OFF according to the oil pressure warning lamp signal received from ECM via CAN communication.
For details, refer to EC-54, "ENGINE PROTECTION CONTROL AT LOW ENGINE OIL PRESSURE : System Description".

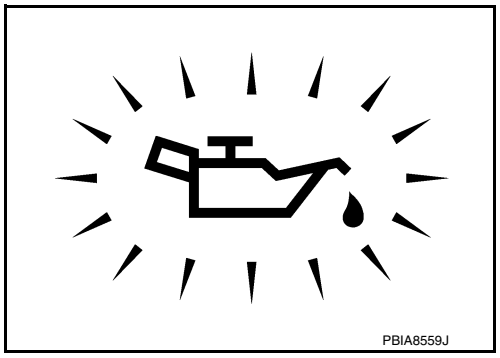

Power Valve Actuator 1 and 2

INFOID:0000000011148465

The power valves are used to control the suction passage of the variable induction air control system. They are set in the fully closed or fully opened position by the power valve actuators operated by the vacuum stored in the vacuum tank. The vacuum to power valve actuators is controlled by the VIAS control solenoid valves.

Refrigerant Pressure Sensor

INFOID:0000000011148466

The refrigerant pressure sensor is installed at the condenser of the air conditioner system. The sensor uses an electrostatic volume pressure transducer to convert refrigerant pressure to voltage. The voltage signal is sent to ECM, and ECM controls cooling fan system.

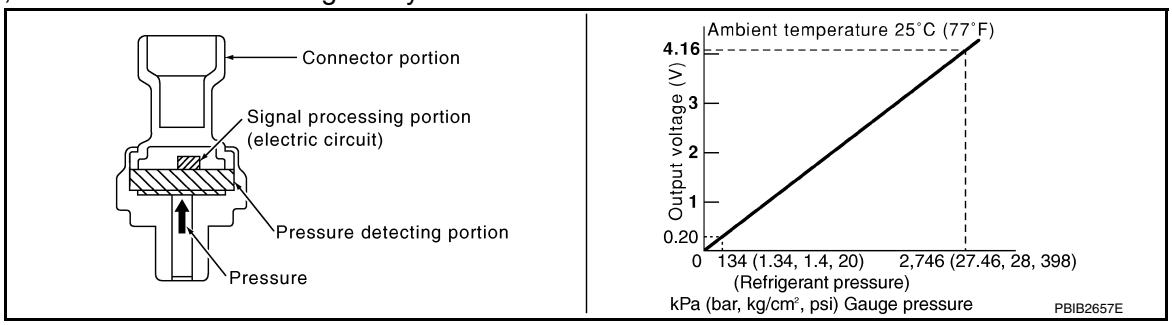

Stop Lamp Switch & Brake Pedal Position Switch

INFOID:0000000011148467

Stop lamp switch and brake pedal position switch are installed to brake pedal bracket.
ECM detects the state of the brake pedal by those two types of input (ON/OFF signal).

Brake pedal	Brake pedal position switch	Stop lamp switch
Released	ON	OFF
Depressed	OFF	ON

VIAS Control Solenoid Valve 1 and 2

INFOID:0000000011148468

The VIAS control solenoid valve cuts the intake manifold vacuum signal for power valve control. It responds to ON/OFF signals from the ECM. When the solenoid is OFF, the vacuum signal from the intake manifold is cut. When the ECM sends an ON signal the coil pulls the plunger downward and sends the vacuum signal to the power valve actuator.

STRUCTURE AND OPERATION

Positive Crankcase Ventilation (PCV)

INFOID:0000000011148469

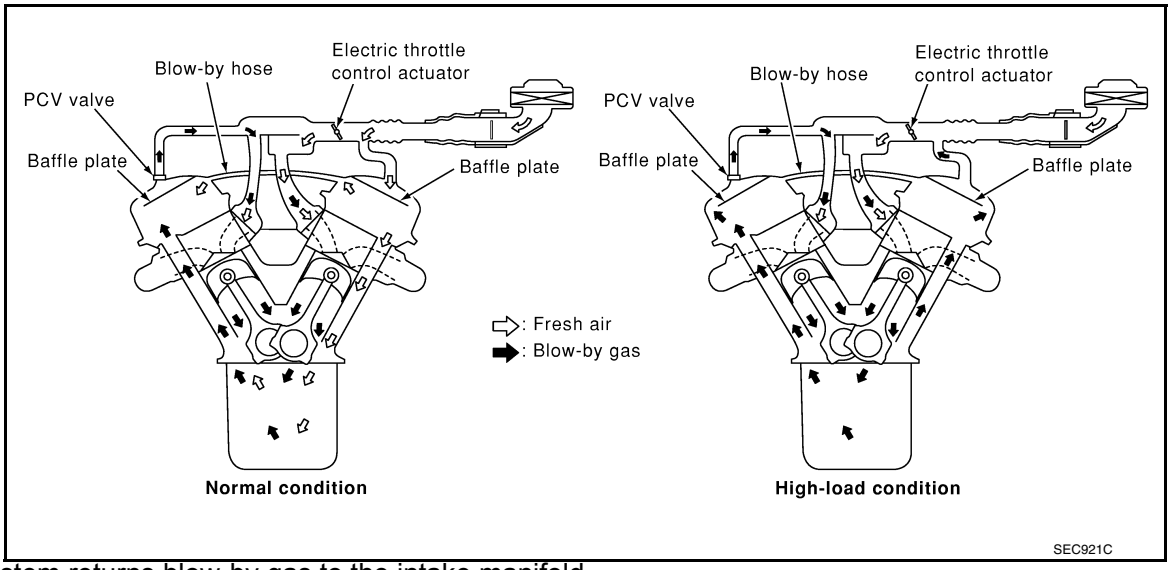

This system returns blow-by gas to the intake manifold.
The positive crankcase ventilation (PCV) valve is provided to conduct crankcase blow-by gas to the intake manifold.
During partial throttle operation of the engine, the intake manifold sucks the blow-by gas through the PCV valve.
Normally, the capacity of the valve is sufficient to handle any blow-by and a small amount of ventilating air.
The ventilating air is drawn from the air inlet tubes into the crankcase. In this process the air passes through the hose connecting air inlet tubes to rocker cover.
Under full-throttle condition, the manifold vacuum is insufficient to draw the blow-by flow through the valve. The flow goes through the hose connection in the reverse direction.
On vehicles with an excessively high blow-by, the valve does not meet the requirement. This is because some of the flow will go through the hose connection to the air inlet tubes under all conditions.

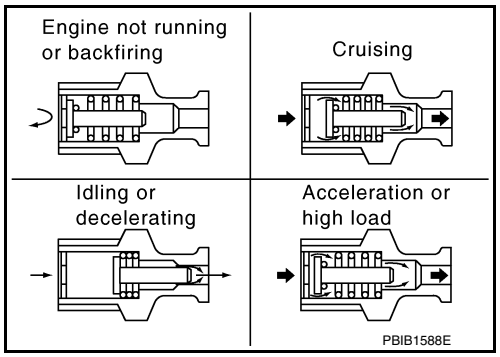

On Board Refueling Vapor Recovery (ORVR)

INFOID:0000000011148470

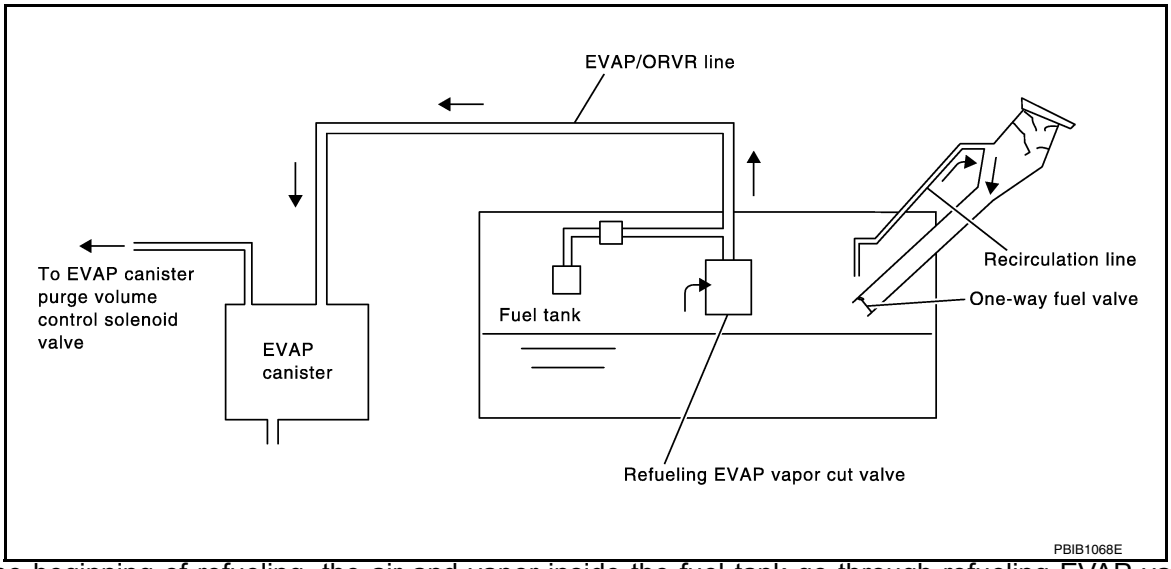

From the beginning of refueling, the air and vapor inside the fuel tank go through refueling EVAP vapor cut valve and EVAP/ORVR line to the EVAP canister. The vapor is absorbed by the EVAP canister and the air is released to the atmosphere.

When the refueling has reached the full level of the fuel tank, the refueling EVAP vapor cut valve is closed and refueling is stopped because of auto shut-off. The vapor which was absorbed by the EVAP canister is purged during driving.

WARNING:

When conducting inspections below, be sure to observe the following:

- **Put a “CAUTION: FLAMMABLE” sign in workshop.**
- **Never smoke while servicing fuel system. Keep open flames and sparks away from work area.**
- **Always to furnish the workshop with a CO_2 fire extinguisher.**

CAUTION:

- **Before removing fuel line parts, carry out the following procedures:**
  - **Put drained fuel in an explosion-proof container and put lid on securely.**
  - **Release fuel pressure from fuel line. Refer to EC-168, "Work Procedure".**
  - **Disconnect battery ground cable.**
- **Always replace O-ring when the fuel gauge retainer is removed.**
- **Never kink or twist hose and tube when they are installed.**
- **Never tighten hose and clamps excessively to avoid damaging hoses.**
- **After installation, run engine and check for fuel leakage at connections.**
- **Never attempt to top off the fuel tank after the fuel pump nozzle shuts off automatically. Continued refueling may cause fuel overflow, resulting in fuel spray and possibly a fire.**

SYSTEM

ENGINE CONTROL SYSTEM

ENGINE CONTROL SYSTEM : System Description

INFOID:0000000011148471

SYSTEM DIAGRAM

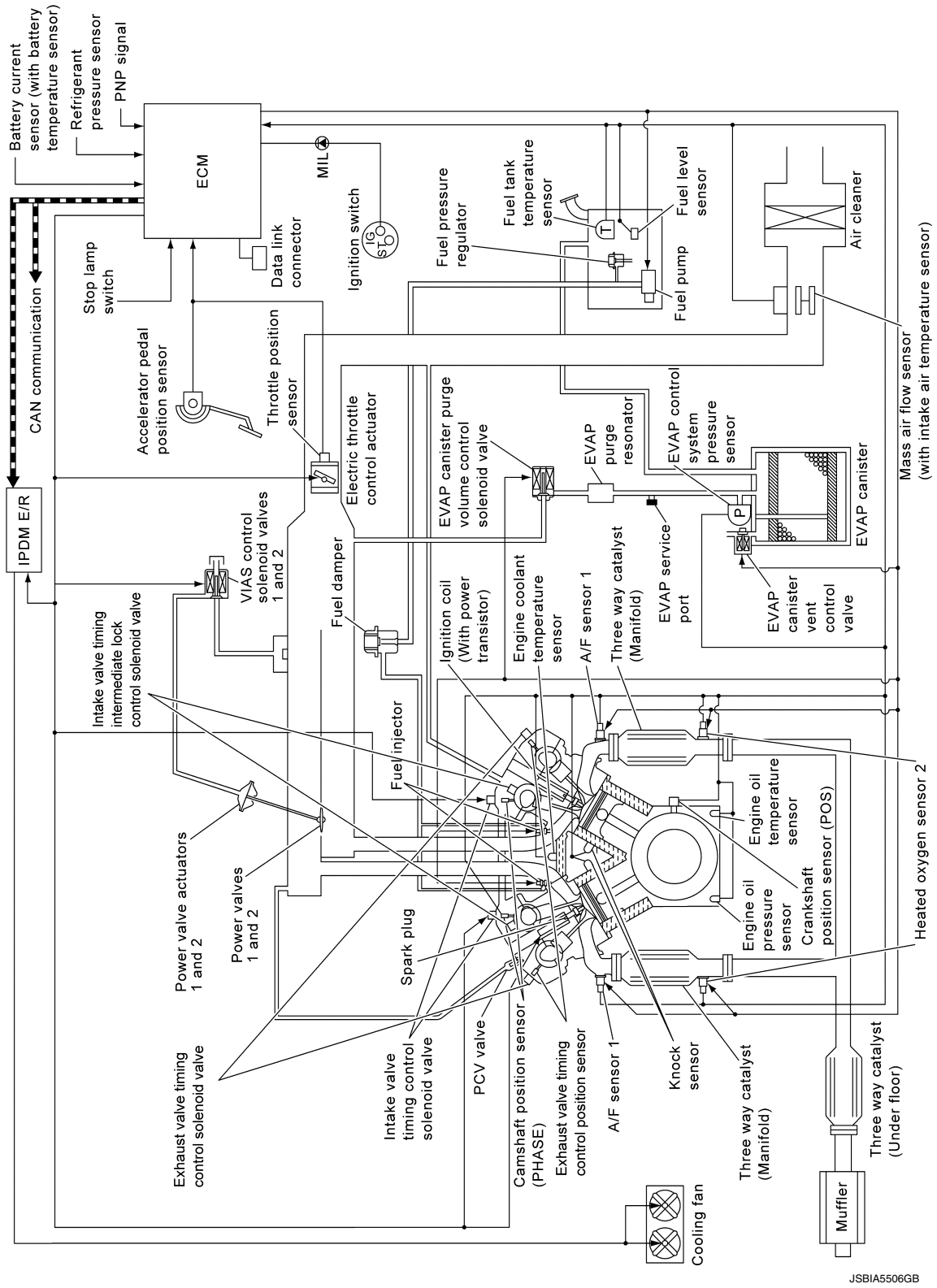

SYSTEM DESCRIPTION

ECM controls the engine by various functions.

Function	Reference
Multiport fuel injection system	EC-41, "MULTIPORT FUEL INJECTION SYSTEM : System Description"
Electric ignition system	EC-43, "ELECTRIC IGNITION SYSTEM : System Description"
Air conditioning cut control	EC-44, "AIR CONDITIONING CUT CONTROL : System Description"
Automatic speed control device (ASCD)	EC-45, "AUTOMATIC SPEED CONTROL DEVICE (ASCD) : System Description"
Cooling fan control	EC-46, "COOLING FAN CONTROL : System Description"
Electronic controlled engine mount	EC-46, "ELECTRONIC CONTROLLED ENGINE MOUNT : System Description"
Evaporative emission system	EC-49, "EVAPORATIVE EMISSION SYSTEM : System Description"
Throttle control	EC-50, "THROTTLE CONTROL : System Description"
Intake valve timing control	EC-50, "INTAKE VALVE TIMING CONTROL : System Description"
Exhaust valve timing control	EC-53, "EXHAUST VALVE TIMING CONTROL : System Description"
Engine protection control at low engine oil pressure	EC-54, "ENGINE PROTECTION CONTROL AT LOW ENGINE OIL PRESSURE : System Description"
Fuel filler cap warning system	EC-55, "FUEL FILLER CAP WARNING SYSTEM : System Description"
Variable induction air system	EC-56, "VARIABLE INDUCTION AIR SYSTEM : System Description"
Integrated control of engine, CVT, and ABS	EC-57, "INTEGRATED CONTROL OF ENGINE, CVT, AND ABS : System Description"
CAN communication	EC-57, "CAN COMMUNICATION : System Description"

ENGINE CONTROL SYSTEM : Fail-safe

INFOID:0000000011491951

NON DTC RELATED ITEM

Engine operating condition in fail-safe mode	Detected items	Remarks	Reference page
Engine speed will not rise more than 2,500 rpm due to the fuel cut	Malfunction indicator lamp circuit	When there is an open circuit on MIL circuit, the ECM cannot warn the driver by illuminating MIL when there is malfunction on engine control system. Therefore, when electrical controlled throttle and part of ECM related diagnoses are continuously detected as NG for 5 trips, ECM warns the driver that engine control system malfunctions and MIL circuit is open by means of operating the fail-safe function. The fail-safe function also operates when above diagnoses except MIL circuit are detected and demands the driver to repair the malfunction.	EC-503

DTC RELATED ITEM

DTC No.	Detected items	Engine operating condition in fail-safe mode
P0011 P0021	Intake valve timing control	• The signal is not energized to the intake valve timing control solenoid valve and the valve control does not function. • ECM activates the IVT intermediate lock control solenoid valve to bring the cam sprocket into an intermediate lock condition.
P0014 P0024	Exhaust valve timing control	The signal is not energized to the exhaust valve timing control magnet retarder and the magnet retarder control does not function.

DTC No.	Detected items	Engine operating condition in fail-safe mode
P0101 P0102 P0103	Mass air flow sensor circuit	Engine speed will not rise more than 2,400 rpm due to the fuel cut.
P0117 P0118	Engine coolant temperature sensor circuit	Engine coolant temperature will be determined by ECM based on the following condition. CONSULT displays the engine coolant temperature decided by ECM. Condition — Engine coolant temperature decided (CONSULT display) Just as ignition switch is turned ON or START — 40°C (104°F) Approx 4 minutes or more after engine starting — 80°C (176°F) Except as shown above — 40 - 80°C (104 - 176°F) (Depends on the time) When the fail-safe system for engine coolant temperature sensor is activated, the cooling fan operates while engine is running.
P0122 P0123 P0222 P0223 P2135	Throttle position sensor	The ECM controls the electric throttle control actuator in regulating the throttle opening in order for the idle position to be within +10 degrees. The ECM regulates the opening speed of the throttle valve to be slower than the normal condition. Therefore, the acceleration will be poor.
P0196 P0197 P0198	Engine oil temperature sensor	Intake valve timing control does not function.
P0500	Vehicle speed sensor	The cooling fan operates (Highest) while engine is running.
P0524	Engine oil pressure	• ECM illuminates oil pressure warning lamp on the combination meter. • Engine speed will not rise more than 4,000 rpm due to the fuel cut. • Fail-safe is canceled when ignition switch OFF → ON.
P052A P052B P052C P052D	Intake valve timing intermediate lock control	—
P0603 P0607	ECM	Engine torque may be limited.
P0604	ECM	• ECM stops the electric throttle control actuator control, throttle valve is maintained at a fixed opening (approx. 5 degrees) by the return spring. • The position of the following components is fixed. - Intake valve timing control solenoid valve - Exhaust valve timing control solenoid valve - Intake manifold runner control valve • ASCD operation may be deactivated.
P0605 P0606 P060B	ECM	**NOTE:** Fail-safe may not occur depending on malfunction type. • ECM stops the electric throttle control actuator control, throttle valve is maintained at a fixed opening (approx. 5 degrees) by the return spring. • The position of the following components is fixed. - Intake valve timing control solenoid valve - Exhaust valve timing control solenoid valve - Intake manifold runner control valve • ASCD operation may be deactivated.

DTC No.	Detected items	Engine operating condition in fail-safe mode
P060A	ECM	**NOTE:** Fail-safe may not occur depending on malfunction type. • ECM stops the electric throttle control actuator control, throttle valve is maintained at a fixed opening (approx. 5 degrees) by the return spring. • The position of the following components is fixed. - Intake valve timing control solenoid valve - Exhaust valve timing control solenoid valve - Intake manifold runner control valve • Engine torque may be limited. • ASCD operation may be deactivated.
P0643	Sensor power supply	• ECM stops the electric throttle control actuator control, throttle valve is maintained at a fixed opening (approx. 5 degrees) by the return spring. • The position of the following components is fixed. - Intake valve timing control solenoid valve - Exhaust valve timing control solenoid valve - Intake manifold runner control valve
P1805	Brake switch	ECM controls the electric throttle control actuator by regulating the throttle opening to a small range. Therefore, acceleration will be poor. Vehicle condition: Driving condition When engine is idling: Normal When accelerating: Poor acceleration
P2100 P2103	Throttle control motor relay	ECM stops the electric throttle control actuator control, throttle valve is maintained at a fixed opening (approx. 5 degrees) by the return spring.
P2101	Electric throttle control function	ECM stops the electric throttle control actuator control, throttle valve is maintained at a fixed opening (approx. 5 degrees) by the return spring.
P2118	Throttle control motor	ECM stops the electric throttle control actuator control, throttle valve is maintained at a fixed opening (approx. 5 degrees) by the return spring.
P2119	Electric throttle control actuator	(When electric throttle control actuator does not function properly due to the return spring malfunction:) ECM controls the electric throttle actuator by regulating the throttle opening around the idle position. The engine speed will not rise more than 2,000 rpm.
		(When throttle valve opening angle in fail-safe mode is not in specified range:) ECM controls the electric throttle control actuator by regulating the throttle opening to 20 degrees or less.
		(When ECM detects the throttle valve is stuck open:) While the vehicle is being driven, it slows down gradually because of fuel cut. After the vehicle stops, the engine stalls. The engine can restart in the N or P position, and engine speed will not exceed 1,000 rpm or more.
P2122 P2123 P2127 P2128 P2138	Accelerator pedal position sensor	The ECM controls the electric throttle control actuator in regulating the throttle opening in order for the idle position to be within +10 degrees. The ECM regulates the opening speed of the throttle valve to be slower than the normal condition. Therefore, the acceleration will be poor.

MULTIPORT FUEL INJECTION SYSTEM

MULTIPORT FUEL INJECTION SYSTEM : System Description

INFOID:0000000011148473

SYSTEM DIAGRAM

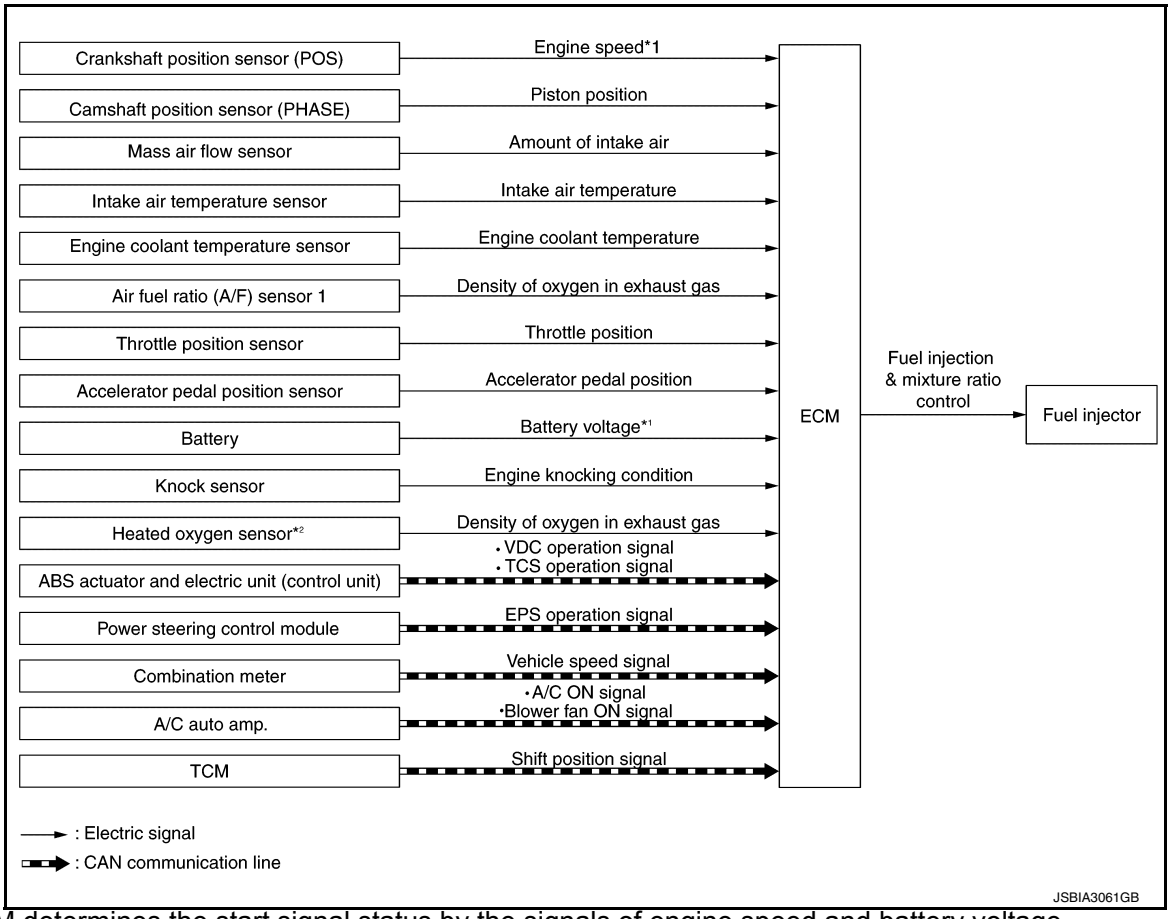

*1: ECM determines the start signal status by the signals of engine speed and battery voltage.
*2: This sensor is not used to control the engine system under normal conditions.

SYSTEM DESCRIPTION

The amount of fuel injected from the fuel injector is determined by the ECM. The ECM controls the length of time the valve remains open (injection pulse duration). The amount of fuel injected is a program value in the ECM memory. The program value is preset by engine operating conditions. These conditions are determined by input signals (for engine speed and intake air) from the crankshaft position sensor (POS), camshaft position sensor (PHASE) and the mass air flow sensor.

VARIOUS FUEL INJECTION INCREASE/DECREASE COMPENSATION

In addition, the amount of fuel injected is compensated to improve engine performance under various operating conditions as listed below.

<Fuel increase>
- During warm-up
- When starting the engine
- During acceleration
- Hot-engine operation
- When selector lever position is changed from N to D
- High-load, high-speed operation

<Fuel decrease>
- During deceleration
- During high engine speed operation

MIXTURE RATIO FEEDBACK CONTROL (CLOSED LOOP CONTROL)

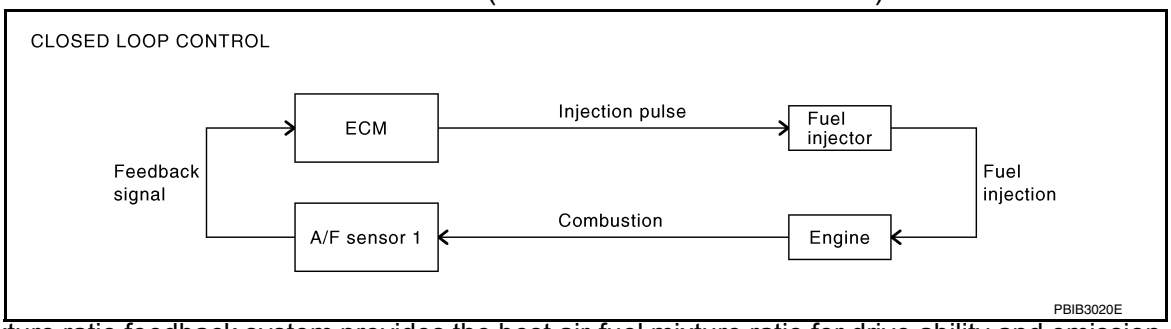

The mixture ratio feedback system provides the best air-fuel mixture ratio for drive ability and emission control. The three way catalyst (manifold) can better reduce CO, HC and NOx emissions. This system uses A/F sensor 1 in the exhaust manifold to monitor whether the engine operation is rich or lean. The ECM adjusts the injection pulse width according to the sensor voltage signal. For more information about A/F sensor 1, refer to EC-24, "Air Fuel Ratio (A/F) Sensor 1". This maintains the mixture ratio within the range of stoichiometric (ideal air-fuel mixture).

This stage is referred to as the closed loop control condition.

Heated oxygen sensor 2 is located downstream of the three way catalyst (manifold). Even if the switching characteristics of A/F sensor 1 shift, the air-fuel ratio is controlled to stoichiometric by the signal from heated oxygen sensor 2.

- Open Loop Control
  The open loop system condition refers to when the ECM detects any of the following conditions. Feedback control stops in order to maintain stabilized fuel combustion.

- Deceleration and acceleration
- High-load, high-speed operation
- Malfunction of A/F sensor 1 or its circuit
- Insufficient activation of A/F sensor 1 at low engine coolant temperature
- High engine coolant temperature
- During warm-up
- After shifting from N to D
- When starting the engine

MIXTURE RATIO SELF-LEARNING CONTROL

The mixture ratio feedback control system monitors the mixture ratio signal transmitted from A/F sensor 1. This feedback signal is then sent to the ECM. The ECM controls the basic mixture ratio as close to the theoretical mixture ratio as possible. However, the basic mixture ratio is not necessarily controlled as originally designed. Both manufacturing differences (i.e., mass air flow sensor hot wire) and characteristic changes during operation (i.e., fuel injector clogging) directly affect mixture ratio.

Accordingly, the difference between the basic and theoretical mixture ratios is monitored in this system. This is then computed in terms of “injection pulse duration” to automatically compensate for the difference between the two ratios.

“Fuel trim” refers to the feedback compensation value compared against the basic injection duration. Fuel trim includes “short-term fuel trim” and “long-term fuel trim”.

“Short-term fuel trim” is the short-term fuel compensation used to maintain the mixture ratio at its theoretical value. The signal from A/F sensor 1 indicates whether the mixture ratio is RICH or LEAN compared to the theoretical value. The signal then triggers a reduction in fuel volume if the mixture ratio is rich, and an increase in fuel volume if it is lean.

“Long-term fuel trim” is overall fuel compensation carried out over time to compensate for continual deviation of the “short-term fuel trim” from the central value. Continual deviation will occur due to individual engine differences, wear over time and changes in the usage environment.

FUEL INJECTION TIMING

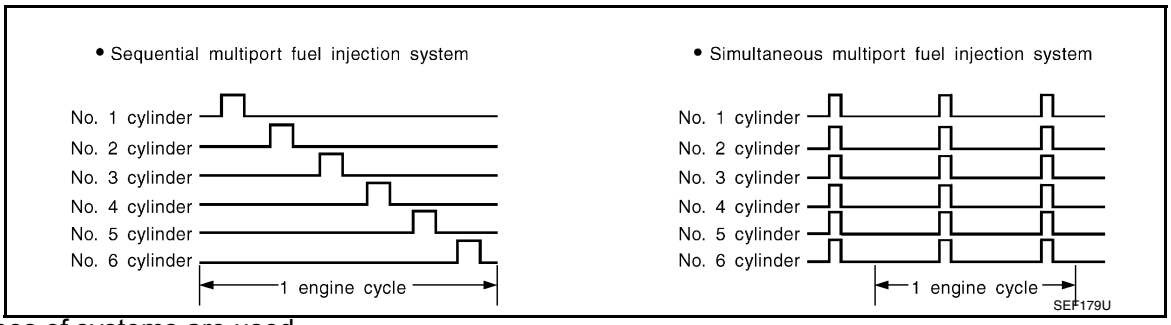

Two types of systems are used.

- Sequential Multiport Fuel Injection System
  Fuel is injected into each cylinder during each engine cycle according to the ignition order. This system is used when the engine is running.
- Simultaneous Multiport Fuel Injection System
  Fuel is injected simultaneously into all six cylinders twice each engine cycle. In other words, pulse signals of the same width are simultaneously transmitted from the ECM.
  The six injectors will then receive the signals 2 times for each engine cycle.
  This system is used when the engine is being started and/or if the fail-safe system (CPU) is operating.

FUEL SHUT-OFF

Fuel to each cylinder is cut off during deceleration, operation of the engine at excessively high speeds or operation of the vehicle at excessively high speeds.

ELECTRIC IGNITION SYSTEM

ELECTRIC IGNITION SYSTEM : System Description

INFOID:0000000011148474

SYSTEM DIAGRAM

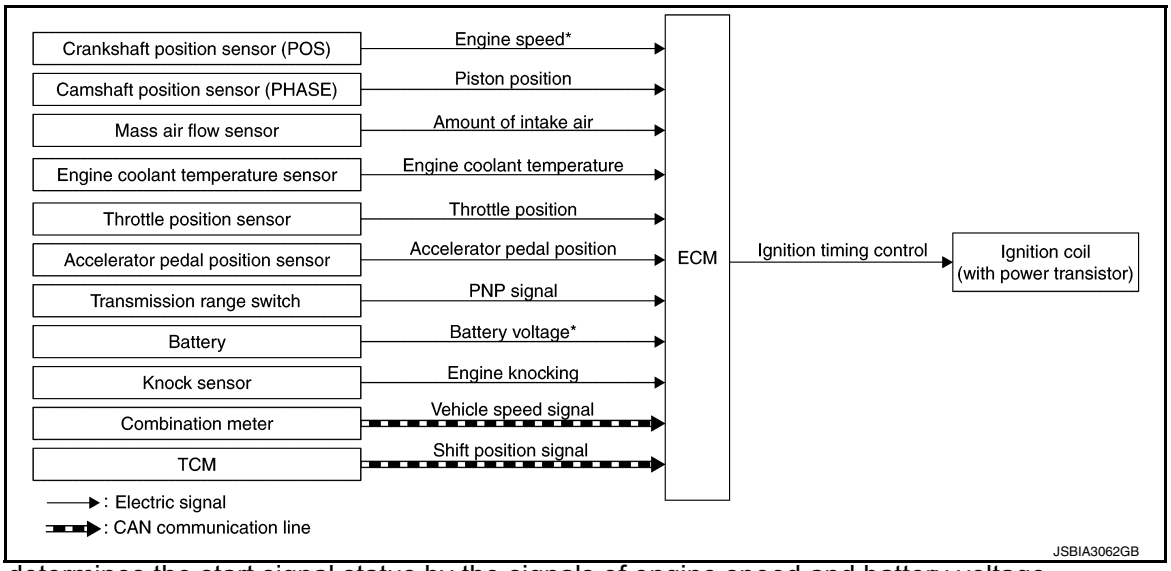

*: ECM determines the start signal status by the signals of engine speed and battery voltage.

SYSTEM DESCRIPTION

Ignition order: 1 - 2 - 3 - 4 - 5 - 6

The ignition timing is controlled by the ECM to maintain the best air-fuel ratio for every running condition of the engine. The ignition timing data is stored in the ECM.

The ECM receives information such as the injection pulse width and camshaft position sensor (PHASE) signal. Computing this information, ignition signals are transmitted to the power transistor.

During the following conditions, the ignition timing is revised by the ECM according to the other data stored in the ECM.

- At starting
- During warm-up
- At idle
- At low battery voltage

• During acceleration

The knock sensor retard system is designed only for emergencies. The basic ignition timing is programmed within the anti-knocking zone, if recommended fuel is used under dry conditions. The retard system does not operate under normal driving conditions. If engine knocking occurs, the knock sensor monitors the condition. The signal is transmitted to the ECM. The ECM retards the ignition timing to eliminate the knocking condition.

AIR CONDITIONING CUT CONTROL

AIR CONDITIONING CUT CONTROL : System Description

INFOID:0000000011148475

SYSTEM DIAGRAM

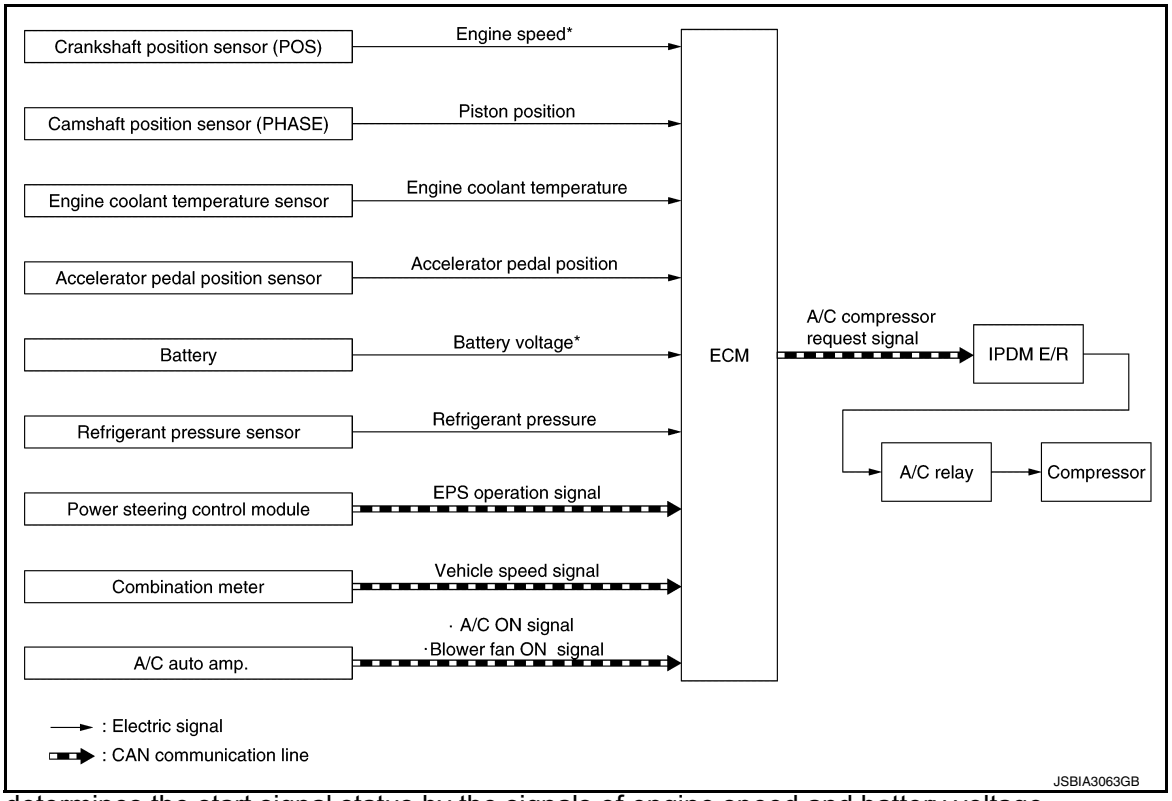

*: ECM determines the start signal status by the signals of engine speed and battery voltage.

SYSTEM DESCRIPTION

This system improves engine operation when the air conditioner is used.
Under the following conditions, the air conditioner is turned OFF.

- When the accelerator pedal is fully depressed.
- When cranking the engine.
- At high engine speeds.
- When the engine coolant temperature becomes excessively high.
- When operating power steering during low engine speed or low vehicle speed.
- When engine speed is excessively low.
- When refrigerant pressure is excessively low or high.

AUTOMATIC SPEED CONTROL DEVICE (ASCD)

AUTOMATIC SPEED CONTROL DEVICE (ASCD) : System Description

INFOID:0000000011148476

SYSTEM DIAGRAM

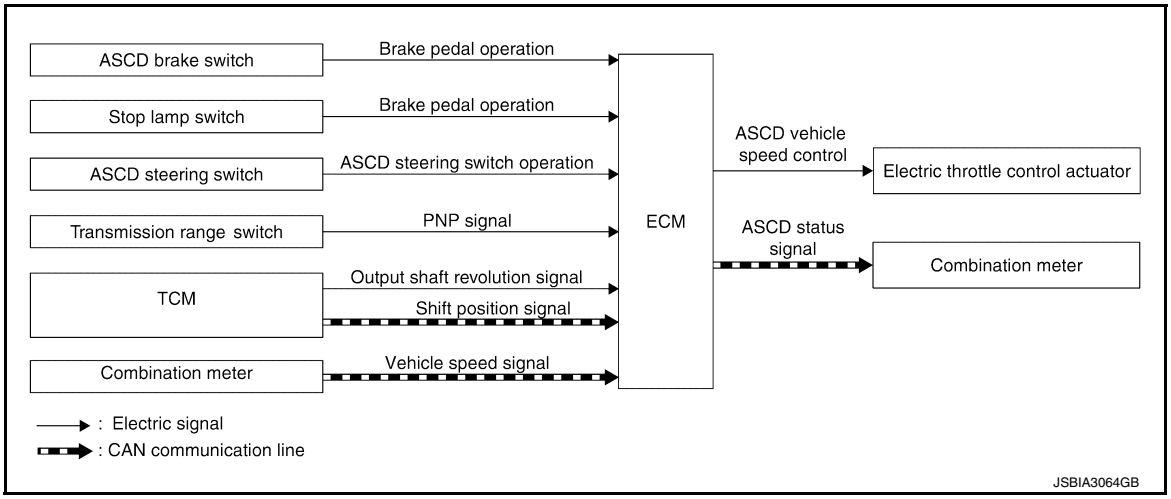

BASIC ASCD SYSTEM

Refer to Owner's Manual for ASCD operating instructions.

Automatic Speed Control Device (ASCD) allows a driver to keep vehicle at predetermined constant speed without depressing accelerator pedal. Driver can set vehicle speed in advance between approximately 40 km/h (25 MPH) and 144 km/h (89 MPH).

ECM controls throttle angle of electric throttle control actuator to regulate engine speed.

Operation status of ASCD is indicated by CRUISE indicator and SET indicator in combination meter. If any malfunction occurs in the ASCD system, it automatically deactivates control.

NOTE:

Always drive vehicle in a safe manner according to traffic conditions and obey all traffic laws.

SET OPERATION

Press MAIN switch. (The CRUISE indicator in combination meter illuminates.)

When vehicle speed reaches a desired speed between approximately 40 km/h (25 MPH) and 144 km/h (89 MPH), press SET/COAST switch. (Then SET lamp in combination meter illuminates.)

ACCELERATE OPERATION

If the RESUME/ACCELERATE switch is pressed during cruise control driving, increase the vehicle speed until the switch is released or vehicle speed reaches maximum speed controlled by the system.

And then ASCD will maintain the new set speed.

CANCEL OPERATION

When any of following conditions exist, cruise operation will be canceled.

- CANCEL switch is pressed.
- More than 2 switches at ASCD steering switch are pressed at the same time. (Set speed will be cleared.)
- Brake pedal is depressed.
- Selector lever is in the N, P, and R positions.
- Vehicle speed decreased to 13 km/h (8 MPH) lower than the set speed.
- TCS system is operated.

When the ECM detects any of the following conditions, the ECM will cancel the cruise operation and inform the driver by blinking indicator lamp.

- Engine coolant temperature is slightly higher than the normal operating temperature, CRUISE lamp may blink slowly.
  When the engine coolant temperature decreases to the normal operating temperature, CRUISE lamp will stop blinking and the cruise operation will be able to work by pressing SET/COAST switch or RESUME/ACCELERATE switch.
- Malfunction for some self-diagnoses regarding ASCD control: SET indicator will blink quickly.

If MAIN switch is turned to OFF while ASCD is activated, all of ASCD operations will be canceled and vehicle speed memory will be erased.

COAST OPERATION

When the SET/COAST switch is pressed during cruise control driving, decrease vehicle set speed until the switch is released. And then ASCD will maintain the new set speed.

RESUME OPERATION

When the RESUME/ACCELERATE switch is pressed after cancel operation other than pressing MAIN switch is performed, vehicle speed will return to last set speed. To resume vehicle set speed, vehicle condition must meet following conditions.

- Brake pedal is released
- Selector lever is in the P and N positions
- Vehicle speed is greater than 40 km/h (25 MPH) and less than 144 km/h (89 MPH)

COOLING FAN CONTROL

COOLING FAN CONTROL : System Description

INFOID:0000000011148477

SYSTEM DIAGRAM

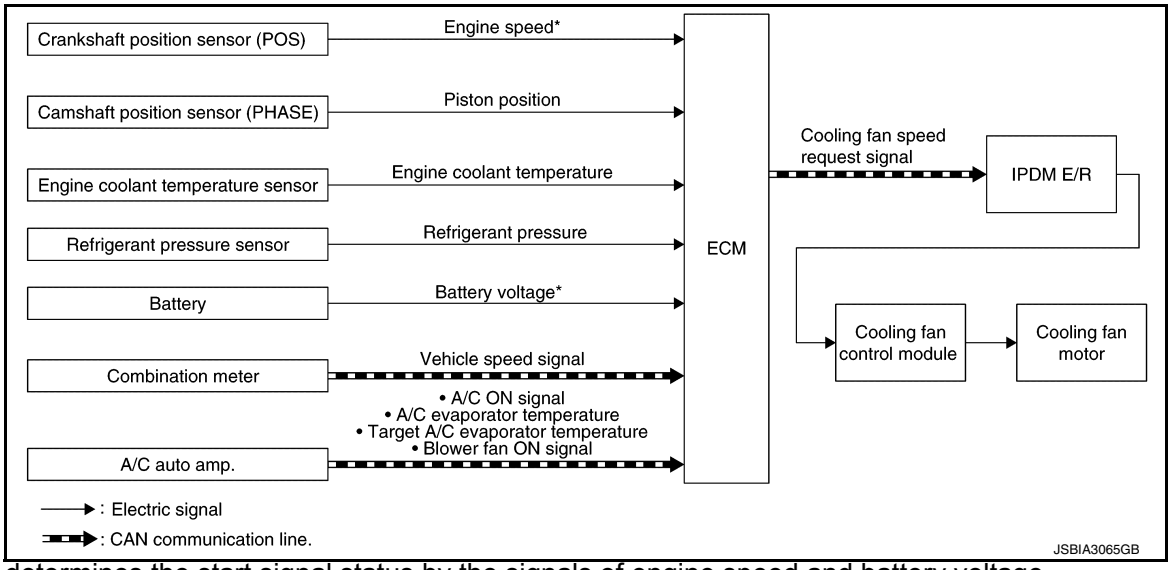

*: ECM determines the start signal status by the signals of engine speed and battery voltage.

SYSTEM DESCRIPTION

ECM controls cooling fan speed corresponding to engine speed, engine coolant temperature, refrigerant pressure, battery voltage, vehicle speed, A/C ON signal, A/C evaporator temperature, target A/C evaporator temperature and blower fan ON signal.

Cooling fan speed request signal is sent to IPDM E/R from ECM via the CAN communication line. Then, IPDM E/R sends ON/OFF pulse duty signal to cooling fan control module. Corresponding to this ON/OFF pulse duty signal, cooling fan control module gives cooling fan motor operating voltage to cooling fan motors. Cooling fan speed is controlled by duty cycle of cooling fan motor operating voltage sent from cooling fan control module.

ELECTRONIC CONTROLLED ENGINE MOUNT

ELECTRONIC CONTROLLED ENGINE MOUNT : System Description

INFOID:0000000011148478

SYSTEM DIAGRAM

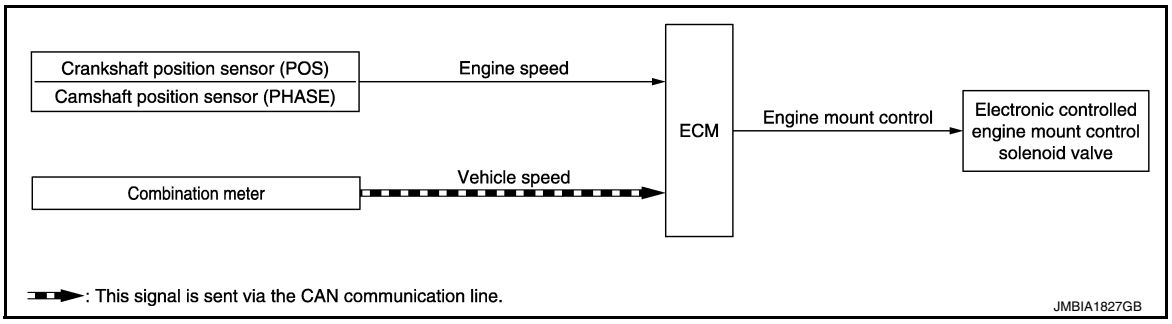

SYSTEM DESCRIPTION

The ECM controls the engine mount operation corresponding to the engine speed. The control system has a 2-step control [Soft/Hard]

Vehicle condition	Engine mount control
Engine speed: Below 950 rpm	Soft
Engine speed: Above 950 rpm	Hard

ELECTRONIC CONTROLLED ENGINE MOUNT LINE DRAWING

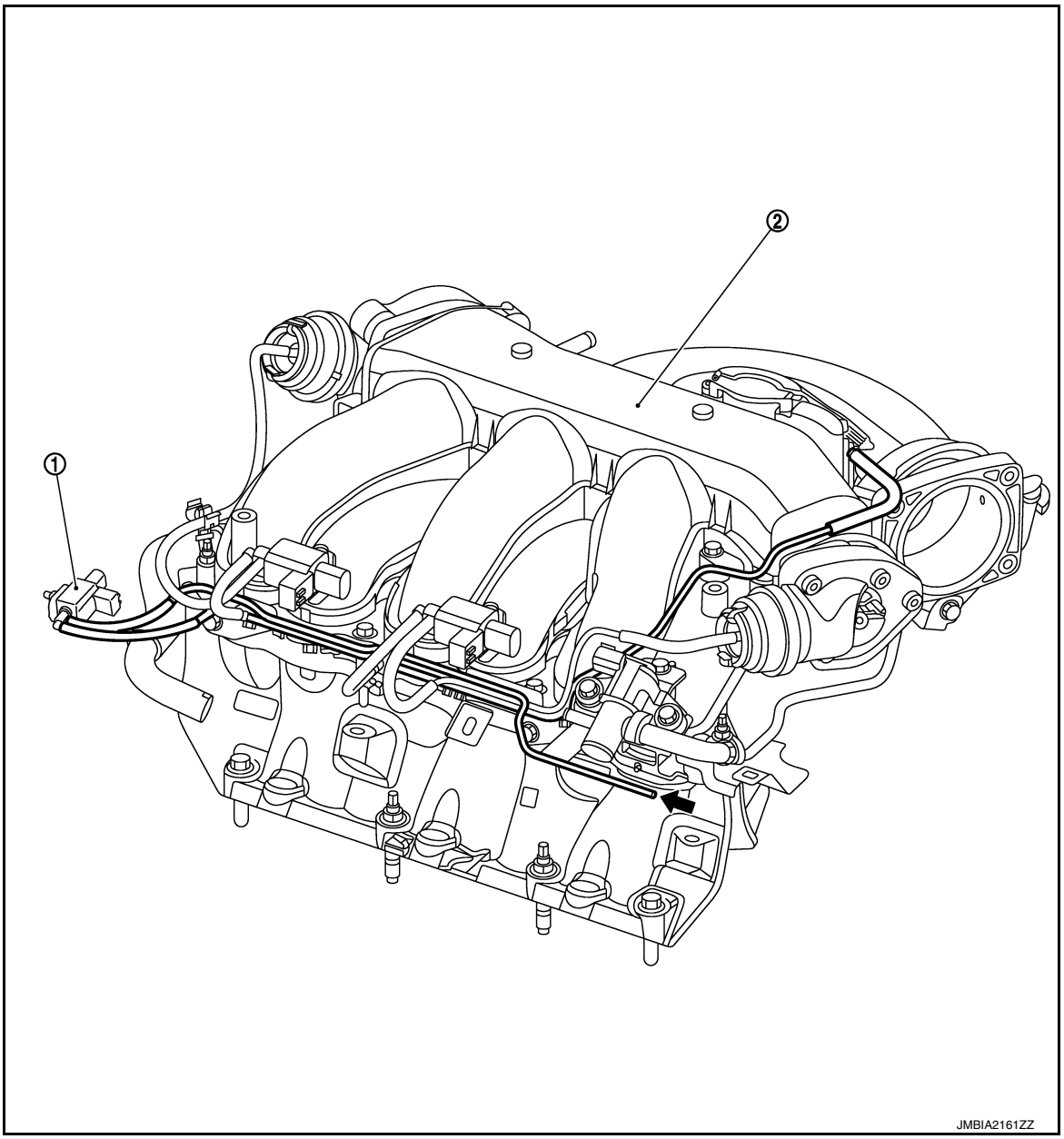

① Electronic controlled engine mount control solenoid valve
② Intake manifold collector
⬅ : From next figure

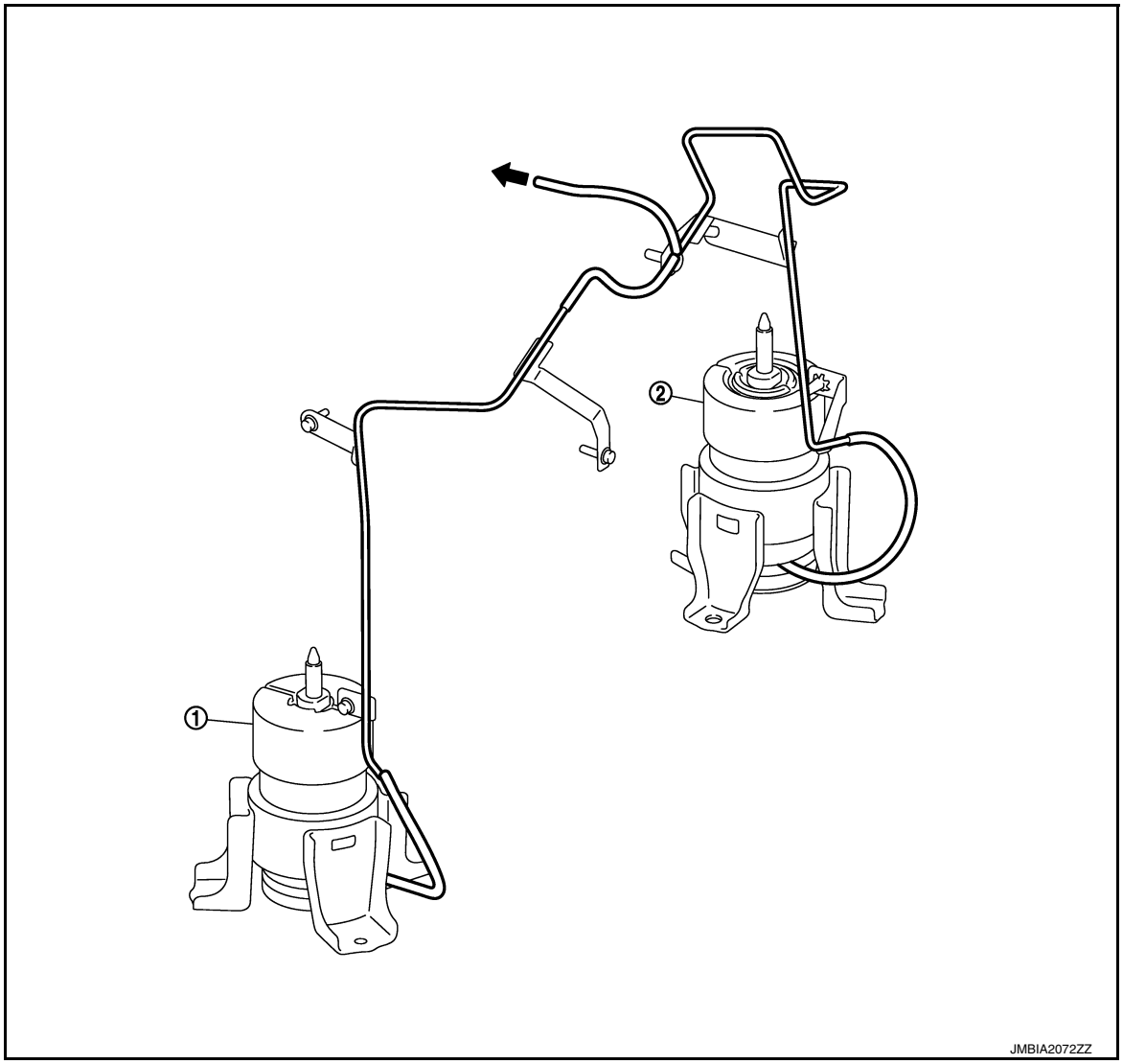

① Front electronic controlled engine mount ② Rear electronic controlled engine mount

⬅ : To previous figure

NOTE:
Do not use soapy water or any type of solvent while installing vacuum hose.

EVAPORATIVE EMISSION SYSTEM

EVAPORATIVE EMISSION SYSTEM : System Description

INFOID:0000000011148479

SYSTEM DIAGRAM

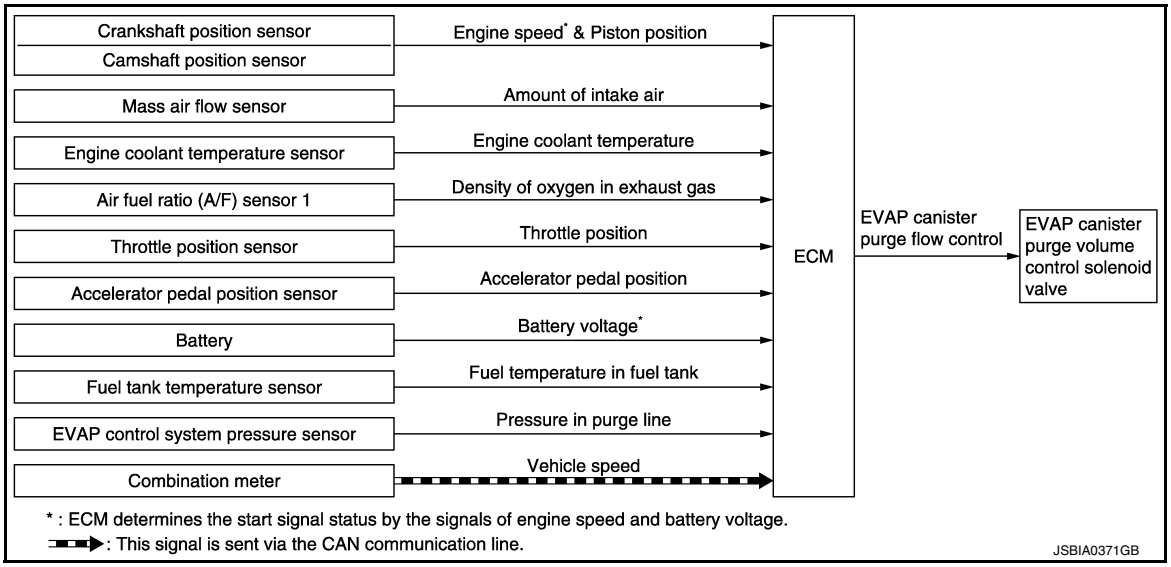

SYSTEM DESCRIPTION

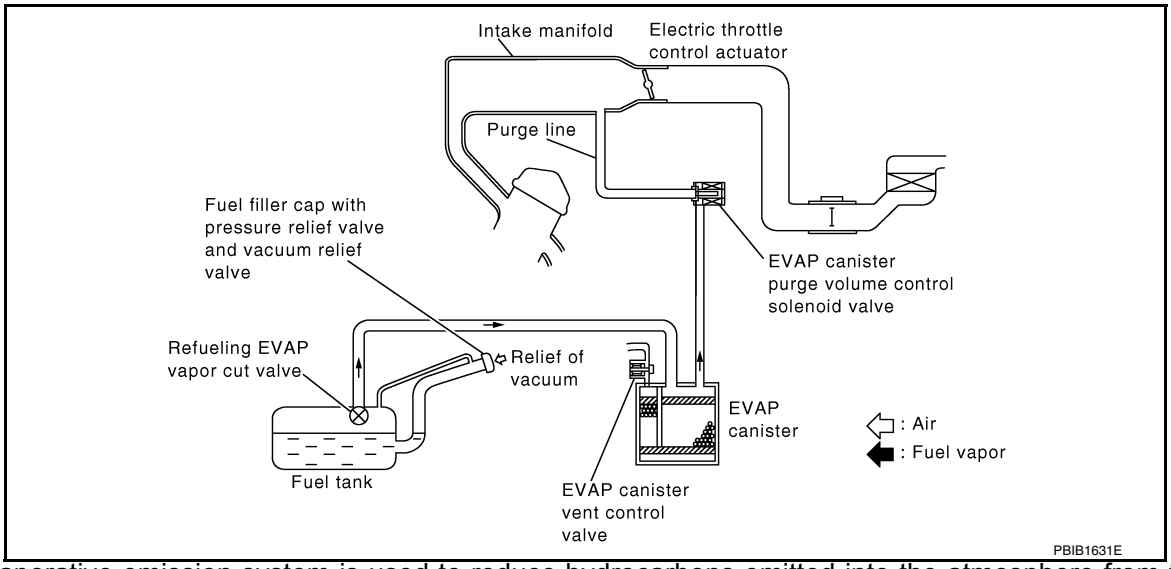

The evaporative emission system is used to reduce hydrocarbons emitted into the atmosphere from the fuel system. This reduction of hydrocarbons is accomplished by activated charcoals in the EVAP canister.
The fuel vapor in the sealed fuel tank is led into the EVAP canister which contains activated carbon and the vapor is stored there when the engine is not operating or when refueling to the fuel tank.
The vapor in the EVAP canister is purged by the air through the purge line to the intake manifold when the engine is operating. EVAP canister purge volume control solenoid valve is controlled by ECM. When the engine operates, the flow rate of vapor controlled by EVAP canister purge volume control solenoid valve is proportionally regulated as the air flow increases.
EVAP canister purge volume control solenoid valve also shuts off the vapor purge line during decelerating and idling.

THROTTLE CONTROL

THROTTLE CONTROL : System Description

INFOID:0000000011148480

SYSTEM DIAGRAM

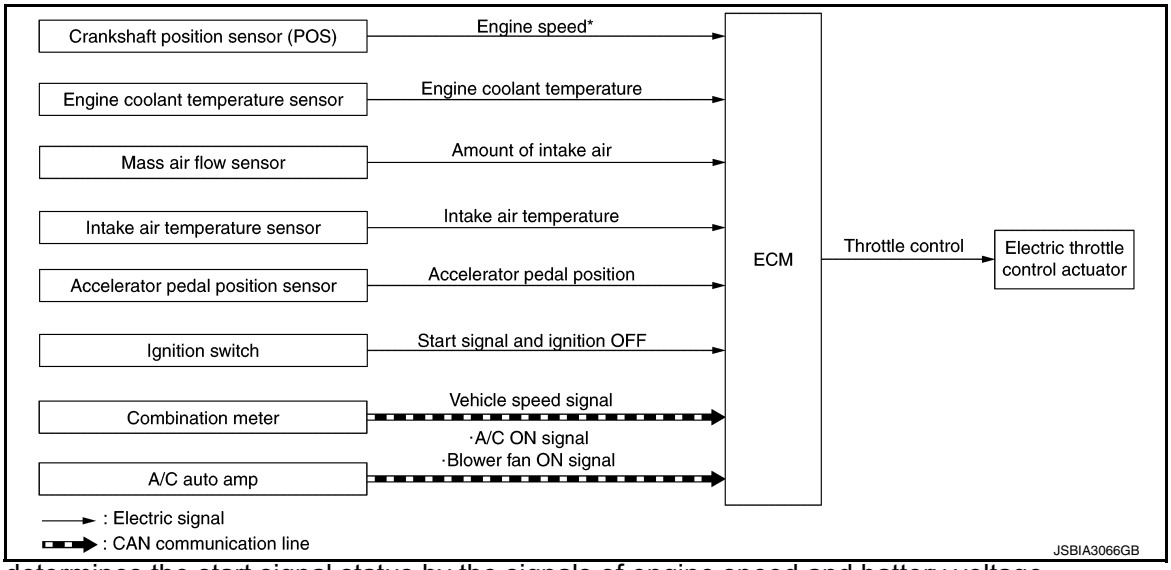

*: ECM determines the start signal status by the signals of engine speed and battery voltage.

SYSTEM DESCRIPTION

ECM calculates the value of signal transmitted from the accelerator pedal and activates the throttle valve by transmitting a control signal to the electric throttle control actuator. This allows the optimum throttle angle and improves drivability and fuel consumption. In addition, ECM learns the fully closed position every time when the ignition switch is turned OFF to improve the accuracy in throttle valve position.

When a malfunction occurs in the throttle control system, the throttle valve is closed by the return spring and maintains the minimum engine speed by holding a slightly opened condition which is close to the fully opened condition. This allows the securing of brake system, power steering system, and electric system and the ensuring of the safety.

INTAKE VALVE TIMING CONTROL

INTAKE VALVE TIMING CONTROL : System Description

INFOID:0000000011148481

INTAKE VALVE TIMING CONTROL

System Diagram

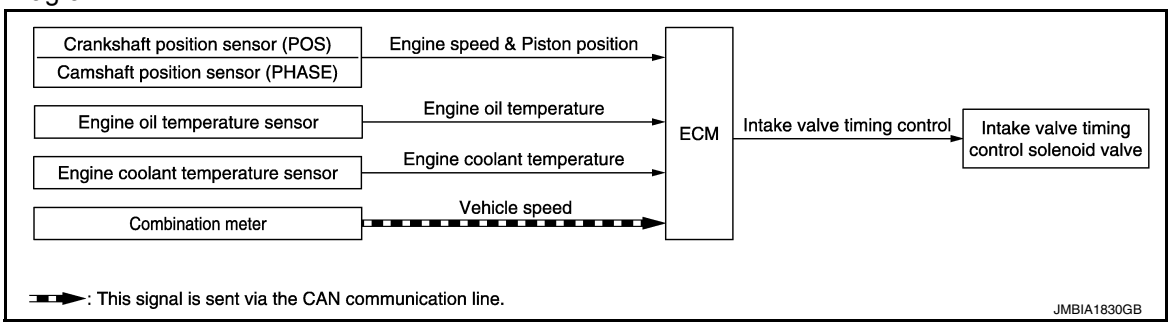

System Description

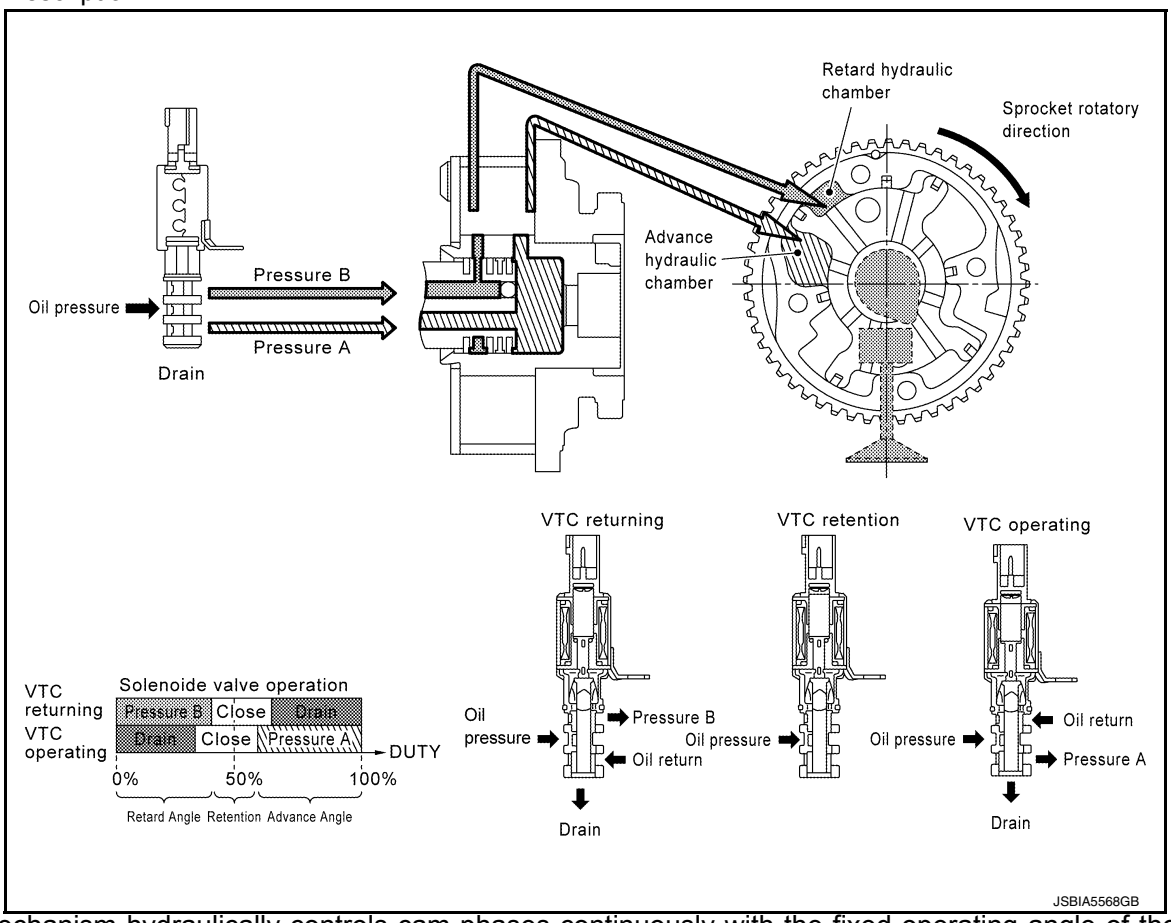

This mechanism hydraulically controls cam phases continuously with the fixed operating angle of the intake valve.

The ECM receives signals such as crankshaft position, camshaft position, engine speed, and engine coolant temperature. Then, the ECM sends ON/OFF pulse duty signals to the intake valve timing (IVT) control solenoid valve depending on driving status. This makes it possible to control the shut/open timing of the intake valve to increase engine torque in low/mid speed range and output in high-speed range.

INTAKE VALVE TIMING INTERMEDIATE LOCK CONTROL

System Diagram

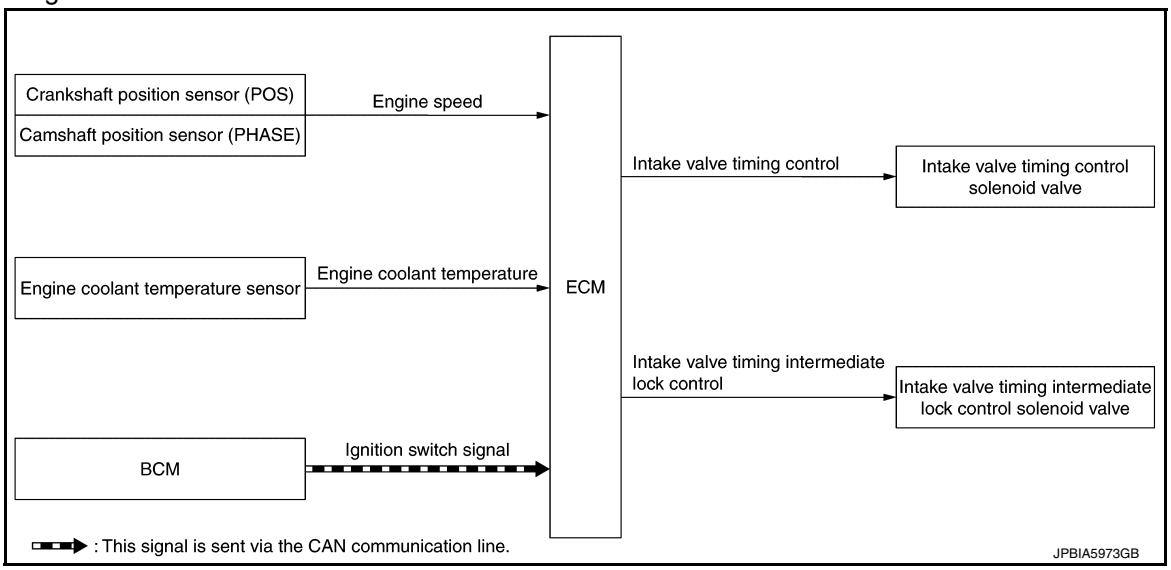

System Description

The intake valve timing intermediate lock control improves the cleaning ability of exhaust gas at cold starting by fixing the camshaft sprocket (INT) with two lock pins and bringing the cam phase into intermediate phase.

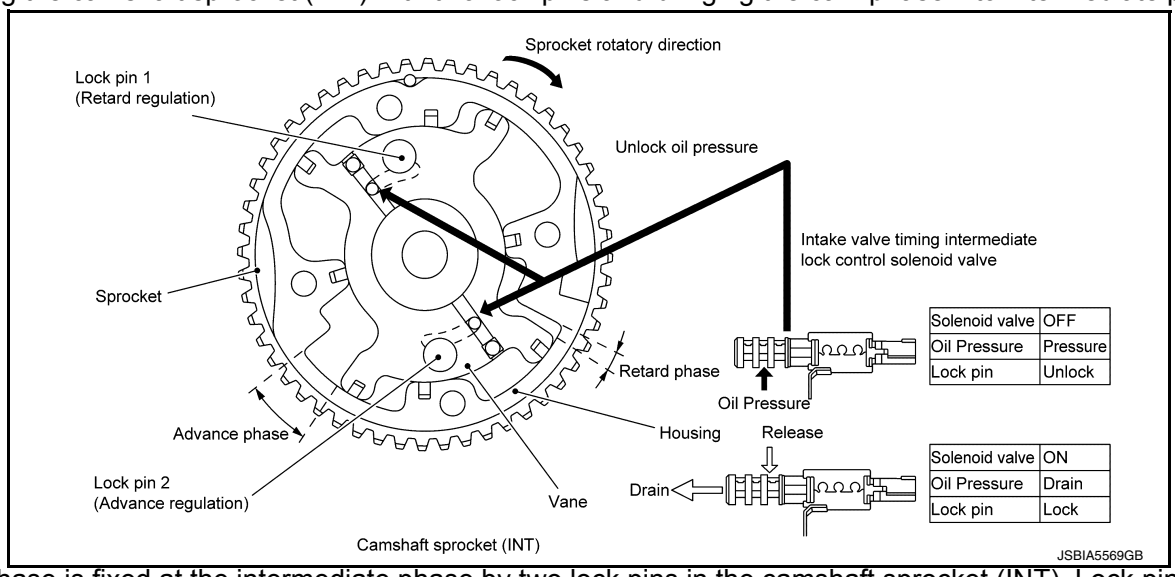

Cam phase is fixed at the intermediate phase by two lock pins in the camshaft sprocket (INT). Lock pin 1 controls retard position and lock pin 2 controls advance position.
ECM controls the intermediate phase lock by opening/closing the intake valve timing intermediate lock control solenoid valve to control oil pressure acting on the lock pin and locking/unlocking the lock pin.

Lock/Unlock Activation

When ECM activates the intake valve timing intermediate lock control solenoid valve, oil pressure generated in the oil pump is drained through the oil pressure path in the control valve. Since oil pressure is not acted on the lock pin, the lock pin position is fixed by the spring tension and the cam phase is fixed at the intermediate phase.
When ECM deactivates the intake valve timing intermediate lock control solenoid valve, unlocking oil pressure acts on each lock pin. Lock pin 1 is not released because it is under load due to sprocket rotational force. For this reason, lock pin 2 is released first by being pushed up by unlocking oil pressure. When lock pin 2 is released, some clearance is formed between lock pin 1 and the rotor due to sprocket rotational force and return spring force. Accordingly, lock pin 1 is pushed up by unlocking oil pressure and the intermediated phase lock is released.

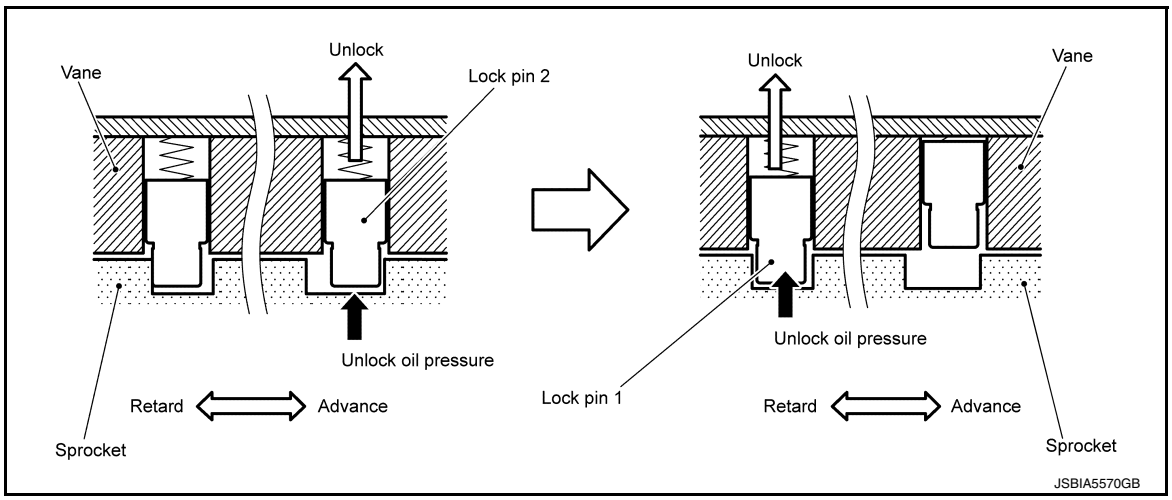

When stopping the engine

When the ignition switch is turned from idle state to OFF, ECM receives an ignition switch signal from BCM via CAN communication and activates the intake valve timing intermediate lock control solenoid valve and drains oil pressure acting on the lock pin before activating the intake valve timing control solenoid valve and operating the cam phase toward the advance position.
The cam phase is fixed by the lock pin when shifting to the intermediated phase and ECM performs Lock judgment to stop the engine.

When starting the engine

When starting the engine by cold start, ECM judges the locked/unlocked state when ignition switch is turned ON. When judged as locked state (fixed at the intermediate phase), the intake valve timing intermediate lock control solenoid valve is activated. Since oil pressure does not act on the lock pin even when the engine is started, the cam phase is fixed at the intermediate phase and the intake valve timing control is not performed.
When the engine stops without locking the cam phase at the intermediate phase due to an engine stall and the state is not judged as locked, the intake valve timing intermediate lock control solenoid valve and the intake valve timing control solenoid valve are activated and the cam phase shifts to the advanced position to be locked at the intermediate phase. Even when not locked in the intermediate lock phase due to no oil pressure or low oil pressure, a ratchet structure of the camshaft sprocket (INT) rotor allows the conversion to the intermediate phase in stages by engine vibration.
When engine coolant temperature is more than 60°C, the intake valve timing is controlled by deactivating the intake valve timing intermediate lock control solenoid valve and releasing the intermediate phase lock.
When the engine is started after warming up, ECM releases the intermediate phase lock immediately after the engine start and controls the intake valve timing.

EXHAUST VALVE TIMING CONTROL

EXHAUST VALVE TIMING CONTROL : System Description

INFOID:0000000011491918

SYSTEM DIAGRAM

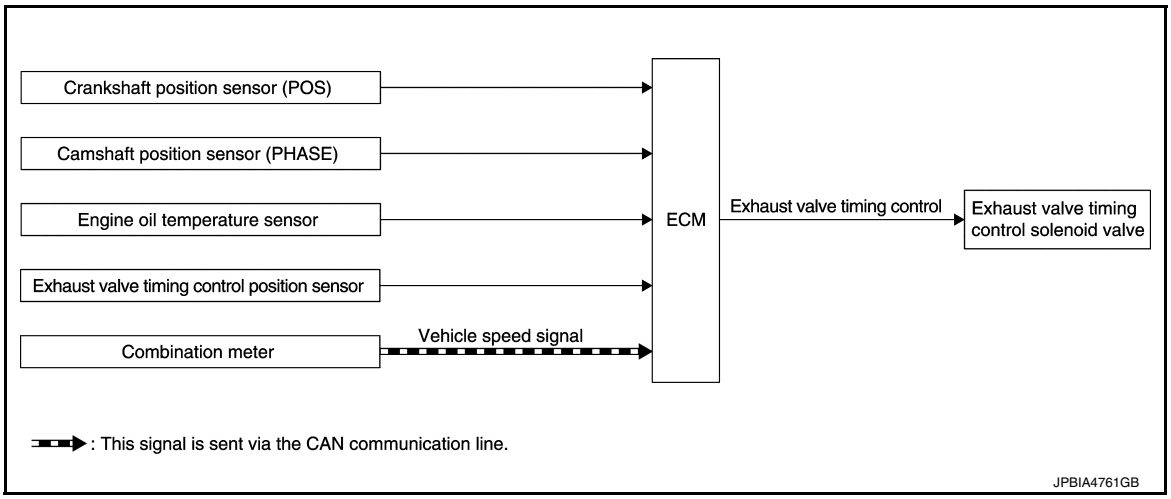

INPUT/OUTPUT SIGNAL CHART

Sensor	Input signal to ECM		ECM function	Actuator
Crankshaft position sensor (POS)	Engine speed and piston position		Exhaust valve timing control	Exhaust valve timing control solenoid valve
Camshaft position sensor (PHASE)				
Engine oil temperature sensor	Engine oil temperature			
Exhaust valve timing control position sensor	Exhaust valve timing signal			
Combination meter	CAN communication	Vehicle speed signal		

SYSTEM DESCRIPTION

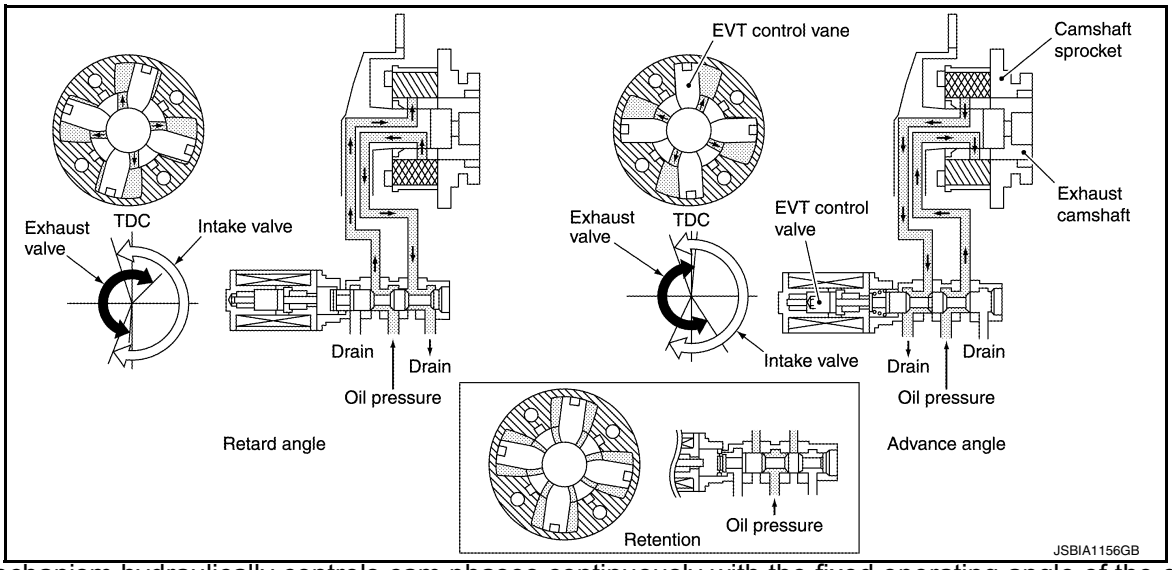

This mechanism hydraulically controls cam phases continuously with the fixed operating angle of the exhaust valve.
The ECM receives signals such as crankshaft position, camshaft position, engine speed, and engine oil temperature. Then, the ECM sends ON/OFF pulse duty signals to the exhaust valve timing (EVT) control solenoid valve depending on driving status. This makes it possible to control the shut/open timing of the exhaust valve to increase engine torque and output in a range of high engine speed.

ENGINE PROTECTION CONTROL AT LOW ENGINE OIL PRESSURE

ENGINE PROTECTION CONTROL AT LOW ENGINE OIL PRESSURE : System Description

INFOID:0000000011148482

SYSTEM DIAGRAM

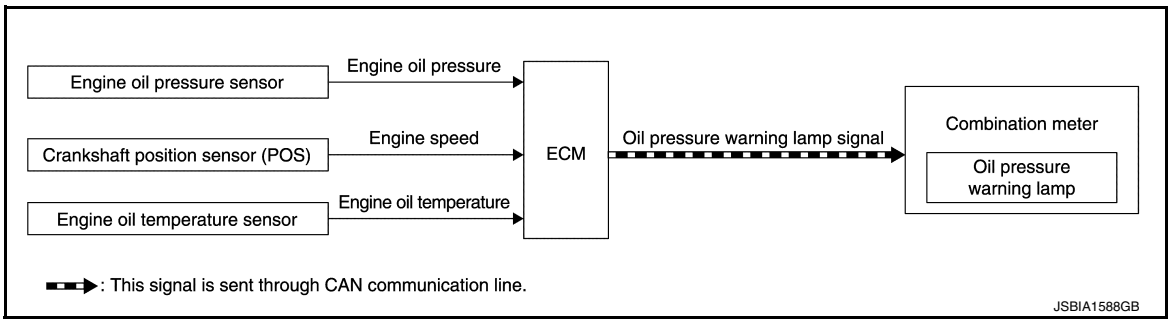

SYSTEM DESCRIPTION

- The engine protection control at low engine oil pressure warns the driver of a decrease in engine oil pressure by the oil pressure warning lamp before the engine becomes damaged.
- When detecting a decrease in engine oil pressure at an engine speed less than 1,000 rpm, ECM transmits an oil pressure warning lamp signal to the combination meter. The combination meter turns ON the oil pressure warning lamp, according to the signal.
- When detecting a decrease in engine oil pressure at an engine speed 1,000 rpm or more, ECM transmits an oil pressure warning lamp signal to the combination meter.
  The combination meter turns ON the oil pressure warning lamp, according to the signals. When detecting a decrease in engine oil pressure, ECM cuts fuel if the engine speed exceeds the specified value.

Decrease in engine oil pressure	Engine speed	Combination meter	Fuel cut
		Oil pressure warning lamp	
Detection	Less than 1,000 rpm	ON*	NO
	1,000 rpm or more	ON	YES

*: When detecting a normal engine oil pressure, ECM turns OFF the oil pressure warning lamp.

FUEL FILLER CAP WARNING SYSTEM

FUEL FILLER CAP WARNING SYSTEM : System Description

INFOID:0000000011148483

SYSTEM DIAGRAM

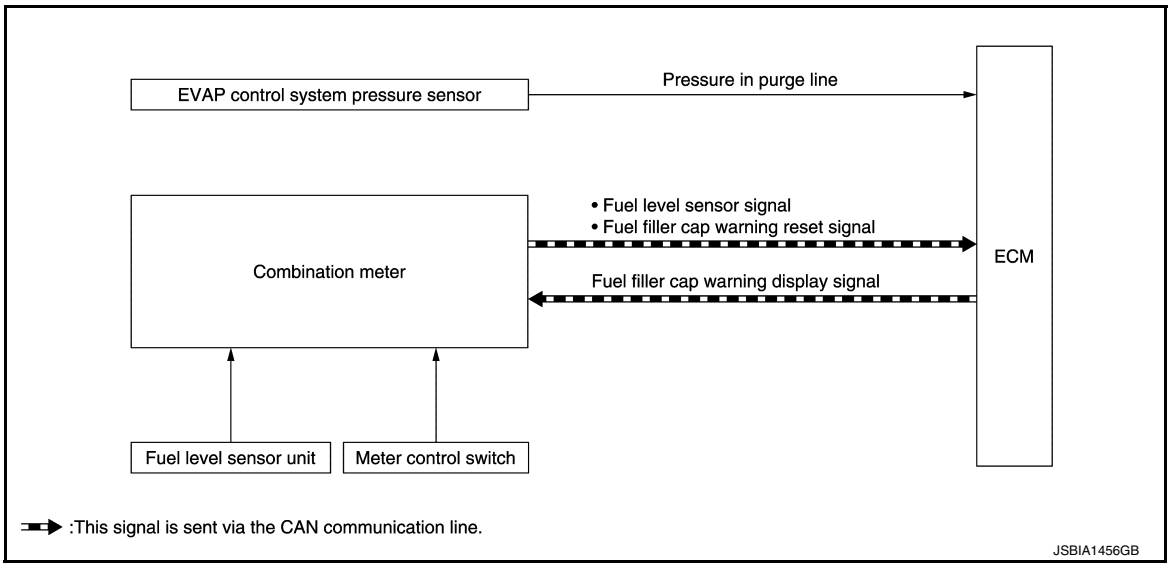

SYSTEM DESCRIPTION

The fuel filler cap warning system alerts the driver to the prevention of the fuel filler being left uncapped and malfunction occurrences after refueling, by turning ON the fuel filler cap warning display on the combination meter.

ECM judges a refueled state, based on a fuel level signal transmitted from the combination meter.

When a very small leak is detected through the EVAP leak diagnosis performed after judging the refueled state, ECM transmits a fuel filler cap warning display signal (request for display ON) to the combination meter via CAN communication.

When receiving the signal, the combination meter turns ON the fuel filler cap warning display.

CAUTION:

Check fuel filler cap installation condition when the fuel filler cap warning display turns ON.

Reset Operation

The fuel filler cap warning lamp tunes OFF, according to any condition listed below:

- Reset operation is performed by operating the meter control switch on the combination meter.
  - When the reset operation is performed, the combination meter transmits a fuel filler cap warning reset signal to ECM via CAN communication. ECM transmits a fuel filler cap warning display signal (request for display OFF) to the combination meter via CAN communication. When receiving the signal, the combination meter turns OFF the fuel filler cap warning display.
- EVAP leak diagnosis result is normal.
- Fuel refilled.
- DTC erased by using CONSULT.

NOTE:

MIL turns ON if a malfunction is detected in leak diagnosis results again at the trip after the fuel filler cap warning display turns ON/OFF.

VARIABLE INDUCTION AIR SYSTEM

VARIABLE INDUCTION AIR SYSTEM : System Description

INFOID:0000000011148484

SYSTEM DIAGRAM

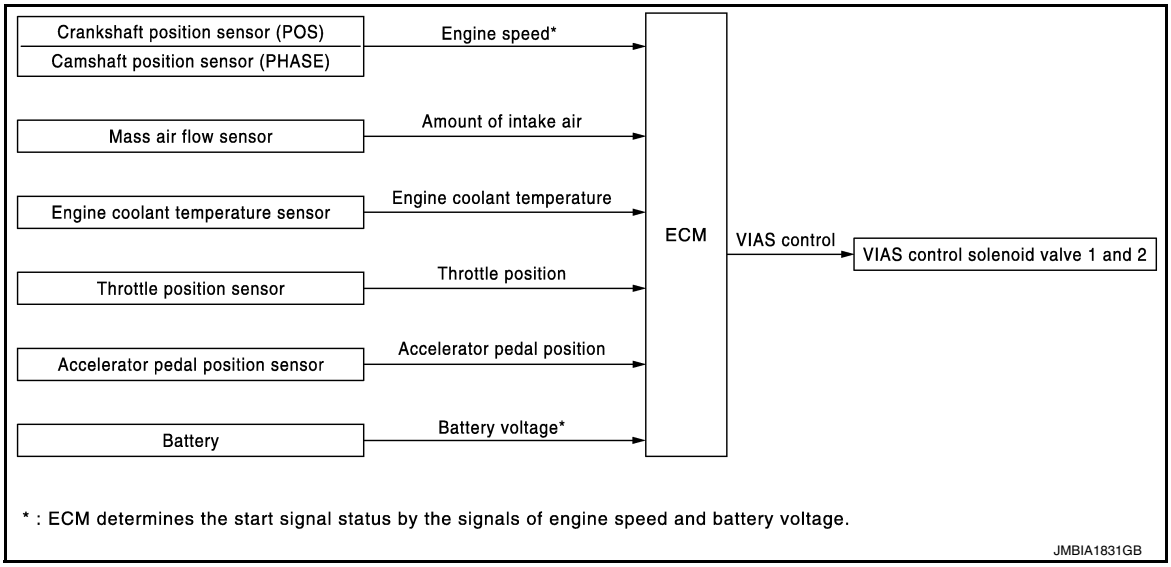

SYSTEM DESCRIPTION

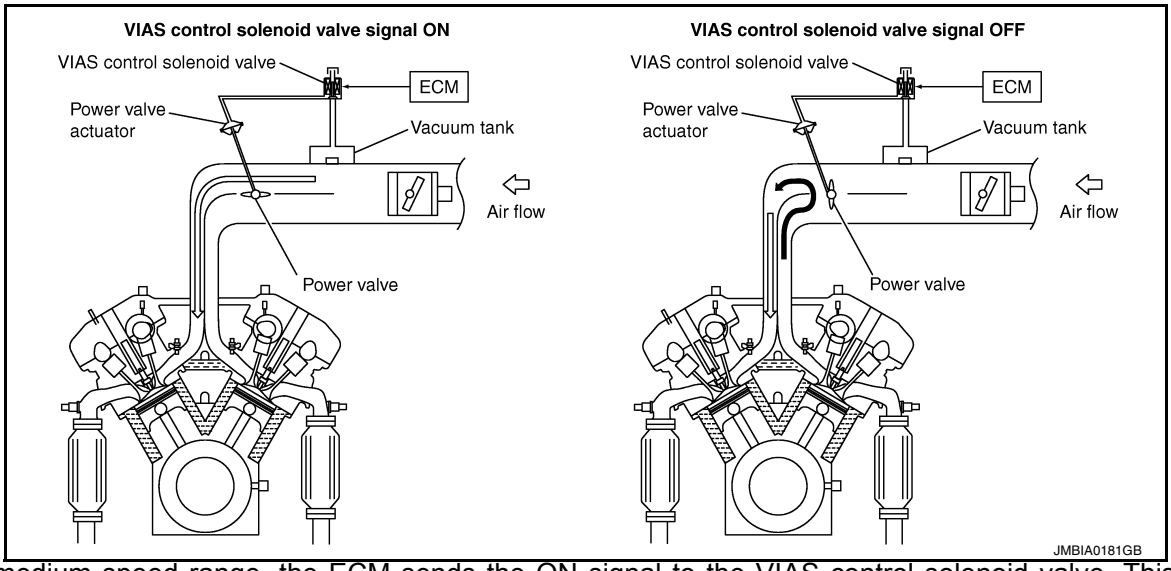

In the medium speed range, the ECM sends the ON signal to the VIAS control solenoid valve. This signal introduces the intake manifold vacuum into the power valve actuator and therefore closes the power valve. Under this condition, the pressure waves of the exhaust stroke do not disturb the pressure waves of the intake stroke of each opposite bank. Therefore, charging efficiency is increased together with the effect of the long intake passage.

However, in the high speed range, the ECM sends the OFF signal to the VIAS control solenoid valve and the power valve is opened. Under this condition, the pressure waves of intake stroke are resonant with those of each opposite bank exhaust stroke. Therefore, charging efficiency is also increased.

In addition, both valves 1 and 2 are opened or closed in other ranges mentioned above. Thus maximum charging efficiency is obtained for the various driving conditions.

VACUUM HOSE DRAWING

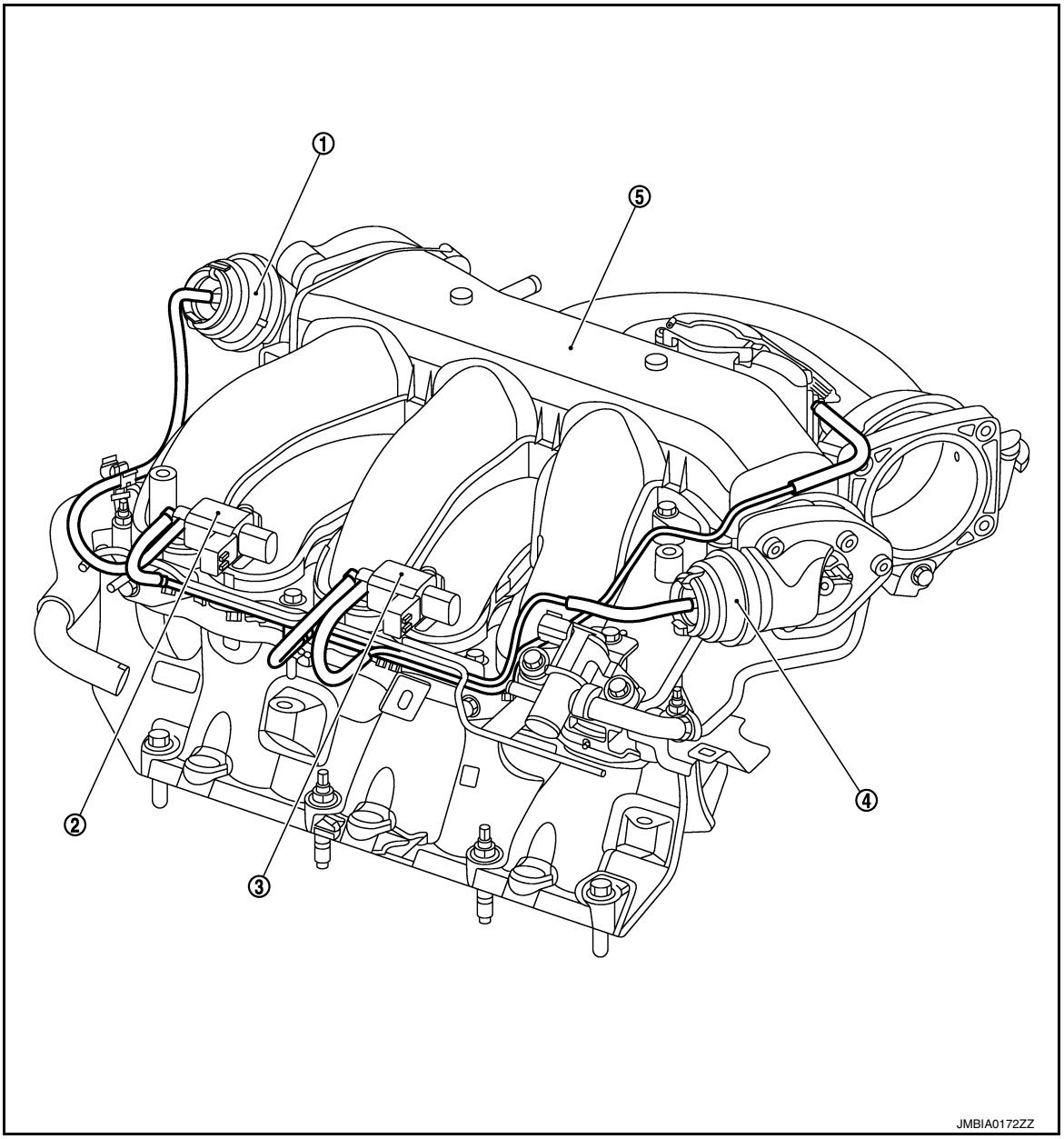

① Power valve actuator 1 ② VIAS control solenoid valve 1 ③ VIAS control solenoid valve 2
④ Power valve actuator 2 ⑤ Intake manifold collector

INTEGRATED CONTROL OF ENGINE, CVT, AND ABS

INTEGRATED CONTROL OF ENGINE, CVT, AND ABS : System Description

INFOID:0000000011148485

Real time communications (signal exchange) among control units (e.g. ECM, CVT, ABS, and combination meter) via CAN communication optimizes engine torque and lock-up during gear shift and prevents engine speed from decreasing during deceleration.

CAN COMMUNICATION

CAN COMMUNICATION : System Description

INFOID:0000000011148486

CAN (Controller Area Network) is a serial communication line for real time application. It is an on-vehicle multiplex communication line with high data communication speed and excellent error detection ability. Many electronic control units are equipped onto a vehicle, and each control unit shares information and links with other

control units during operation (not independent). In CAN communication, control units are connected with 2 communication lines (CAN H line, CAN L line) allowing a high rate of information transmission with less wiring. Each control unit transmits/receives data but selectively reads required data only.
Refer to LAN-38, "CAN COMMUNICATION SYSTEM : CAN Communication Signal Chart", about CAN communication for detail.

OPERATION

AUTOMATIC SPEED CONTROL DEVICE (ASCD)

AUTOMATIC SPEED CONTROL DEVICE (ASCD) : Switch Name and Function

INFOID:0000000011148487

SWITCHES AND INDICATORS

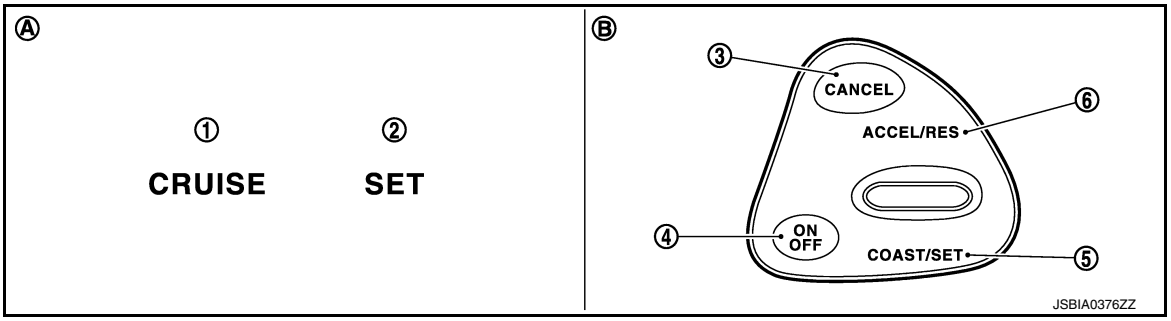

1. CRUISE indicator
2. SET indicator
3. CANCEL switch
4. ON/OFF (MAIN) switch
5. COAST/SET switch
6. ACCEL/RES switch (ACCELERATE/RESUME)

A. On the combination meter (Information display)
B. On the steering wheel

SET SPEED RANGE

ASCD system can be set the following vehicle speed.

Minimum speed (Approx.)	Maximum speed (Approx.)
40 km/h (25 MPH)	144 km/h (89 MPH)

SWITCH OPERATION

Item	Function
CANCEL switch	Cancels the cruise control driving.
ACCEL/RES switch (RESUME/ACCELERATE)	• Resumes the set speed. • Increases speed incrementally during cruise control driving.
COAST/SET switch (SET/COAST)	• Sets desired cruise speed. • Decreases speed incrementally during cruise control driving.
ON/OFF (MAIN) switch	Master switch to activate the ASCD system.

CANCEL OPERATION

When any of following conditions exist, cruise operation will be canceled.

- CANCEL switch is pressed
- ON/OFF (MAIN) switch pressed (Set speed is cleared)
- More than 2 switches at ASCD steering switch are pressed at the same time (Set speed will be cleared)
- Brake pedal is depressed
- Selector lever position is changed to N, P or R
- Vehicle speed decreased to 13 km/h (8 MPH) lower than the set speed
- TCS system is operated

When the ECM detects any of the following conditions, the ECM will cancel the cruise operation and inform the driver by blinking indicator.

- Engine coolant temperature is slightly higher than the normal operating temperature, CRUISE indicator may blink slowly.
  When the engine coolant temperature decreases to the normal operating temperature, CRUISE indicator will stop blinking and the cruise operation will be able to work by pressing COAST/SET switch or ACCEL/RES switch.
- Malfunction for some self-diagnoses regarding ASCD control: SET indicator will blink quickly.

If MAIN switch is turned to OFF during ASCD is activated, all of ASCD operations will be canceled and vehicle speed memory will be erased.

ON BOARD DIAGNOSTIC (OBD) SYSTEM

Diagnosis Description

INFOID:0000000011148488

This system is an on board diagnostic system that records exhaust emission-related diagnostic information and detects a sensors/actuator-related malfunction. A malfunction is indicated by the malfunction indicator lamp (MIL) and stored in ECU memory as a DTC. The diagnostic information can be obtained with the diagnostic tool (GST: Generic Scan Tool).

GST (Generic Scan Tool)

INFOID:0000000011148489

When GST is connected with a data link connector equipped on the vehicle side, it will communicate with the control unit equipped in the vehicle and then enable various kinds of diagnostic tests. Refer to EC-61, "Diagnosis Description".

NOTE:
Service $0A is not applied for regions where it is not mandated.

DIAGNOSIS SYSTEM (ECM)

DIAGNOSIS DESCRIPTION

DIAGNOSIS DESCRIPTION : 1st Trip Detection Logic and Two Trip Detection Logic

INFOID:0000000011148490

When a malfunction is detected for the first time, 1st trip DTC and 1st trip Freeze Frame data are stored in the ECM memory. The MIL will not illuminate at this stage. <1st trip>
If the same malfunction is detected again during the next drive, the DTC and Freeze Frame data are stored in the ECM memory, and the MIL illuminates. The MIL illuminates at the same time when the DTC is stored. <2nd trip> The “trip” in the “Two Trip Detection Logic” means a driving mode in which self-diagnosis is performed during vehicle operation. Specific on board diagnostic items will cause the ECM to illuminate or blink the MIL, and store DTC and Freeze Frame data, even in the 1st trip, as shown below.

×: Applicable —: Not applicable

Items	MIL				DTC		1st trip DTC	
	1st trip		2nd trip		1st trip displaying	2nd trip displaying	1st trip displaying	2nd trip displaying
	Blinking	Illuminated	Blinking	Illuminated				
Misfire (Possible three way catalyst damage) — DTC: P0300 – P0308 is being detected	×	—	—	—	—	—	×	—
Misfire (Possible three way catalyst damage) — DTC: P0300 – P0308 is being detected	—	—	×	—	—	×	—	—
One trip detection diagnoses (Refer to EC-105, "DTC Index".)	—	×	—	—	×	—	—	—
Except above	—	—	—	×	—	×	×	—

DIAGNOSIS DESCRIPTION : DTC and Freeze Frame Data

INFOID:0000000011148491

DTC AND 1ST TRIP DTC

The 1st trip DTC (whose number is the same as the DTC number) is displayed for the latest self-diagnostic result obtained. If the ECM memory was cleared previously, and the 1st trip DTC did not recur, the 1st trip DTC will not be displayed.
If a malfunction is detected during the 1st trip, the 1st trip DTC is saved in the ECM memory. The MIL will not light up (two trip detection logic). If the same malfunction is not detected in the 2nd trip (meeting the required driving pattern), the 1st trip DTC is cleared from the ECM memory. If the same malfunction is detected in the 2nd trip, both the 1st trip DTC and DTC are saved in the ECM memory and the MIL lights up. In other words, the DTC is stored in the ECM memory and the MIL lights up when the same malfunction occurs in two consecutive trips. If a 1st trip DTC is stored and a non-diagnostic operation is performed between the 1st and 2nd trips, only the 1st trip DTC will continue to be stored. For malfunctions that blink or light up the MIL during the 1st trip, the DTC and 1st trip DTC are stored in the ECM memory.
For malfunctions in which 1st trip DTCs are displayed, refer to EC-105, "DTC Index". These items are required by legal regulations to continuously monitor the system/component. In addition, the items monitored non-continuously are also displayed on CONSULT.
1st trip DTC is specified in Service $07 of SAE J1979/ISO 15031-5. 1st trip DTC detection occurs without illuminating the MIL and therefore does not warn the driver of a malfunction.
When a 1st trip DTC is detected, check, print out or write down and erase (1st trip) DTC and Freeze Frame data as specified in Work Flow procedure Step 2, refer to EC-150, "Work Flow". Then perform DTC Confirmation Procedure or Component Function Check to try to duplicate the malfunction. If the malfunction is duplicated, the item requires repair.

FREEZE FRAME DATA AND 1ST TRIP FREEZE FRAME DATA

The ECM records the driving conditions such as fuel system status, calculated load value, engine coolant temperature, short term fuel trim, long term fuel trim, engine speed, vehicle speed, absolute throttle position, base fuel schedule and intake air temperature at the moment a malfunction is detected.
Data which are stored in the ECM memory, along with the 1st trip DTC, are called 1st trip freeze frame data. The data, stored together with the DTC data, are called freeze frame data and displayed on CONSULT or GST. The 1st trip freeze frame data can only be displayed on the CONSULT screen.

Only one set of freeze frame data (either 1st trip freeze frame data or freeze frame data) can be stored in the ECM. 1st trip freeze frame data is stored in the ECM memory along with the 1st trip DTC. There is no priority for 1st trip freeze frame data and it is updated each time a different 1st trip DTC is detected. However, once freeze frame data (2nd trip detection/MIL on) is stored in the ECM memory, 1st trip freeze frame data is no longer stored. Remember, only one set of freeze frame data can be stored in the ECM. The ECM has the following priorities to update the data.

Priority	Items	
1	Freeze frame data	Misfire — DTC: P0300 – P0308 Fuel Injection System Function — DTC: P0171, P0172, P0174, P0175
2		Except the above items
3	1st trip freeze frame data	

For example, the EGR malfunction (Priority: 2) was detected and the freeze frame data was saved in the 2nd trip. After that when the misfire (Priority: 1) is detected in another trip, the freeze frame data will be updated from the EGR malfunction to the misfire. The 1st trip freeze frame data is updated each time a different malfunction is detected. There is no priority for 1st trip freeze frame data. However, once freeze frame data is stored in the ECM memory, 1st trip freeze data is no longer stored (because only one freeze frame data or 1st trip freeze frame data can be stored in the ECM). If freeze frame data is stored in the ECM memory and freeze frame data with the same priority occurs later, the first (original) freeze frame data remains unchanged in the ECM memory.
Both 1st trip freeze frame data and freeze frame data (along with the DTCs) are cleared when the ECM memory is erased.

DIAGNOSIS DESCRIPTION : Counter System

INFOID:0000000011148492

RELATIONSHIP BETWEEN MIL, 1ST TRIP DTC, DTC, AND DETECTABLE ITEMS

- When a malfunction is detected for the first time, the 1st trip DTC and the 1st trip freeze frame data are stored in the ECM memory.
- When the same malfunction is detected in two consecutive trips, the DTC and the freeze frame data are stored in the ECM memory, and the MIL will come on.
- The MIL will turn OFF after the vehicle is driven 3 times (driving pattern B) with no malfunction. The drive is counted only when the recorded driving pattern is met (as stored in the ECM). If another malfunction occurs while counting, the counter will reset.
- The DTC and the freeze frame data will be stored until the vehicle is driven 40 times (driving pattern A) without the same malfunction recurring (except for Misfire and Fuel Injection System). For Misfire and Fuel Injection System, the DTC and freeze frame data will be stored until the vehicle is driven 80 times (driving pattern C) without the same malfunction recurring. The “TIME” in “SELF-DIAGNOSTIC RESULTS” mode of CONSULT will count the number of times the vehicle is driven.
- The 1st trip DTC is not displayed when the self-diagnosis results in OK for the 2nd trip.

COUNTER SYSTEM CHART

Items	Fuel Injection System	Misfire	Other
MIL (turns OFF)	3 (pattern B)	3 (pattern B)	3 (pattern B)
DTC, Freeze Frame Data (no display)	80 (pattern C)	80 (pattern C)	40 (pattern A)
1st Trip DTC (clear)	1 (pattern C), *1	1 (pattern C), *1	1 (pattern B)
1st Trip Freeze Frame Data (clear)	*1, *2	*1, *2	1 (pattern B)

For details about patterns B and C under “Fuel Injection System” and “Misfire”, see “EXPLANATION FOR DRIVING PATTERNS FOR “MISFIRE <EXHAUST QUALITY DETERIORATION>”, “FUEL INJECTION SYSTEM”.
For details about patterns A and B under Other, see “EXPLANATION FOR DRIVING PATTERNS FOR “MISFIRE <EXHAUST QUALITY DETERIORATION>”, “FUEL INJECTION SYSTEM”.
- *1: Clear timing is at the moment OK is detected.
- *2: Clear timing is when the same malfunction is detected in the 2nd trip.

Relationship Between MIL, DTC, 1st Trip DTC and Driving Patterns for “Misfire <Exhaust Quality Deterioration>”, “Fuel Injection System”

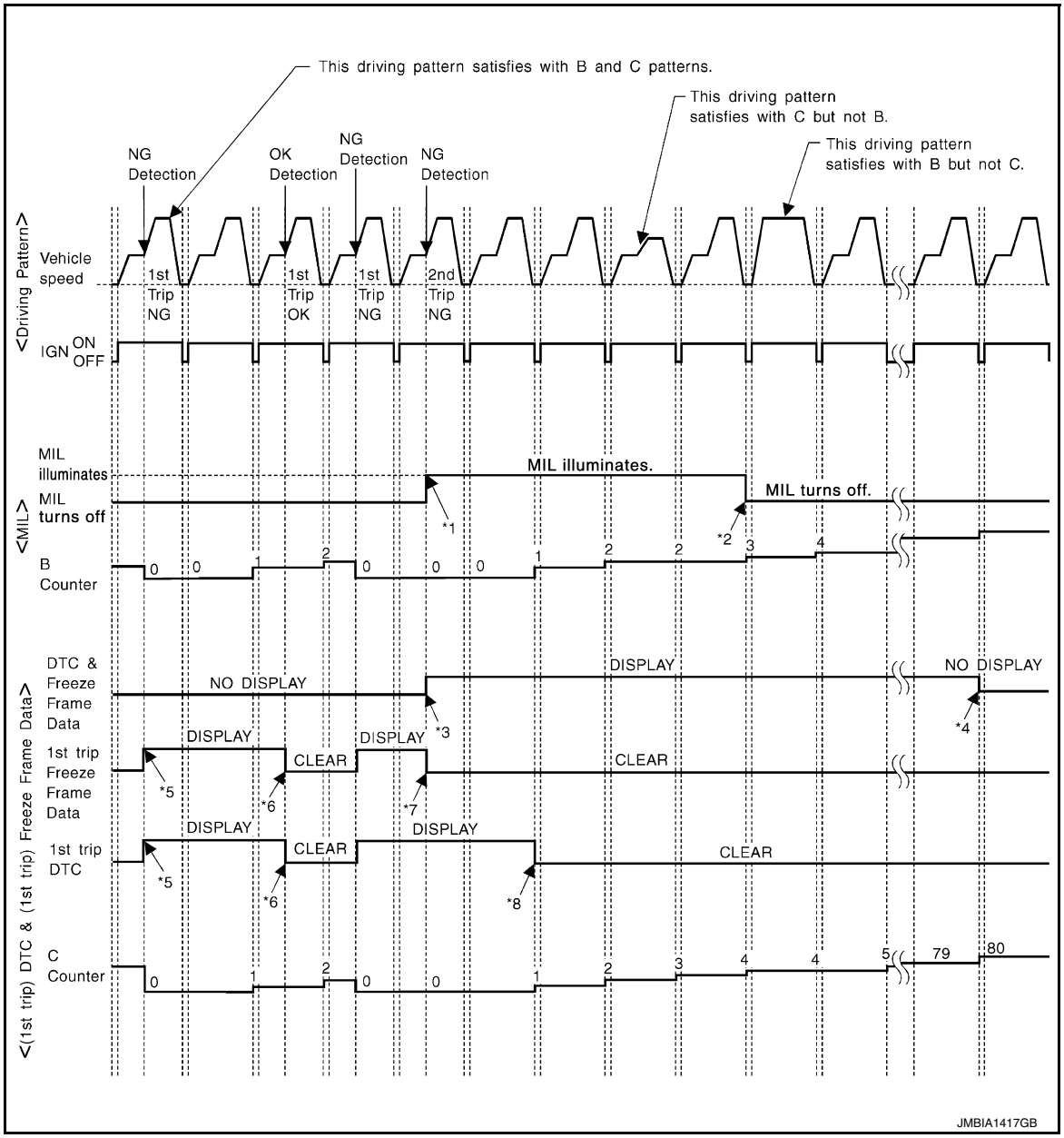

*1: When the same malfunction is detected in two consecutive trips, MIL will light up.

*2: MIL will turn OFF after vehicle is driven 3 times (pattern B) without any malfunctions.

*3: When the same malfunction is detected in two consecutive trips, the DTC and the freeze frame data will be stored in ECM.

*4: The DTC and the freeze frame data will not be displayed any longer after vehicle is driven 80 times (pattern C) without the same malfunction. (The DTC and the freeze frame data still remain in ECM.)

*5: When a malfunction is detected for the first time, the 1st trip DTC and the 1st trip freeze frame data will be stored in ECM.

*6: The 1st trip DTC and the 1st trip freeze frame data will be cleared at the moment OK is detected.

*7: When the same malfunction is detected in the 2nd trip, the 1st trip freeze frame data will be cleared.

*8: 1st trip DTC will be cleared when vehicle is driven once (pattern C) without the same malfunction after DTC is stored in ECM.

Explanation for Driving Patterns for “Misfire <Exhaust Quality Deterioration>”, “Fuel Injection System”

Driving Pattern B

Refer to EC-66, "DIAGNOSIS DESCRIPTION : Driving Pattern".

Driving Pattern C

Refer to EC-66, "DIAGNOSIS DESCRIPTION : Driving Pattern".

Example:

If the stored freeze frame data is as per the following:

Engine speed: 850 rpm, Calculated load value: 30%, Engine coolant temperature: 80°C (176°F)

To be satisfied with driving pattern C, the vehicle should run under the following conditions:

Engine speed: 475 – 1,225 rpm, Calculated load value: 27 – 33%, Engine coolant temperature: more than 70°C (158°F)

Relationship Between MIL, DTC, 1st Trip DTC and Driving Patterns Except For “Misfire <Exhaust Quality Deterioration>”, “Fuel Injection System”

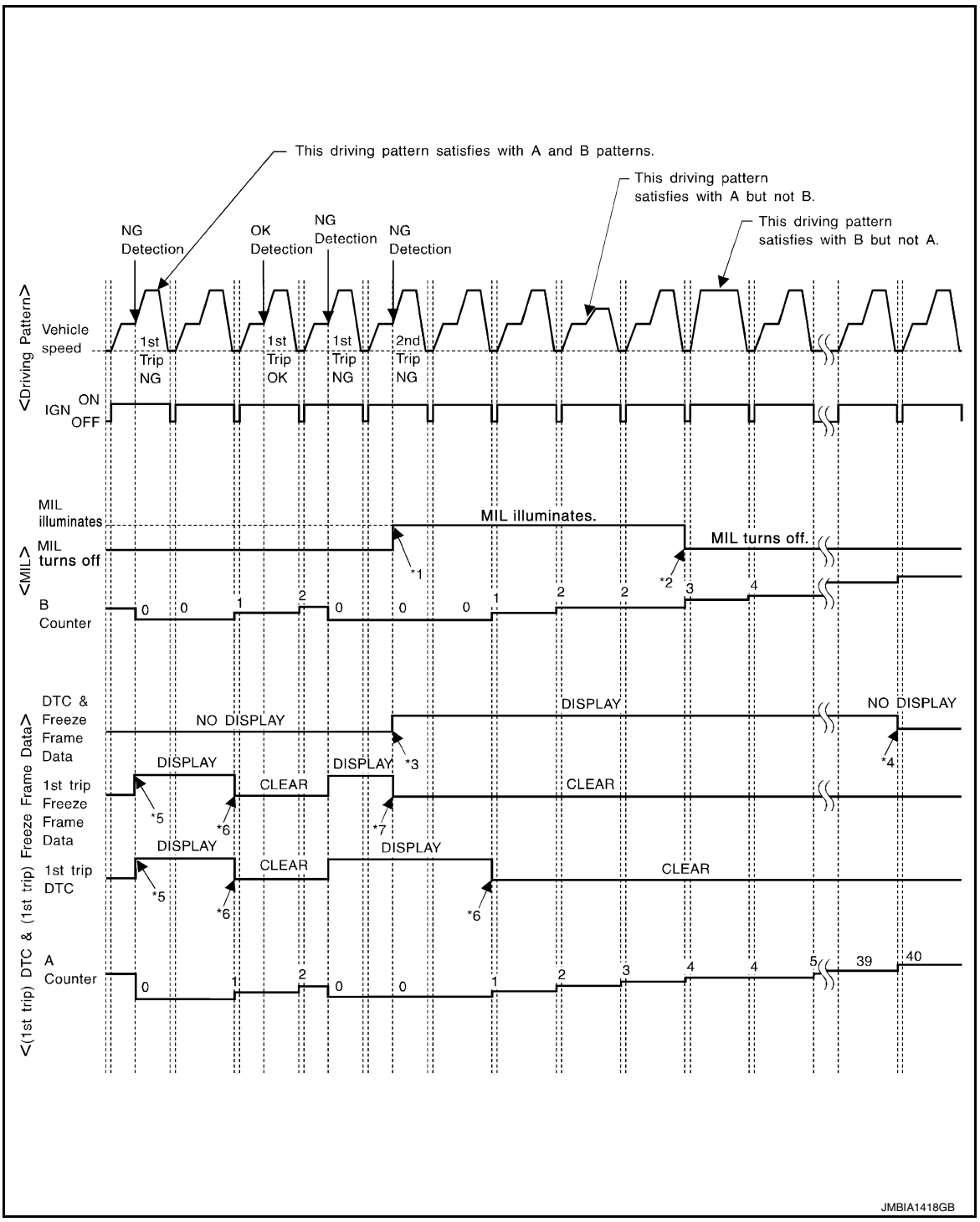

*1: When the same malfunction is detected in two consecutive trips, MIL will light up.

*2: MIL will turn OFF after vehicle is driven 3 times (pattern B) without any malfunctions.

*3: When the same malfunction is detected in two consecutive trips, the DTC and the freeze frame data will be stored in ECM.

*4: The DTC and the freeze frame data will not be displayed any longer after vehicle is driven 40 times (pattern A) without the same malfunction. (The DTC and the freeze frame data still remain in ECM.)

*5: When a malfunction is detected for the first time, the 1st trip DTC and the 1st trip freeze frame data will be stored in ECM.

*6: 1st trip DTC will be cleared after vehicle is driven once (pattern B) without the same malfunction.

*7: When the same malfunction is detected in the 2nd trip, the 1st trip freeze frame data will be cleared.

Explanation for Driving Patterns Except for “Misfire <Exhaust Quality Deterioration>”, “Fuel Injection System”

Driving Pattern A
Refer to EC-66, "DIAGNOSIS DESCRIPTION : Driving Pattern".

Driving Pattern B
Refer to EC-66, "DIAGNOSIS DESCRIPTION : Driving Pattern".

DIAGNOSIS DESCRIPTION : Driving Pattern

INFOID:0000000011148493

CAUTION:
Always drive at a safe speed.

DRIVING PATTERN A

Driving pattern A means a trip satisfying the following conditions.
- Engine speed reaches 400 rpm or more.
- Engine coolant temperature rises by 20°C (36°F) or more after starting the engine.
- Engine coolant temperature reaches 70°C (158°F) or more.
- The ignition switch is turned from ON to OFF.

NOTE:
- When the same malfunction is detected regardless of driving conditions, reset the counter of driving pattern A.
- When the above conditions are satisfied without detecting the same malfunction, reset the counter of driving pattern A.

DRIVING PATTERN B

Driving pattern B means a trip satisfying the following conditions.
- Engine speed reaches 400 rpm or more.
- Engine coolant temperature reaches 70°C (158°F) or more.
- Vehicle speed of 70 – 120 km/h (44 – 75 MPH) is maintained for 60 seconds or more under the control of closed loop.
- Vehicle speed of 30 – 60 km/h (19 – 37 MPH) is maintained for 10 seconds or more under the control of closed loop.
- Under the closed loop control condition, the following state reaches 12 seconds or more in total: Vehicle speed of 4 km/h (2 MPH) or less with idling condition.
- The state of driving at 10 km/h (7 MPH) or more reaches 10 minutes or more in total.
- A lapse of 22 minutes or more after engine start.

NOTE:
- Drive the vehicle at a constant velocity.
- When the same malfunction is detected regardless of driving conditions, reset the counter of driving pattern B.
- When the above conditions are satisfied without detecting the same malfunction, reset the counter of driving pattern B.

DRIVING PATTERN C

Driving pattern C means operating vehicle as per the following:
The following conditions should be satisfied at the same time:
Engine speed: (Engine speed in the freeze frame data) ±375 rpm

Calculated load value: (Calculated load value in the freeze frame data) x (1±0.1) [%]
Engine coolant temperature condition:
- When the freeze frame data shows lower than 70°C (158°F), engine coolant temperature should be lower than 70°C (158°F).
- When the freeze frame data shows higher than or equal to 70°C (158°F), engine coolant temperature should be higher than or equal to 70°C (158°F).

NOTE:
- When the same malfunction is detected regardless of the above vehicle conditions, reset the counter of driving pattern C.
- When the above conditions are satisfied without detecting the same malfunction, reset the counter of driving pattern C.
- The 1st trip DTC will be cleared when C counter is counted once without the same malfunction after DTC is stored in ECM.

DRIVING PATTERN D

Driving pattern D means a trip satisfying the following conditions.
- The state of driving at 40 km/h (25 MPH) reaches 300 seconds or more in total.
- Idle speed lasts 30 seconds or more.
- A lapse of 600 seconds or more after engine start.

NOTE:
- When the same malfunction is detected regardless of driving conditions, reset the counter of driving pattern D.
- When the above conditions are satisfied without detecting the same malfunction, reset the counter of driving pattern D.

DIAGNOSIS DESCRIPTION : System Readiness Test (SRT) Code

INFOID:0000000011148494

System Readiness Test (SRT) code is specified in Service $01 of SAE J1979/ISO 15031-5.
As part of an enhanced emissions test for Inspection & Maintenance (I/M), certain states require the status of SRT be used to indicate whether the ECM has completed self-diagnosis of major emission systems and components. Completion must be verified in order for the emissions inspection to proceed.
If a vehicle is rejected for a State emissions inspection due to one or more SRT items indicating “INCMP”, use the information in this Service Manual to set the SRT to “CMPLT”.
In most cases the ECM will automatically complete its self-diagnosis cycle during normal usage, and the SRT status will indicate “CMPLT” for each application system. Once set as “CMPLT”, the SRT status remains “CMPLT” until the self-diagnosis memory is erased.
Occasionally, certain portions of the self-diagnostic test may not be completed as a result of the customer's normal driving pattern; the SRT will indicate “INCMP” for these items.

NOTE:
The SRT will also indicate “INCMP” if the self-diagnosis memory is erased for any reason or if the ECM memory power supply is interrupted for several hours.
If, during the state emissions inspection, the SRT indicates “CMPLT” for all test items, the inspector will continue with the emissions test. However, if the SRT indicates “INCMP” for one or more of the SRT items the vehicle is returned to the customer untested.

NOTE:
If permanent DTC is stored or MIL illuminates during the state emissions inspection, the vehicle is also returned to the customer untested even though the SRT indicates “CMPLT” for all test items. Therefore, it is important to check SRT (“CMPLT”), DTC (No DTCs) and permanent DTC (NO permanent DTCs) before the inspection.

SRT SET TIMING

SRT is set as “CMPLT” after self-diagnosis has been performed one or more times. Completion of SRT is done regardless of whether the result is OK or NG. The set timing is different between OK and NG results and is shown in the table below.

Self-diagnosis result		Example				
		Diagnosis	Ignition cycle ← ON → OFF ← ON → OFF ← ON → OFF ← ON →			
All OK	Case 1	P0400	OK (1)	— (1)	OK (2)	— (2)
		P0402	OK (1)	— (1)	— (1)	OK (2)
		P1402	OK (1)	OK (2)	— (2)	— (2)
		SRT of EGR	“CMPLT”	“CMPLT”	“CMPLT”	“CMPLT”
	Case 2	P0400	OK (1)	— (1)	— (1)	— (1)
		P0402	— (0)	— (0)	OK (1)	— (1)
		P1402	OK (1)	OK (2)	— (2)	— (2)
		SRT of EGR	“INCMP”	“INCMP”	“CMPLT”	“CMPLT”
NG exists	Case 3	P0400	OK	OK	—	—
		P0402	—	—	—	—
		P1402	NG	—	NG	NG (Consecutive NG)
		(1st trip) DTC	1st trip DTC	—	1st trip DTC	DTC (= MIL ON)
		SRT of EGR	“INCMP”	“INCMP”	“INCMP”	“CMPLT”

OK: Self-diagnosis is carried out and the result is OK.

NG: Self-diagnosis is carried out and the result is NG.

—: Self-diagnosis is not carried out.

When all SRT related self-diagnoses show OK results in a single cycle (Ignition OFF-ON-OFF), the SRT will indicate “CMPLT”. → Case 1 above

When all SRT related self-diagnoses show OK results through several different cycles, the SRT will indicate “CMPLT” at the time the respective self-diagnoses have at least one OK result. → Case 2 above

If one or more SRT related self-diagnoses show NG results in 2 consecutive cycles, the SRT will also indicate “CMPLT”. → Case 3 above

The table above shows that the minimum number of cycles for setting SRT as “INCMP” is the number one (1) for each self-diagnosis (Case 1 & 2) or the number two (2) for one of self-diagnoses (Case 3). However, in preparation for the state emissions inspection, it is unnecessary for each self-diagnosis to be executed twice (Case 3) for the following reasons:

- The SRT will indicate “CMPLT” at the time the respective self-diagnoses have one (1) OK result.
- The emissions inspection requires “CMPLT” of the SRT only with OK self-diagnosis results.
- During SRT driving pattern, the 1st trip DTC (NG) is detected prior to “CMPLT” of SRT and the self-diagnosis memory must be erased from the ECM after repair.
- If the 1st trip DTC is erased, all the SRT will indicate “INCMP”.

  NOTE:

  SRT can be set as “CMPLT” together with the DTC(s). Therefore, DTC check must always be carried out prior to the state emission inspection even though the SRT indicates “CMPLT”.

DIAGNOSIS DESCRIPTION : Permanent Diagnostic Trouble Code (Permanent DTC)

INFOID:0000000011148495

Permanent DTC is defined in SAE J1979/ISO 15031-5 Service $0A.

ECM stores a DTC issuing a command of turning on MIL as a permanent DTC and keeps storing the DTC as a permanent DTC until ECM judges that there is no presence of malfunction.

Permanent DTCs cannot be erased by using the Erase function of CONSULT or Generic Scan Tool (GST) and by disconnecting the battery to shut off power to ECM. This prevents a vehicle from passing the state emission inspection without repairing a malfunctioning part.

When not passing the state emission inspection due to more than one permanent DTC, permanent DTCs should be erased, referring to this manual.

NOTE:

- The important items in state emission inspection are that MIL is not ON, SRT test items are set, and permanent DTCs are not included.
- Permanent DTCs do not apply for regions that permanent DTCs are not regulated by law.

PERMANENT DTC SET TIMING

The setting timing of permanent DTC is stored in ECM with the lighting of MIL when a DTC is confirmed.

DIAGNOSIS DESCRIPTION : Malfunction Indicator Lamp (MIL)

INFOID:0000000011148496

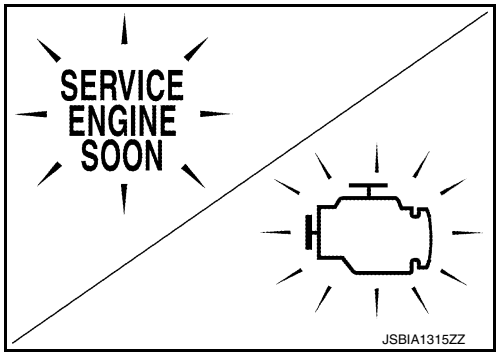

- When detecting a DTC that affects exhaust gas, the exhaust emission-related control module transmits a malfunction indicator lamp signal to ECM via CAN communication line.
  ECM prioritizes (MIL: ON/blink) the signal received from the exhaust emission-related control module and the ECM-stored DTC that affects exhaust gas and transmits a malfunction indicator lamp signal to the combination meter via CAN communication line.
  The combination meter turns ON or blinks the MIL, according to the signal transmitted from ECM, and alerts the driver of malfunction detection.
- Control modules that a DTC of MIL ON/Blink is stored (Control module varies among DTCs.):

- ECM
- TCM

1. The MIL illuminates when ignition switch is turned ON (engine is not running).
   NOTE:
   Check the MIL circuit if MIL does not illuminate. Refer to EC-503, "Component Function Check".
2. When the engine is started, the MIL should go off.
   NOTE:
   If MIL remains ON or continues blinking, a DTC(s) that affects exhaust gas is detected. In this case, Self-diagnosis is required for performing inspection and repair.

On Board Diagnosis Function

INFOID:0000000011148497

ON BOARD DIAGNOSIS ITEM

The on board diagnostic system has the following functions.

Diagnostic test mode	Function
Bulb check	MIL can be checked.
SRT status	ECM can read if SRT codes are set.
Malfunction warning	If ECM detects a malfunction, it illuminates or blinks MIL to inform the driver that a malfunction has been detected.
Self-diagnostic results	DTCs or 1st trip DTCs stored in ECM can be read.
Accelerator pedal released position learning	ECM can learn the accelerator pedal released position. Refer to EC-158, "Description".
Throttle valve closed position learning	ECM can learn the throttle valve closed position. Refer to EC-159, "Description".
Idle air volume learning	ECM can learn the idle air volume. Refer to EC-160, "Description".
Mixture ratio self-learning value clear	Mixture ratio self-learning value can be erased. Refer to EC-162, "Description".

BULB CHECK MODE

Description

This function allows damage inspection in the MIL bulb (blown, open circuit, etc.).

Operation Procedure

1. Turn ignition switch ON.
2. The MIL on the instrument panel should stay ON.
   If it remains OFF, check MIL circuit. Refer to EC-503, "Diagnosis Procedure".

SRT STATUS MODE

Description

This function allows to read if ECM has completed the self-diagnoses of major emission control systems and components. For SRT, refer to EC-67, "DIAGNOSIS DESCRIPTION : System Readiness Test (SRT) Code".

Operation Procedure

1. Turn ignition switch ON and wait 20 seconds.
2. SRT status is indicated as shown blow.
   - ECM continues to illuminate MIL if all SRT codes are set.
   - ECM blinks MIL for about 10 seconds if all SRT codes are not set.

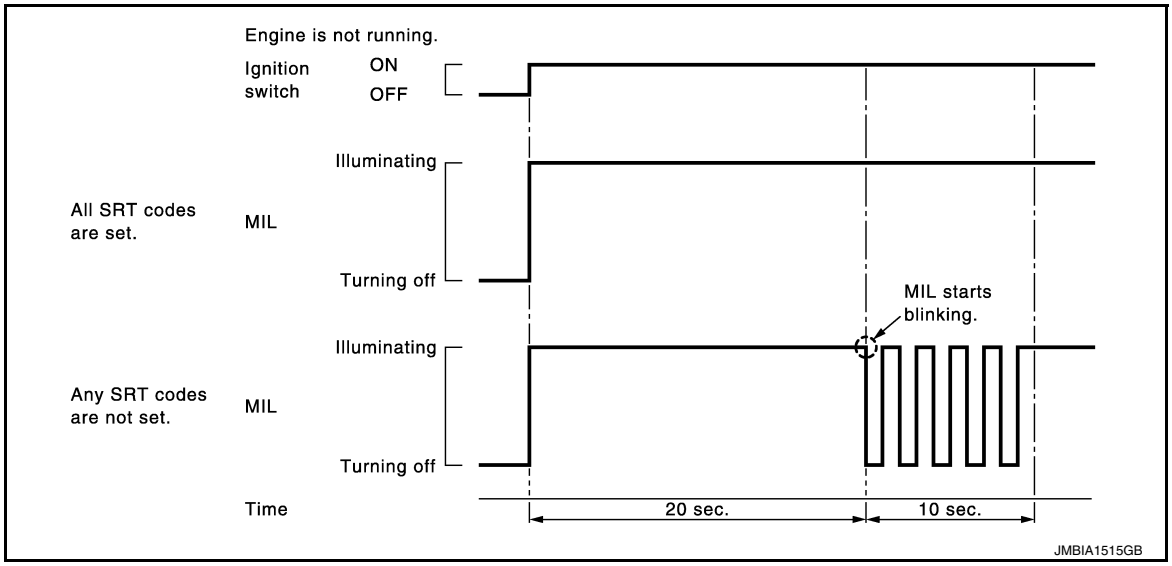

MALFUNCTION WARNING MODE

Description

In this function ECM turns on or blinks MIL when it detects a malfunction in the emission control system components and/or the powertrain control components (which affect vehicle emissions) to inform the driver that a malfunction has been detected.

Operation Procedure

1. Turn ignition switch ON.
2. Check that MIL illuminates.
   If it remains OFF, check MIL circuit. Refer to EC-503, "Diagnosis Procedure".
3. Start engine and let it idle.
   - For two trip detection logic diagnoses, ECM turns on MIL when it detects the same malfunction twice in the two consecutive driving cycles.
   - For 1st trip detection logic diagnoses, ECM turns on MIL when it detects a malfunction in one driving cycle.
   - ECM blinks MIL when it detects a malfunction that may damage the three way catalyst (misfire).

SELF-DIAGNOSTIC RESULTS MODE

Description

This function allows to indicate DTCs or 1st trip DTCs stored in ECM according to the number of times MIL is blinking.

How to Set Self-diagnostic Results Mode

NOTE:

- It is better to count the time accurately with a clock.
- It is impossible to switch the diagnostic mode when an accelerator pedal position sensor circuit has a malfunction.
- After ignition switch is turned off, ECM is always released from the “self-diagnostic results” mode.

1. Confirm that accelerator pedal is fully released, turn ignition switch ON and wait 3 seconds.
2. Repeat the following procedure quickly five times within 5 seconds.
   - Fully depress the accelerator pedal.
   - Fully release the accelerator pedal.

3. Wait 7 seconds, fully depress the accelerator pedal and keep it depressed for approx. 10 seconds until the MIL starts blinking.
   NOTE:
   Do not release the accelerator pedal for 10 seconds if MIL starts blinking during this period. This blinking is displaying SRT status and is continued for another 10 seconds.
4. Fully release the accelerator pedal.
   ECM has entered to “Self-diagnostic results” mode.
   NOTE:
   Wait until the same DTC (or 1st trip DTC) appears to completely confirm all DTCs.

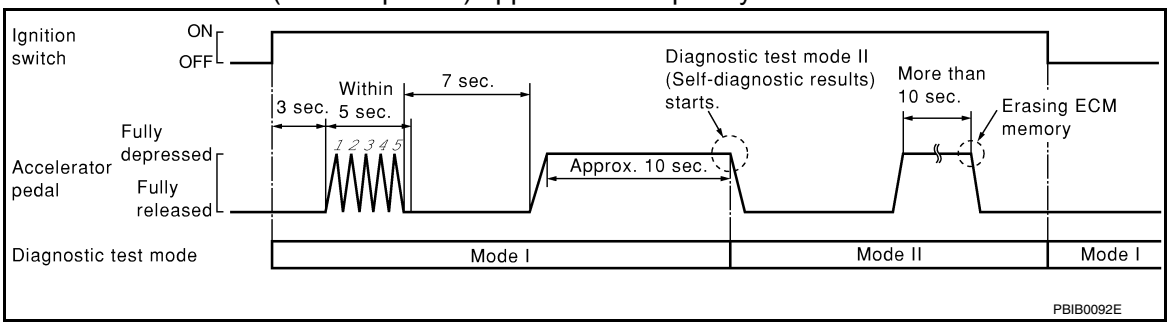

How to Read Self-diagnostic Results

The DTC and 1st trip DTC are indicated by the number of blinks of the MIL as shown below.

The DTC and 1st trip DTC are displayed at the same time. If the MIL does not illuminate in diagnostic test mode I (Malfunction warning), all displayed items are 1st trip DTCs. If only one code is displayed when the MIL illuminates in “malfunction warning” mode, it is a DTC; if two or more codes are displayed, they may be either DTCs or 1st trip DTCs. DTC No. is same as that of 1st trip DTC. These unidentified codes can be identified by using the CONSULT or GST. A DTC will be used as an example for how to read a code.

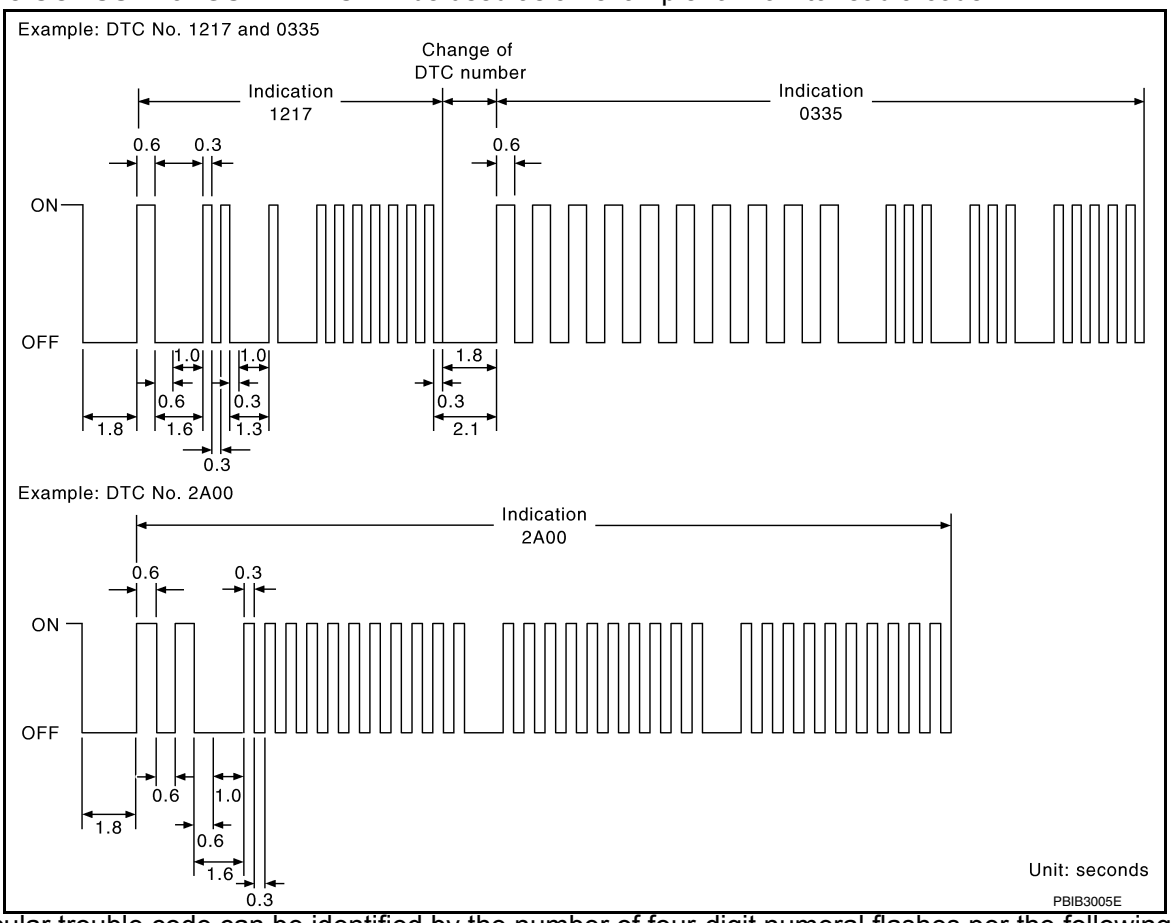

A particular trouble code can be identified by the number of four-digit numeral flashes per the following.

Number	0	1	2	3	4	5	6	7	8	9	A	B	C	D	E	F
Flashes	10	1	2	3	4	5	6	7	8	9	11	12	13	14	15	16

The length of time the 1,000th-digit numeral flashes on and off is 1.2 seconds consisting of an ON (0.6-seconds) - OFF (0.6-seconds) cycle.
The 100th-digit numeral and lower digit numerals consist of a 0.3-seconds ON and 0.3-seconds OFF cycle.
A change from one digit numeral to another occurs at an interval of 1.0-second OFF. In other words, the later numeral appears on the display 1.3 seconds after the former numeral has disappeared.
A change from one trouble code to another occurs at an interval of 1.8-seconds OFF.
In this way, all the detected malfunctions are classified by their DTC numbers. The DTC 0000 refers to no malfunction. Refer to EC-105, "DTC Index".

How to Erase Self-diagnostic Results
By performing this procedure, ECM memory is erased and the following diagnostic information is erased as well.
- Diagnostic trouble codes
- 1st trip diagnostic trouble codes
- Freeze frame data
- 1st trip freeze frame data
- System readiness test (SRT) codes
- Test values

NOTE:
Also, if a battery terminal is disconnected, ECM memory is erased and the diagnostic information as listed above is erased. (The amount of time required for erasing may vary from a few seconds to several hours.)

1. Turn ignition switch OFF and wait at least 10 seconds.
2. Turn ignition switch ON.
3. Turn ignition switch OFF and wait at least 10 seconds.
4. Turn ignition switch ON.
5. Set ECM in “self-diagnostic results” mode.
6. The diagnostic information has been erased from the backup memory in the ECM.
   Fully depress the accelerator pedal and keep it depressed for more than 10 seconds.
7. Fully release the accelerator pedal, and confirm the DTC 0000 is displayed.

CONSULT Function

INFOID:0000000011148498

FUNCTION

Diagnostic test mode	Function
Self Diagnostic Result	Self-diagnostic results such as 1st trip DTC, DTCs and 1st trip freeze frame data or freeze frame data can be read and erased quickly.*
Data Monitor	Input/Output data in the ECM can be read.
Work support	This mode enables a technician to adjust some devices faster and more accurately by following the indications on the CONSULT unit.
Active Test	Diagnostic Test Mode in which CONSULT drives some actuators apart from the ECMs and also shifts some parameters in a specified range.
ECU Identification	ECM part number can be read.
DTC Work Support	The status of system monitoring tests and the self-diagnosis status/results can be confirmed.

*: The following emission-related diagnostic information is cleared when the ECM memory is erased.
- Diagnostic trouble codes
- 1st trip diagnostic trouble codes
- Freeze frame data
- 1st trip freeze frame data
- System readiness test (SRT) codes
- Test values

SELF DIAGNOSTIC RESULT MODE

Self Diagnostic Item
Regarding items of DTC and 1st trip DTC, refer to EC-105, "DTC Index".

How to Read DTC and 1st Trip DTC

DTCs and 1st trip DTCs related to the malfunction are displayed in “self-diag results”.
- When ECM detects a 1st trip DTC, 1t” is displayed for “TIME”.
- When ECM has detected a current DTC, “0” is displayed for “TIME”.
- If “TIME” is neither “0” nor “1t”, the DTC occurred in the past and ECM shows the number of times the vehicle has been driven since the last detection of the DTC.

How to Erase DTC and 1st Trip DTC

NOTE:
If the ignition switch stays ON after repair work, be sure to turn ignition switch OFF once. Wait at least 10 seconds and then turn it ON (engine stopped) again.

1. Select “ENGINE” with CONSULT.
2. Select “SELF-DIAG RESULTS”.
3. Touch “ERASE”. (DTC in ECM will be erased.)

Freeze Frame Data and 1st Trip Freeze Frame Data

Freeze frame data item*	Description
DIAG TROUBLE CODE [PXXXX]	The engine control component part/control system has a trouble code that is displayed as PXXXX. (Refer to EC-105, "DTC Index".)
FUEL SYS-B1	• “Fuel injection system status” at the moment a malfunction is detected is displayed. • One of the following mode is displayed. Mode2: Open loop due to detected system malfunction Mode3: Open loop due to driving conditions (power enrichment, deceleration enleanment) Mode4: Closed loop - using oxygen sensor(s) as feedback for fuel control Mode5: Open loop - has not yet satisfied condition to go to closed loop
FUEL SYS-B2	
COMBUST CONDITION	These items are displayed but are not applicable to this model.
CAL/LD VALUE [%]	The calculated load value at the moment a malfunction is detected is displayed.
COOLANT TEMP [°C] or [°F]	The engine coolant temperature at the moment a malfunction is detected is displayed.
L-FUEL TRM-B1 [%]	• “Long-term fuel trim” at the moment a malfunction is detected is displayed. • The long-term fuel trim indicates much more gradual feedback compensation to the base fuel schedule than short-term fuel trim.
L-FUEL TRM-B2 [%]	
S-FUEL TRM-B1 [%]	• “Short-term fuel trim” at the moment a malfunction is detected is displayed. • The short-term fuel trim indicates dynamic or instantaneous feedback compensation to the base fuel schedule.
S-FUEL TRM-B2 [%]	
ENGINE SPEED [rpm]	The engine speed at the moment a malfunction is detected is displayed.
VEHICL SPEED [km/h] or [mph]	The vehicle speed at the moment a malfunction is detected is displayed.
INT MANI PRES [kPa]	These items are displayed but are not applicable to this model.
ABSOL TH·P/S [%]	The throttle valve opening angle at the moment a malfunction is detected is displayed.
B/FUEL SCHDL [msec]	The base fuel schedule at the moment a malfunction is detected is displayed.
INT/A TEMP SE [°C] or [°F]	The intake air temperature at the moment a malfunction is detected is displayed.

*: The items are the same as those of 1st trip freeze frame data.

DATA MONITOR MODE

NOTE:
The following table includes information (items) inapplicable to this vehicle. For information (items) applicable to this vehicle, refer to CONSULT display items.

Monitored Item

For reference values of the following items, refer to EC-85, "Reference Value".

×: Applicable

Monitored item	Unit	Monitor Item Selection		Description	Remarks
		ECU INPUT SIGNALS	MAIN-SIGNALS		
ENG SPEED	rpm	×	×	Indicates the engine speed computed from the signal of the crankshaft position sensor (POS) and camshaft position sensor (PHASE).	• Accuracy becomes poor if engine speed drops below the idle rpm. • If the signal is interrupted while the engine is running, an abnormal value may be indicated.
B/FUEL SCHDL	ms	×	×	"Base fuel schedule" indicates the fuel injection pulse width programmed into ECM, prior to any learned on board correction.	• When engine is running, specification range is indicated in "SPEC".
A/F ALPHA-B1	%		×	The mean value of the air-fuel ratio feedback correction factor per cycle is indicated.	• When the engine is stopped, a certain value is indicated. • This data also includes the data for the air-fuel ratio learning control. • When engine is running, specification range is indicated in "SPEC".
A/F ALPHA-B2	%		×		
COOLANT TEMP/S	°C or °F	×	×	The engine coolant temperature (determined by the signal voltage of the engine coolant temperature sensor) is displayed.	When the engine coolant temperature sensor is open or short-circuited, ECM enters fail-safe mode. The engine coolant temperature determined by the ECM is displayed.
A/F SEN1 (B1)	V	×	×	The A/F signal computed from the input signal of the air fuel ratio (A/F) sensor 1 is displayed.	
HO2S2 (B1)	V	×	×	The signal voltage of the heated oxygen sensor 2 is displayed.	
HO2S2 (B2)	V	×	×		
HO2S2 MNTR(B1)	RICH/LEAN		×	Display of heated oxygen sensor 2 signal: • RICH: means the amount of oxygen after three way catalyst is relatively small. • LEAN: means the amount of oxygen after three way catalyst is relatively large.	When the engine is stopped, a certain value is indicated.
HO2S2 MNTR(B2)	RICH/LEAN		×		
VHCL SPEED SE	km/h or mph	×	×	The vehicle speed computed from the vehicle speed signal sent from combination meter is displayed.	
BATTERY VOLT	V	×	×	The power supply voltage of ECM is displayed.	
ACCEL SEN 1	V	×	×	The accelerator pedal position sensor signal voltage is displayed.	ACCEL SEN 2 signal is converted by ECM internally. Thus, it differs from ECM terminal voltage signal.
ACCEL SEN 2	V	×			
TP SEN 1-B1	V	×	×	The throttle position sensor signal voltage is displayed.	TP SEN 2-B1 signal is converted by ECM internally. Thus, it differs from ECM terminal voltage signal.
TP SEN 2-B1	V	×	×		
FUEL T/TMP SE	°C or °F	×		The fuel temperature (determined by the signal voltage of the fuel tank temperature sensor) is displayed.	
EVAP SYS PRES	V	×		The signal voltage of EVAP control system pressure sensor is displayed.	

Monitored item	Unit	Monitor Item Selection		Description	Remarks
		ECU INPUT SIGNALS	MAIN-SIGNALS		
FUEL LEVEL SE	V	×		The signal voltage of the fuel level sensor is displayed.	
START SIGNAL	On/Off	×	×	Indicates start signal status [On/Off] computed by the ECM according to the signals of engine speed and battery voltage.	After starting the engine, [Off] is displayed regardless of the starter signal.
CLSD THL POS	On/Off	×	×	Indicates idle position [On/Off] computed by ECM according to the accelerator pedal position sensor signal.	
AIR COND SIG	On/Off	×	×	Indicates [On/Off] condition of the air conditioner switch as determined by the air conditioner signal.	
PW/ST SIGNAL	On/Off	×	×	[On/Off] condition of the power steering system (determined by the signal voltage of the power steering pressure sensor) is indicated.	
LOAD SIGNAL	On/Off	×	×	Indicates [On/Off] condition from the electrical load signal. • On: Rear window defogger switch is ON and/or lighting switch is in 2nd position. • Off: Both rear window defogger switch and lighting switch are OFF.	
IGNITION SW	On/Off	×	×	Indicates [On/Off] condition from ignition switch signal.	
HEATER FAN SW	On/Off	×		Indicates [On/Off] condition from the heater fan switch signal.	
BRAKE SW	On/Off	×		Indicates [On/Off] condition from the stop lamp switch signal.	
INJ PULSE-B1	msec		×	Indicates the actual fuel injection pulse width compensated by ECM according to the input signals.	When the engine is stopped, a certain computed value is indicated.
INJ PULSE-B2	msec				
IGN TIMING	BTDC		×	Indicates the ignition timing computed by ECM according to the input signals.	When the engine is stopped, a certain value is indicated.
CAL/LD VALUE	%			“Calculated load value” indicates the value of the current air flow divided by peak air flow.	
MASS AIRFLOW	g/s			Indicates the mass air flow computed by ECM according to the signal voltage of the mass air flow sensor.	
PURG VOL C/V	%			• Indicates the EVAP canister purge volume control solenoid valve control value computed by the ECM according to the input signals. • The opening becomes larger as the value increases.	
INT/V TIM (B1)	°CA	×		Indicates [°CA] of intake camshaft advance angle.	
INT/V TIM (B2)	°CA	×	×		

Monitored item	Unit	Monitor Item Selection		Description	Remarks
		ECU INPUT SIGNALS	MAIN-SIGNALS		
INT/V SOL(B1)	%		×	• The control value of the intake valve timing control solenoid valve (determined by ECM according to the input signals) is indicated. • The advance angle becomes larger as the value increases.	
INT/V SOL(B2)	%		×		
VIAS S/V-1	On/Off		×	The control condition of the VIAS control solenoid valve 1 (determined by ECM according to the input signals) is indicated. • On: VIAS control solenoid valve 1 is operating. • Off: VIAS control solenoid valve 1 is not operating.	
AIR COND RLY	On/Off		×	The air conditioner relay control condition (determined by ECM according to the input signals) is indicated.	
ENGINE MOUNT	IDLE/ TRVL			The control condition of the electronic controlled engine mount (determined by ECM according to the input signals) is indicated. • IDLE: Engine speed is below 950 rpm • TRVL: Engine speed is above 950 rpm	
FUEL PUMP RLY	On/Off		×	Indicates the fuel pump relay control condition determined by ECM according to the input signals.	
VENT CONT/V	On/Off			The control condition of the EVAP canister vent control valve (determined by ECM according to the input signals) is indicated. • On: Closed • Off: Open	
THRTL RELAY	On/Off		×	Indicates the throttle control motor relay control condition determined by the ECM according to the input signals.	
A/F S1 HTR(B2)	%		×	• Air fuel ratio (A/F) sensor 1 heater control value computed by ECM according to the input signals. • The current flow to the heater becomes larger as the value increases.	
HO2S2 HTR (B1)	On/Off			Indicates [On/Off] condition of heated oxygen sensor 2 heater determined by ECM according to the input signals.	
HO2S2 HTR (B2)	On/Off				
ALT DUTY SIG	On/Off			The control condition of the power generation voltage variable control (determined by ECM according to the input signals) is indicated. • On: Power generation voltage variable control is active. • Off: Power generation voltage variable control is inactive.	

Monitored item	Unit	Monitor Item Selection		Description	Remarks
		ECU INPUT SIGNALS	MAIN-SIGNALS		
I/P PULLY SPD	rpm	×		Indicates the engine speed computed from the input speed sensor signal.	
VEHICLE SPEED	km/h or mph	×		The vehicle speed computed from the vehicle speed signal sent from TCM is displayed.	
IDL A/V LEARN	Yet/CMPLT			Displays the condition of idle air volume learning • Yet: Idle Air Volume Learning has not been performed yet. • CMPLT: Idle Air Volume Learning has already been performed successfully.	
TRVL AFTER MIL	km or mile			Distance traveled while MIL is activated.	
ENG OIL TEMP	°C or °F	×		The engine oil temperature (determined by the signal voltage of the engine oil temperature sensor) is displayed.	
A/F S1 HTR(B1)	%		×	• Air fuel ratio (A/F) sensor 1 heater control value computed by ECM according to the input signals. • The current flow to the heater becomes larger as the value increases.	
VHCL SPEED SE	km/h or mph			The vehicle speed computed from the vehicle speed signal sent from combination meter is displayed.	
SET VHCL SPD	km/h or mph	×		• The preset vehicle speed is displayed.	
MAIN SW	On/Off	×		Indicates [On/Off] condition from MAIN switch signal.	
CANCEL SW	On/Off	×		Indicates [On/Off] condition from CANCEL switch signal.	
RESUME/ACC SW	On/Off	×		Indicates [On/Off] condition from RESUME/ACCELERATE switch signal.	
SET SW	On/Off	×		Indicates [On/Off] condition from SET/COAST switch signal.	
BRAKE SW1	On/Off	×		Indicates [On/Off] condition from Brake pedal position switch signal or ASCD clutch switch.	
BRAKE SW2	On/Off	×		Indicates [On/Off] condition of stop lamp switch signal.	
VHCL SPD CUT	Non/CUT			• Indicates the vehicle cruise condition. NON: Vehicle speed is maintained at the ASCD set speed. CUT: Vehicle speed decreased to excessively low compared with the ASCD set speed, and ASCD operation is cut off.	

Monitored item	Unit	Monitor Item Selection		Description	Remarks
		ECU INPUT SIGNALS	MAIN-SIGNALS		
LO SPEED CUT	Non/CUT			• Indicates the vehicle cruise condition. NON: Vehicle speed is maintained at the ASCD set speed. CUT: Vehicle speed decreased to excessively low, and ASCD operation is cut off.	
AT OD MONITOR	On/Off			• Indicates [On/Off] condition of CVT O/D according to the input signal from the TCM.	
AT OD CANCEL	On/Off			• Indicates [On/Off] condition of CVT O/D cancel request signal.	
CRUISE LAMP	On/Off			Indicates [On/Off] condition of CRUISE lamp determined by the ECM according to the input signals.	
SET LAMP	On/Off			• Indicates [On/Off] condition of SET lamp determined by the ECM according to the input signals.	
FAN DUTY	%			Indicates a command value for cooling fan. The value is calculated by ECM based on input signals.	
ALT DUTY	%			Indicates the duty ratio of the power generation command value. The ratio is calculated by ECM based on the battery current sensor signal.	
VIAS S/V-2	On/Off			The control condition of the VIAS control solenoid valve 2 (determined by ECM according to the input signals) is indicated. • On: VIAS control solenoid valve 2 is operating. • Off: VIAS control solenoid valve 2 is not operating.	
BAT CUR SEN	mV			The signal voltage of battery current sensor is displayed.	
A/F ADJ-B1	—			Indicates the correction of a factor stored in ECM. The factor is calculated from the difference between the target air-fuel ratio stored in ECM and the air-fuel ratio calculated from A/F sensor 1 signal.	
A/F ADJ-B2	—				
P/N POSI SW	On/Off	×	×	Indicates [On/Off] condition from the park/neutral position (PNP) signal.	
INT/A TEMP SE	°C or °F	×	×	The intake air temperature (determined by the signal voltage of the intake air temperature sensor) is indicated.	
AC PRESS SEN	V	×		The signal voltage from the refrigerant pressure sensor is displayed.	
A/F SEN1 (B2)	V	×	×	The A/F signal computed from the input signal of the air fuel ratio (A/F) sensor 1 is displayed.	

Monitored item	Unit	Monitor Item Selection		Description	Remarks
		ECU INPUT SIGNALS	MAIN-SIGNALS		
EVAP LEAK DIAG	Yet/CMPLT			Indicates the condition of EVAP leak diagnosis. • YET: EVAP leak diagnosis has not been performed yet. • CMPLT: EVAP leak diagnosis has been performed successfully.	
EVAP DIAG READY	On/Off			Indicates the ready condition of EVAP leak diagnosis. • On: Diagnosis has been ready condition. • Off: Diagnosis has not been ready condition.	
BAT TEMP SEN	V	×		The signal voltage from the battery temperature sensor is displayed.	
THRTL STK CNT B1*	—			—	
HO2 S2 DIAG1(B2)	INCMP/CMPLT			Indicates DTC P0139 self-diagnosis (delayed response) condition. • INCMP: Self-diagnosis is incomplete. • CMPLT: Self-diagnosis is complete.	
A/F SEN1 DIAG1(B2)	INCMP/CMPLT			Indicates DTC P015C or P015D self-diagnosis condition. • INCMP: Self-diagnosis is incomplete. • CMPLT: Self-diagnosis is complete.	
A/F SEN1 DIAG1(B1)	INCMP/CMPLT			Indicates DTC P015A or P015B self-diagnosis condition. • INCMP: Self-diagnosis is incomplete. • CMPLT: Self-diagnosis is complete.	
A/F SEN1 DIAG2(B2)	INCMP/CMPLT			Indicates DTC P014E or P014F self-diagnosis condition. • INCMP: Self-diagnosis is incomplete. • CMPLT: Self-diagnosis is complete.	
A/F SEN1 DIAG2(B1)	INCMP/CMPLT			Indicates DTC P014C or P014Dself-diagnosis condition. • INCMP: Self-diagnosis is incomplete. • CMPLT: Self-diagnosis is complete.	
A/F SEN1 DIAG3(B2)	ABSNT/PRSNT			Indicates DTC P014E, P014F, P015C or P015D self-diagnosis condition. • ABSNT: The vehicle condition is not within the diagnosis range. • PRSNT: The vehicle condition is within the diagnosis range.	

Monitored item	Unit	Monitor Item Selection		Description	Remarks
		ECU INPUT SIGNALS	MAIN-SIGNALS		
A/F SEN1 DIAG3(B1)	ABSNT/PRSNT			Indicates DTC P014C, P014D, P015A or P015B self-diagnosis condition. • ABSNT: The vehicle condition is not within the diagnosis range. • PRSNT: The vehicle condition is within the diagnosis range.	
HO2 S2 DIAG2(B2)	INCMP/CMPLT			Indicates DTC P0139 self-diagnosis (slow response) condition. • INCMP: Self-diagnosis is incomplete. • CMPLT: Self-diagnosis is complete.	
HO2 S2 DIAG2(B1)	INCMP/CMPLT			Indicates DTC P0139 self-diagnosis (slow response) condition. • INCMP: Self-diagnosis is incomplete. • CMPLT: Self-diagnosis is complete.	
EOP SENSOR	mV	×		The signal voltage of EOP sensor is displayed.	
HO2 S2 DIAG1(B1)	INCMP/CMPLT			Indicates DTC P0139 self-diagnosis (delayed response) condition. • INCMP: Self-diagnosis is incomplete. • CMPLT: Self-diagnosis is complete.	
DIST SW	On/Off			Indicates [On/Off] condition from DISTANCE switch signal.	
AC EVA TEMP	°C or °F			Indicates A/C evaporator temperature sent from“A/C auto amp.”.	
AC EVA TARGET	°C or °F			Indicates target A/C evaporator temperature sent from“A/C auto amp.”.	
MASS AIR FLOW SENSOR (Hz)	Hz	×		The signal frequency of the mass air flow sensor is displayed.	
EXH/V TIM B1	°CA	×	×	Indicates [°CA] of exhaust camshaft advance angle.	
EXH/V TIM B2	°CA	×	×		
VTC DTY EX B1	%			—	
VTC DTY EX B2	%			—	
A/F-S ATMSPHRC CRCT B1	—			Displays a determined value of atmospheric correction factor necessary for correcting an A/F sensor signal input to ECM. The signal used for the correction is an A/F sensor signal transmitted while driving under atmospheric pressure.	
A/F-S ATMSPHRC CRCT B2	—			Displays a determined value of atmospheric correction factor necessary for correcting an A/F sensor signal input to ECM. The signal used for the correction is an A/F sensor signal transmitted while driving under atmospheric pressure.	

Monitored item	Unit	Monitor Item Selection		Description	Remarks
		ECU INPUT SIGNALS	MAIN-SIGNALS		
A/F-S ATMSPHRC CRCT UP B1	count			Displays the number of updates of the A/F sensor atmospheric correction factor.	
A/F-S ATMSPHRC CRCT UP B2	count			Displays the number of updates of the A/F sensor atmospheric correction factor.	
SYSTEM 1 DIAGNOSIS A B2	INCMP/CMPLT			• Indicates DTC P219B self-diagnosis condition. - INCMP: Self-diagnosis is incomplete. - CMPLT: Self-diagnosis is complete.	
SYSTEM 1 DIAGNOSIS A B1	INCMP/CMPLT			• Indicates DTC P219A self-diagnosis condition. - INCMP: Self-diagnosis is incomplete. - CMPLT: Self-diagnosis is complete.	
SYSTEM 1 DIAGNOSIS B B2	ABSNT/PRSNT			• Indicates DTC P219B self-diagnosis condition. - ABSNT: Self-diagnosis standby - PRSNT: Under self-diagnosis	
SYSTEM 1 DIAGNOSIS B B1	ABSNT/PRSNT			• Indicates DTC P219A self-diagnosis condition. - ABSNT: Self-diagnosis standby - PRSNT: Under self-diagnosis	

*: The item is indicated, but not used

NOTE:

Any monitored item that does not match the vehicle being diagnosed is deleted from the display automatically.

WORK SUPPORT MODE

Work Item

WORK ITEM	CONDITION	USAGE
IDLE AIR VOL LEARN	The idle air volume that keeps the engine within the specified range is memorized in ECM.	When learning the idle air volume
EVAP SYSTEM CLOSE	Close the EVAP canister vent control valve in order to make EVAP system close under the following conditions. • Ignition switch ON • Engine not running • Ambient temperature is above 0°C (32°F). • No vacuum and no high pressure in EVAP system • Fuel tank temperature is more than 0°C (32°F). • Within 10 minutes after starting “EVAP SYSTEM CLOSE” • When trying to execute “EVAP SYSTEM CLOSE” under the condition except above, CONSULT will discontinue it and display appropriate instruction. **NOTE:** **When starting engine, CONSULT may display “BATTERY VOLTAGE IS LOW. CHARGE BATTERY”, even in using charged battery.**	When detecting EVAP vapor leakage in the EVAP system
FUEL PRESSURE RELEASE	Fuel pump will stop by touching “START” during idling. crank a few times after engine stalls.	When releasing fuel pressure from fuel line

WORK ITEM	CONDITION	USAGE
SELF-LEARNING CONT	The coefficient of self-learning control mixture ratio returns to the original coefficient.	When clearing mixture ratio self-learning value
TARGET IGN TIM ADJ*	Idle condition	When adjusting target ignition timing
TARGET IDLE RPM ADJ*	Idle condition	When setting target idle speed
VIN REGISTRATION	In this mode, VIN is registered in ECM	When registering VIN in ECM
CLSD THL POS LEARN	Ignition on and engine stopped.	When learning the throttle valve closed position
SAVING DATA FOR REPLC CPU	In this mode, save data that is in ECM.	When ECM is replaced.
WRITING DATA FOR REPLC CPU	In this mode, write data stored by “SAVE DATA FOR CPU REPLC” in work support mode to ECM.	When ECM is replaced.

*: This function is not necessary in the usual service procedure.

ACTIVE TEST MODE

Test Item

TEST ITEM	CONDITION	JUDGMENT	CHECK ITEM (REMEDY)
FUEL INJECTION	• Engine: Return to the original non-standard condition • Change the amount of fuel injection using CONSULT.	If malfunctioning symptom disappears, see CHECK ITEM.	• Harness and connectors • Fuel injector • Air fuel ratio (A/F) sensor 1
ENG COOLANT TEMP	• Engine: Return to the original non-standard condition • Change the engine coolant temperature using CONSULT.	If malfunctioning symptom disappears, see CHECK ITEM.	• Harness and connectors • Engine coolant temperature sensor • Fuel injector
PURG VOL CONT/V	• Engine: After warming up, run engine at 1,500 rpm. • Change the EVAP canister purge volume control solenoid valve opening percent using CONSULT.	Engine speed changes according to the opening percent.	• Harness and connectors • Solenoid valve
FUEL/T TEMP SEN	• Change the fuel tank temperature using CONSULT.		
INT V/T ASSIGN ANGLE	• Engine: Return to the original non-standard condition • Change intake valve timing using CONSULT.	If malfunctioning symptom disappears, see CHECK ITEM.	• Harness and connectors • Intake valve timing control solenoid valve
EXH V/T ASSIGN ANGLE	• Engine: Return to the original non-standard condition • Change exhaust valve timing using CONSULT.	If malfunctioning symptom disappears, see CHECK ITEM.	• Harness and connectors • Exhaust valve timing control solenoid valve
FAN DUTY CONTROL*	• Ignition switch: ON • Change duty ratio using CONSULT.	Cooling fan speed changes.	• Harness and connectors • Cooling fan motor • Cooling fan relay • Cooling fan control module • IPDM E/R
FUEL PUMP RELAY	• Ignition switch: ON (Engine stopped) • Turn the fuel pump relay “ON” and “OFF” using CONSULT and listen to operating sound.	Fuel pump relay makes the operating sound.	• Harness and connectors • Fuel pump relay
VIAS S/V-1	• Ignition switch: ON • Turn solenoid valve “ON” and “OFF” using CONSULT and listen to operating sound.	Solenoid valve makes the operating sound.	• Harness and connectors • Solenoid valve

TEST ITEM	CONDITION	JUDGMENT	CHECK ITEM (REMEDY)
ENGINE MOUNTING	• Ignition switch: ON • Turn electronic controlled engine mount “IDLE” and “TRVL” with CONSULT.	Electronic controlled engine mount makes the operating sound.	• Harness and connectors • Electronic controlled engine mount
VIAS S/V-2	• Ignition switch: ON • Turn solenoid valve “ON” and “OFF” using CONSULT and listen to operating sound.	Solenoid valve makes the operating sound.	• Harness and connectors • Solenoid valve
IGNITION TIMING	• Engine: Return to the original non-standard condition • Timing light: Set • Retard the ignition timing using CONSULT.	If malfunctioning symptom disappears, see CHECK ITEM.	Perform Idle Air Volume Learning.
POWER BALANCE	• Engine: After warming up, idle the engine. • A/C switch OFF • Selector lever: P or N position • Cut off each injector signal one at a time using CONSULT.	Engine runs rough or stops.	• Harness and connectors • Compression • Fuel injector • Power transistor • Spark plug • Ignition coil
VENT CONTROL/V	• Ignition switch: ON (Engine stopped) • Turn solenoid valve “ON” and “OFF” with the CONSULT and listen to operating sound.	Solenoid valve makes an operating sound.	• Harness and connectors • Solenoid valve

*: Leaving cooling fan OFF with CONSULT while engine is running may cause the engine to overheat.

DTC WORK SUPPORT MODE

Test item

Test mode	Test item	Corresponding DTC No.	Reference page
A/F SEN1	A/F SEN1(B1) P1276	P0130	EC-247
	A/F SEN1(B2) P1286	P0150	EC-247
	A/F SENSOR1(B1) P014C, P014D	P014C, P014D	EC-278
	A/F SENSOR1(B2) P014E, P014F	P014E, P014F	EC-278
	A/F SENSOR1(B1) P015A, P015B	P015A, P015B	EC-278
	A/F SENSOR1(B2) P015C, P015D	P015C, P015D	EC-278
EVAPORATIVE SYSTEM	PURG FLOW P0441	P0441	EC-327
	PURG VOL CN/V P1444	P0443	EC-332
HO2S2	HO2S2(B1) P1146	P0138	EC-262
	HO2S2(B1) P1147	P0137	EC-257
	HO2S2(B1) P0139	P0139	EC-269
	HO2S2(B2) P1166	P0158	EC-262
	HO2S2(B2) P1167	P0157	EC-257
	HO2S2(B2) P0159	P0159	EC-269

SRT & P-DTC MODE

SRT STATUS Mode

- For items whose SRT codes are set, “CMPLT” is displayed on the CONSULT screen; for items whose SRT codes are not set, “INCMP” is displayed.
- “SRT STATUS” provides the presence or absence of permanent DTCs stored in ECM memory.

PERMANENT DTC STATUS Mode

How to display permanent DTC status

1. Turn ignition switch OFF and wait at least 10 seconds.
2. Turn ignition switch ON.

3. Turn ignition switch OFF and wait at least 10 seconds.
4. Turn ignition switch ON.
5. Select “PERMANENT DTC STATUS” in “DTC & SRT CONFIRMATION” mode with CONSULT.
   NOTE:
   Permanent DTCs stored in ECM memory are displayed on the CONSULT screen to show if a driving pattern required for erasing permanent DTCs is complete (CMPLT) or incomplete (INCMP).
   CAUTION:
   Since the “PERMANENT DTC STATUS” screen displays the previous trip information, repeat the following twice to update the information: “Ignition switch OFF”, “Wait for more than 10 seconds” and “Ignition switch ON”.

PERMANENT DTC & SRT CONFIRMATION : PERMANENT DTC STATUS

CAUTION:
Turn ignition switch from ON to OFF twice to update the information on the status screen.

PERMANENT DTC	DRIVING PATTERN B	DRIVING PATTERN D
XXXX	INCMP	INCMP
XXXX	CMPLT	INCMP
XXXX	INCMP	CMPLT
XXXX	CMPLT	INCMP
XXXX	INCMP	INCMP
XXXX	INCMP	INCMP

The previous trip information is displayed.

JSBIA0062GB

NOTE:
This mode is not used in regions that permanent DTCs are not regulated by law.

SRT WORK SUPPORT Mode
This mode enables a technician to drive a vehicle to set the SRT while monitoring the SRT status.

PERMANENT DTC WORK SUPPORT Mode
This mode enables a technician to drive a vehicle to complete the driving pattern that is required for erasing permanent DTC.
NOTE:
This mode is not used in regions that permanent DTCs are not regulated by law.

ECU DIAGNOSIS INFORMATION

ECM

Reference Value

INFOID:0000000011148499

VALUES ON THE DIAGNOSIS TOOL

NOTE:

- The following table includes information (items) inapplicable to this vehicle. For information (items) applicable to this vehicle, refer to CONSULT display items.
- Numerical values in the following table are reference values.
- These values are input/output values that ECM receives/transmits and may differ from actual operations.
  Example:
  The ignition timing shown by the timing light may differ from the ignition timing displayed on the data monitor. This occurs because the timing light shows a value calculated by ECM according to signals received from the cam shaft position sensor and other sensors related to ignition timing.

For outlines of following items, refer to EC-72, "CONSULT Function".

Monitor Item	Condition		Values/Status
ENG SPEED	Run engine and compare CONSULT value with the tachometer indication.		Almost the same speed as the tachometer indication.
MAS AIR FLOW SENSOR (Hz)	See EC-182, "Description".		
B/FUEL SCHDL	See EC-182, "Description".		
A/F ALPHA-B1	See EC-182, "Description".		
A/F ALPHA-B2	See EC-182, "Description".		
COOLANT TEMP/S	Engine: After warming up		More than 70°C (158°F)
A/F SEN1 (B1)	Engine: After warming up	Maintaining engine speed at 2,000 rpm	Fluctuates around 2.2 V
HO2S2 (B1)	Revving engine from idle to 3,000 rpm quickly after the following conditions are met. • Engine: After warming up • After keeping engine speed between 3,500 and 4,000 rpm for 1 minute and at idle for 1 minute under no load		0 - 0.3 V ←→ Approx. 0.6 - 1.0 V
HO2S2 (B2)	Revving engine from idle to 3,000 rpm quickly after the following conditions are met. • Engine: After warming up • After keeping engine speed between 3,500 and 4,000 rpm for 1 minute and at idle for 1 minute under no load		0 - 0.3 V ←→ Approx. 0.6 - 1.0 V
HO2S2 MNTR(B1)	Revving engine from idle to 3,000 rpm quickly after the following conditions are met. • Engine: After warming up • After keeping engine speed between 3,500 and 4,000 rpm for 1 minute and at idle for 1 minute under no load		LEAN ←→ RICH
HO2S2 MNTR(B2)	Revving engine from idle to 3,000 rpm quickly after the following conditions are met. • Engine: After warming up • After keeping engine speed between 3,500 and 4,000 rpm for 1 minute and at idle for 1 minute under no load		LEAN ←→ RICH
VHCL SPEED SE	Turn drive wheels and compare CONSULT value with the speedometer indication.		Almost the same speed as speedometer indication
BATTERY VOLT	Ignition switch: ON (Engine stopped)		11 - 14 V
ACCEL SEN 1	Ignition switch: ON (Engine stopped)	Accelerator pedal: Fully released	0.5 - 1.0 V
		Accelerator pedal: Fully depressed	4.2 - 4.8 V
ACCEL SEN 2*1	Ignition switch: ON (Engine stopped)	Accelerator pedal: Fully released	0.5 - 1.0 V
		Accelerator pedal: Fully depressed	4.2 - 4.8 V

Monitor Item	Condition		Values/Status
TP SEN 1-B1	• Ignition switch: ON (Engine stopped) • Selector lever: D position	Accelerator pedal: Fully released	More than 0.36 V
		Accelerator pedal: Fully depressed	Less than 4.75 V
TP SEN 2-B1*1	• Ignition switch: ON (Engine stopped) • Selector lever: D position	Accelerator pedal: Fully released	More than 0.36 V
		Accelerator pedal: Fully depressed	Less than 4.75 V
FUEL T/TMP SE	Ignition switch: ON		Indicates fuel tank temperature
EVAP SYS PRES	Ignition switch: ON		Approx. 1.8 - 4.8 V
FUEL LEVEL SE	Ignition switch: ON		Depending on fuel level of fuel tank
START SIGNAL	Ignition switch: ON → START → ON		Off → On → Off
CLSD THL POS	Ignition switch: ON (Engine stopped)	Accelerator pedal: Fully released	On
		Accelerator pedal: Slightly depressed	Off
AIR COND SIG	Engine: After warming up, idle the engine	Air conditioner switch: OFF	Off
		Air conditioner switch: ON (Compressor operates.)	On
PW/ST SIGNAL	Engine: After warming up, idle the engine	Steering wheel: Not being turned	Off
		Steering wheel: Being turned	On
LOAD SIGNAL	Ignition switch: ON	Rear window defogger switch: ON and/or Lighting switch: 2nd position	On
		Rear window defogger switch and lighting switch: OFF	Off
IGNITION SW	Ignition switch: ON → OFF → ON		On → Off → On
HEATER FAN SW	Engine: After warming up, idle the engine	Heater fan switch: ON	On
		Heater fan switch: OFF	Off
BRAKE SW	Ignition switch: ON	Brake pedal: Fully released	Off
		Brake pedal: Slightly depressed	On
INJ PULSE-B1	• Engine: After warming up • Selector lever: P or N position • Air conditioner switch: OFF • No load	Idle	2.0 - 3.0 msec
		2,000 rpm	1.9 - 2.9 msec
INJ PULSE-B2	• Engine: After warming up • Selector lever: P or N position • Air conditioner switch: OFF • No load	Idle	2.0 - 3.0 msec
		2,000 rpm	1.9 - 2.9 msec
IGN TIMING	• Engine: After warming up • Selector lever: P or N position • Air conditioner switch: OFF • No load	Idle	7 - 17°BTDC
		2,000 rpm	25 - 45°BTDC
CAL/LD VALUE	• Engine: After warming up • Selector lever: P or N position • Air conditioner switch: OFF • No load	Idle	5 - 35%
		2,500 rpm	5 - 35%
MASS AIRFLOW	• Engine: After warming up • Selector lever: P or N position • Air conditioner switch: OFF • No load	Idle	2.0 - 6.0 g/s
		2,500 rpm	7.0 - 20.0 g/s
PURG VOL C/V	• Engine: After warming up • Selector lever: P or N position • Air conditioner switch: OFF • No load	Idle (Accelerator pedal: Not depressed even slightly, after engine starting.)	0%
		2,000 rpm	—

Monitor Item	Condition		Values/Status
INT/V TIM (B1)	• Engine: After warming up • Selector lever: P or N position • Air conditioner switch: OFF • No load	Idle	–5 - 5°CA
		2,000 rpm	Approx. 0 - 30°CA
INT/V TIM (B2)	• Engine: After warming up • Selector lever: P or N position • Air conditioner switch: OFF • No load	Idle	–5 - 5°CA
		2,000 rpm	Approx. 0 - 30°CA
INT/V SOL(B1)	• Engine: After warming up • Selector lever: P or N position • Air conditioner switch: OFF • No load	Idle	0 - 2%
		2,000 rpm	Approx. 0 - 50%
INT/V SOL(B2)	• Engine: After warming up • Selector lever: P or N position • Air conditioner switch: OFF • No load	Idle	0 - 2%
		2,000 rpm	Approx. 0 - 50%
VIAS S/V-1	• Engine: After warming up • Selector lever: P or N position • Air conditioner switch: OFF • No load	When revving engine up to 5,000 rpm quickly	Off →On → Off
AIR COND RLY	Engine: After warming up, idle the engine	Air conditioner switch: OFF	Off
		Air conditioner switch: ON (Compressor operates)	On
ENGINE MOUNT	Engine: After warming up	Below 950 rpm	IDLE
		Above 950 rpm	TRVL
FUEL PUMP RLY	• For 1 second after turning ignition switch: ON • Engine running or cranking		On
	Except above		Off
VENT CONT/V	Ignition switch: ON		Off
THRTL RELAY	Ignition switch: ON		On
A/F S1 HTR(B2)	Engine: After warming up, idle the engine (More than 140 seconds after starting engine)		4 - 100%
HO2S2 HTR (B1)	Engine speed: Below 3,600 rpm after the following conditions are met. • Engine: After warming up • Keeping the engine speed between 3,500 and 4,000 rpm for 1 minute and at idle for 1 minute under no load		On
	Engine speed: Above 3,600 rpm		Off
HO2S2 HTR (B2)	Engine speed: Below 3,600 rpm after the following conditions are met. • Engine: After warming up • Keeping the engine speed between 3,500 and 4,000 rpm for 1 minute and at idle for 1 minute under no load		On
	Engine speed: Above 3,600 rpm		Off
ALT DUTY SIG	Power generation voltage variable control: Operating		On
	Power generation voltage variable control: Not operating		Off
I/P PULLY SPD	Vehicle speed: More than 20 km/h (12 MPH)		Almost the same speed as the tachometer indication
VEHICLE SPEED	Turn drive wheels and compare CONSULT value with the speedometer indication.		Almost the same speed as the speedometer indication
IDL A/V LEARN	Engine: Running	Idle air volume learning has not been performed yet.	Yet
		Idle air volume learning has already been performed successfully.	CMPLT
TRVL AFTER MIL	Ignition switch: ON	Vehicle has traveled after MIL has illuminated.	0 - 65,535 km (0 - 40,723 miles)

Monitor Item	Condition		Values/Status
ENG OIL TEMP	Engine: After warming up		More than 70°C (158°F)
A/F S1 HTR(B1)	Engine: After warming up, idle the engine (More than 140 seconds after starting engine)		4 - 100%
VHCL SPEED SE	Turn drive wheels and compare CONSULT value with the speedometer indication.		Almost the same speed as the speedometer indication
SET VHCL SPD	Engine: Running	ASCD: Operating	The preset vehicle speed is displayed
MAIN SW	Ignition switch: ON	MAIN switch: Pressed	On
		MAIN switch: Released	Off
CANCEL SW	Ignition switch: ON	CANCEL switch: Pressed	On
		CANCEL switch: Released	Off
RESUME/ACC SW	Ignition switch: ON	RESUME/ACCELERATE switch: Pressed	On
		RESUME/ACCELERATE switch: Released	Off
SET SW	Ignition switch: ON	SET/COAST switch: Pressed	On
		SET/COAST switch: Released	Off
BRAKE SW1 (Brake pedal position switch)	Ignition switch: ON	Brake pedal: Fully released	On
		Brake pedal: Slightly depressed	Off
BRAKE SW2 (Stop lamp switch)	Ignition switch: ON	Brake pedal: Fully released	Off
		Brake pedal: Slightly depressed	On
VHCL SPD CUT	Ignition switch: ON		Non
LO SPEED CUT	Ignition switch: ON		Non
AT OD MONITOR	Ignition switch: ON		Off
AT OD CANCEL	Ignition switch: ON		Off
CRUISE LAMP	Ignition switch: ON	MAIN switch: Pressed at the 1st time → at the 2nd time	On → Off
SET LAMP	• MAIN switch: ON • When vehicle speed is between 40 km/h (25 MPH) and 144 km/h (89 MPH)	ASCD: Operating	On
		ASCD: Not operating	Off
FAN DUTY	Engine: Running		0 - 100%
ALT DUTY	Engine: Idle		0 - 80%
VIAS S/V-2	• Engine: After warming up • Selector lever: P or N position • Air conditioner switch: OFF • No load	When revving engine up to 5,000 rpm quickly	Off →On → Off
BAT CUR SEN	• Engine speed: Idle • Battery: Fully charged*2 • Selector lever: P or N position • Air conditioner switch: OFF • No load		Approx. 2,600 - 3,500 mV
A/F ADJ-B1	Engine: Running		–0.330 - 0.330
A/F ADJ-B2	Engine: Running		–0.330 - 0.330
P/N POSI SW	Ignition switch: ON	Selector lever: P or N position	On
		Selector lever: Except above position	Off
INT/A TEMP SE	Ignition switch: ON		Indicates intake air temperature
AC PRESS SEN	• Engine: Idle • Both A/C switch and blower fan switch: ON (Compressor operates)		1.0 - 4.0 V

Monitor Item	Condition		Values/Status
A/F SEN1 (B2)	Engine: After warming up	Maintaining engine speed at 2,000 rpm	Fluctuates around 2.2 V
EVAP LEAK DIAG	Ignition switch: ON		Indicates the condition of EVAP leak diagnosis.
EVAP DIAG READY	Ignition switch: ON		Indicates the ready condition of EVAP leak diagnosis.
BAT TEMP SEN	• Engine: After warming up • Selector lever: P or N position • Air conditioner switch: OFF • No load	Idle	Indicates the temperature around the battery.
THRTL STK CNT B1*3	—		—
HO2 S2 DIAG1(B2)	DTC P0159 self-diagnosis (delayed response) has not been performed yet.		INCMP
	DTC P0159 self-diagnosis (delayed response) has already been performed successfully.		CMPLT
A/F SEN1 DIAG1 (B2)	DTC P015C and P015D self-diagnosis is incomplete.		INCMP
	DTC P015C and P015D self-diagnosis is complete.		CMPLT
A/F SEN1 DIAG1 (B1)	DTC P015A and P015B self-diagnosis is incomplete.		INCMP
	DTC P015A and P015B self-diagnosis is complete.		CMPLT
A/F SEN1 DIAG2 (B2)	DTC P014E and P014F self-diagnosis is incomplete.		INCMP
	DTC P014E and P014F self-diagnosis is complete.		CMPLT
A/F SEN1 DIAG2 (B1)	DTC P014C and P014D self-diagnosis is incomplete.		INCMP
	DTC P014C and P014D self-diagnosis is complete.		CMPLT
A/F SEN1 DIAG3 (B2)	The vehicle condition is not within the diagnosis range of DTC P014E, P014F, P015C or P015D.		ABSNT
	The vehicle condition is within the diagnosis range of DTC P014E, P014F, P015C or P015D.		PRSNT
A/F SEN1 DIAG3 (B1)	The vehicle condition is not within the diagnosis range of DTC P014C, P014D, P015A or P015B.		ABSNT
	The vehicle condition is within the diagnosis range of DTC P014C, P014D, P015A or P015B.		PRSNT
HO2 S2 DIAG2(B2)	DTC P0159 self-diagnosis (slow response) has not been performed yet.		INCMP
	DTC P0159 self-diagnosis (slow response) has already been performed successfully.		CMPLT
HO2 S2 DIAG2(B1)	DTC P0139 self-diagnosis (slow response) has not been performed yet.		INCMP
	DTC P0139 self-diagnosis (slow response) has already been performed successfully.		CMPLT
EOP SENSOR	• Engine: After warming up • Selector lever: P or N position • Air conditioner switch: OFF • No load	Idle	Approx. 1,450 mV
		2,000 rpm	Approx. 2,850 mV
HO2 S2 DIAG1(B1)	DTC P0139 self-diagnosis (delayed response) has not been performed yet.		INCMP
	DTC P0139 self-diagnosis (delayed response) has already been performed successfully.		CMPLT
DIST SW	Ignition switch: ON	DISTANCE switch: Pressed	ON
		DISTANCE switch: Released	OFF
AC EVA TEMP	Engine: Running		Indicates A/C evaporator temperature sent from“A/C auto amp.”.
AC EVA TARGET	Engine: Running		Indicates target A/C evaporator temperature sent from “A/C auto amp.”.

Monitor Item	Condition		Values/Status
EXT/V TIM B1	• Engine: After warming up • Selector lever: N position • Air conditioner switch: OFF • No load	Idle	–5 - 5°CA
		Around 2,500 rpm while the engine speed is rising	Approx. 0 - 30°CA
EXT/V TIM B2	• Engine: After warming up • Selector lever: N position • Air conditioner switch: OFF • No load	Idle	–5 - 5°CA
		Around 2,500 rpm while the engine speed is rising	Approx. 0 - 30°CA
VTC DTY EX B1	• Engine: After warming up • Selector lever: N position • Air conditioner switch: OFF • No load	Idle	0 - 2%
		Around 2,500 rpm while the engine speed is rising	Approx. 0 - 70%
VTC DTY EX B2	• Engine: After warming up • Selector lever: N position • Air conditioner switch: OFF • No load	Idle	0 - 2%
		Around 2,500 rpm while the engine speed is rising	Approx. 0 - 70%
A/F-S ATMSPHRC CRCT B1	Engine: After warming up, idle the engine		Varies depending on vehicle environment.
A/F-S ATMSPHRC CRCT B2	Engine: After warming up, idle the engine		Varies depending on vehicle environment.
A/F-S ATMSPHRC CRCT UP B1	Engine: Running		Varies depending on the number of updates.
A/F-S ATMSPHRC CRCT UP B2	Engine: Running		Varies depending on the number of updates.
SYSTEM 1 DIAGNOSIS A B1	DTC P219A self-diagnosis is incomplete.		INCMP
	DTC P219A self-diagnosis is complete.		CMPLT
SYSTEM 1 DIAGNOSIS A B2	DTC P219B self-diagnosis is incomplete.		INCMP
	DTC P219B self-diagnosis is complete.		CMPLT
SYSTEM 1 DIAGNOSIS B B1	DTC P219A self-diagnosis is on standby.		ABSENT
	DTC P219A self-diagnosis is under diagnosis.		PRSENT
SYSTEM 1 DIAGNOSIS B B2	DTC P219B self-diagnosis is on standby.		ABSENT
	DTC P219B self-diagnosis is under diagnosis.		PRSENT

*1: Accelerator pedal position sensor 2 signal and throttle position sensor 2 signal are converted by ECM internally. Thus, they differ from ECM terminals voltage signal.
*2: Before measuring the terminal voltage, confirm that the battery is fully charged. Refer to PG-86, "How to Handle Battery".
*3: The item is indicated, but not used.

TERMINAL LAYOUT

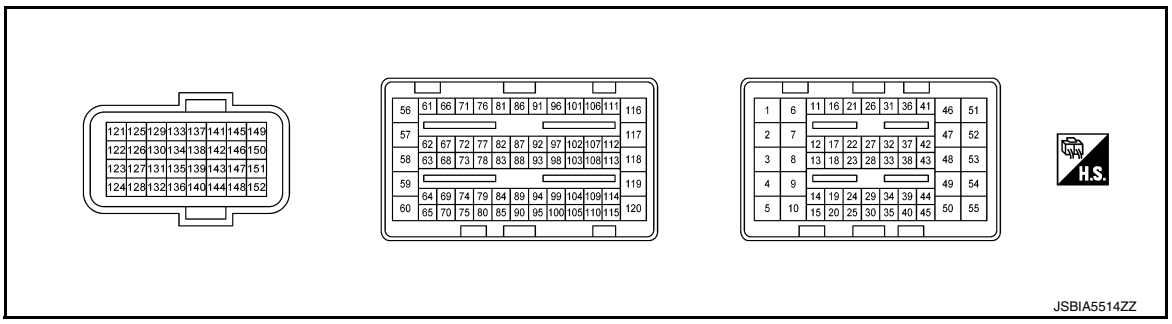

PHYSICAL VALUES

NOTE:
- ECM is located in the engine room left side near battery.
- Specification data are reference values.
- Pulse signal is measured by CONSULT.

Terminal No.		Description		Condition	Value (Approx.)
+	–	Signal name	Input/ Output		
1 (G)	152 (B)	Throttle control motor (Close)	Output	[Ignition switch: ON] • Engine stopped • Selector lever: D position • Accelerator pedal: Fully released	0 - 14 V★ 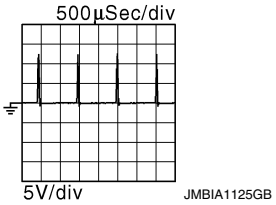
2 (R)	152 (B)	Throttle control motor power supply	Input	[Ignition switch: ON]	BATTERY VOLTAGE (11 - 14 V)
3 (W)	152 (B)	Throttle control motor (Open)	Output	[Ignition switch: ON] • Engine stopped • Selector lever: D position • Accelerator pedal: Fully depressed	0 - 14 V★ 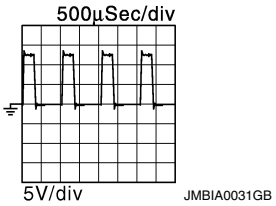
				[Ignition switch: ON] • Engine stopped • Selector lever: D position • Accelerator pedal: Fully released	0 - 14 V★ 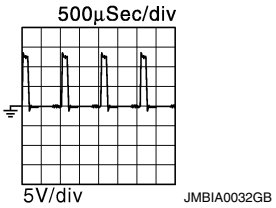
4 (GR)	—	Sensor ground [Knock sensor (bank 1), Knock sensor (bank 2)]	—	—	—
5 (B)	4 (GR)	Knock sensor (bank 1)	Input	[Engine is running] Idle speed	2.5 V*1
6 (BR)	152 (B)	A/F sensor 1 heater (bank 1)	Output	[Engine is running] • Warm-up condition • Idle speed (More than 140 seconds after starting engine)	2.9 - 8.8 V★ 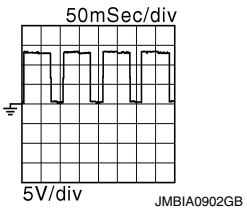
7 (SB)	152 (B)	Heated oxygen sensor 2 heater (bank 1)	Output	[Engine is running] Engine speed: Below 3,600 rpm after the following conditions are met • Engine: after warming up • Keeping the engine speed between 3,500 and 4,000 rpm for 1 minute and at idle for 1 minute under no load	10 V★ 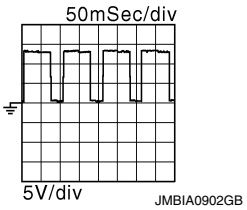
				• [Ignition switch: ON] Engine stopped • [Engine is running] Engine speed: Above 3,600 rpm	BATTERY VOLTAGE (11 - 14 V)

Terminal No.		Description		Condition	Value (Approx.)
+	–	Signal name	Input/ Output		
8 (G)	152 (B)	Throttle control motor relay	Output	[Ignition switch: ON → OFF]	0 - 1.0 V → BATTERY VOLTAGE (11 - 14 V) → 0 V
				[Ignition switch: ON]	0 - 1.0 V
9 (W)	4 (GR)	Knock sensor (bank 2)	Input	[Engine is running] Idle speed	2.5 V*1
10 (B)	—	ECM ground	—	—	—
11 (Y) 12 (V) 16 (V) 17 (Y) 21 (V) 22 (Y)	152 (B)	Fuel injector No. 5 Fuel injector No. 4 Fuel injector No. 2 Fuel injector No. 1 Fuel injector No. 6 Fuel injector No. 3	Output	[Engine is running] • Warm-up condition • Engine speed: 2,000 rpm	BATTERY VOLTAGE (11 - 14 V)★ 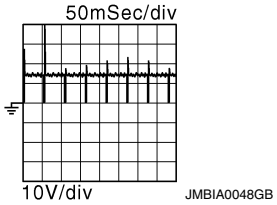
				[Engine is running] • Warm-up condition • Idle speed **NOTE:** The pulse cycle changes depending on rpm at idle	BATTERY VOLTAGE (11 - 14 V)★ 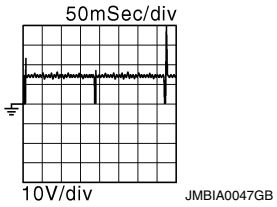
13 (G)	15 (B)	Engine oil temperature sensor	Input	[Engine is running]	0 - 4.8 V Output voltage varies with engine oil temperature.
14 (LG)	18 (Y)	Engine oil pressure sensor	Input	[Engine is running] • Warm-up condition • Idle speed	1.3 V★ 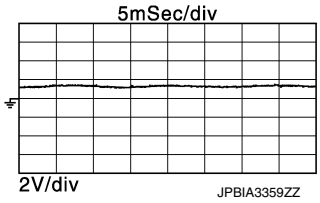
				[Engine is running] • Warm-up condition • Engine speed is 2,000 rpm	2.7 V★ 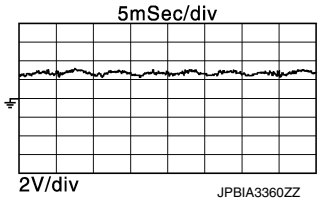
15 (B)	—	Sensor ground (Engine oil temperature sensor, engine oil pressure sensor)	—	—	—
18 (Y)	15 (B)	Sensor power supply (Engine oil pressure sensor)	—	[Ignition switch: ON]	5 V
	25 (V)	Sensor power supply (Refrigerant pressure sensor)			

Terminal No.		Description		Condition	Value (Approx.)
+	–	Signal name	Input/ Output		
19 (W)	152 (B)	Fuel pump relay	Output	• [Ignition switch: ON] For 1 second after turning ignition switch ON • [Engine is running]	0 - 1.0 V
20 (SB)	25 (V)	Refrigerant pressure sensor	Input	[Engine is running] • Warm-up condition • Both A/C switch and blower fan motor switch: ON (Compressor operates)	1.0 - 4.0 V
25 (V)	—	Sensor ground (Refrigerant pressure sensor)	—	—	—
28 (LG)	40 (BR)	Sensor power supply [Exhaust valve timing control position sensor (bank 1), exhaust valve timing control position sensor (bank 2), crankshaft position sensor (POS), mass air flow sensor]	Input	[Engine is running]	5 V
31 (BR)	35 (B)	Engine coolant temperature sensor	Input	[Engine is running]	0 - 4.8 V Output voltage varies with engine coolant temperature.
32 (L)	152 (B)	Heated oxygen sensor 2 (bank 2)	Input	[Engine is running] Revving engine from idle to 3,000 rpm quickly after the following conditions are met • Engine: after warming up • Keeping the engine speed between 3,500 and 4,000 rpm for 1 minute and at idle for 1 minute under no load	0 - 1.0 V
34 (V)	40 (BR)	Intake air temperature sensor	Input	[Engine is running]	0 - 4.8 V Output voltage varies with intake air temperature.
35 (B)	—	Sensor ground (Heated oxygen sensor 2, engine coolant temperature sensor)	—	—	—
36 (L)	40 (BR)	Crankshaft position sensor (POS)	Input	[Engine is running] • Warm-up condition • Idle speed **NOTE:** The pulse cycle changes depending on rpm at idle	4.0 - 5.0 V★ 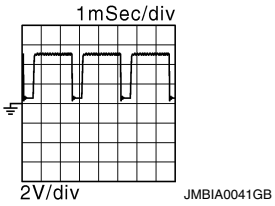
				[Engine is running] Engine speed: 2,000 rpm	4.0 - 5.0 V★ 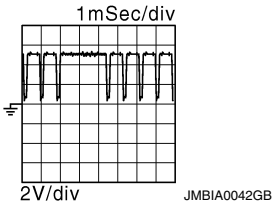

Terminal No.		Description		Condition	Value (Approx.)
+	–	Signal name	Input/ Output		
37 (GR)	152 (B)	Exhaust valve timing control position sensor (bank 1)	Input	[Engine is running] • Warm-up condition • Idle speed **NOTE:** The pulse cycle changes depending on rpm at idle	4.0 – 5.0 V★ 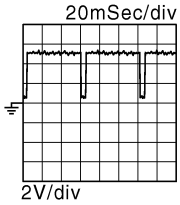
				[Engine is running] • Warm-up condition • Engine speed: 2,000 rpm	4.0 – 5.0 V★ 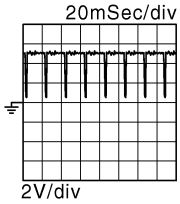
38 (GR)	40 (BR)	Mass air flow sensor	Input	[Ignition switch: ON] • Engine stopped	3,720 Hz 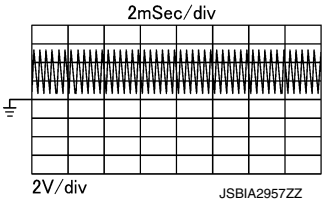
				[Engine is running] • Warm-up condition • Idle speed	4,100 – 4,700 Hz 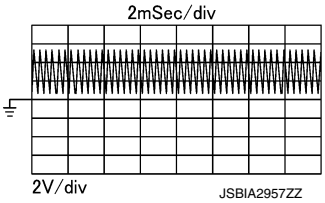
				[Engine is running] • Warm-up condition • Engine speed: idle to about 4,000 rpm **NOTE:** Check for linear frequency rise in response to engine being increased to about 4,000 rpm	4,100 – 4,700 → 8000 Hz 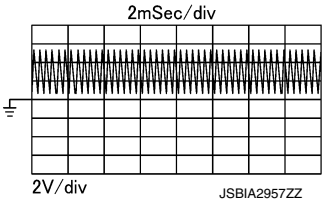

Terminal No.		Description		Condition	Value (Approx.)
+	–	Signal name	Input/ Output		
39 (GR)	152 (B)	Exhaust valve timing control position sensor (bank 2)	Input	[Engine is running] • Warm-up condition • Idle speed **NOTE:** The pulse cycle changes depending on rpm at idle	4.0 – 5.0 V★ 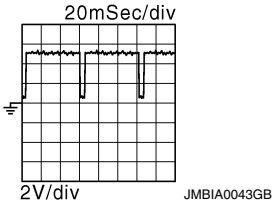
				[Engine is running] • Warm-up condition • Engine speed: 2,000 rpm	4.0 – 5.0 V★ 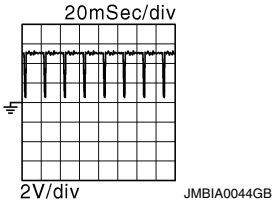
40 (BR)	—	Sensor ground (Exhaust valve timing control position sensor (bank 1), exhaust valve timing control position sensor (bank 2), crankshaft position sensor (POS), mass air flow sensor)	—	—	—
41 (W)	152 (B)	Heated oxygen sensor 2 (bank 1)	Input	[Engine is running] Revving engine from idle to 3,000 rpm quickly after the following conditions are met • Engine: after warming up • Keeping the engine speed between 3,500 and 4,000 rpm for 1 minute and at idle for 1 minute under no load	0 - 1.0 V
46 (Y)	152 (B)	A/F sensor 1 heater (bank 2)	Output	[Engine is running] • Warm-up condition • Idle speed (More than 140 seconds after starting engine)	2.9 - 8.8 V★ 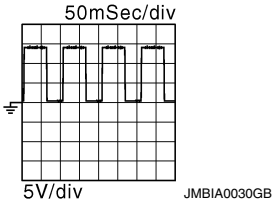
47 (SB)	152 (B)	Heated oxygen sensor 2 heater (bank 2)	Output	[Engine is running] Engine speed: Below 3,600 rpm after the following conditions are met • Engine: after warming up • Keeping the engine speed between 3,500 and 4,000 rpm for 1 minute and at idle for 1 minute under no load	10 V★ 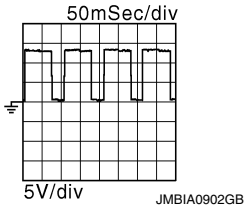
				• [Ignition switch: ON] Engine stopped • [Engine is running] Engine speed: Above 3,600 rpm	BATTERY VOLTAGE (11 - 14 V)

Terminal No.		Description		Condition	Value (Approx.)
+	—	Signal name	Input/ Output		
49 (BR)	152 (B)	Electronic controlled engine mount control solenoid valve	Output	[Engine is running] Idle speed	0 - 1.0 V
				[Engine is running] Engine speed: More than 950 rpm	BATTERY VOLTAGE (11 - 14 V)
51 (L)	152 (B)	Power supply for ECM (Valve)	Input	[Ignition switch: ON]	BATTERY VOLTAGE (11 - 14 V)
54 (BR)	152 (B)	EVAP canister purge volume control solenoid valve	Output	[Engine is running] • Idle speed • Accelerator pedal: Not depressed even slightly, after engine starting	BATTERY VOLTAGE (11 - 14 V)★ 50mSec/div 10V/div JMBIA0039GB
				[Engine is running] Engine speed: approximately 2,000 rpm (More than 100 seconds after starting engine)	BATTERY VOLTAGE (11 - 14 V)★ 50mSec/div 10V/div JMBIA0040GB
55 (B)	—	ECM ground	—	—	—
58 (SB)	152 (B)	Exhaust valve timing control solenoid valve (bank 1)	Output	[Engine is running] • Warm-up condition • Idle speed	0 V
				[Engine is running] • Warm-up condition • Engine speed: 2,000rpm	BATTERY VOLTAGE (11 – 14 V)
60 (BR)	152 (B)	Exhaust valve timing control solenoid valve (bank 2)	Output	[Engine is running] • Warm-up condition • Idle speed	0 V
				[Engine is running] • Warm-up condition • Engine speed: 2,000rpm	BATTERY VOLTAGE (11 – 14 V)
64 (G)	—	—	—	—	—
66 (W)	152 (B)	A/F sensor 1 (bank 1)	Input	[Ignition switch: ON]	1.8 V
67 (B)	152 (B)	A/F sensor 1 (bank 1)	Input	[Engine is running] • Warm-up condition • Engine speed: 2,000 rpm	2.2 V Output voltage varies with air fuel ratio.
68 (Y)	64 (G)	—	—	—	—
69 (W)	64 (G)	—	—	—	—
70 (GR)	—	Shield	—	—	—

Terminal No.		Description		Condition	Value (Approx.)
+	—	Signal name	Input/ Output		
71 (B)	152 (B)	Throttle position sensor 1	Input	[Ignition switch: ON] • Engine stopped • Selector lever: D position • Accelerator pedal: Fully released	More than 0.36 V
				[Ignition switch: ON] • Engine stopped • Selector lever: D position • Accelerator pedal: Fully depressed	Less than 4.75 V
72 (W)	152 (B)	Throttle position sensor 2	Input	[Ignition switch: ON] • Engine stopped • Selector lever: D position • Accelerator pedal: Fully released	Less than 4.75 V
				[Ignition switch: ON] • Engine stopped • Selector lever: D position • Accelerator pedal: Fully depressed	More than 0.36 V
75 (R)	—	Sensor ground (Throttle position sensor)	—	—	—
76 (W)	152 (B)	A/F sensor 1 (bank 2)	Input	[Ignition switch: ON]	1.8 V
77 (B)	152 (B)	A/F sensor 1 (bank 2)	Input	[Engine is running] • Warm-up condition • Engine speed: 2,000 rpm	2.2 V Output voltage varies with air fuel ratio.
80 (GR)	—	Shield	—	—	—
83 (W)	152 (B)	PNP signal	Input	[Ignition switch: ON] Selector lever: P or N position	BATTERY VOLTAGE (11 - 14 V)
				[Ignition switch: ON] Selector lever: Except above position	0 V
84 (GR)	90 (LG)	Camshaft position sensor (PHASE) (bank 1)	Input	[Engine is running] • Warm-up condition • Idle speed **NOTE:** The pulse cycle changes depending on rpm at idle	3.0 - 5.0 V★ 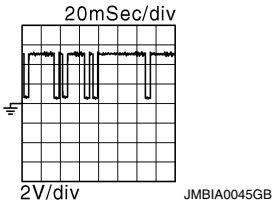
				[Engine is running] Engine speed is 2,000 rpm	3.0 - 5.0 V★ 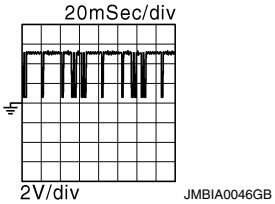

Terminal No.		Description		Condition	Value (Approx.)
+	—	Signal name	Input/ Output		
86 (V)	152 (B)	ECM relay (Self shut-off)	Output	• [Engine is running] • [Ignition switch: OFF] A few seconds after turning ignition switch OFF	0 - 1.5 V
				[Ignition switch: OFF] More than a few seconds after turning ignition switch OFF	BATTERY VOLTAGE (11 - 14 V)
87 (LG)	64 (G)	—	—	—	—
89 (GR)	90 (LG)	Camshaft position sensor (PHASE) (bank 2)	Input	[Engine is running] • Warm-up condition • Idle speed **NOTE:** The pulse cycle changes depending on rpm at idle	3.0 - 5.0 V★ 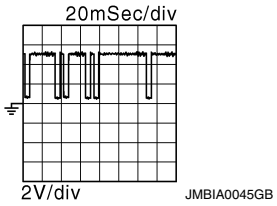
				[Engine is running] Engine speed is 2,000 rpm	3.0 - 5.0 V★ 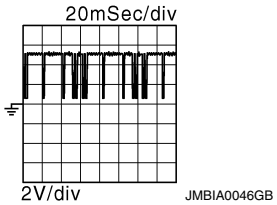
90 (LG)	—	Sensor ground [Camshaft position sensor (PHASE) (bank 1), camshaft position sensor (PHASE) (bank 2)]	—	—	—
92 (BR)	90 (LG)	Sensor power supply [Camshaft position sensor (PHASE) (bank 1), camshaft position sensor (PHASE) (bank 2)]	—	[Ignition switch: ON]	5 V
98 (G)	75 (R)	Sensor power supply (Throttle position sensor)	—	[Ignition switch: ON]	5 V
102 (BR)	152 (B)	VIAS control solenoid valve 2	Output	[Engine is running] • Warm-up condition • Idle speed	BATTERY VOLTAGE (11 - 14 V)
				[Engine is running] • Warm-up condition • When revving engine up to 5,000 rpm quickly	BATTERY VOLTAGE (11 - 14 V) ↓ 0 - 1.0 V ↓ BATTERY VOLTAGE (11 - 14 V)

Terminal No.		Description		Condition	Value (Approx.)
+	—	Signal name	Input/ Output		
103 (LG) 104 (LG) 106 (LG) 107 (LG) 113 (LG) 114 (LG)	152 (B)	Ignition signal No. 3 Ignition signal No. 6 Ignition signal No. 2 Ignition signal No. 5 Ignition signal No. 1 Ignition signal No. 4	Output	[Engine is running] • Warm-up condition • Idle speed **NOTE:** The pulse cycle changes depending on rpm at idle	0 - 0.2 V★ 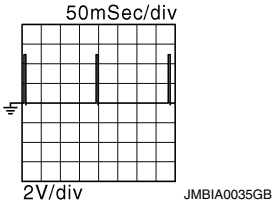
				[Engine is running] • Warm-up condition • Engine speed: 2,000 rpm	0.1 - 0.4 V★ 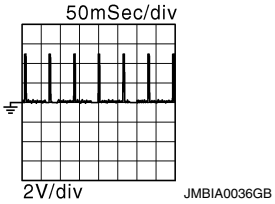
105 (B)	—	ECM ground	—	—	—
108 (BR)	152 (B)	VIAS control solenoid valve 1	Output	[Engine is running] • Warm-up condition • Idle speed	BATTERY VOLTAGE (11 - 14 V)
				[Engine is running] • Warm-up condition • When revving engine up to 5,000 rpm quickly	BATTERY VOLTAGE (11 - 14 V) ↓ 0 - 1.0 V ↓ BATTERY VOLTAGE (11 - 14 V)
110 (B)	—	ECM ground	—	—	—
116 (GR)	152 (B)	Power supply for ECM (Back-up)	Input	[Ignition switch: OFF]	BATTERY VOLTAGE (11 - 14 V)
117 (BR)	152 (B)	Intake valve timing control solenoid valve (bank 1)	Output	[Engine is running] • Warm-up condition • Idle speed	0 V
				[Engine is running] • Warm-up condition • When revving engine up to 2,000rpm quickly	BATTERY VOLTAGE (11 - 14 V)
118 (LG)	152 (B)	Intake valve timing intermediate lock control solenoid valve (bank 1)	Output	[Engine is running] • Warm-up condition • Idle speed	0 V
				[Engine is running] • Cold condition [Engine coolant temperature: below 60°C (140°F)] • Idle speed	Battery voltage (11 - 14 V)
119 (Y)	152 (B)	Intake valve timing control solenoid valve (bank 2)	Output	[Engine is running] • Warm-up condition • Idle speed	0 V
				[Engine is running] • Warm-up condition • When revving engine up to 2,000rpm quickly	BATTERY VOLTAGE (11 - 14 V)

Terminal No.		Description		Condition	Value (Approx.)
+	—	Signal name	Input/ Output		
120 (R)	152 (B)	Intake valve timing intermediate lock control solenoid valve (bank 2)	Output	[Engine is running] • Warm-up condition • Idle speed	0 V
				[Engine is running] • Cold condition [Engine coolant temperature: below 60°C (140°F)] • Idle speed	Battery voltage (11 - 14 V)
121 (W)	148 (LG)	EVAP control system pressure sensor	Input	[Ignition switch: ON]	1.8 - 4.8 V
123 (P)	—	CAN communication line (CAN-L)	Input/ Output	—	—
124 (L)	—	CAN communication line (CAN-H)	Input/ Output	—	—
125 (R)	148 (LG)	Sensor power supply (EVAP control system pressure sensor)	—	[Ignition switch: ON]	5 V
128 (BR)	148 (LG)	Fuel tank temperature sensor	Input	[Engine is running]	0 - 4.8 V Output voltage varies with fuel tank temperature.
133 (SB)	152 (B)	Ignition switch	Input	[Ignition switch: OFF]	0 V
				[Ignition switch: ON]	BATTERY VOLTAGE (11 - 14 V)
134 (G)	135 (R)	ASCD steering switch	Input	[Ignition switch: ON] ASCD steering switch: OFF	4 V
				[Ignition switch: ON] MAIN switch: Pressed	0 V
				[Ignition switch: ON] CANCEL switch: Pressed	1 V
				[Ignition switch: ON] RESUME/ACCELERATE switch: Pressed	3 V
				[Ignition switch: ON] SET/COAST switch: Pressed	2 V
135 (R)	—	Sensor ground (ASCD steering switch)	—	—	—
139 (R)	152 (B)	Stop lamp switch	Input	[Ignition switch: OFF] Brake pedal: Fully released	0 V
				[Ignition switch: OFF] Brake pedal: Slightly depressed	BATTERY VOLTAGE (11 - 14 V)
140 (LG)	152 (B)	Brake pedal position switch	Input	[Ignition switch: ON] Brake pedal: Slightly depressed	0 V
				[Ignition switch: ON] Brake pedal: Fully released	BATTERY VOLTAGE (11 - 14 V)
141 (Y)	152 (B)	EVAP canister vent control valve	Output	[Ignition switch: ON]	BATTERY VOLTAGE (11 - 14 V)
142 (W)	144 (G)	Sensor power supply (Accelerator pedal position sensor 2)	—	[Ignition switch: ON]	5 V

Terminal No.		Description		Condition	Value (Approx.)
+	—	Signal name	Input/ Output		
143 (P)	144 (G)	Accelerator pedal position sensor 2	Input	[Ignition switch: ON] • Engine stopped • Accelerator pedal: Fully released	0.25 - 0.50 V
				[Ignition switch: ON] • Engine stopped • Accelerator pedal: Fully depressed	2.0 - 2.5 V
144 (G)	—	Sensor ground (Accelerator pedal position sensor 2)	—	—	—
145 (LG)	152 (B)	Power supply for ECM	Input	[Ignition switch: ON]	BATTERY VOLTAGE (11 - 14 V)
146 (R)	151 (R)	Sensor power supply (Accelerator pedal position sensor 1)	—	[Ignition switch: ON]	5 V
147 (B) 149 (B) 152 (B)	—	ECM ground	—	—	—
148 (LG)	—	Sensor ground (EVAP control system pressure sensor, Fuel tank temperature sensor)	—	—	—
150 (W)	151 (R)	Accelerator pedal position sensor 1	Input	[Ignition switch: ON] • Engine stopped • Accelerator pedal: Fully released	0.5 - 1.0 V
				[Ignition switch: ON] • Engine stopped • Accelerator pedal: Fully depressed	4.2 - 4.8 V
151 (R)	—	Sensor ground (Accelerator pedal position sensor 1)	—	—	—

★: Average voltage for pulse signal (Actual pulse signal can be confirmed by oscilloscope.)
*1: This may vary depending on internal resistance of the tester.
*2: Before measuring the terminal voltage, confirm that the battery is fully charged. Refer to PG-86, "How to Handle Battery".

Fail-safe

INFOID:0000000011148500

NON DTC RELATED ITEM

Engine operating condition in fail-safe mode	Detected items	Remarks	Reference page
Engine speed will not rise more than 2,500 rpm due to the fuel cut	Malfunction indicator lamp circuit	When there is an open circuit on MIL circuit, the ECM cannot warn the driver by illuminating MIL when there is malfunction on engine control system. Therefore, when electrical controlled throttle and part of ECM related diagnoses are continuously detected as NG for 5 trips, ECM warns the driver that engine control system malfunctions and MIL circuit is open by means of operating the fail-safe function. The fail-safe function also operates when above diagnoses except MIL circuit are detected and demands the driver to repair the malfunction.	EC-503

DTC RELATED ITEM

DTC No.	Detected items	Engine operating condition in fail-safe mode
P0011 P0021	Intake valve timing control	• The signal is not energized to the intake valve timing control solenoid valve and the valve control does not function. • ECM activates the IVT intermediate lock control solenoid valve to bring the cam sprocket into an intermediate lock condition.
P0014 P0024	Exhaust valve timing control	The signal is not energized to the exhaust valve timing control magnet retarder and the magnet retarder control does not function.
P0101 P0102 P0103	Mass air flow sensor circuit	Engine speed will not rise more than 2,400 rpm due to the fuel cut.
P0117 P0118	Engine coolant temperature sensor circuit	Engine coolant temperature will be determined by ECM based on the following condition. CONSULT displays the engine coolant temperature decided by ECM.

Condition	Engine coolant temperature decided (CONSULT display)
Just as ignition switch is turned ON or START	40°C (104°F)
Approx 4 minutes or more after engine starting	80°C (176°F)
Except as shown above	40 - 80°C (104 - 176°F) (Depends on the time)

When the fail-safe system for engine coolant temperature sensor is activated, the cooling fan operates while engine is running.

DTC No.	Detected items	Engine operating condition in fail-safe mode
P0122 P0123 P0222 P0223 P2135	Throttle position sensor	The ECM controls the electric throttle control actuator in regulating the throttle opening in order for the idle position to be within +10 degrees. The ECM regulates the opening speed of the throttle valve to be slower than the normal condition. Therefore, the acceleration will be poor.
P0196 P0197 P0198	Engine oil temperature sensor	Intake valve timing control does not function.
P0500	Vehicle speed sensor	The cooling fan operates (Highest) while engine is running.
P0524	Engine oil pressure	• ECM illuminates oil pressure warning lamp on the combination meter. • Engine speed will not rise more than 4,000 rpm due to the fuel cut. • Fail-safe is canceled when ignition switch OFF → ON.
P052A P052B P052C P052D	Intake valve timing intermediate lock control	—
P0603 P0607	ECM	Engine torque may be limited.

DTC No.	Detected items	Engine operating condition in fail-safe mode
P0604	ECM	• ECM stops the electric throttle control actuator control, throttle valve is maintained at a fixed opening (approx. 5 degrees) by the return spring. • The position of the following components is fixed. - Intake valve timing control solenoid valve - Exhaust valve timing control solenoid valve - Intake manifold runner control valve • ASCD operation may be deactivated.
P0605 P0606 P060B	ECM	**NOTE:** Fail-safe may not occur depending on malfunction type. • ECM stops the electric throttle control actuator control, throttle valve is maintained at a fixed opening (approx. 5 degrees) by the return spring. • The position of the following components is fixed. - Intake valve timing control solenoid valve - Exhaust valve timing control solenoid valve - Intake manifold runner control valve • ASCD operation may be deactivated.
P060A	ECM	**NOTE:** Fail-safe may not occur depending on malfunction type. • ECM stops the electric throttle control actuator control, throttle valve is maintained at a fixed opening (approx. 5 degrees) by the return spring. • The position of the following components is fixed. - Intake valve timing control solenoid valve - Exhaust valve timing control solenoid valve - Intake manifold runner control valve • Engine torque may be limited. • ASCD operation may be deactivated.
P0643	Sensor power supply	• ECM stops the electric throttle control actuator control, throttle valve is maintained at a fixed opening (approx. 5 degrees) by the return spring. • The position of the following components is fixed. - Intake valve timing control solenoid valve - Exhaust valve timing control solenoid valve - Intake manifold runner control valve
P1805	Brake switch	ECM controls the electric throttle control actuator by regulating the throttle opening to a small range. Therefore, acceleration will be poor. Vehicle condition: Driving condition When engine is idling: Normal When accelerating: Poor acceleration
P2100 P2103	Throttle control motor relay	ECM stops the electric throttle control actuator control, throttle valve is maintained at a fixed opening (approx. 5 degrees) by the return spring.
P2101	Electric throttle control function	ECM stops the electric throttle control actuator control, throttle valve is maintained at a fixed opening (approx. 5 degrees) by the return spring.
P2118	Throttle control motor	ECM stops the electric throttle control actuator control, throttle valve is maintained at a fixed opening (approx. 5 degrees) by the return spring.

DTC No.	Detected items	Engine operating condition in fail-safe mode
P2119	Electric throttle control actuator	(When electric throttle control actuator does not function properly due to the return spring malfunction:) ECM controls the electric throttle actuator by regulating the throttle opening around the idle position. The engine speed will not rise more than 2,000 rpm.
		(When throttle valve opening angle in fail-safe mode is not in specified range:) ECM controls the electric throttle control actuator by regulating the throttle opening to 20 degrees or less.
		(When ECM detects the throttle valve is stuck open:) While the vehicle is being driven, it slows down gradually because of fuel cut. After the vehicle stops, the engine stalls. The engine can restart in the N or P position, and engine speed will not exceed 1,000 rpm or more.
P2122 P2123 P2127 P2128 P2138	Accelerator pedal position sensor	The ECM controls the electric throttle control actuator in regulating the throttle opening in order for the idle position to be within +10 degrees. The ECM regulates the opening speed of the throttle valve to be slower than the normal condition. Therefore, the acceleration will be poor.

DTC Inspection Priority Chart

INFOID:0000000011148501

If some DTCs are displayed at the same time, perform inspections one by one based on the following priority chart.

Priority	Detected items (DTC)	Detected items (DTC)
1	U0101, U1000	CAN communication line
	P0101, P0102, P0103	Mass air flow sensor
	P0111, P0112, P0113, P0127	Intake air temperature sensor
	P0116, P0117, P0118, P0125	Engine coolant temperature sensor
	P0122, P0123, P0222, P0223, P1225, P1226, P2135	Throttle position sensor
	P0128	Thermostat function
	P0181, P0182, P0183	Fuel tank temperature sensor
	P0196, P0197, P0198	Engine oil temperature sensor
	P0327, P0328, P0332, P0333	Knock sensor
	P0335	Crankshaft position sensor (POS)
	P0340, P0345	Camshaft position sensor (PHASE)
	P0460, P0461, P0462, P0463	Fuel level sensor
	P0500	Vehicle speed sensor
	P0520	EOP sensor
	P0603, P0604, P0605, P0606, P0607, P060A, P060B, P062F, P2610	ECM
	P0643	Sensor power supply
	P0850	Transmission range switch
	P1078, P1084	Exhaust valve timing control position sensor
	P1550, P1551, P1552, P1553, P1554	Battery current sensor
	P1556, P1557	Battery temperature sensor
	P1610 - P1615	NATS
	P2122, P2123, P2127, P2128, P2138	Accelerator pedal position sensor

Priority	Detected items (DTC)	Detected items (DTC)
2	P0031, P0032, P0051, P0052	Air fuel ratio (A/F) sensor 1 heater
	P0037, P0038, P0057, P0058, P0141, P0161	Heated oxygen sensor 2 heater
	P0075, P0081	Intake valve timing control solenoid valve/Intake valve timing intermediate lock control solenoid valve
	P0078, P0084	Exhaust valve timing control solenoid valve
	P0130, P0131, P0132, P014C, P014D, P014E, P014F, P0150, P0151, P0152, P015A, P015B, P015C, P015D, P2096, P2097, P2098, P2099	Air fuel ratio (A/F) sensor 1
	P0137, P0138, P0139, P0157, P0158, P0159	Heated oxygen sensor 2
	P0441	EVAP control system purge flow monitoring
	P0443, P0444, P0445	EVAP canister purge volume control solenoid valve
	P0447, P0448	EVAP canister vent control valve
	P0451, P0452, P0453	EVAP control system pressure sensor
	P1217	Engine over temperature (OVERHEAT)
	P1800, P1801	VIAS control solenoid valve
	P1805	Brake switch
	P2100, P2103	Throttle control motor relay
	P2101	Electric throttle control function
	P2118	Throttle control motor
3	P0011, P0021, P052A, P052B, P052C, P052D	Intake valve timing control
	P0014, P0024	Exhaust valve timing control
	P0171, P0172, P0174, P0175	Fuel injection system function
	P0300 - P0306	Misfire
	P0420, P0430	Three way catalyst function
	P0456	EVAP control system (VERY SMALL LEAK)
	P0506, P0507	Idle speed control system
	P050A, P050E	Cold start control
	P0524	Engine oil pressure
	P1148, P1168	Closed loop control
	P1212	TCS communication line
	P1564	ASCD steering switch
	P1572	ASCD brake switch
	P1574	ASCD vehicle speed sensor
	P1715	Primary speed sensor
	P2119	Electric throttle control actuator
	P219A, P219B	Air fuel ratio (A/F) sensor 1

DTC Index

INFOID:0000000011148502

×:Applicable —: Not applicable

DTC[*1]		Items (CONSULT screen terms)	SRT code	Trip	MIL	Permanent DTC group[*4]	Reference page
CONSULT GST[*2]	ECM[*3]						
U0101	0101[*5]	LOST COMM (TCM)	—	1	×	B	EC-194
U1000	1000[*5]	CAN COMM CIRCUIT	—	2	—	—	EC-195

DTC[*1]		Items (CONSULT screen terms)	SRT code	Trip	MIL	Permanent DTC group[*4]	Refer-ence page
CONSULT GST[*2]	ECM[*3]						
P0000	**0000**	**NO DTC IS DETECTED. FURTHER TESTING MAY BE REQUIRED.**	—	—	**Blinking[*6]**	—	**—**
P0011	0011	INT/V TIM CONT-B1	×	2	×	B	EC-196
P0014	0014	EXH/V TIM CONT-B1	—	2	×	B	EC-200
P0021	0021	INT/V TIM CONT-B2	×	2	×	B	EC-196
P0024	0024	EXH/V TIM CONT-B2	—	2	×	B	EC-200
P0031	0031	A/F SEN1 HTR (B1)	—	2	×	B	EC-206
P0032	0032	A/F SEN1 HTR (B1)	—	2	×	B	EC-206
P0037	0037	HO2S2 HTR (B1)	—	2	×	B	EC-209
P0038	0038	HO2S2 HTR (B1)	—	2	×	B	EC-209
P0051	0051	A/F SEN1 HTR (B2)	—	2	×	B	EC-206
P0052	0052	A/F SEN1 HTR (B2)	—	2	×	B	EC-206
P0057	0057	HO2S2 HTR (B2)	—	2	×	B	EC-209
P0058	0058	HO2S2 HTR (B2)	—	2	×	B	EC-209
P0075	0075	INT/V TIM V/CIR-B1	—	2	×	B	EC-212
P0078	0078	EX V/T ACT/CIRC-B1	—	2	×	B	EC-212
P0081	0081	INT/V TIM V/CIR-B2	—	2	×	B	EC-212
P0084	0084	EX V/T ACT/CIRC-B2	—	2	×	B	EC-216
P0101	0101	MAF SEN/CIRCUIT-B1	—	2	×	B	EC-219
P0102	0102	MAF SEN/CIRCUIT-B1	—	1	×	B	EC-224
P0103	0103	MAF SEN/CIRCUIT-B1	—	1	×	B	EC-224
P0111	0111	IAT SENSOR 1 B1	—	2	×	A	EC-229
P0112	0112	IAT SEN/CIRCUIT-B1	—	2	×	B	EC-231
P0113	0113	IAT SEN/CIRCUIT-B1	—	2	×	B	EC-231
P0116	0116	ECT SEN/CIRC	—	2	×	A	EC-233
P0117	0117	ECT SEN/CIRC	—	1	×	B	EC-235
P0118	0118	ECT SEN/CIRC	—	1	×	B	EC-235
P0122	0122	TP SEN 2/CIRC-B1	—	1	×	B	EC-237
P0123	0123	TP SEN 2/CIRC-B1	—	1	×	B	EC-237
P0125	0125	ECT SENSOR	—	2	×	B	EC-240
P0127	0127	IAT SENSOR-B1	—	2	×	B	EC-242
P0128	0128	THERMSTAT FNCTN	—	2	×	A	EC-244
P0130	0130	A/F SENSOR1 (B1)	—	2	×	A	EC-247
P0131	0131	A/F SENSOR1 (B1)	—	2	×	B	EC-251
P0132	0132	A/F SENSOR1 (B1)	—	2	×	B	EC-254
P0137	0137	HO2S2 (B1)	×	2	×	A	EC-257
P0138	0138	HO2S2 (B1)	×	2	×	A	EC-262
P0139	0139	HO2S2 (B1)	×	2	×	A	EC-269
P0141	0141	HO2S2 HTR (B1)	—	2	×	B	EC-275
P014C	014C	A/F SENSOR1 (B1)	×	2	×	A	EC-278
P014D	014D	A/F SENSOR1 (B1)	×	2	×	A	EC-278
P014E	014E	A/F SENSOR1 (B2)	×	2	×	A	EC-278

DTC*1		Items (CONSULT screen terms)	SRT code	Trip	MIL	Permanent DTC group*4	Reference page
CONSULT GST*2	ECM*3						
P014F	014F	A/F SENSOR1 (B2)	×	2	×	A	EC-278
P0150	0150	A/F SENSOR1 (B2)	—	2	×	A	EC-247
P0151	0151	A/F SENSOR1 (B2)	—	2	×	B	EC-251
P0152	0152	A/F SENSOR1 (B2)	—	2	×	B	EC-254
P0157	0157	HO2S2 (B2)	×	2	×	A	EC-257
P0158	0158	HO2S2 (B2)	×	2	×	A	EC-262
P0159	0159	HO2S2 (B2)	×	2	×	A	EC-269
P015A	015A	A/F SENSOR1 (B1)	×	2	×	A	EC-278
P015B	015B	A/F SENSOR1 (B1)	×	2	×	A	EC-278
P015C	015C	A/F SENSOR1 (B2)	×	2	×	A	EC-278
P015D	015D	A/F SENSOR1 (B2)	×	2	×	A	EC-278
P0161	0161	HO2S2 HTR (B2)	—	2	×	B	EC-275
P0171	0171	FUEL SYS-LEAN-B1	—	2	×	B	EC-284
P0172	0172	FUEL SYS-RICH-B1	—	2	×	B	EC-288
P0174	0174	FUEL SYS-LEAN-B2	—	2	×	B	EC-284
P0175	0175	FUEL SYS-RICH-B2	—	2	×	B	EC-288
P0181	0181	FTT SENSOR	—	2	×	A and B	EC-292
P0182	0182	FTT SEN/CIRCUIT	—	2	×	B	EC-296
P0183	0183	FTT SEN/CIRCUIT	—	2	×	B	EC-296
P0196	0196	EOT SENSOR	—	2	×	A and B	EC-298
P0197	0197	EOT SEN/CIRC	—	2	×	B	EC-302
P0198	0198	EOT SEN/CIRC	—	2	×	B	EC-302
P0222	0222	TP SEN 1/CIRC-B1	—	1	×	B	EC-304
P0223	0223	TP SEN 1/CIRC-B1	—	1	×	B	EC-304
P0300	0300	MULTI CYL MISFIRE	—	1 or 2	×	B	EC-307
P0301	0301	CYL 1 MISFIRE	—	1 or 2	×	B	EC-307
P0302	0302	CYL 2 MISFIRE	—	1 or 2	×	B	EC-307
P0303	0303	CYL 3 MISFIRE	—	1 or 2	×	B	EC-307
P0304	0304	CYL 4 MISFIRE	—	1 or 2	×	B	EC-307
P0305	0305	CYL 5 MISFIRE	—	1 or 2	×	B	EC-307
P0306	0306	CYL 6 MISFIRE	—	1 or 2	×	B	EC-307
P0327	0327	KNOCK SEN/CIRC-B1	—	2	—	—	EC-313
P0328	0328	KNOCK SEN/CIRC-B1	—	2	—	—	EC-313
P0332	0332	KNOCK SEN/CIRC-B2	—	2	—	—	EC-313
P0333	0333	KNOCK SEN/CIRC-B2	—	2	—	—	EC-313
P0335	0335	CKP SEN/CIRCUIT	—	2	×	B	EC-315
P0340	0340	CMP SEN/CIRC-B1	—	2	×	B	EC-318
P0345	0345	CMP SEN/CIRC-B2	—	2	×	B	EC-318
P0420	0420	TW CATALYST SYS-B1	×	2	×	A	EC-322
P0430	0430	TW CATALYST SYS-B2	×	2	×	A	EC-322
P0441	0441	EVAP PURG FLOW/MON	×	2	×	A	EC-327
P0443	0443	PURG VOLUME CONT/V	—	2	×	A	EC-332

DTC[*1]		Items (CONSULT screen terms)	SRT code	Trip	MIL	Permanent DTC group[*4]	Reference page
CONSULT GST[*2]	ECM[*3]						
P0444	0444	PURG VOLUME CONT/V	—	2	×	B	EC-337
P0445	0445	PURG VOLUME CONT/V	—	2	×	B	EC-337
P0447	0447	VENT CONTROL VALVE	—	2	×	B	EC-340
P0448	0448	VENT CONTROL VALVE	—	2	×	B	EC-343
P0451	0451	EVAP SYS PRES SEN	—	2	×	A	EC-347
P0452	0452	EVAP SYS PRES SEN	—	2	×	B	EC-350
P0453	0453	EVAP SYS PRES SEN	—	2	×	B	EC-353
P0456	0456	EVAP VERY SML LEAK	×[*7]	2	×	A	EC-357
P0460	0460	FUEL LEV SEN SLOSH	—	2	×	A	EC-363
P0461	0461	FUEL LEVEL SENSOR	—	2	×	B	EC-364
P0462	0462	FUEL LEVL SEN/CIRC	—	2	×	B	EC-366
P0463	0463	FUEL LEVL SEN/CIRC	—	2	×	B	EC-366
P0500	0500	VEH SPEED SEN/CIRC[*8]	—	2	×	B	EC-367
P0506	0506	ISC SYSTEM	—	2	×	B	EC-369
P0507	0507	ISC SYSTEM	—	2	×	B	EC-371
P050A	050A	COLD START CONTROL	—	2	×	A	EC-373
P050E	050E	COLD START CONTROL	—	2	×	A	EC-373
P0520	0520	EOP SENSOR/SWITCH	—	2	—	—	EC-375
P0524	0524	ENGINE OIL PRESSURE	—	1	—	—	EC-378
P052A	052A	CAMSHAFT POSITION TIMING B1	×	2	×	B	EC-381
P052B	052B	CAMSHAFT POSITION TIMING B1	×	2	×	B	EC-381
P052C	052C	CAMSHAFT POSITION TIMING B2	×	2	×	B	EC-381
P052D	052D	CAMSHAFT POSITION TIMING B2	×	2	×	B	EC-381
P0603	0603	ECM BACK UP/CIRCUIT	—	2	× or —	B	EC-387
P0604	0604	ECM	—	1	×	B	EC-389
P0605	0605	ECM	—	1	×	B	EC-390
P0606	0606	CONTROL MODULE	—	1	× or —	B	EC-391
P0607	0607	ECM	—	1 or 2	× or —	B	EC-392
P060A	060A	CONTROL MODULE	—	1	×	B	EC-393
P060B	060B	CONTROL MODULE	—	1	×	B	EC-394
P062F	062F	CONTROL MODULE	—	1	×	B	EC-387
P0643	0643	SENSOR POWER/CIRC	—	1	×	B	EC-395
P0850	0850	P-N POS SW/CIRCUIT	—	2	×	B	EC-397
P1078	1078	EXH TIM SEN/CIRC-B1	—	2	×	B	EC-400
P1084	1084	EXH TIM SEN/CIRC-B2	—	2	×	B	EC-400
P1148	1148	CLOSED LOOP-B1	—	1	×	A	EC-404
P1168	1168	CLOSED LOOP-B2	—	1	×	A	EC-404
P1212	1212	TCS/CIRC	—	2	—	—	EC-405
P1217	1217	ENG OVER TEMP	—	1	×	B	EC-406

DTC*1		Items (CONSULT screen terms)	SRT code	Trip	MIL	Permanent DTC group*4	Reference page
CONSULT GST*2	ECM*3						
P1225	1225	CTP LEARNING-B1	—	2	—	—	EC-409
P1226	1226	CTP LEARNING-B1	—	2	—	—	EC-410
P1550	1550	BAT CURRENT SENSOR	—	2	—	—	EC-411
P1551	1551	BAT CURRENT SENSOR	—	2	—	—	EC-414
P1552	1552	BAT CURRENT SENSOR	—	2	—	—	EC-414
P1553	1553	BAT CURRENT SENSOR	—	2	—	—	EC-417
P1554	1554	BAT CURRENT SENSOR	—	2	—	—	EC-420
P1556	1556	BAT TMP SEN/CIRC	—	2	—	—	EC-423
P1557	1557	BAT TMP SEN/CIRC	—	2	—	—	EC-423
P1564	1564	ASCD SW	—	1	—	—	EC-425
P1572	1572	ASCD BRAKE SW	—	1	—	—	EC-428
P1574	1574	ASCD VHL SPD SEN	—	1	—	—	EC-435
P1610	1610	LOCK MODE	—	2	—	—	SEC-78
P1611	1611	ID DISCORD, IMM-ECM	—	2	—	—	SEC-79
P1612	1612	CHAIN OF ECM-IMMU	—	2	—	—	SEC-80
P1614	1614	CHAIN OF IMMU-KEY	—	2	—	—	SEC-81
P1715	1715	IN PULY SPEED	—	2	—	—	EC-438
P1800	1800	VIAS S/V CIRC-B1	—	2	—	—	EC-439
P1801	1801	VIAS S/V CIRC-B2	—	2	—	—	EC-441
P1805	1805	BRAKE SW/CIRCUIT	—	2	—	—	EC-443
P2096	2096	POST CAT FUEL TRIM SYS B1	—	2	×	A	EC-447
P2097	2097	POST CAT FUEL TRIM SYS B1	—	2	×	A	EC-447
P2098	2098	POST CAT FUEL TRIM SYS B2	—	2	×	A	EC-447
P2099	2099	POST CAT FUEL TRIM SYS B2	—	2	×	A	EC-447
P2100	2100	ETC MOT PWR-B1	—	1	×	B	EC-451
P2101	2101	ETC FNCTN/CIRC-B1	—	1	×	B	EC-453
P2103	2103	ETC MOT PWR-B1	—	1	×	B	EC-451
P2118	2118	ETC MOT-B1	—	1	×	B	EC-456
P2119	2119	ETC ACTR-B1	—	1	×	B	EC-458
P2122	2122	APP SEN 1/CIRC	—	1	×	B	EC-460
P2123	2123	APP SEN 1/CIRC	—	1	×	B	EC-460
P2127	2127	APP SEN 2/CIRC	—	1	×	B	EC-463
P2128	2128	APP SEN 2/CIRC	—	1	×	B	EC-463
P2135	2135	TP SENSOR-B1	—	1	×	B	EC-466
P2138	2138	APP SENSOR	—	1	×	B	EC-469
P219A	219A	AIR FUEL RATIO IMBALANCE B1	—	2	×	A	EC-472
P219B	219B	AIR FUEL RATIO IMBALANCE B2	—	2	×	A	EC-472
P2610	2610	ECM/PCM INTERNAL ENG OFF TIMER	—	2	×	A and B	EC-477

*1: 1st trip DTC No. is the same as DTC No.

*2: This number is prescribed by SAE J2012/ISO 15031-6.

*3: In Diagnostic Test Mode II (Self-diagnostic results), this number is controlled by NISSAN.

*4: Refer to EC-176, "Description".

*5: The troubleshooting for this DTC needs CONSULT.

*6: When the ECM is in the mode displays SRT status, MIL may blink. For the details, refer to “How to Display SRT Status”.

*7: SRT code will not be set if the self-diagnostic result is NG.

*8: When the fail-safe operations for both self-diagnoses occur, the MIL illuminates.

*9: When erasing this DTC, always use CONSULT or GST.

Test Value and Test Limit

INFOID:0000000011496628

The following is the information specified in Service $06 of SAE J1979/ISO 15031-5.
The test value is a parameter used to determine whether a system/circuit diagnostic test is OK or NG while being monitored by the ECM during self-diagnosis. The test limit is a reference value which is specified as the maximum or minimum value and is compared with the test value being monitored.
These data (test value and test limit) are specified by On Board Monitor ID (OBDMID), Test ID (TID), Unit and Scaling ID and can be displayed on the GST screen.
The items of the test value and test limit will be displayed with GST screen which items are provided by the ECM. (e.g., if bank 2 is not applied on this vehicle, only the items of bank 1 are displayed)

Item	OBD-MID	Self-diagnostic test item	DTC	Test value and Test limit (GST display)		Description
				TID	Unit and Scaling ID	
HO2S	01H	Air fuel ratio (A/F) sensor 1 (Bank 1)	P0131	83H	0BH	Minimum sensor output voltage for test cycle
			P0131	84H	0BH	Maximum sensor output voltage for test cycle
			P0130	85H	0BH	Minimum sensor output voltage for test cycle
			P0130	86H	0BH	Maximum sensor output voltage for test cycle
			P0133	87H	04H	Response rate: Response ratio (lean to rich)
			P0133	88H	04H	Response rate: Response ratio (rich to lean)
			P2A00 or P2096	89H	84H	The amount of shift in air fuel ratio (too lean)
			P2A00 or P2097	8AH	84H	The amount of shift in air fuel ratio (too rich)
			P0130	8BH	0BH	Difference in sensor output voltage
			P0133	8CH	83H	Response gain at the limited frequency
			P014C	8DH	04H	O2 sensor slow response - Rich to lean bank 1 sensor 1
			P014C	8EH	04H	O2 sensor slow response - Rich to lean bank 1 sensor 1
			P014D	8FH	84H	O2 sensor slow response - Lean to rich bank 1 sensor 1
			P014D	90H	84H	O2 sensor slow response - Lean to rich bank 1 sensor 1
			P015A	91H	01H	O2 sensor delayed response - Rich to lean bank 1 sensor 1
			P015A	92H	01H	O2 sensor delayed response - Rich to lean bank 1 sensor 1
			P015B	93H	01H	O2 sensor delayed response - Lean to rich bank 1 sensor 1
			P015B	94H	01H	O2 sensor delayed response - Lean to rich bank 1 sensor 1
			P0133	95H	04H	Response rate: Response ratio (lean to rich)
			P0133	96H	84H	Response rate: Response ratio (rich to lean)

Item	OBD-MID	Self-diagnostic test item	DTC	Test value and Test limit (GST display)		Description
				TID	Unit and Scaling ID	
HO2S	02H	Heated oxygen sensor 2 (Bank 1)	P0138	07H	0CH	Minimum sensor output voltage for test cycle
			P0137	08H	0CH	Maximum sensor output voltage for test cycle
			P0138	80H	0CH	Sensor output voltage
			P0139	81H	0CH	Difference in sensor output voltage
			P0139	82H	11H	Rear O2 sensor delay response diagnosis
	03H	Heated oxygen sensor 3 (Bank 1)	P0143	07H	0CH	Minimum sensor output voltage for test cycle
			P0144	08H	0CH	Maximum sensor output voltage for test cycle
			P0146	80H	0CH	Sensor output voltage
			P0145	81H	0CH	Difference in sensor output voltage
	05H	Air fuel ratio (A/F) sensor 1 (Bank 2)	P0151	83H	0BH	Minimum sensor output voltage for test cycle
			P0151	84H	0BH	Maximum sensor output voltage for test cycle
			P0150	85H	0BH	Minimum sensor output voltage for test cycle
			P0150	86H	0BH	Maximum sensor output voltage for test cycle
			P0153	87H	04H	Response rate: Response ratio (lean to rich)
			P0153	88H	04H	Response rate: Response ratio (rich to lean)
			P2A03 or P2098	89H	84H	The amount of shift in air fuel ratio (too lean)
			P2A03 or P2099	8AH	84H	The amount of shift in air fuel ratio (too rich)
			P0150	8BH	0BH	Difference in sensor output voltage
			P0153	8CH	83H	Response gain at the limited frequency
			P014E	8DH	04H	O2 sensor slow response - Rich to lean bank 2 sensor 1
			P014E	8EH	04H	O2 sensor slow response - Rich to lean bank 2 sensor 1
			P014F	8FH	84H	O2 sensor slow response - Lean to rich bank 2 sensor 1
			P014F	90H	84H	O2 sensor slow response - Lean to rich bank 2 sensor 1
			P015C	91H	01H	O2 sensor delayed response - Rich to lean bank 2 sensor 1
			P015C	92H	01H	O2 sensor delayed response - Rich to lean bank 2 sensor 1
			P015D	93H	01H	O2 sensor delayed response - Lean to rich bank 2 sensor 1

Item	OBD-MID	Self-diagnostic test item	DTC	Test value and Test limit (GST display)		Description
				TID	Unit and Scaling ID	
HO2S	05H	Air fuel ratio (A/F) sensor 1 (Bank 2)	P015D	94H	01H	O2 sensor delayed response - Lean to rich bank 2 sensor 1
			P0153	95H	04H	Response rate: Response ratio (lean to rich)
			P0153	96H	84H	Response rate: Response ratio (rich to lean)
	06H	Heated oxygen sensor 2 (Bank 2)	P0158	07H	0CH	Minimum sensor output voltage for test cycle
			P0157	08H	0CH	Maximum sensor output voltage for test cycle
			P0158	80H	0CH	Sensor output voltage
			P0159	81H	0CH	Difference in sensor output voltage
			P0159	82H	11H	Rear O2 sensor delay response diagnosis
	07H	Heated oxygen sensor 3 (Bank2)	P0163	07H	0CH	Minimum sensor output voltage for test cycle
			P0164	08H	0CH	Maximum sensor output voltage for test cycle
			P0166	80H	0CH	Sensor output voltage
			P0165	81H	0CH	Difference in sensor output voltage
CATALYST	21H	Three way catalyst function (Bank1)	P0420	80H	01H	O2 storage index
			P0420	82H	01H	Switching time lag engine exhaust index value
			P2423	83H	0CH	Difference in 3rd O2 sensor output voltage
			P2423	84H	84H	O2 storage index in HC trap catalyst
	22H	Three way catalyst function (Bank2)	P0430	80H	01H	O2 storage index
			P0430	82H	01H	Switching time lag engine exhaust index value
			P2424	83H	0CH	Difference in 3rd O2 sensor output voltage
			P2424	84H	84H	O2 storage index in HC trap catalyst
EGR SYSTEM	31H	EGR function	P0400	80H	96H	Low flow faults: EGR temp change rate (short term)
			P0400	81H	96H	Low flow faults: EGR temp change rate (long term)
			P0400	82H	96H	Low flow faults: Difference between max EGR temp and EGR temp under idling condition
			P0400	83H	96H	Low flow faults: Max EGR temp
			P1402	84H	96H	High Flow Faults: EGR temp increase rate
			P0402	85H	FCH	EGR differential pressure high flow
			P0401	86H	37H	EGR differential pressure low flow
			P2457	87H	96H	EGR temperature

Item	OBD-MID	Self-diagnostic test item	DTC	Test value and Test limit (GST display)		Description
				TID	Unit and Scaling ID	
VVT SYSTEM	35H	VVT Monitor (Bank1)	P0011	80H	9DH	VTC intake function diagnosis (VTC alignment check diagnosis)
			P0014	81H	9DH	VTC exhaust function diagnosis (VTC alignment check diagnosis)
			P0011	82H	9DH	VTC intake function diagnosis (VTC drive failure diagnosis)
			P0014	83H	9DH	VTC exhaust function diagnosis (VTC drive failure diagnosis)
			P100A	84H	10H	VEL slow response diagnosis
			P1090	85H	10H	VEL servo system diagnosis
			P0011	86H	9DH	VTC intake intermediate lock function diagnosis (VTC intermediate position alignment check diagnosis)
			Advanced: P052A Retarded: P052B	87H	9DH	VTC intake intermediate lock system diagnosis (VTC intermediate lock position check diagnosis)
	36H	VVT Monitor (Bank2)	P0021	80H	9DH	VTC intake function diagnosis (VTC alignment check diagnosis)
			P0024	81H	9DH	VTC exhaust function diagnosis (VTC alignment check diagnosis)
			P0021	82H	9DH	VTC intake function diagnosis (VTC drive failure diagnosis)
			P0024	83H	9DH	VTC exhaust function diagnosis (VTC drive failure diagnosis)
			P100B	84H	10H	VEL slow response diagnosis
			P1093	85H	10H	VEL servo system diagnosis
			P0021	86H	9DH	VTC intake intermediate lock function diagnosis (VTC intermediate position alignment check diagnosis)
			Advanced: P052C Retarded: P052D	87H	9DH	VTC intake intermediate lock system diagnosis (VTC intermediate lock position check diagnosis)
EVAP SYSTEM	39H	EVAP control system leak (Cap Off)	P0455	80H	0CH	Difference in pressure sensor output voltage before and after pull down
	3BH	EVAP control system leak (Small leak)	P0442	80H	05H	Leak area index (for more than 0.04 inch)
	3CH	EVAP control system leak (Very small leak)	P0456	80H	05H	Leak area index (for more than 0.02 inch)
			P0456	81H	FDH	Maximum internal pressure of EVAP system during monitoring
			P0456	82H	FDH	Internal pressure of EVAP system at the end of monitoring
	3DH	Purge flow system	P0441	83H	0CH	Difference in pressure sensor output voltage before and after vent control valve close

Item	OBD-MID	Self-diagnostic test item	DTC	Test value and Test limit (GST display)		Description
				TID	Unit and Scaling ID	
O2 SENSOR HEATER	41H	A/F sensor 1 heater (Bank 1)	Low Input: P0031 High Input: P0032	81H	0BH	Converted value of heater electric current to voltage
			P0030	83H	0BH	A/F sensor heater circuit malfunction
	42H	Heated oxygen sensor 2 heater (Bank 1)	Low Input: P0037 High Input: P0038	80H	0CH	Converted value of heater electric current to voltage
			P0141	81H	14H	Rear O2 sensor internal impedance
	43H	Heated oxygen sensor 3 heater (Bank 1)	P0043	80H	0CH	Converted value of heater electric current to voltage
	45H	A/F sensor 1 heater (Bank 2)	Low Input: P0051 High Input: P0052	81H	0BH	Converted value of heater electric current to voltage
			P0036	83H	0BH	A/F sensor heater circuit malfunction
	46H	Heated oxygen sensor 2 heater (Bank 2)	Low Input: P0057 High Input: P0058	80H	0CH	Converted value of heater electric current to voltage
			P0161	81H	14CH	Rear O2 sensor internal impedance
	47H	Heated oxygen sensor 3 heater (Bank 2)	P0063	80H	0CH	Converted value of heater electric current to voltage
SECONDARY AIR	71H	Secondary air system	P0411	80H	01H	Secondary air injection system incorrect flow detected
			Bank1: P0491 Bank2: P0492	81H	01H	Secondary air injection system insufficient flow
			P2445	82H	01H	Secondary air injection system pump stuck off
			P2448	83H	01H	Secondary air injection system high airflow
			Bank1: P2440 Bank2: P2442	84H	01H	Secondary air injection system switching valve stuck open
			P2440	85H	01H	Secondary air injection system switching valve stuck open
			P2444	86H	01H	Secondary air injection system pump stuck on
FUEL SYSTEM	81H	Fuel injection system function (Bank 1)	P0171 or P0172	80H	2FH	Long term fuel trim
			P0171 or P0172	81H	24H	The number of lambda control clamped
			P117A / P219A	82H	03H	Cylinder A/F imbalance monitoring
	82H	Fuel injection system function (Bank 2)	P0174 or P0175	80H	2FH	Long term fuel trim
			P0174 or P0175	81H	24H	The number of lambda control clamped
			P117B / P219B	82H	03H	Cylinder A/F imbalance monitoring

Item	OBD-MID	Self-diagnostic test item	DTC	Test value and Test limit (GST display)		Description
				TID	Unit and Scaling ID	
MISFIRE	A1H	Multiple cylinder misfires	P0301	80H	24H	Misfiring counter at 1000 revolution of the first cylinder
			P0302	81H	24H	Misfiring counter at 1000 revolution of the second cylinder
			P0303	82H	24H	Misfiring counter at 1000 revolution of the third cylinder
			P0304	83H	24H	Misfiring counter at 1000 revolution of the fourth cylinder
			P0305	84H	24H	Misfiring counter at 1000 revolution of the fifth cylinder
			P0306	85H	24H	Misfiring counter at 1000 revolution of the sixth cylinder
			P0307	86H	24H	Misfiring counter at 1000 revolution of the seventh cylinder
			P0308	87H	24H	Misfiring counter at 1000 revolution of the eighth cylinder
			P0300	88H	24H	Misfiring counter at 1000 revolution of the multiple cylinders
			P0301	89H	24H	Misfiring counter at 200 revolution of the first cylinder
			P0302	8AH	24H	Misfiring counter at 200 revolution of the second cylinder
			P0303	8BH	24H	Misfiring counter at 200 revolution of the third cylinder
			P0304	8CH	24H	Misfiring counter at 200 revolution of the fourth cylinder
			P0305	8DH	24H	Misfiring counter at 200 revolution of the fifth cylinder
			P0306	8EH	24H	Misfiring counter at 200 revolution of the sixth cylinder
			P0307	8FH	24H	Misfiring counter at 200 revolution of the seventh cylinder
			P0308	90H	24H	Misfiring counter at 200 revolution of the eighth cylinder
			P0300	91H	24H	Misfiring counter at 1000 revolution of the single cylinder
			P0300	92H	24H	Misfiring counter at 200 revolution of the single cylinder
			P0300	93H	24H	Misfiring counter at 200 revolution of the multiple cylinders

Item	OBD-MID	Self-diagnostic test item	DTC	Test value and Test limit (GST display)		Description
				TID	Unit and Scaling ID	
MISFIRE	A2H	No. 1 cylinder misfire	P0301	0BH	24H	EWMA (Exponential Weighted Moving Average) misfire counts for last 10 driving cycles
			P0301	0CH	24H	Misfire counts for last/current driving cycles
	A3H	No. 2 cylinder misfire	P0302	0BH	24H	EWMA (Exponential Weighted Moving Average) misfire counts for last 10 driving cycles
			P0302	0CH	24H	Misfire counts for last/current driving cycles
	A4H	No. 3 cylinder misfire	P0303	0BH	24H	EWMA (Exponential Weighted Moving Average) misfire counts for last 10 driving cycles
			P0303	0CH	24H	Misfire counts for last/current driving cycles
	A5H	No. 4 cylinder misfire	P0304	0BH	24H	EWMA (Exponential Weighted Moving Average) misfire counts for last 10 driving cycles
			P0304	0CH	24H	Misfire counts for last/current driving cycles
	A6H	No. 5 cylinder misfire	P0305	0BH	24H	EWMA (Exponential Weighted Moving Average) misfire counts for last 10 driving cycles
			P0305	0CH	24H	Misfire counts for last/current driving cycles
	A7H	No. 6 cylinder misfire	P0306	0BH	24H	EWMA (Exponential Weighted Moving Average) misfire counts for last 10 driving cycles
			P0306	0CH	24H	Misfire counts for last/current driving cycles
	A8H	No. 7 cylinder misfire	P0307	0BH	24H	EWMA (Exponential Weighted Moving Average) misfire counts for last 10 driving cycles
			P0307	0CH	24H	Misfire counts for last/current driving cycles
	A9H	No. 8 cylinder misfire	P0308	0BH	24H	EWMA (Exponential Weighted Moving Average) misfire counts for last 10 driving cycles
			P0308	0CH	24H	Misfire counts for last/current driving cycles

WIRING DIAGRAM

ENGINE CONTROL SYSTEM

Wiring Diagram

INFOID:0000000011148504

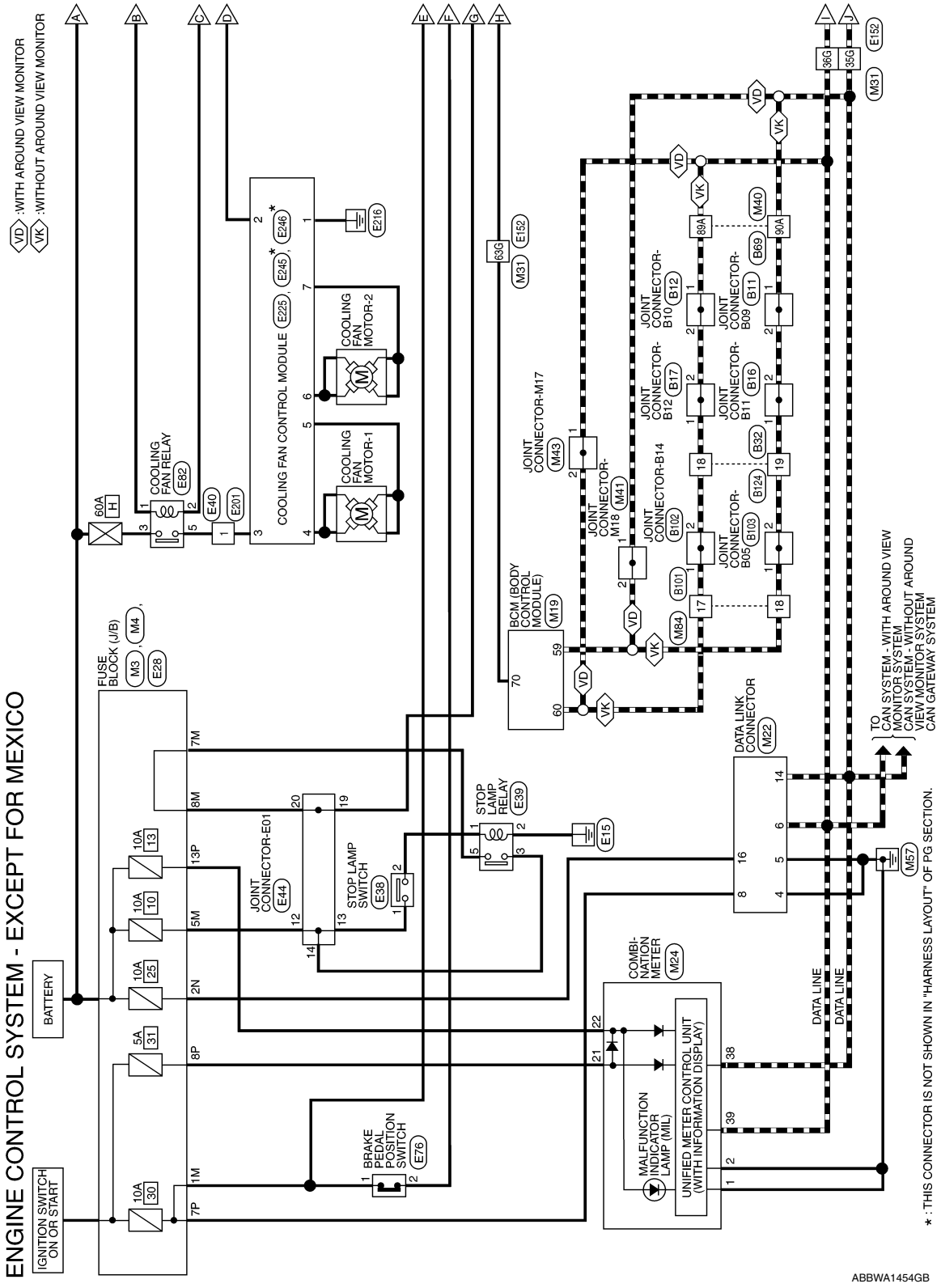

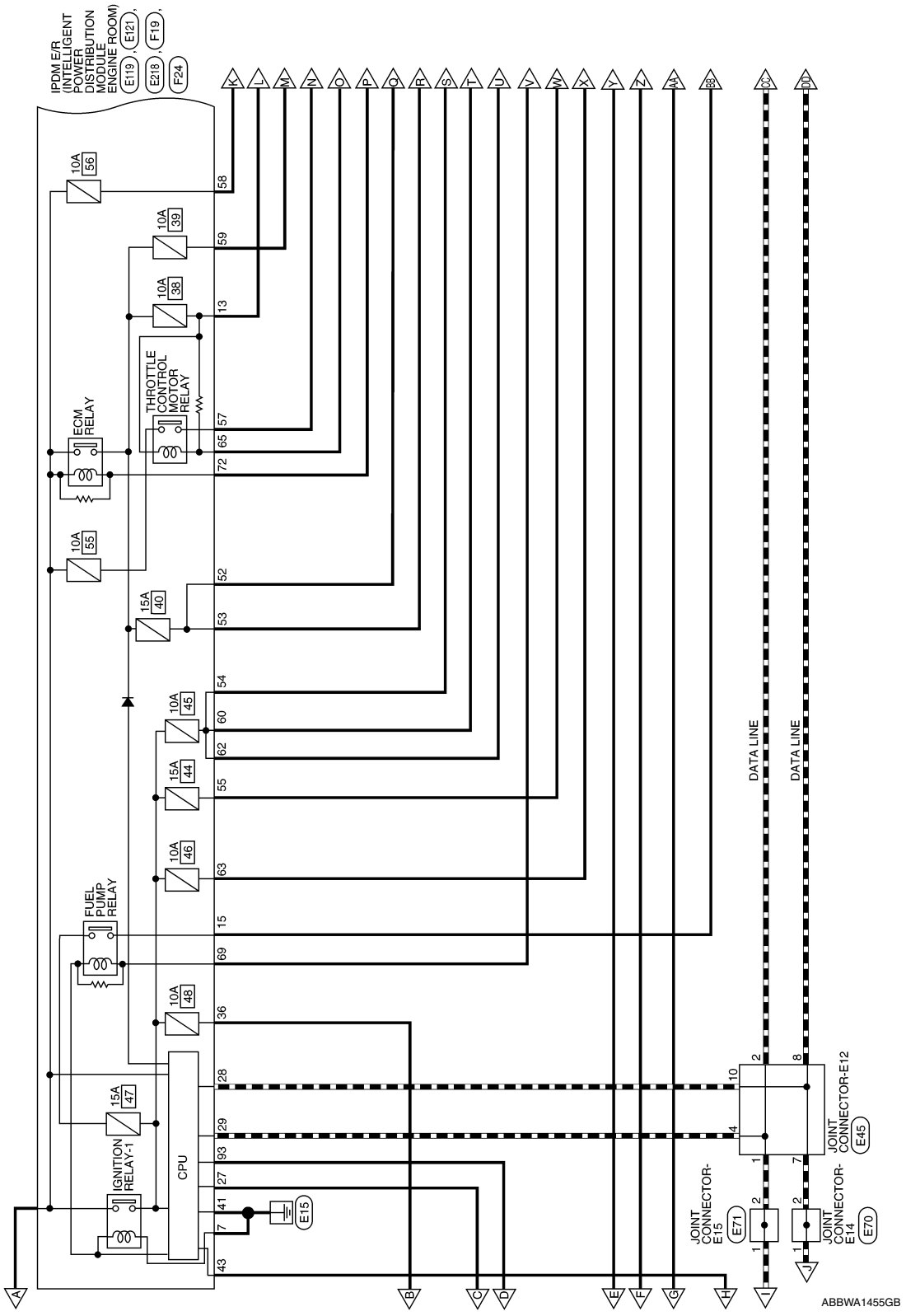
IPDM E/R (INTELLIGENT POWER DISTRIBUTION MODULE ENGINE ROOM)
E119, E121, E218, F19, F24
10A 56
10A 39
10A 38
ECM RELAY
THROTTLE CONTROL MOTOR RELAY
10A 55
15A 40
10A 45
15A 44
10A 46
FUEL PUMP RELAY
10A 48
15A 47
IGNITION RELAY-1
CPU
E15
DATA LINE
DATA LINE
JOINT CONNECTOR-E12
E45
JOINT CONNECTOR-E15
E71
JOINT CONNECTOR-E14
E70
ABBWA1455GB

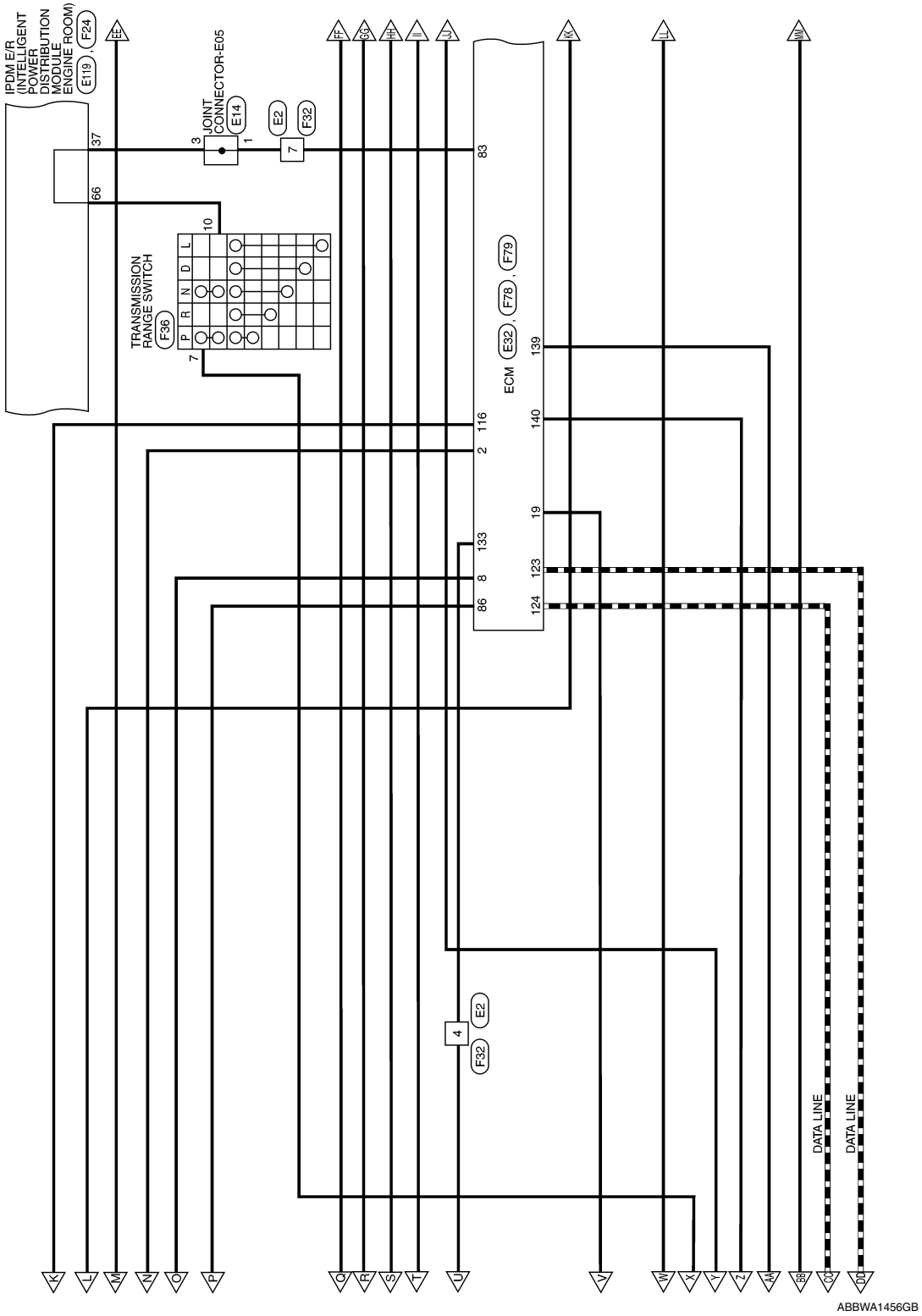
IPDM E/R
(INTELLIGENT
POWER
DISTRIBUTION
MODULE
ENGINE ROOM)
E119
F24
JOINT
CONNECTOR-E05
E14
E2
F32
TRANSMISSION
RANGE SWITCH
F36
P
R
N
D
L
ECM
E32
F78
F79
DATA LINE
DATA LINE
ABBWA1456GB

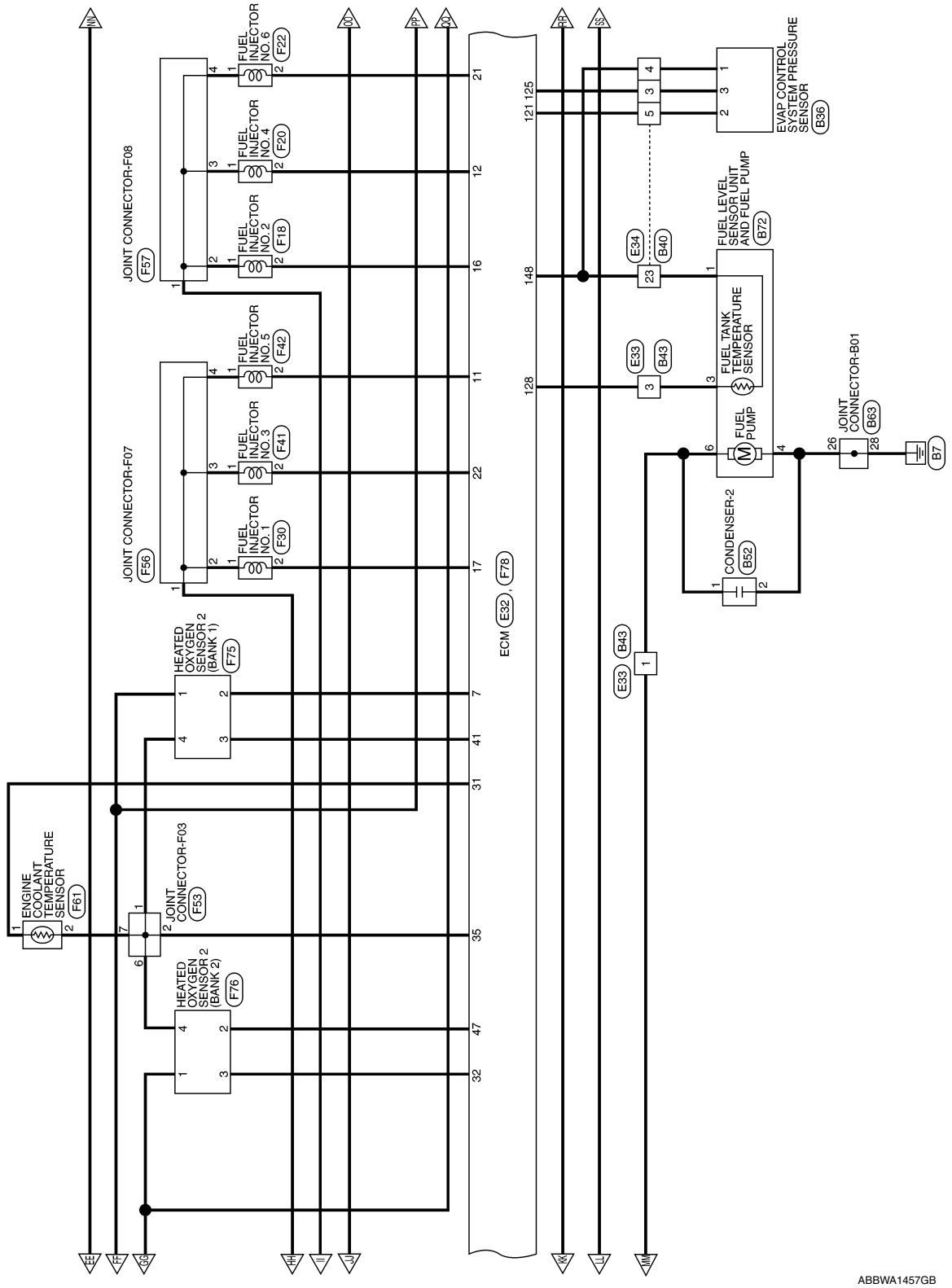
JOINT CONNECTOR-F08
F57
JOINT CONNECTOR-F07
F56
FUEL INJECTOR NO.6
F22
FUEL INJECTOR NO.4
F20
FUEL INJECTOR NO.2
F18
FUEL INJECTOR NO.5
F42
FUEL INJECTOR NO.3
F41
FUEL INJECTOR NO.1
F30
HEATED OXYGEN SENSOR 2 (BANK 1)
F75
HEATED OXYGEN SENSOR 2 (BANK 2)
F76
ENGINE COOLANT TEMPERATURE SENSOR
F61
JOINT CONNECTOR-F03
F53
ECM
E32, F78
EVAP CONTROL SYSTEM PRESSURE SENSOR
B36
FUEL LEVEL SENSOR UNIT AND FUEL PUMP
B72
FUEL TANK TEMPERATURE SENSOR
FUEL PUMP
E34
B40
E33
B43
CONDENSER-2
B52
JOINT CONNECTOR-B01
B63
B7
ABBWA1457GB

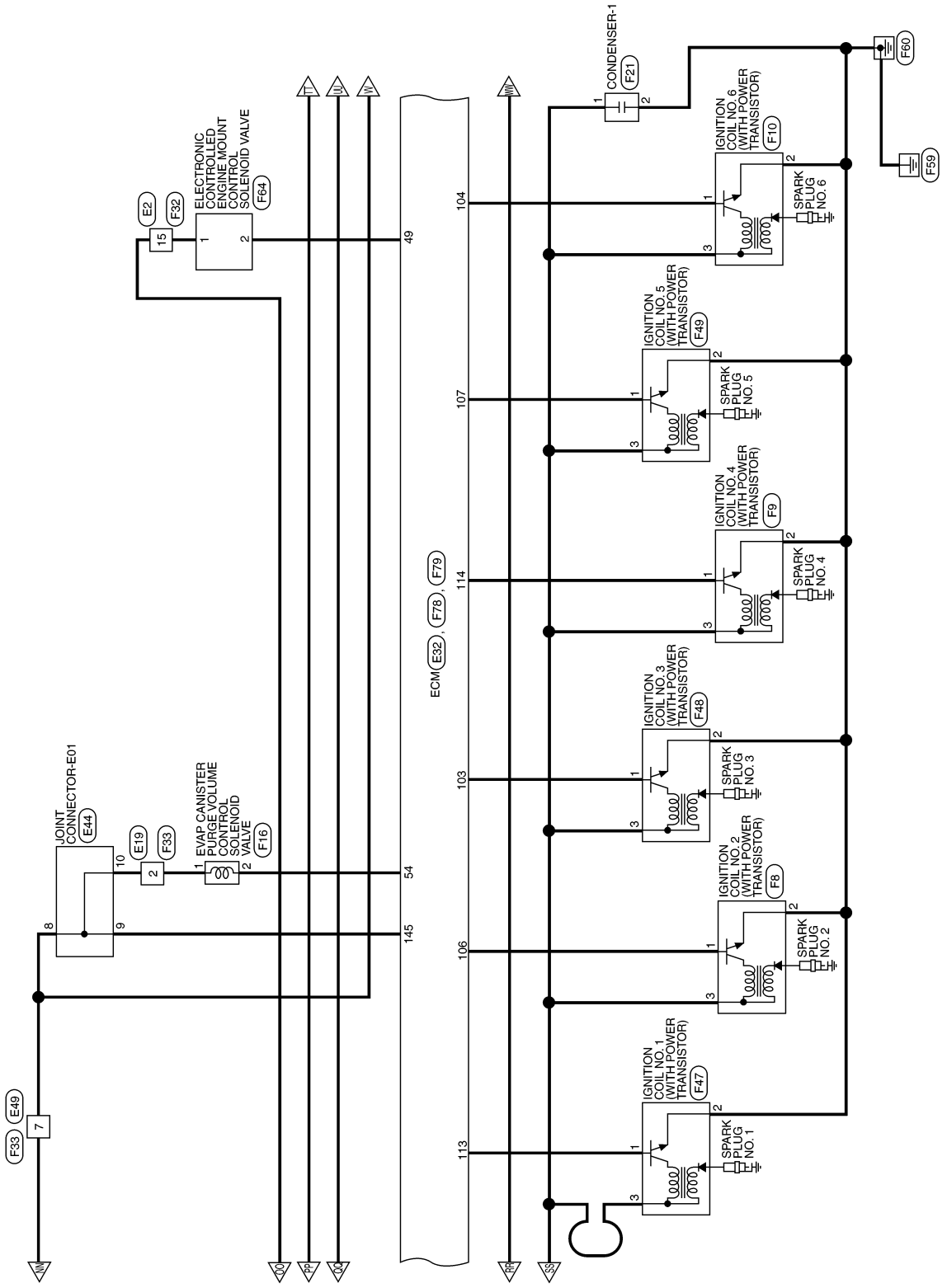

ABBWA1458GB

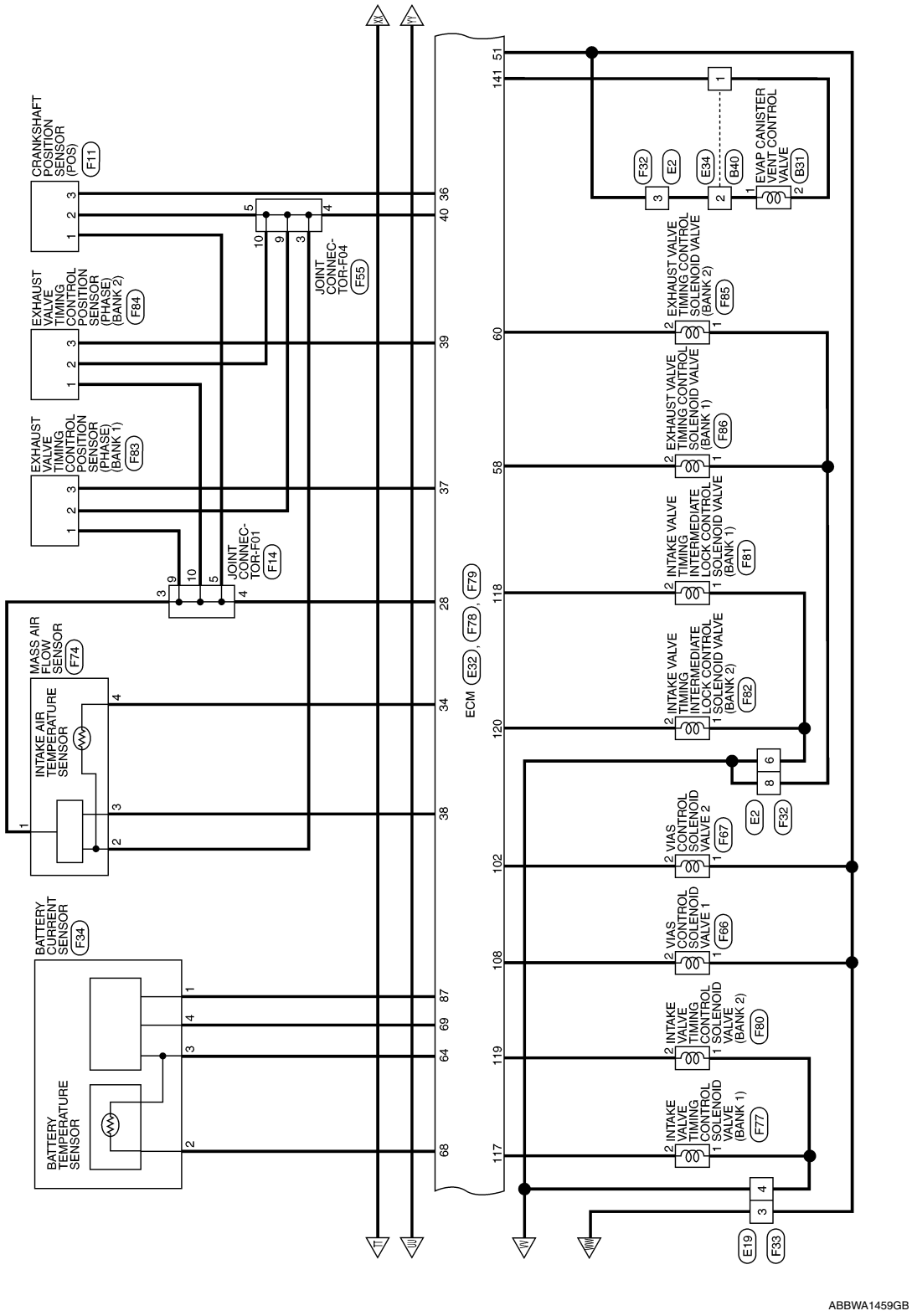
CRANKSHAFT POSITION SENSOR (POS)
F11
EXHAUST VALVE TIMING CONTROL POSITION SENSOR (PHASE) (BANK 2)
F84
EXHAUST VALVE TIMING CONTROL POSITION SENSOR (PHASE) (BANK 1)
F83
JOINT CONNEC-TOR-F04
F55
JOINT CONNEC-TOR-F01
F14
MASS AIR FLOW SENSOR
F74
INTAKE AIR TEMPERATURE SENSOR
BATTERY CURRENT SENSOR
F34
BATTERY TEMPERATURE SENSOR
ECM
E32, F78, F79
EXHAUST VALVE TIMING CONTROL SOLENOID VALVE (BANK 2)
F85
EXHAUST VALVE TIMING CONTROL SOLENOID VALVE (BANK 1)
F86
INTAKE VALVE TIMING INTERMEDIATE LOCK CONTROL SOLENOID VALVE (BANK 1)
F81
INTAKE VALVE TIMING INTERMEDIATE LOCK CONTROL SOLENOID VALVE (BANK 2)
F82
VIAS CONTROL SOLENOID VALVE 2
F67
VIAS CONTROL SOLENOID VALVE 1
F66
INTAKE VALVE TIMING CONTROL SOLENOID VALVE (BANK 2)
F80
INTAKE VALVE TIMING CONTROL SOLENOID VALVE (BANK 1)
F77
EVAP CANISTER VENT CONTROL VALVE
B31
F32
E2
E34
B40
E19
F33
ABBWA1459GB

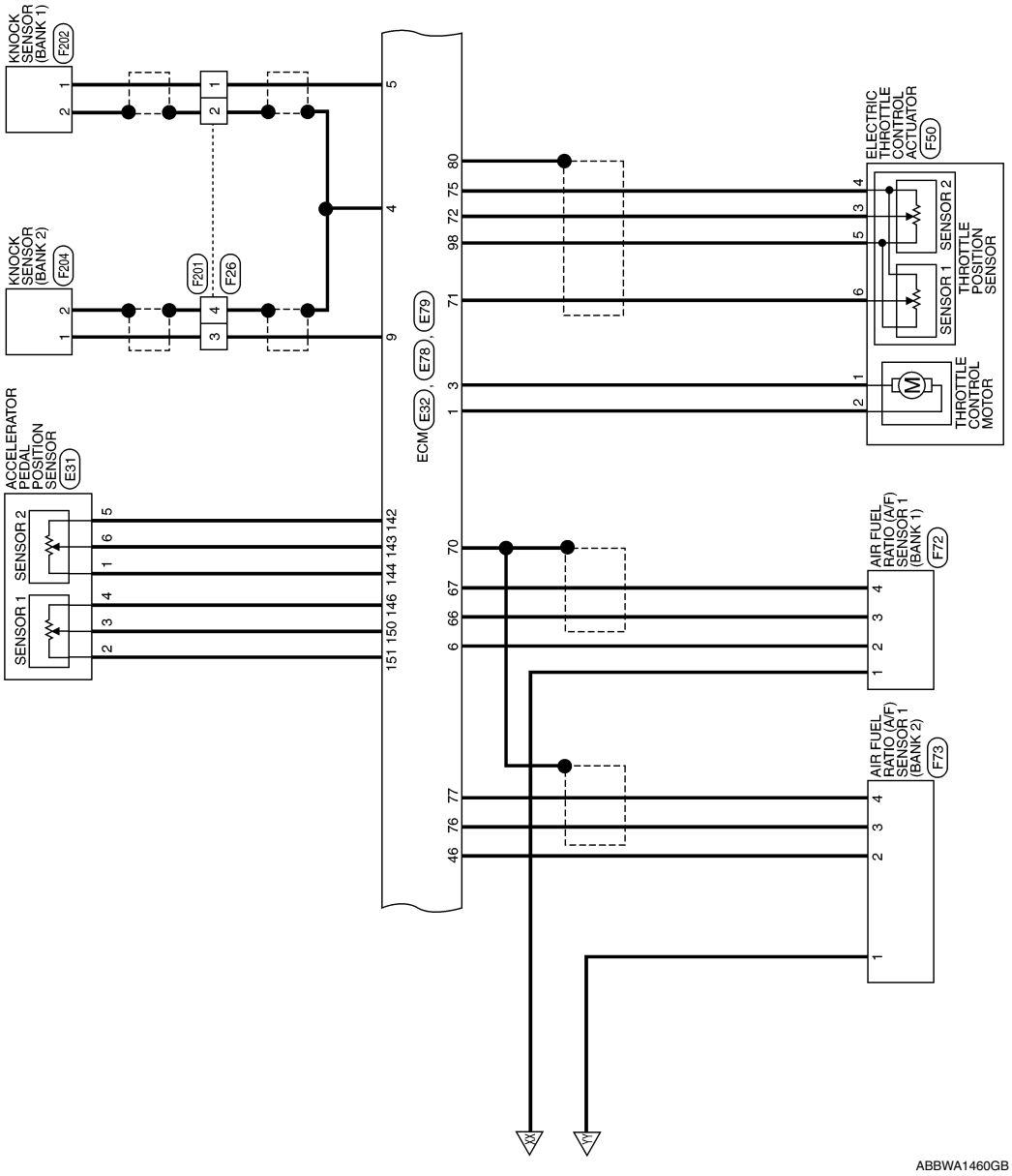
KNOCK SENSOR (BANK 1)
F202
KNOCK SENSOR (BANK 2)
F204
F201
F26
ACCELERATOR PEDAL POSITION SENSOR
E31
SENSOR 1
SENSOR 2
ECM
E32
E78
E79
ELECTRIC THROTTLE CONTROL ACTUATOR
F50
THROTTLE POSITION SENSOR
THROTTLE CONTROL MOTOR
AIR FUEL RATIO (A/F) SENSOR 1 (BANK 1)
F72
AIR FUEL RATIO (A/F) SENSOR 1 (BANK 2)
F73
ABBWA1460GB

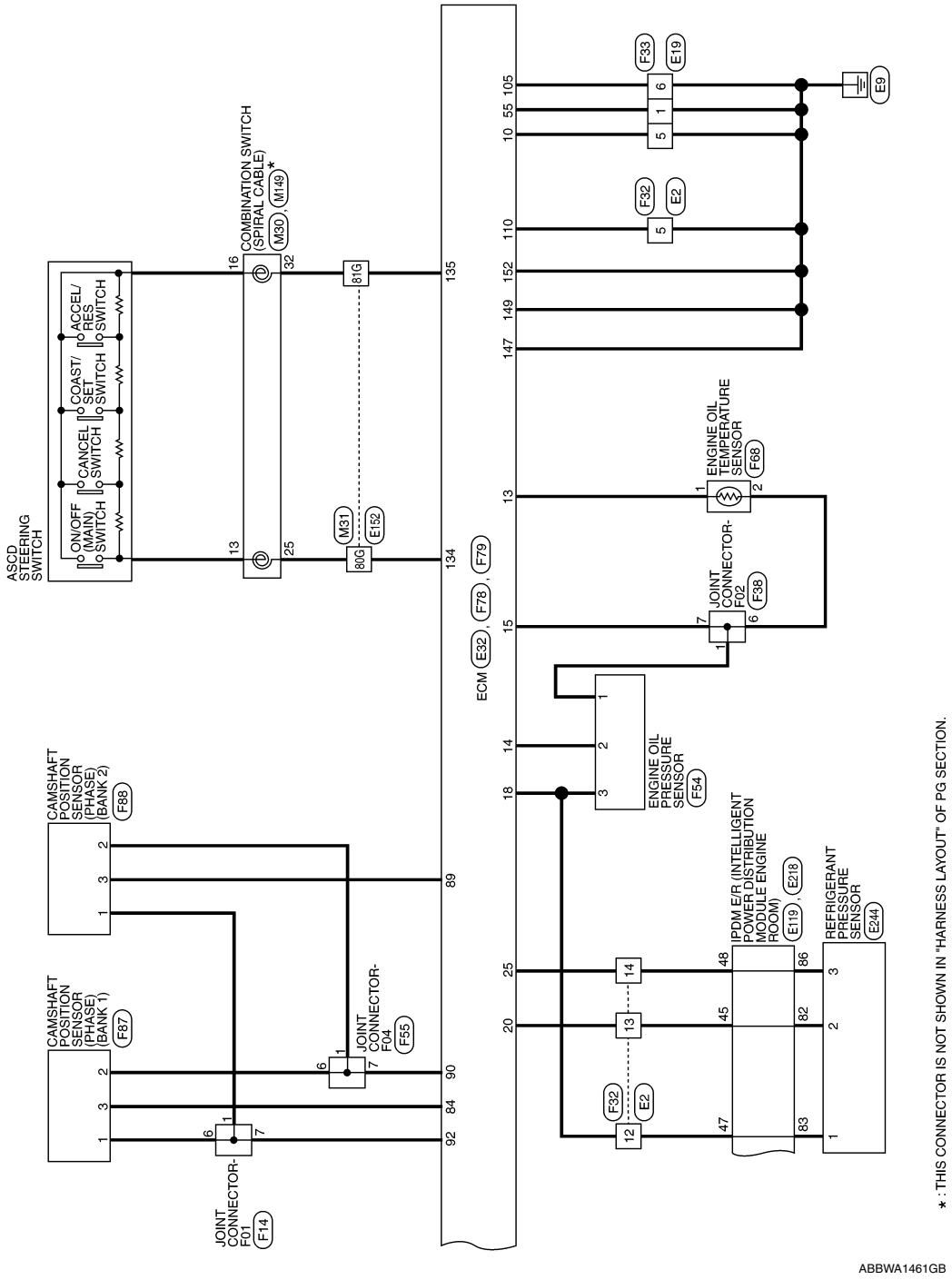

★ : THIS CONNECTOR IS NOT SHOWN IN "HARNESS LAYOUT" OF PG SECTION.

ENGINE CONTROL SYSTEM CONNECTORS - EXCEPT FOR MEXICO

Connector No.	M3
Connector Name	FUSE BLOCK (J/B)
Connector Color	WHITE

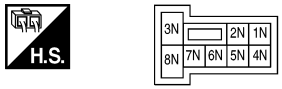

Terminal No.	Color of Wire	Signal Name
2N	BG	–

Connector No.	M4
Connector Name	FUSE BLOCK (J/B)
Connector Color	WHITE

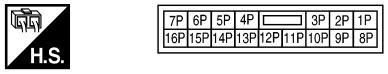

Terminal No.	Color of Wire	Signal Name
7P	LG	–
8P	BG	–
13P	W	–

Connector No.	M19
Connector Name	BCM (BODY CONTROL MODULE)
Connector Color	BLACK

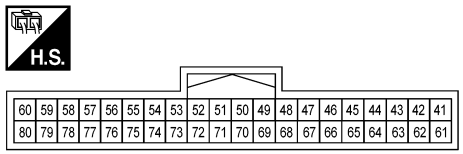

Terminal No.	Color of Wire	Signal Name
59	P	CAN-L
60	L	CAN-H
70	P	IGN USM OUT 1

Connector No.	M22
Connector Name	DATA LINK CONNECTOR
Connector Color	WHITE

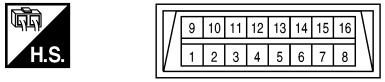

Terminal No.	Color of Wire	Signal Name
4	B	–
5	B	–
6	L	–
8	LG	–
14	P	–
16	BG	–

Connector No.	M24
Connector Name	COMBINATION METER
Connector Color	WHITE

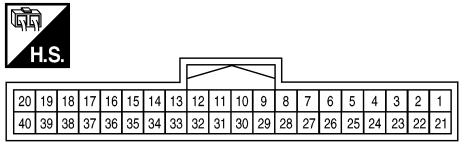

Terminal No.	Color of Wire	Signal Name
1	B	GND1
2	B	GND2
21	BG	IGN
22	W	BAT
38	P	CAN-L
39	L	CAN-H

Connector No.	M30
Connector Name	COMBINATION SWITCH (SPIRAL CABLE)
Connector Color	GRAY

Terminal No.	Color of Wire	Signal Name
25	W	–
32	G	–

ABBIA2658GB

Connector No.	M41
Connector Name	JOINT CONNECTOR-M18
Connector Color	WHITE

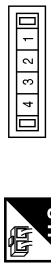

Terminal No.	Color of Wire	Signal Name
1	P	–
2	P	–

Connector No.	M40
Connector Name	WIRE TO WIRE
Connector Color	GRAY

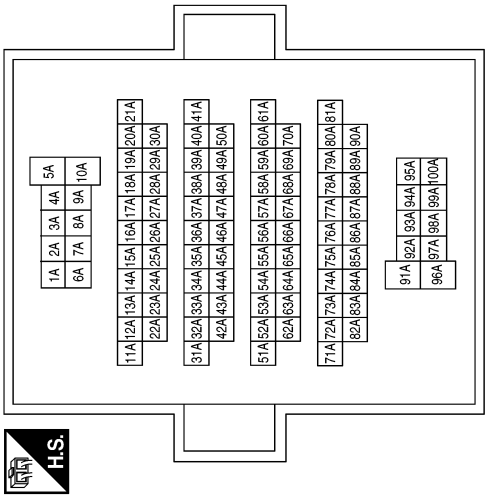

Terminal No.	Color of Wire	Signal Name
89A	L	–
90A	P	–

Connector No.	M31
Connector Name	WIRE TO WIRE
Connector Color	WHITE

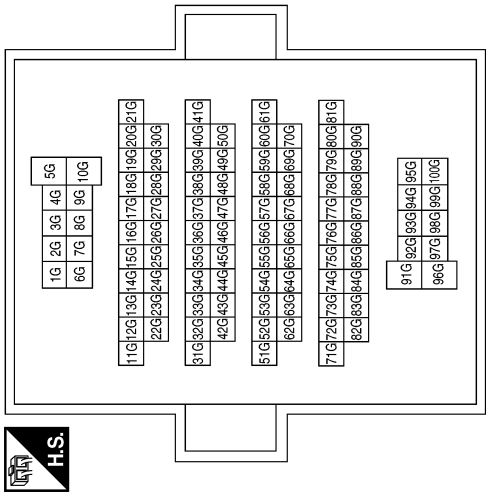

Terminal No.	Color of Wire	Signal Name
35G	P	–
36G	L	–
63G	P	–
80G	W	–
81G	G	–

ABBIA2659GB

Connector No.	M43
Connector Name	JOINT CONNECTOR-M17
Connector Color	WHITE

Terminal No.	Color of Wire	Signal Name
1	L	–
2	L	–

Connector No.	M84
Connector Name	WIRE TO WIRE
Connector Color	WHITE

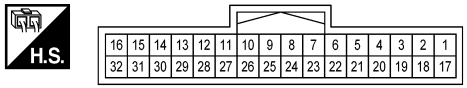

Terminal No.	Color of Wire	Signal Name
17	L	–
18	P	–

Connector No.	M149
Connector Name	COMBINATION SWITCH (SPIRAL CABLE)
Connector Color	GRAY

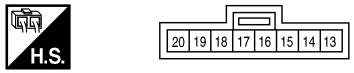

Terminal No.	Color of Wire	Signal Name
13	R	–
16	L	–

Connector No.	E2
Connector Name	WIRE TO WIRE
Connector Color	WHITE

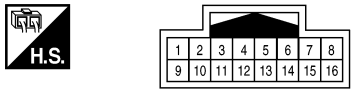

Terminal No.	Color of Wire	Signal Name
3	L	–
4	SB	–
5	GR	–
6	L	–
7	W	–
8	L	–
12	Y	–
13	LG	–
14	V	–
15	R	–

Connector No.	E14
Connector Name	JOINT CONNECTOR-E05
Connector Color	BLACK

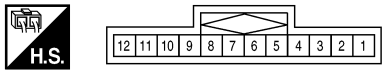

Terminal No.	Color of Wire	Signal Name
1	W	–
3	W	–

Connector No.	E19
Connector Name	WIRE TO WIRE
Connector Color	WHITE

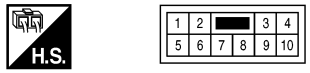

Terminal No.	Color of Wire	Signal Name
1	B	–
2	LG	–
3	L	–
4	L	–
5	B	– (EXCEPT FOR MEXICO)
6	B	–
7	LG	–

ABBIA2660GB

Connector No.	E28
Connector Name	FUSE BLOCK (J/B)
Connector Color	WHITE

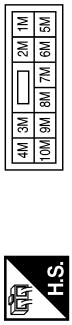

Terminal No.	Color of Wire	Signal Name
1M	R	–
5M	Y	–
7M	R	–
8M	R	–

Connector No.	E31
Connector Name	ACCELERATOR PEDAL POSITION SENSOR
Connector Color	BLACK

Terminal No.	Color of Wire	Signal Name
1	G	–
2	R	–
3	W	–
4	R	–
5	W	–
6	P	–

ABBIA2661GB

Connector No.	E32
Connector Name	ECM (EXCEPT FOR MEXICO)
Connector Color	BLACK

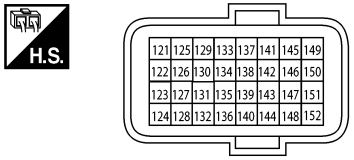

Terminal No.	Color of Wire	Signal Name
121	W	EVAP CONTROL SYSTEM PRESSURE SENSOR
122	–	–
123	P	CAN-L
124	L	CAN-H
125	R	SENSOR POWER SUPPLY (EVAP CONTROL SYSTEM PRESSURE SENSOR)
126	–	–
127	–	–
128	BR	FUEL TANK TEMPERATURE SENSOR
129	–	–
130	–	–
131	–	–
132	–	–
133	SB	IGNITION SWITCH
134	G	ASCD STEERING SWITCH
135	R	SENSOR GROUND (ASCD STEERING SWITCH)
136	–	–
137	–	–
138	–	–
139	R	STOP LAMP SWITCH
140	LG	BRAKE PEDAL POSITION SWITCH
141	Y	EVAP CANISTER VENT CONTROL VALVE
142	W	SENSOR POWER SUPPLY (ACCELERATOR PEDAL POSITION SENSOR 2)
143	P	ACCELERATOR PEDAL POSITION SENSOR 2
144	G	SENSOR GROUND (ACCELERATOR PEDAL POSITION SENSOR 2)
145	LG	POWER SUPPLY FOR ECM
146	R	SENSOR POWER SUPPLY (ACCELERATOR PEDAL POSITION SENSOR 1)
147	B	ECM GROUND
148	LG	SENSOR GROUND
149	B	ECM GROUND
150	W	ACCELERATOR PEDAL POSITION SENSOR 1
151	R	SENSOR GROUND (ACCELERATOR PEDAL POSITION SENSOR)
152	B	ECM GROUND

ABBIA2662GB

Connector No.	E33
Connector Name	WIRE TO WIRE
Connector Color	WHITE

H.S.

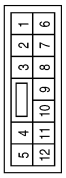

Terminal No.	Color of Wire	Signal Name
1	R	–
3	BR	–

Connector No.	E34
Connector Name	WIRE TO WIRE
Connector Color	WHITE

H.S.

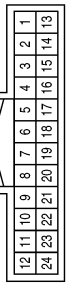

Terminal No.	Color of Wire	Signal Name
1	Y	–
2	L	–
3	R	– (EXCEPT FOR MEXICO)
4	LG	– (EXCEPT FOR MEXICO)
5	W	– (EXCEPT FOR MEXICO)
23	LG	–

Connector No.	E38
Connector Name	STOP LAMP SWITCH
Connector Color	WHITE

H.S.

Terminal No.	Color of Wire	Signal Name
1	Y	–
2	W	–

Connector No.	E39
Connector Name	STOP LAMP RELAY
Connector Color	BLUE

H.S.

Terminal No.	Color of Wire	Signal Name
1	W	–
2	B	–
3	Y	–
5	R	–

Connector No.	E40
Connector Name	WIRE TO WIRE
Connector Color	BLACK

H.S.

Terminal No.	Color of Wire	Signal Name
1	R	–

ABBIA2663GB

Connector No.	E44
Connector Name	JOINT CONNECTOR-E01
Connector Color	WHITE

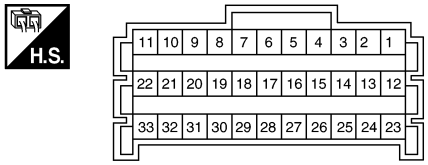

Terminal No.	Color of Wire	Signal Name
8	LG	–
9	LG	–
10	LG	–
12	Y	–
13	Y	–
14	Y	–
19	R	–
20	R	–

Connector No.	E45
Connector Name	JOINT CONNECTOR-E12
Connector Color	BLUE

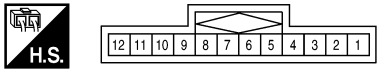

Terminal No.	Color of Wire	Signal Name
1	L	–
2	L	–
4	L	–
7	P	–
8	P	–
10	P	–

Connector No.	E70
Connector Name	JOINT CONNECTOR-E14
Connector Color	BLACK

Terminal No.	Color of Wire	Signal Name
1	P	–
2	P	–

Connector No.	E71
Connector Name	JOINT CONNECTOR-E15
Connector Color	BLACK

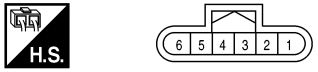

Terminal No.	Color of Wire	Signal Name
1	L	–
2	L	–

Connector No.	E76
Connector Name	BRAKE PEDAL POSITION SWITCH
Connector Color	BROWN

Terminal No.	Color of Wire	Signal Name
1	R	–
2	LG	–

Connector No.	E82
Connector Name	COOLING FAN RELAY
Connector Color	BROWN

Terminal No.	Color of Wire	Signal Name
1	W	–
2	B	–
3	L	–
5	R	–

ABBIA2664GB

Connector No.	E119
Connector Name	IPDM E/R (INTELLIGENT POWER DISTRIBUTION MODULE ENGINE ROOM)
Connector Color	WHITE

H.S.

19	20	21	22	23	24	25	26	27	28	29	30	31	32	33	34
35	36	37	38	39	40	41	42	43	44	45	46	47	48	49	50

Terminal No.	Color of Wire	Signal Name
27	B	MOTOR FAN RLY MID
28	P	CAN-L
29	L	CAN-H

Terminal No.	Color of Wire	Signal Name
36	W	START IG-E/R
37	W	SHIFT N/P
41	B	GND (SIGNAL)
43	L	IGN SIGNAL
45	LG	PD SENS SIG-E/R
47	Y	PD SENS PWR-E/R
48	V	PD SENS GND-E/R

Connector No.	E121
Connector Name	IPDM E/R (INTELLIGENT POWER DISTRIBUTION MODULE ENGINE ROOM)
Connector Color	WHITE

H.S.

7	8		9	10	11
12	13	14	15	16	17	18

Terminal No.	Color of Wire	Signal Name
7	B	GND (POWER)
13	L	ECM VB
15	R	FUEL PUMP

Connector No.	E152
Connector Name	WIRE TO WIRE
Connector Color	WHITE

H.S.

5G	4G	3G	2G	1G
10G	9G	8G	7G	6G

21G	20G	19G	18G	17G	16G	15G	14G	13G	12G	11G
30G	29G	28G	27G	26G	25G	24G	23G	22G		

41G	40G	39G	38G	37G	36G	35G	34G	33G	32G	31G
50G	49G	48G	47G	46G	45G	44G	43G	42G		

61G	60G	59G	58G	57G	56G	55G	54G	53G	52G	51G
70G	69G	68G	67G	66G	65G	64G	63G	62G		

81G	80G	79G	78G	77G	76G	75G	74G	73G	72G	71G
90G	89G	88G	87G	86G	85G	84G	83G	82G		

95G	94G	93G	92G	91G
100G	99G	98G	97G	96G

Terminal No.	Color of Wire	Signal Name
35G	P	–
36G	L	–
63G	L	–
80G	G	–
81G	R	–

Connector No.	E201
Connector Name	WIRE TO WIRE
Connector Color	BLACK

H.S.

1	2

Terminal No.	Color of Wire	Signal Name
1	R	–

ABBIA2665GB

Connector No.	E218
Connector Name	IPDM E/R (INTELLIGENT POWER DISTRIBUTION MODULE ENGINE ROOM)
Connector Color	WHITE

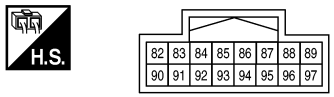

Terminal No.	Color of Wire	Signal Name
82	P	PD SENS SIG-FEM
83	G	PD SENS PWR-FEM
86	L	PD SENS GND-FEM
93	V	MOTOR FAN PWM

Connector No.	E225
Connector Name	COOLING FAN CONTROL MODULE
Connector Color	GRAY

Terminal No.	Color of Wire	Signal Name
1	B	GND
2	V	SIG
3	R	POWER

Connector No.	E244
Connector Name	REFRIGERANT PRESSURE SENSOR
Connector Color	BLACK

Terminal No.	Color of Wire	Signal Name
1	G	–
2	W	– (EXCEPT FOR MEXICO)
3	R	– (EXCEPT FOR MEXICO)

Connector No.	E245
Connector Name	COOLING FAN CONTROL MODULE (COOLING FAN MOTOR-1)
Connector Color	BROWN

Terminal No.	Color of Wire	Signal Name
4	R	–
5	B	–

Connector No.	E246
Connector Name	COOLING FAN CONTROL MODULE (COOLING FAN MOTOR-2)
Connector Color	GRAY

Terminal No.	Color of Wire	Signal Name
6	B	–
7	R	–

Connector No.	F8
Connector Name	IGNITION COIL NO. 2 (WITH POWER TRANSISTOR)
Connector Color	GRAY

Terminal No.	Color of Wire	Signal Name
1	LG	–
2	B	–
3	W	–

ABBIA2666GB

Connector No.	F9
Connector Name	IGNITION COIL NO. 4 (WITH POWER TRANSISTOR)
Connector Color	GRAY

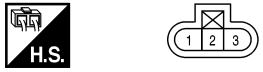

Terminal No.	Color of Wire	Signal Name
1	LG	–
2	B	–
3	W	–

Connector No.	F10
Connector Name	IGNITION COIL NO. 6 (WITH POWER TRANSISTOR)
Connector Color	GRAY

Terminal No.	Color of Wire	Signal Name
1	LG	–
2	B	–
3	W	–

Connector No.	F11
Connector Name	CRANKSHAFT POSITION SENSOR (POS)
Connector Color	BLACK

Terminal No.	Color of Wire	Signal Name
1	LG	–
2	Y	–
3	L	–

Connector No.	F14
Connector Name	JOINT CONNECTOR-F01
Connector Color	BLACK

Terminal No.	Color of Wire	Signal Name
1	BR	– (EXCEPT FOR MEXICO)
3	LG	– (EXCEPT FOR MEXICO)
4	LG	– (EXCEPT FOR MEXICO)
5	LG	– (EXCEPT FOR MEXICO)
6	BR	– (EXCEPT FOR MEXICO)
7	BR	–
9	LG	– (EXCEPT FOR MEXICO)
10	LG	– (EXCEPT FOR MEXICO)

Connector No.	F16
Connector Name	EVAP CANISTER PURGE VOLUME CONTROL SOLENOID VALVE
Connector Color	GRAY

Terminal No.	Color of Wire	Signal Name
1	L	–
2	BR	–

Connector No.	F18
Connector Name	FUEL INJECTOR NO. 2
Connector Color	GRAY

Terminal No.	Color of Wire	Signal Name
1	LG	–
2	V	–

ABBIA2667GB

Connector No.	F19
Connector Name	IPDM E/R (INTELLIGENT POWER DISTRIBUTION MODULE ENGINE ROOM)
Connector Color	WHITE

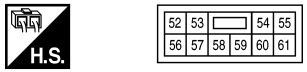

Terminal No.	Color of Wire	Signal Name
52	W	O2SENS #2
53	W	O2SENS #1
54	L	INJECTOR #1
55	W	IGN COIL
57	R	ETC
58	GR	ECM BAT
59	LG	ENG SOL
60	LG	INJECTOR #2

Connector No.	F20
Connector Name	FUEL INJECTOR NO. 4
Connector Color	GRAY

Terminal No.	Color of Wire	Signal Name
1	LG	–
2	V	–

Connector No.	F21
Connector Name	CONDENSER-1
Connector Color	WHITE

Terminal No.	Color of Wire	Signal Name
1	W	–
2	B	–

Connector No.	F22
Connector Name	FUEL INJECTOR NO. 6
Connector Color	GRAY

Terminal No.	Color of Wire	Signal Name
1	LG	–
2	V	–

Connector No.	F24
Connector Name	IPDM E/R (INTELLIGENT POWER DISTRIBUTION MODULE ENGINE ROOM)
Connector Color	WHITE

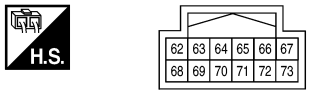

Terminal No.	Color of Wire	Signal Name
62	W	ECM IGN SW
63	L	INHIBIT SW
65	G	ETC RLY CONT
66	G	NP SW
69	W	FPR
72	V	SSOFF

Connector No.	F26
Connector Name	WIRE TO WIRE
Connector Color	BLUE

Terminal No.	Color of Wire	Signal Name
1	B	–
2	SHIELD	–
3	W	–
4	SHIELD	–

ABBIA2668GB

Connector No.	F30
Connector Name	FUEL INJECTOR NO. 1
Connector Color	GRAY

Terminal No.	Color of Wire	Signal Name
1	L	–
2	Y	–

Connector No.	F32
Connector Name	WIRE TO WIRE
Connector Color	WHITE

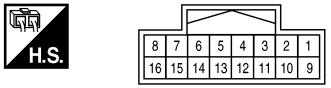

Terminal No.	Color of Wire	Signal Name
3	L	–
4	W	–
5	B	–
6	L	–
7	W	–
8	L	–
12	Y	– (EXCEPT FOR MEXICO)

Terminal No.	Color of Wire	Signal Name
13	SB	–
14	V	–
15	L	–

Connector No.	F33
Connector Name	WIRE TO WIRE
Connector Color	WHITE

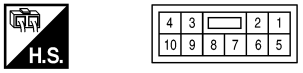

Terminal No.	Color of Wire	Signal Name
1	B	–
2	L	–
3	L	–
4	L	–
5	B	– (EXCEPT FOR MEXICO)
6	B	–
7	LG	–

Connector No.	F34
Connector Name	BATTERY CURRENT SENSOR
Connector Color	GRAY

Terminal No.	Color of Wire	Signal Name
1	LG	–
2	Y	–
3	G	–
4	W	–

Connector No.	F36
Connector Name	TRANSMISSION RANGE SWITCH
Connector Color	BLACK

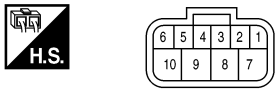

Terminal No.	Color of Wire	Signal Name
7	L	–
10	G	–

ABBIA2669GB

Connector No.	F38
Connector Name	JOINT CONNECTOR-F02
Connector Color	BLACK

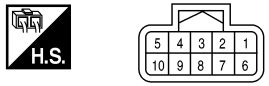

Terminal No.	Color of Wire	Signal Name
1	L	–
6	B	–
7	B	–

Connector No.	F41
Connector Name	FUEL INJECTOR NO. 3
Connector Color	GRAY

Terminal No.	Color of Wire	Signal Name
1	L	–
2	Y	–

Connector No.	F42
Connector Name	FUEL INJECTOR NO. 5
Connector Color	GRAY

Terminal No.	Color of Wire	Signal Name
1	L	–
2	Y	–

Connector No.	F47
Connector Name	IGNITION COIL NO. 1 (WITH POWER TRANSISTOR)
Connector Color	GRAY

Terminal No.	Color of Wire	Signal Name
1	LG	–
2	B	–
3	W	–

Connector No.	F48
Connector Name	IGNITION COIL NO. 3 (WITH POWER TRANSISTOR)
Connector Color	GRAY

Terminal No.	Color of Wire	Signal Name
1	LG	–
2	B	–
3	W	–

Connector No.	F49
Connector Name	IGNITION COIL NO. 5 (WITH POWER TRANSISTOR)
Connector Color	GRAY

Terminal No.	Color of Wire	Signal Name
1	LG	–
2	B	–
3	W	–

ABBIA2670GB

Connector No.	F50
Connector Name	ELECTRIC THROTTLE CONTROL ACTUATOR
Connector Color	BLACK

Terminal No.	Color of Wire	Signal Name
1	W	– (EXCEPT FOR MEXICO)
2	G	– (EXCEPT FOR MEXICO)
3	W	–
4	R	–
5	G	–
6	B	– (EXCEPT FOR MEXICO)

Connector No.	F53
Connector Name	JOINT CONNECTOR-F03
Connector Color	BLACK

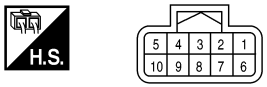

Terminal No.	Color of Wire	Signal Name
1	B	–
2	B	–
6	B	–
7	B	–

Connector No.	F54
Connector Name	ENGINE OIL PRESSURE SENSOR
Connector Color	BLACK

Terminal No.	Color of Wire	Signal Name
1	L	– (EXCEPT FOR MEXICO)
2	LG	–
3	Y	–

Connector No.	F55
Connector Name	JOINT CONNECTOR-F04
Connector Color	BLACK

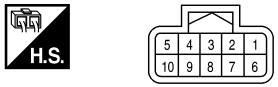

Terminal No.	Color of Wire	Signal Name
1	LG	– (EXCEPT FOR MEXICO)
3	BR	– (EXCEPT FOR MEXICO)

Terminal No.	Color of Wire	Signal Name
4	BR	– (EXCEPT FOR MEXICO)
5	Y	– (EXCEPT FOR MEXICO)
6	LG	– (EXCEPT FOR MEXICO)
7	LG	–
9	BR	– (EXCEPT FOR MEXICO)
10	BR	– (EXCEPT FOR MEXICO)

Connector No.	F56
Connector Name	JOINT CONNECTOR-F07
Connector Color	WHITE

Terminal No.	Color of Wire	Signal Name
1	L	–
2	L	–
3	L	–
4	L	–

ABBIA2671GB

Connector No.	F57
Connector Name	JOINT CONNECTOR-F08
Connector Color	WHITE

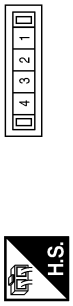

Terminal No.	Color of Wire	Signal Name
1	LG	–
2	LG	–
3	LG	–
4	LG	–

Connector No.	F61
Connector Name	ENGINE COOLANT TEMPERATURE SENSOR
Connector Color	GRAY

Terminal No.	Color of Wire	Signal Name
1	BR	–
2	B	–

Connector No.	F64
Connector Name	ELECTRONIC CONTROLLED ENGINE MOUNT CONTROL SOLENOID VALVE
Connector Color	BROWN

Terminal No.	Color of Wire	Signal Name
1	L	–
2	BR	–

Connector No.	F66
Connector Name	VIAS CONTROL SOLENOID VALVE 1
Connector Color	BLACK

Terminal No.	Color of Wire	Signal Name
1	L	–
2	BR	–

Connector No.	F67
Connector Name	VIAS CONTROL SOLENOID VALVE 2
Connector Color	BLACK

Terminal No.	Color of Wire	Signal Name
1	L	–
2	BR	–

Connector No.	F68
Connector Name	ENGINE OIL TEMPERATURE SENSOR
Connector Color	GRAY

Terminal No.	Color of Wire	Signal Name
1	G	–
2	B	–

ABBIA2672GB

Connector No.	F72
Connector Name	AIR FUEL RATIO (A/F) SENSOR 1 (BANK 1) (EXCEPT FOR MEXICO)
Connector Color	GRAY

Terminal No.	Color of Wire	Signal Name
1	W	–
2	BR	–
3	W	–
4	B	–

Connector No.	F73
Connector Name	AIR FUEL RATIO (A/F) SENSOR 1 (BANK 2) (EXCEPT FOR MEXICO)
Connector Color	GRAY

Terminal No.	Color of Wire	Signal Name
1	W	–
2	Y	–
3	W	–
4	B	–

Connector No.	F74
Connector Name	MASS AIR FLOW SENSOR (EXCEPT FOR MEXICO)
Connector Color	BLACK

Terminal No.	Color of Wire	Signal Name
1	LG	–
2	BR	–
3	GR	–
4	V	–

Connector No.	F75
Connector Name	HEATED OXYGEN SENSOR 2 (BANK 1) (EXCEPT FOR MEXICO)
Connector Color	GRAY

Terminal No.	Color of Wire	Signal Name
1	W	–
2	SB	–
3	W	–
4	B	–

Connector No.	F76
Connector Name	HEATED OXYGEN SENSOR 2 (BANK 2) (EXCEPT FOR MEXICO)
Connector Color	GRAY

Terminal No.	Color of Wire	Signal Name
1	W	–
2	SB	–
3	L	–
4	B	–

Connector No.	F77
Connector Name	INTAKE VALVE TIMING CONTROL SOLENOID VALVE (BANK 1) (EXCEPT FOR MEXICO)
Connector Color	GRAY

Terminal No.	Color of Wire	Signal Name
1	L	–
2	BR	–

ABBIA2673GB

Connector No.	F78
Connector Name	ECM (EXCEPT FOR MEXICO)
Connector Color	BLACK

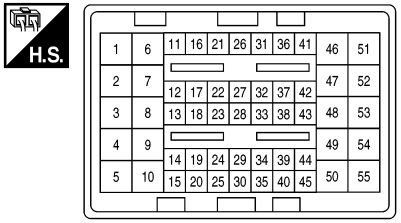

Terminal No.	Color of Wire	Signal Name
1	G	THROTTLE CONTROL MOTOR (CLOSE)
2	R	THROTTLE CONTROL MOTOR POWER SUPPLY
3	W	THROTTLE CONTROL MOTOR (OPEN)
4	GR	KNOCK SENSOR [KNOCK SENSOR (BANK 1), KNOCK SENSOR (BANK 2)]
5	B	KNOCK SENSOR (BANK 1)
6	BR	A/F SENSOR 1 HEATER (BANK 1)
7	SB	HEATED OXYGEN SENSOR 2 (BANK 1)
8	G	THROTTLE CONTROL MOTOR RELAY
9	W	KNOCK SENSOR (BANK 2)
10	B	ECM GROUND
11	Y	FUEL INJECTOR NO. 5
12	V	FUEL INJECTOR NO. 4

ABBIA2674GB

Terminal No.	Color of Wire	Signal Name
13	G	ENGINE OIL TEMPERATURE SENSOR
14	LG	ENGINE OIL PRESSURE SENSOR
15	B	SENSOR GROUND (ENGINE OIL PRESSURE SENSOR, ENGINE OIL TEMPERATURE SENSOR)
16	V	FUEL INJECTOR NO. 2
17	Y	FUEL INJECTOR NO. 1
18	Y	SENSOR POWER SUPPLY (ENGINE OIL PRESSURE SENSOR)
19	W	FUEL PUMP RELAY
20	SB	REFRIGERANT PRESSURE SENSOR
21	V	FUEL INJECTOR NO. 6
22	Y	FUEL INJECTOR NO. 3
23	–	–
24	–	–
25	V	SENSOR GROUND (REFRIGERANT PRESSURE SENSOR)
26	–	–
27	–	–
28	LG	SENSOR POWER SUPPLY
29	–	–
30	–	–
31	BR	ENGINE COOLANT TEMPERATURE SENSOR
32	L	HEATED OXYGEN SENSOR 2 (BANK 2)
33	–	–
34	V	INTAKE AIR TEMPERATURE SENSOR

Terminal No.	Color of Wire	Signal Name
35	B	SENSOR GROUND (HEATED OXYGEN SENSOR 2)
36	L	CRANKSHAFT POSITION SENSOR (POS)
37	GR	EXHAUST CAMSHAFT POSITION SENSOR (PHASE) (BANK 1)
38	GR	MASS AIR FLOW SENSOR
39	GR	EXHAUST CAMSHAFT POSITION SENSOR (PHASE) (BANK 2)
40	BR	SENSOR GROUND
41	W	HEATED OXYGEN SENSOR 2 (BANK 1)
42	–	–
43	–	–
44	–	–
45	–	–
46	Y	A/F SENSOR 1 HEATER (BANK 2)
47	SB	HEATED OXYGEN SENSOR 2 HEATER (BANK 2)
48	–	–
49	BR	ELECTRONIC CONTROLLED ENGINE MOUNT CONTROL SOLENOID VALVE
50	–	–
51	L	POWER SUPPLY (VALVE)
52	–	–
53	–	–
54	BR	EVAP CANISTER PURGE VOLUME CONTROL SOLENOID VALVE
55	B	ECM GROUND

Connector No.	F79
Connector Name	ECM (EXCEPT FOR MEXICO)
Connector Color	BLACK

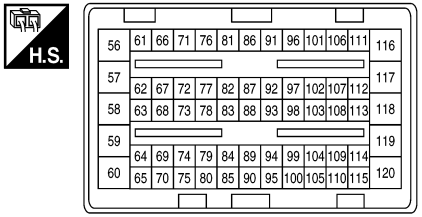

Terminal No.	Color of Wire	Signal Name
56	–	–
57	–	–
58	SB	EXHAUST VALVE TIMING CONTROL SOLENOID VALVE (BANK 1)
59	–	–
60	BR	EXHAUST VALVE TIMING CONTROL SOLENOID VALVE (BANK 2)
61	–	–
62	–	–
63	–	–
64	G	SENSOR GROUND (BATTERY CURRENT SENSOR)
65	–	–
66	W	A/F SENSOR 1 (BANK 1)
67	B	A/F SENSOR 1 (BANK 1)
68	Y	BATTERY TEMPERATURE SENSOR
69	W	BATTERY CURRENT SENSOR
70	GR	ECM GROUND
71	B	THROTTLE POSITION SENSOR 1
72	W	THROTTLE POSITION SENSOR 2

ABBIA2675GB

Terminal No.	Color of Wire	Signal Name
73	–	–
74	–	–
75	R	SENSOR GROUND (THROTTLE POSITION SENSOR)
76	W	A/F SENSOR 1 (BANK 2)
77	B	A/F SENSOR 1 (BANK 2)
78	–	–
79	–	–
80	GR	SHIELD (ELECTRIC THROTTLE CONTROL ACTUATOR)
81	–	–
82	–	–
83	W	PNP SIGNAL
84	GR	INTAKE CAMSHAFT POSITION SENSOR (PHASE) (BANK 1)
85	–	–
86	V	ECM RELAY (SELF SHUT-OFF)
87	LG	SENSOR POWER SUPPLY (BATTERY CURRENT SENSOR)
88	–	–
89	GR	INTAKE CAMSHAFT POSITION SENSOR (PHASE) (BANK 2)
90	LG	SENSOR GROUND [INTAKE CAMSHAFT POSITION SENSOR (PHASE) (BANK 1), INTAKE CAMSHAFT POSITION SENSOR (PHASE) (BANK 2)]
91	–	–
92	BR	SENSOR POWER SUPPLY [INTAKE CAMSHAFT POSITION SENSOR (PHASE) (BANK 1), INTAKE CAMSHAFT POSITION SENSOR (PHASE) (BANK 2)]
93	–	–

Terminal No.	Color of Wire	Signal Name
94	–	–
95	–	–
96	–	–
97	–	–
98	G	SENSOR POWER SUPPLY (THROTTLE POSITION SENSOR)
99	–	–
100	–	–
101	–	–
102	BR	VIAS CONTROL SOLENOID VALVE 2
103	LG	IGNITION SIGNAL NO. 3
104	LG	IGNITION SIGNAL NO. 6
105	B	ECM GROUND
106	LG	IGNITION SIGNAL NO. 2
107	LG	IGNITION SIGNAL NO. 5
108	BR	VIAS CONTROL SOLENOID VALVE 1
109	–	–
110	B	ECM GROUND
111	–	–
112	–	–
113	LG	IGNITION SIGNAL NO. 1
114	LG	IGNITION SIGNAL NO. 4
115	–	–
116	GR	POWER SUPPLY FOR ECM (BACK-UP)
117	BR	INTAKE VALVE TIMING CONTROL SOLENOID VALVE (BANK 1)
118	LG	INTAKE VALVE TIMING INTERMEDIATE LOCK CONTROL SOLENOID VALVE (BANK 1)
119	Y	INTAKE VALVE TIMING CONTROL SOLENOID VALVE (BANK 2)
120	R	INTAKE VALVE TIMING INTERMEDIATE LOCK CONTROL SOLENOID VALVE (BANK 2)

Connector No.	F80
Connector Name	INTAKE VALVE TIMING CONTROL SOLENOID VALVE (BANK 2) (EXCEPT FOR MEXICO)
Connector Color	GRAY

Terminal No.	Color of Wire	Signal Name
1	L	–
2	Y	–

Connector No.	F81
Connector Name	INTAKE VALVE TIMING INTERMEDIATE LOCK CONTROL SOLENOID VALVE (BANK 1)
Connector Color	GRAY

Terminal No.	Color of Wire	Signal Name
1	L	–
2	LG	–

Connector No.	F82
Connector Name	INTAKE VALVE TIMING INTERMEDIATE LOCK CONTROL SOLENOID VALVE (BANK 2)
Connector Color	GRAY

Terminal No.	Color of Wire	Signal Name
1	L	–
2	R	–

Connector No.	F83
Connector Name	EXHAUST VALVE TIMING CONTROL POSITION SENSOR (PHASE) (BANK 1)
Connector Color	BLACK

Terminal No.	Color of Wire	Signal Name
1	LG	–
2	BR	–
3	GR	–

Connector No.	F84
Connector Name	EXHAUST VALVE TIMING CONTROL POSITION SENSOR (PHASE) (BANK 2)
Connector Color	BLACK

Terminal No.	Color of Wire	Signal Name
1	LG	–
2	BR	–
3	GR	–

Connector No.	F85
Connector Name	EXHAUST VALVE TIMING CONTROL SOLENOID VALVE (BANK 2)
Connector Color	GRAY

Terminal No.	Color of Wire	Signal Name
1	L	–
2	BR	–

ABBIA2676GB

Connector No.	F86
Connector Name	EXHAUST VALVE TIMING CONTROL SOLENOID VALVE (BANK 1)
Connector Color	GRAY

Terminal No.	Color of Wire	Signal Name
1	L	–
2	SB	–

Connector No.	F87
Connector Name	CAMSHAFT POSITION SENSOR (PHASE) (BANK 1) (EXCEPT FOR MEXICO)
Connector Color	BLACK

Terminal No.	Color of Wire	Signal Name
1	BR	–
2	LG	–
3	GR	–

Connector No.	F88
Connector Name	CAMSHAFT POSITION SENSOR (PHASE) (BANK 2) (EXCEPT FOR MEXICO)
Connector Color	BLACK

Terminal No.	Color of Wire	Signal Name
1	BR	–
2	LG	–
3	GR	–

Connector No.	F201
Connector Name	WIRE TO WIRE
Connector Color	BLUE

Terminal No.	Color of Wire	Signal Name
1	GR	–
2	SHIELD	–
3	W	–
4	SHIELD	–

Connector No.	F202
Connector Name	KNOCK SENSOR (BANK 1)
Connector Color	GRAY

Terminal No.	Color of Wire	Signal Name
1	GR	–
2	SHIELD	–

Connector No.	F204
Connector Name	KNOCK SENSOR (BANK 2)
Connector Color	GRAY

Terminal No.	Color of Wire	Signal Name
1	W	–
2	SHIELD	–

ABBIA2677GB

Connector No.	B11
Connector Name	JOINT CONNECTOR-B09
Connector Color	WHITE

Terminal No.	Color of Wire	Signal Name
1	P	–
2	P	–

Connector No.	B12
Connector Name	JOINT CONNECTOR-B10
Connector Color	WHITE

Terminal No.	Color of Wire	Signal Name
1	L	–
2	L	–

Connector No.	B16
Connector Name	JOINT CONNECTOR-B11
Connector Color	WHITE

Terminal No.	Color of Wire	Signal Name
1	P	–
2	P	–

Connector No.	B17
Connector Name	JOINT CONNECTOR-B12
Connector Color	WHITE

Terminal No.	Color of Wire	Signal Name
1	L	–
2	L	–

Connector No.	B31
Connector Name	EVAP CANISTER VENT CONTROL VALVE
Connector Color	BLACK

Terminal No.	Color of Wire	Signal Name
1	Y	–
2	LG	–

Connector No.	B32
Connector Name	WIRE TO WIRE
Connector Color	WHITE

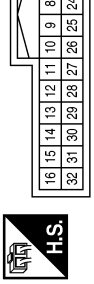

Terminal No.	Color of Wire	Signal Name
18	L	–
19	P	–

ABBIA2678GB

Connector No.	B36
Connector Name	EVAP CONTROL SYSTEM PRESSURE SENSOR
Connector Color	GRAY

Terminal No.	Color of Wire	Signal Name
1	G	–
2	W	–
3	R	–

Connector No.	B40
Connector Name	WIRE TO WIRE
Connector Color	WHITE

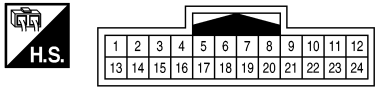

Terminal No.	Color of Wire	Signal Name
1	LG	–
2	Y	–
3	R	–
4	G	–
5	W	–
23	W	–

Connector No.	B43
Connector Name	WIRE TO WIRE
Connector Color	WHITE

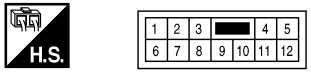

Terminal No.	Color of Wire	Signal Name
1	W	–
3	W	–

Connector No.	B52
Connector Name	CONDENSER-2
Connector Color	WHITE

Terminal No.	Color of Wire	Signal Name
1	W	–
2	B	–

Connector No.	B63
Connector Name	JOINT CONNECTOR-B01
Connector Color	WHITE

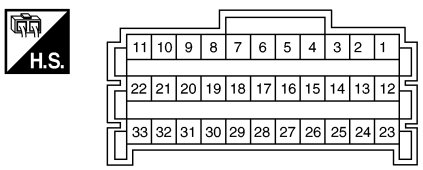

Terminal No.	Color of Wire	Signal Name
26	B	–
28	B	–

ABBIA2679GB

Connector No.	B72
Connector Name	FUEL LEVEL SENSOR UNIT AND FUEL PUMP
Connector Color	GRAY

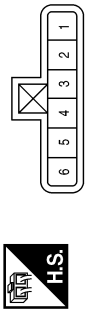

Terminal No.	Color of Wire	Signal Name
1	W	–
3	W	–
4	B	–
6	W	–

Terminal No.	Color of Wire	Signal Name
89A	L	–
90A	P	–

Connector No.	B69
Connector Name	WIRE TO WIRE
Connector Color	GRAY

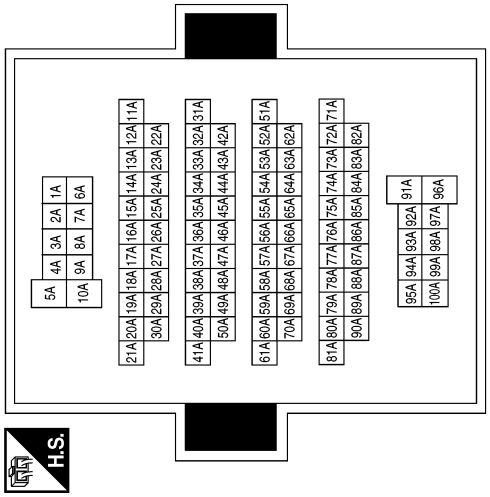

Connector No.	B103
Connector Name	JOINT CONNECTOR-B05
Connector Color	WHITE

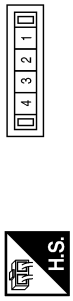

Terminal No.	Color of Wire	Signal Name
1	P	–
2	P	–

Connector No.	B102
Connector Name	JOINT CONNECTOR-B14
Connector Color	WHITE

Terminal No.	Color of Wire	Signal Name
1	L	–
2	L	–

Connector No.	B101
Connector Name	WIRE TO WIRE
Connector Color	WHITE

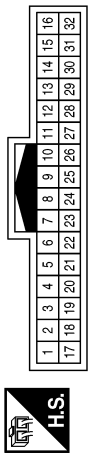

Terminal No.	Color of Wire	Signal Name
17	L	–
18	P	–

ABBIA2680GB

Connector No.	B124
Connector Name	WIRE TO WIRE
Connector Color	WHITE

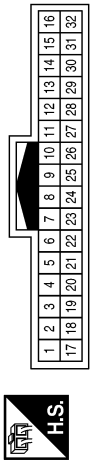

Terminal No.	Color of Wire	Signal Name
18	L	–
19	P	–

ABBIA2681GB

BASIC INSPECTION

DIAGNOSIS AND REPAIR WORKFLOW

Work Flow

INFOID:0000000011148505

OVERALL SEQUENCE

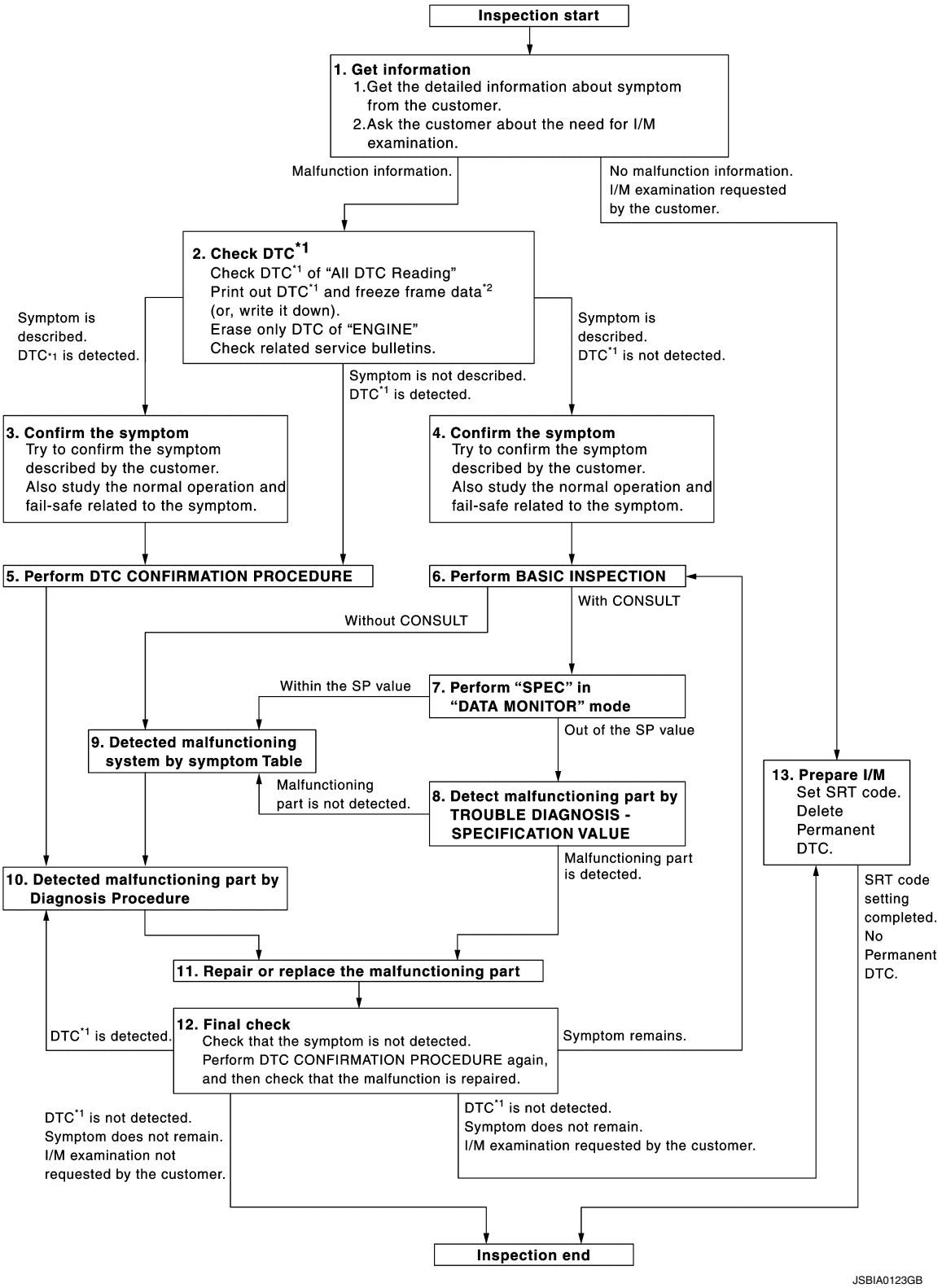

*1: Include 1st trip DTC.
*2: Include 1st trip freeze frame data.

DETAILED FLOW

1. GET INFORMATION FOR SYMPTOM

1. Get the detailed information from the customer about the symptom (the condition and the environment when the incident/malfunction occurred) using the “Diagnostic Work Sheet”. (Refer to EC-153, "Diagnostic Work Sheet".)
2. Ask if the customer requests I/M examination.

Malfunction information, obtained>>GO TO 2.
No Malfunction information, but a request for I/M examination>>GO TO 13.

2. CHECK DTC

1. Check DTC of “All DTC Reading”.
2. Perform the following procedure if DTC is displayed.
- Record DTC and freeze frame data. (Print them out with CONSULT or GST.)
- Erase only DTC of “ENGINE”.
  - With CONSULT: Refer to “How to Erase DTC and 1st Trip DTC” in EC-72, "CONSULT Function".
  - Without CONSULT: Refer to “How to Erase Self-diagnostic Results” in EC-69, "On Board Diagnosis Function".
- Turn ignition switch OFF.
- Study the relationship between the cause detected by DTC and the symptom described by the customer. (Symptom Table is useful. Refer to EC-516, "Symptom Table".)
3. Check related service bulletins for information.

Are any symptoms described and any DTCs detected?

Symptom is described, DTC is detected>>GO TO 3.
Symptom is described, DTC is not detected>>GO TO 4.
Symptom is not described, DTC is detected>>GO TO 5.

3. CONFIRM THE SYMPTOM

Try to confirm the symptom described by the customer (except MIL ON).
Also study the normal operation and fail-safe related to the symptom. Refer to EC-520, "Description" and EC-101, "Fail-safe".
Diagnosis Work Sheet is useful to verify the incident.
Verify relation between the symptom and the condition when the symptom is detected.

>> GO TO 5.

4. CONFIRM THE SYMPTOM

Try to confirm the symptom described by the customer.
Also study the normal operation and fail-safe related to the symptom. Refer to EC-520, "Description" and EC-101, "Fail-safe".
Diagnosis Work Sheet is useful to verify the incident.
Verify relation between the symptom and the condition when the symptom is detected.

>> GO TO 6.

5. PERFORM DTC CONFIRMATION PROCEDURE

Perform DTC CONFIRMATION PROCEDURE for the displayed DTC, and then make sure that DTC is detected again.
If two or more DTCs are detected, refer to EC-104, "DTC Inspection Priority Chart" and determine trouble diagnosis order.

NOTE:
- Freeze frame data is useful if the DTC is not detected.

- Perform Component Function Check if DTC CONFIRMATION PROCEDURE is not included on Service Manual. This simplified check procedure is an effective alternative though DTC cannot be detected during this check.
  If the result of Component Function Check is NG, it is the same as the detection of DTC by DTC CONFIRMATION PROCEDURE.

Is DTC detected?

YES >> GO TO 10.
NO >> Check according to GI-47, "Intermittent Incident".

6. PERFORM BASIC INSPECTION

Perform EC-164, "Work Procedure".

Do you have CONSULT?

YES >> GO TO 7.
NO >> GO TO 9.

7. PERFORM SPEC IN DATA MONITOR MODE

With CONSULT

Make sure that “MAS AIR FLOW SENSOR (Hz), “B/FUEL SCHDL”, “A/F ALPHA-B1” and “A/F ALPHA-B2” are within the SP value using CONSULT “SPEC” in “DATA MONITOR” mode of “ENGINE”. Refer to EC-182, "Component Function Check".

Is the measurement value within the SP value?

YES >> GO TO 9.
NO >> GO TO 8.

8. DETECT MALFUNCTIONING PART BY TROUBLE DIAGNOSIS - SPECIFICATION VALUE

Detect malfunctioning part according to EC-183, "Diagnosis Procedure".

Is a malfunctioning part detected?

YES >> GO TO 11.
NO >> GO TO 9.

9. DETECT MALFUNCTIONING SYSTEM BY SYMPTOM TABLE

Detect malfunctioning system according to EC-516, "Symptom Table" based on the confirmed symptom in step 4, and determine the trouble diagnosis order based on possible causes and symptoms.

>> GO TO 10.

10. DETECT MALFUNCTIONING PART BY DIAGNOSIS PROCEDURE

Inspect according to Diagnosis Procedure of the system.

NOTE:

The Diagnosis Procedure in EC section described based on open circuit inspection. A short circuit inspection is also required for the circuit check in the Diagnosis Procedure. For details, refer to GI-49, "Circuit Inspection".

Is a malfunctioning part detected?

YES >> GO TO 11.
NO >> Monitor input data from related sensors or check voltage of related ECM terminals using CONSULT. Refer to EC-85, "Reference Value".

11. REPAIR OR REPLACE THE MALFUNCTIONING PART

1. Repair or replace the malfunctioning part.
2. Reconnect parts or connectors disconnected during Diagnosis Procedure again after repair and replacement.
3. Check DTC. If DTC is displayed, erase it.
   With CONSULT: Refer to “How to Erase DTC and 1st Trip DTC” in EC-72, "CONSULT Function".
   Without CONSULT: Refer to “How to Erase Self-diagnostic Results” in EC-69, "On Board Diagnosis Function".

>> GO TO 12.

12. FINAL CHECK

When DTC was detected in step 2, perform DTC CONFIRMATION PROCEDURE or Component Function Check again, and then make sure that the malfunction have been completely repaired.
When symptom was described from the customer, refer to confirmed symptom in step 3 or 4, and make sure that the symptom is not detected.

Is DTC detected and does symptom remain?

YES-1 >> DTC is detected: GO TO 10.
YES-2 >> Symptom remains: GO TO 6.
NO-1 >> No request for I/M examination from the customer: Before returning the vehicle to the customer, always erase unnecessary DTC in ECM and TCM (With CONSULT: Refer to “How to Read DTC and 1st Trip DTC” in EC-72, "CONSULT Function", Without CONSULT: Refer to “How to Read Self-diagnostic Results” in EC-69, "On Board Diagnosis Function").
NO-2 >> I/M examination, requested from the customer: GO TO 13.

13. PREPARE FOR I/M EXAMINATION

1. Set SRT codes. Refer to EC-170, "Description".
2. Erase permanent DTCs. Refer to EC-176, "Description".

>> INSPECTION END.

Diagnostic Work Sheet

INFOID:0000000011148506

DESCRIPTION

There are many operating conditions that lead to the malfunction of engine components. A good grasp of such conditions can make troubleshooting faster and more accurate.
In general, each customer feels differently about symptoms. It is important to fully understand the symptoms or conditions for a customer complaint.
Utilize a diagnostic worksheet like the WORKSHEET SAMPLE below in order to organize all the information for troubleshooting.
Some conditions may cause the MIL to illuminate or blink, and DTC to be detected. Examples:

- Vehicle ran out of fuel, which caused the engine to misfire.
- Fuel filler cap was left off or incorrectly screwed on, allowing fuel to evaporate into the atmosphere.

KEY POINTS

WHAT ..... Vehicle & engine model
WHEN ..... Date, Frequencies
WHERE..... Road conditions
HOW ..... Operating conditions, Weather conditions, Symptoms

SEF907L

WORKSHEET SAMPLE

Customer name MR/MS		Model & Year	VIN
Engine #		Trans.	Mileage
Incident Date		Manuf. Date	In Service Date
Fuel and fuel filler cap		☐ Vehicle ran out of fuel causing misfire ☐ Fuel filler cap was left off or incorrectly screwed on.	
Symptoms	☐ Startability	☐ Impossible to start ☐ No combustion ☐ Partial combustion ☐ Partial combustion affected by throttle position ☐ Partial combustion NOT affected by throttle position ☐ Possible but hard to start ☐ Others [ ]	
	☐ Idling	☐ No fast idle ☐ Unstable ☐ High idle ☐ Low idle ☐ Others [ ]	
	☐ Driveability	☐ Stumble ☐ Surge ☐ Knock ☐ Lack of power ☐ Intake backfire ☐ Exhaust backfire ☐ Others [ ]	
	☐ Engine stall	☐ At the time of start ☐ While idling ☐ While accelerating ☐ While decelerating ☐ Just after stopping ☐ While loading	
Incident occurrence		☐ Just after delivery ☐ Recently ☐ In the morning ☐ At night ☐ In the daytime	
Frequency		☐ All the time ☐ Under certain conditions ☐ Sometimes	
Weather conditions		☐ Not affected	
	Weather	☐ Fine ☐ Raining ☐ Snowing ☐ Others [ ]	
	Temperature	☐ Hot ☐ Warm ☐ Cool ☐ Cold ☐ Humid °F	
Engine conditions		☐ Cold ☐ During warm-up ☐ After warm-up Engine speed 0 2,000 4,000 6,000 8,000 rpm	
Road conditions		☐ In town ☐ In suburbs ☐ Highway ☐ Off road (up/down)	
Driving conditions		☐ Not affected ☐ At starting ☐ While idling ☐ At racing ☐ While accelerating ☐ While cruising ☐ While decelerating ☐ While turning (RH/LH) Vehicle speed 0 10 20 30 40 50 60 MPH	
Malfunction indicator lamp		☐ Turned on ☐ Not turned on	

MTBL0017

SERVICE AFTER REPLACING OR REMOVING ENGINE PARTS

Description

INFOID:0000000011148507

SPECIAL REPAIR REQUIREMENT

×: Applicable

Part name	Service performed		Required service	Reference
	Replacement	Removal*1		
ECM	×		Additional service when replacing ECM	EC-156
		×	Accelerator pedal released position learning	EC-158
			Throttle valve closed position learning	EC-159
			Idle air volume learning	EC-160
			VIN registration	EC-163
Accelerator Pedal	×	×	Accelerator pedal released position learning	EC-158
Electric throttle	×	×	Throttle valve closed position learning	EC-159
	×		Idle air volume learning	EC-160
Engine assembly	×		Throttle valve closed position learning*2	EC-159
			Idle air volume learning*2	EC-160
		×	Accelerator pedal released position learning	EC-158
			Throttle valve closed position learning*2	EC-159

*1: Harness connector disconnection included.
*2: Replacement of engine with a electric throttle.

ADDITIONAL SERVICE WHEN REPLACING ECM

Description

INFOID:0000000011148508

When replacing ECM, the following procedure must be performed. (For details, refer to EC-156, "Work Procedure".)

PROGRAMMING OPERATION

NOTE:
After replacing with a blank ECM, programming is required to write ECM information. Be sure to follow the procedure to perform the programming.

BEFORE REPLACEMENT

When replacing ECM, perform “SAVING DATA FOR REPLC CPU” in “WORK SUPPORT” of “ENGINE” by using CONSULT to save current ECM data before replacement.

AFTER REPLACEMENT

After replacing ECM, the following items must be performed:
- Write data after replace CPU
- Accelerator pedal released position learning
- Throttle valve closed position learning
- Idle air volume learning

Work Procedure

INFOID:0000000011148509

1. SAVE ECM DATA

With CONSULT
1. Turn ignition switch OFF.
2. Reconnect all harness connectors disconnected.
3. Turn ignition switch ON.
4. Select “SAVING DATA FOR REPLC CPU” in “WORK SUPPORT” mode of “ENGINE” using CONSULT.
5. Follow the instruction of CONSULT display.

NOTE:
- Necessary data in ECM is copied and saved to CONSULT.
- Go to Step 2 regardless of with or without success in saving data.

>> GO TO 2.

2. CHECK ECM PART NUMBER

Check ECM part number to see whether it is blank ECM or not.
NOTE:
- Part number of blank ECM is 23703 - ×××××.
- Check part number when ordering ECM or the one included in the label on the container box.

Is the ECM a blank ECM?

YES >> GO TO 3.
NO >> GO TO 5.

3. SAVE ECM PART NUMBER

Read out the part number from the old ECM and save the number, following the programming instructions. Refer to CONSULT Operation Manual.
NOTE:
- The ECM part number is saved in CONSULT.
- Even when ECM part number is not saved in CONSULT, go to 4.

>> GO TO 4.

4. PERFORM ECM PROGRAMMING

After replacing ECM, perform the ECM programming. Refer to CONSULT Operation Manual.
NOTE:
- Refer to EC-526, "Removal and Installation" for replacement of ECM.

- During programming, maintain the following conditions:
- Ignition switch: ON
- Electric load: OFF
- Brake pedal: Not depressed
- Battery voltage: 12 – 13.5 V (Be sure to check the value of battery voltage by selecting “BATTERY VOLT” in “Data monitor” of CONSULT.)

>> GO TO 6.

5. REPLACE ECM

Replace ECM. Refer to EC-526, "Removal and Installation".

>> GO TO 6.

6. PERFORM INITIALIZATION OF IVIS (NATS) SYSTEM AND REGISTRATION OF ALL IVIS (NATS) IGNITION KEY IDS

Refer to SEC-76, "ECM : Work Procedure".

>> GO TO 7.

7. CHECK ECM DATA STATUS

Check if the data is successfully copied from the ECM at Step 1 (before replacement) and saved in CONSULT.

Is the data saved successfully?

YES >> GO TO 8.
NO >> GO TO 9.

8. WRITE ECM DATA

With CONSULT

1. Select “WRITING DATA FOR REPLC CPU” in “WORK SUPPORT” mode of “ENGINE” using CONSULT.
2. Follow the instruction of CONSULT display.

NOTE:
The data saved by “SAVING DATA FOR REPLC CPU” is written to ECM.

>> GO TO 10.

9. PERFORM VIN REGISTRATION

Refer to EC-163, "Work Procedure".

>> GO TO 10.

10. PERFORM ACCELERATOR PEDAL RELEASED POSITION LEARNING

Refer to EC-158, "Work Procedure".

>> GO TO 11.

11. PERFORM THROTTLE VALVE CLOSED POSITION LEARNING

Refer to EC-159, "Work Procedure".

>> GO TO 12.

12. PERFORM IDLE AIR VOLUME LEARNING

Refer to EC-160, "Work Procedure".

>> END

ACCELERATOR PEDAL RELEASED POSITION LEARNING

Description

INFOID:0000000011148510

Accelerator Pedal Released Position Learning is a function of ECM to learn the fully released position of the accelerator pedal by monitoring the accelerator pedal position sensor output signal. It must be performed each time the harness connector of the accelerator pedal position sensor or ECM is disconnected.

Work Procedure

INFOID:0000000011148511

1.START

1. Check that accelerator pedal is fully released.
2. Turn ignition switch ON and wait at least 2 seconds.
3. Turn ignition switch OFF and wait at least 10 seconds.
4. Turn ignition switch ON and wait at least 2 seconds.
5. Turn ignition switch OFF and wait at least 10 seconds.

>> END

THROTTLE VALVE CLOSED POSITION LEARNING

Description

INFOID:0000000011148512

Throttle Valve Closed Position Learning is a function of ECM to learn the fully closed position of the throttle valve by monitoring the throttle position sensor output signal. It must be performed each time the harness connector of electric throttle control actuator or ECM is disconnected or electric throttle control actuator is cleaned.

Work Procedure

INFOID:0000000011148513

1.START

WITH CONSULT

1. Turn ignition switch ON.
2. Select “CLSD THL POS LEARN” in “WORK SUPPORT” mode.
3. Follow the instructions on the CONSULT display.
4. Turn ignition switch OFF and wait at least 10 seconds.
   Check that throttle valve moves during the above 10 seconds by confirming the operating sound.

WITHOUT CONSULT

1. Start the engine.
   NOTE:
   Coolant temperature is less than 25°C (77°F) before engine starts.
2. Warm up the engine.
   NOTE:
   Warm up the engine until “COOLANT TEMP/S” on “DATA MONITOR” of CONSULT reaches more than 65°C (149°F).
3. Turn ignition switch OFF and wait at least 10 seconds.
   NOTE:
   Check that throttle valve moves during the above 10 seconds by confirming the operating sound.

>> END

IDLE AIR VOLUME LEARNING

Description

INFOID:0000000011148514

Idle Air Volume Learning is a function of ECM to learn the idle air volume that keeps engine idle speed within the specific range. It must be performed under the following conditions:
- Each time the electric throttle control actuator or ECM is replaced.
- Idle speed or ignition timing is out of the specification.

Work Procedure

INFOID:0000000011148515

1.PRECONDITIONING

Check that all of the following conditions are satisfied.
Learning will be cancelled if any of the following conditions are missed for even a moment.
- Battery voltage: More than 12.9 V (At idle)
- Engine coolant temperature: 70 - 100°C (158 - 212°F)
- Selector lever position: P or N
- Electric load switch: OFF
  (Air conditioner, head lamp, rear window defogger)
  On vehicles equipped with daytime light systems, if the parking brake is applied before the engine is started the head lamp will not illuminate.
- Steering wheel: Neutral (Straight-ahead position)
- Vehicle speed: Stopped
- Transmission: Warmed-up
- With CONSULT: Drive vehicle until “ATF TEMP SEN” in “DATA MONITOR” mode of “CVT” system indicates less than 0.9 V.
- Without CONSULT: Drive vehicle for 10 minutes.

Will CONSULT be used?

YES >> GO TO 2.
NO >> GO TO 3.

2.PERFORM IDLE AIR VOLUME LEARNING

With CONSULT
1. Perform Accelerator Pedal Released Position Learning. Refer to EC-158, "Work Procedure".
2. Perform Throttle Valve Closed Position Learning. Refer to EC-159, "Work Procedure".
3. Start engine and warm it up to normal operating temperature.
4. Select “IDLE AIR VOL LEARN” in “WORK SUPPORT” mode.
5. Touch “START” and wait 20 seconds.

Is “CMPLT” displayed on CONSULT screen?

YES >> GO TO 4.
NO >> GO TO 5.

3.PERFORM IDLE AIR VOLUME LEARNING

Without CONSULT
NOTE:
- **It is better to count the time accurately with a clock.**
- **It is impossible to switch the diagnostic mode when an accelerator pedal position sensor circuit has a malfunction.**

1. Perform Accelerator Pedal Released Position Learning. Refer to EC-158, "Work Procedure".
2. Perform Throttle Valve Closed Position Learning. Refer to EC-159, "Work Procedure".
3. Start engine and warm it up to normal operating temperature.
4. Turn ignition switch OFF and wait at least 10 seconds.
5. Confirm that accelerator pedal is fully released, turn ignition switch ON and wait 3 seconds.
6. Repeat the following procedure quickly 5 times within 5 seconds.
   - Fully depress the accelerator pedal.
   - Fully release the accelerator pedal.
7. Wait 7 seconds, fully depress the accelerator pedal for approx. 20 seconds until the MIL stops blinking and turns ON.
8. Fully release the accelerator pedal within 3 seconds after the MIL turns ON.

9. Start engine and let it idle.
10. Wait 20 seconds.

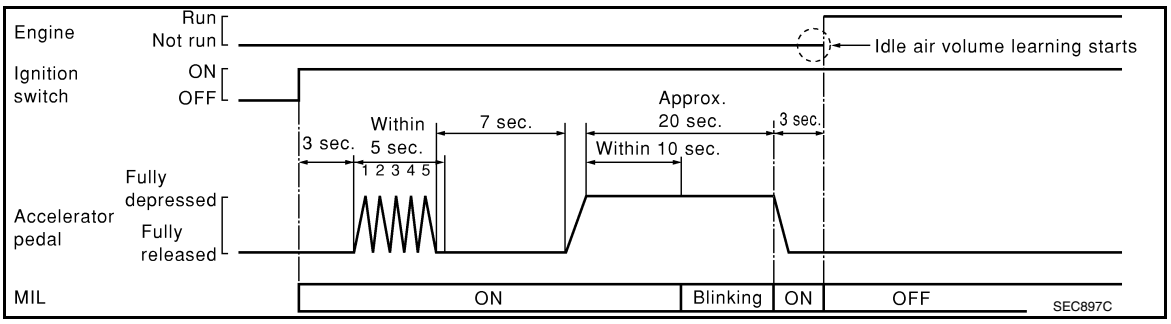

>> GO TO 4.

4. CHECK IDLE SPEED AND IGNITION TIMING

Rev up the engine 2 or 3 times and check that idle speed and ignition timing are within the specifications.
For procedure, refer to EC-521, "Work Procedure" and EC-522, "Work Procedure".
For specifications, refer to EC-527, "Idle Speed" and EC-527, "Ignition Timing".

Is the inspection result normal?

YES >> INSPECTION END
NO >> GO TO 5.

5. DETECT MALFUNCTIONING PART-I

Check the following
- Check that throttle valve is fully closed.
- Check PCV valve operation.
- Check that downstream of throttle valve is free from air leakage.

Is the inspection result normal?

YES >> GO TO 6.
NO >> Repair or replace malfunctioning part.

6. DETECT MALFUNCTIONING PART-II

Engine component parts and their installation condition are questionable. Check and eliminate the cause of the incident.
It is useful to perform “TROUBLE DIAGNOSIS - SPECIFICATION VALUE”. Refer to EC-182, "Description".
If any of the following conditions occur after the engine has started, eliminate the cause of the incident and perform Idle Air Volume Learning again:
- Engine stalls.
- Incorrect idle.

>> INSPECTION END

MIXTURE RATIO SELF-LEARNING VALUE CLEAR

Description

INFOID:0000000011148516

This describes show to erase the mixture ratio self-learning value. For the actual procedure, follow the instructions in “Diagnosis Procedure”.

Work Procedure

INFOID:0000000011148517

1.START

With CONSULT

1. Start engine and warm it up to normal operating temperature.
2. Select “SELF-LEARNING CONT” in “WORK SUPPORT” mode with CONSULT.
3. Clear mixture ratio self-learning value by touching “CLEAR”.

With GST

1. Start engine and warm it up to normal operating temperature.
2. Turn ignition switch OFF.
3. Disconnect mass air flow sensor harness connector.
4. Restart engine and let it idle for at least 5 seconds.
5. Stop engine and reconnect mass air flow sensor harness connector.
6. Select Service $03 with GST. Check that DTC P0102 is detected.
7. Select Service $04 with GST to erase the DTC P0102.

>> END

VIN REGISTRATION

Description

INFOID:0000000011148518

VIN Registration is an operation to register VIN in ECM. It must be performed each time ECM is replaced.
NOTE:
Accurate VIN which is registered in ECM may be required for Inspection & Maintenance (I/M).

Work Procedure

INFOID:0000000011148519

1. CHECK VIN

Check the VIN of the vehicle and note it. Refer to GI-25, "Identification Plate".

>> GO TO 2.

2. PERFORM VIN REGISTRATION

With CONSULT
1. Turn ignition switch ON with engine stopped.
2. Select “VIN REGISTRATION” in “WORK SUPPORT” mode.
3. Follow the instructions on the CONSULT display.

>> END

BASIC INSPECTION

Work Procedure

INFOID:0000000011148520

1. INSPECTION START

1. Check service records for any recent repairs that may indicate a related malfunction, or a current need for scheduled maintenance.
2. Open engine hood and check the following:
- Harness connectors for improper connections
- Wiring harness for improper connections, pinches and cut
- Vacuum hoses for splits, kinks and improper connections
- Hoses and ducts for leakage
- Air cleaner clogging
- Gasket
3. Check that electrical or mechanical loads are not applied.
- Head lamp switch is OFF.
- Air conditioner switch is OFF.
- Rear window defogger switch is OFF.
- Steering wheel is in the straight-ahead position, etc.

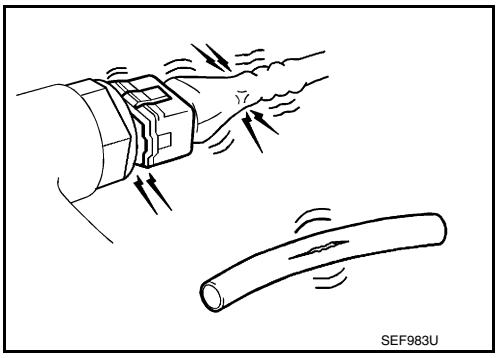

4. Start engine and warm it up until engine coolant temperature indicator points to the middle of gauge.
   Check that engine stays below 1,000 rpm.

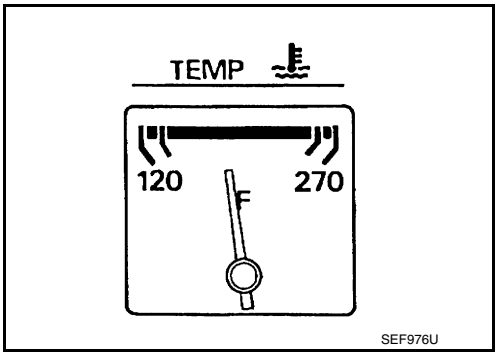

5. Run engine at approximately 2,000 rpm for approximately 2 minutes under no load.
6. Check that no DTC is displayed with CONSULT or GST.

Are any DTCs detected?

YES >> GO TO 2.
NO >> GO TO 3.

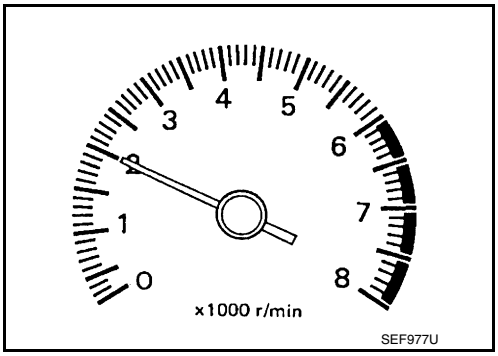

2. REPAIR OR REPLACE

Repair or replace components as necessary according to corresponding Diagnostic Procedure.

>> GO TO 3

3. CHECK TARGET IDLE SPEED

1. Run engine at approximately 2,000 rpm for approximately 2 minutes under no load.

2. Rev engine (2,000 to 3,000 rpm) 2 or 3 times under no load, then run engine at idle speed for approximately 1 minute.
3. Check idle speed.
   For procedure, refer to EC-521, "Work Procedure".
   For specification, refer to EC-527, "Idle Speed".

Is the inspection result normal?

YES >> GO TO 10.
NO >> GO TO 4.

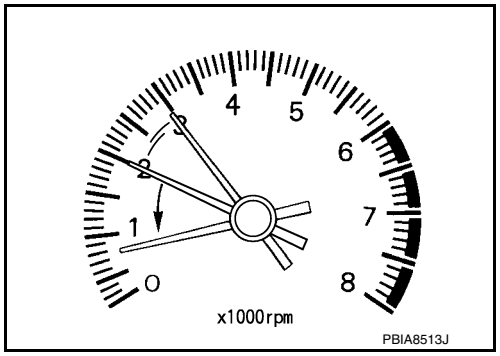

4. PERFORM ACCELERATOR PEDAL RELEASED POSITION LEARNING

1. Stop engine.
2. Perform EC-158, "Work Procedure".

>> GO TO 5.

5. PERFORM THROTTLE VALVE CLOSED POSITION LEARNING

Perform EC-159, "Work Procedure".

>> GO TO 6.

6. PERFORM IDLE AIR VOLUME LEARNING

Perform EC-160, "Work Procedure".

Is Idle Air Volume Learning carried out successfully?

YES >> GO TO 7.
NO >> Follow the instruction of Idle Air Volume Learning. Then GO TO 4.

7. CHECK IDLE SPEED AGAIN

1. Start engine and warm it up to normal operating temperature.
2. Check idle speed.
   For procedure, refer to EC-521, "Work Procedure".
   For specification, refer to EC-527, "Idle Speed".

Is the inspection result normal?

YES >> GO TO 10.
NO >> GO TO 8.

8. DETECT MALFUNCTIONING PART

Check the Following.
- Check camshaft position sensor (PHASE) and circuit. Refer to EC-318, "Diagnosis Procedure".
- Check crankshaft position sensor (POS) and circuit. Refer to EC-315, "Diagnosis Procedure".

Is the inspection result normal?

YES >> GO TO 9.
NO >> Repair or replace malfunctioning part. Then GO TO 4.

9. CHECK ECM FUNCTION

1. Substitute with a non-malfunctioning ECM to check ECM function. (ECM may be the cause of the incident, although this is rare.)
2. Perform initialization of NVIS (NATS) system and registration of all NVIS (NATS) ignition key IDs. Refer to SEC-76, "ECM : Work Procedure".

>> GO TO 4.

10. CHECK IGNITION TIMING

1. Run engine at idle.
2. Check ignition timing with a timing light.
   For procedure, refer to EC-522, "Work Procedure".

For specification, refer to EC-527, "Ignition Timing".

Is the inspection result normal?

YES >> GO TO 19.
NO >> GO TO 11.

11. PERFORM ACCELERATOR PEDAL RELEASED POSITION LEARNING

1. Stop engine.
2. Perform EC-158, "Work Procedure".

>> GO TO 12.

12. PERFORM THROTTLE VALVE CLOSED POSITION LEARNING

Perform EC-159, "Work Procedure".

>> GO TO 13.

13. PERFORM IDLE AIR VOLUME LEARNING

Perform EC-160, "Work Procedure".

Is Idle Air Volume Learning carried out successfully?

YES >> GO TO 14.
NO >> Follow the instruction of Idle Air Volume Learning. Then GO TO 4.

14. CHECK IDLE SPEED AGAIN

1. Start engine and warm it up to normal operating temperature.
2. Check idle speed.
   For procedure, refer to EC-521, "Work Procedure".
   For specification, refer to EC-527, "Idle Speed".

Is the inspection result normal?

YES >> GO TO 15.
NO >> GO TO 17.

15. CHECK IGNITION TIMING AGAIN

1. Run engine at idle.
2. Check ignition timing with a timing light.
   For procedure, refer to EC-522, "Work Procedure".
   For specification, refer to EC-527, "Ignition Timing".

Is the inspection result normal?

YES >> GO TO 19.
NO >> GO TO 16.

16. CHECK TIMING CHAIN INSTALLATION

Check timing chain installation. Refer to EM-63, "Exploded View".

Is the inspection result normal?

YES >> GO TO 17.
NO >> Repair the timing chain installation. Then GO TO 4.

17. DETECT MALFUNCTIONING PART

Check the following.
- Check camshaft position sensor (PHASE) and circuit. Refer to EC-318, "Diagnosis Procedure".
- Check crankshaft position sensor (POS) and circuit. Refer to EC-315, "Diagnosis Procedure".

Is the inspection result normal?

YES >> GO TO 18.
NO >> Repair or replace malfunctioning part. Then GO TO 4.

18. CHECK ECM FUNCTION

1. Substitute with a non-malfunctioning ECM to check ECM function. (ECM may be the cause of the incident, although this is rare.)

2. Perform initialization of NVIS (NATS) system and registration of all NVIS (NATS) ignition key IDs. Refer to EC-156, "Work Procedure".

>> GO TO 4.

19. INSPECTION END

If ECM is replaced during this BASIC INSPECTION procedure, perform EC-156, "Work Procedure".

>> INSPECTION END

FUEL PRESSURE

Work Procedure

INFOID:0000000011148521

FUEL PRESSURE RELEASE

With CONSULT

1. Turn ignition switch ON.
2. Perform “FUEL PRESSURE RELEASE” in “WORK SUPPORT” mode with CONSULT.
3. Start engine.
4. After engine stalls, crank it 2 or 3 times to release all fuel pressure.
5. Turn ignition switch OFF.

Without CONSULT

1. Remove fuel pump fuse located in IPDM E/R.
2. Start engine.
3. After engine stalls, crank it 2 or 3 times to release all fuel pressure.
4. Turn ignition switch OFF.
5. Reinstall fuel pump fuse after servicing fuel system.

FUEL PRESSURE CHECK

CAUTION:

Before disconnecting fuel line, release fuel pressure from fuel line to eliminate danger.

NOTE:

- **Prepare pans or saucers under the disconnected fuel line because the fuel may spill out. The fuel pressure cannot be completely released because this models do not have fuel return system.**
- **Be careful not to scratch or get the fuel hose connection area dirty when servicing, so that the quick connector o-ring maintains seal ability.**
- **Use Fuel Pressure Gauge Kit [SST: — (J-44321)] and Fuel Pressure Adapter [SST: — (J-44321-6)] to check fuel pressure.**

1. Release fuel pressure to zero.
2. Remove fuel hose using Quick Connector Release [SST: — (J-45488)].
   - Do not twist or kink fuel hose because it is plastic hose.
   - Do not remove fuel hose from quick connector.
   - Keep fuel hose connections clean.
3. Install Fuel Pressure Adapter [SST: — (J-44321-6)] (B) and Fuel Pressure Gauge kit [SST: — (J44321)] (A) as shown in figure.
   - Do not distort or bend fuel rail tube when installing fuel pressure gauge adapter.
   - When reconnecting fuel hose, check the original fuel hose for damage and abnormality.

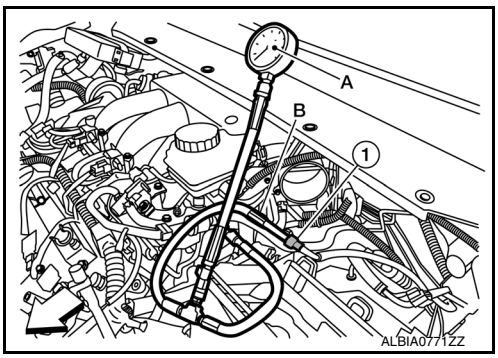

1 : Quick connector

4. Turn ignition switch ON (reactivate fuel pump) and check for fuel leakage.
5. Start engine and check for fuel leakage.
6. Read the indication of fuel pressure gauge kit [SST: — (J-44321)].
   - During fuel pressure check, check for fuel leakage from fuel connection every 3 minutes.

At idling : Approximately 350 kPa (3.57 kg/cm^2, 51 psi)

7. If result is unsatisfactory, go to next step.
8. Check the following.
   - Fuel hoses and fuel tubes for clogging
   - Fuel filter for clogging
   - Fuel pump

- Fuel pressure regulator for clogging

9. If OK, replace fuel pressure regulator.
   If NG, repair or replace malfunctioning part.
10. Before disconnecting Fuel Pressure Gauge kit [SST: — (J-44321)] and Fuel Pressure Adapter [SST: — (J-44321-6)], release fuel pressure to zero.

HOW TO SET SRT CODE

Description

INFOID:0000000011148522

OUTLINE

In order to set all SRTs, the self-diagnoses as in the “SRT ITEM” table must have been performed at least once. Each diagnosis may require actual driving for a long period of time under various conditions.

SRT ITEM

The table below shows required self-diagnostic items to set the SRT to “CMPLT”.

SRT item*1 (CONSULT indication)	Performance Priority*2	Required self-diagnostic items to set the SRT to “CMPLT”	Corresponding DTC No.
CATALYST	2	Three way catalyst function	P0420, P0430
EVAP SYSTEM	2	EVAP control system purge flow monitoring	P0441
		EVAP control system	P0456
HO2S	2	Air fuel ratio (A/F) sensor 1	P014C, P014D, P014E, P014F, P015A, P015B,P015C, P015D
		Heated oxygen sensor 2	P0137, P0157
		Heated oxygen sensor 2	P0138, P0158
		Heated oxygen sensor 2	P0139, P0159
EGR/VVT SYSTEM	3	Intake valve timing control function	P0011, P0021, P052A, P052B, P052C, P052D

*1: Though displayed on the CONSULT screen, “HO2S HTR” is not SRT item.
*2: If completion of several SRTs is required, perform driving patterns (DTC confirmation procedure), one by one based on the priority for models with CONSULT.

SRT SERVICE PROCEDURE

If a vehicle has failed the state emissions inspection due to one or more SRT items indicating “INCMP”, review the flowchart diagnostic sequence, referring to the following flowchart.

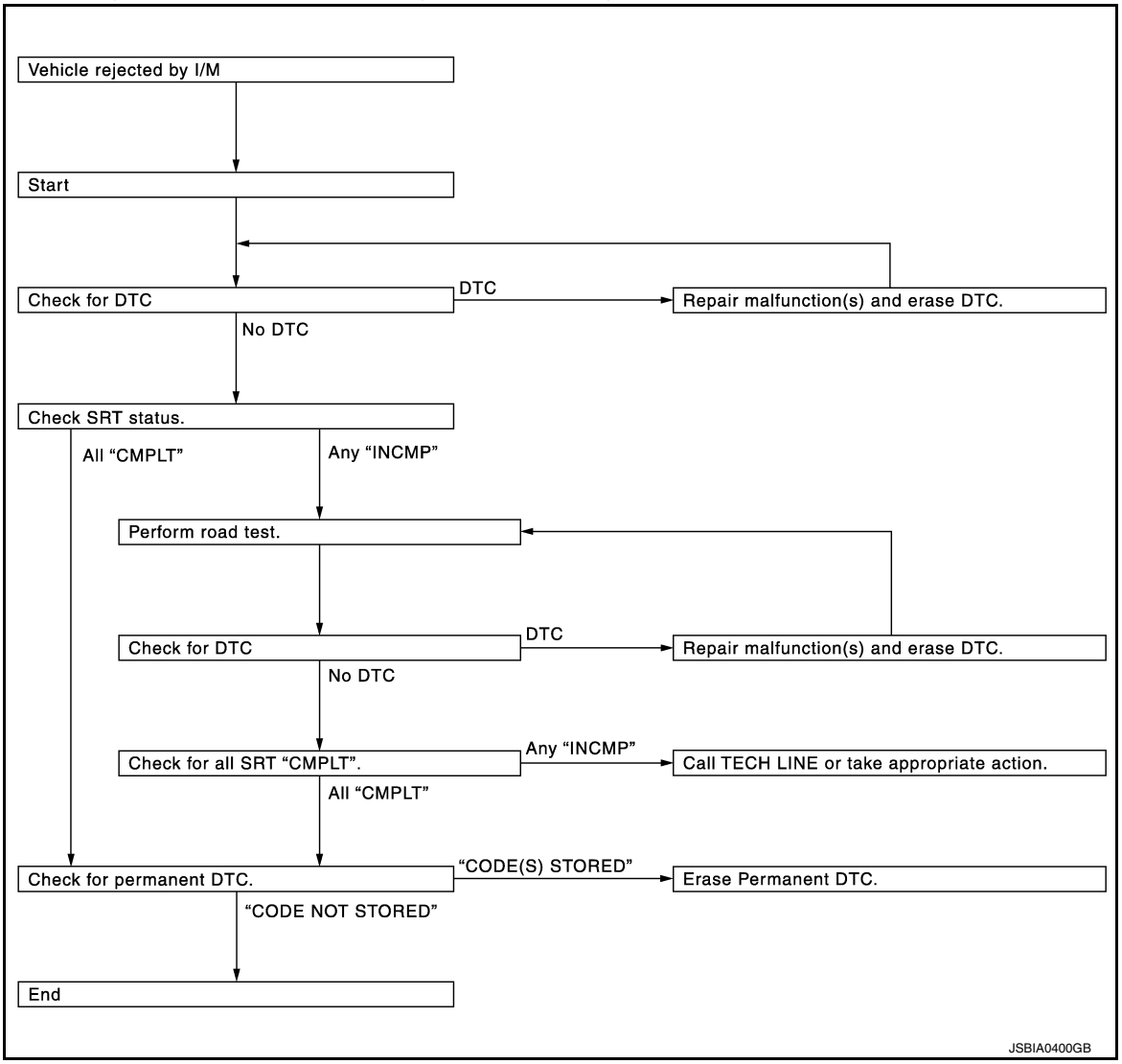

SRT Set Driving Pattern

INFOID:0000000011148523

CAUTION:

Always drive the vehicle in safe manner according to traffic conditions and obey all traffic laws.

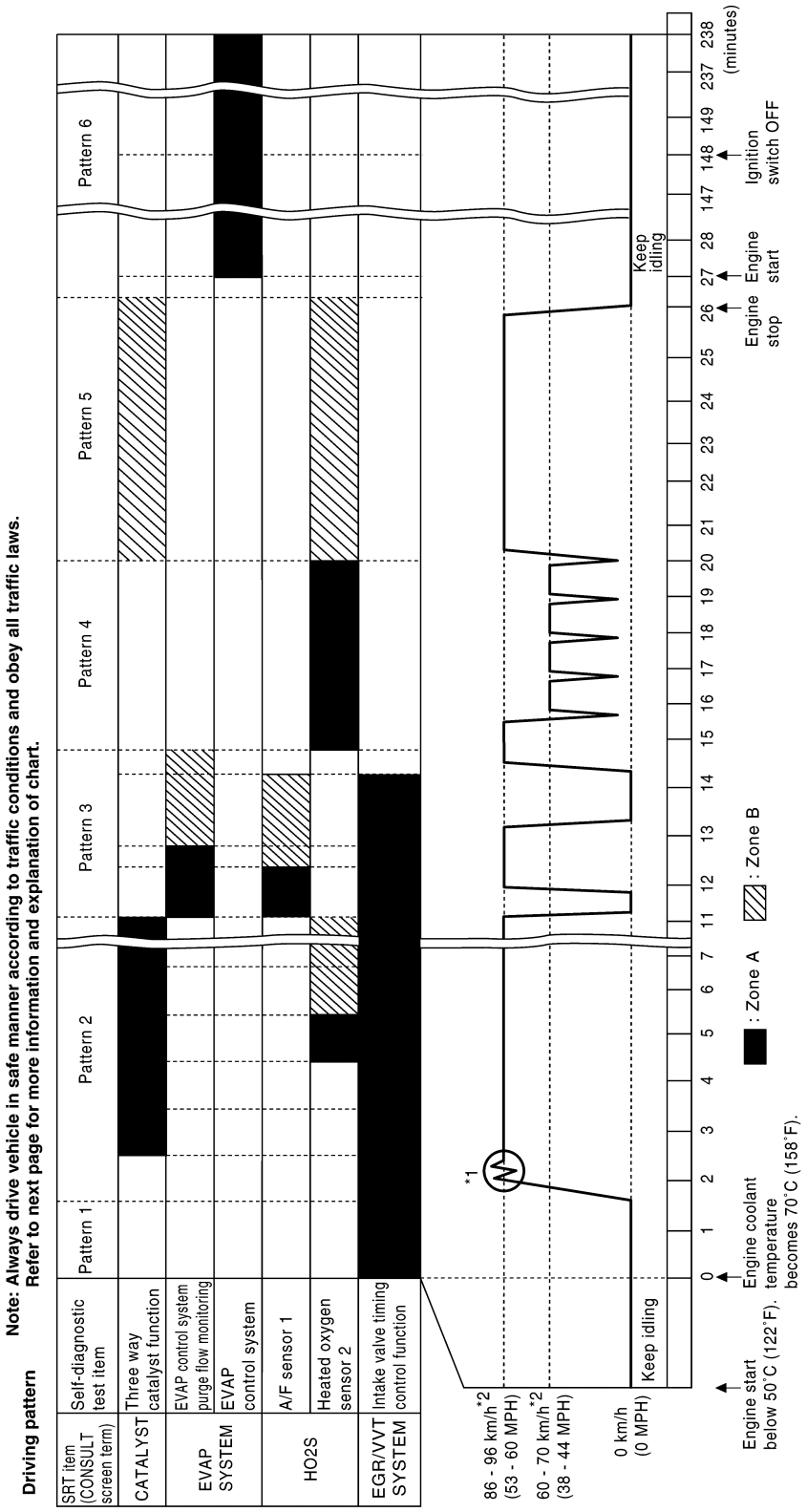

*1: Depress the accelerator pedal until vehicle speed is 90 km/h (56 MPH), then release the accelerator pedal and keep it released for more than 10 seconds. Depress the accelerator pedal until vehicle speed is 90 km/h (56 MPH) again.

*2: Checking the vehicle speed with GST is advised.

- The time required for each diagnosis varies with road surface conditions, weather, altitude, individual driving habits, etc.
- “Zone A” is the fastest time where required for the diagnosis under normal conditions*. If the diagnosis is not completed within “Zone A”, the diagnosis can still be performed within “Zone B”.

*: Normal conditions
- Sea level
- Flat road
- Ambient air temperature: 20 – 30°C (68 – 86°F)

NOTE:
Diagnosis is performed as quickly as possible under normal conditions. However, under other conditions, diagnosis may also be performed. [For example: ambient air temperature other than 20 – 30°C (68 – 86°F)]

Work Procedure

INFOID:0000000011148524

1. CHECK DTC

Check DTC.

Is any DTC detected?

YES >> Repair malfunction(s) and erase DTC. Refer to EC-105, "DTC Index".
NO >> GO TO 2.

2. CHECK SRT STATUS

With CONSULT
Select “SRT STATUS” in “DTC & SRT CONFIRMATION” mode with CONSULT.

Without CONSULT
Perform “SRT status” mode with EC-69, "On Board Diagnosis Function".

With GST
Select Service $01 with GST.

Is SRT code(s) set?

YES >> GO TO 12.
NO-1 >> With CONSULT: GO TO 3.
NO-2 >> Without CONSULT: GO TO 4.

3. DTC CONFIRMATION PROCEDURE

1. Select “SRT WORK SUPPORT” in “DTC & SRT CONFIRMATION” mode with CONSULT.
2. For SRT(s) that is not set, perform the corresponding “DTC CONFIRMATION PROCEDURE” according to the “Performance Priority” in the “SRT ITEM” table. Refer to EC-170, "Description".
3. Check DTC.

Is any DTC detected?

YES >> Repair malfunction(s) and erase DTC. Refer to EC-105, "DTC Index".
NO >> GO TO 11.

4. PERFORM ROAD TEST

- Check the “Performance Priority” in the “SRT ITEM” table. Refer to EC-170, "Description".
- Perform the most efficient SRT set driving pattern to set the SRT properly. Refer to EC-171, "SRT Set Driving Pattern".
  In order to set all SRTs, the SRT set driving pattern must be performed at least once.

>> GO TO 5.

5. PATTERN 1

1. Check the vehicle condition;
- Engine coolant temperature is –10 to 35°C (14 to 95°F).
- Fuel tank temperature is more than 0°C (32°F).
2. Start the engine.
3. Keep engine idling until the engine coolant temperature is greater than 70°C (158°F)

NOTE:
ECM terminal voltage is follows;
- Engine coolant temperature
  - –10 to 35°C (14 to 95°F): 3.0 – 4.3 V
  - 70°(158°F): Less than 4.1 V
- Fuel tank temperature: Less than 1.4 V

Refer to EC-85, "Reference Value".

>> GO TO 6.

6. PATTERN 2

1. Drive the vehicle. And depress the accelerator pedal until vehicle speed is 90 km/h (56 MPH), then release the accelerator pedal and keep it released for more than 10 seconds.
2. Depress the accelerator pedal until vehicle speed is 90 km/h (56 MPH) again

NOTE:
- Checking the vehicle speed with GST is advised.
- When steady-state driving is performed again even after it is interrupted, each diagnosis can be conducted. In this case, the time required for diagnosis may be extended.

>> GO TO 7.

7. PATTERN 3

- Operate vehicle following the driving pattern shown in the figure.
- Release the accelerator pedal during deceleration of vehicle speed from 90 km/h (56 MPH) to 0 km/h (0 MPH).

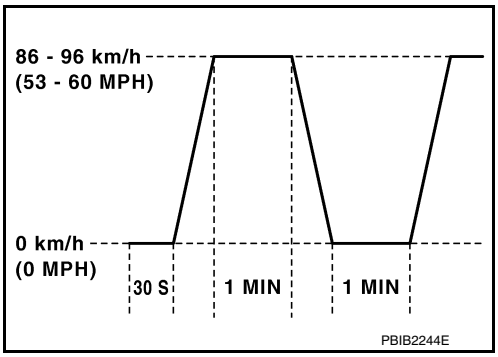

>> GO TO 8.

8. PATTERN 4

- Operate vehicle, following the driving pattern shown in the figure.
- Drive the vehicle in a proper gear at 60 km/h (38 MPH) and maintain the speed.
- Release the accelerator pedal fully at least 5 seconds.
- Repeat the above two steps at least 5 times.

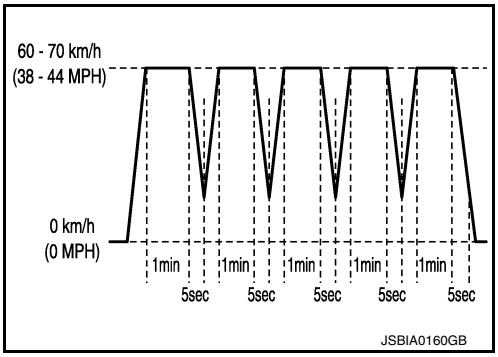

>> GO TO 9.

9. PATTERN 5

- The accelerator pedal must be held very steady during steady-state driving.
- If the accelerator pedal is moved, the test must be conducted again.

>> GO TO 10.

10. PATTERN 6

- Cool down the engine so that the engine coolant temperature lowers between 15 – 35°C (59 – 95°F).
  CAUTION:
  Never turn the ignition switch ON while cooling down the engine.
- Engine coolant temperature at engine start is between 15 – 35°C (59 – 95°F) and has lowered 45°C (113°F) or more since the latest engine stop.

>> GO TO 11.

11. CHECK SRT STATUS

With CONSULT

Select “SRT STATUS” in “DTC & SRT CONFIRMATION” mode with CONSULT.

Without CONSULT

Perform “SRT status” mode with EC-69, "On Board Diagnosis Function".

With GST

Select Service $01 with GST.

Is SRT(s) set?

YES >> GO TO 12.

NO >> Call TECH LINE or take appropriate action.

12. CHECK PERMANENT DTC

NOTE:

Permanent DTC cannot be checked with a tool other than CONSULT or GST.

With CONSULT

Select “SRT STATUS” in “DTC & SRT CONFIRMATION” mode with CONSULT.

With GST

Select Service $0A with GST.

Is permanent DTC(s) detected?

YES >> Proceed to EC-176, "Description".

NO >> END

HOW TO ERASE PERMANENT DTC

Description

INFOID:0000000011148525

OUTLINE

When a DTC is stored in ECM
When a DTC is stored in ECM and MIL is ON, a permanent DTC is erased with MIL shutoff if the same malfunction is not detected after performing the driving pattern for MIL shutoff three times in a raw.

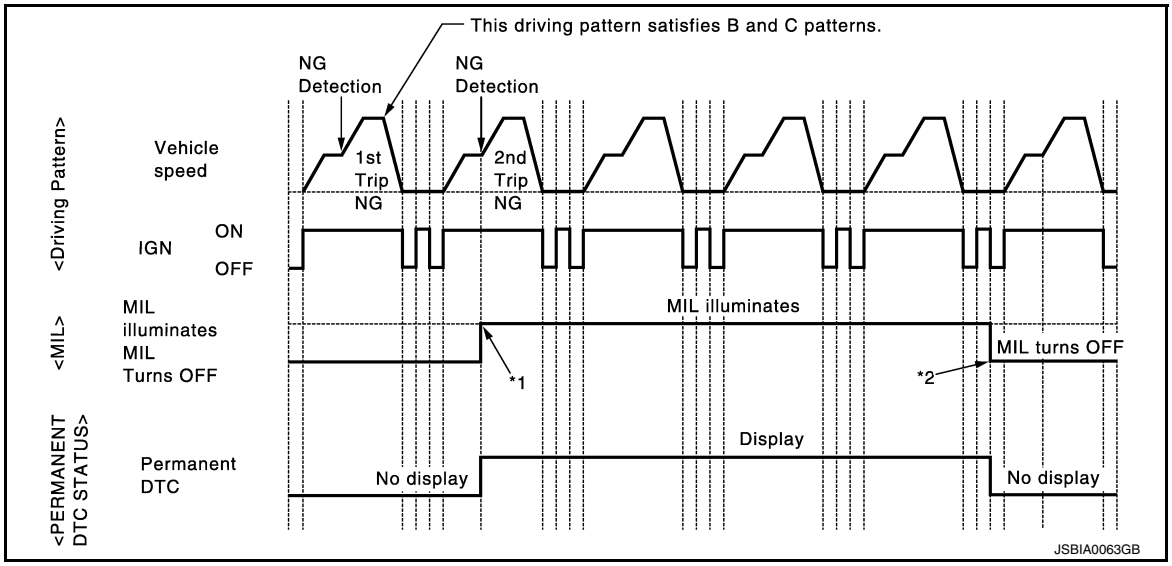

*1: When the same malfunction is detected in two consecutive trips, MIL will illuminate.

*2: MIL will turn off after vehicle is driven 3 times (driving pattern B) without any malfunctions.

When a DTC is not stored in ECM
The erasing method depends on a permanent DTC stored in ECM. Refer to the following table.
NOTE:
If the applicable permanent DTC includes multiple groups, perform the procedure of Group B first. If the permanent DTC is not erased, perform the procedure of Group A.

×: Applicable —: Not applicable

Group*	Perform "DTC CONFIRMATION PROCEDURE" for applicable DTCs.	Driving pattern		Reference
		B	D	
A	×	—	—	EC-177, "Work Procedure (Group A)"
B	—	×	×	EC-179, "Work Procedure (Group B)"

*: For group, refer to EC-105, "DTC Index".

PERMANENT DTC ITEM

For permanent DTC items, MIL turns ON. Refer to EC-105, "DTC Index".

PERMANENT DTC SERVICE PROCEDURE

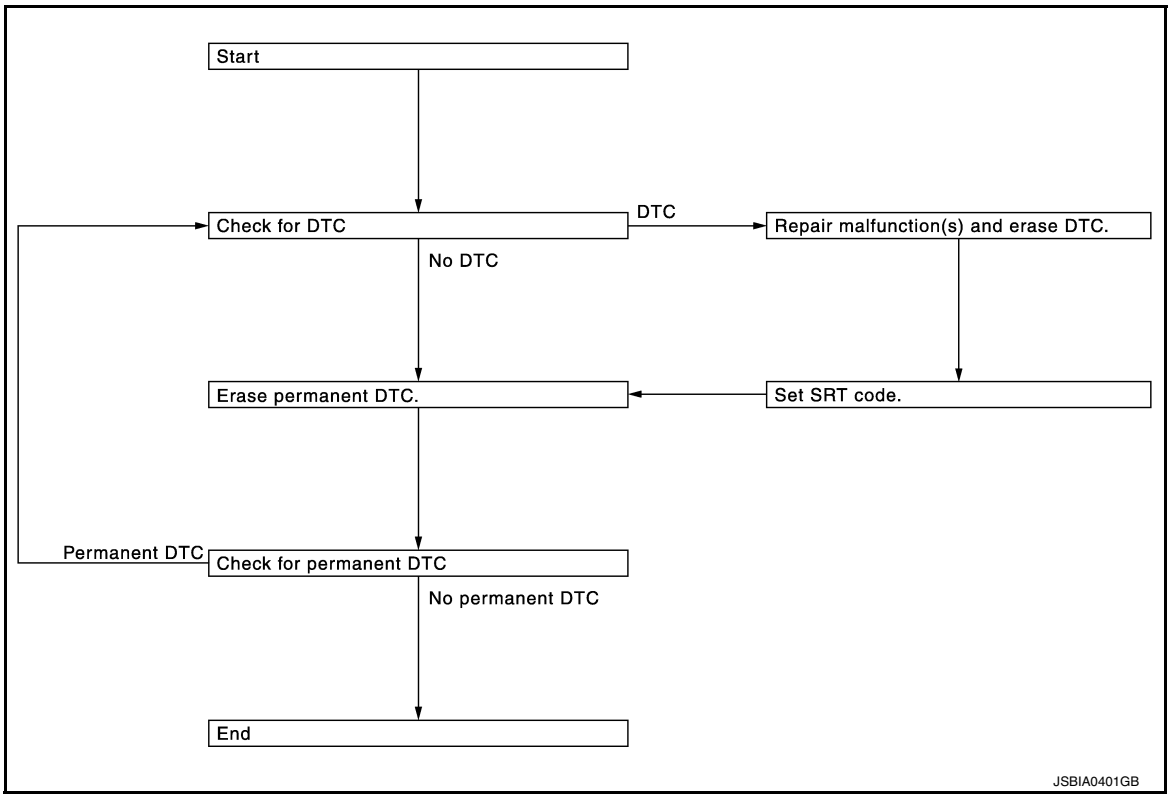

Work Procedure (Group A)

INFOID:0000000011148526

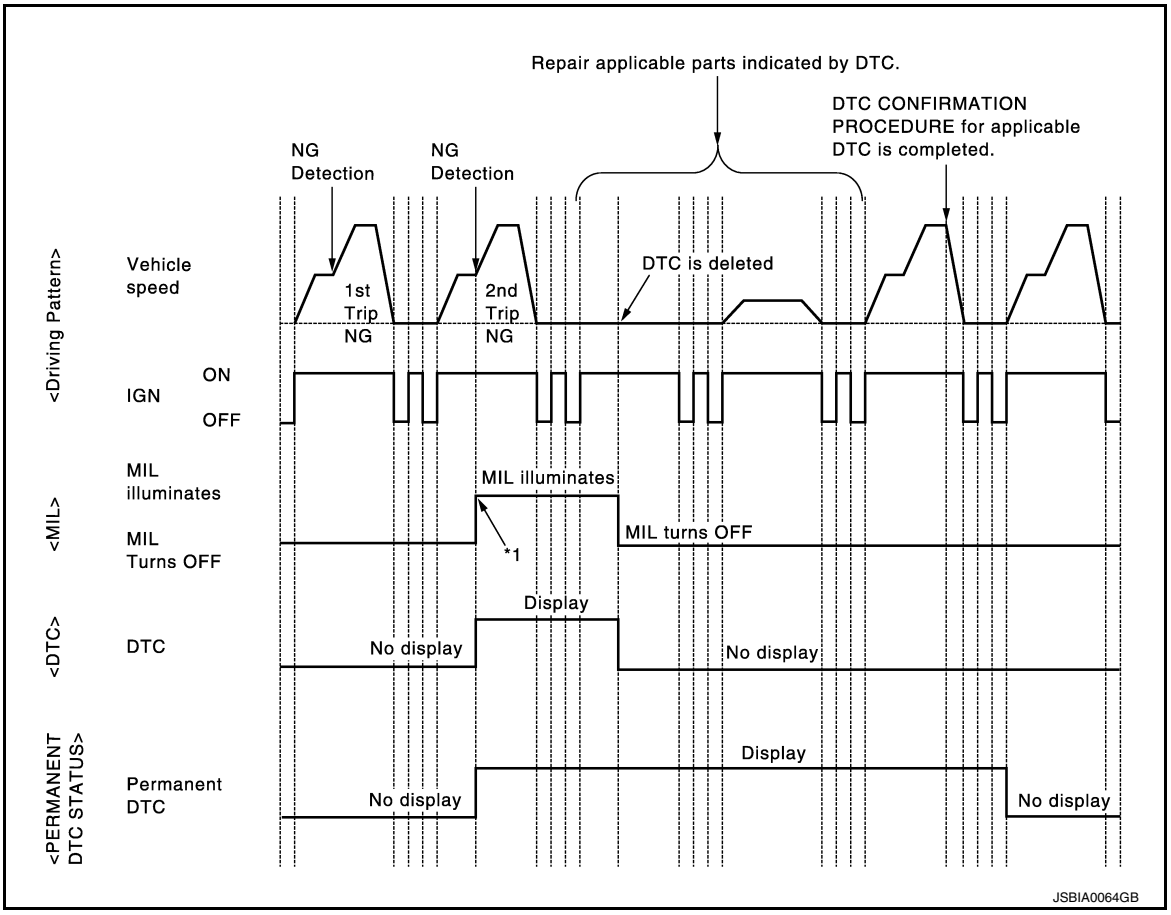

*1: When the same malfunction is detected in two consecutive trips, MIL will illuminate.

1. CHECK DTC

Check DTC.

Is any DTC detected?

YES >> Repair malfunction(s) and erase DTC. Refer to EC-69, "On Board Diagnosis Function" or EC-72, "CONSULT Function".

NO >> GO TO 2.

2. CHECK PERMANENT DTC

With CONSULT

1. Turn ignition switch OFF and wait at least 10 seconds.
2. Turn ignition switch ON.
3. Turn ignition switch OFF and wait at least 10 seconds.
4. Turn ignition switch ON.
5. Select “PERMANENT DTC STATUS” mode with CONSULT.

With GST

1. Turn ignition switch OFF and wait at least 10 seconds.
2. Turn ignition switch ON.
3. Turn ignition switch OFF and wait at least 10 seconds.
4. Turn ignition switch ON.
5. Select Service $0A with GST.

Is any permanent DTC detected?

YES >> GO TO 3.

NO >> END

3. PERFORM DTC CONFIRMATION PROCEDURE

Perform “DTC CONFIRMATION PROCEDURE” for DTCs which are the same as permanent DTCs stored in ECM. Refer to EC-105, "DTC Index".

>> GO TO 4.

4. CHECK PERMANENT DTC

With CONSULT

1. Turn ignition switch OFF and wait at least 10 seconds.
2. Turn ignition switch ON.
3. Turn ignition switch OFF and wait at least 10 seconds.
4. Turn ignition switch ON.
5. Select “PERMANENT DTC STATUS” mode with CONSULT.

With GST

1. Turn ignition switch OFF and wait at least 10 seconds.
2. Turn ignition switch ON.
3. Turn ignition switch OFF and wait at least 10 seconds.
4. Turn ignition switch ON.
5. Select Service $0A with GST.

Is any permanent DTC detected?

YES >> GO TO 1.

NO >> END

Work Procedure (Group B)

INFOID:0000000011148527

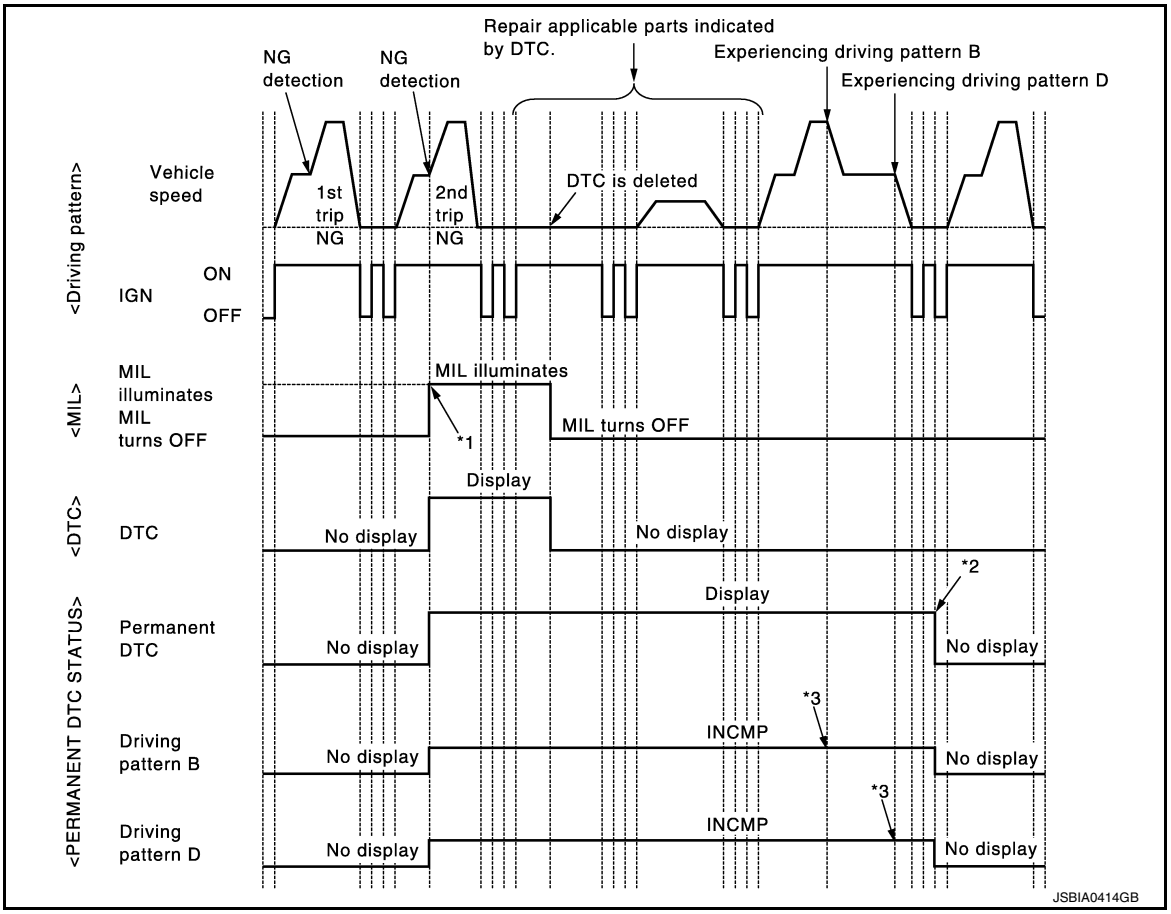

*1: When the same malfunction is detected in two consecutive trips, MIL will illuminate.

*2: After experiencing driving pattern B and D, permanent DTC is erased.

*3: Indication does not change unless the ignition switch is turned from ON to OFF twice even after experiencing driving pattern B or D.

NOTE:
Drive the vehicle according to only driving patterns indicating “INCMP” in driving patterns B and D on the “PERMANENT DTC STATUS” screen.

1. CHECK DTC

Check DTC.

Is any DTC detected?

YES >> Repair malfunction(s) and erase DTC. Refer to EC-69, "On Board Diagnosis Function" or EC-72, "CONSULT Function".

NO >> GO TO 2.

2. CHECK PERMANENT DTC

With CONSULT

1. Turn ignition switch OFF and wait at least 10 seconds.
2. Turn ignition switch ON.
3. Turn ignition switch OFF and wait at least 10 seconds.
4. Turn ignition switch ON.
5. Select “PERMANENT DTC STATUS” mode with CONSULT.

With GST

1. Turn ignition switch OFF and wait at least 10 seconds.
2. Turn ignition switch ON.
3. Turn ignition switch OFF and wait at least 10 seconds.

4. Turn ignition switch ON.
5. Select Service $0A with GST.

Is any permanent DTC detected?

YES >> GO TO 3.
NO >> END

3. DRIVE DRIVING PATTERN B

CAUTION:
- **Always drive at a safe speed.**
- **Never erase self-diagnosis results.**
- **If self-diagnosis results are erased during the trip of driving pattern B or D, the counter of driving pattern B and D is reset.**

With CONSULT
1. Start engine and warm it up to normal operating temperature.
2. Use “PERMANENT DTC WORK SUPPORT” mode with CONSULT to drive the vehicle according to driving pattern B. Refer to EC-72, "CONSULT Function", EC-66, "DIAGNOSIS DESCRIPTION : Driving Pattern".

With GST
1. Start engine and warm it up to normal operating temperature.
2. Drive the vehicle according to driving pattern B. Refer to EC-66, "DIAGNOSIS DESCRIPTION : Driving Pattern".

>> GO TO 4.

4. CHECK PERMANENT DTC

With CONSULT
1. Turn ignition switch OFF and wait at least 10 seconds.
2. Turn ignition switch ON.
3. Turn ignition switch OFF and wait at least 10 seconds.
4. Turn ignition switch ON.
5. Select “PERMANENT DTC STATUS” mode with CONSULT.

With GST
1. Turn ignition switch OFF and wait at least 10 seconds.
2. Turn ignition switch ON.
3. Turn ignition switch OFF and wait at least 10 seconds.
4. Turn ignition switch ON.
5. Select Service $0A with GST.

Is any permanent DTC detected?

YES >> GO TO 5.
NO >> END

5. DRIVE DRIVING PATTERN D

CAUTION:
- **Always drive at a safe speed.**
- **Never erase self-diagnosis results.**
- **If self-diagnosis results are erased during the trip of driving pattern B or D, the counter of driving pattern B and D is reset.**

1. Drive the vehicle according to driving pattern D. Refer to EC-66, "DIAGNOSIS DESCRIPTION : Driving Pattern".

>> GO TO 6.

6. CHECK PERMANENT DTC

With CONSULT
1. Turn ignition switch OFF and wait at least 10 seconds.
2. Turn ignition switch ON.
3. Turn ignition switch OFF and wait at least 10 seconds.
4. Turn ignition switch ON.

5. Select “PERMANENT DTC STATUS” mode with CONSULT.

With GST

1. Turn ignition switch OFF and wait at least 10 seconds.
2. Turn ignition switch ON.
3. Turn ignition switch OFF and wait at least 10 seconds.
4. Turn ignition switch ON.
5. Select Service $0A with GST.

Is any permanent DTC detected?

YES >> GO TO 1.
NO >> END

DTC/CIRCUIT DIAGNOSIS

TROUBLE DIAGNOSIS - SPECIFICATION VALUE

Description

INFOID:0000000011148528

The specification (SP) value indicates the tolerance of the value that is displayed in “SPEC” in “DATA MONITOR” mode of CONSULT during normal operation of the Engine Control System. When the value in “SPEC” in “DATA MONITOR” mode is within the SP value, the Engine Control System is confirmed OK. When the value in “SPEC” in “DATA MONITOR” mode is NOT within the SP value, the Engine Control System may have one or more malfunctions.
The SP value is used to detect malfunctions that may affect the Engine Control System, but will not illuminate the MIL.
The SP value will be displayed for the following three items:
- B/FUEL SCHDL (The fuel injection pulse width programmed into ECM prior to any learned on board correction)
- A/F ALPHA-B1/B2 (The mean value of air-fuel ratio feedback correction factor per cycle)
- MAS AIR FLOW SENSOR (Hz) (The signal frequency of the mass air flow sensor)

Component Function Check

INFOID:0000000011148529

1.START

Check that all of the following conditions are satisfied.
- Vehicle driven distance: More than 5,000 km (3,107 miles)
- Barometric pressure: 98.3 - 104.3 kPa (1.003 - 1.064 kg/cm^2, 14.25 - 15.12 psi)
- Atmospheric temperature: 20 - 30°C (68 - 86°F)
- Engine coolant temperature: 75 - 95°C (167 - 203°F)
- Transmission: Warmed-up
  - After the engine is warmed up to normal operating temperature, drive vehicle until “FLUID TEMP SE” (CVT fluid temperature sensor signal) indicates more than 60°C (140°F).
- Electrical load: Not applied
  - Rear window defogger switch, air conditioner switch lighting switch are OFF. Steering wheel is straight ahead.
- Engine speed: Idle

>> GO TO 2.

2.PERFORM “SPEC” OF “DATA MONITOR” MODE

With CONSULT
NOTE:
Perform “SPEC” in “DATA MONITOR” mode in maximum scale display.
1. Perform basic inspection. Refer to EC-164, "Work Procedure".
2. Select “B/FUEL SCHDL”, “A/F ALPHA-B1”, “A/F ALPHA-B2” and “MAS AIR FLOW SENSOR (Hz)” in “SPEC” of “DATA MONITOR” mode with CONSULT.
3. Check that monitor items are within the SP value.

Is the measurement value within the SP value?

YES >> INSPECTION END
NO >> Proceed to EC-183, "Diagnosis Procedure".

Diagnosis Procedure

INFOID:0000000011148530

OVERALL SEQUENCE

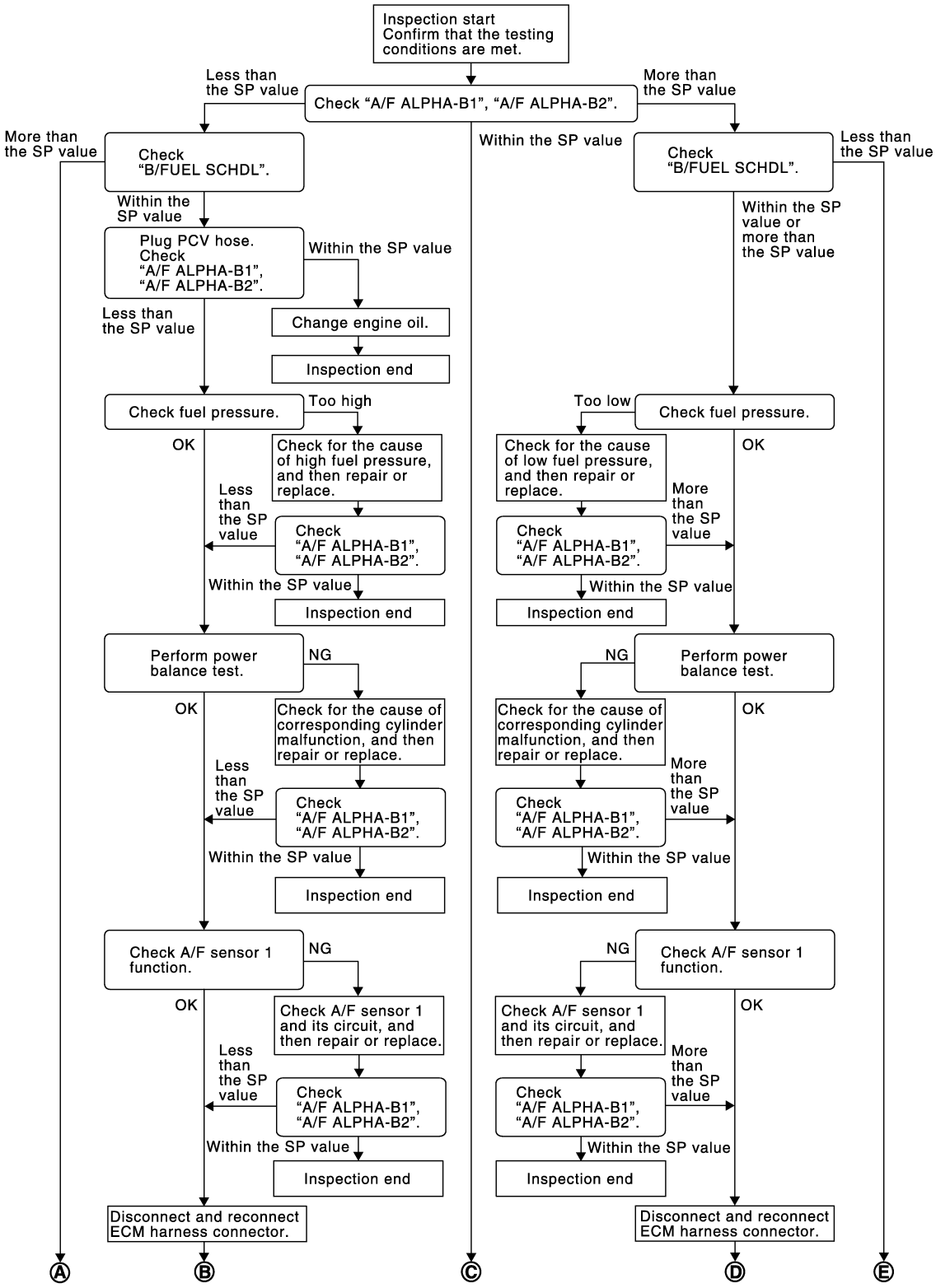

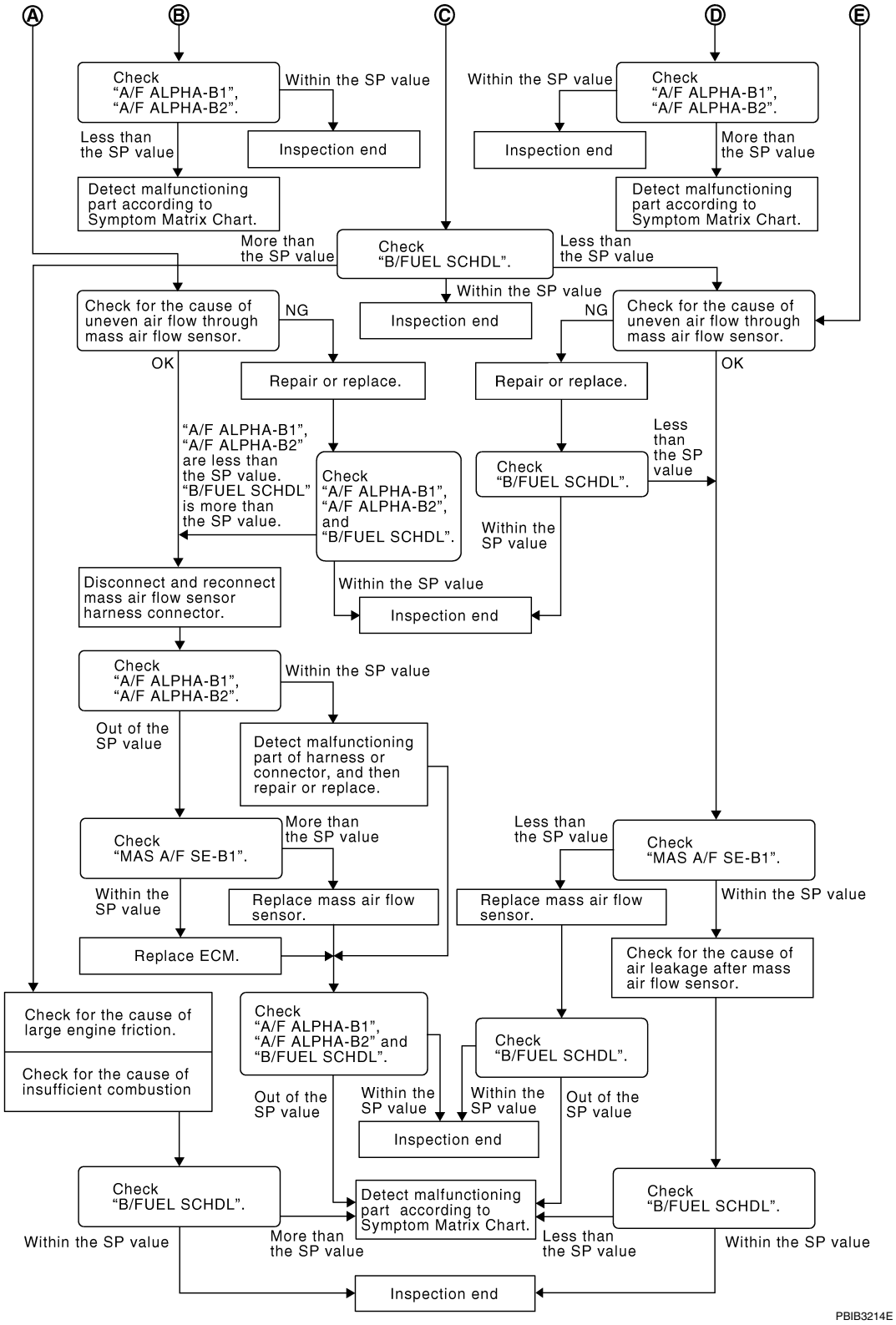

DETAILED PROCEDURE

1. CHECK "A/F ALPHA-B1", "A/F ALPHA-B2"

With CONSULT

1. Start engine.
2. Confirm that the testing conditions are met. Refer to EC-182, "Component Function Check".
3. Select "A/F ALPHA-B1", "A/F ALPHA-B2" in "SPEC" of "DATA MONITOR" mode, and check that each indication is within the SP value.

NOTE:
Check “A/F ALPHA-B1”, “A/F ALPHA-B2” for approximately 1 minute because they may fluctuate. It is NG if the indication is out of the SP value even a little.

Is the measurement value within the SP value?

YES >> GO TO 17.
NO-1 >> Less than the SP value: GO TO 2.
NO-2 >> More than the SP value: GO TO 3.

2. CHECK “B/FUEL SCHDL”

Select “B/FUEL SCHDL” in “SPEC” of “DATA MONITOR” mode, and check that the indication is within the SP value.

Is the measurement value within the SP value?

YES >> GO TO 4.
NO >> More than the SP value: GO TO 19.

3. CHECK “B/FUEL SCHDL”

Select “B/FUEL SCHDL” in “SPEC” of “DATA MONITOR” mode, and check that the indication is within the SP value.

Is the measurement value within the SP value?

YES >> GO TO 6.
NO-1 >> More than the SP value: GO TO 6.
NO-2 >> Less than the SP value: GO TO 25.

4. CHECK “A/F ALPHA-B1”, “A/F ALPHA-B2”

1. Stop the engine.
2. Disconnect PCV hose, and then plug it.
3. Start engine.
4. Select “A/F ALPHA-B1”, “A/F ALPHA-B2” in “SPEC” of “DATA MONITOR” mode, and check that each indication is within the SP value.

Is the measurement value within the SP value?

YES >> GO TO 5.
NO >> GO TO 6.

5. CHANGE ENGINE OIL

1. Stop the engine.
2. Change engine oil.

NOTE:
This symptom may occur when a large amount of gasoline is mixed with engine oil because of driving conditions (such as when engine oil temperature does not rise enough since a journey distance is too short during winter). The symptom will not be detected after changing engine oil or changing driving conditions.

>> INSPECTION END

6. CHECK FUEL PRESSURE

Check fuel pressure. (Refer to EC-168, "Work Procedure".)

Is the inspection result normal?

YES >> GO TO 9.
NO-1 >> Fuel pressure is too high: Replace “fuel filter and fuel pump assembly”, refer to FL-6, "Removal and Installation", and then GO TO 8.
NO-2 >> Fuel pressure is too low: GO TO 7.

7. DETECT MALFUNCTIONING PART

Check fuel hoses and fuel tubes for clogging.

Is the inspection result normal?

YES >> Replace “fuel filter and fuel pump assembly”, refer to FL-6, "Removal and Installation", and then GO TO 8.
NO >> Repair or replace malfunctioning part and then GO TO 8.

8. CHECK “A/F ALPHA-B1”, “A/F ALPHA-B2”

1. Start engine.
2. Select “A/F ALPHA-B1”, “A/F ALPHA-B2” in “SPEC” of “DATA MONITOR” mode, and check that each indication is within the SP value.

Is the measurement value within the SP value?

YES >> INSPECTION END
NO >> GO TO 9.

9. PERFORM POWER BALANCE TEST

1. Perform “POWER BALANCE” in “ACTIVE TEST” mode.
2. Check that the each cylinder produces a momentary engine speed drop.

Is the inspection result normal?

YES >> GO TO 12.
NO >> GO TO 10.

10. DETECT MALFUNCTIONING PART

Check the following below.
- Ignition coil and its circuit (Refer to EC-497, "Component Function Check".)
- Fuel injector and its circuit (Refer to EC-490, "Component Function Check".)
- Intake air leakage
- Low compression pressure (Refer to EM-22, "On-Vehicle Service".)

Is the inspection result normal?

YES >> Replace fuel injector, refer to EM-47, "Removal and Installation", and then GO TO 11.
NO >> Repair or replace malfunctioning part and then GO TO 11.

11. CHECK “A/F ALPHA-B1”, “A/F ALPHA-B2”

1. Start engine.
2. Select “A/F ALPHA-B1”, “A/F ALPHA-B2” in “SPEC” of “DATA MONITOR” mode, and check that each indication is within the SP value.

Is the measurement value within the SP value?

YES >> INSPECTION END
NO >> GO TO 12.

12. CHECK A/F SENSOR 1 FUNCTION

Perform all DTC CONFIRMATION PROCEDURE related with A/F sensor 1.
- For DTC P0130, P0150, refer to EC-247, "DTC Logic".
- For DTC P0131, P0151, refer to EC-251, "DTC Logic".
- For DTC P0132, P0152, refer to EC-254, "DTC Logic".
- For DTC P014C, P014D, P014E, P014F, P015A, P015B, P015C, P015D, refer to EC-278, "DTC Logic".
- For DTC P2096, P2097, P2098, P2099, refer to EC-447, "DTC Logic".

Are any DTCs detected?

YES >> GO TO 15.
NO >> GO TO 13.

13. CHECK A/F SENSOR 1 CIRCUIT

Perform Diagnostic Procedure according to corresponding DTC.

>> GO TO 14.

14. CHECK “A/F ALPHA-B1”, “A/F ALPHA-B2”

1. Start engine.
2. Select “A/F ALPHA-B1”, “A/F ALPHA-B2” in “SPEC” of “DATA MONITOR” mode, and check that each indication is within the SP value.

Is the measurement value within the SP value?

YES >> INSPECTION END
NO >> GO TO 15.

15. DISCONNECT AND RECONNECT ECM HARNESS CONNECTOR

1. Stop the engine.
2. Disconnect ECM harness connector. Check pin terminal and connector for damage, and then reconnect it.

>> GO TO 16.

16. CHECK “A/F ALPHA-B1”, “A/F ALPHA-B2”

1. Start engine.
2. Select “A/F ALPHA-B1”, “A/F ALPHA-B2” in “SPEC” of “DATA MONITOR” mode, and check that each indication is within the SP value.

Is the measurement value within the SP value?

YES >> INSPECTION END
NO >> Detect malfunctioning part according to EC-516, "Symptom Table".

17. CHECK “B/FUEL SCHDL”

Select “B/FUEL SCHDL” in “SPEC” of “DATA MONITOR” mode, and check that the indication is within the SP value.

Is the measurement value within the SP value?

YES >> INSPECTION END
NO-1 >> More than the SP value: GO TO 18.
NO-2 >> Less than the SP value: GO TO 25.

18. DETECT MALFUNCTIONING PART

1. Check for the cause of large engine friction. Refer to the following.
- Engine oil level is too high
- Engine oil viscosity
- Belt tension of power steering, alternator, A/C compressor, etc. is excessive
- Noise from engine
- Noise from transmission, etc.
2. Check for the cause of insufficient combustion. Refer to the following.
- Valve clearance malfunction
- Intake valve timing control function malfunction
- Camshaft sprocket installation malfunction, etc.

>> Repair or replace malfunctioning part, and then GO TO 30.

19. CHECK INTAKE SYSTEM

Check for the cause of uneven air flow through mass air flow sensor. Refer to the following.
- Crushed air ducts
- Malfunctioning seal of air cleaner element
- Uneven dirt of air cleaner element
- Improper specification of intake air system

Is the inspection result normal?

YES >> GO TO 21.
NO >> Repair or replace malfunctioning part, and then GO TO 20.

20. CHECK “A/F ALPHA-B1”, “A/F ALPHA-B2”, AND “B/FUEL SCHDL”

Select “A/F ALPHA-B1”, “A/F ALPHA-B2”, and “B/FUEL SCHDL” in “SPEC” of “DATA MONITOR” mode, and check that each indication is within the SP value.

Is the measurement value within the SP value?

YES >> INSPECTION END
NO >> “B/FUEL SCHDL” is more, “A/F ALPHA-B1”, “A/F ALPHA-B2” are less than the SP value: GO TO 21.

21. DISCONNECT AND RECONNECT MASS AIR FLOW SENSOR HARNESS CONNECTOR

1. Stop the engine.

2. Disconnect mass air flow sensor harness connector. Check pin terminal and connector for damage and then reconnect it again.

>> GO TO 22.

22. CHECK “A/F ALPHA-B1”, “A/F ALPHA-B2”

1. Start engine.
2. Select “A/F ALPHA-B1”, “A/F ALPHA-B2” in “SPEC” of “DATA MONITOR” mode, and check that each indication is within the SP value.

Is the measurement value within the SP value?

YES >> Detect malfunctioning part of mass air flow sensor circuit and repair it. Refer to EC-224, "Diagnosis Procedure". Then GO TO 29.
NO >> GO TO 23.

23. CHECK “MAS AIR FLOW SENSOR (HZ)”

Select “MAS AIR FLOW SENSOR (Hz)” in “SPEC” of “DATA MONITOR” mode, and check that the indication is within the SP value.

Is the measurement value within the SP value?

YES >> GO TO 24.
NO >> More than the SP value: Replace mass air flow sensor, refer to EM-24, "Removal and Installation", and then GO TO 29.

24. REPLACE ECM

Replace ECM. Refer to EC-526, "Removal and Installation".

>> GO TO 29.

25. CHECK INTAKE SYSTEM

Check for the cause of uneven air flow through mass air flow sensor. Refer to the following.
- Crushed air ducts
- Malfunctioning seal in air cleaner element
- Uneven dirt in air cleaner element
- Improper specification in intake air system

Is the inspection result normal?

YES >> GO TO 27.
NO >> Repair or replace malfunctioning part, and then GO TO 26.

26. CHECK “B/FUEL SCHDL”

Select “B/FUEL SCHDL” in “SPEC” of “DATA MONITOR” mode, and check that the indication is within the SP value.

Is the measurement value within the SP value?

YES >> INSPECTION END
NO >> Less than the SP value: GO TO 27.

27. CHECK “MAS AIR FLOW SENSOR (HZ)”

Select “MAS AIR FLOW SENSOR (Hz)” in “SPEC” of “DATA MONITOR” mode, and check that the indication is within the SP value.

Is the measurement value within the SP value?

YES >> GO TO 28.
NO >> Less than the SP value: Replace mass air flow sensor, refer to EM-24, "Removal and Installation", and then GO TO 30.

28. CHECK INTAKE SYSTEM

Check for the cause of air leakage after the mass air flow sensor. Refer to the following.
- Disconnection, looseness, and cracks in air duct
- Looseness of oil filler cap
- Disconnection of oil level gauge
- Open stuck, breakage, hose disconnection, or cracks in PCV valve

- Disconnection or cracks in EVAP purge hose, stuck open EVAP canister purge volume control solenoid valve
- Malfunctioning seal in rocker cover gasket
- Disconnection, looseness, or cracks in hoses, such as a vacuum hose, connecting to intake air system parts
- Malfunctioning seal in intake air system, etc.

>> GO TO 30.

29. CHECK “A/F ALPHA-B1”, “A/F ALPHA-B2”, AND “B/FUEL SCHDL”

Select “A/F ALPHA-B1”, “A/F ALPHA-B2”, and “B/FUEL SCHDL” in “SPEC” of “DATA MONITOR” mode, and check that each indication is within the SP value.

Is the measurement value within the SP value?

YES >> INSPECTION END
NO >> Detect malfunctioning part according to EC-516, "Symptom Table".

30. CHECK “B/FUEL SCHDL”

Select “B/FUEL SCHDL” in “SPEC” of “DATA MONITOR” mode, and then check that the indication is within the SP value.

Is the measurement value within the SP value?

YES >> INSPECTION END
NO >> Detect malfunctioning part according to EC-516, "Symptom Table".

POWER SUPPLY AND GROUND CIRCUIT

Diagnosis Procedure

INFOID:0000000011148531

1.CHECK FUSE

Check that there is no blowout in the following fuses.

Location	Fuse No.	Capacity
IPDM E/R	#44	15 A
	#56	10 A

Is the fuse fusing?

YES >> Replace the fuse after repairing the applicable circuit.
NO >> GO TO 2.

2.CHECK GROUND CONNECTION

1. Turn ignition switch OFF.
2. Check ground connection E9. Refer to PG-56, "Harness Layout".

Is the inspection result normal?

YES >> GO TO 3.
NO >> Repair or replace ground connection.

3.CHECK ECM GROUND CIRCUIT

1. Disconnect ECM harness connectors.
2. Check the continuity between ECM harness connector and ground.

+		–	Continuity
ECM			
Connector	Terminal		
E32	147	Ground	Existed
	149		
	152		
F78	10		
	58		
F79	105		
	110		

Is the inspection result normal?

YES >> GO TO 4.
NO >> Repair or replace error-detected parts.

4.CHECK ECM POWER SUPPLY (MAIN)-I

1. Reconnect ECM harness connector.
2. Turn ignition switch ON.
3. Check the voltage between ECM harness connector terminals.

ECM			Voltage
Connector	+	–	
	Terminal		
E32	145	152	Battery voltage

Is the inspection result normal?

YES >> GO TO 6.
NO >> GO TO 5.

5. CHECK ECM POWER SUPPLY (MAIN) CIRCUIT

1. Turn ignition switch OFF.
2. Disconnect ECM harness connectors.
3. Disconnect IPDM E/R harness connector.
4. Check the continuity between ECM harness connector and IPDM E/R harness connector.

+		–		Continuity
ECM		IPDM E/R		
Connector	Terminal	Connector	Terminal	
E32	145	F19	59	Existed

5. Also check harness for short to ground.

Is the inspection result normal?

YES >> Perform the trouble diagnosis for power supply circuit.
NO >> Repair or replace error-detected parts.

6. CHECK ECM POWER SUPPLY (MAIN)-II

1. Turn ignition switch OFF and wait at least 10 seconds.
2. Check the voltage between ECM harness connector terminals as per the following.

ECM			Condition	Voltage (Approx.)
Connector	+	–		
	Terminal			
E32	145	152	After turning ignition switch OFF, battery voltage will exist for a few seconds	Drop to 0 V

Is the inspection result normal?

YES >> GO TO 9.
NO >> GO TO 7.

7. CHECK ECM RELAY CONTROL SIGNAL

Check the voltage between ECM harness connector terminals as per the following.

ECM				Condition	Voltage (Approx.)
+		–			
Connector	Terminal	Connector	Terminal		
F79	86	E32	152	Ignition switch ON	0 V
				Turn ignition switch OFF and wait at least 10 seconds.	Battery voltage

Is the inspection result normal?

YES >> Check intermittent incident. Refer to GI-47, "Intermittent Incident".
NO >> GO TO 8.

8. CHECK ECM RELAY CONTROL SIGNAL CIRCUIT

1. Turn ignition switch OFF.
2. Disconnect ECM harness connector.
3. Disconnect IPDM E/R harness connector.
4. Check the continuity between ECM harness connector and IPDM E/R harness connector.

+		–		Continuity
ECM		IPDM E/R		
Connector	Terminal	Connector	Terminal	
F79	86	F24	72	Existed

5. Also check harness for short to ground and to power.

Is the inspection result normal?

YES >> Replace IPDM E/R. Refer to PCS-32, "Removal and Installation".
NO >> Repair or replace error-detected parts.

9. CHECK IGNITION SWITCH SIGNAL

1. Turn ignition switch ON.
2. Check the voltage between ECM harness connector terminals.

ECM			Condition	Voltage (Approx.)
Connector	+	–		
	Terminal			
E32	133	152	Ignition switch OFF	0 V
			Ignition switch ON	Battery voltage

Is the inspection result normal?

YES >> GO TO 11.
NO >> GO TO 10.

10. CHECK IGNITION SWITCH SIGNAL CIRCUIT

1. Turn ignition switch OFF.
2. Disconnect ECM harness connector.
3. Disconnect IPDM E/R harness connector.
4. Check the continuity between ECM harness connector and IPDM E/R harness connector.

+		–		Continuity
ECM		IPDM E/R		
Connector	Terminal	Connector	Terminal	
E32	133	F24	62	Existed

5. Also check harness for short to ground and to power.

Is the inspection result normal?

YES >> Perform the trouble diagnosis for power supply circuit.
NO >> Repair or replace error-detected parts.

11. CHECK ECM POWER SUPPLY (BACK-UP)

Check the voltage between ECM harness connector terminals.

ECM				Voltage
+		–		
Connector	Terminal	Connector	Terminal	
F79	116	E32	152	Battery voltage

Is the inspection result normal?

YES >> Check intermittent incident. Refer to GI-47, "Intermittent Incident".
NO >> GO TO 12.

12. CHECK ECM POWER SUPPLY (BACK-UP) CIRCUIT

1. Turn ignition switch OFF.
2. Disconnect ECM harness connector.
3. Disconnect IPDM E/R harness connector.
4. Check the continuity between ECM harness connector and IPDM E/R harness connector.

+		–		Continuity
ECM		IPDM E/R		
Connector	Terminal	Connector	Terminal	
F79	116	F19	58	Existed

5. Also check harness for short to ground.

Is the inspection result normal?

YES >> Perform the trouble diagnosis for power supply circuit.
NO >> Repair or replace error-detected parts.

U0101 CAN COMM CIRCUIT

Description

INFOID:0000000011148532

CAN (Controller Area Network) is a serial communication line for real time application. It is an on-vehicle multiplex communication line with high data communication speed and excellent error detection ability. Many electronic control units are equipped onto a vehicle, and each control unit shares information and links with other control units during operation (not independent). In CAN communication, control units are connected with 2 communication lines (CAN H line, CAN L line) allowing a high rate of information transmission with less wiring. Each control unit transmits/receives data but selectively reads required data only.

DTC Logic

INFOID:0000000011148533

DTC DETECTION LOGIC

DTC No.	CONSULT screen terms (Trouble diagnosis content)	DTC detecting condition	Possible cause
U0101	LOST COMM (TCM) (Lost Communication with TCM)	When ECM is not transmitting or receiving CAN communication signal of OBD (emission-related diagnosis) with TCM for 2 seconds or more.	• CAN communication line between TCM and ECM • CAN communication line open or shorted

DTC CONFIRMATION PROCEDURE

1.PERFORM DTC CONFIRMATION PROCEDURE

1. Turn ignition switch ON and wait at least 3 seconds.
2. Check DTC.

Is DTC detected?

YES >> Proceed to EC-194, "Diagnosis Procedure".
NO >> INSPECTION END

Diagnosis Procedure

INFOID:0000000011148534

Perform the trouble diagnosis for CAN communication system. Refer to LAN-21, "Trouble Diagnosis Flow Chart".

U1000 CAN COMM CIRCUIT

Description

INFOID:0000000011148535

CAN (Controller Area Network) is a serial communication line for real time application. It is an on-vehicle multiplex communication line with high data communication speed and excellent error detection ability. Many electronic control units are equipped onto a vehicle, and each control unit shares information and links with other control units during operation (not independent). In CAN communication, control units are connected with 2 communication lines (CAN H line, CAN L line) allowing a high rate of information transmission with less wiring. Each control unit transmits/receives data but selectively reads required data only.

DTC Logic

INFOID:0000000011148536

DTC DETECTION LOGIC

DTC No.	CONSULT screen terms (Trouble diagnosis content)	DTC detecting condition	Possible cause
U1000	CAN COMM CIRCUIT (CAN COMM CIRCUIT)	When ECM is not transmitting or receiving CAN communication signal of OBD (emission related diagnosis) for 2 seconds or more.	• Harness or connectors (CAN communication line is open or shorted)

DTC CONFIRMATION PROCEDURE

1. PERFORM DTC CONFIRMATION PROCEDURE

1. Turn ignition switch ON and wait at least 3 seconds.
2. Check DTC.

Is DTC detected?

YES >> Proceed to EC-195, "Diagnosis Procedure".
NO >> INSPECTION END

Diagnosis Procedure

INFOID:0000000011148537

Perform the trouble diagnosis for CAN communication system. Refer to LAN-21, "Trouble Diagnosis Flow Chart".

P0011, P0021 IVT CONTROL

DTC Logic

INFOID:0000000011148538

DTC DETECTION LOGIC

NOTE:
If DTC P0011 or P0021 is displayed with DTC P0075 or P0081, first perform the trouble diagnosis for DTC P0075, P0081. Refer to EC-212, "DTC Logic".

DTC No.	CONSULT screen terms (Trouble diagnosis content)	DTC detecting condition	Possible cause
P0011	INT/V TIM CONT-B1 (“A” Camshaft Position - Timing Over-Advanced or System Performance bank 1)	There is a gap between angle of target and phase-control angle degree.	• Crankshaft position sensor (POS) • Camshaft position sensor (PHASE) • Intake valve timing control solenoid valve • Accumulation of debris to the signal pick-up portion of the camshaft • Timing chain installation • Foreign matter caught in the oil groove for intake valve timing control
P0021	INT/V TIM CONT-B2 (“B” Camshaft Position - Timing Over-Advanced or System Performance bank 2)		

DTC CONFIRMATION PROCEDURE

1.PRECONDITIONING

If DTC Confirmation Procedure has been previously conducted, always perform the following before conducting the next test.
1. Turn ignition switch OFF and wait at least 10 seconds.
2. Turn ignition switch ON.
3. Turn ignition switch OFF and wait at least 10 seconds.

TESTING CONDITION:
Before performing the following procedure, confirm that battery voltage is between 10 V and 16 V at idle.

>> GO TO 2.

2.PERFORM DTC CONFIRMATION PROCEDURE-I

With CONSULT
1. Turn ignition switch ON and select “DATA MONITOR” mode with CONSULT.
2. Start engine and warm it up to the normal operating temperature.
3. Maintain the following conditions for at least 6 consecutive seconds. Hold the accelerator pedal as steady as possible.

ENG SPEED	1,200 - 2,000 rpm
COOLANT TEMP/S	More than 60°C (140°F)
B/FUEL SCHDL	More than 7.3 msec
Selector lever	D position

CAUTION:
Always drive at a safe speed.

4. Stop vehicle with engine running and let engine idle for 10 seconds.
5. Check 1st trip DTC.

With GST
Follow the procedure “With CONSULT” above.

Is 1st trip DTC detected?

YES >> Proceed to EC-197, "Diagnosis Procedure"
NO >> GO TO 3.

3.PERFORM DTC CONFIRMATION PROCEDURE-II

With CONSULT

1. Maintain the following conditions for at least 20 consecutive seconds.

ENG SPEED	1,200 - 3,175 rpm (A constant rotation is maintained.)
COOLANT TEMP/S	More than 60°C (140°F)
Selector lever	1st or 2nd position
Driving location uphill	Driving vehicle uphill (Increased engine load will help maintain the driving conditions required for this test.)

CAUTION:
Always drive at a safe speed.

2. Check 1st trip DTC.

With GST

Follow the procedure “With CONSULT” above.

Is 1st trip DTC detected?

YES >> Proceed to EC-197, "Diagnosis Procedure"
NO >> INSPECTION END

Diagnosis Procedure

INFOID:0000000011148539

1. CHECK OIL PRESSURE WARNING LAMP

1. Start engine.
2. Check oil pressure warning lamp and confirm it is not illuminated.

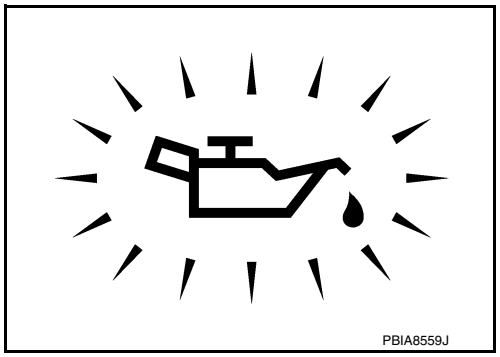

Is oil pressure warming lamp illuminated?

YES >> Check the engine oil level. Refer to LU-8, "Inspection".
NO >> GO TO 2.

2. CHECK INTAKE VALVE TIMING CONTROL SOLENOID VALVE

Check intake valve timing control solenoid valve. Refer to EC-198, "Component Inspection".

Is the inspection result normal?

YES >> GO TO 3.
NO >> Replace malfunctioning intake valve timing control solenoid valve. Refer to EM-53, "Valve Timing Control Cover (bank 1)", EM-54, "Valve Timing Control Cover (bank 2)".

3. CHECK CRANKSHAFT POSITION SENSOR (POS)

Check crankshaft position sensor (POS). Refer to EC-316, "Component Inspection".

Is the inspection result normal?

YES >> GO TO 4.
NO >> Replace crankshaft position sensor (POS). Refer to EM-37, "Removal and Installation (Upper Oil Pan)".

4. CHECK CAMSHAFT POSITION SENSOR (PHASE)

Check camshaft position sensor (PHASE). Refer to EC-320, "Component Inspection".

Is the inspection result normal?

YES >> GO TO 5.
NO >> Replace malfunctioning camshaft position sensor (PHASE). Refer to EM-43, "Removal and Installation (LH)", EM-44, "Removal and Installation (RH)".

5. CHECK CAMSHAFT (INTAKE)

Check the following.

- Accumulation of debris on the signal plate of camshaft rear end
- Chipping signal plate of camshaft rear end

Is the inspection result normal?

YES >> GO TO 6.
NO >> Remove debris and clean the signal plate of camshaft rear end or replace camshaft. Refer to EM-76, "Removal and Installation".

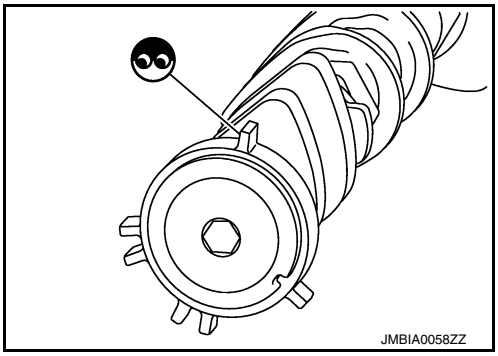

6. CHECK TIMING CHAIN INSTALLATION

Check service records for any recent repairs that may cause timing chain misalignment.

Are there any service records that may cause timing chain misalignment?

YES >> Check timing chain installation. Refer to EM-63, "Removal and Installation".
NO >> GO TO 7.

7. CHECK LUBRICATION CIRCUIT

Check lubrication circuit. Refer to EM-84, "Inspection after Installation".

Is the inspection result normal?

YES >> Check intermittent incident. Refer to GI-47, "Intermittent Incident".
NO >> Clean lubrication line.

Component Inspection

INFOID:0000000011148540

1. CHECK INTAKE VALVE TIMING CONTROL SOLENOID VALVE-I

1. Turn ignition switch OFF.
2. Disconnect intake valve timing control solenoid valve harness connector.
3. Check resistance between intake valve timing control solenoid valve terminals as per the following.

Intake valve timing control solenoid valve		Condition		Resistance
+	–			
Terminal				
1	2	Temperature	20°C (68°F)	7.0 – 7.8 Ω
1	Ground			∞ (Continuity should not exist)
2				

Is the inspection result normal?

YES >> GO TO 2.
NO >> Replace malfunctioning intake valve timing control solenoid valve. Refer to EM-53, "Valve Timing Control Cover (bank 1)", EM-54, "Valve Timing Control Cover (bank 2)".

2. CHECK INTAKE VALVE TIMING CONTROL SOLENOID VALVE-II

1. Remove intake valve timing control solenoid valve. Refer to EM-54, "Valve Timing Control Cover (bank 2)", EM-54, "Valve Timing Control Cover (bank 2)".

2. Provide 12 V DC between intake valve timing control solenoid valve terminals 1 and 2, and then interrupt it. Check that the plunger moves as shown in the figure.
   CAUTION:
   Never apply 12 V DC continuously for 5 seconds or more. Doing so may result in damage to the coil in intake valve timing control solenoid valve.
   NOTE:
   Always replace O-ring when intake valve timing control solenoid valve is removed.

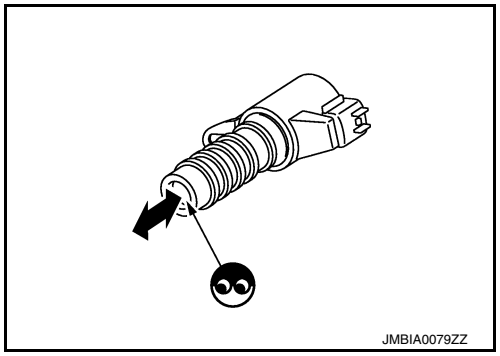

Is the inspection result normal?

YES >> INSPECTION END
NO >> Replace malfunctioning intake valve timing control solenoid valve. Refer to EM-54, "Valve Timing Control Cover (bank 2)", EM-54, "Valve Timing Control Cover (bank 2)".

P0014, P0024 EVT CONTROL

DTC Description

INFOID:0000000011491919

DTC DETECTION LOGIC

DTC No.	CONSULT screen terms (Trouble diagnosis content)	DTC detecting condition
P0014	EXH/V TIM CONT-B1 [Exhaust valve timing control performance (bank 1)]	There is a gap between angle of target and phase-control angle degree.
P0024	EXH/V TIM CONT-B2 [Exhaust valve timing control performance (bank 2)]	

POSSIBLE CAUSE

- Crankshaft position sensor
- Camshaft position sensor
- Exhaust valve timing control position sensor
- Exhaust valve timing control solenoid valve
- Accumulation of debris to the signal pick-up portion of the camshaft
- Timing chain installation
- Foreign matter caught in the oil groove for exhaust valve timing control

TESTING CONDITION:
Before performing the following procedure, confirm that battery voltage is between 10 V and 16 V at idle.

DTC CONFIRMATION PROCEDURE

1.CHECK DTC PRIORITY

If DTC P0014 or P0024 is displayed with DTC P0078, P0084, P1078, or P1084, first perform the confirmation procedure (trouble diagnosis) for DTC P0078, P0084, P1078, or P1084.

Is applicable DTC detected?

YES >> Perform diagnosis of applicable.
- DTC P0078: Refer to EC-216, "DTC Logic".
- DTC P0084: Refer to EC-216, "DTC Logic".
- DTC P1078: Refer to EC-400, "DTC Description".
- DTC P1084: Refer to EC-400, "DTC Description".

NO >> GO TO 2.

2.PRECONDITIONING

If DTC Confirmation Procedure has been previously conducted, always perform the following procedure before conducting the next test.

1. Turn ignition switch OFF and wait at least 10 seconds.
2. Turn ignition switch ON
3. Turn ignition switch OFF and wait at least 10 seconds.

TESTING CONDITION:
Before performing the following procedure, confirm that battery voltage is between 10 V and 16 V at idle.

>> GO TO 3.

3.PERFORM DTC CONFIRMATION PROCEDURE - 1

With CONSULT

1. Turn the ignition switch ON and select “DATA MONITOR” mode of “ENGINE” using CONSULT.
2. Warm engine up to the normal operating temperature.
3. Maintain the following conditions for at least 6 consecutive seconds. Hold the accelerator pedal as steady as possible.

ENG SPEED	500 – 2,000 rpm (A constant rotation is maintained)
COOLAN TEMP/S	More than 20°C (68°F)
Selector lever	P or N position

4. Let engine idle for 10 seconds.
5. Check 1st trip DTC.

With GST
Follow the procedure “With CONSULT” above.

Is 1st trip DTC detected?

YES >> Proceed to EC-201, "Diagnosis Procedure"
NO >> GO TO 4.

4. PERFORM DTC CONFIRMATION PROCEDURE - 2

With CONSULT
1. Select “DATA MONITOR” mode of “ENGINE” using CONSULT.
2. Maintain the following conditions for at least 20 consecutive seconds.

ENG SPEED	1,400 – 3,175 rpm (A constant rotation is maintained.)
COOLAN TEMP/S	More than 60°C (140°F)
Selector lever	1st or 2nd position
Driving location uphill	Driving vehicle uphill (Increased engine load will help maintain the driving conditions required for this test.)

CAUTION:
Always drive vehicle at a safe speed.

3. Check 1st trip DTC.

With GST
Follow the procedure “With CONSULT” above.

Is 1st trip DTC detected?

YES >> Proceed to EC-201, "Diagnosis Procedure".
NO-1 >> To check malfunction symptom before repair: Refer to GI-47, "Intermittent Incident".
NO-2 >> Confirmation after repair: INSPECTION END

Diagnosis Procedure

INFOID:0000000011491920

1. CHECK DTC PRIORITY

If DTC P0014 or P0024 is displayed with DTC P0078, P0084, P1078, or P1084, first perform the confirmation procedure (trouble diagnosis) for DTC P0078, P0084, P1078, or P1084.

Is applicable DTC detected?

YES >> Perform diagnosis of applicable.
- DTC P0078: Refer to EC-216, "DTC Logic".
- DTC P0084: Refer to EC-216, "DTC Logic".
- DTC P1078: Refer to EC-400, "DTC Description".
- DTC P1084: Refer to EC-400, "DTC Description".

NO >> GO TO 2.

2. CHECK ENGINE OIL PRESSURE WARNING LAMP

1. Start the engine.

2. Check that engine oil pressure warning lamp is not illuminated.

Is engine oil pressure warning lamp illuminated?

YES >> Proceed to LU-8, "Inspection".
NO >> GO TO 3.

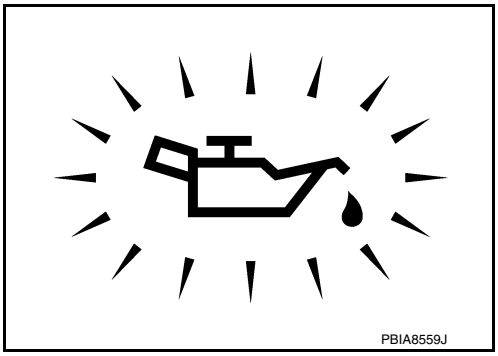

3. CHECK EXHAUST VALVE TIMING CONTROL SOLENOID VALVE

Check exhaust valve timing control solenoid valve. Refer to EC-205, "Component Inspection (Exhaust Valve Timing Control Solenoid Valve)".

Is the inspection result normal?

YES >> GO TO 4.
NO >> Replace malfunctioning exhaust valve timing control solenoid valve. Refer to EM-53, "Valve Timing Control Cover (bank 1)", EM-54, "Valve Timing Control Cover (bank 2)"

4. CHECK EXHAUST VALVE TIMING CONTROL POSITION SENSOR

Check exhaust valve timing control position sensor. Refer to EC-204, "Component Inspection (Exhaust Valve Timing Control Position Sensor)".

Is the inspection result normal?

YES >> GO TO 5.
NO >> Replace malfunctioning exhaust valve timing control position sensor. Refer to EM-43, "Exploded View".

5. CHECK CRANKSHAFT POSITION SENSOR

Check crankshaft position sensor. Refer to EC-203, "Component Inspection (Crankshaft Position Sensor)".

Is the inspection result normal?

YES >> GO TO 6.
NO >> Replace crankshaft position sensor. Refer to EM-36, "Exploded View".

6. CHECK CAMSHAFT POSITION SENSOR

Check camshaft position sensor. Refer to EC-203, "Component Inspection (Camshaft Position Sensor)".

Is the inspection result normal?

YES >> GO TO 7.
NO >> Replace malfunctioning camshaft position sensor. Refer to EM-43, "Exploded View".

7. CHECK CAMSHAFT (EXH)

Check the following.
- Accumulation of debris on the signal plate of camshaft rear end
- Chipping signal plate of camshaft rear end

Is the inspection result normal?

YES >> GO TO 8.
NO >> Remove debris and clean the signal plate of camshaft rear end or replace camshaft. Refer to EM-76, "Removal and Installation".

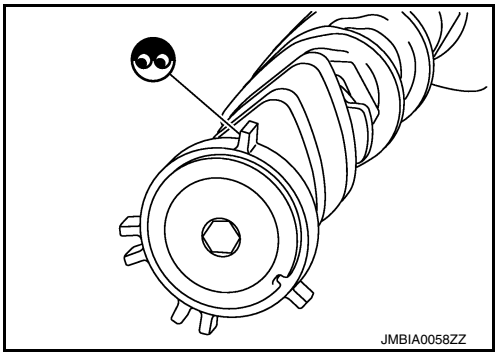

8. CHECK TIMING CHAIN INSTALLATION

Check service records for any recent repairs that may cause timing chain misaligned.

Are there any service records that may cause timing chain misaligned?

YES >> Check timing chain installation. Refer to EM-63, "Removal and Installation".

NO >> GO TO 9.

9. CHECK LUBRICATION CIRCUIT

Perform “Inspection of Camshaft Sprocket (EXT) Oil Groove”. Refer to EM-84, "Inspection after Installation".

Is the inspection result normal?

YES >> INSPECTION END
NO >> Clean lubrication line.

Component Inspection (Camshaft Position Sensor)

INFOID:0000000011491921

1. CHECK CAMSHAFT POSITION SENSOR (PHASE) - 1

1. Turn ignition switch OFF.
2. Loosen the fixing bolt of the sensor.
3. Disconnect camshaft position sensor (PHASE) harness connector.
4. Remove the sensor. Refer to EM-43, "Removal and Installation (LH)", EM-44, "Removal and Installation (RH)".
5. Visually check the sensor for chipping.

Is the inspection result normal?

YES >> GO TO 2.
NO >> Replace malfunctioning camshaft position sensor (PHASE). Refer to EM-43, "Removal and Installation (LH)", EM-44, "Removal and Installation (RH)".

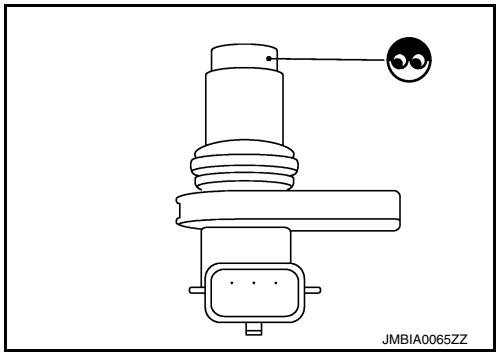

2. CHECK CAMSHAFT POSITION SENSOR (PHASE) - 2

Check resistance camshaft position sensor (PHASE) terminals as follows.

Crankshaft position sensor		Condition		Resistance
+	–			
Terminals				
1	2	Temperature	25°C (77°F)	Except 0 Ω or ∞
1	3			
2	3			

Is the inspection result normal?

YES >> INSPECTION END
NO >> Replace malfunctioning camshaft position sensor (PHASE). Refer to EM-43, "Removal and Installation (LH)", EM-44, "Removal and Installation (RH)".

Component Inspection (Crankshaft Position Sensor)

INFOID:0000000011491922

1. CHECK CRANKSHAFT POSITION SENSOR (POS) - 1

1. Turn ignition switch OFF.
2. Loosen the fixing bolt of the sensor.
3. Disconnect crankshaft position sensor (POS) harness connector.
4. Remove the sensor. Refer to EM-36, "Exploded View".

5. Visually check the sensor for chipping.

Is the inspection result normal?

YES >> GO TO 2.
NO >> Replace crankshaft position sensor (POS). Refer to EM-36, "Exploded View".

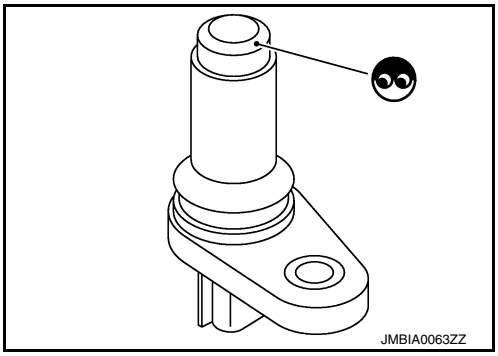

2. CHECK CRANKSHAFT POSITION SENSOR (POS) - 2

Check resistance between crankshaft position sensor (POS) terminals as follows.

Crankshaft position sensor		Condition		Resistance
+	–			
Terminals				
1	2	Temperature	25°C (77°F)	Except 0 Ω or ∞
1	3			
2	3			

Is the inspection result normal?

YES >> INSPECTION END
NO >> Replace crankshaft position sensor (POS). Refer to EM-36, "Exploded View".

Component Inspection (Exhaust Valve Timing Control Position Sensor)

INFOID:0000000011491923

1. EXHAUST VALVE TIMING CONTROL POSITION SENSOR - 1

1. Turn ignition switch OFF.
2. Disconnect exhaust valve timing control position sensor harness connector.
3. Loosen the fixing bolt of the sensor.
4. Remove the sensor. Refer to EM-43, "Exploded View".
5. Visually check the sensor for chipping.

Is the inspection result normal?

YES >> GO TO 2.
NO >> Replace malfunctioning exhaust valve timing control position sensor. Refer to EM-43, "Exploded View".

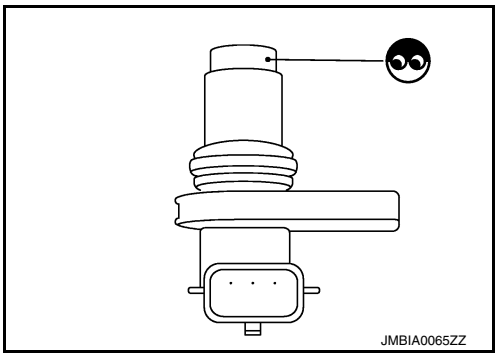

2. EXHAUST VALVE TIMING CONTROL POSITION SENSOR - 2

Check resistance exhaust valve timing control position sensor terminals as follows.

Exhaust valve timing control position sensor		Condition		Resistance
+	–			
Terminal				
1	2	Temperature	25°C (77°F)	Except 0 Ω or ∞ Ω
1	3			
2	3			

Is the inspection result normal?

YES >> INSPECTION END
NO >> Replace malfunctioning exhaust valve timing control position sensor. Refer to EM-43, "Exploded View".

Component Inspection (Exhaust Valve Timing Control Solenoid Valve)

INFOID:0000000011491924

1. CHECK EXHAUST VALVE TIMING CONTROL SOLENOID VALVE - 1

1. Turn ignition switch OFF.
2. Disconnect exhaust valve timing control solenoid valve harness connector.
3. Check resistance between exhaust valve timing control solenoid valve terminals as follows.

Exhaust valve timing control solenoid valve		Condition		Resistance
+	–			
Terminal				
1	2	Temperature	20°C (68°F)	7.0 – 7.8 Ω
1	Ground			∞ (Continuity should not exist)
2				

Is the inspection result normal?

YES >> GO TO 2.
NO >> Replace malfunctioning exhaust valve timing control solenoid valve. Refer to EM-53, "Valve Timing Control Cover (bank 1)", EM-54, "Valve Timing Control Cover (bank 2)".

2. CHECK EXHAUST VALVE TIMING CONTROL SOLENOID VALVE - 2

1. Remove intake valve timing control solenoid valve. Refer to EM-54, "Valve Timing Control Cover (bank 2)", EM-54, "Valve Timing Control Cover (bank 2)".
2. Apply 12 V between exhaust valve timing control solenoid valve terminals 1 and 2, and then interrupt it. Check that the plunger moves as shown in the figure.
   CAUTION:
   Never apply 12 V continuously for 5 seconds or more. Doing so may result in damage to the coil in exhaust valve timing control solenoid valve.
   NOTE:
   Always replace O-ring when exhaust valve timing control solenoid valve is removed.

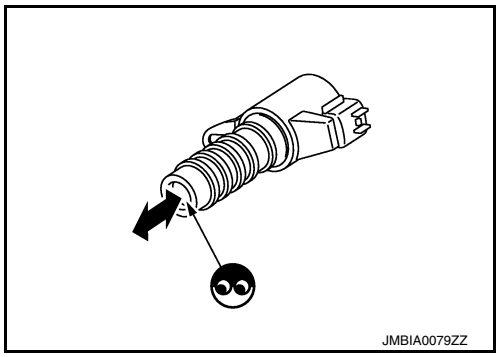

Is the inspection result normal?

YES >> INSPECTION END
NO >> Replace malfunctioning exhaust valve timing control solenoid valve. Refer to EM-53, "Valve Timing Control Cover (bank 1)", EM-54, "Valve Timing Control Cover (bank 2)".

P0031, P0032, P0051, P0052 A/F SENSOR 1 HEATER

DTC Logic

INFOID:0000000011148541

DTC DETECTION LOGIC

DTC No.	CONSULT screen terms (Trouble diagnosis content)	DTC detecting condition	Possible cause
P0031	A/F SEN1 HTR (B1) (HO2S heater control circuit low bank 1 sensor 1)	The current amperage in the A/F sensor 1 heater circuit is out of the normal range. (An excessively low voltage signal is sent to ECM through the A/F sensor 1 heater.)	• Harness or connectors (The A/F sensor 1 heater circuit is open or shorted.) • A/F sensor 1 heater
P0032	A/F SEN1 HTR (B1) (HO2S heater control circuit high bank 1 sensor 1)	The current amperage in the A/F sensor 1 heater circuit is out of the normal range. (An excessively high voltage signal is sent to ECM through the A/F sensor 1 heater.)	• Harness or connectors (The A/F sensor 1 heater circuit is shorted.) • A/F sensor 1 heater
P0051	A/F SEN1 HTR (B2) (HO2S heater control circuit low bank 2 sensor 1)	The current amperage in the A/F sensor 1 heater circuit is out of the normal range. (An excessively low voltage signal is sent to ECM through the A/F sensor 1 heater.)	• Harness or connectors (The A/F sensor 1 heater circuit is open or shorted.) • A/F sensor 1 heater
P0052	A/F SEN1 HTR (B2) (HO2S heater control circuit high bank 2 sensor 1)	The current amperage in the A/F sensor 1 heater circuit is out of the normal range. (An excessively high voltage signal is sent to ECM through the A/F sensor 1 heater.)	• Harness or connectors (The A/F sensor 1 heater circuit is shorted.) • A/F sensor 1 heater

DTC CONFIRMATION PROCEDURE

1. PRECONDITIONING

If DTC Confirmation Procedure has been previously conducted, always perform the following before conducting the next test.

1. Turn ignition switch OFF and wait at least 10 seconds.
2. Turn ignition switch ON.
3. Turn ignition switch OFF and wait at least 10 seconds.

TESTING CONDITION:

Before performing the following procedure, confirm that battery voltage is more than 11 V at idle.

>> GO TO 2.

2. PERFORM DTC CONFIRMATION PROCEDURE

1. Start engine and let it idle for at least 10 seconds.
2. Check 1st trip DTC.

Is 1st trip DTC detected?

YES >> Proceed to EC-206, "Diagnosis Procedure".
NG >> INSPECTION END

Diagnosis Procedure

INFOID:0000000011148542

1. CHECK AIR FUEL RATIO (A/F) SENSOR 1 POWER SUPPLY

1. Disconnect air fuel ratio (A/F) sensor 1 harness connector.
2. Turn ignition switch ON.
3. Check the voltage between A/F sensor 1 harness connector and ground.

DTC	A/F sensor 1			Ground	Voltage
	Bank	Connector	Terminal		
P0031, P0032	1	F72	1	Ground	Battery voltage
P0051, P0052	2	F73	1		

Is the inspection result normal?

YES >> GO TO 3.
NO >> GO TO 2.

2. CHECK AIR FUEL RATIO (A/F) SENSOR 1 POWER SUPPLY CIRCUIT

1. Turn ignition switch OFF.
2. Disconnect IPDM E/R harness connector.
3. Check the continuity between A/F sensor 1 harness connector and IPDM E/R harness connector.

DTC	A/F sensor 1			IPDM E/R		Continuity
	Bank	Connector	Terminal	Connector	Terminal	
P0031, P0032	1	F72	1	F19	52	Existed
P0051, P0052	2	F73	1		53	

Is the inspection result normal?

YES >> Perform the trouble diagnosis for power supply circuit.
NO >> Repair or replace error-detected parts.

3. CHECK A/F SENSOR 1 HEATER OUTPUT SIGNAL CIRCUIT

1. Turn ignition switch OFF.
2. Disconnect ECM harness connector.
3. Check harness continuity between A/F sensor 1 harness connector and ECM harness connector.

DTC	A/F sensor 1			ECM		Continuity
	Bank	Connector	Terminal	Connector	Terminal	
P0031, P0032	1	F72	2	F78	6	Existed
P0051, P0052	2	F73	2		46	

4. Also check harness for short to ground and short to power.

Is the inspection result normal?

YES >> GO TO 4.
NO >> Repair open circuit, short to ground or short to power in harness or connectors.

4. CHECK A/F SENSOR 1 HEATER

Check A/F sensor 1 heater. Refer to EC-207, "Component Inspection".

Is the inspection result normal?

YES >> Check intermittent incident. Refer to GI-47, "Intermittent Incident".
NO >> Replace malfunctioning air fuel ratio (A/F) sensor 1. Refer to EM-31, "Removal and Installation (bank 2)", EM-33, "Removal and Installation (bank 1)".

Component Inspection

INFOID:0000000011148543

1. CHECK AIR FUEL RATIO (A/F) SENSOR 1

1. Turn ignition switch OFF.
2. Disconnect A/F sensor 1 harness connector.
3. Check resistance between A/F sensor 1 terminals as per the following.

+	–	Resistance
A/F sensor 1		
Terminal		
2	1	1.8 - 2.44 Ω [at 25°C (77°F)]
	3	∞ Ω (Continuity should not exist)
	4	
1	3	
	4	

Is the inspection result normal?

YES >> INSPECTION END

NO >> Replace malfunctioning air fuel ratio (A/F) sensor 1. Refer to EM-31, "Removal and Installation (bank 2)", EM-33, "Removal and Installation (bank 1)".

P0037, P0038, P0057, P0058 HO2S2 HEATER

DTC Logic

INFOID:0000000011148544

DTC DETECTION LOGIC

DTC No.	CONSULT screen terms (Trouble diagnosis content)	DTC detecting condition	Possible cause
P0037	HO2S2 HTR (B1) (HO2S heater control circuit low bank 1 sensor 2)	The current amperage in the heated oxygen sensor 2 heater circuit is out of the normal range. (An excessively low voltage signal is sent to ECM through the heated oxygen sensor 2 heater.)	• Harness or connectors (The heated oxygen sensor 2 heater circuit is open or shorted.) • Heated oxygen sensor 2 heater
P0038	HO2S2 HTR (B1) (HO2S heater control circuit high bank 1 sensor 2)	The current amperage in the heated oxygen sensor 2 heater circuit is out of the normal range. (An excessively high voltage signal is sent to ECM through the heated oxygen sensor 2 heater.)	• Harness or connectors (The heated oxygen sensor 2 heater circuit is shorted.) • Heated oxygen sensor 2 heater
P0057	HO2S2 HTR (B2) (HO2S heater control circuit low bank 2 sensor 2)	The current amperage in the heated oxygen sensor 2 heater circuit is out of the normal range. (An excessively low voltage signal is sent to ECM through the heated oxygen sensor 2 heater.)	• Harness or connectors (The heated oxygen sensor 2 heater circuit is open or shorted.) • Heated oxygen sensor 2 heater
P0058	HO2S2 HTR (B2) (HO2S heater control circuit high bank 2 sensor 2)	The current amperage in the heated oxygen sensor 2 heater circuit is out of the normal range. (An excessively high voltage signal is sent to ECM through the heated oxygen sensor 2 heater.)	• Harness or connectors (The heated oxygen sensor 2 heater circuit is shorted.) • Heated oxygen sensor 2 heater

DTC CONFIRMATION PROCEDURE

1.PRECONDITIONING

If DTC Confirmation Procedure has been previously conducted, always perform the following before conducting the next test.
1. Turn ignition switch OFF and wait at least 10 seconds.
2. Turn ignition switch ON.
3. Turn ignition switch OFF and wait at least 10 seconds.

TESTING CONDITION:
Before performing the following procedure, confirm that battery voltage is between 10.5 V and 16 V at idle.

>> GO TO 2.

2.PERFORM DTC CONFIRMATION PROCEDURE

1. Start engine and warm it up to the normal operating temperature.
2. Turn ignition switch OFF and wait at least 10 seconds.
3. Turn ignition switch ON.
4. Turn ignition switch OFF and wait at least 10 seconds.
5. Start engine and keep the engine speed between 3,500 and 4,000 rpm for at least 1 minute under no load.
6. Let engine idle for 1 minute.
7. Check 1st trip DTC.

Is 1st tip DTC detected?

YES >> Proceed to EC-209, "Diagnosis Procedure".
NO >> INSPECTION END

Diagnosis Procedure

INFOID:0000000011148545

1.CHECK HO2S2 POWER SUPPLY

1. Disconnect heated oxygen sensor 2 (HO2S2) harness connector.
2. Turn ignition switch ON.
3. Check the voltage between HO2S2 harness connector and ground.

DTC	HO2S2			Ground	Voltage
	Bank	Connector	Terminal		
P0037, P0038	1	F75	1	Ground	Battery voltage
P0057, P0058	2	F76	1		

Is the inspection result normal?

YES >> GO TO 3.
NO >> GO TO 2.

2. CHECK HO2S2 SENSOR 1 POWER SUPPLY CIRCUIT

1. Turn ignition switch OFF.
2. Disconnect IPDM E/R harness connector.
3. Check the continuity between HO2S2 harness connector and IPDM E/R harness connector.

DTC	HO2S2			IPDM E/R		Continuity
	Bank	Connector	Terminal	Connector	Terminal	
P0037, P0038	1	F75	1	F19	52	Existed
P0057, P0058	2	F76	1		53	

Is the inspection result normal?

YES >> Perform the trouble diagnosis for power supply circuit.
NO >> Repair or replace error-detected parts.

3. CHECK HO2S2 HEATER OUTPUT SIGNAL CIRCUIT FOR OPEN AND SHORT

1. Turn ignition switch OFF.
2. Disconnect ECM harness connector.
3. Check the continuity between HO2S2 harness connector and ECM harness connector.

DTC	HO2S2			ECM		Continuity
	Bank	Connector	Terminal	Connector	Terminal	
P0037, P0038	1	F75	2	F78	7	Existed
P0057, P0058	2	F76	2		47	

4. Also check harness for short to ground and short to power.

Is the inspection result normal?

YES >> GO TO 4.
NO >> Repair open circuit, short to ground or short to power in harness or connectors.

4. CHECK HEATED OXYGEN SENSOR 2 HEATER

Check heated oxygen sensor 2 heater. Refer to EC-210, "Component Inspection".

Is the inspection result normal?

YES >> Check intermittent incident. Refer to GI-47, "Intermittent Incident".
NO >> Replace malfunctioning heated oxygen sensor 2. Refer to EM-31, "Removal and Installation (bank 2)", EM-33, "Removal and Installation (bank 1)".

Component Inspection

INFOID:0000000011148546

1. CHECK HEATED OXYGEN SENSOR 2 HEATER

1. Turn ignition switch OFF.
2. Disconnect heated oxygen sensor 2 harness connector.
3. Check resistance between HO2S2 terminals as per the following.

+	–	Resistance
Heated oxygen sensor 2		
Terminal		
1	2	3.4 - 4.4 Ω [at 25°C (77°F)]
3	1	∞ Ω (Continuity should not exist)
	2	
	4	
4	1	
	2	
	3	

Is the inspection result normal?

YES >> INSPECTION END

NO >> Replace malfunctioning heated oxygen sensor 2. Refer to EM-31, "Removal and Installation (bank 2)", EM-33, "Removal and Installation (bank 1)".

P0075, P0081 IVT CONTROL SOLENOID VALVE

DTC Logic

INFOID:0000000011148547

DTC DETECTION LOGIC

DTC No.	Trouble diagnosis name	DTC detecting condition	Possible cause
P0075	INT/V TIM V/CIR-B1 (Intake valve control solenoid circuit bank 1)	• ECM detects an abnormal voltage in the intake valve timing control solenoid valve control circuit. • ECM detects an abnormal voltage in the intake valve timing intermediate lock control solenoid valve control circuit.	• Harness or connectors (Intake valve timing control solenoid valve circuit is open or shorted.) (Intake valve timing intermediate lock control solenoid valve circuit is open or shorted.) • Intake valve timing control solenoid valve • Intake valve timing intermediate lock control solenoid valve
P0081	INT/V TIM V/CIR-B1 (Intake valve control solenoid circuit bank 2)		

DTC CONFIRMATION PROCEDURE

1.PRECONDITIONING

If DTC Confirmation Procedure has been previously conducted, always perform the following before conducting the next test.

1. Turn ignition switch OFF and wait at least 10 seconds.
2. Turn ignition switch ON.
3. Turn ignition switch OFF and wait at least 10 seconds.

>> GO TO 2.

2.PERFORM DTC CONFIRMATION PROCEDURE

1. Start engine and let it idle for 5 seconds.
2. Check 1st trip DTC.

Is 1st trip DTC detected?

YES >> Proceed to EC-212, "Diagnosis Procedure".
NO >> INSPECTION END

Diagnosis Procedure

INFOID:0000000011148548

1.CHECK INTAKE VALVE TIMING CONTROL SOLENOID VALVE POWER SUPPLY

1. Turn ignition switch OFF.
2. Disconnect intake valve timing (IVT) control solenoid valve harness connector.
3. Turn ignition switch ON.
4. Check the voltage between intake valve timing control solenoid valve harness connector and ground with CONSULT or tester.

DTC	IVT control solenoid valve			Ground	Voltage
	Bank	Connector	Terminal		
P0075	1	F77	1	Ground	Battery voltage
P0081	2	F80	1		

Is the inspection result normal?

YES >> GO TO 2.
NO >> Repair open circuit, short to ground or short to power in harness or connectors.

2.CHECK IVT CONTROL SOLENOID VALVE POWER SUPPLY CIRCUIT

1. Turn ignition switch OFF.
2. Disconnect IPDM E/R harness connector.
3. Check the continuity between IVT control solenoid valve harness connector and IPDM E/R harness connector.

DTC	IVT control solenoid valve			IPDM E/R		Continuity
	Bank	Connector	Terminal	Connector	Terminal	
P0075	1	F77	1	F19	59	Existed
P0081	2	F80	1			

4. Also check harness for short to ground.

Is the inspection result normal?

YES >> GO TO 3.
NO >> Repair or replace error-detected parts.

3. CHECK INTAKE VALVE TIMING CONTROL SOLENOID VALVE OUTPUT SIGNAL CIRCUIT FOR OPEN AND SHORT

1. Turn ignition switch OFF.
2. Disconnect ECM harness connector.
3. Check the continuity between intake valve timing control solenoid valve harness connector and ECM harness connector.

DTC	IVT control solenoid valve			ECM		Continuity
	Bank	Connector	Terminal	Connector	Terminal	
P0075	1	F77	2	F79	117	Existed
P0081	2	F80	2		119	

4. Also check harness for short to ground and short to power.

Is the inspection result normal?

YES >> GO TO 4.
NO >> Repair open circuit, short to ground or short to power in harness or connectors.

4. CHECK IVT CONTROL SOLENOID VALVE

Check the IVT control solenoid valve. Refer to EC-214, "Component Inspection (IVT Control Solenoid Valve)".

Is the inspection result normal?

YES >> GO TO 5.
NO >> Replace IVT control solenoid valve. Refer to EM-52, "Exploded View".

5. CHECK IVT INTERMEDIATE LOCK CONTROL SOLENOID VALVE POWER SUPPLY

1. Disconnect IVT intermediate lock control solenoid valve harness connector.
2. Turn ignition switch ON.
3. Check the voltage between IVT intermediate lock control solenoid valve harness connector and ground.

DTC	IVT intermediate lock control solenoid valve			Ground	Voltage
	Bank	Connector	Terminal		
P0075	1	F81	1	Ground	Battery voltage
P0081	2	F82	1		

Is the inspection result normal?

YES >> GO TO 7.
NO >> GO TO 6.

6. CHECK IVT INTERMEDIATE LOCK CONTROL SOLENOID VALVE POWER SUPPLY CIRCUIT

1. Turn ignition switch OFF.
2. Disconnect IPDM E/R harness connector.
3. Check the continuity between IVT intermediate lock control solenoid valve harness connector and IPDM E/R harness connector.

DTC	IVT intermediate lock control solenoid valve			IPDM E/R		Continuity
	Bank	Connector	Terminal	Connector	Terminal	
P0075	1	F81	1	F19	59	Existed
P0081	2	F82	1			

4. Also check harness for short to ground.

Is the inspection result normal?

YES >> Perform the trouble diagnosis for power supply circuit.
NO >> Repair or replace error-detected parts.

7. CHECK IVT INTERMEDIATE LOCK CONTROL SOLENOID VALVE GROUND CIRCUIT

1. Turn ignition switch OFF.
2. Disconnect ECM harness connector.
3. Check the continuity between IVT intermediate lock control solenoid valve harness connector and ECM harness connector.

DTC	IVT intermediate lock control solenoid valve			ECM		Continuity
	Bank	Connector	Terminal	Connector	Terminal	
P0075	1	F81	2	F79	118	Existed
P0081	2	F82	2		120	

4. Also check harness for short to ground and short to power.

Is the inspection result normal?

YES >> GO TO 8.
NO >> Repair or replace error-detected parts.

8. CHECK IVT INTERMEDIATE LOCK CONTROL SOLENOID VALVE

Check the IVT intermediate lock control solenoid valve. Refer to EC-215, "Component Inspection (IVT Intermediate Lock Control Solenoid Valve)".

Is the inspection result normal?

YES >> Check intermittent incident. Refer to GI-47, "Intermittent Incident".
NO >> Replace IVT intermediate lock control solenoid valve. Refer to EM-52, "Exploded View".

Component Inspection (IVT Control Solenoid Valve)

INFOID:0000000011497957

1. CHECK INTAKE VALVE TIMING CONTROL SOLENOID VALVE-I

1. Turn ignition switch OFF.
2. Disconnect intake valve timing control solenoid valve harness connector.
3. Check resistance between intake valve timing control solenoid valve terminals as follows.

Intake valve timing control solenoid valve		Condition		Resistance
+	–			
Terminal				
1	2	Temperature	20°C (68°F)	7.0 – 7.8 Ω
1	Ground			∞ (Continuity should not exist)
2				

Is the inspection result normal?

YES >> GO TO 2.
NO >> Replace intake valve timing control solenoid valve. Refer to EM-52, "Exploded View".

2. CHECK INTAKE VALVE TIMING CONTROL SOLENOID VALVE-II

1. Remove intake valve timing control solenoid valve. Refer to EM-52, "Exploded View".
2. Provide 12 V DC between intake valve timing control solenoid valve terminals 1 and 2, and then interrupt it. Make sure that the plunger moves as shown in the figure.
   CAUTION:
   Do not apply 12 V DC continuously for 5 seconds or more. Doing so may result in damage to the coil in intake valve timing control solenoid valve.
   NOTE:
   Always replace O-ring when intake valve timing control solenoid valve is removed.

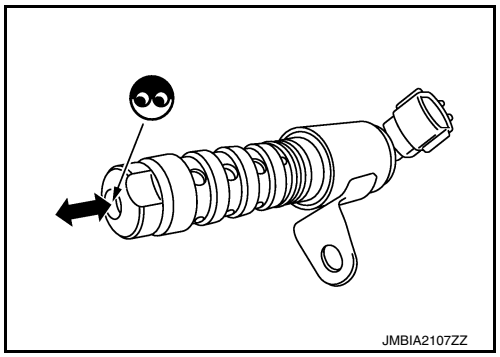

Is the inspection result normal?

YES >> INSPECTION END
NO >> Replace intake valve timing control solenoid valve. Refer to EM-52, "Exploded View".

Component Inspection (IVT Intermediate Lock Control Solenoid Valve)

INFOID:0000000011497958

1. CHECK INTAKE VALVE TIMING INTERMEDIATE LOCK CONTROL SOLENOID VALVE-I

1. Turn ignition switch OFF.
2. Disconnect intake valve timing intermediate lock control solenoid valve harness connector.
3. Check resistance between intake valve timing intermediate lock control solenoid valve terminals as follows.

Intake valve timing intermediate lock control solenoid valve		Condition		Resistance
+	–			
Terminal				
1	2	Temperature	20°C (68°F)	7.0 – 7.8 Ω
1	Ground			∞ (Continuity should not exist)
2				

Is the inspection result normal?

YES >> GO TO 2.
NO >> Replace intake valve timing intermediate lock control solenoid valve. Refer to EM-52, "Exploded View".

2. CHECK INTAKE VALVE TIMING INTERMEDIATE LOCK CONTROL SOLENOID VALVE-II

1. Remove intake valve timing intermediate lock control solenoid valve. Refer to EM-52, "Exploded View".
2. Provide 12 V DC between intake valve timing intermediate lock control solenoid valve terminals 1 and 2, and then interrupt it. Make sure that the plunger moves as shown in the figure.
   CAUTION:
   Do not apply 12 V DC continuously for 5 seconds or more. Doing so may result in damage to the coil in intake valve timing intermediate lock control solenoid valve.
   NOTE:
   Always replace O-ring when intake valve timing intermediate lock control solenoid valve is removed.

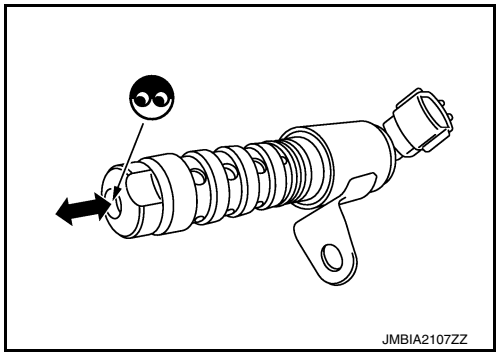

Is the inspection result normal?

YES >> INSPECTION END
NO >> Replace intake valve timing intermediate lock control solenoid valve. Refer to EM-52, "Exploded View".

P0078, P0084 EVT CONTROL SOLENOID VALVE

DTC Logic

INFOID:0000000011491925

DTC DETECTION LOGIC

DTC No.	Trouble diagnosis (Trouble diagnosis content)	Detecting condition	Possible cause
P0078	EX V/T ACT/CIRC-B1 [Exhaust valve timing control solenoid valve (bank 1) circuit]	An improper voltage is sent to the ECM through exhaust valve timing control solenoid valve.	• Harness or connectors (Exhaust valve timing control solenoid valve circuit is open or shorted.) • Exhaust valve timing control solenoid valve
P0084	EX V/T ACT/CIRC-B2 [Exhaust valve timing control solenoid valve (bank 2) circuit]		

DTC CONFIRMATION PROCEDURE

1.PRECONDITIONING

If DTC Confirmation Procedure has been previously conducted, always perform the following procedure before conducting the next test.

1. Turn ignition switch OFF and wait at least 10 seconds.
2. Turn ignition switch ON.
3. Turn ignition switch OFF and wait at least 10 seconds.

>> GO TO 2.

2.PERFORM DTC CONFIRMATION PROCEDURE

1. Start the engine and let it idle for 5 seconds.
2. Check 1st trip DTC.

Is 1st trip DTC detected?

YES >> Proceed to EC-216, "Diagnosis Procedure".
NO-1 >> To check malfunction symptom before repair: Refer to GI-47, "Intermittent Incident".
NO-2 >> Confirmation after repair: INSPECTION END

Diagnosis Procedure

INFOID:0000000011491926

1.CHECK EXHAUST VALVE TIMING CONTROL SOLENOID VALVE POWER SUPPLY CIRCUIT - 1

1. Turn ignition switch OFF.
2. Disconnect exhaust valve timing control solenoid valve harness connector.
3. Turn ignition switch ON.
4. Check the voltage between exhaust valve timing control solenoid valve harness connector and ground.

DTC	+			–	Voltage
	Exhaust valve timing control solenoid valve				
	Bank	Connector	Terminal		
P0078	1	F86	1	Ground	Battery voltage
P0084	2	F85	1		

Is the inspection result normal?

YES >> GO TO 2.
NO >> GO TO 4.

2.CHECK EVT CONTROL SOLENOID VALVE OUTPUT SIGNAL CIRCUIT FOR OPEN AND SHORT

1. Turn ignition switch OFF.
2. Disconnect ECM harness connector.

3. Check the continuity between exhaust valve timing control solenoid valve harness connector and ECM harness connector.

DTC	+			–		Continuity
	Exhaust valve timing control solenoid valve			ECM		
	Bank	Connector	Terminal	Connector	Terminal	
P0078	1	F86	2	F79	58	Existed
P0084	2	F85	2		60	

4. Also check harness for short to ground and short to power.

Is the inspection result normal?

YES >> GO TO 3.
NO >> Repair open circuit, short to ground or short to power in harness or connectors.

3. CHECK EXHAUST VALVE TIMING CONTROL SOLENOID VALVE

Check exhaust valve timing control solenoid valve. Refer to EC-217, "Component Inspection".

Is the inspection result normal?

YES >> INSPECTION END
NO >> Replace malfunctioning exhaust valve timing control solenoid valve. Refer to EM-53, "Valve Timing Control Cover (bank 1)", EM-54, "Valve Timing Control Cover (bank 2)".

4. CHECK EXHAUST VALVE TIMING CONTROL SOLENOID VALVE POWER SUPPLY CIRCUIT - 2

1. Turn ignition switch OFF.
2. Disconnect IPDM E/R harness connector.
3. Check the continuity between IPDM E/R harness connector and exhaust valve timing control solenoid valve harness connector.

DTC	+		–		Continuity
	IPDM E/R		Exhaust valve timing control solenoid valve		
	Connector	Terminal	Connector	Terminal	
P0075	F19	59	F72	1	Existed
P0081			F73		Existed

4. Also check harness for short to ground.

Is the inspection result normal?

YES >> Perform the trouble diagnosis for power supply circuit.
NO >> Repair or replace error-detected parts.

Component Inspection

INFOID:0000000011491927

1. CHECK EXHAUST VALVE TIMING CONTROL SOLENOID VALVE - 1

1. Turn ignition switch OFF.
2. Disconnect exhaust valve timing control solenoid valve harness connector.
3. Check resistance between exhaust valve timing control solenoid valve terminals as follows.

Exhaust valve timing control solenoid valve		Condition		Resistance
+	–			
Terminal				
1	2	Temperature	20°C (68°F)	7.0 – 7.8 Ω
1	Ground			∞ (Continuity should not exist)
2				

Is the inspection result normal?

YES >> GO TO 2.
NO >> Replace malfunctioning exhaust valve timing control solenoid valve. Refer to EM-53, "Valve Timing Control Cover (bank 1)", EM-54, "Valve Timing Control Cover (bank 2)".

2. CHECK EXHAUST VALVE TIMING CONTROL SOLENOID VALVE - 2

1. Remove exhaust valve timing control solenoid valve. Refer to EM-53, "Valve Timing Control Cover (bank 1)", EM-54, "Valve Timing Control Cover (bank 2)".
2. Apply 12 V between exhaust valve timing control solenoid valve terminals 1 and 2, and then interrupt it. Check that the plunger moves as shown in the figure.
   CAUTION:
   Never apply 12 V continuously for 5 seconds or more. Doing so may result in damage to the coil in exhaust valve timing control solenoid valve.
   NOTE:
   Always replace O-ring when exhaust valve timing control solenoid valve is removed.

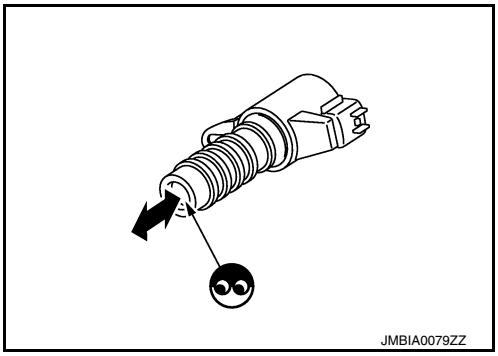

Is the inspection result normal?

YES >> INSPECTION END
NO >> Replace malfunctioning exhaust valve timing control solenoid valve. Refer to EM-53, "Valve Timing Control Cover (bank 1)", EM-54, "Valve Timing Control Cover (bank 2)".

P0101 MAF SENSOR

DTC Logic

INFOID:0000000011148550

DTC DETECTION LOGIC

NOTE:
If DTC P0101 is displayed with other DTC, first perform the trouble diagnosis for other DTC.

DTC No.	CONSULT screen terms (Trouble diagnosis content)	DTC detecting condition	Possible cause
P0101	MAF SEN/CIRCUIT-B1 (Mass or volume air flow “A” circuit range/performance)	• A high voltage from the sensor is sent to ECM under light load driving condition. • A low voltage from the sensor is sent to ECM under heavy load driving condition.	• Harness or connectors (The sensor circuit is open or shorted.) • Intake air leaks • MAF sensor • EVAP control system pressure sensor • Intake air temperature sensor

DTC CONFIRMATION PROCEDURE

1.PRECONDITIONING

If DTC CONFIRMATION PROCEDURE has been previously conducted, always perform the following procedure before conducting the next test.
1. Turn ignition switch OFF and wait at least 10 seconds.
2. Turn ignition switch ON.
3. Turn ignition switch OFF and wait at least 10 seconds.

>> GO TO 2.

2.PERFORM DTC CONFIRMATION PROCEDURE

1. Start engine and warm it up to normal operating temperature.
2. Drive the vehicle for at least 5 seconds under the following conditions:
   CAUTION:
   Always drive vehicle at safe speed.

Selector lever	Suitable position
Vehicle speed	40 km/h (25 MPH) or more

   NOTE:
   • The gear must be fixed while driving the vehicle.
   • Keep the accelerator pedal as steady as possible during cruising.
3. Check 1st trip DTC.

Is 1st trip DTC detected?

YES >> Proceed to EC-219, "Diagnosis Procedure".
NO >> INSPECTION END

Diagnosis Procedure

INFOID:0000000011148551

1.CHECK INTAKE SYSTEM

Check the following for connection.
• Air duct
• Vacuum hoses
• Intake air passage between air duct and intake manifold

Is the inspection result normal?

YES >> GO TO 2.
NO >> Reconnect the parts.

2.CHECK MASS AIR FLOW (MAF) SENSOR POWER SUPPLY

1. Disconnect MAF sensor harness connector.
2. Turn ignition switch ON.
3. Check the voltage between MAF sensor harness connector and ground.

+		–	Voltage
MAF sensor			
Connector	Terminal		
F74	1	Ground	Approx. 5 V

Is the inspection result normal?

YES >> GO TO 4.
NO >> GO TO 3.

3. CHECK MASS AIR FLOW (MAF) SENSOR POWER SUPPLY CIRCUIT

1. Turn ignition switch OFF.
2. Disconnect ECM harness connector.
3. Check the continuity between MAF sensor harness connector and ECM harness connector.

MAF sensor		ECM		Continuity
Connector	Terminal	Connector	Terminal	
F74	1	F78	28	Existed

Is the inspection result normal?

YES >> Check intermittent incident. Refer to GI-47, "Intermittent Incident".
NO >> Repair or replace error-detected parts.

4. CHECK MAF SENSOR GROUND CIRCUIT

1. Turn ignition switch OFF.
2. Disconnect ECM harness connector.
3. Check the continuity between MAF sensor harness connector and ECM harness connector.

MAF sensor		ECM		Continuity
Connector	Terminal	Connector	Terminal	
F74	2	F78	40	Existed

4. Also check harness for short to ground and short to power.

Is the inspection result normal?

YES >> GO TO 5.
NO >> Repair open circuit or short to ground or short to power in harness or connectors.

5. CHECK MAF SENSOR INPUT SIGNAL CIRCUIT

1. Check the continuity between MAF sensor harness connector and ECM harness connector.

MAF sensor		ECM		Continuity
Connector	Terminal	Connector	Terminal	
F74	3	F78	38	Existed

2. Also check harness for short to ground and short to power.

Is the inspection result normal?

YES >> GO TO 6.
NO >> Repair open circuit or short to ground or short to power in harness or connectors.

6. CHECK INTAKE AIR TEMPERATURE SENSOR

Check intake air temperature sensor. Refer to EC-221, "Component Inspection".

Is the inspection result normal?

YES >> GO TO 7.

NO >> Replace MAF sensor (with intake air temperature sensor).

7. CHECK EVAP CONTROL SYSTEM PRESSURE SENSOR

Check EVAP control system pressure sensor. Refer to EC-349, "Component Inspection".

Is the inspection result normal?

YES >> GO TO 8.
NO >> Replace EVAP control system pressure sensor.

8. CHECK MAF SENSOR

Check MAF sensor. Refer to EC-221, "Component Inspection".

Is the inspection result normal?

YES >> Check intermittent incident. Refer to GI-47, "Intermittent Incident".
NO >> Replace MAF sensor. Refer to EM-24, "Removal and Installation".

Component Inspection

INFOID:0000000011148552

1. CHECK MASS AIR FLOW (MAF) SENSOR-I

With CONSULT

1. Turn ignition switch OFF.
2. Reconnect all harness connectors disconnected.
3. Start engine and warm it up to normal operating temperature.
4. Connect CONSULT and select “DATA MONITOR” mode.
5. Select “MASS AIR FLOW SENSOR (Hz)” and check the indication.

Monitor item	Condition	Indication (Hz)
MASS AIR FLOW SENSOR (Hz)	Ignition switch ON (Engine stopped.)	Approx. 3,720 Hz
	Idle (Engine is warmed-up to normal operating temperature.)	4,100 – 4,700 Hz
	Idle to about 4,000 rpm	4,100 – 4,700 to Approx. 8,000 Hz*

*: Check for linear frequency rise in response to engine being increased to about 4,000 rpm.

Without CONSULT

1. Turn ignition switch OFF.
2. Reconnect all harness connectors disconnected.
3. Start engine and warm it up to normal operating temperature.
4. Check the frequency between ECM harness connector terminals under the following conditions.

ECM			Condition	Frequency (Hz)
Connector	+	–		
	Terminal			
F78	38	40	Ignition switch ON (Engine stopped.)	Approx. 3,720 Hz
			Idle (Engine is warmed-up to normal operating temperature.)	4,100 – 4,700 Hz
			Idle to about 4,000 rpm	4,100 – 4,700 to Approx. 8,000 Hz*

*: Check for linear frequency rise in response to engine being increased to about 4,000 rpm.

Is the inspection result normal?

YES >> GO TO 4.
NO >> GO TO 2.

2. CHECK FOR THE CAUSE OF UNEVEN AIR FLOW THROUGH MAF SENSOR

1. Turn ignition switch OFF.
2. Check for the cause of uneven air flow through MAF sensor. Refer to the following.

- Crushed air ducts
- Malfunctioning seal of air cleaner element
- Uneven dirt of air cleaner element
- Improper specification of intake air system parts

Is the inspection result normal?

YES >> GO TO 4.
NO >> GO TO 3.

3. CHECK MAF SENSOR-II

With CONSULT

1. Repair or replace malfunctioning part.
2. Start engine and warm it up to normal operating temperature.
3. Connect CONSULT and select “DATA MONITOR” mode.
4. Select “MASS AIR FLOW SENSOR (Hz)” and check the indication.

Monitor item	Condition	Indication (Hz)
MASS AIR FLOW SENSOR (Hz)	Ignition switch ON (Engine stopped.)	Approx. 3,720 Hz
	Idle (Engine is warmed-up to normal operating temperature.)	4,100 – 4,700 Hz
	Idle to about 4,000 rpm	4,100 – 4,700 to Approx. 8,000 Hz*

*: Check for linear frequency rise in response to engine being increased to about 4,000 rpm.

Without CONSULT

1. Repair or replace malfunctioning part.
2. Start engine and warm it up to normal operating temperature.
3. Check the frequency between ECM harness connector terminals under the following conditions.

ECM			Condition	Frequency (Hz)
Connector	+	–		
	Terminal			
F78	38	40	Ignition switch ON (Engine stopped.)	Approx. 3,720 Hz
			Idle (Engine is warmed-up to normal operating temperature.)	4,100 – 4,700 Hz
			Idle to about 4,000 rpm	4,100 – 4,700 to Approx. 8,000 Hz*

*: Check for linear frequency rise in response to engine being increased to about 4,000 rpm.

Is the inspection result normal?

YES >> INSPECTION END
NO >> GO TO 4.

4. CHECK MAF SENSOR-III

With CONSULT

1. Turn ignition switch OFF.
2. Disconnect MAF sensor harness connector and reconnect it again.
3. Start engine and warm it up to normal operating temperature.
4. Connect CONSULT and select “DATA MONITOR” mode.
5. Select “MASS AIR FLOW SENSOR (Hz)” and check the indication.

Monitor item	Condition	Indication (Hz)
MASS AIR FLOW SENSOR (Hz)	Ignition switch ON (Engine stopped.)	Approx. 3,720 Hz
	Idle (Engine is warmed-up to normal operating temperature.)	4,100 – 4,700 Hz
	Idle to about 4,000 rpm	4,100 – 4,700 to Approx. 8,000 Hz*

*: Check for linear frequency rise in response to engine being increased to about 4,000 rpm.

Without CONSULT

1. Turn ignition switch OFF.
2. Disconnect MAF sensor harness connector and reconnect it again.
3. Start engine and warm it up to normal operating temperature.
4. Check the frequency between ECM harness connector terminals under the following conditions.

ECM			Condition	Frequency (Hz)
Connector	+	–		
	Terminal			
F78	38	40	Ignition switch ON (Engine stopped.)	Approx. 3,720 Hz
			Idle (Engine is warmed-up to normal operating temperature.)	4,100 – 4,700 Hz
			Idle to about 4,000 rpm	4,100 – 4,700 to Approx. 8,000 Hz*

*: Check for linear frequency rise in response to engine being increased to about 4,000 rpm.

Is the inspection result normal?

YES >> INSPECTION END
NO >> Clean or replace MAF sensor. Refer to EM-24, "Removal and Installation".

P0102, P0103 MAF SENSOR

DTC Logic

INFOID:0000000011148553

DTC DETECTION LOGIC

NOTE:
If DTC P0102 or P0103 is displayed with DTC P0643, first perform the trouble diagnosis for DTC P0643. Refer to EC-395, "DTC Logic".

DTC No.	CONSULT screen terms (Trouble diagnosis content)	DTC detecting condition	Possible cause
P0102	MAF SEN/CIRCUIT-B1 (Mass or volume air flow "A" circuit low input)	An excessively low voltage from the sensor is sent to ECM.	• Harness or connectors (The sensor circuit is open or shorted.) • Intake air leakage • Mass air flow sensor
P0103	MAF SEN/CIRCUIT-B1 (Mass or volume air flow "A" circuit high input)	An excessively high voltage from the sensor is sent to ECM.	• Harness or connectors (The sensor circuit is open or shorted.) • Mass air flow sensor

DTC CONFIRMATION PROCEDURE

1.PRECONDITIONING

If DTC Confirmation Procedure has been previously conducted, always perform the following before conducting the next test.
1. Turn ignition switch OFF and wait at least 10 seconds.
2. Turn ignition switch ON.
3. Turn ignition switch OFF and wait at least 10 seconds.

Which DTC is detected?

P0102 >> GO TO 2.
P0103 >> GO TO 3.

2.PERFORM DTC CONFIRMATION PROCEDURE FOR DTC P0102

1. Start engine and wait at least 5 seconds.
2. Check DTC.

Is DTC detected?

YES >> Proceed to EC-224, "Diagnosis Procedure".
NO >> INSPECTION END

3.PERFORM DTC CONFIRMATION PROCEDURE FOR DTC P0103-I

1. Turn ignition switch ON and wait at least 5 seconds.
2. Check DTC.

Is DTC detected?

YES >> Proceed to EC-224, "Diagnosis Procedure".
NO >> GO TO 4.

4.PERFORM DTC CONFIRMATION PROCEDURE FOR DTC P0103-II

1. Start engine and wait at least 5 seconds.
2. Check DTC.

Is DTC detected?

YES >> Proceed to EC-224, "Diagnosis Procedure".
NO >> INSPECTION END

Diagnosis Procedure

INFOID:0000000011148554

1.INSPECTION START

Confirm the detected DTC.

Which DTC is detected?

P0102 >> GO TO 2.

P0103 >> GO TO 3.

2. CHECK INTAKE SYSTEM

Check the following for connection.
- Air duct
- Vacuum hoses
- Intake air passage between air duct to intake manifold

Is the inspection result normal?

YES >> GO TO 3.
NO >> Reconnect the parts.

3. CHECK MAF SENSOR POWER SUPPLY

1. Disconnect mass air flow (MAF) sensor harness connector.
2. Turn ignition switch ON.
3. Check the voltage between MAF sensor harness connector and ground.

+		–	Voltage
MAF sensor			
Connector	Terminal		
F74	1	Ground	Approx. 5 V

Is the inspection result normal?

YES >> GO TO 5.
NO >> GO TO 4.

4. CHECK MASS AIR FLOW (MAF) SENSOR POWER SUPPLY CIRCUIT

1. Turn ignition switch OFF.
2. Disconnect ECM harness connector.
3. Check the continuity between MAF sensor harness connector and ECM harness connector.

MAF sensor		ECM		Continuity
Connector	Terminal	Connector	Terminal	
F74	1	F78	28	Existed

Is the inspection result normal?

YES >> Check intermittent incident. Refer to GI-47, "Intermittent Incident".
NO >> Repair or replace error-detected parts.

5. CHECK MAF SENSOR GROUND CIRCUIT

1. Turn ignition switch OFF.
2. Disconnect ECM harness connector.
3. Check the continuity between MAF sensor harness connector and ECM harness connector.

MAF sensor		ECM		Continuity
Connector	Terminal	Connector	Terminal	
F74	2	F78	40	Existed

4. Also check harness for short to ground and short to power.

Is the inspection result normal?

YES >> GO TO 6.
NO >> Repair open circuit, short to ground or short to power in harness or connectors.

6. CHECK MAF SENSOR INPUT SIGNAL CIRCUIT

1. Check the continuity between MAF sensor harness connector and ECM harness connector.

MAF sensor		ECM		Continuity
Connector	Terminal	Connector	Terminal	
F74	3	F78	38	Existed

2. Also check harness for short to ground and short to power.

Is the inspection result normal?

YES >> GO TO 7.
NO >> Repair open circuit, short to ground or short to power in harness or connectors.

7. CHECK MASS AIR FLOW SENSOR

Check mass air flow sensor. Refer to EC-226, "Component Inspection".

Is the inspection result normal?

YES >> Check intermittent incident. Refer to GI-47, "Intermittent Incident".
NO >> Replace mass air flow sensor. Refer to EM-24, "Removal and Installation".

Component Inspection

INFOID:0000000011148555

1. CHECK MASS AIR FLOW (MAF) SENSOR-I

With CONSULT

1. Turn ignition switch OFF.
2. Reconnect all harness connectors disconnected.
3. Start engine and warm it up to normal operating temperature.
4. Connect CONSULT and select “DATA MONITOR” mode.
5. Select “MASS AIR FLOW SENSOR (Hz)” and check the indication.

Monitor item	Condition	Indication (Hz)
MASS AIR FLOW SENSOR (Hz)	Ignition switch ON (Engine stopped.)	Approx. 3,720 Hz
	Idle (Engine is warmed-up to normal operating temperature.)	4,100 – 4,700 Hz
	Idle to about 4,000 rpm	4,100 – 4,700 to Approx. 8,000 Hz*

*: Check for linear frequency rise in response to engine being increased to about 4,000 rpm.

Without CONSULT

1. Turn ignition switch OFF.
2. Reconnect all harness connectors disconnected.
3. Start engine and warm it up to normal operating temperature.
4. Check the frequency between ECM harness connector terminals under the following conditions.

ECM			Condition	Frequency (Hz)
Connector	+	–		
	Terminal			
F78	38	40	Ignition switch ON (Engine stopped.)	Approx. 3,720 Hz
			Idle (Engine is warmed-up to normal operating temperature.)	4,100 – 4,700 Hz
			Idle to about 4,000 rpm	4,100 – 4,700 to Approx. 8,000 Hz*

*: Check for linear frequency rise in response to engine being increased to about 4,000 rpm.

Is the inspection result normal?

YES >> GO TO 4.
NO >> GO TO 2.

2. CHECK FOR THE CAUSE OF UNEVEN AIR FLOW THROUGH MAF SENSOR

1. Turn ignition switch OFF.
2. Check for the cause of uneven air flow through MAF sensor. Refer to the following.

- Crushed air ducts
- Malfunctioning seal of air cleaner element

- Uneven dirt of air cleaner element
- Improper specification of intake air system parts

Is the inspection result normal?

YES >> GO TO 4.
NO >> GO TO 3.

3. CHECK MAF SENSOR-II

With CONSULT

1. Repair or replace malfunctioning part.
2. Start engine and warm it up to normal operating temperature.
3. Connect CONSULT and select “DATA MONITOR” mode.
4. Select “MASS AIR FLOW SENSOR (Hz)” and check the indication.

Monitor item	Condition	Indication (Hz)
MASS AIR FLOW SENSOR (Hz)	Ignition switch ON (Engine stopped.)	Approx. 3,720 Hz
	Idle (Engine is warmed-up to normal operating temperature.)	4,100 – 4,700 Hz
	Idle to about 4,000 rpm	4,100 – 4,700 to Approx. 8,000 Hz*

*: Check for linear frequency rise in response to engine being increased to about 4,000 rpm.

Without CONSULT

1. Repair or replace malfunctioning part.
2. Start engine and warm it up to normal operating temperature.
3. Check the frequency between ECM harness connector terminals under the following conditions.

ECM			Condition	Frequency (Hz)
Connector	+	–		
	Terminal			
F78	38	40	Ignition switch ON (Engine stopped.)	Approx. 3,720 Hz
			Idle (Engine is warmed-up to normal operating temperature.)	4,100 – 4,700 Hz
			Idle to about 4,000 rpm	4,100 – 4,700 to Approx. 8,000 Hz*

*: Check for linear frequency rise in response to engine being increased to about 4,000 rpm.

Is the inspection result normal?

YES >> INSPECTION END
NO >> GO TO 4.

4. CHECK MAF SENSOR-III

With CONSULT

1. Turn ignition switch OFF.
2. Disconnect MAF sensor harness connector and reconnect it again.
3. Start engine and warm it up to normal operating temperature.
4. Connect CONSULT and select “DATA MONITOR” mode.
5. Select “MASS AIR FLOW SENSOR (Hz)” and check the indication.

Monitor item	Condition	Indication (Hz)
MASS AIR FLOW SENSOR (Hz)	Ignition switch ON (Engine stopped.)	Approx. 3,720 Hz
	Idle (Engine is warmed-up to normal operating temperature.)	4,100 – 4,700 Hz
	Idle to about 4,000 rpm	4,100 – 4,700 to Approx. 8,000 Hz*

*: Check for linear frequency rise in response to engine being increased to about 4,000 rpm.

Without CONSULT

1. Turn ignition switch OFF.
2. Disconnect MAF sensor harness connector and reconnect it again.
3. Start engine and warm it up to normal operating temperature.
4. Check the frequency between ECM harness connector terminals under the following conditions.

ECM			Condition	Frequency (Hz)
Connector	+	–		
	Terminal			
F78	38	40	Ignition switch ON (Engine stopped.)	Approx. 3,720 Hz
			Idle (Engine is warmed-up to normal operating temperature.)	4,100 – 4,700 Hz
			Idle to about 4,000 rpm	4,100 – 4,700 to Approx. 8,000 Hz*

*: Check for linear frequency rise in response to engine being increased to about 4,000 rpm.

Is the inspection result normal?

YES >> INSPECTION END
NO >> Clean or replace MAF sensor. Refer to EM-24, "Removal and Installation".

P0111 IAT SENSOR

DTC Logic

INFOID:0000000011148556

DTC DETECTION LOGIC

DTC No.	CONSULT screen terms (Trouble diagnosis content)	DTC detecting condition	Possible cause
P0111	IAT SENSOR 1 B1 (Intake air temperature sensor 1 circuit range/performance bank 1)	The comparison result of signals transmitted to ECM from each temperature sensor (IAT sensor, ECT sensor, FTT sensor, and EOT sensor) shows that the voltage signal of the IAT sensor is higher/lower than that of other temperature sensors when the engine is started with its cold state.	• Harness or connectors (High or low resistance in the IAT sensor circuit) • IAT sensor

DTC CONFIRMATION PROCEDURE

1.INSPECTION START

Is it necessary to erase permanent DTC?

YES >> GO TO 3.
NO >> GO TO 2.

2.PERFORM COMPONENT FUNCTION CHECK

Perform component function check. Refer to EC-230, "Component Function Check".

NOTE:
Use the component function check to check the overall function of the IAT sensor circuit. During this check, a 1st trip DTC might not be confirmed.

Is the inspection result normal?

YES >> INSPECTION END
NO >> Proceed to EC-230, "Diagnosis Procedure".

3.PRECONDITIONING

If DTC CONFIRMATION PROCEDURE has been previously conducted, always perform the following procedure before conducting the next test.

1. Turn ignition switch OFF and wait at least 10 seconds.
2. Turn ignition switch ON.
3. Turn ignition switch OFF and wait at least 10 seconds.

TESTING CONDITION:

- **Before performing the following procedure, do not add fuel.**
- **Before performing the following procedure, check that fuel level is between 1/4 and 4/4.**
- **Before performing the following procedure, confirm that battery voltage is 11 V or more at idle.**

>> GO TO 4.

4.PERFORM DTC CONFIRMATION PROCEDURE

1. Move the vehicle to a cool place.
   NOTE:
   Cool the vehicle in an environment of ambient air temperature between –10°C (14°F) and 35°C (95°F).
2. Turn ignition switch OFF and leave the vehicle for 12 hours.
   CAUTION:
   Never turn ignition switch ON during this procedure.
   NOTE:
   The vehicle must be cooled with the hood open.
3. Start engine and let it idle for 5 minutes or more.
   CAUTION:
   Never turn ignition switch OFF during idling.
4. Check 1st trip DTC.

Is 1st trip DTC detected?

YES >> Proceed to EC-230, "Diagnosis Procedure".
NO >> INSPECTION END

Component Function Check

INFOID:0000000011148557

1. CHECK INTAKE AIR TEMPERATURE (IAT) SENSOR

1. Turn ignition switch OFF.
2. Disconnect mass air flow sensor harness connector.
3. Check resistance between mass air flow sensor terminals as follows.

Terminals	Condition		Resistance (kΩ)
2 and 4	Temperature [°C (°F)]	25 (77)	1,800 – 2,200

Is the inspection result normal?

YES >> Check intermittent incident. Refer to GI-47, "Intermittent Incident".
NO >> Proceed to EC-230, "Diagnosis Procedure".

Diagnosis Procedure

INFOID:0000000011148558

1. CHECK INTAKE AIR TEMPERATURE (IAT) SENSOR

Check intake air temperature sensor. Refer to EC-230, "Component Inspection".

Is the inspection result normal?

YES >> Check intermittent incident. Refer to GI-47, "Intermittent Incident".
NO >> Replace mass air flow sensor. Refer to EM-24, "Exploded View".

Component Inspection

INFOID:0000000011148559

1. CHECK INTAKE AIR TEMPERATURE SENSOR

1. Turn ignition switch OFF.
2. Disconnect mass air flow sensor harness connector.
3. Check resistance between mass air flow sensor terminals as per the following.

Mass air flow sensor		Condition		Resistance (kΩ)
+	–			
Terminals				
4	2	Temperature [°C (°F)]	25 (77)	1.800 - 2.200

Is the inspection result normal?

YES >> INSPECTION END
NO >> Replace mass air flow sensor. Refer to EM-24, "Exploded View".

P0112, P0113 IAT SENSOR

DTC Logic

INFOID:0000000011148560

DTC DETECTION LOGIC

DTC No.	CONSULT screen terms (Trouble diagnosis content)	DTC detecting condition	Possible cause
P0112	IAT SEN/CIRCUIT-B1 (Intake air temperature sensor 1 circuit low bank 1)	An excessively low voltage from the sensor is sent to ECM.	• Harness or connectors (The sensor circuit is open or shorted.) • Intake air temperature sensor
P0113	IAT SEN/CIRCUIT-B1 (Intake air temperature sensor 1 circuit high bank 1)	An excessively high voltage from the sensor is sent to ECM.	

DTC CONFIRMATION PROCEDURE

1. PRECONDITIONING

If DTC Confirmation Procedure has been previously conducted, always perform the following before conducting the next test.

1. Turn ignition switch OFF and wait at least 10 seconds.
2. Turn ignition switch ON.
3. Turn ignition switch OFF and wait at least 10 seconds.

>> GO TO 2.

2. PERFORM DTC CONFIRMATION PROCEDURE

1. Turn ignition switch ON and wait at least 5 seconds.
2. Check 1st trip DTC.

Is 1st trip DTC detected?

YES >> Proceed to EC-231, "Diagnosis Procedure".
NO >> INSPECTION END

Diagnosis Procedure

INFOID:0000000011148561

1. CHECK INTAKE AIR TEMPERATURE SENSOR POWER SUPPLY

1. Disconnect mass air flow sensor (with intake air temperature sensor) harness connector.
2. Turn ignition switch ON.
3. Check the voltage between mass air flow sensor harness connector and ground.

MAF sensor		Ground	Voltage
Connector	Terminal		
F74	4	Ground	Approx. 5 V

Is the inspection result normal?

YES >> GO TO 2.
NO >> Repair open circuit, short to ground or short to power in harness or connectors.

2. CHECK INTAKE AIR TEMPERATURE SENSOR GROUND CIRCUIT FOR OPEN AND SHORT

1. Turn ignition switch OFF.
2. Disconnect ECM harness connector.
3. Check harness continuity between mass air flow sensor harness connector and ECM harness connector.

MAF sensor		ECM		Continuity
Connector	Terminal	Connector	Terminal	
F74	2	F78	40	Existed

4. Also check harness for short to ground and short to power.

Is the inspection result normal?

YES >> GO TO 3.
NO >> Repair open circuit, short to ground or short to power in harness or connectors.

3. CHECK INTAKE AIR TEMPERATURE SENSOR

Check intake air temperature sensor. Refer to EC-232, "Component Inspection".

Is the inspection result normal?

YES >> Check intermittent incident. Refer to GI-47, "Intermittent Incident".
NO >> Replace mass air flow sensor. Refer to EM-24, "Exploded View".

Component Inspection

INFOID:0000000011148562

1. CHECK INTAKE AIR TEMPERATURE SENSOR

1. Turn ignition switch OFF.
2. Disconnect mass air flow sensor harness connector and reconnect it again.
3. Turn ignition switch ON.
4. On CONSULT screen, select “ENGINE” >> “DATA MONITOR” >> “INT/A TEMP SEN”.
5. Check that the indicated value of “INT/A TEMP SEN” is almost the same as intake air temperature.

Is the inspection result normal?

YES >> INSPECTION END
NO >> Replace mass air flow sensor. Refer to EM-24, "Exploded View".

P0116 ECT SENSOR

DTC Logic

INFOID:0000000011148563

DTC DETECTION LOGIC

DTC No.	CONSULT screen terms (Trouble diagnosis content)	DTC detecting condition	Possible cause
P0116	ECT SEN/CIRC (Engine coolant temperature sensor 1 circuit range/performance)	The comparison result of signals transmitted to ECM from each temperature sensor (IAT sensor, ECT sensor, FTT sensor, and EOT sensor) shows that the voltage signal of the ECT sensor is higher/lower than that of other temperature sensors when the engine is started with its cold state.	• Harness or connectors (High or low resistance in the ECT sensor circuit) • ECT sensor

DTC CONFIRMATION PROCEDURE

1. INSPECTION START

Is it necessary to erase permanent DTC?

YES >> GO TO 3.
NO >> GO TO 2.

2. PERFORM COMPONENT FUNCTION CHECK

Perform component function check. Refer to EC-234, "Component Function Check".

NOTE:
Use the component function check to check the overall function of the ECT sensor circuit. During this check, a 1st trip DTC might not be confirmed.

Is the inspection result normal?

YES >> INSPECTION END
NO >> Proceed to EC-234, "Diagnosis Procedure".

3. PRECONDITIONING

If DTC CONFIRMATION PROCEDURE has been previously conducted, always perform the following procedure before conducting the next test.

1. Turn ignition switch OFF and wait at least 10 seconds.
2. Turn ignition switch ON.
3. Turn ignition switch OFF and wait at least 10 seconds.

TESTING CONDITION:

- **Before performing the following procedure, do not add fuel.**
- **Before performing the following procedure, check that fuel level is between 1/4 and 4/4.**
- **Before performing the following procedure, confirm that battery voltage is 11 V or more at idle.**

>> GO TO 4.

4. PERFORM DTC CONFIRMATION PROCEDURE

1. Move the vehicle to a cool place.
   NOTE:
   Cool the vehicle in an environment of ambient air temperature between –10°C (14°F) and 35°C (95°F).
2. Turn ignition switch OFF and leave the vehicle for 12 hours.
   CAUTION:
   Never turn ignition switch ON during this procedure.
   NOTE:
   The vehicle must be cooled with the hood open.
3. Start engine and let it idle for 20 minutes or more.
   CAUTION:
   Never turn ignition switch OFF during idling.
4. Check 1st trip DTC.

Is 1st trip DTC detected?

YES >> Proceed to EC-234, "Diagnosis Procedure".
NO >> INSPECTION END

Component Function Check

INFOID:0000000011503925

1. CHECK ENGINE COOLANT TEMPERATURE (ECT) SENSOR

1. Turn ignition switch OFF.
2. Disconnect ECT sensor harness connector.
3. Remove ECT sensor. Refer to CO-26, "Exploded View".
4. Check resistance between ECT sensor terminals by heating with hot water as shown in the figure.

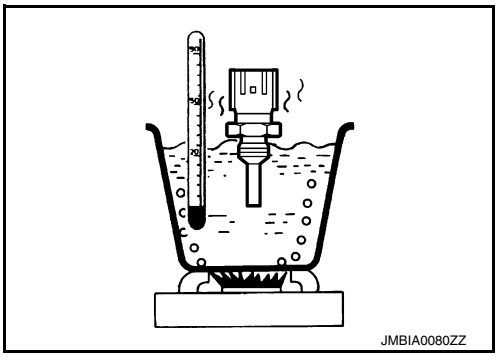

Terminals	Condition		Resistance (kΩ)
1 and 2	Temperature [°C (°F)]	20 (68)	2.37 – 2.63
		50 (122)	0.68 – 1.00
		90 (194)	0.236 – 0.260

Is the inspection result normal?

YES >> Check intermittent incident. Refer to GI-47, "Intermittent Incident".
NO >> Proceed to EC-234, "Diagnosis Procedure".

Diagnosis Procedure

INFOID:0000000011503926

1. CHECK ENGINE COOLANT TEMPERATURE (ECT) SENSOR

Check ECT sensor. Refer to EC-234, "Component Inspection".

Is the inspection result normal?

YES >> Check intermittent incident. Refer to GI-47, "Intermittent Incident".
NO >> Replace ECT sensor. Refer to CO-26, "Exploded View".

Component Inspection

INFOID:0000000011148566

1. CHECK ENGINE COOLANT TEMPERATURE SENSOR

1. Turn ignition switch OFF.
2. Disconnect engine coolant temperature sensor harness connector.
3. Remove engine coolant temperature sensor. Refer to CO-26, "Exploded View".
4. Check resistance between engine coolant temperature sensor terminals as per the following.

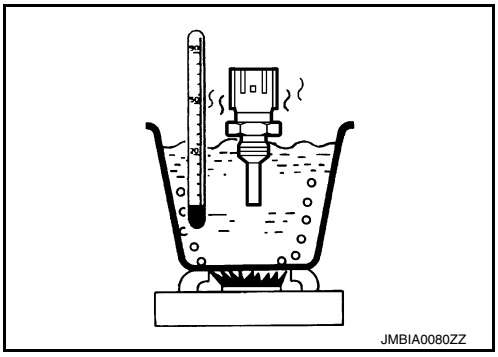

ECT sensor		Condition		Resistance (kΩ)
+	–			
Terminal				
1	2	Temperature [°C (°F)]	20 (68)	2.37 - 2.63
			50 (122)	0.68 - 1.00
			90 (194)	0.236 - 0.260

Is the inspection result normal?

YES >> INSPECTION END
NO >> Replace engine coolant temperature sensor. Refer to CO-26, "Exploded View".

P0117, P0118 ECT SENSOR

DTC Logic

INFOID:0000000011148567

DTC DETECTION LOGIC

DTC No.	CONSULT screen terms (Trouble diagnosis content)	DTC detecting condition	Possible Cause
P0117	ECT SEN/CIRC (Engine coolant temperature sensor 1 circuit low)	An excessively low voltage from the sensor is sent to ECM.	• Harness or connectors (The sensor circuit is open or shorted.) • Engine coolant temperature sensor
P0118	ECT SEN/CIRC (Engine coolant temperature sensor 1 circuit high)	An excessively high voltage from the sensor is sent to ECM.	

DTC CONFIRMATION PROCEDURE

1. PRECONDITIONING

If DTC Confirmation Procedure has been previously conducted, always perform the following before conducting the next test.

1. Turn ignition switch OFF and wait at least 10 seconds.
2. Turn ignition switch ON.
3. Turn ignition switch OFF and wait at least 10 seconds.

>> GO TO 2.

2. PERFORM DTC CONFIRMATION PROCEDURE

1. Turn ignition switch ON and wait at least 5 seconds.
2. Check DTC.

Is DTC detected?

YES >> Proceed to EC-235, "Diagnosis Procedure".
NO >> INSPECTION END

Diagnosis Procedure

INFOID:0000000011148568

1. CHECK ECT SENSOR POWER SUPPLY

1. Disconnect engine coolant temperature (ECT) sensor harness connector.
2. Turn ignition switch ON.
3. Check the voltage between ECT sensor harness connector and ground.

ECT sensor		Ground	Voltage
Connector	Terminal		
F61	1	Ground	Approx. 5 V

Is the inspection result normal?

YES >> GO TO 2.
NO >> Repair open circuit, short to ground or short to power in harness or connectors.

2. CHECK ECT SENSOR GROUND CIRCUIT

1. Turn ignition switch OFF.
2. Disconnect ECM harness connector.
3. Check the continuity between ECT sensor harness connector and ECM harness connector.

ECT sensor		ECM		Continuity
Connector	Terminal	Connector	Terminal	
F61	2	F78	35	Existed

4. Also check harness for short to ground and short to power.

Is the inspection result normal?

YES >> GO TO 3.
NO >> Repair open circuit, short to ground or short to power in harness or connectors.

3. CHECK ENGINE COOLANT TEMPERATURE SENSOR

Check engine coolant temperature sensor. Refer to EC-236, "Component Inspection".

Is the inspection result normal?

YES >> Check intermittent incident. Refer to GI-47, "Intermittent Incident".
NO >> Replace engine coolant temperature sensor. Refer to CO-26, "Exploded View".

Component Inspection

INFOID:0000000011148569

1. CHECK ENGINE COOLANT TEMPERATURE SENSOR

1. Turn ignition switch OFF.
2. Disconnect engine coolant temperature sensor harness connector.
3. Remove engine coolant temperature sensor. Refer to CO-26, "Exploded View".
4. Check resistance between engine coolant temperature sensor terminals as per the following.

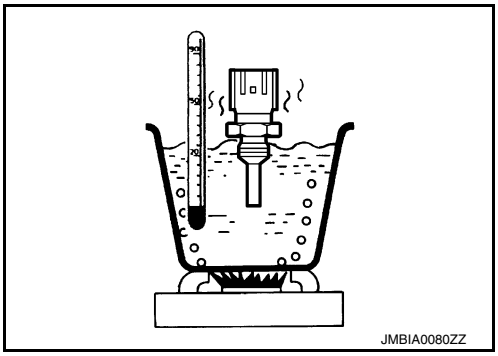

ECT sensor		Condition		Resistance (kΩ)
+	–			
Terminal				
1	2	Temperature [°C (°F)]	20 (68)	2.37 - 2.63
			50 (122)	0.68 - 1.00
			90 (194)	0.236 - 0.260

Is the inspection result normal?

YES >> INSPECTION END
NO >> Replace engine coolant temperature sensor. Refer to CO-26, "Exploded View".

P0122, P0123 TP SENSOR

DTC Logic

INFOID:0000000011148570

DTC DETECTION LOGIC

NOTE:
If DTC P0122 or P0123 is displayed with DTC P0643, first perform the trouble diagnosis for DTC P0643. Refer to EC-395, "DTC Logic".

DTC No.	CONSULT screen terms (Trouble diagnosis content)	DTC detecting condition	Possible cause
P0122	TP SEN 2/CIRC-B1 (Throttle/Pedal position sensor/switch “A” circuit low)	An excessively low voltage from the TP sensor 2 is sent to ECM.	• Harness or connectors (TP sensor 2 circuit is open or shorted.) • Electric throttle control actuator (TP sensor 2)
P0123	TP SEN 2/CIRC-B1 (Throttle/Pedal position sensor/switch “A” circuit high)	An excessively high voltage from the TP sensor 2 is sent to ECM.	

DTC CONFIRMATION PROCEDURE

1. PRECONDITIONING

If DTC Confirmation Procedure has been previously conducted, always perform the following before conducting the next test.
1. Turn ignition switch OFF and wait at least 10 seconds.
2. Turn ignition switch ON.
3. Turn ignition switch OFF and wait at least 10 seconds.

TESTING CONDITION:
Before performing the following procedure, confirm that battery voltage is more than 8 V at idle.

>> GO TO 2.

2. PERFORM DTC CONFIRMATION PROCEDURE

1. Start engine and let it idle for 1 second.
2. Check DTC.

Is DTC detected?

YES >> Proceed to EC-237, "Diagnosis Procedure".
NO >> INSPECTION END

Diagnosis Procedure

INFOID:0000000011148571

1. CHECK THROTTLE POSITION SENSOR 2 POWER SUPPLY

1. Disconnect electric throttle control actuator harness connector.
2. Turn ignition switch ON.
3. Check the voltage between electric throttle control actuator harness connector and ground.

+		–	Voltage
Electric throttle control actuator			
Connector	Terminal		
F50	5	Ground	Approx. 5 V

Is the inspection result normal?

YES >> GO TO 3.
NO >> GO TO 2.

2. CHECK THROTTLE POSITION SENSOR 2 POWER SUPPLY CIRCUIT

1. Turn ignition switch OFF.
2. Disconnect ECM harness connector.

3. Check the continuity between electric throttle control actuator harness connector and ECM harness connector.

Electric throttle control actuator		ECM		Continuity
Connector	Terminal	Connector	Terminal	
F50	5	F79	98	Existed

Is the inspection result normal?

YES >> Check intermittent incident. Refer to GI-47, "Intermittent Incident".
NO >> Repair or replace error-detected parts.

3. CHECK THROTTLE POSITION SENSOR 2 GROUND CIRCUIT

1. Turn ignition switch OFF.
2. Disconnect ECM harness connector.
3. Check the continuity between electric throttle control actuator harness connector and ECM harness connector.

Electric throttle control actuator		ECM		Continuity
Connector	Terminal	Connector	Terminal	
F50	4	F79	75	Existed

4. Also check harness for short to ground and short to power.

Is the inspection result normal?

YES >> GO TO 4.
NO >> Repair open circuit, short to ground or short to power in harness or connectors.

4. CHECK THROTTLE POSITION SENSOR 2 INPUT SIGNAL CIRCUIT

1. Check the continuity between electric throttle control actuator harness connector and ECM harness connector.

Electric throttle control actuator		ECM		Continuity
Connector	Terminal	Connector	Terminal	
F50	3	F79	72	Existed

2. Also check harness for short to ground and short to power.

Is the inspection result normal?

YES >> GO TO 5.
NO >> Repair open circuit, short to ground or short to power in harness or connectors.

5. CHECK THROTTLE POSITION SENSOR

Check throttle position sensor. Refer to EC-238, "Component Inspection".

Is the inspection result normal?

YES >> Check intermittent incident. Refer to GI-47, "Intermittent Incident".
NO >> Replace electric throttle control actuator. Refer to EM-26, "Exploded View".

Component Inspection

INFOID:0000000011148572

1. CHECK THROTTLE POSITION SENSOR

1. Turn ignition switch OFF.
2. Reconnect all harness connectors disconnected.
3. Perform EC-159, "Work Procedure".
4. Turn ignition switch ON.
5. Set selector lever to D position.
6. Check the voltage between ECM harness connector terminals under the following conditions.

ECM			Condition		Voltage
Connector	+	–			
	Terminal				
F79	71	75	Accelerator pedal	Fully released	More than 0.36 V
				Fully depressed	Less than 4.75 V
	72			Fully released	Less than 4.75 V
				Fully depressed	More than 0.36 V

Is the inspection result normal?

YES >> INSPECTION END
NO >> Replace electric throttle control actuator. Refer to EM-26, "Exploded View".

P0125 ECT SENSOR

DTC Logic

INFOID:0000000011148573

DTC DETECTION LOGIC

NOTE:

- **If DTC P0125 is displayed with P0116, first perform the trouble diagnosis for DTC P0116. Refer to EC-233, "DTC Logic".**
- **If DTC P0125 is displayed with P0117 or P0118, first perform the trouble diagnosis for DTC P0117, P0118. Refer to EC-235, "DTC Logic".**

DTC No.	CONSULT screen terms (Trouble diagnosis content)	DTC detecting condition	Possible cause
P0125	ECT SENSOR (Insufficient coolant temperature for closed loop fuel control)	• Voltage sent to ECM from the sensor is not practical, even when some time has passed after starting the engine. • Engine coolant temperature is insufficient for closed loop fuel control.	• Harness or connectors (High resistance in the circuit) • Engine coolant temperature sensor • Thermostat

DTC CONFIRMATION PROCEDURE

1. PRECONDITIONING

If DTC Confirmation Procedure has been previously conducted, always perform the following before conducting the next test.

1. Turn ignition switch OFF and wait at least 10 seconds.
2. Turn ignition switch ON.
3. Turn ignition switch OFF and wait at least 10 seconds.

>> GO TO 2.

2. CHECK ENGINE COOLANT TEMPERATURE SENSOR FUNCTION

With CONSULT

1. Turn ignition switch ON.
2. Select “DATA MONITOR” mode with CONSULT.
3. Check that “COOLANT TEMP/S” is above 10°C (50°F).

With GST

Follow the procedure “With CONSULT” above.

Is the temperature above 10°C (50°F)?

YES >> INSPECTION END
NO >> GO TO 3.

3. PERFORM DTC CONFIRMATION PROCEDURE

With CONSULT

1. Start engine and run it for 65 minutes at idle speed.
   If “COOLANT TEMP/S” increases to more than 10°C (50°F) within 65 minutes, stop engine because the test result will be OK.
   CAUTION:
   Never overheat engine.
2. Check 1st trip DTC.

With GST

Follow the procedure “With CONSULT” above.

Is 1st trip DTC detected?

YES >> EC-240, "Diagnosis Procedure"
NO >> INSPECTION END

Diagnosis Procedure

INFOID:0000000011148574

1. CHECK ENGINE COOLANT TEMPERATURE SENSOR

Check engine coolant temperature sensor. Refer to EC-241, "Component Inspection".

Is the inspection result normal?

YES >> GO TO 2.
NO >> Replace engine coolant temperature sensor.

2. CHECK THERMOSTAT OPERATION

When the engine is cold [lower than 70°C (158°F)] condition, grasp lower radiator hose and confirm that the engine coolant does not flow.

Is the inspection result normal?

YES >> Check intermittent incident. Refer to GI-47, "Intermittent Incident".
NO >> Repair or replace thermostat. Refer to CO-24, "Exploded View".

Component Inspection

INFOID:0000000011148575

1. CHECK ENGINE COOLANT TEMPERATURE SENSOR

1. Turn ignition switch OFF.
2. Disconnect engine coolant temperature sensor harness connector.
3. Remove engine coolant temperature sensor. Refer to CO-26, "Exploded View".
4. Check resistance between engine coolant temperature sensor terminals as per the following.

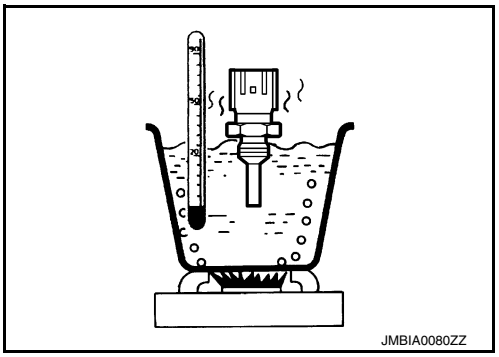

ECT sensor		Condition		Resistance (kΩ)
+	–			
Terminal				
1	2	Temperature [°C (°F)]	20 (68)	2.37 - 2.63
			50 (122)	0.68 - 1.00
			90 (194)	0.236 - 0.260

Is the inspection result normal?

YES >> INSPECTION END
NO >> Replace engine coolant temperature sensor. Refer to CO-26, "Exploded View".

P0127 IAT SENSOR

DTC Logic

INFOID:0000000011148576

DTC DETECTION LOGIC

DTC No.	CONSULT screen terms (Trouble diagnosis content)	DTC detecting condition	Possible cause
P0127	IAT SENSOR-B1 (Intake air temperature too high)	Rationally incorrect voltage from the sensor is sent to ECM, compared with the voltage signal from engine coolant temperature sensor.	• Harness or connectors (The sensor circuit is open or shorted) • Intake air temperature sensor

DTC CONFIRMATION PROCEDURE

1.PRECONDITIONING

If DTC Confirmation Procedure has been previously conducted, always perform the following before conducting the next test.
1. Turn ignition switch OFF and wait at least 10 seconds.
2. Turn ignition switch ON.
3. Turn ignition switch OFF and wait at least 10 seconds.

TESTING CONDITION:
This test may be conducted with the drive wheels lifted in the shop or by driving the vehicle. If a road test is expected to be easier, it is unnecessary to lift the vehicle.

>> GO TO 2.

2.PERFORM DTC CONFIRMATION PROCEDURE

With CONSULT
1. Wait until engine coolant temperature is less than 96°C (205°F)
- Turn ignition switch ON.
- Select “DATA MONITOR” mode with CONSULT.
- Check the engine coolant temperature.
- If the engine coolant temperature is not less than 96°C (205°F), turn ignition switch OFF and cool down engine.

NOTE:
Perform the following steps before engine coolant temperature is above 96°C (205°F).
2. Turn ignition switch ON.
3. Select “DATA MONITOR” mode with CONSULT.
4. Start engine.
5. Hold vehicle speed at more than 70 km/h (43 MPH) for 100 consecutive seconds.
   CAUTION:
   Always drive vehicle at a safe speed.
6. Check 1st trip DTC.

With GST
Follow the procedure “With CONSULT” above.

Is 1st trip DTC detected?

YES >> Proceed to EC-242, "Diagnosis Procedure".
NO >> INSPECTION END

Diagnosis Procedure

INFOID:0000000011148577

1.CHECK INTAKE AIR TEMPERATURE SENSOR

Check intake air temperature sensor. Refer to EC-243, "Component Inspection".

Is the inspection result normal?

YES >> Check intermittent incident. Refer to GI-47, "Intermittent Incident".
NO >> Replace mass air flow sensor (with intake air temperature sensor).

Component Inspection

INFOID:0000000011148578

1. CHECK INTAKE AIR TEMPERATURE SENSOR

1. Turn ignition switch OFF.
2. Disconnect mass air flow sensor harness connector.
3. Check resistance between mass air flow sensor terminals as per the following.

Mass air flow sensor		Condition		Resistance (kΩ)
+	–			
Terminals				
4	2	Temperature [°C (°F)]	25 (77)	1.800 - 2.200

Is the inspection result normal?

YES >> INSPECTION END
NO >> Replace mass air flow sensor. Refer to EM-24, "Exploded View".

P0128 THERMOSTAT FUNCTION

DTC Logic

INFOID:0000000011148579

DTC DETECTION LOGIC

NOTE:
If DTC P0128 is displayed with DTC P0300, P0301, P0302, P0303, P0304, P0305 or P0306, first perform the trouble diagnosis for P0300, P0301, P0302, P0303, P0304, P0305, and P0306. Refer to EC-307, "DTC Logic".
Engine coolant temperature has not risen enough to open the thermostat even though the engine has run long enough.
This is due to a leak in the seal or the thermostat being stuck open.

DTC No.	CONSULT screen terms (Trouble diagnosis content)	DTC detecting condition	Possible cause
P0128	THERMSTAT FNCTN [Coolant thermostat (coolant temperature below thermostat regulating temperature)]	The engine coolant temperature does not reach to specified temperature even though the engine has run long enough.	• Thermostat • Leakage from sealing portion of thermostat • Engine coolant temperature sensor

DTC CONFIRMATION PROCEDURE

NOTE:
Never refuel before and during the following procedure.

1. PRECONDITIONING-I

If DTC Confirmation Procedure has been previously conducted, always perform the following procedure before conducting the next test.
1. Turn ignition switch OFF and wait at least 10 seconds.
2. Turn ignition switch ON.
3. Turn ignition switch OFF and wait at least 10 seconds.

>> GO TO 2.

2. PRECONDITIONING-II

With CONSULT
1. Turn ignition switch ON.
2. Check the following conditions:

Ambient temperature	–10°C (14°F) or more
A/C switch	OFF
Blower fan switch	OFF

3. Select “DATA MONITOR” mode of “ENGINE” using CONSULT.
4. Check the following conditions:

COOLANT TEMP/S	–10°C – 55°C (14 – 131°F)

Is the condition satisfied?

YES >> GO TO 3.
NO >> 1. Satisfy the condition.
2. GO TO 3.

3. PERFORM DTC CONFIRMATION PROCEDURE-I

With CONSULT
1. Start engine.
2. Drive the vehicle until the following condition is satisfied.
CAUTION:
Always drive vehicle at safe speed.
- **STEP 1**

Drive the vehicle under the conditions instructed below until the difference between “COOLANT TEMP/S” and “FUEL T/TMP SE” becomes at least 25°C (45°F).

COOLANT TEMP/S	74°C (165°F) or less
FUEL T/TMP SE	Less than the value calculated by subtracting 25°C (45°F) from “COOLANT TEMP/S”.*

*: Example

COOLANT TEMP/S	FUEL T/TMP SE
70°C (158°F)	45°C (113°F) or less
65°C (149°F)	40°C (104°F) or less
60°C (140°F)	35°C (95°F) or less

- **STEP 2**

Drive the vehicle at 50 km/h (32 MPH) or more with the difference between “COOLANT TEMP/S” and “FUEL T/TMP SE” maintained at 25°C (45°F) or more.

NOTE:
Keep the accelerator pedal as steady as possible during cruising.

- **STEP 3**

Drive the vehicle at 50 km/h (32 MPH) or more until “COOLANT TEMP/S” increases by 6°C (43°F).

NOTE:
Keep the accelerator pedal as steady as possible during cruising.

Is the condition satisfied?

YES >> GO TO 4.
NO >> GO TO 1.

4. PERFORM DTC CONFIRMATION PROCEDURE-II

With CONSULT

1. Drive the vehicle until the following condition is satisfied.

COOLANT TEMP/S	71°C (160°F) or more

CAUTION:
Always drive vehicle at safe speed.

2. Check 1st trip DTC.

Is 1st trip DTC detected?

YES >> Proceed to EC-245, "Diagnosis Procedure".
NO >> INSPECTION END

Diagnosis Procedure

INFOID:0000000011148580

1. CHECK ENGINE COOLANT TEMPERATURE SENSOR

Check engine coolant temperature sensor. Refer to EC-245, "Component Inspection".

Is the inspection result normal?

YES >> GO TO 2.
NO >> Replace engine coolant temperature sensor.

2. CHECK THERMOSTAT

Check thermostat. Refer to CO-24, "Removal and Installation".

Is the inspection result normal?

YES >> INSPECTION END
NO >> Replace thermostat. Refer to CO-24, "Removal and Installation".

Component Inspection

INFOID:0000000011148581

1. CHECK ENGINE COOLANT TEMPERATURE SENSOR

1. Turn ignition switch OFF.
2. Disconnect engine coolant temperature sensor harness connector.
3. Remove engine coolant temperature sensor. Refer to CO-26, "Removal and Installation".
4. Check resistance between engine coolant temperature sensor terminals as per the following.

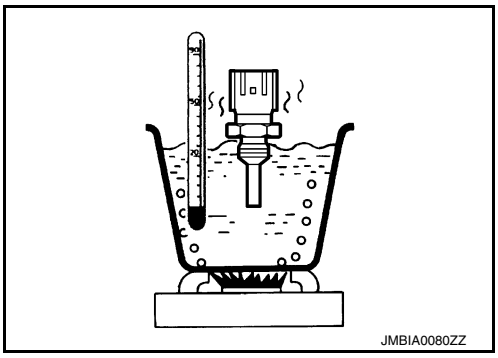

ECT sensor		Condition		Resistance (kΩ)
+	–			
Terminal				
1	2	Temperature [°C (°F)]	20 (68)	2.37 - 2.63
			50 (122)	0.68 - 1.00
			90 (194)	0.236 - 0.260

Is the inspection result normal?

YES >> INSPECTION END
NO >> Replace engine coolant temperature sensor. Refer to CO-26, "Removal and Installation".

P0130, P0150 A/F SENSOR 1

DTC Logic

INFOID:0000000011148582

DTC DETECTION LOGIC

To judge malfunctions, the diagnosis checks that the A/F signal computed by ECM from the A/F sensor 1 signal fluctuates according to fuel feedback control.

DTC No.	CONSULT screen terms (Trouble diagnosis content)	DTC detecting condition		Possible cause
P0130	A/F SENSOR1 (B1) (O2 sensor circuit bank 1 sensor 1)	A)	The A/F signal computed by ECM from the A/F sensor 1 signal is constantly in a range other than approx. 2.2 V.	• Harness or connectors (The A/F sensor 1 circuit is open or shorted.) • A/F sensor 1
		B)	The A/F signal computed by ECM from the A/F sensor 1 signal is constantly approx. 2.2 V.	
P0150	A/F SENSOR1 (B2) (O2 sensor circuit bank 2 sensor 1)	A)	The A/F signal computed by ECM from the A/F sensor 1 signal is constantly in a range other than approx. 2.2 V.	• Harness or connectors (The A/F sensor 1 circuit is open or shorted.) • A/F sensor 1
		B)	The A/F signal computed by ECM from the A/F sensor 1 signal is constantly approx. 2.2 V.	

DTC CONFIRMATION PROCEDURE

1. PRECONDITIONING

If DTC Confirmation Procedure has been previously conducted, always perform the following before conducting the next test.

1. Turn ignition switch OFF and wait at least 10 seconds.
2. Turn ignition switch ON.
3. Turn ignition switch OFF and wait at least 10 seconds.

TESTING CONDITION:

Before performing the following procedure, confirm that battery voltage is more than 11 V at idle.

>> GO TO 2.

2. PERFORM DTC CONFIRMATION PROCEDURE FOR MALFUNCTION A

1. Start engine and warm it up to normal operating temperature.
2. Let engine idle for 2 minutes.
3. Check 1st trip DTC.

Is 1st trip DTC detected?

YES >> Proceed to EC-249, "Diagnosis Procedure".
NO-1 >> With CONSULT: GO TO 3.
NO-2 >> With GST: GO TO 7.

3. CHECK AIR FUEL RATIO (A/F) SENSOR 1 FUNCTION

1. Start engine and warm it up to normal operating temperature.
2. Select “A/F SEN1 (B1)” or “A/F SEN1 (B2)” in “DATA MONITOR” mode with CONSULT.
3. Check “A/F SEN1 (B1)” or “A/F SEN1 (B2)” indication.

Does the indication fluctuate around 2.2 V?

YES >> GO TO 4.
NO >> Proceed to EC-249, "Diagnosis Procedure".

4. PERFORM DTC CONFIRMATION PROCEDURE FOR MALFUNCTION B-I

1. Select “A/F SEN1 (B1) P1276” (for DTC P0130) or “A/F SEN1 (B2) P1286” (for DTC P0150) of “A/F SEN1” in “DTC WORK SUPPORT” mode with CONSULT.
2. Touch “START”.
3. When the following conditions are met, “TESTING” will be displayed on the CONSULT screen.

ENG SPEED	1,000 - 3,200 rpm
VHCL SPEED SE	More than 64 km/h (40 mph)
B/FUEL SCHDL	1.0 - 10.0 msec
Selector lever	D position

If "TESTING" is not displayed after 20 seconds, retry from step 2.
CAUTION:
Always drive vehicle at a safe speed.

Is "TESTING" displayed on CONSULT screen?

YES >> GO TO 5.
NO >> Check A/F sensor 1 function again. GO TO 3.

5. PERFORM DTC CONFIRMATION PROCEDURE FOR MALFUNCTION B-II

Release accelerator pedal fully.
NOTE:
Never apply brake when releasing the accelerator pedal.

Which does "TESTING" change to?

COMPLETED>>GO TO 6.
OUT OF CONDITION>>Retry DTC CONFIRMATION PROCEDURE. GO TO 4.

6. PERFORM DTC CONFIRMATION PROCEDURE FOR MALFUNCTION B-III

Touch "SELF-DIAG RESULT".

Which is displayed on CONSULT screen?

OK >> INSPECTION END
NG >> Proceed to EC-249, "Diagnosis Procedure".

7. PERFORM COMPONENT FUNCTION CHECK FOR MALFUNCTION B

Perform component function check. Refer to EC-248, "Component Function Check".
NOTE:
Use component function check to check the overall function of the A/F sensor 1 circuit. During this check, a 1st trip DTC might not be confirmed.

Is the inspection result normal?

YES >> INSPECTION END
NO >> Proceed to EC-249, "Diagnosis Procedure".

Component Function Check

INFOID:0000000011148583

1. PERFORM COMPONENT FUNCTION CHECK

With GST

1. Start engine and warm it up to normal operating temperature.
2. Drive the vehicle at a speed of 80 km/h (50 MPH) for a few minutes in the suitable gear position.
3. Shift the selector lever to the D position, then release the accelerator pedal fully until the vehicle speed decreases to 50 km/h (31 MPH).
   CAUTION:
   Always drive vehicle at a safe speed.
   NOTE:
   Never apply brake when releasing the accelerator pedal.
4. Repeat steps 2 and 3 for 5 times.
5. Stop the vehicle and turn ignition switch OFF.
6. Wait at least 10 seconds and restart engine.
7. Repeat steps 2 and 3 for 5 times.
8. Stop the vehicle.
9. Check 1st trip DTC.

Is 1st trip DTC detected?

YES >> Proceed to EC-249, "Diagnosis Procedure".
NO >> INSPECTION END

Diagnosis Procedure

INFOID:0000000011148584

1. CHECK AIR FUEL RATIO (A/F) SENSOR 1 POWER SUPPLY

1. Disconnect A/F sensor 1 harness connector.
2. Turn ignition switch ON.
3. Check the voltage between A/F sensor 1 harness connector and ground.

DTC	A/F sensor 1			Ground	Voltage
	Bank	Connector	Terminal		
P0130	1	F72	1	Ground	Battery voltage
P0150	2	F73	1		

Is the inspection result normal?

YES >> GO TO 3.
NO >> GO TO 2.

2. CHECK AIR FUEL RATIO (A/F) SENSOR 1 POWER SUPPLY CIRCUIT

1. Turn ignition switch OFF.
2. Disconnect IPDM E/R harness connector.
3. Check the continuity between A/F sensor 1 harness connector and IPDM E/R harness connector.

DTC	A/F sensor 1			IPDM E/R		Continuity
	Bank	Connector	Terminal	Connector	Terminal	
P0130	1	F72	1	F19	52	Existed
P0150	2	F73	1		53	

Is the inspection result normal?

YES >> Perform the trouble diagnosis for power supply circuit.
NO >> Repair or replace error-detected parts.

3. CHECK A/F SENSOR 1 INPUT SIGNAL CIRCUIT

1. Turn ignition switch OFF.
2. Disconnect ECM harness connector.
3. Check the continuity between A/F sensor 1 harness connector and ECM harness connector.

DTC	A/F sensor 1			ECM		Continuity
	Bank	Connector	Terminal	Connector	Terminal	
P0130	1	F72	3	F79	66	Existed
			4		67	
P0150	2	F73	3		76	
			4		77	

4. Check the continuity between A/F sensor 1 harness connector and ground, or ECM harness connector and ground.

DTC	A/F sensor 1			Ground	Continuity
	Bank	Connector	Terminal		
P0130	1	F72	3	Ground	Not existed
			4		
P0150	2	F73	3		
			4		

DTC	ECM		Ground	Continuity
	Connector	Terminal		
P0130	F79	66	Ground	Not existed
		67		
P0150		76		
		77		

5. Also check harness for short to power.

Is the inspection result normal?

YES >> GO TO 4.
NO >> Repair open circuit, short to ground or short to power in harness or connectors.

4. CHECK INTERMITTENT INCIDENT

Check intermittent incident. Refer to GI-47, "Intermittent Incident".

Is the inspection result normal?

YES >> Replace malfunctioning air fuel ratio (A/F) sensor 1. Refer to EM-31, "Removal and Installation (bank 2)", EM-33, "Removal and Installation (bank 1)".
NO >> Repair or replace error-detected parts.

P0131, P0151 A/F SENSOR 1

DTC Logic

INFOID:0000000011148585

DTC DETECTION LOGIC

To judge the malfunction, the diagnosis checks that the A/F signal computed by ECM from the A/F sensor 1 signal is not inordinately low.

DTC No.	CONSULT screen terms (Trouble diagnosis content)	DTC detecting condition	Possible cause
P0131	A/F SENSOR1 (B1) (O2 sensor circuit low voltage bank 1 sensor 1)	• The A/F signal computed by ECM from the A/F sensor 1 signal is constantly approx. 0 V.	• Harness or connectors (The A/F sensor 1 circuit is open or shorted.) • A/F sensor 1
P0151	A/F SENSOR1 (B2) (O2 sensor circuit high voltage bank 2 sensor 1)		

DTC CONFIRMATION PROCEDURE

1.PRECONDITIONING

If DTC Confirmation Procedure has been previously conducted, always perform the following before conducting the next test.

1. Turn ignition switch OFF and wait at least 10 seconds.
2. Turn ignition switch ON.
3. Turn ignition switch OFF and wait at least 10 seconds.

TESTING CONDITION:

Before performing the following procedure, confirm that battery voltage is more than 10.5 V at idle.

>> GO TO 2.

2.CHECK A/F SENSOR 1 FUNCTION

With CONSULT

1. Start engine and warm it up to normal operating temperature.
2. Select “A/F SEN1 (B1)” or “A/F SEN1 (B2)” in “DATA MONITOR” mode with CONSULT.
3. Check “A/F SEN1 (B1)” or “A/F SEN1 (B2)” indication.

With GST

Follow the procedure “With CONSULT” above.

Is the indication constantly approx. 0 V?

YES >> Proceed to EC-252, "Diagnosis Procedure".
NO >> GO TO 3.

3.PERFORM DTC CONFIRMATION PROCEDURE

With CONSULT

1. Turn ignition switch OFF, wait at least 10 seconds.
2. Turn ignition switch ON.
3. Turn ignition switch OFF, wait at least 10 seconds and then restart engine.
4. Drive and accelerate vehicle to more than 40 km/h (25 MPH) within 20 seconds after restarting engine.
   CAUTION:
   Always drive vehicle at a safe speed.
5. Maintain the following conditions for approximately 20 consecutive seconds.

ENG SPEED	1,000 - 3,200 rpm
VHCL SPEED SE	More than 40 km/h (25 mph)
B/FUEL SCHDL	1.5 - 9.0 msec
Selector lever	Suitable position

NOTE:
- **Keep the accelerator pedal as steady as possible during cruising.**

- **If this procedure is not completed within 1 minute after restarting engine at step 1, return to step 1.**

6. Check 1st trip DTC.

With GST

Follow the procedure “With CONSULT” above.

Is 1st trip DTC detected?

YES >> Proceed to EC-252, "Diagnosis Procedure".
NO >> INSPECTION END

Diagnosis Procedure

INFOID:0000000011148586

1. CHECK AIR FUEL RATIO (A/F) SENSOR 1 POWER SUPPLY

1. Disconnect A/F sensor 1 harness connector.
2. Turn ignition switch ON.
3. Check the voltage between A/F sensor 1 harness connector and ground.

DTC	A/F sensor 1			Ground	Voltage
	Bank	Connector	Terminal		
P0131	1	F72	1	Ground	Battery voltage
P0151	2	F73	1		

Is the inspection result normal?

YES >> GO TO 3.
NO >> GO TO 2.

2. CHECK AIR FUEL RATIO (A/F) SENSOR 1 POWER SUPPLY CIRCUIT

1. Turn ignition switch OFF.
2. Disconnect IPDM E/R harness connector.
3. Check the continuity between A/F sensor 1 harness connector and IPDM E/R harness connector.

DTC	A/F sensor 1			IPDM E/R		Continuity
	Bank	Connector	Terminal	Connector	Terminal	
P0131	1	F72	1	F19	52	Existed
P0151	2	F73	1		53	

Is the inspection result normal?

YES >> Perform the trouble diagnosis for power supply circuit.
NO >> Repair or replace error-detected parts.

3. CHECK A/F SENSOR 1 INPUT SIGNAL CIRCUIT

1. Turn ignition switch OFF.
2. Disconnect ECM harness connector.
3. Check the continuity between A/F sensor 1 harness connector and ECM harness connector.

DTC	A/F sensor 1			ECM		Continuity
	Bank	Connector	Terminal	Connector	Terminal	
P0131	1	F72	3	F79	66	Existed
			4		67	
P0151	2	F73	3		76	
			4		77	

4. Check the continuity between A/F sensor 1 harness connector and ground, or ECM harness connector and ground.

DTC	A/F sensor 1			Ground	Continuity
	Bank	Connector	Terminal		
P0131	1	F72	3	Ground	Not existed
			4		
P0151	2	F73	3		
			4		

DTC	ECM		Ground	Continuity
	Connector	Terminal		
P0131	F79	66	Ground	Not existed
		67		
P0151		76		
		77		

5. Also check harness for short to power.

Is the inspection result normal?

YES >> GO TO 4.
NO >> Repair open circuit, short to ground or short to power in harness or connectors.

4. CHECK INTERMITTENT INCIDENT

Check intermittent incident. Refer to GI-47, "Intermittent Incident".

Is the inspection result normal?

YES >> Replace malfunctioning air fuel ratio (A/F) sensor 1. Refer to EM-31, "Removal and Installation (bank 2)", EM-33, "Removal and Installation (bank 1)".
NO >> Repair or replace error-detected parts.

P0132, P0152 A/F SENSOR 1

DTC Logic

INFOID:0000000011148587

DTC DETECTION LOGIC

To judge the malfunction, the diagnosis checks that the A/F signal computed by ECM from the A/F sensor 1 signal is not inordinately high.

DTC No.	CONSULT screen terms (Trouble diagnosis content)	DTC detecting condition	Possible cause
P0132	A/F SENSOR1 (B1) (O2 sensor circuit high voltage bank 1 sensor 1)	• The A/F signal computed by ECM from the A/F sensor 1 signal is constantly approx. 5 V.	• Harness or connectors (The A/F sensor 1 circuit is open or shorted.) • A/F sensor 1
P0152	A/F SENSOR1 (B2) (O2 sensor circuit high voltage bank 2 sensor 1)		

DTC CONFIRMATION PROCEDURE

1. PRECONDITIONING

If DTC Confirmation Procedure has been previously conducted, always perform the following before conducting the next test.

1. Turn ignition switch OFF and wait at least 10 seconds.
2. Turn ignition switch ON.
3. Turn ignition switch OFF and wait at least 10 seconds.

TESTING CONDITION:

Before performing the following procedure, confirm that battery voltage is more than 10.5 V at idle.

>> GO TO 2.

2. CHECK A/F SENSOR 1 FUNCTION

With CONSULT

1. Start engine and warm it up to normal operating temperature.
2. Select “A/F SEN1 (B1)” or “A/F SEN1 (B2)” in “DATA MONITOR” mode with CONSULT.
3. Check “A/F SEN1 (B1)” or “A/F SEN1 (B2)” indication.

With GST

Follow the procedure “With CONSULT” above.

Is the indication constantly approx. 5 V?

YES >> Proceed to EC-255, "Diagnosis Procedure".
NO >> GO TO 3.

3. PERFORM DTC CONFIRMATION PROCEDURE

With CONSULT

1. Turn ignition switch OFF and wait at least 10 seconds.
2. Turn ignition switch ON.
3. Turn ignition switch OFF, wait at least 10 seconds and then restart engine.
4. Drive and accelerate vehicle to more than 40 km/h (25 MPH) within 20 seconds after restarting engine.
   CAUTION:
   Always drive vehicle at a safe speed.
5. Maintain the following conditions for approximately 20 consecutive seconds.

ENG SPEED	1,000 - 3,200 rpm
VHCL SPEED SE	More than 40 km/h (25 mph)
B/FUEL SCHDL	1.5 - 9.0 msec
Selector lever	Suitable position

NOTE:
- **Keep the accelerator pedal as steady as possible during cruising.**

- **If this procedure is not completed within 1 minute after restarting engine at step 1, return to step 1.**

6. Check 1st trip DTC.

With GST

Follow the procedure “With CONSULT” above.

Is 1st trip DTC detected?

YES >> Proceed to EC-255, "Diagnosis Procedure".
NO >> INSPECTION END

Diagnosis Procedure

INFOID:0000000011148588

1. CHECK AIR FUEL RATIO (A/F) SENSOR 1 POWER SUPPLY

1. Disconnect A/F sensor 1 harness connector.
2. Turn ignition switch ON.
3. Check the voltage between A/F sensor 1 harness connector and ground.

DTC	A/F sensor 1			Ground	Voltage
	Bank	Connector	Terminal		
P0132	1	F72	1	Ground	Battery voltage
P0152	2	F73	1		

Is the inspection result normal?

YES >> GO TO 3.
NO >> GO TO 2.

2. CHECK AIR FUEL RATIO (A/F) SENSOR 1 POWER SUPPLY CIRCUIT

1. Turn ignition switch OFF.
2. Disconnect IPDM E/R harness connector.
3. Check the continuity between A/F sensor 1 harness connector and IPDM E/R harness connector.

DTC	A/F sensor 1			IPDM E/R		Continuity
	Bank	Connector	Terminal	Connector	Terminal	
P0132	1	F72	1	F19	52	Existed
P0152	2	F73	1		53	

Is the inspection result normal?

YES >> Perform the trouble diagnosis for power supply circuit.
NO >> Repair or replace error-detected parts.

3. CHECK A/F SENSOR 1 INPUT SIGNAL CIRCUIT FOR OPEN AND SHORT

1. Turn ignition switch OFF.
2. Disconnect ECM harness connector.
3. Check the continuity between A/F sensor 1 harness connector and ECM harness connector.

DTC	A/F sensor 1			ECM		Continuity
	Bank	Connector	Terminal	Connector	Terminal	
P0132	1	F72	3	F79	66	Existed
			4		67	
P0152	2	F73	3		76	
			4		77	

4. Check the continuity between A/F sensor 1 harness connector and ground, or ECM harness connector and ground.

DTC	A/F sensor 1			Ground	Continuity
	Bank	Connector	Terminal		
P0132	1	F72	3	Ground	Not existed
			4		
P0152	2	F73	3		
			4		

DTC	ECM		Ground	Continuity
	Connector	Terminal		
P0132	F79	66	Ground	Not existed
		67		
P0152		76		
		77		

5. Also check harness for short to power.

Is the inspection result normal?

YES >> GO TO 4.
NO >> Repair open circuit, short to ground or short to power in harness or connectors.

4. CHECK INTERMITTENT INCIDENT

Check intermittent incident. Refer to GI-47, "Intermittent Incident".

Is the inspection result normal?

YES >> Replace malfunctioning air fuel ratio (A/F) sensor 1. Refer to EM-31, "Removal and Installation (bank 2)", EM-33, "Removal and Installation (bank 1)".
NO >> Repair or replace error-detected parts.

P0137, P0157 HO2S2

DTC Logic

INFOID:0000000011148589

DTC DETECTION LOGIC

The heated oxygen sensor 2 has a much longer switching time between rich and lean than the air fuel ratio (A/F) sensor 1. The oxygen storage capacity of the three way catalyst (manifold) causes the longer switching time. To judge the malfunctions of heated oxygen sensor 2, ECM monitors whether the maximum voltage of the sensor is sufficiently high during various driving conditions such as fuel-cut.

ⓐ : 0.72 V

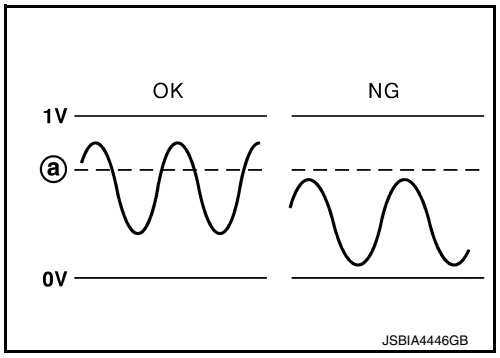

DTC No.	CONSULT screen terms (Trouble diagnosis content)	DTC detecting condition	Possible cause
P0137	HO2S2 (B1) (O2 sensor circuit low voltage bank 1 sensor 2)	The maximum voltage from the sensor does not reach the specified voltage.	• Harness or connectors (The sensor circuit is open or shorted) • Heated oxygen sensor 2 • Fuel pressure • Fuel injector • Intake air leakage
P0157	HO2S2 (B2) (O2 sensor circuit low voltage bank 2 sensor 2)		

DTC CONFIRMATION PROCEDURE

1. INSPECTION START

Will CONSULT be used?

Will CONSULT be used?

YES >> GO TO 2.
NO >> GO TO 5.

2. PRECONDITIONING

If DTC confirmation Procedure has been previously conducted, always perform the following before conducting the next test.

1. Turn ignition switch OFF and wait at least 10 seconds.
2. Turn ignition switch ON.
3. Turn ignition switch OFF and wait at least 10 seconds.

TESTING CONDITION:
For better results, perform “DTC WORK SUPPORT” at a temperature of 0 to 30°C (32 to 86°F).

>> GO TO 3.

3. PERFORM DTC CONFIRMATION PROCEDURE

With CONSULT

1. Turn ignition switch ON and select “DATA MONITOR” mode with CONSULT.
2. Start engine and warm it up to the normal operating temperature.
3. Turn ignition switch OFF and wait at least 10 seconds.
4. Turn ignition switch ON.
5. Turn ignition switch OFF and wait at least 10 seconds.
6. Start engine and keep the engine speed between 3,500 and 4,000 rpm for at least 1 minute under no load.
7. Let engine idle for 1 minute.
8. Check that “COOLANT TEMP/S” indicates more than 70°C (158°F).
   If not, warm up engine and go to next step when “COOLANT TEMP/S” indication reaches 70°C (158°F).
9. Open engine hood.

10. Select “HO2S2 (B1) P1147” (for DTC P0137) or “HO2S2 (B2) P1167” (for DTC P0157) of “HO2S2” in “DTC WORK SUPPORT” mode with CONSULT.
11. Follow the instruction of CONSULT display.
    NOTE:
    It will take at most 10 minutes until “COMPLETED” is displayed.
12. Touch “SELF-DIAG RESULTS”.

Which is displayed on CONSULT screen?

OK >> INSPECTION END
NG >> Proceed to EC-259, "Diagnosis Procedure".
CAN NOT BE DIAGNOSED>>GO TO 4.

4. PERFORM DTC CONFIRMATION PROCEDURE AGAIN

1. Turn ignition switch OFF and leave the vehicle in a cool place (soak the vehicle).
2. Perform DTC confirmation procedure again.

>> GO TO 3.

5. PERFORM COMPONENT FUNCTION CHECK

Perform component function check. Refer to EC-258, "Component Function Check".
NOTE:
Use component function check to check the overall function of the heated oxygen sensor 2 circuit. During this check, a 1st trip DTC might not be confirmed.

Is the inspection result normal?

YES >> INSPECTION END
NO >> Proceed to EC-259, "Diagnosis Procedure".

Component Function Check

INFOID:0000000011148590

1. PERFORM COMPONENT FUNCTION CHECK-I

Without CONSULT
1. Start engine and warm it up to the normal operating temperature.
2. Turn ignition switch OFF and wait at least 10 seconds.
3. Turn ignition switch ON.
4. Turn ignition switch OFF and wait at least 10 seconds.
5. Start engine and keep the engine speed between 3,500 and 4,000 rpm for at least 1 minute under no load.
6. Let engine idle for 1 minute.
7. Check the voltage between ECM harness connector terminals under the following conditions.

DTC	ECM			Condition	Voltage
	Connector	+	–		
		Terminal			
P0137	F78	41	35	Revving up to 4,000 rpm under no load at least 10 times	The voltage should be above 0.72 V at least once during this procedure.
P0157		32			

Is the inspection result normal?

YES >> INSPECTION END
NO >> GO TO 2.

2. PERFORM COMPONENT FUNCTION CHECK-II

Check the voltage between ECM harness connector terminals under the following conditions.

DTC	ECM			Condition	Voltage
	Connector	+	–		
		Terminal			
P0137	F78	41	35	Keeping engine at idle for 10 minutes	The voltage should be above 0.72 V at least once during this procedure.
P0157		32			

Is the inspection result normal?

YES >> INSPECTION END
NO >> GO TO 3.

3. PERFORM COMPONENT FUNCTION CHECK-III

Check the voltage between ECM harness connector terminals under the following conditions.

DTC	ECM			Condition	Voltage
	Connector	+	–		
		Terminal			
P0137	F78	41	35	Coasting from 80 km/h (50 MPH) with selector lever in the D position	The voltage should be above 0.72 V at least once during this procedure.
P0157		32			

Is the inspection result normal?

YES >> INSPECTION END
NO >> Proceed to EC-259, "Diagnosis Procedure".

Diagnosis Procedure

INFOID:0000000011148591

1. CLEAR MIXTURE RATIO SELF-LEARNING VALUE

1. Clear the mixture ratio self-learning value. Refer to EC-162, "Work Procedure".
2. Run engine for at least 10 minutes at idle speed.

Is the 1st trip DTC P0171 or P0174 detected? Is it difficult to start engine?

YES >> Perform trouble diagnosis for DTC P0171 or P0174. Refer to EC-284, "DTC Logic".
NO >> GO TO 2.

2. CHECK HO2S2 GROUND CIRCUIT

1. Turn ignition switch OFF.
2. Disconnect heated oxygen sensor 2 harness connector.
3. Disconnect ECM harness connector.
4. Check the continuity between heated oxygen sensor 2 (HO2S2) harness connector and ECM harness connector.

DTC	HO2S2			ECM		Continuity
	Bank	Connector	Terminal	Connector	Terminal	
P0137	1	F75	4	F78	35	Existed
P0157	2	F76	4			

5. Also check harness for short to ground and short to power.

Is the inspection result normal?

YES >> GO TO 3.
NO >> Repair open circuit, short to ground or short to power in harness or connectors.

3. CHECK HO2S2 INPUT SIGNAL CIRCUIT FOR OPEN AND SHORT

1. Check the continuity between HO2S2 harness connector and ECM harness connector.

DTC	HO2S2			ECM		Continuity
	Bank	Connector	Terminal	Connector	Terminal	
P0137	1	F75	3	F78	41	Existed
P0157	2	F76	3		32	

2. Check the continuity between HO2S2 harness connector and ground, or ECM harness connector and ground.

DTC	HO2S2			Ground	Continuity
	Bank	Connector	Terminal		
P0137	1	F75	3	Ground	Not existed
P0157	2	F76	3		

DTC	ECM		Ground	Continuity
	Connector	Terminal		
P0137	F78	41	Ground	Not existed
P0157		32		

3. Also check harness for short to power.

Is the inspection result normal?

YES >> GO TO 4.
NO >> Repair open circuit, short to ground or short to power in harness or connectors.

4. CHECK HEATED OXYGEN SENSOR 2

Check heated oxygen sensor 2. Refer to EC-260, "Component Inspection".

Is the inspection result normal?

YES >> Check intermittent incident. Refer to GI-47, "Intermittent Incident".
NO >> Replace malfunctioning heated oxygen sensor 2. Refer to EM-31, "Removal and Installation (bank 2)", EM-33, "Removal and Installation (bank 1)".

Component Inspection

INFOID:0000000011148592

1. INSPECTION START

Will CONSULT be used?

Will CONSULT be used?

YES >> GO TO 2.
NO >> GO TO 3.

2. CHECK HEATED OXYGEN SENSOR 2

With CONSULT

1. Turn ignition switch ON and select “DATA MONITOR” mode with CONSULT.
2. Start engine and warm it up to the normal operating temperature.
3. Turn ignition switch OFF and wait at least 10 seconds.
4. Start engine and keep the engine speed between 3,500 and 4,000 rpm for at least 1 minute under no load.
5. Let engine idle for 1 minute.
6. Select “FUEL INJECTION” in “ACTIVE TEST” mode, and select “HO2S2 (B1)/(B2)” as the monitor item with CONSULT.
7. Check “HO2S2 (B1)/(B2)” at idle speed when adjusting “FUEL INJECTION” to ± 25%.

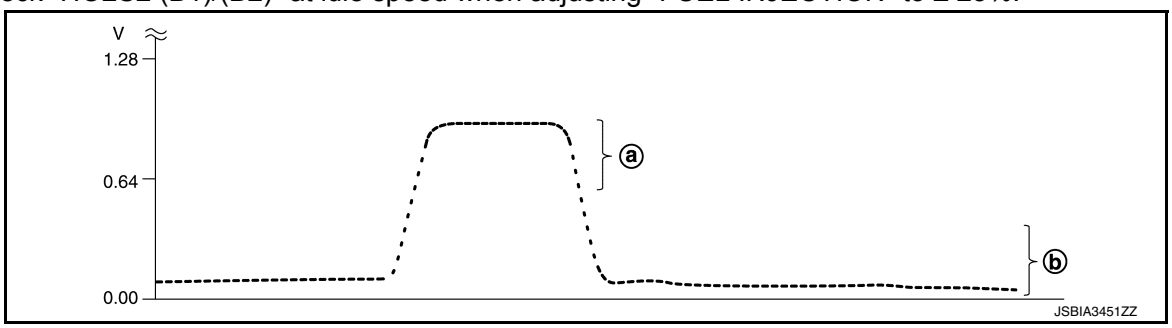

ⓐ : The voltage should be above 0.72 V at least on time.

ⓑ : The voltage should be below 0.27 V at least on time.

“HO2S2 (B1)/(B2)” should be above 0.72 V at least once when the “FUEL INJECTION” is + 25%.

"HO2S2 (B1)/(B2)" should be below 0.27 V at least once when the "FUEL INJECTION" is – 25%.

Is the inspection result normal?

YES >> INSPECTION END
NO >> Replace malfunctioning heated oxygen sensor 2. Refer to EM-31, "Removal and Installation (bank 2)", EM-33, "Removal and Installation (bank 1)".

3. CHECK HEATED OXYGEN SENSOR 2-I

Without CONSULT

1. Start engine and warm it up to the normal operating temperature.
2. Turn ignition switch OFF and wait at least 10 seconds.
3. Start engine and keep the engine speed between 3,500 and 4,000 rpm for at least 1 minute under no load.
4. Let engine idle for 1 minute.
5. Check the voltage between ECM harness connector terminals under the following conditions.

ECM			Condition	Voltage
Connector	+	–		
	Terminal			
F78	32	35	Revving up to 4,000 rpm under no load at least 10 times	The voltage should be above 0.72 V at least once during this procedure. The voltage should be below 0.27 V at least once during this procedure.
	41			

Is the inspection result normal?

YES >> INSPECTION END
NO >> GO TO 4.

4. CHECK HEATED OXYGEN SENSOR 2-II

Check the voltage between ECM harness connector terminals under the following conditions.

ECM			Condition	Voltage
Connector	+	–		
	Terminal			
F78	32	35	Keeping engine at idle for 10 minutes	The voltage should be above 0.72 V at least once during this procedure. The voltage should be below 0.27 V at least once during this procedure.
	41			

Is the inspection result normal?

YES >> INSPECTION END
NO >> GO TO 5.

5. CHECK HEATED OXYGEN SENSOR 2-III

Check the voltage between ECM harness connector terminals under the following conditions.

ECM			Condition	Voltage
Connector	+	–		
	Terminal			
F78	32	35	Coasting from 80 km/h (50 MPH) with selector lever in the D position	The voltage should be above 0.72 V at least once during this procedure. The voltage should be below 0.27 V at least once during this procedure.
	41			

Is the inspection result normal?

YES >> INSPECTION END
NO >> Replace malfunctioning heated oxygen sensor 2. Refer to EM-31, "Removal and Installation (bank 2)", EM-33, "Removal and Installation (bank 1)".

P0138, P0158 HO2S2

DTC Logic

INFOID:0000000011148593

DTC DETECTION LOGIC

The heated oxygen sensor 2 has a much longer switching time between rich and lean than the air fuel ratio (A/F) sensor 1. The oxygen storage capacity of the three way catalyst (manifold) causes the longer switching time.

MALFUNCTION A

To judge the malfunctions of heated oxygen sensor 2, ECM monitors whether the voltage is unusually high during various driving conditions such as fuel cut.

ⓐ : 1.3 V

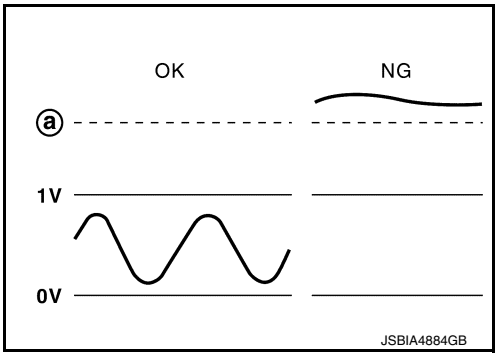

MALFUNCTION B

To judge the malfunctions of heated oxygen sensor 2, ECM monitors whether the minimum voltage of sensor is sufficiently low during various driving conditions such as fuel-cut.

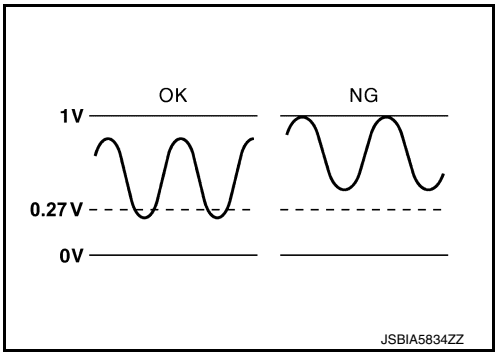

DTC No.	CONSULT screen terms (Trouble diagnosis content)	DTC detecting condition		Possible cause
P0138	HO2S2 (B1) (O2 sensor circuit high voltage bank 1 sensor 2)	A)	An excessively high voltage from the sensor is sent to ECM.	• Harness or connectors (The sensor circuit is open or shorted) • Heated oxygen sensor 2
		B)	The minimum voltage from the sensor is not reached to the specified voltage.	• Harness or connectors (The sensor circuit is open or shorted) • Heated oxygen sensor 2 • Fuel pressure • Fuel injector
P0158	HO2S2 (B2) (O2 sensor circuit high voltage bank 2 sensor2)	A)	An excessively high voltage from the sensor is sent to ECM.	• Harness or connectors (The sensor circuit is open or shorted) • Heated oxygen sensor 2
		B)	The minimum voltage from the sensor is not reached to the specified voltage.	• Harness or connectors (The sensor circuit is open or shorted) • Heated oxygen sensor 2 • Fuel pressure • Fuel injector

DTC CONFIRMATION PROCEDURE

1.PRECONDITIONING

If DTC Confirmation Procedure has been previously conducted, always perform the following before conducting the next test.

1. Turn ignition switch OFF and wait at least 10 seconds.
2. Turn ignition switch ON.
3. Turn ignition switch OFF and wait at least 10 seconds.

>> GO TO 2.

2. PERFORM DTC CONFIRMATION PROCEDURE FOR MALFUNCTION A

1. Start engine and warm it up to the normal operating temperature.
2. Turn ignition switch OFF and wait at least 10 seconds.
3. Turn ignition switch ON.
4. Turn ignition switch OFF and wait at least 10 seconds.
5. Start engine and keep the engine speed between 3,500 and 4,000 rpm for at least 1 minute under no load.
6. Let engine idle for 2 minutes.
7. Check 1st trip DTC.

Is 1st trip DTC detected?

YES >> Proceed to EC-264, "Diagnosis Procedure".
NO-1 >> With CONSULT: GO TO 3.
NO-2 >> Without CONSULT: GO TO 5.

3. PERFORM DTC CONFIRMATION PROCEDURE FOR MALFUNCTION B

NOTE:
For better results, perform "DTC WORK SUPPORT" at a temperature of 0 to 30°C (32 to 86°F).

1. Select "DATA MONITOR" mode with CONSULT.
2. Start engine and warm it up to the normal operating temperature.
3. Turn ignition switch OFF and wait at least 10 seconds.
4. Turn ignition switch ON.
5. Turn ignition switch OFF and wait at least 10 seconds.
6. Start engine and keep the engine speed between 3,500 and 4,000 rpm for at least 1 minute under no load.
7. Let engine idle for 1 minute.
8. Check that "COOLANT TEMP/S" indicates more than 70°C (158°F).
   If not, warm up engine and go to next step when "COOLANT TEMP/S" indication reaches 70°C (158°F).
9. Open engine hood.
10. Select "HO2S2 (B1) P1146" (for DTC P0138) or "HO2S2 (B2) P1166" (for DTC P0158) of "HO2S2" in "DTC WORK SUPPORT" mode with CONSULT.
11. Follow the instruction of CONSULT display.
    NOTE:
    It will take at most 10 minutes until "COMPLETED" is displayed.
12. Touch "SELF-DIAG RESULTS".

Which is displayed on CONSULT screen?

OK >> INSPECTION END
NG >> Proceed to EC-264, "Diagnosis Procedure".
CON NOT BE DIAGNOSED>>GO TO 4.

4. PERFORM DTC CONFIRMATION PROCEDURE FOR MALFUNCTION B AGAIN

1. Turn ignition switch OFF and leave the vehicle in a cool place (soak the vehicle).
2. Perform DTC confirmation procedure again.

>> GO TO 3.

5. PERFORM COMPONENT FUNCTION CHECK FOR MALFUNCTION B

Perform component function check. Refer to EC-264, "Component Function Check".
NOTE:
Use component function check to check the overall function of the heated oxygen sensor 2 circuit. During this check, a 1st trip DTC might not be confirmed.

Is the inspection result normal?

YES >> INSPECTION END
NO >> Proceed to EC-264, "Diagnosis Procedure".

Component Function Check

INFOID:0000000011148594

1. PERFORM COMPONENT FUNCTION CHECK-1

Without CONSULT

1. Start engine and warm it up to the normal operating temperature.
2. Turn ignition switch OFF and wait at least 10 seconds.
3. Turn ignition switch ON.
4. Turn ignition switch OFF and wait at least 10 seconds.
5. Start engine and keep the engine speed between 3,500 and 4,000 rpm for at least 1 minute under no load.
6. Let engine idle for 1 minute.
7. Check the voltage between ECM harness connector terminals under the following conditions.

DTC	ECM			Condition	Voltage
	Connector	+	–		
		Terminal			
P0138	F78	41	35	Revving up to 4,000 rpm under no load at least 10 times	The voltage should be below 0.27 V at least once during this procedure.
P0158		32			

Is the inspection result normal?

YES >> INSPECTION END
NO >> GO TO 2.

2. PERFORM COMPONENT FUNCTION CHECK-2

Check the voltage between ECM harness connector terminals under the following conditions.

DTC	ECM			Condition	Voltage
	Connector	+	–		
		Terminal			
P0138	F78	41	35	Keeping engine speed at idle for 10 minutes	The voltage should be below 0.27 V at least once during this procedure.
P0158		32			

Is the inspection result normal?

YES >> INSPECTION END
NO >> GO TO 3.

3. PERFORM COMPONENT FUNCTION CHECK-3

Check the voltage between ECM harness connector terminals under the following conditions.

DTC	ECM			Condition	Voltage
	Connector	+	–		
		Terminal			
P0138	F78	41	35	Coasting from 80 km/h (50 MPH) with selector lever in the D position	The voltage should be below 0.27 V at least once during this procedure.
P0158		32			

Is the inspection result normal?

YES >> INSPECTION END
NO >> Proceed to EC-264, "Diagnosis Procedure".

Diagnosis Procedure

INFOID:0000000011148595

1. INSPECTION START

Confirm the detected malfunction (A or B). Refer to EC-262, "DTC Logic".

Which malfunction is detected?

A >> GO TO 2.
B >> GO TO 6.

2. CHECK HO2S2 CONNECTOR FOR WATER

1. Disconnect heated oxygen sensor 2 harness connector.
2. Check that water is not inside connectors.

Is the inspection result normal?

YES >> GO TO 3.
NO >> Repair or replace harness or connectors.

3. CHECK HO2S2 GROUND CIRCUIT

1. Disconnect heated oxygen sensor 2 harness connector.
2. Disconnect ECM harness connector.
3. Check the continuity between heated oxygen sensor 2 (HO2S2) harness connector and ECM harness connector.

DTC	HO2S2			ECM		Continuity
	Bank	Connector	Terminal	Connector	Terminal	
P0138	1	F75	4	F78	35	Existed
P0158	2	F76	4			

4. Also check harness for short to ground and short to power.

Is the inspection result normal?

YES >> GO TO 4.
NO >> Repair open circuit, short to ground or short to power in harness or connectors.

4. CHECK HO2S2 INPUT SIGNAL CIRCUIT

1. Check the continuity between HO2S2 harness connector and ECM harness connector.

DTC	HO2S2			ECM		Continuity
	Bank	Connector	Terminal	Connector	Terminal	
P0138	1	F75	3	F78	41	Existed
P0158	2	F76	3		32	

2. Check the continuity between HO2S2 harness connector and ground, or ECM harness connector and ground.

DTC	HO2S2			Ground	Continuity
	Bank	Connector	Terminal		
P0138	1	F75	3	Ground	Not existed
P0158	2	F76	3		

DTC	ECM		Ground	Continuity
	Connector	Terminal		
P0138	F78	41	Ground	Not existed
P0158		32		

3. Also check harness for short to power.

Is the inspection result normal?

YES >> GO TO 5.
NO >> Repair open circuit, short to ground or short to power in harness or connectors.

5. CHECK HEATED OXYGEN SENSOR 2

Check heated oxygen sensor 2. Refer to EC-267, "Component Inspection".

Is the inspection result normal?

YES >> Check intermittent incident. Refer to GI-47, "Intermittent Incident".

NO >> Replace malfunctioning heated oxygen sensor 2. Refer to EM-31, "Removal and Installation (bank 2)", EM-33, "Removal and Installation (bank 1)".

6. CLEAR MIXTURE RATIO SELF-LEARNING VALUE

1. Clear the mixture ratio self-learning value. Refer to EC-162, "Work Procedure".
2. Run engine for at least 10 minutes at idle speed.

Is the 1st trip DTC P0172 or P0175 detected? Is it difficult to start engine?

YES >> Perform trouble diagnosis for DTC P0172, P0175. Refer to EC-288, "DTC Logic".
NO >> GO TO 7.

7. CHECK HO2S2 GROUND CIRCUIT

1. Turn ignition switch OFF.
2. Disconnect heated oxygen sensor 2 harness connector.
3. Disconnect ECM harness connector.
4. Check the continuity between HO2S2 harness connector and ECM harness connector.

DTC	HO2S2			ECM		Continuity
	Bank	Connector	Terminal	Connector	Terminal	
P0138	1	F75	4	F78	35	Existed
P0158	2	F76	4			

5. Also check harness for short to ground and short to power.

Is the inspection result normal?

YES >> GO TO 8.
NO >> Repair open circuit, short to ground or short to power in harness or connectors.

8. CHECK HO2S2 INPUT SIGNAL CIRCUIT

1. Check the continuity between HO2S2 harness connector and ECM harness connector.

DTC	HO2S2			ECM		Continuity
	Bank	Connector	Terminal	Connector	Terminal	
P0138	1	F75	3	F78	41	Existed
P0158	2	F76	3		32	

2. Check the continuity between HO2S2 harness connector and ground, or ECM harness connector and ground.

DTC	HO2S2			Ground	Continuity
	Bank	Connector	Terminal		
P0138	1	F75	3	Ground	Not existed
P0158	2	F76	3		

DTC	ECM		Ground	Continuity
	Connector	Terminal		
P0138	F78	41	Ground	Not existed
P0158		32		

3. Also check harness for short to power.

Is the inspection result normal?

YES >> GO TO 9.
NO >> Repair open circuit, short to ground or short to power in harness or connectors.

9. CHECK HEATED OXYGEN SENSOR 2

Check heated oxygen sensor 2. Refer to EC-267, "Component Inspection"

Is the inspection result normal?

YES >> Check intermittent incident. Refer to GI-47, "Intermittent Incident".
NO >> Replace malfunctioning heated oxygen sensor 2. Refer to EM-31, "Removal and Installation (bank 2)", EM-33, "Removal and Installation (bank 1)".

Component Inspection

INFOID:0000000011148596

1. INSPECTION START

Will CONSULT be used?

Will CONSULT be used?

YES >> GO TO 2.
NO >> GO TO 3.

2. CHECK HEATED OXYGEN SENSOR 2

With CONSULT

1. Turn ignition switch ON and select “DATA MONITOR” mode with CONSULT.
2. Start engine and warm it up to the normal operating temperature.
3. Turn ignition switch OFF and wait at least 10 seconds.
4. Start engine and keep the engine speed between 3,500 and 4,000 rpm for at least 1 minute under no load.
5. Let engine idle for 1 minute.
6. Select “FUEL INJECTION” in “ACTIVE TEST” mode, and select “HO2S2 (B1)/(B2)” as the monitor item with CONSULT.
7. Check “HO2S2 (B1)/(B2)” at idle speed when adjusting “FUEL INJECTION” to ± 25%.

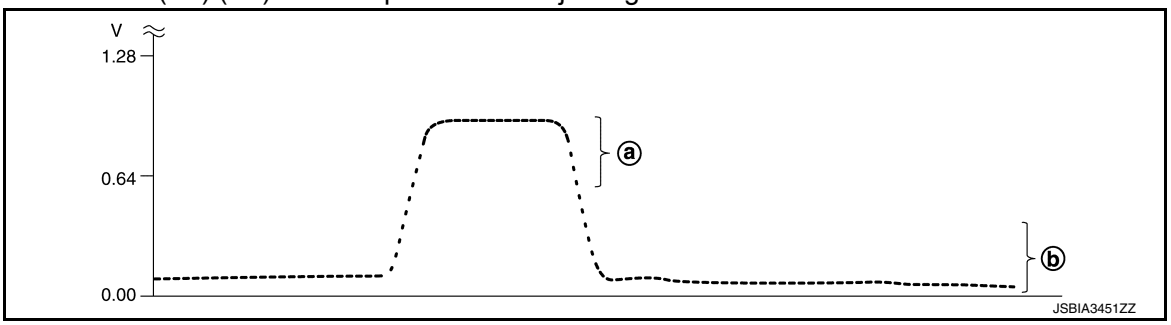

ⓐ : The voltage should be above 0.72 V at least on time.

ⓑ : The voltage should be below 0.27 V at least on time.

“HO2S2 (B1)/(B2)” should be above 0.72 V at least once when the “FUEL INJECTION” is + 25%.
“HO2S2 (B1)/(B2)” should be below 0.27 V at least once when the “FUEL INJECTION” is – 25%.

Is the inspection result normal?

YES >> INSPECTION END
NO >> Replace malfunctioning heated oxygen sensor 2. Refer to EM-31, "Removal and Installation (bank 2)", EM-33, "Removal and Installation (bank 1)".

3. CHECK HEATED OXYGEN SENSOR 2-I

Without CONSULT

1. Start engine and warm it up to the normal operating temperature.
2. Turn ignition switch OFF and wait at least 10 seconds.
3. Start engine and keep the engine speed between 3,500 and 4,000 rpm for at least 1 minute under no load.
4. Let engine idle for 1 minute.
5. Check the voltage between ECM harness connector terminals under the following conditions.

ECM			Condition	Voltage
Connector	+	–		
	Terminal			
F78	32	35	Revving up to 4,000 rpm under no load at least 10 times	The voltage should be above 0.72 V at least once during this procedure. The voltage should be below 0.27 V at least once during this procedure.
	41			

Is the inspection result normal?

YES >> INSPECTION END
NO >> GO TO 4.

4. CHECK HEATED OXYGEN SENSOR 2-II

Check the voltage between ECM harness connector terminals under the following conditions.

ECM			Condition	Voltage
Connector	+	–		
	Terminal			
F78	32	35	Keeping engine at idle for 10 minutes	The voltage should be above 0.72 V at least once during this procedure. The voltage should be below 0.27 V at least once during this procedure.
	41			

Is the inspection result normal?

YES >> INSPECTION END
NO >> GO TO 5.

5. CHECK HEATED OXYGEN SENSOR 2-III

Check the voltage between ECM harness connector terminals under the following conditions.

ECM			Condition	Voltage
Connector	+	–		
	Terminal			
F78	32	35	Coasting from 80 km/h (50 MPH) with selector lever in the D position	The voltage should be above 0.72 V at least once during this procedure. The voltage should be below 0.27 V at least once during this procedure.
	41			

Is the inspection result normal?

YES >> INSPECTION END
NO >> Replace malfunctioning heated oxygen sensor 2. Refer to EM-31, "Removal and Installation (bank 2)", EM-33, "Removal and Installation (bank 1)".

P0139, P0159 HO2S2

DTC Logic

INFOID:0000000011148597

DTC DETECTION LOGIC

The heated oxygen sensor 2 has a much longer switching time between rich and lean than the air fuel ratio (A/F) sensor 1. The oxygen storage capacity of the three way catalyst 1 causes the longer switching time. To judge the malfunctions of heated oxygen sensor 2, ECM monitors whether the switching response of the sensor's voltage is faster than specified during various driving conditions such as fuel cut.

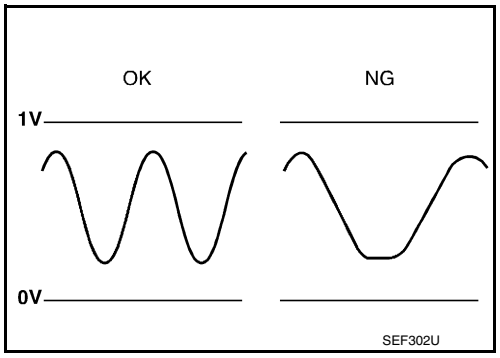

DTC No.	CONSULT screen terms (Trouble diagnosis content)	DTC detecting condition	Possible cause
P0139	HO2S2 (B1) (O2 sensor circuit slow response bank 1 sensor 2)	The switching time between rich and lean of a heated oxygen sensor 2 signal delays more than the specified time computed by ECM.	• Harness or connectors (The sensor circuit is open or shorted) • Heated oxygen sensor 2 • Fuel system • EVAP system • Intake air system
P0159	HO2S2 (B2) (O2 sensor circuit slow response bank 2 sensor2)		

DTC CONFIRMATION PROCEDURE

1.INSPECTION START

Do you have CONSULT?

Do you have CONSULT?

YES >> GO TO 2.
NO >> GO TO 7.

2.PRECONDITIONING

If DTC Confirmation Procedure has been previously conducted, always perform the following procedure before conducting the next test.

1. Turn ignition switch OFF and wait at least 10 seconds.
2. Turn ignition switch ON.
3. Turn ignition switch OFF and wait at least 10 seconds.

TESTING CONDITION:
For better results, perform “DTC WORK SUPPORT” at a temperature of 0 to 30°C (32 to 86°F).

>> GO TO 3.

3.PERFORM DTC CONFIRMATION PROCEDURE

With CONSULT

1. Turn ignition switch ON and select “DATA MONITOR” mode with CONSULT.
2. Start engine and warm it up to the normal operating temperature.
3. Turn ignition switch OFF and wait at least 10 seconds.
4. Turn ignition switch ON.
5. Turn ignition switch OFF and wait at least 10 seconds.
6. Start engine and keep the engine speed between 3,500 and 4,000 rpm for at least 1 minute under no load.
7. Let engine idle for 1 minute.
8. Make sure that “COOLANT TEMP/S” indicates more than 70°C (158°F).
9. Drive the vehicle in a proper gear at 60 km/h (38MPH) and maintain the speed.

CAUTION:

Always drive vehicle at a safe speed.

10. Release the accelerator pedal fully at least 5 seconds.
    CAUTION:
    - **Enable the engine brake.**
    - **Always drive carefully.**
    - **Never apply brake when releasing the accelerator pedal.**
11. Repeat step 9 and 10 at least 8 times.
12. Check the following item of “DATA MONITOR”.

DTC	Data monitor item	Status
P0139	HO2 S2 DIAG1 (B1)	CMPLT
	HO2 S2 DIAG2 (B1)	
P0159	HO2 S2 DIAG1 (B2)	
	HO2 S2 DIAG2 (B2)	

Is “CMPLT” displayed on CONSULT screen?

YES >> GO TO 6.
NO-1: “CMPLT” is not displayed on DIAG 1>>Perform DTC confirmation procedure again.
NO-2: “CMPLT” is not displayed on DIAG 2>>GO TO 4.

4. PERFORM DTC WORK SUPPORT

1. Open engine hood.
2. Select “HO2S2 (B1) P0139” or “HO2S2 (B2) P0159” of “HO2S2” in “DTC WORK SUPPORT” mode with CONSULT.
3. Start engine and follow the instruction of CONSULT display.
   NOTE:
   It will take at most 10 minutes until “COMPLETED” is displayed.

Is “COMPLETED” displayed on CONSULT screen?

YES >> GO TO 6.
NO >> GO TO 5.

5. PERFORM DTC CONFIRMATION PROCEDURE AGAIN

1. Turn ignition switch OFF and leave the vehicle in a cool place (soak the vehicle).
2. Perform DTC confirmation procedure again.

>> GO TO 3.

6. PERFORM SELF-DIAGNOSIS

With CONSULT
Perform ECM self-diagnosis.

Is DTC “P0139” or “P0159” detected?

YES >> Proceed to EC-271, "Diagnosis Procedure".
NO >> INSPECTION END

7. PERFORM COMPONENT FUNCTION CHECK

Perform component function check. Refer to EC-270, "Component Function Check".
NOTE:
Use component function check to check the overall function of the heated oxygen sensor 2 circuit. During this check, a 1st trip DTC might not be confirmed.

Is the inspection result normal?

YES >> INSPECTION END
NO >> Proceed to EC-271, "Diagnosis Procedure".

Component Function Check

INFOID:0000000011148598

1. PERFORM COMPONENT FUNCTION CHECK-I

Without CONSULT

1. Start engine and warm it up to the normal operating temperature.
2. Turn ignition switch OFF and wait at least 10 seconds.
3. Turn ignition switch ON.
4. Turn ignition switch OFF and wait at least 10 seconds.
5. Start engine and keep the engine speed between 3,500 and 4,000 rpm for at least 1 minute under no load.
6. Let engine idle for 1 minute.
7. Check the voltage between ECM harness connector terminals under the following conditions.

DTC	ECM			Condition	Voltage
	Connector	+	–		
		Terminal			
P0139	F78	41	35	Revving up to 4,000 rpm under no load at least 10 times	A change of voltage should be more than 0.28 V for 1 second during this procedure.
P0159		32			

Is the inspection result normal?

YES >> INSPECTION END
NO >> GO TO 2.

2. PERFORM COMPONENT FUNCTION CHECK-II

Check the voltage between ECM harness connector terminals under the following conditions.

DTC	ECM			Condition	Voltage
	Connector	+	–		
		Terminal			
P0139	F78	41	35	Keeping engine at idle for 10 minutes	A change of voltage should be more than 0.28 V for 1 second during this procedure.
P0159		32			

Is the inspection result normal?

YES >> INSPECTION END
NO >> GO TO 3.

3. PERFORM COMPONENT FUNCTION CHECK-III

Check the voltage between ECM harness connector terminals under the following conditions.

DTC	ECM			Condition	Voltage
	Connector	+	–		
		Terminal			
P0139	F78	41	35	Coasting from 80 km/h (50 MPH) in D position	A change of voltage should be more than 0.28 V for 1 second during this procedure.
P0159		32			

Is the inspection result normal?

YES >> INSPECTION END
NO >> Proceed to EC-271, "Diagnosis Procedure".

Diagnosis Procedure

INFOID:0000000011148599

1. CLEAR MIXTURE RATIO SELF-LEARNING VALUE

1. Clear the mixture ratio self-learning value. Refer to EC-162, "Work Procedure".
2. Run engine for at least 10 minutes at idle speed.

Is the 1st trip DTC P0171, P0172, P0174 or P0175 detected? Is it difficult to start engine?

YES >> Perform trouble diagnosis for DTC P0171, P0174 or P0172, P0175. Refer to EC-284, "DTC Logic" or EC-288, "DTC Logic".
NO >> GO TO 2.

2. CHECK HO2S2 GROUND CIRCUIT

1. Turn ignition switch OFF.

2. Disconnect heated oxygen sensor 2 harness connector.
3. Disconnect ECM harness connector.
4. Check the continuity between heated oxygen sensor 2 (HO2S2) harness connector and ECM harness connector.

DTC	HO2S2			ECM		Continuity
	Bank	Connector	Terminal	Connector	Terminal	
P0139	1	F75	4	F78	35	Existed
P0159	2	F76	4			

5. Also check harness for short to ground and short to power.

Is the inspection result normal?

YES >> GO TO 3.
NO >> Repair open circuit, short to ground or short to power in harness or connectors.

3. CHECK HO2S2 INPUT SIGNAL CIRCUIT

1. Check the continuity between HO2S2 harness connector and ECM harness connector.

DTC	HO2S2			ECM		Continuity
	Bank	Connector	Terminal	Connector	Terminal	
P0139	1	F75	3	F78	41	Existed
P0159	2	F76	3		32	

2. Check the continuity between HO2S2 harness connector and ground, or ECM harness connector and ground.

DTC	HO2S2			Ground	Continuity
	Bank	Connector	Terminal		
P0139	1	F75	3	Ground	Not existed
P0159	2	F76	3		

DTC	ECM		Ground	Continuity
	Connector	Terminal		
P0139	F78	41	Ground	Not existed
P0159		32		

3. Also check harness for short to power.

Is the inspection result normal?

YES >> GO TO 4.
NO >> Repair open circuit, short to ground or short to power in harness or connectors.

4. CHECK HEATED OXYGEN SENSOR 2

Check heated oxygen sensor 2. Refer to EC-272, "Component Inspection".

Is the inspection result normal?

YES >> Check intermittent incident. Refer to GI-47, "Intermittent Incident".
NO >> Replace malfunctioning heated oxygen sensor 2. Refer to EM-31, "Removal and Installation (bank 2)", EM-33, "Removal and Installation (bank 1)".

Component Inspection

INFOID:0000000011148600

1. INSPECTION START

Will CONSULT be used?

Will CONSULT be used?

YES >> GO TO 2.

NO >> GO TO 3.

2. CHECK HEATED OXYGEN SENSOR 2

With CONSULT

1. Turn ignition switch ON and select “DATA MONITOR” mode with CONSULT.
2. Start engine and warm it up to the normal operating temperature.
3. Turn ignition switch OFF and wait at least 10 seconds.
4. Start engine and keep the engine speed between 3,500 and 4,000 rpm for at least 1 minute under no load.
5. Let engine idle for 1 minute.
6. Select “FUEL INJECTION” in “ACTIVE TEST” mode, and select “HO2S2 (B1)/(B2)” as the monitor item with CONSULT.
7. Check “HO2S2 (B1)/(B2)” at idle speed when adjusting “FUEL INJECTION” to ± 25%.

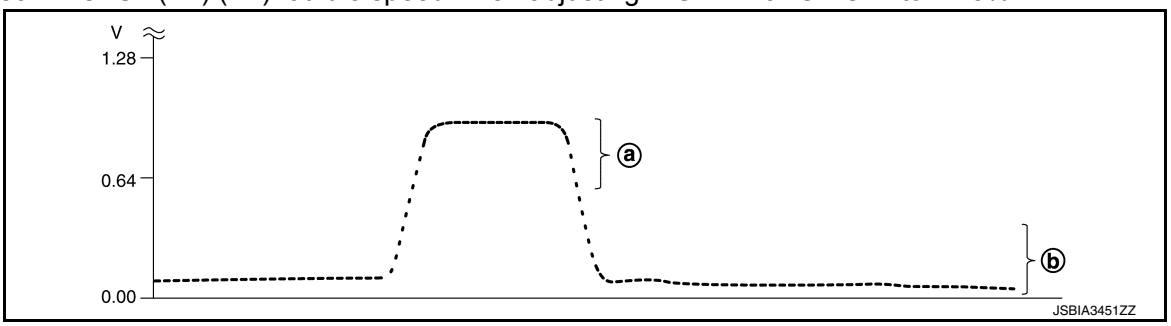

ⓐ : The voltage should be above 0.72 V at least on time.

ⓑ : The voltage should be below 0.27 V at least on time.

“HO2S2 (B1)/(B2)” should be above 0.68 V at least once when the “FUEL INJECTION” is + 25%.
“HO2S2 (B1)/(B2)” should be below 0.18 V at least once when the “FUEL INJECTION” is – 25%.

Is the inspection result normal?

YES >> INSPECTION END
NO >> Replace malfunctioning heated oxygen sensor 2. Refer to EM-31, "Removal and Installation (bank 2)", EM-33, "Removal and Installation (bank 1)".

3. CHECK HEATED OXYGEN SENSOR 2-I

Without CONSULT

1. Start engine and warm it up to the normal operating temperature.
2. Turn ignition switch OFF and wait at least 10 seconds.
3. Start engine and keep the engine speed between 3,500 and 4,000 rpm for at least 1 minute under no load.
4. Let engine idle for 1 minute.
5. Check the voltage between ECM harness connector terminals under the following conditions.

ECM			Condition	Voltage
Connector	+	–		
	Terminal			
F78	32	35	Revving up to 4,000 rpm under no load at least 10 times	The voltage should be above 0.72 V at least once during this procedure. The voltage should be below 0.27 V at least once during this procedure.
	41			

Is the inspection result normal?

YES >> INSPECTION END
NO >> GO TO 4.

4. CHECK HEATED OXYGEN SENSOR 2-II

Check the voltage between ECM harness connector terminals under the following conditions.

ECM			Condition	Voltage
Connector	+	–		
	Terminal			
F78	32	35	Keeping engine at idle for 10 minutes	The voltage should be above 0.72 V at least once during this procedure. The voltage should be below 0.27 V at least once during this procedure.
	41			

Is the inspection result normal?

YES >> INSPECTION END
NO >> GO TO 5.

5. CHECK HEATED OXYGEN SENSOR 2-III

Check the voltage between ECM harness connector terminals under the following conditions.

ECM			Condition	Voltage
Connector	+	–		
	Terminal			
F78	32	35	Coasting from 80 km/h (50 MPH) with selector lever in the D position	The voltage should be above 0.72 V at least once during this procedure. The voltage should be below 0.27 V at least once during this procedure.
	41			

Is the inspection result normal?

YES >> INSPECTION END
NO >> Replace malfunctioning heated oxygen sensor 2. Refer to EM-31, "Removal and Installation (bank 2)", EM-33, "Removal and Installation (bank 1)".

P0141, P0161 HEATED OXYGEN SENSOR 2 HEATER

DTC Logic

INFOID:0000000011516468

DTC DETECTION LOGIC

DTC No.	CONSULT screen terms (Trouble diagnosis content)	DTC detecting condition	Possible cause
P0141	HO2S2 HTR (B1) (O2 sensor heater circuit bank 1 sensor 2)	• Sensor temperature does not increase for 100 consecutive seconds or more despite the maximum operating condition of the heated oxygen sensor 2 heater. • Sensor temperature does not decrease for 100 consecutive seconds or more despite the inactive condition of the heated oxygen sensor 2 heater.	• Harness or connectors (The heated oxygen sensor 2 heater circuit is open or shorted.) • Heated oxygen sensor 2 heater
P0161	HO2S2 HTR (B2) (O2 sensor heater circuit bank 2 sensor 2)		

DTC CONFIRMATION PROCEDURE

1.PRECONDITIONING

If DTC Confirmation Procedure has been previously conducted, always perform the following before conducting the next test.
1. Turn ignition switch OFF and wait at least 10 seconds.
2. Turn ignition switch ON.
3. Turn ignition switch OFF and wait at least 10 seconds.

TESTING CONDITION:
Before performing the following procedure, confirm that battery voltage is between 10.5 V and 16 V at idle.

>> GO TO 2.

2.PERFORM DTC CONFIRMATION PROCEDURE

1. Start engine and warm it up to the normal operating temperature.
2. Turn ignition switch OFF and wait at least 10 seconds.
3. Turn ignition switch ON.
4. Turn ignition switch OFF and wait at least 10 seconds.
5. Start engine and keep the engine speed between 3,500 and 4,000 rpm for at least 60 seconds under no load.
6. Let engine idle for 120 seconds.
7. Check 1st trip DTC.

Is 1st tip DTC detected?

YES >> Proceed to EC-275, "Diagnosis Procedure".
NO >> INSPECTION END

Diagnosis Procedure

INFOID:0000000011516469

1.CHECK HO2S2 POWER SUPPLY

1. Disconnect heated oxygen sensor 2 (HO2S2) harness connector.
2. Turn ignition switch ON.
3. Check the voltage between HO2S2 harness connector and ground.

DTC	HO2S2			Ground	Voltage
	Bank	Connector	Terminal		
P0141	1	F75	1	Ground	Battery voltage
P0161	2	F76	1		

Is the inspection result normal?

YES >> GO TO 3.
NO >> GO TO 2.

2. CHECK HO2S2 SENSOR 1 POWER SUPPLY CIRCUIT

1. Turn ignition switch OFF.
2. Disconnect IPDM E/R harness connector.
3. Check the continuity between HO2S2 harness connector and IPDM E/R harness connector.

DTC	HO2S2			IPDM E/R		Continuity
	Bank	Connector	Terminal	Connector	Terminal	
P0141	1	F75	1	F19	52	Existed
P0161	2	F76	1		53	

Is the inspection result normal?

YES >> Perform the trouble diagnosis for power supply circuit.
NO >> Repair or replace error-detected parts.

3. CHECK HO2S2 HEATER OUTPUT SIGNAL CIRCUIT FOR OPEN AND SHORT

1. Turn ignition switch OFF.
2. Disconnect ECM harness connector.
3. Check the continuity between HO2S2 harness connector and ECM harness connector.

DTC	HO2S2			ECM		Continuity
	Bank	Connector	Terminal	Connector	Terminal	
P0141	1	F75	2	F78	7	Existed
P0161	2	F76	2		47	

4. Also check harness for short to ground and short to power.

Is the inspection result normal?

YES >> GO TO 4.
NO >> Repair open circuit, short to ground or short to power in harness or connectors.

4. CHECK HEATED OXYGEN SENSOR 2 HEATER

Check heated oxygen sensor 2 heater. Refer to EC-276, "Component Inspection".

Is the inspection result normal?

YES >> Check intermittent incident. Refer to GI-47, "Intermittent Incident".
NO >> Replace malfunctioning heated oxygen sensor 2. Refer to EM-31, "Removal and Installation (bank 2)", EM-33, "Removal and Installation (bank 1)".

Component Inspection

INFOID:0000000011516470

1. CHECK HEATED OXYGEN SENSOR 2 HEATER

1. Turn ignition switch OFF.
2. Disconnect heated oxygen sensor 2 harness connector.
3. Check resistance between HO2S2 terminals as per the following.

+	–	Resistance
Heated oxygen sensor 2		
Terminal		
1	2	3.4 - 4.4 Ω [at 25°C (77°F)]
3	1	∞ Ω (Continuity should not exist)
	2	
	4	
4	1	
	2	
	3	

Is the inspection result normal?

YES >> INSPECTION END

NO >> Replace malfunctioning heated oxygen sensor 2. Refer to EM-31, "Removal and Installation (bank 2)", EM-33, "Removal and Installation (bank 1)".

P014C, P014D, P014E, P014F, P015A, P015B, P015C, P015D A/F SENSOR 1

DTC Logic

INFOID:0000000011148601

DTC DETECTION LOGIC

To judge malfunctions, this diagnosis measures response time of the A/F signal computed by ECM from the A/F sensor 1 signal. The time is compensated by engine operating (speed and load), fuel feedback control constant, and the A/F sensor 1 temperature index. Judgment is based on whether the compensated time (the A/F signal cycling time index) is inordinately long or not.

DTC No.	CONSULT screen terms (Trouble diagnosis content)	DTC detecting condition	Possible Cause
P014C	A/F SENSOR1 (B1) (O2 sensor slow response - rich to lean bank 1 sensor 1)	• The response time of a A/F sensor 1 signal delays more than the specified time computed by ECM.	• Harness or connectors (The A/F sensor 1 circuit is open or shorted.) • A/F sensor 1
P014D	A/F SENSOR1 (B1) (O2 sensor slow response - lean to rich bank 1 sensor 1)		
P014E	A/F SENSOR1 (B2) (O2 sensor slow response - rich to lean bank 2 sensor 1)		
P014F	A/F SENSOR1 (B2) (O2 sensor slow response - lean to rich bank 2 sensor 1)		
P015A	A/F SENSOR1 (B1) (O2 sensor delayed response - rich to lean bank 1 sensor 1)		
P015B	A/F SENSOR1 (B1) (O2 sensor delayed response - lean to rich bank 1 sensor 1)		
P015C	A/F SENSOR1 (B2) (O2 sensor delayed response - rich to lean bank 2 sensor 1)		
P015D	A/F SENSOR1 (B2) (O2 sensor delayed response - lean to rich bank 2 sensor 1)		

DTC CONFIRMATION PROCEDURE

1.PRECONDITIONING

If DTC Confirmation Procedure has been previously conducted, always perform the following procedure before conducting the next test.

1. Turn ignition switch OFF and wait at least 10 seconds.
2. Turn ignition switch ON.
3. Turn ignition switch OFF and wait at least 10 seconds.

TESTING CONDITION:

Before performing the following procedure, confirm that battery voltage is more than 11 V at idle.

Do you have CONSULT?

YES >> GO TO 2.
NO >> GO TO 6.

2.PERFORM DTC CONFIRMATION PROCEDURE-1

With CONSULT

1. Start engine and warm it up to normal operating temperature.
2. Turn ignition switch OFF and wait at least 10 seconds.
3. Turn ignition switch ON.
4. Turn ignition switch OFF and wait at least 10 seconds.

5. Start engine and keep the engine speed between 3,500 and 4,000 rpm for at least 1minute under no load.
6. Let engine idle for 1 minute.
7. Increase the engine speed up to about 3,600 rpm and keep it for 10 seconds.
8. Fully release accelerator pedal and then let engine idle for about 1 minute.
9. Check the items status of “DATA MONITOR” as follows.
   NOTE:
   If “PRSNT” changed to “ABSNT”, refer to EC-182, "Component Function Check".

DTC	Data monitor item	Status
• P014C • P014D • P015A • P015B	A/F SEN1 DIAG3 (B1)	PRSNT
• P014E • P014F • P015C • P015D	A/F SEN1 DIAG3 (B2)	

Is “PRSNT” displayed on CONSULT screen?

YES >> GO TO 4.
NO >> GO TO 3.

3. PERFORM DTC CONFIRMATION PROCEDURE-2

With CONSULT
Perform DTC confirmation procedure-1 again.

Is “PRSNT” displayed on CONSULT screen?

YES >> GO TO 4.
NO >> Refer to EC-182, "Component Function Check".

4. PERFORM DTC CONFIRMATION PROCEDURE-2

With CONSULT
1. Wait for about 20 seconds at idle.
2. Check the items status of “DATA MONITOR” as follows.
   NOTE:
   If “CMPLT” changed to “INCMP”, refer to EC-182, "Component Function Check".

DTC	Data monitor item	Status
• P014C • P014D • P015A • P015B	A/F SEN1 DIAG1 (B1)	CMPLT
	A/F SEN1 DIAG2 (B1)	
• P014E • P014F • P015C • P015D	A/F SEN1 DIAG1 (B2)	
	A/F SEN1 DIAG2 (B2)	

Is “CMPLT” displayed on CONSULT screen?

YES >> GO TO 5.
NO >> Refer to EC-182, "Component Function Check".

5. PERFORM SELF-DIAGNOSIS

With CONSULT
Check the “SELF-DIAG RESULT”.

Is any DTC detected?

YES >> Proceed to EC-280, "Diagnosis Procedure".
NO >> INSPECTION END

6. CHECK AIR-FUEL RATIO SELF-LEARNING VALUE

With GST

1. Start engine and warm it up to normal operating temperature.
2. Select Service $01 with GST.
3. Calculate the total value of “Short term fuel trim” and “Long term fuel trim” indications.

Is the total percentage within ±15%?

YES >> GO TO 8.
NO >> GO TO 7.

7. DETECT MALFUNCTIONING PART

Check the following.
- Intake air leaks
- Exhaust gas leaks
- Incorrect fuel pressure
- Lack of fuel
- Fuel injector
- Incorrect PCV hose connection
- PCV valve
- Mass air flow sensor

>> Repair or replace malfunctioning part.

8. PERFORM DTC CONFIRMATION PROCEDURE

1. Turn ignition switch OFF and wait at least 10 seconds.
2. Turn ignition switch ON.
3. Turn ignition switch OFF and wait at least 10 seconds.
4. Start engine and keep the engine speed between 3,500 and 4,000 rpm for at least 1 minute under no load.
5. Let engine idle for 1 minute.
6. Increase the engine speed up to about 3,600 rpm and keep it for 10 seconds.
7. Fully release accelerator pedal and then let engine idle for about 1 minute.
8. Check 1st trip DTC.

Is 1st trip DTC detected?

YES >> Proceed to EC-280, "Diagnosis Procedure".
NO >> INSPECTION END

Diagnosis Procedure

INFOID:0000000011148602

1. RETIGHTEN A/F SENSOR 1

Loosen and retighten the A/F sensor 1. Refer to EM-31, "Removal and Installation (bank 2)", EM-33, "Removal and Installation (bank 1)".

>> GO TO 2.

2. CHECK EXHAUST GAS LEAK

1. Start engine and run it at idle.
2. Listen for an exhaust gas leak before three way catalyst 1.

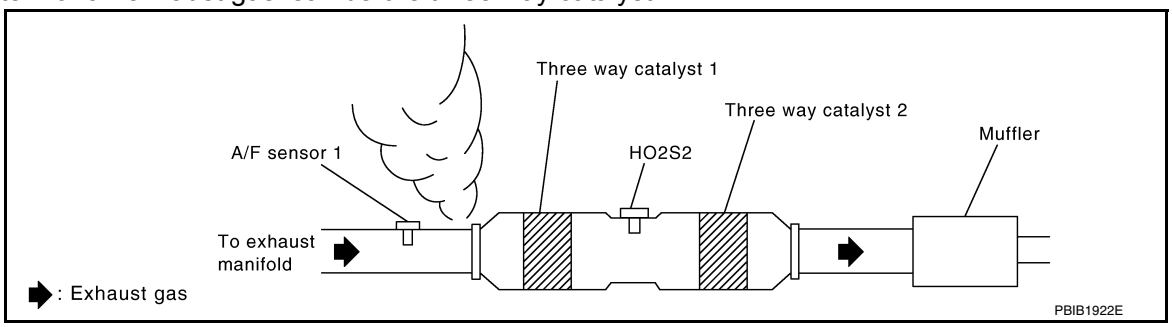

Is exhaust gas leak detected?

YES >> Repair or replace.
NO >> GO TO 3.

3. CHECK FOR INTAKE AIR LEAK

Listen for an intake air leak after the mass air flow sensor.

Is intake air leak detected?

YES >> Repair or replace.
NO >> GO TO 4.

4. CLEAR THE MIXTURE RATIO SELF-LEARNING VALUE

1. Clear the mixture ratio self-learning value. Refer to EC-162, "Work Procedure".
2. Run engine for at least 10 minutes at idle speed.

Is the 1st trip DTC P0171, P0172, P0174 or P0175 detected? Is it difficult to start engine?

YES >> Perform trouble diagnosis for DTC P0171, P0174 or P0172, P0175. Refer to EC-284, "DTC Logic" or EC-288, "DTC Logic".
NO >> GO TO 5.

5. CHECK AIR FUEL RATIO (A/F) SENSOR 1 POWER SUPPLY

1. Disconnect A/F sensor 1 harness connector.
2. Turn ignition switch ON.
3. Check the voltage between A/F sensor 1 harness connector and ground.

DTC	A/F sensor 1			Ground	Voltage
	Bank	Connector	Terminal		
• P014C • P014D • P015A • P015B	1	F72	1	Ground	Battery voltage
• P014E • P014F • P015C • P015D	2	F73	1		

Is the inspection result normal?

YES >> GO TO 7.
NO >> GO TO 6.

6. CHECK AIR FUEL RATIO (A/F) SENSOR 1 POWER SUPPLY CIRCUIT

1. Turn ignition switch OFF.
2. Disconnect IPDM E/R harness connector.
3. Check the continuity between A/F sensor 1 harness connector and IPDM E/R harness connector.

DTC	A/F sensor 1			IPDM E/R		Continuity
	Bank	Connector	Terminal	Connector	Terminal	
• P014C • P014D • P015A • P015B	1	F72	1	F19	52	Existed
• P014E • P014F • P015C • P015D	2	F73	1		53	

Is the inspection result normal?

YES >> Perform the trouble diagnosis for power supply circuit.
NO >> Repair or replace error-detected parts.

7. CHECK A/F SENSOR 1 INPUT SIGNAL CIRCUIT FOR OPEN AND SHORT

1. Turn ignition switch OFF.
2. Disconnect ECM harness connector.
3. Check the continuity between A/F sensor 1 harness connector and ECM harness connector.

DTC	A/F sensor 1			ECM		Continuity
	Bank	Connector	Terminal	Connector	Terminal	
• P014C • P014D • P015A • P015B	1	F72	3	F79	66	Existed
			4		67	
• P014E • P014F • P015C • P015D	2	F73	3		76	
			4		77	

4. Check the continuity between A/F sensor 1 harness connector and ground, or ECM harness connector and ground.

DTC	A/F sensor 1			Ground	Continuity
	Bank	Connector	Terminal		
• P014C • P014D • P015A • P015B	1	F72	3	Ground	Not existed
			4		
• P014E • P014F • P015C • P015D	2	F73	3		
			4		

DTC	ECM			Ground	Continuity
	Bank	Connector	Terminal		
• P014C • P014D • P015A • P015B	1	F79	66	Ground	Not existed
			67		
• P014E • P014F • P015C • P015D	2		76		
			77		

5. Also check harness for short to power.

Is the inspection result normal?

YES >> GO TO 8.
NO >> Repair open circuit, short to ground or short to power in harness or connectors.

8. CHECK AIR FUEL RATIO (A/F) SENSOR 1 HEATER

Check air fuel ratio (A/F) sensor 1 heater. Refer to EC-207, "Component Inspection".

Is the inspection result normal?

YES >> GO TO 9.
NO >> Replace malfunctioning air fuel ratio (A/F) sensor 1. Refer to EM-31, "Removal and Installation (bank 2)", EM-33, "Removal and Installation (bank 1)".

9. CHECK MASS AIR FLOW SENSOR

Check both mass air flow sensor (bank 1 and bank 2). Refer to EC-221, "Component Inspection".

Is the inspection result normal?

YES >> GO TO 10.
NO >> Replace malfunctioning mass air flow sensor. Refer to EM-24, "Removal and Installation".

10. CHECK PCV VALVE

Check PCV valve. Refer to EC-525, "Work Procedure".

Is the inspection result normal?

YES >> GO TO 11.
NO >> Repair or replace PCV valve. Refer to EC-20, "ENGINE CONTROL SYSTEM : Component Parts Location".

11. CHECK INTERMITTENT INCIDENT

Check intermittent incident. Refer to GI-47, "Intermittent Incident".

Is the inspection result normal?

YES >> Replace malfunctioning air fuel ratio (A/F) sensor 1. Refer to EM-31, "Removal and Installation (bank 2)", EM-33, "Removal and Installation (bank 1)".
NO >> Repair or replace error-detected parts.

P0171, P0174 FUEL INJECTION SYSTEM FUNCTION

DTC Logic

INFOID:0000000011148603

DTC DETECTION LOGIC

With the Air/Fuel Mixture Ratio Self-Learning Control, the actual mixture ratio can be brought closely to the theoretical mixture ratio based on the mixture ratio feedback signal from A/F sensor 1. The ECM calculates the necessary compensation to correct the offset between the actual and the theoretical ratios.
In case the amount of the compensation value is extremely large (the actual mixture ratio is too lean), the ECM judges the condition as the fuel injection system malfunction and illuminates the MIL (2 trip detection logic).

Sensor	Input signal to ECM	ECM function	Actuator
A/F sensor 1	Density of oxygen in exhaust gas (Mixture ratio feedback signal)	Fuel injection control	Fuel injector

DTC No.	CONSULT screen terms (Trouble diagnosis content)	DTC detecting condition	Possible cause
P0171	FUEL SYS-LEAN-B1 (System too lean bank 1)	• Fuel injection system does not operate properly. • The amount of mixture ratio compensation is too large. (The mixture ratio is too lean.)	• Intake air leakage • A/F sensor 1 • Fuel injector • Exhaust gas leakage • Incorrect fuel pressure • Lack of fuel • Mass air flow sensor • Incorrect PCV hose connection
P0174	FUEL SYS-LEAN-B2 (System too lean bank 2)		

DTC CONFIRMATION PROCEDURE

1.PRECONDITIONING

If DTC Confirmation Procedure has been previously conducted, always perform the following before conducting the next test.
1. Turn ignition switch OFF and wait at least 10 seconds.
2. Turn ignition switch ON.
3. Turn ignition switch OFF and wait at least 10 seconds.

>> GO TO 2.

2.PERFORM DTC CONFIRMATION PROCEDURE-I

1. Clear the mixture ratio self-learning value. Refer to EC-162, "Work Procedure".
2. Start engine.

Is it difficult to start engine?

YES >> GO TO 3.
NO >> GO TO 4.

3.RESTART ENGINE

If it is difficult to start engine, the fuel injection system has a malfunction, too.
Crank engine while depressing accelerator pedal.
NOTE:
- **When depressing accelerator pedal three-fourths (3/4) or more, the control system does not start the engine. Do not depress accelerator pedal too much.**

Does engine start?

YES >> Proceed to EC-285, "Diagnosis Procedure".
NO >> Check exhaust and intake air leakage visually.

4.PERFORM DTC CONFIRMATION PROCEDURE-II

1. Keep engine idle for at least 5 minutes.
2. Check 1st trip DTC.

Is 1st trip DTC detected?

YES >> Proceed to EC-285, "Diagnosis Procedure".
NO >> GO TO 5.

5. PERFORM DTC CONFIRMATION PROCEDURE-III

1. Turn ignition switch OFF and wait at least 10 seconds.
2. Start engine.
3. Maintain the following conditions for at least 10 consecutive minutes.
   Hold the accelerator pedal as steady as possible.

VHCL SPEED SE	50 - 120 km/h (31 - 75 mph)

CAUTION:
Always drive vehicle at a safe speed.

4. Check 1st trip DTC.

Is 1st trip DTC detected?

YES >> Proceed to EC-285, "Diagnosis Procedure".
NO >> INSPECTION END

Diagnosis Procedure

INFOID:0000000011148604

1. CHECK EXHAUST GAS LEAKAGE

1. Start engine and run it at idle.
2. Listen for an exhaust gas leakage before three way catalyst (manifold).

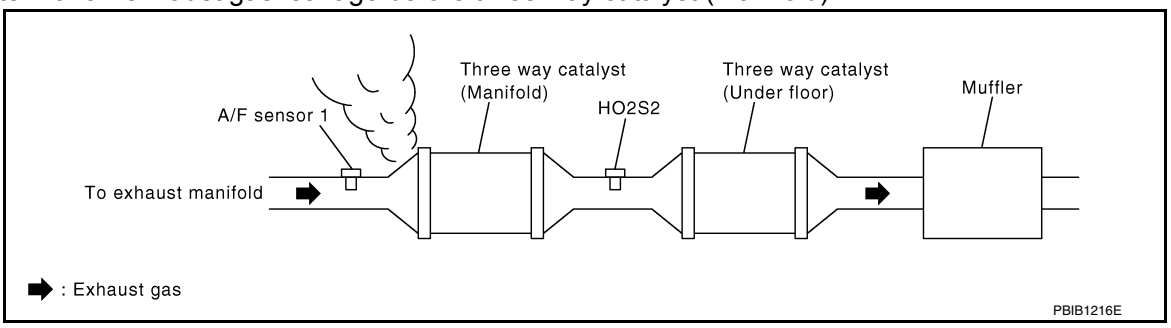

Is exhaust gas leakage detected?

YES >> Repair or replace malfunctioning part.
NO >> GO TO 2.

2. CHECK FOR INTAKE AIR LEAKAGE

1. Listen for an intake air leakage after the mass air flow sensor.
2. Check PCV hose connection.

Is intake air leakage detected?

YES >> Repair or replace malfunctioning part.
NO >> GO TO 3.

3. CHECK A/F SENSOR 1 INPUT SIGNAL CIRCUIT

1. Turn ignition switch OFF.
2. Disconnect corresponding A/F sensor 1 harness connector.
3. Disconnect ECM harness connector.
4. Check the continuity between A/F sensor 1 harness connector and ECM harness connector.

DTC	A/F sensor 1			ECM		Continuity
	Bank	Connector	Terminal	Connector	Terminal	
P0171	1	F72	3	F79	66	Existed
			4		67	
P0174	2	F73	3		76	
			4		77	

5. Check the continuity between A/F sensor 1 harness connector and ground, or ECM harness connector and ground.

DTC	A/F sensor 1			Ground	Continuity
	Bank	Connector	Terminal		
P0171	1	F72	3	Ground	Not existed
			4		
P0174	2	F73	3		
			4		

DTC	ECM		Ground	Continuity
	Connector	Terminal		
P0171	F79	66	Ground	Not existed
		67		
P0174		76		
		77		

6. Also check harness for short to power.

Is the inspection result normal?

YES >> GO TO 4.
NO >> Repair open circuit, short to ground or short to power in harness or connectors.

4. CHECK FUEL PRESSURE

1. Release fuel pressure to zero. Refer to EC-168, "Work Procedure".
2. Install fuel pressure gauge kit [SST: — (J-44321)] and check fuel pressure. Refer to EC-168, "Work Procedure".

At idling: Approximately 350 kPa (3.57 kg/cm^2, 51 psi)

Is the inspection result normal?

YES >> GO TO 6.
NO >> GO TO 5.

5. DETECT MALFUNCTIONING PART

Check fuel hoses and fuel tubes for clogging.

Is the inspection result normal?

YES >> Replace “fuel filter and fuel pump assembly”. Refer to FL-6, "Removal and Installation".
NO >> Repair or replace malfunctioning part.

6. CHECK MASS AIR FLOW SENSOR

With CONSULT

1. Install all removed parts.
2. Check “MASS AIR FLOW” in “DATA MONITOR” mode with CONSULT.
   For specification, refer to EC-527, "Mass Air Flow Sensor".

With GST

1. Install all removed parts.
2. Check mass air flow sensor signal in Service $01 with GST.
   For specification, refer to EC-527, "Mass Air Flow Sensor".

Is the measurement value within the specification?

YES >> GO TO 7.
NO >> Check connectors for rusted terminals or loose connections in the mass air flow sensor circuit or ground. Refer to EC-224, "Diagnosis Procedure".

7. CHECK FUNCTION OF FUEL INJECTOR

With CONSULT

1. Start engine.
2. Perform “POWER BALANCE” in “ACTIVE TEST” mode with CONSULT.
3. Check that each circuit produces a momentary engine speed drop.

With GST

1. Let engine idle.
2. Listen to each fuel injector operating sound.

Is the inspection result normal?

YES >> GO TO 8.
NO >> Perform trouble diagnosis for FUEL INJECTOR, refer to EC-490, "Diagnosis Procedure".

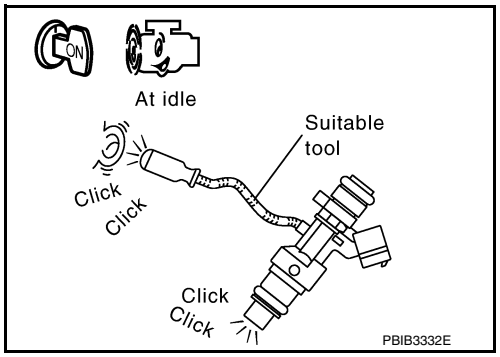

8. CHECK FUEL INJECTOR

1. Turn ignition switch OFF.
2. Confirm that the engine is cooled down and there are no fire hazards near the vehicle.
3. Disconnect all fuel injector harness connectors.
4. Remove fuel tube assembly. Refer to EM-47, "Removal and Installation".
   Keep fuel hose and all fuel injectors connected to fuel tube.
5. For DTC P0171, reconnect fuel injector harness connectors on bank 1.
   For DTC P0174, reconnect fuel injector harness connectors on bank 2.
6. Disconnect all ignition coil harness connectors.
7. Prepare pans or saucers under each fuel injector.
8. Crank engine for about 3 seconds.
   For DTC P0171, check that fuel sprays out from fuel injectors on bank 1.
   For DTC P0174, check that fuel sprays out from fuel injectors on bank 2.

Fuel should be sprayed evenly for each fuel injector.

Is the inspection result normal?

YES >> Check intermittent incident. Refer to GI-47, "Intermittent Incident".
NO >> Replace fuel injectors from which fuel does not spray out. Always replace O-ring with new ones. Refer to EM-47, "Removal and Installation".

P0172, P0175 FUEL INJECTION SYSTEM FUNCTION

DTC Logic

INFOID:0000000011148605

DTC DETECTION LOGIC

With the Air/Fuel Mixture Ratio Self-Learning Control, the actual mixture ratio can be brought closely to the theoretical mixture ratio based on the mixture ratio feedback signal from A/F sensor 1. The ECM calculates the necessary compensation to correct the offset between the actual and the theoretical ratios.
In case the amount of the compensation value is extremely large (the actual mixture ratio is too rich), the ECM judges the condition as the fuel injection system malfunction and illuminates the MIL (2 trip detection logic).

Sensor	Input signal to ECM	ECM function	Actuator
A/F sensor 1	Density of oxygen in exhaust gas (Mixture ratio feedback signal)	Fuel injection control	Fuel injector

DTC No.	CONSULT screen terms (Trouble diagnosis content)	DTC detecting condition	Possible cause
P0172	FUEL SYS-RICH-B1 (System too rich bank 1)	• Fuel injection system does not operate properly. • The amount of mixture ratio compensation is too large. (The mixture ratio is too rich.)	• A/F sensor 1 • Fuel injector • Exhaust gas leakage • Incorrect fuel pressure • Mass air flow sensor
P0175	FUEL SYS-RICH-B2 (System too rich bank 2)		

DTC CONFIRMATION PROCEDURE

1.PRECONDITIONING

If DTC Confirmation Procedure has been previously conducted, always perform the following before conducting the next test.
1. Turn ignition switch OFF and wait at least 10 seconds.
2. Turn ignition switch ON.
3. Turn ignition switch OFF and wait at least 10 seconds.

>> GO TO 2.

2.PERFORM DTC CONFIRMATION PROCEDURE-I

1. Clear the mixture ratio self-learning value. Refer to EC-162, "Work Procedure".
2. Start engine.

Is it difficult to start engine?

YES >> GO TO 3.
NO >> GO TO 4.

3.RESTART ENGINE

If it is difficult to start engine, the fuel injection system has a malfunction, too.
Crank engine while depressing accelerator pedal.
NOTE:
- **When depressing accelerator pedal three-fourths (3/4) or more, the control system does not start the engine. Do not depress accelerator pedal too much.**

Does engine start?

YES >> Proceed to EC-289, "Diagnosis Procedure".
NO >> Check exhaust and intake air leakage visually.

4.PERFORM DTC CONFIRMATION PROCEDURE-II

1. Keep engine idle for at least 5 minutes.
2. Check 1st trip DTC.

Is 1st trip DTC detected?

YES >> Proceed to EC-289, "Diagnosis Procedure".
NO >> GO TO 5.

5. PERFORM DTC CONFIRMATION PROCEDURE-III

1. Turn ignition switch OFF and wait at least 10 seconds.
2. Start engine.
3. Maintain the following conditions for at least 10 consecutive minutes.
   Hold the accelerator pedal as steady as possible.

VHCL SPEED SE	50 - 120 km/h (31 - 75 mph)

CAUTION:
Always drive vehicle at a safe speed.

4. Check 1st trip DTC.

Is 1st trip DTC detected?

YES >> Proceed to EC-289, "Diagnosis Procedure".
NO >> INSPECTION END

Diagnosis Procedure

INFOID:0000000011148606

1. CHECK EXHAUST GAS LEAKAGE

1. Start engine and run it at idle.
2. Listen for an exhaust gas leakage before three way catalyst (manifold).

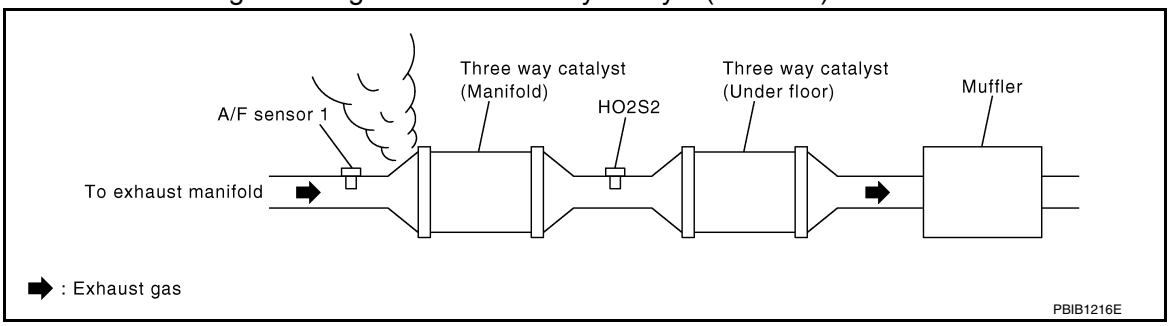

Is exhaust gas leakage detected?

YES >> Repair or replace malfunctioning part.
NO >> GO TO 2.

2. CHECK FOR INTAKE AIR LEAKAGE

Listen for an intake air leakage after the mass air flow sensor.

Is intake air leakage detected?

YES >> Repair or replace malfunctioning part.
NO >> GO TO 3.

3. CHECK A/F SENSOR 1 INPUT SIGNAL CIRCUIT

1. Turn ignition switch OFF.
2. Disconnect corresponding A/F sensor 1 harness connector.
3. Disconnect ECM harness connector.
4. Check the continuity between A/F sensor 1 harness connector and ECM harness connector.

DTC	A/F sensor 1			ECM		Continuity
	Bank	Connector	Terminal	Connector	Terminal	
P0172	1	F72	3	F79	66	Existed
			4		67	
P0175	2	F73	3		76	
			4		77	

5. Check the continuity between A/F sensor 1 harness connector and ground, or ECM harness connector and ground.

DTC	A/F sensor 1			Ground	Continuity
	Bank	Connector	Terminal		
P0172	1	F72	3	Ground	Not existed
			4		
P0175	2	F73	3		
			4		

DTC	ECM		Ground	Continuity
	Connector	Terminal		
P0172	F79	66	Ground	Not existed
		67		
P0175		76		
		77		

6. Also check harness for short to power.

Is the inspection result normal?

YES >> GO TO 4.
NO >> Repair open circuit, short to ground or short to power in harness or connectors.

4. CHECK FUEL PRESSURE

1. Release fuel pressure to zero. Refer to EC-168, "Work Procedure".
2. Install fuel pressure gauge kit [SST: — (J-44321)] and check fuel pressure. Refer to EC-168, "Work Procedure".

At idling: Approximately 350 kPa (3.57 kg/cm^2, 51 psi)

Is the inspection result normal?

YES >> GO TO 5.
NO >> Replace “fuel filter and fuel pump assembly”. Refer to FL-6, "Removal and Installation".

5. CHECK MASS AIR FLOW SENSOR

With CONSULT

1. Install all removed parts.
2. Check “MASS AIR FLOW” in “DATA MONITOR” mode with CONSULT.
   For specification, refer to EC-527, "Mass Air Flow Sensor".

With GST

1. Install all removed parts.
2. Check mass air flow sensor signal in “Service $01” with GST.
   For specification, refer to EC-527, "Mass Air Flow Sensor".

Is the measurement value within the specification?

YES >> GO TO 6.
NO >> Check connectors for rusted terminals or loose connections in the mass air flow sensor circuit or ground. Refer to EC-224, "Diagnosis Procedure".

6. CHECK FUNCTION OF FUEL INJECTOR

With CONSULT

1. Start engine.
2. Perform “POWER BALANCE” in “ACTIVE TEST” mode with CONSULT.
3. Check that each circuit produces a momentary engine speed drop.

With GST

1. Let engine idle.

2. Listen to each fuel injector operating sound.

Is the inspection result normal?

YES >> GO TO 7.
NO >> Perform trouble diagnosis for FUEL INJECTOR, refer to EC-490, "Diagnosis Procedure".

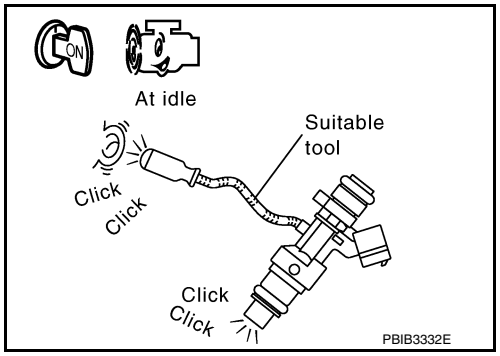

7. CHECK FUEL INJECTOR

1. Remove fuel injector assembly. Refer to EM-47, "Removal and Installation".
   Keep fuel hose and all fuel injectors connected to fuel tube.
2. Confirm that the engine is cooled down and there are no fire hazards near the vehicle.
3. Disconnect all fuel injector harness connectors.
4. Disconnect all ignition coil harness connectors.
5. Prepare pans or saucers under each fuel injectors.
6. Crank engine for about 3 seconds.
   Check fuel does not drip from fuel injector.

Is the inspection result normal?

YES >> Check intermittent incident. Refer to GI-47, "Intermittent Incident".
NO >> Replace the fuel injectors from which fuel is dripping. Always replace O-ring with new one. Refer to EM-47, "Removal and Installation".

P0181 FTT SENSOR

DTC Logic

INFOID:0000000011148607

DTC DETECTION LOGIC

DTC No.	CONSULT screen terms (Trouble diagnosis content)		DTC detecting condition	Possible cause
P0181	FTT SENSOR (Fuel temperature sensor a circuit range/performance)	A)	Rationally incorrect voltage from the sensor is sent to ECM, compared with the voltage signals from ECT sensor and intake air temperature sensor.	• Harness or connectors (The FTT sensor circuit is open or shorted) • FTT sensor
		B)	The comparison result of signals transmitted to ECM from each temperature sensor (IAT sensor, ECT sensor, EOT sensor, and FTT sensor) shows that the voltage signal of the FTT sensor is higher/lower than that of other temperature sensors when the engine is started with its cold state.	• Harness or connectors (High or low resistance in the FTT sensor circuit) • FTT sensor

DTC CONFIRMATION PROCEDURE

1. INSPECTION START

Is it necessary to erase permanent DTC?

YES >> GO TO 7.
NO >> GO TO 2.

2. PRECONDITIONING

If DTC CONFIRMATION PROCEDURE has been previously conducted, always perform the following procedure before conducting the next test.

1. Turn ignition switch OFF and wait at least 10 seconds.
2. Turn ignition switch ON.
3. Turn ignition switch OFF and wait at least 10 seconds.

>> GO TO 3.

3. PERFORM DTC CONFIRMATION PROCEDURE FOR MALFUNCTION A-I

1. Turn ignition switch ON and wait at least 10 seconds.
2. Check 1st trip DTC.

Is 1st trip DTC detected?

YES >> Proceed to EC-294, "Diagnosis Procedure".
NO >> GO TO 4.

4. CHECK ENGINE COOLANT TEMPERATURE

With CONSULT
1. Select “COOLANT TEMP/S” in “DATA MONITOR” with CONSULT.
2. Check “COOLANT TEMP/S” value.

With GST
Follow the procedure “With CONSULT” above.

“COOLANT TEMP/S” less than 60°C (140°F)?

YES >> INSPECTION END
NO >> GO TO 5.

5. PERFORM DTC CONFIRMATION PROCEDURE FOR MALFUNCTION A-II

With CONSULT
1. Cool engine down until “COOLANT TEMP/S” is less than 60°C (140°F).

2. Wait at least 10 seconds.
3. Check 1st trip DTC.

With GST
Follow the procedure “With CONSULT” above.

Is 1st trip DTC detected?

YES >> Proceed to EC-294, "Diagnosis Procedure".
NO >> GO TO 6.

6. PERFORM COMPONENT FUNCTION CHECK (FOR MALFUNCTION B)

Perform component function check. Refer to EC-293, "Component Function Check".

NOTE:
Use the component function check to check the overall function of the FTT sensor circuit. During this check, a 1st trip DTC might not be confirmed.

Is the inspection result normal?

YES >> INSPECTION END
NO >> Proceed to EC-294, "Diagnosis Procedure".

7. PRECONDITIONING

If DTC CONFIRMATION PROCEDURE has been previously conducted, always perform the following procedure before conducting the next test.

1. Turn ignition switch OFF and wait at least 10 seconds.
2. Turn ignition switch ON.
3. Turn ignition switch OFF and wait at least 10 seconds.

TESTING CONDITION:

- **Before performing the following procedure, do not add fuel.**
- **Before performing the following procedure, check that fuel level is between 1/4 and 4/4.**
- **Before performing the following procedure, confirm that battery voltage is 11 V or more at idle.**

>> GO TO 8.

8. PERFORM DTC CONFIRMATION PROCEDURE B

1. Move the vehicle to a cool place.
   NOTE:
   Cool the vehicle in an environment of ambient air temperature between –10°C (14°F) and 35°C (95°F).
2. Turn ignition switch OFF and leave the vehicle for 12 hours.
   CAUTION:
   Never turn ignition switch ON during this procedure.
   NOTE:
   The vehicle must be cooled with the hood open.
3. Start engine and let it idle for 5 minutes or more.
   CAUTION:
   Never turn ignition switch OFF during idling.
4. Check 1st trip DTC.

Is 1st trip DTC detected?

YES >> Proceed to EC-294, "Diagnosis Procedure".
NO >> INSPECTION END

Component Function Check

INFOID:0000000011148608

1. CHECK FUEL TANK TEMPERATURE (FTT) SENSOR

1. Turn ignition switch OFF.
2. Disconnect fuel level sensor unit and fuel pump harness connector.
3. Remove fuel level sensor unit. Refer to FL-6, "Removal and Installation".

4. Check resistance between fuel level sensor unit and fuel pump terminals by heating with hot water as shown in the figure.

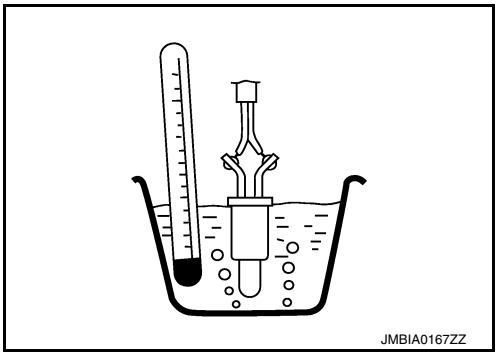

Terminals	Condition		Resistance (kΩ)
1 and 3	Temperature [°C (°F)]	20 (68)	2.3 – 2.7
		50 (122)	0.79 – 0.90

Is the inspection result normal?

YES >> GO TO 2.
NO >> Proceed to EC-294, "Diagnosis Procedure".

2. CHECK INTERMITTENT INCIDENT

Check intermittent incident. Refer to GI-47, "Intermittent Incident".

Is the inspection result normal?

YES >> INSPECTION END
NO >> Proceed to EC-294, "Diagnosis Procedure".

Diagnosis Procedure

INFOID:0000000011148609

1. INSPECTION START

Confirm the detected malfunction (A or B). Refer to EC-292, "DTC Logic".

Which malfunction is detected?

A >> GO TO 2.
B >> GO TO 5.

2. CHECK FUEL TANK TEMPERATURE SENSOR POWER SUPPLY

1. Turn ignition switch OFF.
2. Disconnect fuel level sensor unit and fuel pump harness connector.
3. Turn ignition switch ON.
4. Check the voltage between fuel level sensor unit and fuel pump harness connector and ground.

Fuel level sensor unit and fuel pump		Ground	Voltage
Connector	Terminal		
B72	3	Ground	Approx. 5 V

Is the inspection result normal?

YES >> GO TO 4.
NO >> GO TO 3.

3. CHECK FUEL TANK TEMPERATURE SENSOR POWER SUPPLY CIRCUIT

1. Turn ignition switch OFF.
2. Disconnect ECM harness connector.
3. Check the continuity between fuel tank temperature sensor harness connector and ECM harness connector.

Fuel level sensor unit and fuel pump		ECM		Continuity
Connector	Terminal	Connector	Terminal	
B72	3	E32	128	Existed

Is the inspection result normal?

YES >> Perform the trouble diagnosis for power supply circuit.
NO >> Repair or replace error-detected parts.

4. CHECK FUEL TANK TEMPERATURE SENSOR GROUND CIRCUIT FOR OPEN AND SHORT

1. Turn ignition switch OFF.
2. Disconnect ECM harness connector.

3. Check the continuity between fuel level sensor unit and fuel pump harness connector and ECM harness connector.

Fuel level sensor unit and fuel pump		ECM		Continuity
Connector	Terminal	Connector	Terminal	
B72	1	E32	148	Existed

4. Also check harness for short to ground and short to power.

Is the inspection result normal?

YES >> GO TO 5.
NO >> Repair open circuit, short to ground or short to power in harness or connector.

5. CHECK FUEL TANK TEMPERATURE SENSOR

Check fuel tank temperature sensor. Refer to EC-295, "Component Inspection".

Is the inspection result normal?

YES >> Check intermittent incident. Refer to GI-47, "Intermittent Incident".
NO >> Replace fuel level sensor unit and fuel pump. Refer to FL-6, "Removal and Installation".

Component Inspection

INFOID:0000000011148610

1. CHECK FUEL TANK TEMPERATURE SENSOR

1. Turn ignition switch OFF.
2. Remove fuel level sensor unit. Refer to FL-6, "Removal and Installation".
3. Check resistance between “fuel level sensor unit and fuel pump” terminals by heating with hot water as shown in the figure.

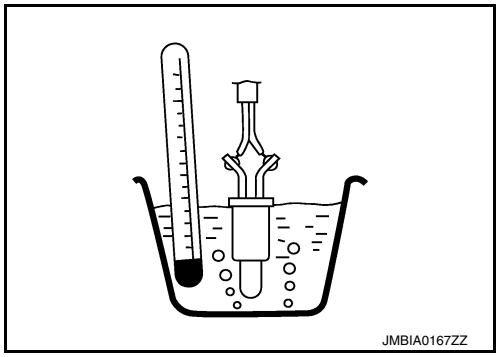

Mass air flow sensor		Condition		Resistance (kΩ)
+	–			
Terminals				
3	1	Temperature [°C (°F)]	20 (68)	2.3 - 2.7 kΩ
			50 (122)	0.79 - 0.90 kΩ

Is the inspection result normal?

YES >> INSPECTION END
NO >> Replace fuel level sensor unit and fuel pump. Refer to FL-6, "Removal and Installation".

P0182, P0183 FTT SENSOR

DTC Logic

INFOID:0000000011148611

DTC DETECTION LOGIC

DTC No.	CONSULT screen terms (Trouble diagnosis content)	DTC detecting condition	Possible cause
P0182	FTT_SEN/CIRCUIT (Fuel temperature sensor “A” circuit low)	An excessively low voltage from the sensor is sent to ECM.	• Harness or connectors (The sensor circuit is open or shorted.) • Fuel tank temperature sensor
P0183	FTT_SEN/CIRCUIT (Fuel temperature sensor “A” circuit high)	An excessively high voltage from the sensor is sent to ECM.	

DTC CONFIRMATION PROCEDURE

1.PRECONDITIONING

If DTC Confirmation Procedure has been previously conducted, always perform the following before conducting the next test.
1. Turn ignition switch OFF and wait at least 10 seconds.
2. Turn ignition switch ON.
3. Turn ignition switch OFF and wait at least 10 seconds.

>> GO TO 2.

2.PERFORM DTC CONFIRMATION PROCEDURE

1. Turn ignition switch ON and wait at least 5 seconds.
2. Check 1st trip DTC.

Is 1st trip DTC detected?

YES >> Proceed to EC-296, "Diagnosis Procedure".
NO >> INSPECTION END

Diagnosis Procedure

INFOID:0000000011148612

1.CHECK FUEL TANK TEMPERATURE SENSOR POWER SUPPLY

1. Turn ignition switch OFF.
2. Disconnect “fuel level sensor unit and fuel pump” harness connector.
3. Turn ignition switch ON.
4. Check the voltage between “fuel level sensor unit and fuel pump” harness connector and ground.

Fuel level sensor unit and fuel pump		Ground	Voltage
Connector	Terminal		
B72	3	Ground	Approx. 5 V

Is the inspection result normal?

YES >> GO TO 3.
NO >> GO TO 2.

2.CHECK FUEL TANK TEMPERATURE SENSOR POWER SUPPLY CIRCUIT

1. Turn ignition switch OFF.
2. Disconnect ECM harness connector.
3. Check the continuity between “fuel level sensor unit and fuel pump” harness connector and ECM harness connector.

Fuel level sensor unit and fuel pump		ECM		Continuity
Connector	Terminal	Connector	Terminal	
B72	3	E32	128	Existed

4. Also check harness for short to ground and short to power.

Is the inspection result normal?

YES >> GO TO 3.
NO >> Repair or replace error-detected parts.

3. CHECK FUEL TANK TEMPERATURE SENSOR GROUND CIRCUIT

1. Turn ignition switch OFF.
2. Disconnect ECM harness connector.
3. Check the continuity between “fuel level sensor unit and fuel pump” harness connector and ECM harness connector.

Fuel level sensor unit and fuel pump		ECM		Continuity
Connector	Terminal	Connector	Terminal	
B72	1	E32	148	Existed

4. Also check harness for short to ground and short to power.

Is the inspection result normal?

YES >> GO TO 4.
NO >> Repair or replace error-detected parts.

4. CHECK FUEL TANK TEMPERATURE SENSOR

Check fuel tank temperature sensor. Refer to EC-297, "Component Inspection".

Is the inspection result normal?

YES >> Check intermittent incident. Refer to GI-47, "Intermittent Incident".
NO >> Replace “fuel level sensor unit and fuel pump”. Refer to FL-6, "Removal and Installation".

Component Inspection

INFOID:0000000011148613

1. CHECK FUEL TANK TEMPERATURE SENSOR

1. Turn ignition switch OFF.
2. Remove fuel level sensor unit. Refer to FL-6, "Removal and Installation".
3. Check resistance between “fuel level sensor unit and fuel pump” terminals by heating with hot water as shown in the figure.

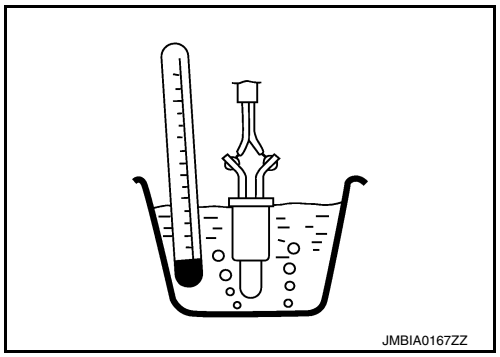

Mass air flow sensor		Condition		Resistance (kΩ)
+	–			
Terminals				
3	1	Temperature [°C (°F)]	20 (68)	2.3 - 2.7 kΩ
			50 (122)	0.79 - 0.90 kΩ

Is the inspection result normal?

YES >> INSPECTION END
NO >> Replace fuel level sensor unit and fuel pump. Refer to FL-6, "Removal and Installation".

P0196 EOT SENSOR

DTC Logic

INFOID:0000000011148614

DTC DETECTION LOGIC

NOTE:
If DTC P0196 is displayed with DTC P0197 or P0198, first perform the trouble diagnosis for DTC P0197 or P0198. Refer to EC-302, "DTC Logic".

DTC No.	CONSULT screen terms (Trouble diagnosis content)	DTC detecting condition		Possible cause
P0196	EOT SENSOR (Engine oil temperature sensor range/performance)	A)	Rationally incorrect voltage from the sensor is sent to ECM, compared with the voltage signals from EOT sensor and intake air temperature sensor.	• Harness or connectors (The EOT sensor circuit is open or shorted) • EOT sensor
		B)	The comparison result of signals transmitted to ECM from each temperature sensor (IAT sensor, ECT sensor, FTT sensor, and EOT sensor) shows that the signal voltage of the EOT sensor is higher/lower than that of other temperature sensors when the engine is started with its cold state.	• Harness or connectors (High or low resistance in the EOT sensor circuit) • EOT sensor

DTC CONFIRMATION PROCEDURE

1. INSPECTION START

Is it necessary to erase permanent DTC?

YES >> GO TO 6.
NO >> GO TO 2.

2. PRECONDITIONING

If DTC CONFIRMATION PROCEDURE has been previously conducted, always perform the following procedure before conducting the next test.

1. Turn ignition switch OFF and wait at least 10 seconds.
2. Turn ignition switch ON.
3. Turn ignition switch OFF and wait at least 10 seconds.

TESTING CONDITION:
Before performing the following procedure, confirm that battery voltage is 11 V or more at idle.

>> GO TO 3.

3. PERFORM DTC CONFIRMATION PROCEDURE FOR MULFUNCTION A-I

1. Start engine and warm it up to normal operating temperature.
2. Turn ignition switch OFF and wait at least 10 seconds.
3. Turn ignition switch ON.
4. Turn ignition switch OFF and wait at least 10 seconds.
5. Start engine and let it idle for 5 minutes and 10 seconds.
6. Check 1st trip DTC.

Is 1st trip DTC detected?

YES >> Proceed to EC-300, "Diagnosis Procedure".
NO >> GO TO 4.

4. PERFORM DTC CONFIRMATION PROCEDURE FOR MULFUNCTION A-II

With CONSULT
1. Select “DATA MONITOR” mode with CONSULT.
2. Check that “COOLANT TEMP/S” indicates above 70°C (158°F).
   If it is above 70°C (158°F), go to the following steps.

If it is below 70°C (158°F), warm engine up until “COOLANT TEMP/S” indicates more than 70°C (158°F). Then perform the following steps.
3. Turn ignition switch OFF and soak the vehicle in a cool place.
4. Turn ignition switch ON.
NOTE:
Do not turn ignition switch OFF until step 8.
5. Select “DATA MONITOR” mode with CONSULT.
6. Check the following.

COOLANT TEMP/S	Below 40°C (104°F)
INT/A TEMP SE	Below 40°C (104°F)
Difference between “COOLANT TEMP/S” and “INT/A TEMP SE”	Within 6°C (11°F)

If they are within the specified range, perform the following steps.
If they are out of the specified range, soak the vehicle to meet the above conditions. Then perform the following steps.
NOTE:
- **Do not turn ignition switch OFF.**
- **If it is supposed to need a long period of time, do not deplete the battery.**

7. Start engine and let it idle for 5 minutes.
8. Check 1st trip DTC.

With GST
Follow the procedure “With CONSULT” above.

Is 1st trip DTC detected?

YES >> Proceed to EC-300, "Diagnosis Procedure".
NO >> GO TO 5.

5. PERFORM COMPONENT FUNCTION CHECK (FOR MULFUNCTION B)

Perform component function check. Refer to EC-300, "Component Function Check".
NOTE:
Use the component function check to check the overall function of the EOT sensor circuit. During this check, a 1st trip DTC might not be confirmed.

Is the inspection result normal?

YES >> INSPECTION END
NO >> Proceed to EC-300, "Diagnosis Procedure".

6. PRECONDITIONING

If DTC CONFIRMATION PROCEDURE has been previously conducted, always perform the following procedure before conducting the next test.
1. Turn ignition switch OFF and wait at least 10 seconds.
2. Turn ignition switch ON.
3. Turn ignition switch OFF and wait at least 10 seconds.

TESTING CONDITION:
- **Before performing the following procedure, do not add fuel.**
- **Before performing the following procedure, check that fuel level is between 1/4 and 4/4.**
- **Before performing the following procedure, confirm that battery voltage is 11 V or more at idle.**

>> GO TO 7.

7. PERFORM DTC CONFIRMATION PROCEDURE B

1. Move the vehicle to a cool place.
NOTE:
Cool the vehicle in an environment of ambient air temperature between –10°C (14°F) and 35°C (95°F).
2. Turn ignition switch OFF and leave the vehicle for 12 hours.
CAUTION:
Never turn ignition switch ON during this procedure.
NOTE:
The vehicle must be cooled with the hood open.
3. Start engine and let it idle for 5 minutes or more.

CAUTION:
Never turn ignition switch OFF during idling.

4. Check 1st trip DTC.

Is 1st trip DTC detected?

YES >> Proceed to EC-300, "Diagnosis Procedure".
NO >> INSPECTION END

Component Function Check

INFOID:0000000011148615

1. CHECK ENGINE OIL TEMPERATURE (EOT) SENSOR

1. Turn ignition switch OFF.
2. Disconnect EOT sensor harness connector.
3. Remove EOT sensor. Refer to EC-20, "ENGINE CONTROL SYSTEM : Component Parts Location".
4. Check resistance between EOT sensor terminals by heating with hot water as shown in the figure.

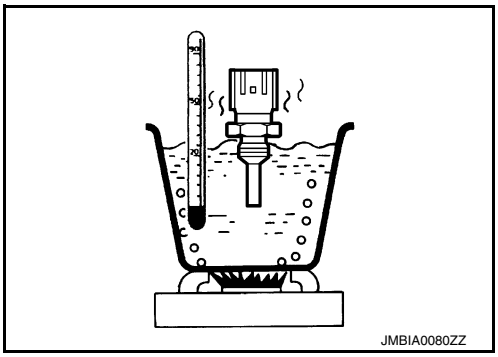

Terminals	Condition		Resistance (kΩ)
1 and 2	Temperature [°C (°F)]	20 (68)	2.37 – 2.63
		50 (122)	0.68 – 1.00
		90 (194)	0.236 – 0.260

Is the inspection result normal?

YES >> GO TO 2.
NO >> Proceed to EC-300, "Diagnosis Procedure".

2. CHECK INTERMITTENT INCIDENT

Check intermittent incident. Refer to GI-47, "Intermittent Incident".

Is the inspection result normal?

YES >> INSPECTION END
NO >> Proceed to EC-300, "Diagnosis Procedure".

Diagnosis Procedure

INFOID:0000000011148616

1. CHECK ENGINE OIL TEMPERATURE SENSOR

Check engine oil temperature sensor. Refer to EC-300, "Component Inspection".

Is the inspection result normal?

YES >> Check intermittent incident. Refer to GI-47, "Intermittent Incident".
NO >> Replace engine oil temperature sensor. Refer to EC-20, "ENGINE CONTROL SYSTEM : Component Parts Location".

Component Inspection

INFOID:0000000011148617

1. CHECK ENGINE OIL TEMPERATURE SENSOR

1. Turn ignition switch OFF.
2. Disconnect engine oil temperature sensor harness connector.
3. Remove engine oil temperature sensor. Refer to EC-20, "ENGINE CONTROL SYSTEM : Component Parts Location".

4. Check resistance between engine oil temperature sensor terminals by heating with hot water as shown in the figure.

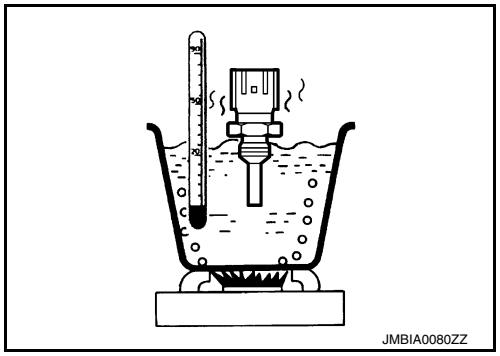

Terminals	Condition		Resistance (kΩ)
1 and 2	Temperature [°C (°F)]	20 (68)	2.37 - 2.63
		50 (122)	0.68 - 1.00
		90 (194)	0.236 - 0.260

Is the inspection result normal?

YES >> INSPECTION END

NO >> Replace engine oil temperature sensor. Refer to EC-20, "ENGINE CONTROL SYSTEM : Component Parts Location".

P0197, P0198 EOT SENSOR

DTC Logic

INFOID:0000000011148618

DTC DETECTION LOGIC

DTC No.	CONSULT screen terms (Trouble diagnosis content)	DTC detecting condition	Possible Cause
P0197	EOT SEN/CIRC (Engine oil temperature sensor circuit low)	An excessively low voltage from the sensor is sent to ECM.	• Harness or connectors (The sensor circuit is open or shorted.) • Engine oil temperature sensor
P0198	EOT SEN/CIRC (Engine oil temperature sensor circuit high)	An excessively high voltage from the sensor is sent to ECM.	

DTC CONFIRMATION PROCEDURE

1. PRECONDITIONING

If DTC Confirmation Procedure has been previously conducted, always perform the following before conducting the next test.
1. Turn ignition switch OFF and wait at least 10 seconds.
2. Turn ignition switch ON.
3. Turn ignition switch OFF and wait at least 10 seconds.

>> GO TO 2.

2. PERFORM DTC CONFIRMATION PROCEDURE

1. Start engine and wait at least 5 seconds.
2. Check 1st trip DTC.

Is 1st trip DTC detected?

YES >> Proceed to EC-302, "Diagnosis Procedure".
NO >> INSPECTION END

Diagnosis Procedure

INFOID:0000000011148619

1. CHECK EOT SENSOR POWER SUPPLY

1. Disconnect engine oil temperature (EOT) sensor harness connector.
2. Turn ignition switch ON.
3. Check the voltage between EOT sensor harness connector and ground.

EOT sensor		Ground	Voltage
Connector	Terminal		
F68	1	Ground	Approx. 5 V

Is the inspection result normal?

YES >> GO TO 2.
NO >> Repair open circuit, short to ground or short to power in harness or connectors.

2. CHECK EOT SENSOR GROUND CIRCUIT FOR OPEN AND SHORT

1. Turn ignition switch OFF.
2. Disconnect ECM harness connector.
3. Check the continuity between EOT sensor harness connector and ECM harness connector.

EOT sensor		ECM		Continuity
Connector	Terminal	Connector	Terminal	
F68	2	F78	15	Existed

4. Also check harness for short to ground and short to power.

Is the inspection result normal?

YES >> GO TO 3.
NO >> Repair open circuit, short to ground or short to power in harness or connectors.

3. CHECK ENGINE OIL TEMPERATURE SENSOR

Check engine oil temperature sensor. Refer to EC-303, "Component Inspection".

Is the inspection result normal?

YES >> Check intermittent incident. Refer to GI-47, "Intermittent Incident".
NO >> Replace engine oil temperature sensor. Refer to EC-20, "ENGINE CONTROL SYSTEM : Component Parts Location".

Component Inspection

INFOID:0000000011148620

1. CHECK ENGINE OIL TEMPERATURE SENSOR

1. Turn ignition switch OFF.
2. Disconnect engine oil temperature sensor harness connector.
3. Remove engine oil temperature sensor. Refer to EC-20, "ENGINE CONTROL SYSTEM : Component Parts Location".
4. Check resistance between engine oil temperature sensor terminals by heating with hot water as shown in the figure.

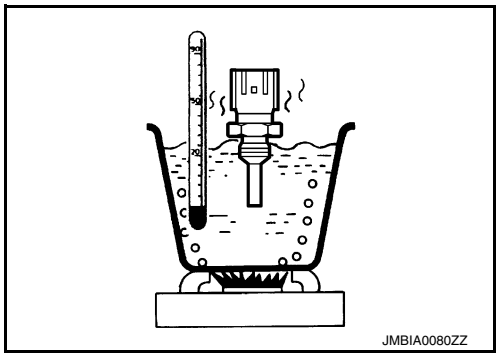

Terminals	Condition		Resistance (kΩ)
1 and 2	Temperature [°C (°F)]	20 (68)	2.37 - 2.63
		50 (122)	0.68 - 1.00
		90 (194)	0.236 - 0.260

Is the inspection result normal?

YES >> INSPECTION END
NO >> Replace engine oil temperature sensor. Refer to EC-20, "ENGINE CONTROL SYSTEM : Component Parts Location".

P0222, P0223 TP SENSOR

DTC Logic

INFOID:0000000011148621

DTC DETECTION LOGIC

NOTE:
If DTC P0222 or P0223 is displayed with DTC P0643, first perform the trouble diagnosis for DTC P0643. Refer to EC-395, "DTC Logic".

DTC No.	CONSULT screen terms (Trouble diagnosis content)	DTC detecting condition	Possible cause
P0222	TP SEN 1/CIRC-B1 (Throttle/Pedal position sensor/switch “B” circuit low)	An excessively low voltage from the TP sensor 1 is sent to ECM.	• Harness or connectors (TP sensor 1 circuit is open or shorted.) • Electric throttle control actuator (TP sensor 1)
P0223	TP SEN 1/CIRC-B1 (Throttle/Pedal position sensor/switch “B” circuit high)	An excessively high voltage from the TP sensor 1 is sent to ECM.	

DTC CONFIRMATION PROCEDURE

1.PRECONDITIONING

If DTC Confirmation Procedure has been previously conducted, always perform the following before conducting the next test.
1. Turn ignition switch OFF and wait at least 10 seconds.
2. Turn ignition switch ON.
3. Turn ignition switch OFF and wait at least 10 seconds.

TESTING CONDITION:
Before performing the following procedure, confirm that battery voltage is more than 10 V at idle.

>> GO TO 2.

2.PERFORM DTC CONFIRMATION PROCEDURE

1. Start engine and let it idle for 1 second.
2. Check DTC.

Is DTC detected?

YES >> Proceed to EC-304, "Diagnosis Procedure".
NO >> INSPECTION END

Diagnosis Procedure

INFOID:0000000011148622

1.CHECK THROTTLE POSITION SENSOR 1 POWER SUPPLY

1. Disconnect electric throttle control actuator harness connector.
2. Turn ignition switch ON.
3. Check the voltage between electric throttle control actuator harness connector and ground.

+		–	Voltage
Electric throttle control actuator			
Connector	Terminal		
F50	5	Ground	Approx. 5 V

Is the inspection result normal?

YES >> GO TO 3.
NO >> GO TO 2.

2.CHECK THROTTLE POSITION SENSOR 1 POWER SUPPLY CIRCUIT

1. Turn ignition switch OFF.
2. Disconnect ECM harness connector.

3. Check the continuity between electric throttle control actuator and ECM harness connector.

Electric throttle control actuator		ECM		Continuity
Connector	Terminal	Connector	Terminal	
F50	5	F79	98	Existed

Is the inspection result normal?

YES >> Check intermittent incident. Refer to GI-47, "Intermittent Incident".
NO >> Repair or replace error-detected parts.

3. CHECK THROTTLE POSITION SENSOR 1 GROUND CIRCUIT

1. Turn ignition switch OFF.
2. Disconnect ECM harness connector.
3. Check the continuity between electric throttle control actuator and ECM harness connector.

Electric throttle control actuator		ECM		Continuity
Connector	Terminal	Connector	Terminal	
F50	4	F79	75	Existed

4. Also check harness for short to ground and short to power.

Is the inspection result normal?

YES >> GO TO 4.
NO >> Repair open circuit, short to ground or short to power in harness or connectors.

4. CHECK THROTTLE POSITION SENSOR 1 INPUT SIGNAL CIRCUIT

1. Check the continuity between electric throttle control actuator and ECM harness connector.

Electric throttle control actuator		ECM		Continuity
Connector	Terminal	Connector	Terminal	
F50	6	F79	71	Existed

2. Also check harness for short to ground and short to power.

Is the inspection result normal?

YES >> GO TO 5.
NO >> Repair open circuit, short to ground or short to power in harness or connectors.

5. CHECK THROTTLE POSITION SENSOR

Check throttle position sensor. Refer to EC-305, "Component Inspection".

Is the inspection result normal?

YES >> Check intermittent incident. Refer to GI-47, "Intermittent Incident".
NO >> Replace electric throttle control actuator. Refer to EM-26, "Removal and Installation".

Component Inspection

INFOID:0000000011148623

1. CHECK THROTTLE POSITION SENSOR

1. Turn ignition switch OFF.
2. Reconnect all harness connectors disconnected.
3. Perform EC-159, "Work Procedure".
4. Turn ignition switch ON.
5. Set selector lever to D position.
6. Check the voltage between ECM harness connector terminals under the following conditions.

ECM			Condition		Voltage
Connector	+	–			
	Terminal	Terminal			
F79	71	75	Accelerator pedal	Fully released	More than 0.36 V
				Fully depressed	Less than 4.75 V
	72			Fully released	Less than 4.75 V
				Fully depressed	More than 0.36 V

Is the inspection result normal?

YES >> INSPECTION END
NO >> Replace electric throttle control actuator. Refer to EM-26, "Removal and Installation".

P0300, P0301, P0302, P0303, P0304, P0305, P0306 MISFIRE

DTC Logic

INFOID:0000000011148624

DTC DETECTION LOGIC

When a misfire occurs, engine speed will fluctuate. If the engine speed fluctuates enough to cause the crankshaft position (CKP) sensor (POS) signal to vary, ECM can determine that a misfire is occurring.

Sensor	Input signal to ECM	ECM function
Crankshaft position sensor (POS)	Engine speed	On board diagnosis of misfire

The misfire detection logic consists of the following two conditions.

1. One Trip Detection Logic (Three Way Catalyst Damage)
   On the 1st trip, when a misfire condition occurs that can damage the three way catalyst (TWC) due to overheating, the MIL will blink.
   When a misfire condition occurs, the ECM monitors the CKP sensor signal every 200 engine revolutions for a change.
   When the misfire condition decreases to a level that will not damage the TWC, the MIL will turn off.
   If another misfire condition occurs that can damage the TWC on a second trip, the MIL will blink.
   When the misfire condition decreases to a level that will not damage the TWC, the MIL will remain on.
   If another misfire condition occurs that can damage the TWC, the MIL will begin to blink again.
2. Two Trip Detection Logic (Exhaust quality deterioration)
   For misfire conditions that will not damage the TWC (but will affect vehicle emissions), the MIL will only illuminate when the misfire is detected on a second trip. During this condition, the ECM monitors the CKP sensor signal every 1,000 engine revolutions.
   A misfire malfunction can be detected in any one cylinder or in multiple cylinders.

DTC No.	CONSULT screen terms (Trouble diagnosis content)	DTC detecting condition	Possible cause
P0300	MULTI CYL MISFIRE (Random/Multiple cylinder misfire detected)	Multiple cylinders misfire.	• Improper spark plug • Insufficient compression • Incorrect fuel pressure • The fuel injector circuit is open or shorted • Fuel injector • Intake air leakage • The ignition signal circuit is open or shorted • Lack of fuel • Signal plate • A/F sensor 1 • Incorrect PCV hose connection
P0301	CYL 1 MISFIRE (Cylinder 1 misfire detected)	No. 1 cylinder misfires.	
P0302	CYL 2 MISFIRE (Cylinder 2 misfire detected)	No. 2 cylinder misfires.	
P0303	CYL 3 MISFIRE (Cylinder 3 misfire detected)	No. 3 cylinder misfires.	
P0304	CYL 4 MISFIRE (Cylinder 4 misfire detected)	No. 4 cylinder misfires.	
P0305	CYL 5 MISFIRE (Cylinder 5 misfire detected)	No. 5 cylinder misfires.	
P0306	CYL 6 MISFIRE (Cylinder 6 misfire detected)	No. 6 cylinder misfires.	

DTC CONFIRMATION PROCEDURE

1. PRECONDITIONING

If DTC Confirmation Procedure has been previously conducted, always perform the following procedure before conducting the next test.

1. Turn ignition switch OFF and wait at least 10 seconds.
2. Turn ignition switch ON.
3. Turn ignition switch OFF and wait at least 10 seconds.

>> GO TO 2.

2. PERFORM DTC CONFIRMATION PROCEDURE-I

1. Start engine and warm it up to normal operating temperature.
2. Turn ignition switch OFF and wait at least 10 seconds.

3. Turn ignition switch ON.
4. Turn ignition switch OFF and wait at least 10 seconds.
5. Restart engine and let it idle for approximately 15 minutes.
6. Check 1st trip DTC.

Is 1st trip DTC detected?

YES >> Proceed to EC-308, "Diagnosis Procedure".
NO >> GO TO 3.

3. PERFORM DTC CONFIRMATION PROCEDURE-II

1. Turn ignition switch OFF and wait at least 10 seconds.
2. Turn ignition switch ON.
3. Turn ignition switch OFF and wait at least 10 seconds.
4. Start engine and drive the vehicle under similar conditions to (1st trip) Freeze Frame Data for a certain time. Refer to the table below.
   Hold the accelerator pedal as steady as possible.
   Similar conditions to (1st trip) Freeze Frame Data mean that the following conditions should be satisfied at the same time.
   CAUTION:
   Always drive vehicle in safe manner according to traffic conditions and obey all traffic laws when driving.

Engine speed	Engine speed in the freeze frame data ± 400 rpm
Vehicle speed	Vehicle speed in the freeze frame data ± 10 km/h (6 MPH)
Basic fuel schedule	Basic fuel schedule in freeze frame data × (1 ± 0.1)
Engine coolant temperature (T) condition	When the freeze frame data shows lower than 70°C (158°F), T should be lower than 70°C (158°F).
	When the freeze frame data shows higher than or equal to 70°C (158°F), T should be higher than or equal to 70°C (158°F).

Driving time varies according to the engine speed in the freeze frame data.

Engine speed	Time
Around 1,000 rpm	Approximately 10 minutes
Around 2,000 rpm	Approximately 5 minutes
More than 3,000 rpm	Approximately 3.5 minutes

5. Check 1st trip DTC.

Is 1st trip DTC detected?

YES >> Proceed to EC-308, "Diagnosis Procedure".
NO >> INSPECTION END

Diagnosis Procedure

INFOID:0000000011148625

1. CHECK FOR INTAKE AIR LEAKAGE AND PCV HOSE

1. Start engine and run it at idle speed.
2. Listen for the sound of the intake air leakage.
3. Check PCV hose connection.

Is intake air leakage detected?

YES >> Discover air leakage location and repair.
NO >> GO TO 2.

2. CHECK FOR EXHAUST SYSTEM CLOGGING

Stop engine and visually check exhaust tube, three way catalyst and muffler for dents.

Is the inspection result normal?

YES-1 >> With CONSULT: GO TO 3.
YES-2 >> Without CONSULT: GO TO 4.
NO >> Repair or replace malfunctioning part.

3. PERFORM POWER BALANCE TEST

With CONSULT

1. Start engine.
2. Perform “POWER BALANCE” in “ACTIVE TEST” mode with CONSULT.
3. Check that each circuit produces a momentary engine speed drop.

Is the inspection result normal?

YES >> GO TO 9.
NO >> GO TO 4.

4. CHECK FUNCTION OF FUEL INJECTOR

1. Start engine and let it idle.
2. Listen to each fuel injector make operation sound.

Clicking sound should be heard.

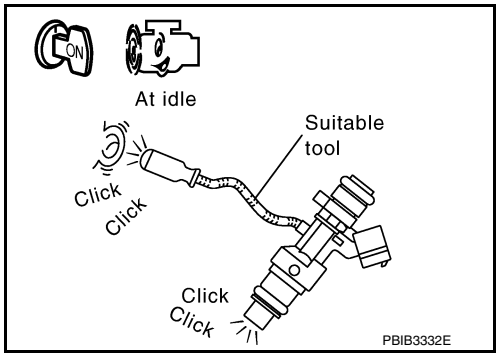

Is the inspection result normal?

YES >> GO TO 5.
NO >> Perform trouble diagnosis for FUEL INJECTOR, refer to EC-490, "Diagnosis Procedure".

5. CHECK FUNCTION OF IGNITION COIL-I

CAUTION:
Perform the following procedure in a place with no combustible objects and good ventilation.

1. Turn ignition switch OFF.
2. Remove fuel pump fuse in IPDM E/R to release fuel pressure.
   NOTE:
   Do not use CONSULT to release fuel pressure, or fuel pressure applies again during the following procedure.
3. Start engine.
4. After engine stalls, crank it 2 or 3 times to release all fuel pressure.
5. Turn ignition switch OFF.
6. Remove all ignition coil harness connectors to avoid the electrical discharge from the ignition coils.
7. Remove ignition coil and spark plug of the cylinder to be checked.
8. Crank engine for 5 seconds or more to remove combustion gas in the cylinder.
9. Connect spark plug and harness connector to ignition coil.
10. Fix ignition coil using a rope etc. with gap of 13 - 17 mm (0.52 - 0.66 in) between the edge of the spark plug and grounded metal portion as shown in the figure.
11. Crank engine for approximately 3 seconds, and check whether spark is generated between the spark plug and the grounded metal portion.

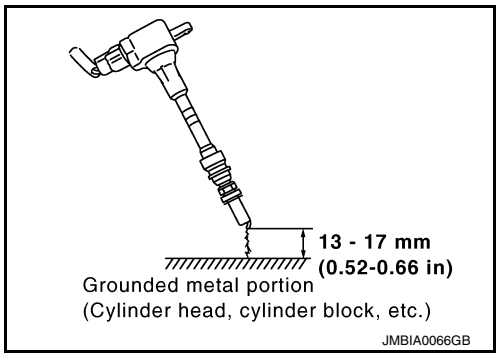

Spark should be generated.

CAUTION:
- **During the operation, always stay 0.5 m (19.7 in) or more away from the spark plug and the ignition coil. Be careful not to get an electrical shock while checking, because the electrical discharge voltage becomes 20 kV or more.**
- **It might damage the ignition coil if the gap of more than 17 mm (0.66 in) is made.**

NOTE:
When the gap is less than 13 mm (0.52 in), a spark might be generated even if the coil is malfunctioning.

Is the inspection result normal?

YES >> GO TO 9.
NO >> GO TO 6.

6. CHECK FUNCTION OF IGNITION COIL-II

1. Turn ignition switch OFF.
2. Disconnect spark plug and connect a non-malfunctioning spark plug.
3. Crank engine for approximately 3 seconds, and recheck whether spark is generated between the spark plug and the grounded metal portion.

Spark should be generated.

Is the inspection result normal?

YES >> GO TO 7.
NO >> Check ignition coil, power transistor and their circuits. Refer to EC-497, "Diagnosis Procedure".

7. CHECK SPARK PLUG

Check the initial spark plug for fouling, etc.

Is the inspection result normal?

YES >> Replace spark plug(s) with standard type one(s). For spark plug type, refer to EM-135, "Spark Plug".
NO >> Repair or clean spark plug. Then GO TO 8.

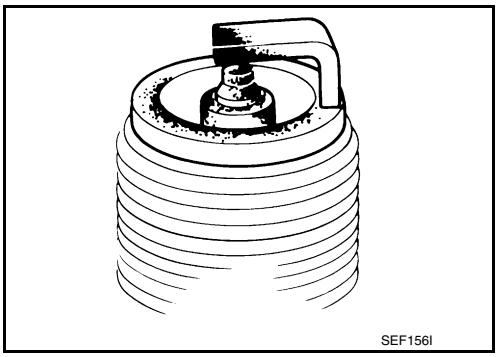

8. CHECK FUNCTION OF IGNITION COIL-III

1. Reconnect the initial spark plugs.
2. Crank engine for approximately 3 seconds, and recheck whether spark is generated between the spark plug and the grounded portion.

Spark should be generated.

Is the inspection result normal?

YES >> INSPECTION END
NO >> Replace spark plug(s) with standard type one(s). For spark plug type, refer to EM-135, "Spark Plug".

9. CHECK COMPRESSION PRESSURE

Check compression pressure. Refer to EM-22, "On-Vehicle Service".

Is the inspection result normal?

YES >> GO TO 10.
NO >> Check pistons, piston rings, valves, valve seats and cylinder head gaskets.

10. CHECK FUEL PRESSURE

1. Install all removed parts.
2. Release fuel pressure to zero. Refer to EC-168, "Work Procedure".
3. Install fuel pressure gauge kit [SST: — (J-44321)] and check fuel pressure. Refer to EC-168, "Work Procedure".

At idle: Approximately 350 kPa (3.57 kg/cm^2, 51 psi)

Is the inspection result normal?

YES >> GO TO 12.
NO >> GO TO 11.

11. DETECT MALFUNCTIONING PART

Check fuel hoses and fuel tubes for clogging.

Is the inspection result normal?

YES >> Replace “fuel filter and fuel pump assembly”. Refer to FL-6, "Removal and Installation".

NO >> Repair or replace malfunctioning part.

12. CHECK IGNITION TIMING

Check idle speed and ignition timing.
For procedure, refer to EC-164, "Work Procedure".
For specification, refer to EC-527, "Idle Speed" and EC-527, "Ignition Timing".

Is the inspection result normal?

YES >> GO TO 13.
NO >> Follow the EC-164, "Work Procedure".

13. CHECK A/F SENSOR 1 INPUT SIGNAL CIRCUIT

1. Turn ignition switch OFF.
2. Disconnect corresponding A/F sensor 1 harness connector.
3. Disconnect ECM harness connector.
4. Check the continuity between A/F sensor 1 harness connector and ECM harness connector.

A/F sensor 1			ECM		Continuity
Bank	Connector	Terminal	Connector	Terminal	
1	F72	3	F79	66	Existed
		4		67	
2	F73	3		76	
		4		77	

5. Check the continuity between A/F sensor 1 harness connector and ground, or ECM harness connector and ground.

A/F sensor 1			Ground	Continuity
Bank	Connector	Terminal		
1	F72	3	Ground	Not existed
		4		
2	F73	3		
		4		

ECM		Ground	Continuity
Connector	Terminal		
F79	66	Ground	Not existed
	67		
	76		
	77		

6. Also check harness for short to power.

Is the inspection result normal?

YES >> GO TO 14.
NO >> Repair open circuit, short to ground or short to power in harness or connectors.

14. CHECK A/F SENSOR 1 HEATER

Check A/F sensor 1 heater. Refer to EC-207, "Component Inspection".

Is the inspection result normal?

YES >> GO TO 15.
NO >> Replace malfunctioning A/F sensor 1. Refer to EM-31, "Removal and Installation (bank 2)", EM-33, "Removal and Installation (bank 1)".

15. CHECK MASS AIR FLOW SENSOR

With CONSULT

1. Check “MASS AIR FLOW” in “DATA MONITOR” mode with CONSULT.
2. For specification, refer to EC-527, "Mass Air Flow Sensor".

With GST

1. Check mass air flow sensor signal in Service $01 with GST.
2. For specification, refer to EC-527, "Mass Air Flow Sensor".

Is the measurement value within the specification?

YES >> GO TO 16.
NO >> Check connectors for rusted terminals or loose connections in the mass air flow sensor circuit or ground. Refer to EC-224, "Diagnosis Procedure".

16. CHECK SYMPTOM TABLE

Check items on the rough idle symptom in EC-516, "Symptom Table".

Is the inspection result normal?

YES >> GO TO 17.
NO >> Repair or replace malfunctioning part.

17. ERASE THE 1ST TRIP DTC

Some tests may cause a 1st trip DTC to be set.
Erase the 1st trip DTC from the ECM memory after performing the tests. Refer to EC-72, "CONSULT Function".

>> Check intermittent incident. Refer to GI-47, "Intermittent Incident".

P0327, P0328, P0332, P0333 KS

DTC Logic

INFOID:0000000011148626

DTC DETECTION LOGIC

DTC No.	CONSULT screen terms (Trouble diagnosis content)	DTC detected condition	Possible cause
P0327	KNOCK SEN/CIRC-B1 (Knock sensor 1 circuit low bank 1)	An excessively low voltage from the sensor is sent to ECM.	• Harness or connectors (The sensor circuit is open or shorted.) • Knock sensor
P0328	KNOCK SEN/CIRC-B1 (Knock sensor 1 circuit high bank 1)	An excessively high voltage from the sensor is sent to ECM.	
P0332	KNOCK SEN/CIRC-B2 (Knock sensor 2 circuit low bank 2)	An excessively low voltage from the sensor is sent to ECM.	
P0333	KNOCK SEN/CIRC-B1 (Knock sensor 2 circuit high bank 2)	An excessively high voltage from the sensor is sent to ECM.	

DTC CONFIRMATION PROCEDURE

1.PRECONDITIONING

If DTC Confirmation Procedure has been previously conducted, always perform the following before conducting the next test.
1. Turn ignition switch OFF and wait at least 10 seconds.
2. Turn ignition switch ON.
3. Turn ignition switch OFF and wait at least 10 seconds.

TESTING CONDITION:
Before performing the following procedure, confirm that battery voltage is more than 10 V at idle.

>> GO TO 2.

2.PERFORM DTC CONFIRMATION PROCEDURE

1. Start engine and run it for at least 5 seconds at idle speed.
2. Check 1st trip DTC.

Is 1st trip DTC detected?

YES >> Proceed to EC-313, "Diagnosis Procedure".
NO >> INSPECTION END

Diagnosis Procedure

INFOID:0000000011148627

1.CHECK KNOCK SENSOR GROUND CIRCUIT

1. Disconnect knock sensor harness connector and ECM harness connector.
2. Check the continuity between knock sensor harness connector and ECM harness connector.

DTC	Knock sensor			ECM		Continuity
	Bank	Connector	Terminal	Connector	Terminal	
P0327, P0328	1	F202	2	F78	4	Existed
P0332, P0333	2	F204	2			

3. Also check harness for short to ground and short to power.

Is the inspection result normal?

YES >> GO TO 2.
NO >> Repair open circuit, short to ground or short to power in harness or connectors.

2.CHECK KNOCK SENSOR INPUT SIGNAL CIRCUIT

1. Check the continuity between knock sensor harness connector and ECM harness connector.

DTC	Knock sensor			ECM		Continuity
	Bank	Connector	Terminal	Connector	Terminal	
P0327, P0328	1	F202	1	F78	5	Existed
P0332, P0333	2	F204	1		9	

2. Also check harness for short to ground and short to power.

Is the inspection result normal?

YES >> GO TO 3.
NO >> Repair open circuit, short to ground or short to power in harness or connectors.

3.CHECK KNOCK SENSOR

Check knock sensor. Refer to EC-314, "Component Inspection".

Is the inspection result normal?

YES >> Check intermittent incident. Refer to GI-47, "Intermittent Incident".
NO >> Replace malfunctioning knock sensor. Refer to EM-113, "Disassembly and Assembly".

Component Inspection

INFOID:0000000011148628

1.CHECK KNOCK SENSOR

1. Turn ignition switch OFF.
2. Disconnect knock sensor harness connector.
3. Check resistance between knock sensor terminal as per the following.
   NOTE:
   It is necessary to use an ohmmeter which can measure more than 10 MΩ.

Knock sensor		Resistance
+	-	
Terminals		
1	2	Approx. 532 - 588 kΩ [at 20°C (68°F)]

CAUTION:
Never use any knock sensors that have been dropped or physically damaged. Use only new ones.

Is the inspection result normal?

YES >> INSPECTION END
NO >> Replace malfunctioning knock sensor. Refer to EM-113, "Disassembly and Assembly".

P0335 CKP SENSOR (POS)

DTC Logic

INFOID:0000000011148629

DTC DETECTION LOGIC

NOTE:
If DTC P0335 is displayed with DTC P0643, first perform the trouble diagnosis for DTC P0643. Refer to **EC-395, "DTC Logic"****.**

DTC No.	CONSULT screen terms (Trouble diagnosis content)	DTC detecting condition	Possible cause
P0335	CKP SEN/CIRCUIT (Crankshaft position sensor "A" circuit)	• The crankshaft position sensor (POS) signal is not detected by the ECM during the first few seconds of engine cranking. • The proper pulse signal from the crankshaft position sensor (POS) is not sent to ECM while the engine is running. • The crankshaft position sensor (POS) signal is not in the normal pattern during engine running.	• Harness or connectors [CKP sensor (POS) circuit is open or shorted.] • Crankshaft position sensor (POS) • Signal plate

DTC CONFIRMATION PROCEDURE

1. PRECONDITIONING

If DTC Confirmation Procedure has been previously conducted, always perform the following before conducting the next test.
1. Turn ignition switch OFF and wait at least 10 seconds.
2. Turn ignition switch ON.
3. Turn ignition switch OFF and wait at least 10 seconds.

TESTING CONDITION:
Before performing the following procedure, confirm that battery voltage is more than 10.5 V with ignition switch ON.

>> GO TO 2.

2. PERFORM DTC CONFIRMATION PROCEDURE

1. Start engine and let it idle for at least 5 seconds.
   If engine does not start, crank engine for at least 2 seconds.
2. Check 1st trip DTC.

Is 1st trip DTC detected?

YES >> Proceed to EC-315, "Diagnosis Procedure".
NO >> INSPECTION END

Diagnosis Procedure

INFOID:0000000011148630

1. CHECK CRANKSHAFT POSITION (CKP) SENSOR (POS) POWER SUPPLY

1. Disconnect crankshaft position (CKP) sensor (POS) harness connector.
2. Turn ignition switch ON.
3. Check the voltage between CKP sensor (POS) harness connector and ground.

+		–	Voltage (V)
CKP sensor (POS)			
Connector	Terminal		
F11	1	Ground	Approx. 5

Is the inspection result normal?

YES >> GO TO 3.
NO >> GO TO 2.

2. CHECK CRANKSHAFT POSITION (CKP) SENSOR (POS) POWER SUPPLY CIRCUIT

1. Turn ignition switch OFF
2. Disconnect ECM harness connector.
3. Check the continuity between CKP sensor (POS) harness connector and ECM harness connector.

CKP sensor (POS)		ECM		Continuity
Connector	Terminal	Connector	Terminal	
F11	1	F78	28	Existed

Is the inspection result normal?

YES >> Check intermittent incident. Refer to GI-47, "Intermittent Incident".
NO >> Repair or replace error-detected parts.

3. CHECK CKP SENSOR (POS) GROUND CIRCUIT

1. Turn ignition switch OFF.
2. Disconnect ECM harness connector.
3. Check the continuity between CKP sensor (POS) harness connector and ECM harness connector.

CKP sensor (POS)		ECM		Continuity
Connector	Terminal	Connector	Terminal	
F11	2	F78	40	Existed

4. Also check harness for short to ground and short to power.

Is the inspection result normal?

YES >> GO TO 4.
NO >> Repair open circuit, short to ground or short to power in harness or connectors.

4. CHECK CKP SENSOR (POS) INPUT SIGNAL CIRCUIT FOR OPEN AND SHORT

1. Check the continuity between CKP sensor (POS) harness connector and ECM harness connector.

CKP sensor (POS)		ECM		Continuity
Connector	Terminal	Connector	Terminal	
F11	3	F78	36	Existed

2. Also check harness for short to ground and short to power.

Is the inspection result normal?

YES >> GO TO 5.
NO >> Repair open circuit, short to ground or short to power in harness or connectors.

5. CHECK CRANKSHAFT POSITION SENSOR (POS)

Check crankshaft position sensor (POS). Refer to EC-316, "Component Inspection".

Is the inspection result normal?

YES >> GO TO 6.
NO >> Replace crankshaft position sensor (POS). Refer to EM-37, "Removal and Installation (Upper Oil Pan)".

6. CHECK GEAR TOOTH

Visually check for chipping signal plate gear tooth.

Is the inspection result normal?

YES >> Check intermittent incident. Refer to GI-47, "Intermittent Incident".
NO >> Replace the drive plate. Refer to EM-113, "Disassembly and Assembly".

Component Inspection

INFOID:0000000011148631

1. CHECK CRANKSHAFT POSITION SENSOR (POS)-I

1. Loosen the fixing bolt of the sensor.

2. Disconnect crankshaft position sensor (POS) harness connector.
3. Remove the sensor.
4. Visually check the sensor for chipping.

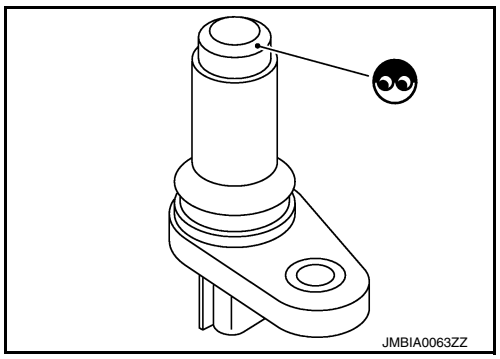

Is the inspection result normal?

YES >> GO TO 2.
NO >> Replace crankshaft position sensor (POS). Refer to EM-37, "Removal and Installation (Upper Oil Pan)".

2. CHECK CRANKSHAFT POSITION SENSOR (POS)-II

Check the resistance between crankshaft position sensor (POS) terminals as per the following.

Crankshaft position sensor (POS)		Resistance [at 25°C (77°F)]
+	–	
Terminal (Polarity)		
1	2	Except 0 or ∞ Ω
	3	
2	3	

Is the inspection result normal?

YES >> INSPECTION END
NO >> Replace crankshaft position sensor (POS). Refer to EM-37, "Removal and Installation (Upper Oil Pan)".

P0340, P0345 CMP SENSOR (PHASE)

DTC Logic

INFOID:0000000011148632

DTC DETECTION LOGIC

DTC No.	CONSULT screen terms (Trouble diagnosis content)	DTC detecting condition	Possible cause
P0340	CMP SEN/CIRC-B1 (Camshaft position sensor “A” circuit bank 1)	• The cylinder No. signal is not sent to ECM for the first few seconds during engine cranking. • The cylinder No. signal is not sent to ECM during engine running. • The cylinder No. signal is not in the normal pattern during engine running.	• Harness or connectors [CMP sensor (PHASE) circuit is open or shorted.] (APP sensor 2 circuit is shorted.) (Battery current sensor circuit is shorted.) (EOP sensor circuit is shorted.) (Refrigerant pressure sensor is shorted.) • Camshaft position sensor (PHASE) • Camshaft (INT) • Starter motor (Refer to STR-5, "System Description".) • Starting system circuit (Refer to STR-5, "System Description".) • Dead (Weak) battery • Accelerator pedal position sensor (APP sensor 2) • Battery current sensor • Engine oil pressure sensor • Refrigerant pressure sensor
P0345	CMP SEN/CIRC-B2 (Camshaft position sensor “A” circuit bank 2)		

DTC CONFIRMATION PROCEDURE

1.PRECONDITIONING

If DTC Confirmation Procedure has been previously conducted, always perform the following before conducting the next test.
1. Turn ignition switch OFF and wait at least 10 seconds.
2. Turn ignition switch ON.
3. Turn ignition switch OFF and wait at least 10 seconds.

TESTING CONDITION:
Before performing the following procedure, confirm that battery voltage is more than 10.5 V with ignition switch ON.

>> GO TO 2.

2.PERFORM DTC CONFIRMATION PROCEDURE-I

1. Start engine and let it idle for at least 5 seconds.
   If engine does not start, crank engine for at least 2 seconds.
2. Check 1st trip DTC.

Is 1st trip DTC detected?

YES >> Proceed to EC-318, "Diagnosis Procedure".
NO >> GO TO 3.

3.PERFORM DTC CONFIRMATION PROCEDURE-I

1. Maintaining engine speed at more than 800 rpm for at least 5 seconds.
2. Check 1st trip DTC.

Is 1st trip DTC detected?

YES >> Proceed to EC-318, "Diagnosis Procedure".
NO >> INSPECTION END

Diagnosis Procedure

INFOID:0000000011148633

1.CHECK STARTING SYSTEM

Turn ignition switch to START position.

Does the engine turn over? Does the starter motor operate?

YES >> GO TO 2.
NO >> Check starting system. (Refer to STR-10, "Work Flow (With GR8-1200 NI)" or STR-14, "Work Flow (Without GR8-1200 NI)".)

2. CHECK CAMSHAFT POSITION (CMP) SENSOR (PHASE) POWER SUPPLY

1. Disconnect camshaft position (CMP) sensor (PHASE) harness connector.
2. Turn ignition switch ON.
3. Check the voltage between CMP sensor (PHASE) harness connector and ground.

DTC	CMP sensor (PHASE)			–	Voltage (V)
	Bank	Connector	+ Terminal		
P0340	1	F87	1	Ground	Approx. 5
P0345	2	F88	1		

Is the inspection result normal?

YES >> GO TO 4.
NO >> GO TO 3.

3. CHECK CMP SENSOR (PHASE) POWER SUPPLY CIRCUIT

1. Turn ignition switch OFF.
2. Disconnect ECM harness connector.
3. Check the continuity between CMP sensor (PHASE) harness connector and ECM harness connector.

DTC	CMP sensor (PHASE)			ECM		Continuity
	Bank	Connector	Terminal	Connector	Terminal	
P0340	1	F87	1	F79	92	Existed
P0345	2	F88	1			

Is the inspection result normal?

YES >> Check sensor power supply 2 circuit. Refer to EC-510, "Diagnosis Procedure".
NO >> Repair or replace error-detected parts.

4. CHECK CMP SENSOR (PHASE) GROUND CIRCUIT

1. Turn ignition switch OFF.
2. Disconnect ECM harness connector.
3. Check the continuity between CMP sensor (PHASE) harness connector and ECM harness connector.

DTC	CMP sensor (PHASE)			ECM		Continuity
	Bank	Connector	Terminal	Connector	Terminal	
P0340	1	F87	2	F79	90	Existed
P0345	2	F88	2			

4. Also check harness for short to ground and short to power.

Is the inspection result normal?

YES >> GO TO 5.
NO >> Repair open circuit, short to ground or short to power in harness or connectors.

5. CHECK CMP SENSOR (PHASE) INPUT SIGNAL CIRCUIT

1. Check the continuity between CMP sensor (PHASE) harness connector and ECM harness connector.

DTC	CMP sensor (PHASE)			ECM		Continuity
	Bank	Connector	Terminal	Connector	Terminal	
P0340	1	F87	3	F79	84	Existed
P0345	2	F88	3		89	

2. Also check harness for short to ground and short to power.

Is the inspection result normal?

YES >> GO TO 6.
NO >> Repair open circuit, short to ground or short to power in harness or connectors.

6. CHECK CAMSHAFT POSITION SENSOR (PHASE)

Check camshaft position sensor (PHASE). Refer to EC-320, "Component Inspection".

Is the inspection result normal?

YES >> GO TO 7.
NO >> Replace malfunctioning camshaft position sensor (PHASE). Refer to EM-43, "Removal and Installation (LH)", EM-44, "Removal and Installation (RH)".

7. CHECK CAMSHAFT (INT)

Check the following.
- Accumulation of debris to the signal plate of camshaft rear end
- Chipping signal plate of camshaft rear end

Is the inspection result normal?

YES >> Check intermittent incident. Refer to GI-47, "Intermittent Incident".
NO >> Remove debris and clean the signal plate of camshaft rear end or replace camshaft. Refer to EM-76, "Removal and Installation".

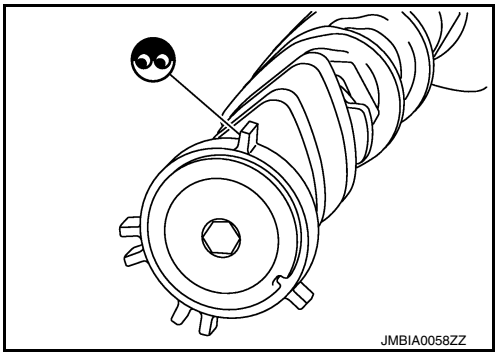

Component Inspection

INFOID:0000000011148634

1. CHECK CAMSHAFT POSITION SENSOR (PHASE)-I

1. Turn ignition switch OFF.
2. Loosen the fixing bolt of the sensor.
3. Disconnect camshaft position sensor (PHASE) harness connector.
4. Remove the sensor.
5. Visually check the sensor for chipping.

Is the inspection result normal?

YES >> GO TO 2.
NO >> Replace malfunctioning camshaft position sensor (PHASE). Refer to EM-43, "Removal and Installation (LH)", EM-44, "Removal and Installation (RH)".

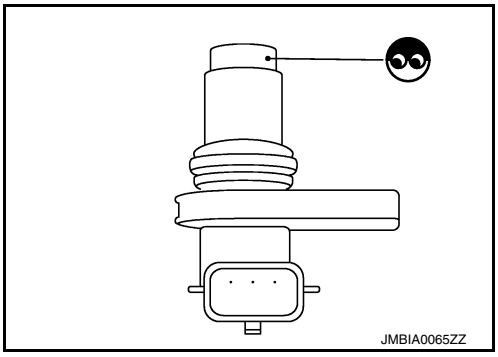

2. CHECK CAMSHAFT POSITION SENSOR (PHASE)-II

Check the resistance camshaft position sensor (PHASE) terminals as per the following.

Camshaft position sensor (PHASE)		Resistance [Ω at 25°C (77°F)]
+	–	
Terminals (Polarity)		
1	2	Except 0 or ∞
	3	
2	3	

Is the inspection result normal?

YES >> INSPECTION END

NO >> Replace malfunctioning camshaft position sensor (PHASE). Refer to EM-43, "Removal and Installation (LH)", EM-44, "Removal and Installation (RH)".

P0420, P0430 THREE WAY CATALYST FUNCTION

DTC Logic

INFOID:0000000011148635

DTC DETECTION LOGIC

The ECM monitors the switching frequency ratio of air fuel ratio (A/F) sensor 1 and heated oxygen sensor 2.
A three way catalyst (manifold) with high oxygen storage capacity will indicate a low switching frequency of heated oxygen sensor 2. As oxygen storage capacity decreases, the heated oxygen sensor 2 switching frequency will increase.
When the frequency ratio of A/F sensor 1 and heated oxygen sensor 2 approaches a specified limit value, the three way catalyst (manifold) malfunction is diagnosed.

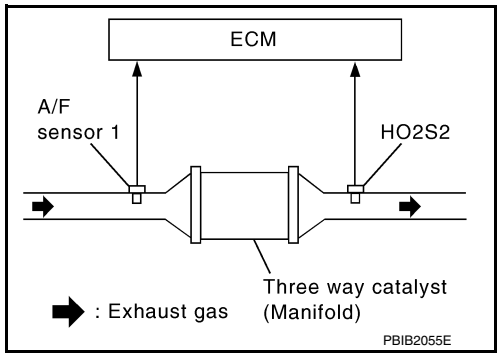

DTC No.	CONSULT screen terms (Trouble diagnosis content)	DTC detecting condition	Possible cause
P0420	TW CATALYST SYS-B1 (Catalyst system efficiency below threshold bank 1)	• Three way catalyst (manifold) does not operate properly. • Three way catalyst (manifold) does not have enough oxygen storage capacity.	• Three way catalyst (manifold) • Exhaust tube • Intake air leakage • Fuel injector • Fuel injector leakage • Spark plug • Improper ignition timing
P0430	TW CATALYST SYS-B2 (Catalyst system efficiency below threshold bank 2)		

DTC CONFIRMATION PROCEDURE

1. INSPECTION START

Will CONSULT be used?

Will CONSULT be used?

YES >> GO TO 2.
NO >> GO TO 7.

2. PRECONDITIONING

If DTC Confirmation Procedure has been previously conducted, always perform the following before conducting the next test.

1. Turn ignition switch OFF and wait at least 10 seconds.
2. Turn ignition switch ON.
3. Turn ignition switch OFF and wait at least 10 seconds.

TESTING CONDITION:
Do not maintain engine speed for more than the specified minutes below.

>> GO TO 3.

3. PERFORM DTC CONFIRMATION PROCEDURE-I

With CONSULT

1. Turn ignition switch ON and select “DATA MONITOR” mode with CONSULT.
2. Start engine and warm it up to the normal operating temperature.
3. Turn ignition switch OFF and wait at least 10 seconds.
4. Turn ignition switch ON.
5. Turn ignition switch OFF and wait at least 10 seconds.
6. Start engine and keep the engine speed between 3,500 and 4,000 rpm for at least 1 minute under no load.
7. Let engine idle for 1 minute.
8. Check that “COOLANT TEMP/S” indicates more than 70°C (158°F).
   If not, warm up engine and go to next step when “COOLANT TEMP/S” indication reaches 70°C (158°F).
9. Open engine hood.

10. Select “DTC & SRT CONFIRMATION” then “SRT WORK SUPPORT” mode with CONSULT.
11. Rev engine between 2,000 and 3,000 rpm and hold it for 3 consecutive minutes then release the accelerator pedal completely.
12. Check the indication of “CATALYST”.

Which is displayed on CONSULT screen?

CMPLT >> GO TO 6.
INCMP >> GO TO 4.

4. PERFORM DTC CONFIRMATION PROCEDURE-II

1. Wait 5 seconds at idle.
2. Rev engine between 2,000 and 3,000 rpm and maintain it until “INCMP” of “CATALYST” changes to “CMPLT” (It will take approximately 5 minutes).

Does the indication change to “CMPLT”?

YES >> GO TO 6.
NO >> GO TO 5.

5. PERFORM DTC CONFIRMATION PROCEDURE AGAIN

1. Stop engine and cool it down to less than 70°C (158°F).
2. Perform DTC CONFIRMATION PROCEDURE again.

>> GO TO 3.

6. PERFORM DTC CONFIRMATION PROCEDURE-III

Check 1st trip DTC.

Is 1st trip DTC detected?

YES >> Proceed to EC-324, "Diagnosis Procedure".
NO >> INSPECTION END

7. PERFORM COMPONENT FUNCTION CHECK

Perform component function check. Refer to EC-323, "Component Function Check".

NOTE:
Use component function check to check the overall function of the three way catalyst (manifold). During this check, a 1st trip DTC might not be confirmed.

Is the inspection result normal?

YES >> INSPECTION END
NO >> Proceed to EC-324, "Diagnosis Procedure".

Component Function Check

INFOID:0000000011148636

1. PERFORM COMPONENT FUNCTION CHECK

Without CONSULT

1. Start engine and warm it up to the normal operating temperature.
2. Turn ignition switch OFF and wait at least 10 seconds.
3. Turn ignition switch ON.
4. Turn ignition switch OFF and wait at least 10 seconds.
5. Start engine and keep the engine speed between 3,500 and 4,000 rpm for at least 1 minute under no load.
6. Let engine idle for 1 minute.
7. Open engine hood.
8. Check the voltage between ECM harness connector terminals under the following conditions.

DTC	ECM			Condition	Voltage (V)
	Connector	+	–		
		Terminal	Terminal		
P0420	F78	41	35	Keeping engine speed at 2,500 rpm constant under no load	The voltage fluctuation cycle takes more than 5 seconds. • 1 cycle: 0.6 - 1.0 → 0 - 0.3 → 0.6 - 1.0
P0430		32			

Is the inspection result normal?

YES >> INSPECTION END
NO >> Proceed to EC-324, "Diagnosis Procedure".

Diagnosis Procedure

INFOID:0000000011148637

1. CHECK EXHAUST SYSTEM

Visually check exhaust tubes and muffler for dents.

Is the inspection result normal?

YES >> GO TO 2.
NO >> Repair or replace malfunctioning part.

2. CHECK EXHAUST GAS LEAKAGE

1. Start engine and run it at idle.
2. Listen for an exhaust gas leakage before the three way catalyst (manifold).

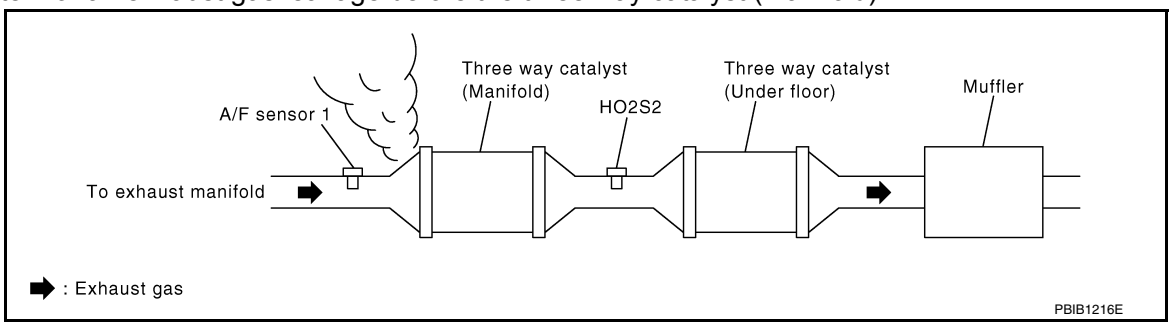

Is exhaust gas leakage detected?

YES >> Repair or replace malfunctioning part.
NO >> GO TO 3.

3. CHECK INTAKE AIR LEAKAGE

Listen for an intake air leakage after the mass air flow sensor.

Is intake air leakage detected?

YES >> Repair or replace malfunctioning part.
NO >> GO TO 4.

4. CHECK IGNITION TIMING

Check idle speed and ignition timing.
For procedure, refer to EC-164, "Work Procedure".
For specification, refer to EC-527, "Idle Speed" and EC-527, "Ignition Timing".

Is the inspection result normal?

YES >> GO TO 5.
NO >> Follow the EC-164, "Work Procedure".

5. CHECK FUEL INJECTORS

1. Stop engine and then turn ignition switch ON.
2. Check the voltage between ECM harness connector terminals.

ECM				Voltage
+		–		
Connector	Terminal	Connector	Terminal	
F78	11	E32	152	Battery voltage
	12			
	16			
	17			
	21			
	22			

Is the inspection result normal?

YES >> GO TO 6.
NO >> Perform EC-490, "Diagnosis Procedure".

6. CHECK FUNCTION OF IGNITION COIL-I

CAUTION:
Perform the following procedure in a place with no combustible objects and good ventilation.

1. Turn ignition switch OFF.
2. Remove fuel pump fuse in IPDM E/R to release fuel pressure.
   NOTE:
   Do not use CONSULT to release fuel pressure, or fuel pressure applies again during the following procedure.
3. Start engine.
4. After engine stalls, crank it 2 or 3 times to release all fuel pressure.
5. Turn ignition switch OFF.
6. Remove all ignition coil harness connectors to avoid the electrical discharge from the ignition coils.
7. Remove ignition coil and spark plug of the cylinder to be checked.
8. Crank engine for 5 seconds or more to remove combustion gas in the cylinder.
9. Connect spark plug and harness connector to ignition coil.
10. Fix ignition coil using a rope etc. with gap of 13 - 17 mm (0.52 - 0.66 in) between the edge of the spark plug and grounded metal portion as shown in the figure.
11. Crank engine for approximately 3 seconds, and check whether spark is generated between the spark plug and the grounded metal portion.

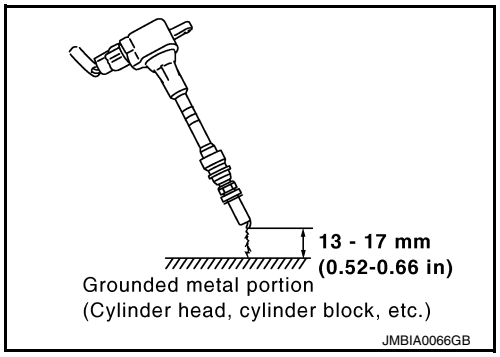

Spark should be generated.

CAUTION:
- **During the operation, always stay 0.5 m (19.7 in) or more away from the spark plug and the ignition coil. Be careful not to get an electrical shock while checking, because the electrical discharge voltage becomes 20 kV or more.**
- **It might cause to damage the ignition coil if the gap of more than 17 mm (0.66 in) is taken.**

NOTE:
When the gap is less than 13 mm (0.52 in), the spark might be generated even if the coil is malfunctioning.

Is the inspection result normal?

YES >> GO TO 10.
NO >> GO TO 7.

7. CHECK FUNCTION OF IGNITION COIL-II

1. Turn ignition switch OFF.
2. Disconnect spark plug and connect a known-good spark plug.
3. Crank engine for approximately 3 seconds, and recheck whether spark is generated between the spark plug and the grounded metal portion.

Spark should be generated.

Is the inspection result normal?

YES >> GO TO 8.
NO >> Check ignition coil, power transistor and their circuit. Refer to EC-497, "Diagnosis Procedure".

8. CHECK SPARK PLUG

Check the initial spark plug for fouling, etc.

Is the inspection result normal?

YES >> Replace spark plug(s) with standard type one(s). For spark plug type, refer to EM-135, "Spark Plug".
NO >> Repair or clean spark plug. Then GO TO 9.

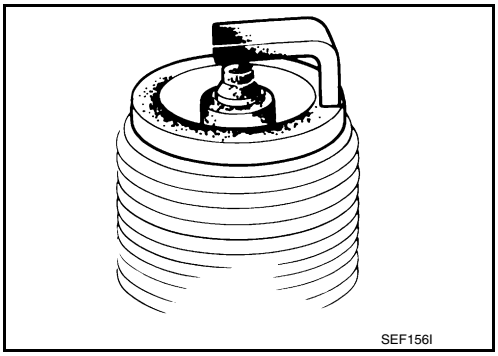

9. CHECK FUNCTION OF IGNITION COIL-III

1. Reconnect the initial spark plugs.
2. Crank engine for approximately 3 seconds, and recheck whether spark is generated between the spark plug and the grounded portion.

Spark should be generated.

Is the inspection result normal?

YES >> INSPECTION END
NO >> Replace spark plug(s) with standard type one(s). For spark plug type, refer to EM-135, "Spark Plug".

10. CHECK FUEL INJECTOR

1. Turn ignition switch OFF.
2. Remove fuel injector assembly. Refer to EM-47, "Removal and Installation".
   Keep fuel hose and all fuel injectors connected to fuel tube.
3. Disconnect all ignition coil harness connectors.
4. Reconnect all fuel injector harness connectors disconnected.
5. Turn ignition switch ON.
6. Check that the fuel does not drip from fuel injector.

Does fuel drip from fuel injector?

YES >> Replace the fuel injector(s) from which fuel is dripping. Refer to EM-47, "Removal and Installation".
NO >> GO TO 11.

11. CHECK INTERMITTENT INCIDENT

Check intermittent incident. Refer to GI-47, "Intermittent Incident".

Is the inspection result normal?

YES >> Replace three way catalyst assembly. Refer to EM-31, "Removal and Installation (bank 2)", EM-33, "Removal and Installation (bank 1)".
NO >> Repair or replace error-detected parts.

P0441 EVAP CONTROL SYSTEM

DTC Logic

INFOID:0000000011148638

DTC DETECTION LOGIC

NOTE:

If DTC P0441 is displayed with other DTC such as P2122, P2123, P2127, P2128 or P2138, first perform trouble diagnosis for other DTC.

In this evaporative emission (EVAP) control system, purge flow occurs during non-closed throttle conditions. Purge volume is related to air intake volume. Under normal purge conditions (non-closed throttle), the EVAP canister purge volume control solenoid valve is open to admit purge flow. Purge flow exposes the EVAP control system pressure sensor to intake manifold vacuum.

Under normal conditions (non-closed throttle), sensor output voltage indicates if pressure drop and purge flow are adequate. If not, a malfunction is determined.

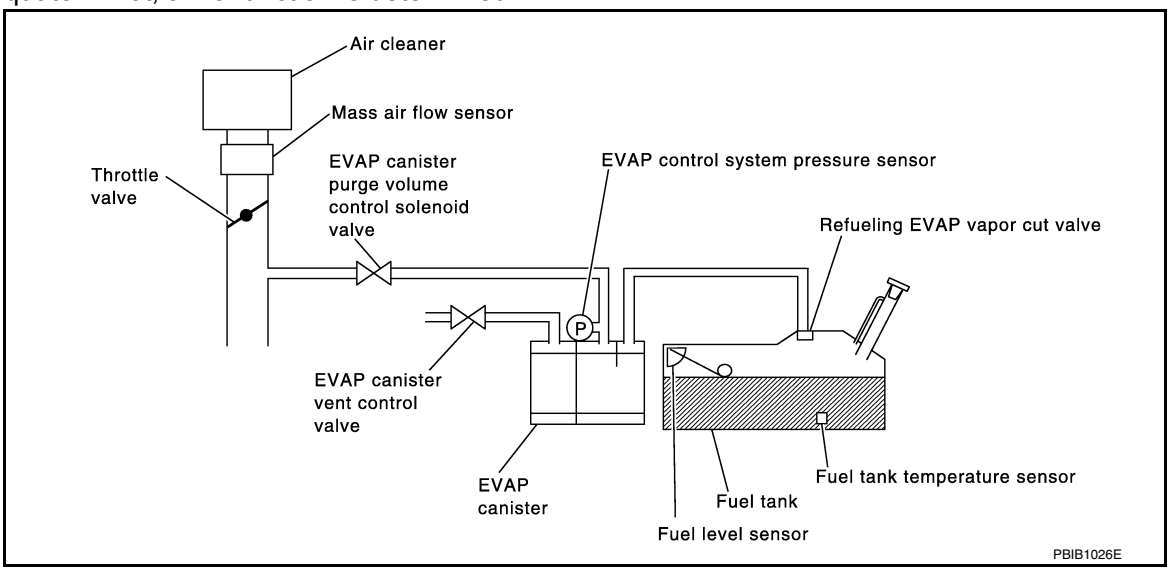

DTC No.	CONSULT screen terms (Trouble diagnosis content)	DTC detecting condition	Possible cause
P0441	EVAP PURG FLOW/MON (Evaporative emission system incorrect purge flow)	EVAP control system does not operate properly, EVAP control system has a leakage between intake manifold and EVAP control system pressure sensor.	• EVAP canister purge volume control solenoid valve stuck closed • EVAP control system pressure sensor and the circuit • Loose, disconnected or improper connection of rubber tube • Blocked rubber tube • Cracked EVAP canister • EVAP canister purge volume control solenoid valve circuit • Accelerator pedal position sensor • Blocked purge port • EVAP canister vent control valve

DTC CONFIRMATION PROCEDURE

1. INSPECTION START

Will CONSULT be used?

Will CONSULT be used?

YES >> GO TO 2.
NO >> GO TO 6.

2. PRECONDITIONING

If DTC Confirmation Procedure has been previously conducted, always perform the following before conducting the next test.

1. Turn ignition switch OFF and wait at least 10 seconds.
2. Turn ignition switch ON.
3. Turn ignition switch OFF and wait at least 10 seconds.

TESTING CONDITION:
Always perform test at a temperature of 5°C (41°F) or more.

>> GO TO 3.

3. PERFORM DTC CONFIRMATION PROCEDURE-I

With CONSULT

1. Start engine and warm it up to normal operating temperature.
2. Turn ignition switch OFF and wait at least 10 seconds.
3. Turn ignition switch ON.
4. Turn ignition switch OFF and wait at least 10 seconds.
5. Start engine and let it idle for at least 70 seconds.
6. Select “PURG FLOW P0441” of “EVAPORATIVE SYSTEM” in “DTC WORK SUPPORT” mode with CONSULT.
7. Touch “START”.

Is “COMPLETED” displayed on CONSULT screen?

YES >> GO TO 5.
NO >> GO TO 4.

4. PERFORM DTC CONFIRMATION PROCEDURE-II

When the following conditions are met, “TESTING” will be displayed on the CONSULT screen. Maintain the conditions continuously until “TESTING” changes to “COMPLETED”. (It will take at least 35 seconds.)

Selector lever	Suitable position
VHCL SPEED SE	32 - 120 km/h (20 - 75 mph)
ENG SPEED	500 - 3,000 rpm
B/FUEL SCHDL	1.25 - 9.0 msec
COOLANT TEMP/S	More than 0°C (32°F)

CAUTION:
Always drive vehicle at a safe speed.
If “TESTING” does not change for a long time, retry from step 2.

Is “COMPLETED” displayed on CONSULT screen?

YES >> GO TO 5.
NO >> Perform DTC CONFIRMATION PROCEDURE again. GO TO 3.

5. PERFORM DTC CONFIRMATION PROCEDURE-III

Touch “SELF-DIAG RESULTS”.

Which is displayed on CONSULT screen?

OK >> INSPECTION END
NG >> Proceed to EC-329, "Diagnosis Procedure".

6. PERFORM COMPONENT FUNCTION CHECK

Perform component function check. Refer to EC-328, "Component Function Check".

NOTE:
Use component function check to check the overall monitoring function of the EVAP control system purge flow monitoring. During this check, a 1st trip DTC might not be confirmed.

Is the inspection result normal?

YES >> INSPECTION END
NO >> Proceed to EC-329, "Diagnosis Procedure".

Component Function Check

INFOID:0000000011148639

1. PERFORM COMPONENT FUNCTION CHECK

Without CONSULT

1. Lift up drive wheels.
2. Start engine (VDC switch OFF) and warm it up to normal operating temperature.
3. Turn ignition switch OFF, wait at least 10 seconds.
4. Turn ignition switch ON.
5. Turn ignition switch OFF, wait at least 10 seconds.
6. Start engine and wait at least 70 seconds.
7. Set voltmeter probes to ECM harness connector terminals under the following conditions.

ECM		
Connector	+	–
	Terminal	
E32	121	148

8. Check EVAP control system pressure sensor value at idle speed and note it.
9. Establish and maintain the following conditions for at least 1 minute.

Air conditioner switch	ON
Head lamp switch	ON
Rear window defogger switch	ON
Engine speed	Approx. 3,000 rpm
Gear position	Any position other than P, N or R

10. Verify that EVAP control system pressure sensor value stays 0.1 V less than the value at idle speed (measured at step 6) for at least 1 second.

Is the inspection result normal?

YES >> INSPECTION END
NO >> Proceed to EC-329, "Diagnosis Procedure".

Diagnosis Procedure

INFOID:0000000011148640

1. CHECK EVAP CANISTER

1. Turn ignition switch OFF.
2. Check EVAP canister for cracks.

Is the inspection result normal?

YES-1 >> With CONSULT: GO TO 2.
YES-2 >> Without CONSULT: GO TO 3.
NO >> Replace EVAP canister. Refer to FL-18, "Removal and Installation".

2. CHECK PURGE FLOW

With CONSULT

1. Disconnect vacuum hose connected to EVAP canister purge volume control solenoid valve at EVAP service port and install vacuum gauge. For the location of EVAP service port, refer to EC-49, "EVAPORATIVE EMISSION SYSTEM : System Description".
2. Start engine and let it idle.
3. Select “PURG VOL C/V” in “ACTIVE TEST” mode with CONSULT.
4. Touch “Qd” and “Qu” on CONSULT screen to adjust “PURG VOL C/V” opening and check vacuum existence.

PURG VOL C/V	Vacuum
100%	Existed
0%	Not existed

Is the inspection result normal?

YES >> GO TO 7.
NO >> GO TO 4.

3. CHECK PURGE FLOW

Without CONSULT

1. Start engine and warm it up to normal operating temperature.
2. Stop engine.
3. Disconnect vacuum hose connected to EVAP canister purge volume control solenoid valve at EVAP service port and install vacuum gauge. For the location of EVAP service port, refer to EC-49, "EVAPORATIVE EMISSION SYSTEM : System Description".
4. Start engine and let it idle.
   Do not depress accelerator pedal even slightly.
5. Check vacuum gauge indication before 60 seconds pass after starting engine.

   Vacuum should not exist.

6. Rev engine up to 2,000 rpm after 100 seconds pass after starting engine.

   Vacuum should exist.

Is the inspection result normal?

YES >> GO TO 7.
NO >> GO TO 4.

4. CHECK EVAP PURGE LINE

1. Turn ignition switch OFF.
2. Check EVAP purge line for improper connection or disconnection.
   Refer to EC-49, "EVAPORATIVE EMISSION SYSTEM : System Description".

Is the inspection result normal?

YES >> GO TO 5.
NO >> Repair EVAP purge line.

5. CHECK EVAP PURGE HOSE AND PURGE PORT

1. Disconnect purge hoses connected to EVAP service port **A** and EVAP canister purge volume control solenoid valve **B**.
2. Blow air into each hose and EVAP purge port **C**.

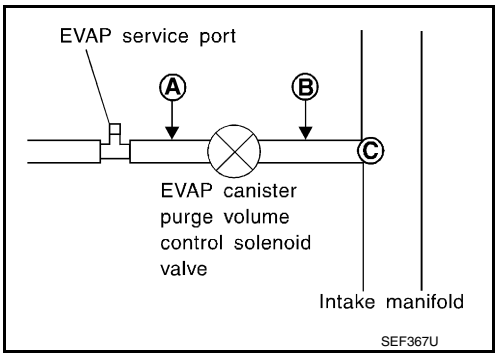

3. Check that air flows freely.

Is the inspection result normal?

YES-1 >> With CONSULT: GO TO 6.
YES-2 >> Without CONSULT: GO TO 7.
NO >> Repair or clean hoses and/or purge port.

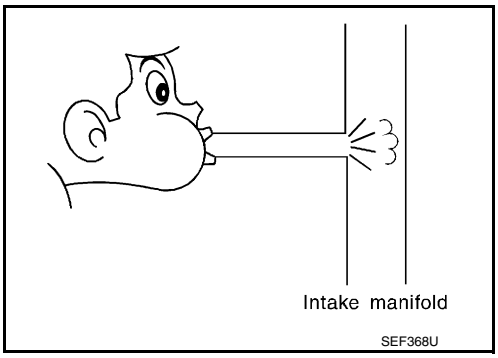

6. CHECK EVAP CANISTER PURGE VOLUME CONTROL SOLENOID VALVE

With CONSULT

1. Start engine.
2. Perform “PURG VOL C/V” in “ACTIVE TEST” mode with CONSULT. Check that engine speed varies according to the valve opening.

Does engine speed vary according to the valve opening?

YES >> GO TO 8.
NO >> GO TO 7.

7. CHECK EVAP CANISTER PURGE VOLUME CONTROL SOLENOID VALVE

Check EVAP canister purge volume control solenoid valve. Refer to EC-335, "Component Inspection".

Is the inspection result normal?

YES >> GO TO 8.
NO >> Replace EVAP canister purge volume control solenoid valve. Refer to EC-20, "ENGINE CONTROL SYSTEM : Component Parts Location".

8. CHECK EVAP CONTROL SYSTEM PRESSURE SENSOR CONNECTOR

1. Disconnect EVAP control system pressure sensor harness connector.
2. Check that water is not inside connectors.

Is the inspection result normal?

YES >> GO TO 9.
NO >> Replace EVAP control system pressure sensor. Refer to FL-18, "Removal and Installation".

9. CHECK EVAP CONTROL SYSTEM PRESSURE SENSOR FUNCTION

Check EVAP control system pressure sensor function. Refer to EC-350, "DTC Logic" for DTC P0452, EC-353, "DTC Logic" for DTC P0453.

Is the inspection result normal?

YES >> GO TO 10.
NO >> Replace EVAP control system pressure sensor. Refer to FL-18, "Removal and Installation".

10. CHECK RUBBER TUBE FOR CLOGGING

1. Disconnect rubber tube connected to EVAP canister vent control valve.
2. Check the rubber tube for clogging.

Is the inspection result normal?

YES >> GO TO 11.
NO >> Clean the rubber tube using an air blower.

11. CHECK EVAP CANISTER VENT CONTROL VALVE

Check EVAP canister vent control valve. Refer to EC-341, "Component Inspection".

Is the inspection result normal?

YES >> GO TO 12.
NO >> Replace EVAP canister vent control valve. Refer to FL-18, "Removal and Installation".

12. CHECK EVAP PURGE LINE

Inspect EVAP purge line (pipe and rubber tube). Check for evidence of leakage.
Refer to EC-49, "EVAPORATIVE EMISSION SYSTEM : System Description".

Is the inspection result normal?

YES >> GO TO 13.
NO >> Repair EVAP purge line.

13. CLEAN EVAP PURGE LINE

Clean EVAP purge line (pipe and rubber tube) using air blower.

>> Check intermittent incident. Refer to GI-47, "Intermittent Incident".

P0443 EVAP CANISTER PURGE VOLUME CONTROL SOLENOID VALVE

DTC Logic

INFOID:0000000011148641

DTC DETECTION LOGIC

DTC No.	CONSULT screen terms (Trouble diagnosis content)		DTC detecting condition	Possible cause
P0443	PURG VOLUME CONT/V (Evaporative emission system purge control valve circuit)	A	The canister purge flow is detected during the vehicle is stopped while the engine is running, even when EVAP canister purge volume control solenoid valve is completely closed.	• EVAP control system pressure sensor • EVAP canister purge volume control solenoid valve (The valve is stuck open.) • EVAP canister vent control valve • EVAP canister • Hoses (Hoses are connected incorrectly or clogged.)
		B	The canister purge flow is detected during the specified driving conditions, even when EVAP canister purge volume control solenoid valve is completely closed.	

DTC CONFIRMATION PROCEDURE

1. PRECONDITIONING

If DTC Confirmation Procedure has been previously conducted, always perform the following procedure before conducting the next test.

1. Turn ignition switch OFF and wait at least 10 seconds.
2. Turn ignition switch ON.
3. Turn ignition switch OFF and wait at least 10 seconds.

TESTING CONDITION:

- **Perform "DTC CONFIRMATION PROCEDURE" when the fuel level is between 1/4 and 3/4 full, and vehicle is placed on flat level surface.**
- **Always perform test at a temperature of 5 to 60°C (41 to 140°F).**
- **Cool the vehicle so that engine coolant temperature becomes same level as ambient temperature.**

Do you have CONSULT

YES >> GO TO 2.
NO >> GO TO 4.

2. PERFORM DTC CONFIRMATION PROCEDURE A

With CONSULT

1. Turn ignition switch ON.
2. Check that the following condition are met.
   FUEL T/TMP SE: 0 - 35°C (32 - 95°F)
3. Start engine and wait at least 60 seconds.
4. Check 1st trip DTC.

IS 1st trip DTC detected?

YES >> Proceed to EC-333, "Diagnosis Procedure".
NO >> GO TO 3.

3. PERFORM DTC CONFIRMATION PROCEDURE B

With CONSULT

1. Start engine and warm it up to normal operating temperature.
2. Turn ignition switch OFF and wait at least 10 seconds.
3. Turn ignition switch ON.
4. Turn ignition switch OFF and wait at least 10 seconds.
5. Turn ignition switch ON.
6. Select "PURG VOL CN/V P1444" of "EVAPORATIVE SYSTEM" in "DTC WORK SUPPORT" mode with CONSULT.
7. Touch "START".
8. Start engine and let it idle until "TESTING" on CONSULT changes to "COMPLETED". (It will take approximately 10 seconds.)
   If "TESTING" is not displayed after 5 minutes, retry from step 2.

9. Touch “SELF-DIAG RESULTS”.

Which is displayed on CONSULT screen?

YES >> INSPECTION END
NO >> Proceed to EC-333, "Diagnosis Procedure".

4. PERFORM DTC CONFIRMATION PROCEDURE A

With GST

1. Turn ignition switch ON.
2. Set voltmeter probes to ECM harness connector terminals.

ECM			Voltage (V)
Connector	+	–	
	Terminal		
E32	128	148	3.1 - 4.0

3. Start engine and wait at least 60 seconds.
4. Check 1st trip DTC.

Is 1st trip DTC detected?

YES >> Proceed to EC-333, "Diagnosis Procedure".
NO >> GO TO 5.

5. PERFORM DTC CONFIRMATION PROCEDURE B

With GST

1. Start engine and warm it up to normal operating temperature.
2. Turn ignition switch OFF and wait at least 10 seconds.
3. Turn ignition switch ON.
4. Turn ignition switch OFF and wait at least 10 seconds.
5. Start engine and let it idle for at least 20 seconds.
6. Check 1st trip DTC.

Is 1st trip DTC displayed?

YES >> Proceed to EC-333, "Diagnosis Procedure".
NO >> INSPECTION END

Diagnosis Procedure

INFOID:0000000011148642

1. CHECK EVAP CANISTER PURGE VOLUME CONTROL SOLENOID VALVE POWER SUPPLY

1. Turn ignition switch OFF.
2. Disconnect EVAP canister purge volume control solenoid valve harness connector.
3. Turn ignition switch ON.
4. Check the voltage between EVAP canister purge volume control solenoid valve harness connector and ground.

EVAP canister purge volume control solenoid valve		Ground	Voltage
Connector	Terminal		
F16	1	Ground	Battery voltage

Is the inspection result normal?

YES >> GO TO 2.
NO >> Perform the trouble diagnosis for power supply circuit.

2. CHECK EVAP CANISTER PURGE VOLUME CONTROL SOLENOID VALVE OUTPUT SIGNAL CIRCUIT

1. Turn ignition switch OFF.
2. Disconnect ECM harness connector.
3. Check the continuity between EVAP canister purge volume control solenoid valve harness connector and ECM harness connector.

EVAP canister purge volume control solenoid valve		ECM		Continuity
Connector	Terminal	Connector	Terminal	
F16	2	F78	54	Existed

4. Also check harness for short to ground and short to power.

Is the inspection result normal?

YES >> GO TO 3.
NO >> Repair open circuit, short to ground or short to power in harness or connectors.

3. CHECK EVAP CONTROL SYSTEM PRESSURE SENSOR CONNECTOR

1. Disconnect EVAP control system pressure sensor harness connector.
2. Check that water is not inside connectors.

Is the inspection result normal?

YES >> GO TO 4.
NO >> Replace EVAP control system pressure sensor. Refer to FL-18, "Removal and Installation".

4. CHECK EVAP CONTROL SYSTEM PRESSURE SENSOR

Check EVAP control system pressure sensor. Refer to EC-349, "Component Inspection".

Is the inspection result normal?

YES-1 >> With CONSULT: GO TO 5.
YES-2 >> Without CONSULT: GO TO 6.
NO >> Replace EVAP control system pressure sensor. Refer to FL-6, "Removal and Installation".

5. CHECK EVAP CANISTER PURGE VOLUME CONTROL SOLENOID VALVE

With CONSULT

1. Turn ignition switch OFF.
2. Reconnect harness connectors disconnected.
3. Start engine.
4. Perform “PURG VOL C/V” in “ACTIVE TEST” mode with CONSULT. Check that engine speed varies according to the valve opening.

Does engine speed vary according to the valve opening?

YES >> GO TO 7.
NO >> GO TO 6.

6. CHECK EVAP CANISTER PURGE VOLUME CONTROL SOLENOID VALVE

Check EVAP canister purge volume control solenoid valve. Refer to EC-335, "Component Inspection".

Is the inspection result normal?

YES >> GO TO 7.
NO >> Replace EVAP canister purge volume control solenoid valve. Refer to EC-20, "ENGINE CONTROL SYSTEM : Component Parts Location".

7. CHECK RUBBER TUBE FOR CLOGGING

1. Disconnect rubber tube connected to EVAP canister vent control valve.
2. Check the rubber tube for clogging.

Is the inspection result normal?

YES >> GO TO 8.
NO >> Clean the rubber tube using an air blower.

8. CHECK EVAP CANISTER VENT CONTROL VALVE

Check EVAP canister vent control valve. Refer to EC-341, "Component Inspection".

Is the inspection result normal?

YES >> GO TO 9.
NO >> Replace EVAP canister vent control valve. Refer to FL-18, "Removal and Installation".

9. CHECK IF EVAP CANISTER IS SATURATED WITH WATER

Remove EVAP canister with EVAP canister vent control valve and EVAP control system pressure sensor attached. Refer to FL-18, "Removal and Installation".

Does water drain from the EVAP canister?

YES >> GO TO 10.
NO >> Check intermittent incident. Refer to GI-47, "Intermittent Incident".

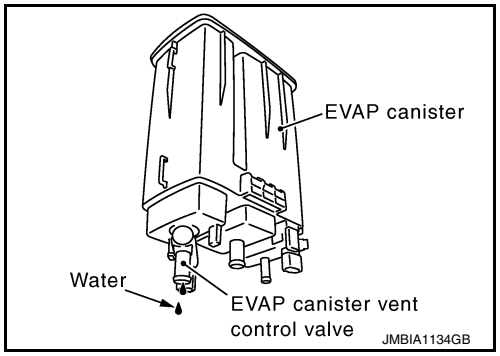

10. CHECK EVAP CANISTER

Weigh the EVAP canister with the EVAP canister vent control valve and EVAP control system pressure sensor attached.

The weight should be less than 2.1 kg (4.6 lb).

Is the inspection result normal?

YES >> Check intermittent incident. Refer to GI-47, "Intermittent Incident".
NO >> GO TO 11.

11. DETECT MALFUNCTIONING PART

Check the following.
- EVAP canister for damage
- EVAP hose between EVAP canister and vehicle frame for clogging or poor connection

>> Repair hose or replace EVAP canister. Refer to FL-18, "Removal and Installation".

Component Inspection

INFOID:0000000011148643

1. CHECK EVAP CANISTER PURGE VOLUME CONTROL SOLENOID VALVE

With CONSULT

1. Turn ignition switch OFF.
2. Reconnect all harness connectors disconnected.
3. Disconnect EVAP purge hoses connected to EVAP canister purge volume control solenoid valve.
4. Start engine.
5. Select “PURG VOL C/V” in “ACTIVE TEST” mode with CONSULT.
6. Touch “Qd” and “Qu” on CONSULT screen to adjust “PURG VOL C/V” opening and check air passage continuity of EVAP canister purge volume control solenoid valve under the following conditions.

Condition (PURG VOL C/V value)	Air passage continuity between Ⓐ and Ⓑ
100%	Existed
0%	Not existed

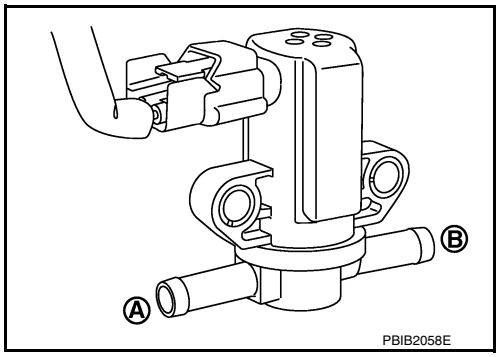

Without CONSULT

1. Turn ignition switch OFF.
2. Disconnect EVAP canister purge volume control solenoid valve harness connector.
3. Disconnect EVAP purge hoses connected to EVAP canister purge volume control solenoid valve.

4. Check air passage continuity of EVAP canister purge volume control solenoid valve under the following conditions.

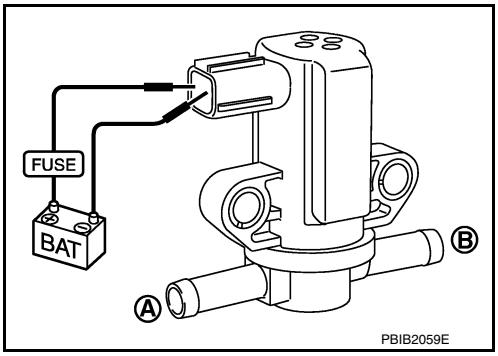

Condition	Air passage continuity between Ⓐ and Ⓑ
12 V direct current supply between terminals 1 and 2	Existed
No supply	Not existed

Is the inspection result normal?

YES >> INSPECTION END

NO >> Replace EVAP canister purge volume control solenoid valve. Refer to EC-20, "ENGINE CONTROL SYSTEM : Component Parts Location".

P0444, P0445 EVAP CANISTER PURGE VOLUME CONTROL SOLENOID VALVE

DTC Logic

INFOID:0000000011148644

DTC DETECTION LOGIC

DTC No.	CONSULT screen terms (Trouble diagnosis content)	DTC detecting condition	Possible cause
P0444	PURG VOLUME CONT/V (Evaporative emission system purge control valve circuit open)	An excessively low voltage signal is sent to ECM through the valve	• Harness or connectors (The solenoid valve circuit is open or shorted.) • EVAP canister purge volume control solenoid valve
P0445	PURG VOLUME CONT/V (Evaporative emission system purge control valve circuit shorted)	An excessively high voltage signal is sent to ECM through the valve	• Harness or connectors (The solenoid valve circuit is shorted.) • EVAP canister purge volume control solenoid valve

DTC CONFIRMATION PROCEDURE

1.CONDITIONING

If DTC Confirmation Procedure has been previously conducted, always perform the following before conducting the next test.
1. Turn ignition switch OFF and wait at least 10 seconds.
2. Turn ignition switch ON.
3. Turn ignition switch OFF and wait at least 10 seconds.

TESTING CONDITION:
Before performing the following procedure, confirm battery voltage is more than 11 V at idle.

>> GO TO 2.

2.PERFORM DTC CONFIRMATION PROCEDURE

1. Start engine and let it idle for at least 13 seconds.
2. Check 1st trip DTC.

Is 1st trip DTC detected?

YES >> Proceed to EC-337, "Diagnosis Procedure".
NO >> INSPECTION END

Diagnosis Procedure

INFOID:0000000011148645

1.CHECK EVAP CANISTER PURGE VOLUME CONTROL SOLENOID VALVE POWER SUPPLY

1. Turn ignition switch OFF.
2. Disconnect EVAP canister purge volume control solenoid valve harness connector.
3. Turn ignition switch ON.
4. Check the voltage between EVAP canister purge volume control solenoid valve harness connector and ground.

EVAP canister purge volume control solenoid valve		Ground	Voltage
Connector	Terminal		
F16	1	Ground	Battery voltage

Is the inspection result normal?

YES >> GO TO 2.
NO >> Perform the trouble diagnosis for power supply circuit.

2.CHECK EVAP CANISTER PURGE VOLUME CONTROL SOLENOID VALVE OUTPUT SIGNAL CIRCUIT

1. Turn ignition switch OFF.
2. Disconnect ECM harness connector.
3. Check the continuity between EVAP canister purge volume control solenoid valve harness connector and ECM harness connector.

EVAP canister purge volume control solenoid valve		ECM		Continuity
Connector	Terminal	Connector	Terminal	
F16	2	F78	54	Existed

4. Also check harness for short to ground and short to power.

Is the inspection result normal?

YES-1 >> With CONSULT: GO TO 3.
YES-2 >> Without CONSULT: GO TO 4.
NO >> Repair open circuit, short to ground or short to power in harness or connectors.

3. CHECK EVAP CANISTER PURGE VOLUME CONTROL SOLENOID VALVE OPERATION

With CONSULT

1. Reconnect all harness connectors disconnected.
2. Start engine.
3. Perform “PURG VOL C/V” in “ACTIVE TEST” mode with CONSULT. Check that engine speed varies according to the valve opening.

Does engine speed vary according to the valve opening?

YES >> Check intermittent incident. Refer to GI-47, "Intermittent Incident".
NO >> GO TO 4.

4. CHECK EVAP CANISTER PURGE VOLUME CONTROL SOLENOID VALVE

Check EVAP canister purge volume control solenoid valve. Refer to EC-338, "Component Inspection".

Is the inspection result normal?

YES >> Check intermittent incident. Refer to GI-47, "Intermittent Incident".
NO >> Replace EVAP canister purge volume control solenoid valve. Refer to EC-20, "ENGINE CONTROL SYSTEM : Component Parts Location".

Component Inspection

INFOID:0000000011148646

1. CHECK EVAP CANISTER PURGE VOLUME CONTROL SOLENOID VALVE

With CONSULT

1. Turn ignition switch OFF.
2. Reconnect all harness connectors disconnected.
3. Disconnect EVAP purge hoses connected to EVAP canister purge volume control solenoid valve.
4. Start engine.
5. Select “PURG VOL C/V” in “ACTIVE TEST” mode with CONSULT.
6. Touch “Qd” and “Qu” on CONSULT screen to adjust “PURG VOL C/V” opening and check air passage continuity of EVAP canister purge volume control solenoid valve under the following conditions.

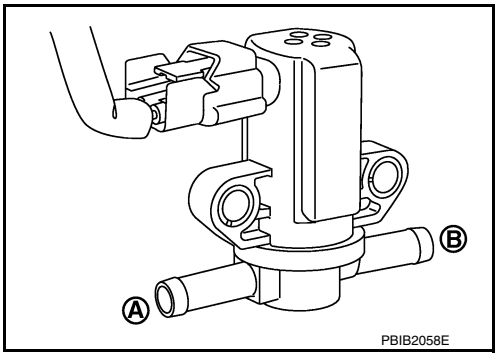

Condition (PURG VOL C/V value)	Air passage continuity between Ⓐ and Ⓑ
100%	Existed
0%	Not existed

Without CONSULT

1. Turn ignition switch OFF.
2. Disconnect EVAP canister purge volume control solenoid valve harness connector.
3. Disconnect EVAP purge hoses connected to EVAP canister purge volume control solenoid valve.

4. Check air passage continuity of EVAP canister purge volume control solenoid valve under the following conditions.

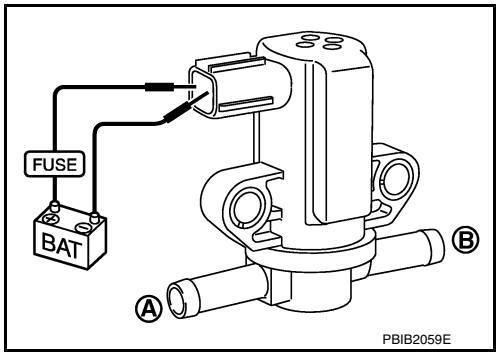

Condition	Air passage continuity between Ⓐ and Ⓑ
12 V direct current supply between terminals 1 and 2	Existed
No supply	Not existed

Is the inspection result normal?

YES >> INSPECTION END

NO >> Replace EVAP canister purge volume control solenoid valve. Refer to EC-20, "ENGINE CONTROL SYSTEM : Component Parts Location".

P0447 EVAP CANISTER VENT CONTROL VALVE

DTC Logic

INFOID:0000000011148647

DTC DETECTION LOGIC

DTC No.	CONSULT screen terms (Trouble diagnosis content)	DTC detecting condition	Possible cause
P0447	VENT CONTROL VALVE (Evaporative emission system vent control circuit open)	An improper voltage signal is sent to ECM through EVAP canister vent control valve.	• Harness or connectors (The valve circuit is open or shorted.) • EVAP canister vent control valve • Hoses (Hoses are connected incorrectly or clogged.)

DTC CONFIRMATION PROCEDURE

1. PRECONDITIONING

If DTC Confirmation Procedure has been previously conducted, always perform the following before conducting the next test.
1. Turn ignition switch OFF and wait at least 10 seconds.
2. Turn ignition switch ON.
3. Turn ignition switch OFF and wait at least 10 seconds.

TESTING CONDITION:
Before performing the following procedure, confirm battery voltage is more than 11 V at idle.

>> GO TO 2.

2. PERFORM DTC CONFIRMATION PROCEDURE

1. Start engine and wait at least 8 seconds.
2. Check 1st trip DTC.

Is 1st trip DTC detected?

YES >> Proceed to EC-340, "Diagnosis Procedure".
NO >> INSPECTION END

Diagnosis Procedure

INFOID:0000000011148648

1. INSPECTION START

Will CONSULT be used?

Will CONSULT be used?

YES >> GO TO 2.
NO >> GO TO 3.

2. CHECK EVAP CANISTER VENT CONTROL VALVE CIRCUIT

With CONSULT
1. Turn ignition switch OFF and then ON.
2. Select “VENT CONTROL/V” in “ACTIVE TEST” mode with CONSULT.
3. Touch “ON/OFF” on CONSULT screen.
4. Check for operating sound of the valve.

Clicking sound should be heard.

Is the inspection result normal?

YES >> GO TO 6.
NO >> GO TO 3.

3. CHECK EVAP CANISTER VENT CONTROL VALVE POWER SUPPLY

1. Turn ignition switch OFF.
2. Disconnect EVAP canister vent control valve harness connector.

3. Turn ignition switch ON.
4. Check the voltage between EVAP canister vent control valve harness connector and ground.

EVAP canister vent control valve		Ground	Voltage
Connector	Terminal		
B31	1	Ground	Battery voltage

Is the inspection result normal?

YES >> GO TO 4.
NO >> Perform the trouble diagnosis for power supply circuit.

4. CHECK EVAP CANISTER VENT CONTROL VALVE OUTPUT SIGNAL CIRCUIT

1. Turn ignition switch OFF.
2. Disconnect ECM harness connector.
3. Check the continuity between ECM harness connector and EVAP canister vent control valve harness connector.
   Refer to Wiring Diagram.

EVAP canister vent control valve		ECM		Continuity
Connector	Terminal	Connector	Terminal	
B31	2	E32	141	Existed

4. Also check harness for short to ground and short to power.

Is the inspection result normal?

YES >> GO TO 5.
NO >> Repair open circuit, short to ground or short to power in harness or connectors.

5. CHECK RUBBER TUBE FOR CLOGGING

1. Disconnect rubber tube connected to EVAP canister vent control valve.
2. Check the rubber tube for clogging.

Is the inspection result normal?

YES >> GO TO 6.
NO >> Clean the rubber tube using an air blower.

6. CHECK EVAP CANISTER VENT CONTROL VALVE

Check EVAP canister vent control valve. Refer to EC-341, "Component Inspection".

Is the inspection result normal?

YES >> Check intermittent incident. Refer to GI-47, "Intermittent Incident".
NO >> Replace EVAP canister vent control valve. Refer to FL-18, "Removal and Installation".

Component Inspection

INFOID:0000000011148649

1. CHECK EVAP CANISTER VENT CONTROL VALVE-I

1. Remove EVAP canister vent control valve from EVAP canister. Refer to FL-18, "Removal and Installation".
2. Check portion Ⓐ of EVAP canister vent control valve for rust.

Is it rusted?

YES >> Replace EVAP canister vent control valve. Refer to FL-18, "Removal and Installation".
NO >> GO TO 2.

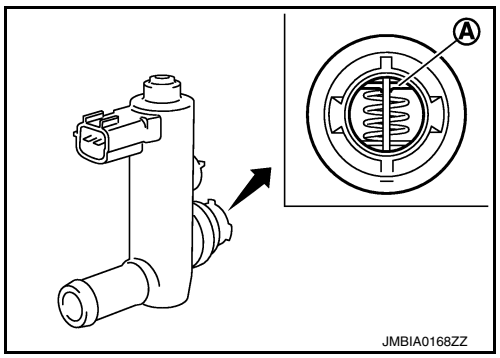

2. CHECK EVAP CANISTER VENT CONTROL VALVE-II

With CONSULT

1. Reconnect harness connectors disconnected.
2. Turn ignition switch ON.
3. Perform “VENT CONTROL/V” in “ACTIVE TEST” mode.
4. Check air passage continuity and operation delay time.
   Check that new O-ring is installed properly.

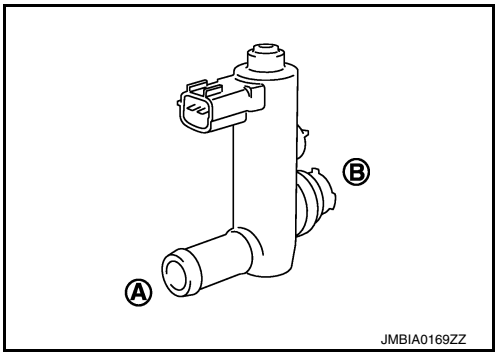

Condition VENT CONTROL/V	Air passage continuity between Ⓐ and Ⓑ
ON	Not existed
OFF	Existed

Operation takes less than 1 second.

Without CONSULT

1. Disconnect EVAP canister vent control valve harness connector.
2. Check air passage continuity and operation delay time under the following conditions.

Check that new O-ring is installed properly.

Condition	Air passage continuity between Ⓐ and Ⓑ
12 V direct current supply between terminals 1 and 2	Not existed
OFF	Existed

Operation takes less than 1 second.

Is the inspection result normal?

YES >> INSPECTION END
NO >> GO TO 3.

3. CHECK EVAP CANISTER VENT CONTROL VALVE-III

With CONSULT

1. Clean the air passage [portion Ⓐ to Ⓑ] of EVAP canister vent control valve using an air blower.
2. Perform “VENT CONTROL/V” in “ACTIVE TEST” mode.
3. Check air passage continuity and operation delay time.
   Check that new O-ring is installed properly.

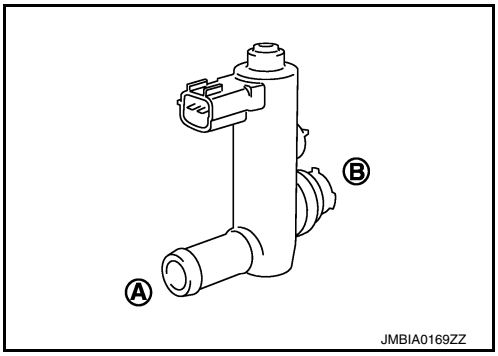

Condition VENT CONTROL/V	Air passage continuity between Ⓐ and Ⓑ
ON	No
OFF	Yes

Operation takes less than 1 second.

Without CONSULT

1. Clean the air passage [portion Ⓐ to Ⓑ] of EVAP canister vent control valve using an air blower.
2. Check air passage continuity and operation delay time under the following conditions.
   Check that new O-ring is installed properly.

Condition	Air passage continuity between Ⓐ and Ⓑ
12 V direct current supply between terminals (1) and (2)	No
OFF	Yes

Operation takes less than 1 second.

Is the inspection result normal?

YES >> INSPECTION END
NO >> Replace EVAP canister vent control valve. Refer to FL-18, "Removal and Installation".

P0448 EVAP CANISTER VENT CONTROL VALVE

DTC Logic

INFOID:0000000011148650

DTC DETECTION LOGIC

DTC No.	CONSULT screen terms (Trouble diagnosis content)	DTC detecting condition	Possible cause
P0448	VENT CONTROL VALVE (Evaporative emission system vent control circuit shorted)	EVAP canister vent control valve remains closed under specified driving conditions.	• EVAP canister vent control valve • EVAP control system pressure sensor and the circuit • Blocked rubber tube to EVAP canister vent control valve • EVAP canister is saturated with water

DTC CONFIRMATION PROCEDURE

1.PRECONDITIONING

If DTC Confirmation Procedure has been previously conducted, always perform the following before conducting the next test.
1. Turn ignition switch OFF and wait at least 10 seconds.
2. Turn ignition switch ON.
3. Turn ignition switch OFF and wait at least 10 seconds.

>> GO TO 2.

2.PERFORM DTC CONFIRMATION PROCEDURE

With CONSULT
1. Turn ignition switch ON and wait at least 5 seconds.
2. Turn ignition switch OFF and wait at least 10 seconds.
3. Turn ignition switch ON and select “DATA MONITOR” mode with CONSULT.
4. Start engine and let it idle for at least 1 minute.
5. Repeat next procedures 3 times.
- Increase the engine speed up to 3,000 to 3,500 rpm and keep it for 2 minutes and 50 seconds to 3 minutes.

Never exceed 3 minutes.
- Fully released accelerator pedal and keep engine idle for about 5 seconds.

6. Repeat next procedure 20 times.
- Quickly increase the engine speed up to 4,000 to 4,500 rpm or more and keep it for 25 to 30 seconds.
- Fully released accelerator pedal and keep engine idle for at least 35 seconds.

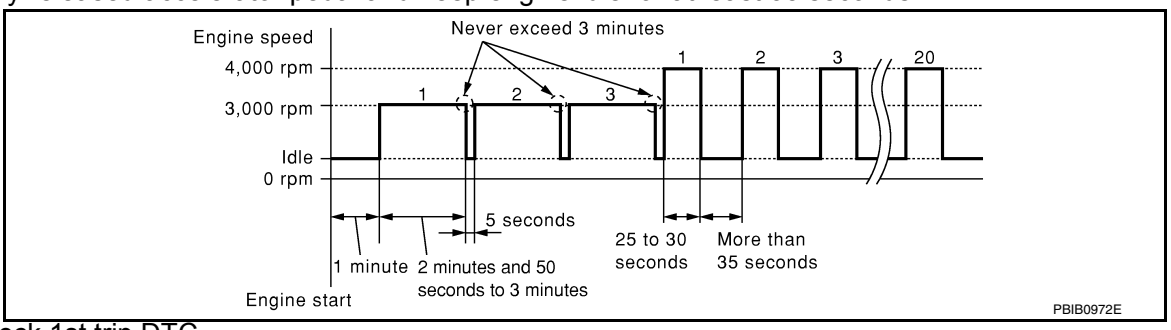

7. Check 1st trip DTC.

Is 1st trip DTC detected?

YES >> Proceed to EC-343, "Diagnosis Procedure".
NO >> INSPECTION END

Diagnosis Procedure

INFOID:0000000011148651

1.CHECK RUBBER TUBE

1. Turn ignition switch OFF.

2. Disconnect rubber tube connected to EVAP canister vent control valve.
3. Check the rubber tube for clogging.

Is the inspection result normal?

YES >> GO TO 2.
NO >> Clean rubber tube using an air blower.

2. CHECK EVAP CANISTER VENT CONTROL VALVE

Check EVAP canister vent control valve. Refer to EC-345, "Component Inspection".

Is he inspection result normal?

YES >> GO TO 3.
NO >> Replace EVAP canister vent control valve. Refer to FL-18, "Removal and Installation".

3. CHECK IF EVAP CANISTER SATURATED WITH WATER

1. Remove EVAP canister with EVAP canister vent control valve and EVAP control system pressure sensor attached. Refer to FL-18, "Removal and Installation".
2. Check if water will drain from the EVAP canister.

Does water drain from the EVAP canister?

YES >> GO TO 4.
NO >> GO TO 6.

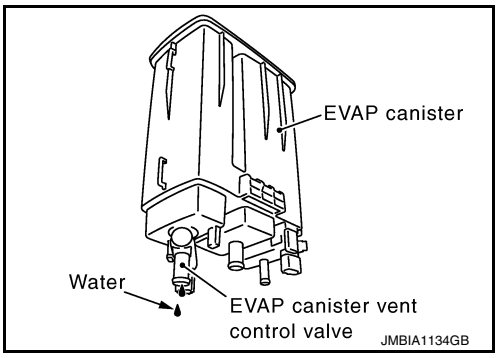

4. CHECK EVAP CANISTER

Weigh the EVAP canister with the EVAP canister vent control valve and EVAP control system pressure sensor attached.

The weight should be less than 2.1 kg (4.6 lb).

Is the inspection result normal?

YES >> GO TO 6.
NO >> GO TO 5.

5. DETECT MALFUNCTIONING PART

Check the following.
- EVAP canister for damage
- EVAP hose between EVAP canister and vehicle frame for clogging or poor connection

>> Repair hose or replace EVAP canister. Refer to FL-18, "Removal and Installation".

6. CHECK EVAP CONTROL SYSTEM PRESSURE SENSOR CONNECTOR

1. Disconnect EVAP control system pressure sensor harness connector.
2. Check that water is not inside connectors.

Is the inspection result normal?

YES >> GO TO 7.
NO >> Replace EVAP control system pressure sensor. Refer to FL-18, "Removal and Installation".

7. CHECK EVAP CONTROL SYSTEM PRESSURE SENSOR

Check EVAP control system pressure sensor. Refer to EC-349, "Component Inspection".

Is the inspection result normal?

YES >> Check intermittent incident. Refer to GI-47, "Intermittent Incident".
NO >> Replace EVAP control system pressure sensor. Refer to FL-18, "Removal and Installation".

Component Inspection

INFOID:0000000011148652

1. CHECK EVAP CANISTER VENT CONTROL VALVE-I

1. Remove EVAP canister vent control valve from EVAP canister. Refer to FL-18, "Removal and Installation".
2. Check portion Ⓐ of EVAP canister vent control valve for rust.

Is it rusted?

YES >> Replace EVAP canister vent control valve. Refer to FL-18, "Removal and Installation".
NO >> GO TO 2.

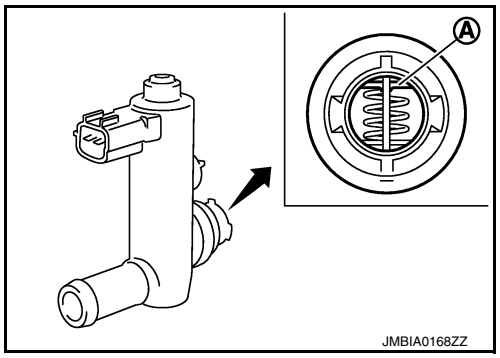

2. CHECK EVAP CANISTER VENT CONTROL VALVE-II

With CONSULT

1. Reconnect harness connectors disconnected.
2. Turn ignition switch ON.
3. Perform “VENT CONTROL/V” in “ACTIVE TEST” mode.
4. Check air passage continuity and operation delay time.
   Check that new O-ring is installed properly.

Condition VENT CONTROL/V	Air passage continuity between Ⓐ and Ⓑ
ON	Not existed
OFF	Existed

Operation takes less than 1 second.

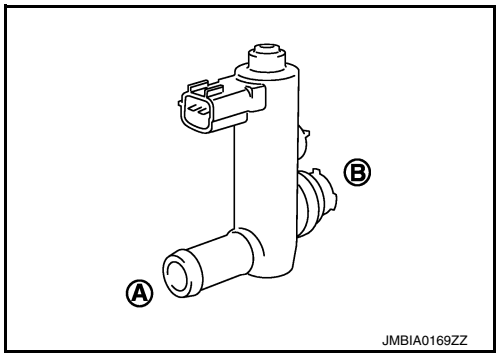

Without CONSULT

1. Disconnect EVAP canister vent control valve harness connector.
2. Check air passage continuity and operation delay time under the following conditions.

Check that new O-ring is installed properly.

Condition	Air passage continuity between Ⓐ and Ⓑ
12 V direct current supply between terminals 1 and 2	Not existed
OFF	Existed

Operation takes less than 1 second.

Is the inspection result normal?

YES >> INSPECTION END
NO >> GO TO 3.

3. CHECK EVAP CANISTER VENT CONTROL VALVE-III

With CONSULT

1. Clean the air passage [portion Ⓐ to Ⓑ] of EVAP canister vent control valve using an air blower.
2. Perform “VENT CONTROL/V” in “ACTIVE TEST” mode.

3. Check air passage continuity and operation delay time.
Check that new O-ring is installed properly.

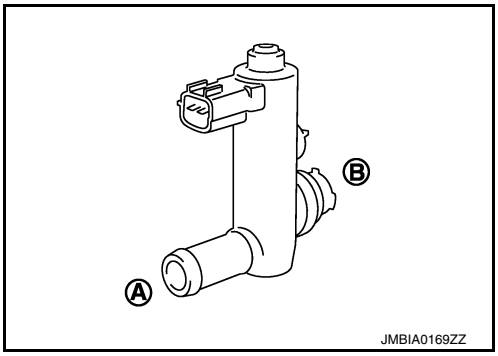

Condition VENT CONTROL/V	Air passage continuity between Ⓐ and Ⓑ
ON	No
OFF	Yes

Operation takes less than 1 second.

Without CONSULT

1. Clean the air passage [portion Ⓐ to Ⓑ] of EVAP canister vent control valve using an air blower.
2. Check air passage continuity and operation delay time under the following conditions.
Check that new O-ring is installed properly.

Condition	Air passage continuity between Ⓐ and Ⓑ
12 V direct current supply between terminals (1) and (2)	No
OFF	Yes

Operation takes less than 1 second.

Is the inspection result normal?

YES >> INSPECTION END
NO >> Replace EVAP canister vent control valve. Refer to FL-18, "Removal and Installation".

P0451 EVAP CONTROL SYSTEM PRESSURE SENSOR

DTC Logic

INFOID:0000000011148653

DTC DETECTION LOGIC

DTC No.	CONSULT screen terms (Trouble diagnosis content)	DTC detecting condition	Possible cause
P0451	EVAP SYS PRES SEN (Evaporative emission system pressure sensor/switch range/performance)	ECM detects a sloshing signal from the EVAP control system pressure sensor	• Harness or connectors (EVAP control system pressure sensor circuit is shorted.) • EVAP control system pressure sensor

DTC CONFIRMATION PROCEDURE

NOTE:
Never remove fuel filler cap during DTC confirmation procedure.

1. PRECONDITIONING

If DTC Confirmation Procedure has been previously conducted, always perform the following procedure before conducting the next test.
1. Turn ignition switch OFF and wait at least 10 seconds.
2. Turn ignition switch ON.
3. Turn ignition switch OFF and wait at least 10 seconds.

With CONSULT>>GO TO 2.
Without CONSULT>>GO TO 5.

2. PERFORM DTC CONFIRMATION PROCEDURE-1

With CONSULT
1. Start engine and let it idle for least 40 seconds.
   NOTE:
   Do not depress accelerator pedal even slightly.
2. Check 1st trip DTC.

Is 1st trip DTC detected?

YES >> Proceed to EC-348, "Diagnosis Procedure".
NO >> GO TO 3.

3. PERFORM DTC CONFIRMATION PROCEDURE-2

With CONSULT
1. Select “EVAP DIAG READY” in “DATA MONITOR” mode of “ENGINE”.
2. Let it idle until “OFF” of “EVAP DIAG READY” changes to “ON”.
   NOTE:
   It will take at most 2 hours until “OFF” of “EVAP DIAG READY” changes to “ON”.
3. Turn ignition switch OFF and wait at least 90 minutes.
   NOTE:
   Never turn ignition switch ON during 90 minutes.
4. Turn ignition switch ON.
5. Select “EVAP LEAK DIAG” in “DATA MONITOR” mode of “ENGINE”.
6. Check that “EVAP LEAK DIAG” indication.

Which is displayed on CONSULT?

CMPLT >> GO TO 4.
YET >> 1. Perform DTC CONFIRMATION PROCEDURE again.
2. GO TO 1.

4. PERFORM DTC CONFIRMATION PROCEDURE-3

With CONSULT
Check 1st trip DTC.

Is 1st trip DTC detected?

YES >> Proceed to EC-348, "Diagnosis Procedure".
NO >> INSPECTION END

5. PERFORM DTC CONFIRMATION PROCEDURE-4

With GST

1. Start engine and let it idle for least 40 seconds.
   NOTE:
   Do not depress accelerator pedal even slightly.
2. Check 1st trip DTC.

Is 1st trip DTC detected?

YES >> Proceed to EC-348, "Diagnosis Procedure".
NO >> GO TO 6.

6. PERFORM DTC CONFIRMATION PROCEDURE-5

With GST

1. Let it idle for at least 2 hours.
2. Turn ignition switch OFF and wait at least 90 minutes.
   NOTE:
   Never turn ignition switch ON during 90 minutes.
3. Turn ignition switch ON.
4. Check 1st trip DTC.

Is 1st trip DTC detected?

YES >> Proceed to EC-348, "Diagnosis Procedure".
NO >> INSPECTION END

Diagnosis Procedure

INFOID:0000000011148654

1. CHECK EVAP CONTROL SYSTEM PRESSURE SENSOR CONNECTOR FOR WATER

1. Disconnect EVAP control system pressure sensor harness connector.
2. Check that water is not inside connectors.

Is the inspection result normal?

YES >> GO TO 2.
NO >> Repair or replace error-detected parts.

2. CHECK EVAP CONTROL SYSTEM PRESSURE SENSOR POWER SUPPLY

1. Turn ignition switch ON.
2. Check the voltage between EVAP control system pressure sensor harness connector and ground.

+		–	Voltage (V)
EVAP control system pressure sensor			
Connector	Terminal		
B36	3	Ground	Approx. 5

Is the inspection result normal?

YES >> GO TO 4.
NO >> GO TO 3.

3. CHECK EVAP CONTROL SYSTEM PRESSURE SENSOR POWER SUPPLY CIRCUIT

1. Turn ignition switch OFF.
2. Disconnect ECM harness connector.
3. Check the continuity between EVAP control system pressure sensor harness connector and ECM harness connector.

EVAP control system pressure sensor		ECM		Continuity
Connector	Terminal	Connector	Terminal	
B36	3	E32	125	Existed

Is the inspection result normal?

YES >> Check intermittent incident. Refer to GI-47, "Intermittent Incident".
NO >> Repair or replace error-detected parts.

4. CHECK EVAP CONTROL SYSTEM PRESSURE SENSOR GROUND CIRCUIT

1. Turn ignition switch OFF.
2. Disconnect ECM harness connector.
3. Check the continuity between EVAP control system pressure sensor harness connector and ECM harness connector.

EVAP control system pressure sensor		ECM		Continuity
Connector	Terminal	Connector	Terminal	
B36	1	E32	148	Existed

4. Also check harness for short to ground and short to power.

Is the inspection result normal?

YES >> GO TO 5.
NO >> Repair or replace error-detected parts.

5. CHECK EVAP CONTROL SYSTEM PRESSURE SENSOR

Check EVAP control system pressure sensor. Refer to EC-349, "Component Inspection".

Is the inspection result normal?

YES >> Check intermittent incident. Refer to GI-47, "Intermittent Incident".
NO >> Replace EVAP control system pressure sensor. Refer to FL-18, "Removal and Installation".

Component Inspection

INFOID:0000000011148655

1. CHECK EVAP CONTROL SYSTEM PRESSURE SENSOR

1. Turn ignition switch OFF.
2. Remove EVAP control system pressure sensor with its harness connector. Refer to FL-18, "Removal and Installation".
   Always replace O-ring with a new one.
3. Install a vacuum pump to EVAP control system pressure sensor.
4. Turn ignition switch ON and check output voltage between ECM terminals under the following conditions.

ECM			Applied vacuum kPa (kg/cm^2, psi)	Voltage
Connector	+	–		
	Terminal	Terminal		
E32	121	148	Not applied	1.8 - 4.8 V
			-26.7 (-0.272, -3.87)	2.1 to 2.5 V lower than above value

CAUTION:
- **Always calibrate the vacuum pump gauge when using it.**
- **Never apply below -93.3 kPa (-0.952 kg/cm^2, -13.53 psi) or pressure over 101.3 kPa (1.033 kg/cm^2, 14.69 psi).**

Is the inspection result normal?

YES >> INSPECTION END
NO >> Replace EVAP control system pressure sensor. Refer to FL-18, "Removal and Installation".

P0452 EVAP CONTROL SYSTEM PRESSURE SENSOR

DTC Logic

INFOID:0000000011148656

DTC DETECTION LOGIC

DTC No.	CONSULT screen terms (Trouble diagnosis content)	DTC detecting condition	Possible cause
P0452	EVAP SYS PRES SEN (Evaporative emission system pressure sensor/switch low)	An excessively low voltage from the sensor is sent to ECM.	• Harness or connectors (EVAP control system pressure sensor circuit is open or shorted.) • EVAP control system pressure sensor

DTC CONFIRMATION PROCEDURE

1.PRECONDITIONING

If DTC Confirmation Procedure has been previously conducted, always perform the following before conducting the next test.
1. Turn ignition switch OFF and wait at least 10 seconds.
2. Turn ignition switch ON.
3. Turn ignition switch OFF and wait at least 10 seconds.

TESTING CONDITION:
Always perform test at a temperature of 5°C (41°F) or more.

>> GO TO 2.

2.PERFORM DTC CONFIRMATION PROCEDURE

With CONSULT
1. Start engine and warm it up to normal operating temperature.
2. Turn ignition switch OFF and wait at least 10 seconds.
3. Turn ignition switch ON.
4. Turn ignition switch OFF and wait at least 10 seconds.
5. Turn ignition switch ON.
6. Select “DATA MONITOR” mode with CONSULT.
7. Check that “FUEL T/TMP SE” is more than 0°C (32°F).
8. Start engine and wait at least 20 seconds.
9. Check 1st trip DTC.

With GST
1. Start engine and warm it up to normal operating temperature.
2. Set voltmeter probes to ECM harness connector terminals under the following conditions.

ECM		
Connector	+	–
	Terminal	
E32	128	148

3. Check that the voltage is less than 4.2 V.
4. Turn ignition switch OFF and wait at least 10 seconds.
5. Turn ignition switch ON.
6. Turn ignition switch OFF and wait at least 10 seconds.
7. Start engine and wait at least 20 seconds.
8. Check 1st trip DTC.

Is 1st trip DTC detected?

YES >> Proceed to EC-351, "Diagnosis Procedure".
NO >> INSPECTION END

Diagnosis Procedure

INFOID:0000000011148657

1. CHECK CONNECTOR

1. Disconnect EVAP control system pressure sensor harness connector.
2. Check that water is not inside connector.

Is the inspection result normal?

YES >> GO TO 2.
NO >> Repair or replace harness connector.

2. CHECK EVAP CONTROL SYSTEM PRESSURE SENSOR POWER SUPPLY

1. Turn ignition switch ON.
2. Check the voltage between EVAP control system pressure sensor harness connector and ground.

+		–	Voltage (V)
EVAP control system pressure sensor			
Connector	Terminal		
B36	3	Ground	Approx. 5

Is the inspection result normal?

YES >> GO TO 4.
NO >> GO TO 3.

3. CHECK EVAP CONTROL SYSTEM PRESSURE SENSOR POWER SUPPLY CIRCUIT

1. Turn ignition switch OFF.
2. Disconnect ECM harness connector.
3. Check the continuity between EVAP control system pressure sensor harness connector and ECM harness connector.

EVAP control system pressure sensor		ECM		Continuity
Connector	Terminal	Connector	Terminal	
B36	3	E32	125	Existed

Is the inspection result normal?

YES >> Check intermittent incident. Refer to GI-47, "Intermittent Incident".
NO >> Repair or replace harness connector.

4. CHECK EVAP CONTROL SYSTEM PRESSURE SENSOR GROUND CIRCUIT

1. Turn ignition switch OFF.
2. Disconnect ECM harness connector.
3. Check the continuity between EVAP control system pressure sensor harness connector and ECM harness connector.

EVAP control system pressure sensor		ECM		Continuity
Connector	Terminal	Connector	Terminal	
B36	1	E32	148	Existed

4. Also check harness for short to ground and short to power.

Is the inspection result normal?

YES >> GO TO 5.
NO >> Repair open circuit, short to ground or short to power in harness or connectors.

5. CHECK EVAP CONTROL SYSTEM PRESSURE SENSOR INPUT SIGNAL CIRCUIT

1. Check the continuity between EVAP control system pressure sensor harness connector and ECM harness connector.

EVAP control system pressure sensor		ECM		Continuity
Connector	Terminal	Connector	Terminal	
B36	2	E32	121	Existed

2. Also check harness for short to ground and short to power.

Is the inspection result normal?

YES >> GO TO 6.
NO >> Repair open circuit, short to ground or short to power in harness or connectors.

6. CHECK EVAP CONTROL SYSTEM PRESSURE SENSOR

Check EVAP control system pressure sensor. Refer to EC-352, "Component Inspection".

Is the inspection result normal?

YES >> Check intermittent incident. Refer to GI-47, "Intermittent Incident".
NO >> Replace EVAP control system pressure sensor. Refer to FL-18, "Removal and Installation".

Component Inspection

INFOID:0000000011148658

1. CHECK EVAP CONTROL SYSTEM PRESSURE SENSOR

1. Turn ignition switch OFF.
2. Remove EVAP control system pressure sensor with its harness connector. Refer to FL-18, "Removal and Installation".
   Always replace O-ring with a new one.
3. Install a vacuum pump to EVAP control system pressure sensor.
4. Turn ignition switch ON and check output voltage between ECM terminals under the following conditions.

ECM			Applied vacuum kPa (kg/cm^2, psi)	Voltage
Connector	+	–		
	Terminal	Terminal		
E32	121	148	Not applied	1.8 - 4.8 V
			-26.7 (-0.272, -3.87)	2.1 to 2.5 V lower than above value

CAUTION:
- **Always calibrate the vacuum pump gauge when using it.**
- **Never apply below -93.3 kPa (-0.952 kg/cm^2, -13.53 psi) or pressure over 101.3 kPa (1.033 kg/cm^2, 14.69 psi).**

Is the inspection result normal?

YES >> INSPECTION END
NO >> Replace EVAP control system pressure sensor. Refer to FL-18, "Removal and Installation".

P0453 EVAP CONTROL SYSTEM PRESSURE SENSOR

DTC Logic

INFOID:0000000011148659

DTC DETECTION LOGIC

DTC No.	CONSULT screen terms (Trouble diagnosis content)	DTC detecting condition	Possible cause
P0453	EVAP SYS PRES SEN (Evaporative emission system pressure sensor/switch high)	An excessively high voltage from the sensor is sent to ECM.	• Harness or connectors (EVAP control system pressure sensor circuit is open or shorted.) • EVAP control system pressure sensor • EVAP canister vent control valve • EVAP canister • Rubber hose from EVAP canister vent control valve to vehicle frame

DTC CONFIRMATION PROCEDURE

1.PRECONDITIONING

If DTC Confirmation Procedure has been previously conducted, always perform the following before conducting the next test.
1. Turn ignition switch OFF and wait at least 10 seconds.
2. Turn ignition switch ON.
3. Turn ignition switch OFF and wait at least 10 seconds.

TESTING CONDITION:
Always perform test at a temperature of 5°C (41°F) or more.

>> GO TO 2.

2.PERFORM DTC CONFIRMATION PROCEDURE

With CONSULT
1. Start engine and warm it up to normal operating temperature.
2. Turn ignition switch OFF and wait at least 10 seconds.
3. Turn ignition switch ON.
4. Turn ignition switch OFF and wait at least 10 seconds.
5. Turn ignition switch ON.
6. Select “DATA MONITOR” mode with CONSULT.
7. Check that “FUEL T/TMP SE” is more than 0°C (32°F).
8. Start engine and wait at least 20 seconds.
9. Check 1st trip DTC.

With GST
1. Start engine and warm it up to normal operating temperature.
2. Set voltmeter probes to ECM harness connector terminals.

ECM		
Connector	+	–
	Terminal	
E32	128	148

3. Check that the voltage is less than 4.2 V.
4. Turn ignition switch OFF and wait at least 10 seconds.
5. Turn ignition switch ON.
6. Turn ignition switch OFF and wait at least 10 seconds.
7. Start engine and wait at least 20 seconds.
8. Check 1st trip DTC.

Is 1st trip DTC detected?

YES >> Proceed to EC-354, "Diagnosis Procedure".

NO >> INSPECTION END

Diagnosis Procedure

INFOID:0000000011148660

1. CHECK CONNECTOR

1. Disconnect EVAP control system pressure sensor harness connector.
2. Check that water is not inside connectors.

Is the inspection result normal?

YES >> GO TO 2.
NO >> Repair or replace harness connector.

2. CHECK EVAP CONTROL SYSTEM PRESSURE SENSOR POWER SUPPLY

1. Turn ignition switch ON.
2. Check the voltage between EVAP control system pressure sensor harness connector and ground.

+		–	Voltage (V)
EVAP control system pressure sensor			
Connector	Terminal		
B36	3	Ground	Approx. 5

Is the inspection result normal?

YES >> GO TO 4.
NO >> GO TO 3.

3. CHECK EVAP CONTROL SYSTEM PRESSURE SENSOR POWER SUPPLY CIRCUIT

1. Turn ignition switch OFF.
2. Disconnect ECM harness connector.
3. Check the continuity between EVAP control system pressure sensor harness connector and ECM harness connector.

EVAP control system pressure sensor		ECM		Continuity
Connector	Terminal	Connector	Terminal	
B36	3	E32	125	Existed

Is the inspection result normal?

YES >> Check intermittent incident. Refer to GI-47, "Intermittent Incident".
NO >> Repair open circuit.

4. CHECK EVAP CONTROL SYSTEM PRESSURE SENSOR GROUND CIRCUIT

1. Turn ignition switch OFF.
2. Disconnect ECM harness connector.
3. Check the continuity between EVAP control system pressure sensor harness connector and ECM harness connector.

EVAP control system pressure sensor		ECM		Continuity
Connector	Terminal	Connector	Terminal	
B36	1	E32	148	Existed

4. Also check harness for short to ground and short to power.

Is the inspection result normal?

YES >> GO TO 5.
NO >> Repair open circuit, short to ground or short to power in harness or connectors.

5. CHECK EVAP CONTROL SYSTEM PRESSURE SENSOR INPUT SIGNAL CIRCUIT

1. Check the continuity between EVAP control system pressure sensor harness connector and ECM harness connector.

EVAP control system pressure sensor		ECM		Continuity
Connector	Terminal	Connector	Terminal	
B36	2	E32	121	Existed

2. Also check harness for short to ground and short to power.

Is the inspection result normal?

YES >> GO TO 6.
NO >> Repair open circuit, short to ground or short to power in harness or connectors.

6. CHECK RUBBER TUBE

1. Disconnect rubber tube connected to EVAP canister vent control valve.
2. Check the rubber tube for clogging.

Is the inspection result normal?

YES >> GO TO 7.
NO >> Clean the rubber tube using an air blower, repair or replace rubber tube.

7. CHECK EVAP CANISTER VENT CONTROL VALVE

Check EVAP canister vent control valve. Refer to EC-356, "Component Inspection".

Is the inspection result normal?

YES >> GO TO 8.
NO >> Replace EVAP canister vent control valve. Refer to FL-18, "Removal and Installation".

8. CHECK EVAP CONTROL SYSTEM PRESSURE SENSOR

Check EVAP control system pressure sensor. Refer to EC-356, "Component Inspection".

Is the inspection result normal?

YES >> GO TO 9.
NO >> Replace EVAP control system pressure sensor. Refer to FL-18, "Removal and Installation".

9. CHECK IF EVAP CANISTER IS SATURATED WITH WATER

1. Remove EVAP canister with EVAP canister vent control valve and EVAP control system pressure sensor attached. Refer to FL-18, "Removal and Installation".
2. Check if water will drain from the EVAP canister.

Does water drain from the EVAP canister?

YES >> GO TO 10.
NO >> Check intermittent incident. Refer to GI-47, "Intermittent Incident".

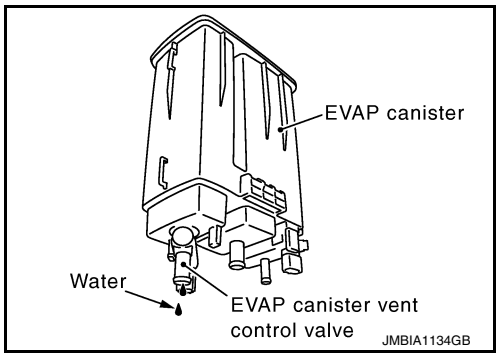

10. CHECK EVAP CANISTER

Weigh the EVAP canister with the EVAP canister vent control valve and EVAP control system pressure sensor attached.

The weight should be less than 2.1 kg (4.6 lb).

Is the inspection result normal?

YES >> Check intermittent incident. Refer to GI-47, "Intermittent Incident".
NO >> GO TO 11.

11. DETECT MALFUNCTIONING PART

Check the following.
- EVAP canister for damage
- EVAP hose between EVAP canister and vehicle frame for clogging or poor connection

>> Repair hose or replace EVAP canister. Refer to FL-18, "Removal and Installation".

Component Inspection

INFOID:0000000011148661

1. CHECK EVAP CONTROL SYSTEM PRESSURE SENSOR

1. Turn ignition switch OFF.
2. Remove EVAP control system pressure sensor with its harness connector. Refer to FL-18, "Removal and Installation".
   Always replace O-ring with a new one.
3. Install a vacuum pump to EVAP control system pressure sensor.
4. Turn ignition switch ON and check output voltage between ECM terminals under the following conditions.

ECM			Applied vacuum kPa (kg/cm^2, psi)	Voltage
Connector	+	–		
	Terminal	Terminal		
E32	121	148	Not applied	1.8 - 4.8 V
			-26.7 (-0.272, -3.87)	2.1 to 2.5 V lower than above value

CAUTION:
- **Always calibrate the vacuum pump gauge when using it.**
- **Never apply below -93.3 kPa (-0.952 kg/cm^2, -13.53 psi) or pressure over 101.3 kPa (1.033 kg/cm^2, 14.69 psi).**

Is the inspection result normal?

YES >> INSPECTION END
NO >> Replace EVAP control system pressure sensor. Refer to FL-18, "Removal and Installation".

P0456 EVAP CONTROL SYSTEM

DTC Logic

INFOID:0000000011148662

DTC DETECTION LOGIC

This diagnosis detects leaks in the EVAP line between fuel tank and EVAP canister purge volume control solenoid valve, using the negative pressure caused by decrease of fuel temperature in the fuel tank after turning ignition switch OFF.
If ECM judges there are no leaks, the diagnosis will be OK.

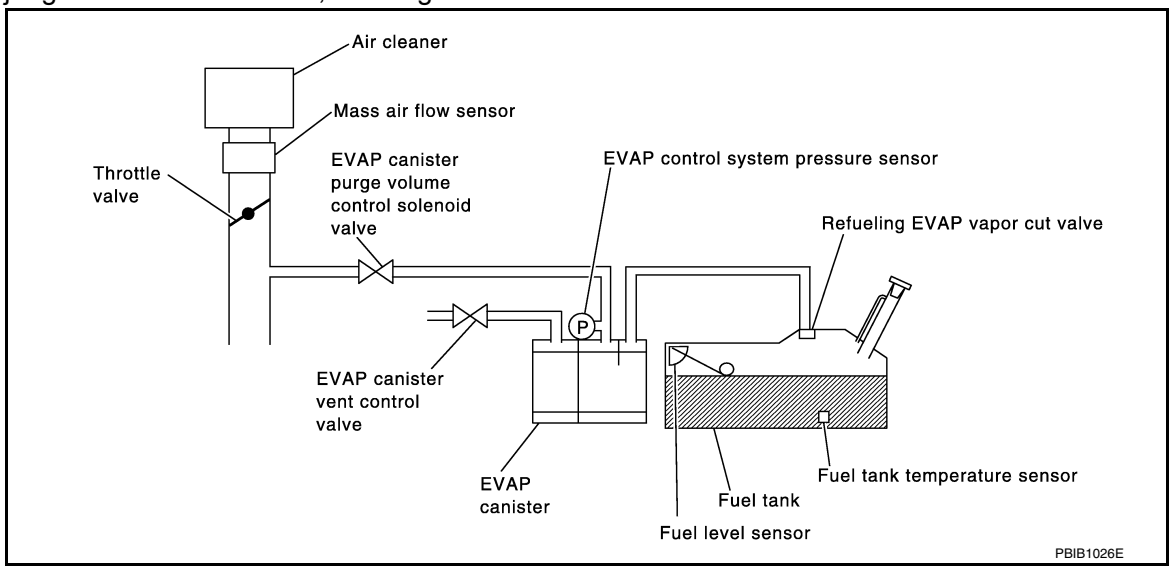

DTC No.	CONSULT screen terms (Trouble diagnosis content)	DTC detecting condition	Possible cause
P0456	EVAP VERY SML LEAK [Evaporative emission system leak detected (very small leak)]	• EVAP system has a leak. • EVAP system does not operate properly.	• Incorrect fuel tank vacuum relief valve • Incorrect fuel filler cap used • Fuel filler cap remains open or fails to close. • Foreign matter caught in fuel filler cap. • Leak is in line between intake manifold and EVAP canister purge volume control solenoid valve. • Foreign matter caught in EVAP canister vent control valve. • EVAP canister or fuel tank leaks • EVAP purge line (pipe and rubber tube) leaks • EVAP purge line rubber tube bent • Loose or disconnected rubber tube • EVAP canister vent control valve and the circuit • EVAP canister purge volume control solenoid valve and the circuit • Fuel tank temperature sensor • O-ring of EVAP canister vent control valve is missing or damaged • EVAP canister is saturated with water • EVAP control system pressure sensor • Refueling EVAP vapor cut valve • ORVR system leaks • Fuel level sensor and the circuit • Foreign matter caught in EVAP canister purge volume control solenoid valve

CAUTION:
- **Use only a genuine NISSAN fuel filler cap as a replacement. If an incorrect fuel filler cap is used, the MIL may come on.**
- **If the fuel filler cap is not tightened properly, the MIL may come on.**
- **Use only a genuine NISSAN rubber tube as a replacement.**

DTC CONFIRMATION PROCEDURE

1.PRECONDITIONING

If DTC Confirmation Procedure has been previously conducted, always perform the following before conducting the next test.
1. Turn ignition switch OFF and wait at least 10 seconds.
2. Turn ignition switch ON.
3. Turn ignition switch OFF and wait at least 10 seconds.

Do you have CONSULT?

YES >> GO TO 2.
NO >> GO TO 4.

2.PERFORM DTC CONFIRMATION PROCEDURE-I

With CONSULT
1. Turn ignition switch ON and select “EVAP DIAG READY” in “DATA MONITOR” mode with CONSULT.
2. Start engine and wait at idle until “OFF” of “EVAP DIAG READY” changes to “ON”.
   NOTE:
   It will take at most 2 hours until “OFF” of “EVAP DIAG READY” changes to “ON”.
3. Turn ignition switch OFF and wait at least 90 minutes.
   NOTE:
   Never turn ignition switch ON during 90 minutes.
4. Turn ignition switch ON and select “EVAP LEAK DIAG” in “DATA MONITOR” mode with CONSULT.
5. Check that “EVAP LEAK DIAG” indication.

Which is displayed on CONSULT?

CMPLT >> GO TO 3.
YET >> Perform DTC CONFIRMATION PROCEDURE again. GO TO 1.

3.PERFORM DTC CONFIRMATION PROCEDURE-II

Check 1st trip DTC.

Is 1st trip DTC detected?

YES >> Go to EC-358, "Diagnosis Procedure".
NO >> INSPECTION END.

4.PERFORM DTC CONFIRMATION PROCEDURE

With GST
1. Start engine and wait engine idle for at least 2 hours.
2. Turn ignition switch OFF and wait at least 90 minutes.
   NOTE:
   Never turn ignition switch ON during 90 minutes.
3. Turn ignition switch ON.
4. Check 1st trip DTC.

Is 1st trip DTC detected?

YES >> Go to EC-358, "Diagnosis Procedure".
NO >> INSPECTION END.

Diagnosis Procedure

INFOID:0000000011148663

1.CHECK FUEL FILLER CAP DESIGN

1. Turn ignition switch OFF.

2. Check for genuine NISSAN fuel filler cap design.

Is the inspection result normal?

YES >> GO TO 2.
NO >> Replace with genuine NISSAN fuel filler cap.

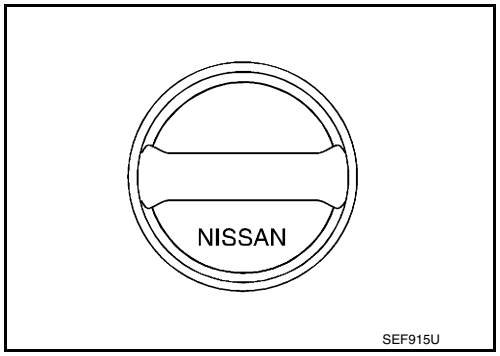

2. CHECK FUEL FILLER CAP INSTALLATION

Check that the cap is tightened properly by rotating the cap clockwise.

Is the inspection result normal?

YES >> GO TO 3.
NO >> Open fuel filler cap, then clean cap and fuel filler neck threads using air blower. Then retighten until ratcheting sound is heard.

3. CHECK FUEL FILLER CAP FUNCTION

Check for air releasing sound while opening the fuel filler cap.

Is the inspection result normal?

YES >> GO TO 5.
NO >> GO TO 4.

4. CHECK FUEL TANK VACUUM RELIEF VALVE

Refer to EC-362, "Component Inspection".

Is the inspection result normal?

YES >> GO TO 5.
NO >> Replace fuel filler cap with a genuine one.

5. CHECK FOR EVAP LEAK

Refer to EC-523, "Work Procedure".

Is there any leak in EVAP line?

YES >> Repair or replace.
NO >> GO TO 6.

6. CHECK EVAP CANISTER VENT CONTROL VALVE

Check the following.

- EVAP canister vent control valve is installed properly.
  Refer to FL-18, "Removal and Installation".
- EVAP canister vent control valve.
  Refer to EC-341, "Component Inspection".

Is the inspection result normal?

YES >> GO TO 7.
NO >> Repair or replace EVAP canister vent control valve and O-ring.

7. CHECK IF EVAP CANISTER SATURATED WITH WATER

1. Remove EVAP canister with EVAP canister vent control valve and EVAP control system pressure sensor attached.
2. Check if water will drain from the EVAP canister.

Does water drain from EVAP canister?

YES >> GO TO 8.
NO-1 >> With CONSULT: GO TO 10.
NO-2 >> Without CONSULT: GO TO 11.

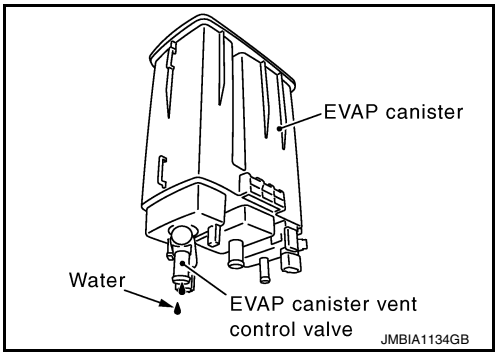

8. CHECK EVAP CANISTER

Weigh the EVAP canister assembly with the EVAP canister vent control valve and EVAP control system pressure sensor attached.
The weight should be less than 2.1 kg (4.6 lb).

Is the inspection result normal?

YES-1 >> With CONSULT: GO TO 10.
YES-2 >> Without CONSULT: GO TO 11.
NO >> GO TO 9.

9. DETECT MALFUNCTIONING PART

Check the following.
- EVAP canister for damage
- EVAP hose between EVAP canister and vehicle frame for clogging or poor connection

>> Repair hose or replace EVAP canister.

10. CHECK EVAP CANISTER PURGE VOLUME CONTROL SOLENOID VALVE OPERATION

With CONSULT
1. Disconnect vacuum hose to EVAP canister purge volume control solenoid valve at EVAP service port.
2. Start engine and let it idle.
3. Select “PURG VOL CONT/V” in “ACTIVE TEST” mode.
4. Touch “Qu” on CONSULT screen to increase “PURG VOL CONT/V” opening to 100%.
5. Check vacuum hose for vacuum.

Vacuum should exist.

Is the inspection result normal?

YES >> GO TO 13.
NO >> GO TO 12.

11. CHECK EVAP CANISTER PURGE VOLUME CONTROL SOLENOID VALVE OPERATION

Without CONSULT
1. Start engine and warm it up to normal operating temperature.
2. Stop engine.
3. Disconnect vacuum hose to EVAP canister purge volume control solenoid valve at EVAP service port.
4. Start engine and let it idle for at least 80 seconds.
5. Check vacuum hose for vacuum when revving engine up to 2,000 rpm.

Vacuum should exist.

Is the inspection result normal?

YES >> GO TO 13.
NO >> GO TO 12.

12. CHECK VACUUM HOSE

Check vacuum hoses for clogging or disconnection. Refer to EC-49, "EVAPORATIVE EMISSION SYSTEM : System Description".

Is the inspection result normal?

YES >> GO TO 13.
NO >> Repair or reconnect the hose.

13. CHECK EVAP CANISTER PURGE VOLUME CONTROL SOLENOID VALVE

Refer to EC-335, "Component Inspection".

Is the inspection result normal?

YES >> GO TO 14.
NO >> Replace EVAP canister purge volume control solenoid valve.

14. CHECK FUEL TANK TEMPERATURE SENSOR

Refer to EC-295, "Component Inspection".

Is the inspection result normal?

YES >> GO TO 15.
NO >> Replace fuel level sensor unit.

15. CHECK EVAP CONTROL SYSTEM PRESSURE SENSOR

Refer to EC-349, "Component Inspection".

Is the inspection result normal?

YES >> GO TO 16.
NO >> Replace EVAP control system pressure sensor.

16. CHECK EVAP PURGE LINE

Check EVAP purge line (pipe, rubber tube, fuel tank and EVAP canister) for cracks or improper connection. Refer to EC-49, "EVAPORATIVE EMISSION SYSTEM : System Description".

Is the inspection result normal?

YES >> GO TO 17.
NO >> Repair or reconnect the hose.

17. CLEAN EVAP PURGE LINE

Clean EVAP purge line (pipe and rubber tube) using air blower.

>> GO TO 18.

18. CHECK EVAP/ORVR LINE

Check EVAP/ORVR line between EVAP canister and fuel tank for clogging, kink, looseness and improper connection. For location, refer to EC-36, "On Board Refueling Vapor Recovery (ORVR)".

Is the inspection result normal?

YES >> GO TO 19.
NO >> Repair or replace hoses and tubes.

19. CHECK RECIRCULATION LINE

Check recirculation line between fuel filler tube and fuel tank for clogging, kink, cracks, looseness and improper connection.

Is the inspection result normal?

YES >> GO TO 20.
NO >> Repair or replace hose, tube or fuel filler tube.

20. CHECK REFUELING EVAP VAPOR CUT VALVE

Refer to EC-506, "Component Inspection".

Is the inspection result normal?

YES >> GO TO 21.
NO >> Replace refueling EVAP vapor cut valve with fuel tank.

21. CHECK FUEL LEVEL SENSOR

Refer to MWI-68, "Component Inspection".

Is the inspection result normal?

YES >> GO TO 22.
NO >> Replace fuel level sensor unit.

22. CHECK INTERMITTENT INCIDENT

Refer to GI-47, "Intermittent Incident".

>> INSPECTION END

Component Inspection

INFOID:0000000011148664

1. CHECK FUEL FILLER CAP

1. Turn ignition switch OFF.
2. Remove fuel filler cap. Refer to FL-13, "Removal and Installation".
3. Wipe clean valve housing.

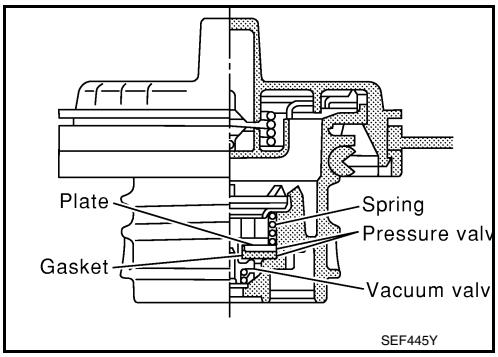

4. Install fuel filler cap adapter (commercial service tool) to fuel filler cap.
5. Check valve opening pressure and vacuum.

Pressure: **15.3 - 20.0 kPa (0.156 - 0.204 kg/cm^2, 2.22 - 2.90 psi)**

Vacuum: **−6.0 to −3.3 kPa (−0.061 to −0.034 kg/cm^2, −0.87 to −0.48 psi)**

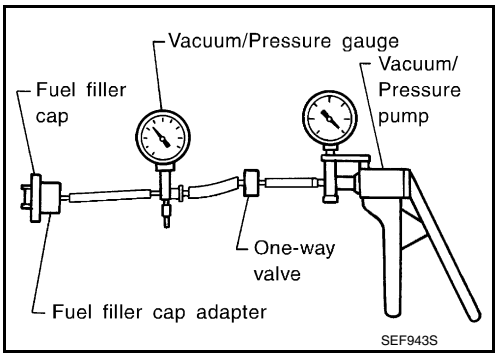

Is the inspection result normal?

YES >> INSPECTION END
NO >> GO TO 2.

2. REPLACE FUEL FILLER CAP

Replace fuel filler cap. Refer to FL-13, "Removal and Installation".

CAUTION:
Use only a genuine fuel filler cap as a replacement. If an incorrect fuel filler cap is used, the MIL may illuminate.

>> INSPECTION END

P0460 FUEL LEVEL SENSOR

DTC Logic

INFOID:0000000011148665

DTC DETECTION LOGIC

NOTE:
- **If DTC P0460 is displayed with DTC UXXXX, first perform the trouble diagnosis for DTC UXXXX.**
- **If DTC P0460 is displayed with DTC P0607, first perform the trouble diagnosis for DTC P0607. Refer to EC-392, "DTC Logic".**

When the vehicle is parked, the fuel level in the fuel tank is naturally stable. It means that output signal of the fuel level sensor does not change. If ECM senses sloshing signal from the sensor, fuel level sensor malfunction is detected.

DTC No.	CONSULT screen terms (Trouble diagnosis content)	DTC detecting condition	Possible cause
P0460	FUEL LEV SEN SLOSH (Fuel level sensor “A” circuit)	Even though the vehicle is parked, a signal being varied is sent from the fuel level sensor to ECM.	• Harness or connectors (The CAN communication line is open or shorted) • Harness or connectors (The sensor circuit is open or shorted) • Combination meter • Fuel level sensor

DTC CONFIRMATION PROCEDURE

1.PRECONDITIONING

If DTC Confirmation Procedure has been previously conducted, always perform the following before conducting the next test.
1. Turn ignition switch OFF and wait at least 10 seconds.
2. Turn ignition switch ON.
3. Turn ignition switch OFF and wait at least 10 seconds.

>> GO TO 2.

2.PERFORM DTC CONFIRMATION PROCEDURE

1. Start engine and wait maximum of 2 consecutive minutes.
2. Check 1st trip DTC.

Is 1st trip DTC detected?

YES >> Proceed to EC-363, "Diagnosis Procedure".
NO >> INSPECTION END

Diagnosis Procedure

INFOID:0000000011148666

1.CHECK COMBINATION METER FUNCTION

Check combination meter function. Refer to MWI-18, "CONSULT Function (METER/M&A)".

Is the inspection result normal?

YES >> Check intermittent incident. Refer to GI-47, "Intermittent Incident".
NO >> Proceed to MWI-67, "Diagnosis Procedure".

P0461 FUEL LEVEL SENSOR

DTC Logic

INFOID:0000000011148667

DTC DETECTION LOGIC

NOTE:
- **If DTC P0461 is displayed with DTC UXXXX, first perform the trouble diagnosis for DTC UXXXX.**
- **If DTC P0461 is displayed with DTC P0607, first perform the trouble diagnosis for DTC P0607. Refer to EC-392, "DTC Logic".**

Driving long distances naturally affect fuel gauge level.
This diagnosis detects the fuel gauge malfunction of the gauge not moving even after a long distance has been driven.

DTC No.	CONSULT screen terms (Trouble diagnosis content)	DTC detecting condition	Possible cause
P0461	FUEL LEVEL SENSOR (Fuel level sensor “A” circuit range/performance)	The output signal of the fuel level sensor does not change within the specified range even though the vehicle has been driven a long distance.	• Harness or connectors (The CAN communication line is open or shorted) • Harness or connectors (The sensor circuit is open or shorted) • Combination meter • Fuel level sensor

DTC CONFIRMATION PROCEDURE

1.PERFORM COMPONENT FUNCTION CHECK

Perform component function check. Refer to EC-364, "Component Function Check".
Use component function check to check the overall function of the fuel level sensor. During this check, a 1st trip DTC might not be confirmed.

Is the inspection result normal?

YES >> INSPECTION END
NO >> Proceed to EC-365, "Diagnosis Procedure".

Component Function Check

INFOID:0000000011148668

1.PRECONDITIONING

WARNING:
When performing the following procedure, always observe the handling of the fuel. Refer to FL-6, "Removal and Installation".
TESTING CONDITION:
Before starting component function check, preparation of draining fuel and refilling fuel is required.

Will CONSULT be used?

YES >> GO TO 2.
NO >> GO TO 3.

2.PERFORM COMPONENT FUNCTION CHECK

With CONSULT
NOTE:
Start from step 10, if it is possible to confirm that the fuel cannot be drained by 30 ℓ (7-7/8 US gal, 6-5/8 Imp gal) in advance.

1. Prepare a fuel container and a spare hose.
2. Release fuel pressure from fuel line, refer to EC-523, "Work Procedure".
3. Remove the fuel feed hose on the fuel level sensor unit.
4. Connect a spare fuel hose where the fuel feed hose was removed.
5. Turn ignition switch OFF and wait at least 10 seconds then turn ON.
6. Select “FUEL LEVEL SE” in “DATA MONITOR” mode with CONSULT.
7. Check “FUEL LEVEL SE” output voltage and note it.
8. Select “FUEL PUMP RELAY” in “ACTIVE TEST” mode with CONSULT.

9. Touch “ON” and drain fuel approximately 30 ℓ (7-7/8 US gal, 6-5/8 Imp gal) and stop it.
10. Check “FUEL LEVEL SE” output voltage and note it.
11. Fill fuel into the fuel tank for 30 ℓ (7-7/8 US gal, 6-5/8 Imp gal).
12. Check “FUEL LEVEL SE” output voltage and note it.
13. Confirm whether the voltage changes more than 0.03 V during step 7 to 10 and 10 to 12.

Is the inspection result normal?

YES >> INSPECTION END
NO >> Proceed to EC-365, "Diagnosis Procedure".

3. PERFORM COMPONENT FUNCTION CHECK

Without CONSULT

NOTE:

Start from step 8, if it is possible to confirm that the fuel cannot be drained by 30 ℓ (7-7/8 US gal, 6-5/8 Imp gal) in advance.

1. Prepare a fuel container and a spare hose.
2. Release fuel pressure from fuel line. Refer to EC-523, "Work Procedure".
3. Remove the fuel feed hose on the fuel level sensor unit. Refer to FL-6, "Removal and Installation".
4. Connect a spare fuel hose where the fuel feed hose was removed.
5. Turn ignition switch ON.
6. Drain fuel by 30 ℓ (7-7/8 US gal, 6-5/8 Imp gal) from the fuel tank using proper equipment.
7. Confirm that the fuel gauge indication varies.
8. Fill fuel into the fuel tank for 30 ℓ (7-7/8 US gal, 6-5/8 Imp gal).
9. Confirm that the fuel gauge indication varies.

Is the inspection result normal?

YES >> INSPECTION END
NO >> Proceed to EC-365, "Diagnosis Procedure".

Diagnosis Procedure

INFOID:0000000011148669

1. CHECK COMBINATION METER FUNCTION

Check combination meter function. Refer to MWI-18, "CONSULT Function (METER/M&A)".

Is the inspection result normal?

YES >> Check intermittent incident. Refer to GI-47, "Intermittent Incident".
NO >> Proceed to MWI-67, "Diagnosis Procedure".

P0462, P0463 FUEL LEVEL SENSOR

DTC Logic

INFOID:0000000011148670

DTC DETECTION LOGIC

NOTE:
- **If DTC P0462 or P0463 is displayed with DTC UXXXX, first perform the trouble diagnosis for DTC UXXXX.**
- **If DTC P0462 or P0463 is displayed with DTC P0607, first perform the trouble diagnosis for DTC P0607.Refer to EC-392, "DTC Logic".**

DTC No.	CONSULT screen terms (Trouble diagnosis content)	DTC detecting condition	Possible cause
P0462	FUEL LEVL SEN/CIRC (Fuel level sensor “A” circuit low)	An excessively low voltage from the sensor is sent to ECM.	• Harness or connectors (The CAN communication line is open or shorted) • Harness or connectors (The sensor circuit is open or shorted) • Combination meter • Fuel level sensor
P0463	FUEL LEVL SEN/CIRC (Fuel level sensor “A” circuit high)	An excessively high voltage from the sensor is sent to ECM.	

DTC CONFIRMATION PROCEDURE

1.PRECONDITIONING

If DTC Confirmation Procedure has been previously conducted, always perform the following before conducting the next test.
1. Turn ignition switch OFF and wait at least 10 seconds.
2. Turn ignition switch ON.
3. Turn ignition switch OFF and wait at least 10 seconds.

TESTING CONDITION:
Before performing the following procedure, confirm that battery voltage is more than 11 V at ignition switch ON.

>> GO TO 2.

2.PERFORM DTC CONFIRMATION PROCEDURE

1. Turn ignition switch ON and wait at least 5 seconds.
2. Check 1st trip DTC.

Is 1st trip DTC detected?

YES >> Proceed to EC-366, "Diagnosis Procedure".
NO >> INSPECTION END

Diagnosis Procedure

INFOID:0000000011148671

1.CHECK COMBINATION METER FUNCTION

Check combination meter function. Refer to MWI-18, "CONSULT Function (METER/M&A)".

Is the inspection result normal?

YES >> Check intermittent incident. Refer to GI-47, "Intermittent Incident".
NO >> Proceed to MWI-67, "Diagnosis Procedure".

P0500 VSS

Description

INFOID:0000000011148672

ECM receives vehicle speed signals from two different paths via CAN communication line: One is from the ABS actuator and electric unit (control unit) via the combination unit and the other is from TCM.

DTC Logic

INFOID:0000000011148673

DTC DETECTION LOGIC

NOTE:
- If DTC P0500 is displayed with DTC UXXXX, first perform the trouble diagnosis for DTC UXXXX.
- If DTC P0500 is displayed with DTC P0607, first perform the trouble diagnosis for DTC P0607. Refer to EC-392, "DTC Logic".

DTC No.	CONSULT screen terms (Trouble diagnosis content)	DTC detecting condition	Possible cause
P0500	VEH SPEED SEN/CIRC (Vehicle speed sensor “A”)	At 20 km/h (13 MPH), ECM detects the following status continuously for 5 seconds or more: The difference between a vehicle speed calculated by a output speed sensor transmitted from TCM to ECM via CAN communication and the vehicle speed indicated on the combination meter exceeds 15km/h (10 MPH).	• Harness or connector (The CAN communication line is open or shorted.) • Combination meter • ABS actuator and electric unit (control unit) • Wheel sensor • TCM • Output speed sensor

DTC CONFIRMATION PROCEDURE

1. PRECONDITIONING

If DTC CONFIRMATION PROCEDURE has been previously conducted, always perform the following procedure before conducting the next test.
1. Turn ignition switch OFF and wait at least 10 seconds.
2. Turn ignition switch ON.
3. Turn ignition switch OFF and wait at least 10 seconds.

TESTING CONDITION:
Before performing the following procedure, confirm that battery voltage is 10 V or more at idle.

>> GO TO 2.

2. PERFORM DTC CONFIRMATION PROCEDURE

1. Start engine.
2. Shift the selector lever to D range and wait at least for 2 seconds.
3. Drive the vehicle at least 5 seconds at 20 km/h (13 MPH) or more.
   CAUTION:
   Always drive vehicle at a safe speed.
   NOTE:
   This procedure may be conducted with the drive wheels lifted in the shop or by driving the vehicle. If a road test is expected to be easier, it is unnecessary to lift the vehicle.
4. Check 1st trip DTC.

Is 1st trip DTC detected?

YES >> Proceed to EC-367, "Diagnosis Procedure"
NO >> INSPECTION END

Diagnosis Procedure

INFOID:0000000011148674

1. CHECK DTC WITH TCM

Check DTC with TCM. Refer to TM-47, "CONSULT Function".

Is the inspection result normal?

YES >> GO TO 2.

NO >> Perform trouble shooting relevant to DTC indicated.

2. CHECK DTC WITH ABS ACTUATOR AND ELECTRIC UNIT (CONTROL UNIT)

Check DTC with ABS actuator and electric unit (control unit). Refer to BRC-165, "CONSULT Function".

Is the inspection result normal?

YES >> GO TO 3.
NO >> Perform trouble shooting relevant to DTC indicated.

3. CHECK DTC WITH COMBINATION METER

Check DTC with combination meter. Refer to MWI-18, "CONSULT Function (METER/M&A)".

Is the inspection result normal?

YES >> GO TO 4.
NO >> Perform trouble shooting relevant to DTC indicated.

4. CHECK OUTPUT SPEED SENSOR

Check output speed sensor. Refer to TM-162, "Diagnosis Procedure".

Is the inspection result normal?

YES >> GO TO 5.
NO >> Replace or replace error-detected parts.

5. CHECK WHEEL SENSOR

Check wheel sensor. Refer to BRC-205, "Diagnosis Procedure".

Is the inspection result normal?

YES >> Check intermittent incident. Refer to GI-47, "Intermittent Incident".
NO >> Replace or replace error-detected parts.

P0506 ISC SYSTEM

Description

INFOID:0000000011148679

The ECM controls the engine idle speed to a specified level through the fine adjustment of the air, which is let into the intake manifold, by operating the electric throttle control actuator. The operating of the throttle valve is varied to allow for optimum control of the engine idling speed. The crankshaft position sensor (POS) detects the actual engine speed and sends a signal to the ECM.
The ECM controls the electric throttle control actuator so that the engine speed coincides with the target value memorized in the ECM. The target engine speed is the lowest speed at which the engine can operate steadily. The optimum value stored in the ECM is determined by taking into consideration various engine conditions, such as during warming up, deceleration and engine load (air conditioner, power steering and cooling fan operation, etc.).

DTC Logic

INFOID:0000000011148680

DTC DETECTION LOGIC

NOTE:
If DTC P0506 is displayed with other DTC, first perform the trouble diagnosis for the other DTC.

DTC No.	CONSULT screen terms (Trouble diagnosis content)	DTC detecting condition	Possible cause
P0506	ISC SYSTEM (Idle air control system RPM lower than expected)	The idle speed is less than the target idle speed by 100 rpm or more.	• Electric throttle control actuator • Intake air leakage

DTC CONFIRMATION PROCEDURE

1.PRECONDITIONING

If DTC Confirmation Procedure has been previously conducted, always perform the following before conducting the next test.
1. Turn ignition switch OFF and wait at least 10 seconds.
2. Turn ignition switch ON.
3. Turn ignition switch OFF and wait at least 10 seconds.

If the target idle speed is out of the specified value, perform EC-160, "Work Procedure", before conducting DTC CONFIRMATION PROCEDURE.
TESTING CONDITION:
- **Before performing the following procedure, confirm that battery voltage is more than 11 V at idle.**
- **Always perform the test at a temperature above –10°C(14°F).**

>> GO TO 2.

2.PERFORM DTC CONFIRMATION PROCEDURE

1. Start engine and warm it up to normal operating temperature.
2. Turn ignition switch OFF and wait at least 10 seconds.
3. Turn ignition switch ON.
4. Turn ignition switch OFF and wait at least 10 seconds.
5. Restart engine and run it for at least 1 minute at idle speed.
6. Check 1st trip DTC.

Is 1st trip DTC detected?

YES >> Proceed to EC-369, "Diagnosis Procedure".
NO >> INSPECTION END

Diagnosis Procedure

INFOID:0000000011148681

1.CHECK INTAKE AIR LEAKAGE

1. Start engine and let it idle.
2. Listen for an intake air leakage after the mass air flow sensor.

Is intake air leakage detected?

YES >> Discover air leakage location and repair.
NO >> Replace ECM. Refer to EC-526, "Removal and Installation".

P0507 ISC SYSTEM

Description

INFOID:0000000011148682

The ECM controls the engine idle speed to a specified level through the fine adjustment of the air, which is let into the intake manifold, by operating the electric throttle control actuator. The operating of the throttle valve is varied to allow for optimum control of the engine idling speed. The crankshaft position sensor (POS) detects the actual engine speed and sends a signal to the ECM.
The ECM controls the electric throttle control actuator so that the engine speed coincides with the target value memorized in the ECM. The target engine speed is the lowest speed at which the engine can operate steadily. The optimum value stored in the ECM is determined by taking into consideration various engine conditions, such as during warming up, deceleration and engine load (air conditioner, power steering and cooling fan operation, etc.).

DTC Logic

INFOID:0000000011148683

DTC DETECTION LOGIC

NOTE:
If DTC P0507 is displayed with other DTC, first perform the trouble diagnosis for the other DTC.

DTC No.	CONSULT screen terms (Trouble diagnosis content)	DTC detecting condition	Possible cause
P0507	ISC SYSTEM (Idle air control system RPM higher than expected)	The idle speed is more than the target idle speed by 200 rpm or more.	• Electric throttle control actuator • Intake air leakage • PCV system

DTC CONFIRMATION PROCEDURE

1.PRECONDITIONING

If DTC Confirmation Procedure has been previously conducted, always perform the following before conducting the next test.
1. Turn ignition switch OFF and wait at least 10 seconds.
2. Turn ignition switch ON.
3. Turn ignition switch OFF and wait at least 10 seconds.

If the target idle speed is out of the specified value, perform EC-160, "Work Procedure", before conducting DTC Confirmation Procedure.
TESTING CONDITION:
- **Before performing the following procedure, confirm that battery voltage is more than 11 V at idle.**
- **Always perform the test at a temperature above −10°C(14°F).**

>> GO TO 2.

2.PERFORM DTC CONFIRMATION PROCEDURE

1. Start engine and warm it up to normal operating temperature.
2. Turn ignition switch OFF and wait at least 10 seconds.
3. Turn ignition switch ON.
4. Turn ignition switch OFF and wait at least 10 seconds.
5. Restart engine and run it for at least 1 minute at idle speed.
6. Check 1st trip DTC.

Is 1st trip DTC detected?

YES >> Proceed to EC-371, "Diagnosis Procedure".
NO >> INSPECTION END

Diagnosis Procedure

INFOID:0000000011148684

1.CHECK PCV HOSE CONNECTION

Confirm that PCV hose is connected correctly.

Is the inspection result normal?

YES >> GO TO 2.

NO >> Repair or replace malfunctioning part.

2. CHECK INTAKE AIR LEAKAGE

1. Start engine and let it idle.
2. Listen for an intake air leakage after the mass air flow sensor.

Is intake air leakage detected?

YES >> Discover air leakage location and repair.
NO >> Replace ECM. Refer to EC-526, "Removal and Installation".

P050A, P050E COLD START CONTROL

Description

INFOID:0000000011148685

ECM controls ignition timing and engine idle speed when engine is started with pre-warming up condition. This control promotes the activation of three way catalyst by heating the catalyst and reduces emissions.

DTC Logic

INFOID:0000000011148686

DTC DETECTION LOGIC

NOTE:
If DTC P050A, P050E is displayed with other DTC, first perform the trouble diagnosis for other DTC.

DTC No.	CONSULT screen terms (Trouble diagnosis content)	DTC detecting condition	Possible cause
P050A	COLD START CONTROL (Cold start idle air control system performance)	ECM does not control engine idle speed properly when engine is started with pre-warming up condition.	• Lack of intake air volume • Fuel injection system • ECM
P050E	COLD START CONTROL (Cold start engine exhaust temperature too low)	The temperature of the catalyst inlet does not rise to the proper temperature when the engine is started with pre-warming up condition.	

DTC CONFIRMATION PROCEDURE

1. PRECONDITIONING

If DTC Confirmation Procedure has been previously conducted, always perform the following procedure before conducting the next test.
1. Turn ignition switch OFF and wait at least 10 seconds.
2. Turn ignition switch ON.
3. Turn ignition switch OFF and wait at least 10 seconds.

TESTING CONDITION:
Before performing the following procedure, confirm that battery voltage is more than 11 V at idle.

>> GO TO 2.

2. PERFORM DTC CONFIRMATION PROCEDURE-I

With CONSULT
1. Turn ignition switch OFF and wait at least 10 seconds.
2. Turn ignition switch ON.
3. Select “DATA MONITOR” mode with CONSULT.
4. Check the indication of “COOLANT TEMP/S”.

With GST
Follow the procedure “With CONSULT” above.

Is the value of “COOLANT TEMP/S” between 4°C (39°F) and 36°C (97°F)?

YES >> GO TO 3.
NO-1 [If it is below 4°C (39°F)]>>Warm up the engine until the value of “COOLANT TEMP/S” reaches 4°C (39°F) or more. Retry from step 1.
NO-2 [If it is above 36°C (97°F)]>>Cool engine down to less than 36°C (97°F). Retry from step 1.

3. PERFORM DTC CONFIRMATION PROCEDURE-II

With CONSULT
1. Set the select lever in N range.
2. Start the engine and warm up in idle with the value of “COOLANT TEMP/S” between 4°C (39°F) and 40°C (104°F) for more than 15 seconds.
3. Check 1st trip DTC.

With GST
Follow the procedure “With CONSULT” above.

Is 1st trip DTC detected?

YES >> Proceed to EC-374, "Diagnosis Procedure".
NO >> INSPECTION END

Diagnosis Procedure

INFOID:0000000011148687

1. PERFORM IDLE AIR VOLUME LEARNING

Perform EC-160, "Work Procedure".

Is Idle Air Volume Learning carried out successfully?

YES >> GO TO 2.
NO >> Follow the instruction of Idle Air Volume Learning.

2. CHECK INTAKE SYSTEM

Check for the cause of intake air volume lacking. Refer to the following.

- Crushed intake air passage
- Intake air passage clogging
- Clogging of throttle body

Is the inspection result normal?

YES >> GO TO 3.
NO >> Repair or replace malfunctioning part

3. CHECK FUEL INJECTION SYSTEM FUNCTION

Perform DTC Confirmation Procedure for DTC P0171, P0174. Refer to EC-284, "DTC Logic".

Is the inspection result normal?

YES >> GO TO 4.
NO >> Proceed to EC-285, "Diagnosis Procedure" for DTC P0171, P0174.

4. PERFORM DTC CONFIRMATION PROCEDURE

1. Turn ignition switch ON.
2. Erase DTC.
3. Perform DTC Confirmation Procedure.
   See EC-373, "DTC Logic".

Is the 1st trip DTC P050A, P050E displayed again?

YES >> Replace ECM. Refer to EC-526, "Removal and Installation".
NO >> INSPECTION END

P0520 EOP SENSOR

DTC Logic

INFOID:0000000011148688

DTC DETECTION LOGIC

DTC No.	CONSULT screen terms (Trouble diagnosis content)	DTC detecting condition	Possible cause
P0520	EOP SENSOR/SWITCH (Engine oil pressure sensor/ switch circuit)	ECM detects the following status continuously for 5 seconds or more: • A voltage signal transmitted from the engine oil pressure sensor is lower than 0.26 V. • A voltage signal transmitted from the engine oil pressure sensor is higher than 4.9 V.	• Harness or connectors (EOP sensor circuit is open or shorted) (APP sensor 2 circuit is shorted.) [Battery current sensor circuit is shorted.] [CMP sensor (PAHSE) circuit is open or shorted.] (Refrigerant pressure sensor is shorted.) • Engine oil temperature (EOP) sensor • Accelerator pedal position sensor (APP sensor 2) • Camshaft position (CMP) sensor (PHESE) • Refrigerant pressure sensor

DTC CONFIRMATION PROCEDURE

1.PRECONDITIONING

If DTC Confirmation Procedure has been previously conducted, always perform the following procedure before conducting the next test.

1. Turn ignition switch OFF and wait at least 10 seconds.
2. Turn ignition switch ON.
3. Turn ignition switch OFF and wait at least 10 seconds.

>> GO TO 2.

2.CHECK ENGINE OIL LEVEL

1. Turn ignition switch OFF.
2. Check engine oil level. Refer to LU-8, "Inspection".

Is inspection result normal?

YES >> GO TO 3.
NO >> Check engine oil leak. Refer to LU-8, "Inspection".

3.PERFORM DTC CONFIRMATION PROCEDURE

1. Start engine and let it idle for at least 5 seconds.
2. Check 1st trip DTC.

Is 1st trip DTC detected?

YES >> Proceed to EC-375, "Diagnosis Procedure".
NO >> INSPECTION END

Diagnosis Procedure

INFOID:0000000011148689

1.CHECK EOP SENSOR POWER SUPPLY-I

1. Turn ignition switch OFF.
2. Disconnect EOP sensor harness connector.
3. Turn ignition switch ON.
4. Check the voltage between EOP sensor harness connector terminals.

EOP sensor			Voltage (Approx.)
Connector	+	–	
	terminal		
F54	3	1	5 V

Is the inspection result normal?

YES >> GO TO 2.
NO >> GO TO 4.

2. CHECK EOP SENSOR SIGNAL CIRCUIT

1. Turn ignition switch OFF.
2. Disconnect ECM harness connectors.
3. Check the continuity between EOP sensor harness connector and ECM harness connector.

EOP sensor		ECM		Continuity
Connector	Terminal	Connector	Terminal	
F54	2	F78	14	Existed

4. Also check harness for short to ground and short to power.

Is the inspection result normal?

YES >> GO TO 3.
NO >> Repair or replace error-detected parts.

3. CHECK EOP SENSOR

Check EOP sensor. Refer to EC-377, "Component Inspection".

Is the inspection result normal?

YES >> Check intermittent incident. Refer to GI-47, "Intermittent Incident".
NO >> Repair or replace error-detected parts.

4. CHECK EOP SENSOR POWER SUPPLY-II

Check the voltage between EOP sensor harness connector terminal and ground.

+		–	Voltage (Approx.)
EOP sensor			
Connector	Terminal		
F54	3	Ground	5 V

Is the inspection result normal?

YES >> GO TO 6.
NO >> GO TO 5.

5. CHECK EOP SENSOR POWER SUPPLY CIRCUIT

1. Turn ignition switch OFF.
2. Disconnect ECM harness connectors.
3. Check the continuity between EOP sensor harness connector and ECM harness connector.

EOP sensor		ECM		Continuity
Connector	Terminal	Connector	Terminal	
F54	3	F78	18	Existed

4. Also check harness for short to ground and short to power.

Is the inspection result normal?

YES >> Check sensor power supply 2 circuit. Refer to EC-510, "Diagnosis Procedure".
NO >> Repair or replace error-detected parts.

6. CHECK EOP SENSOR GROUND CIRCUIT

1. Turn ignition switch OFF.
2. Disconnect ECM harness connector.
3. Check the continuity between EOP sensor harness connector and ECM harness connector.

EOP sensor		ECM		Continuity
Connector	Terminal	Connector	Terminal	
F54	1	F78	15	Existed

Is the inspection result normal?

YES >> GO TO 7.
NO >> Repair or replace error-detected parts.

7. CHECK ECM GROUND CIRCUIT

Check the continuity between ECM harness connector and ground.

ECM		—	Continuity
Connector	Terminal		
E32	147	Ground	Existed
	149		
	152		
F78	10		
	55		
F79	105		
	110		

Is the inspection result normal?

YES >> Check intermittent incident. Refer to GI-47, "Intermittent Incident".
NO >> Repair or replace error-detected parts.

Component Inspection

INFOID:0000000011148690

1. CHECK EOP SENSOR

1. Turn ignition switch OFF.
2. Disconnect EOP sensor harness connector.
3. Check resistance between EOP sensor connector terminals.

EOP sensor		Condition	Resistance (kΩ)
+	–		
Terminal			
1	2	None	4 – 10
	3		2 – 8
2	1		4 – 10
	3		1 – 3
3	1		2 – 8
	2		1 – 3

Is the inspection result normal?

YES >> INSPECTION END.
NO >> Replace EOP sensor. Refer to EC-20, "ENGINE CONTROL SYSTEM : Component Parts Location".

P0524 ENGINE OIL PRESSURE

DTC Logic

INFOID:0000000011148691

DTC DETECTION LOGIC

DTC No.	CONSULT screen terms (Trouble diagnosis content)	DTC detecting condition	Possible cause
P0524	ENGINE OIL PRESSURE (Engine oil pressure too low)	An EOP sensor signal voltage applied to ECM remains lower than the specified value continuously for 10 seconds or more when the engine speed is 1,000 rpm or more.	• Decrease in engine oil pressure • Decrease in engine oil level • Engine oil condition • EOP sensor • Engine body

DTC CONFIRMATION PROCEDURE

CAUTION:

If "EC-379, "Diagnosis Procedure"" is unfinished, be sure to perform Step 3 and 4.

1. PRECONDITIONING-1

If DTC Confirmation Procedure has been previously conducted, always perform the following procedure before conducting the next test.

1. Turn ignition switch OFF and wait at least 10 seconds.
2. Turn ignition switch ON.
3. Turn ignition switch OFF and wait at least 10 seconds.

TEST CONDITION:

Before performing the following procedure, confirm that battery voltage is 11 V or more at idle.

>> GO TO 2.

2. PRECONDITIONING-2

Is "Diagnosis Procedure" of DTC P0524 finished?

YES >> GO TO 3.
NO >> GO TO 4.

3. PERFORM DTC CONFIRMATION PROCEDURE

1. Start engine and warm it up to normal operating temperature.
2. Maintain the following conditions for about 10 consecutive seconds.

Selector lever	P or N position
Engine coolant temperature	70°C (158°F) or more
Engine speed	1,000 rpm or more

NOTE:
With engine speed set around 4,000 rpm, the phenomenon can be reproduced more easily.

3. Check DTC.

Is DTC detected?

YES >> Proceed to EC-379, "Diagnosis Procedure".
NO >> INSPECTION END

4. CHECK ENGINE OIL LEVEL

Check engine oil level. Refer to LU-8, "Inspection".

Is the inspection result normal?

YES >> GO TO 5.
NO >> Proceed to EC-379, "Diagnosis Procedure".

5. CHECK ENGINE OIL PRESSURE

With CONSULT

1. Turn ignition switch ON.
2. Select “DATA MONITOR” mode of “ENGINE” using CONSULT.
3. Start the engine and check that “EOP SENSOR” changes, according to engine speeds.

Monitor item	Condition		Value (Approx.)
EOP SENSOR	• Engine oil temperature: 80°C (176°F) • Selector lever: P or N position • Air conditioner switch: OFF • No load	Engine speed: Idle	1,450 mV or more
		Engine speed: 2,000 rpm	2,850 mV or more

Without CONSULT
Check engine oil pressure. Refer to LU-8, "Inspection".

Is the inspection result normal?

YES >> GO TO 3.
NO >> Proceed to EC-379, "Diagnosis Procedure".

Diagnosis Procedure

INFOID:0000000011148692

1. CHECK ENGINE OIL LEVEL

1. Turn ignition switch OFF.
2. Check engine oil level. Refer to LU-8, "Inspection".

Is the inspection result normal?

YES >> GO TO 2.
NO >> GO TO 4.

2. CHECK ENGINE OIL PRESSURE

With CONSULT
1. Turn ignition switch ON.
2. Select “DATA MONITOR” mode of “ENGINE” using CONSULT.
3. Start the engine and check that “EOP SENSOR” changes, according to engine speeds.

Monitor item	Condition		Value (Approx.)
EOP SENSOR	• Engine oil temperature: 80°C (176°F) • Selector lever: P or N position • Air conditioner switch: OFF • No load	Engine speed: Idle	1,450 mV or more
		Engine speed: 2,000 rpm	2,850 mV or more

Without CONSULT
Check engine oil level. Refer to LU-8, "Inspection".

Is the inspection result normal?

YES >> GO TO 3.
NO >> Check oil pump. Refer to LU-12, "Removal and Installation".

3. CHECK EOP SENSOR

Check EOP sensor. Refer to EC-380, "Component Inspection".

Is the inspection result normal?

YES >> Check intermittent incident. Refer to GI-47, "Intermittent Incident".
NO >> Repair or replace error-detected parts.

4. CHECK ENGINE OIL LEAKAGE

Check engine oil leakage. Refer to LU-6, "Lubrication Circuit".

Is the inspection result normal?

YES >> GO TO 5.
NO >> Repair or replace error-detected parts.

5. CHECK CAUSE OF ENGINE OIL CONSUMPTION

Check the following item.

Step	Inspection item	Equipment	Standard	Reference
1	PCV valve	EC-525, "Work Procedure"		
2	Exhaust front tube	Visual	• No blocking • No abnormal sounds	—
3	Oil pump	LU-12, "Removal and Installation"		
4	• Piston • Piston pin • Piston ring	• Piston to piston pin oil clearance • Piston ring side clearance • Piston ring end gap		EM-122
5	Cylinder block	• Cylinder block top surface distortion • Piston to cylinder bore clearance		EM-122

>> Repair or replace error-detected parts.

Component Inspection

INFOID:0000000011148693

1. CHECK EOP SENSOR

1. Turn ignition switch OFF.
2. Disconnect EOP sensor harness connector.
3. Check resistance between EOP sensor connector terminals.

EOP sensor		Condition	Resistance (kΩ)
+	–		
Terminal			
1	2	None	4 – 10
	3		2 – 8
2	1		4 – 10
	3		1 – 3
3	1		2 – 8
	2		1 – 3

Is the inspection result normal?

YES >> INSPECTION END.

NO >> Replace EOP sensor. Refer to EC-20, "ENGINE CONTROL SYSTEM : Component Parts Location".

P052A, P052B, P052C, P052D INTAKE VALVE TIMING CONTROL

DTC Logic

INFOID:0000000011491928

DTC DETECTION LOGIC

NOTE:
If DTC P052A, P052B, P052C and P052D is displayed with DTC P0075 or P0081, perform the trouble diagnosis for DTC P0075 or P0081. Refer to EC-212, "DTC Logic".

DTC No.	Trouble diagnosis (Trouble diagnosis content)	Detecting condition	Possible cause
P052A	CAMSHAFT POSITION TIMING B1 (Cold start “A” camshaft position timing over-advanced bank 1)	There is a gap between the target phase angle and the detected phase angle when the engine is operating in cold conditions.	• Crankshaft position sensor • Camshaft position sensor • Intake valve timing control solenoid valve • Intake valve timing intermediate lock control solenoid valve • Accumulation of debris to the signal pick-up portion of the camshaft • Timing chain installation • Foreign matter caught in the intake valve timing control (or intermediate lock control) solenoid valve
P052B	CAMSHAFT POSITION TIMING B1 (Cold start “A” camshaft position timing over-retarded bank 1)		
P052C	CAMSHAFT POSITION TIMING B2 (Cold start “A” camshaft position timing over-advanced bank 2)		
P052D	CAMSHAFT POSITION TIMING B2 (Cold start “A” camshaft position timing over-retarded bank 2)		

DTC CONFIRMATION PROCEDURE

1.PRECONDITIONING

TESTING CONDITION:
Before performing the following procedure, confirm that battery voltage is 10 V or more at idle.

With CONSULT

1. Turn ignition switch OFF and wait at least 10 seconds.
2. Turn ignition switch ON.
3. Turn ignition switch OFF and wait at least 10 seconds.
4. Turn ignition switch ON.
5. On the CONSULT screen, select “ENGINE” >> “DATA MONITOR” >> “COOLAN TEMP/S”.
6. Check “COOLAN TEMP/S” indication value.

With GST

Follow the procedure “With CONSULT” above.

Is the value of “COOLAN TEMP/S”–5°C (23°F) and 45°C (113°F)?

YES >> GO TO 2.
NO-1 [if it is below – 5°C (23°F)]>>Warm up the engine until the value of “COOLAN TEMP/S” indicates –5°C (23°F) and 45°C (113°F). And then GO TO 2.
NO-2 [if it is above 45°C (113°F)]>>Cool the engine down to the value of “COOLAN TEMP/S” indicates –5°C (23°F) and 45°C (113°F). And then GO TO 2.

2.PERFORM DTC CONFIRMATION PROCEDURE-I

1. Turn ignition switch OFF and wait at 10 seconds.
2. Turn ignition switch ON.
3. Set the selector lever in N range.
4. Start the engine and let it idle for 20 seconds or more.
5. Check 1st trip DTC.

Is 1st trip DTC detected?

YES >> Proceed to EC-382, "Diagnosis Procedure"
NO >> INSPECTION END

Diagnosis Procedure

INFOID:0000000011491929

1. INSPECTION START

With CONSULT>>GO TO 2.
Without CONSULT>>GO TO 3.

2. CHECK VTC POSITION

With CONSULT

1. Turn ignition switch ON.
2. On the CONSULT screen, select “ENGINE” >> “DATA MONITOR” >> “COOLAN TEMP/S”.
3. Check that the “COOLAN TEMP/S” indication value is between –5°C (23°F) and 45°C (113°F).
4. Start engine and wait at least 5 seconds.
5. On the CONSULT screen, select “ENGINE” >> “DATA MONITOR” >> “INT/V TIM (B1)”.
6. Check that the data monitor item indicates as follows:

Item	Value (°CA)
INT/V TIM (B1)	10 ± 2
INT/V TIM (B2)	10 ± 2

Is the inspection result normal?

YES >> Check intermittent incident. Refer to GI-47, "Intermittent Incident".
NO >> GO TO 3.

3. CHECK OIL PRESSURE WARNING LAMP

1. Start engine.
2. Check that oil pressure warning lamp is not illuminated.

Is oil pressure warning lamp illuminated?

YES >> Refer to LU-8, "Inspection".
NO >> GO TO 4.

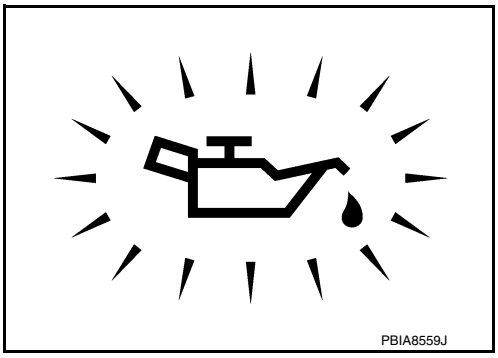

4. CHECK INTAKE VALVE TIMING INTERMEDIATE LOCK CONTROL SOLENOID VALVE

Perform Component Inspection of the intake valve timing intermediate lock control solenoid valve. Refer to EC-384, "Component Inspection (Intake Valve Timing Intermediate Lock Control Solenoid Valve)".

Is the inspection result normal?

YES >> GO TO 5.
NO >> Repair or replace error-detected parts.

5. CHECK INTAKE VALVE TIMING CONTROL SOLENOID VALVE

Perform Component Inspection of the intake valve timing control solenoid valve. Refer to EC-383, "Component Inspection (Intake Valve Timing Control Solenoid Valve)".

Is the inspection result normal?

YES >> GO TO 6.
NO >> Repair or replace error-detected parts.

6. CHECK CRANKSHAFT POSITION SENSOR

Perform Component Inspection of the crankshaft position sensor. Refer to EC-385, "Component Inspection (Crankshaft Position sensor)".

Is the inspection result normal?

YES >> GO TO 7.
NO >> Repair or replace error-detected parts.

7. CHECK CAMSHAFT POSITION SENSOR

Perform Component Inspection of the camshaft position sensor. Refer to EC-385, "Component Inspection (Camshaft position sensor)".

Is the inspection result normal?

YES >> GO TO 8.
NO >> Repair or replace error-detected parts.

8. CHECK CAMSHAFT (INTAKE)

Check the following.
1. Accumulation of debris on the signal plate of camshaft front end
2. Chipping signal plate of camshaft front end

Is the inspection result normal?

YES >> GO TO 9.
NO >> Remove debris and clean the signal plate of camshaft front end or replace camshaft. Refer to EM-76, "Removal and Installation".

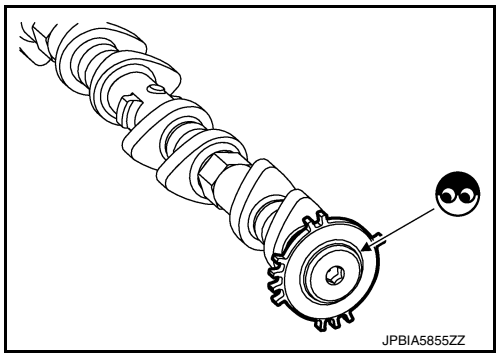

9. CHECK TIMING CHAIN INSTALLATION

Check service records for any recent repairs that may cause timing chain misalignment.

Are there any service records that may cause timing chain misalignment?

YES >> Check timing chain installation. Refer to EM-63, "Removal and Installation".
NO >> GO TO 10.

10. CHECK LUBRICATION CIRCUIT

Perform “Inspection of Camshaft Sprocket (INT) Oil Groove”. Refer to EM-84, "Inspection after Installation".

Is the inspection result normal?

YES >> Check intermittent incident. Refer to GI-47, "Intermittent Incident".
NO >> Clean lubrication line.

Component Inspection (Intake Valve Timing Control Solenoid Valve)

INFOID:0000000011491930

1. CHECK INTAKE VALVE TIMING CONTROL SOLENOID VALVE-I

1. Turn ignition switch OFF.
2. Disconnect intake valve timing control solenoid valve harness connector.
3. Check resistance between intake valve timing control solenoid valve terminals as per the following.

Intake valve timing control solenoid valve		Condition		Resistance
+	–			
Terminal				
1	2	Temperature	20°C (68°F)	7.0 – 7.8 Ω
1	Ground			∞ (Continuity should not exist)
2				

Is the inspection result normal?

YES >> GO TO 2.

NO >> Replace malfunctioning intake valve timing control solenoid valve. Refer to EM-52, "Exploded View".

2. CHECK INTAKE VALVE TIMING CONTROL SOLENOID VALVE-II

1. Remove intake valve timing control solenoid valve. Refer to EM-52, "Exploded View".
2. Provide 12 V DC between intake valve timing control solenoid valve terminals 1 and 2, and then interrupt it. Check that the plunger moves as shown in the figure.
   CAUTION:
   Never apply 12 V DC continuously for 5 seconds or more. Doing so may result in damage to the coil in intake valve timing control solenoid valve.
   NOTE:
   Always replace O-ring when intake valve timing control solenoid valve is removed.

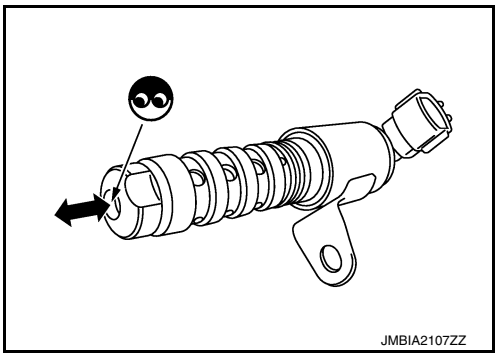

Is the inspection result normal?

YES >> INSPECTION END
NO >> Replace malfunctioning intake valve timing control solenoid valve. Refer to EM-52, "Exploded View".

Component Inspection (Intake Valve Timing Intermediate Lock Control Solenoid Valve)

INFOID:0000000011491931

1. CHECK INTAKE VALVE TIMING INTERMEDIATE LOCK CONTROL SOLENOID VALVE-I

1. Turn ignition switch OFF.
2. Disconnect intake valve timing intermediate lock control solenoid valve harness connector.
3. Check resistance between intake valve timing intermediate lock control solenoid valve terminals as per the following.

Intake valve timing intermediate lock control solenoid valve		Condition		Resistance
+	–			
Terminal				
1	2	Temperature	20°C (68°F)	7.0 – 7.8 Ω
1	Ground			∞ (Continuity should not exist)
2				

Is the inspection result normal?

YES >> GO TO 2.
NO >> Replace malfunctioning intake valve timing intermediate lock control solenoid valve. Refer to EM-52, "Exploded View".

2. CHECK INTAKE VALVE TIMING INTERMEDIATE LOCK CONTROL SOLENOID VALVE-II

1. Remove intake valve timing intermediate lock control solenoid valve. Refer to EM-52, "Exploded View".
2. Provide 12 V DC between intake valve timing intermediate lock control solenoid valve terminals 1 and 2, and then interrupt it. Check that the plunger moves as shown in the figure.
   CAUTION:
   Never apply 12 V DC continuously for 5 seconds or more. Doing so may result in damage to the coil in intake valve timing intermediate lock control solenoid valve.
   NOTE:
   Always replace O-ring when intake valve timing intermediate lock control solenoid valve is removed.

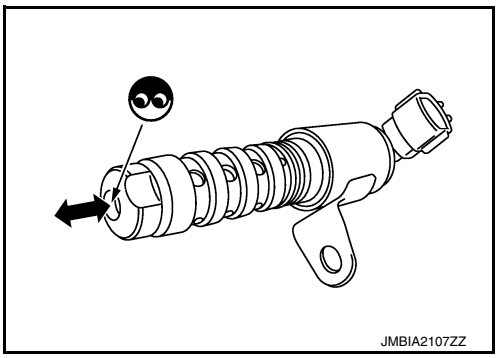

Is the inspection result normal?

YES >> INSPECTION END

NO >> Replace malfunctioning intake valve timing intermediate lock control solenoid valve. Refer to EM-52, "Exploded View".

Component Inspection (Crankshaft Position sensor)

INFOID:0000000011491932

1. CHECK CRANKSHAFT POSITION SENSOR (POS)-1

1. Turn ignition switch OFF.
2. Loosen the fixing bolt of the sensor.
3. Disconnect crankshaft position sensor (POS) harness connector.
4. Remove the sensor.
5. Visually check the sensor for chipping.

Is the inspection result normal?

YES >> GO TO 2.
NO >> Replace crankshaft position sensor (POS). Refer to EM-36, "Exploded View".

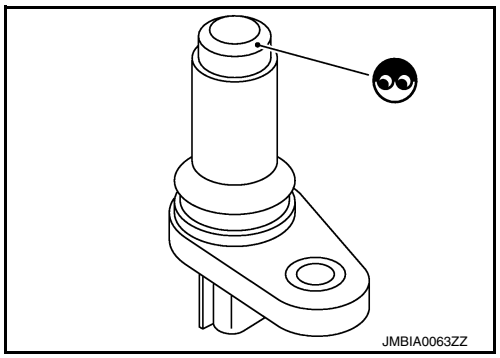

2. CHECK CRANKSHAFT POSITION SENSOR (POS)-2

Check the resistance between crankshaft position sensor (POS) terminals as per the following.

Crankshaft position sensor (POS)		Resistance [at 25°C (77°F)]
+	–	
Terminal (Polarity)		
1	2	Except 0 or ∞ Ω
	3	
2	3	

Is the inspection result normal?

YES >> INSPECTION END
NO >> Replace crankshaft position sensor (POS). Refer to EM-36, "Exploded View".

Component Inspection (Camshaft position sensor)

INFOID:0000000011491933

1. CHECK CAMSHAFT POSITION SENSOR (PHASE)-1

1. Turn ignition switch OFF.
2. Loosen the fixing bolt of the sensor.
3. Disconnect camshaft position sensor (PHASE) harness connector.
4. Remove the sensor. Refer to EM-43, "Removal and Installation (LH)", EM-44, "Removal and Installation (RH)".
5. Visually check the sensor for chipping.

Is the inspection result normal?

YES >> GO TO 2.
NO >> Replace camshaft position sensor (PHASE).

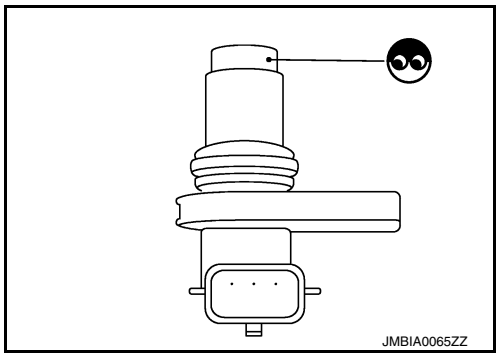

2. CHECK CAMSHAFT POSITION SENSOR (PHASE)-2

Check the resistance camshaft position sensor (PHASE) terminals as per the following.

Camshaft position sensor (PHASE)		Resistance [Ω at 25°C (77°F)]
+	–	
Terminals (Polarity)		
1	2	Except 0 or ∞
	3	
2	3	

Is the inspection result normal?

YES >> INSPECTION END

NO >> Replace camshaft position sensor (PHASE). Refer to EM-43, "Removal and Installation (LH)", EM-44, "Removal and Installation (RH)".

P0603, P062F ECM

DTC Logic

INFOID:0000000011148694

DTC DETECTION LOGIC

DTC No.	CONSULT screen terms (Trouble diagnosis content)	DTC detecting condition	Possible cause
P0603	ECM BACK UP/CIRCUIT [Internal Control Module Keep Alive Memory (KAM) Error]	ECM buck up system does not function properly.	• Harness or connectors [ECM power supply circuit is open or shorted.] • ECM
P062F	CONTROL MODULE (Internal control module EEPROM error)	EEPROM (built-in microcomputer) system internal ECM does not function properly.	

DTC CONFIRMATION PROCEDURE

1.PRECONDITIONING

Perform the following procedure before performing DTC Confirmation Procedure.
1. Turn ignition switch OFF and wait at least 10 seconds.
2. Turn ignition switch ON.
3. Turn ignition switch OFF and wait at least 10 seconds.

>> GO TO 2.

2.PERFORM DTC CONFIRMATION PROCEDURE FOR DTC P062F

1. Start engine and wait at least 10 seconds.
2. Turn ignition switch OFF and wait at least 10 seconds.
3. Repeat steps 1 and 2 for 4 times.
4. Turn ignition switch ON.
5. Erase DTC.
6. Turn ignition switch OFF and wait at least 10 seconds.
7. Start engine and wait at least 10 seconds.
8. Check 1st trip DTC.

Is 1st trip DTC detected?

YES >> Proceed to EC-387, "Diagnosis Procedure".
NO >> GO TO 3.

3.PERFORM DTC CONFIRMATION PROCEDURE FOR DTC P0603

1. Turn ignition switch OFF and wait at least 10 seconds.
2. Turn ignition switch ON and wait at least 10 seconds.
3. Turn ignition switch OFF and wait at least 5 minutes.
4. Turn ignition switch ON and wait at least 10 seconds.
5. Repeat steps 3 and 4 for 5 times.
6. Turn ignition switch ON.
7. Check 1st trip DTC.

Is 1st trip DTC detected?

YES >> Proceed to EC-387, "Diagnosis Procedure".
NO >> INSPECTION END

Diagnosis Procedure

INFOID:0000000011148695

1.INSPECTION START

Check that the battery negative terminal is not disconnected during ignition switch ON.

Is the inspection result normal?

YES >> GO TO 3.
NO >> GO TO 2.

2. ERASE DTC

1. Start the engine and let it idle at least 10 seconds.
2. Turn ignition switch OFF.
3. Repeat steps 1 and 2 for 4 times.
4. Erase DTC.
5. Turn ignition switch OFF and wait at least 10 seconds.
6. Start the engine and let it idle for 10 seconds.
7. Check 1st trip DTC.

Is DTC P062F detected again?

YES >> Replace ECM. Refer to EC-526, "Removal and Installation".
NO >> INSPECTION END

3. CHECK ECM POWER SUPPLY AND GROUND CIRCUIT

Check ECM power supply and ground circuit. Refer to EC-190, "Diagnosis Procedure".

Is the inspection result normal?

YES >> GO TO 4.
NO >> Repair or replace error-detected parts.

4. CHECK INTERMITTENT INCIDENT

Check intermittent incident. Refer to GI-47, "Intermittent Incident".

Is the inspection result normal?

YES >> GO TO 5.
NO >> Repair or replace error-detected parts.

5. PERFORM DTC CONFIRMATION PROCEDURE

1. Turn ignition switch ON.
2. Erase DTC.
3. Perform DTC confirmation procedure. Refer to EC-387, "DTC Logic".

Is the DTC P0603 or P062F detected again?

YES >> Replace ECM. Refer to EC-526, "Removal and Installation".
NO >> INSPECTION END

P0604 ECM

DTC Logic

INFOID:0000000011491934

DTC DETECTION LOGIC

DTC No.	CONSULT screen terms (Trouble diagnosis content)	DTC detecting condition	Possible cause
P0604	ECM [Internal control module random access memory (RAM) error]	Malfunction in the internal RAM of ECM.	ECM

DTC CONFIRMATION PROCEDURE

1.PRECONDITIONING

1. Turn ignition switch OFF and wait at least 10 seconds.
2. Turn ignition switch ON.
3. Turn ignition switch OFF and wait at least 10 seconds.

TESTING CONDITION:
Before performing the following procedure, confirm that battery voltage is 11 V or more with ignition switch ON.

>> GO TO 2.

2.PERFORM DTC CONFIRMATION PROCEDURE

1. Turn ignition switch ON (engine stopped) and wait least 20 minutes.
   CAUTION:
   Never start engine during this procedure.
2. Turn ignition switch OFF and wait at least 10 seconds.
3. Turn ignition switch ON.
4. Check 1st trip DTC.

Is 1st trip DTC detected?

YES >> Proceed to EC-389, "Diagnosis Procedure".
NO >> INSPECTION END

Diagnosis Procedure

INFOID:0000000011491935

1.PERFORM DTC CONFIRMATION PROCEDURE

1. Turn ignition switch ON.
2. Erase DTC.
3. Perform DTC confirmation procedure. Refer to EC-389, "DTC Logic".

Is the 1st trip DTC P0604 displayed again?

YES >> Replace ECM. Refer to EC-526, "Removal and Installation".
NO >> INSPECTION END

P0605 ECM

DTC Logic

INFOID:0000000011148696

DTC DETECTION LOGIC

DTC No.	CONSULT screen terms (Trouble diagnosis content)	DTC detecting condition	Possible cause
P0605	ECM [Internal control module read only memory (ROM) error]	Malfunction in the internal ROM of ECM.	ECM

DTC CONFIRMATION PROCEDURE

1.PRECONDITIONING

1. Turn ignition switch OFF and wait at least 10 seconds.
2. Turn ignition switch ON.
3. Turn ignition switch OFF and wait at least 10 seconds.

TESTING CONDITION:
Before performing the following procedure, confirm that battery voltage is 11 V or more with ignition switch ON.

>> GO TO 2.

2.PERFORM DTC CONFIRMATION PROCEDURE

1. Turn ignition switch ON (engine stopped) and wait least 20 minutes.
   CAUTION:
   Never start engine during this procedure.
2. Turn ignition switch OFF and wait at least 10 seconds.
3. Turn ignition switch ON.
4. Check 1st trip DTC.

Is 1st trip DTC detected?

YES >> Proceed to EC-390, "Diagnosis Procedure".
NO >> INSPECTION END

Diagnosis Procedure

INFOID:0000000011148697

1.INSPECTION START

1. Turn ignition switch ON.
2. Erase DTC.
3. Perform DTC CONFIRMATION PROCEDURE.
   See EC-390, "DTC Logic".

Is the 1st trip DTC P0605 displayed again?

YES >> Replace ECM. Refer to EC-526, "Removal and Installation".
NO >> INSPECTION END

P0606 ECM

DTC Logic

INFOID:0000000011491936

DTC DETECTION LOGIC

DTC No.	CONSULT screen terms (Trouble diagnosis content)	DTC detecting condition	Possible cause
P0606	CONTROL MODULE (Control module processor)	Malfunction in ECM processor.	ECM

DTC CONFIRMATION PROCEDURE

1.PRECONDITIONING

1. Turn ignition switch OFF and wait at least 10 seconds.
2. Turn ignition switch ON.
3. Turn ignition switch OFF and wait at least 10 seconds.

TESTING CONDITION:
Before performing the following procedure, confirm that battery voltage is 11 V or more with ignition switch ON.

>> GO TO 2.

2.PERFORM DTC CONFIRMATION PROCEDURE-I

1. Turn ignition switch ON (engine stopped) and wait at least 10 seconds.
   CAUTION:
   Never start engine during this procedure.
2. Turn ignition switch OFF and wait at least 10 seconds.
3. Turn ignition switch ON.
4. Check 1st trip DTC.

Is 1st trip DTC detected?

YES >> Proceed to EC-391, "Diagnosis Procedure".
NO >> GO TO 3.

3.PERFORM DTC CONFIRMATION PROCEDURE-II

1. Start engine.
2. Rev up the engine quickly to approximately 3,000 rpm under unloaded condition and completely release the accelerator pedal.
3. Let the engine idle and wait at least 10 seconds.
4. Turn ignition switch OFF and wait at least 10 seconds.
5. Turn ignition switch ON.
6. Check 1st trip DTC.

Is 1st trip DTC detected?

YES >> Proceed to EC-391, "Diagnosis Procedure".
NO >> INSPECTION END

Diagnosis Procedure

INFOID:0000000011491937

1.PERFORM DTC CONFIRMATION PROCEDURE

1. Turn ignition switch ON.
2. Erase DTC.
3. Perform DTC confirmation procedure for 3 times. Refer to EC-391, "DTC Logic".

Is the 1st trip DTC P0606 displayed again?

YES >> Replace ECM. Refer to EC-526, "Removal and Installation".
NO >> INSPECTION END

P0607 ECM

DTC Logic

INFOID:0000000011148698

DTC DETECTION LOGIC

DTC No.	CONSULT screen terms (Trouble diagnosis content)	DTC detecting condition	Possible cause
P0607	ECM (Control module performance)	ECM internal communication system is malfunctioning.	ECM

DTC CONFIRMATION PROCEDURE

1.PRECONDITIONING

1. Turn ignition switch OFF and wait at least 10 seconds.
2. Turn ignition switch ON.
3. Turn ignition switch OFF and wait at least 10 seconds.

TESTING CONDITION:
Before performing the following procedure, confirm that battery voltage is 11 V or more with ignition switch ON.

>> GO TO 2.

2.PERFORM DTC CONFIRMATION PROCEDURE

1. Turn ignition switch ON (engine stopped) and wait least 10 seconds.
2. Turn ignition switch OFF and wait at least 10 seconds.
3. Turn ignition switch ON.
4. Check 1st trip DTC.

Is 1st trip DTC detected?

YES >> Proceed to EC-392, "Diagnosis Procedure".
NO >> INSPECTION END

Diagnosis Procedure

INFOID:0000000011148699

1.PERFORM DTC CONFIRMATION PROCEDURE

1. Turn ignition switch ON.
2. Erase DTC.
3. Perform DTC confirmation procedure. Refer to EC-392, "DTC Logic".

Is the 1st trip DTC P0607 displayed again?

YES >> Replace ECM. Refer to EC-526, "Removal and Installation".
NO >> INSPECTION END

P060A ECM

DTC Logic

INFOID:0000000011491938

DTC DETECTION LOGIC

DTC No.	CONSULT screen terms (Trouble diagnosis content)	DTC detecting condition	Possible cause
P060A	CONTROL MODULE (Internal control module monitoring processor performance)	ECM internal monitoring processor is malfunctioning.	ECM

DTC CONFIRMATION PROCEDURE

1.PRECONDITIONING

1. Turn ignition switch OFF and wait at least 10 seconds.
2. Turn ignition switch ON.
3. Turn ignition switch OFF and wait at least 10 seconds.

TESTING CONDITION:
Before performing the following procedure, confirm that battery voltage is 11 V or more with ignition switch ON.

>> GO TO 2.

2.PERFORM DTC CONFIRMATION PROCEDURE

1. Start engine and wait at least 10 seconds.
2. Turn ignition switch OFF and wait at least 10 seconds.
3. Repeat step 1 and 2 for 5 times.
4. Turn ignition switch ON.
5. Check 1st trip DTC.

Is 1st trip DTC detected?

YES >> Proceed to EC-393, "Diagnosis Procedure".
NO >> INSPECTION END

Diagnosis Procedure

INFOID:0000000011491939

1.PERFORM DTC CONFIRMATION PROCEDURE

1. Turn ignition switch ON.
2. Erase DTC.
3. Perform DTC confirmation procedure. Refer to EC-393, "DTC Logic".

Is the 1st trip DTC P060A displayed again?

YES >> Replace ECM. Refer to EC-526, "Removal and Installation".
NO >> INSPECTION END

P060B ECM

DTC Logic

INFOID:0000000011491940

DTC DETECTION LOGIC

DTC No.	CONSULT screen terms (Trouble diagnosis content)	DTC detecting condition	Possible cause
P060B	CONTROL MODULE (Internal control module A/D processing performance)	ECM internal analog/digital conversion processing system is malfunctioning.	ECM

DTC CONFIRMATION PROCEDURE

1.PRECONDITIONING

1. Turn ignition switch OFF and wait at least 10 seconds.
2. Turn ignition switch ON.
3. Turn ignition switch OFF and wait at least 10 seconds.

TESTING CONDITION:
Before performing the following procedure, confirm that battery voltage is 11 V or more with ignition switch ON.

>> GO TO 2.

2.PERFORM DTC CONFIRMATION PROCEDURE

1. Turn ignition switch ON (engine stopped) and wait least 10 seconds.
2. Turn ignition switch OFF and wait at least 10 seconds.
3. Turn ignition switch ON.
4. Check 1st trip DTC.

Is 1st trip DTC detected?

YES >> Proceed to EC-394, "Diagnosis Procedure".
NO >> INSPECTION END

Diagnosis Procedure

INFOID:0000000011491941

1.PERFORM DTC CONFIRMATION PROCEDURE

1. Turn ignition switch ON.
2. Erase DTC.
3. Perform DTC confirmation procedure. Refer to EC-394, "DTC Logic".

Is the 1st trip DTC P060B displayed again?

YES >> Replace ECM. Refer to EC-526, "Removal and Installation".
NO >> INSPECTION END

P0643 SENSOR POWER SUPPLY

Description

INFOID:0000000011148700

ECM supplies a voltage of 5 V to some of the sensors systematically divided into 2 groups, respectively. Accordingly, when a short circuit develops in a sensor power source, a malfunction may occur simultaneously in the sensors belonging to the same group as the short-circuited sensor.

Sensor power supply 1

- Accelerator pedal position (APP) sensor 1
- Crankshaft position (CKP) sensor (POS)
- Exhaust valve timing (EVT) control position sensor
- Mass air flow (MAF) sensor
- Throttle position (TP) sensor

NOTE:
If sensor power supply 1 circuit is malfunctioning, DTC P0643 is displayed.

Sensor power supply 2

- Accelerator pedal position (APP) sensor 2
- Battery current sensor
- Camshaft position (CMP) sensor (PHASE)
- Engine oil pressure (EOP) sensor
- Refrigerant pressure sensor

DTC Logic

INFOID:0000000011148701

DTC DETECTION LOGIC

DTC No.	CONSULT screen terms (Trouble diagnosis content)	DTC detecting condition	Possible cause
P0643	SENSOR POWER/CIRC (Sensor reference voltage “A” circuit high)	ECM detects a voltage of power source for sensor is excessively low or high.	Sensor power supply 1 circuit

DTC CONFIRMATION PROCEDURE

1.PRECONDITIONING

If DTC Confirmation Procedure has been previously conducted, always perform the following procedure before conducting the next test.

1. Turn ignition switch OFF and wait at least 10 seconds.
2. Turn ignition switch ON.
3. Turn ignition switch OFF and wait at least 10 seconds.

TESTING CONDITION:
Before performing the following procedure, confirm that battery voltage is more than 8 V at idle.

>> GO TO 2.

2.PERFORM DTC CONFIRMATION PROCEDURE

1. Start the engine and let it idle for 1 second.
2. Check DTC.

Is DTC detected?

YES >> Proceed to EC-395, "Diagnosis Procedure".
NO >> INSPECTION END

Diagnosis Procedure

INFOID:0000000011148702

1.CHECK SENSOR POWER SUPPLY 1

1. Turn ignition switch OFF.
2. Disconnect ECM harness connector.
3. Turn ignition switch ON.
4. Check the voltage between ECM harness connector and ground.

+		–	Voltage (Approx.)
ECM			
Connector	Terminal		
E32	146	Ground	5 V
F78	28		
F79	98		

Is the inspection result normal?

YES >> Check intermittent incident. Refer to GI-47, "Intermittent Incident".
NO >> GO TO 2.

2. CHECK SENSOR POWER SUPPLY 1 CIRCUIT

1. Turn ignition switch OFF.
2. Disconnect following sensor harness connector.
3. Check harness for short to power and to ground, between the following terminals.

ECM		Sensor		
Connector	Terminal	Name	Connector	Terminal
E32	146	APP sensor 1	E31	4
F78	28	CKP sensor (POS)	F11	1
		MAF sensor	F74	1
		EVT control position sensor (bank 1)	F83	1
		EVT control position sensor (bank 2)	F84	1
F79	98	TP sensor	F50	5

Is the inspection result normal?

YES >> GO TO 3.
NO >> Repair or replace error-detected parts.

3. CHECK COMPONENTS

Check the following.
- Accelerator pedal position (APP) sensor 1 (Refer to EC-461, "Component Inspection".)
- Crankshaft position (CKP) sensor (POS) (Refer to EC-316, "Component Inspection".)
- Exhaust valve timing (EVT) control position sensor [Refer to EC-204, "Component Inspection (Exhaust Valve Timing Control Position Sensor)".]
- Mass air flow (MAF) sensor (Refer to EC-221, "Component Inspection".)
- Throttle position (TP) sensor (Refer to EC-238, "Component Inspection".)

Is the inspection result normal?

YES >> Check intermittent incident. Refer to GI-47, "Intermittent Incident".
NO >> Replace malfunctioning component.

P0850 PNP SWITCH

Description

INFOID:0000000011148703

When the selector lever position is P or N, park/neutral position (PNP) signal from the transmission range switch is sent to ECM.

DTC Logic

INFOID:0000000011148704

DTC DETECTION LOGIC

DTC No.	CONSULT screen terms (Trouble diagnosis content)	DTC detecting condition	Possible cause
P0850	P-N POS SW/CIRCUIT (Park/Neutral switch input circuit)	The signal of the park/neutral position (PNP) signal does not change during driving after the engine is started.	• Harness or connectors [The park/neutral position (PNP) signal circuit is open or shorted.] • TCM

DTC CONFIRMATION PROCEDURE

1. INSPECTION START

Will CONSULT be used?

Will CONSULT be used?

YES >> GO TO 2.
NO >> GO TO 5.

2. PRECONDITIONING

If DTC Confirmation Procedure has been previously conducted, always perform the following before conducting the next test.

1. Turn ignition switch OFF and wait at least 10 seconds.
2. Turn ignition switch ON.
3. Turn ignition switch OFF and wait at least 10 seconds.

>> GO TO 3.

3. CHECK PNP SIGNAL

With CONSULT

1. Turn ignition switch ON.
2. Select “P/N POSI SW” in “DATA MONITOR” mode with CONSULT. Then check the “P/N POSI SW” signal under the following conditions.

Position (Selector lever)	Known-good signal
N or P position	ON
Except above position	OFF

Is the inspection result normal?

YES >> GO TO 4.
NO >> Proceed to EC-398, "Diagnosis Procedure".

4. PERFORM DTC CONFIRMATION PROCEDURE

1. Select “DATA MONITOR” mode with CONSULT.
2. Start engine and warm it up to normal operating temperature.
3. Maintain the following conditions for at least 50 consecutive seconds.

CAUTION:
Always drive vehicle at a safe speed.

ENG SPEED	1,100 - 6,375 rpm
COOLANT TEMP/S	More than 65°C (149°F)

B/FUEL SCHDL	2.2 - 31.8 msec
VHCL SPEED SE	More than 64 km/h (40 mph)
Selector lever	Suitable position

4. Check 1st trip DTC.

Is 1st trip DTC detected?

YES >> Proceed to EC-398, "Diagnosis Procedure".
NO >> INSPECTION END

5. PERFORM COMPONENT FUNCTION CHECK

Perform component function check. Refer to EC-398, "Component Function Check".

NOTE:
Use component function check to check the overall function of the park/neutral position (PNP) signal circuit. During this check, a 1st trip DTC might not be confirmed.

Is the inspection result normal?

YES >> INSPECTION END
NO >> Proceed to EC-398, "Diagnosis Procedure".

Component Function Check

INFOID:0000000011148705

1. PERFORM COMPONENT FUNCTION CHECK

1. Turn ignition switch ON.
2. Check the voltage between ECM harness connector terminals.

ECM				Condition		Voltage
+		–				
Connector	Terminal	Connector	Terminal			
F79	83	E32	152	Selector lever position	P or N	Approx. 0 V
					Except above	Battery voltage

Is the inspection result normal?

YES >> INSPECTION END
NO >> Proceed to EC-398, "Diagnosis Procedure".

Diagnosis Procedure

INFOID:0000000011148706

1. CHECK TRANSMISSION RANGE SWITCH POWER SUPPLY

1. Turn ignition switch OFF.
2. Disconnect transmission range switch harness connector.
3. Turn ignition switch ON.
4. Check the voltage between transmission range switch harness connector and ground.

+		–	Voltage
Transmission range switch			
Connector	Terminal		
F36	7	Ground	Battery voltage

Is the inspection result normal?

YES >> GO TO 3.
NO >> GO TO 2.

2. CHECK TRANSMISSION RANGE SWITCH POWER SUPPLY CIRCUIT

1. Turn ignition switch OFF.
2. Disconnect IPDM E/R harness connector.
3. Check the continuity between transmission range switch harness connector and IPDM E/R harness connector.

Transmission range switch		IPDM E/R		Continuity
Connector	Terminal	Connector	Terminal	
F36	7	F24	63	Existed

4. Also check harness for short to ground.

Is the inspection result normal?

YES >> Perform the trouble diagnosis for power supply circuit.
NO >> Repair or replace error-detected parts.

3. CHECK TRANSMISSION RANGE SWITCH SIGNAL CIRCUIT

1. Turn ignition switch OFF.
2. Disconnect ECM harness connector.
3. Check the continuity between transmission range switch harness connector and ECM harness connector.

Transmission range switch		ECM		Continuity
Connector	Terminal	Connector	Terminal	
F36	10	F79	83	Existed

4. Also check harness for short to ground and to power.

Is the inspection result normal?

YES >> GO TO 4.
NO >> Repair or replace error-detected parts.

4. CHECK TRANSMISSION RANGE SWITCH

Check the transmission range switch. Refer to TM-108, "Component Inspection".

Is the inspection result normal?

YES >> Check intermittent incident. Refer to GI-47, "Intermittent Incident".
NO >> There is malfunction of transmission range switch. Replace transaxle assembly. Refer to TM-218, "Removal and Installation".

P1078, P1084 EVT CONTROL POSITION SENSOR

DTC Description

INFOID:0000000011496584

DTC DETECTION LOGIC

NOTE:
If DTC P1078 or P1084 is displayed with DTC P0643, first perform the trouble diagnosis for DTC P0643. Refer to EC-395, "DTC Logic".

DTC No.	CONSULT screen terms (Trouble diagnosis content)	DTC detecting condition
P1078	EXH TIM SEN/CIRC-B1 [Exhaust valve timing (EVT) control position sensor (bank 1) circuit]	An excessively high or low voltage from the sensor is sent to ECM.
P1084	EXH TIM SEN/CIRC-B2 [Exhaust valve timing (EVT) control position sensor (bank 2) circuit]	

POSSIBLE CAUSE

DTC P1078
- Harness or connectors [EVT control position sensor (bank 1) circuit is open or shorted.]
- EVT control position sensor
- Crankshaft position (CKP) sensor
- Camshaft position (CMP) sensor (bank 1)
- Accumulation of debris to the signal pick-up portion of the camshaft

DTC P1084
- Harness or connectors [EVT control position sensor (bank 2) circuit is open or shorted.]
- EVT control position sensor (bank 2)
- Each sensor, connected with sensor power supply 2 circuit
- Accumulation of debris to the signal pick-up portion of the camshaft

DTC CONFIRMATION PROCEDURE

1. CHECK DTC PRIORITY

If DTC P1078 or P0184 is displayed with DTC P0643, first perform the confirmation procedure (trouble diagnosis) for DTC P0643.

Is applicable DTC detected?

YES >> Perform diagnosis of applicable. Refer to EC-395, "DTC Logic".
NO >> GO TO 2.

2. PRECONDITIONING

If DTC Confirmation Procedure has been previously conducted, always perform the following procedure before conducting the next test.

1. Turn ignition switch OFF and wait at least 10 seconds.
2. Turn ignition switch ON.
3. Turn ignition switch OFF and wait at least 10 seconds.

>> GO TO 3.

3. PERFORM DTC CONFIRMATION PROCEDURE

1. Start engine and let it idle for 10 seconds.
2. Check 1st trip DTC.

Is 1st trip DTC detected?

YES >> Proceed to EC-401, "Diagnosis Procedure".
NO-1 >> To check malfunction symptom before repair: Refer to GI-47, "Intermittent Incident".
NO-2 >> Confirmation after repair: INSPECTION END

Diagnosis Procedure

INFOID:0000000011496585

1. CHECK DTC PRIORITY

If DTC P1078 or P1084 is displayed with DTC P0643, first perform the confirmation procedure (trouble diagnosis) for DTC P0643.

Is applicable DTC detected?

YES >> Perform diagnosis of applicable. Refer to EC-395, "DTC Logic".
NO >> GO TO 2.

2. CHECK EXHAUST VALVE TIMING (EVT) CONTROL POSITION SENSOR POWER SUPPLY

1. Disconnect EVT control position sensor harness connector.
2. Turn ignition switch ON.
3. Check the voltage between EVT control position sensor harness connector and ground.

DTC	+			–	Voltage (V)
	EVT control position sensor				
	Bank	Connector	Terminal		
P1078	1	F83	1	Ground	Approx. 5
P1084	2	F84	1		

Is the inspection result normal?

YES >> GO TO 4.
NO >> GO TO 3.

3. CHECK EVT CONTROL POSITION SENSOR POWER SUPPLY CIRCUIT

1. Turn ignition switch OFF.
2. Disconnect ECM harness connector.
3. Check the continuity between EVT control position sensor harness connector and ECM harness connector.

DTC	EVT control position sensor			ECM		Continuity
	Bank	Connector	Terminal	Connector	Terminal	
P1078	1	F83	1	F78	28	Existed
P1084	2	F84	1			

Is the inspection result normal?

YES >> INSPECTION END
NO >> Repair or replace error-detected parts.

4. CHECK EVT CONTROL POSITION SENSOR GROUND CIRCUIT

1. Turn ignition switch OFF.
2. Disconnect ECM harness connector.
3. Check the continuity between EVT control position sensor harness connector and ECM harness connector.

DTC	EVT control position sensor			ECM		Continuity
	Bank	Connector	Terminal	Connector	Terminal	
P1078	1	F83	2	F78	40	Existed
P1084	2	F84	2			

4. Also check harness for short to ground and short to power.

Is the inspection result normal?

YES >> GO TO 5.
NO >> Repair open circuit, short to ground or short to power in harness or connectors.

5. CHECK EVT CONTROL POSITION SENSOR INPUT SIGNAL CIRCUIT

1. Check the continuity between exhaust valve timing control position sensor harness connector and ECM harness connector.

DTC	+			–		Continuity
	EVT control position sensor			ECM		
	Bank	Connector	Terminal	Connector	Terminal	
P1078	1	F83	3	F78	37	Existed
P1084	2	F84	3		39	

2. Also check harness for short to ground and short to power.

Is the inspection result normal?

YES >> GO TO 6.
NO >> Repair open circuit, short to ground or short to power in harness or connectors.

6.CHECK EVT CONTROL POSITION SENSOR

Check exhaust valve timing control position sensor. Refer to EC-402, "Component Inspection".

Is the inspection result normal?

YES >> GO TO 7.
NO >> Replace malfunctioning EVT control position sensor. Refer to EM-43, "Exploded View".

7.CHECK CKP SENSOR

Check Crankshaft position sensor. Refer to EC-316, "Component Inspection".

Is the inspection result normal?

YES >> GO TO 8.
NO >> Replace crankshaft position sensor. Refer to EM-36, "Exploded View".

8.CHECK CMP SENSOR

Check camshaft position sensor. Refer to EC-320, "Component Inspection".

Is the inspection result normal?

YES >> GO TO 9.
NO >> Replace malfunctioning camshaft position sensor. Refer to EM-43, "Exploded View".

9.CHECK CAMSHAFT (EXH)

Check the following.
- Accumulation of debris to the signal plate of camshaft rear end
- Chipping signal plate of camshaft rear end

Is the inspection result normal?

YES >> INSPECTION END
NO >> Remove debris and clean the signal plate of camshaft rear end or replace camshaft. Refer to EM-76, "Removal and Installation".

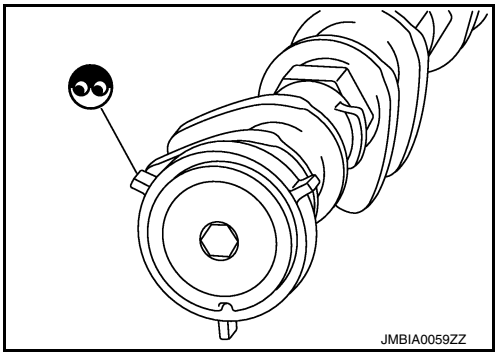

Component Inspection

INFOID:0000000011496586

1.EXHAUST VALVE TIMING CONTROL POSITION SENSOR - 1

1. Turn ignition switch OFF.
2. Disconnect exhaust valve timing control position sensor harness connector.
3. Loosen the fixing bolt of the sensor.
4. Remove the sensor. Refer to EM-43, "Exploded View".

5. Visually check the sensor for chipping.

Is the inspection result normal?

YES >> GO TO 2.
NO >> Replace malfunctioning exhaust valve timing control position sensor. Refer to EM-43, "Exploded View".

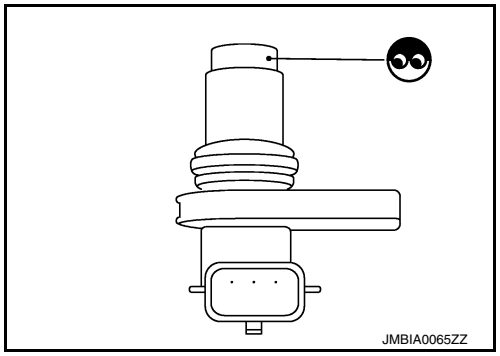

2. EXHAUST VALVE TIMING CONTROL POSITION SENSOR - 2

Check resistance exhaust valve timing control position sensor terminals as follows.

Exhaust valve timing control position sensor		Condition		Resistance
+	–			
Terminal				
1	2	Temperature	25°C (77°F)	Except 0 Ω or ∞ Ω
1	3			
2	3			

Is the inspection result normal?

YES >> INSPECTION END
NO >> Replace malfunctioning exhaust valve timing control position sensor. Refer to EM-43, "Exploded View".

P1148, P1168 CLOSED LOOP CONTROL

DTC Logic

INFOID:0000000011148707

DTC DETECTION LOGIC

NOTE:
DTC P1148 or P1168 is displayed with another DTC for A/F sensor 1.
Perform the trouble diagnosis for the corresponding DTC.

DTC No.	CONSULT screen terms (Trouble diagnosis content)	DTC detecting condition	Possible cause
P1148	CLOSED LOOP-B1 (Closed loop bank 1)	The closed loop control function for bank 1 does not operate even when vehicle is being driven in the specified condition.	• Harness or connectors (The A/F sensor 1 circuit is open or shorted.) • A/F sensor 1 • A/F sensor 1 heater
P1168	CLOSED LOOP-B2 (Closed loop bank 2)	The closed loop control function for bank 2 does not operate even when vehicle is being driven in the specified condition.	

P1212 TCS COMMUNICATION LINE

Description

INFOID:0000000011148708

This CAN communication line is used to control the smooth engine operation during the TCS operation. Pulse signals are exchanged between ECM and “ABS actuator and electric unit (control unit)”.
Be sure to erase the malfunction information such as DTC not only for “ABS actuator and electric unit (control unit)” but also for ECM after TCS related repair.

DTC Logic

INFOID:0000000011148709

DTC DETECTION LOGIC

NOTE:
- **If DTC P1212 is displayed with DTC UXXXX, first perform the trouble diagnosis for DTC UXXXX.**
- **If DTC P1212 is displayed with DTC P0607, first perform the trouble diagnosis for DTC P0607. Refer to EC-392, "DTC Logic".**

Freeze frame data is not stored in the ECM for this self-diagnosis.

DTC No.	CONSULT screen terms (Trouble diagnosis content)	DTC detecting condition	Possible cause
P1212	TCS C/U FUNCTN (TCS control unit function)	ECM cannot receive the information from “ABS actuator and electric unit (control unit)” continuously.	• Harness or connectors (The CAN communication line is open or shorted.) • ABS actuator and electric unit (control unit) • Dead (Weak) battery

DTC CONFIRMATION PROCEDURE

1.PRECONDITIONING

If DTC Confirmation Procedure has been previously conducted, always perform the following before conducting the next test
1. Turn ignition switch OFF and wait at least 10 seconds.
2. Turn ignition switch ON.
3. Turn ignition switch OFF and wait at least 10 seconds.

TESTING CONDITION:
Before performing the following procedure, confirm that battery voltage is more than 10.5 V at idle.

>> GO TO 2.

2.PERFORM DTC CONFIRMATION PROCEDURE

1. Start engine and let it idle for at least 10 seconds.
2. Check 1st trip DTC.

Is 1st trip DTC detected?

YES >> Proceed to EC-405, "Diagnosis Procedure".
NO >> INSPECTION END

Diagnosis Procedure

INFOID:0000000011148710

Perform the trouble diagnosis for brake control system. Refer to BRC-187, "Work Flow".
NOTE:
If DTC P1212 is displayed with DTC UXXXX and/or P0607, perform the following trouble diagnosis.
- Trouble diagnosis for DTC UXXXX Refer to EC-105, "DTC Index".
- Trouble diagnosis for DTC P0607 Refer to EC-392, "DTC Logic".

P1217 ENGINE OVER TEMPERATURE

DTC Logic

INFOID:0000000011148711

DTC DETECTION LOGIC

NOTE:
- **If DTC P1217 is displayed with DTC UXXXX, first perform the trouble diagnosis for DTC UXXXX.**
- **If DTC P1217 is displayed with DTC P0607, first perform the trouble diagnosis for DTC P0607. Refer to EC-392, "DTC Logic".**

If the cooling fan or another component in the cooling system malfunctions, engine coolant temperature will rise.
When the engine coolant temperature reaches an abnormally high temperature condition, a malfunction is indicated.

DTC No.	CONSULT screen terms (Trouble diagnosis content)	DTC detecting condition	Possible cause
P1217	ENG OVER TEMP [Engine over temperature (Overheat)]	• Cooling fan does not operate properly (Overheat). • Cooling fan system does not operate properly (Overheat). • Engine coolant was not added to the system using the proper filling method. • Engine coolant is not within the specified range.	• Harness or connectors (Cooling fan circuit is open or shorted.) • IPDM E/R • Cooling fan control module • Cooling fan motor • Radiator hose • Radiator • Radiator cap • Reservoir tank • Water pump • Thermostat • Water control valve

CAUTION:
When a malfunction is indicated, be sure to replace the coolant. Refer to CO-10, "System Inspection". Also, replace the engine oil. Refer to MA-28, "ENGINE OIL : Changing Engine Oil".
1. **Fill radiator with coolant up to specified level with a filling speed of 2 liters per minute. Be sure to use coolant with the proper mixture ratio. Refer to MA-16, "FOR USA AND CANADA : Engine Coolant Mixture Ratio".**
2. **After refilling coolant, run engine to ensure that no water-flow noise is emitted.**

DTC CONFIRMATION PROCEDURE

1.PERFORM COMPONENT FUNCTION CHECK

Perform component function check. Refer to EC-406, "Component Function Check".
NOTE:
Use component function check to check the overall function of the cooling fan. During this check, a DTC might not be confirmed.

Is the inspection result normal?

YES >> INSPECTION END
NO >> Proceed to EC-407, "Diagnosis Procedure".

Component Function Check

INFOID:0000000011148712

1.PERFORM COMPONENT FUNCTION CHECK-I

WARNING:
Never remove the radiator cap when the engine is hot. Serious burns could be caused by high pressure fluid escaping from the radiator.
Wrap a thick cloth around cap. Carefully remove the cap by turning it a quarter turn to allow built-up pressure to escape. Then turn the cap all the way off.

Check the coolant level in the reservoir tank and radiator.
Allow engine to cool before checking coolant level.

Is the coolant level in the reservoir tank and/or radiator below the proper range?

YES >> Proceed to EC-407, "Diagnosis Procedure".
NO >> GO TO 2.

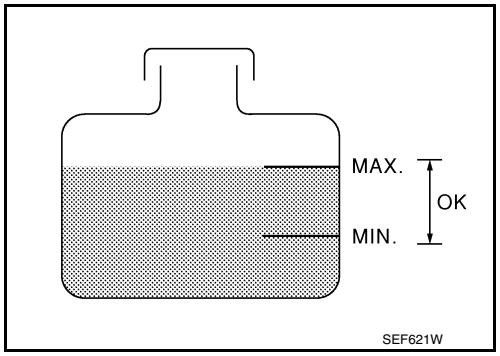

2. PERFORM COMPONENT FUNCTION CHECK-II

Confirm whether customer filled the coolant or not.

Did customer fill the coolant?

YES >> Proceed to EC-407, "Diagnosis Procedure".
NO >> GO TO 3.

3. PERFORM COMPONENT FUNCTION CHECK-III

With CONSULT
1. Turn ignition switch ON.
2. Perform “FAN DUTY CONTROL” in “ACTIVE TEST” mode of “ENGINE” using CONSULT.
3. Check that cooling fan speed varies according to the percentage.

Without CONSULT
1. Activate IPDM E/R auto active test and check cooling fan motors operation. Refer to PCS-8, "Diagnosis Description".
2. Check that cooling fan operates.

Is the inspection result normal?

YES >> INSPECTION END
NO >> Proceed to EC-407, "Diagnosis Procedure".

Diagnosis Procedure

INFOID:0000000011148713

1. CHECK COOLING FAN OPERATION

With CONSULT
1. Turn ignition switch ON.
2. Perform “FAN DUTY CONTROL” in “ACTIVE TEST” mode of “ENGINE” using CONSULT.
3. Check that cooling fan speed varies according to the percentage.

Without CONSULT
1. Activate IPDM E/R auto active test and check cooling fan motors operation. Refer to PCS-8, "Diagnosis Description".
2. Check that cooling fan operates.

Is the inspection result normal?

YES >> GO TO 2.
NO >> Proceed to EC-482, "Diagnosis Procedure".

2. CHECK COOLING SYSTEM FOR LEAK-I

Check cooling system for leak. Refer to CO-10, "System Inspection".

Is leakage detected?

YES >> GO TO 3.
NO >> GO TO 4.

3. CHECK COOLING SYSTEM FOR LEAK-II

Check the following for leak.
- Hose (Refer to CO-10, "System Inspection".)
- Radiator (Refer to CO-10, "System Inspection".)
- Water pump (Refer to CO-10, "System Inspection".)

>> Repair or replace malfunctioning part.

4. CHECK RADIATOR CAP

Check radiator cap. Refer to CO-10, "System Inspection".

Is the inspection result normal?

YES >> GO TO 5.
NO >> Replace radiator cap. Refer to CO-15, "Removal and Installation".

5. CHECK THERMOSTAT

Check thermostat. Refer to CO-24, "Removal and Installation".

Is the inspection result normal?

YES >> GO TO 6.
NO >> Replace thermostat. Refer to CO-24, "Removal and Installation".

6. CHECK ENGINE COOLANT TEMPERATURE SENSOR

Refer to EC-234, "Component Inspection".

Is the inspection result normal?

YES >> GO TO 7.
NO >> Replace engine coolant temperature sensor. Refer to CO-26, "Removal and Installation".

7. OVERHEATING CAUSE ANALYSIS

If the cause cannot be isolated, check the CO-6, "Troubleshooting Chart".

>> INSPECTION END

P1225 TP SENSOR

DTC Logic

INFOID:0000000011148714

DTC DETECTION LOGIC

DTC No.	CONSULT screen terms (Trouble diagnosis content)	DTC detecting condition	Possible cause
P1225	CTP LEARNING-B1 (Closed throttle position learning performance)	Closed throttle position learning value is excessively low.	• Electric throttle control actuator (TP sensor 1 and 2)

DTC CONFIRMATION PROCEDURE

1.PRECONDITIONING

If DTC Confirmation Procedure has been previously conducted, always perform the following before conducting the next test.
1. Turn ignition switch OFF and wait at least 10 seconds.
2. Turn ignition switch ON.
3. Turn ignition switch OFF and wait at least 10 seconds.

TESTING CONDITION:
Before performing the following procedure, confirm that battery voltage is more than 10 V at idle.

>> GO TO 2.

2.PERFORM DTC CONFIRMATION PROCEDURE

1. Turn ignition switch ON.
2. Turn ignition switch OFF and wait at least 10 seconds.
3. Turn ignition switch ON.
4. Check 1st trip DTC.

Is 1st trip DTC detected?

YES >> Proceed to EC-409, "Diagnosis Procedure".
NO >> INSPECTION END

Diagnosis Procedure

INFOID:0000000011148715

1.CHECK ELECTRIC THROTTLE CONTROL ACTUATOR VISUALLY

1. Turn ignition switch OFF.
2. Remove the intake air duct. Refer to EM-24, "Removal and Installation".
3. Check if foreign matter is caught between the throttle valve and the housing.

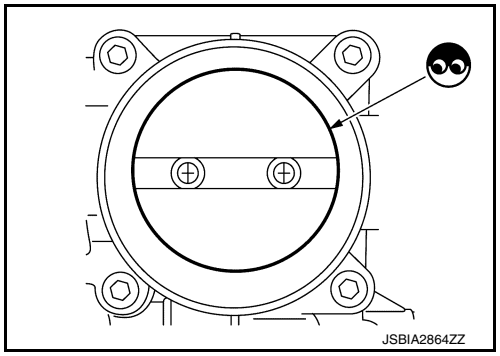

Is the inspection result normal?

YES >> GO TO 2.
NO >> Remove the foreign matter and clean the electric throttle control actuator inside, and then perform throttle valve closed position learning. Refer to EC-159, "Description".

2.REPLACE ELECTRIC THROTTLE CONTROL ACTUATOR

1. Replace electric throttle control actuator. Refer to EM-26, "Removal and Installation".
2. Go to EC-160, "Description".

>> INSPECTION END

P1226 TP SENSOR

DTC Logic

INFOID:0000000011148716

DTC DETECTION LOGIC

DTC No.	CONSULT screen terms (Trouble diagnosis content)	DTC detecting condition	Possible cause
P1226	CTP LEARNING-B1 (Closed throttle position learning performance)	Closed throttle position learning is not performed successfully, repeatedly.	• Electric throttle control actuator (TP sensor 1 and 2)

DTC CONFIRMATION PROCEDURE

1.PRECONDITIONING

If DTC Confirmation Procedure has been previously conducted, always perform the following before conducting the next test.
1. Turn ignition switch OFF and wait at least 10 seconds.
2. Turn ignition switch ON.
3. Turn ignition switch OFF and wait at least 10 seconds.

TESTING CONDITION:
Before performing the following procedure, confirm that battery voltage is more than 10 V at idle.

>> GO TO 2.

2.PERFORM DTC CONFIRMATION PROCEDURE

1. Turn ignition switch ON.
2. Turn ignition switch OFF and wait at least 10 seconds.
3. Turn ignition switch ON.
4. Repeat steps 2 and 3 for 32 times.
5. Check 1st trip DTC.

Is 1st trip DTC detected?

YES >> Proceed to EC-410, "Diagnosis Procedure".
NO >> INSPECTION END

Diagnosis Procedure

INFOID:0000000011148717

1.CHECK ELECTRIC THROTTLE CONTROL ACTUATOR VISUALLY

1. Turn ignition switch OFF.
2. Remove the intake air duct. Refer to EM-24, "Removal and Installation".
3. Check if foreign matter is caught between the throttle valve and the housing.

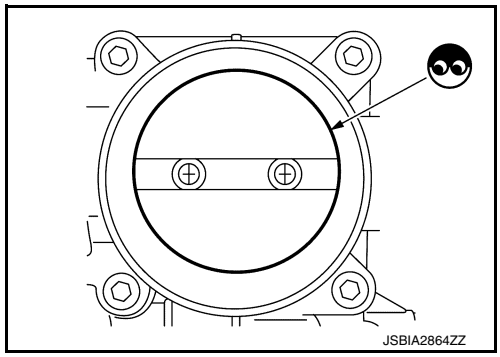

Is the inspection result normal?

YES >> GO TO 2.
NO >> Remove the foreign matter and clean the electric throttle control actuator inside, and then perform throttle valve closed position learning. Refer to EC-159, "Description".

2.REPLACE ELECTRIC THROTTLE CONTROL ACTUATOR

1. Replace electric throttle control actuator. Refer to EM-26, "Removal and Installation".
2. Go to EC-160, "Description".

>> INSPECTION END

P1550 BATTERY CURRENT SENSOR

DTC Logic

INFOID:0000000011148718

DTC DETECTION LOGIC

DTC No.	CONSULT screen terms (Trouble diagnosis content)	DTC detecting condition	Possible cause
P1550	BAT CURRENT SENSOR (Battery current sensor circuit range/performance)	The output voltage of the battery current sensor remains within the specified range while engine is running.	• Harness or connectors (Battery current sensor circuit is open or shorted.) (APP sensor 2 circuit is shorted.) [CMP sensor (PHASE) circuit is or shorted.] (EOP sensor circuit is shorted.) (Refrigerant pressure sensor is shorted.) • Battery current sensor • Accelerator pedal position sensor • Camshaft position sensor (PHASE) • Engine oil pressure sensor • Refrigerant pressure sensor

DTC CONFIRMATION PROCEDURE

1. PRECONDITIONING

If DTC Confirmation Procedure has been previously conducted, always perform the following before conducting the next test.

1. Turn ignition switch OFF and wait at least 10 seconds.
2. Turn ignition switch ON.
3. Turn ignition switch OFF and wait at least 10 seconds.

TESTING CONDITION:

Before performing the following procedure, confirm that battery voltage is more than 8 V at idle.

>> GO TO 2.

2. PERFORM DTC CONFIRMATION PROCEDURE

1. Start engine and wait at least 10 seconds.
2. Check 1st trip DTC.

Is 1st trip DTC detected?

YES >> Proceed to EC-411, "Diagnosis Procedure".
NO >> INSPECTION END

Diagnosis Procedure

INFOID:0000000011148719

1. CHECK BATTERY CURRENT SENSOR POWER SUPPLY

1. Disconnect battery current sensor harness connector.
2. Turn ignition switch ON.
3. Check the voltage between battery current sensor harness connector and ground.

+		–	Voltage (V)
Battery current sensor			
Connector	Terminal		
F34	1	Ground	Approx. 5

Is the inspection result normal?

YES >> GO TO 3.
NO >> GO TO 2.

2. CHECK BATTERY CURRENT SENSOR POWER SUPPLY CIRCUIT

1. Turn ignition switch OFF.
2. Disconnect ECM harness connector.
3. Check the continuity between battery current sensor harness connector and ECM harness connector.

Battery current sensor		ECM		Continuity
Connector	Terminal	Connector	Terminal	
F34	1	F79	87	Existed

Is the inspection result normal?

YES >> Check sensor power supply 2 circuit. Refer to EC-510, "Diagnosis Procedure".
NO >> Repair or replace error-detected parts.

3. CHECK BATTERY CURRENT SENSOR GROUND CIRCUIT

1. Turn ignition switch OFF.
2. Disconnect ECM harness connector.
3. Check the continuity between battery current sensor harness connector and ECM harness connector.

Battery current sensor		ECM		Continuity
Connector	Terminal	Connector	Terminal	
F34	3	F79	64	Existed

4. Also check harness for short to ground and short to power.

Is the inspection result normal?

YES >> GO TO 4.
NO >> Repair open circuit, short to ground or short to power in harness or connectors.

4. CHECK BATTERY CURRENT SENSOR INPUT SIGNAL CIRCUIT

1. Check the continuity between battery current sensor harness connector and ECM harness connector.

Battery current sensor		ECM		Continuity
Connector	Terminal	Connector	Terminal	
F34	4	F79	69	Existed

2. Also check harness for short to ground and short to power.

Is the inspection result normal?

YES >> GO TO 5.
NO >> Repair open circuit, short to ground or short to power in harness or connectors.

5. CHECK BATTERY CURRENT SENSOR

Check battery current sensor. Refer to EC-412, "Component Inspection".

Is the inspection result normal?

YES >> Check intermittent incident. Refer to GI-47, "Intermittent Incident".
NO >> Replace battery negative cable assembly.

Component Inspection

INFOID:0000000011148720

1. CHECK BATTERY CURRENT SENSOR

1. Turn ignition switch OFF.
2. Reconnect harness connectors disconnected.

3. Disconnect battery negative cable.
4. Install jumper cable between battery negative terminal and body ground.
5. Turn ignition switch ON.
6. Check the voltage between ECM harness connector terminals under the following conditions.

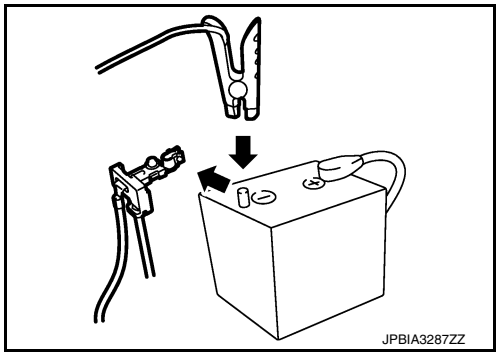

ECM			Voltage (V)
Connector	+	–	
	Terminal	Terminal	
F79	69	64	Approx. 2.5

Before measuring the terminal voltage, confirm that the battery is fully charged. Refer to PG-86, "How to Handle Battery".

Is the inspection result normal?

YES >> INSPECTION END
NO >> Replace battery negative cable assembly.

P1551, P1552 BATTERY CURRENT SENSOR

DTC Logic

INFOID:0000000011148721

DTC DETECTION LOGIC

DTC No.	CONSULT screen terms (Trouble diagnosis content)	DTC detecting condition	Possible cause
P1551	BAT CURRENT SENSOR (Battery current sensor circuit low input)	An excessively low voltage from the sensor is sent to ECM.	• Harness or connectors (Battery current sensor circuit is open or shorted.) (APP sensor 2 circuit is shorted.) [CMP sensor (PHASE) circuit is or shorted.] (EOP sensor circuit is shorted.) (Refrigerant pressure sensor is shorted.) • Battery current sensor • Accelerator pedal position sensor • Camshaft position sensor (PHASE) • Engine oil pressure sensor • Refrigerant pressure sensor
P1552	BAT CURRENT SENSOR (Battery current sensor circuit high input)	An excessively high voltage from the sensor is sent to ECM.	

DTC CONFIRMATION PROCEDURE

1.PRECONDITIONING

If DTC Confirmation Procedure has been previously conducted, always perform the following before conducting the next test.
1. Turn ignition switch OFF and wait at least 10 seconds.
2. Turn ignition switch ON.
3. Turn ignition switch OFF and wait at least 10 seconds.

TESTING CONDITION:
Before performing the following procedure, confirm that battery voltage is more than 8 V with ignition switch ON

>> GO TO 2.

2.PERFORM DTC CONFIRMATION PROCEDURE

1. Turn ignition switch ON and wait at least 10 seconds.
2. Check 1st trip DTC.

Is 1st trip DTC detected?

YES >> Proceed to EC-414, "Diagnosis Procedure".
NO >> INSPECTION END

Diagnosis Procedure

INFOID:0000000011148722

1.CHECK BATTERY CURRENT SENSOR POWER SUPPLY

1. Disconnect battery current sensor harness connector.
2. Turn ignition switch ON.
3. Check the voltage between battery current sensor harness connector and ground.

+		–	Voltage (V)
Battery current sensor			
Connector	Terminal		
F34	1	Ground	Approx. 5

Is the inspection result normal?

YES >> GO TO 3.
NO >> GO TO 2.

2. CHECK BATTERY CURRENT SENSOR POWER SUPPLY CIRCUIT

1. Turn ignition switch OFF.
2. Disconnect ECM harness connector.
3. Check the continuity between battery current sensor harness connector and ECM harness connector.

Battery current sensor		ECM		Continuity
Connector	Terminal	Connector	Terminal	
F34	1	F79	87	Existed

Is the inspection result normal?

YES >> Check sensor power supply 2 circuit. Refer to EC-510, "Diagnosis Procedure".
NO >> Repair or replace error-detected parts.

3. CHECK BATTERY CURRENT SENSOR GROUND CIRCUIT

1. Turn ignition switch OFF.
2. Disconnect ECM harness connector.
3. Check the continuity between battery current sensor harness connector and ECM harness connector.

Battery current sensor		ECM		Continuity
Connector	Terminal	Connector	Terminal	
F34	3	F79	64	Existed

4. Also check harness for short to ground and short to power.

Is the inspection result normal?

YES >> GO TO 4.
NO >> Repair open circuit, short to ground or short to power in harness or connectors.

4. CHECK BATTERY CURRENT SENSOR INPUT SIGNAL CIRCUIT

1. Check the continuity between battery current sensor harness connector and ECM harness connector.

Battery current sensor		ECM		Continuity
Connector	Terminal	Connector	Terminal	
F34	4	F79	69	Existed

2. Also check harness for short to ground and short to power.

Is the inspection result normal?

YES >> GO TO 5.
NO >> Repair open circuit, short to ground or short to power in harness or connectors.

5. CHECK BATTERY CURRENT SENSOR

Check battery current sensor. Refer to EC-422, "Component Inspection".

Is the inspection result normal?

YES >> Check intermittent incident. Refer to GI-47, "Intermittent Incident".
NO >> Replace battery negative cable assembly.

Component Inspection

INFOID:0000000011148723

1. CHECK BATTERY CURRENT SENSOR

1. Turn ignition switch OFF.
2. Reconnect harness connectors disconnected.

3. Disconnect battery negative cable.
4. Install jumper cable between battery negative terminal and body ground.
5. Turn ignition switch ON.
6. Check the voltage between ECM harness connector terminals under the following conditions.

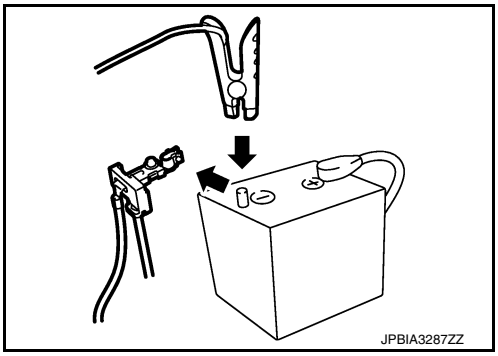

ECM			Voltage (V)
Connector	+	–	
	Terminal	Terminal	
F79	69	64	Approx. 2.5

Before measuring the terminal voltage, confirm that the battery is fully charged. Refer to PG-86, "How to Handle Battery".

Is the inspection result normal?

YES >> INSPECTION END
NO >> Replace battery negative cable assembly.

P1553 BATTERY CURRENT SENSOR

DTC Logic

INFOID:0000000011148724

DTC DETECTION LOGIC

DTC No.	CONSULT screen terms (Trouble diagnosis content)	DTC detecting condition	Possible cause
P1553	BAT CURRENT SENSOR (Battery current sensor performance)	The signal voltage transmitted from the sensor to ECM is higher than the amount of the maximum power generation.	• Harness or connectors (Battery current sensor circuit is open or shorted.) (APP sensor 2 circuit is shorted.) [CMP sensor (PHASE) circuit is or shorted.] (EOP sensor circuit is shorted.) (Refrigerant pressure sensor is shorted.) • Battery current sensor • Accelerator pedal position sensor • Camshaft position sensor (PHASE) • Engine oil pressure sensor • Refrigerant pressure sensor

DTC CONFIRMATION PROCEDURE

1. PRECONDITIONING

If DTC Confirmation Procedure has been previously conducted, always perform the following before conducting the next test.

1. Turn ignition switch OFF and wait at least 10 seconds.
2. Turn ignition switch ON.
3. Turn ignition switch OFF and wait at least 10 seconds.

TESTING CONDITION:

Before performing the following procedure, confirm that battery voltage is more than 8 V at idle.

>> GO TO 2.

2. PERFORM DTC CONFIRMATION PROCEDURE

1. Start engine and wait at least 10 seconds.
2. Check 1st trip DTC.

Is 1st trip DTC detected?

YES >> Proceed to EC-417, "Diagnosis Procedure".
NO >> INSPECTION END

Diagnosis Procedure

INFOID:0000000011148725

1. CHECK BATTERY CURRENT SENSOR POWER SUPPLY

1. Disconnect battery current sensor harness connector.
2. Turn ignition switch ON.
3. Check the voltage between battery current sensor harness connector and ground.

+		–	Voltage (V)
Battery current sensor			
Connector	Terminal		
F34	1	Ground	Approx. 5

Is the inspection result normal?

YES >> GO TO 3.
NO >> GO TO 2.

2. CHECK BATTERY CURRENT SENSOR POWER SUPPLY CIRCUIT

1. Turn ignition switch OFF.
2. Disconnect ECM harness connector.
3. Check the continuity between battery current sensor harness connector and ECM harness connector.

Battery current sensor		ECM		Continuity
Connector	Terminal	Connector	Terminal	
F34	1	F79	87	Existed

Is the inspection result normal?

YES >> Check sensor power supply 2 circuit. Refer to EC-510, "Diagnosis Procedure".
NO >> Repair or replace error-detected parts.

3. CHECK BATTERY CURRENT SENSOR GROUND CIRCUIT

1. Turn ignition switch OFF.
2. Disconnect ECM harness connector.
3. Check the continuity between battery current sensor harness connector and ECM harness connector.

Battery current sensor		ECM		Continuity
Connector	Terminal	Connector	Terminal	
F34	3	F79	64	Existed

4. Also check harness for short to ground and short to power.

Is the inspection result normal?

YES >> GO TO 4.
NO >> Repair open circuit, short to ground or short to power in harness or connectors.

4. CHECK BATTERY CURRENT SENSOR INPUT SIGNAL CIRCUIT

1. Check the continuity between battery current sensor harness connector and ECM harness connector.

Battery current sensor		ECM		Continuity
Connector	Terminal	Connector	Terminal	
F34	4	F79	69	Existed

2. Also check harness for short to ground and short to power.

Is the inspection result normal?

YES >> GO TO 5.
NO >> Repair open circuit, short to ground or short to power in harness or connectors.

5. CHECK BATTERY CURRENT SENSOR

Check battery current sensor. Refer to EC-422, "Component Inspection".

Is the inspection result normal?

YES >> Check intermittent incident. Refer to GI-47, "Intermittent Incident".
NO >> Replace battery negative cable assembly.

Component Inspection

INFOID:0000000011148726

1. CHECK BATTERY CURRENT SENSOR

1. Turn ignition switch OFF.
2. Reconnect harness connectors disconnected.

3. Disconnect battery negative cable.
4. Install jumper cable between battery negative terminal and body ground.
5. Turn ignition switch ON.
6. Check the voltage between ECM harness connector terminals under the following conditions.

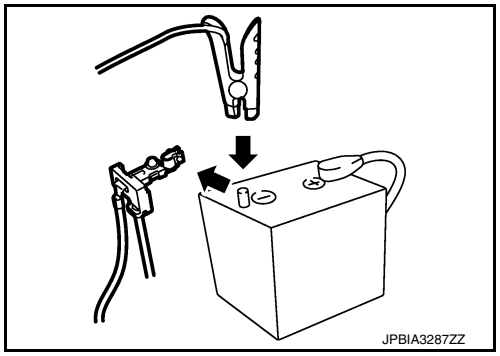

ECM			Voltage (V)
Connector	+	–	
	Terminal	Terminal	
F79	69	64	Approx. 2.5

Before measuring the terminal voltage, confirm that the battery is fully charged. Refer to PG-86, "How to Handle Battery".

Is the inspection result normal?

YES >> INSPECTION END
NO >> Replace battery negative cable assembly.

P1554 BATTERY CURRENT SENSOR

DTC Logic

INFOID:0000000011148727

DTC DETECTION LOGIC

DTC No.	CONSULT screen terms (Trouble diagnosis content)	DTC detecting condition	Possible cause
P1554	BAT CURRENT SENSOR (Battery current sensor performance)	The output voltage of the battery current sensor is lower than the specified value while the battery voltage is high enough.	• Harness or connectors (Battery current sensor circuit is open or shorted.) (APP sensor 2 circuit is shorted.) [CMP sensor (PHASE) circuit is or shorted.] (EOP sensor circuit is shorted.) (Refrigerant pressure sensor is shorted.) • Battery current sensor • Accelerator pedal position sensor • Camshaft position sensor (PHASE) • Engine oil pressure sensor • Refrigerant pressure sensor

DTC CONFIRMATION PROCEDURE

1.PERFORM COMPONENT FUNCTION CHECK

Perform component function check. Refer to EC-420, "Component Function Check".

NOTE:

Use component function check to check the overall function of the battery current sensor circuit. During this check, a 1st trip DTC might not be confirmed.

Is the inspection result normal?

YES >> INSPECTION END
NO >> Proceed to EC-421, "Diagnosis Procedure".

Component Function Check

INFOID:0000000011148728

1.PRECONDITIONING

TESTING CONDITION:

- **Before performing the following procedure, confirm that battery voltage is more than 12.8 V at idle.**
- **Before performing the following procedure, confirm that all load switches and A/C switch are turned OFF.**

>> GO TO 2.

2.PERFORM COMPONENT FUNCTION CHECK

With CONSULT

1. Start engine and let it idle.
2. Select “BAT CUR SEN” in “DATA MONITOR” mode with CONSULT.
3. Check “BAT CUR SEN” indication for 10 seconds.
   “BAT CUR SEN” should be above 2,300mV at least once.

Without CONSULT

1. Start engine and let it idle.
2. Check voltage between ECM harness connector terminals under the following conditions.

ECM			Voltage (V)
Connector	+	–	
	Terminal		
F79	69	64	Above 2.3 at least once

Is the inspection result normal?

YES >> INSPECTION END
NO >> Proceed to EC-421, "Diagnosis Procedure"

Diagnosis Procedure

INFOID:0000000011148729

1. CHECK BATTERY CURRENT SENSOR POWER SUPPLY

1. Disconnect battery current sensor harness connector.
2. Turn ignition switch ON.
3. Check the voltage between battery current sensor harness connector and ground.

+		–	Voltage (V)
Battery current sensor			
Connector	Terminal		
F34	1	Ground	Approx. 5

Is the inspection result normal?

YES >> GO TO 3.
NO >> GO TO 2.

2. CHECK BATTERY CURRENT SENSOR POWER SUPPLY CIRCUIT

1. Turn ignition switch OFF.
2. Disconnect ECM harness connector.
3. Check the continuity between battery current sensor harness connector and ECM harness connector.

Battery current sensor		ECM		Continuity
Connector	Terminal	Connector	Terminal	
F34	1	F79	87	Existed

Is the inspection result normal?

YES >> Check sensor power supply 2 circuit. Refer to EC-510, "Diagnosis Procedure".
NO >> Repair or replace error-detected parts.

3. CHECK BATTERY CURRENT SENSOR GROUND CIRCUIT

1. Turn ignition switch OFF.
2. Disconnect ECM harness connector.
3. Check the continuity between battery current sensor harness connector and ECM harness connector.

Battery current sensor		ECM		Continuity
Connector	Terminal	Connector	Terminal	
F34	3	F79	64	Existed

4. Also check harness for short to ground and short to power.

Is the inspection result normal?

YES >> GO TO 4.
NO >> Repair open circuit, short to ground or short to power in harness or connectors.

4. CHECK BATTERY CURRENT SENSOR INPUT SIGNAL CIRCUIT

1. Check the continuity between battery current sensor harness connector and ECM harness connector.

Battery current sensor		ECM		Continuity
Connector	Terminal	Connector	Terminal	
F34	4	F79	69	Existed

2. Also check harness for short to ground and short to power.

Is the inspection result normal?

YES >> GO TO 5.
NO >> Repair open circuit, short to ground or short to power in harness or connectors.

5. CHECK BATTERY CURRENT SENSOR

Check battery current sensor. Refer to EC-422, "Component Inspection".

Is the inspection result normal?

YES >> Check intermittent incident. Refer to GI-47, "Intermittent Incident".
NO >> Replace battery negative cable assembly.

Component Inspection

INFOID:0000000011148730

1. CHECK BATTERY CURRENT SENSOR

1. Turn ignition switch OFF.
2. Reconnect harness connectors disconnected.
3. Disconnect battery negative cable.
4. Install jumper cable between battery negative terminal and body ground.
5. Turn ignition switch ON.
6. Check the voltage between ECM harness connector terminals under the following conditions.

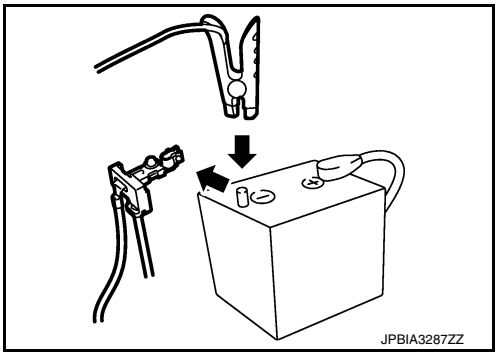

ECM			Voltage (V)
Connector	+	–	
	Terminal	Terminal	
F79	69	64	Approx. 2.5

Before measuring the terminal voltage, confirm that the battery is fully charged. Refer to PG-86, "How to Handle Battery".

Is the inspection result normal?

YES >> INSPECTION END
NO >> Replace battery negative cable assembly.

P1556, P1557 BATTERY TEMPERATURE SENSOR

DTC Logic

INFOID:0000000011148731

DTC DETECTION LOGIC

DTC No.	CONSULT screen terms (Trouble diagnosis content)	DTC detecting condition	Possible cause
P1556	BAT TMP SEN/CIRC (Battery temperature sensor circuit low input)	Signal voltage from Battery temperature sensor remains 0.16V or less for 5 seconds or more.	• Harness or connectors [Battery current sensor (Battery temperature sensor) circuit is open or shorted.] (APP sensor 2 circuit is shorted.) [CMP sensor (PAHSE) circuit is open or shorted.] (EOP sensor is shorted.) (Refrigerant pressure sensor is shorted.) • Battery current sensor (Battery temperature sensor) • Accelerator pedal position sensor (APP sensor 2) • Camshaft position (CMP) sensor (PHESE) • Engine oil temperature (EOP) sensor • Refrigerant pressure sensor
P1557	BAT TMP SEN/CIRC (Battery temperature sensor circuit high input)	Signal voltage from Battery temperature sensor remains 4.84V or more for 5 seconds or more.	

DTC CONFIRMATION PROCEDURE

1.PRECONDITIONING

1. Turn ignition switch OFF and wait at least 10 seconds.
2. Turn ignition switch ON.
3. Turn ignition switch OFF and wait at least 10 seconds.

TESTING CONDITION:
Before performing the following procedure, confirm that battery voltage is 10 V or more at idle.

>> GO TO 2.

2.PERFORM DTC CONFIRMATION PROCEDURE

1. Start the engine and let it idle at least 10 seconds.
2. Check 1st trip DTC.

Is 1st trip DTC detected?

YES >> Proceed to EC-423, "Diagnosis Procedure".
NO >> INSPECTION END

Diagnosis Procedure

INFOID:0000000011148732

1.CHECK BATTERY TEMPERATURE SENSOR INPUT SIGNAL

1. Disconnect battery current sensor harness connector.
2. Turn ignition switch ON.
3. Check the voltage between battery current sensor harness connector and ground.

+		–	Voltage (V)
Battery current sensor			
Connector	Terminal		
F34	2	Ground	Approx. 5

Is the inspection result normal?

YES >> GO TO 3.
NO >> GO TO 2.

2. CHECK BATTERY TEMPERATURE SENSOR INPUT SIGNAL CIRCUIT

1. Turn ignition switch OFF.
2. Disconnect ECM harness connector.
3. Check the continuity between battery current sensor harness connector and ECM harness connector.

Battery current sensor		ECM		Continuity
Connector	Terminal	Connector	Terminal	
F34	2	F79	68	Existed

4. Also check harness for short to ground and short to power.

Is the inspection result normal?

YES >> Check sensor power supply 2 circuit. Refer to EC-510, "Diagnosis Procedure".
NO >> Repair or replace error-detected parts.

3. CHECK BATTERY TEMPERATURE SENSOR GROUND CIRCUIT

1. Turn ignition switch OFF.
2. Disconnect ECM harness connector.
3. Check the continuity between battery current sensor harness connector and ECM harness connector.

Battery current sensor		ECM		Continuity
Connector	Terminal	Connector	Terminal	
F34	3	F79	64	Existed

Is the inspection result normal?

YES >> GO TO 4.
NO >> Repair open circuit, short to ground or short to power in harness or connectors.

4. CHECK BATTERY TEMPERATURE SENSOR

Check battery temperature sensor. Refer to EC-424, "Component Inspection (Battery Temperature Sensor)".

Is the inspection result normal?

YES >> Check intermittent incident. Refer to GI-47, "Intermittent Incident".
NO >> Replace battery negative cable assembly.

Component Inspection (Battery Temperature Sensor)

INFOID:0000000011148733

1. CHECK BATTERY TEMPERATURE SENSOR

1. Turn ignition switch OFF.
2. Disconnect battery current sensor.
3. Check the resistance between battery current sensor connector terminals.

Battery current sensor	Resistance
Terminal	
2 and 3	continuity with the resistance value 100 Ω or more

Is the inspection result normal?

YES >> INSPECTION END
NO >> Replace battery negative cable assembly.

P1564 ASCD STEERING SWITCH

DTC Logic

INFOID:0000000011148734

DTC DETECTION LOGIC

NOTE:
If DTC P1564 is displayed with DTC P0605, first perform the trouble diagnosis for DTC P0605. Refer to EC-390, "DTC Logic".

DTC No.	CONSULT screen terms (Trouble diagnosis content)	DTC detecting condition	Possible cause
P1564	ASCD SW (ASCD steering switch)	• An excessively high voltage signal from the ASCD steering switch is sent to ECM. • ECM detects that input signal from the ASCD steering switch is out of the specified range. • ECM detects that the ASCD steering switch is stuck ON.	• Harness or connectors (The switch circuit is open or shorted.) • ASCD steering switch • ECM

DTC CONFIRMATION PROCEDURE

1.PRECONDITIONING

If DTC Confirmation Procedure has been previously conducted, always perform the following before conducting the next test.
1. Turn ignition switch OFF and wait at least 10 seconds.
2. Turn ignition switch ON.
3. Turn ignition switch OFF and wait at least 10 seconds.

>> GO TO 2.

2.PERFORM DTC CONFIRMATION PROCEDURE

1. Turn ignition switch ON and wait at least 10 seconds.
2. Press MAIN switch for at least 10 seconds, then release it and wait at least 10 seconds.
3. Press CANCEL switch for at least 10 seconds, then release it and wait at least 10 seconds.
4. Press RESUME/ACCELERATE switch for at least 10 seconds, then release it and wait at least 10 seconds.
5. Press SET/COAST switch for at least 10 seconds, then release it and wait at least 10 seconds.
6. Check DTC.

Is DTC detected?

YES >> Proceed to EC-425, "Diagnosis Procedure".
NO >> INSPECTION END

Diagnosis Procedure

INFOID:0000000011148735

1.CHECK ASCD STEERING SWITCH CIRCUIT

With CONSULT
1. Turn ignition switch ON.
2. Select “MAIN SW”, “CANCEL SW”, “RESUME/ACC SW” and “SET SW” in “DATA MONITOR” mode with CONSULT.
3. Check each item indication under the following conditions.

Monitor item	Condition		Indication
MAIN SW	ON/OFF (MAIN) switch	Pressed	ON
		Released	OFF
CANCEL SW	CANCEL switch	Pressed	ON
		Released	OFF

Monitor item	Condition		Indication
RESUME/ACC SW	ACCEL/RES switch	Pressed	ON
		Released	OFF
SET SW	COAST/SET switch	Pressed	ON
		Released	OFF

Without CONSULT

1. Turn ignition switch ON.
2. Check the voltage between ECM harness connector terminals under the following conditions.

ECM			Condition	Voltage (V)
Con-nector	+	–		
	Terminal	Terminal		
E32	134	135	ON/OFF (MAIN) switch: Pressed	Approx. 0
			CANCEL switch: Pressed	Approx. 1
			COAST/SET switch: Pressed	Approx. 2
			ACCEL/RES switch: Pressed	Approx. 3
			All ASCD steering switches: Released	Approx. 4

Is the inspection result normal?

YES >> Check intermittent incident. Refer to GI-47, "Intermittent Incident".
NO >> GO TO 2.

2. CHECK ASCD STEERING SWITCH GROUND CIRCUIT

1. Turn ignition switch OFF.
2. Disconnect ECM harness connector.
3. Disconnect combination switch harness connector M149.
4. Check the continuity between combination switch and ECM harness connector.

Combination switch	ECM		Continuity
Terminal	Connector	Terminal	
16	E32	135	Existed

5. Also check harness for short to ground and short to power.

Is the inspection result normal?

YES >> GO TO 3.
NO >> Repair or replace error-detected parts.

3. CHECK ASCD STEERING SWITCH INPUT SIGNAL CIRCUIT

1. Check the continuity between combination switch and ECM harness connector.

Combination switch	ECM		Continuity
Terminal	Connector	Terminal	
13	E32	134	Existed

2. Also check harness for short to ground and short to power.

Is the inspection result normal?

YES >> GO TO 4.
NO >> Repair or replace error-detected parts.

4. CHECK ASCD STEERING SWITCH

Check ASCD steering switch. Refer to EC-427, "Component Inspection".

Is the inspection result normal?

YES >> Check intermittent incident. Refer to GI-47, "Intermittent Incident".
NO >> Replace ASCD steering switch. Refer to ST-45, "Removal and Installation".

Component Inspection

INFOID:0000000011148736

1. CHECK ASCD STEERING SWITCH

1. Turn ignition switch OFF.
2. Disconnect combination switch (spiral cable) harness connector.
3. Check resistance between combination switch harness connector terminals as per the following.

Combination switch		Condition	Resistance (Ω)
Connector	Terminals		
M149	13 and 16	ON/OFF (MAIN) switch: Pressed	Approx. 0
		CANCEL switch: Pressed	Approx. 250
		COAST/SET switch: Pressed	Approx. 660
		ACCEL/RES switch: Pressed	Approx. 1,480
		All ASCD steering switches: Released	Approx. 4,000

Is the inspection result normal?

YES >> INSPECTION END
NO >> Replace ASCD steering switch. Refer to ST-45, "Removal and Installation".

P1572 ASCD BRAKE SWITCH

Description

INFOID:0000000011148737

When the brake pedal is depressed, brake pedal position switch is turned OFF and stop lamp switch is turned ON. ECM detects the state of the brake pedal by this input of two kinds (ON/OFF signal).
Refer to EC-45, "AUTOMATIC SPEED CONTROL DEVICE (ASCD) : System Description" for the ASCD function.

DTC Logic

INFOID:0000000011148738

DTC DETECTION LOGIC

NOTE:
- **If DTC P1572 is displayed with DTC P0605, first perform the trouble diagnosis for DTC P0605. Refer to EC-390, "DTC Logic".**
- **This self-diagnosis has the one trip detection logic. When malfunction A is detected, DTC is not stored in ECM memory. And in that case, 1st trip DTC and 1st trip freeze frame data are displayed. 1st trip DTC is erased when ignition switch OFF. And even when malfunction A is detected in two consecutive trips, DTC is not stored in ECM memory.**

DTC No.	CONSULT screen terms (Trouble diagnosis content)	DTC detecting condition		Possible cause
P1572	ASCD BRAKE SW (Brake pedal position switch)	A)	When the vehicle speed is above 30 km/h (19 MPH), ON signals from the stop lamp switch and the brake pedal position switch are sent to the ECM at the same time.	• Harness or connectors (The stop lamp switch circuit is shorted.) • Harness or connectors (The brake pedal position switch circuit is shorted.) • Stop lamp switch • Brake pedal position switch • Incorrect stop lamp switch installation • Incorrect brake pedal position switch installation • ECM
		B)	brake pedal position switch signal is not sent to ECM for extremely long time while the vehicle is driving.	

DTC CONFIRMATION PROCEDURE

1. INSPECTION START

Do you have CONSULT?

Do you have CONSULT?

YES >> GO TO 2.
NO >> GO TO 5.

2. PRECONDITIONING

If DTC Confirmation Procedure has been previously conducted, always turn ignition switch OFF and wait at least 10 seconds before conducting the next test.

NOTE:
Procedure for malfunction B is not described here. It takes extremely long time to complete procedure for malfunction B. By performing procedure for malfunction A, the incident that causes malfunction B can be detected.

>> GO TO 3.

3. PERFORM DTC CONFIRMATION PROCEDURE FOR MALFUNCTION A-I

1. Start engine (VDC switch OFF).
2. Select “DATA MONITOR” mode with CONSULT.
3. Press MAIN switch and make sure that CRUISE lamp lights up.
4. Drive the vehicle for at least 5 consecutive seconds under the following conditions.
   CAUTION:
   Always drive vehicle at a safe speed.
   NOTE:

This procedure may be conducted with the drive wheels lifted in the shop or by driving the vehicle. If a road test is expected to be easier, it is unnecessary to lift the vehicle.

VHCL SPEED SE	More than 30 km/h (19 mph)
Selector lever	Suitable position

5. Check 1st trip DTC.

Is 1st trip DTC detected?

YES >> Go to EC-430, "Diagnosis Procedure".
NO >> GO TO 4.

4. PERFORM DTC CONFIRMATION PROCEDURE A-II

1. Drive the vehicle for at least 5 consecutive seconds under the following conditions.

CAUTION:
Always drive vehicle at a safe speed.
NOTE:
This procedure may be conducted with the drive wheels lifted in the shop or by driving the vehicle. If a road test is expected to be easier, it is unnecessary to lift the vehicle.

VHCL SPEED SE	More than 30 km/h (19 mph)
Selector lever	Suitable position
Driving location	Depress the brake pedal for more than five seconds so as not to come off from the above-mentioned vehicle speed.

2. Check 1st trip DTC.

Is 1st trip DTC detected?

YES >> Go to EC-430, "Diagnosis Procedure".
NO >> INSPECTION END

5. PERFORM COMPONENT FUNCTION CHECK

Perform component function check. Refer to EC-429, "Component Function Check".

NOTE:
Use component function check to check the overall function of brake pedal position switch. During this check, a DTC might not be confirmed.

Is the inspection result normal?

YES >> INSPECTION END
NO >> Go to EC-430, "Diagnosis Procedure".

Component Function Check

INFOID:0000000011148739

1. PERFORM COMPONENT FUNCTION CHECK

1. Turn ignition switch ON.
2. Check the voltage between ECM harness connectors.

ECM			Condition		Voltage
Connector	+ Terminal	– Terminal			
E32	140	152	Brake pedal	Slightly depressed	Approx. 0 V
				Fully released	Battery voltage

Is the inspection result normal?

YES >> INSPECTION END
NO >> GO TO 2.

2. PERFORM COMPONENT FUNCTION CHECK-II

Check the voltage between ECM harness connectors.

ECM			Condition		Voltage
Connector	+ Terminal	– Terminal			
E32	139	152	Brake pedal	Slightly depressed	Battery voltage
				Fully released	Approx. 0 V

Is the inspection result normal?

YES >> INSPECTION END
NO >> Go to EC-430, "Diagnosis Procedure".

Diagnosis Procedure

INFOID:0000000011148740

1. CHECK OVERALL FUNCTION-I

With CONSULT

1. Turn ignition switch ON.
2. Select “BRAKE SW1” in “DATA MONITOR” mode with CONSULT.
3. Check “BRAKE SW1” indication under the following conditions.

Monitor item	Condition		Indication
BRAKE SW1	Brake pedal	Slightly depressed	OFF
		Fully released	ON

Without CONSULT

1. Turn ignition switch ON.
2. Check the voltage between ECM harness connectors.

ECM			Condition		Voltage
Connector	+ Terminal	– Terminal			
E32	140	152	Brake pedal	Slightly depressed	Approx. 0 V
				Fully released	Battery voltage

Is the inspection result normal?

YES >> GO TO 2.
NO >> GO TO 3.

2. CHECK OVERALL FUNCTION-II

With CONSULT

Check “BRAKE SW2” indication in “DATA MONITOR” mode.

Monitor item	Condition		Indication
BRAKE SW2	Brake pedal	Slightly depressed	ON
		Fully released	OFF

Without CONSULT

Check the voltage between ECM harness connectors.

ECM			Condition		Voltage
Connector	+	–			
	Terminal				
E32	139	152	Brake pedal	Slightly depressed	Battery voltage
				Fully released	Approx. 0 V

Is the inspection result normal?

YES >> Check intermittent incident. Refer to GI-47, "Intermittent Incident".
NO >> GO TO 6.

3. CHECK BRAKE PEDAL POSITION SWITCH POWER SUPPLY

1. Turn ignition switch OFF.
2. Disconnect brake pedal position switch harness connector.
3. Turn ignition switch ON.
4. Check the voltage between brake pedal position switch harness connector and ground.

Brake pedal position switch		Ground	Voltage
Connector	Terminal		
E76	1	Ground	Battery voltage

Is the inspection result normal?

YES >> GO TO 4.
NO >> Repair or replace error-detected parts.

4. CHECK BRAKE PEDAL POSITION SWITCH INPUT SIGNAL CIRCUIT

1. Turn ignition switch OFF.
2. Disconnect ECM harness connector.
3. Check the continuity between brake pedal position switch harness connector and ECM harness connector.

Brake pedal position switch		ECM		Continuity
Connector	Terminal	Connector	Terminal	
E76	2	E32	140	Existed

4. Also check harness for short to ground and short to power.

Is the inspection result normal?

YES >> GO TO 5.
NO >> Repair open circuit, short to ground or short to power in harness or connectors.

5. CHECK BRAKE PEDAL POSITION SWITCH

Check brake pedal position switch. Refer to EC-433, "Component Inspection (Brake Pedal Position Switch)".

Is the inspection result normal?

YES >> Check intermittent incident. Refer to GI-47, "Intermittent Incident".
NO >> Replace brake pedal position switch. Refer to BR-20, "Removal and Installation".

6. CHECK STOP LAMP SWITCH SIGNAL CIRCUIT-I

1. Turn ignition switch OFF.
2. Remove stop lamp relay.
3. Check the voltage between stop lamp relay harness connector and ground.

+		–	Voltage
Stop lamp relay			
Connector	Terminal		
E39	3	Ground	Battery voltage

Is the inspection result normal?

YES >> GO TO 7.
NO >> Repair open circuit, short to ground or short to power in harness or connectors.

7. CHECK STOP LAMP SWITCH SIGNAL CIRCUIT-II

1. Check the continuity between stop lamp relay harness connector and ECM harness connector.

Stop lamp relay		ECM		Continuity
Connector	Terminal	Connector	Terminal	
E39	5	E32	139	Existed

2. Also check harness for short to ground and short to power.

Is the inspection result normal?

YES >> GO TO 8.
NO >> Repair open circuit, short to ground or short to power in harness or connectors.

8. CHECK STOP LAMP RELAY POWER SUPPLY CIRCUIT-I

Check the voltage between stop lamp relay harness connector terminals.

Stop lamp relay			Condition		Voltage
Connector	+	–			
	Terminal				
E39	1	2	Brake pedal	Slightly depressed	Battery voltage
				Fully released	Approx. 0 V

Is the inspection result normal?

YES >> GO TO 9.
NO >> GO TO 10.

9. CHECK STOP LAMP RELAY

Check stop lamp relay. Refer to EC-434, "Component Inspection (Stop Lamp Relay)".

Is the inspection result normal?

YES >> Check intermittent incident. Refer to GI-47, "Intermittent Incident".
NO >> Replace stop lamp relay.

10. CHECK STOP LAMP RELAY GROUND CIRCUIT

Check the continuity between stop lamp relay harness connector and ground.

Stop lamp relay		—	Continuity
Connector	Terminal		
E39	2	Ground	Existed

Is the inspection result normal?

YES >> GO TO 11.
NO >> Repair or replace error-detected parts.

11. CHECK STOP LAMP SWITCH POWER SUPPLY CIRCUIT

1. DIsconnect stop lamp switch harness connector.
2. Check the voltage between stop lamp switch harness connector and ground.

+		–	Voltage
Stop lamp switch			
Connector	Terminal		
E38	1	Ground	Battery voltage

Is the inspection result normal?

YES >> GO TO 12.
NO >> Repair open circuit, short to ground or short to power in harness or connectors.

12. CHECK STOP LAMP RELAY POWER SUPPLY CIRCUIT-II

1. Check the continuity between stop lamp switch harness connector and stop lamp relay harness connector.

Stop lamp switch		Stop lamp relay		Continuity
Connector	Terminal	Connector	Terminal	
E38	2	E39	1	Existed

2. Also check harness for short to ground and short to power.

Is the inspection result normal?

YES >> GO TO 13.
NO >> Repair open circuit, short to ground or short to power in harness or connectors.

13. CHECK STOP LAMP SWITCH

Check stop lamp switch. Refer to EC-433, "Component Inspection (Stop Lamp Switch)".

Is the inspection result normal?

YES >> Check intermittent incident. Refer to GI-47, "Intermittent Incident".
NO >> Replace stop lamp switch. Refer to BR-20, "Removal and Installation".

Component Inspection (Brake Pedal Position Switch)

INFOID:0000000011148741

1. CHECK BRAKE PEDAL POSITION SWITCH-I

1. Turn ignition switch OFF.
2. Disconnect brake pedal position switch harness connector.
3. Check the continuity between brake pedal position switch terminals under the following conditions.

Terminals	Condition		Continuity
1 and 2	Brake pedal	Fully released	Existed
		Slightly depressed	Not existed

Is the inspection result normal?

YES >> INSPECTION END
NO >> GO TO 2.

2. CHECK BRAKE PEDAL POSITION SWITCH-II

1. Adjust brake pedal position switch installation. Refer to BR-15, "Adjustment".
2. Check the continuity between brake pedal position switch terminals under the following conditions.

Terminals	Condition		Continuity
1 and 2	Brake pedal	Fully released	Existed
		Slightly depressed	Not existed

Is the inspection result normal?

YES >> INSPECTION END
NO >> Replace brake pedal position switch. Refer to BR-20, "Removal and Installation".

Component Inspection (Stop Lamp Switch)

INFOID:0000000011148742

1. CHECK STOP LAMP SWITCH-I

1. Turn ignition switch OFF.
2. Disconnect stop lamp switch harness connector.
3. Check harness continuity between stop lamp switch terminals under the following conditions.

Terminals	Condition		Continuity
1 and 2	Brake pedal	Fully released	Not existed
		Slightly depressed	Existed

Is the inspection result normal?

YES >> INSPECTION END
NO >> GO TO 2.

2. CHECK STOP LAMP SWITCH-II

1. Adjust stop lamp switch installation. Refer to BR-15, "Adjustment".
2. Check harness continuity between stop lamp switch terminals under the following conditions.

Terminals	Condition		Continuity
1 and 2	Brake pedal	Fully released	Not existed
		Slightly depressed	Existed

Is the inspection result normal?

YES >> INSPECTION END
NO >> Replace stop lamp switch. Refer to BR-20, "Removal and Installation".

Component Inspection (Stop Lamp Relay)

INFOID:0000000011615803

1. CHECK STOP LAMP RELAY

1. Turn ignition switch OFF.
2. Remove stop lamp relay.
3. Check the continuity between stop lamp relay terminals under the following conditions.

Terminals	Condition	Continuity
3 and 5	12V direct current supply between terminals 1 and 2	Existed
	No current supply	Not existed

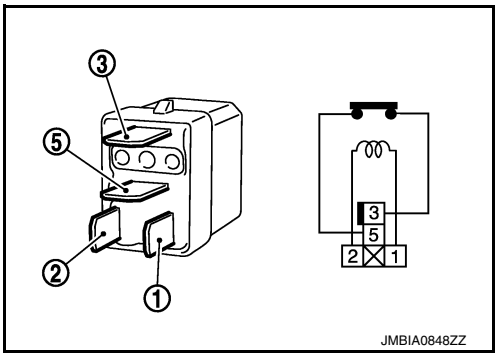

Is the inspection result normal?

YES >> INSPECTION END
NO >> Replace stop lamp relay.

P1574 ASCD VEHICLE SPEED SENSOR

Description

INFOID:0000000011148743

The ECM receives two vehicle speed signals via CAN communication line. One is sent from combination meter, and the other is from TCM (Transmission control module). The ECM uses these signals for ASCD control. Refer to EC-45, "AUTOMATIC SPEED CONTROL DEVICE (ASCD) : System Description" for ASCD functions.

DTC Logic

INFOID:0000000011148744

DTC DETECTION LOGIC

NOTE:
- **If DTC P1574 is displayed with DTC UXXXX, first perform the trouble diagnosis for DTC UXXXX.**
- **If DTC P1574 is displayed with DTC P0500, first perform the trouble diagnosis for DTC P0500. Refer to EC-367, "DTC Logic".**
- **If DTC P1574 is displayed with DTC P0605, first perform the trouble diagnosis for DTC P0605. Refer to EC-390, "DTC Logic".**
- **If DTC P1574 is displayed with DTC P0607, first perform the trouble diagnosis for DTC P0607. Refer to EC-392, "DTC Logic".**

DTC No.	CONSULT screen terms (Trouble diagnosis content)	DTC detecting condition	Possible cause
P1574	ASCD VHL SPD SEN (ASCD vehicle speed sensor)	The difference the between two vehicle speed signals is out of the specified range.	• Harness or connectors (The CAN communication line is open or shorted.) • Combination meter • ABS actuator and electric unit (control unit) • Wheel sensor • TCM • ECM

DTC CONFIRMATION PROCEDURE

1.PRECONDITIONING

If DTC Confirmation Procedure has been previously conducted, always perform the following before conducting the next test.
1. Turn ignition switch OFF and wait at least 10 seconds.
2. Turn ignition switch ON.
3. Turn ignition switch OFF and wait at least 10 seconds.

>> GO TO 2.

2.PERFORM DTC CONFIRMATION PROCEDURE

1. Start engine (VDC switch OFF).
2. Drive the vehicle at more than 40 km/h (25 MPH).
   CAUTION:
   Always drive vehicle at a safe speed.
   NOTE:
   This procedure may be conducted with the drive wheels lifted in the shop or by driving the vehicle. If a road test is expected to be easier, it is unnecessary to lift the vehicle.
3. Check DTC.

Is DTC detected?

YES >> Proceed to EC-435, "Diagnosis Procedure".
NO >> INSPECTION END

Diagnosis Procedure

INFOID:0000000011148745

1.CHECK DTC WITH TCM

Check DTC with TCM. Refer to TM-47, "CONSULT Function".

Is the inspection result normal?

YES >> GO TO 2.
NO >> Perform trouble shooting relevant to DTC indicated.

2. CHECK DTC WITH ABS ACTUATOR AND ELECTRIC UNIT (CONTROL UNIT)

Check DTC with ABS actuator and electric unit (control unit). Refer to BRC-165, "CONSULT Function".

Is the inspection result normal?

YES >> GO TO 3.
NO >> Repair or replace malfunctioning part.

3. CHECK COMBINATION METER FUNCTION

Check combination meter function. Refer to MWI-18, "CONSULT Function (METER/M&A)".

>> INSPECTION END

P1700 CVT CONTROL SYSTEM

Description

INFOID:0000000011148746

This DTC is displayed with other DTC regarding TCM. Perform the trouble diagnosis for corresponding DTC. Refer to EC-105, "DTC Index". When this DTC is detected, the ASCD control is canceled.

P1715 INPUT SPEED SENSOR (PRIMARY SPEED SENSOR)

Description

INFOID:0000000011148747

ECM receives input speed sensor signal from TCM via the CAN communication line. ECM uses this signal for engine control.

DTC Logic

INFOID:0000000011148748

DTC DETECTION LOGIC

NOTE:
- **If DTC P1715 is displayed with DTC UXXXX first perform the trouble diagnosis for DTC UXXXX.**
- **If DTC P1715 is displayed with DTC P0335, first perform the trouble diagnosis for DTC P0335. Refer to EC-315, "DTC Logic".**
- **If DTC P1715 is displayed with DTC P0340, P0345, first perform the trouble diagnosis for DTC P0340, P0345. Refer to EC-318, "DTC Logic".**
- **If DTC P1715 is displayed with DTC P0605, first perform the trouble diagnosis for DTC P0605. Refer to EC-390, "DTC Logic".**
- **If DTC P1715 is displayed with DTC P0607, first perform the trouble diagnosis for DTC P0607. Refer to EC-392, "DTC Logic".**

DTC No.	CONSULT screen terms (Trouble diagnosis content)	DTC detecting condition	Possible cause
P1715	IN PULY SPEED [Input speed sensor (Primary speed sensor) (TCM output)]	Input speed sensor signal is different from the theoretical value calculated by ECM from output speed sensor signal and engine rpm signal.	• Harness or connectors (The CAN communication line is open or shorted) • Harness or connectors (Input speed sensor circuit is open or shorted) • TCM

DTC CONFIRMATION PROCEDURE

1.PRECONDITIONING

If DTC Confirmation Procedure has been previously conducted, always perform the following before conducting the next test.
1. Turn ignition switch OFF and wait at least 10 seconds.
2. Turn ignition switch ON.
3. Turn ignition switch OFF and wait at least 10 seconds.

>> GO TO 2.

2.PERFORM DTC CONFIRMATION PROCEDURE

1. Start engine.
2. Drive vehicle at a speed of more than 50 km/h (31 MPH) for at least 5 seconds.
3. Check 1st trip DTC.

Is 1st trip DTC detected?

YES >> Proceed to EC-438, "Diagnosis Procedure".
NO >> INSPECTION END

Diagnosis Procedure

INFOID:0000000011148749

1.CHECK DTC WITH TCM

Check DTC with TCM. Refer to TM-63, "DTC Index".

Is the inspection result normal?

YES >> Replace TCM. Refer to TM-198, "Removal and Installation".
NO >> Perform trouble shooting relevant to DTC indicated.

P1800 VIAS CONTROL SOLENOID VALVE 1

DTC Logic

INFOID:0000000011148750

DTC DETECTION LOGIC

DTC No.	CONSULT screen terms (Trouble diagnosis content)	DTC detecting condition	Possible cause
P1800	VIAS S/V CIRC-B1 (VIAS solenoid valve circuit bank 1)	An excessively low or high voltage signal is sent to ECM through the VIAS control solenoid valve 1.	• Harness or connectors (The solenoid valve 1 circuit is open or shorted.) • VIAS control solenoid valve 1

DTC CONFIRMATION PROCEDURE

1. CONDITIONING

If DTC Confirmation Procedure has been previously conducted, always perform the following before conducting the next test.

1. Turn ignition switch OFF and wait at least 10 seconds.
2. Turn ignition switch ON.
3. Turn ignition switch OFF and wait at least 10 seconds.

TESTING CONDITION:
Before performing the following procedure, confirm battery voltage is more than 11 V at idle.

>> GO TO 2.

2. PERFORM DTC CONFIRMATION PROCEDURE

1. Start engine and let it idle for at least 5 seconds.
2. Check 1st trip DTC.

Is 1st trip DTC detected?

YES >> Proceed to EC-439, "Diagnosis Procedure".
NO >> INSPECTION END

Diagnosis Procedure

INFOID:0000000011148751

1. CHECK VIAS CONTROL SOLENOID VALVE 1 POWER SUPPLY

1. Turn ignition switch OFF.
2. Disconnect VIAS control solenoid valve 1 harness connector.
3. Turn ignition switch ON.
4. Check the voltage between VIAS control solenoid valve 1 harness connector and ground.

VIAS control solenoid valve 1		Ground	Voltage
Connector	Terminal		
F66	1	Ground	Battery voltage

Is the inspection result normal?

YES >> GO TO 2.
NO >> Repair open circuit, short to ground or short to power in harness or connectors.

2. CHECK VIAS CONTROL SOLENOID VALVE 1 OUTPUT SIGNAL CIRCUIT

1. Turn ignition switch OFF.
2. Disconnect ECM harness connector.
3. Check the continuity between VIAS control solenoid valve 1 harness connector and ECM harness connector.

VIAS control solenoid valve 1		ECM		Continuity
Connector	Terminal	Connector	Terminal	
F66	2	F79	108	Existed

4. Also check harness for short to ground and short to power.

Is the inspection result normal?

YES >> GO TO 3.
NO >> Repair open circuit, short to ground or short to power in harness or connectors.

3. CHECK VIAS CONTROL SOLENOID VALVE 1

Check VIAS control solenoid valve 1. Refer to EC-440, "Component Inspection".

Is the inspection result normal?

YES >> Check intermittent incident. Refer to GI-47, "Intermittent Incident".
NO >> Replace VIAS control solenoid valve 1. Refer to EC-20, "ENGINE CONTROL SYSTEM : Component Parts Location".

Component Inspection

INFOID:0000000011148752

1. CHECK VIAS CONTROL SOLENOID VALVE 1

With CONSULT

1. Turn ignition switch OFF.
2. Reconnect all harness connectors disconnected.
3. Disconnect vacuum hoses connected to VIAS control solenoid valve 1.
4. Turn ignition switch ON.
5. Select “VIAS S/V-1” in “ACTIVE TEST” mode with CONSULT.
6. Check air passage continuity and operation delay time under the following conditions.

Condition (VIAS S/V-1)	Air passage continuity between Ⓐ and Ⓑ	Air passage continuity between Ⓐ and Ⓒ
ON	Existed	Not existed
OFF	Not existed	Existed

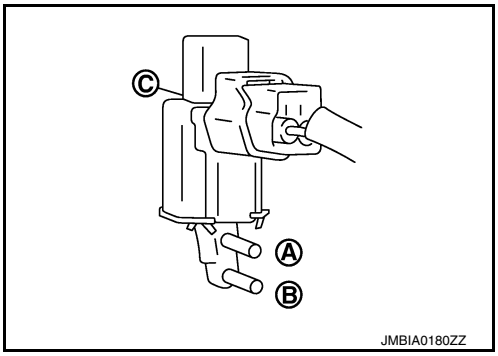

Without CONSULT

1. Turn ignition switch OFF.
2. Disconnect VIAS control solenoid valve 1 harness connector.
3. Disconnect vacuum hoses connected to VIAS volume control solenoid valve 1.
4. Check air passage continuity and operation delay time under the following conditions.

Condition	Air passage continuity between Ⓐ and Ⓑ	Air passage continuity between Ⓐ and Ⓒ
12 V direct current supply between terminals 1 and 2	Existed	Not existed
No supply	Not existed	Existed

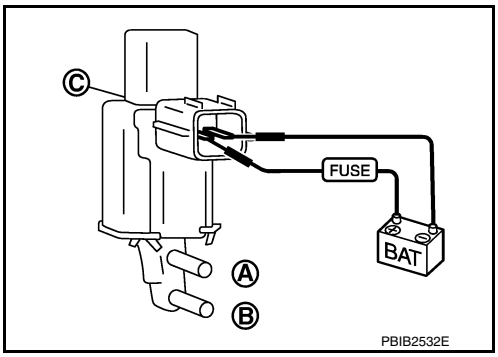

Is the inspection result normal?

YES >> INSPECTION END
NO >> Replace VIAS control solenoid valve 1. Refer to EC-20, "ENGINE CONTROL SYSTEM : Component Parts Location".

P1801 VIAS CONTROL SOLENOID VALVE 2

DTC Logic

INFOID:0000000011148753

DTC DETECTION LOGIC

DTC No.	CONSULT screen terms (Trouble diagnosis content)	DTC detecting condition	Possible cause
P1801	VIAS S/V CIRC-B2 (VIAS solenoid valve circuit bank 2)	An excessively low or high voltage signal is sent to ECM through the VIAS control solenoid valve 2.	• Harness or connectors (The solenoid valve 2 circuit is open or shorted.) • VIAS control solenoid valve 2

DTC CONFIRMATION PROCEDURE

1.CONDITIONING

If DTC Confirmation Procedure has been previously conducted, always perform the following before conducting the next test.

1. Turn ignition switch OFF and wait at least 10 seconds.
2. Turn ignition switch ON.
3. Turn ignition switch OFF and wait at least 10 seconds.

TESTING CONDITION:
Before performing the following procedure, confirm battery voltage is more than 11 V at idle.

>> GO TO 2.

2.PERFORM DTC CONFIRMATION PROCEDURE

1. Start engine and let it idle for at least 5 seconds.
2. Check 1st trip DTC.

Is 1st trip DTC detected?

YES >> Proceed to EC-441, "Diagnosis Procedure".
NO >> INSPECTION END

Diagnosis Procedure

INFOID:0000000011148754

1.CHECK VIAS CONTROL SOLENOID VALVE 2 POWER SUPPLY

1. Turn ignition switch OFF.
2. Disconnect VIAS control solenoid valve 2 harness connector.
3. Turn ignition switch ON.
4. Check the voltage between VIAS control solenoid valve 2 harness connector and ground.

VIAS control solenoid valve 2		Ground	Voltage
Connector	Terminal		
F67	1	Ground	Battery voltage

Is the inspection result normal?

YES >> GO TO 2.
NO >> Repair open circuit, short to ground or short to power in harness or connectors.

2.CHECK VIAS CONTROL SOLENOID VALVE 2 OUTPUT SIGNAL CIRCUIT FOR OPEN AND SHORT

1. Turn ignition switch OFF.
2. Disconnect ECM harness connector.
3. Check the continuity between VIAS control solenoid valve 2 harness connector and ECM harness connector.

VIAS control solenoid valve 2		ECM		Continuity
Connector	Terminal	Connector	Terminal	
F67	2	F79	102	Existed

4. Also check harness for short to ground and short to power.

Is the inspection result normal?

YES >> GO TO 3.
NO >> Repair open circuit, short to ground or short to power in harness or connectors.

3. CHECK VIAS CONTROL SOLENOID VALVE 2

Check VIAS control solenoid valve 2. Refer to EC-442, "Component Inspection".

Is the inspection result normal?

YES >> Check intermittent incident. Refer to GI-47, "Intermittent Incident".
NO >> Replace VIAS control solenoid valve 2. Refer to EC-20, "ENGINE CONTROL SYSTEM : Component Parts Location".

Component Inspection

INFOID:0000000011148755

1. CHECK VIAS CONTROL SOLENOID VALVE 2

With CONSULT

1. Turn ignition switch OFF.
2. Reconnect all harness connectors disconnected.
3. Disconnect vacuum hoses connected to VIAS control solenoid valve 2.
4. Turn ignition switch ON.
5. Select “VIAS S/V-2” in “ACTIVE TEST” mode with CONSULT.
6. Check air passage continuity and operation delay time under the following conditions.

Condition (VIAS S/V-2)	Air passage continuity between Ⓐ and Ⓑ	Air passage continuity between Ⓐ and Ⓒ
ON	Existed	Not existed
OFF	Not existed	Existed

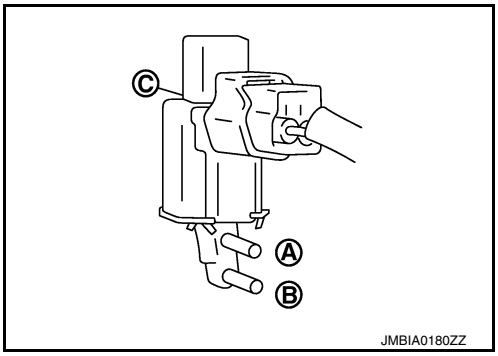

Without CONSULT

1. Turn ignition switch OFF.
2. Disconnect VIAS control solenoid valve 2 harness connector.
3. Disconnect vacuum hoses connected to VIAS volume control solenoid valve 2.
4. Check air passage continuity and operation delay time under the following conditions.

Condition	Air passage continuity between Ⓐ and Ⓑ	Air passage continuity between Ⓐ and Ⓒ
12 V direct current supply between terminals 1 and 2	Existed	Not existed
No supply	Not existed	Existed

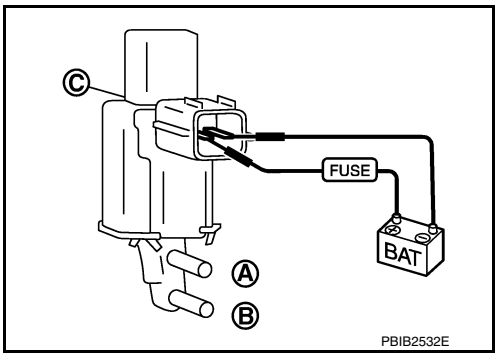

Is the inspection result normal?

YES >> INSPECTION END
NO >> Replace VIAS control solenoid valve 2. Refer to EC-20, "ENGINE CONTROL SYSTEM : Component Parts Location".

P1805 BRAKE SWITCH

Description

INFOID:0000000011148756

Brake switch signal is applied to the ECM via the stop lamp switch when the brake pedal is depressed. This signal is used mainly to decrease the engine speed when the vehicle is driven.

DTC Logic

INFOID:0000000011148757

DTC DETECTION LOGIC

DTC No.	CONSULT screen terms (Trouble diagnosis content)	DTC detecting condition	Possible cause
P1805	BRAKE SW/CIRCUIT (Stop lamp switch circuit)	A brake switch signal is not sent to ECM for extremely long time while the vehicle is driving.	• Harness or connectors (Stop lamp switch circuit is open or shorted.) • Stop lamp switch

DTC CONFIRMATION PROCEDURE

1. PERFORM DTC CONFIRMATION PROCEDURE

1. Turn ignition switch ON.
2. Fully depress the brake pedal for at least 5 seconds.
3. Erase the DTC with CONSULT.
4. Check 1st trip DTC.

Is 1st trip DTC detected?

YES >> Go to EC-443, "Diagnosis Procedure".
NO >> INSPECTION END

Diagnosis Procedure

INFOID:0000000011148758

1. CHECK STOP LAMP SWITCH CIRCUIT

1. Turn ignition switch OFF.
2. Check the stop lamp when depressing and releasing the brake pedal.

Brake pedal	Stop lamp
Fully released	Not illuminated
Slightly depressed	Illuminated

Is the inspection result normal?

YES >> Check intermittent incident. Refer to GI-47, "Intermittent Incident".
NO >> GO TO 2.

2. CHECK STOP LAMP SWITCH SIGNAL CIRCUIT-I

1. Turn ignition switch OFF.
2. Remove stop lamp relay.
3. Check the voltage between stop lamp relay harness connector and ground.

+		–	Voltage
Stop lamp relay			
Connector	Terminal		
E39	3	Ground	Battery voltage

Is the inspection result normal?

YES >> GO TO 3.
NO >> Repair open circuit, short to ground or short to power in harness or connectors.

3. CHECK STOP LAMP SWITCH SIGNAL CIRCUIT-II

1. Check the continuity between stop lamp relay harness connector and ECM harness connector.

Stop lamp relay		ECM		Continuity
Connector	Terminal	Connector	Terminal	
E39	5	E32	139	Existed

2. Also check harness for short to ground and short to power.

Is the inspection result normal?

YES >> GO TO 4.
NO >> Repair open circuit, short to ground or short to power in harness or connectors.

4. CHECK STOP LAMP RELAY POWER SUPPLY CIRCUIT-I

Check the voltage between stop lamp relay harness connector terminals.

Stop lamp relay			Condition		Voltage
Connector	+	–			
	Terminal				
E39	1	2	Brake pedal	Slightly depressed	Battery voltage
				Fully released	Approx. 0 V

Is the inspection result normal?

YES >> GO TO 5.
NO >> GO TO 6.

5. CHECK STOP LAMP RELAY

Check stop lamp relay. Refer to EC-445, "Component Inspection (Stop Lamp Relay)".

Is the inspection result normal?

YES >> Check intermittent incident. Refer to GI-47, "Intermittent Incident".
NO >> Replace stop lamp relay.

6. CHECK STOP LAMP RELAY GROUND CIRCUIT

Check the continuity between stop lamp relay harness connector and ground.

Stop lamp relay		—	Continuity
Connector	Terminal		
E39	2	Ground	Existed

Is the inspection result normal?

YES >> GO TO 7.
NO >> Repair or replace error-detected parts.

7. CHECK STOP LAMP SWITCH POWER SUPPLY CIRCUIT

1. DIsconnect stop lamp switch harness connector.
2. Check the voltage between stop lamp switch harness connector and ground.

+		–	Voltage
Stop lamp switch			
Connector	Terminal		
E38	1	Ground	Battery voltage

Is the inspection result normal?

YES >> GO TO 8.
NO >> Repair open circuit, short to ground or short to power in harness or connectors.

8. CHECK STOP LAMP RELAY POWER SUPPLY CIRCUIT-II

1. Check the continuity between stop lamp switch harness connector and stop lamp relay harness connector.

Stop lamp switch		Stop lamp relay		Continuity
Connector	Terminal	Connector	Terminal	
E38	2	E39	1	Existed

2. Also check harness for short to ground and short to power.

Is the inspection result normal?

YES >> GO TO 9.
NO >> Repair open circuit, short to ground or short to power in harness or connectors.

9. CHECK STOP LAMP SWITCH

Check stop lamp switch. Refer to EC-445, "Component Inspection (Stop Lamp Switch)".

Is the inspection result normal?

YES >> Check intermittent incident. Refer to GI-47, "Intermittent Incident".
NO >> Replace stop lamp switch. Refer to BR-20, "Removal and Installation".

Component Inspection (Stop Lamp Switch)

INFOID:0000000011148759

1. CHECK STOP LAMP SWITCH-I

1. Turn ignition switch OFF.
2. Disconnect stop lamp switch harness connector.
3. Check harness continuity between stop lamp switch terminals under the following conditions.

Terminals	Condition		Continuity
1 and 2	Brake pedal	Fully released	Not existed
		Slightly depressed	Existed

Is the inspection result normal?

YES >> INSPECTION END
NO >> GO TO 2.

2. CHECK STOP LAMP SWITCH-II

1. Adjust stop lamp switch installation. Refer to BR-15, "Adjustment".
2. Check harness continuity between stop lamp switch terminals under the following conditions.

Terminals	Condition		Continuity
1 and 2	Brake pedal	Fully released	Not existed
		Slightly depressed	Existed

Is the inspection result normal?

YES >> INSPECTION END
NO >> Replace stop lamp switch. Refer to BR-20, "Removal and Installation".

Component Inspection (Stop Lamp Relay)

INFOID:0000000011615936

1. CHECK STOP LAMP RELAY

1. Turn ignition switch OFF.
2. Remove stop lamp relay.

3. Check the continuity between stop lamp relay terminals under the following conditions.

Terminals	Condition	Continuity
3 and 5	12V direct current supply between terminals 1 and 2	Existed
	No current supply	Not existed

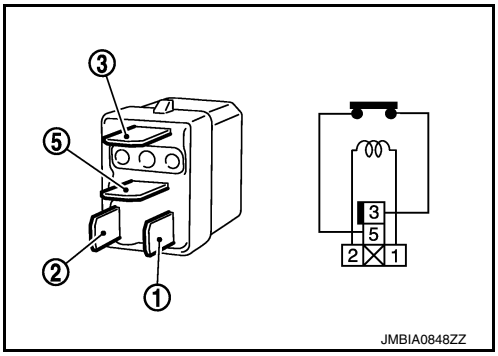

Is the inspection result normal?

YES >> INSPECTION END
NO >> Replace stop lamp relay.

P2096, P2097, P2098, P2099 A/F SENSOR 1

DTC Logic

INFOID:0000000011148760

DTC DETECTION LOGIC

DTC No.	Trouble diagnosis name (Trouble diagnosis content)	DTC detecting condition	Possible Cause
P2096	POST CAT FUEL TRIM SYS B1 (Post catalyst fuel trim system too lean bank 1)	The output voltage computed by ECM from the A/F sensor 1 signal is shifts to the lean side for a specified period.	• A/F sensor 1 (bank 1) • A/F sensor 1 heater • Heated oxygen sensor 2 (bank 1) • Fuel pressure • Fuel injector • Intake air leaks • Exhaust gas leaks
P2097	POST CAT FUEL TRIM SYS B1 (Post catalyst fuel trim system too rich bank 1)	The A/F signal computed by ECM from the A/F sensor 1 signal is shifts to the rich side for a specified period.	
P2098	POST CAT FUEL TRIM SYS B2 (Post catalyst fuel trim system too lean bank 2)	The output voltage computed by ECM from the A/F sensor 1 signal is shifts to the lean side for a specified period.	• A/F sensor 1 (bank 2) • A/F sensor 1 heater • Heated oxygen sensor 2 (bank 2) • Fuel pressure • Fuel injector • Intake air leaks • Exhaust gas leaks
P2099	POST CAT FUEL TRIM SYS B2 (Post catalyst fuel trim system too rich bank 2)	The A/F signal computed by ECM from the A/F sensor 1 signal is shifts to the rich side for a specified period.	

DTC CONFIRMATION PROCEDURE

1.PRECONDITIONING

If DTC Confirmation Procedure has been previously conducted, always perform the following before conducting the next test.

1. Turn ignition switch OFF and wait at least 10 seconds.
2. Turn ignition switch ON.
3. Turn ignition switch OFF and wait at least 10 seconds.

TESTING CONDITION:

Before performing the following procedure, confirm that battery voltage is more than 11 V at idle.

>> GO TO 2.

2.PERFORM DTC CONFIRMATION PROCEDURE

1. Clear the mixture ratio self-learning value. Refer to EC-162, "Work Procedure".
2. Turn ignition switch OFF and wait at least 10 seconds.
3. Turn ignition switch ON.
4. Turn ignition switch OFF and wait at least 10 seconds.
5. Start engine and keep the engine speed between 3,500 and 4,000 rpm for 1 minute under no load.
6. Let engine idle for 1 minute.
7. Keep engine speed between 2,500 and 3,000 rpm for 20 minutes.
8. Check 1st trip DTC.

Is 1st trip DTC detected?

YES >> Proceed to EC-447, "Diagnosis Procedure".
NO >> INSPECTION END

Diagnosis Procedure

INFOID:0000000011148761

1.RETIGHTEN A/F SENSOR 1 AND HEATED OXYGEN SENSOR 2

Loosen and retighten the A/F sensor 1 and heated oxygen sensor 2. Refer to EM-31, "Removal and Installation (bank 2)", EM-33, "Removal and Installation (bank 1)".

>> GO TO 2.

2. CHECK FOR EXHAUST GAS LEAK

1. Start engine and run it at idle.
2. Listen for an exhaust gas leak before the three way catalyst 2.

Is exhaust gas leak detected?

YES >> Repair or replace.
NO >> GO TO 3.

3. CHECK FOR INTAKE AIR LEAKAGE

1. Start engine and run it at idle.
2. Listen for an intake air leakage after the mass air flow sensor.

Is intake air leakage detected?

YES >> GO TO 4.
NO >> Repair or replace malfunctioning part.

4. CLEAR THE MIXTURE RATIO SELF-LEARNING VALUE

1. Clear the mixture ratio self-learning value. Refer to EC-162, "Work Procedure".
2. Run engine for at least 10 minutes at idle speed.

Is the 1st trip DTC P0171, P0172, P0174 or P0175 detected? Is it difficult to start engine?

YES >> Perform trouble diagnosis for DTC P0171, P0174 or P0172, P0175. Refer to EC-284, "DTC Logic" or EC-288, "DTC Logic".
NO >> GO TO 5.

5. CHECK HARNESS CONNECTOR

1. Turn ignition switch OFF.
2. Disconnect A/F sensor 1 harness connector.
3. Check harness connector for water.

Water should not exit.

Is the inspection result normal?

YES >> GO TO 6.
NO >> Repair or replace harness connector.

6. CHECK AIR FUEL RATIO (A/F) SENSOR 1 POWER SUPPLY

1. Disconnect A/F sensor 1 harness connector.
2. Turn ignition switch ON.
3. Check the voltage between A/F sensor 1 harness connector and ground.

DTC	A/F sensor			Ground	Voltage (V)
	Bank	Connector	Terminal		
P2096 P2097	1	F72	1	Ground	Battery voltage
P2098 P2099	2	F73	1		

Is the inspection result normal?

YES >> GO TO 8.
NO >> GO TO 7.

7. CHECK AIR FUEL RATIO (A/F) SENSOR 1 POWER SUPPLY CIRCUIT

1. Turn ignition switch OFF.
2. Disconnect IPDM E/R harness connector.
3. Check the continuity between A/F sensor 1 harness connector and IPDM E/R harness connector.

DTC	A/F sensor 1			IPDM E/R		Continuity
	Bank	Connector	Terminal	Connector	Terminal	
P2096 P2097	1	F72	1	F19	52	Existed
P2098 P2099	2	F73	1		53	

Is the inspection result normal?

YES >> Perform the trouble diagnosis for power supply circuit.
NO >> Repair or replace error-detected parts.

8. CHECK A/F SENSOR 1 INPUT SIGNAL CIRCUIT FOR OPEN AND SHORT

1. Turn ignition switch OFF.
2. Disconnect ECM harness connector.
3. Check the continuity between A/F sensor 1 harness connector and ECM harness connector.

DTC	A/F sensor 1			ECM		Continuity
	Bank	Connector	Terminal	Connector	Terminal	
P2096 P2097	1	F72	3	F79	66	Existed
			4		67	
P2098 P2099	2	F73	3		76	
			4		77	

4. Check the continuity between A/F sensor 1 harness connector and ground, or ECM harness connector and ground.

DTC	A/F sensor 1			Ground	Continuity
	Bank	Connector	Terminal		
P2096 P2097	1	F72	3	Ground	Not existed
			4		
P2098 P2099	2	F73	3		
			4		

DTC	ECM		Ground	Continuity
	Connector	Terminal		
P2096 P2097	F79	66	Ground	Not existed
		67		
P2098 P2099		76		
		77		

5. Also check harness for short to power.

Is the inspection result normal?

YES >> GO TO 9.
NO >> Repair open circuit, short to ground or short to power in harness or connectors.

9. CHECK A/F SENSOR 1 HEATER

Check A/F sensor 1 heater. Refer to EC-207, "Component Inspection".

Is the inspection result normal?

YES >> GO TO 10.
NO >> GO TO 12.

10. CHECK HEATED OXYGEN SENSOR 2

Check heated oxygen sensor 2. Refer to EC-210, "Component Inspection".

Is the inspection result normal?

YES >> GO TO 11.
NO >> Replace malfunctioning heated oxygen sensor 2.

11. CHECK INTERMITTENT INCIDENT

Check intermittent incident. Perform GI-47, "Intermittent Incident".

Is the inspection result normal?

YES >> GO TO 12.
NO >> Repair or replace malfunctioning part.

12. REPLACE AIR FUEL RATIO (A/F) SENSOR 1

Replace malfunctioning air fuel ratio (A/F) sensor 1. Refer to EM-31, "Removal and Installation (bank 2)", EM-33, "Removal and Installation (bank 1)".

Do you have CONSULT?

YES >> GO TO 13.
NO >> GO TO 14.

13. CONFIRM A/F ADJUSTMENT DATA

With CONSULT

1. Turn ignition switch ON.
2. Select “A/F ADJ-B1” and “A/F ADJ-B2” in “DATA MONITOR” mode with CONSULT.
3. Make sure that “0.000” is displayed on CONSULT screen.

Is “0.000” displayed?

YES >> INSPECTION END
NO >> GO TO 14.

14. CLEAR THE MIXTURE RATIO SELF-LEARNING VALUE

Clear the mixture ratio self-learning value. Refer to EC-162, "Work Procedure".

Do you have CONSULT?

YES >> GO TO 15.
NO >> INSPECTION END

15. CONFIRM A/F ADJUSTMENT DATA

With CONSULT

1. Turn ignition switch ON.
2. Select “A/F ADJ-B1” and “A/F ADJ-B2” in “DATA MONITOR” mode with CONSULT.
3. Make sure that “0.000” is displayed on CONSULT screen.

>> INSPECTION END

P2100, P2103 THROTTLE CONTROL MOTOR RELAY

DTC Logic

INFOID:0000000011148762

DTC DETECTION LOGIC

DTC No.	CONSULT screen terms (Trouble diagnosis content)	DTC detecting condition	Possible cause
P2100	ETC MOT PWR-B1 (Throttle actuator “A” control motor circuit/open)	ECM detects that the voltage of power source for throttle control motor is excessively low.	• Harness or connectors (Throttle control motor relay circuit is open) • Throttle control motor relay
P2103	ETC MOT PWR-B1 (Throttle actuator “A” control motor circuit high)	ECM detects that the throttle control motor relay is stuck ON.	• Harness or connectors (Throttle control motor relay circuit is shorted) • Throttle control motor relay

DTC CONFIRMATION PROCEDURE

1.PRECONDITIONING

If DTC Confirmation Procedure has been previously conducted, always perform the following before conducting the next test.
1. Turn ignition switch OFF and wait at least 10 seconds.
2. Turn ignition switch ON.
3. Turn ignition switch OFF and wait at least 10 seconds.

TESTING CONDITION:
Before performing the following procedure, confirm that battery voltage is more than 8 V.

Witch DTC is detected?

P2100 >> GO TO 2.
P2103 >> GO TO 3.

2.PERFORM DTC CONFIRMATION PROCEDURE FOR DTC P2100

1. Turn ignition switch ON and wait at least 2 seconds.
2. Start engine and let it idle for 5 seconds.
3. Check DTC.

Is DTC detected?

YES >> Proceed to EC-451, "Diagnosis Procedure".
NO >> INSPECTION END

3.PERFORM DTC CONFIRMATION PROCEDURE FOR DTC P2103

1. Turn ignition switch ON and wait at least 1 second.
2. Check DTC.

Is DTC detected?

YES >> Proceed to EC-451, "Diagnosis Procedure".
NO >> INSPECTION END

Diagnosis Procedure

INFOID:0000000011148763

1.CHECK THROTTLE CONTROL MOTOR RELAY POWER SUPPLY CIRCUIT

1. Turn ignition switch OFF.
2. Disconnect ECM harness connector.
3. Disconnect IPDM E/R harness connector.
4. Check the continuity between IPDM E/R harness connector and ECM harness connector.

IPDM E/R		ECM		Continuity
Connector	Terminal	Connector	Terminal	
F19	57	F78	2	Existed

5. Also check harness for short to ground and short to power.

Is the inspection result normal?

YES >> GO TO 2.
NO >> Repair open circuit, short to ground or short to power in harness or connectors.

2. CHECK THROTTLE CONTROL MOTOR RELAY INPUT SIGNAL CIRCUIT

1. Check the continuity between IPDM E/R harness connector and ECM harness connector.

IPDM E/R		ECM		Continuity
Connector	Terminal	Connector	Terminal	
F24	65	F78	8	Existed

2. Also check harness for short to ground and short to power.

Is the inspection result normal?

YES >> Perform the trouble diagnosis for power supply circuit.
NO >> Repair open circuit, short to ground or short to power in harness or connectors.

P2101 ELECTRIC THROTTLE CONTROL FUNCTION

DTC Logic

INFOID:0000000011148764

DTC DETECTION LOGIC

NOTE:
If DTC P2101 is displayed with DTC P2100, first perform the trouble diagnosis for DTC P2100. Refer to EC-451, "DTC Logic".
If DTC P2101 is displayed with DTC P2119, first perform the trouble diagnosis for DTC P2119. Refer to EC-458, "DTC Logic".

DTC No.	CONSULT screen terms (Trouble diagnosis content)	DTC detecting condition	Possible cause
P2101	ETC FNCTN/CIRC-B1 (Throttle actuator "A" control motor circuit range/performance)	Electric throttle control function does not operate properly.	• Harness or connectors (Throttle control motor circuit is open or shorted) • Electric throttle control actuator

DTC CONFIRMATION PROCEDURE

1. PRECONDITIONING

If DTC Confirmation Procedure has been previously conducted, always perform the following before conducting the next test.
1. Turn ignition switch OFF and wait at least 10 seconds.
2. Turn ignition switch ON.
3. Turn ignition switch OFF and wait at least 10 seconds.

TESTING CONDITION:
Before performing the following procedure, confirm that battery voltage is more than 11 V when engine is running.

>> GO TO 2.

2. PERFORM DTC CONFIRMATION PROCEDURE

1. Turn ignition switch ON and wait at least 2 seconds.
2. Start engine and let it idle for 5 seconds.
3. Check DTC.

Is DTC detected?

YES >> Proceed to EC-453, "Diagnosis Procedure".
NO >> INSPECTION END

Diagnosis Procedure

INFOID:0000000011148765

1. CHECK THROTTLE CONTROL MOTOR RELAY INPUT SIGNAL

1. Check the voltage between ECM harness connector terminals.

ECM				Condition	Voltage
+		–			
Connector	Terminal	Condition	Terminal		
F78	8	E32	152	Ignition switch OFF	Approx. 0 V
				Ignition switch ON	Battery voltage

Is the inspection result normal?

YES >> GO TO 4.
NO >> GO TO 2.

2. CHECK THROTTLE CONTROL MOTOR RELAY POWER SUPPLY CIRCUIT

1. Turn ignition switch OFF.
2. Disconnect ECM harness connector.

3. Disconnect IPDM E/R harness connector.
4. Check the continuity between IPDM E/R harness connector and ECM harness connector.

IPDM E/R		ECM		Continuity
Connector	Terminal	Connector	Terminal	
F19	57	F78	2	Existed

5. Also check harness for short to ground and short to power.

Is the inspection result normal?

YES >> GO TO 3.
NO >> Repair open circuit, short to ground or short to power in harness or connectors.

3. CHECK THROTTLE CONTROL MOTOR RELAY INPUT SIGNAL CIRCUIT

1. Check the continuity between IPDM E/R harness connector and ECM harness connector.

IPDM E/R		ECM		Continuity
Connector	Terminal	Connector	Terminal	
F24	65	F78	8	Existed

2. Also check harness for short to ground and short to power.

Is the inspection result normal?

YES >> Perform the trouble diagnosis for power supply circuit.
NO >> Repair open circuit, short to ground or short to power in harness or connectors.

4. CHECK THROTTLE CONTROL MOTOR OUTPUT SIGNAL CIRCUIT FOR OPEN OR SHORT

1. Turn ignition switch OFF.
2. Disconnect electric throttle control actuator harness connector.
3. Disconnect ECM harness connector.
4. Check the continuity between electric throttle control actuator harness connector and ECM harness connector.

Electric throttle control actuator		ECM		Continuity
Connector	Terminal	Connector	Terminal	
F50	1	F78	1	Not existed
			3	Existed
	2		1	Existed
			3	Not existed

5. Also check harness for short to ground and short to power.

Is the inspection result normal?

YES >> GO TO 5.
NO >> Repair or replace malfunctioning part.

5. CHECK ELECTRIC THROTTLE CONTROL ACTUATOR VISUALLY

1. Remove the intake air duct. Refer to EM-24, "Removal and Installation".
2. Check if foreign matter is caught between the throttle valve and the housing.

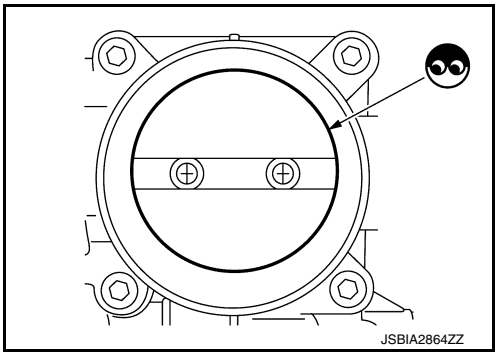

Is the inspection result normal?

YES >> GO TO 6.
NO >> Remove the foreign matter and clean the electric throttle control actuator inside, refer to EM-26, "Removal and Installation", and then perform throttle valve closed position learning. Refer to EC-159, "Description".

6. CHECK THROTTLE CONTROL MOTOR

Check throttle control motor. Refer to EC-455, "Component Inspection".

Is the inspection result normal?

YES >> GO TO 7.
NO >> Replace electric throttle control actuator. Refer to EM-26, "Removal and Installation".

7. CHECK INTERMITTENT INCIDENT

Check intermittent incident. Refer to GI-47, "Intermittent Incident".

Is the inspection result normal?

YES >> Replace electric throttle control actuator. Refer to EM-26, "Removal and Installation".
NO >> Repair or replace error-detected parts.

Component Inspection

INFOID:0000000011148766

1. CHECK THROTTLE CONTROL MOTOR

1. Turn ignition switch OFF.
2. Disconnect electric throttle control actuator harness connector.
3. Check resistance between electric throttle control actuator terminals as per the following.

Terminals	Resistance
1 and 2	Approx. 1 - 15 Ω [at 25°C (77°F)]

Is the inspection result normal?

YES >> INSPECTION END
NO >> Replace electric throttle control actuator. Refer to EM-26, "Removal and Installation".

P2118 THROTTLE CONTROL MOTOR

DTC Logic

INFOID:0000000011148767

DTC DETECTION LOGIC

DTC No.	CONSULT screen terms (Trouble diagnosis content)	DTC detecting condition	Possible cause
P2118	ETC MOT-B1 (Throttle actuator control motor current range/performance)	ECM detects short in both circuits between ECM and throttle control motor.	• Harness or connectors (Throttle control motor circuit is shorted.) • Electric throttle control actuator (Throttle control motor)

DTC CONFIRMATION PROCEDURE

1. PRECONDITIONING

If DTC Confirmation Procedure has been previously conducted, always perform the following before conducting the next test.

1. Turn ignition switch OFF and wait at least 10 seconds.
2. Turn ignition switch ON.
3. Turn ignition switch OFF and wait at least 10 seconds.

>> GO TO 2.

2. PERFORM DTC CONFIRMATION PROCEDURE

1. Turn ignition switch ON and wait at least 2 seconds.
2. Start engine and let it idle for 5 seconds.
3. Check DTC.

Is DTC detected?

YES >> Proceed to EC-456, "Diagnosis Procedure".
NO >> INSPECTION END

Diagnosis Procedure

INFOID:0000000011148768

1. CHECK THROTTLE CONTROL MOTOR OUTPUT SIGNAL CIRCUIT FOR OPEN AND SHORT

1. Disconnect electric throttle control actuator harness connector.
2. Disconnect ECM harness connector.
3. Check the continuity between electric throttle control actuator harness connector and ECM harness connector.

Electric throttle control actuator		ECM		Continuity
Connector	Terminal	Connector	Terminal	
F50	1	F78	1	Not existed
			3	Existed
	2		1	Existed
			3	Not existed

4. Also check harness for short to ground and short to power.

Is the inspection result normal?

YES >> GO TO 2.
NO >> Repair or replace malfunctioning part.

2. CHECK THROTTLE CONTROL MOTOR

Check throttle control motor. Refer to EC-457, "Component Inspection".

Is the inspection result normal?

YES >> Check intermittent incident. Refer to GI-47, "Intermittent Incident".

NO >> Replace electric throttle control actuator. Refer to EM-26, "Removal and Installation".

Component Inspection

INFOID:0000000011148769

1. CHECK THROTTLE CONTROL MOTOR

1. Turn ignition switch OFF.
2. Disconnect electric throttle control actuator harness connector.
3. Check resistance between electric throttle control actuator terminals as per the following.

Terminals	Resistance
1 and 2	Approx. 1 - 15 Ω [at 25°C (77°F)]

Is the inspection result normal?

YES >> INSPECTION END
NO >> Replace electric throttle control actuator. Refer to EM-26, "Removal and Installation".

P2119 ELECTRIC THROTTLE CONTROL ACTUATOR

DTC Logic

INFOID:0000000011148770

DTC DETECTION LOGIC

DTC No.	CONSULT screen terms (Trouble diagnosis content)	DTC detecting condition		Possible cause
P2119	ETC ACTR-B1 (Throttle actuator control throttle body range/performance)	A)	Electric throttle control actuator does not function properly due to the return spring malfunction.	• Electric throttle control actuator
		B)	Throttle valve opening angle in fail-safe mode is not in specified range.	
		C)	ECM detects that the throttle valve is stuck open.	

DTC CONFIRMATION PROCEDURE

1.PRECONDITIONING

If DTC Confirmation Procedure has been previously conducted, always perform the following before conducting the next test.
1. Turn ignition switch OFF and wait at least 10 seconds.
2. Turn ignition switch ON.
3. Turn ignition switch OFF and wait at least 10 seconds.

>> GO TO 2.

2.PERFORM DTC CONFIRMATION PROCEDURE FOR MALFUNCTION A AND B

1. Turn ignition switch ON and wait at least 1 second.
2. Shift selector lever to the D position and wait at least 3 seconds.
3. Shift selector lever to the P position.
4. Turn ignition switch OFF and wait at least 10 seconds.
5. Turn ignition switch ON and wait at least 1 second.
6. Shift selector lever to the D position and wait at least 3 seconds.
7. Shift selector lever to the P position.
8. Turn ignition switch OFF, wait at least 10 seconds, and then turn ON.
9. Check DTC.

Is DTC detected?

YES >> Proceed to EC-458, "Diagnosis Procedure".
NO >> GO TO 3.

3.PERFORM DTC CONFIRMATION PROCEDURE FOR MALFUNCTION C

1. Turn ignition switch ON and wait at least 1 second.
2. Shift selector lever to the D position and wait at least 3 seconds.
3. Shift selector lever to the N or P position.
4. Start engine and let it idle for 3 seconds.
5. Check DTC.

Is DTC detected?

YES >> Proceed to EC-458, "Diagnosis Procedure".
NO >> INSPECTION END

Diagnosis Procedure

INFOID:0000000011148771

1.CHECK ELECTRIC THROTTLE CONTROL ACTUATOR VISUALLY

1. Turn ignition switch OFF.
2. Remove the intake air duct. Refer to EM-26, "Removal and Installation".

3. Check if foreign matter is caught between the throttle valve and the housing.

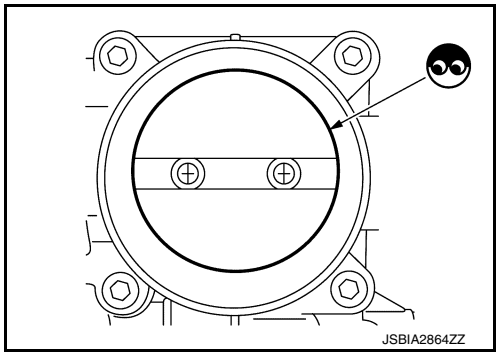

Is the inspection result normal?

YES >> GO TO 2.
NO >> Remove the foreign matter and clean the electric throttle control actuator inside, and then perform throttle valve closed position learning. Refer to EC-159, "Description".

2. REPLACE ELECTRIC THROTTLE CONTROL ACTUATOR

1. Replace electric throttle control actuator. Refer to EM-26, "Removal and Installation".
2. Go to EC-160, "Description".

>> INSPECTION END

P2122, P2123 APP SENSOR

DTC Logic

INFOID:0000000011148772

DTC DETECTION LOGIC

NOTE:
If DTC P2122 or P2123 is displayed with DTC P0643, first perform the trouble diagnosis for DTC P0643. Refer to EC-395, "DTC Logic".

DTC No.	CONSULT screen terms (Trouble diagnosis content)	DTC detecting condition	Possible cause
P2122	APP SEN 1/CIRC (Throttle/Pedal position sensor/ switch “D” circuit low)	An excessively low voltage from the APP sensor 1 is sent to ECM.	• Harness or connectors (APP sensor 1 circuit is open or shorted.) • Accelerator pedal position sensor (APP sensor 1)
P2123	APP SEN 1/CIRC (Throttle/Pedal position sensor/ switch “D” circuit high)	An excessively high voltage from the APP sensor 1 is sent to ECM.	

DTC CONFIRMATION PROCEDURE

1.PRECONDITIONING

If DTC Confirmation Procedure has been previously conducted, always perform the following before conducting the next test.
1. Turn ignition switch OFF and wait at least 10 seconds.
2. Turn ignition switch ON.
3. Turn ignition switch OFF and wait at least 10 seconds.

TESTING CONDITION:
Before performing the following procedure, confirm that battery voltage is more than 10 V at idle.

>> GO TO 2.

2.PERFORM DTC CONFIRMATION PROCEDURE

1. Start engine and let it idle for 1 second.
2. Check DTC.

Is DTC detected?

YES >> Proceed to EC-460, "Diagnosis Procedure".
NO >> INSPECTION END

Diagnosis Procedure

INFOID:0000000011148773

1.CHECK APP SENSOR 1 POWER SUPPLY

1. Disconnect accelerator pedal position (APP) sensor harness connector.
2. Turn ignition switch ON.
3. Check the voltage between APP sensor harness connector and ground.

+		–	Voltage (Approx.)
APP sensor			
Connector	Terminal		
E31	4	Ground	5 V

Is the inspection result normal?

YES >> GO TO 3.
NO >> GO TO 2.

2.CHECK APP SENSOR 1 POWER SUPPLY CIRCUIT

1. Turn ignition switch OFF
2. Disconnect ECM harness connector.

3. Check the voltage between APP sensor harness connector and ground.

APP sensor		ECM		Continuity
Connector	Terminal	Connector	Terminal	
E31	4	E32	146	Existed

Is the inspection result normal?

YES >> Check intermittent incident. Refer to GI-47, "Intermittent Incident".
NO >> Repair or replace error-detected parts.

3. CHECK APP SENSOR 1 GROUND CIRCUIT

1. Turn ignition switch OFF.
2. Disconnect ECM harness connector.
3. Check the continuity between APP sensor harness connector and ECM harness connector.

APP sensor		ECM		Continuity
Connector	Terminal	Connector	Terminal	
E31	2	E32	151	Existed

4. Also check harness for short to ground and short to power.

Is the inspection result normal?

YES >> GO TO 4.
NO >> Repair open circuit, short to ground or short to power in harness or connectors.

4. CHECK APP SENSOR 1 INPUT SIGNAL CIRCUIT

1. Check the continuity between APP sensor harness connector and ECM harness connector.

APP sensor		ECM		Continuity
Connector	Terminal	Connector	Terminal	
E31	3	E32	150	Existed

2. Also check harness for short to ground and short to power.

Is the inspection result normal?

YES >> GO TO 5.
NO >> Repair open circuit, short to ground or short to power in harness or connectors.

5. CHECK APP SENSOR

Check APP sensor. Refer to EC-461, "Component Inspection".

Is the inspection result normal?

YES >> Check intermittent incident. Refer to GI-47, "Intermittent Incident".
NO >> Replace accelerator pedal assembly. Refer to ACC-3, "Removal and Installation".

Component Inspection

INFOID:0000000011148774

1. CHECK ACCELERATOR PEDAL POSITION SENSOR

1. Reconnect all harness connectors disconnected.
2. Turn ignition switch ON.
3. Check the voltage between ECM harness connector terminals under the following conditions.

ECM			Condition		Voltage (V)
Connector	+	–			
	Terminal				
E32	150	151	Accelerator pedal	Fully released	0.5 - 1.0
				Fully depressed	4.2 - 4.8
	143	144		Fully released	0.25 - 0.50
				Fully depressed	2.0 - 2.5

Is the inspection result normal?

YES >> INSPECTION END
NO >> Replace accelerator pedal assembly. Refer to ACC-3, "Removal and Installation".

P2127, P2128 APP SENSOR

DTC Logic

INFOID:0000000011148775

DTC DETECTION LOGIC

DTC No.	CONSULT screen terms (Trouble diagnosis content)	DTC detecting condition	Possible cause
P2127	APP SEN 2/CIRC (Throttle/Pedal position sensor/switch “E” circuit low)	An excessively low voltage from the APP sensor 2 is sent to ECM.	• Harness or connectors (APP sensor 2 circuit is open or shorted.) [CMP sensor (PHASE) circuit is open or shorted.] (Battery current sensor circuit is shorted.) (EOP sensor circuit is shorted.) (Refrigerant pressure sensor is shorted.) • Accelerator pedal position sensor (APP sensor 2) • Camshaft position sensor (PHASE) • Battery current sensor • Engine oil pressure sensor • Refrigerant pressure sensor
P2128	APP SEN 2/CIRC (Throttle/Pedal position sensor/switch “E” circuit high)	An excessively high voltage from the APP sensor 2 is sent to ECM.	

DTC CONFIRMATION PROCEDURE

1.PRECONDITIONING

If DTC Confirmation Procedure has been previously conducted, always perform the following before conducting the next test.
1. Turn ignition switch OFF and wait at least 10 seconds.
2. Turn ignition switch ON.
3. Turn ignition switch OFF and wait at least 10 seconds.

TESTING CONDITION:
Before performing the following procedure, confirm that battery voltage is more than 8 V at idle.

>> GO TO 2.

2.PERFORM DTC CONFIRMATION PROCEDURE

1. Start engine and let it idle for 1 second.
2. Check DTC.

Is DTC detected?

YES >> Proceed to EC-463, "Diagnosis Procedure".
NO >> INSPECTION END

Diagnosis Procedure

INFOID:0000000011148776

1.CHECK APP SENSOR 2 POWER SUPPLY

1. Disconnect accelerator pedal position (APP) sensor harness connector.
2. Turn ignition switch ON.
3. Check the voltage between APP sensor harness connector and ground.

+		–	Voltage (V)
APP sensor			
Connector	Terminal		
E31	5	Ground	Approx. 5

Is the inspection result normal?

YES >> GO TO 3.
NO >> GO TO 2.

2.CHECK APP SENSOR 2 POWER SUPPLY CIRCUIT

1. Turn ignition switch OFF.
2. Disconnect ECM harness connector.
3. Check the continuity between APP sensor harness connector and ECM harness connector.

APP sensor		ECM		Continuity
Connector	Terminal	Connector	Terminal	
E31	5	E32	142	Existed

Is the inspection result normal?

YES >> Check sensor power supply 2 circuit. Refer to EC-510, "Diagnosis Procedure".
NO >> Repair or replace error-detected parts.

3. CHECK APP SENSOR 2 GROUND CIRCUIT

1. Turn ignition switch OFF.
2. Disconnect ECM harness connector.
3. Check the continuity between APP sensor harness connector and ECM harness connector.

APP sensor		ECM		Continuity
Connector	Terminal	Connector	Terminal	
E31	1	E32	144	Existed

4. Also check harness for short to ground and short to power.

Is the inspection result normal?

YES >> GO TO 4.
NO >> Repair open circuit, short to ground or short to power in harness or connectors.

4. CHECK APP SENSOR 2 INPUT SIGNAL CIRCUIT

1. Check the continuity between APP sensor harness connector and ECM harness connector.

APP sensor		ECM		Continuity
Connector	Terminal	Connector	Terminal	
E31	6	E32	143	Existed

2. Also check harness for short to ground and short to power.

Is the inspection result normal?

YES >> GO TO 5.
NO >> Repair open circuit, short to ground or short to power in harness or connectors.

5. CHECK APP SENSOR

Check APP sensor. Refer to EC-464, "Component Inspection".

Is the inspection result normal?

YES >> Check intermittent incident. Refer to GI-47, "Intermittent Incident".
NO >> Replace accelerator pedal assembly. Refer to ACC-3, "Removal and Installation".

Component Inspection

INFOID:0000000011148777

1. CHECK ACCELERATOR PEDAL POSITION SENSOR

1. Reconnect all harness connectors disconnected.
2. Turn ignition switch ON.
3. Check the voltage between ECM harness connector terminals under the following conditions.

ECM			Condition		Voltage (V)
Connector	+	–			
	Terminal				
E32	150	151	Accelerator pedal	Fully released	0.5 - 1.0
				Fully depressed	4.2 - 4.8
	143	144		Fully released	0.25 - 0.50
				Fully depressed	2.0 - 2.5

Is the inspection result normal?

YES >> INSPECTION END

NO >> Replace accelerator pedal assembly. Refer to ACC-3, "Removal and Installation".

P2135 TP SENSOR

DTC Logic

INFOID:0000000011148778

DTC DETECTION LOGIC

NOTE:
If DTC P2135 is displayed with DTC P0643, first perform the trouble diagnosis for DTC P0643. Refer to EC-395, "DTC Logic".

DTC No.	CONSULT screen terms (Trouble diagnosis content)	DTC detecting condition	Possible cause
P2135	TP SENSOR-B1 (Throttle/Pedal position sensor/switch “A” / “B” voltage correlation)	Rationally incorrect voltage is sent to ECM compared with the signals from TP sensor 1 and TP sensor 2.	• Harness or connector (TP sensor 1 or 2 circuit is open or shorted.) • Electric throttle control actuator (TP sensor 1 or 2)

DTC CONFIRMATION PROCEDURE

1.PRECONDITIONING

If DTC Confirmation Procedure has been previously conducted, always perform the following before conducting the next test.
1. Turn ignition switch OFF and wait at least 10 seconds.
2. Turn ignition switch ON.
3. Turn ignition switch OFF and wait at least 10 seconds.

TESTING CONDITION:
Before performing the following procedure, confirm that battery voltage is more than 8 V at idle.

>> GO TO 2.

2.PERFORM DTC CONFIRMATION PROCEDURE

1. Start engine and let it idle for 1 second.
2. Check DTC.

Is DTC detected?

YES >> Proceed to EC-466, "Diagnosis Procedure".
NO >> INSPECTION END

Diagnosis Procedure

INFOID:0000000011148779

1.CHECK THROTTLE POSITION SENSOR POWER SUPPLY

1. Disconnect electric throttle control actuator harness connector.
2. Turn ignition switch ON.
3. Check the voltage between electric throttle control actuator harness connector and ground.

+		–	Voltage (Approx.)
Electric throttle control actuator			
Connector	Terminal		
F50	5	Ground	5 V

Is the inspection result normal?

YES >> GO TO 3.
NO >> GO TO 2.

2.CHECK THROTTLE POSITION SENSOR POWER SUPPLY CIRCUIT

1. Turn ignition switch OFF.
2. Disconnect ECM harness connector.
3. Check the continuity between electric throttle control actuator harness connector and ECM harness connector.

Electric throttle control actuator		ECM		Continuity
Connector	Terminal	Connector	Terminal	
F50	5	F79	98	Existed

Is the inspection result normal?

YES >> Check intermittent incident. Refer to GI-47, "Intermittent Incident".
NO >> Repair or replace error-detected parts.

3. CHECK THROTTLE POSITION SENSOR GROUND CIRCUIT

1. Turn ignition switch OFF.
2. Disconnect ECM harness connector.
3. Check the continuity between electric throttle control actuator harness connector and ECM harness connector.

Electric throttle control actuator		ECM		Continuity
Connector	Terminal	Connector	Terminal	
F50	4	F79	75	Existed

4. Also check harness for short to ground and short to power.

Is the inspection result normal?

YES >> GO TO 4.
NO >> Repair open circuit, short to ground or short to power in harness or connectors.

4. CHECK THROTTLE POSITION SENSOR INPUT SIGNAL CIRCUIT

1. Check the continuity between electric throttle control actuator harness connector and ECM harness connector.

Electric throttle control actuator		ECM		Continuity
Connector	Terminal	Connector	Terminal	
F50	3	F79	72	Existed
	6		71	

2. Also check harness for short to ground and short to power.

Is the inspection result normal?

YES >> GO TO 5.
NO >> Repair open circuit, short to ground or short to power in harness or connectors.

5. CHECK THROTTLE POSITION SENSOR

Check throttle position sensor. Refer to EC-467, "Component Inspection".

Is the inspection result normal?

YES >> Check intermittent incident. Refer to GI-47, "Intermittent Incident".
NO >> Replace electric throttle control actuator. Refer to EM-26, "Removal and Installation".

Component Inspection

INFOID:0000000011148780

1. CHECK THROTTLE POSITION SENSOR

1. Turn ignition switch OFF.
2. Reconnect all harness connectors disconnected.
3. Perform EC-159, "Description".
4. Turn ignition switch ON.
5. Shift selector lever position to D.
6. Check the voltage between ECM harness connector terminals under the following conditions.

ECM			Condition		Voltage
Connector	+	–			
	Terminal				
F79	71	75	Accelerator pedal	Fully released	More than 0.36 V
				Fully depressed	Less than 4.75 V
	72			Fully released	Less than 4.75 V
				Fully depressed	More than 0.36 V

Is the inspection result normal?

YES >> INSPECTION END
NO >> Replace electric throttle control actuator. Refer to EM-26, "Removal and Installation".

P2138 APP SENSOR

DTC Logic

INFOID:0000000011148781

DTC DETECTION LOGIC

NOTE:
If DTC P2138 is displayed with DTC P0643, first perform the trouble diagnosis for DTC P0643. Refer to **EC-395, "DTC Logic"****.**

DTC No.	CONSULT screen terms (Trouble diagnosis content)	DTC detecting condition	Possible cause
P2138	APP SENSOR (Throttle/Pedal position sensor/switch “D” / “E” voltage correlation)	Rationally incorrect voltage is sent to ECM compared with the signals from APP sensor 1 and APP sensor 2.	• Harness or connector (APP sensor 1 or 2 circuit is open or shorted.) [CMP sensor (PHASE) circuit is open or shorted.] (Battery current sensor circuit is shorted.) (EOP sensor circuit is shorted.) (Refrigerant pressure sensor is shorted.) • Accelerator pedal position sensor (APP sensor 1 or 2) • Camshaft position sensor (PHASE) • Battery current sensor • Engine oil pressure sensor • Refrigerant pressure sensor

DTC CONFIRMATION PROCEDURE

1.PRECONDITIONING

If DTC Confirmation Procedure has been previously conducted, always perform the following before conducting the next test.
1. Turn ignition switch OFF and wait at least 10 seconds.
2. Turn ignition switch ON.
3. Turn ignition switch OFF and wait at least 10 seconds.

TESTING CONDITION:
Before performing the following procedure, confirm that battery voltage is more than 8 V at idle.

>> GO TO 2.

2.PERFORM DTC CONFIRMATION PROCEDURE

1. Start engine and let it idle for 1 second.
2. Check DTC.

Is DTC detected?

YES >> Proceed to EC-469, "Diagnosis Procedure".
NO >> INSPECTION END

Diagnosis Procedure

INFOID:0000000011148782

1.CHECK APP SENSOR 1 POWER SUPPLY

1. Disconnect accelerator pedal position (APP) sensor harness connector.
2. Turn ignition switch ON.
3. Check the voltage between APP sensor harness connector and ground.

+		–	Voltage (Approx.)
APP sensor			
Connector	Terminal		
E31	4	Ground	5 V

Is the inspection result normal?

YES >> GO TO 3.
NO >> GO TO 2.

2. CHECK APP SENSOR 1 POWER SUPPLY CIRCUIT

1. Turn ignition switch OFF.
2. Disconnect ECM harness connector.
3. Check the continuity between APP sensor harness connector and ECM harness connector.

APP sensor		ECM		Continuity
Connector	Terminal	Connector	Terminal	
E31	4	E32	146	Existed

Is the inspection result normal?

YES >> Check intermittent incident. Refer to GI-47, "Intermittent Incident".
NO >> Repair or replace error-detected parts.

3. CHECK APP SENSOR 2 POWER SUPPLY

1. Turn ignition switch ON.
2. Check the voltage between APP sensor harness connector and ground.

+		–	Voltage (Approx.)
APP sensor			
Connector	Terminal		
E31	5	Ground	5 V

Is the inspection result normal?

YES >> GO TO 5.
NO >> GO TO 4.

4. CHECK APP SENSOR 2 POWER SUPPLY CIRCUIT

1. Turn ignition switch OFF.
2. Disconnect ECM harness connector.
3. Check the continuity between APP sensor harness connector and ECM harness connector.

APP sensor		ECM		Continuity
Connector	Terminal	Connector	Terminal	
E31	5	E32	142	Existed

Is the inspection result normal?

YES >> Check sensor power supply 2 circuit. Refer to EC-510, "Diagnosis Procedure".
NO >> Repair or replace error-detected parts.

5. CHECK APP SENSOR GROUND CIRCUIT

1. Turn ignition switch OFF.
2. Disconnect ECM harness connector.
3. Check the continuity between APP sensor harness connector and ECM harness connector.

APP sensor		ECM		Continuity
Connector	Terminal	Connector	Terminal	
E31	1	E32	144	Existed
	2		151	

4. Also check harness for short to ground and short to power.

Is the inspection result normal?

YES >> GO TO 6.
NO >> Repair open circuit, short to ground or short to power in harness or connectors.

6. CHECK APP SENSOR INPUT SIGNAL CIRCUIT

1. Check the continuity between APP sensor harness connector and ECM harness connector.

APP sensor		ECM		Continuity
Connector	Terminal	Connector	Terminal	
E31	3	E32	150	Existed
	6		143	

2. Also check harness for short to ground and short to power.

Is the inspection result normal?

YES >> GO TO 7.
NO >> Repair open circuit, short to ground or short to power in harness or connectors.

7. CHECK APP SENSOR

Check APP sensor. Refer to EC-471, "Component Inspection".

Is the inspection result normal?

YES >> Check intermittent incident. Refer to GI-47, "Intermittent Incident".
NO >> Replace accelerator pedal assembly. Refer to ACC-3, "Removal and Installation".

Component Inspection

INFOID:0000000011148783

1. CHECK ACCELERATOR PEDAL POSITION SENSOR

1. Reconnect all harness connectors disconnected.
2. Turn ignition switch ON.
3. Check the voltage between ECM harness connector terminals under the following conditions.

ECM			Condition		Voltage (V)
Connector	+	–			
	Terminal				
E32	143	144	Accelerator pedal	Fully released	0.25 - 0.50
				Fully depressed	2.0 - 2.5
	150	151		Fully released	0.5 - 1.0
				Fully depressed	4.2 - 4.8

Is the inspection result normal?

YES >> INSPECTION END
NO >> Replace accelerator pedal assembly. Refer to ACC-3, "Removal and Installation".

P219A, P219B AIR FUEL RATIO

DTC Logic

INFOID:0000000011496587

DTC DETECTION LOGIC

NOTE:
If DTC P219A or P219B is displayed with other DTC, first perform the trouble diagnosis for the other DTC. Refer to EC-105, "DTC Index".

DTC No.	CONSULT screen terms (Trouble diagnosis content)	DTC detecting condition	Possible cause
P219A	AIR FUEL RATIO IMBALANCE B1 (Air-fuel ratio imbalance bank 1)	ECM detects a lean/rich air fuel ratio state in any cylinder for a specified length of time.	• Fuel injector • Exhaust gas leaks • Incorrect fuel pressure • Mass air flow sensor • Intake air leaks • Lack of fuel • Incorrect PCV hose connection • Improper spark plug • Insufficient compression • The fuel injector circuit is open or shorted • ignition coil • The ignition signal circuit is open or shorted
P219B	AIR FUEL RATIO IMBALANCE B2 (Air-fuel ratio imbalance bank 2)		

DTC CONFIRMATION PROCEDURE

1.PRECONDITIONING-1

If DTC Confirmation Procedure has been previously conducted, always perform the following before conducting the next test.
1. Turn ignition switch OFF and wait at least 10 seconds.
2. Turn ignition switch ON.
3. Turn ignition switch OFF and wait at least 10 seconds.

NOTE:
Before performing the following procedure, confirm that battery voltage is 11 V or more at idle.

>> GO TO 2.

2.PRECONDITIONING-2

1. Turn ignition switch ON.
2. Clear the mixture ratio self-learning value. Refer to EC-162, "Work Procedure".

Will CONSULT be used?

YES >> GO TO 3.
NO >> GO TO 6.

3.PERFORM DTC CONFIRMATION PROCEDURE-1

1. Turn ignition switch ON.
2. Select “COOLAN TEMP/S” in “DATA MONITOR” mode of “ENGINE” using CONSULT.
3. Start engine.
4. Make sure that “COOLAN TEMP/S” indicates more than 80°C (176°F).

>> GO TO 4.

4.PERFORM DTC CONFIRMATION PROCEDURE-2

With CONSULT
1. Select “SYSTEM 1 DIAGNOSIS B B1” and “SYSTEM 1 DIAGNOSIS A B1” in “DATA MONITOR” mode of “ENGINE” using CONSULT.
2. Drive vehicle under the following conditions for at least 5 consecutive seconds.
   CAUTION:

- **Always drive vehicle at a safe speed.**

ENG SPEED	1,000 – 1,600rpm
COOLAN TEMP/S	More than 80°C (176°F)
B/FUEL SCHDL	5 – 12 msec
Selector lever	D position
SYSTEM 1 DIAGNOSIS B B1	PRSENT

NOTE:
- Drive the vehicle at approximately 88 km/h (55MPH) allows easy diagnosis.
- Keep the accelerator pedal as possible during crusing.

3. Check “SYSTEM 1 DIAGNOSIS A B1” indication.

Is “CMPLT” displayed?

YES >> GO TO 5.
NO >> GO TO 2.

5. PERFORM DTC CONFIRMATION PROCEDURE-3

Check 1st trip DTC.

Is 1st trip DTC detected?

YES >> Proceed to EC-473, "Diagnosis Procedure".
NO >> INSPECTION END

6. PERFORM DTC CONFIRMATION PROCEDURE-4

Without CONSULT

1. Start the engine and warm it up to normal operating temperature.
2. Drive vehicle under the following conditions for at least 5 consecutive seconds.

CAUTION:
- **Always drive vehicle at a safe speed.**

Engine speed	1,000 – 1,600 rpm
Calculated load value	27 – 63 %
Selector lever	D position

NOTE:
- Drive the vehicle at approximately 88 km/h (55MPH) allows easy diagnosis.
- Keep the accelerator pedal as possible during crusing.

3. Check 1st trip DTC.

Is 1st trip DTC detected?

YES >> Proceed to EC-473, "Diagnosis Procedure".
NO >> INSPECTION END

Diagnosis Procedure

INFOID:0000000011496588

1. CHECK FOR INTAKE AIR LEAK

1. Stop engine and check the following for connection.
- Air duct
- Vacuum hoses
- PCV hose
- Intake air passage between air duct to intake manifold
2. Start engine and let it idle.
3. Listen for an intake air leak after the mass air flow sensor.

Is the inspection result normal?

YES >> GO TO 2.
NO >> Repair or replace error-detected parts.

2. CHECK EXHAUST GAS LEAK

1. Stop engine and visually check exhaust tube, three way catalyst and muffler for dents connection.
2. Start engine and let it idle.
3. Listen for an exhaust gas leak before three way catalyst (manifold).

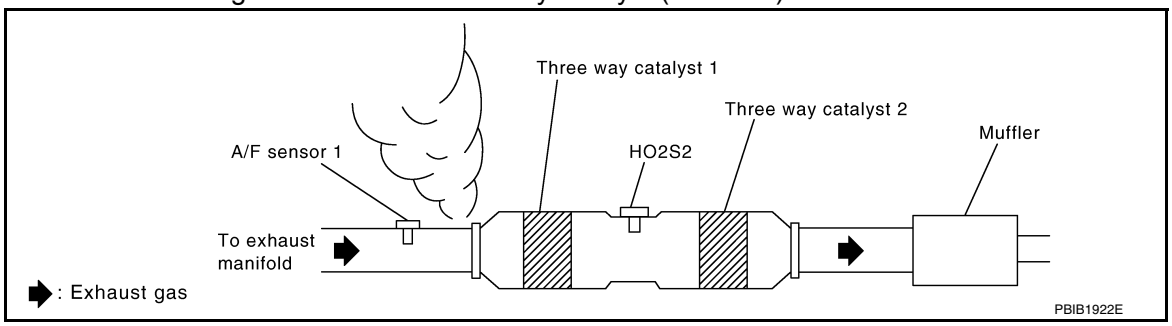

Is the inspection result normal?

YES >> GO TO 3.
NO >> Repair or replace error-detected parts.

3. CHECK FUEL PRESSURE

1. Release fuel pressure to zero. Refer to EC-168, "Work Procedure".
2. Check fuel pressure. Refer to EC-168, "Work Procedure".

Is the inspection result normal?

YES >> GO TO 4.
NO >> GO TO 9.

4. CHECK MASS AIR FLOW SENSOR

With CONSULT
Check “MASS AIR FLOW” in “DATA MONITOR” mode of “ENGINE” using CONSULT.
For specification, refer to EC-527, "Mass Air Flow Sensor".

With GST
Check mass air flow sensor signal in Service $01 using GST.
For specification, refer to EC-527, "Mass Air Flow Sensor".

Is the inspection result normal?

YES >> GO TO 5.
NO >> Check connectors for rusted terminals or loose connections in the mass air flow sensor circuit or grounds. Refer to EC-219, "Diagnosis Procedure".

5. CHECK FUNCTION OF FUEL INJECTOR-1

With CONSULT
1. Start engine.
2. Perform “POWER BALANCE” in “ACTIVE TEST” mode of “ENGINE” using CONSULT.
3. Check that each circuit produces a momentary engine speed drop.

Without CONSULT
1. Let engine idle.
2. Listen to each fuel injector operating sound.

Clicking noise should be heard.

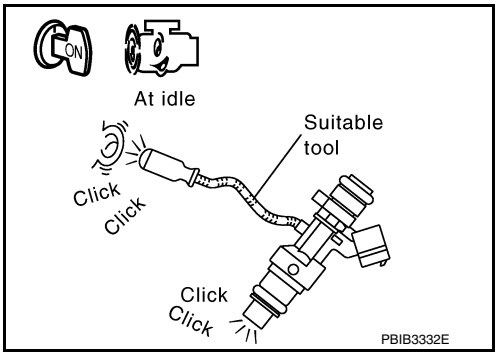

Is the inspection result normal?

YES >> GO TO 6.
NO >> Perform trouble diagnosis for fuel injector, refer to EC-491, "Component Inspection".

6. CHECK FUNCTION OF FUEL INJECTOR-2

CAUTION:

Perform the following procedure in a place with no combustible objects and good ventilation.

1. Turn ignition switch OFF.
2. Confirm that the engine is cooled down and there are no fire hazards near the vehicle.
3. Disconnect all fuel injector harness connectors.
4. Remove fuel tube assembly. Refer to EM-47, "Removal and Installation".
   Keep fuel hose and all fuel injectors connected to fuel tube.
5. Disconnect all ignition coil harness connectors.
6. Prepare pans or saucers under each fuel injector.
7. Crank engine for approximately 3 seconds.

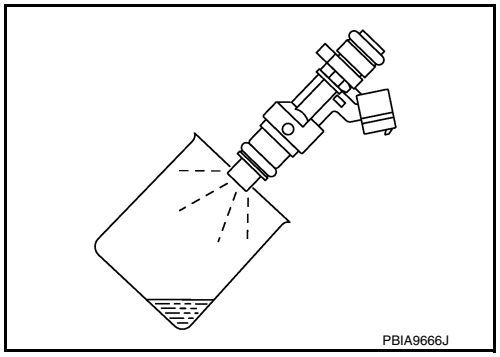

- **Fuel should be sprayed evenly for each fuel injector.**
- **Fuel must not drip from the tip of fuel injector.**

Is the inspection result normal?

YES >> GO TO 7.
NO >> Replace fuel injector. Refer to EM-47, "Removal and Installation".

7. CHECK FUNCTION OF IGNITION COIL-1

CAUTION:
Perform the following steps in a well-ventilated area with no combustibles.

1. Turn ignition switch OFF.
2. Remove fuel pump fuse from IPDM E/R to release fuel pressure.
   NOTE:
   CONSULT must not be used to release fuel pressure. It develops again during the following steps, if released by using CONSULT.
3. Start the engine.
4. After an engine stall, crank the engine two or three times to release all the fuel pressure.
5. Turn ignition switch OFF.
6. Disconnect all the harness connectors of ignition coil to prevent electric discharge from occurring in ignition coil.
7. Remove ignition coil assembly and spark plug of cylinder. Refer to EM-42, "Removal and Installation (LH)", EM-42, "Removal and Installation (RH)".
8. Crank engine for 5 seconds or more to remove combustion gas in the cylinder.
9. Connect spark plug and harness connector to ignition coil.
10. Allow a 13-17mm (0.52-0.66 in) spacing between spark plug and grounded metal portion as shown in the figure to fix the ignition coil with a rope or an equivalent.
11. Crank the engine for approximately 3 seconds to see if sparking occurs between spark plug and the grounded metal portion.

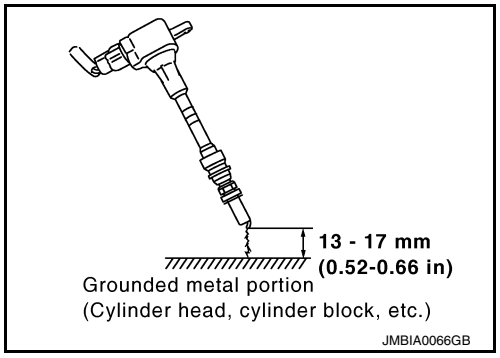

Spark should be generated.

CAUTION:
- **The discharge voltage becomes 20 kV or higher. Therefore, always stay away from the spark plug and ignition coil at least 50 cm (19.7 in) during the inspection.**
- **Leaving a space of more than 17mm (0.66 in) may damage the ignition coil.**

NOTE:
When the gap is less than 13 mm (0.52 in), a the spark might be generated even if the coil is malfunctioning.

Is the inspection result normal?

YES >> GO TO 8.
NO >> GO TO 10.

8. CHECK COMPRESSION PRESSURE

Check compression pressure. Refer to EC-168, "Work Procedure".

Is the inspection result normal?

YES >> Check intermittent incident. Refer to GI-47, "Intermittent Incident".
NO >> Check pistons, piston rings, valves, valve seats and cylinder head gaskets.

9. DETECT MALFUNCTIONING PART

Check fuel hoses and fuel tubes for clogging.

Is the inspection result normal?

YES >> Replace fuel filter and fuel pump assembly. Refer to EM-47, "Removal and Installation".
NO >> Repair or replace error-detected parts.

10. CHECK FUNCTION OF IGNITION COIL-2

1. Turn ignition switch OFF.
2. Disconnect spark plug and connect a non-malfunctioning spark plug.
3. Crank engine for approximately 3 seconds, and recheck whether spark is generated between the spark plug and the grounded metal portion.

Spark should be generated.

Is the inspection result normal?

YES >> GO TO 11.
NO >> Check ignition coil, power transistor and their circuits. Refer to EC-497, "Component Function Check".

11. CHECK SPARK PLUG

Check the initial spark plug for fouling, etc.

Is the inspection result normal?

YES >> 1. Repair or clean spark plug. Refer to MA-30, "SPARK PLUG : Removal and Installation".
2. GO TO 12.
NO >> Replace spark plug(s) with standard type one(s). For spark plug type, refer to MA-30, "SPARK PLUG : Removal and Installation".

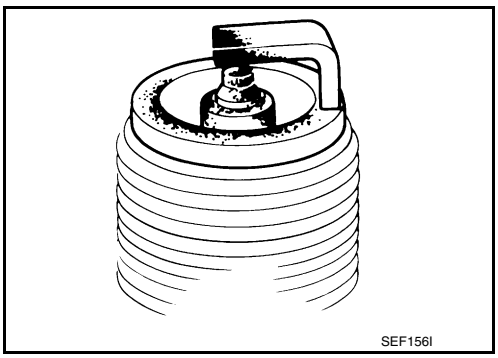

12. CHECK FUNCTION OF IGNITION COIL-3

1. Reconnect the initial spark plugs.
2. Crank engine for approximately 3 seconds, and recheck whether spark is generated between the spark plug and the grounded portion.

Spark should be generated.

Is the inspection result normal?

YES >> Check intermittent incident. Refer to GI-47, "Intermittent Incident".
NO >> Replace spark plug(s) with standard type one(s). For spark plug type, refer to EM-135, "Spark Plug".

P2610 ECM INTERNAL TIMER

Description

INFOID:0000000011491942

This ECM contains a timer and measures time between an ignition switch OFF and the next ignition switch ON. This enables the judging of the state of engine cooling at an engine start.

DTC Logic

INFOID:0000000011491943

DTC DETECTION LOGIC

DTC No.	CONSULT screen terms (Trouble diagnosis content)	DTC detecting condition	Possible cause
P2610	ECM/PCM INTERNAL ENG OFF TIMER (ECM/PCM internal engine off timer performance)	• ECM internal engine off timer is malfunctioning. • The time calculated by ECM based on a descent allowance of engine coolant temperatures during ignition switch OFF is extremely shorter than the time counted by the Engine internal OFF timer.	ECM

DTC CONFIRMATION PROCEDURE

1. INSPECTION START

It is necessary to erase permanent DTC?

YES >> GO TO 4.
NO >> GO TO 2.

2. PRECONDITIONING

1. Turn ignition switch OFF and wait at least 10 seconds.
2. Turn ignition switch ON.
3. Turn ignition switch OFF and wait at least 10 seconds.

TESTING CONDITION:
Before performing the following procedure, confirm that battery voltage is 12 V or more under ignition switch OFF condition.

>> GO TO 3.

3. PERFORM DTC CONFIRMATION PROCEDURE-I

1. Turn ignition switch ON and wait at least 190 seconds.
2. Check 1st trip DTC.

Is 1st trip DTC detected?

YES >> Proceed to EC-478, "Diagnosis Procedure".
NO >> INSPECTION END

4. PRECONDITIONING

1. Turn ignition switch OFF and wait at least 10 seconds.
2. Turn ignition switch ON.
3. Turn ignition switch OFF and wait at least 10 seconds.

TESTING CONDITION:
- **Before performing the following procedure, confirm that battery voltage is 12 V or more under ignition switch OFF condition.**
- **Before performing the following procedure, check that fuel level is between 2/8 and 7/8.**

>> GO TO 5.

5. PERFORM DTC CONFIRMATION PROCEDURE-I

1. Turn ignition switch ON and wait at least 190 seconds.

2. Check 1st trip DTC.

Is 1st trip DTC detected?

YES >> Proceed to EC-478, "Diagnosis Procedure".
NO >> GO TO 6.

6. PERFORM DTC CONFIRMATION PROCEDURE-II

CAUTION:
To start this self-diagnosis, the conditions listed bellow are required to be satisfied. Perform the following steps to satisfy the conditions.
- **Engine coolant temperature decrease by 55°C (131°F) or more during the time between an ignition switch OFF (after engine warm-up) and the second ignition switch ON.**
- **A fuel temperature at the second ignition switch ON is –5°C (23°F) or more and less than 35°C (95°F).**
- **The temperature difference between engine coolant and fuel is 5°C (41°F) or more.**

NOTE:
This self-diagnosis is not performed if the distance traveled is extremely short.

1. Turn ignition switch ON.
2. Start engine and warm it up to normal operating temperature.
3. Turn ignition switch OFF and soak the vehicle for at least 12 hours.
   CAUTION:
   - **Never turn ON the ignition switch during soaking.**
   - **Never open the fuel filler cap and perform refueling during soaking.**
4. Turn ignition switch ON and wait at least 190 seconds.
5. Check 1st trip DTC.

Is 1st trip DTC detected?

YES >> Proceed to EC-478, "Diagnosis Procedure".
NO >> INSPECTION END

Diagnosis Procedure

INFOID:0000000011491944

1. CHECK SELF-DIAGNOSTIC RESULT

check that DTCs related to the fuel system and the cooling system are not detected.

Is the inspection result normal?

YES >> Check the DTC. Refer to EC-72, "CONSULT Function".
NO >> GO TO 2.

2. PERFORM DTC CONFIRMATION PROCEDURE

1. Erase DTC.
2. Perform DTC Confirmation Procedure again. Refer to EC-105, "DTC Index".

Is the 1st trip DTC P2610 displayed again?

YES >> Replace ECM. Refer to EC-526, "Removal and Installation".
NO >> INSPECTION END

ASCD INDICATOR

Component Function Check

INFOID:0000000011148784

1.CHECK ASCD INDICATOR FUNCTION

Check ASCD indicator under the following conditions.

ASCD INDICATOR	CONDITION		SPECIFICATION
CRUISE	• Ignition switch: ON	• MAIN switch: Pressed at the 1st time →at the 2nd time	ON → OFF

Is the inspection result normal?

YES >> INSPECTION END
NO >> Proceed to EC-479, "Diagnosis Procedure".

Diagnosis Procedure

INFOID:0000000011148785

1.CHECK DTC

Check that DTC UXXXX is not displayed.

Is the inspection result normal?

YES >> GO TO 2.
NO >> Perform trouble diagnosis for DTC UXXXX.

2.CHECK COMBINATION METER FUNCTION

Check combination meter function. Refer to MWI-18, "CONSULT Function (METER/M&A)".

Is the inspection result normal?

YES >> GO TO 3.
NO >> Repair or replace malfunctioning part.

3.CHECK INTERMITTENT INCIDENT

Check intermittent incident. Refer to GI-47, "Intermittent Incident".

Is the inspection result normal?

YES >> Replace combination meter. Refer to MWI-85, "Removal and Installation".
NO >> Repair or replace error-detected parts.

BRAKE PEDAL POSITION SWITCH

Component Function Check

INFOID:0000000011148786

1. CHECK BRAKE PEDAL POSITION SWITCH FUNCTION

With CONSULT

1. Turn ignition switch ON.
2. Select “BRAKE SW1” in “DATA MONITOR” mode with CONSULT.
3. Check “BRAKE SW1” indication under the following conditions.

Monitor item	Condition		Indication
BRAKE SW1	Brake pedal	Slightly depressed	OFF
		Fully released	ON

Without CONSULT

1. Turn ignition switch ON.
2. Check the voltage between ECM harness connector terminals.

ECM			Condition		Voltage
Connector	+	–			
	Terminal				
E32	140	152	Brake pedal	Slightly depressed	Approx. 0 V
				Fully released	Battery voltage

Is the inspection result normal?

YES >> INSPECTION END
NO >> Proceed to EC-480, "Diagnosis Procedure".

Diagnosis Procedure

INFOID:0000000011148787

1. CHECK BRAKE PEDAL POSITION SWITCH POWER SUPPLY CIRCUIT

1. Turn ignition switch OFF.
2. Disconnect brake pedal position switch harness connector.
3. Turn ignition switch ON.
4. Check the voltage between brake pedal position switch harness connector and ground.

Brake pedal position switch		Ground	Voltage
Connector	Terminal		
E76	1	Ground	Battery voltage

Is the inspection result normal?

YES >> GO TO 3.
NO >> GO TO 2.

2. CHECK BRAKE PEDAL POSITION SWITCH POWER SUPPLY CIRCUIT

1. Turn ignition switch OFF.
2. Disconnect fuse block (J/B) harness connector.
3. Check the continuity between brake pedal position switch harness connector and fuse block (J/B) harness connector.

Brake pedal position switch		Fuse block (J/B)		Continuity
Connector	Terminal	Connector	Terminal	
E76	1	E28	1M	Existed

Is the inspection result normal?

YES >> Perform the trouble diagnosis for power supply circuit.

NO >> Repair or replace error-detected parts.

3. CHECK BRAKE PEDAL POSITION SWITCH INPUT SIGNAL CIRCUIT FOR OPEN AND SHORT

1. Turn ignition switch OFF.
2. Disconnect ECM harness connector.
3. Check the continuity between brake pedal position switch harness connector and ECM harness connector.

Brake pedal position switch		ECM		Continuity
Connector	Terminal	Connector	Terminal	
E76	2	E32	140	Existed

4. Also check harness for short to ground and short to power.

Is the inspection result normal?

YES >> GO TO 4.
NO >> Repair open circuit, short to ground or short to power in harness or connectors.

4. CHECK BRAKE PEDAL POSITION SWITCH

Check brake pedal position switch. Refer to EC-481, "Component Inspection (Brake Pedal Position Switch)".

Is the inspection result normal?

YES >> Check intermittent incident. Refer to GI-47, "Intermittent Incident".
NO >> Replace brake pedal position switch. Refer to BR-20, "Removal and Installation".

Component Inspection (Brake Pedal Position Switch)

INFOID:0000000011148788

1. CHECK BRAKE PEDAL POSITION SWITCH-I

1. Turn ignition switch OFF.
2. Disconnect BRAKE pedal position switch harness connector.
3. Check the continuity between BRAKE pedal position switch terminals under the following conditions.

Terminals	Condition		Continuity
1 and 2	Brake pedal	Fully released	Existed
		Slightly depressed	Not existed

Is the inspection result normal?

YES >> INSPECTION END
NO >> GO TO 2.

2. CHECK BRAKE PEDAL POSITION SWITCH-II

1. Adjust BRAKE pedal position switch installation. Refer to BR-15, "Adjustment".
2. Check the continuity between BRAKE pedal position switch terminals under the following conditions.

Terminals	Condition		Continuity
1 and 2	Brake pedal	Fully released	Existed
		Slightly depressed	Not existed

Is the inspection result normal?

YES >> INSPECTION END
NO >> Replace BRAKE pedal position switch. Refer to BR-20, "Removal and Installation".

COOLING FAN

Component Function Check

INFOID:0000000011148789

1. CHECK COOLING FAN FUNCTION

With CONSULT
1. Turn ignition switch ON.
2. Perform “FAN DUTY CONTROL” in “ACTIVE TEST” mode of “ENGINE” using CONSULT.
3. Check that cooling fan speed varies according to the percentage.

Without CONSULT
1. Activate IPDM E/R auto active test and check cooling fan motors operation. Refer to PCS-8, "Diagnosis Description".
2. Check that cooling fan operates.

Is the inspection result normal?

YES >> INSPECTION END
NO >> Proceed to EC-482, "Diagnosis Procedure".

Diagnosis Procedure

INFOID:0000000011148790

1. CHECK COOLING FAN CONTROL MODULE POWER SUPPLY

1. Turn ignition switch OFF.
2. Disconnect cooling fan control nodule harness connector.
3. Turn ignition switch ON.
4. Check the voltage between cooling fan control nodule harness connector and ground.

+		–	Voltage
Cooling fan control module			
Connector	Terminal		
E225	3	Ground	Battery voltage

Is the inspection result normal?

YES >> GO TO 5.
NO >> GO TO 2.

2. CHECK COOLING FAN CONTROL MODULE POWER SUPPLY CIRCUIT

1. Turn ignition switch OFF.
2. Disconnect cooling fan relay harness connector.
3. Check the continuity between cooling fan control nodule harness connector and cooling fan relay harness connector.

+		–		Continuity
Cooling fan control module		Cooling fan relay		
Connector	Terminal	Connector	Terminal	
E225	3	E82	5	Existed

4. Also check harness for short to ground.

Is the inspection result normal?

YES >> GO TO 3.
NO >> Repair or replace error-detected parts.

3. CHECK COOLING FAN RELAY POWER SUPPLY CIRCUIT

1. Disconnect IPDM E/R harness connector.
2. Check the continuity between cooling fan relay harness connector and IPDM E/R harness connector.

+		–		Continuity
Cooling fan relay		IPDM E/R		
Connector	Terminal	Connector	Terminal	
E82	2	E119	27	Existed

3. Also check harness for short to ground.

Is the inspection result normal?

YES >> GO TO 4.
NO >> Repair or replace error-detected parts.

4. CHECK COOLING FAN RELAY

Check cooling fan relay. Refer to EC-484, "Component Inspection (Cooling Fan Relay)".

Is the inspection result normal?

YES >> Perform the trouble diagnosis for power supply circuit.
NO >> Replace cooling fan relay.

5. CHECK COOLING FAN CONTROL MODULE GROUND CIRCUIT

1. Turn ignition switch OFF.
2. Check the continuity between cooling fan control nodule harness connector and ground.

+		–	Continuity
Cooling fan control module			
Connector	Terminal		
E225	1	Ground	Existed

3. Also check harness for short to power.

Is the inspection result normal?

YES >> GO TO 6.
NO >> Repair or replace error-detected parts.

6. CHECK COOLING FAN CONTROL SIGNAL CIRCUIT

1. Disconnect IPDM E/R harness connector.
2. Check the continuity between cooling fan control nodule harness connector and IPDM E/R harness connector.

+		–		Continuity
Cooling fan control module		IPDM E/R		
Connector	Terminal	Connector	Terminal	
E225	2	E218	93	Existed

3. Also check harness for short to ground and to power.

Is the inspection result normal?

YES >> GO TO 7.
NO >> Repair or replace error-detected parts.

7. CHECK COOLING FAN CONTROL MODULE OUTPUT SIGNAL CIRCUIT

1. Reconnect all harness connectors disconnected.
2. Disconnect cooling fan control module harness connector.
3. Turn ignition switch ON.
4. Check the voltage between cooling fan control module terminals and ground.

+		–	Voltage
Cooling fan control module			
Connector	Terminal		
E245	4	Ground	Battery voltage
E246	6		

Is the inspection result normal?

YES >> GO TO 8.
NO >> Repair or replace error-detected parts.

8. CHECK COOLING FAN MOTORS -1 AND -2

Check the cooling fan motor. Refer to EC-484, "Component Inspection (Cooling Fan Motor)".

YES >> Check intermittent incident. Refer to GI-47, "Intermittent Incident".
NO >> Replace cooling motor. Refer to CO-17, "Removal and Installation".

Component Inspection (Cooling Fan Motor)

INFOID:0000000011148791

1. CHECK COOLING FAN MOTOR

1. Turn ignition switch OFF.
2. Disconnect cooling fan control module harness connector.
3. Supply cooling fan control module harness connector terminals with battery voltage as per the following, and check operation.

Cooling fan control module				Operation
Motor	Connector	Terminal		
		+	–	
1	E245	4	5	Cooling fan operates.
2	E246	6	7	

Is the inspection result normal?

YES >> INSPECTION END
NO >> Replace malfunctioning cooling fan motor. Refer to CO-17, "Removal and Installation".

Component Inspection (Cooling Fan Relay)

INFOID:0000000011148792

1. CHECK COOLING FAN RELAY

1. Turn ignition switch OFF.
2. Remove cooling fan relay.
3. Check the continuity between cooling fan relay terminals under the following conditions.

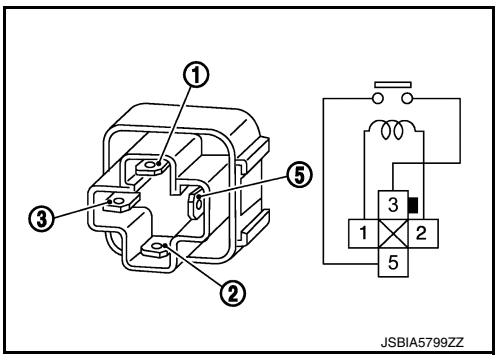

Cooling fan relay		Conditions	Continuity
+	–		
Terminal			
3	5	12 V direct current supply between terminals ① and ②	Existed
		No current supply	Not existed

Is the inspection result normal?

YES >> INSPECTION END
NO >> Replace cooling fan relay.

ELECTRICAL LOAD SIGNAL

Description

INFOID:0000000011148793

The electrical load signal (Headlamp switch signal, rear window defogger switch signal, etc.) is transferred via the CAN communication.

Component Function Check

INFOID:0000000011148794

1. CHECK REAR WINDOW DEFOGGER SWITCH FUNCTION

1. Turn ignition switch ON.
2. Connect CONSULT and select “DATA MONITOR” mode.
3. Select “LOAD SIGNAL” and check indication under the following conditions.

Monitor item	Condition		Indication
LOAD SIGNAL	Rear window defogger switch	ON	ON
		OFF	OFF

Is the inspection result normal?

YES >> GO TO 2.
NO >> Proceed to EC-485, "Diagnosis Procedure".

2. CHECK LIGHTING SWITCH FUNCTION

Check “LOAD SIGNAL” indication under the following conditions.

Monitor item	Condition		Indication
LOAD SIGNAL	Lighting switch	ON at 2nd position	ON
		OFF	OFF

Is the inspection result normal?

YES >> GO TO 3.
NO >> Proceed to EC-485, "Diagnosis Procedure".

3. CHECK HEATER FAN CONTROL SWITCH FUNCTION

Select “HEATER FAN SW” and check indication under the following conditions.

Monitor item	Condition		Indication
HEATER FAN SW	Heater fan control switch	ON	ON
		OFF	OFF

Is the inspection result normal?

YES >> INSPECTION END
NO >> Proceed to EC-485, "Diagnosis Procedure".

Diagnosis Procedure

INFOID:0000000011148795

1. INSPECTION START

Confirm the malfunctioning circuit (rear window defogger, headlamp or heater fan). Refer to EC-485, "Component Function Check".

Which circuit is related to the incident?

Rear window defogger>>GO TO 2.
Headlamp>>GO TO 3.
Heater fan>>GO TO 4.

2. CHECK REAR WINDOW DEFOGGER SYSTEM

Check rear window defogger system. Refer to DEF-23, "Work Flow".

>> INSPECTION END

3. CHECK HEADLAMP SYSTEM

Check headlamp system. Refer to EXL-107, "Work Flow".

>> INSPECTION END

4. CHECK HEATER FAN CONTROL SYSTEM

Check heater fan control system. Refer to VTL-7, "System Description".

>> INSPECTION END

ELECTRONIC CONTROLLED ENGINE MOUNT

Component Function Check

INFOID:0000000011148796

1. CHECK OVERALL FUNCTION

1. Start engine and warm it up to normal operating temperature.
2. Shift selector position is D while depressing the brake pedal and parking brake pedal.
3. Disconnect electronic controlled engine mount control solenoid valve harness connector.
4. Check that body vibration increases compared to the condition of step 2 above (with vehicle stopped).

Is the inspection result normal?

YES >> INSPECTION END
NO >> EC-487, "Diagnosis Procedure".

Diagnosis Procedure

INFOID:0000000011148797

1. CHECK VACUUM SOURCE

1. Turn ignition switch OFF.
2. Reconnect electronic controlled engine mount control solenoid valve harness connector.
3. Disconnect vacuum hose connected to electronic controlled engine mount.
4. Start engine and let it idle.
5. Check vacuum hose for vacuum existence.

Vacuum should exist.

Is the inspection result normal?

YES >> GO TO 7.
NO >> GO TO 2.

2. CHECK VACUUM HOSES AND VACUUM GALLERY

1. Turn ignition switch OFF.
2. Check vacuum hoses and vacuum gallery for clogging, cracks or improper connection. Refer to EC-46, "ELECTRONIC CONTROLLED ENGINE MOUNT : System Description".

Is the inspection result normal?

YES >> GO TO 3.
NO >> Repair or replace vacuum hoses and vacuum gallery.

3. CHECK ELECTRONIC CONTROLLED ENGINE MOUNT CONTROL SOLENOID VALVE POWER SUPPLY

1. Disconnect electronic controlled engine mount control solenoid valve harness connector.
2. Turn ignition switch ON.
3. Check the voltage between front electronic controlled engine mount harness connector and ground.

Electronic controlled engine mount control solenoid valve		Ground	Voltage
Connector	Terminal		
F64	1	Ground	Battery voltage

Is the inspection result normal?

YES >> GO TO 5.
NO >> GO TO 4.

4. CHECK ELECTRONIC CONTROLLED ENGINE MOUNT CONTROL SOLENOID VALVE POWER SUPPLY CIRCUIT

1. Turn ignition switch OFF.
2. Disconnect fuse block (J/B) harness connector.
3. Check the continuity between electronic controlled engine mount harness connector and fuse block (J/B) harness connector.

Electronic controlled engine mount control solenoid valve		Fuse block (J/B)		Continuity
Connector	Terminal	Connector	Terminal	
F64	1	E28	1M	Existed

Is the inspection result normal?

YES >> Perform the trouble diagnosis for power supply circuit.
NO >> Repair or replace error-detected parts.

5. CHECK ELECTRONIC CONTROLLED ENGINE MOUNT CONTROL SOLENOID VALVE OUTPUT SIGNAL CIRCUIT FOR OPEN AND SHORT

1. Disconnect ECM harness connector.
2. Check the continuity between ECM harness connector and electronic controlled engine mount control solenoid valve harness connector.

ECM		Electronic controlled engine mount control solenoid valve		Continuity
Connector	Terminal	Connector	Terminal	
F78	49	F64	2	Existed

3. Also check harness for short to ground and short to power.

Is the inspection result normal?

YES >> GO TO 6.
NO >> Repair open circuit, short to ground or short to power in harness connectors.

6. CHECK ELECTRONIC CONTROLLED ENGINE MOUNT CONTROL SOLENOID VALVE

Check electronic controlled engine mount control solenoid valve. Refer to EC-488, "Component Inspection".

Is the inspection result normal?

YES >> GO TO 7.
NO >> Replace electronic controlled engine mount control solenoid valve. Refer to EC-20, "ENGINE CONTROL SYSTEM : Component Parts Location".

7. CHECK ELECTRONIC CONTROLLED ENGINE MOUNT

1. Turn ignition switch OFF.
2. Install vacuum pump (A) to electronic controlled engine mount ①.
3. Check that a vacuum is maintained when applying the vacuum of -40 kPa (-0.41 kg/cm^2, -5.8 psi) to electronic controlled engine mount.
4. Also visually check electronic controlled engine mount.

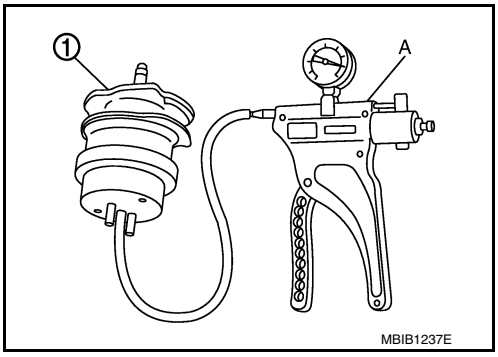

Is the inspection result normal?

YES >> GO TO 8.
NO >> Replace electronic controlled engine mount.

8. CHECK INTERMITTENT INCIDENT

Check intermittent incident. Refer to GI-47, "Intermittent Incident".

Is the inspection result normal?

YES >> Replace intake manifold collector. Refer to EM-26, "Removal and Installation".
NO >> Repair or replace error-detected parts.

Component Inspection

INFOID:0000000011148798

1. CHECK ELECTRONIC CONTROLLED ENGINE MOUNT CONTROL SOLENOID VALVE

With CONSULT

1. Turn ignition switch OFF.

2. Reconnect electronic controlled engine mount control solenoid valve harness connector.
3. Disconnect vacuum hoses connected to electronic controlled engine mount control solenoid valve.
4. Turn ignition switch ON.
5. Select “ENGINE MOUNTING” in “ACTIVE TEST” mode with CONSULT.
6. Check air passage continuity and operation delay time under the following conditions.

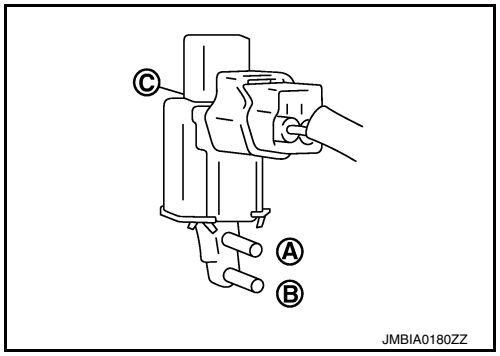

Condition (ENGINE MOUNTING)	Air passage continuity between Ⓐ and Ⓑ	Air passage continuity between Ⓐ and Ⓒ
TRVL	Existed	Not existed
IDLE	Not existed	Existed

Without CONSULT

1. Turn ignition switch OFF.
2. Disconnect electronic controlled engine mount control solenoid valve harness connector.
3. Disconnect vacuum hoses connected to electronic controlled engine mount control solenoid valve.
4. Check air passage continuity and operation delay time under the following conditions.

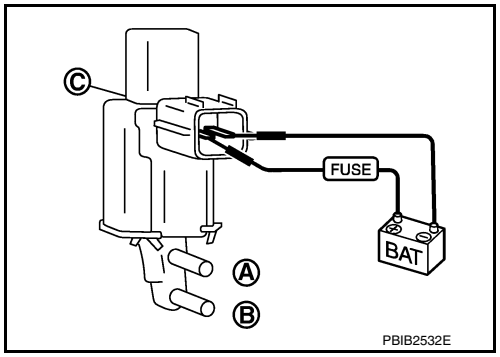

Condition	Air passage continuity between Ⓐ and Ⓑ	Air passage continuity between Ⓐ and Ⓒ
12 V direct current supply between terminals 1 and 2	Existed	Not existed
No supply	Not existed	Existed

Is the inspection result normal?

YES >> INSPECTION END

NO >> Replace electronic controlled engine mount control solenoid valve. Refer to EC-20, "ENGINE CONTROL SYSTEM : Component Parts Location".

FUEL INJECTOR

Component Function Check

INFOID:0000000011148799

1. INSPECTION START

Turn ignition switch to START.

Are any cylinders ignited?

YES >> GO TO 2.
NO >> Proceed to EC-490, "Diagnosis Procedure".

2. CHECK FUEL INJECTOR FUNCTION

With CONSULT

1. Start engine.
2. Perform “POWER BALANCE” in “ACTIVE TEST” mode with CONSULT.
3. Check that each circuit produces a momentary engine speed drop.

Without CONSULT

1. Start engine.
2. Listen to each fuel injector operating sound.

Clicking sound should be heard.

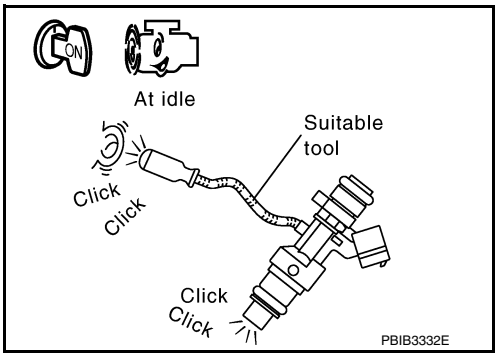

Is the inspection result normal?

YES >> INSPECTION END
NO >> Proceed to EC-490, "Diagnosis Procedure".

Diagnosis Procedure

INFOID:0000000011148800

1. CHECK FUEL INJECTOR POWER SUPPLY

1. Turn ignition switch OFF.
2. Disconnect fuel injector harness connector.
3. Turn ignition switch ON.
4. Check the voltage between fuel injector harness connector and ground.

Fuel injector			Ground	Voltage
Cylinder	Connector	Terminal		
1	F30	1	Ground	Battery voltage
2	F18	1		
3	F41	1		
4	F20	1		
5	F42	1		
6	F22	1		

Is the inspection result normal?

YES >> GO TO 3.
NO >> GO TO 2.

2. CHECK FUEL INJECTOR POWER SUPPLY CIRCUIT

1. Turn ignition switch OFF.
2. Disconnect IPDM E/R harness connector.
3. Check the continuity between fuel injector harness connector and IPDM E/R harness connector.

Fuel injector			IPDM E/R		Continuity
Cylinder	Connector	Terminal	Connector	Terminal	
1	F30	1	F19	54	Existed
2	F18	1		60	
3	F41	1		54	
4	F20	1		60	
5	F42	1		54	
6	F22	1		60	

Is the inspection result normal?

YES >> Perform the trouble diagnosis for power supply circuit.
NO >> Repair or replace error-detected parts.

3. CHECK FUEL INJECTOR OUTPUT SIGNAL CIRCUIT FOR OPEN AND SHORT

1. Turn ignition switch OFF.
2. Disconnect ECM harness connector.
3. Check the continuity between fuel injector harness connector and ECM harness connector.

Fuel injector			ECM		Continuity
Cylinder	Connector	Terminal	Connector	Terminal	
1	F30	2	F78	17	Existed
2	F18	2		16	
3	F41	2		22	
4	F20	2		12	
5	F42	2		11	
6	F22	2		21	

4. Also check harness for short to ground and short to power.

Is the inspection result normal?

YES >> GO TO 4.
NO >> Repair open circuit, short to ground or short to power in harness or connectors.

4. CHECK FUEL INJECTOR

Check fuel injector. Refer to EC-491, "Component Inspection".

Is the inspection result normal?

YES >> GO TO 5.
NO >> Replace malfunctioning fuel injector. Refer to EM-47, "Removal and Installation".

5. CHECK INTERMITTENT INCIDENT

Check intermittent incident. Refer to GI-47, "Intermittent Incident".

Is the inspection result normal?

YES >> Replace IPDM E/R. Refer to PCS-32, "Removal and Installation".
NO >> Repair or replace error-detected parts.

Component Inspection

INFOID:0000000011148801

1. CHECK FUEL INJECTOR

1. Turn ignition switch OFF.
2. Disconnect fuel injector harness connector.

3. Check resistance between fuel injector terminals as per the following.

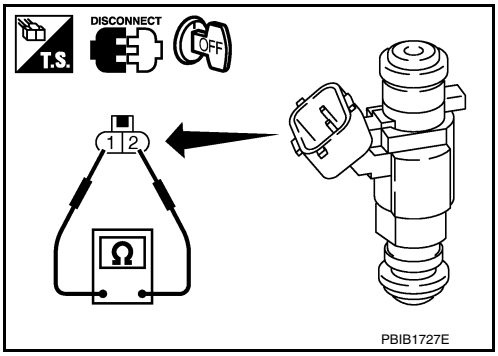

Terminals	Resistance
1 and 2	11.1 - 14.5 Ω [at 10 - 60°C (50 - 140°F)]

Is the inspection result normal?

YES >> INSPECTION END

NO >> Replace malfunctioning fuel injector. Refer to EM-47, "Removal and Installation".

FUEL PUMP

Component Function Check

INFOID:0000000011148802

1. CHECK FUEL PUMP FUNCTION

1. Turn ignition switch ON.
2. Pinch fuel feed hose with two fingers.

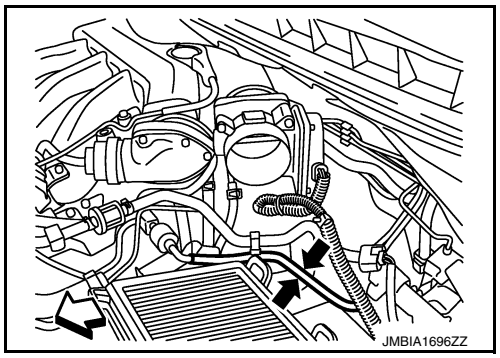

Fuel pressure pulsation should be felt on the fuel feed hose for 1 second after ignition switch is turned ON.

Is the inspection result normal?

YES >> INSPECTION END
NO >> EC-493, "Diagnosis Procedure".

Diagnosis Procedure

INFOID:0000000011148803

1. CHECK FUEL PUMP RELAY POWER SUPPLY-I

1. Turn ignition switch OFF.
2. Disconnect ECM harness connector.
3. Turn ignition switch ON.
4. Check the voltage between ECM harness connector terminals.

ECM				Voltage
+		–		
Connector	Terminal	Connector	Terminal	
F78	19	E32	152	Battery voltage

Is the inspection result normal?

YES >> GO TO 4.
NO >> GO TO 2.

2. CHECK FUEL PUMP RELAY POWER SUPPLY-II

Check the voltage between IPDM E/R harness connector and ground.

IPDM E/R		Ground	Voltage
Connector	Terminal		
F24	69	Ground	Battery voltage

Is the inspection result normal?

YES >> GO TO 3.
NO >> GO TO 11.

3. CHECK FUEL PUMP RELAY POWER SUPPLY CIRCUIT

1. Turn ignition switch OFF.
2. Disconnect IPDM E/R harness connector.
3. Check the continuity between ECM harness connector and IPDM E/R harness connector.

ECM		IPDM E/R		Continuity
Connector	Terminal	Connector	Terminal	
F78	19	F24	69	Existed

Is the inspection result normal?

YES >> Perform the trouble diagnosis for power supply circuit.

NO >> Repair or replace error-detected parts.

4. CHECK CONDENSER-2 POWER SUPPLY

1. Turn ignition switch OFF.
2. Reconnect all harness connectors disconnected.
3. Disconnect condenser-2 harness connector.
4. Turn ignition switch ON.
5. Check the voltage between condenser-2 harness connector and ground.

Condenser-2		Ground	Voltage
Connector	Terminal		
B52	1	Ground	Battery voltage should exist for 1 second after ignition switch is turned ON.

Is the inspection result normal?

YES >> GO TO 6.
NO >> GO TO 5.

5. CHECK CONDENSER-2 POWER SUPPLY CIRCUIT

1. Disconnect IPDM E/R harness connector.
2. Check the continuity between IPDM E/R harness connector and condenser-2 harness connector.

IPDM E/R		Condenser-2		Continuity
Connector	Terminal	Connector	Terminal	
E121	15	B52	1	Existed

3. Also check harness for short to ground and short to power.

Is the inspection result normal?

YES >> GO TO 11.
NO >> Perform the trouble diagnosis for power supply circuit.

6. CHECK CONDENSER-2 GROUND CIRCUIT

1. Turn ignition switch OFF.
2. Check the continuity between condenser-2 harness connector and ground.

Condenser-2		Ground	Continuity
Connector	Terminal		
B52	2	Ground	Existed

3. Also check harness for short to power.

Is the inspection result normal?

YES >> GO TO 7.
NO >> Repair open circuit or short to power in harness or connectors.

7. CHECK CONDENSER-2

Check condenser-2. Refer to EC-495, "Component Inspection (Condenser-2)".

Is the inspection result normal?

YES >> GO TO 8.
NO >> Replace condenser-2.

8. CHECK FUEL PUMP POWER SUPPLY CIRCUIT

1. Disconnect “fuel level sensor unit and fuel pump” harness connector.
2. Check harness continuity between IPDM E/R harness connector and “fuel level sensor unit and fuel pump” harness connector.

IPDM E/R		Fuel level sensor unit and fuel pump		Continuity
Connector	Terminal	Connector	Terminal	
E121	15	B72	6	Existed

Is the inspection result normal?

YES >> GO TO 9.
NO >> Repair open circuit or short to power in harness or connectors.

9. CHECK FUEL PUMP GROUND CIRCUIT

1. Disconnect “fuel level sensor unit and fuel pump” harness connector.
2. Check the continuity between “fuel level sensor unit and fuel pump” harness connector and ground.

Fuel level sensor unit and fuel pump		Ground	Continuity
Connector	Terminal		
B72	4	Ground	Existed

Is the inspection result normal?

YES >> GO TO 10.
NO >> Repair open circuit or short to power in harness or connectors.

10. CHECK FUEL PUMP

Check fuel pump. Refer to EC-495, "Component Inspection (Fuel Pump)".

Is the inspection result normal?

YES >> GO TO 11.
NO >> Replace fuel pump. Refer to FL-6, "Removal and Installation".

11. CHECK INTERMITTENT INCIDENT

Check intermittent incident. Refer to GI-47, "Intermittent Incident".

Is the inspection result normal?

YES >> Replace IPDM E/R. Refer to PCS-32, "Removal and Installation".
NO >> Repair or replace error-detected parts.

Component Inspection (Fuel Pump)

INFOID:0000000011148804

1. CHECK FUEL PUMP

1. Turn ignition switch OFF.
2. Disconnect “fuel level sensor unit (fuel pump)” harness connector.
3. Check resistance between “fuel level sensor unit (fuel pump)” terminals as follows.

Terminals	Resistance [at 25°C (77°F)]
4 and 6	0.2 - 5.0 Ω

Is the inspection result normal?

YES >> INSPECTION END
NO >> Replace fuel level sensor unit, fuel filter and fuel pump assembly. Refer to FL-6, "Removal and Installation".

Component Inspection (Condenser-2)

INFOID:0000000011148805

1. CHECK CONDENSER-2

1. Turn ignition switch OFF.
2. Disconnect condenser-2 harness connector.
3. Check resistance between condenser-2 terminals as per the following.

Terminals	Resistance
1 and 2	Above 1 MΩ [at 25°C (77°F)]

Is the inspection result normal?

YES >> INSPECTION END
NO >> Replace condenser-2.

IGNITION SIGNAL

Component Function Check

INFOID:0000000011148806

1. INSPECTION START

Turn ignition switch OFF, and restart engine.

Does the engine start?

YES-1 >> With CONSULT: GO TO 2.
YES-2 >> Without CONSULT: GO TO 3.
NO >> Proceed to EC-497, "Diagnosis Procedure".

2. CHECK IGNITION SIGNAL FUNCTION

With CONSULT

1. Perform “POWER BALANCE” in “ACTIVE TEST” mode with CONSULT.
2. Check that each circuit produces a momentary engine speed drop.

Is the inspection result normal?

YES >> INSPECTION END
NO >> Proceed to EC-497, "Diagnosis Procedure".

3. CHECK IGNITION SIGNAL FUNCTION

Without CONSULT

1. Let engine idle.
2. Read the voltage signal between ECM harness connector terminals with an oscilloscope.

ECM				Voltage signal
+		–		
Connector	Terminal	Connector	Terminal	
F79	103	E32	152	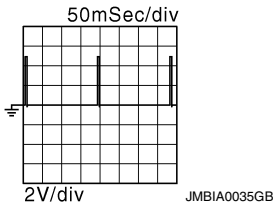
	104			
	106			
	107			
	113			
	114			

NOTE:

The pulse cycle changes depending on rpm at idle.

Is the inspection result normal?

YES >> INSPECTION END
NO >> Proceed to EC-497, "Diagnosis Procedure".

Diagnosis Procedure

INFOID:0000000011148807

1. CHECK ECM POWER SUPPLY

1. Turn ignition switch OFF, wait at least 10 seconds and then turn it ON.
2. Check the voltage between ECM harness connector terminals.

ECM				Voltage
Connector	Terminal	Connector	Terminal	
F79	86	E32	152	Battery voltage

Is the inspection result normal?

YES >> GO TO 2.
NO >> Refer to EC-190, "Diagnosis Procedure".

2. CHECK CONDENSER-1 POWER SUPPLY

1. Turn ignition switch OFF.
2. Disconnect condenser-1 harness connector.
3. Turn ignition switch ON.
4. Check the voltage between condenser-1 harness connector and ground.

Condenser-1		Ground	Voltage
Connector	Terminal		
F21	1	Ground	Battery voltage

Is the inspection result normal?

YES >> GO TO 4.
NO >> GO TO 3.

3. CHECK CONDENSER-1 POWER SUPPLY CIRCUIT

1. Turn ignition switch OFF.
2. Disconnect IPDM E/R harness connector.
3. Check the continuity between IPDM E/R harness connector and condenser-1 harness connector.

IPDM E/R		Condenser-1		Continuity
Connector	Terminal	Connector	Terminal	
F19	55	F21	1	Existed

4. Also check harness for short to ground and short to power.

Is the inspection result normal?

YES >> Refer to EC-190, "Diagnosis Procedure".
NO >> Repair open circuit, short to ground or short to power in harness or connectors.

4. CHECK CONDENSER-1 GROUND CIRCUIT

1. Turn ignition switch OFF.
2. Check the continuity between condenser-1 harness connector and ground.

Condenser-1		Ground	Continuity
Connector	Terminal		
F21	2	Ground	Existed

3. Also check harness for short to power.

Is the inspection result normal?

YES >> GO TO 5.
NO >> Repair open circuit or short to power in harness or connectors.

5. CHECK CONDENSER-1

Check condenser-1. Refer to EC-501, "Component Inspection (Condenser-1)"

Is the inspection result normal?

YES >> GO TO 6.
NO >> Replace condenser-1.

6. CHECK IGNITION COIL POWER SUPPLY

1. Reconnect all harness connectors disconnected.
2. Disconnect ignition coil harness connector-1.
3. Turn ignition switch ON.
4. Check the voltage between ignition coil harness connector and ground.

Ignition coil			Ground	Voltage
Cylinder	Connector	Terminal		
1	F47	3	Ground	Battery voltage
2	F8	3		
3	F48	3		
4	F9	3		
5	F49	3		
6	F10	3		

Is the inspection result normal?

YES >> GO TO 7.
NO >> Repair or replace harness or connectors.

7. CHECK IGNITION COIL GROUND CIRCUIT FOR OPEN AND SHORT

1. Turn ignition switch OFF.
2. Check the continuity between ignition coil harness connector and ground.

Ignition coil			Ground	Continuity
Cylinder	Connector	Terminal		
1	F47	2	Ground	Existed
2	F8	2		
3	F48	2		
4	F9	2		
5	F49	2		
6	F10	2		

3. Also check harness for short to power.

Is the inspection result normal?

YES >> GO TO 8.
NO >> Repair open circuit or short to power in harness or connectors.

8. CHECK IGNITION COIL OUTPUT SIGNAL CIRCUIT FOR OPEN AND SHORT

1. Disconnect ECM harness connector.
2. Check the continuity between ignition coil harness connector and ECM harness connector.

Ignition coil			ECM		Continuity
Cylinder	Connector	Terminal	Connector	Terminal	
1	F47	1	F79	113	Existed
2	F8	1		106	
3	F48	1		103	
4	F9	1		114	
5	F49	1		107	
6	F10	1		104	

3. Also check harness for short to ground and short to power.

Is the inspection result normal?

YES >> GO TO 9.
NO >> Repair open circuit, short to ground or short to power in harness or connectors.

9. CHECK IGNITION COIL WITH POWER TRANSISTOR

Check ignition coil with power transistor. Refer to EC-500, "Component Inspection (Ignition Coil with Power Transistor)".

Is the inspection result normal?

YES >> Check intermittent incident. Refer to GI-47, "Intermittent Incident".
NO >> Replace malfunctioning ignition coil with power transistor. Refer to EM-42, "Removal and Installation (LH)", EM-42, "Removal and Installation (RH)".

Component Inspection (Ignition Coil with Power Transistor)

INFOID:0000000011148808

1. CHECK IGNITION COIL WITH POWER TRANSISTOR-I

1. Turn ignition switch OFF.
2. Disconnect ignition coil harness connector.
3. Check resistance between ignition coil terminals as per the following.

Terminal No. (Polarity)	Resistance Ω [at 25°C (77°F)]
1 and 2	Except 0 or ∞
1 and 3	Except 0
2 and 3	

Is the inspection result normal?

YES >> GO TO 2.
NO >> Replace malfunctioning ignition coil with power transistor. Refer to EM-42, "Removal and Installation (LH)", EM-42, "Removal and Installation (RH)".

2. CHECK IGNITION COIL WITH POWER TRANSISTOR-II

CAUTION:
Perform the following procedure in a place with no combustible objects and good ventilation.

1. Turn ignition switch OFF.
2. Reconnect all harness connectors disconnected.
3. Remove fuel pump fuse in IPDM E/R to release fuel pressure.
   NOTE:
   Do not use CONSULT to release fuel pressure, or fuel pressure applies again during the following procedure.
4. Start engine.
5. After engine stalls, crank it 2 or 3 times to release all fuel pressure.
6. Turn ignition switch OFF.
7. Remove all ignition coil harness connectors to avoid the electrical discharge from the ignition coils.
8. Remove ignition coil and spark plug of the cylinder to be checked.
9. Crank engine for 5 seconds or more to remove combustion gas in the cylinder.
10. Connect spark plug and harness connector to ignition coil.
11. Fix ignition coil using a rope etc. with gap of 13 - 17 mm (0.52 - 0.66 in) between the edge of the spark plug and grounded metal portion as shown in the figure.
12. Crank engine for approximately 3 seconds, and check whether spark is generated between the spark plug and the grounded metal portion.

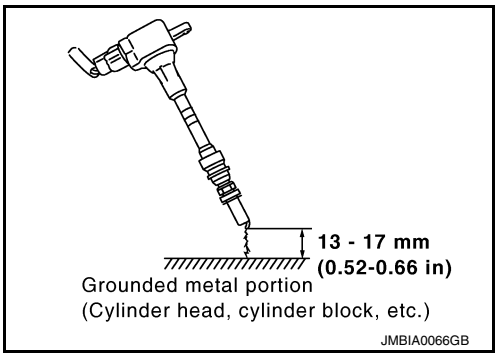

Spark should be generated.

CAUTION:
- **During the operation, always stay 0.5 m (19.7 in) or more away from the spark plug and the ignition coil. Be careful not to get an electrical shock while checking, because the electrical discharge voltage becomes 20 kV or more.**
- **It might cause to damage the ignition coil if the gap of more than 17 mm (0.66 in) is taken.**

NOTE:
When the gap is less than 13 mm (0.52 in), the spark might be generated even if the coil is malfunctioning.

Is the inspection result normal?

YES >> INSPECTION END

NO >> Replace malfunctioning ignition coil with power transistor. Refer to EM-42, "Removal and Installation (LH)", EM-42, "Removal and Installation (RH)".

Component Inspection (Condenser-1)

INFOID:0000000011148809

1. CHECK CONDENSER-1

1. Turn ignition switch OFF.
2. Disconnect condenser-1 harness connector.
3. Check resistance between condenser-1 terminals as per the following.

Terminals	Resistance
1 and 2	Above 1 MΩ [at 25C° (77C°)]

Is the inspection result normal?

YES >> INSPECTION END
NO >> Replace condenser-1.

INFORMATION DISPLAY (ASCD)

Component Function Check

INFOID:0000000011148810

1. CHECK INFORMATION DISPLAY

1. Start engine.
2. Press MAIN switch on ASCD steering switch.
3. Drive the vehicle at more than 40 km/h (25 MPH).
   CAUTION:
   Always drive vehicle at a safe speed.
4. Press SET/COAST switch.
5. Check that the reading of the speedometer shows the same value as the set speed indicated in the information display while driving the vehicle on a flat road.

Is the inspection result normal?

YES >> INSPECTION END
NO >> Proceed to EC-502, "Diagnosis Procedure".

Diagnosis Procedure

INFOID:0000000011148811

1. CHECK DTC

Check that DTC UXXXX, P0500 or P1574 is not displayed.

Is the inspection result normal?

YES >> GO TO 2.
NO-1 >> Perform trouble diagnosis for DTC UXXXX.
NO-2 >> Perform trouble diagnosis for DTC P0500. Refer to EC-367, "DTC Logic".
NO-3 >> Perform trouble diagnosis for DTC P1574. Refer to EC-435, "DTC Logic".

2. CHECK DTC WITH COMBINATION METER

Refer to MWI-18, "CONSULT Function (METER/M&A)".

Is the inspection result normal?

YES >> GO TO 3.
NO >> Perform trouble diagnosis for DTC indicated.

3. CHECK INTERMITTENT INCIDENT

Refer to GI-47, "Intermittent Incident".

Is the inspection result normal?

YES >> Replace combination meter. Refer to MWI-85, "Removal and Installation".
NO >> Repair or replace.

MALFUNCTION INDICATOR LAMP

Component Function Check

INFOID:0000000011148812

1.CHECK MIL FUNCTION

1. Turn ignition switch ON.
2. Check that MIL illuminates.

Is the inspection result normal?

YES >> INSPECTION END
NO >> Proceed to EC-503, "Diagnosis Procedure".

Diagnosis Procedure

INFOID:0000000011148813

1.CHECK DTC

Check that DTC UXXXX is not displayed.

Is the inspection result normal?

YES >> GO TO 2.
NO >> Perform trouble diagnosis for DTC UXXXX.

2.CHECK COMBINATION METER FUNCTION

Check combination meter function. Refer to MWI-18, "CONSULT Function (METER/M&A)".

Is the inspection result normal?

YES >> GO TO 3.
NO >> Repair or replace.

3.CHECK INTERMITTENT INCIDENT

Check intermittent incident. Refer to GI-47, "Intermittent Incident".

Is the inspection result normal?

YES >> Replace combination meter. Refer to MWI-85, "Removal and Installation".
NO >> Repair or replace error-detected parts.

ON BOARD REFUELING VAPOR RECOVERY (ORVR)

Component Function Check

INFOID:0000000011148814

1.CHECK ORVR FUNCTION

Check whether the following symptoms are present.
- Fuel odor from EVAP canister is strong.
- Cannot refuel/Fuel odor from the fuel filler opening is strong while refueling.

Are any symptoms present?

YES >> Proceed to EC-504, "Diagnosis Procedure".
NO >> INSPECTION END

Diagnosis Procedure

INFOID:0000000011148815

1.INSPECTION START

Check whether the following symptoms are present.
A: Fuel odor from EVAP canister is strong.
B: Cannot refuel/Fuel odor from the fuel filler opening is strong while refueling.

A or B

A >> GO TO 2.
B >> GO TO 7.

2.CHECK EVAP CANISTER

1. Remove EVAP canister with EVAP canister vent control valve and EVAP control system pressure sensor attached. Refer to FL-18, "Removal and Installation".
2. Weigh the EVAP canister with EVAP canister vent control valve and EVAP control system pressure sensor attached.
   The weight should be less than 2.1 kg (4.6 lb).

Is the inspection result normal?

YES >> GO TO 3.
NO >> GO TO 4.

3.CHECK IF EVAP CANISTER IS SATURATED WITH WATER

Check if water will drain from EVAP canister

Does water drain from the EVAP canister?

YES >> GO TO 4.
NO >> GO TO 6.

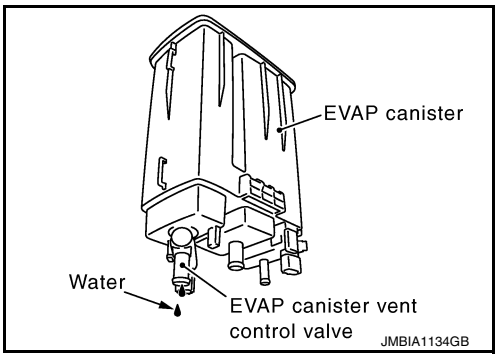

4.REPLACE EVAP CANISTER

Replace EVAP canister with a new one. Refer to FL-18, "Removal and Installation".

>> GO TO 5.

5.DETECT MALFUNCTIONING PART

Check the EVAP hose between EVAP canister and vehicle frame for clogging or poor connection.

>> Repair or replace EVAP hose. Refer to FL-20, "Removal and Installation".

6.CHECK REFUELING EVAP VAPOR CUT VALVE

Check refueling EVAP vapor cut valve. Refer to EC-506, "Component Inspection".

Is the inspection result normal?

YES >> INSPECTION END
NO >> Replace refueling EVAP vapor cut valve with fuel tank. Refer to FL-18, "Removal and Installation".

7. CHECK EVAP CANISTER

1. Remove EVAP canister with EVAP canister vent control valve and EVAP control system pressure sensor attached. Refer to FL-18, "Removal and Installation".
2. Weigh the EVAP canister with EVAP canister vent control valve and EVAP control system pressure sensor attached.
   The weight should be less than 2.1 kg (4.6 lb).

Is the inspection result normal?

YES >> GO TO 8.
NO >> GO TO 9.

8. CHECK IF EVAP CANISTER IS SATURATED WITH WATER

Check if water will drain from EVAP canister.

Does water drain from the EVAP canister?

YES >> GO TO 6.
NO >> GO TO 11.

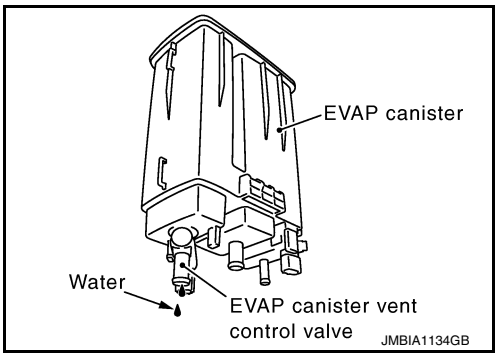

9. REPLACE EVAP CANISTER

Replace EVAP canister with a new one. Refer to FL-18, "Removal and Installation".

>> GO TO 10.

10. DETECT MALFUNCTIONING PART

Check the EVAP hose between EVAP canister and vehicle frame for clogging or poor connection.

>> Repair or replace EVAP hose. Refer to FL-20, "Removal and Installation".

11. CHECK VENT HOSES AND VENT TUBES

Check hoses and tubes between EVAP canister and refueling control valve for clogging, kinks, looseness and improper connection.

Is the inspection result normal?

YES >> GO TO 12.
NO >> Repair or replace hoses and tubes.

12. CHECK FILLER NECK TUBE

Check recirculation line for clogging, dents and cracks.

Is the inspection result normal?

YES >> GO TO 13.
NO >> Replace filler neck tube.

13. CHECK REFUELING EVAP VAPOR CUT VALVE

Check refueling EVAP vapor cut valve. Refer to EC-506, "Component Inspection".

Is the inspection result normal?

YES >> GO TO 14.
NO >> Replace refueling EVAP vapor cut valve with fuel tank. Refer to FL-18, "Removal and Installation".

14. CHECK FUEL FILLER TUBE

Check filler neck tube and hose connected to the fuel tank for clogging, dents and cracks.

Is the inspection result normal?

YES >> GO TO 15.
NO >> Replace fuel filler tube. Refer to FL-13, "Removal and Installation".

15. CHECK ONE-WAY FUEL VALVE-I

Check one-way valve for clogging.

Is the inspection result normal?

YES >> GO TO 16.
NO >> Repair or replace one-way fuel valve with fuel tank. Refer to FL-13, "Removal and Installation".

16. CHECK ONE-WAY FUEL VALVE-II

1. Check that fuel is drained from the tank.
2. Remove fuel filler tube and hose. Refer to FL-13, "Removal and Installation".
3. Check one-way fuel valve for operation as per the following.
   When a stick is inserted, the valve should open, when removing stick it should close.
   Do not drop any material into the tank.

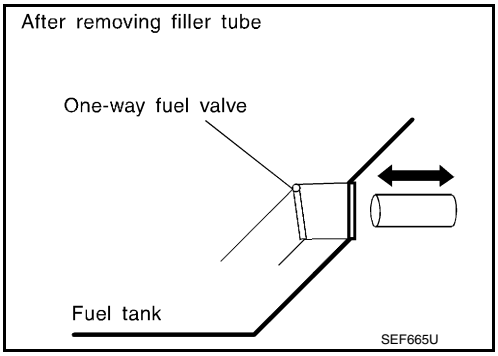

Is the inspection result normal?

YES >> INSPECTION END
NO >> Replace fuel filler tube or replace one-way fuel valve with fuel tank. Refer to FL-13, "Removal and Installation".

Component Inspection

INFOID:0000000011148816

1. INSPECTION START

Will CONSULT be used?

Will CONSULT be used?

YES >> GO TO 2.
NO >> GO TO 3.

2. CHECK REFUELING EVAP VAPOR CUT VALVE

With CONSULT

1. Turn ignition switch OFF.
2. Remove fuel tank. Refer to FL-13, "Removal and Installation".
3. Drain fuel from the tank as per the following:
- Remove fuel feed hose located on the fuel gauge retainer. Refer to FL-13, "Removal and Installation".
- Connect a spare fuel hose, one side to fuel gauge retainer where the hose was removed and the other side to a fuel container.
- Drain fuel using “FUEL PUMP RELAY” in “ACTIVE TEST” mode with CONSULT.
4. Check refueling EVAP vapor cut valve for being stuck to close as per the following.
   Blow air into the refueling EVAP vapor cut valve (from the end of EVAP/ORVR line hose), and check that the air flows freely into the tank.
5. Check refueling EVAP vapor cut valve for being stuck to open as per the following.
- Connect vacuum pump to hose end.
- Remove fuel gauge retainer with fuel gauge unit.

Always replace O-ring with new one.

- Turn fuel tank upside down.

- Apply vacuum pressure to hose end [–13.3 kPa (–0.136 kg/cm^2, –1.93 psi)] with fuel gauge retainer remaining open and check that the pressure is applicable.

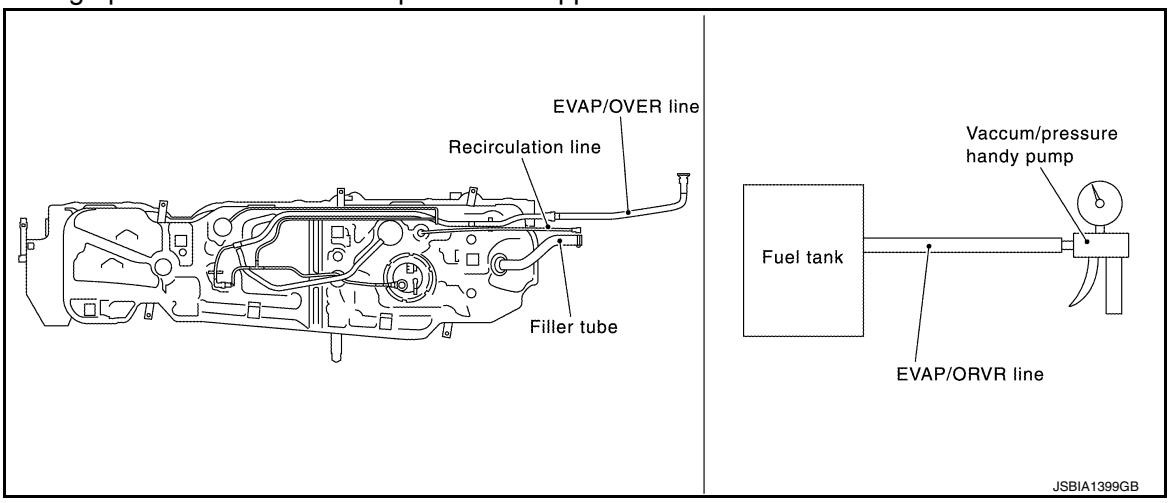

Is the inspection result normal?

YES >> INSPECTION END
NO >> Replace refueling EVAP vapor cut valve with fuel tank. Refer to FL-13, "Removal and Installation".

3. CHECK REFUELING EVAP VAPOR CUT VALVE

Without CONSULT

1. Turn ignition switch OFF.
2. Remove fuel tank. Refer to FL-13, "Removal and Installation".
3. Drain fuel from the tank as per the following:
- Remove fuel gauge retainer.
- Drain fuel from the tank using a handy pump into a fuel container.
4. Check refueling EVAP vapor cut valve for being stuck to close as per the following.
   Blow air into the refueling EVAP vapor cut valve (from the end of EVAP/ORVR line hose), and check that the air flows freely into the tank.
5. Check refueling EVAP vapor cut valve for being stuck to open as per the following.
- Connect vacuum pump to hose end.
- Remove fuel gauge retainer with fuel gauge unit.

Always replace O-ring with new one.

- Turn fuel tank upside down.
- Apply vacuum pressure to hose end [–13.3 kPa (–0.136 kg/cm^2, –1.93 psi)] with fuel gauge retainer remaining open and check that the pressure is applicable.

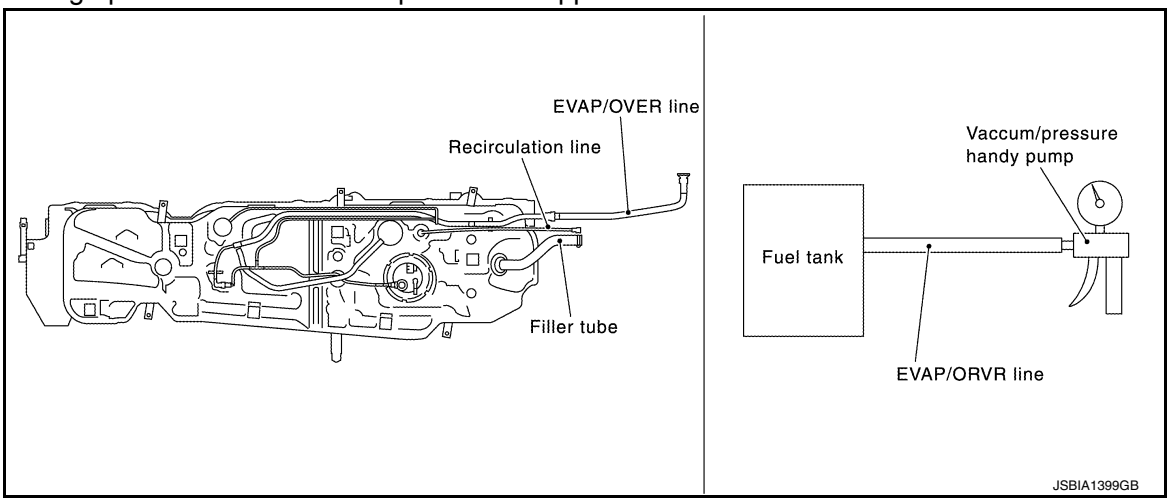

Is the inspection result normal?

YES >> INSPECTION END
NO >> Replace refueling EVAP vapor cut valve with fuel tank. Refer to FL-13, "Removal and Installation".

REFRIGERANT PRESSURE SENSOR

Component Function Check

INFOID:0000000011148817

1. CHECK REFRIGERANT PRESSURE SENSOR FUNCTION

1. Start engine and warm it up to normal operating temperature.
2. Turn A/C switch and blower fan switch ON.
3. Check the voltage between ECM harness connector terminals under the following conditions.

ECM			Voltage (V)
Connector	+	–	
	Terminal		
F78	20	25	1.0 - 4.0

Is the inspection result normal?

YES >> INSPECTION END
NO >> Proceed to EC-508, "Diagnosis Procedure".

Diagnosis Procedure

INFOID:0000000011148818

1. CHECK REFRIGERANT PRESSURE SENSOR POWER SUPPLY

1. Disconnect refrigerant pressure sensor harness connector.
2. Turn ignition switch ON.
3. Check the voltage between refrigerant pressure sensor harness connector and ground.

+		–	Voltage (V)
Refrigerant pressure sensor			
Connector	Terminal		
E244	1	Ground	Approx. 5

Is the inspection result normal?

YES >> GO TO 3.
NO >> GO TO 2.

2. CHECK REFRIGERANT PRESSURE SENSOR POWER SUPPLY CIRCUIT

1. Turn ignition switch OFF.
2. Disconnect ECM harness connector.
3. Check the continuity between refrigerant pressure sensor harness connector and ECM harness connector.

Refrigerant pressure sensor		ECM		Continuity
Connector	Terminal	Connector	Terminal	
E244	1	F78	18	Existed

Is the inspection result normal?

YES >> Check sensor power supply 2 circuit. Refer to EC-510, "Diagnosis Procedure".
NO >> Repair or replace error-detected parts.

3. CHECK REFRIGERANT PRESSURE SENSOR GROUND CIRCUIT FOR OPEN AND SHORT

1. Turn ignition switch OFF.
2. Disconnect ECM harness connector.
3. Check the continuity between refrigerant pressure sensor harness connector and ECM harness connector.

Refrigerant pressure sensor		ECM		Continuity
Connector	Terminal	Connector	Terminal	
E244	3	F78	25	Existed

4. Also check harness for short to ground and short to power.

Is the inspection result normal?

YES >> GO TO 4.
NO >> Repair or replace error-detected parts.

4. CHECK REFRIGERANT PRESSURE SENSOR INPUT SIGNAL CIRCUIT FOR OPEN AND SHORT

1. Check the continuity between refrigerant pressure sensor harness connector and ECM harness connector.

Refrigerant pressure sensor		ECM		Continuity
Connector	Terminal	Connector	Terminal	
E244	2	F78	20	Existed

2. Also check harness for short to ground and short to power.

Is the inspection result normal?

YES >> GO TO 5.
NO >> Repair or replace error-detected parts.

5. CHECK INTERMITTENT INCIDENT

Check intermittent incident. Refer to GI-47, "Intermittent Incident".

Is the inspection result normal?

YES >> Replace refrigerant pressure sensor. Refer to HA-38, "CONDENSER : Removal and Installation".
NO >> Repair or replace error-detected parts.

SENSOR POWER SUPPLY2 CIRCUIT

Description

INFOID:0000000011148819

ECM supplies a voltage of 5 V to some of the sensors systematically divided into 2 groups, respectively. Accordingly, when a short circuit develops in a sensor power source, a malfunction may occur simultaneously in the sensors belonging to the same group as the short-circuited sensor.

Sensor power supply 1

- Accelerator pedal position (APP) sensor 1
- Crankshaft position (CKP) sensor (POS)
- Exhaust valve timing (EVT) control position sensor
- Mass air flow (MAF) sensor
- Throttle position (TP) sensor

NOTE:
If sensor power supply 1 circuit is malfunctioning, DTC P0643 is displayed.

Sensor power supply 2

- Accelerator pedal position (APP) sensor 2
- Battery current sensor
- Camshaft position (CMP) sensor (PHASE)
- Engine oil pressure (EOP) sensor
- Refrigerant pressure sensor

Diagnosis Procedure

INFOID:0000000011148820

1. CHECK SENSOR POWER SUPPLY 2

1. Turn ignition switch OFF.
2. Disconnect ECM harness connectors
3. Turn ignition switch ON.
4. Check the voltage between ECM harness connector and ground.

+		–	Voltage (Approx.)
ECM			
Connector	Terminal		
E32	142	Ground	5 V
F78	18		
F79	87		
	92		

Is the inspection result normal?

YES >> Check intermittent incident. Refer to GI-47, "Intermittent Incident".
NO >> GO TO 2.

2. CHECK SENSOR POWER SUPPLY 2 CIRCUIT

1. Turn ignition switch OFF.
2. Disconnect following sensors harness connector.
3. Check harness for short to power and short to ground, between the following terminals.

ECM		Sensor		
Connector	Terminal	Name	Connector	Terminal
E32	142	APP sensor 2	E31	5
F78	18	Refrigerant pressure sensor	E244	1
		EOP sensor	F54	3

ECM		Sensor		
Connector	Terminal	Name	Connector	Terminal
F79	87	Battery current sensor	F34	1
	92	CMP sensor (PHASE) (bank 1)	F87	1
		CMP sensor (PHASE) (bank 2)	F88	1

Is the inspection result normal?

YES >> GO TO 3.
NO >> Repair or replace error-detected parts.

3. CHECK COMPONENTS

Check the following.
- Accelerator pedal position (APP) sensor 2 (Refer to EC-461, "Component Inspection".)
- Battery current sensor (Refer to EC-412, "Component Inspection".)
- Camshaft position sensor (PHASE) (bank 1) (Refer to EC-320, "Component Inspection".)
- Camshaft position sensor (PHASE) (bank 2) (Refer to EC-320, "Component Inspection".)
- Engine oil pressure (EOP) sensor (Refer to EC-377, "Component Inspection".)
- Refrigerant pressure sensor (Refer to EC-508, "Diagnosis Procedure".)

Is the inspection result normal?

YES >> Perform GI-47, "Intermittent Incident".
NO >> Replace malfunctioning component.

VARIABLE INDUCTION AIR SYSTEM

Component Function Check

INFOID:0000000011148821

1. CHECK OVERALL FUNCTION-I

With CONSULT

1. Start engine and warm it up to the normal operating temperature.
2. Perform “VIAS S/V-1” in “ACTIVE TEST” mode with CONSULT.
3. Turn VIAS control solenoid valve 1 “ON” and “OFF”, and check that power valve actuator 1 rod moves.

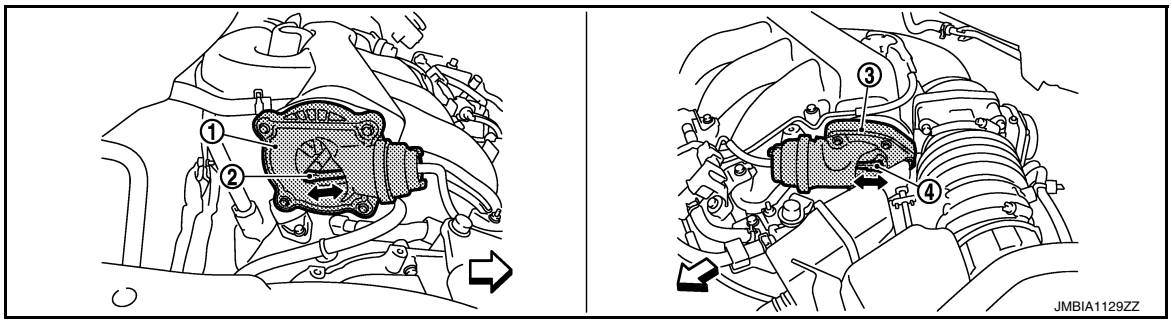

① Power valve actuator 1 ② Power valve actuator 1 rod ③ Power valve actuator 2
④ Power valve actuator 2 rod
⇦ : Vehicle front

Without CONSULT

1. Start engine and warm it up to the normal operating temperature.
2. Rev engine quickly up to approximately 5,000 rpm.
3. Check that power valve actuator 1 rod moves.

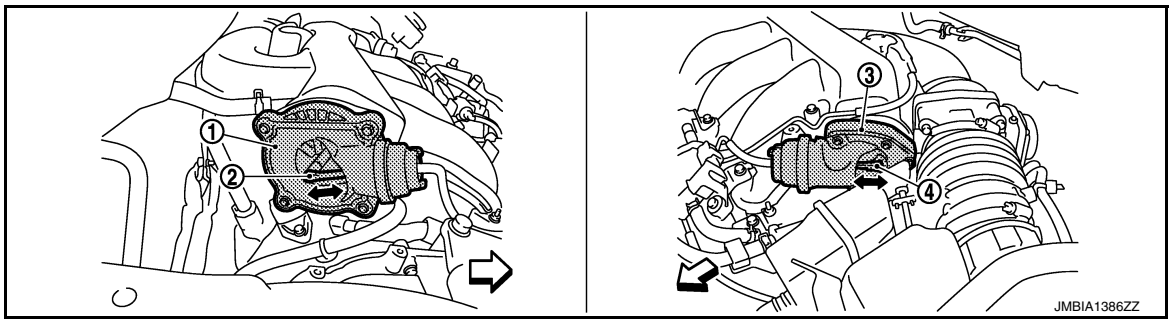

① Power valve actuator 1 ② Power valve actuator 1 rod ③ Power valve actuator 2
④ Power valve actuator 2 rod
⇦ : Vehicle front

Is the inspection result normal?

YES >> GO TO 2.
NO >> EC-513, "Diagnosis Procedure".

2. CHECK OVERALL FUNCTION-II

With CONSULT

1. Perform “VIAS S/V-2” in “ACTIVE TEST” mode with CONSULT.
2. Turn VIAS control solenoid valve 2 “ON” and “OFF”, and check that power valve actuator 2 rod moves.

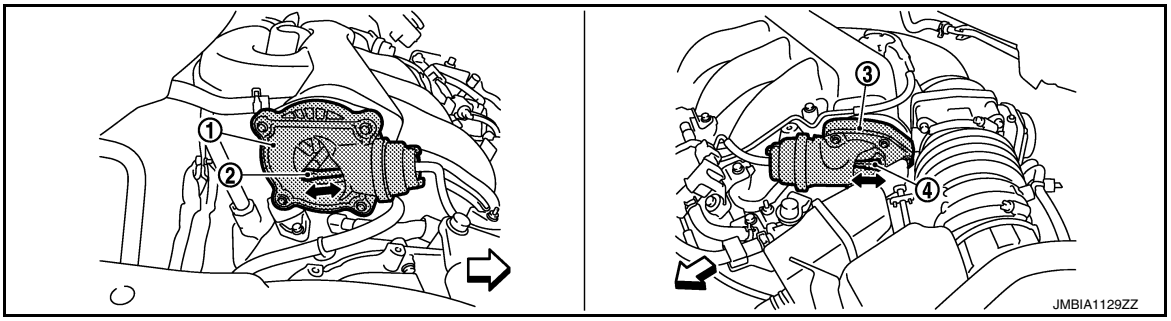

① Power valve actuator 1 ② Power valve actuator 1 rod ③ Power valve actuator 2
④ Power valve actuator 2 rod
⇦ : Vehicle front

Without CONSULT
1. When revving engine up to 5,000 rpm quickly.
2. Rev engine quickly up to approximately 5,000 rpm.
3. Check that power valve actuator 2 rod moves.

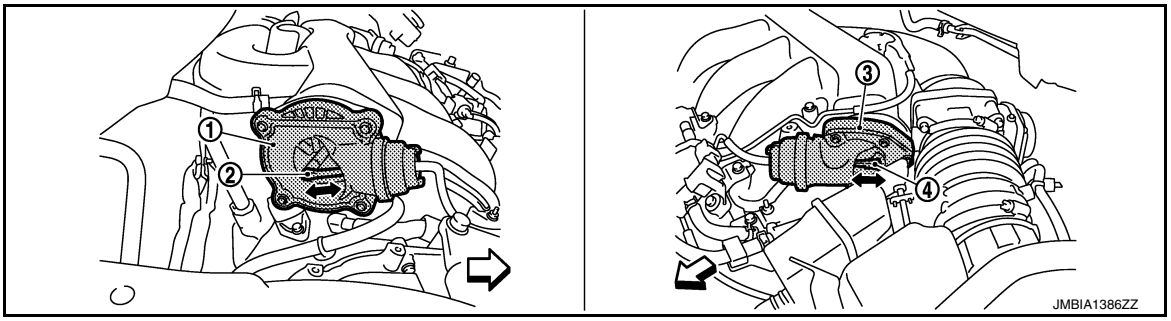

① Power valve actuator 1 ② Power valve actuator 1 rod ③ Power valve actuator 2
④ Power valve actuator 2 rod
⇦ : Vehicle front

Is the inspection result normal?

YES >> INSPECTION END
NO >> EC-513, "Diagnosis Procedure".

Diagnosis Procedure

INFOID:0000000011148822

1. INSPECTION START

Confirm the malfunctioning system (power valve 1 or power valve 2). Refer to EC-512, "Component Function Check".

Which system is related to the incident?

Power valve 1>>GO TO 2.
Power valve 2>>GO TO 6.

2. CHECK VACUUM EXISTENCE-I

With CONSULT
1. Stop engine and disconnect vacuum hose connected to power valve actuator 1.
2. Start engine and let it idle.
3. Perform “VIAS S/V-1” in “ACTIVE TEST” mode with CONSULT.
4. Turn VIAS control solenoid valve 1 ON and OFF, and check vacuum existence under the following conditions.

VIAS S/V-1	Vacuum
ON	Existed
OFF	Not existed

Without CONSULT

1. Stop engine and disconnect vacuum hose connected to power valve actuator 1.
2. Disconnect VIAS control solenoid valve 1 harness connector.
3. Start engine.
4. Rev engine quickly up to approximately 5,000 rpm.
5. Check vacuum existence under the following conditions.

Condition	Vacuum
Idle	Existed
Rev engine quickly up to approximately 5,000 rpm	Not existed

Is the inspection result normal?

YES >> Repair or replace power valve actuator 1. Refer to EC-20, "ENGINE CONTROL SYSTEM : Component Parts Location".
NO >> GO TO 3.

3. CHECK VACUUM TANK

1. Stop engine and disconnect vacuum hose connected to intake manifold collector.
2. Start engine and let it idle.
3. Check vacuum existence from intake manifold collector.

Does vacuum existence from the intake manifold collector?

YES >> GO TO 4.
NO >> Replace intake manifold collector. Refer to EM-26, "Removal and Installation".

4. CHECK VACUUM HOSE

1. Stop engine.
2. Check vacuum hose for crack, clogging, improper connection or disconnection. Refer to EC-56, "VARIABLE INDUCTION AIR SYSTEM : System Description".

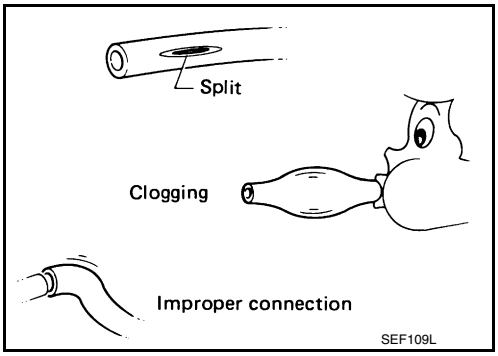

Is the inspection result normal?

YES >> GO TO 5.
NO >> Repair hoses or tubes.

5. CHECK VIAS CONTROL SOLENOID VALVE 1

Check VIAS control solenoid valve 1. Refer to EC-440, "Component Inspection".

Is the inspection result normal?

YES >> GO TO 8.
NO >> Replace VIAS control solenoid valve 1. Refer to EC-20, "ENGINE CONTROL SYSTEM : Component Parts Location".

6. CHECK VACUUM EXISTENCE-II

With CONSULT

1. Stop engine and disconnect vacuum hose connected to power valve actuator 2.
2. Start engine and let it idle.
3. Perform “VIAS S/V-2” in “ACTIVE TEST” mode with CONSULT.
4. Turn VIAS control solenoid valve 2 ON and OFF, and check vacuum existence under the following conditions.

VIAS S/V 2	Vacuum
ON	Existed
OFF	Not existed

Without CONSULT

1. Stop engine and disconnect vacuum hose connected to power valve actuator 2.
2. Disconnect VIAS control solenoid valve 1 harness connector.
3. Start engine.
4. Rev engine quickly up to approximately 5,000 rpm.
5. Check vacuum existence under the following conditions.

Condition	Operation
Idle	Existed
Rev engine quickly up to approximately 5,000 rpm	Not existed

Is the inspection result normal?

YES >> Repair or replace power valve actuator 2. Refer to EC-20, "ENGINE CONTROL SYSTEM : Component Parts Location".
NO >> GO TO 7.

7. CHECK VACUUM HOSE

1. Stop engine.
2. Check vacuum hose for crack, clogging, improper connection or disconnection. Refer to EC-56, "VARIABLE INDUCTION AIR SYSTEM : System Description".

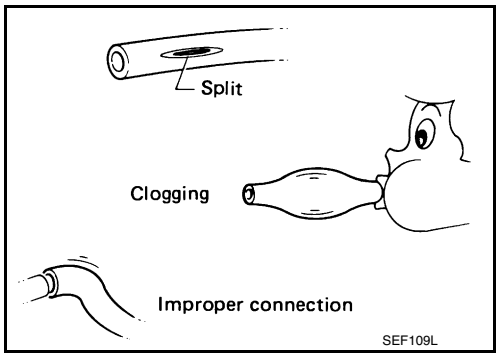

Is the inspection result normal?

YES >> GO TO 8.
NO >> Repair hoses or tubes.

8. CHECK VIAS CONTROL SOLENOID VALVE 2

Check VIAS control solenoid valve 2. Refer to EC-442, "Component Inspection".

Is the inspection result normal?

YES >> Check intermittent incident. Refer to GI-47, "Intermittent Incident".
NO >> Replace VIAS control solenoid valve 2. Refer to EC-20, "ENGINE CONTROL SYSTEM : Component Parts Location".

SYMPTOM DIAGNOSIS

ENGINE CONTROL SYSTEM SYMPTOMS

Symptom Table

INFOID:0000000011148823

SYSTEM — BASIC ENGINE CONTROL SYSTEM

<table>
<tr><th colspan="2" rowspan="2"></th><th colspan="13">SYMPTOM</th><th rowspan="2">Reference page</th></tr>
<tr><th>HARD/NO START/RESTART (EXCP. HA)</th><th>ENGINE STALL</th><th>HESITATION/SURGING/FLAT SPOT</th><th>SPARK KNOCK/DETONATION</th><th>LACK OF POWER/POOR ACCELERATION</th><th>HIGH IDLE/LOW IDLE</th><th>ROUGH IDLE/HUNTING</th><th>IDLING VIBRATION</th><th>SLOW/NO RETURN TO IDLE</th><th>OVERHEATS/WATER TEMPERATURE HIGH</th><th>EXCESSIVE FUEL CONSUMPTION</th><th>EXCESSIVE OIL CONSUMPTION</th><th>BATTERY DEAD (UNDER CHARGE)</th></tr>
<tr><td colspan="2">Warranty symptom code</td><td>AA</td><td>AB</td><td>AC</td><td>AD</td><td>AE</td><td>AF</td><td>AG</td><td>AH</td><td>AJ</td><td>AK</td><td>AL</td><td>AM</td><td>HA</td><td></td></tr>
<tr><td rowspan="4">Fuel</td><td>Fuel pump circuit</td><td>1</td><td>1</td><td>2</td><td>3</td><td>2</td><td></td><td>2</td><td>2</td><td></td><td></td><td>3</td><td></td><td>2</td><td>EC-493</td></tr>
<tr><td>Fuel pressure regulator system</td><td>3</td><td>3</td><td>4</td><td>4</td><td>4</td><td>4</td><td>4</td><td>4</td><td>4</td><td></td><td>4</td><td></td><td></td><td>EC-168</td></tr>
<tr><td>Fuel injector circuit</td><td>1</td><td>1</td><td>2</td><td>3</td><td>2</td><td></td><td>2</td><td>2</td><td></td><td></td><td>2</td><td></td><td></td><td>EC-490</td></tr>
<tr><td>Evaporative emission system</td><td>3</td><td>3</td><td>4</td><td>4</td><td>4</td><td>4</td><td>4</td><td>4</td><td>4</td><td></td><td>4</td><td></td><td></td><td>EC-49</td></tr>
<tr><td rowspan="3">Air</td><td>Positive crankcase ventilation system</td><td rowspan="2">3</td><td rowspan="2">3</td><td>4</td><td>4</td><td>4</td><td>4</td><td>4</td><td>4</td><td>4</td><td></td><td>4</td><td>1</td><td></td><td>EC-35</td></tr>
<tr><td>Incorrect idle speed adjustment</td><td></td><td></td><td></td><td>1</td><td>1</td><td>1</td><td>1</td><td></td><td>1</td><td></td><td></td><td>EC-164</td></tr>
<tr><td>Electric throttle control actuator</td><td>1</td><td>1</td><td>2</td><td>3</td><td>3</td><td>2</td><td>2</td><td>2</td><td>2</td><td></td><td>2</td><td></td><td>2</td><td>EC-453, EC-458</td></tr>
<tr><td rowspan="2">Ignition</td><td>Incorrect ignition timing adjustment</td><td>3</td><td>3</td><td>1</td><td>1</td><td>1</td><td></td><td>1</td><td>1</td><td></td><td></td><td>1</td><td></td><td></td><td>EC-164</td></tr>
<tr><td>Ignition circuit</td><td>1</td><td>1</td><td>2</td><td>2</td><td>2</td><td></td><td>2</td><td>2</td><td></td><td></td><td>2</td><td></td><td></td><td>EC-497</td></tr>
<tr><td colspan="2">Power supply and ground circuit</td><td>2</td><td>2</td><td>3</td><td>3</td><td>3</td><td></td><td>3</td><td>3</td><td></td><td>2</td><td>3</td><td></td><td></td><td>EC-190</td></tr>
<tr><td colspan="2">Mass air flow sensor circuit</td><td rowspan="3">1</td><td rowspan="6">1</td><td rowspan="6">2</td><td>2</td><td rowspan="6">2</td><td></td><td rowspan="6">2</td><td rowspan="6">2</td><td></td><td></td><td rowspan="6">2</td><td></td><td></td><td>EC-219, EC-224</td></tr>
<tr><td colspan="2">Engine coolant temperature sensor circuit</td><td rowspan="3">3</td><td>3</td><td>3</td><td></td><td></td><td>EC-235, EC-240</td></tr>
<tr><td colspan="2">Air fuel ratio (A/F) sensor 1 circuit</td><td></td><td></td><td></td><td></td><td>EC-247, EC-251, EC-254, EC-278, EC-447</td></tr>
<tr><td colspan="2">Throttle position sensor circuit</td><td></td><td></td><td></td><td>2</td><td>2</td><td></td><td></td><td></td><td>EC-237, EC-304, EC-409, EC-410, EC-466</td></tr>
<tr><td colspan="2">Accelerator pedal position sensor circuit</td><td></td><td>3</td><td>2</td><td>1</td><td></td><td></td><td></td><td></td><td></td><td></td><td>EC-395, EC-460, EC-463, EC-469</td></tr>
</table>

	SYMPTOM													Reference page
	HARD/NO START/RESTART (EXCP. HA)	ENGINE STALL	HESITATION/SURGING/FLAT SPOT	SPARK KNOCK/DETONATION	LACK OF POWER/POOR ACCELERATION	HIGH IDLE/LOW IDLE	ROUGH IDLE/HUNTING	IDLING VIBRATION	SLOW/NO RETURN TO IDLE	OVERHEATS/WATER TEMPERATURE HIGH	EXCESSIVE FUEL CONSUMPTION	EXCESSIVE OIL CONSUMPTION	BATTERY DEAD (UNDER CHARGE)	
Warranty symptom code	AA	AB	AC	AD	AE	AF	AG	AH	AJ	AK	AL	AM	HA	
Knock sensor circuit			2								3			EC-313
Engine oil temperature sensor			4		2						3			EC-298, EC-302
Crankshaft position sensor (POS) circuit	2	2												EC-315
Camshaft position sensor (PHASE) circuit	3	2												EC-318
Vehicle speed signal circuit		2	3		3						3			EC-367
ECM	2	2	3	3	3	3	3	3	3	3	3			EC-387, EC-390
Intake valve timing control solenoid valve circuit		3	2		1	3	2	2	3		3			EC-212
Intake valve timing intermediate lock control solenoid valve circuit														EC-381
Exhaust valve timing control solenoid valve		3	2		1	3	2	2	3		3			EC-216
PNP signal circuit			3		3		3	3			3			EC-397
VIAS control solenoid valve 1 circuit					1									EC-439
VIAS control solenoid valve 2 circuit					1									EC-441
Refrigerant pressure sensor circuit		2				3			3		4			EC-508
Cooling fan control module circuit	5	5	5	5	5		5	5	5	4	5			EC-482
Electrical load signal circuit							3							EC-485
Air conditioner circuit	2	2	3	3	3	3	3	3	3		3		2	HA-15
ABS actuator and electric unit (control unit)			4											BRC-187

1 - 6: The numbers refer to the order of inspection.

(continued on next page)

SYSTEM — ENGINE MECHANICAL & OTHER

		SYMPTOM													Reference page
		HARD/NO START/RESTART (EXCP. HA)	ENGINE STALL	HESITATION/SURGING/FLAT SPOT	SPARK KNOCK/DETONATION	LACK OF POWER/POOR ACCELERATION	HIGH IDLE/LOW IDLE	ROUGH IDLE/HUNTING	IDLING VIBRATION	SLOW/NO RETURN TO IDLE	OVERHEATS/WATER TEMPERATURE HIGH	EXCESSIVE FUEL CONSUMPTION	EXCESSIVE OIL CONSUMPTION	BATTERY DEAD (UNDER CHARGE)	
Warranty symptom code		AA	AB	AC	AD	AE	AF	AG	AH	AJ	AK	AL	AM	HA	
Fuel	Fuel tank	5	5												FL-5
	Fuel piping			5	5	5		5	5			5			
	Vapor lock														—
	Valve deposit	5		5	5	5		5	5			5			—
	Poor fuel (Heavy weight gasoline, Low octane)														—
Air	Air duct		5	5		5		5	5			5			EM-24
	Air cleaner														EM-15
	Air leakage from air duct (Mass air flow sensor — electric throttle control actuator)	5			5		5			5					EM-24
	Electric throttle control actuator														EM-26
	Air leakage from intake manifold/ Collector/Gasket														EM-26, EM-29
Cranking	Battery	1	1	1		1		1	1			1		1	PG-86
	Generator circuit														CHG-14 (With EXP-800 NI or GR8-1200 NI)*, CHG-17(Without EXP-800 NI or GR8-1200 NI)*
	Starter circuit	3													STR-10 (With GR8-1200 NI)*, STR-14 (Without GR8-1200 NI)*
	Signal plate	6													EM-95
	PNP signal	4													EC-397

		SYMPTOM													Reference page
		HARD/NO START/RESTART (EXCP. HA)	ENGINE STALL	HESITATION/SURGING/FLAT SPOT	SPARK KNOCK/DETONATION	LACK OF POWER/POOR ACCELERATION	HIGH IDLE/LOW IDLE	ROUGH IDLE/HUNTING	IDLING VIBRATION	SLOW/NO RETURN TO IDLE	OVERHEATS/WATER TEMPERATURE HIGH	EXCESSIVE FUEL CONSUMPTION	EXCESSIVE OIL CONSUMPTION	BATTERY DEAD (UNDER CHARGE)	
Warranty symptom code		AA	AB	AC	AD	AE	AF	AG	AH	AJ	AK	AL	AM	HA	
Engine	Cylinder head	5	5	5	5	5		5	5			5			EM-95
	Cylinder head gasket										4		3		
	Cylinder block	6	6	6	6	6		6	6			6	4		EM-122
	Piston														
	Piston ring														
	Connecting rod														
	Bearing														
	Crankshaft														
Valve mechanism	Timing chain	5	5	5	5	5		5	5			5			EM-63
	Camshaft														EM-76
	Intake valve timing control														EM-63
	Exhaust valve timing control														EM-52
	Intake valve												3		EM-90
	Exhaust valve														
Exhaust	Exhaust manifold/Tube/Muffler/Gasket	5	5	5	5	5		5	5			5			EM-29, EX-4
	Three way catalyst														
Lubrication	Oil pan/Oil strainer/Oil pump/Oil filter/Oil gallery/Oil cooler	5	5	5	5	5		5	5			5			EM-36, LU-10, LU-12, LU-15
	Oil level (Low)/Filthy oil														LU-8
Cooling	Radiator/Hose/Radiator filler cap	5	5	5	5	5		5	5		4	5			CO-15, CO-26
	Thermostat									5					CO-24
	Water pump														CO-19
	Water gallery														CO-8
	Cooling fan									5					CO-17
	Coolant level (Low)/Contaminated coolant														CO-10
NVIS (NISSAN Vehicle Immobilizer System — NATS)		1	1												SEC-12

1 - 6: The numbers refer to the order of inspection.
*: For the details of the EXP-800 NI or GR8-1200 NI, refer to CHG-4, "Special Service Tool".

NORMAL OPERATING CONDITION

Description

INFOID:0000000011148824

FUEL CUT CONTROL (AT NO LOAD AND HIGH ENGINE SPEED)

If the engine speed is above 2,000 rpm under no load (for example, the selector lever position is P or N and engine speed is over 2,000 rpm) fuel will be cut off after some time. The exact time when the fuel is cut off varies based on engine speed.

Fuel cut will be operated until the engine speed reaches 1,100 rpm, then fuel cut will be cancelled.

NOTE:

This function is different from deceleration control listed under Multiport Fuel Injection (MFI) System, EC-41, "MULTIPORT FUEL INJECTION SYSTEM : System Description".

PERIODIC MAINTENANCE

IDLE SPEED

Work Procedure

INFOID:0000000011148825

1. CHECK IDLE SPEED

With CONSULT
Check idle speed in “DATA MONITOR” mode with CONSULT.
With GST
Check idle speed with Service $01 of GST.

>> INSPECTION END

IGNITION TIMING

Work Procedure

INFOID:0000000011148826

1. CHECK IGNITION TIMING

1. Attach timing light to loop wires ① as shown.

   Ⓐ : Timing light

   ⇦ : Vehicle front

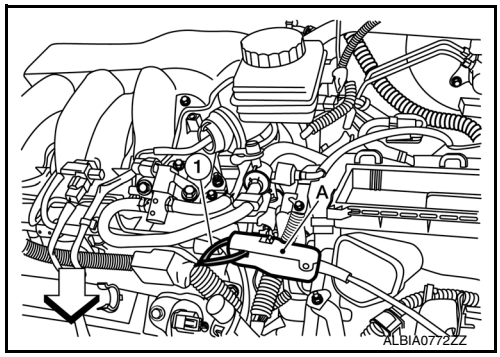

2. Check ignition timing.

   >> INSPECTION END

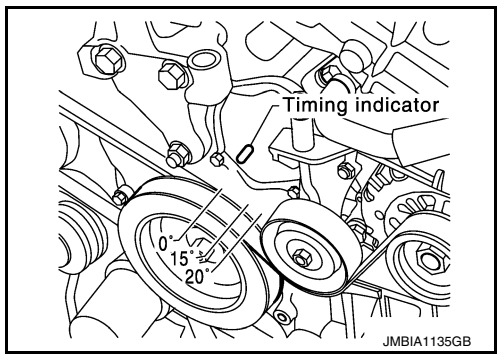

EVAP LEAK CHECK

Work Procedure

INFOID:0000000011148827

CAUTION:
- **Never use compressed air or a high pressure pump.**
- **Never exceed 4.12 kPa (0.042 kg/cm^2, 0.6 psi) of pressure in EVAP system.**

NOTE:
- Do not start engine.
- Improper installation of EVAP service port adapter (commercial service tool) to the EVAP service port may cause a leakage.

WITH CONSULT

1. To locate the EVAP leakage, install EVAP service port adapter (commercial service tool) and pressure pump to EVAP service port.
2. Turn ignition switch ON.
3. Select the “EVAP SYSTEM CLOSE” of “WORK SUPPORT MODE” with CONSULT.
4. Touch “START”. A bar graph (Pressure indicating display) will appear on the screen.
5. Apply positive pressure to the EVAP system until the pressure indicator reaches the middle of the bar graph.
6. Remove EVAP service port adapter (commercial service tool) and hose with pressure pump.
7. Locate the leakage using a leakage detector (commercial service tool). Refer to EC-49, "EVAPORATIVE EMISSION SYSTEM : System Description".

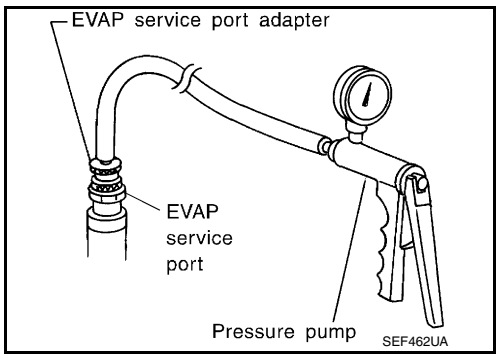

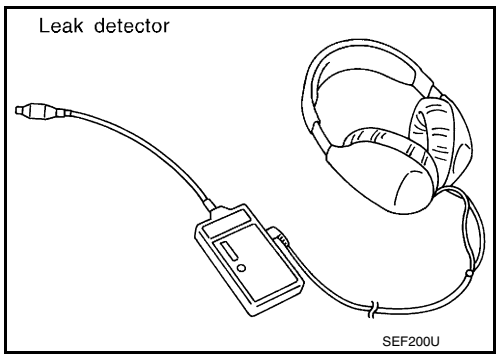

WITHOUT CONSULT

1. To locate the EVAP leakage, install EVAP service port adapter (commercial service tool) and pressure pump to EVAP service port.
2. Apply battery voltage between the terminals of EVAP canister vent control valve to make a closed EVAP system.
3. To locate the leakage, deliver positive pressure to the EVAP system until pressure gauge points reach 1.38 to 2.76 kPa (0.014 to 0.028 kg/cm^2, 0.2 to 0.4 psi).
4. Remove EVAP service port adapter (commercial service tool) and hose with pressure pump.

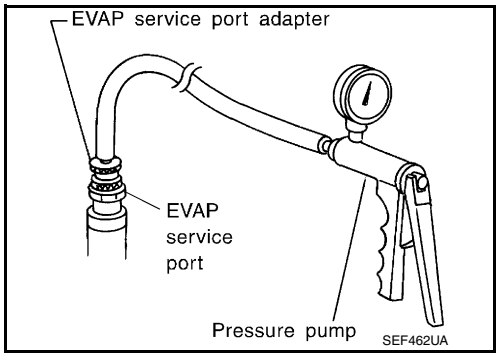

5. Locate the leakage using a leak detector (commercial service tool). Refer to EC-49, "EVAPORATIVE EMISSION SYSTEM : System Description".

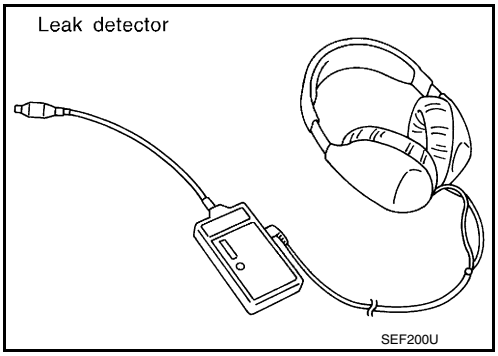

POSITIVE CRANKCASE VENTILATION

Work Procedure

INFOID:0000000011148828

1. CHECK PCV VALVE

With engine running at idle, remove PCV valve from rocker cover. A properly working valve makes a hissing noise as air passes through it. A strong vacuum should be felt immediately when a finger is placed over valve inlet.

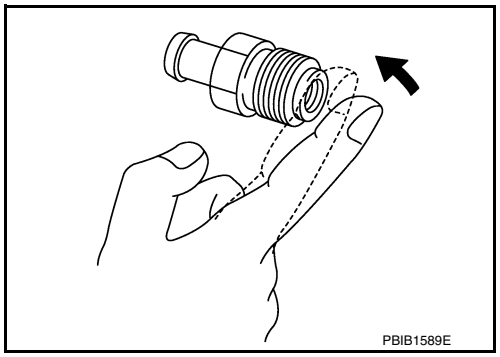

Is the inspection result normal?

YES >> INSPECTION END
NO >> Replace PCV valve.

REMOVAL AND INSTALLATION

ECM

Removal and Installation

INFOID:0000000011148829

CAUTION:
Perform ADDITIONAL SERVICE WHEN REPLACING ECM. Refer to EC-156, "Work Procedure".

REMOVAL

1. Remove front air duct. Refer to EM-24, "Exploded View".
2. Remove battery. Refer to PG-95, "Exploded View".
3. Disconnect ECM harness connectors. Refer to PG-10, "Harness Connector".
4. Remove ECM mounting nuts Ⓐ, and then remove ECM ①.

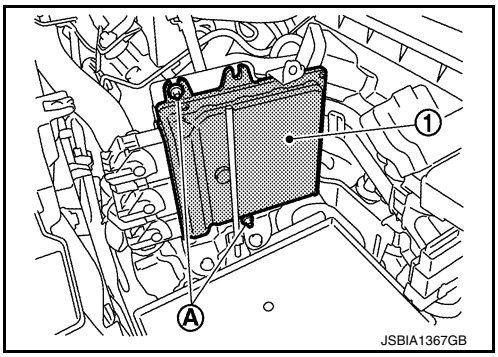

INSTALLATION
Install in the reverse order of removal.

SERVICE DATA AND SPECIFICATIONS (SDS)

SERVICE DATA AND SPECIFICATIONS (SDS)

Idle Speed

INFOID:0000000011148830

Condition	Specification
No load* (in P or N position)	625 ± 50 rpm

*: Under the following conditions
- A/C switch: OFF
- Electric load: OFF (Lights, heater fan & rear window defogger)
- Steering wheel: Kept in straight-ahead position

Ignition Timing

INFOID:0000000011148831

Condition	Specification
No load* (in P or N position)	12 ± 2° BTDC

*: Under the following conditions
- A/C switch: OFF
- Electric load: OFF (Lights, heater fan & rear window defogger)
- Steering wheel: Kept in straight-ahead position

Calculated Load Value

INFOID:0000000011148832

Condition	Specification (Using CONSULT or GST)
At idle	10 – 35 %
At 2,500 rpm	10 – 35 %

Mass Air Flow Sensor

INFOID:0000000011148833

Supply voltage	Battery voltage (11 – 14 V)
Output frequency at idle (in N position)	4,100 – 4,700 Hz*
Mass air flow (Using CONSULT or GST)	2.0 – 6.0 g/s at idle* 7.0 – 20.0 g/s at 2,500 rpm*

*: Engine is warmed up to normal operating temperature and running under no load.

PRECAUTION

PRECAUTIONS

Precaution for Supplemental Restraint System (SRS) "AIR BAG" and "SEAT BELT PRE-TENSIONER"

INFOID:0000000011489440

The Supplemental Restraint System such as “AIR BAG” and “SEAT BELT PRE-TENSIONER”, used along with a front seat belt, helps to reduce the risk or severity of injury to the driver and front passenger for certain types of collision. Information necessary to service the system safely is included in the SR and SB section of this Service Manual.

WARNING:

- **To avoid rendering the SRS inoperative, which could increase the risk of personal injury or death in the event of a collision which would result in air bag inflation, all maintenance must be performed by an authorized NISSAN/INFINITI dealer.**
- **Improper maintenance, including incorrect removal and installation of the SRS, can lead to personal injury caused by unintentional activation of the system. For removal of Spiral Cable and Air Bag Module, see the SR section.**
- **Do not use electrical test equipment on any circuit related to the SRS unless instructed to in this Service Manual. SRS wiring harnesses can be identified by yellow and/or orange harnesses or harness connectors.**

PRECAUTIONS WHEN USING POWER TOOLS (AIR OR ELECTRIC) AND HAMMERS

WARNING:

- **When working near the Airbag Diagnosis Sensor Unit or other Airbag System sensors with the Ignition ON or engine running, DO NOT use air or electric power tools or strike near the sensor(s) with a hammer. Heavy vibration could activate the sensor(s) and deploy the air bag(s), possibly causing serious injury.**
- **When using air or electric power tools or hammers, always switch the Ignition OFF, disconnect the battery and wait at least three minutes before performing any service.**

On Board Diagnostic (OBD) System of Engine and CVT

INFOID:0000000011489441

The ECM has an on board diagnostic system. It will illuminate the malfunction indicator lamp (MIL) to warn the driver of a malfunction causing emission deterioration.

CAUTION:

- **Always to turn the ignition switch OFF and disconnect the negative battery cable before any repair or inspection work. The open/short circuit of related switches, sensors, solenoid valves, etc. will cause the MIL to illuminate.**
- **Always to connect and lock the connectors securely after work. A loose (unlocked) connector will cause the MIL to illuminate due to the open circuit. (Be sure the connector is free from water, grease, dirt, bent terminals, etc.)**
- **Certain systems and components, especially those related to OBD, may use a new style slide-locking type harness connector. For description and how to disconnect, refer to PG-10, "Harness Connector".**
- **Always route and secure the harnesses properly after work. The interference of the harness with a bracket, etc. may cause the MIL to illuminate due to the short circuit.**
- **Always to connect rubber tubes properly after work. A misconnected or disconnected rubber tube may cause the MIL to illuminate due to the malfunction of the EVAP system or fuel injection system, etc.**
- **Always to erase the unnecessary malfunction information (repairs completed) from the ECM and TCM (Transmission control module) before returning the vehicle to the customer.**

General Precautions

INFOID:0000000011489442

- **Always use a 12 volt battery as power source.**
- **Never attempt to disconnect battery cables while engine is running.**
- **Before connecting or disconnecting the ECM harness connector, turn ignition switch OFF and disconnect negative battery cable. Failure to do so may damage the ECM because battery voltage is applied to ECM even if ignition switch is turned OFF.**
- **Before removing parts, turn ignition switch OFF and then disconnect battery ground cable.**

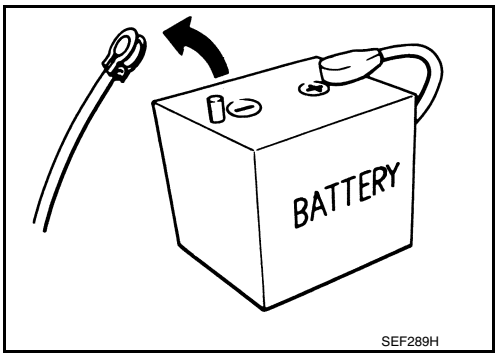

SEF289H

- **Never disassemble ECM.**
- **If a battery cable is disconnected, the memory will return to the ECM value.**
  The ECM will now start to self-control at its initial value. Thus, engine operation can vary slightly in this case. However, this is not an indication of a malfunction. Never replace parts because of a slight variation.
- **If the battery is disconnected, the following emission-related diagnostic information will be lost within 24 hours.**
- **Diagnostic trouble codes**
- **1st trip diagnostic trouble codes**
- **Freeze frame data**
- **1st trip freeze frame data**
- **System readiness test (SRT) codes**
- **Test values**
- **When connecting or disconnecting pin connectors into or from ECM, never damage pin terminals (bends or break).**
  Check that there are not any bends or breaks on ECM pin terminal, when connecting pin connectors.
- **Securely connect ECM harness connectors.**
  A poor connection can cause an extremely high (surge) voltage to develop in coil and condenser, thus resulting in damage to ICs.
- **Keep engine control system harness at least 10 cm (4 in) away from adjacent harness, to prevent engine control system malfunctions due to receiving external noise, degraded operation of ICs, etc.**
- **Keep engine control system parts and harness dry.**
- **Before replacing ECM, perform ECM Terminals and Reference Value inspection and check ECM functions properly. Refer to EC-593, "Reference Value".**
- **Handle mass air flow sensor carefully to avoid damage.**
- **Never clean mass air flow sensor with any type of detergent.**
- **Never disassemble electric throttle control actuator.**
- **Even a slight leakage in the air intake system can cause serious incidents.**
- **Never shock or jar the camshaft position sensor (PHASE), crankshaft position sensor (POS).**

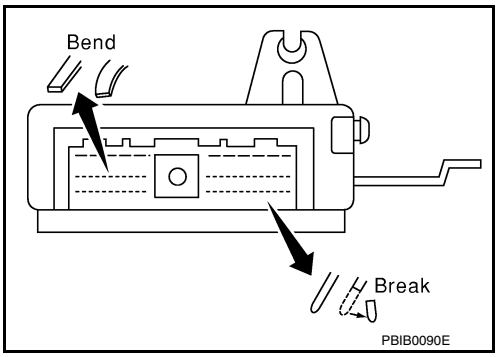

PBIB0090E

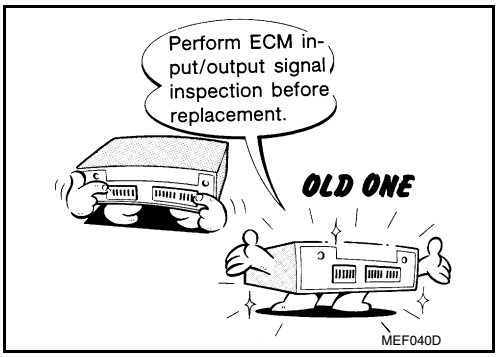

MEF040D

- **After performing each TROUBLE DIAGNOSIS, perform DTC Confirmation Procedure or Component Function Check.**
  The DTC should not be displayed in the DTC Confirmation Procedure if the repair is completed. The Component Function Check should be a good result if the repair is completed.

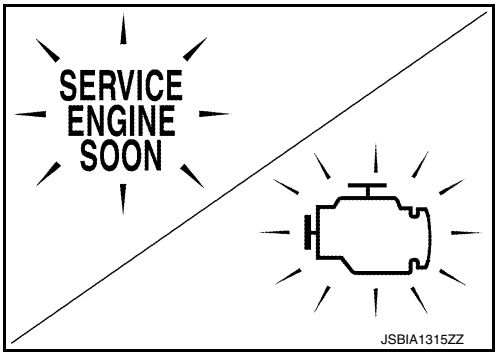

- **When measuring ECM signals with a circuit tester, never allow the two tester probes to contact.**
  Accidental contact of probes will cause a short circuit and damage the ECM power transistor.

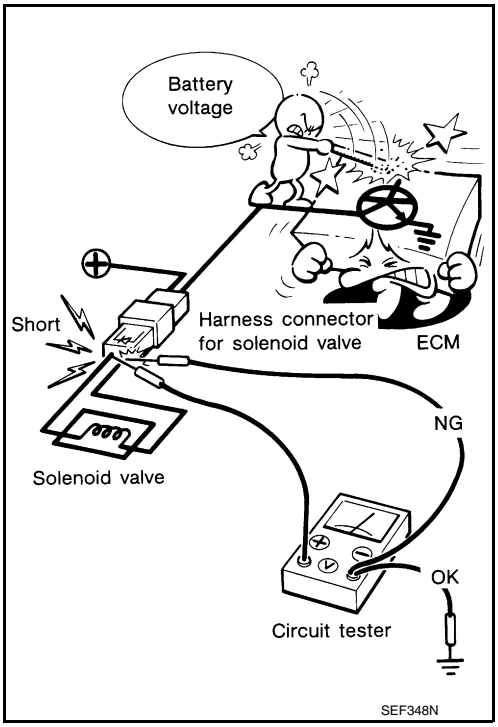

- **B1 indicates bank 1, B2 indicates bank 2 as shown in the figure.**
- **Never operate fuel pump when there is no fuel in lines.**
- **Tighten fuel hose clamps to the specified torque.**

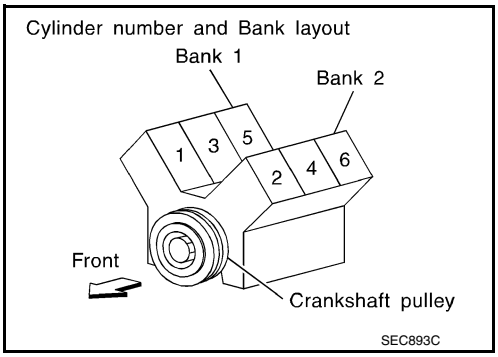

- **Never depress accelerator pedal when starting.**
- **Immediately after starting, never rev up engine unnecessarily.**
- **Never rev up engine just prior to shutdown.**

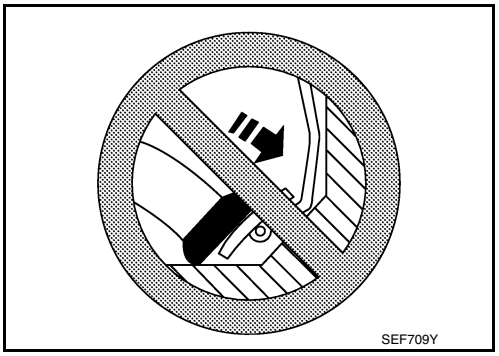

- **When installing C.B. ham radio or a mobile phone, be sure to observe the following as it may adversely affect electronic control systems depending on installation location.**
  - **Keep the antenna as far as possible from the electronic control units.**
  - **Keep the antenna feeder line more than 20 cm (8 in) away from the harness of electronic controls.**
    Never let them run parallel for a long distance.
  - **Adjust the antenna and feeder line so that the standing-wave ratio can be kept smaller.**
  - **Be sure to ground the radio to vehicle body.**

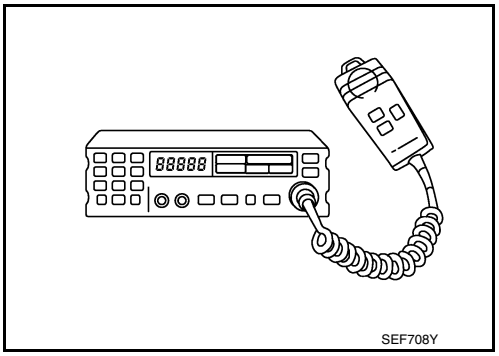

PREPARATION

PREPARATION

Special Service Tools

INFOID:0000000011489443

Tool number Tool name	Description
(J-44321) Fuel pressure gauge kit 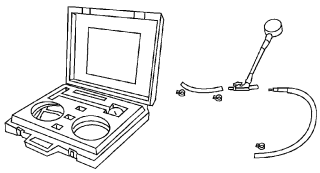 LEC642	Checks fuel pressure
(J-44321-6) Fuel pressure adapter 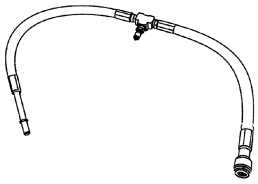 LBIA0376E	Connects fuel pressure gauge to quick connector type fuel lines

Commercial Service Tools

INFOID:0000000011489444

Tool name	Description
(J-45488) Quick connector release 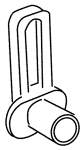 PBIC0198E	Removes fuel tube quick connectors in engine room
Leak detector i.e.: (J-41416) 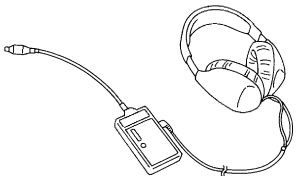 S-NT703	Locates the EVAP leakage
EVAP service port adapter i.e.: (J-41413-OBD) 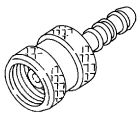 S-NT704	Applies positive pressure through EVAP service port

Tool name	Description
Fuel filler cap adapter i.e.: (MLR-8382)  S-NT815	Checks fuel tank vacuum relief valve opening pressure
Socket wrench 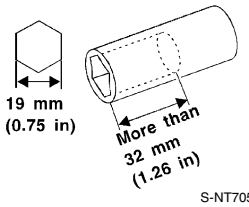 S-NT705	Removes and installs engine coolant temperature sensor. Refer to CO-26, "Exploded View".

SYSTEM DESCRIPTION

COMPONENT PARTS

ENGINE CONTROL SYSTEM

ENGINE CONTROL SYSTEM : Component Parts Location

INFOID:0000000011489445

ENGINE ROOM

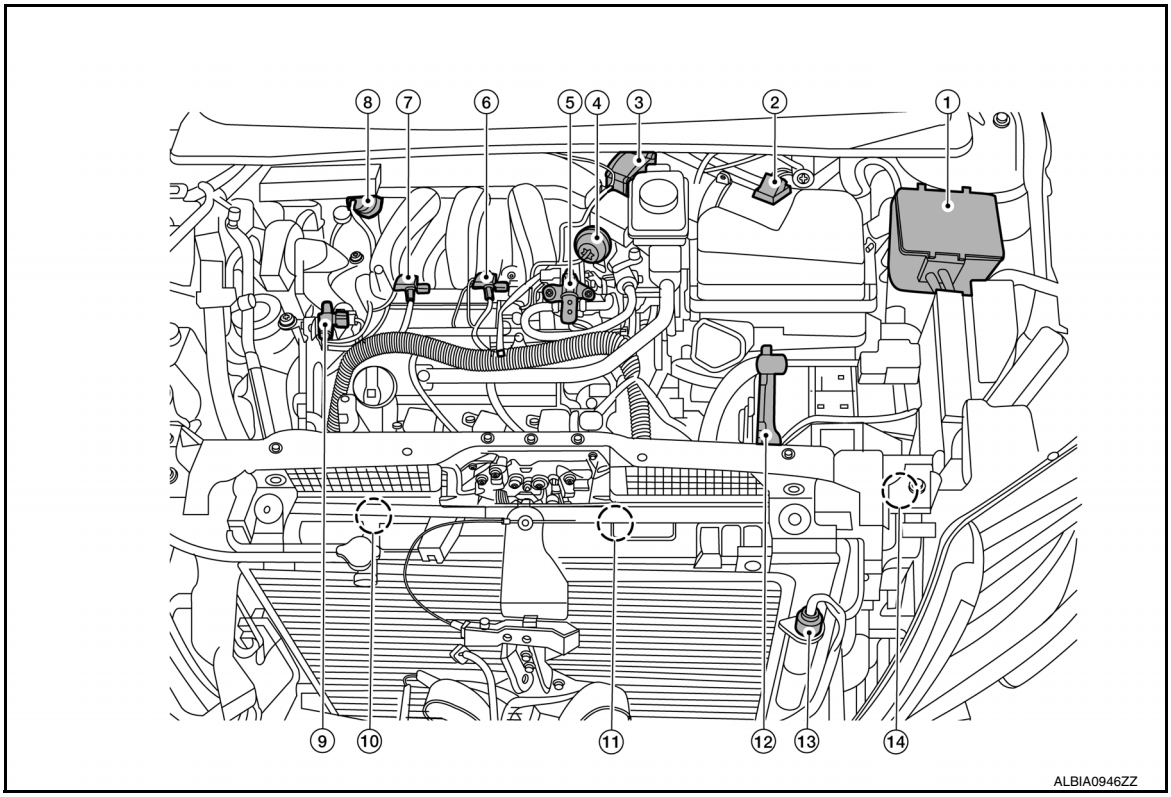

No.	Component	Function
①	IPDM E/R	IPDM E/R activates the internal control circuit to perform the relay ON-OFF control according to the input signals from various sensors and the request signals received from control units via CAN communication. Refer to PCS-4, "Component Parts Location" for detailed installation location.
②	Mass air flow sensor (with intake air temperature sensor)	EC-546, "Mass Air Flow Sensor (With Intake Air Temperature Sensor)"
③	Electric throttle control actuator	EC-541, "Electric Throttle Control Actuator"
④	Power valve actuator 2	EC-547, "Power Valve Actuator 1 and 2"
⑤	EVAP canister purge volume control solenoid valve	EC-543, "EVAP Canister Purge Volume Control Solenoid Valve"
⑥	VIAS control solenoid valve 2	EC-547, "VIAS Control Solenoid Valve 1 and 2"
⑦	VIAS control solenoid valve 1	EC-547, "VIAS Control Solenoid Valve 1 and 2"
⑧	Power valve actuator 1	EC-547, "Power Valve Actuator 1 and 2"
⑨	Electronic controlled engine mount control solenoid valve	EC-541, "Electronic Controlled Engine Mount"
⑩	Cooling fan motor-2	EC-540, "Cooling Fan Motor & Cooling Fan Control Module"
⑪	Cooling fan motor-1	EC-540, "Cooling Fan Motor & Cooling Fan Control Module"
⑫	ECM	EC-540, "ECM"

No.	Component	Function
⑬	Refrigerant pressure sensor	EC-547, "Refrigerant Pressure Sensor" Refer to HAC-11, "FRONT AUTOMATIC AIR CONDITIONING SYSTEM : Component Parts Location" for detailed installation location.
⑭	Battery current sensor (with battery temperature sensor)*	EC-539, "Battery Current Sensor (With Battery Temperature Sensor)"

*: Not used for engine control system.

ENGINE

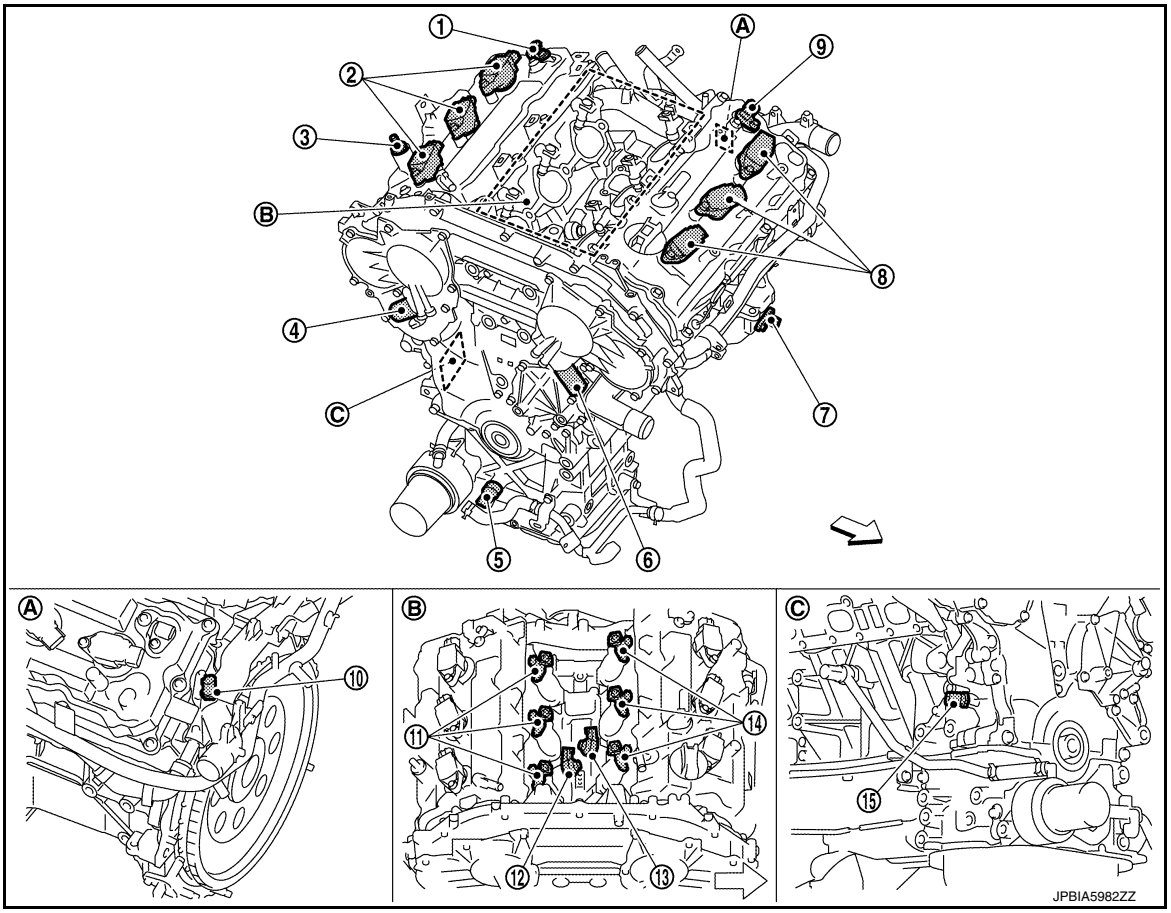

Ⓐ Engine rear upper-left Ⓑ Engine top center Ⓒ Engine front lower-right

⇦ : Vehicle front

No.	Component	Function
①	Camshaft position sensor (PHASE) (bank 1)	EC-539, "Camshaft Position Sensor (PHASE)"
②	Ignition coil (with power transistor) (bank 1)	EC-545, "Ignition Coil (With Power Transistor)"
③	PCV valve	EC-548, "Positive Crankcase Ventilation (PCV)"
④	Intake valve timing control solenoid valve (bank 1)	EC-545, "Intake Valve Timing Control Solenoid Valve"
⑤	Engine oil pressure sensor	EC-542, "Engine Oil Pressure Sensor"
⑥	Intake valve timing control solenoid valve (bank 2)	EC-545, "Intake Valve Timing Control Solenoid Valve"
⑦	Crankshaft position sensor (POS)	EC-540, "Crankshaft Position Sensor (POS)"
⑧	Ignition coil (with power transistor) (bank 2)	EC-545, "Ignition Coil (With Power Transistor)"
⑨	Camshaft position sensor (PHASE) (bank 2)	EC-539, "Camshaft Position Sensor (PHASE)"

No.	Component	Function
⑩	Engine coolant temperature sensor	EC-542, "Engine Coolant Temperature Sensor"
⑪	Fuel injector (bank 1)	EC-544, "Fuel Injector"
⑫	Knock sensor (bank 1)	EC-546, "Knock Sensor"
⑬	Knock sensor (bank 2)	EC-546, "Knock Sensor"
⑭	Fuel injector (bank 2)	EC-544, "Fuel Injector"
⑮	Engine oil temperature sensor	EC-542, "Engine Oil Temperature Sensor"

EXHAUST

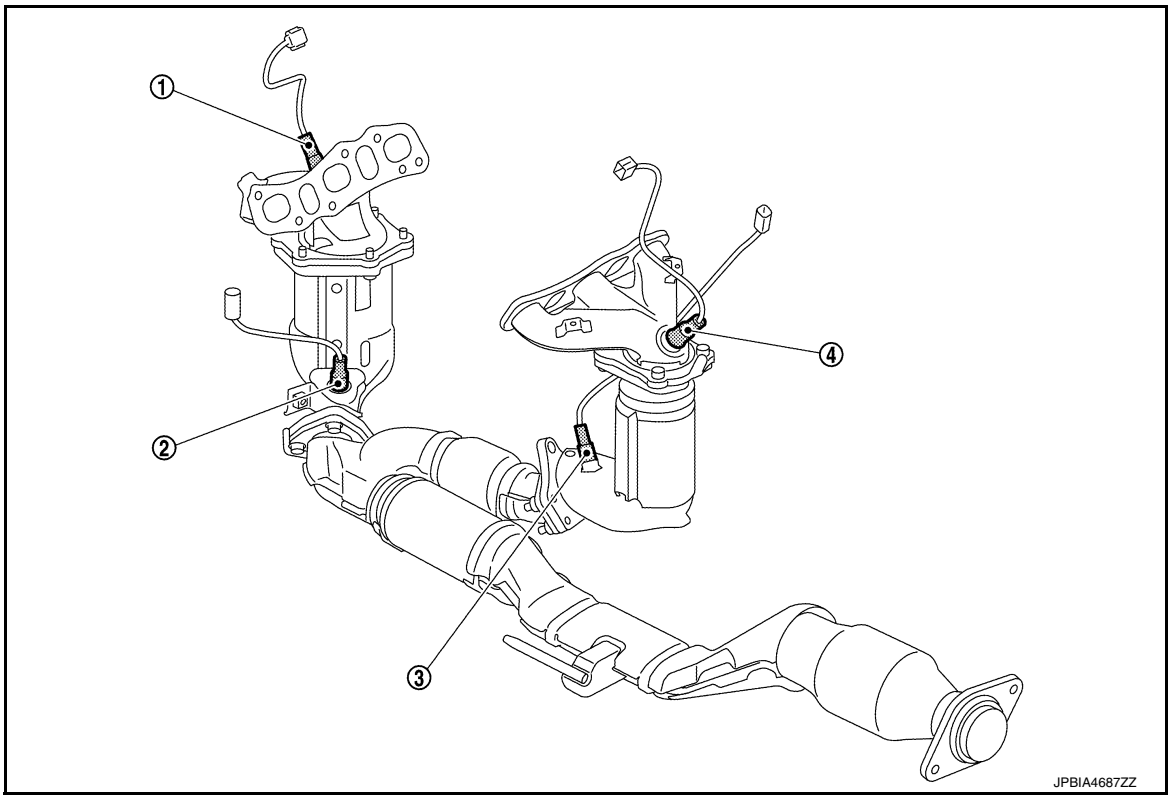

No.	Component	Function
①	Air fuel ratio (A/F) sensor 1 (bank 2)	EC-538, "Air Fuel Ratio (A/F) Sensor 1"
②	Heated oxygen sensor 2 (bank 2)	EC-545, "Heated Oxygen Sensor 2"
③	Heated oxygen sensor 2 (bank 1)	EC-545, "Heated Oxygen Sensor 2"
④	Air fuel ratio (A/F) sensor 1 (bank 1)	EC-538, "Air Fuel Ratio (A/F) Sensor 1"

BODY

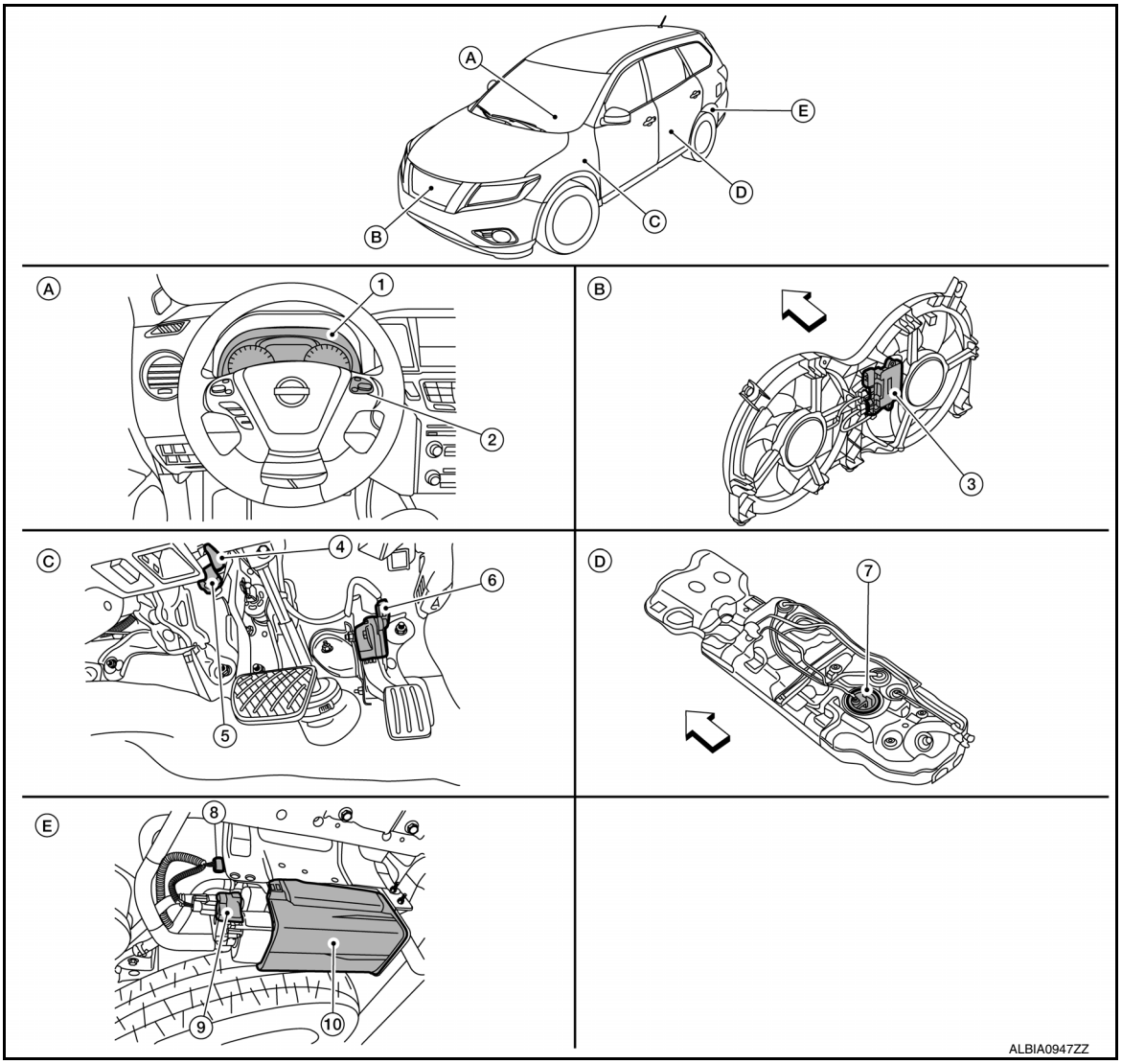

Ⓐ Instrument panel periphery (driver side)
Ⓑ Front side of engine room (cooling fan assembly)
Ⓒ Pedal periphery
Ⓓ Under of rear seat (fuel tank)
Ⓔ Under the spare tire housing
⇦ : Vehicle front

No.	Component		Function
①	Combination meter	Malfunction indicator lamp (MIL)	EC-546, "Malfunction Indicator Lamp (MIL)"
		Information display	The operation mode of the ASCD is indicated on the information display in the combination meter. ECM transmits the status signal to the combination meter via CAN communication according to ASCD operation.
②	ASCD steering switch		EC-539, "ASCD Steering Switch"
③	Cooling fan control module		EC-540, "Cooling Fan Motor & Cooling Fan Control Module"
④	Stop lamp switch		EC-547, "Stop Lamp Switch & Brake Pedal Position Switch"
⑤	Brake pedal position switch		EC-547, "Stop Lamp Switch & Brake Pedal Position Switch"
⑥	Accelerator pedal position sensor		EC-538, "Accelerator Pedal Position Sensor"

No.	Component	Function
⑦	Fuel level sensor unit and fuel pump (with fuel tank temperature sensor)	EC-544, "Fuel Level Sensor Unit and Fuel Pump (With Fuel Tank Temperature Sensor)" Refer to FL-6, "Exploded View" for detailed installation location.
⑧	EVAP control system pressure sensor	EC-543, "EVAP Control System Pressure Sensor"
⑨	EVAP canister vent control valve	EC-543, "EVAP Canister Vent Control Valve"
⑩	EVAP canister	EC-543, "EVAP Canister"

Accelerator Pedal Position Sensor

INFOID:0000000011489446

The accelerator pedal position sensor is installed on the upper end of the accelerator pedal assembly. The sensor detects the accelerator position and sends a signal to the ECM.

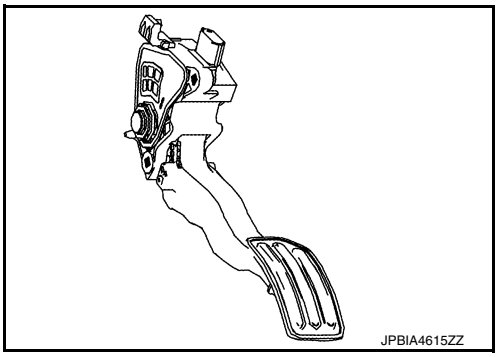

Accelerator pedal position sensor has two sensors. These sensors are a kind of potentiometers which transform the accelerator pedal position into output voltage, and emit the voltage signal to the ECM. In addition, these sensors detect the opening and closing speed of the accelerator pedal and feed the voltage signals to the ECM. The ECM judges the current opening angle of the accelerator pedal from these signals and controls the throttle control motor based on these signals.
Idle position of the accelerator pedal is determined by the ECM receiving the signal from the accelerator pedal position sensor. The ECM uses this signal for the engine operation such as fuel cut.

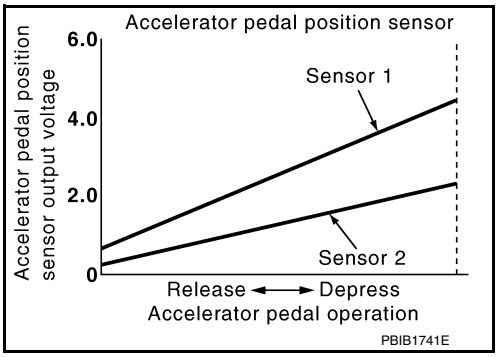

Air Fuel Ratio (A/F) Sensor 1

INFOID:0000000011489447

DESCRIPTION

The air fuel ratio (A/F) sensor 1 is a planar one-cell limit current sensor. The sensor element of the A/F sensor 1 is composed an electrode layer, which transports ions. It has a heater in the element.
The sensor is capable of precise measurement λ = 1, but also in the lean and rich range. Together with its control electronics, the sensor outputs a clear, continuous signal throughout a wide λ range.
The exhaust gas components diffuse through the diffusion layer at the sensor cell. An electrode layer is applied voltage, and this current relative oxygen density in lean. Also this current relative hydrocarbon density in rich.

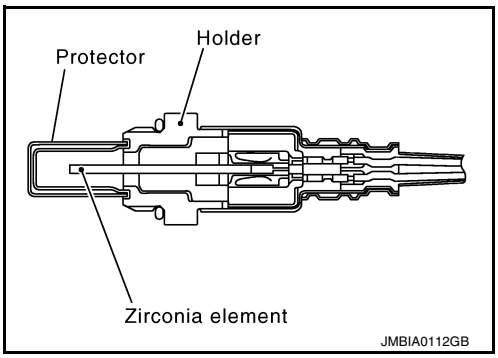

Therefore, the A/F sensor 1 is able to indicate air fuel ratio by this electrode layer of current. In addition, a heater is integrated in the sensor to ensure the required operating temperature of approximately 800°C (1,472°F).

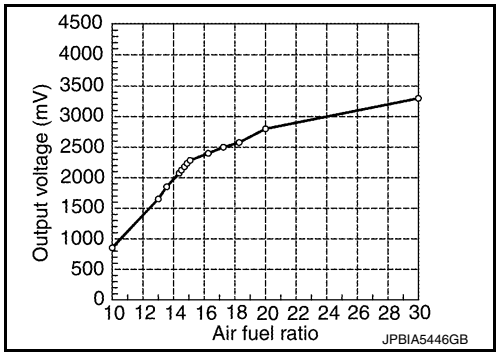

A/F SENSOR 1 HEATER

A/F sensor 1 heater is integrated in the sensor.
The ECM performs ON/OFF duty control of the A/F sensor 1 heater corresponding to the engine operating condition to keep the temperature of A/F sensor 1 element within the specified range.

ASCD Steering Switch

INFOID:0000000011489448

ASCD steering switch has variant values of electrical resistance for each button. ECM reads voltage variation of switch, and determines which button is operated.

Battery Current Sensor (With Battery Temperature Sensor)

INFOID:0000000011489449

BATTERY CURRENT SENSOR

The battery current sensor is installed to the battery cable at the negative terminal. The sensor measures the charging/discharging current of the battery.

BATTERY TEMPERATURE SENSOR

Battery temperature sensor is integrated in battery current sensor.
The sensor measures temperature around the battery.
The electrical resistance of the thermistor decreases as temperature increases.
<Reference data>

Temperature [°C (°F)]	Voltage* (V)	Resistance (kΩ)
25 (77)	3.333	1.9 - 2.1
90 (194)	0.969	0.222 - 0.258

*: These data are reference values and are measured between battery temperature sensor signal terminal and sensor ground.

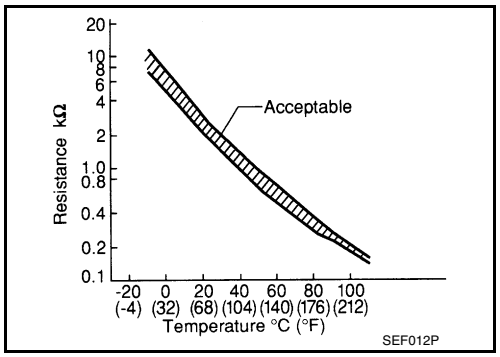

Camshaft Position Sensor (PHASE)

INFOID:0000000011489450

The camshaft position sensor (PHASE) senses the retraction of intake camshaft to identify a particular cylinder. The camshaft position sensor (PHASE) senses the piston position.
When the crankshaft position sensor (POS) system becomes inoperative, the camshaft position sensor (PHASE) provides various controls of engine parts instead, utilizing timing of cylinder identification signals.
The sensor consists of a permanent magnet and Hall IC.
When engine is running, the high and low parts of the teeth cause the gap with the sensor to change.
The changing gap causes the magnetic field near the sensor to change.
Due to the changing magnetic field, the voltage from the sensor changes.

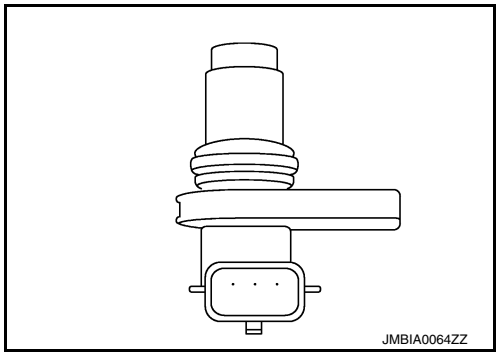

ECM receives the signals as shown in the figure.

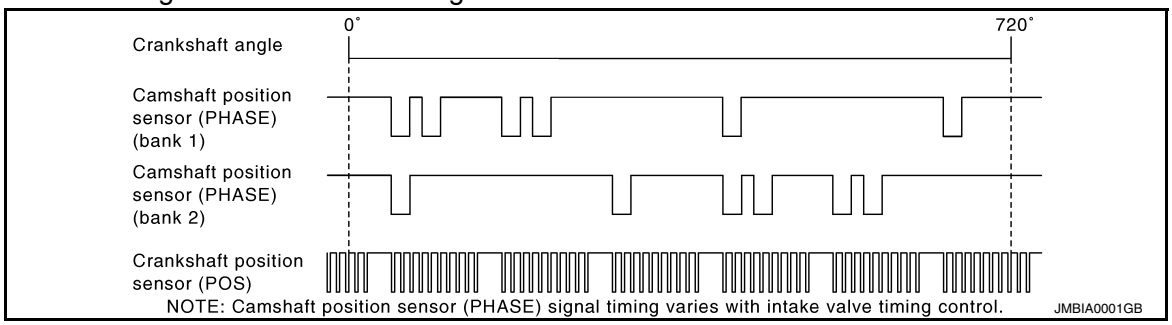

Cooling Fan Motor & Cooling Fan Control Module

INFOID:0000000011489451

COOLING FAN MOTOR

Cooling fan motor receives cooling fan motor operating voltage from cooling fan control module. The revolution speed of cooling fan motor is controlled by duty cycle of the voltage.

COOLING FAN CONTROL MODULE

Cooling fan control module receives ON/OFF pulse duty signal from IPDM E/R. Corresponding to this ON/OFF pulse duty signal, cooling fan control module sends cooling fan motor operating voltage to cooling fan motor. The revolution speed of cooling fan motor is controlled by duty cycle of the voltage.

Crankshaft Position Sensor (POS)

INFOID:0000000011489452

The crankshaft position sensor (POS) is located on the oil pan facing the gear teeth (cogs) of the signal plate. It detects the fluctuation of the engine revolution.
The sensor consists of a permanent magnet and Hall IC.
When the engine is running, the high and low parts of the teeth cause the gap with the sensor to change.
The changing gap causes the magnetic field near the sensor to change.
Due to the changing magnetic field, the voltage from the sensor changes.
The ECM receives the voltage signal and detects the fluctuation of the engine revolution.

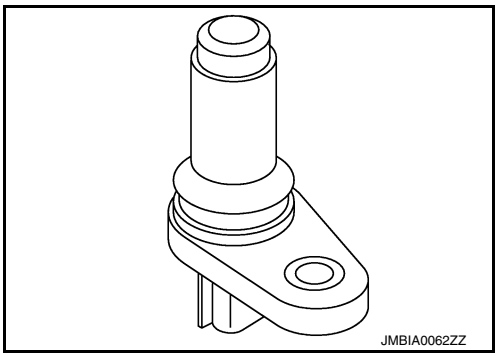

ECM receives the signals as shown in the figure.

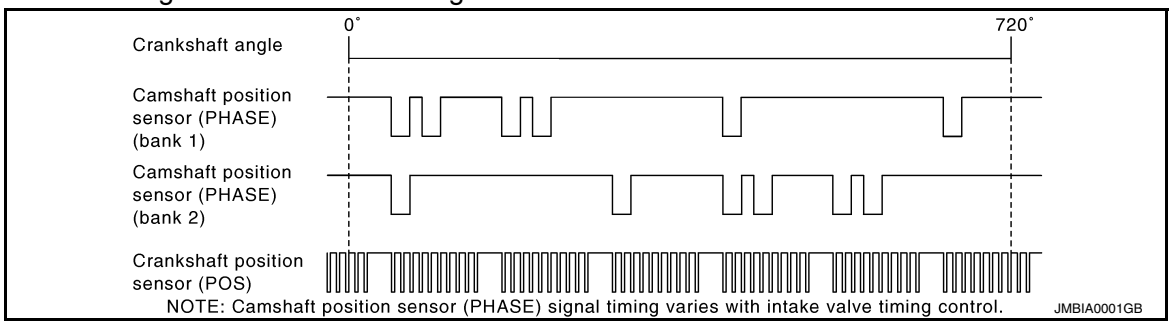

ECM

INFOID:0000000011489453

- ECM (Engine Control Module) controls the engine.

- ECM consists of a microcomputer and connectors for signal input and output and for power supply.
- Battery voltage is supplied to the ECM even when the ignition switch is turned OFF for the ECM memory function of the DTC memory, the air-fuel ratio feedback compensation value memory, the idle air volume learning value memory, etc.

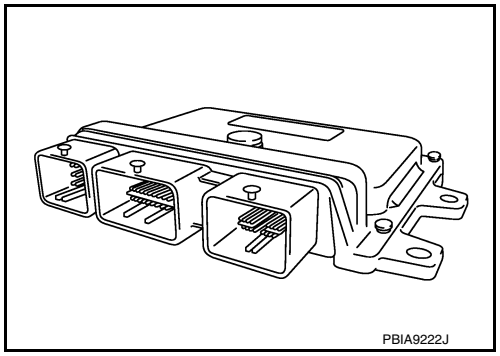

Electric Throttle Control Actuator

INFOID:0000000011489454

OUTLINE

Electric throttle control actuator consists of throttle body, throttle valve, throttle control motor and throttle position sensor.

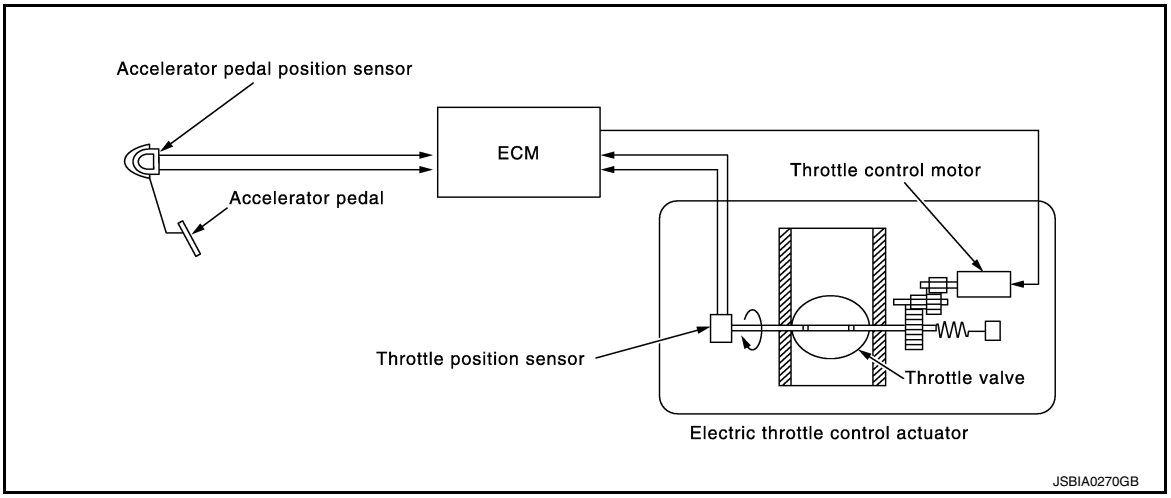

THROTTLE CONTROL MOTOR

The throttle control motor is operated by the ECM and it opens and closes the throttle valve.
The current opening angle of the throttle valve is detected by the throttle position sensor and it provides feedback to the ECM to control the throttle control motor to make the throttle valve opening angle properly in response to driving condition.

THROTTLE POSITION SENSOR

The throttle position sensor responds to the throttle valve movement.
The throttle position sensor has two sensors. These sensors are a kind of potentiometers which transform the throttle valve position into output voltage, and emit the voltage signal to the ECM. In addition, these sensors detect the opening and closing speed of the throttle valve and feed the voltage signals to the ECM. The ECM judges the current opening angle of the throttle valve from these signals and the ECM controls the throttle control motor to make the throttle valve opening angle properly in response to driving condition.

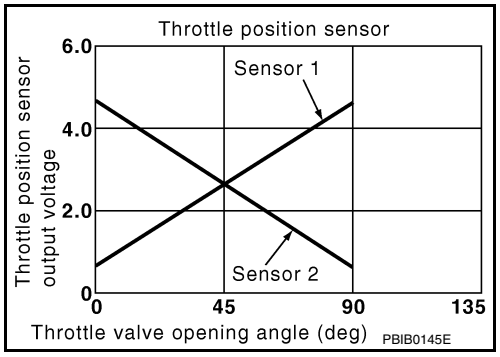

Electronic Controlled Engine Mount

INFOID:0000000011489455

In the idle range, ECM turns OFF the electronically-controlled engine mount control solenoid valve and applies manifold pressure to the electronically-controlled engine mount. This decreases damping force of the electronically-controlled engine mount and absorbs vibrations traveling from the engine to the body for improving the quietness.

In the driving range, ECM turns ON the electronically-controlled engine mount control solenoid valve and cuts manifold pressure applied on the electronically-controlled engine mount. This increases damping force of the electronically-controlled engine mount and reduces vibrations generated during driving.

Engine Coolant Temperature Sensor

INFOID:0000000011489456

The engine coolant temperature sensor is used to detect the engine coolant temperature. The sensor modifies a voltage signal from the ECM. The modified signal returns to the ECM as the engine coolant temperature input. The sensor uses a thermistor which is sensitive to the change in temperature. The electrical resistance of the thermistor decreases as temperature increases.

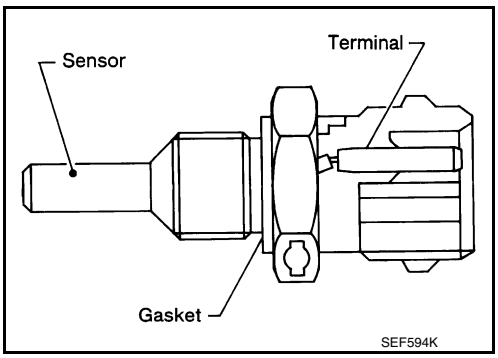

<Reference data>

Engine coolant temperature [°C (°F)]	Voltage* (V)	Resistance (kΩ)
–10 (14)	4.4	7.0 - 11.4
20 (68)	3.5	2.37 - 2.63
50 (122)	2.2	0.68 - 1.00
90 (194)	0.9	0.236 - 0.260

*: These data are reference values and are measured between ECM terminals.

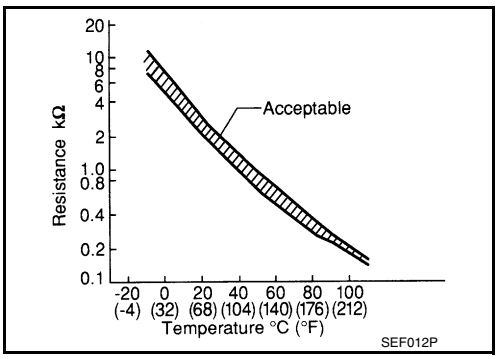

Engine Oil Pressure Sensor

INFOID:0000000011489457

The engine oil pressure (EOP) sensor is detects engine oil pressure and transmits a voltage signal to the ECM.

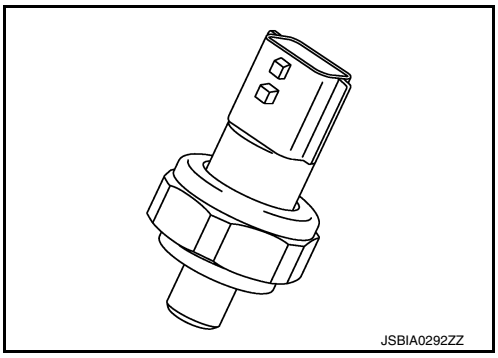

Engine Oil Temperature Sensor

INFOID:0000000011489458

The engine oil temperature sensor is used to detect the engine oil temperature. The sensor modifies a voltage signal from the ECM. The modified signal returns to the ECM as the engine oil temperature input. The sensor uses a thermistor which is sensitive to the change in temperature. The electrical resistance of the thermistor decreases as temperature increases.

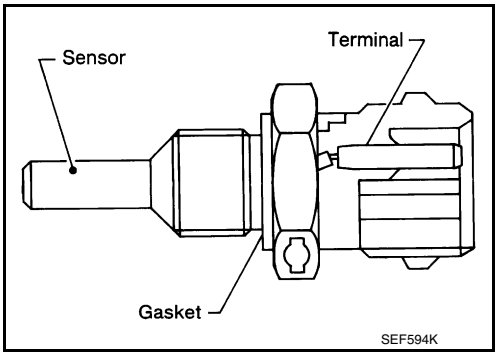

<Reference data>

Engine oil temperature [°C (°F)]	Voltage* (V)	Resistance (kΩ)
–10 (14)	4.4	7.0 - 11.4
20 (68)	3.5	2.37 - 2.63
50 (122)	2.2	0.68 - 1.00
90 (194)	0.9	0.236 - 0.260
110 (230)	0.6	0.143 - 0.153

*: These data are reference values and are measured between ECM terminals.

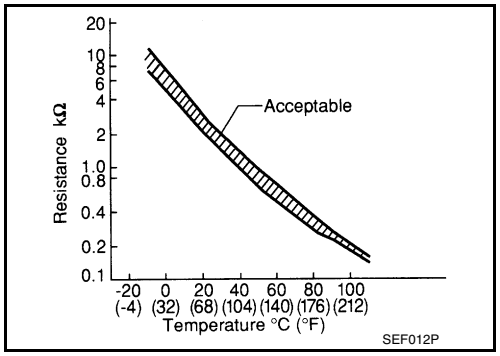

EVAP Canister

INFOID:0000000011489459

The fuel vapor in the sealed fuel tank is led into the EVAP canister which contains activated carbon and the vapor is stored there when the engine is not operating or when refueling to the fuel tank.
For details, refer to EC-561, "EVAPORATIVE EMISSION SYSTEM : System Description".

EVAP Canister Purge Volume Control Solenoid Valve

INFOID:0000000011489460

The EVAP canister purge volume control solenoid valve is used to control the flow rate of fuel vapor from the EVAP canister. The EVAP canister purge volume control solenoid valve is moved by ON/OFF pulses from the ECM. The longer the ON pulse, the greater the amount of fuel vapor that will flow through the valve.

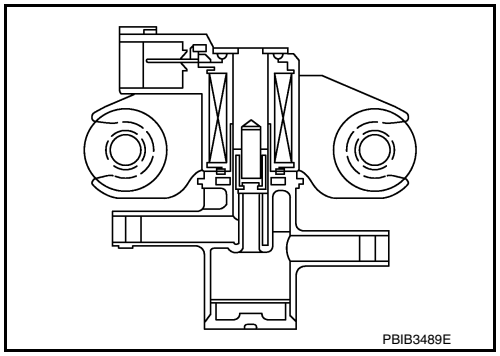

EVAP Canister Vent Control Valve

INFOID:0000000011489461

The EVAP canister vent control valve is located on the EVAP canister and is used to seal the canister vent.
This solenoid valve responds to signals from the ECM. When the ECM sends an ON signal, the coil in the solenoid valve is energized. A plunger will then move to seal the canister vent. The ability to seal the vent is necessary for the on board diagnosis of other evaporative emission control system components.
This solenoid valve is used only for diagnosis, and usually remains opened.
When the vent is closed, under normal purge conditions, the evaporative emission control system is depressurized and allows “EVAP Control System” diagnosis.

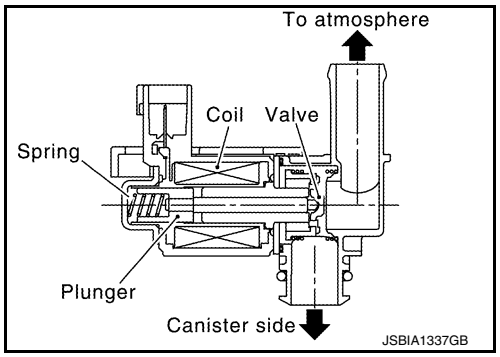

EVAP Control System Pressure Sensor

INFOID:0000000011489462

The EVAP control system pressure sensor detects pressure in the purge line. The sensor output voltage to the ECM increases as pressure increases.

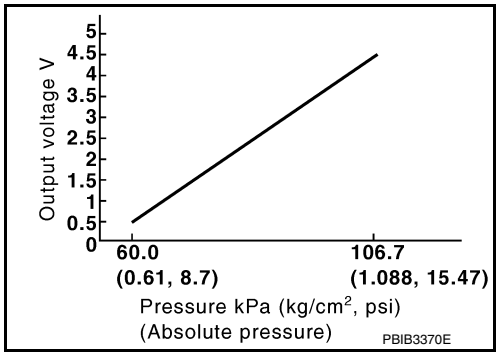

Fuel Injector

INFOID:0000000011489463

The fuel injector is a small, precise solenoid valve. When the ECM supplies a ground to the fuel injector circuit, the coil in the fuel injector is energized. The energized coil pulls the ball valve back and allows fuel to flow through the fuel injector into the intake manifold. The amount of fuel injected depends upon the injection pulse duration. Pulse duration is the length of time the fuel injector remains open. The ECM controls the injection pulse duration based on engine fuel needs.

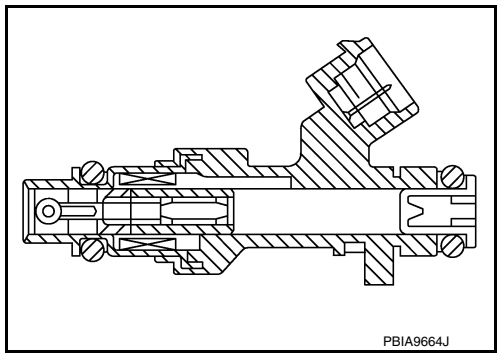

Fuel Level Sensor Unit and Fuel Pump (With Fuel Tank Temperature Sensor)

INFOID:0000000011489464

FUEL PUMP

The ECM activates the fuel pump for 1 second after the ignition switch is turned ON to improve engine start ability. If the ECM receives an engine speed signal from the camshaft position sensor (PHASE), it knows that the engine is rotating, and causes the pump to operate. If the engine speed signal is not received when the ignition switch is ON, the engine stalls. The ECM stops pump operation and prevents battery discharging, thereby improving safety. The ECM does not directly drive the fuel pump. It sends the control signal to the fuel pump control module, which in turn controls the fuel pump.

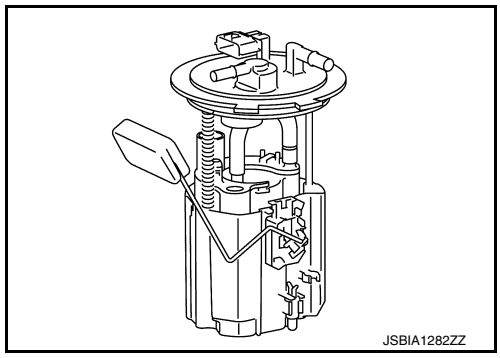

Condition	Fuel pump operation
Ignition switch is turned to ON.	Operates for 1 second.
Engine running and cranking	Operates.
When engine is stopped	Stops in 1.5 seconds.
Except as shown above	Stops.

FUEL LEVEL SENSOR

The fuel level sensor is mounted in the fuel level sensor unit.
The sensor detects a fuel level in the fuel tank and transmits a signal to the combination meter. The combination meter sends the fuel level sensor signal to the ECM via the CAN communication line.
It consists of two parts, one is mechanical float and the other is variable resistor. Fuel level sensor output voltage changes depending on the movement of the fuel mechanical float.

FUEL TANK TEMPERATURE SENSOR

The fuel tank temperature sensor is used to detect the fuel temperature inside the fuel tank. The sensor modifies a voltage signal from the ECM. The modified signal returns to the ECM as the fuel temperature input. The sensor uses a thermistor which is sensitive to the change in temperature. The electrical resistance of the thermistor decreases as temperature increases.

<Reference data>

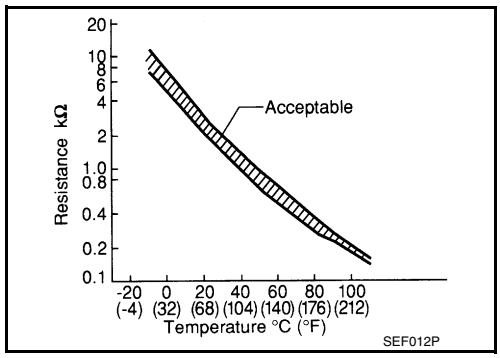

Fluid temperature [°C (°F)]	Voltage* (V)	Resistance (kΩ)
20 (68)	3.5	2.3 - 2.7
50 (122)	2.2	0.79 - 0.90

*: These data are reference values and are measured between ECM terminals 95 (Fuel tank temperature sensor) and ground.

Heated Oxygen Sensor 2

INFOID:0000000011489465

DESCRIPTION

The heated oxygen sensor 2, after three way catalyst (manifold), monitors the oxygen level in the exhaust gas.
Even if switching characteristics of the air fuel ratio (A/F) sensor 1 are shifted, the air fuel ratio is controlled to stoichiometric, by the signal from the heated oxygen sensor 2.
This sensor is made of ceramic zirconia. The zirconia generates voltage from approximately 1 V in richer conditions to 0 V in leaner conditions.
Under normal conditions the heated oxygen sensor 2 is not used for engine control operation.

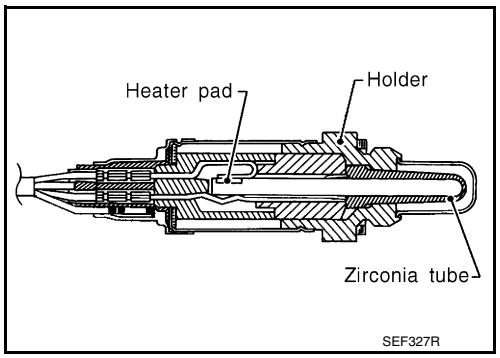

HEATED OXYGEN SENSOR 2 HEATER

Heated oxygen sensor 2 heater is integrated in the sensor.
The ECM performs ON/OFF control of the heated oxygen sensor 2 heater corresponding to the engine speed, amount of intake air and engine coolant temperature.

Engine speed	Heated oxygen sensor 2 heater
Above 3,600 rpm	OFF
Below 3,600 rpm after the following conditions are met. • Engine: After warming up • Keeping the engine speed between 3,500 and 4,000 rpm for 1 minute and at idle for 1 minute under no load	ON

Ignition Coil (With Power Transistor)

INFOID:0000000011489466

The ignition signal from the ECM is sent to and amplified by the power transistor. The power transistor turns ON and OFF the ignition coil primary circuit. This ON/OFF operation induces the proper high voltage in the coil secondary circuit.

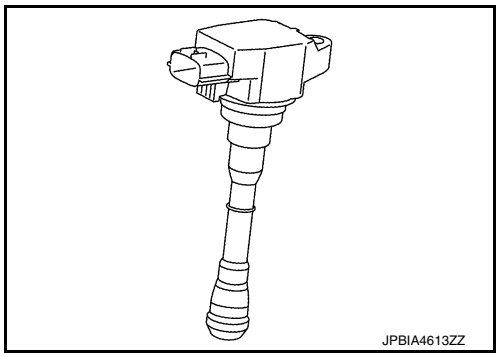

Intake Valve Timing Control Solenoid Valve

INFOID:0000000011489467

Intake valve timing control solenoid valve is activated by ON/OFF pulse duty (ratio) signals from the ECM.
The intake valve timing control solenoid valve changes the oil amount and direction of flow through intake valve timing control unit or stops oil flow.
The longer pulse width advances valve angle.
The shorter pulse width retards valve angle.
When ON and OFF pulse widths become equal, the solenoid valve stops oil pressure flow to fix the intake valve angle at the control position.

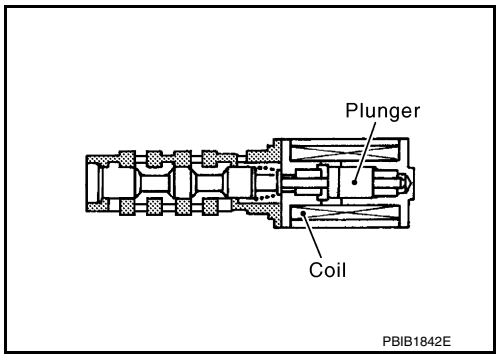

Knock Sensor

INFOID:0000000011489468

The knock sensor is attached to the cylinder block. It senses engine knocking using a piezoelectric element. A knocking vibration from the cylinder block is sensed as vibrational pressure. This pressure is converted into a voltage signal and sent to the ECM.

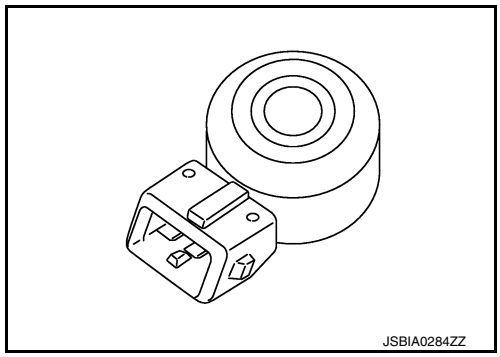

Malfunction Indicator Lamp (MIL)

INFOID:0000000011489469

Malfunction Indicator lamp (MIL) is located on the combination meter.
MIL will illuminate when the ignition switch is turned ON without the engine running. This is a bulb check.
When the engine is started, MIL should turn OFF. If the MIL remains illuminated, the on board diagnostic system has detected an engine system malfunction.
For details, refer to EC-577, "DIAGNOSIS DESCRIPTION : Malfunction Indicator Lamp (MIL)".

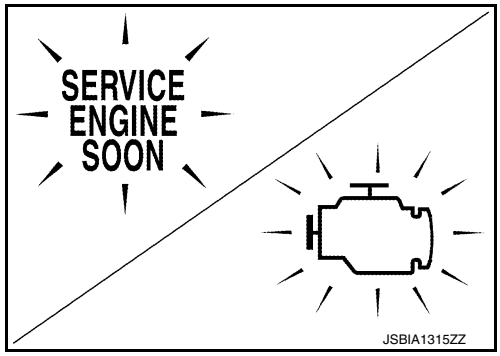

Mass Air Flow Sensor (With Intake Air Temperature Sensor)

INFOID:0000000011489470

MASS AIR FLOW SENSOR

The mass air flow sensor ① is placed in the stream of intake air. It measures the intake flow rate by measuring a part of the entire intake flow. The mass air flow sensor controls the temperature of the hot wire to a certain amount. The heat generated by the hot wire is reduced as the intake air flows around it. The more air, the greater the heat loss.
Therefore, the electric current supplied to hot wire is changed to maintain the temperature of the hot wire as air flow increases. The ECM detects the air flow by means of this current change.

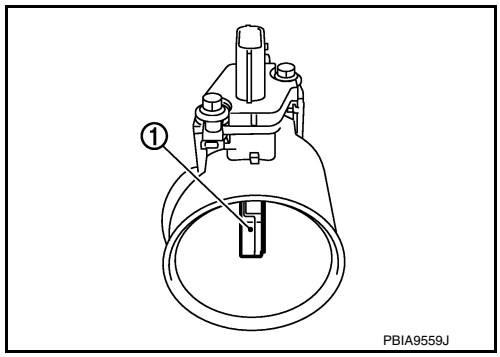

INTAKE AIR TEMPERATURE SENSOR

The intake air temperature sensor is built-into mass air flow sensor. The sensor detects intake air temperature and transmits a signal to the ECM.
The temperature sensing unit uses a thermistor which is sensitive to the change in temperature. Electrical resistance of the thermistor decreases in response to the temperature rise.

<Reference data>

Intake air temperature [°C (°F)]	Voltage* (V)	Resistance (kΩ)
25 (77)	3.3	1.800 - 2.200
80 (176)	1.2	0.283 - 0.359

*: These data are reference values and are measured between ECM terminals.

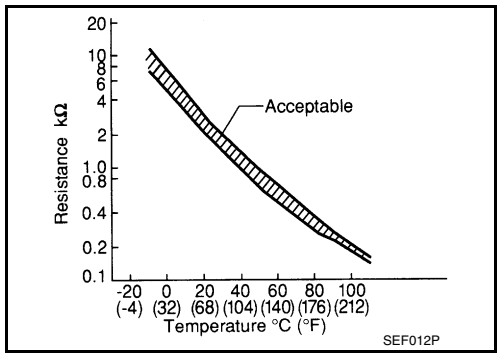

Oil Pressure Warning Lamp

INFOID:0000000011489471

Oil pressure warning lamp is located on the combination meter.
It indicates the low pressure of the engine oil and the malfunction of the engine oil pressure system.
Combination meter turns the oil pressure warning lamp ON/OFF according to the oil pressure warning lamp signal received from ECM via CAN communication.
For details, refer to EC-563, "ENGINE PROTECTION CONTROL AT LOW ENGINE OIL PRESSURE : System Description".

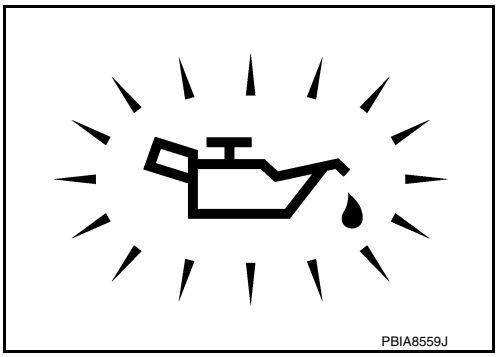

Power Valve Actuator 1 and 2

INFOID:0000000011489472

The power valves are used to control the suction passage of the variable induction air control system. They are set in the fully closed or fully opened position by the power valve actuators operated by the vacuum stored in the vacuum tank. The vacuum to power valve actuators is controlled by the VIAS control solenoid valves.

Refrigerant Pressure Sensor

INFOID:0000000011489473

The refrigerant pressure sensor is installed at the condenser of the air conditioner system. The sensor uses an electrostatic volume pressure transducer to convert refrigerant pressure to voltage. The voltage signal is sent to ECM, and ECM controls cooling fan system.

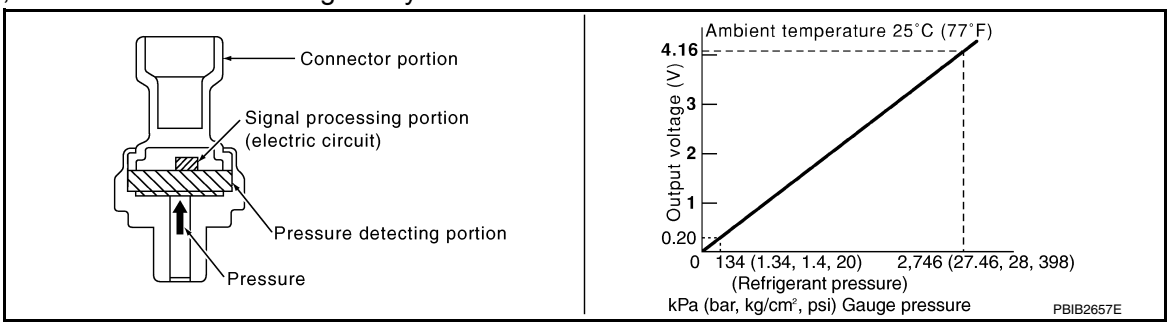

Stop Lamp Switch & Brake Pedal Position Switch

INFOID:0000000011489474

Stop lamp switch and brake pedal position switch are installed to brake pedal bracket.
ECM detects the state of the brake pedal by those two types of input (ON/OFF signal).

Brake pedal	Brake pedal position switch	Stop lamp switch
Released	ON	OFF
Depressed	OFF	ON

VIAS Control Solenoid Valve 1 and 2

INFOID:0000000011489475

The VIAS control solenoid valve cuts the intake manifold vacuum signal for power valve control. It responds to ON/OFF signals from the ECM. When the solenoid is OFF, the vacuum signal from the intake manifold is cut. When the ECM sends an ON signal the coil pulls the plunger downward and sends the vacuum signal to the power valve actuator.

STRUCTURE AND OPERATION

Positive Crankcase Ventilation (PCV)

INFOID:0000000011489476

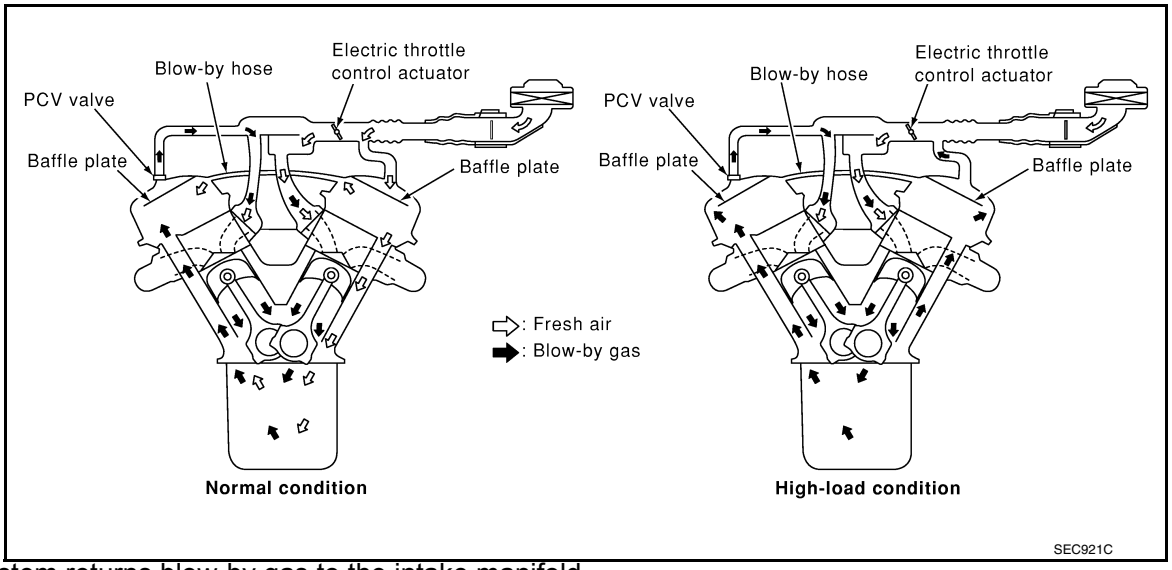

This system returns blow-by gas to the intake manifold.
The positive crankcase ventilation (PCV) valve is provided to conduct crankcase blow-by gas to the intake manifold.
During partial throttle operation of the engine, the intake manifold sucks the blow-by gas through the PCV valve.
Normally, the capacity of the valve is sufficient to handle any blow-by and a small amount of ventilating air.
The ventilating air is drawn from the air inlet tubes into the crankcase. In this process the air passes through the hose connecting air inlet tubes to rocker cover.
Under full-throttle condition, the manifold vacuum is insufficient to draw the blow-by flow through the valve. The flow goes through the hose connection in the reverse direction.
On vehicles with an excessively high blow-by, the valve does not meet the requirement. This is because some of the flow will go through the hose connection to the air inlet tubes under all conditions.

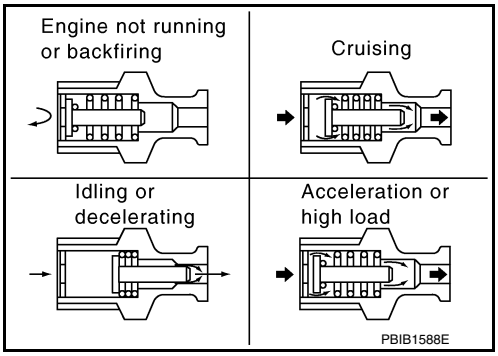

On Board Refueling Vapor Recovery (ORVR)

INFOID:0000000011489477

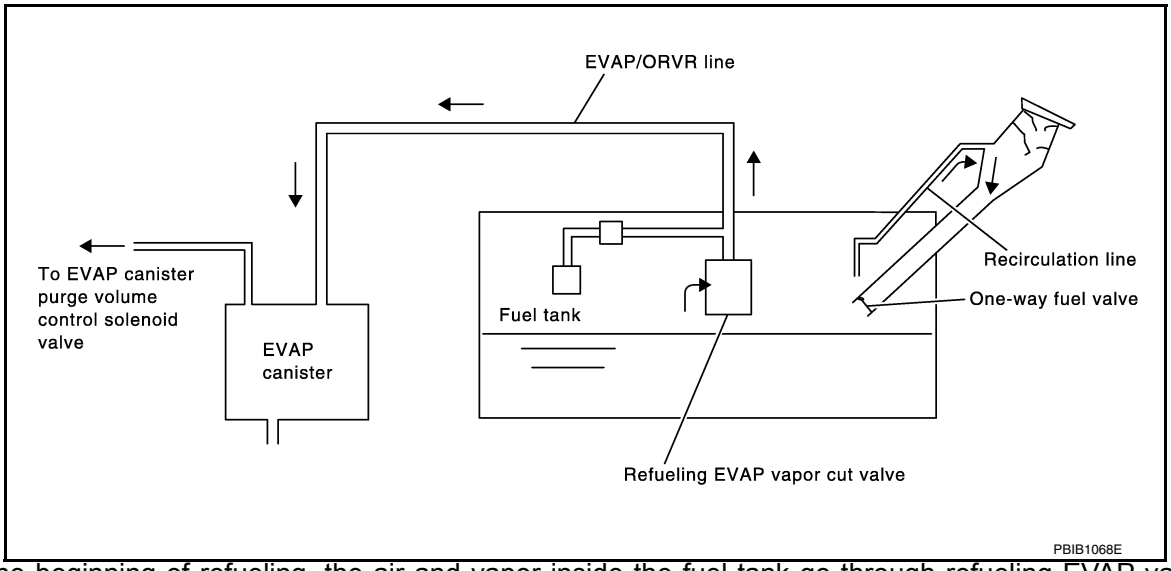

From the beginning of refueling, the air and vapor inside the fuel tank go through refueling EVAP vapor cut valve and EVAP/ORVR line to the EVAP canister. The vapor is absorbed by the EVAP canister and the air is released to the atmosphere.

When the refueling has reached the full level of the fuel tank, the refueling EVAP vapor cut valve is closed and refueling is stopped because of auto shut-off. The vapor which was absorbed by the EVAP canister is purged during driving.

WARNING:

When conducting inspections below, be sure to observe the following:

- **Put a “CAUTION: FLAMMABLE” sign in workshop.**
- **Never smoke while servicing fuel system. Keep open flames and sparks away from work area.**
- **Always to furnish the workshop with a CO_2 fire extinguisher.**

CAUTION:

- **Before removing fuel line parts, carry out the following procedures:**
  - **Put drained fuel in an explosion-proof container and put lid on securely.**
  - **Release fuel pressure from fuel line. Refer to EC-669, "Work Procedure".**
  - **Disconnect battery ground cable.**
- **Always replace O-ring when the fuel gauge retainer is removed.**
- **Never kink or twist hose and tube when they are installed.**
- **Never tighten hose and clamps excessively to avoid damaging hoses.**
- **After installation, run engine and check for fuel leakage at connections.**
- **Never attempt to top off the fuel tank after the fuel pump nozzle shuts off automatically. Continued refueling may cause fuel overflow, resulting in fuel spray and possibly a fire.**

SYSTEM

ENGINE CONTROL SYSTEM

ENGINE CONTROL SYSTEM : System Description

INFOID:0000000011489478

SYSTEM DIAGRAM

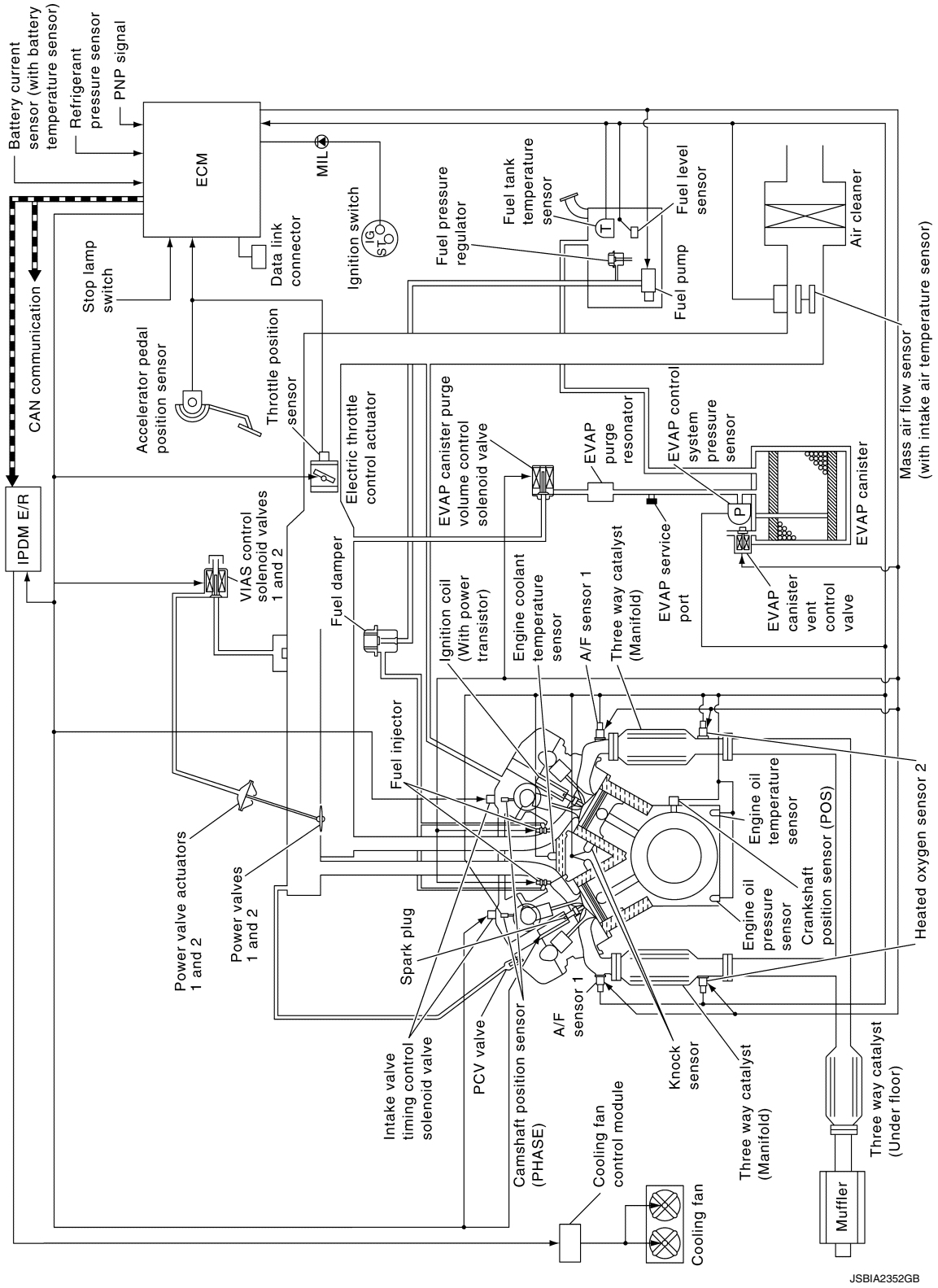

SYSTEM DESCRIPTION

ECM controls the engine by various functions.

Function	Reference
Multiport fuel injection system	EC-553, "MULTIPORT FUEL INJECTION SYSTEM : System Description"
Electric ignition system	EC-555, "ELECTRIC IGNITION SYSTEM : System Description"
Air conditioning cut control	EC-556, "AIR CONDITIONING CUT CONTROL : System Description"
Automatic speed control device (ASCD)	EC-557, "AUTOMATIC SPEED CONTROL DEVICE (ASCD) : System Description"
Cooling fan control	EC-558, "COOLING FAN CONTROL : System Description"
Electronic controlled engine mount	EC-558, "ELECTRONIC CONTROLLED ENGINE MOUNT : System Description"
Evaporative emission system	EC-561, "EVAPORATIVE EMISSION SYSTEM : System Description"
Throttle control	EC-562, "THROTTLE CONTROL : System Description"
Intake valve timing control	EC-562, "INTAKE VALVE TIMING CONTROL : System Description"
Engine protection control at low engine oil pressure	EC-563, "ENGINE PROTECTION CONTROL AT LOW ENGINE OIL PRESSURE : System Description"
Fuel filler cap warning system	EC-564, "FUEL FILLER CAP WARNING SYSTEM : System Description"
Variable induction air system	EC-565, "VARIABLE INDUCTION AIR SYSTEM : System Description"
Integrated control of engine, CVT, and ABS	EC-566, "INTEGRATED CONTROL OF ENGINE, CVT, AND ABS : System Description"
CAN communication	EC-566, "CAN COMMUNICATION : System Description"

ENGINE CONTROL SYSTEM : Fail-safe

INFOID:0000000011504799

NON DTC RELATED ITEM

Engine operating condition in fail-safe mode	Detected items	Remarks	Reference page
Engine speed will not rise more than 2,500 rpm due to the fuel cut	Malfunction indicator lamp circuit	When there is an open circuit on MIL circuit, the ECM cannot warn the driver by illuminating MIL when there is malfunction on engine control system. Therefore, when electrical controlled throttle and part of ECM related diagnoses are continuously detected as NG for 5 trips, ECM warns the driver that engine control system malfunctions and MIL circuit is open by means of operating the fail-safe function. The fail-safe function also operates when above diagnoses except MIL circuit are detected and demands the driver to repair the malfunction.	EC-893

DTC RELATED ITEM

DTC No.	Detected items	Engine operating condition in fail-safe mode
P0011 P0021	Intake valve timing control	The signal is not energized to the intake valve timing control solenoid valve and the valve control does not function.
P0102 P0103	Mass air flow sensor circuit	Engine speed will not rise more than 2,400 rpm due to the fuel cut.

DTC No.	Detected items	Engine operating condition in fail-safe mode
P0117 P0118	Engine coolant temperature sensor circuit	Engine coolant temperature will be determined by ECM based on the following condition. CONSULT displays the engine coolant temperature decided by ECM. Condition: Engine coolant temperature decided (CONSULT display) Just as ignition switch is turned ON or START: 40°C (104°F) Approx 4 minutes or more after engine starting: 80°C (176°F) Except as shown above: 40 - 80°C (104 - 176°F) (Depends on the time) When the fail-safe system for engine coolant temperature sensor is activated, the cooling fan operates while engine is running.
P0122 P0123 P0222 P0223 P2135	Throttle position sensor	The ECM controls the electric throttle control actuator in regulating the throttle opening in order for the idle position to be within +10 degrees. The ECM regulates the opening speed of the throttle valve to be slower than the normal condition. Therefore, the acceleration will be poor.
P0197 P0198	Engine oil temperature sensor	Intake valve timing control does not function.
P0500	Vehicle speed sensor	The cooling fan operates (Highest) while engine is running.
P0524	Engine oil pressure	• ECM illuminates oil pressure warning lamp on the combination meter. • Engine speed will not rise more than 4,000 rpm due to the fuel cut. • Fail-safe is canceled when ignition switch OFF → ON.
P0605	ECM	(When ECM calculation function is malfunctioning:) ECM stops the electric throttle control actuator control, throttle valve is maintained at a fixed opening (approx. 5 degrees) by the return spring. ECM deactivates ASCD operation.
P0643	Sensor power supply	ECM stops the electric throttle control actuator control, throttle valve is maintained at a fixed opening (approx. 5 degrees) by the return spring.
P1805	Brake switch	ECM controls the electric throttle control actuator by regulating the throttle opening to a small range. Therefore, acceleration will be poor. Vehicle condition / Driving condition When engine is idling: Normal When accelerating: Poor acceleration
P2100 P2103	Throttle control motor relay	ECM stops the electric throttle control actuator control, throttle valve is maintained at a fixed opening (approx. 5 degrees) by the return spring.
P2101	Electric throttle control function	ECM stops the electric throttle control actuator control, throttle valve is maintained at a fixed opening (approx. 5 degrees) by the return spring.
P2118	Throttle control motor	ECM stops the electric throttle control actuator control, throttle valve is maintained at a fixed opening (approx. 5 degrees) by the return spring.

DTC No.	Detected items	Engine operating condition in fail-safe mode
P2119	Electric throttle control actuator	(When electric throttle control actuator does not function properly due to the return spring malfunction:) ECM controls the electric throttle actuator by regulating the throttle opening around the idle position. The engine speed will not rise more than 2,000 rpm.
		(When throttle valve opening angle in fail-safe mode is not in specified range:) ECM controls the electric throttle control actuator by regulating the throttle opening to 20 degrees or less.
		(When ECM detects the throttle valve is stuck open:) While the vehicle is being driven, it slows down gradually because of fuel cut. After the vehicle stops, the engine stalls. The engine can restart in the N or P position, and engine speed will not exceed 1,000 rpm or more.
P2122 P2123 P2127 P2128 P2138	Accelerator pedal position sensor	The ECM controls the electric throttle control actuator in regulating the throttle opening in order for the idle position to be within +10 degrees. The ECM regulates the opening speed of the throttle valve to be slower than the normal condition. Therefore, the acceleration will be poor.

MULTIPORT FUEL INJECTION SYSTEM

MULTIPORT FUEL INJECTION SYSTEM : System Description

INFOID:0000000011489480

SYSTEM DIAGRAM

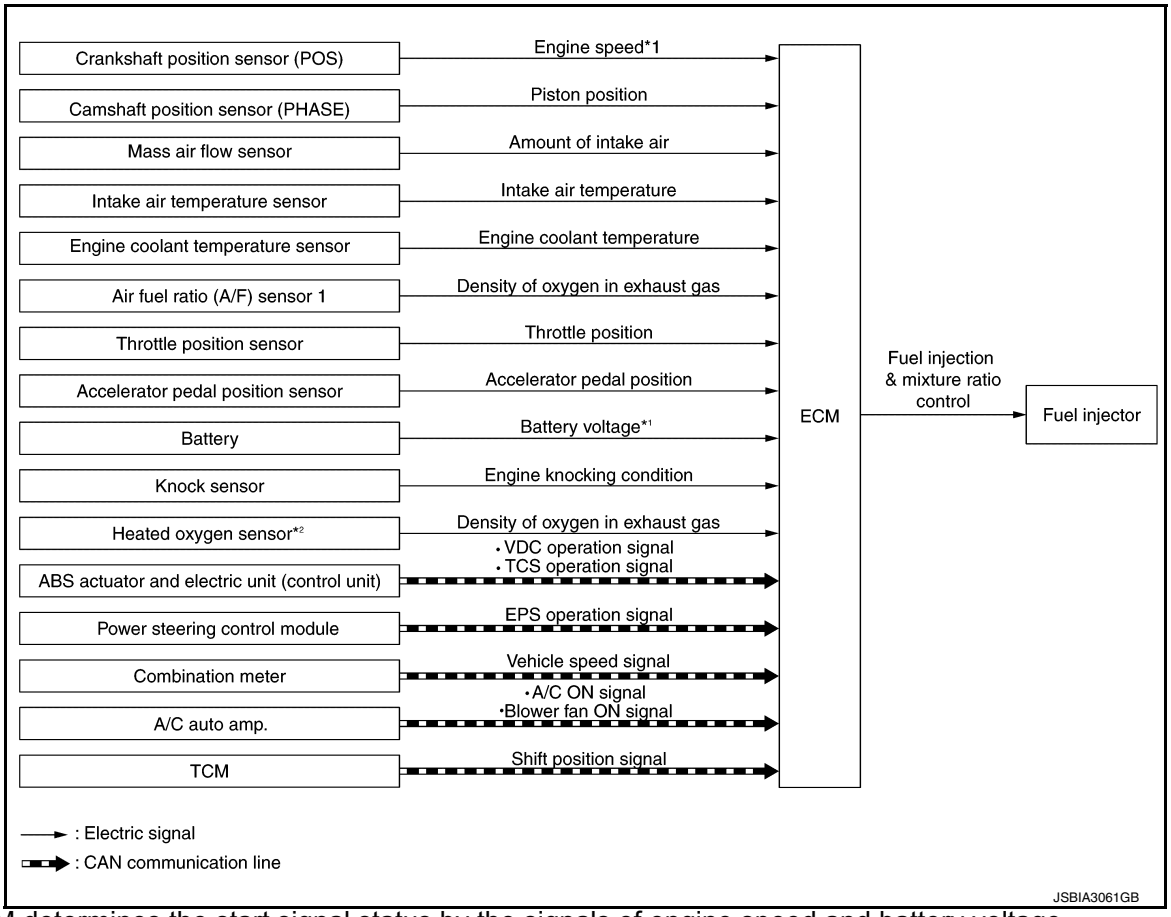

*1: ECM determines the start signal status by the signals of engine speed and battery voltage.
*2: This sensor is not used to control the engine system under normal conditions.

SYSTEM DESCRIPTION

The amount of fuel injected from the fuel injector is determined by the ECM. The ECM controls the length of time the valve remains open (injection pulse duration). The amount of fuel injected is a program value in the ECM memory. The program value is preset by engine operating conditions. These conditions are determined

by input signals (for engine speed and intake air) from the crankshaft position sensor (POS), camshaft position sensor (PHASE) and the mass air flow sensor.

VARIOUS FUEL INJECTION INCREASE/DECREASE COMPENSATION

In addition, the amount of fuel injected is compensated to improve engine performance under various operating conditions as listed below.

<Fuel increase>
- During warm-up
- When starting the engine
- During acceleration
- Hot-engine operation
- When selector lever position is changed from N to D
- High-load, high-speed operation

<Fuel decrease>
- During deceleration
- During high engine speed operation

MIXTURE RATIO FEEDBACK CONTROL (CLOSED LOOP CONTROL)

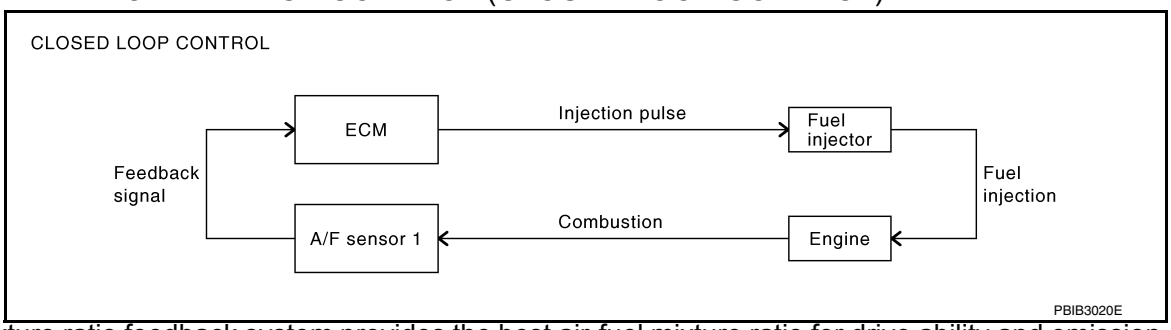

The mixture ratio feedback system provides the best air-fuel mixture ratio for drive ability and emission control. The three way catalyst (manifold) can better reduce CO, HC and NOx emissions. This system uses A/F sensor 1 in the exhaust manifold to monitor whether the engine operation is rich or lean. The ECM adjusts the injection pulse width according to the sensor voltage signal. For more information about A/F sensor 1, refer to EC-538, "Air Fuel Ratio (A/F) Sensor 1". This maintains the mixture ratio within the range of stoichiometric (ideal air-fuel mixture).
This stage is referred to as the closed loop control condition.
Heated oxygen sensor 2 is located downstream of the three way catalyst (manifold). Even if the switching characteristics of A/F sensor 1 shift, the air-fuel ratio is controlled to stoichiometric by the signal from heated oxygen sensor 2.
- Open Loop Control
  The open loop system condition refers to when the ECM detects any of the following conditions. Feedback control stops in order to maintain stabilized fuel combustion.
- Deceleration and acceleration
- High-load, high-speed operation
- Malfunction of A/F sensor 1 or its circuit
- Insufficient activation of A/F sensor 1 at low engine coolant temperature
- High engine coolant temperature
- During warm-up
- After shifting from N to D
- When starting the engine

MIXTURE RATIO SELF-LEARNING CONTROL

The mixture ratio feedback control system monitors the mixture ratio signal transmitted from A/F sensor 1. This feedback signal is then sent to the ECM. The ECM controls the basic mixture ratio as close to the theoretical mixture ratio as possible. However, the basic mixture ratio is not necessarily controlled as originally designed. Both manufacturing differences (i.e., mass air flow sensor hot wire) and characteristic changes during operation (i.e., fuel injector clogging) directly affect mixture ratio.
Accordingly, the difference between the basic and theoretical mixture ratios is monitored in this system. This is then computed in terms of “injection pulse duration” to automatically compensate for the difference between the two ratios.
“Fuel trim” refers to the feedback compensation value compared against the basic injection duration. Fuel trim includes “short-term fuel trim” and “long-term fuel trim”.

"Short-term fuel trim" is the short-term fuel compensation used to maintain the mixture ratio at its theoretical value. The signal from A/F sensor 1 indicates whether the mixture ratio is RICH or LEAN compared to the theoretical value. The signal then triggers a reduction in fuel volume if the mixture ratio is rich, and an increase in fuel volume if it is lean.
"Long-term fuel trim" is overall fuel compensation carried out over time to compensate for continual deviation of the "short-term fuel trim" from the central value. Continual deviation will occur due to individual engine differences, wear over time and changes in the usage environment.

FUEL INJECTION TIMING

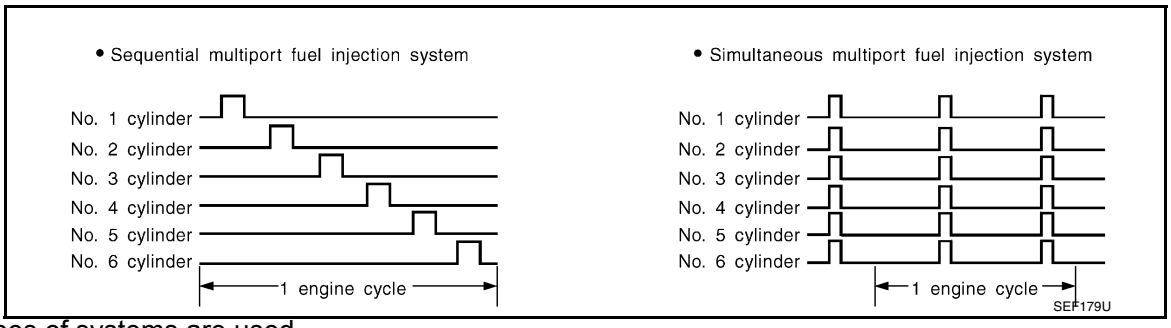

Two types of systems are used.
- Sequential Multiport Fuel Injection System
  Fuel is injected into each cylinder during each engine cycle according to the ignition order. This system is used when the engine is running.
- Simultaneous Multiport Fuel Injection System
  Fuel is injected simultaneously into all six cylinders twice each engine cycle. In other words, pulse signals of the same width are simultaneously transmitted from the ECM.
  The six injectors will then receive the signals 2 times for each engine cycle.
  This system is used when the engine is being started and/or if the fail-safe system (CPU) is operating.

FUEL SHUT-OFF

Fuel to each cylinder is cut off during deceleration, operation of the engine at excessively high speeds or operation of the vehicle at excessively high speeds.

ELECTRIC IGNITION SYSTEM

ELECTRIC IGNITION SYSTEM : System Description

INFOID:0000000011489481

SYSTEM DIAGRAM

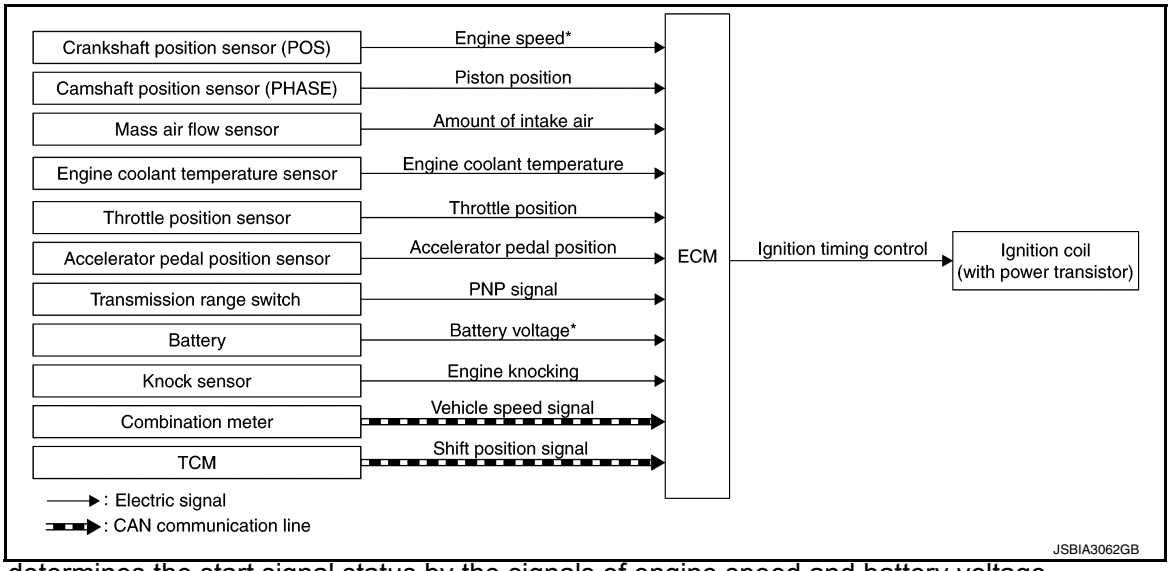

*: ECM determines the start signal status by the signals of engine speed and battery voltage.

SYSTEM DESCRIPTION

Ignition order: 1 - 2 - 3 - 4 - 5 - 6
The ignition timing is controlled by the ECM to maintain the best air-fuel ratio for every running condition of the engine. The ignition timing data is stored in the ECM.

The ECM receives information such as the injection pulse width and camshaft position sensor (PHASE) signal. Computing this information, ignition signals are transmitted to the power transistor.
During the following conditions, the ignition timing is revised by the ECM according to the other data stored in the ECM.
- At starting
- During warm-up
- At idle
- At low battery voltage
- During acceleration

The knock sensor retard system is designed only for emergencies. The basic ignition timing is programmed within the anti-knocking zone, if recommended fuel is used under dry conditions. The retard system does not operate under normal driving conditions. If engine knocking occurs, the knock sensor monitors the condition. The signal is transmitted to the ECM. The ECM retards the ignition timing to eliminate the knocking condition.

AIR CONDITIONING CUT CONTROL

AIR CONDITIONING CUT CONTROL : System Description

INFOID:0000000011489482

SYSTEM DIAGRAM

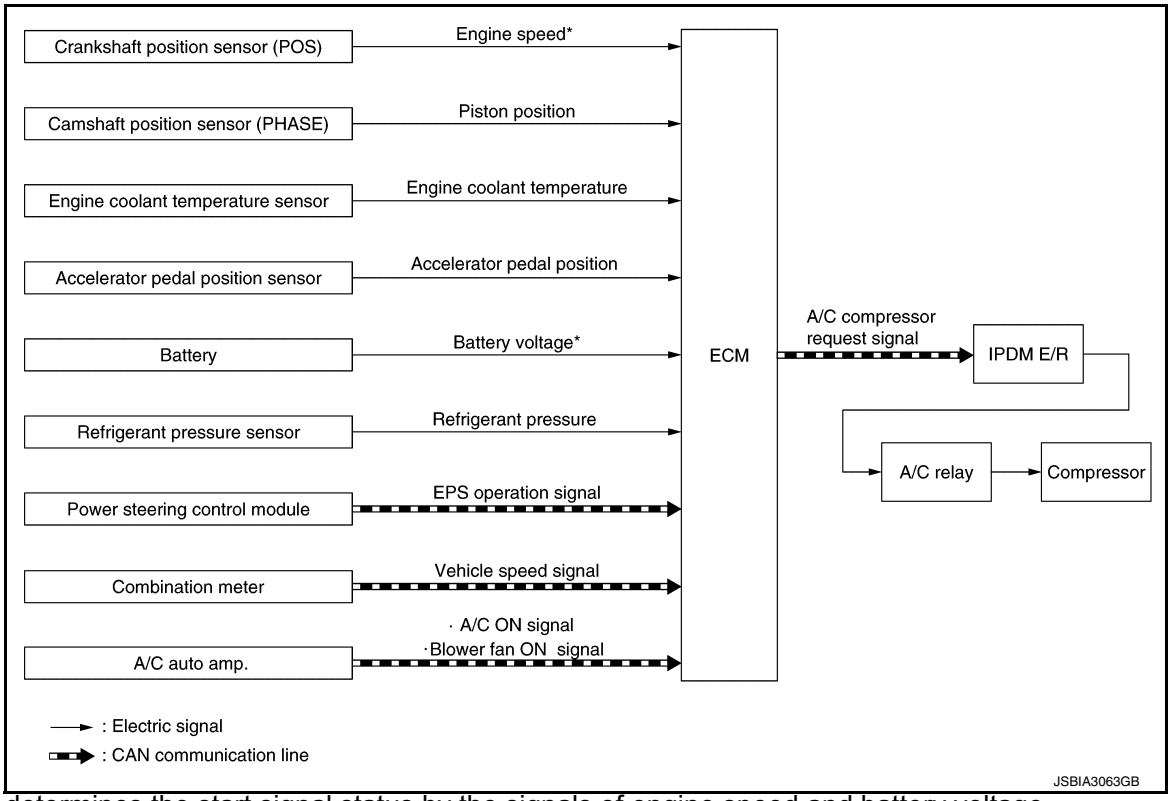

*: ECM determines the start signal status by the signals of engine speed and battery voltage.

SYSTEM DESCRIPTION

This system improves engine operation when the air conditioner is used.
Under the following conditions, the air conditioner is turned OFF.
- When the accelerator pedal is fully depressed.
- When cranking the engine.
- At high engine speeds.
- When the engine coolant temperature becomes excessively high.
- When operating power steering during low engine speed or low vehicle speed.
- When engine speed is excessively low.
- When refrigerant pressure is excessively low or high.

AUTOMATIC SPEED CONTROL DEVICE (ASCD)

AUTOMATIC SPEED CONTROL DEVICE (ASCD) : System Description

INFOID:0000000011489483

SYSTEM DIAGRAM

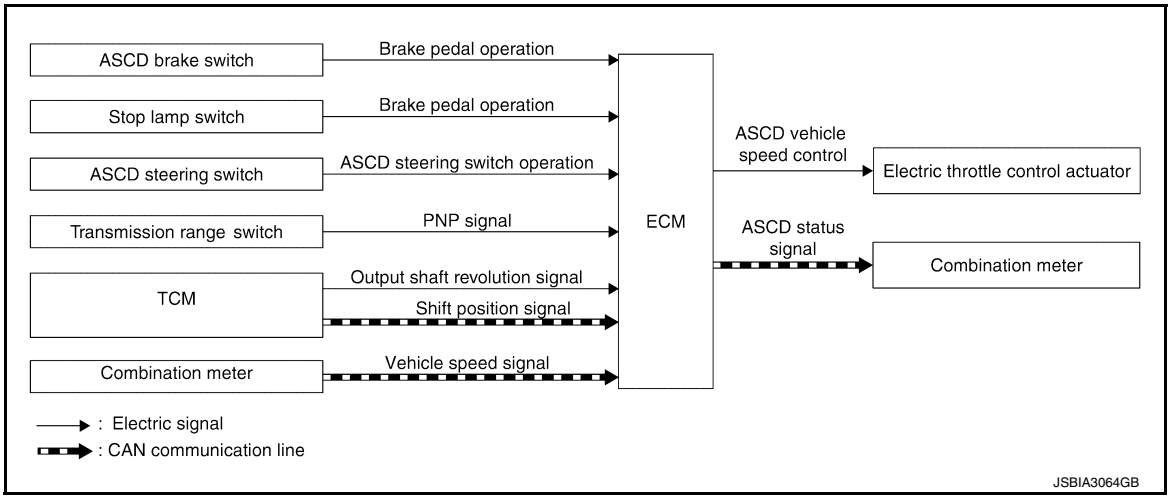

BASIC ASCD SYSTEM

Refer to Owner's Manual for ASCD operating instructions.

Automatic Speed Control Device (ASCD) allows a driver to keep vehicle at predetermined constant speed without depressing accelerator pedal. Driver can set vehicle speed in advance between approximately 40 km/h (25 MPH) and 144 km/h (89 MPH).

ECM controls throttle angle of electric throttle control actuator to regulate engine speed.

Operation status of ASCD is indicated by CRUISE indicator and SET indicator in combination meter. If any malfunction occurs in the ASCD system, it automatically deactivates control.

NOTE:

Always drive vehicle in a safe manner according to traffic conditions and obey all traffic laws.

SET OPERATION

Press MAIN switch. (The CRUISE indicator in combination meter illuminates.)

When vehicle speed reaches a desired speed between approximately 40 km/h (25 MPH) and 144 km/h (89 MPH), press SET/COAST switch. (Then SET lamp in combination meter illuminates.)

ACCELERATE OPERATION

If the RESUME/ACCELERATE switch is pressed during cruise control driving, increase the vehicle speed until the switch is released or vehicle speed reaches maximum speed controlled by the system.

And then ASCD will maintain the new set speed.

CANCEL OPERATION

When any of following conditions exist, cruise operation will be canceled.

- CANCEL switch is pressed.
- More than 2 switches at ASCD steering switch are pressed at the same time. (Set speed will be cleared.)
- Brake pedal is depressed.
- Selector lever is in the N, P, and R positions.
- Vehicle speed decreased to 13 km/h (8 MPH) lower than the set speed.
- TCS system is operated.

When the ECM detects any of the following conditions, the ECM will cancel the cruise operation and inform the driver by blinking indicator lamp.

- Engine coolant temperature is slightly higher than the normal operating temperature, CRUISE lamp may blink slowly.
  When the engine coolant temperature decreases to the normal operating temperature, CRUISE lamp will stop blinking and the cruise operation will be able to work by pressing SET/COAST switch or RESUME/ACCELERATE switch.
- Malfunction for some self-diagnoses regarding ASCD control: SET indicator will blink quickly.

If MAIN switch is turned to OFF while ASCD is activated, all of ASCD operations will be canceled and vehicle speed memory will be erased.

COAST OPERATION

When the SET/COAST switch is pressed during cruise control driving, decrease vehicle set speed until the switch is released. And then ASCD will maintain the new set speed.

RESUME OPERATION

When the RESUME/ACCELERATE switch is pressed after cancel operation other than pressing MAIN switch is performed, vehicle speed will return to last set speed. To resume vehicle set speed, vehicle condition must meet following conditions.

- Brake pedal is released
- Selector lever is in the P and N positions
- Vehicle speed is greater than 40 km/h (25 MPH) and less than 144 km/h (89 MPH)

COOLING FAN CONTROL

COOLING FAN CONTROL : System Description

INFOID:0000000011489484

SYSTEM DIAGRAM

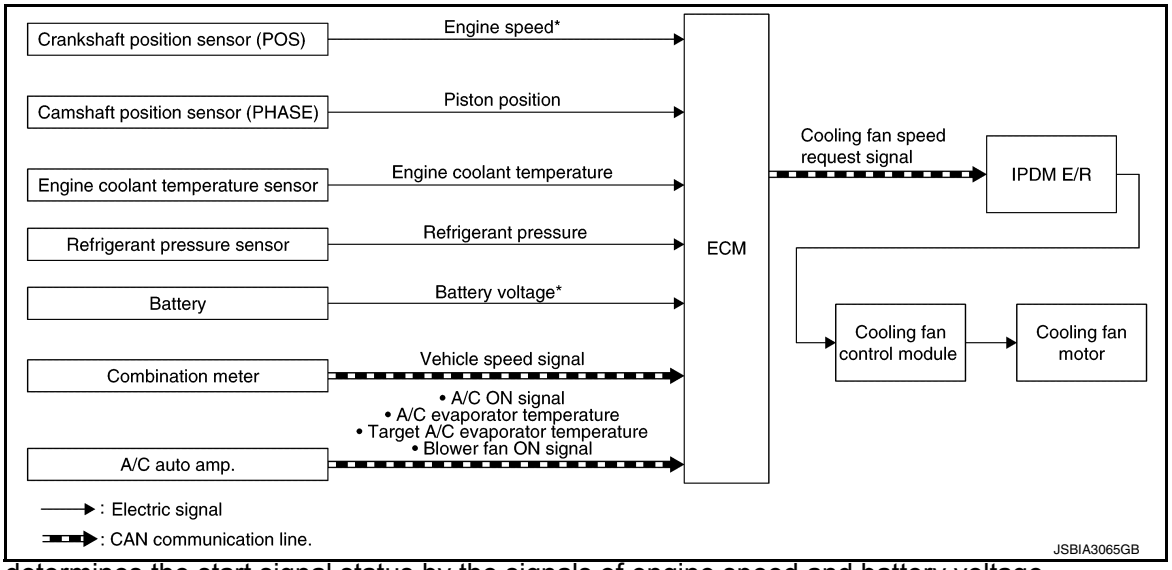

*: ECM determines the start signal status by the signals of engine speed and battery voltage.

SYSTEM DESCRIPTION

ECM controls cooling fan speed corresponding to engine speed, engine coolant temperature, refrigerant pressure, battery voltage, vehicle speed, A/C ON signal, A/C evaporator temperature, target A/C evaporator temperature and blower fan ON signal.

Cooling fan speed request signal is sent to IPDM E/R from ECM via the CAN communication line. Then, IPDM E/R sends ON/OFF pulse duty signal to cooling fan control module. Corresponding to this ON/OFF pulse duty signal, cooling fan control module gives cooling fan motor operating voltage to cooling fan motors. Cooling fan speed is controlled by duty cycle of cooling fan motor operating voltage sent from cooling fan control module.

ELECTRONIC CONTROLLED ENGINE MOUNT

ELECTRONIC CONTROLLED ENGINE MOUNT : System Description

INFOID:0000000011489485

SYSTEM DIAGRAM

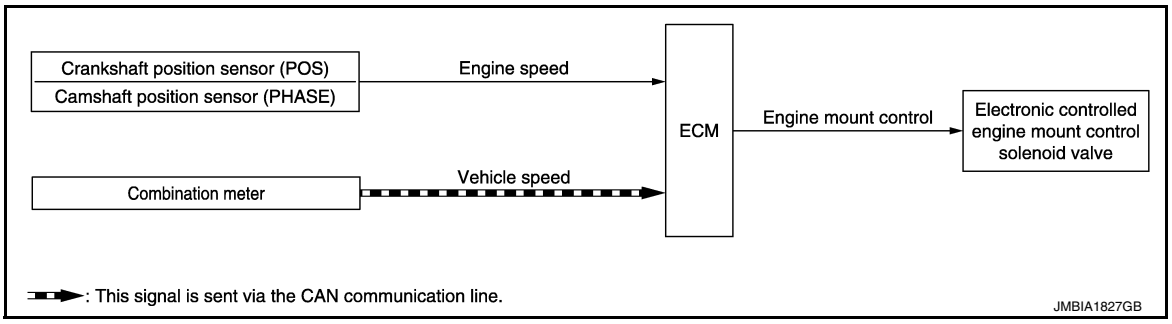

SYSTEM DESCRIPTION

The ECM controls the engine mount operation corresponding to the engine speed. The control system has a 2-step control [Soft/Hard]

Vehicle condition	Engine mount control
Engine speed: Below 950 rpm	Soft
Engine speed: Above 950 rpm	Hard

ELECTRONIC CONTROLLED ENGINE MOUNT LINE DRAWING

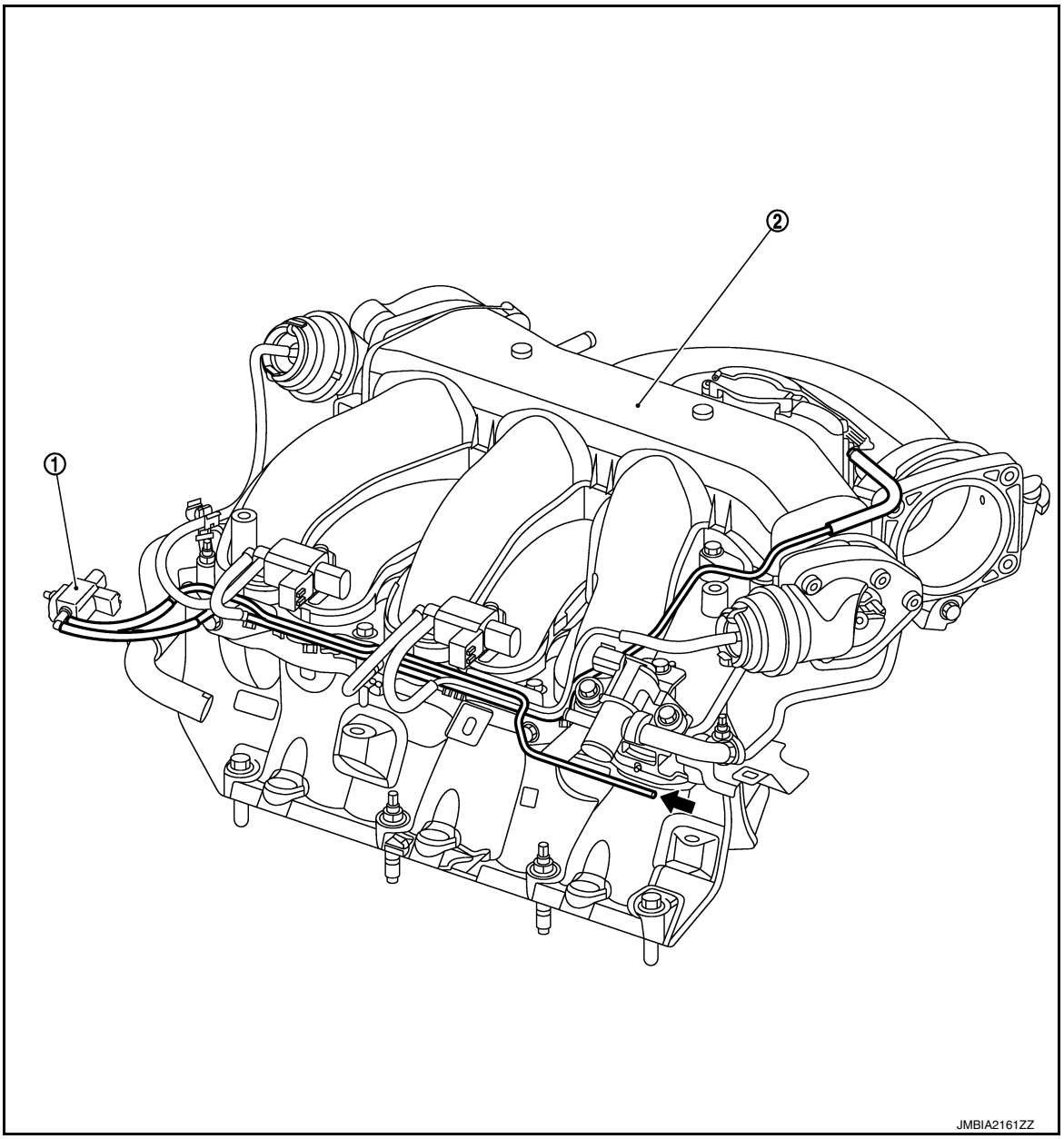

① Electronic controlled engine mount control solenoid valve
② Intake manifold collector
⬅ : From next figure

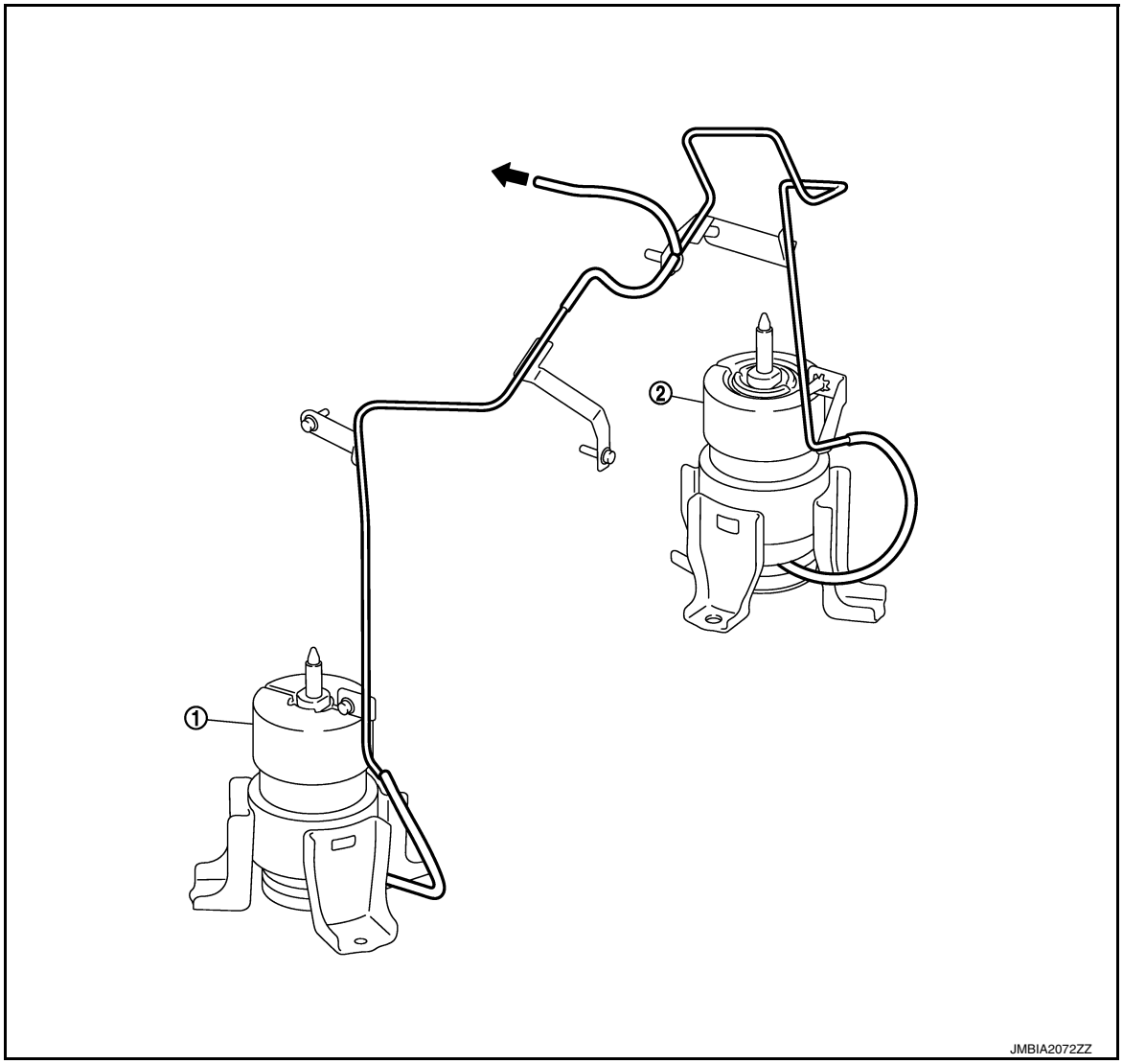

① Front electronic controlled engine mount ② Rear electronic controlled engine mount

⬅ : To previous figure

NOTE:
Do not use soapy water or any type of solvent while installing vacuum hose.

EVAPORATIVE EMISSION SYSTEM

EVAPORATIVE EMISSION SYSTEM : System Description

INFOID:0000000011489486

SYSTEM DIAGRAM

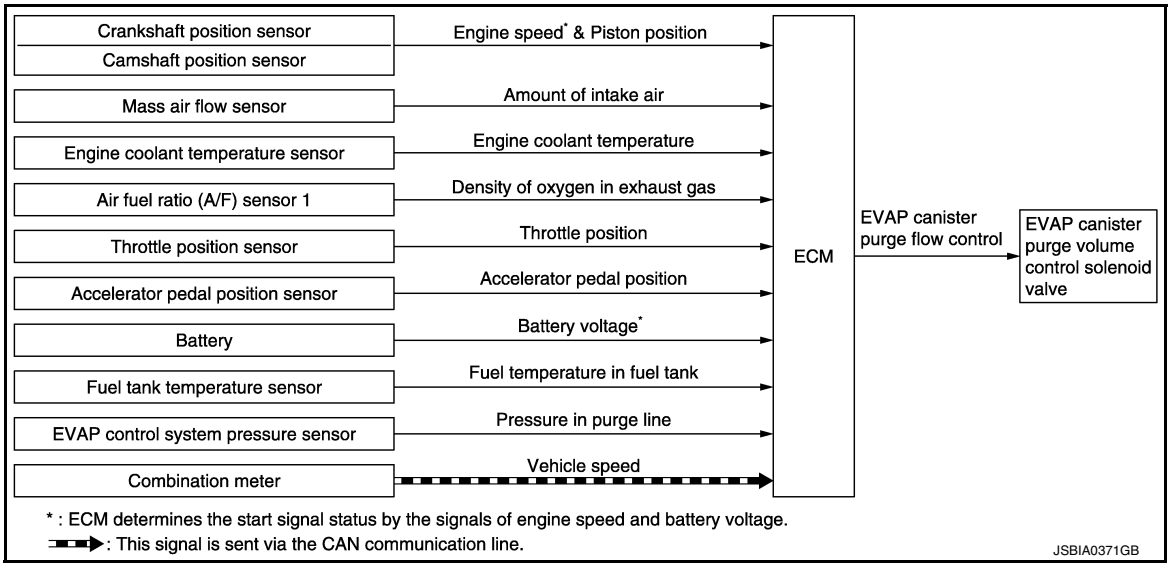

SYSTEM DESCRIPTION

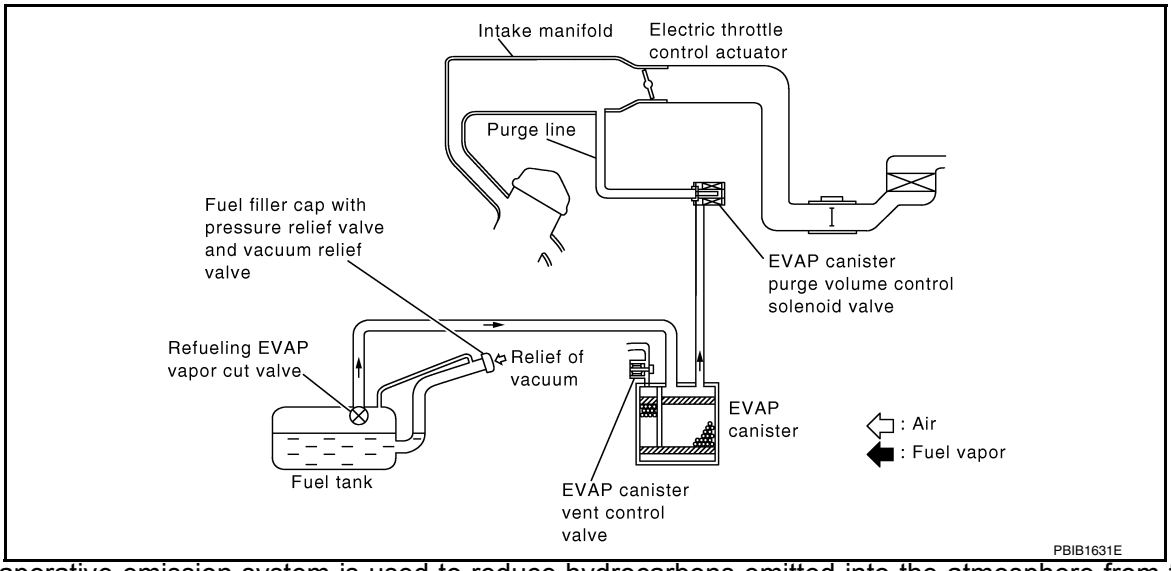

The evaporative emission system is used to reduce hydrocarbons emitted into the atmosphere from the fuel system. This reduction of hydrocarbons is accomplished by activated charcoals in the EVAP canister.

The fuel vapor in the sealed fuel tank is led into the EVAP canister which contains activated carbon and the vapor is stored there when the engine is not operating or when refueling to the fuel tank.

The vapor in the EVAP canister is purged by the air through the purge line to the intake manifold when the engine is operating. EVAP canister purge volume control solenoid valve is controlled by ECM. When the engine operates, the flow rate of vapor controlled by EVAP canister purge volume control solenoid valve is proportionally regulated as the air flow increases.

EVAP canister purge volume control solenoid valve also shuts off the vapor purge line during decelerating and idling.

THROTTLE CONTROL

THROTTLE CONTROL : System Description

INFOID:0000000011489487

SYSTEM DIAGRAM

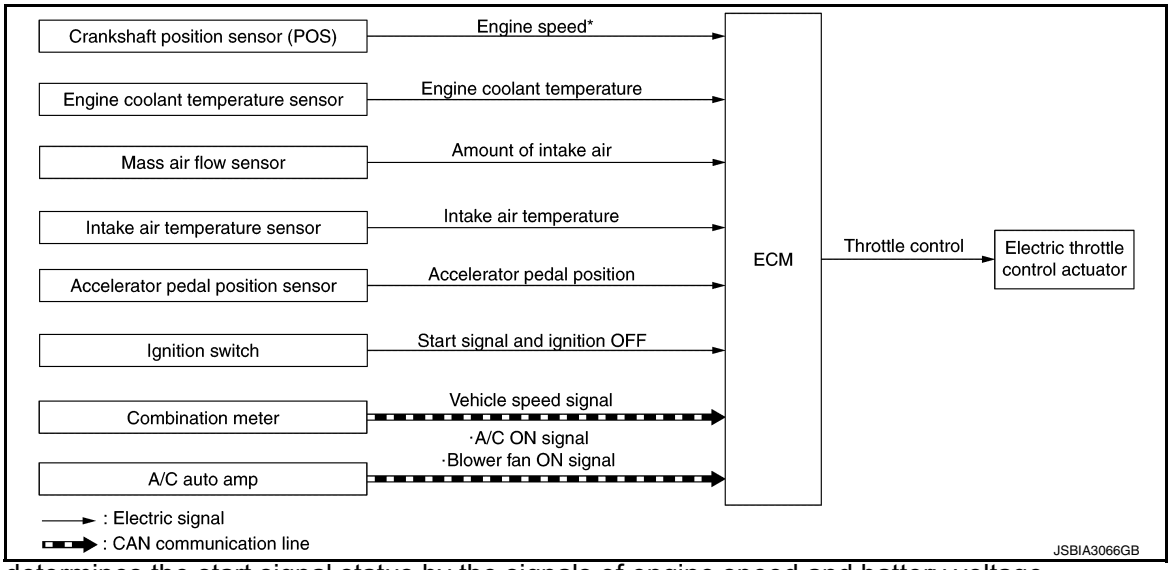

*: ECM determines the start signal status by the signals of engine speed and battery voltage.

SYSTEM DESCRIPTION

ECM calculates the value of signal transmitted from the accelerator pedal and activates the throttle valve by transmitting a control signal to the electric throttle control actuator. This allows the optimum throttle angle and improves drivability and fuel consumption. In addition, ECM learns the fully closed position every time when the ignition switch is turned OFF to improve the accuracy in throttle valve position.

When a malfunction occurs in the throttle control system, the throttle valve is closed by the return spring and maintains the minimum engine speed by holding a slightly opened condition which is close to the fully opened condition. This allows the securing of brake system, power steering system, and electric system and the ensuring of the safety.

INTAKE VALVE TIMING CONTROL

INTAKE VALVE TIMING CONTROL : System Description

INFOID:0000000011489488

SYSTEM DIAGRAM

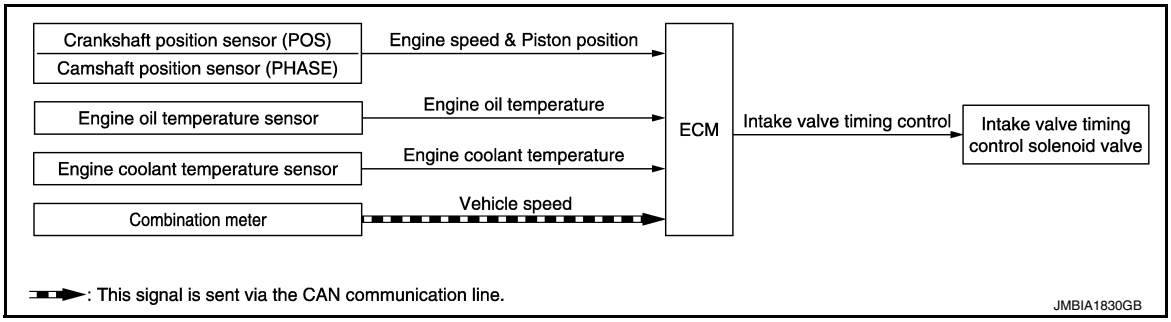

SYSTEM DESCRIPTION

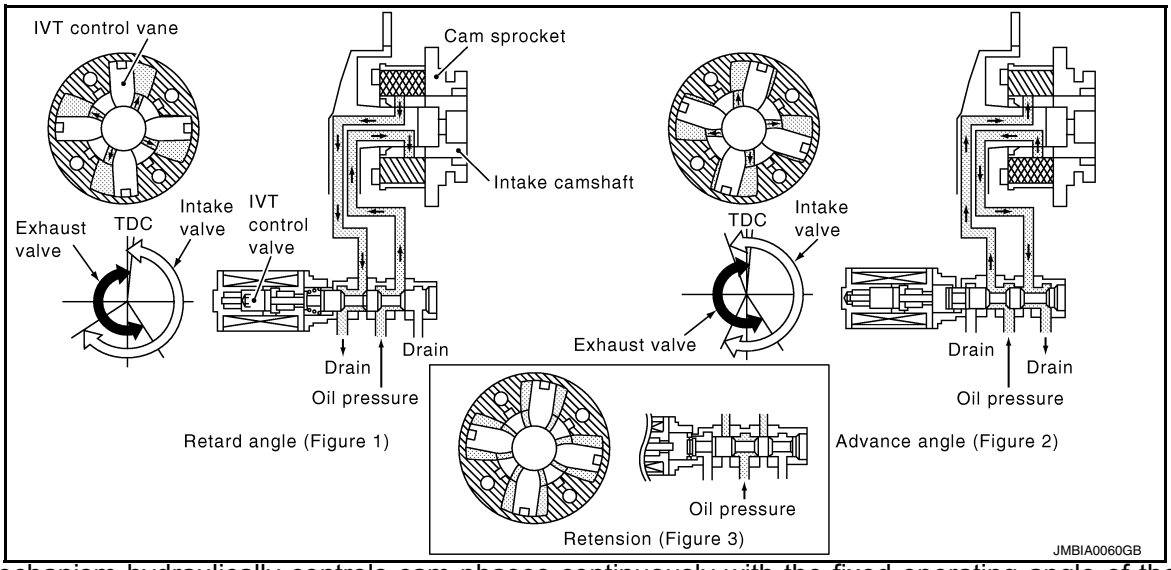

This mechanism hydraulically controls cam phases continuously with the fixed operating angle of the intake valve.
The ECM receives signals such as crankshaft position, camshaft position, engine speed, and engine coolant temperature. Then, the ECM sends ON/OFF pulse duty signals to the intake valve timing (IVT) control solenoid valve depending on driving status. This makes it possible to control the shut/open timing of the intake valve to increase engine torque in low/mid speed range and output in high-speed range.

ENGINE PROTECTION CONTROL AT LOW ENGINE OIL PRESSURE

ENGINE PROTECTION CONTROL AT LOW ENGINE OIL PRESSURE : System Description

INFOID:0000000011489489

SYSTEM DIAGRAM

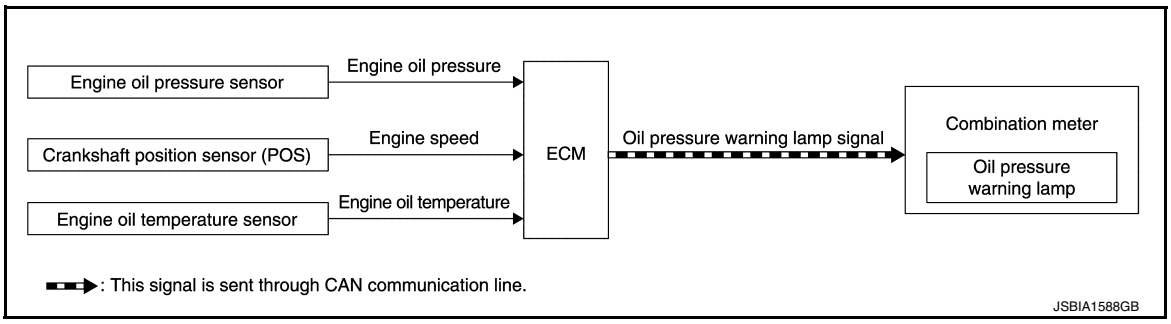

SYSTEM DESCRIPTION

- The engine protection control at low engine oil pressure warns the driver of a decrease in engine oil pressure by the oil pressure warning lamp before the engine becomes damaged.
- When detecting a decrease in engine oil pressure at an engine speed less than 1,000 rpm, ECM transmits an oil pressure warning lamp signal to the combination meter. The combination meter turns ON the oil pressure warning lamp, according to the signal.
- When detecting a decrease in engine oil pressure at an engine speed 1,000 rpm or more, ECM transmits an oil pressure warning lamp signal to the combination meter.
  The combination meter turns ON the oil pressure warning lamp, according to the signals. When detecting a decrease in engine oil pressure, ECM cuts fuel if the engine speed exceeds the specified value.

Decrease in engine oil pressure	Engine speed	Combination meter	Fuel cut
		Oil pressure warning lamp	
Detection	Less than 1,000 rpm	ON*	NO
	1,000 rpm or more	ON	YES

*: When detecting a normal engine oil pressure, ECM turns OFF the oil pressure warning lamp.

FUEL FILLER CAP WARNING SYSTEM

FUEL FILLER CAP WARNING SYSTEM : System Description

INFOID:0000000011489490

SYSTEM DIAGRAM

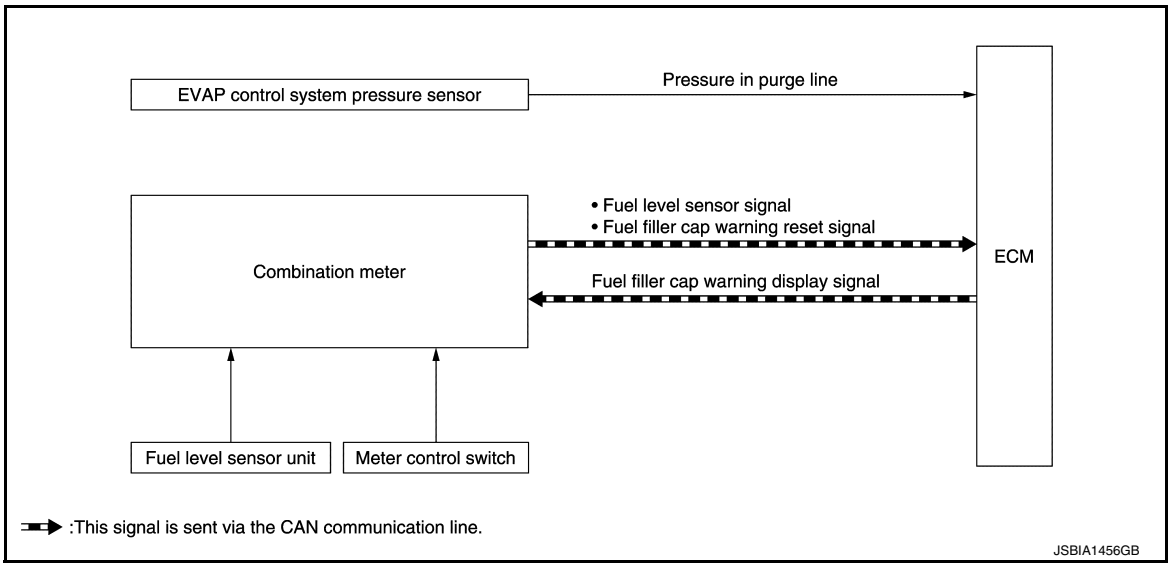

SYSTEM DESCRIPTION

The fuel filler cap warning system alerts the driver to the prevention of the fuel filler being left uncapped and malfunction occurrences after refueling, by turning ON the fuel filler cap warning display on the combination meter.

ECM judges a refueled state, based on a fuel level signal transmitted from the combination meter.

When a very small leak is detected through the EVAP leak diagnosis performed after judging the refueled state, ECM transmits a fuel filler cap warning display signal (request for display ON) to the combination meter via CAN communication.

When receiving the signal, the combination meter turns ON the fuel filler cap warning display.

CAUTION:

Check fuel filler cap installation condition when the fuel filler cap warning display turns ON.

Reset Operation

The fuel filler cap warning lamp tunes OFF, according to any condition listed below:

- Reset operation is performed by operating the meter control switch on the combination meter.
  - When the reset operation is performed, the combination meter transmits a fuel filler cap warning reset signal to ECM via CAN communication. ECM transmits a fuel filler cap warning display signal (request for display OFF) to the combination meter via CAN communication. When receiving the signal, the combination meter turns OFF the fuel filler cap warning display.
- EVAP leak diagnosis result is normal.
- Fuel refilled.
- DTC erased by using CONSULT.

NOTE:

MIL turns ON if a malfunction is detected in leak diagnosis results again at the trip after the fuel filler cap warning display turns ON/OFF.

VARIABLE INDUCTION AIR SYSTEM

VARIABLE INDUCTION AIR SYSTEM : System Description

INFOID:0000000011489491

SYSTEM DIAGRAM

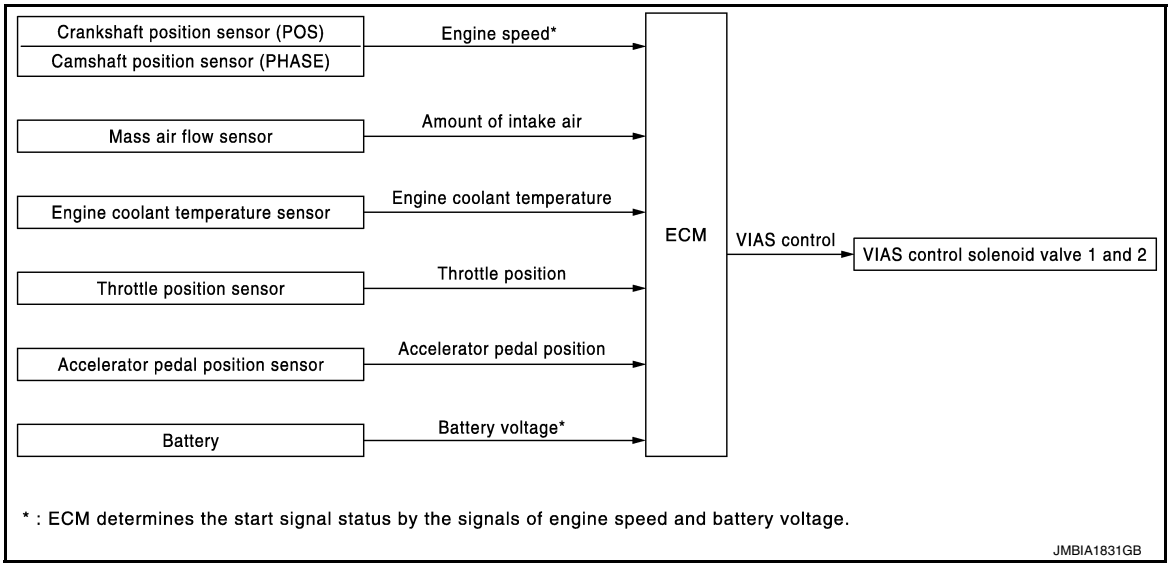

SYSTEM DESCRIPTION

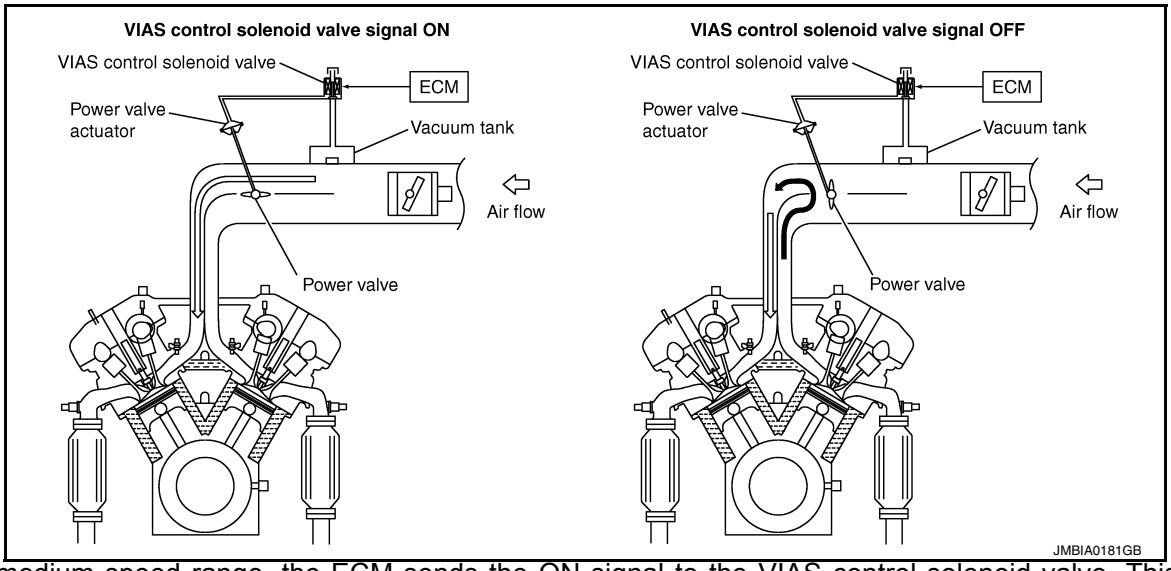

In the medium speed range, the ECM sends the ON signal to the VIAS control solenoid valve. This signal introduces the intake manifold vacuum into the power valve actuator and therefore closes the power valve. Under this condition, the pressure waves of the exhaust stroke do not disturb the pressure waves of the intake stroke of each opposite bank. Therefore, charging efficiency is increased together with the effect of the long intake passage.

However, in the high speed range, the ECM sends the OFF signal to the VIAS control solenoid valve and the power valve is opened. Under this condition, the pressure waves of intake stroke are resonant with those of each opposite bank exhaust stroke. Therefore, charging efficiency is also increased.

In addition, both valves 1 and 2 are opened or closed in other ranges mentioned above. Thus maximum charging efficiency is obtained for the various driving conditions.

VACUUM HOSE DRAWING

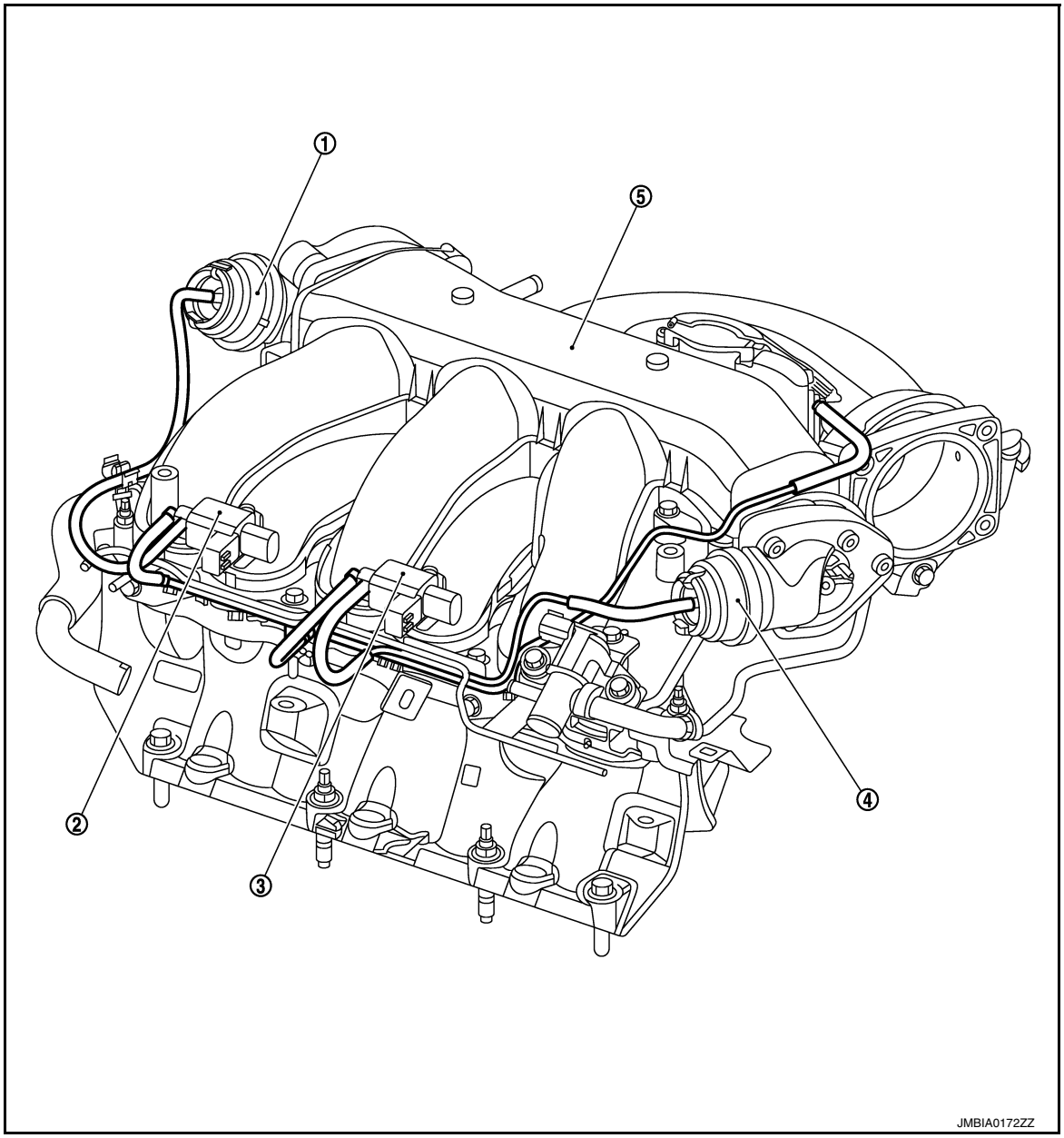

① Power valve actuator 1 ② VIAS control solenoid valve 1 ③ VIAS control solenoid valve 2
④ Power valve actuator 2 ⑤ Intake manifold collector

INTEGRATED CONTROL OF ENGINE, CVT, AND ABS

INTEGRATED CONTROL OF ENGINE, CVT, AND ABS : System Description

INFOID:0000000011489492

Real time communications (signal exchange) among control units (e.g. ECM, CVT, ABS, and combination meter) via CAN communication optimizes engine torque and lock-up during gear shift and prevents engine speed from decreasing during deceleration.

CAN COMMUNICATION

CAN COMMUNICATION : System Description

INFOID:0000000011489493

CAN (Controller Area Network) is a serial communication line for real time application. It is an on-vehicle multiplex communication line with high data communication speed and excellent error detection ability. Many electronic control units are equipped onto a vehicle, and each control unit shares information and links with other

control units during operation (not independent). In CAN communication, control units are connected with 2 communication lines (CAN H line, CAN L line) allowing a high rate of information transmission with less wiring. Each control unit transmits/receives data but selectively reads required data only.
Refer to LAN-38, "CAN COMMUNICATION SYSTEM : CAN Communication Signal Chart", about CAN communication for detail.

OPERATION

AUTOMATIC SPEED CONTROL DEVICE (ASCD)

AUTOMATIC SPEED CONTROL DEVICE (ASCD) : Switch Name and Function

INFOID:0000000011489494

SWITCHES AND INDICATORS

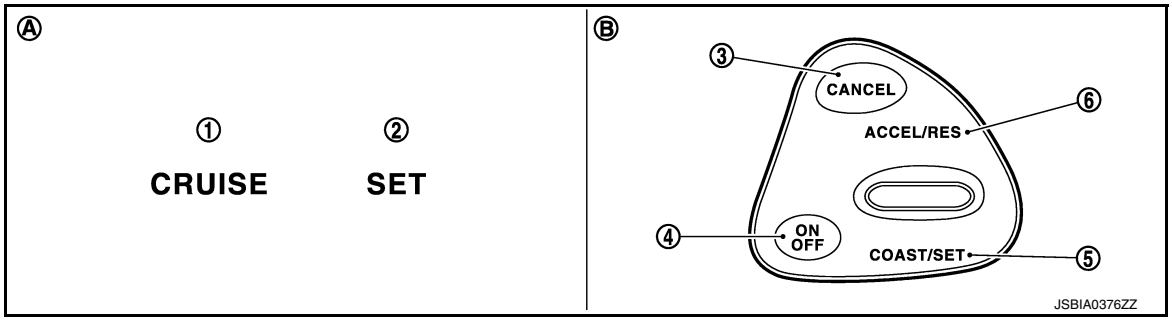

1. CRUISE indicator
2. SET indicator
3. CANCEL switch
4. ON/OFF (MAIN) switch
5. COAST/SET switch
6. ACCEL/RES switch (ACCELERATE/RESUME)

A. On the combination meter (Information display)
B. On the steering wheel

SET SPEED RANGE

ASCD system can be set the following vehicle speed.

Minimum speed (Approx.)	Maximum speed (Approx.)
40 km/h (25 MPH)	144 km/h (89 MPH)

SWITCH OPERATION

Item	Function
CANCEL switch	Cancels the cruise control driving.
ACCEL/RES switch (RESUME/ACCELERATE)	• Resumes the set speed. • Increases speed incrementally during cruise control driving.
COAST/SET switch (SET/COAST)	• Sets desired cruise speed. • Decreases speed incrementally during cruise control driving.
ON/OFF (MAIN) switch	Master switch to activate the ASCD system.

CANCEL OPERATION

When any of following conditions exist, cruise operation will be canceled.

- CANCEL switch is pressed
- ON/OFF (MAIN) switch pressed (Set speed is cleared)
- More than 2 switches at ASCD steering switch are pressed at the same time (Set speed will be cleared)
- Brake pedal is depressed
- Selector lever position is changed to N, P or R
- Vehicle speed decreased to 13 km/h (8 MPH) lower than the set speed
- TCS system is operated

When the ECM detects any of the following conditions, the ECM will cancel the cruise operation and inform the driver by blinking indicator.

- Engine coolant temperature is slightly higher than the normal operating temperature, CRUISE indicator may blink slowly.
  When the engine coolant temperature decreases to the normal operating temperature, CRUISE indicator will stop blinking and the cruise operation will be able to work by pressing COAST/SET switch or ACCEL/RES switch.
- Malfunction for some self-diagnoses regarding ASCD control: SET indicator will blink quickly.

If MAIN switch is turned to OFF during ASCD is activated, all of ASCD operations will be canceled and vehicle speed memory will be erased.

ON BOARD DIAGNOSTIC (OBD) SYSTEM

Diagnosis Description

INFOID:0000000011489495

This system is an on board diagnostic system that records exhaust emission-related diagnostic information and detects a sensors/actuator-related malfunction. A malfunction is indicated by the malfunction indicator lamp (MIL) and stored in ECU memory as a DTC. The diagnostic information can be obtained with the diagnostic tool (GST: Generic Scan Tool).

GST (Generic Scan Tool)

INFOID:0000000011489496

When GST is connected with a data link connector equipped on the vehicle side, it will communicate with the control unit equipped in the vehicle and then enable various kinds of diagnostic tests. Refer to EC-570, "Diagnosis Description".

NOTE:
Service $0A is not applied for regions where it is not mandated.

DIAGNOSIS SYSTEM (ECM)

DIAGNOSIS DESCRIPTION

DIAGNOSIS DESCRIPTION : 1st Trip Detection Logic and Two Trip Detection Logic

INFOID:0000000011489497

When a malfunction is detected for the first time, 1st trip DTC and 1st trip Freeze Frame data are stored in the ECM memory. The MIL will not illuminate at this stage. <1st trip>
If the same malfunction is detected again during the next drive, the DTC and Freeze Frame data are stored in the ECM memory, and the MIL illuminates. The MIL illuminates at the same time when the DTC is stored. <2nd trip> The “trip” in the “Two Trip Detection Logic” means a driving mode in which self-diagnosis is performed during vehicle operation. Specific on board diagnostic items will cause the ECM to illuminate or blink the MIL, and store DTC and Freeze Frame data, even in the 1st trip, as shown below.

×: Applicable —: Not applicable

Items	MIL				DTC		1st trip DTC	
	1st trip		2nd trip		1st trip displaying	2nd trip displaying	1st trip displaying	2nd trip displaying
	Blinking	Illuminated	Blinking	Illuminated				
Misfire (Possible three way catalyst damage) — DTC: P0300 – P0308 is being detected	×	—	—	—	—	—	×	—
Misfire (Possible three way catalyst damage) — DTC: P0300 – P0308 is being detected	—	—	×	—	—	×	—	—
One trip detection diagnoses (Refer to EC-610, "DTC Index".)	—	×	—	—	×	—	—	—
Except above	—	—	—	×	—	×	×	—

DIAGNOSIS DESCRIPTION : DTC and Freeze Frame Data

INFOID:0000000011489498

DTC AND 1ST TRIP DTC

The 1st trip DTC (whose number is the same as the DTC number) is displayed for the latest self-diagnostic result obtained. If the ECM memory was cleared previously, and the 1st trip DTC did not recur, the 1st trip DTC will not be displayed.
If a malfunction is detected during the 1st trip, the 1st trip DTC is saved in the ECM memory. The MIL will not light up (two trip detection logic). If the same malfunction is not detected in the 2nd trip (meeting the required driving pattern), the 1st trip DTC is cleared from the ECM memory. If the same malfunction is detected in the 2nd trip, both the 1st trip DTC and DTC are saved in the ECM memory and the MIL lights up. In other words, the DTC is stored in the ECM memory and the MIL lights up when the same malfunction occurs in two consecutive trips. If a 1st trip DTC is stored and a non-diagnostic operation is performed between the 1st and 2nd trips, only the 1st trip DTC will continue to be stored. For malfunctions that blink or light up the MIL during the 1st trip, the DTC and 1st trip DTC are stored in the ECM memory.
For malfunctions in which 1st trip DTCs are displayed, refer to EC-610, "DTC Index". These items are required by legal regulations to continuously monitor the system/component. In addition, the items monitored non-continuously are also displayed on CONSULT.
1st trip DTC is specified in Service $07 of SAE J1979/ISO 15031-5. 1st trip DTC detection occurs without illuminating the MIL and therefore does not warn the driver of a malfunction.
When a 1st trip DTC is detected, check, print out or write down and erase (1st trip) DTC and Freeze Frame data as specified in Work Flow procedure Step 2, refer to EC-651, "Work Flow". Then perform DTC Confirmation Procedure or Component Function Check to try to duplicate the malfunction. If the malfunction is duplicated, the item requires repair.

FREEZE FRAME DATA AND 1ST TRIP FREEZE FRAME DATA

The ECM records the driving conditions such as fuel system status, calculated load value, engine coolant temperature, short term fuel trim, long term fuel trim, engine speed, vehicle speed, absolute throttle position, base fuel schedule and intake air temperature at the moment a malfunction is detected.
Data which are stored in the ECM memory, along with the 1st trip DTC, are called 1st trip freeze frame data. The data, stored together with the DTC data, are called freeze frame data and displayed on CONSULT or GST. The 1st trip freeze frame data can only be displayed on the CONSULT screen.

Only one set of freeze frame data (either 1st trip freeze frame data or freeze frame data) can be stored in the ECM. 1st trip freeze frame data is stored in the ECM memory along with the 1st trip DTC. There is no priority for 1st trip freeze frame data and it is updated each time a different 1st trip DTC is detected. However, once freeze frame data (2nd trip detection/MIL on) is stored in the ECM memory, 1st trip freeze frame data is no longer stored. Remember, only one set of freeze frame data can be stored in the ECM. The ECM has the following priorities to update the data.

Priority	Items	
1	Freeze frame data	Misfire — DTC: P0300 – P0308 Fuel Injection System Function — DTC: P0171, P0172, P0174, P0175
2		Except the above items
3	1st trip freeze frame data	

For example, the EGR malfunction (Priority: 2) was detected and the freeze frame data was saved in the 2nd trip. After that when the misfire (Priority: 1) is detected in another trip, the freeze frame data will be updated from the EGR malfunction to the misfire. The 1st trip freeze frame data is updated each time a different malfunction is detected. There is no priority for 1st trip freeze frame data. However, once freeze frame data is stored in the ECM memory, 1st trip freeze data is no longer stored (because only one freeze frame data or 1st trip freeze frame data can be stored in the ECM). If freeze frame data is stored in the ECM memory and freeze frame data with the same priority occurs later, the first (original) freeze frame data remains unchanged in the ECM memory.
Both 1st trip freeze frame data and freeze frame data (along with the DTCs) are cleared when the ECM memory is erased.

DIAGNOSIS DESCRIPTION : Counter System

INFOID:0000000011489499

RELATIONSHIP BETWEEN MIL, 1ST TRIP DTC, DTC, AND DETECTABLE ITEMS

- When a malfunction is detected for the first time, the 1st trip DTC and the 1st trip freeze frame data are stored in the ECM memory.
- When the same malfunction is detected in two consecutive trips, the DTC and the freeze frame data are stored in the ECM memory, and the MIL will come on.
- The MIL will turn OFF after the vehicle is driven 3 times (driving pattern B) with no malfunction. The drive is counted only when the recorded driving pattern is met (as stored in the ECM). If another malfunction occurs while counting, the counter will reset.
- The DTC and the freeze frame data will be stored until the vehicle is driven 40 times (driving pattern A) without the same malfunction recurring (except for Misfire and Fuel Injection System). For Misfire and Fuel Injection System, the DTC and freeze frame data will be stored until the vehicle is driven 80 times (driving pattern C) without the same malfunction recurring. The “TIME” in “SELF-DIAGNOSTIC RESULTS” mode of CONSULT will count the number of times the vehicle is driven.
- The 1st trip DTC is not displayed when the self-diagnosis results in OK for the 2nd trip.

COUNTER SYSTEM CHART

Items	Fuel Injection System	Misfire	Other
MIL (turns OFF)	3 (pattern B)	3 (pattern B)	3 (pattern B)
DTC, Freeze Frame Data (no display)	80 (pattern C)	80 (pattern C)	40 (pattern A)
1st Trip DTC (clear)	1 (pattern C), *1	1 (pattern C), *1	1 (pattern B)
1st Trip Freeze Frame Data (clear)	*1, *2	*1, *2	1 (pattern B)

For details about patterns B and C under “Fuel Injection System” and “Misfire”, see “EXPLANATION FOR DRIVING PATTERNS FOR “MISFIRE <EXHAUST QUALITY DETERIORATION>”, “FUEL INJECTION SYSTEM”.
For details about patterns A and B under Other, see “EXPLANATION FOR DRIVING PATTERNS FOR “MISFIRE <EXHAUST QUALITY DETERIORATION>”, “FUEL INJECTION SYSTEM”.
- *1: Clear timing is at the moment OK is detected.
- *2: Clear timing is when the same malfunction is detected in the 2nd trip.

Relationship Between MIL, DTC, 1st Trip DTC and Driving Patterns for “Misfire <Exhaust Quality Deterioration>”, “Fuel Injection System”

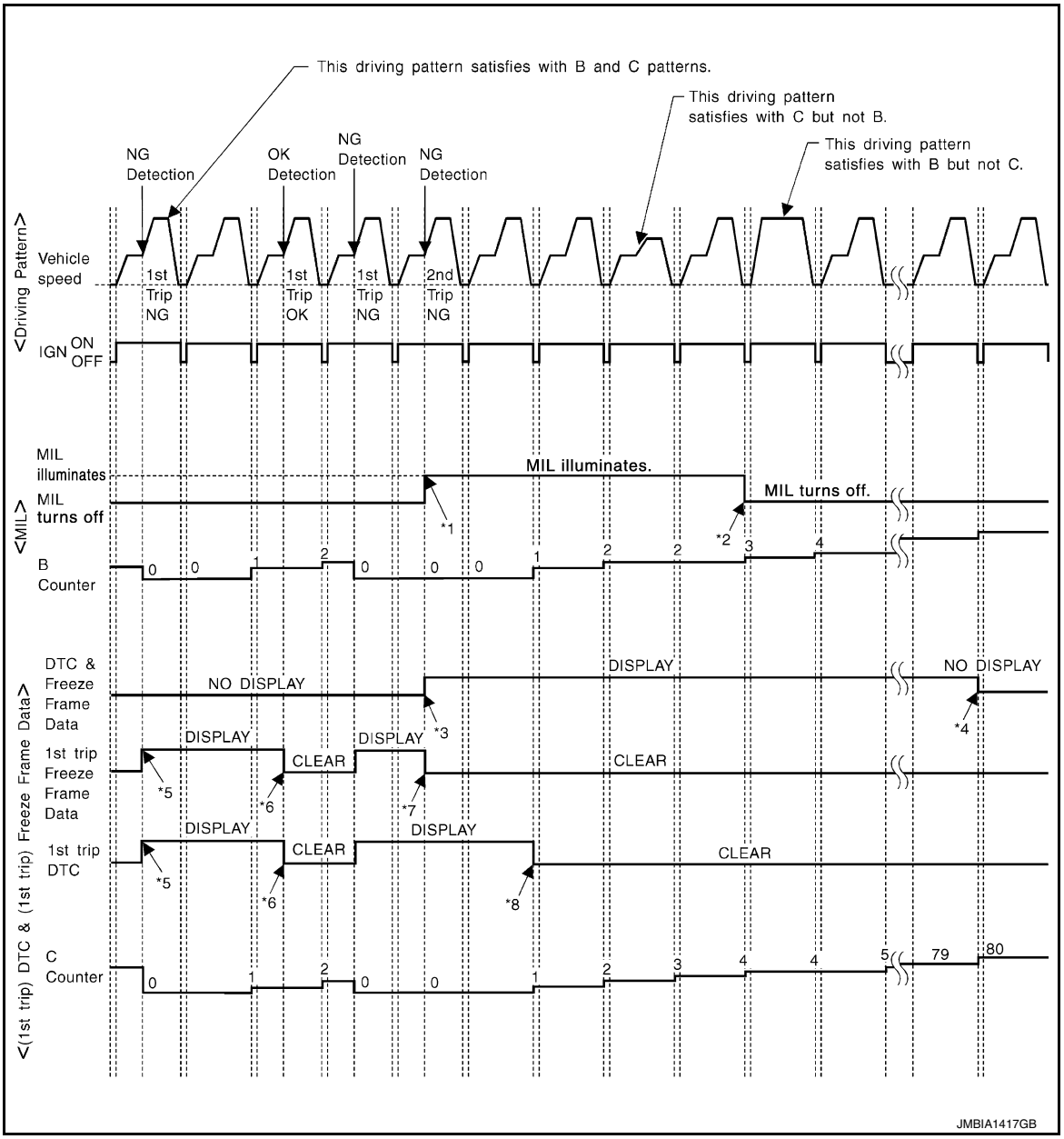

*1: When the same malfunction is detected in two consecutive trips, MIL will light up.

*2: MIL will turn OFF after vehicle is driven 3 times (pattern B) without any malfunctions.

*3: When the same malfunction is detected in two consecutive trips, the DTC and the freeze frame data will be stored in ECM.

*4: The DTC and the freeze frame data will not be displayed any longer after vehicle is driven 80 times (pattern C) without the same malfunction. (The DTC and the freeze frame data still remain in ECM.)

*5: When a malfunction is detected for the first time, the 1st trip DTC and the 1st trip freeze frame data will be stored in ECM.

*6: The 1st trip DTC and the 1st trip freeze frame data will be cleared at the moment OK is detected.

*7: When the same malfunction is detected in the 2nd trip, the 1st trip freeze frame data will be cleared.

*8: 1st trip DTC will be cleared when vehicle is driven once (pattern C) without the same malfunction after DTC is stored in ECM.

Explanation for Driving Patterns for “Misfire <Exhaust Quality Deterioration>”, “Fuel Injection System”

Driving Pattern B

Refer to EC-575, "DIAGNOSIS DESCRIPTION : Driving Pattern".

Driving Pattern C

Refer to EC-575, "DIAGNOSIS DESCRIPTION : Driving Pattern".

Example:

If the stored freeze frame data is as per the following:

Engine speed: 850 rpm, Calculated load value: 30%, Engine coolant temperature: 80°C (176°F)

To be satisfied with driving pattern C, the vehicle should run under the following conditions:

Engine speed: 475 – 1,225 rpm, Calculated load value: 27 – 33%, Engine coolant temperature: more than 70°C (158°F)

Relationship Between MIL, DTC, 1st Trip DTC and Driving Patterns Except For “Misfire <Exhaust Quality Deterioration>”, “Fuel Injection System”

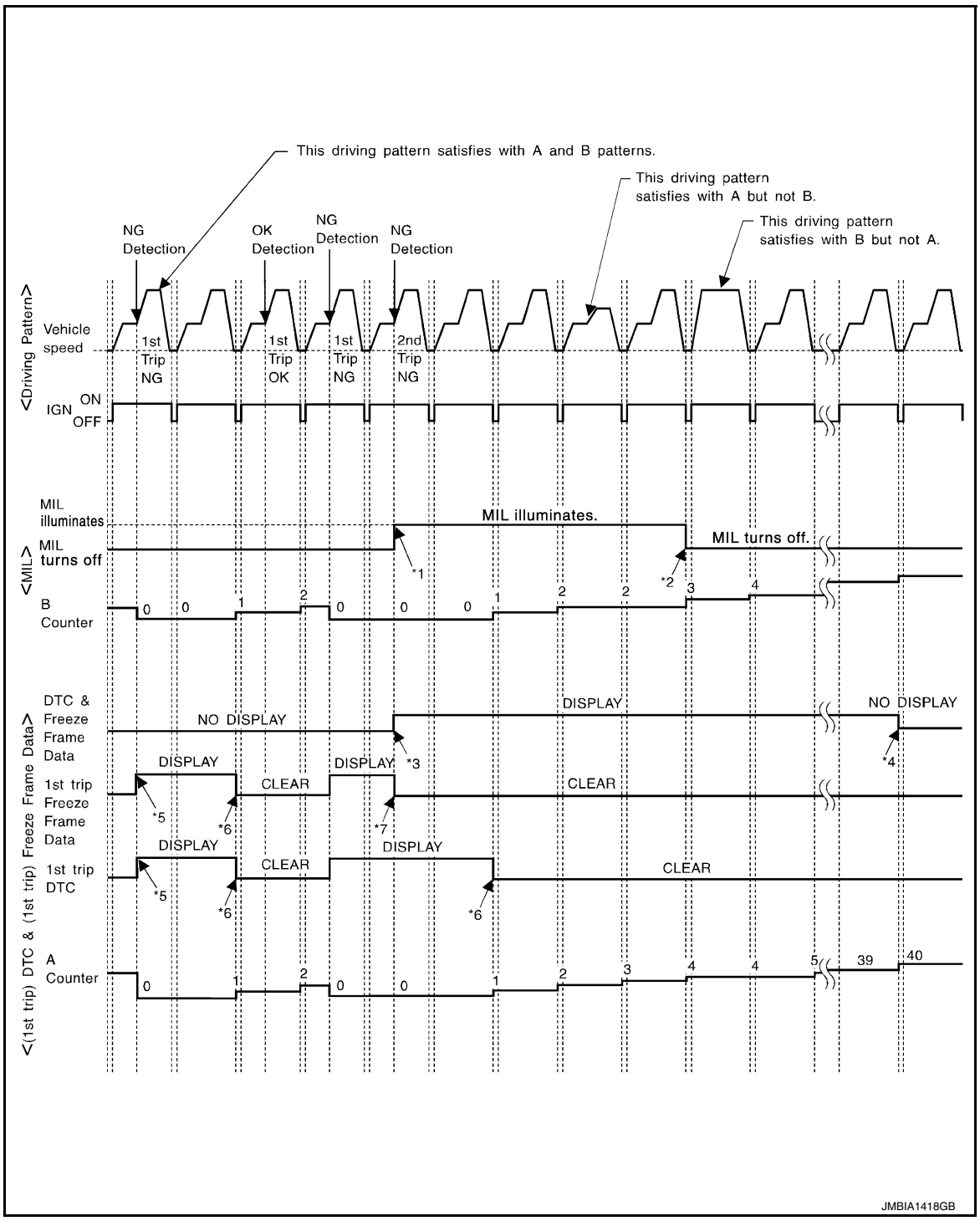

*1: When the same malfunction is detected in two consecutive trips, MIL will light up.

*2: MIL will turn OFF after vehicle is driven 3 times (pattern B) without any malfunctions.

*3: When the same malfunction is detected in two consecutive trips, the DTC and the freeze frame data will be stored in ECM.

*4: The DTC and the freeze frame data will not be displayed any longer after vehicle is driven 40 times (pattern A) without the same malfunction. (The DTC and the freeze frame data still remain in ECM.)

*5: When a malfunction is detected for the first time, the 1st trip DTC and the 1st trip freeze frame data will be stored in ECM.

*6: 1st trip DTC will be cleared after vehicle is driven once (pattern B) without the same malfunction.

*7: When the same malfunction is detected in the 2nd trip, the 1st trip freeze frame data will be cleared.

Explanation for Driving Patterns Except for “Misfire <Exhaust Quality Deterioration>”, “Fuel Injection System”

Driving Pattern A
Refer to EC-575, "DIAGNOSIS DESCRIPTION : Driving Pattern".

Driving Pattern B
Refer to EC-575, "DIAGNOSIS DESCRIPTION : Driving Pattern".

DIAGNOSIS DESCRIPTION : Driving Pattern

INFOID:0000000011489500

CAUTION:
Always drive at a safe speed.

DRIVING PATTERN A

Driving pattern A means a trip satisfying the following conditions.
- Engine speed reaches 400 rpm or more.
- Engine coolant temperature rises by 20°C (36°F) or more after starting the engine.
- Engine coolant temperature reaches 70°C (158°F) or more.
- The ignition switch is turned from ON to OFF.

NOTE:
- When the same malfunction is detected regardless of driving conditions, reset the counter of driving pattern A.
- When the above conditions are satisfied without detecting the same malfunction, reset the counter of driving pattern A.

DRIVING PATTERN B

Driving pattern B means a trip satisfying the following conditions.
- Engine speed reaches 400 rpm or more.
- Engine coolant temperature reaches 70°C (158°F) or more.
- Vehicle speed of 70 – 120 km/h (44 – 75 MPH) is maintained for 60 seconds or more under the control of closed loop.
- Vehicle speed of 30 – 60 km/h (19 – 37 MPH) is maintained for 10 seconds or more under the control of closed loop.
- Under the closed loop control condition, the following state reaches 12 seconds or more in total: Vehicle speed of 4 km/h (2 MPH) or less with idling condition.
- The state of driving at 10 km/h (7 MPH) or more reaches 10 minutes or more in total.
- A lapse of 22 minutes or more after engine start.

NOTE:
- Drive the vehicle at a constant velocity.
- When the same malfunction is detected regardless of driving conditions, reset the counter of driving pattern B.
- When the above conditions are satisfied without detecting the same malfunction, reset the counter of driving pattern B.

DRIVING PATTERN C

Driving pattern C means operating vehicle as per the following:
The following conditions should be satisfied at the same time:
Engine speed: (Engine speed in the freeze frame data) ±375 rpm

Calculated load value: (Calculated load value in the freeze frame data) x (1±0.1) [%]
Engine coolant temperature condition:
- When the freeze frame data shows lower than 70°C (158°F), engine coolant temperature should be lower than 70°C (158°F).
- When the freeze frame data shows higher than or equal to 70°C (158°F), engine coolant temperature should be higher than or equal to 70°C (158°F).

NOTE:
- When the same malfunction is detected regardless of the above vehicle conditions, reset the counter of driving pattern C.
- When the above conditions are satisfied without detecting the same malfunction, reset the counter of driving pattern C.
- The 1st trip DTC will be cleared when C counter is counted once without the same malfunction after DTC is stored in ECM.

DIAGNOSIS DESCRIPTION : System Readiness Test (SRT) Code

INFOID:0000000011489501

System Readiness Test (SRT) code is specified in Service $01 of SAE J1979/ISO 15031-5.
As part of an enhanced emissions test for Inspection & Maintenance (I/M), certain states require the status of SRT be used to indicate whether the ECM has completed self-diagnosis of major emission systems and components. Completion must be verified in order for the emissions inspection to proceed.
If a vehicle is rejected for a State emissions inspection due to one or more SRT items indicating “INCMP”, use the information in this Service Manual to set the SRT to “CMPLT”.
In most cases the ECM will automatically complete its self-diagnosis cycle during normal usage, and the SRT status will indicate “CMPLT” for each application system. Once set as “CMPLT”, the SRT status remains “CMPLT” until the self-diagnosis memory is erased.
Occasionally, certain portions of the self-diagnostic test may not be completed as a result of the customer's normal driving pattern; the SRT will indicate “INCMP” for these items.

NOTE:
The SRT will also indicate “INCMP” if the self-diagnosis memory is erased for any reason or if the ECM memory power supply is interrupted for several hours.

NOTE:
If MIL is ON during the state emissions inspection, the vehicle is also returned to the customer untested even though the SRT indicates “CMPLT” for all test items. Therefore, it is important to check SRT (“CMPLT”) and DTC (No DTCs) before the inspection.
If, during the state emissions inspection, the SRT indicates “CMPLT” for all test items, the inspector will continue with the emissions test. However, if the SRT indicates “INCMP” for one or more of the SRT items the vehicle is returned to the customer untested.

SRT SET TIMING

SRT is set as “CMPLT” after self-diagnosis has been performed one or more times. Completion of SRT is done regardless of whether the result is OK or NG. The set timing is different between OK and NG results and is shown in the table below.

Self-diagnosis result		Example				
		Diagnosis	Ignition cycle ← ON → OFF	← ON → OFF	← ON → OFF	← ON →
All OK	Case 1	P0400	OK (1)	— (1)	OK (2)	— (2)
		P0402	OK (1)	— (1)	— (1)	OK (2)
		P1402	OK (1)	OK (2)	— (2)	— (2)
		SRT of EGR	“CMPLT”	“CMPLT”	“CMPLT”	“CMPLT”
	Case 2	P0400	OK (1)	— (1)	— (1)	— (1)
		P0402	— (0)	— (0)	OK (1)	— (1)
		P1402	OK (1)	OK (2)	— (2)	— (2)
		SRT of EGR	“INCMP”	“INCMP”	“CMPLT”	“CMPLT”

Self-diagnosis result		Example				
		Diagnosis	Ignition cycle ← ON → OFF	← ON → OFF	← ON → OFF	← ON →
NG exists	Case 3	P0400	OK	OK	—	—
		P0402	—	—	—	—
		P1402	NG	—	NG	NG (Consecutive NG)
		(1st trip) DTC	1st trip DTC	—	1st trip DTC	DTC (= MIL ON)
		SRT of EGR	"INCMP"	"INCMP"	"INCMP"	"CMPLT"

OK: Self-diagnosis is carried out and the result is OK.

NG: Self-diagnosis is carried out and the result is NG.

—: Self-diagnosis is not carried out.

When all SRT related self-diagnoses show OK results in a single cycle (Ignition OFF-ON-OFF), the SRT will indicate "CMPLT". → Case 1 above

When all SRT related self-diagnoses show OK results through several different cycles, the SRT will indicate "CMPLT" at the time the respective self-diagnoses have at least one OK result. → Case 2 above

If one or more SRT related self-diagnoses show NG results in 2 consecutive cycles, the SRT will also indicate "CMPLT". → Case 3 above

The table above shows that the minimum number of cycles for setting SRT as "INCMP" is the number one (1) for each self-diagnosis (Case 1 & 2) or the number two (2) for one of self-diagnoses (Case 3). However, in preparation for the state emissions inspection, it is unnecessary for each self-diagnosis to be executed twice (Case 3) for the following reasons:

- The SRT will indicate "CMPLT" at the time the respective self-diagnoses have one (1) OK result.
- The emissions inspection requires "CMPLT" of the SRT only with OK self-diagnosis results.
- During SRT driving pattern, the 1st trip DTC (NG) is detected prior to "CMPLT" of SRT and the self-diagnosis memory must be erased from the ECM after repair.
- If the 1st trip DTC is erased, all the SRT will indicate "INCMP".

  NOTE:
  SRT can be set as "CMPLT" together with the DTC(s). Therefore, DTC check must always be carried out prior to the state emission inspection even though the SRT indicates "CMPLT".

DIAGNOSIS DESCRIPTION : Malfunction Indicator Lamp (MIL)

INFOID:0000000011489503

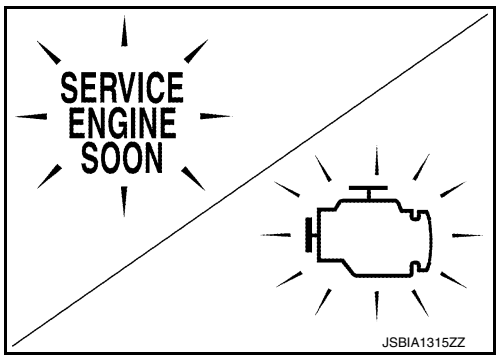

- When detecting a DTC that affects exhaust gas, the exhaust emission-related control module transmits a malfunction indicator lamp signal to ECM via CAN communication line.
  ECM prioritizes (MIL: ON/blink) the signal received from the exhaust emission-related control module and the ECM-stored DTC that affects exhaust gas and transmits a malfunction indicator lamp signal to the combination meter via CAN communication line.
  The combination meter turns ON or blinks the MIL, according to the signal transmitted from ECM, and alerts the driver of malfunction detection.
- Control modules that a DTC of MIL ON/Blink is stored (Control module varies among DTCs.):

- ECM
- TCM

1. The MIL illuminates when ignition switch is turned ON (engine is not running).
   NOTE:
   Check the MIL circuit if MIL does not illuminate. Refer to EC-893, "Component Function Check".
2. When the engine is started, the MIL should go off.
   NOTE:
   If MIL remains ON or continues blinking, a DTC(s) that affects exhaust gas is detected. In this case, Self-diagnosis is required for performing inspection and repair.

On Board Diagnosis Function

INFOID:0000000011489504

ON BOARD DIAGNOSIS ITEM

The on board diagnostic system has the following functions.

Diagnostic test mode	Function
Bulb check	MIL can be checked.
SRT status	ECM can read if SRT codes are set.
Malfunction warning	If ECM detects a malfunction, it illuminates or blinks MIL to inform the driver that a malfunction has been detected.
Self-diagnostic results	DTCs or 1st trip DTCs stored in ECM can be read.
Accelerator pedal released position learning	ECM can learn the accelerator pedal released position. Refer to EC-659, "Description".
Throttle valve closed position learning	ECM can learn the throttle valve closed position. Refer to EC-660, "Description".
Idle air volume learning	ECM can learn the idle air volume. Refer to EC-661, "Description".
Mixture ratio self-learning value clear	Mixture ratio self-learning value can be erased. Refer to EC-663, "Description".

BULB CHECK MODE

Description

This function allows damage inspection in the MIL bulb (blown, open circuit, etc.).

Operation Procedure

1. Turn ignition switch ON.
2. The MIL on the instrument panel should stay ON.
   If it remains OFF, check MIL circuit. Refer to EC-893, "Diagnosis Procedure".

SRT STATUS MODE

Description

This function allows to read if ECM has completed the self-diagnoses of major emission control systems and components. For SRT, refer to EC-576, "DIAGNOSIS DESCRIPTION : System Readiness Test (SRT) Code".

Operation Procedure

1. Turn ignition switch ON and wait 20 seconds.
2. SRT status is indicated as shown blow.
   - ECM continues to illuminate MIL if all SRT codes are set.
   - ECM blinks MIL for about 10 seconds if all SRT codes are not set.

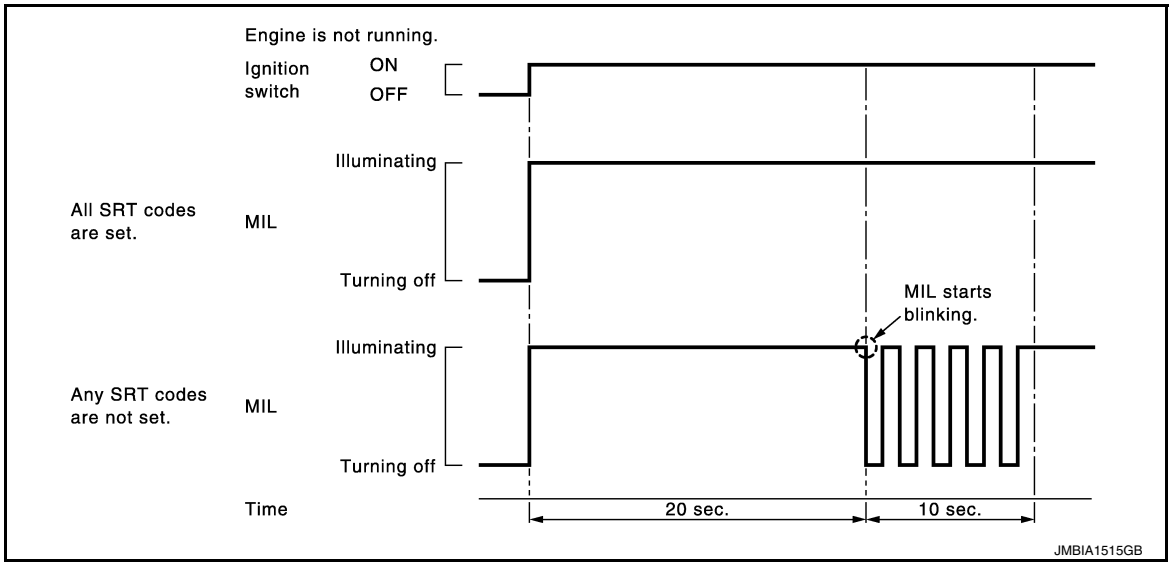

MALFUNCTION WARNING MODE

Description

In this function ECM turns on or blinks MIL when it detects a malfunction in the emission control system components and/or the powertrain control components (which affect vehicle emissions) to inform the driver that a malfunction has been detected.

Operation Procedure

1. Turn ignition switch ON.
2. Check that MIL illuminates.
   If it remains OFF, check MIL circuit. Refer to EC-893, "Diagnosis Procedure".
3. Start engine and let it idle.
   - For two trip detection logic diagnoses, ECM turns on MIL when it detects the same malfunction twice in the two consecutive driving cycles.
   - For 1st trip detection logic diagnoses, ECM turns on MIL when it detects a malfunction in one driving cycle.
   - ECM blinks MIL when it detects a malfunction that may damage the three way catalyst (misfire).

SELF-DIAGNOSTIC RESULTS MODE

Description

This function allows to indicate DTCs or 1st trip DTCs stored in ECM according to the number of times MIL is blinking.

How to Set Self-diagnostic Results Mode

NOTE:
- It is better to count the time accurately with a clock.
- It is impossible to switch the diagnostic mode when an accelerator pedal position sensor circuit has a malfunction.
- After ignition switch is turned off, ECM is always released from the “self-diagnostic results” mode.

1. Confirm that accelerator pedal is fully released, turn ignition switch ON and wait 3 seconds.
2. Repeat the following procedure quickly five times within 5 seconds.
   - Fully depress the accelerator pedal.
   - Fully release the accelerator pedal.
3. Wait 7 seconds, fully depress the accelerator pedal and keep it depressed for approx. 10 seconds until the MIL starts blinking.
   NOTE:
   Do not release the accelerator pedal for 10 seconds if MIL starts blinking during this period. This blinking is displaying SRT status and is continued for another 10 seconds.
4. Fully release the accelerator pedal.
   ECM has entered to “Self-diagnostic results” mode.
   NOTE:
   Wait until the same DTC (or 1st trip DTC) appears to completely confirm all DTCs.

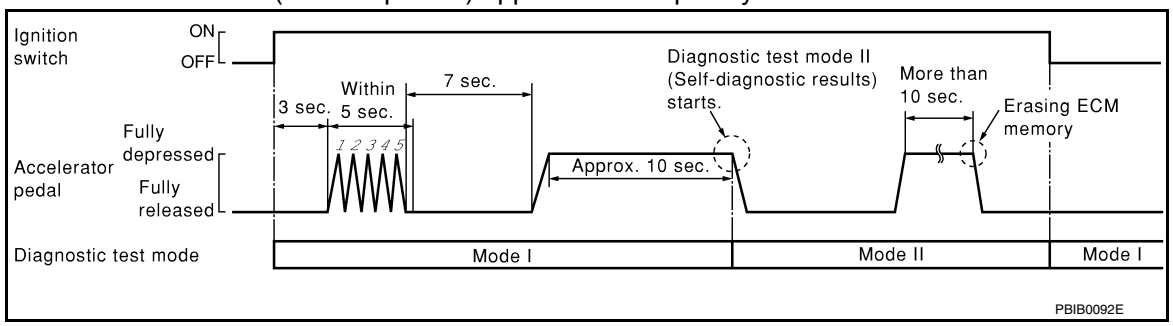

How to Read Self-diagnostic Results

The DTC and 1st trip DTC are indicated by the number of blinks of the MIL as shown below.
The DTC and 1st trip DTC are displayed at the same time. If the MIL does not illuminate in diagnostic test mode I (Malfunction warning), all displayed items are 1st trip DTCs. If only one code is displayed when the MIL illuminates in “malfunction warning” mode, it is a DTC; if two or more codes are displayed, they may be either

DTCs or 1st trip DTCs. DTC No. is same as that of 1st trip DTC. These unidentified codes can be identified by using the CONSULT or GST. A DTC will be used as an example for how to read a code.

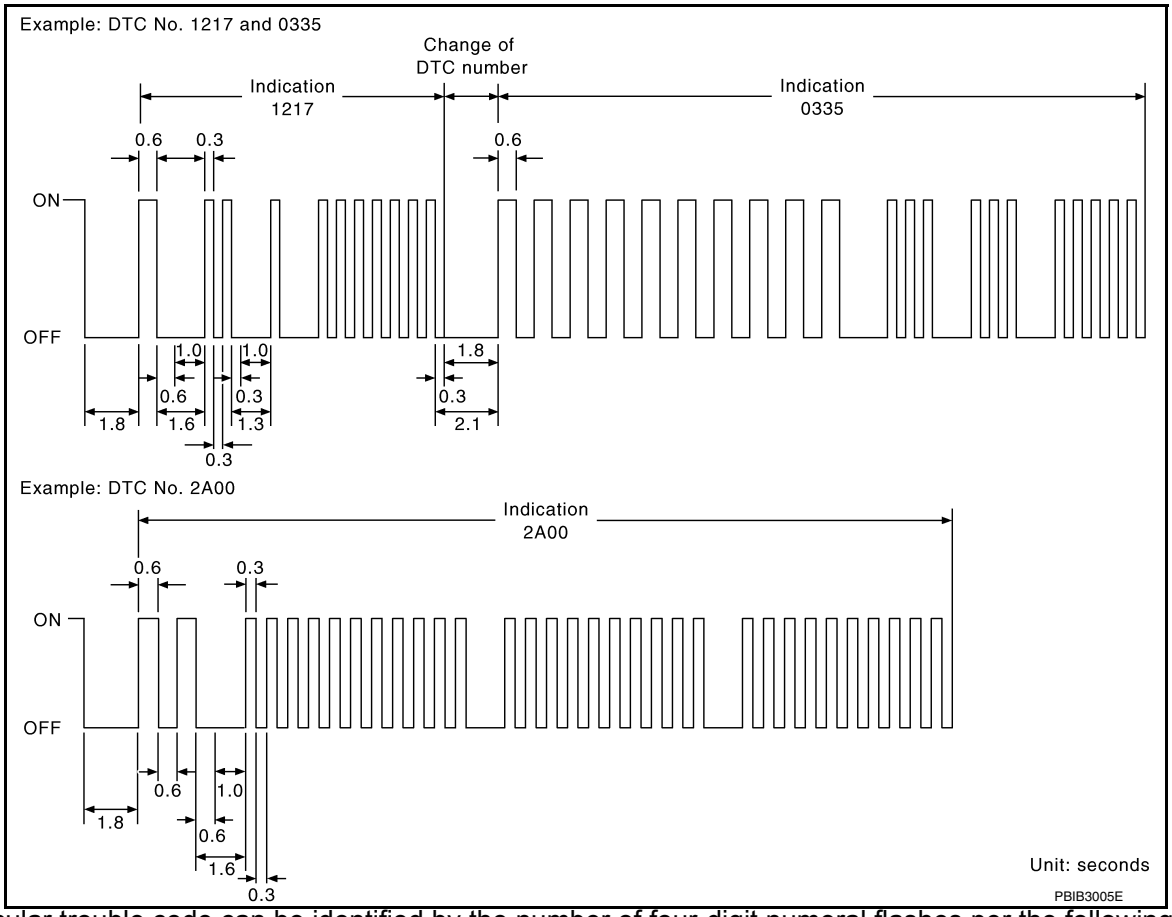

A particular trouble code can be identified by the number of four-digit numeral flashes per the following.

Number	0	1	2	3	4	5	6	7	8	9	A	B	C	D	E	F
Flashes	10	1	2	3	4	5	6	7	8	9	11	12	13	14	15	16

The length of time the 1,000th-digit numeral flashes on and off is 1.2 seconds consisting of an ON (0.6-seconds) - OFF (0.6-seconds) cycle.
The 100th-digit numeral and lower digit numerals consist of a 0.3-seconds ON and 0.3-seconds OFF cycle.
A change from one digit numeral to another occurs at an interval of 1.0-second OFF. In other words, the later numeral appears on the display 1.3 seconds after the former numeral has disappeared.
A change from one trouble code to another occurs at an interval of 1.8-seconds OFF.
In this way, all the detected malfunctions are classified by their DTC numbers. The DTC 0000 refers to no malfunction. Refer to EC-610, "DTC Index".

How to Erase Self-diagnostic Results

By performing this procedure, ECM memory is erased and the following diagnostic information is erased as well.

- Diagnostic trouble codes
- 1st trip diagnostic trouble codes
- Freeze frame data
- 1st trip freeze frame data
- System readiness test (SRT) codes
- Test values

NOTE:

Also, if a battery terminal is disconnected, ECM memory is erased and the diagnostic information as listed above is erased. (The amount of time required for erasing may vary from a few seconds to several hours.)

1. Turn ignition switch OFF and wait at least 10 seconds.
2. Turn ignition switch ON.
3. Turn ignition switch OFF and wait at least 10 seconds.

4. Turn ignition switch ON.
5. Set ECM in “self-diagnostic results” mode.
6. The diagnostic information has been erased from the backup memory in the ECM.
   Fully depress the accelerator pedal and keep it depressed for more than 10 seconds.
7. Fully release the accelerator pedal, and confirm the DTC 0000 is displayed.

CONSULT Function

INFOID:0000000011489505

FUNCTION

Diagnostic test mode	Function
Self Diagnostic Result	Self-diagnostic results such as 1st trip DTC, DTCs and 1st trip freeze frame data or freeze frame data can be read and erased quickly.*
Data Monitor	Input/Output data in the ECM can be read.
Work support	This mode enables a technician to adjust some devices faster and more accurately by following the indications on the CONSULT unit.
Active Test	Diagnostic Test Mode in which CONSULT drives some actuators apart from the ECMs and also shifts some parameters in a specified range.
ECU Identification	ECM part number can be read.
DTC Work Support	The status of system monitoring tests and the self-diagnosis status/results can be confirmed.

*: The following emission-related diagnostic information is cleared when the ECM memory is erased.
- Diagnostic trouble codes
- 1st trip diagnostic trouble codes
- Freeze frame data
- 1st trip freeze frame data
- System readiness test (SRT) codes
- Test values

SELF DIAGNOSTIC RESULT MODE

Self Diagnostic Item
Regarding items of DTC and 1st trip DTC, refer to EC-610, "DTC Index".

How to Read DTC and 1st Trip DTC
DTCs and 1st trip DTCs related to the malfunction are displayed in “self-diag results”.
- When ECM detects a 1st trip DTC, 1t” is displayed for “TIME”.
- When ECM has detected a current DTC, “0” is displayed for “TIME”.
- If “TIME” is neither “0” nor “1t”, the DTC occurred in the past and ECM shows the number of times the vehicle has been driven since the last detection of the DTC.

How to Erase DTC and 1st Trip DTC
NOTE:
If the ignition switch stays ON after repair work, be sure to turn ignition switch OFF once. Wait at least 10 seconds and then turn it ON (engine stopped) again.
1. Select “ENGINE” with CONSULT.
2. Select “SELF-DIAG RESULTS”.
3. Touch “ERASE”. (DTC in ECM will be erased.)

Freeze Frame Data and 1st Trip Freeze Frame Data

Freeze frame data item*	Description
DIAG TROUBLE CODE [PXXXX]	The engine control component part/control system has a trouble code that is displayed as PXXXX. (Refer to EC-610, "DTC Index".)
FUEL SYS-B1	• “Fuel injection system status” at the moment a malfunction is detected is displayed. • One of the following mode is displayed. Mode2: Open loop due to detected system malfunction Mode3: Open loop due to driving conditions (power enrichment, deceleration enleanment) Mode4: Closed loop - using oxygen sensor(s) as feedback for fuel control Mode5: Open loop - has not yet satisfied condition to go to closed loop
FUEL SYS-B2	

Freeze frame data item*	Description
COMBUST CONDITION	These items are displayed but are not applicable to this model.
CAL/LD VALUE [%]	The calculated load value at the moment a malfunction is detected is displayed.
COOLANT TEMP [°C] or [°F]	The engine coolant temperature at the moment a malfunction is detected is displayed.
L-FUEL TRM-B1 [%]	• "Long-term fuel trim" at the moment a malfunction is detected is displayed. • The long-term fuel trim indicates much more gradual feedback compensation to the base fuel schedule than short-term fuel trim.
L-FUEL TRM-B2 [%]	
S-FUEL TRM-B1 [%]	• "Short-term fuel trim" at the moment a malfunction is detected is displayed. • The short-term fuel trim indicates dynamic or instantaneous feedback compensation to the base fuel schedule.
S-FUEL TRM-B2 [%]	
ENGINE SPEED [rpm]	The engine speed at the moment a malfunction is detected is displayed.
VEHICL SPEED [km/h] or [mph]	The vehicle speed at the moment a malfunction is detected is displayed.
INT MANI PRES [kPa]	These items are displayed but are not applicable to this model.
ABSOL TH·P/S [%]	The throttle valve opening angle at the moment a malfunction is detected is displayed.
B/FUEL SCHDL [msec]	The base fuel schedule at the moment a malfunction is detected is displayed.
INT/A TEMP SE [°C] or [°F]	The intake air temperature at the moment a malfunction is detected is displayed.

*: The items are the same as those of 1st trip freeze frame data.

DATA MONITOR MODE

NOTE:
The following table includes information (items) inapplicable to this vehicle. For information (items) applicable to this vehicle, refer to CONSULT display items.

Monitored Item
For reference values of the following items, refer to EC-593, "Reference Value".

×: Applicable

Monitored item	Unit	Monitor Item Selection		Description	Remarks
		ECU INPUT SIGNALS	MAIN-SIGNALS		
ENG SPEED	rpm	×	×	Indicates the engine speed computed from the signal of the crankshaft position sensor (POS) and camshaft position sensor (PHASE).	• Accuracy becomes poor if engine speed drops below the idle rpm. • If the signal is interrupted while the engine is running, an abnormal value may be indicated.
MAS A/F SE-B1	V	×	×	The signal voltage of the mass air flow sensor is displayed.	• When the engine is stopped, a certain value is indicated. • When engine is running, specification range is indicated in "SPEC".
B/FUEL SCHDL	ms	×	×	"Base fuel schedule" indicates the fuel injection pulse width programmed into ECM, prior to any learned on board correction.	• When engine is running, specification range is indicated in "SPEC".
A/F ALPHA-B1	%			The mean value of the air-fuel ratio feedback correction factor per cycle is indicated.	• When the engine is stopped, a certain value is indicated. • This data also includes the data for the air-fuel ratio learning control. • When engine is running, specification range is indicated in "SPEC".
A/F ALPHA-B2					

Monitored item	Unit	Monitor Item Selection		Description	Remarks
		ECU INPUT SIGNALS	MAIN-SIGNALS		
COOLANT TEMP/S	°C or °F	×	×	The engine coolant temperature (determined by the signal voltage of the engine coolant temperature sensor) is displayed.	When the engine coolant temperature sensor is open or short-circuited, ECM enters fail-safe mode. The engine coolant temperature determined by the ECM is displayed.
A/F SEN1 (B1)	V	×	×	The A/F signal computed from the input signal of the air fuel ratio (A/F) sensor 1 is displayed.	
HO2S2 (B1)	V	×	×	The signal voltage of the heated oxygen sensor 2 is displayed.	
HO2S2 (B2)		×	×		
HO2S2 MNTR(B1)	RICH/LEAN		×	Display of heated oxygen sensor 2 signal: • RICH: means the amount of oxygen after three way catalyst is relatively small. • LEAN: means the amount of oxygen after three way catalyst is relatively large.	When the engine is stopped, a certain value is indicated.
HO2S2 MNTR(B2)			×		
VHCL SPEED SE	km/h or mph	×	×	The vehicle speed computed from the vehicle speed signal sent from combination meter is displayed.	
BATTERY VOLT	V			The power supply voltage of ECM is displayed.	
ACCEL SEN 1	V			The accelerator pedal position sensor signal voltage is displayed.	ACCEL SEN 2 signal is converted by ECM internally. Thus, it differs from ECM terminal voltage signal.
ACCEL SEN 2					
TP SEN 1-B1	V	×	×	The throttle position sensor signal voltage is displayed.	TP SEN 2-B1 signal is converted by ECM internally. Thus, it differs from ECM terminal voltage signal.
TP SEN 2-B1		×	×		
FUEL T/TMP SE	°C or °F			The fuel temperature (determined by the signal voltage of the fuel tank temperature sensor) is displayed.	
EVAP SYS PRES	V			The signal voltage of EVAP control system pressure sensor is displayed.	
FUEL LEVEL SE	V	×		The signal voltage of the fuel level sensor is displayed.	
START SIGNAL	On/Off			Indicates start signal status [On/Off] computed by the ECM according to the signals of engine speed and battery voltage.	After starting the engine, [Off] is displayed regardless of the starter signal.
CLSD THL POS	On/Off	×	×	Indicates idle position [On/Off] computed by ECM according to the accelerator pedal position sensor signal.	
AIR COND SIG	On/Off	×	×	Indicates [On/Off] condition of the air conditioner switch as determined by the air conditioner signal.	
PW/ST SIGNAL	On/Off	×	×	[On/Off] condition of the power steering system (determined by the signal voltage of the power steering pressure sensor) is indicated.	

Monitored item	Unit	Monitor Item Selection		Description	Remarks
		ECU INPUT SIGNALS	MAIN-SIGNALS		
LOAD SIGNAL	On/Off	×	×	Indicates [On/Off] condition from the electrical load signal. • On: Rear window defogger switch is ON and/or lighting switch is in 2nd position. • Off: Both rear window defogger switch and lighting switch are OFF.	
IGNITION SW	On/Off	×	×	Indicates [On/Off] condition from ignition switch signal.	
HEATER FAN SW	On/Off	×		Indicates [On/Off] condition from the heater fan switch signal.	
BRAKE SW	On/Off			Indicates [On/Off] condition from the stop lamp switch signal.	
INJ PULSE-B1	msec			Indicates the actual fuel injection pulse width compensated by ECM according to the input signals.	When the engine is stopped, a certain computed value is indicated.
INJ PULSE-B2					
IGN TIMING	BTDC		×	Indicates the ignition timing computed by ECM according to the input signals.	When the engine is stopped, a certain value is indicated.
CAL/LD VALUE	%			“Calculated load value” indicates the value of the current air flow divided by peak air flow.	
MASS AIRFLOW	g/s			Indicates the mass air flow computed by ECM according to the signal voltage of the mass air flow sensor.	
PURG VOL C/V	%			• Indicates the EVAP canister purge volume control solenoid valve control value computed by the ECM according to the input signals. • The opening becomes larger as the value increases.	
INT/V TIM (B1)	°CA			Indicates [°CA] of intake camshaft advance angle.	
INT/V TIM (B2)					
INT/V SOL(B1)	%			• The control value of the intake valve timing control solenoid valve (determined by ECM according to the input signals) is indicated. • The advance angle becomes larger as the value increases.	
INT/V SOL(B2)					
VIAS S/V-1	On/Off			The control condition of the VIAS control solenoid valve 1 (determined by ECM according to the input signals) is indicated. • On: VIAS control solenoid valve 1 is operating. • Off: VIAS control solenoid valve 1 is not operating.	
AIR COND RLY	On/Off			The air conditioner relay control condition (determined by ECM according to the input signals) is indicated.	

Monitored item	Unit	Monitor Item Selection		Description	Remarks
		ECU INPUT SIGNALS	MAIN-SIGNALS		
ENGINE MOUNT	IDLE/TRVL			The control condition of the electronic controlled engine mount (determined by ECM according to the input signals) is indicated. • IDLE: Engine speed is below 950 rpm • TRVL: Engine speed is above 950 rpm	
FUEL PUMP RLY	On/Off			Indicates the fuel pump relay control condition determined by ECM according to the input signals.	
VENT CONT/V	On/Off			The control condition of the EVAP canister vent control valve (determined by ECM according to the input signals) is indicated. • On: Closed • Off: Open	
THRTL RELAY	On/Off			Indicates the throttle control motor relay control condition determined by the ECM according to the input signals.	
A/F S1 HTR(B2)	%			• Air fuel ratio (A/F) sensor 1 heater control value computed by ECM according to the input signals. • The current flow to the heater becomes larger as the value increases.	
HO2S2 HTR (B1)	On/Off			Indicates [On/Off] condition of heated oxygen sensor 2 heater determined by ECM according to the input signals.	
HO2S2 HTR (B2)					
ALT DUTY SIG	On/Off			The control condition of the power generation voltage variable control (determined by ECM according to the input signals) is indicated. • On: Power generation voltage variable control is active. • Off: Power generation voltage variable control is inactive.	
I/P PULLY SPD	rpm			Indicates the engine speed computed from the input speed sensor signal.	
VEHICLE SPEED	km/h or mph			The vehicle speed computed from the vehicle speed signal sent from TCM is displayed.	
IDL A/V LEARN	Yet/CMPLT			Displays the condition of idle air volume learning • Yet: Idle Air Volume Learning has not been performed yet. • CMPLT: Idle Air Volume Learning has already been performed successfully.	
TRVL AFTER MIL	km or mile			Distance traveled while MIL is activated.	

Monitored item	Unit	Monitor Item Selection		Description	Remarks
		ECU INPUT SIGNALS	MAIN SIGNALS		
ENG OIL TEMP	°C or °F	×		The engine oil temperature (determined by the signal voltage of the engine oil temperature sensor) is displayed.	
A/F S1 HTR(B1)	%			• Air fuel ratio (A/F) sensor 1 heater control value computed by ECM according to the input signals. • The current flow to the heater becomes larger as the value increases.	
VHCL SPEED SE	km/h or mph			The vehicle speed computed from the vehicle speed signal sent from combination meter is displayed.	
SET VHCL SPD	km/h or mph			• The preset vehicle speed is displayed.	
MAIN SW	On/Off	×		Indicates [On/Off] condition from MAIN switch signal.	
CANCEL SW	On/Off			Indicates [On/Off] condition from CANCEL switch signal.	
RESUME/ACC SW	On/Off			Indicates [On/Off] condition from RESUME/ACCELERATE switch signal.	
SET SW	On/Off	×		Indicates [On/Off] condition from SET/COAST switch signal.	
BRAKE SW1	On/Off			Indicates [On/Off] condition from Brake pedal position switch signal or ASCD clutch switch.	
BRAKE SW2	On/Off			Indicates [On/Off] condition of stop lamp switch signal.	
VHCL SPD CUT	Non/CUT			• Indicates the vehicle cruise condition. NON: Vehicle speed is maintained at the ASCD set speed. CUT: Vehicle speed decreased to excessively low compared with the ASCD set speed, and ASCD operation is cut off.	
LO SPEED CUT	Non/CUT			• Indicates the vehicle cruise condition. NON: Vehicle speed is maintained at the ASCD set speed. CUT: Vehicle speed decreased to excessively low, and ASCD operation is cut off.	
AT OD MONITOR	On/Off			• Indicates [On/Off] condition of CVT O/D according to the input signal from the TCM.	
AT OD CANCEL	On/Off			• Indicates [On/Off] condition of CVT O/D cancel request signal.	
CRUISE LAMP	On/Off			Indicates [On/Off] condition of CRUISE lamp determined by the ECM according to the input signals.	

Monitored item	Unit	Monitor Item Selection		Description	Remarks
		ECU INPUT SIGNALS	MAIN-SIGNALS		
SET LAMP	On/Off			• Indicates [On/Off] condition of SET lamp determined by the ECM according to the input signals.	
FAN DUTY	%			Indicates a command value for cooling fan. The value is calculated by ECM based on input signals.	
ALT DUTY	%			Indicates the duty ratio of the power generation command value. The ratio is calculated by ECM based on the battery current sensor signal.	
VIAS S/V-2	On/Off			The control condition of the VIAS control solenoid valve 2 (determined by ECM according to the input signals) is indicated. • On: VIAS control solenoid valve 2 is operating. • Off: VIAS control solenoid valve 2 is not operating.	
BAT CUR SEN	mV			The signal voltage of battery current sensor is displayed.	
A/F ADJ-B1	—			Indicates the correction of a factor stored in ECM. The factor is calculated from the difference between the target air-fuel ratio stored in ECM and the air-fuel ratio calculated from A/F sensor 1 signal.	
A/F ADJ-B2					
P/N POSI SW	On/Off	×	×	Indicates [On/Off] condition from the park/neutral position (PNP) signal.	
INT/A TEMP SE	°C or °F	×	×	The intake air temperature (determined by the signal voltage of the intake air temperature sensor) is indicated.	
AC PRESS SEN	V			The signal voltage from the refrigerant pressure sensor is displayed.	
A/F SEN1 (B2)	V	×	×	The A/F signal computed from the input signal of the air fuel ratio (A/F) sensor 1 is displayed.	
VTC DTY EX B2*	%			—	
EVAP LEAK DIAG	Yet/CMPLT			Indicates the condition of EVAP leak diagnosis. • YET: EVAP leak diagnosis has not been performed yet. • CMPLT: EVAP leak diagnosis has been performed successfully.	
EVAP DIAG READY	On/Off			Indicates the ready condition of EVAP leak diagnosis. • On: Diagnosis has been ready condition. • Off: Diagnosis has not been ready condition.	
BAT TEMP SEN	V			The signal voltage from the battery temperature sensor is displayed.	
THRTL STK CNT B1*	—			—	

Monitored item	Unit	Monitor Item Selection		Description	Remarks
		ECU INPUT SIGNALS	MAIN-SIGNALS		
HO2 S2 DIAG1(B2)	INCMP/ CMPLT			Indicates DTC P0139 self-diagnosis (delayed response) condition. • INCMP: Self-diagnosis is incomplete. • CMPLT: Self-diagnosis is complete.	
A/F SEN1 DIAG1(B2)	INCMP/ CMPLT			Indicates DTC P015C or P015D self-diagnosis condition. • INCMP: Self-diagnosis is incomplete. • CMPLT: Self-diagnosis is complete.	
A/F SEN1 DIAG1(B1)	INCMP/ CMPLT			Indicates DTC P015A or P015B self-diagnosis condition. • INCMP: Self-diagnosis is incomplete. • CMPLT: Self-diagnosis is complete.	
A/F SEN1 DIAG2(B2)	INCMP/ CMPLT			Indicates DTC P014E or P014F self-diagnosis condition. • INCMP: Self-diagnosis is incomplete. • CMPLT: Self-diagnosis is complete.	
A/F SEN1 DIAG2(B1)	INCMP/ CMPLT			Indicates DTC P014C or P014Dself-diagnosis condition. • INCMP: Self-diagnosis is incomplete. • CMPLT: Self-diagnosis is complete.	
A/F SEN1 DIAG3(B2)	ABSNT/ PRSNT			Indicates DTC P014E, P014F, P015C or P015D self-diagnosis condition. • ABSNT: The vehicle condition is not within the diagnosis range. • PRSNT: The vehicle condition is within the diagnosis range.	
A/F SEN1 DIAG3(B1)	ABSNT/ PRSNT			Indicates DTC P014C, P014D, P015A or P015B self-diagnosis condition. • ABSNT: The vehicle condition is not within the diagnosis range. • PRSNT: The vehicle condition is within the diagnosis range.	
HO2 S2 DIAG2(B2)	INCMP/ CMPLT			Indicates DTC P0139 self-diagnosis (slow response) condition. • INCMP: Self-diagnosis is incomplete. • CMPLT: Self-diagnosis is complete.	
HO2 S2 DIAG2(B1)	INCMP/ CMPLT			Indicates DTC P0139 self-diagnosis (slow response) condition. • INCMP: Self-diagnosis is incomplete. • CMPLT: Self-diagnosis is complete.	

Monitored item	Unit	Monitor Item Selection		Description	Remarks
		ECU INPUT SIGNALS	MAIN-SIGNALS		
EOP SENSOR	mV			The signal voltage of EOP sensor is displayed.	
HO2 S2 DIAG1(B1)	INCMP/ CMPLT			Indicates DTC P0139 self-diagnosis (delayed response) condition. • INCMP: Self-diagnosis is incomplete. • CMPLT: Self-diagnosis is complete.	
DIST SW	On/Off			Indicates [On/Off] condition from DISTANCE switch signal.	
AC EVA TEMP	°C or °F			Indicates A/C evaporator temperature sent from“A/C auto amp.”.	
AC EVA TARGET	°C or °F			Indicates target A/C evaporator temperature sent from“A/C auto amp.”.	
A/F-S ATMSPHRC CRCT B1	—			Displays a determined value of atmospheric correction factor necessary for correcting an A/F sensor signal input to ECM. The signal used for the correction is an A/F sensor signal transmitted while driving under atmospheric pressure.	
A/F-S ATMSPHRC CRCT B2	—			Displays a determined value of atmospheric correction factor necessary for correcting an A/F sensor signal input to ECM. The signal used for the correction is an A/F sensor signal transmitted while driving under atmospheric pressure.	
A/F-S ATMSPHRC CRCT UP B1	count			Displays the number of updates of the A/F sensor atmospheric correction factor.	
A/F-S ATMSPHRC CRCT UP B2	count			Displays the number of updates of the A/F sensor atmospheric correction factor.	

*: The item is indicated, but not used

NOTE:

Any monitored item that does not match the vehicle being diagnosed is deleted from the display automatically.

WORK SUPPORT MODE

Work Item

WORK ITEM	CONDITION	USAGE
IDLE AIR VOL LEARN	The idle air volume that keeps the engine within the specified range is memorized in ECM.	When learning the idle air volume
EVAP SYSTEM CLOSE	Close the EVAP canister vent control valve in order to make EVAP system close under the following conditions. • Ignition switch ON • Engine not running • Ambient temperature is above 0°C (32°F). • No vacuum and no high pressure in EVAP system • Fuel tank temperature is more than 0°C (32°F). • Within 10 minutes after starting “EVAP SYSTEM CLOSE” • When trying to execute “EVAP SYSTEM CLOSE” under the condition except above, CONSULT will discontinue it and display appropriate instruction. **NOTE:** **When starting engine, CONSULT may display “BATTERY VOLTAGE IS LOW. CHARGE BATTERY”, even in using charged battery.**	When detecting EVAP vapor leakage in the EVAP system
FUEL PRESSURE RELEASE	Fuel pump will stop by touching “START” during idling. crank a few times after engine stalls.	When releasing fuel pressure from fuel line
SELF-LEARNING CONT	The coefficient of self-learning control mixture ratio returns to the original coefficient.	When clearing mixture ratio self-learning value
TARGET IGN TIM ADJ*	Idle condition	When adjusting target ignition timing
TARGET IDLE RPM ADJ*	Idle condition	When setting target idle speed
VIN REGISTRATION	In this mode, VIN is registered in ECM	When registering VIN in ECM
CLSD THL POS LEARN	Ignition on and engine stopped.	When learning the throttle valve closed position
SAVING DATA FOR REPLC CPU	In this mode, save data that is in ECM.	When ECM is replaced.
WRITING DATA FOR REPLC CPU	In this mode, write data stored by “SAVE DATA FOR CPU REPLC” in work support mode to ECM.	When ECM is replaced.

*: This function is not necessary in the usual service procedure.

ACTIVE TEST MODE

Test Item

TEST ITEM	CONDITION	JUDGMENT	CHECK ITEM (REMEDY)
FUEL INJECTION	• Engine: Return to the original non-standard condition • Change the amount of fuel injection using CONSULT.	If malfunctioning symptom disappears, see CHECK ITEM.	• Harness and connectors • Fuel injector • Air fuel ratio (A/F) sensor 1
ENG COOLANT TEMP	• Engine: Return to the original non-standard condition • Change the engine coolant temperature using CONSULT.	If malfunctioning symptom disappears, see CHECK ITEM.	• Harness and connectors • Engine coolant temperature sensor • Fuel injector
PURG VOL CONT/V	• Engine: After warming up, run engine at 1,500 rpm. • Change the EVAP canister purge volume control solenoid valve opening percent using CONSULT.	Engine speed changes according to the opening percent.	• Harness and connectors • Solenoid valve
FUEL/T TEMP SEN	• Change the fuel tank temperature using CONSULT.		

TEST ITEM	CONDITION	JUDGMENT	CHECK ITEM (REMEDY)
FAN DUTY CONTROL*	• Ignition switch: ON • Change duty ratio using CONSULT.	Cooling fan speed changes.	• Harness and connectors • Cooling fan motor • Cooling fan relay • Cooling fan control module • IPDM E/R
FUEL PUMP RELAY	• Ignition switch: ON (Engine stopped) • Turn the fuel pump relay “ON” and “OFF” using CONSULT and listen to operating sound.	Fuel pump relay makes the operating sound.	• Harness and connectors • Fuel pump relay
VIAS S/V-1	• Ignition switch: ON • Turn solenoid valve “ON” and “OFF” using CONSULT and listen to operating sound.	Solenoid valve makes the operating sound.	• Harness and connectors • Solenoid valve
ENGINE MOUNTING	• Ignition switch: ON • Turn electronic controlled engine mount “IDLE” and “TRVL” with CONSULT.	Electronic controlled engine mount makes the operating sound.	• Harness and connectors • Electronic controlled engine mount
VIAS S/V-2	• Ignition switch: ON • Turn solenoid valve “ON” and “OFF” using CONSULT and listen to operating sound.	Solenoid valve makes the operating sound.	• Harness and connectors • Solenoid valve
IGNITION TIMING	• Engine: Return to the original non-standard condition • Timing light: Set • Retard the ignition timing using CONSULT.	If malfunctioning symptom disappears, see CHECK ITEM.	Perform Idle Air Volume Learning.
POWER BALANCE	• Engine: After warming up, idle the engine. • A/C switch OFF • Selector lever: P or N position • Cut off each injector signal one at a time using CONSULT.	Engine runs rough or stops.	• Harness and connectors • Compression • Fuel injector • Power transistor • Spark plug • Ignition coil
VENT CONTROL/V	• Ignition switch: ON (Engine stopped) • Turn solenoid valve “ON” and “OFF” with the CONSULT and listen to operating sound.	Solenoid valve makes an operating sound.	• Harness and connectors • Solenoid valve
V/T ASSIGN ANGLE	• Engine: Return to the original non-standard condition • Change intake valve timing using CONSULT.	If malfunctioning symptom disappears, see CHECK ITEM.	• Harness and connectors • Intake valve timing control solenoid valve

*: Leaving cooling fan OFF with CONSULT while engine is running may cause the engine to overheat.

DTC WORK SUPPORT MODE

Test item

Test mode	Test item	Corresponding DTC No.	Reference page
A/F SEN1	A/F SEN1(B1) P1276	P0130	EC-712
	A/F SEN1(B2) P1286	P0150	EC-712
HO2S2	HO2S2(B1) P1146	P0138	EC-727
	HO2S2(B1) P1147	P0137	EC-722
	HO2S2(B1) P0139	P0139	EC-734
	HO2S2(B2) P1166	P0158	EC-727
	HO2S2(B2) P1167	P0157	EC-722
	HO2S2(B2) P0159	P0159	EC-734

SRT & P-DTC MODE

SRT STATUS Mode

- For items whose SRT codes are set, “CMPLT” is displayed on the CONSULT screen; for items whose SRT codes are not set, “INCMP” is displayed.
- “SRT STATUS” provides the presence or absence of permanent DTCs stored in ECM memory.

SRT WORK SUPPORT Mode

This mode enables a technician to drive a vehicle to set the SRT while monitoring the SRT status.

ECU DIAGNOSIS INFORMATION

ECM

Reference Value

INFOID:0000000011489506

VALUES ON THE DIAGNOSIS TOOL

NOTE:

- The following table includes information (items) inapplicable to this vehicle. For information (items) applicable to this vehicle, refer to CONSULT display items.
- Numerical values in the following table are reference values.
- These values are input/output values that ECM receives/transmits and may differ from actual operations.
  Example:
  The ignition timing shown by the timing light may differ from the ignition timing displayed on the data monitor. This occurs because the timing light shows a value calculated by ECM according to signals received from the cam shaft position sensor and other sensors related to ignition timing.

For outlines of following items, refer to EC-581, "CONSULT Function".

Monitor Item	Condition		Values/Status
ENG SPEED	Run engine and compare CONSULT value with the tachometer indication.		Almost the same speed as the tachometer indication.
MAS A/F SE-B1	See EC-676, "Description".		
B/FUEL SCHDL	See EC-676, "Description".		
A/F ALPHA-B1	See EC-676, "Description".		
A/F ALPHA-B2	See EC-676, "Description".		
COOLANT TEMP/S	Engine: After warming up		More than 70°C (158°F)
A/F SEN1 (B1)	Engine: After warming up	Maintaining engine speed at 2,000 rpm	Fluctuates around 2.2 V
HO2S2 (B1)	Revving engine from idle to 3,000 rpm quickly after the following conditions are met. • Engine: After warming up • After keeping engine speed between 3,500 and 4,000 rpm for 1 minute and at idle for 1 minute under no load		0 - 0.3 V ←→ Approx. 0.6 - 1.0 V
HO2S2 (B2)	Revving engine from idle to 3,000 rpm quickly after the following conditions are met. • Engine: After warming up • After keeping engine speed between 3,500 and 4,000 rpm for 1 minute and at idle for 1 minute under no load		0 - 0.3 V ←→ Approx. 0.6 - 1.0 V
HO2S2 MNTR(B1)	Revving engine from idle to 3,000 rpm quickly after the following conditions are met. • Engine: After warming up • After keeping engine speed between 3,500 and 4,000 rpm for 1 minute and at idle for 1 minute under no load		LEAN ←→ RICH
HO2S2 MNTR(B2)	Revving engine from idle to 3,000 rpm quickly after the following conditions are met. • Engine: After warming up • After keeping engine speed between 3,500 and 4,000 rpm for 1 minute and at idle for 1 minute under no load		LEAN ←→ RICH
VHCL SPEED SE	Turn drive wheels and compare CONSULT value with the speedometer indication.		Almost the same speed as speedometer indication
BATTERY VOLT	Ignition switch: ON (Engine stopped)		11 - 14 V
ACCEL SEN 1	Ignition switch: ON (Engine stopped)	Accelerator pedal: Fully released	0.5 - 1.0 V
		Accelerator pedal: Fully depressed	4.2 - 4.8 V
ACCEL SEN 2*1	Ignition switch: ON (Engine stopped)	Accelerator pedal: Fully released	0.5 - 1.0 V
		Accelerator pedal: Fully depressed	4.2 - 4.8 V

Monitor Item	Condition		Values/Status
TP SEN 1-B1	• Ignition switch: ON (Engine stopped) • Selector lever: D position	Accelerator pedal: Fully released	More than 0.36 V
		Accelerator pedal: Fully depressed	Less than 4.75 V
TP SEN 2-B1*1	• Ignition switch: ON (Engine stopped) • Selector lever: D position	Accelerator pedal: Fully released	More than 0.36 V
		Accelerator pedal: Fully depressed	Less than 4.75 V
FUEL T/TMP SE	Ignition switch: ON		Indicates fuel tank temperature
EVAP SYS PRES	Ignition switch: ON		Approx. 1.8 - 4.8 V
FUEL LEVEL SE	Ignition switch: ON		Depending on fuel level of fuel tank
START SIGNAL	Ignition switch: ON → START → ON		Off → On → Off
CLSD THL POS	Ignition switch: ON (Engine stopped)	Accelerator pedal: Fully released	On
		Accelerator pedal: Slightly depressed	Off
AIR COND SIG	Engine: After warming up, idle the engine	Air conditioner switch: OFF	Off
		Air conditioner switch: ON (Compressor operates.)	On
PW/ST SIGNAL	Engine: After warming up, idle the engine	Steering wheel: Not being turned	Off
		Steering wheel: Being turned	On
LOAD SIGNAL	Ignition switch: ON	Rear window defogger switch: ON and/or Lighting switch: 2nd position	On
		Rear window defogger switch and lighting switch: OFF	Off
IGNITION SW	Ignition switch: ON → OFF → ON		On → Off → On
HEATER FAN SW	Engine: After warming up, idle the engine	Heater fan switch: ON	On
		Heater fan switch: OFF	Off
BRAKE SW	Ignition switch: ON	Brake pedal: Fully released	Off
		Brake pedal: Slightly depressed	On
INJ PULSE-B1	• Engine: After warming up • Selector lever: P or N position • Air conditioner switch: OFF • No load	Idle	2.0 - 3.0 msec
		2,000 rpm	1.9 - 2.9 msec
INJ PULSE-B2	• Engine: After warming up • Selector lever: P or N position • Air conditioner switch: OFF • No load	Idle	2.0 - 3.0 msec
		2,000 rpm	1.9 - 2.9 msec
IGN TIMING	• Engine: After warming up • Selector lever: P or N position • Air conditioner switch: OFF • No load	Idle	7 - 17°BTDC
		2,000 rpm	25 - 45°BTDC
CAL/LD VALUE	• Engine: After warming up • Selector lever: P or N position • Air conditioner switch: OFF • No load	Idle	5 - 35%
		2,500 rpm	5 - 35%
MASS AIRFLOW	• Engine: After warming up • Selector lever: P or N position • Air conditioner switch: OFF • No load	Idle	2.0 - 6.0 g/s
		2,500 rpm	7.0 - 20.0 g/s
PURG VOL C/V	• Engine: After warming up • Selector lever: P or N position • Air conditioner switch: OFF • No load	Idle (Accelerator pedal: Not depressed even slightly, after engine starting.)	0%
		2,000 rpm	—

Monitor Item	Condition		Values/Status
INT/V TIM (B1)	• Engine: After warming up • Selector lever: P or N position • Air conditioner switch: OFF • No load	Idle	–5 - 5°CA
		2,000 rpm	Approx. 0 - 30°CA
INT/V TIM (B2)	• Engine: After warming up • Selector lever: P or N position • Air conditioner switch: OFF • No load	Idle	–5 - 5°CA
		2,000 rpm	Approx. 0 - 30°CA
INT/V SOL(B1)	• Engine: After warming up • Selector lever: P or N position • Air conditioner switch: OFF • No load	Idle	0 - 2%
		2,000 rpm	Approx. 0 - 50%
INT/V SOL(B2)	• Engine: After warming up • Selector lever: P or N position • Air conditioner switch: OFF • No load	Idle	0 - 2%
		2,000 rpm	Approx. 0 - 50%
VIAS S/V-1	• Engine: After warming up • Selector lever: P or N position • Air conditioner switch: OFF • No load	When revving engine up to 5,000 rpm quickly	Off →On → Off
AIR COND RLY	Engine: After warming up, idle the engine	Air conditioner switch: OFF	Off
		Air conditioner switch: ON (Compressor operates)	On
ENGINE MOUNT	Engine: After warming up	Below 950 rpm	IDLE
		Above 950 rpm	TRVL
FUEL PUMP RLY	• For 1 second after turning ignition switch: ON • Engine running or cranking		On
	Except above		Off
VENT CONT/V	Ignition switch: ON		Off
THRTL RELAY	Ignition switch: ON		On
A/F S1 HTR(B2)	Engine: After warming up, idle the engine (More than 140 seconds after starting engine)		4 - 100%
HO2S2 HTR (B1)	Engine speed: Below 3,600 rpm after the following conditions are met. • Engine: After warming up • Keeping the engine speed between 3,500 and 4,000 rpm for 1 minute and at idle for 1 minute under no load		On
	Engine speed: Above 3,600 rpm		Off
HO2S2 HTR (B2)	Engine speed: Below 3,600 rpm after the following conditions are met. • Engine: After warming up • Keeping the engine speed between 3,500 and 4,000 rpm for 1 minute and at idle for 1 minute under no load		On
	Engine speed: Above 3,600 rpm		Off
ALT DUTY SIG	Power generation voltage variable control: Operating		On
	Power generation voltage variable control: Not operating		Off
I/P PULLY SPD	Vehicle speed: More than 20 km/h (12 MPH)		Almost the same speed as the tachometer indication
VEHICLE SPEED	Turn drive wheels and compare CONSULT value with the speedometer indication.		Almost the same speed as the speedometer indication
IDL A/V LEARN	Engine: Running	Idle air volume learning has not been performed yet.	Yet
		Idle air volume learning has already been performed successfully.	CMPLT
TRVL AFTER MIL	Ignition switch: ON	Vehicle has traveled after MIL has illuminated.	0 - 65,535 km (0 - 40,723 miles)

Monitor Item	Condition		Values/Status
ENG OIL TEMP	Engine: After warming up		More than 70°C (158°F)
A/F S1 HTR(B1)	Engine: After warming up, idle the engine (More than 140 seconds after starting engine)		4 - 100%
VHCL SPEED SE	Turn drive wheels and compare CONSULT value with the speedometer indication.		Almost the same speed as the speedometer indication
SET VHCL SPD	Engine: Running	ASCD: Operating	The preset vehicle speed is displayed
MAIN SW	Ignition switch: ON	MAIN switch: Pressed	On
		MAIN switch: Released	Off
CANCEL SW	Ignition switch: ON	CANCEL switch: Pressed	On
		CANCEL switch: Released	Off
RESUME/ACC SW	Ignition switch: ON	RESUME/ACCELERATE switch: Pressed	On
		RESUME/ACCELERATE switch: Released	Off
SET SW	Ignition switch: ON	SET/COAST switch: Pressed	On
		SET/COAST switch: Released	Off
BRAKE SW1 (Brake pedal position switch)	Ignition switch: ON	Brake pedal: Fully released	On
		Brake pedal: Slightly depressed	Off
BRAKE SW2 (Stop lamp switch)	Ignition switch: ON	Brake pedal: Fully released	Off
		Brake pedal: Slightly depressed	On
VHCL SPD CUT	Ignition switch: ON		Non
LO SPEED CUT	Ignition switch: ON		Non
AT OD MONITOR	Ignition switch: ON		Off
AT OD CANCEL	Ignition switch: ON		Off
CRUISE LAMP	Ignition switch: ON	MAIN switch: Pressed at the 1st time → at the 2nd time	On → Off
SET LAMP	• MAIN switch: ON • When vehicle speed is between 40 km/h (25 MPH) and 144 km/h (89 MPH)	ASCD: Operating	On
		ASCD: Not operating	Off
FAN DUTY	Engine: Running		0 - 100%
ALT DUTY	Engine: Idle		0 - 80%
VIAS S/V-2	• Engine: After warming up • Selector lever: P or N position • Air conditioner switch: OFF • No load	When revving engine up to 5,000 rpm quickly	Off →On → Off
BAT CUR SEN	• Engine speed: Idle • Battery: Fully charged*2 • Selector lever: P or N position • Air conditioner switch: OFF • No load		Approx. 2,600 - 3,500 mV
A/F ADJ-B1	Engine: Running		–0.330 - 0.330
A/F ADJ-B2	Engine: Running		–0.330 - 0.330
P/N POSI SW	Ignition switch: ON	Selector lever: P or N position	On
		Selector lever: Except above position	Off
INT/A TEMP SE	Ignition switch: ON		Indicates intake air temperature
AC PRESS SEN	• Engine: Idle • Both A/C switch and blower fan switch: ON (Compressor operates)		1.0 - 4.0 V

Monitor Item	Condition		Values/Status
A/F SEN1 (B2)	Engine: After warming up	Maintaining engine speed at 2,000 rpm	Fluctuates around 2.2 V
VTC DTY EX B2*3	—		—
EVAP LEAK DIAG	Ignition switch: ON		Indicates the condition of EVAP leak diagnosis.
EVAP DIAG READY	Ignition switch: ON		Indicates the ready condition of EVAP leak diagnosis.
BAT TEMP SEN	• Engine: After warming up • Selector lever: P or N position • Air conditioner switch: OFF • No load	Idle	Indicates the temperature around the battery.
THRTL STK CNT B1*3	—		—
HO2 S2 DIAG1(B2)	DTC P0159 self-diagnosis (delayed response) has not been performed yet.		INCMP
	DTC P0159 self-diagnosis (delayed response) has already been performed successfully.		CMPLT
A/F SEN1 DIAG1 (B2)	DTC P015C and P015D self-diagnosis is incomplete.		INCMP
	DTC P015C and P015D self-diagnosis is complete.		CMPLT
A/F SEN1 DIAG1 (B1)	DTC P015A and P015B self-diagnosis is incomplete.		INCMP
	DTC P015A and P015B self-diagnosis is complete.		CMPLT
A/F SEN1 DIAG2 (B2)	DTC P014E and P014F self-diagnosis is incomplete.		INCMP
	DTC P014E and P014F self-diagnosis is complete.		CMPLT
A/F SEN1 DIAG2 (B1)	DTC P014C and P014D self-diagnosis is incomplete.		INCMP
	DTC P014C and P014D self-diagnosis is complete.		CMPLT
A/F SEN1 DIAG3 (B2)	The vehicle condition is not within the diagnosis range of DTC P014E, P014F, P015C or P015D.		ABSNT
	The vehicle condition is within the diagnosis range of DTC P014E, P014F, P015C or P015D.		PRSNT
A/F SEN1 DIAG3 (B1)	The vehicle condition is not within the diagnosis range of DTC P014C, P014D, P015A or P015B.		ABSNT
	The vehicle condition is within the diagnosis range of DTC P014C, P014D, P015A or P015B.		PRSNT
HO2 S2 DIAG2(B2)	DTC P0159 self-diagnosis (slow response) has not been performed yet.		INCMP
	DTC P0159 self-diagnosis (slow response) has already been performed successfully.		CMPLT
HO2 S2 DIAG2(B1)	DTC P0139 self-diagnosis (slow response) has not been performed yet.		INCMP
	DTC P0139 self-diagnosis (slow response) has already been performed successfully.		CMPLT
EOP SENSOR	• Engine: After warming up • Selector lever: P or N position • Air conditioner switch: OFF • No load	Idle	Approx. 1,450 mV
		2,000 rpm	Approx. 2,850 mV
HO2 S2 DIAG1(B1)	DTC P0139 self-diagnosis (delayed response) has not been performed yet.		INCMP
	DTC P0139 self-diagnosis (delayed response) has already been performed successfully.		CMPLT
DIST SW	Ignition switch: ON	DISTANCE switch: Pressed	ON
		DISTANCE switch: Released	OFF
AC EVA TEMP	Engine: Running		Indicates A/C evaporator temperature sent from“A/C auto amp.”.

Monitor Item	Condition	Values/Status
AC EVA TARGET	Engine: Running	Indicates target A/C evaporator temperature sent from “A/C auto amp.”.
A/F-S ATMSPHRC CRCT B1	Engine: After warming up, idle the engine	Varies depending on vehicle environment.
A/F-S ATMSPHRC CRCT B2	Engine: After warming up, idle the engine	Varies depending on vehicle environment.
A/F-S ATMSPHRC CRCT UP B1	Engine: Running	Varies depending on the number of updates.
A/F-S ATMSPHRC CRCT UP B2	Engine: Running	Varies depending on the number of updates.

*1: Accelerator pedal position sensor 2 signal and throttle position sensor 2 signal are converted by ECM internally. Thus, they differ from ECM terminals voltage signal.
*2: Before measuring the terminal voltage, confirm that the battery is fully charged. Refer to PG-86, "How to Handle Battery".
*3: The item is indicated, but not used.

TERMINAL LAYOUT

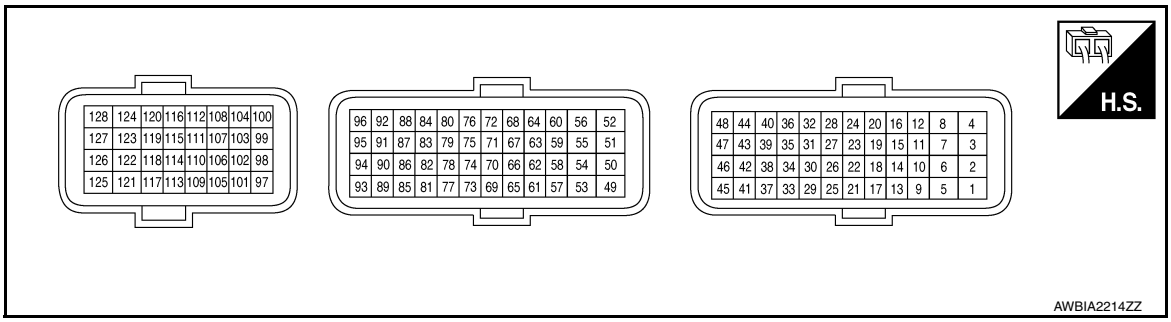

PHYSICAL VALUES

NOTE:
- ECM is located in the engine room left side near battery.
- Specification data are reference values.
- Pulse signal is measured by CONSULT.

Terminal No.		Description		Condition	Value (Approx.)
+	—	Signal name	Input/ Output		
1 (R)	128 (B)	Throttle control motor power supply	Input	[Ignition switch: ON]	BATTERY VOLTAGE (11 - 14 V)
2 (G)	128 (B)	Throttle control motor (Close)	Output	[Ignition switch: ON] • Engine stopped • Selector lever: D position • Accelerator pedal: Fully released	0 - 14 V★ 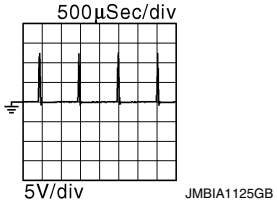
3 (Y)	128 (B)	A/F sensor 1 heater (bank 2)	Output	[Engine is running] • Warm-up condition • Idle speed (More than 140 seconds after starting engine)	2.9 - 8.8 V★ 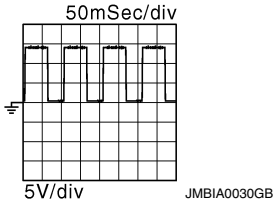

Terminal No.		Description		Condition	Value (Approx.)
+	–	Signal name	Input/ Output		
4 (LG)	107 (W)	Engine oil pressure sensor	Input	[Engine is running] • Warm-up condition • Idle speed	1.3 V★ 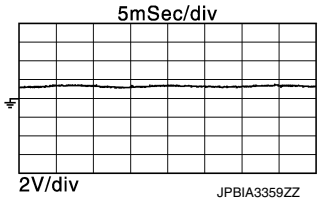
				[Engine is running] • Warm-up condition • Engine speed is 2,000 rpm	2.7 V★ 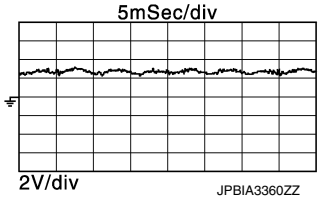
5 (W)	128 (B)	Throttle control motor (Open)	Output	[Ignition switch: ON] • Engine stopped • Selector lever: D position • Accelerator pedal: Fully depressed	0 - 14 V★ 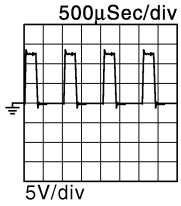
				[Ignition switch: ON] • Engine stopped • Selector lever: D position • Accelerator pedal: Fully released	0 - 14 V★ 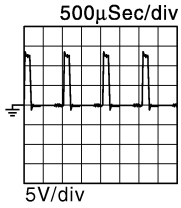
6 (BR)	128 (B)	A/F sensor 1 heater (bank 1)	Output	[Engine is running] • Warm-up condition • Idle speed (More than 140 seconds after starting engine)	2.9 - 8.8 V★ 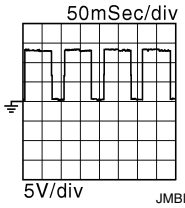

Terminal No.		Description		Condition	Value (Approx.)
+	—	Signal name	Input/ Output		
9 (LG) 10 (LG) 11 (LG) 13 (LG) 14 (LG) 15 (LG)	128 (B)	Ignition signal No. 3 Ignition signal No. 2 Ignition signal No. 1 Ignition signal No. 6 Ignition signal No. 5 Ignition signal No. 4	Output	[Engine is running] • Warm-up condition • Idle speed **NOTE:** The pulse cycle changes depending on rpm at idle	0 - 0.2 V★ 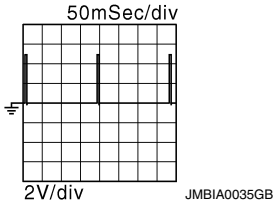
				[Engine is running] • Warm-up condition • Engine speed: 2,000 rpm	0.1 - 0.4 V★ 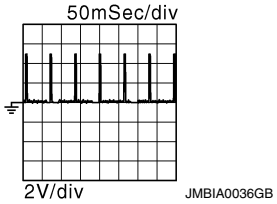
12 (B)	—	ECM ground	—	—	—
16 (B)	—	ECM ground	—	—	—
19 (R)	—	Sensor ground (Throttle position sensor)	—	—	—
22 (B)	128 (B)	Throttle position sensor 1	Input	[Ignition switch: ON] • Engine stopped • Selector lever: D position • Accelerator pedal: Fully released	More than 0.36 V
				[Ignition switch: ON] • Engine stopped • Selector lever: D position • Accelerator pedal: Fully depressed	Less than 4.75 V
23 (W)	128 (B)	Throttle position sensor 2	Input	[Ignition switch: ON] • Engine stopped • Selector lever: D position • Accelerator pedal: Fully released	Less than 4.75 V
				[Ignition switch: ON] • Engine stopped • Selector lever: D position • Accelerator pedal: Fully depressed	More than 0.36 V
24 (G)	19 (R)	Sensor power supply (Throttle position sensor)	—	[Ignition switch: ON]	5 V
26 (GR)	128 (B)	Power supply for ECM (Back-up)	Input	[Ignition switch: OFF]	BATTERY VOLTAGE (11 - 14 V)
31 (V)	128 (B)	ECM relay (Self shut-off)	Output	• [Engine is running] • [Ignition switch: OFF] A few seconds after turning ignition switch OFF	0 - 1.5 V
				[Ignition switch: OFF] More than a few seconds after turning ignition switch OFF	BATTERY VOLTAGE (11 - 14 V)

Terminal No. +	Terminal No. —	Description: Signal name	Description: Input/Output	Condition	Value (Approx.)
33 (Y) 44 (V) 45 (V) 46 (Y) 47 (V) 48 (Y)	128 (B)	Fuel injector No. 1 Fuel injector No. 2 Fuel injector No. 6 Fuel injector No. 5 Fuel injector No. 4 Fuel injector No. 3	Output	[Engine is running] • Warm-up condition • Idle speed **NOTE:** The pulse cycle changes depending on rpm at idle	BATTERY VOLTAGE (11 - 14 V)★ 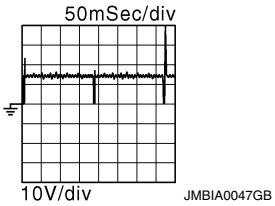
				[Engine is running] • Warm-up condition • Engine speed: 2,000 rpm	BATTERY VOLTAGE (11 - 14 V)★ 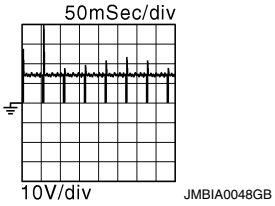
34 (G)	128 (B)	Throttle control motor relay	Output	[Ignition switch: ON → OFF]	0 - 1.0 V → BATTERY VOLTAGE (11 - 14 V) → 0 V
				[Ignition switch: ON]	0 - 1.0 V
37 (SB)	128 (B)	Heated oxygen sensor 2 heater (bank 1)	Output	[Engine is running] Engine speed: Below 3,600 rpm after the following conditions are met • Engine: after warming up • Keeping the engine speed between 3,500 and 4,000 rpm for 1 minute and at idle for 1 minute under no load	10 V★ 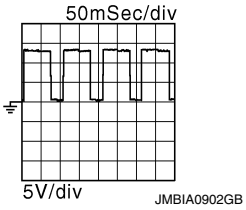
				• [Ignition switch: ON] Engine stopped • [Engine is running] Engine speed: Above 3,600 rpm	BATTERY VOLTAGE (11 - 14 V)
38 (BR)	128 (B)	Electronic controlled engine mount control solenoid valve	Output	[Engine is running] Idle speed	0 - 1.0 V
				[Engine is running] Engine speed: More than 950 rpm	BATTERY VOLTAGE (11 - 14 V)
39 (BR)	128 (B)	VIAS control solenoid valve 1	Output	[Engine is running] • Warm-up condition • Idle speed	BATTERY VOLTAGE (11 - 14 V)
				[Engine is running] • Warm-up condition • When revving engine up to 5,000 rpm quickly	BATTERY VOLTAGE (11 - 14 V) ↓ 0 - 1.0 V ↓ BATTERY VOLTAGE (11 - 14 V)
40 (BR)	128 (B)	VIAS control solenoid valve 2	Output	[Engine is running] • Warm-up condition • Idle speed	BATTERY VOLTAGE (11 - 14 V)
				[Engine is running] • Warm-up condition • When revving engine up to 5,000 rpm quickly	BATTERY VOLTAGE (11 - 14 V) ↓ 0 - 1.0 V ↓ BATTERY VOLTAGE (11 - 14 V)

Terminal No.		Description		Condition	Value (Approx.)
+	—	Signal name	Input/ Output		
41 (SB)	128 (B)	Heated oxygen sensor 2 heater (bank 2)	Output	[Engine is running] Engine speed: Below 3,600 rpm after the following conditions are met • Engine: after warming up • Keeping the engine speed between 3,500 and 4,000 rpm for 1 minute and at idle for 1 minute under no load	10 V★ 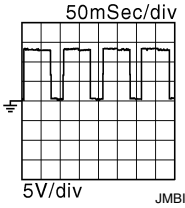
				• [Ignition switch: ON] Engine stopped • [Engine is running] Engine speed: Above 3,600 rpm	BATTERY VOLTAGE (11 - 14 V)
42 (BR)	128 (B)	EVAP canister purge volume control solenoid valve	Output	[Engine is running] • Idle speed • Accelerator pedal: Not depressed even slightly, after engine starting	BATTERY VOLTAGE (11 - 14 V)★ 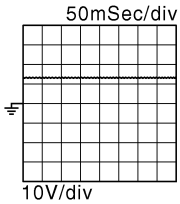
				[Engine is running] Engine speed: approximately 2,000 rpm (More than 100 seconds after starting engine)	BATTERY VOLTAGE (11 - 14 V)★ 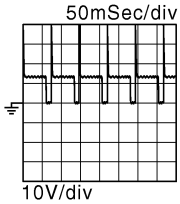
43 (W)	128 (B)	Fuel pump relay	Output	• [Ignition switch: ON] For 1 second after turning ignition switch ON • [Engine is running]	0 - 1.0 V
54 (LG)	84 (Y)	Sensor power supply [Crankshaft position sensor (POS)]	—	[Ignition switch: ON]	5 V
55 (BR)	128 (B)	Intake valve timing control solenoid valve (bank 1)	Output	[Engine is running] • Warm-up condition • Idle speed	BATTERY VOLTAGE (11 - 14 V)
				[Engine is running] • Warm-up condition • Engine speed: 2,000 rpm	7 - 12 V★ 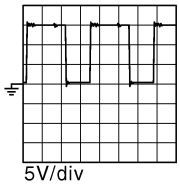

Terminal No.		Description		Condition	Value (Approx.)
+	–	Signal name	Input/ Output		
56 (Y)	128 (B)	Intake valve timing control solenoid valve (bank 2)	Output	[Engine is running] • Warm-up condition • Idle speed	BATTERY VOLTAGE (11 - 14 V)
				[Engine is running] • Warm-up condition • Engine speed: 2,000 rpm	7 - 12 V★ 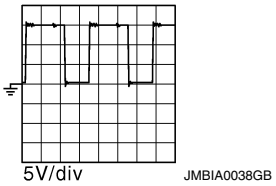
57 (L)	128 (B)	Heated oxygen sensor 2 (bank 1)	Input	[Engine is running] Revving engine from idle to 3,000 rpm quickly after the following conditions are met • Engine: after warming up • Keeping the engine speed between 3,500 and 4,000 rpm for 1 minute and at idle for 1 minute under no load	0 - 1.0 V
58 (L)	128 (B)	Heated oxygen sensor 2 (bank 2)	Input	[Engine is running] Revving engine from idle to 3,000 rpm quickly after the following conditions are met • Engine: after warming up • Keeping the engine speed between 3,500 and 4,000 rpm for 1 minute and at idle for 1 minute under no load	0 - 1.0 V
59 (B)	—	Sensor ground (Heated oxygen sensor 2)	—	—	—
63 (SB)	64 (V)	Refrigerant pressure sensor	Input	[Engine is running] • Warm-up condition • Both A/C switch and blower fan motor switch: ON (Compressor operates)	1.0 - 4.0 V
64 (V)	—	Sensor ground (Refrigerant pressure sensor)	—	—	—
66 (W)	—	—	—	—	—
67 (Y)	—	—	—	—	—
68 (G)	—	—	—	—	—
69 (B)	128 (B)	A/F sensor 1 (bank 1)	Input	[Engine is running] • Warm-up condition • Engine speed: 2,000 rpm	2.2 V Output voltage varies with air fuel ratio.
70 (BR)	76 (B)	Engine coolant temperature sensor	Input	[Engine is running]	0 - 4.8 V Output voltage varies with engine coolant temperature.
73 (W)	128 (B)	A/F sensor 1 (bank 1)	Input	[Ignition switch: ON]	1.8 V
74 (V)	80 (BR)	Intake air temperature sensor	Input	[Engine is running]	0 - 4.8 V Output voltage varies with intake air temperature.

Terminal No.		Description		Condition	Value (Approx.)
+	–	Signal name	Input/ Output		
75 (LG)	—	—	—	—	—
76 (B)	—	Sensor ground (Engine coolant temperature sensor, engine oil temperature sensor)	—	—	—
77 (B)	128 (B)	A/F sensor 1 (bank 2)	Input	[Engine is running] • Warm-up condition • Engine speed: 2,000 rpm	2.2 V Output voltage varies with air fuel ratio.
78 (G)	76 (B)	Engine oil temperature sensor	Input	[Engine is running]	0 - 4.8 V Output voltage varies with engine oil temperature.
80 (BR)	—	Sensor ground (Mass air flow sensor, intake air temperature sensor)	—	—	—
81 (W)	128 (B)	A/F sensor 1 (bank 2)	Input	[Ignition switch: ON]	1.8 V
82 (P)	80 (BR)	Mass air flow sensor	Input	[Engine is running] • Warm-up condition • Idle speed	0.8 - 1.2 V
				[Engine is running] • Warm-up condition • Engine speed: 2,500 rpm	1.6 - 1.9 V
83 (BR)	88 (LG)	Sensor power supply [Camshaft position sensor (PHASE) (bank 1)]	—	[Ignition switch: ON]	5 V
84 (Y)	—	Sensor ground [Crankshaft position sensor (POS)]	—	—	—
85 (B)	91 (—)	Knock sensor (bank 1)	Input	[Engine is running] Idle speed	2.5 V*1
86 (W)	91 (—)	Knock sensor (bank 2)	Input	[Engine is running] Idle speed	2.5 V*1
87 (V)	92 (SB)	Sensor power supply [Camshaft position sensor (PHASE) (bank 2)]	—	[Ignition switch: ON]	5 V
88 (LG)	—	Sensor ground [Camshaft position sensor (PHASE) (bank 1)]	—	—	—

Terminal No. +	Terminal No. —	Description: Signal name	Description: Input/Output	Condition	Value (Approx.)
89 (L)	84 (Y)	Crankshaft position sensor (POS)	Input	[Engine is running] • Warm-up condition • Idle speed **NOTE:** The pulse cycle changes depending on rpm at idle	4.0 - 5.0 V★ 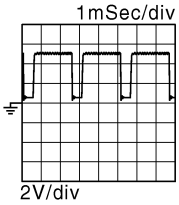
				[Engine is running] Engine speed: 2,000 rpm	4.0 - 5.0 V★ 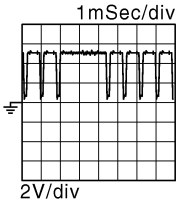
91 (—)	—	Sensor ground [Knock sensor (bank 1), knock sensor (bank 2)]	—	—	—
92 (SB)	—	Sensor ground [Camshaft position sensor (PHASE) (bank 2)]	—	—	—
93 (LG)	92 (SB)	Camshaft position sensor (PHASE) (bank 2)	Input	[Engine is running] • Warm-up condition • Idle speed **NOTE:** The pulse cycle changes depending on rpm at idle	3.0 - 5.0 V★ 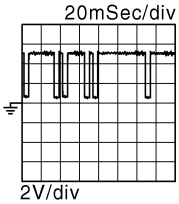
				[Engine is running] Engine speed is 2,000 rpm	3.0 - 5.0 V★ 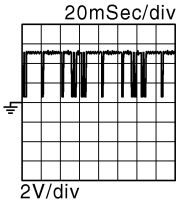
94 (GR)	88 (LG)	Camshaft position sensor (PHASE) (bank 1)	Input	[Engine is running] • Warm-up condition • Idle speed **NOTE:** The pulse cycle changes depending on rpm at idle	3.0 - 5.0 V★ 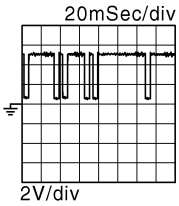
				[Engine is running] Engine speed is 2,000 rpm	3.0 - 5.0 V★ 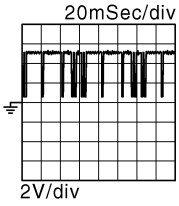

Terminal No.		Description		Condition	Value (Approx.)
+	—	Signal name	Input/ Output		
96 (P)	64 (V)	Sensor power supply (Refrigerant pressure sensor)	—	[Ignition switch: ON]	5 V
97 (W)	100 (R)	Accelerator pedal position sensor 1	Input	[Ignition switch: ON] • Engine stopped • Accelerator pedal: Fully released	0.5 - 1.0 V
				[Ignition switch: ON] • Engine stopped • Accelerator pedal: Fully depressed	4.2 - 4.8 V
98 (P)	116 (G)	Accelerator pedal position sensor 2	Input	[Ignition switch: ON] • Engine stopped • Accelerator pedal: Fully released	0.25 - 0.50 V
				[Ignition switch: ON] • Engine stopped • Accelerator pedal: Fully depressed	2.0 - 2.5 V
99 (R)	100 (R)	Sensor power supply (Accelerator pedal position sensor 1)	—	[Ignition switch: ON]	5 V
100 (R)	—	Sensor ground (Accelerator pedal position sensor 1)	—	—	—
101 (G)	108 (R)	ASCD steering switch	Input	[Ignition switch: ON] ASCD steering switch: OFF	4 V
				[Ignition switch: ON] MAIN switch: Pressed	0 V
				[Ignition switch: ON] CANCEL switch: Pressed	1 V
				[Ignition switch: ON] RESUME/ACCELERATE switch: Pressed	3 V
				[Ignition switch: ON] SET/COAST switch: Pressed	2 V
102 (O)	112 (G)	EVAP control system pressure sensor	Input	[Ignition switch: ON]	1.8 - 4.8 V
103 (W)	116 (G)	Sensor power supply (Accelerator pedal position sensor 2)	—	[Ignition switch: ON]	5 V
104 (P)	—	Data link connector	Input/ Output	—	—
106 (Y)	128 (B)	EVAP canister vent control valve	Output	[Ignition switch: ON]	BATTERY VOLTAGE (11 - 14 V)
107 (W)	112 (G)	Sensor power supply (EVAP control system pressure sensor, engine oil pressure sensor)	—	[Ignition switch: ON]	5 V
108 (R)	—	Sensor ground (ASCD steering switch)	—	—	—
109 (SB)	128 (B)	Ignition switch	Input	[Ignition switch: OFF]	0 V
				[Ignition switch: ON]	BATTERY VOLTAGE (11 - 14 V)

Terminal No.		Description		Condition	Value (Approx.)
+	—	Signal name	Input/ Output		
111 (BR)	120 (LG)	Fuel tank temperature sensor	Input	[Engine is running]	0 - 4.8 V Output voltage varies with fuel tank temperature.
112 (G)	—	Sensor ground (EVAP control system pressure sensor, engine oil pressure sensor)	—	—	—
113 (P)	—	CAN communication line (CAN-L)	Input/ Output	—	—
114 (L)	—	CAN communication line (CAN-H)	Input/ Output	—	—
116 (G)	—	Sensor ground (Accelerator pedal position sensor 2)	—	—	—
118 (W)	128 (B)	PNP signal	Input	[Ignition switch: ON] Selector lever: P or N position	BATTERY VOLTAGE (11 - 14 V)
				[Ignition switch: ON] Selector lever: Except above position	0 V
120 (LG)	—	Sensor ground (Fuel tank temperature sensor)	—	—	—
121 (LG)	128 (B)	Power supply for ECM	Input	[Ignition switch: ON]	BATTERY VOLTAGE (11 - 14 V)
122 (R)	128 (B)	Stop lamp switch	Input	[Ignition switch: OFF] Brake pedal: Fully released	0 V
				[Ignition switch: OFF] Brake pedal: Slightly depressed	BATTERY VOLTAGE (11 - 14 V)
123 (B) 124 (B)	—	ECM ground	—	—	—
126 (LG)	128 (B)	Brake pedal position switch	Input	[Ignition switch: ON] Brake pedal: Slightly depressed	0 V
				[Ignition switch: ON] Brake pedal: Fully released	BATTERY VOLTAGE (11 - 14 V)
127 (B) 128 (B)	—	ECM ground	—	—	—

★: Average voltage for pulse signal (Actual pulse signal can be confirmed by oscilloscope.)
*1: This may vary depending on internal resistance of the tester.
*2: Before measuring the terminal voltage, confirm that the battery is fully charged. Refer to PG-86, "How to Handle Battery".

Fail-safe

INFOID:0000000011489507

NON DTC RELATED ITEM

Engine operating condition in fail-safe mode	Detected items	Remarks	Reference page
Engine speed will not rise more than 2,500 rpm due to the fuel cut	Malfunction indicator lamp circuit	When there is an open circuit on MIL circuit, the ECM cannot warn the driver by illuminating MIL when there is malfunction on engine control system. Therefore, when electrical controlled throttle and part of ECM related diagnoses are continuously detected as NG for 5 trips, ECM warns the driver that engine control system malfunctions and MIL circuit is open by means of operating the fail-safe function. The fail-safe function also operates when above diagnoses except MIL circuit are detected and demands the driver to repair the malfunction.	EC-893

DTC RELATED ITEM

DTC No.	Detected items	Engine operating condition in fail-safe mode	
P0011 P0021	Intake valve timing control	The signal is not energized to the intake valve timing control solenoid valve and the valve control does not function.	
P0102 P0103	Mass air flow sensor circuit	Engine speed will not rise more than 2,400 rpm due to the fuel cut.	
P0117 P0118	Engine coolant temperature sensor circuit	Engine coolant temperature will be determined by ECM based on the following condition. CONSULT displays the engine coolant temperature decided by ECM.	
		Condition	Engine coolant temperature decided (CONSULT display)
		Just as ignition switch is turned ON or START	40°C (104°F)
		Approx 4 minutes or more after engine starting	80°C (176°F)
		Except as shown above	40 - 80°C (104 - 176°F) (Depends on the time)
		When the fail-safe system for engine coolant temperature sensor is activated, the cooling fan operates while engine is running.	
P0122 P0123 P0222 P0223 P2135	Throttle position sensor	The ECM controls the electric throttle control actuator in regulating the throttle opening in order for the idle position to be within +10 degrees. The ECM regulates the opening speed of the throttle valve to be slower than the normal condition. Therefore, the acceleration will be poor.	
P0197 P0198	Engine oil temperature sensor	Intake valve timing control does not function.	
P0500	Vehicle speed sensor	The cooling fan operates (Highest) while engine is running.	
P0524	Engine oil pressure	• ECM illuminates oil pressure warning lamp on the combination meter. • Engine speed will not rise more than 4,000 rpm due to the fuel cut. • Fail-safe is canceled when ignition switch OFF → ON.	
P0605	ECM	(When ECM calculation function is malfunctioning:) ECM stops the electric throttle control actuator control, throttle valve is maintained at a fixed opening (approx. 5 degrees) by the return spring. ECM deactivates ASCD operation.	
P0643	Sensor power supply	ECM stops the electric throttle control actuator control, throttle valve is maintained at a fixed opening (approx. 5 degrees) by the return spring.	
P1805	Brake switch	ECM controls the electric throttle control actuator by regulating the throttle opening to a small range. Therefore, acceleration will be poor.	
		Vehicle condition	Driving condition
		When engine is idling	Normal
		When accelerating	Poor acceleration
P2100 P2103	Throttle control motor relay	ECM stops the electric throttle control actuator control, throttle valve is maintained at a fixed opening (approx. 5 degrees) by the return spring.	

DTC No.	Detected items	Engine operating condition in fail-safe mode
P2101	Electric throttle control function	ECM stops the electric throttle control actuator control, throttle valve is maintained at a fixed opening (approx. 5 degrees) by the return spring.
P2118	Throttle control motor	ECM stops the electric throttle control actuator control, throttle valve is maintained at a fixed opening (approx. 5 degrees) by the return spring.
P2119	Electric throttle control actuator	(When electric throttle control actuator does not function properly due to the return spring malfunction:) ECM controls the electric throttle actuator by regulating the throttle opening around the idle position. The engine speed will not rise more than 2,000 rpm.
		(When throttle valve opening angle in fail-safe mode is not in specified range:) ECM controls the electric throttle control actuator by regulating the throttle opening to 20 degrees or less.
		(When ECM detects the throttle valve is stuck open:) While the vehicle is being driven, it slows down gradually because of fuel cut. After the vehicle stops, the engine stalls. The engine can restart in the N or P position, and engine speed will not exceed 1,000 rpm or more.
P2122 P2123 P2127 P2128 P2138	Accelerator pedal position sensor	The ECM controls the electric throttle control actuator in regulating the throttle opening in order for the idle position to be within +10 degrees. The ECM regulates the opening speed of the throttle valve to be slower than the normal condition. Therefore, the acceleration will be poor.

DTC Inspection Priority Chart

INFOID:0000000011489508

If some DTCs are displayed at the same time, perform inspections one by one based on the following priority chart.

Priority	Detected items (DTC)	Detected items (DTC)
1	U0101, U1001	CAN communication line
	P0102, P0103	Mass air flow sensor
	P0112, P0113	Intake air temperature sensor
	P0117, P0118	Engine coolant temperature sensor
	P0122, P0123, P0222, P0223, P1225, P1226, P2135	Throttle position sensor
	P0197, P0198	Engine oil temperature sensor
	P0327, P0328, P0332, P0333	Knock sensor
	P0335	Crankshaft position sensor (POS)
	P0340, P0345	Camshaft position sensor (PHASE)
	P0500	Vehicle speed sensor
	P0520	EOP sensor
	P0605, P0607	ECM
	P0643	Sensor power supply
	P0850	Transmission range switch
	P1550, P1551, P1552, P1553, P1554	Battery current sensor
	P1556, P1557	Battery temperature sensor
	P1610 - P1615	NATS
	P1700	CVT control system
	P2122, P2123, P2127, P2128, P2138	Accelerator pedal position sensor

Priority	Detected items (DTC)	Detected items (DTC)
2	P0031, P0032, P0051, P0052	Air fuel ratio (A/F) sensor 1 heater
	P0037, P0038, P0057, P0058	Heated oxygen sensor 2 heater
	P0075, P0081	Intake valve timing control solenoid valve
	P0130, P0131, P0132, P014C, P014D, P014E, P014F, P0150, P0151, P0152	Air fuel ratio (A/F) sensor 1
	P0137, P0138, P0139, P0157, P0158, P0159	Heated oxygen sensor 2
	P0444	EVAP canister purge volume control solenoid valve
	P0447	EVAP canister vent control valve
	P0452, P0453	EVAP control system pressure sensor
	P0603	ECM power supply
	P0710, P0845	CVT related sensors, solenoid valves and switches
	P1217	Engine over temperature (OVERHEAT)
	P1800, P1801	VIAS control solenoid valve
	P1805	Brake switch
	P2100, P2103	Throttle control motor relay
	P2101	Electric throttle control function
	P2118	Throttle control motor
3	P0011, P0021	Intake valve timing control
	P0171, P0172, P0174, P0175	Fuel injection system function
	P0300 - P0306	Misfire
	P0420, P0430	Three way catalyst function
	P0506, P0507	Idle speed control system
	P0524	Engine oil pressure
	P1212	TCS communication line
	P1564	ASCD steering switch
	P1572	ASCD brake switch
	P1574	ASCD vehicle speed sensor
	P1715	Primary speed sensor
	P2119	Electric throttle control actuator

DTC Index

INFOID:0000000011489509

×:Applicable —: Not applicable

DTC[*1]		Items (CONSULT screen terms)	SRT code	Trip	MIL	Reference page
CONSULT GST[*2]	ECM[*3]					
U0101	0101[*4]	LOST COMM (TCM)	—	1	×	EC-688
U1001	1001[*4]	CAN COMM CIRCUIT	—	2	—	EC-689
P0000	**0000**	**NO DTC IS DETECTED. FURTHER TESTING MAY BE REQUIRED.**	—	—	**Blinking**[*5]	**—**
P0011	0011	INT/V TIM CONT-B1	×	2	×	EC-690
P0021	0021	INT/V TIM CONT-B2	×	2	×	EC-690
P0031	0031	A/F SEN1 HTR (B1)	—	2	×	EC-694
P0032	0032	A/F SEN1 HTR (B1)	—	2	×	EC-694
P0037	0037	HO2S2 HTR (B1)	—	2	×	EC-697

DTC*1		Items (CONSULT screen terms)	SRT code	Trip	MIL	Reference page
CONSULT GST*2	ECM*3					
P0038	0038	HO2S2 HTR (B1)	—	2	×	EC-697
P0051	0051	A/F SEN1 HTR (B2)	—	2	×	EC-694
P0052	0052	A/F SEN1 HTR (B2)	—	2	×	EC-694
P0057	0057	HO2S2 HTR (B2)	—	2	×	EC-697
P0058	0058	HO2S2 HTR (B2)	—	2	×	EC-697
P0075	0075	INT/V TIM V/CIR-B1	—	2	×	EC-700
P0081	0081	INT/V TIM V/CIR-B2	—	2	×	EC-700
P0102	0102	MAF SEN/CIRCUIT-B1	—	1	×	EC-702
P0103	0103	MAF SEN/CIRCUIT-B1	—	1	×	EC-702
P0112	0112	IAT SEN/CIRCUIT-B1	—	2	×	EC-706
P0113	0113	IAT SEN/CIRCUIT-B1	—	2	×	EC-706
P0117	0117	ECT SEN/CIRC	—	1	×	EC-708
P0118	0118	ECT SEN/CIRC	—	1	×	EC-708
P0122	0122	TP SEN 2/CIRC-B1	—	1	×	EC-710
P0123	0123	TP SEN 2/CIRC-B1	—	1	×	EC-710
P0130	0130	A/F SENSOR1 (B1)	—	2	×	EC-712
P0131	0131	A/F SENSOR1 (B1)	—	2	×	EC-716
P0132	0132	A/F SENSOR1 (B1)	—	2	×	EC-719
P0137	0137	HO2S2 (B1)	×	2	×	EC-722
P0138	0138	HO2S2 (B1)	×	2	×	EC-727
P0139	0139	HO2S2 (B1)	×	2	×	EC-734
P014C	014C	A/F SENSOR1 (B1)	×	2	×	EC-740
P014D	014D	A/F SENSOR1 (B1)	×	2	×	EC-740
P014E	014E	A/F SENSOR1 (B2)	×	2	×	EC-740
P014F	014F	A/F SENSOR1 (B2)	×	2	×	EC-740
P0150	0150	A/F SENSOR1 (B2)	—	2	×	EC-712
P0151	0151	A/F SENSOR1 (B2)	—	2	×	EC-716
P0152	0152	A/F SENSOR1 (B2)	—	2	×	EC-719
P0157	0157	HO2S2 (B2)	×	2	×	EC-722
P0158	0158	HO2S2 (B2)	×	2	×	EC-727
P0159	0159	HO2S2 (B2)	×	2	×	EC-734
P0171	0171	FUEL SYS-LEAN-B1	—	2	×	EC-745
P0172	0172	FUEL SYS-RICH-B1	—	2	×	EC-749
P0174	0174	FUEL SYS-LEAN-B2	—	2	×	EC-745
P0175	0175	FUEL SYS-RICH-B2	—	2	×	EC-749
P0197	0197	EOT SEN/CIRC	—	2	×	EC-753
P0198	0198	EOT SEN/CIRC	—	2	×	EC-753
P0222	0222	TP SEN 1/CIRC-B1	—	1	×	EC-755
P0223	0223	TP SEN 1/CIRC-B1	—	1	×	EC-755
P0300	0300	MULTI CYL MISFIRE	—	1 or 2	×	EC-757
P0301	0301	CYL 1 MISFIRE	—	1 or 2	×	EC-757
P0302	0302	CYL 2 MISFIRE	—	1 or 2	×	EC-757

DTC*1		Items (CONSULT screen terms)	SRT code	Trip	MIL	Reference page
CONSULT GST*2	ECM*3					
P0303	0303	CYL 3 MISFIRE	—	1 or 2	×	EC-757
P0304	0304	CYL 4 MISFIRE	—	1 or 2	×	EC-757
P0305	0305	CYL 5 MISFIRE	—	1 or 2	×	EC-757
P0306	0306	CYL 6 MISFIRE	—	1 or 2	×	EC-757
P0327	0327	KNOCK SEN/CIRC-B1	—	2	—	EC-763
P0328	0328	KNOCK SEN/CIRC-B1	—	2	—	EC-763
P0332	0332	KNOCK SEN/CIRC-B2	—	2	—	EC-763
P0333	0333	KNOCK SEN/CIRC-B2	—	2	—	EC-763
P0335	0335	CKP SEN/CIRCUIT	—	2	×	EC-765
P0340	0340	CMP SEN/CIRC-B1	—	2	×	EC-768
P0345	0345	CMP SEN/CIRC-B2	—	2	×	EC-768
P0420	0420	TW CATALYST SYS-B1	×	2	×	EC-771
P0430	0430	TW CATALYST SYS-B2	×	2	×	EC-771
P0444	0444	PURG VOLUME CONT/V	—	2	×	EC-776
P0447	0447	VENT CONTROL VALVE	—	2	×	EC-779
P0452	0452	EVAP SYS PRES SEN	—	2	×	EC-782
P0453	0453	EVAP SYS PRES SEN	—	2	×	EC-785
P0500	0500	VEH SPEED SEN/CIRC*6	—	2	×	EC-789
P0506	0506	ISC SYSTEM	—	2	×	EC-791
P0507	0507	ISC SYSTEM	—	2	×	EC-793
P0520	0520	EOP SENSOR/SWITCH	—	2	—	EC-795
P0524	0524	ENGINE OIL PRESSURE	—	1	—	EC-798
P0603	0603	ECM BACK UP/CIRCUIT	—	2	×	EC-801
P0605	0605	ECM	—	1 or 2	× or —	EC-803
P0607	0607	ECM	—	1	×	EC-805
P0643	0643	SENSOR POWER/CIRC	—	1	×	EC-806
P0850	0850	P-N POS SW/CIRCUIT	—	2	×	EC-808
P1212	1212	TCS/CIRC	—	2	—	EC-811
P1217	1217	ENG OVER TEMP	—	1	×	EC-812
P1225	1225	CTP LEARNING-B1	—	2	—	EC-815
P1226	1226	CTP LEARNING-B1	—	2	—	EC-816
P1550	1550	BAT CURRENT SENSOR	—	2	—	EC-817
P1551	1551	BAT CURRENT SENSOR	—	2	—	EC-819
P1552	1552	BAT CURRENT SENSOR	—	2	—	EC-819
P1553	1553	BAT CURRENT SENSOR	—	2	—	EC-821
P1554	1554	BAT CURRENT SENSOR	—	2	—	EC-823
P1556	1556	BAT TMP SEN/CIRC	—	2	—	EC-826
P1557	1557	BAT TMP SEN/CIRC	—	2	—	EC-826
P1564	1564	ASCD SW	—	1	—	EC-828
P1572	1572	ASCD BRAKE SW	—	1	—	EC-831
P1574	1574	ASCD VHL SPD SEN	—	1	—	EC-838
P1610	1610	LOCK MODE	—	2	—	SEC-78

DTC*1		Items (CONSULT screen terms)	SRT code	Trip	MIL	Reference page
CONSULT GST*2	ECM*3					
P1611	1611	ID DISCORD, IMM-ECM	—	2	—	SEC-79
P1612	1612	CHAIN OF ECM-IMMU	—	2	—	SEC-80
P1614	1614	CHAIN OF IMMU-KEY	—	2	—	SEC-81
P1700	1700	CVT C/U FUNCT	—	1	—	EC-840
P1715	1715	IN PULY SPEED	—	2	—	EC-841
P1800	1800	VIAS S/V CIRC-B1	—	2	—	EC-842
P1801	1801	VIAS S/V CIRC-B2	—	2	—	EC-844
P1805	1805	BRAKE SW/CIRCUIT	—	2	—	EC-846
P2100	2100	ETC MOT PWR-B1	—	1	×	EC-850
P2101	2101	ETC FNCTN/CIRC-B1	—	1	×	EC-852
P2103	2103	ETC MOT PWR-B1	—	1	×	EC-850
P2118	2118	ETC MOT-B1	—	1	×	EC-855
P2119	2119	ETC ACTR-B1	—	1	×	EC-857
P2122	2122	APP SEN 1/CIRC	—	1	×	EC-859
P2123	2123	APP SEN 1/CIRC	—	1	×	EC-859
P2127	2127	APP SEN 2/CIRC	—	1	×	EC-861
P2128	2128	APP SEN 2/CIRC	—	1	×	EC-861
P2135	2135	TP SENSOR-B1	—	1	×	EC-864
P2138	2138	APP SENSOR	—	1	×	EC-866

*1: 1st trip DTC No. is the same as DTC No.
*2: This number is prescribed by SAE J2012/ISO 15031-6.
*3: In Diagnostic Test Mode II (Self-diagnostic results), this number is controlled by NISSAN.
*4: The troubleshooting for this DTC needs CONSULT.
*5: When the ECM is in the mode displays SRT status, MIL may blink. For the details, refer to “How to Display SRT Status”.
*6: When the fail-safe operations for both self-diagnoses occur, the MIL illuminates.
*7: When erasing this DTC, always use CONSULT or GST.

Test Value and Test Limit

INFOID:0000000011504802

The following is the information specified in Service $06 of SAE J1979/ISO 15031-5.
The test value is a parameter used to determine whether a system/circuit diagnostic test is OK or NG while being monitored by the ECM during self-diagnosis. The test limit is a reference value which is specified as the maximum or minimum value and is compared with the test value being monitored.
These data (test value and test limit) are specified by On Board Monitor ID (OBDMID), Test ID (TID), Unit and Scaling ID and can be displayed on the GST screen.
The items of the test value and test limit will be displayed with GST screen which items are provided by the ECM. (e.g., if bank 2 is not applied on this vehicle, only the items of bank 1 are displayed)

Item	OBD-MID	Self-diagnostic test item	DTC	Test value and Test limit (GST display)		Description
				TID	Unit and Scaling ID	
HO2S	01H	Air fuel ratio (A/F) sensor 1 (Bank 1)	P0131	83H	0BH	Minimum sensor output voltage for test cycle
			P0131	84H	0BH	Maximum sensor output voltage for test cycle
			P0130	85H	0BH	Minimum sensor output voltage for test cycle
			P0130	86H	0BH	Maximum sensor output voltage for test cycle
			P0133	87H	04H	Response rate: Response ratio (lean to rich)
			P0133	88H	04H	Response rate: Response ratio (rich to lean)
			P2A00 or P2096	89H	84H	The amount of shift in air fuel ratio (too lean)
			P2A00 or P2097	8AH	84H	The amount of shift in air fuel ratio (too rich)
			P0130	8BH	0BH	Difference in sensor output voltage
			P0133	8CH	83H	Response gain at the limited frequency
			P014C	8DH	04H	O2 sensor slow response - Rich to lean bank 1 sensor 1
			P014C	8EH	04H	O2 sensor slow response - Rich to lean bank 1 sensor 1
			P014D	8FH	84H	O2 sensor slow response - Lean to rich bank 1 sensor 1
			P014D	90H	84H	O2 sensor slow response - Lean to rich bank 1 sensor 1
			P015A	91H	01H	O2 sensor delayed response - Rich to lean bank 1 sensor 1
			P015A	92H	01H	O2 sensor delayed response - Rich to lean bank 1 sensor 1
			P015B	93H	01H	O2 sensor delayed response - Lean to rich bank 1 sensor 1
			P015B	94H	01H	O2 sensor delayed response - Lean to rich bank 1 sensor 1
			P0133	95H	04H	Response rate: Response ratio (lean to rich)
			P0133	96H	84H	Response rate: Response ratio (rich to lean)

Item	OBD-MID	Self-diagnostic test item	DTC	Test value and Test limit (GST display)		Description
				TID	Unit and Scaling ID	
HO2S	02H	Heated oxygen sensor 2 (Bank 1)	P0138	07H	0CH	Minimum sensor output voltage for test cycle
			P0137	08H	0CH	Maximum sensor output voltage for test cycle
			P0138	80H	0CH	Sensor output voltage
			P0139	81H	0CH	Difference in sensor output voltage
			P0139	82H	11H	Rear O2 sensor delay response diagnosis
	03H	Heated oxygen sensor 3 (Bank 1)	P0143	07H	0CH	Minimum sensor output voltage for test cycle
			P0144	08H	0CH	Maximum sensor output voltage for test cycle
			P0146	80H	0CH	Sensor output voltage
			P0145	81H	0CH	Difference in sensor output voltage
	05H	Air fuel ratio (A/F) sensor 1 (Bank 2)	P0151	83H	0BH	Minimum sensor output voltage for test cycle
			P0151	84H	0BH	Maximum sensor output voltage for test cycle
			P0150	85H	0BH	Minimum sensor output voltage for test cycle
			P0150	86H	0BH	Maximum sensor output voltage for test cycle
			P0153	87H	04H	Response rate: Response ratio (lean to rich)
			P0153	88H	04H	Response rate: Response ratio (rich to lean)
			P2A03 or P2098	89H	84H	The amount of shift in air fuel ratio (too lean)
			P2A03 or P2099	8AH	84H	The amount of shift in air fuel ratio (too rich)
			P0150	8BH	0BH	Difference in sensor output voltage
			P0153	8CH	83H	Response gain at the limited frequency
			P014E	8DH	04H	O2 sensor slow response - Rich to lean bank 2 sensor 1
			P014E	8EH	04H	O2 sensor slow response - Rich to lean bank 2 sensor 1
			P014F	8FH	84H	O2 sensor slow response - Lean to rich bank 2 sensor 1
			P014F	90H	84H	O2 sensor slow response - Lean to rich bank 2 sensor 1
			P015C	91H	01H	O2 sensor delayed response - Rich to lean bank 2 sensor 1
			P015C	92H	01H	O2 sensor delayed response - Rich to lean bank 2 sensor 1
			P015D	93H	01H	O2 sensor delayed response - Lean to rich bank 2 sensor 1

Item	OBD-MID	Self-diagnostic test item	DTC	Test value and Test limit (GST display)		Description
				TID	Unit and Scaling ID	
HO2S	05H	Air fuel ratio (A/F) sensor 1 (Bank 2)	P015D	94H	01H	O2 sensor delayed response - Lean to rich bank 2 sensor 1
			P0153	95H	04H	Response rate: Response ratio (lean to rich)
			P0153	96H	84H	Response rate: Response ratio (rich to lean)
	06H	Heated oxygen sensor 2 (Bank 2)	P0158	07H	0CH	Minimum sensor output voltage for test cycle
			P0157	08H	0CH	Maximum sensor output voltage for test cycle
			P0158	80H	0CH	Sensor output voltage
			P0159	81H	0CH	Difference in sensor output voltage
			P0159	82H	11H	Rear O2 sensor delay response diagnosis
	07H	Heated oxygen sensor 3 (Bank2)	P0163	07H	0CH	Minimum sensor output voltage for test cycle
			P0164	08H	0CH	Maximum sensor output voltage for test cycle
			P0166	80H	0CH	Sensor output voltage
			P0165	81H	0CH	Difference in sensor output voltage
CATALYST	21H	Three way catalyst function (Bank1)	P0420	80H	01H	O2 storage index
			P0420	82H	01H	Switching time lag engine exhaust index value
			P2423	83H	0CH	Difference in 3rd O2 sensor output voltage
			P2423	84H	84H	O2 storage index in HC trap catalyst
	22H	Three way catalyst function (Bank2)	P0430	80H	01H	O2 storage index
			P0430	82H	01H	Switching time lag engine exhaust index value
			P2424	83H	0CH	Difference in 3rd O2 sensor output voltage
			P2424	84H	84H	O2 storage index in HC trap catalyst
EGR SYSTEM	31H	EGR function	P0400	80H	96H	Low flow faults: EGR temp change rate (short term)
			P0400	81H	96H	Low flow faults: EGR temp change rate (long term)
			P0400	82H	96H	Low flow faults: Difference between max EGR temp and EGR temp under idling condition
			P0400	83H	96H	Low flow faults: Max EGR temp
			P1402	84H	96H	High Flow Faults: EGR temp increase rate
			P0402	85H	FCH	EGR differential pressure high flow
			P0401	86H	37H	EGR differential pressure low flow
			P2457	87H	96H	EGR temperature

Item	OBD-MID	Self-diagnostic test item	DTC	Test value and Test limit (GST display)		Description
				TID	Unit and Scaling ID	
VVT SYSTEM	35H	VVT Monitor (Bank1)	P0011	80H	9DH	VTC intake function diagnosis (VTC alignment check diagnosis)
			P0014	81H	9DH	VTC exhaust function diagnosis (VTC alignment check diagnosis)
			P0011	82H	9DH	VTC intake function diagnosis (VTC drive failure diagnosis)
			P0014	83H	9DH	VTC exhaust function diagnosis (VTC drive failure diagnosis)
			P100A	84H	10H	VEL slow response diagnosis
			P1090	85H	10H	VEL servo system diagnosis
			P0011	86H	9DH	VTC intake intermediate lock function diagnosis (VTC intermediate position alignment check diagnosis)
			Advanced: P052A Retarded: P052B	87H	9DH	VTC intake intermediate lock system diagnosis (VTC intermediate lock position check diagnosis)
	36H	VVT Monitor (Bank2)	P0021	80H	9DH	VTC intake function diagnosis (VTC alignment check diagnosis)
			P0024	81H	9DH	VTC exhaust function diagnosis (VTC alignment check diagnosis)
			P0021	82H	9DH	VTC intake function diagnosis (VTC drive failure diagnosis)
			P0024	83H	9DH	VTC exhaust function diagnosis (VTC drive failure diagnosis)
			P100B	84H	10H	VEL slow response diagnosis
			P1093	85H	10H	VEL servo system diagnosis
			P0021	86H	9DH	VTC intake intermediate lock function diagnosis (VTC intermediate position alignment check diagnosis)
			Advanced: P052C Retarded: P052D	87H	9DH	VTC intake intermediate lock system diagnosis (VTC intermediate lock position check diagnosis)
EVAP SYSTEM	39H	EVAP control system leak (Cap Off)	P0455	80H	0CH	Difference in pressure sensor output voltage before and after pull down
	3BH	EVAP control system leak (Small leak)	P0442	80H	05H	Leak area index (for more than 0.04 inch)
	3CH	EVAP control system leak (Very small leak)	P0456	80H	05H	Leak area index (for more than 0.02 inch)
			P0456	81H	FDH	Maximum internal pressure of EVAP system during monitoring
			P0456	82H	FDH	Internal pressure of EVAP system at the end of monitoring
	3DH	Purge flow system	P0441	83H	0CH	Difference in pressure sensor output voltage before and after vent control valve close

Item	OBD-MID	Self-diagnostic test item	DTC	Test value and Test limit (GST display)		Description
				TID	Unit and Scaling ID	
O2 SENSOR HEATER	41H	A/F sensor 1 heater (Bank 1)	Low Input: P0031 High Input: P0032	81H	0BH	Converted value of heater electric current to voltage
			P0030	83H	0BH	A/F sensor heater circuit malfunction
	42H	Heated oxygen sensor 2 heater (Bank 1)	Low Input: P0037 High Input: P0038	80H	0CH	Converted value of heater electric current to voltage
			P0141	81H	14H	Rear O2 sensor internal impedance
	43H	Heated oxygen sensor 3 heater (Bank 1)	P0043	80H	0CH	Converted value of heater electric current to voltage
	45H	A/F sensor 1 heater (Bank 2)	Low Input: P0051 High Input: P0052	81H	0BH	Converted value of heater electric current to voltage
			P0036	83H	0BH	A/F sensor heater circuit malfunction
	46H	Heated oxygen sensor 2 heater (Bank 2)	Low Input: P0057 High Input: P0058	80H	0CH	Converted value of heater electric current to voltage
			P0161	81H	14CH	Rear O2 sensor internal impedance
	47H	Heated oxygen sensor 3 heater (Bank 2)	P0063	80H	0CH	Converted value of heater electric current to voltage
SECONDARY AIR	71H	Secondary air system	P0411	80H	01H	Secondary air injection system incorrect flow detected
			Bank1: P0491 Bank2: P0492	81H	01H	Secondary air injection system insufficient flow
			P2445	82H	01H	Secondary air injection system pump stuck off
			P2448	83H	01H	Secondary air injection system high airflow
			Bank1: P2440 Bank2: P2442	84H	01H	Secondary air injection system switching valve stuck open
			P2440	85H	01H	Secondary air injection system switching valve stuck open
			P2444	86H	01H	Secondary air injection system pump stuck on
FUEL SYSTEM	81H	Fuel injection system function (Bank 1)	P0171 or P0172	80H	2FH	Long term fuel trim
			P0171 or P0172	81H	24H	The number of lambda control clamped
			P117A / P219A	82H	03H	Cylinder A/F imbalance monitoring
	82H	Fuel injection system function (Bank 2)	P0174 or P0175	80H	2FH	Long term fuel trim
			P0174 or P0175	81H	24H	The number of lambda control clamped
			P117B / P219B	82H	03H	Cylinder A/F imbalance monitoring

Item	OBD-MID	Self-diagnostic test item	DTC	Test value and Test limit (GST display)		Description
				TID	Unit and Scaling ID	
MISFIRE	A1H	Multiple cylinder misfires	P0301	80H	24H	Misfiring counter at 1000 revolution of the first cylinder
			P0302	81H	24H	Misfiring counter at 1000 revolution of the second cylinder
			P0303	82H	24H	Misfiring counter at 1000 revolution of the third cylinder
			P0304	83H	24H	Misfiring counter at 1000 revolution of the fourth cylinder
			P0305	84H	24H	Misfiring counter at 1000 revolution of the fifth cylinder
			P0306	85H	24H	Misfiring counter at 1000 revolution of the sixth cylinder
			P0307	86H	24H	Misfiring counter at 1000 revolution of the seventh cylinder
			P0308	87H	24H	Misfiring counter at 1000 revolution of the eighth cylinder
			P0300	88H	24H	Misfiring counter at 1000 revolution of the multiple cylinders
			P0301	89H	24H	Misfiring counter at 200 revolution of the first cylinder
			P0302	8AH	24H	Misfiring counter at 200 revolution of the second cylinder
			P0303	8BH	24H	Misfiring counter at 200 revolution of the third cylinder
			P0304	8CH	24H	Misfiring counter at 200 revolution of the fourth cylinder
			P0305	8DH	24H	Misfiring counter at 200 revolution of the fifth cylinder
			P0306	8EH	24H	Misfiring counter at 200 revolution of the sixth cylinder
			P0307	8FH	24H	Misfiring counter at 200 revolution of the seventh cylinder
			P0308	90H	24H	Misfiring counter at 200 revolution of the eighth cylinder
			P0300	91H	24H	Misfiring counter at 1000 revolution of the single cylinder
			P0300	92H	24H	Misfiring counter at 200 revolution of the single cylinder
			P0300	93H	24H	Misfiring counter at 200 revolution of the multiple cylinders

Item	OBD-MID	Self-diagnostic test item	DTC	Test value and Test limit (GST display)		Description
				TID	Unit and Scaling ID	
MISFIRE	A2H	No. 1 cylinder misfire	P0301	0BH	24H	EWMA (Exponential Weighted Moving Average) misfire counts for last 10 driving cycles
			P0301	0CH	24H	Misfire counts for last/current driving cycles
	A3H	No. 2 cylinder misfire	P0302	0BH	24H	EWMA (Exponential Weighted Moving Average) misfire counts for last 10 driving cycles
			P0302	0CH	24H	Misfire counts for last/current driving cycles
	A4H	No. 3 cylinder misfire	P0303	0BH	24H	EWMA (Exponential Weighted Moving Average) misfire counts for last 10 driving cycles
			P0303	0CH	24H	Misfire counts for last/current driving cycles
	A5H	No. 4 cylinder misfire	P0304	0BH	24H	EWMA (Exponential Weighted Moving Average) misfire counts for last 10 driving cycles
			P0304	0CH	24H	Misfire counts for last/current driving cycles
	A6H	No. 5 cylinder misfire	P0305	0BH	24H	EWMA (Exponential Weighted Moving Average) misfire counts for last 10 driving cycles
			P0305	0CH	24H	Misfire counts for last/current driving cycles
	A7H	No. 6 cylinder misfire	P0306	0BH	24H	EWMA (Exponential Weighted Moving Average) misfire counts for last 10 driving cycles
			P0306	0CH	24H	Misfire counts for last/current driving cycles
	A8H	No. 7 cylinder misfire	P0307	0BH	24H	EWMA (Exponential Weighted Moving Average) misfire counts for last 10 driving cycles
			P0307	0CH	24H	Misfire counts for last/current driving cycles
	A9H	No. 8 cylinder misfire	P0308	0BH	24H	EWMA (Exponential Weighted Moving Average) misfire counts for last 10 driving cycles
			P0308	0CH	24H	Misfire counts for last/current driving cycles

WIRING DIAGRAM

ENGINE CONTROL SYSTEM

Wiring Diagram

INFOID:0000000011489511

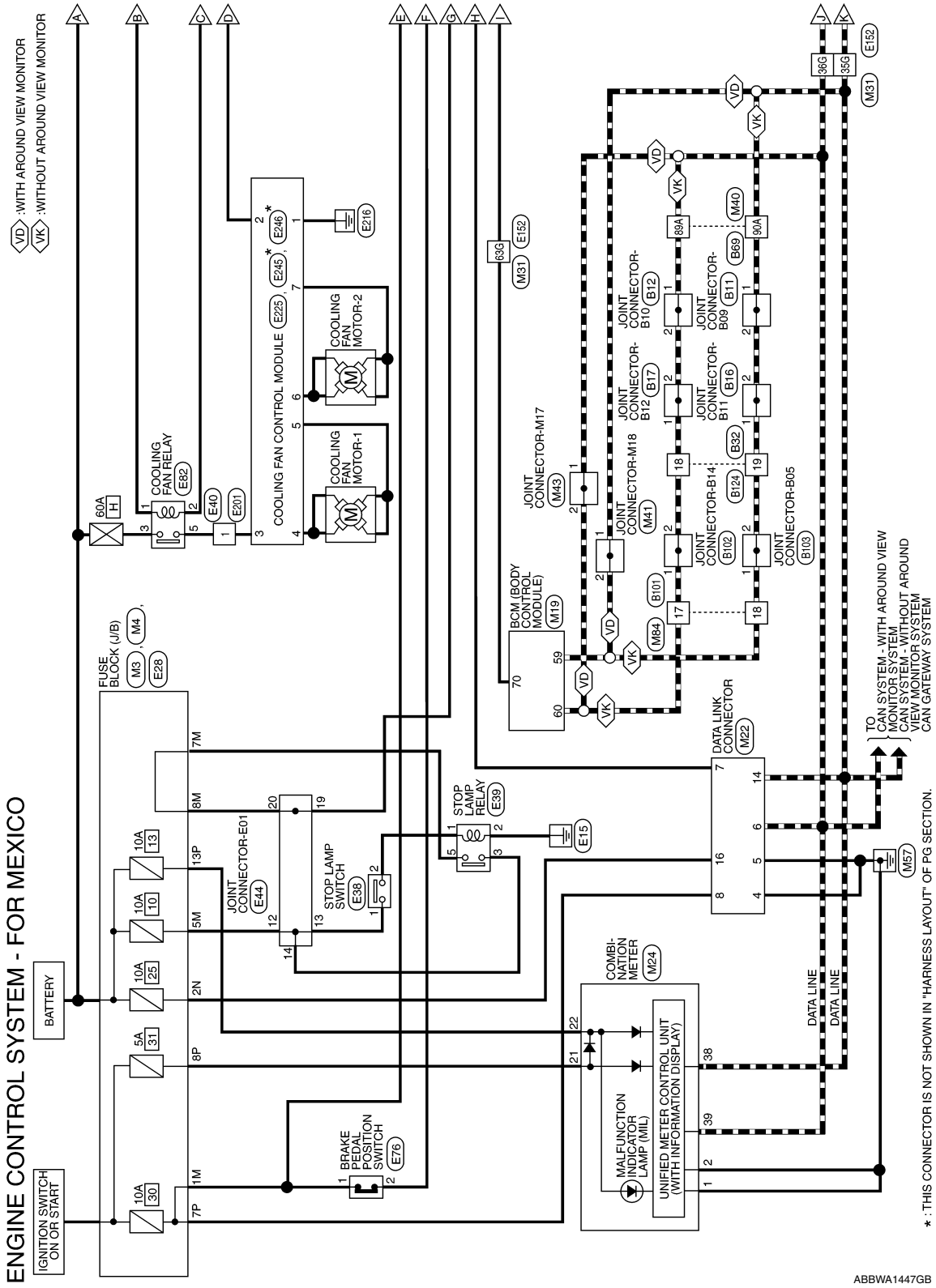

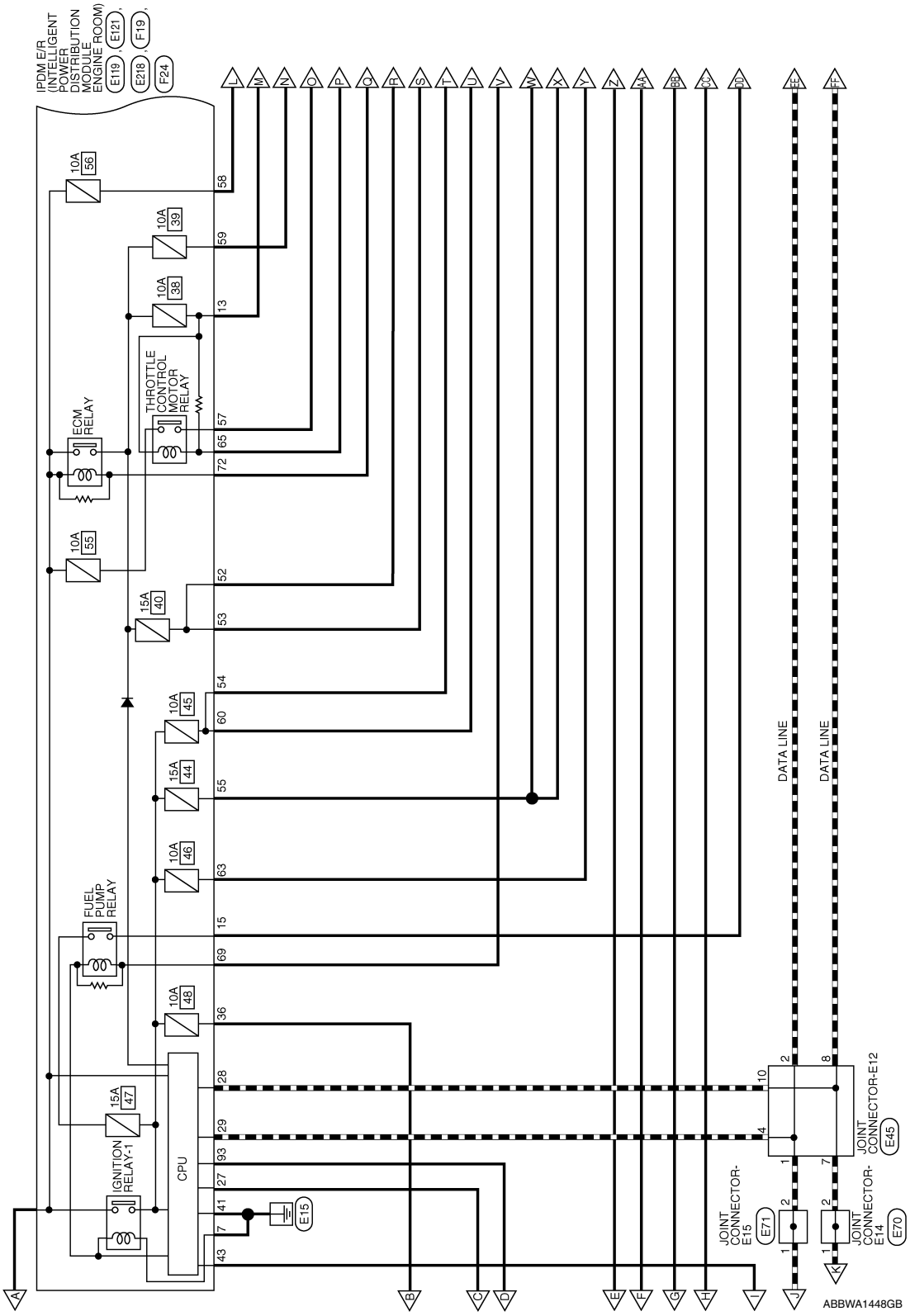
IPDM E/R
(INTELLIGENT POWER DISTRIBUTION MODULE ENGINE ROOM)
E119
E121
E218
F19
F24
10A 56
10A 39
10A 38
THROTTLE CONTROL MOTOR RELAY
ECM RELAY
10A 55
15A 40
10A 45
15A 44
10A 46
FUEL PUMP RELAY
10A 48
15A 47
IGNITION RELAY-1
CPU
E15
DATA LINE
DATA LINE
JOINT CONNECTOR-E12
E45
JOINT CONNECTOR-E15
E71
JOINT CONNECTOR-E14
E70
ABBWA1448GB

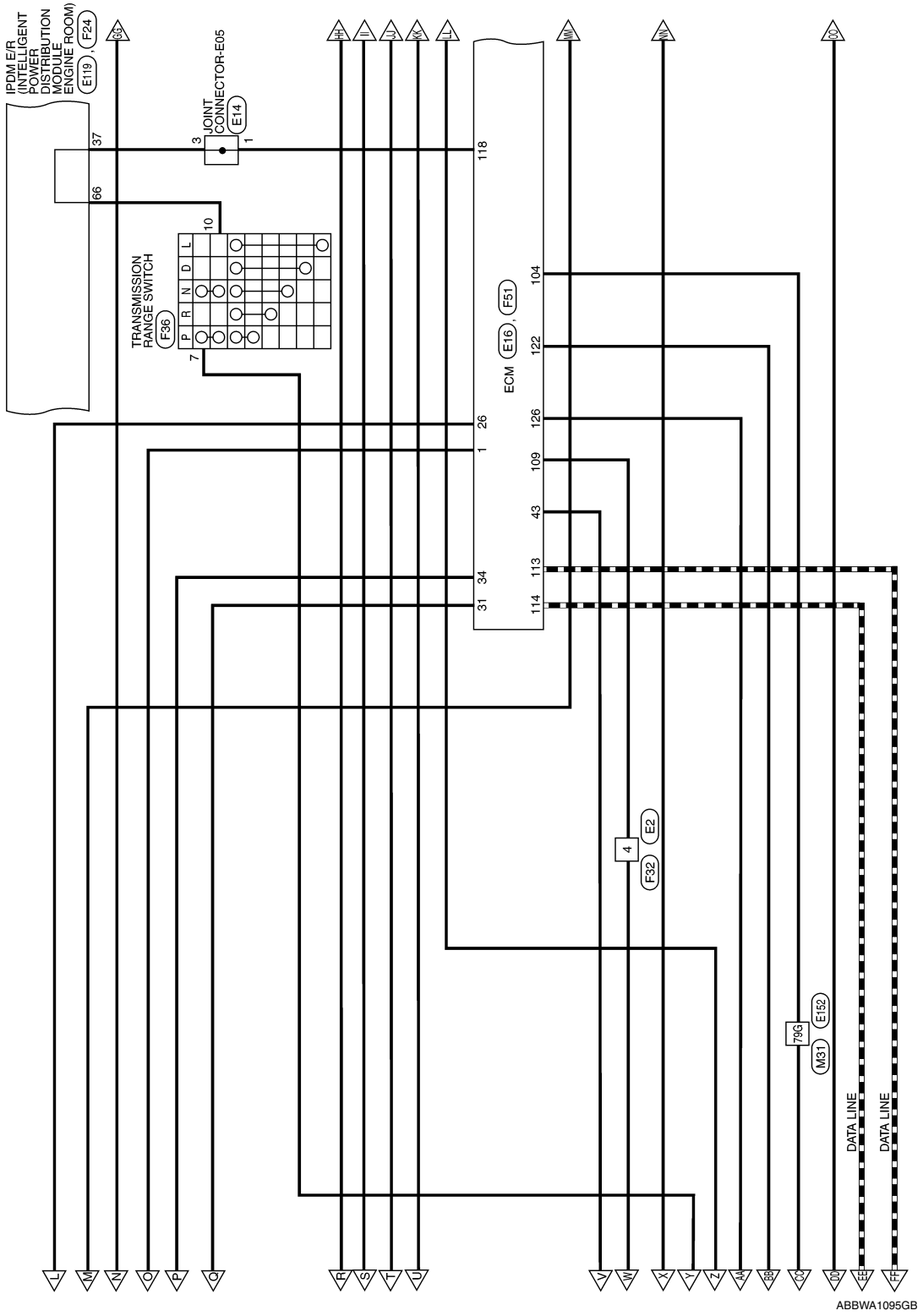
IPDM E/R
(INTELLIGENT
POWER
DISTRIBUTION
MODULE
ENGINE ROOM)
E119
F24
37
66
JOINT
CONNECTOR-E05
E14
3
1
TRANSMISSION
RANGE SWITCH
F36
P
R
N
D
L
7
10
ECM
E16
F51
118
104
122
126
109
43
113
114
26
1
34
31
4
E2
F32
79G
M31
E152
DATA LINE
DATA LINE
ABBWA1095GB

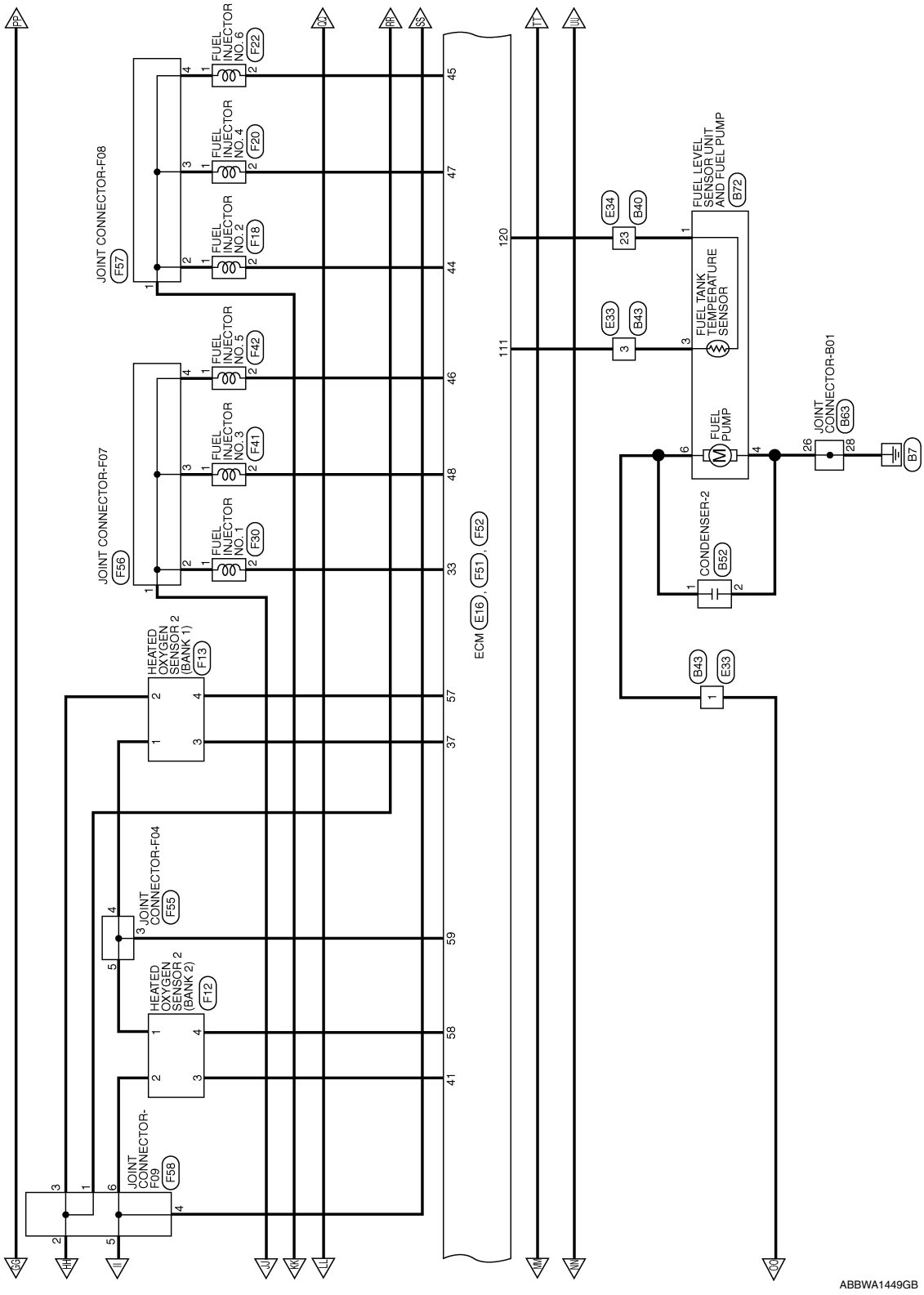
PP
FUEL INJECTOR NO.6 F22
FUEL INJECTOR NO.4 F20
FUEL INJECTOR NO.2 F18
JOINT CONNECTOR-F08 F57
FUEL INJECTOR NO.5 F42
FUEL INJECTOR NO.3 F41
FUEL INJECTOR NO.1 F30
JOINT CONNECTOR-F07 F56
HEATED OXYGEN SENSOR 2 (BANK 1) F13
JOINT CONNECTOR-F04 F55
HEATED OXYGEN SENSOR 2 (BANK 2) F12
JOINT CONNECTOR-F09 F58
ECM E16, F51, F52
FUEL LEVEL SENSOR UNIT AND FUEL PUMP B72
FUEL TANK TEMPERATURE SENSOR
FUEL PUMP
CONDENSER-2 B52
JOINT CONNECTOR-B01 B63
B7
E34 B40
E33 B43
ABBWA1449GB

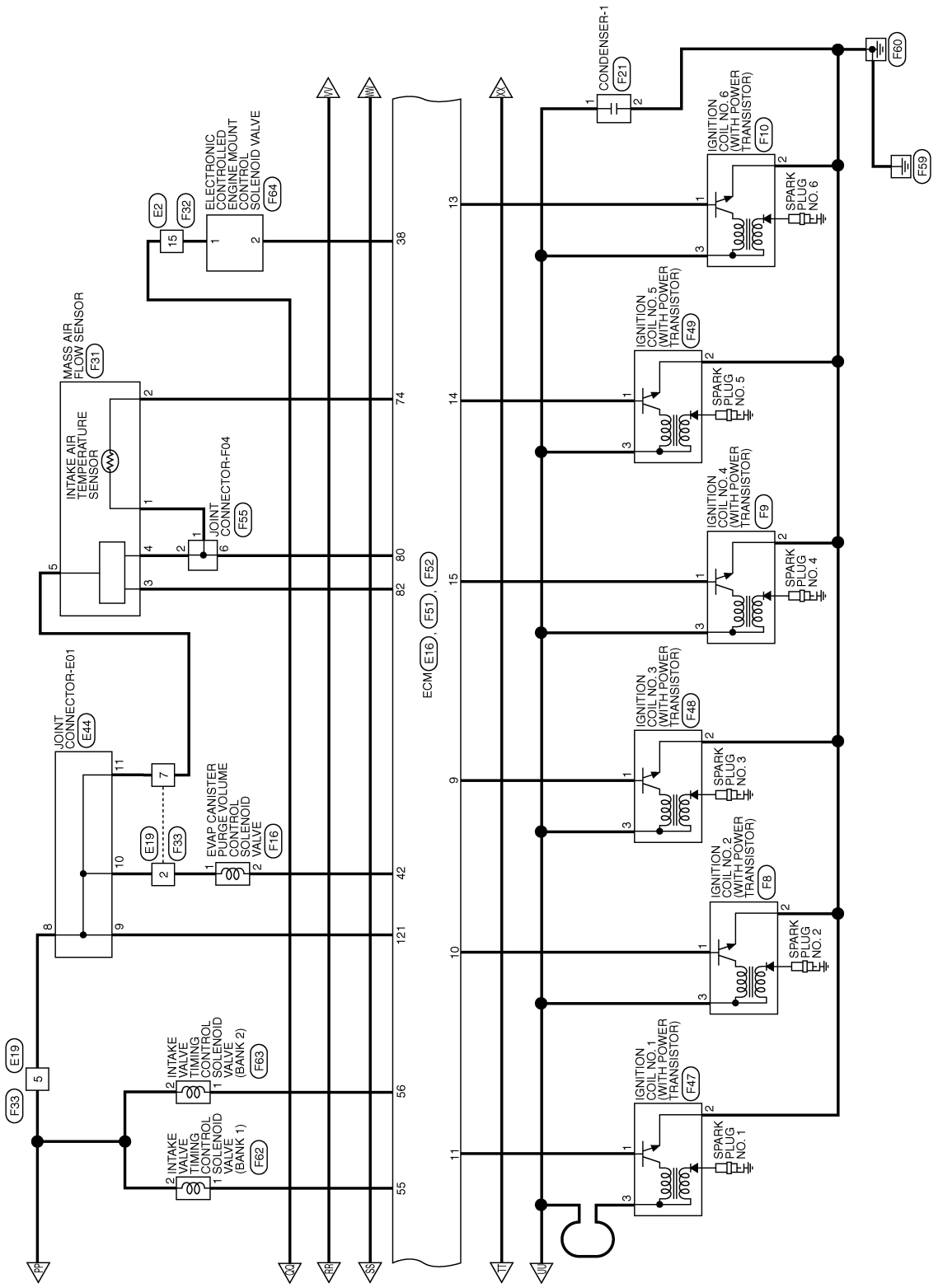

ABBWA1450GB

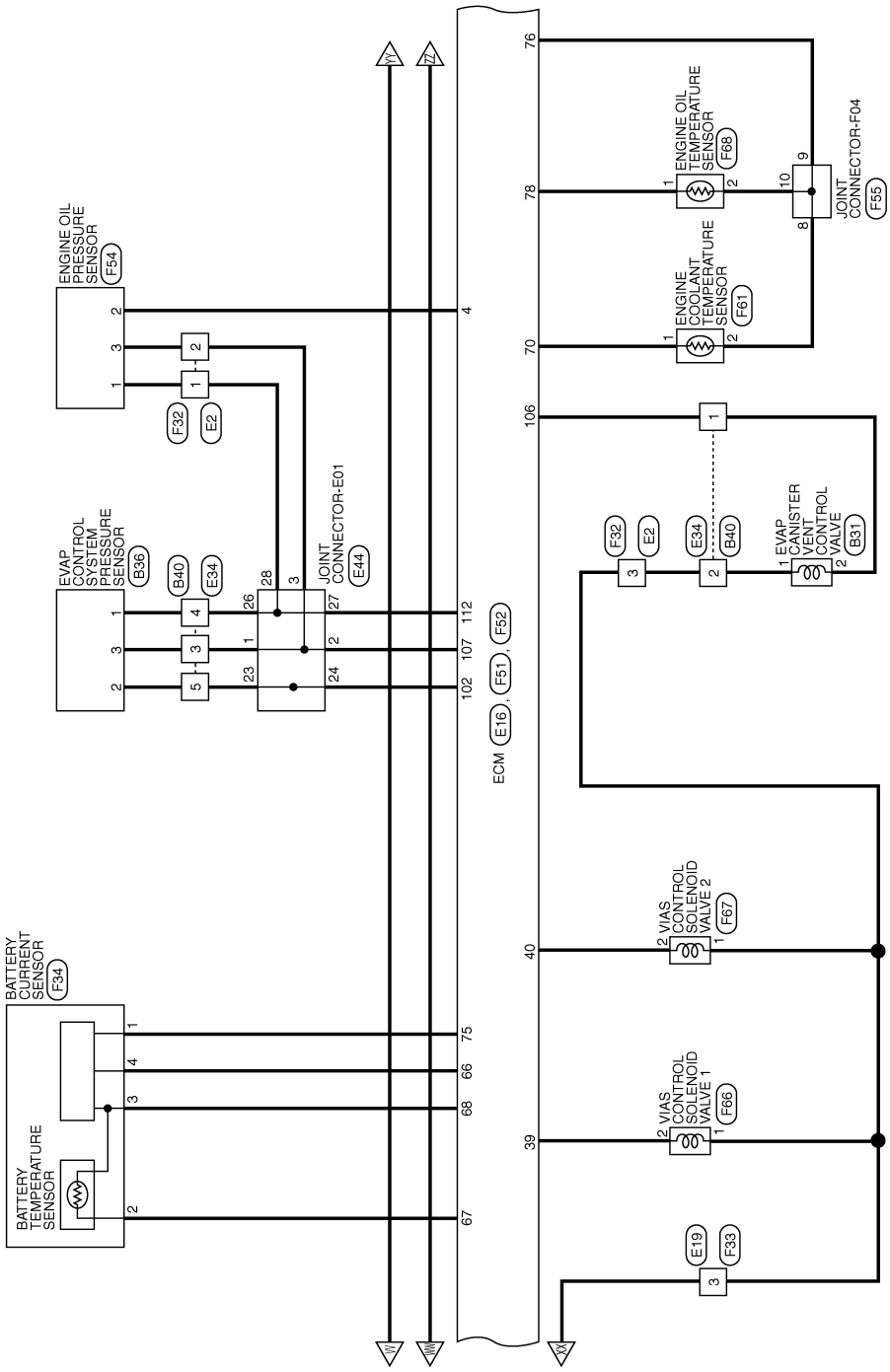

ABBWA1451GB

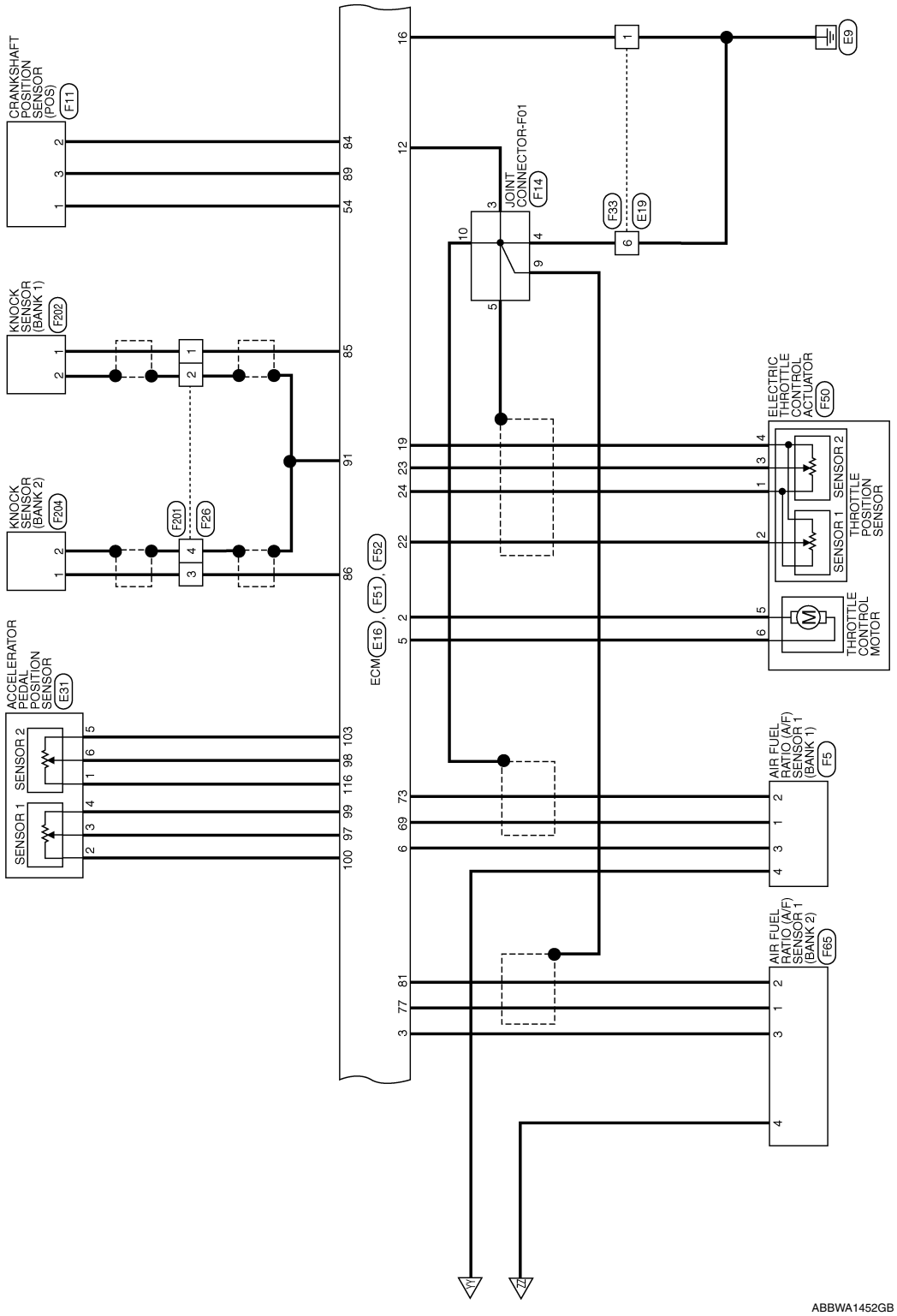
CRANKSHAFT POSITION SENSOR (POS)
F11
KNOCK SENSOR (BANK 1)
F202
KNOCK SENSOR (BANK 2)
F204
F201
F26
ACCELERATOR PEDAL POSITION SENSOR
E31
SENSOR 1
SENSOR 2
ECM
E16
F51
F52
JOINT CONNECTOR-F01
F14
F33
E19
E9
ELECTRIC THROTTLE CONTROL ACTUATOR
F50
THROTTLE POSITION SENSOR
THROTTLE CONTROL MOTOR
AIR FUEL RATIO (A/F) SENSOR 1 (BANK 1)
F5
AIR FUEL RATIO (A/F) SENSOR 1 (BANK 2)
F65
ABBWA1452GB

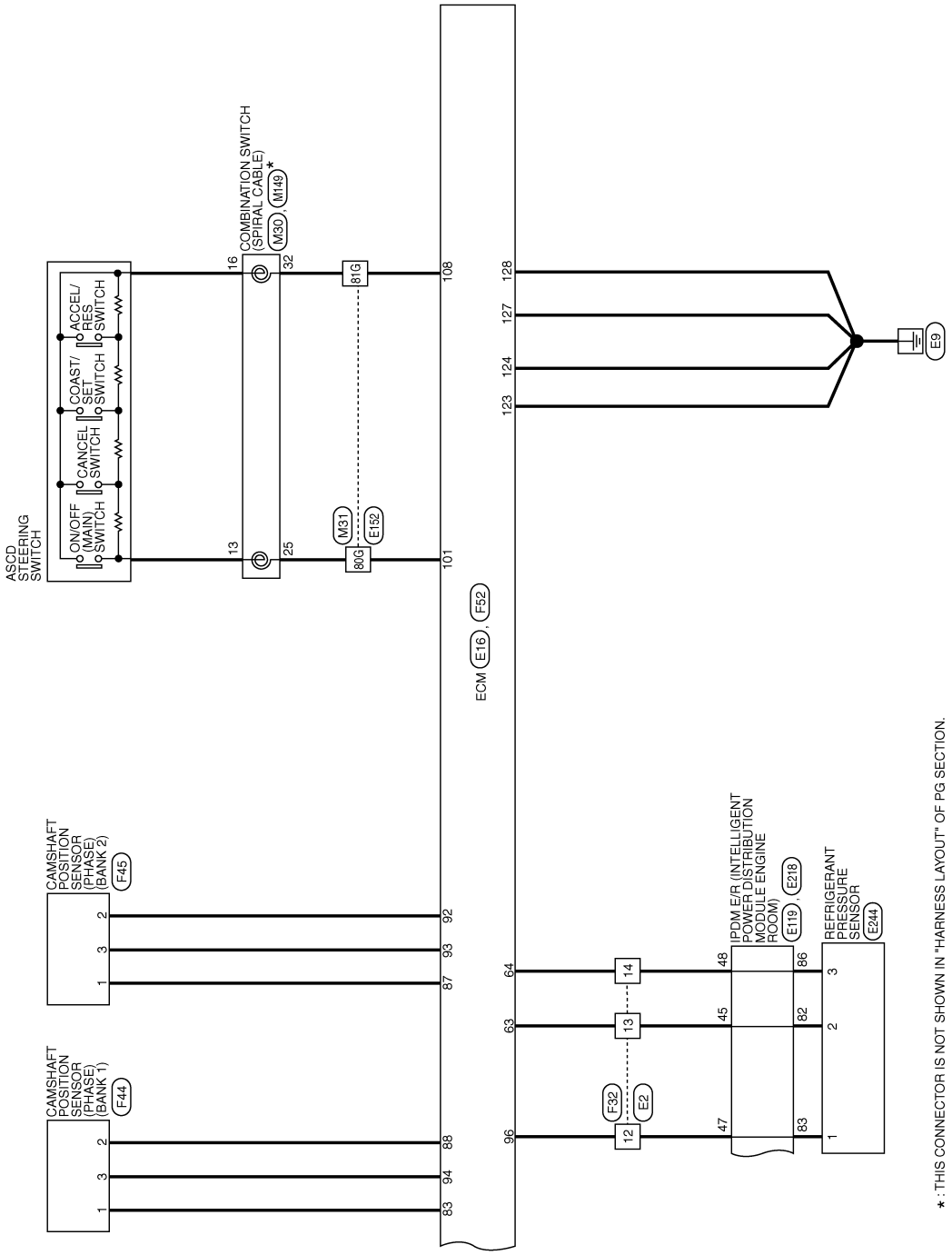
ASCD STEERING SWITCH
ON/OFF (MAIN) SWITCH
CANCEL SWITCH
COAST/ SET SWITCH
ACCEL/ RES SWITCH
COMBINATION SWITCH (SPIRAL CABLE)
M30, M149*
16
32
13
25
81G
80G
M31
E152
108
101
128
127
124
123
E9
ECM E16, F52
CAMSHAFT POSITION SENSOR (PHASE) (BANK 2)
F45
CAMSHAFT POSITION SENSOR (PHASE) (BANK 1)
F44
92
93
87
88
94
83
64
63
96
14
13
12
F32
E2
48
45
47
IPDM E/R (INTELLIGENT POWER DISTRIBUTION MODULE ENGINE ROOM)
E119, E218
86
82
83
REFRIGERANT PRESSURE SENSOR
E244
3
2
1
* : THIS CONNECTOR IS NOT SHOWN IN "HARNESS LAYOUT" OF PG SECTION.
ABBWA1453GB

ENGINE CONTROL SYSTEM CONNECTORS - FOR MEXICO

Connector No.	M3
Connector Name	FUSE BLOCK (J/B)
Connector Color	WHITE

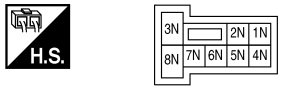

Terminal No.	Color of Wire	Signal Name
2N	BG	–

Connector No.	M4
Connector Name	FUSE BLOCK (J/B)
Connector Color	WHITE

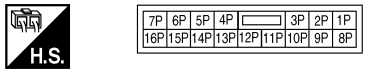

Terminal No.	Color of Wire	Signal Name
7P	LG	–
8P	BG	–
13P	W	–

Connector No.	M19
Connector Name	BCM (BODY CONTROL MODULE)
Connector Color	BLACK

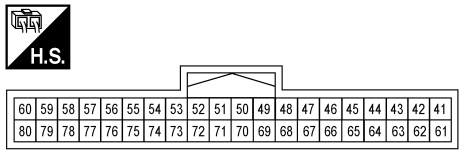

Terminal No.	Color of Wire	Signal Name
59	P	CAN-L
60	L	CAN-H
70	P	IGN USM OUT 1

Connector No.	M22
Connector Name	DATA LINK CONNECTOR
Connector Color	WHITE

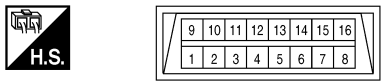

Terminal No.	Color of Wire	Signal Name
4	B	–
5	B	–
6	L	–
7	R	–
8	LG	–
14	P	–
16	BG	–

Connector No.	M24
Connector Name	COMBINATION METER
Connector Color	WHITE

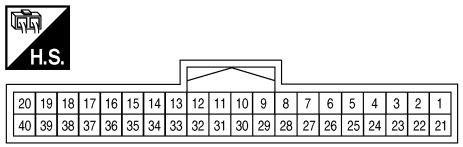

Terminal No.	Color of Wire	Signal Name
1	B	GND1
2	B	GND2
21	BG	IGN
22	W	BAT
38	P	CAN-L
39	L	CAN-H

Connector No.	M30
Connector Name	COMBINATION SWITCH (SPIRAL CABLE)
Connector Color	GRAY

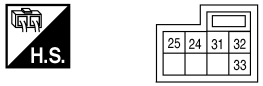

Terminal No.	Color of Wire	Signal Name
25	W	–
32	G	–

ABBIA2642GB

Connector No.	M41
Connector Name	JOINT CONNECTOR-M18
Connector Color	WHITE

Terminal No.	Color of Wire	Signal Name
1	P	–
2	P	–

Connector No.	M40
Connector Name	WIRE TO WIRE
Connector Color	GRAY

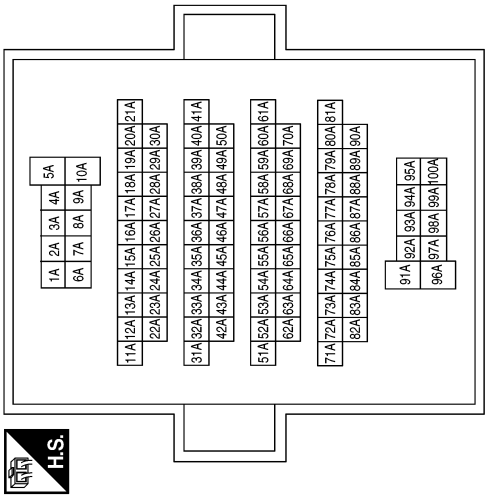

Terminal No.	Color of Wire	Signal Name
89A	L	–
90A	P	–

Connector No.	M31
Connector Name	WIRE TO WIRE
Connector Color	WHITE

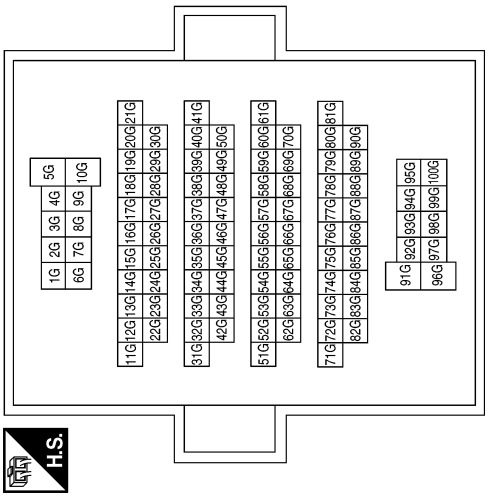

Terminal No.	Color of Wire	Signal Name
35G	P	–
36G	L	–
63G	P	–
79G	R	–
80G	W	–
81G	G	–

ABBIA1734GB

Connector No.	M43
Connector Name	JOINT CONNECTOR-M17
Connector Color	WHITE

Terminal No.	Color of Wire	Signal Name
1	L	–
2	L	–

Connector No.	M84
Connector Name	WIRE TO WIRE
Connector Color	WHITE

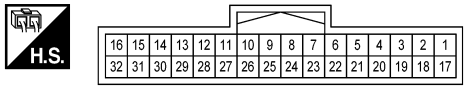

Terminal No.	Color of Wire	Signal Name
17	L	–
18	P	–

Connector No.	M149
Connector Name	COMBINATION SWITCH (SPIRAL CABLE)
Connector Color	GRAY

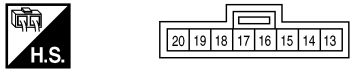

Terminal No.	Color of Wire	Signal Name
13	R	–
16	L	–

Connector No.	E2
Connector Name	WIRE TO WIRE
Connector Color	WHITE

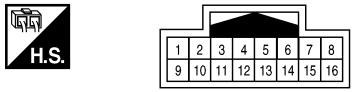

Terminal No.	Color of Wire	Signal Name
1	G	–
2	W	–
3	L	–
4	SB	–
12	Y	–
13	LG	–
14	V	–
15	R	–

Connector No.	E14
Connector Name	JOINT CONNECTOR-E05
Connector Color	BLACK

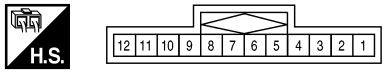

Terminal No.	Color of Wire	Signal Name
1	W	–
3	W	–

ABBIA1735GB

Connector No.	E16
Connector Name	ECM (FOR MEXICO)
Connector Color	GRAY

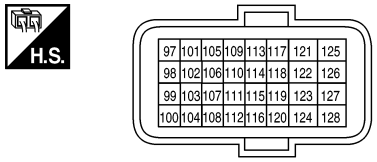

Terminal No.	Color of Wire	Signal Name
97	W	ACCELERATOR PEDAL POSITION SENSOR 1
98	P	ACCELERATOR PEDAL POSITION SENSOR 2
99	R	SENSOR POWER SUPPLY (ACCELERATOR PEDAL POSITION SENSOR 1)
100	R	SENSOR GROUND (ACCELERATOR PEDAL POSITION SENSOR 1)
101	G	ASCD STEERING SWITCH
102	O	EVAP CONTROL SYSTEM PRESSURE SENSOR
103	W	SENSOR POWER SUPPLY (ACCELERATOR PEDAL POSITION SENSOR 2)
104	P	DATA LINK CONNECTOR
105	–	–
106	Y	EVAP CANISTER VENT CONTROL VALVE
107	W	SENSOR POWER SUPPLY (EVAP CONTROL SYSTEM PRESSURE SENSOR, ENGINE OIL PRESSURE SENSOR)
108	R	SENSOR GROUND (ASCD STEERING SWITCH)
109	SB	IGNITION SWITCH
110	–	–
111	BR	FUEL TANK TEMPERATURE SENSOR
112	G	SENSOR GROUND (EVAP CONTROL SYSTEM PRESSURE SENSOR, ENGINE OIL PRESSURE SENSOR)
113	P	CAN-L
114	L	CAN-H
115	–	–
116	G	SENSOR GROUND (ACCELERATOR PEDAL POSITION SENSOR)
117	–	–
118	W	PNP SIGNAL
119	–	–
120	LG	SENSOR GROUND (FUEL TANK TEMPERATURE SENSOR)
121	LG	POWER SUPPLY FOR ECM
122	R	STOP LAMP SWITCH
123	B	ECM GND
124	B	ECM GND
125	–	–
126	LG	BRAKE PEDAL POSITION SWITCH
127	B	ECM GROUND
128	B	ECM GROUND

ABBIA2643GB

Connector No.	E19
Connector Name	WIRE TO WIRE
Connector Color	WHITE

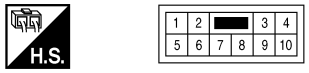

Terminal No.	Color of Wire	Signal Name
1	B	–
2	LG	–
3	L	–
5	LG	– (FOR MEXICO)
6	B	–
7	LG	–

Connector No.	E28
Connector Name	FUSE BLOCK (J/B)
Connector Color	WHITE

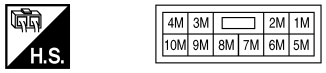

Terminal No.	Color of Wire	Signal Name
1M	R	–
5M	Y	–
7M	R	–
8M	R	–

Connector No.	E31
Connector Name	ACCELERATOR PEDAL POSITION SENSOR
Connector Color	BLACK

Terminal No.	Color of Wire	Signal Name
1	G	–
2	R	–
3	W	–
4	R	–
5	W	–
6	P	–

Connector No.	E33
Connector Name	WIRE TO WIRE
Connector Color	WHITE

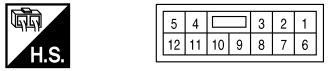

Terminal No.	Color of Wire	Signal Name
1	R	–
3	BR	–

Connector No.	E34
Connector Name	WIRE TO WIRE
Connector Color	WHITE

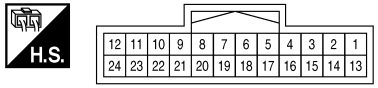

Terminal No.	Color of Wire	Signal Name
1	Y	–
2	L	–
3	W	– (FOR MEXICO)
4	G	– (FOR MEXICO)
5	BG	– (FOR MEXICO)
23	LG	–

Connector No.	E38
Connector Name	STOP LAMP SWITCH
Connector Color	WHITE

Terminal No.	Color of Wire	Signal Name
1	Y	–
2	W	–

ABBIA2644GB

Connector No.	E39
Connector Name	STOP LAMP RELAY
Connector Color	BLUE

H.S.

Terminal No.	Color of Wire	Signal Name
1	W	–
2	B	–
3	Y	–
5	R	–

Connector No.	E40
Connector Name	WIRE TO WIRE
Connector Color	BLACK

H.S.

Terminal No.	Color of Wire	Signal Name
1	R	–

Connector No.	E44
Connector Name	JOINT CONNECTOR-E01
Connector Color	WHITE

H.S.

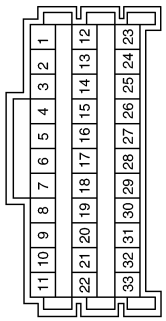

Terminal No.	Color of Wire	Signal Name
1	W	–
2	W	–
3	W	–
8	LG	–
9	LG	–
10	LG	–
11	LG	–
12	Y	–
13	Y	–
14	Y	–
19	R	–
20	R	–
23	BG	–
24	O	–
26	G	–
27	G	–
28	G	–

Connector No.	E45
Connector Name	JOINT CONNECTOR-E12
Connector Color	BLUE

H.S.

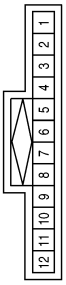

Terminal No.	Color of Wire	Signal Name
1	L	–
2	L	–
4	L	–
7	P	–
8	P	–
10	P	–

ABBIA1738GB

Connector No.	E70
Connector Name	JOINT CONNECTOR-E14
Connector Color	BLACK

Terminal No.	Color of Wire	Signal Name
1	P	–
2	P	–

Connector No.	E71
Connector Name	JOINT CONNECTOR-E15
Connector Color	BLACK

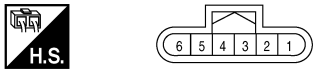

Terminal No.	Color of Wire	Signal Name
1	L	–
2	L	–

Connector No.	E76
Connector Name	BRAKE PEDAL POSITION SWITCH
Connector Color	BROWN

Terminal No.	Color of Wire	Signal Name
1	R	–
2	LG	–

Connector No.	E82
Connector Name	COOLING FAN RELAY
Connector Color	BROWN

Terminal No.	Color of Wire	Signal Name
1	W	–
2	B	–
3	L	–
5	R	–

Connector No.	E119
Connector Name	IPDM E/R (INTELLIGENT POWER DISTRIBUTION MODULE ENGINE ROOM)
Connector Color	WHITE

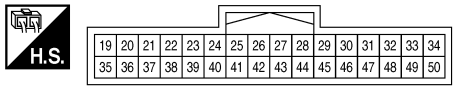

Terminal No.	Color of Wire	Signal Name
27	B	MOTOR FAN RLY MID
28	P	CAN-L
29	L	CAN-H
36	W	START IG-E/R
37	W	SHIFT N/P
41	B	GND (SIGNAL)
43	L	IGN SIGNAL
45	LG	PD SENS SIG-E/R
47	Y	PD SENS PWR-E/R
48	V	PD SENS GND-E/R

Connector No.	E121
Connector Name	IPDM E/R (INTELLIGENT POWER DISTRIBUTION MODULE ENGINE ROOM)
Connector Color	WHITE

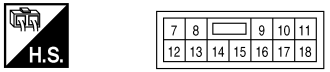

Terminal No.	Color of Wire	Signal Name
7	B	GND (POWER)
13	L	ECM VB
15	R	FUEL PUMP

ABBIA2645GB

Connector No.	E152
Connector Name	WIRE TO WIRE
Connector Color	WHITE

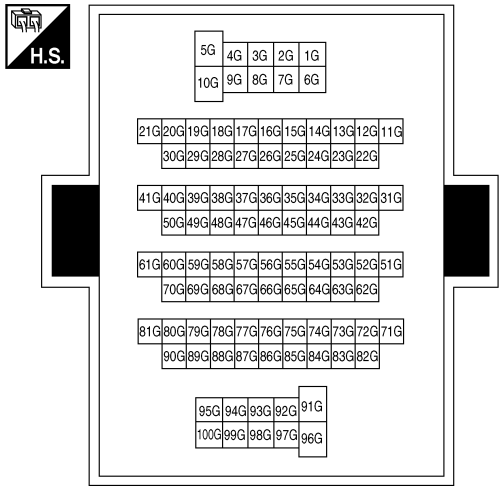

Terminal No.	Color of Wire	Signal Name
35G	P	–
36G	L	–
63G	L	–
79G	P	–
80G	G	–
81G	R	–

Connector No.	E201
Connector Name	WIRE TO WIRE
Connector Color	BLACK

Terminal No.	Color of Wire	Signal Name
1	R	–

Connector No.	E218
Connector Name	IPDM E/R (INTELLIGENT POWER DISTRIBUTION MODULE ENGINE ROOM)
Connector Color	WHITE

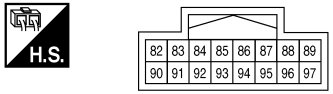

Terminal No.	Color of Wire	Signal Name
82	P	PD SENS SIG-FEM
83	G	PD SENS PWR-FEM
86	L	PD SENS GND-FEM
93	V	MOTOR FAN PWM

Connector No.	E225
Connector Name	COOLING FAN CONTROL MODULE
Connector Color	GRAY

Terminal No.	Color of Wire	Signal Name
1	B	GND
2	V	SIG
3	R	POWER

Connector No.	E244
Connector Name	REFRIGERANT PRESSURE SENSOR
Connector Color	BLACK

Terminal No.	Color of Wire	Signal Name
1	G	–
2	P	– (FOR MEXICO)
3	L	– (FOR MEXICO)

ABBIA2646GB

Connector No.	E245
Connector Name	COOLING FAN CONTROL MODULE (COOLING FAN MOTOR-1)
Connector Color	BROWN

Terminal No.	Color of Wire	Signal Name
4	R	–
5	B	–

Connector No.	E246
Connector Name	COOLING FAN CONTROL MODULE (COOLING FAN MOTOR-2)
Connector Color	GRAY

Terminal No.	Color of Wire	Signal Name
6	B	–
7	R	–

Connector No.	F5
Connector Name	AIR FUEL RATIO (A/F) SENSOR 1 (BANK 1) (FOR MEXICO)
Connector Color	BROWN

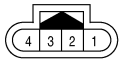

Terminal No.	Color of Wire	Signal Name
1	B	–
2	W	–
3	BR	–
4	W	–

Connector No.	F8
Connector Name	IGNITION COIL NO. 2 (WITH POWER TRANSISTOR)
Connector Color	GRAY

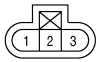

Terminal No.	Color of Wire	Signal Name
1	LG	–
2	B	–
3	W	–

Connector No.	F9
Connector Name	IGNITION COIL NO. 4 (WITH POWER TRANSISTOR)
Connector Color	GRAY

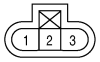

Terminal No.	Color of Wire	Signal Name
1	LG	–
2	B	–
3	W	–

Connector No.	F10
Connector Name	IGNITION COIL NO. 6 (WITH POWER TRANSISTOR)
Connector Color	GRAY

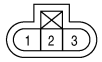

Terminal No.	Color of Wire	Signal Name
1	LG	–
2	B	–
3	W	–

ABBIA2647GB

Connector No.	F11
Connector Name	CRANKSHAFT POSITION SENSOR (POS)
Connector Color	BLACK

Terminal No.	Color of Wire	Signal Name
1	LG	–
2	Y	–
3	L	–

Connector No.	F12
Connector Name	HEATED OXYGEN SENSOR 2 (BANK 2) (FOR MEXICO)
Connector Color	BLACK

Terminal No.	Color of Wire	Signal Name
1	B	–
2	W	–
3	SB	–
4	L	–

Connector No.	F13
Connector Name	HEATED OXYGEN SENSOR 2 (BANK 1) (FOR MEXICO)
Connector Color	BLACK

Terminal No.	Color of Wire	Signal Name
1	B	–
2	W	–
3	SB	–
4	L	–

Connector No.	F14
Connector Name	JOINT CONNECTOR-F01
Connector Color	BLACK

Terminal No.	Color of Wire	Signal Name
3	B	– (FOR MEXICO)
4	B	– (FOR MEXICO)
5	SHIELD	– (FOR MEXICO)
9	SHIELD	– (FOR MEXICO)
10	SHIELD	– (FOR MEXICO)

Connector No.	F16
Connector Name	EVAP CANISTER PURGE VOLUME CONTROL SOLENOID VALVE
Connector Color	GRAY

Terminal No.	Color of Wire	Signal Name
1	L	–
2	BR	–

Connector No.	F18
Connector Name	FUEL INJECTOR NO. 2
Connector Color	GRAY

Terminal No.	Color of Wire	Signal Name
1	LG	–
2	V	–

ABBIA2648GB

Connector No.	F19
Connector Name	IPDM E/R (INTELLIGENT POWER DISTRIBUTION MODULE ENGINE ROOM)
Connector Color	WHITE

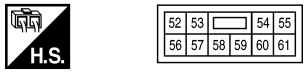

Terminal No.	Color of Wire	Signal Name
52	W	O2SENS #2
53	W	O2SENS #1
54	L	INJECTOR #1
55	W	IGN COIL
57	R	ETC
58	GR	ECM BAT
59	LG	ENG SOL
60	LG	INJECTOR #2

Connector No.	F20
Connector Name	FUEL INJECTOR NO. 4
Connector Color	GRAY

Terminal No.	Color of Wire	Signal Name
1	LG	–
2	V	–

Connector No.	F21
Connector Name	CONDENSER-1
Connector Color	WHITE

Terminal No.	Color of Wire	Signal Name
1	W	–
2	B	–

Connector No.	F22
Connector Name	FUEL INJECTOR NO. 6
Connector Color	GRAY

Terminal No.	Color of Wire	Signal Name
1	LG	–
2	V	–

Connector No.	F24
Connector Name	IPDM E/R (INTELLIGENT POWER DISTRIBUTION MODULE ENGINE ROOM)
Connector Color	WHITE

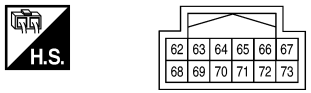

Terminal No.	Color of Wire	Signal Name
63	L	INHIBIT SW
65	G	ETC RLY CONT
66	G	NP SW
69	W	FPR
72	V	SSOFF

Connector No.	F26
Connector Name	WIRE TO WIRE
Connector Color	BLUE

Terminal No.	Color of Wire	Signal Name
1	B	–
2	SHIELD	–
3	W	–
4	SHIELD	–

ABBIA2649GB

Connector No.	F30
Connector Name	FUEL INJECTOR NO. 1
Connector Color	GRAY

H.S.

Terminal No.	Color of Wire	Signal Name
1	L	–
2	Y	–

Connector No.	F31
Connector Name	MASS AIR FLOW SENSOR (FOR MEXICO)
Connector Color	BLACK

H.S.

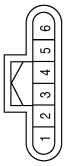

Terminal No.	Color of Wire	Signal Name
1	BR	–
2	V	–
3	P	–
4	BR	–
5	LG	–

Connector No.	F32
Connector Name	WIRE TO WIRE
Connector Color	WHITE

H.S.

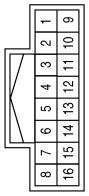

Terminal No.	Color of Wire	Signal Name
1	BR	–
2	Y	–
3	L	–
4	W	–
12	P	– (FOR MEXICO)
13	SB	–
14	V	–
15	L	–

Connector No.	F33
Connector Name	WIRE TO WIRE
Connector Color	WHITE

H.S.

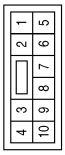

Terminal No.	Color of Wire	Signal Name
1	B	–
2	L	–
3	L	–
5	L	– (FOR MEXICO)
6	B	–
7	LG	–

Connector No.	F34
Connector Name	BATTERY CURRENT SENSOR
Connector Color	GRAY

H.S.

Terminal No.	Color of Wire	Signal Name
1	LG	–
2	Y	–
3	G	–
4	W	–

Connector No.	F36
Connector Name	TRANSMISSION RANGE SWITCH
Connector Color	BLACK

H.S.

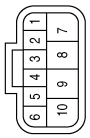

Terminal No.	Color of Wire	Signal Name
7	L	–
10	G	–

ABBIA2650GB

Connector No.	F41
Connector Name	FUEL INJECTOR NO. 3
Connector Color	GRAY

Terminal No.	Color of Wire	Signal Name
1	L	–
2	Y	–

Connector No.	F42
Connector Name	FUEL INJECTOR NO. 5
Connector Color	GRAY

Terminal No.	Color of Wire	Signal Name
1	L	–
2	Y	–

Connector No.	F44
Connector Name	CAMSHAFT POSITION SENSOR (PHASE) (BANK 1) (FOR MEXICO)
Connector Color	BLACK

Terminal No.	Color of Wire	Signal Name
1	BR	–
2	LG	–
3	GR	–

Connector No.	F45
Connector Name	CAMSHAFT POSITION SENSOR (PHASE) (BANK 2) (FOR MEXICO)
Connector Color	BLACK

Terminal No.	Color of Wire	Signal Name
1	V	–
2	SB	–
3	LG	–

Connector No.	F47
Connector Name	IGNITION COIL NO. 1 (WITH POWER TRANSISTOR)
Connector Color	GRAY

Terminal No.	Color of Wire	Signal Name
1	LG	–
2	B	–
3	W	–

Connector No.	F48
Connector Name	IGNITION COIL NO. 3 (WITH POWER TRANSISTOR)
Connector Color	GRAY

Terminal No.	Color of Wire	Signal Name
1	LG	–
2	B	–
3	W	–

ABBIA2651GB

Connector No.	F49
Connector Name	IGNITION COIL NO. 5 (WITH POWER TRANSISTOR)
Connector Color	GRAY

Terminal No.	Color of Wire	Signal Name
1	LG	–
2	B	–
3	W	–

Connector No.	F50
Connector Name	ELECTRIC THROTTLE CONTROL ACTUATOR
Connector Color	BLACK

Terminal No.	Color of Wire	Signal Name
1	G	– (FOR MEXICO)
2	B	– (FOR MEXICO)
3	W	–
4	R	–
5	G	–
6	W	– (FOR MEXICO)

ABBIA2652GB

Connector No.	F51
Connector Name	ECM (FOR MEXICO)
Connector Color	BLACK

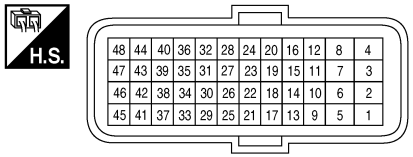

Terminal No.	Color of Wire	Signal Name
1	R	THROTTLE CONTROL MOTOR POWER SUPPLY
2	G	THROTTLE CONTROL MOTOR (CLOSE)
3	Y	A/F SENSOR 1 HEATER (BANK 2)
4	LG	ENGINE OIL PRESSURE SENSOR
5	W	THROTTLE CONTROL MOTOR (OPEN)
6	BR	A/F SENSOR 1 HEATER (BANK 1)
7	–	–
8	–	–
9	LG	IGNITION SIGNAL NO. 3
10	LG	IGNITION SIGNAL NO. 2
11	LG	IGNITION SIGNAL NO. 1
12	B	ECM GROUND
13	LG	IGNITION SIGNAL NO. 6
14	LG	IGNITION SIGNAL NO. 5
15	LG	IGNITION SIGNAL NO. 4
16	B	ECM GROUND
17	–	–
18	–	–
19	R	SENSOR GROUND (THROTTLE POSITION SENSOR)
20	–	–
21	–	–
22	B	THROTTLE POSITION SENSOR 1
23	W	THROTTLE POSITION SENSOR 2
24	G	SENSOR POWER SUPPLY (THROTTLE POSITION SENSOR)
25	–	–
26	GR	POWER SUPPLY FOR ECM (BACK-UP)
27	–	–
28	–	–
29	–	–
30	–	–
31	V	ECM RELAY (SELF SHUT-OFF)
32	–	–
33	Y	FUEL INJECTOR NO. 1
34	G	THROTTLE CONTROL MOTOR RELAY
35	–	–
36	–	–
37	SB	HEATED OXYGEN SENSOR 2 HEATER (BANK 1)
38	BR	ELECTRONIC CONTROLLED ENGINE MOUNT CONTROL SOLENOID VALVE
39	BR	VIAS CONTROL SOLENOID VALVE 1
40	BR	VIAS CONTROL SOLENOID VALVE 2
41	SB	HEATED OXYGEN SENSOR 2 HEATER (BANK 2)
42	BR	EVAP CANISTER PURGE VOLUME CONTROL SOLENOID VALVE
43	W	FUEL PUMP RELAY
44	V	FUEL INJECTOR NO. 2
45	V	FUEL INJECTOR NO. 6
46	Y	FUEL INJECTOR NO. 5
47	V	FUEL INJECTOR NO. 4
48	Y	FUEL INJECTOR NO. 3

ABBIA2653GB

Connector No.	F52
Connector Name	ECM (FOR MEXICO)
Connector Color	BROWN

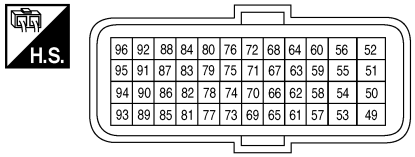

Terminal No.	Color of Wire	Signal Name
49	–	–
50	–	–
51	–	–
52	–	–
53	–	–
54	LG	SENSOR POWER SUPPLY [CRANKSHAFT POSITION SENSOR (POS)]
55	BR	INTAKE VALVE TIMING CONTROL SOLENOID VALVE (BANK 1)
56	Y	INTAKE VALVE TIMING CONTROL SOLENOID VALVE (BANK 2)
57	L	HEATED OXYGEN SENSOR 2 (BANK 1)
58	L	HEATED OXYGEN SENSOR 2 (BANK 2)
59	B	SENSOR GROUND (HEATED OXYGEN SENSOR 2)
60	–	–
61	–	–
62	–	–
63	SB	REFRIGERANT PRESSURE SENSOR

Terminal No.	Color of Wire	Signal Name
64	V	SENSOR GROUND (REFRIGERANT PRESSURE SENSOR)
65	–	–
66	W	BATTERY CURRENT SENSOR
67	Y	BATTERY TEMPERATURE SENSOR
68	G	SENSOR GROUND (BATTERY CURRENT SENSOR)
69	B	A/F SENSOR 1 (BANK 1)
70	BR	ENGINE COOLANT TEMPERATURE SENSOR
71	–	–
72	–	–
73	W	A/F SENSOR 1 (BANK 1)
74	V	INTAKE AIR TEMPERATURE SENSOR
75	LG	SENSOR POWER SUPPLY (BATTERY CURRENT SENSOR)
76	B	SENSOR GROUND (ENGINE COOLANT TEMPERATURE SENSOR, ENGINE OIL TEMPERATURE SENSOR)
77	B	A/F SENSOR 1 (BANK 2)
78	G	ENGINE OIL TEMPERATURE SENSOR
79	–	–
80	BR	SENSOR GROUND (MASS AIR FLOW SENSOR, INTAKE AIR TEMPERATURE SENSOR)
81	W	A/F SENSOR 1 (BANK 2)

Terminal No.	Color of Wire	Signal Name
82	P	MASS AIR FLOW SENSOR
83	BR	SENSOR POWER SUPPLY [CAMSHAFT POSITION SENSOR (PHASE) (BANK 1)]
84	Y	SENSOR GROUND [CRANKSHAFT POSITION SENSOR (POS)]
85	B	KNOCK SENSOR (BANK 1)
86	W	KNOCK SENSOR (BANK 2)
87	V	SENSOR POWER SUPPLY [CAMSHAFT POSITION SENSOR (PHASE) (BANK 2)]
88	LG	SENSOR GROUND [CAMSHAFT POSITION SENSOR (PHASE) (BANK 1)]
89	L	CRANKSHAFT POSITION SENSOR (POS)
90	–	–
91	SHIELD	SENSOR GROUND [KNOCK SENSOR (BANK 1), KNOCK SENSOR (BANK 2)]
92	SB	SENSOR GROUND [CAMSHAFT POSITION SENSOR (PHASE) (BANK 2)]
93	LG	CAMSHAFT POSITION SENSOR (PHASE) (BANK 2)
94	GR	CAMSHAFT POSITION SENSOR (PHASE) (BANK 1)
95	–	–
96	P	SENSOR POWER SUPPLY (REFRIGERANT PRESSURE SENSOR)

ABBIA2654GB

Connector No.	F54
Connector Name	ENGINE OIL PRESSURE SENSOR
Connector Color	BLACK

Terminal No.	Color of Wire	Signal Name
1	BR	– (FOR MEXICO)
2	LG	–
3	Y	–

Connector No.	F55
Connector Name	JOINT CONNECTOR-F04
Connector Color	BLACK

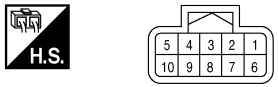

Terminal No.	Color of Wire	Signal Name
1	BR	– (FOR MEXICO)
2	BR	–
3	B	– (FOR MEXICO)

Terminal No.	Color of Wire	Signal Name
4	B	– (FOR MEXICO)
5	B	– (FOR MEXICO)
6	BR	– (FOR MEXICO)
8	B	–
9	B	– (FOR MEXICO)
10	B	– (FOR MEXICO)

Connector No.	F56
Connector Name	JOINT CONNECTOR-F07
Connector Color	WHITE

Terminal No.	Color of Wire	Signal Name
1	L	–
2	L	–
3	L	–
4	L	–

Connector No.	F57
Connector Name	JOINT CONNECTOR-F08
Connector Color	WHITE

Terminal No.	Color of Wire	Signal Name
1	LG	–
2	LG	–
3	LG	–
4	LG	–

Connector No.	F58
Connector Name	JOINT CONNECTOR-F09
Connector Color	GREEN

Terminal No.	Color of Wire	Signal Name
1	W	–
2	W	–
3	W	–
4	W	–
5	W	–
6	W	–

ABBIA2655GB

Connector No.	F61
Connector Name	ENGINE COOLANT TEMPERATURE SENSOR
Connector Color	GRAY

Terminal No.	Color of Wire	Signal Name
1	BR	–
2	B	–

Connector No.	F62
Connector Name	INTAKE VALVE TIMING CONTROL SOLENOID VALVE (BANK 1) (FOR MEXICO)
Connector Color	GRAY

Terminal No.	Color of Wire	Signal Name
1	BR	–
2	L	–

Connector No.	F63
Connector Name	INTAKE VALVE TIMING CONTROL SOLENOID VALVE (BANK 2) (FOR MEXICO)
Connector Color	GRAY

Terminal No.	Color of Wire	Signal Name
1	Y	–
2	L	–

Connector No.	F64
Connector Name	ELECTRONIC CONTROLLED ENGINE MOUNT CONTROL SOLENOID VALVE
Connector Color	BROWN

Terminal No.	Color of Wire	Signal Name
1	L	–
2	BR	–

Connector No.	F65
Connector Name	AIR FUEL RATIO (A/F) SENSOR 1 (BANK 2) (FOR MEXICO)
Connector Color	BROWN

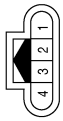

Terminal No.	Color of Wire	Signal Name
1	B	–
2	W	–
3	Y	–
4	W	–

Connector No.	F66
Connector Name	VIAS CONTROL SOLENOID VALVE 1
Connector Color	BLACK

Terminal No.	Color of Wire	Signal Name
1	L	–
2	BR	–

ABBIA2656GB

Connector No.	F67
Connector Name	VIAS CONTROL SOLENOID VALVE 2
Connector Color	BLACK

Terminal No.	Color of Wire	Signal Name
1	L	–
2	BR	–

Connector No.	F68
Connector Name	ENGINE OIL TEMPERATURE SENSOR
Connector Color	GRAY

Terminal No.	Color of Wire	Signal Name
1	G	–
2	B	–

Connector No.	F201
Connector Name	WIRE TO WIRE
Connector Color	BLUE

Terminal No.	Color of Wire	Signal Name
1	GR	–
2	SHIELD	–
3	W	–
4	SHIELD	–

Connector No.	F202
Connector Name	KNOCK SENSOR (BANK 1)
Connector Color	GRAY

Terminal No.	Color of Wire	Signal Name
1	GR	–
2	SHIELD	–

Connector No.	F204
Connector Name	KNOCK SENSOR (BANK 2)
Connector Color	GRAY

Terminal No.	Color of Wire	Signal Name
1	W	–
2	SHIELD	–

Connector No.	B11
Connector Name	JOINT CONNECTOR-B09
Connector Color	WHITE

Terminal No.	Color of Wire	Signal Name
1	P	–
2	P	–

ABBIA1751GB

Connector No.	B12
Connector Name	JOINT CONNECTOR-B10
Connector Color	WHITE

Terminal No.	Color of Wire	Signal Name
1	L	–
2	L	–

Connector No.	B16
Connector Name	JOINT CONNECTOR-B11
Connector Color	WHITE

Terminal No.	Color of Wire	Signal Name
1	P	–
2	P	–

Connector No.	B17
Connector Name	JOINT CONNECTOR-B12
Connector Color	WHITE

Terminal No.	Color of Wire	Signal Name
1	L	–
2	L	–

Connector No.	B31
Connector Name	EVAP CANISTER VENT CONTROL VALVE
Connector Color	BLACK

Terminal No.	Color of Wire	Signal Name
1	Y	–
2	LG	–

Connector No.	B32
Connector Name	WIRE TO WIRE
Connector Color	WHITE

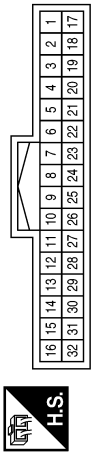

Terminal No.	Color of Wire	Signal Name
18	L	–
19	P	–

Connector No.	B36
Connector Name	EVAP CONTROL SYSTEM PRESSURE SENSOR
Connector Color	GRAY

Terminal No.	Color of Wire	Signal Name
1	G	–
2	W	–
3	R	–

ABBIA1752GB

Connector No.	B40
Connector Name	WIRE TO WIRE
Connector Color	WHITE

H.S.

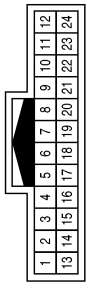

Terminal No.	Color of Wire	Signal Name
1	LG	–
2	Y	–
3	R	–
4	G	–
5	W	–
23	W	–

Connector No.	B43
Connector Name	WIRE TO WIRE
Connector Color	WHITE

H.S.

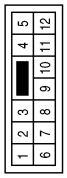

Terminal No.	Color of Wire	Signal Name
1	W	–
3	W	–

Connector No.	B52
Connector Name	CONDENSER-2
Connector Color	WHITE

H.S.

Terminal No.	Color of Wire	Signal Name
1	W	–
2	B	–

Connector No.	B63
Connector Name	JOINT CONNECTOR-B01
Connector Color	WHITE

H.S.

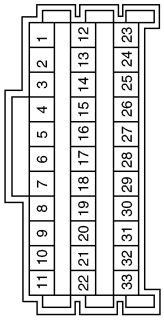

Terminal No.	Color of Wire	Signal Name
26	B	–
28	B	–

Connector No.	B69
Connector Name	WIRE TO WIRE
Connector Color	GRAY

H.S.

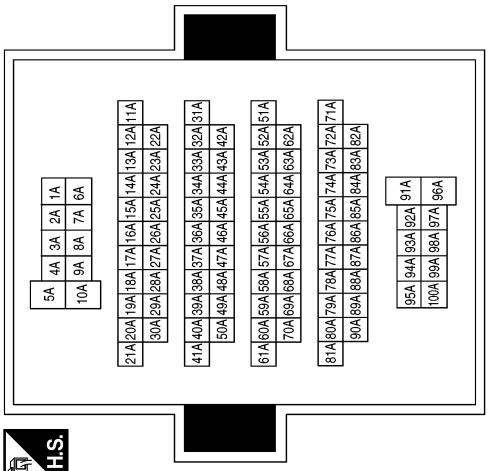

Terminal No.	Color of Wire	Signal Name
89A	L	–
90A	P	–

ABBIA1753GB

Connector No.	B72
Connector Name	FUEL LEVEL SENSOR UNIT AND FUEL PUMP
Connector Color	GRAY

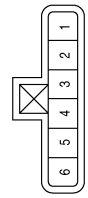

H.S.

Terminal No.	Color of Wire	Signal Name
1	W	–
3	W	–
4	B	–
6	W	–

Connector No.	B101
Connector Name	WIRE TO WIRE
Connector Color	WHITE

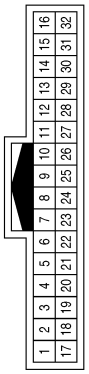

H.S.

Terminal No.	Color of Wire	Signal Name
17	L	–
18	P	–

Connector No.	B102
Connector Name	JOINT CONNECTOR-B14
Connector Color	WHITE

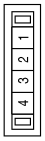

H.S.

Terminal No.	Color of Wire	Signal Name
1	L	–
2	L	–

Connector No.	B103
Connector Name	JOINT CONNECTOR-B05
Connector Color	WHITE

H.S.

Terminal No.	Color of Wire	Signal Name
1	P	–
2	P	–

Connector No.	B124
Connector Name	WIRE TO WIRE
Connector Color	WHITE

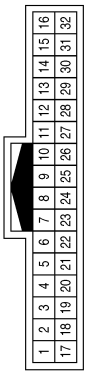

H.S.

Terminal No.	Color of Wire	Signal Name
18	L	–
19	P	–

ABBIA2657GB

BASIC INSPECTION

DIAGNOSIS AND REPAIR WORKFLOW

Work Flow

INFOID:0000000011489512

OVERALL SEQUENCE

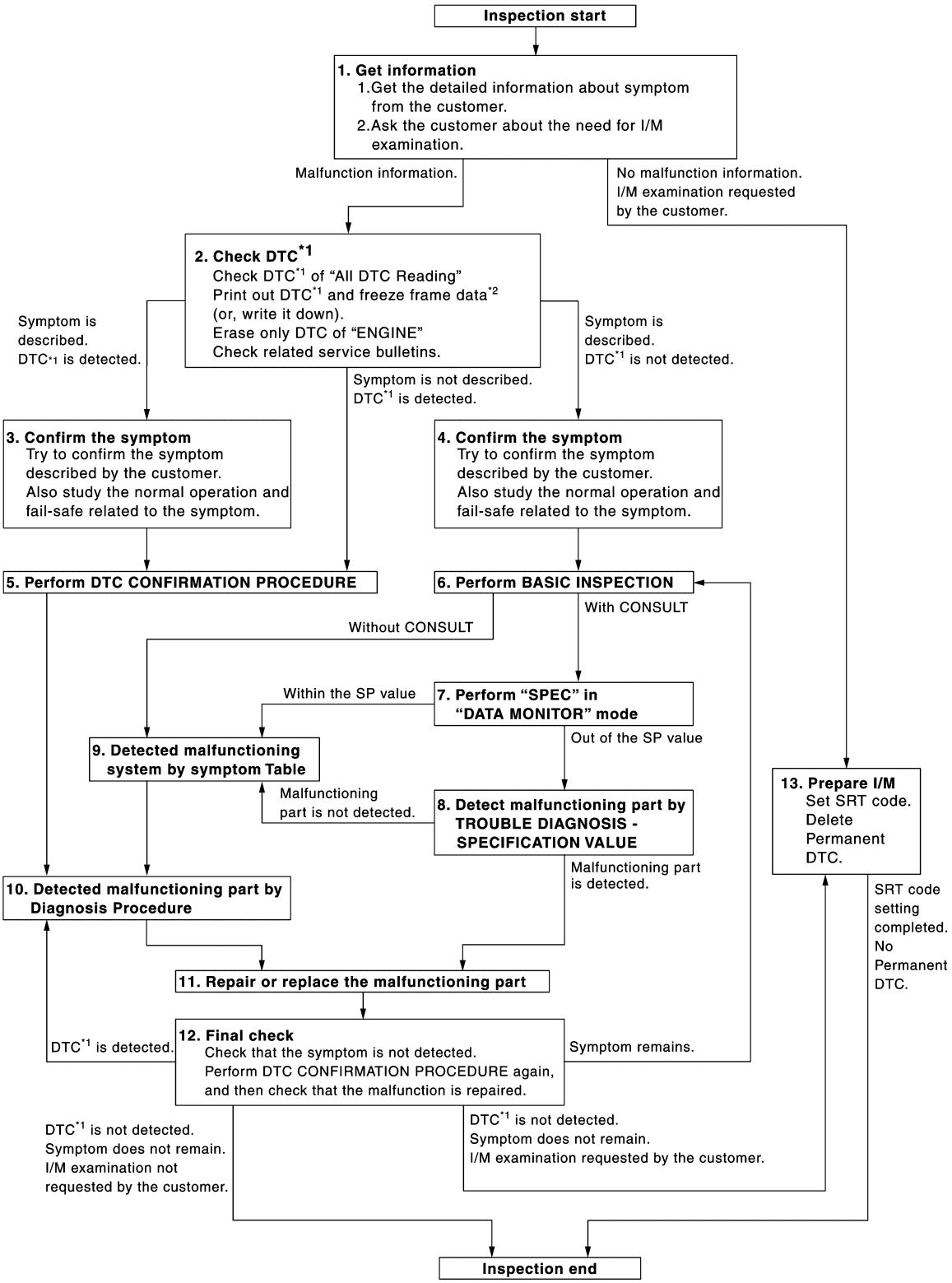

*1: Include 1st trip DTC.

*2: Include 1st trip freeze frame data.

DETAILED FLOW

1.GET INFORMATION FOR SYMPTOM

Get the detailed information from the customer about the symptom (the condition and the environment when the incident/malfunction occurred) using the “Diagnostic Work Sheet”. (Refer to EC-654, "Diagnostic Work Sheet".)

>> GO TO 2.

2.CHECK DTC

1. Check DTC of “All DTC Reading”.
2. Perform the following procedure if DTC is displayed.
- Record DTC and freeze frame data. (Print them out with CONSULT or GST.)
- Erase only DTC of “ENGINE”.
  - With CONSULT: Refer to “How to Erase DTC and 1st Trip DTC” in EC-581, "CONSULT Function".
  - Without CONSULT: Refer to “How to Erase Self-diagnostic Results” in EC-578, "On Board Diagnosis Function".
- Turn ignition switch OFF.
- Study the relationship between the cause detected by DTC and the symptom described by the customer. (Symptom Table is useful. Refer to EC-906, "Symptom Table".)
3. Check related service bulletins for information.

Are any symptoms described and any DTCs detected?

Symptom is described, DTC is detected>>GO TO 3.
Symptom is described, DTC is not detected>>GO TO 4.
Symptom is not described, DTC is detected>>GO TO 5.

3.CONFIRM THE SYMPTOM

Try to confirm the symptom described by the customer (except MIL ON).
Also study the normal operation and fail-safe related to the symptom. Refer to EC-910, "Description" and EC-607, "Fail-safe".
Diagnosis Work Sheet is useful to verify the incident.
Verify relation between the symptom and the condition when the symptom is detected.

>> GO TO 5.

4.CONFIRM THE SYMPTOM

Try to confirm the symptom described by the customer.
Also study the normal operation and fail-safe related to the symptom. Refer to EC-910, "Description" and EC-607, "Fail-safe".
Diagnosis Work Sheet is useful to verify the incident.
Verify relation between the symptom and the condition when the symptom is detected.

>> GO TO 6.

5.PERFORM DTC CONFIRMATION PROCEDURE

Perform DTC CONFIRMATION PROCEDURE for the displayed DTC, and then make sure that DTC is detected again.
If two or more DTCs are detected, refer to EC-609, "DTC Inspection Priority Chart" and determine trouble diagnosis order.

NOTE:

- Freeze frame data is useful if the DTC is not detected.
- Perform Component Function Check if DTC CONFIRMATION PROCEDURE is not included on Service Manual. This simplified check procedure is an effective alternative though DTC cannot be detected during this check.

If the result of Component Function Check is NG, it is the same as the detection of DTC by DTC CONFIRMATION PROCEDURE.

Is DTC detected?

YES >> GO TO 10.
NO >> Check according to GI-47, "Intermittent Incident".

6. PERFORM BASIC INSPECTION

Perform EC-665, "Work Procedure".

Do you have CONSULT?

YES >> GO TO 7.
NO >> GO TO 9.

7. PERFORM SPEC IN DATA MONITOR MODE

With CONSULT

Make sure that “MAS A/F SE-B1”, “MAS A/F SE-B2”, “B/FUEL SCHDL”, “A/F ALPHA-B1” and “A/F ALPHA-B2” are within the SP value using CONSULT “SPEC” in “DATA MONITOR” mode of “ENGINE”. Refer to EC-676, "Component Function Check".

Is the measurement value within the SP value?

YES >> GO TO 9.
NO >> GO TO 8.

8. DETECT MALFUNCTIONING PART BY TROUBLE DIAGNOSIS - SPECIFICATION VALUE

Detect malfunctioning part according to EC-677, "Diagnosis Procedure".

Is a malfunctioning part detected?

YES >> GO TO 11.
NO >> GO TO 9.

9. DETECT MALFUNCTIONING SYSTEM BY SYMPTOM TABLE

Detect malfunctioning system according to EC-906, "Symptom Table" based on the confirmed symptom in step 4, and determine the trouble diagnosis order based on possible causes and symptoms.

>> GO TO 10.

10. DETECT MALFUNCTIONING PART BY DIAGNOSIS PROCEDURE

Inspect according to Diagnosis Procedure of the system.

NOTE:

The Diagnosis Procedure in EC section described based on open circuit inspection. A short circuit inspection is also required for the circuit check in the Diagnosis Procedure. For details, refer to GI-49, "Circuit Inspection".

Is a malfunctioning part detected?

YES >> GO TO 11.
NO >> Monitor input data from related sensors or check voltage of related ECM terminals using CONSULT. Refer to EC-593, "Reference Value".

11. REPAIR OR REPLACE THE MALFUNCTIONING PART

1. Repair or replace the malfunctioning part.
2. Reconnect parts or connectors disconnected during Diagnosis Procedure again after repair and replacement.
3. Check DTC. If DTC is displayed, erase it.
   - With CONSULT: Refer to “How to Erase DTC and 1st Trip DTC” in EC-581, "CONSULT Function".
   - Without CONSULT: Refer to “How to Erase Self-diagnostic Results” in EC-578, "On Board Diagnosis Function".

>> GO TO 12.

12. FINAL CHECK

When DTC was detected in step 2, perform DTC CONFIRMATION PROCEDURE or Component Function Check again, and then make sure that the malfunction have been completely repaired.
When symptom was described from the customer, refer to confirmed symptom in step 3 or 4, and make sure that the symptom is not detected.

Is DTC detected and does symptom remain?

YES-1 >> DTC is detected: GO TO 10.
YES-2 >> Symptom remains: GO TO 6.
NO >> Before returning the vehicle to the customer, always erase unnecessary DTC in ECM and TCM (With CONSULT: Refer to “How to Read DTC and 1st Trip DTC” in EC-581, "CONSULT Function", Without CONSULT: Refer to “How to Read Self-diagnostic Results” in EC-578, "On Board Diagnosis Function").

Diagnostic Work Sheet

INFOID:0000000011489513

DESCRIPTION

There are many operating conditions that lead to the malfunction of engine components. A good grasp of such conditions can make troubleshooting faster and more accurate.
In general, each customer feels differently about symptoms. It is important to fully understand the symptoms or conditions for a customer complaint.
Utilize a diagnostic worksheet like the WORKSHEET SAMPLE below in order to organize all the information for troubleshooting.
Some conditions may cause the MIL to illuminate or blink, and DTC to be detected. Examples:

- Vehicle ran out of fuel, which caused the engine to misfire.
- Fuel filler cap was left off or incorrectly screwed on, allowing fuel to evaporate into the atmosphere.

KEY POINTS

WHAT ..... Vehicle & engine model
WHEN ..... Date, Frequencies
WHERE..... Road conditions
HOW ..... Operating conditions, Weather conditions, Symptoms

SEF907L

WORKSHEET SAMPLE

Customer name MR/MS		Model & Year	VIN
Engine #		Trans.	Mileage
Incident Date		Manuf. Date	In Service Date
Fuel and fuel filler cap		☐ Vehicle ran out of fuel causing misfire ☐ Fuel filler cap was left off or incorrectly screwed on.	
Symptoms	☐ Startability	☐ Impossible to start ☐ No combustion ☐ Partial combustion ☐ Partial combustion affected by throttle position ☐ Partial combustion NOT affected by throttle position ☐ Possible but hard to start ☐ Others [ ]	
	☐ Idling	☐ No fast idle ☐ Unstable ☐ High idle ☐ Low idle ☐ Others [ ]	
	☐ Driveability	☐ Stumble ☐ Surge ☐ Knock ☐ Lack of power ☐ Intake backfire ☐ Exhaust backfire ☐ Others [ ]	
	☐ Engine stall	☐ At the time of start ☐ While idling ☐ While accelerating ☐ While decelerating ☐ Just after stopping ☐ While loading	
Incident occurrence		☐ Just after delivery ☐ Recently ☐ In the morning ☐ At night ☐ In the daytime	
Frequency		☐ All the time ☐ Under certain conditions ☐ Sometimes	
Weather conditions		☐ Not affected	
	Weather	☐ Fine ☐ Raining ☐ Snowing ☐ Others [ ]	
	Temperature	☐ Hot ☐ Warm ☐ Cool ☐ Cold ☐ Humid °F	
Engine conditions		☐ Cold ☐ During warm-up ☐ After warm-up Engine speed 0 2,000 4,000 6,000 8,000 rpm	
Road conditions		☐ In town ☐ In suburbs ☐ Highway ☐ Off road (up/down)	
Driving conditions		☐ Not affected ☐ At starting ☐ While idling ☐ At racing ☐ While accelerating ☐ While cruising ☐ While decelerating ☐ While turning (RH/LH) Vehicle speed 0 10 20 30 40 50 60 MPH	
Malfunction indicator lamp		☐ Turned on ☐ Not turned on	

MTBL0017

SERVICE AFTER REPLACING OR REMOVING ENGINE PARTS

Description

INFOID:0000000011489514

SPECIAL REPAIR REQUIREMENT

×: Applicable

Part name	Service performed		Required service	Reference
	Replacement	Removal*1		
ECM	×		Additional service when replacing ECM	EC-657
		×	Accelerator pedal released position learning	EC-659
			Throttle valve closed position learning	EC-660
			Idle air volume learning	EC-661
			VIN registration	EC-664
Accelerator Pedal	×	×	Accelerator pedal released position learning	EC-659
Electric throttle	×	×	Throttle valve closed position learning	EC-660
	×		Idle air volume learning	EC-661
Engine assembly	×		Throttle valve closed position learning*2	EC-660
			Idle air volume learning*2	EC-661
		×	Accelerator pedal released position learning	EC-659
			Throttle valve closed position learning*2	EC-660

*1: Harness connector disconnection included.
*2: Replacement of engine with a electric throttle.

ADDITIONAL SERVICE WHEN REPLACING ECM

Description

INFOID:0000000011489515

When replacing ECM, the following procedure must be performed. (For details, refer to EC-657, "Work Procedure".)

PROGRAMMING OPERATION

NOTE:
After replacing with a blank ECM, programming is required to write ECM information. Be sure to follow the procedure to perform the programming.

BEFORE REPLACEMENT

When replacing ECM, perform “SAVING DATA FOR REPLC CPU” in “WORK SUPPORT” of “ENGINE” by using CONSULT to save current ECM data before replacement.

AFTER REPLACEMENT

After replacing ECM, the following items must be performed:
- Write data after replace CPU
- Accelerator pedal released position learning
- Throttle valve closed position learning
- Idle air volume learning

Work Procedure

INFOID:0000000011489516

1. SAVE ECM DATA

With CONSULT
1. Turn ignition switch OFF.
2. Reconnect all harness connectors disconnected.
3. Turn ignition switch ON.
4. Select “SAVING DATA FOR REPLC CPU” in “WORK SUPPORT” mode of “ENGINE” using CONSULT.
5. Follow the instruction of CONSULT display.

NOTE:
- Necessary data in ECM is copied and saved to CONSULT.
- Go to Step 2 regardless of with or without success in saving data.

>> GO TO 2.

2. CHECK ECM PART NUMBER

Check ECM part number to see whether it is blank ECM or not.
NOTE:
- Part number of blank ECM is 23703 - ×××××.
- Check part number when ordering ECM or the one included in the label on the container box.

Is the ECM a blank ECM?

YES >> GO TO 3.
NO >> GO TO 5.

3. SAVE ECM PART NUMBER

Read out the part number from the old ECM and save the number, following the programming instructions. Refer to CONSULT Operation Manual.
NOTE:
- The ECM part number is saved in CONSULT.
- Even when ECM part number is not saved in CONSULT, go to 4.

>> GO TO 4.

4. PERFORM ECM PROGRAMMING

After replacing ECM, perform the ECM programming. Refer to CONSULT Operation Manual.
NOTE:
- Refer to EC-916, "Removal and Installation" for replacement of ECM.

- During programming, maintain the following conditions:
- Ignition switch: ON
- Electric load: OFF
- Brake pedal: Not depressed
- Battery voltage: 12 – 13.5 V (Be sure to check the value of battery voltage by selecting “BATTERY VOLT” in “Data monitor” of CONSULT.)

>> GO TO 6.

5. REPLACE ECM

Replace ECM. Refer to EC-916, "Removal and Installation".

>> GO TO 6.

6. PERFORM INITIALIZATION OF IVIS (NATS) SYSTEM AND REGISTRATION OF ALL IVIS (NATS) IGNITION KEY IDS

Refer to SEC-76, "ECM : Work Procedure".

>> GO TO 7.

7. CHECK ECM DATA STATUS

Check if the data is successfully copied from the ECM at Step 1 (before replacement) and saved in CONSULT.

Is the data saved successfully?

YES >> GO TO 8.
NO >> GO TO 9.

8. WRITE ECM DATA

With CONSULT

1. Select “WRITING DATA FOR REPLC CPU” in “WORK SUPPORT” mode of “ENGINE” using CONSULT.
2. Follow the instruction of CONSULT display.

NOTE:
The data saved by “SAVING DATA FOR REPLC CPU” is written to ECM.

>> GO TO 10.

9. PERFORM VIN REGISTRATION

Refer to EC-664, "Work Procedure".

>> GO TO 10.

10. PERFORM ACCELERATOR PEDAL RELEASED POSITION LEARNING

Refer to EC-659, "Work Procedure".

>> GO TO 11.

11. PERFORM THROTTLE VALVE CLOSED POSITION LEARNING

Refer to EC-660, "Work Procedure".

>> GO TO 12.

12. PERFORM IDLE AIR VOLUME LEARNING

Refer to EC-661, "Work Procedure".

>> END

ACCELERATOR PEDAL RELEASED POSITION LEARNING

Description

INFOID:0000000011489517

Accelerator Pedal Released Position Learning is a function of ECM to learn the fully released position of the accelerator pedal by monitoring the accelerator pedal position sensor output signal. It must be performed each time the harness connector of the accelerator pedal position sensor or ECM is disconnected.

Work Procedure

INFOID:0000000011489518

1.START

1. Check that accelerator pedal is fully released.
2. Turn ignition switch ON and wait at least 2 seconds.
3. Turn ignition switch OFF and wait at least 10 seconds.
4. Turn ignition switch ON and wait at least 2 seconds.
5. Turn ignition switch OFF and wait at least 10 seconds.

>> END

THROTTLE VALVE CLOSED POSITION LEARNING

Description

INFOID:0000000011489519

Throttle Valve Closed Position Learning is a function of ECM to learn the fully closed position of the throttle valve by monitoring the throttle position sensor output signal. It must be performed each time the harness connector of electric throttle control actuator or ECM is disconnected or electric throttle control actuator is cleaned.

Work Procedure

INFOID:0000000011489520

1.START

WITH CONSULT

1. Turn ignition switch ON.
2. Select “CLSD THL POS LEARN” in “WORK SUPPORT” mode.
3. Follow the instructions on the CONSULT display.
4. Turn ignition switch OFF and wait at least 10 seconds.
   Check that throttle valve moves during the above 10 seconds by confirming the operating sound.

WITHOUT CONSULT

1. Start the engine.
   NOTE:
   Coolant temperature is less than 25°C (77°F) before engine starts.
2. Warm up the engine.
   NOTE:
   Warm up the engine until “COOLANT TEMP/S” on “DATA MONITOR” of CONSULT reaches more than 65°C (149°F).
3. Turn ignition switch OFF and wait at least 10 seconds.
   NOTE:
   Check that throttle valve moves during the above 10 seconds by confirming the operating sound.

>> END

IDLE AIR VOLUME LEARNING

Description

INFOID:0000000011489521

Idle Air Volume Learning is a function of ECM to learn the idle air volume that keeps engine idle speed within the specific range. It must be performed under the following conditions:
- Each time the electric throttle control actuator or ECM is replaced.
- Idle speed or ignition timing is out of the specification.

Work Procedure

INFOID:0000000011489522

1.PRECONDITIONING

Check that all of the following conditions are satisfied.
Learning will be cancelled if any of the following conditions are missed for even a moment.
- Battery voltage: More than 12.9 V (At idle)
- Engine coolant temperature: 70 - 100°C (158 - 212°F)
- Selector lever position: P or N
- Electric load switch: OFF
  (Air conditioner, head lamp, rear window defogger)
  On vehicles equipped with daytime light systems, if the parking brake is applied before the engine is started the head lamp will not illuminate.
- Steering wheel: Neutral (Straight-ahead position)
- Vehicle speed: Stopped
- Transmission: Warmed-up
- With CONSULT: Drive vehicle until “ATF TEMP SEN” in “DATA MONITOR” mode of “CVT” system indicates less than 0.9 V.
- Without CONSULT: Drive vehicle for 10 minutes.

Will CONSULT be used?

YES >> GO TO 2.
NO >> GO TO 3.

2.PERFORM IDLE AIR VOLUME LEARNING

With CONSULT
1. Perform Accelerator Pedal Released Position Learning. Refer to EC-659, "Work Procedure".
2. Perform Throttle Valve Closed Position Learning. Refer to EC-660, "Work Procedure".
3. Start engine and warm it up to normal operating temperature.
4. Select “IDLE AIR VOL LEARN” in “WORK SUPPORT” mode.
5. Touch “START” and wait 20 seconds.

Is “CMPLT” displayed on CONSULT screen?

YES >> GO TO 4.
NO >> GO TO 5.

3.PERFORM IDLE AIR VOLUME LEARNING

Without CONSULT
NOTE:
- **It is better to count the time accurately with a clock.**
- **It is impossible to switch the diagnostic mode when an accelerator pedal position sensor circuit has a malfunction.**

1. Perform Accelerator Pedal Released Position Learning. Refer to EC-659, "Work Procedure".
2. Perform Throttle Valve Closed Position Learning. Refer to EC-660, "Work Procedure".
3. Start engine and warm it up to normal operating temperature.
4. Turn ignition switch OFF and wait at least 10 seconds.
5. Confirm that accelerator pedal is fully released, turn ignition switch ON and wait 3 seconds.
6. Repeat the following procedure quickly 5 times within 5 seconds.
   - Fully depress the accelerator pedal.
   - Fully release the accelerator pedal.
7. Wait 7 seconds, fully depress the accelerator pedal for approx. 20 seconds until the MIL stops blinking and turns ON.
8. Fully release the accelerator pedal within 3 seconds after the MIL turns ON.

9. Start engine and let it idle.
10. Wait 20 seconds.

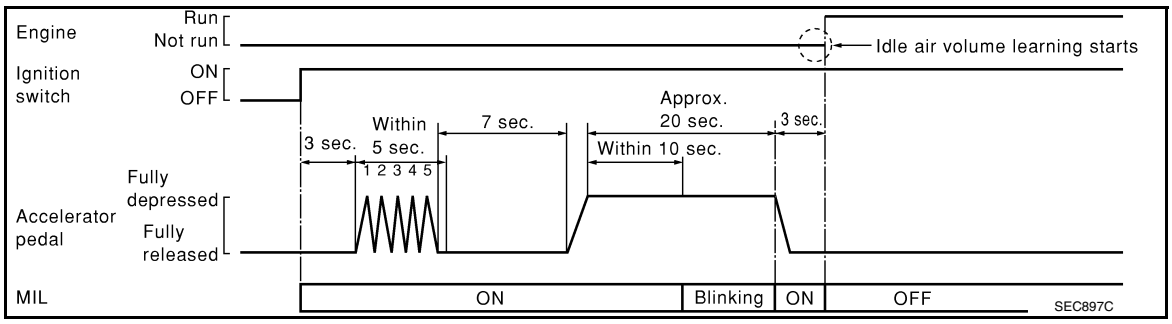

>> GO TO 4.

4. CHECK IDLE SPEED AND IGNITION TIMING

Rev up the engine 2 or 3 times and check that idle speed and ignition timing are within the specifications.
For procedure, refer to EC-911, "Work Procedure" and EC-912, "Work Procedure".
For specifications, refer to EC-917, "Idle Speed" and EC-917, "Ignition Timing".

Is the inspection result normal?

YES >> INSPECTION END
NO >> GO TO 5.

5. DETECT MALFUNCTIONING PART-I

Check the following
- Check that throttle valve is fully closed.
- Check PCV valve operation.
- Check that downstream of throttle valve is free from air leakage.

Is the inspection result normal?

YES >> GO TO 6.
NO >> Repair or replace malfunctioning part.

6. DETECT MALFUNCTIONING PART-II

Engine component parts and their installation condition are questionable. Check and eliminate the cause of the incident.
It is useful to perform “TROUBLE DIAGNOSIS - SPECIFICATION VALUE”. Refer to EC-676, "Description".
If any of the following conditions occur after the engine has started, eliminate the cause of the incident and perform Idle Air Volume Learning again:
- Engine stalls.
- Incorrect idle.

>> INSPECTION END

MIXTURE RATIO SELF-LEARNING VALUE CLEAR

Description

INFOID:0000000011489523

This describes show to erase the mixture ratio self-learning value. For the actual procedure, follow the instructions in “Diagnosis Procedure”.

Work Procedure

INFOID:0000000011489524

1.START

With CONSULT

1. Start engine and warm it up to normal operating temperature.
2. Select “SELF-LEARNING CONT” in “WORK SUPPORT” mode with CONSULT.
3. Clear mixture ratio self-learning value by touching “CLEAR”.

With GST

1. Start engine and warm it up to normal operating temperature.
2. Turn ignition switch OFF.
3. Disconnect mass air flow sensor harness connector.
4. Restart engine and let it idle for at least 5 seconds.
5. Stop engine and reconnect mass air flow sensor harness connector.
6. Select Service $03 with GST. Check that DTC P0102 is detected.
7. Select Service $04 with GST to erase the DTC P0102.

>> END

VIN REGISTRATION

Description

INFOID:0000000011489525

VIN Registration is an operation to register VIN in ECM. It must be performed each time ECM is replaced.

Work Procedure

INFOID:0000000011489526

1. CHECK VIN

Check the VIN of the vehicle and note it. Refer to GI-25, "Identification Plate".

>> GO TO 2.

2. PERFORM VIN REGISTRATION

With CONSULT

1. Turn ignition switch ON with engine stopped.
2. Select “VIN REGISTRATION” in “WORK SUPPORT” mode.
3. Follow the instructions on the CONSULT display.

>> END

BASIC INSPECTION

Work Procedure

INFOID:0000000011489527

1. INSPECTION START

1. Check service records for any recent repairs that may indicate a related malfunction, or a current need for scheduled maintenance.
2. Open engine hood and check the following:
- Harness connectors for improper connections
- Wiring harness for improper connections, pinches and cut
- Vacuum hoses for splits, kinks and improper connections
- Hoses and ducts for leakage
- Air cleaner clogging
- Gasket
3. Check that electrical or mechanical loads are not applied.
- Head lamp switch is OFF.
- Air conditioner switch is OFF.
- Rear window defogger switch is OFF.
- Steering wheel is in the straight-ahead position, etc.

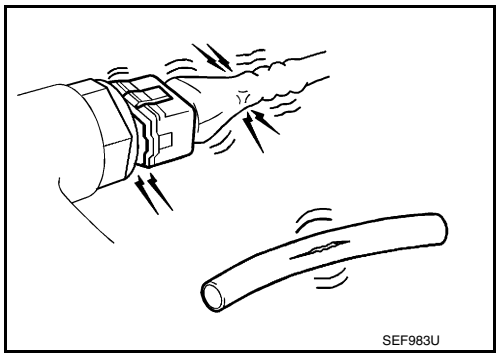

4. Start engine and warm it up until engine coolant temperature indicator points to the middle of gauge.
Check that engine stays below 1,000 rpm.

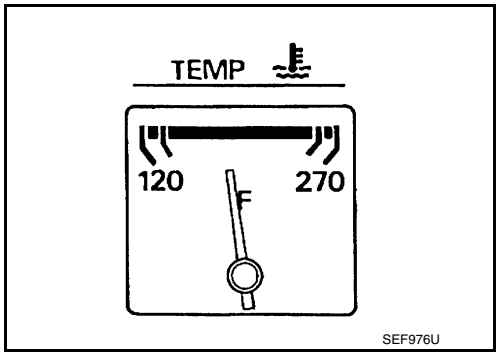

5. Run engine at approximately 2,000 rpm for approximately 2 minutes under no load.
6. Check that no DTC is displayed with CONSULT or GST.

Are any DTCs detected?

YES >> GO TO 2.
NO >> GO TO 3.

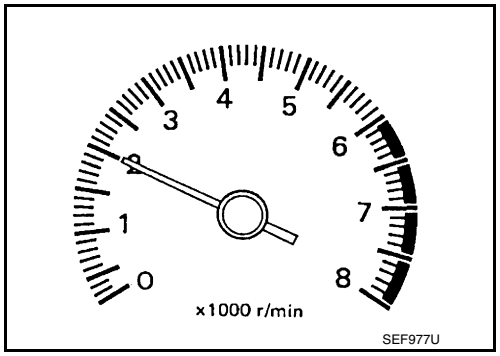

2. REPAIR OR REPLACE

Repair or replace components as necessary according to corresponding Diagnostic Procedure.

>> GO TO 3

3. CHECK TARGET IDLE SPEED

1. Run engine at approximately 2,000 rpm for approximately 2 minutes under no load.

2. Rev engine (2,000 to 3,000 rpm) 2 or 3 times under no load, then run engine at idle speed for approximately 1 minute.
3. Check idle speed.
   For procedure, refer to EC-911, "Work Procedure".
   For specification, refer to EC-917, "Idle Speed".

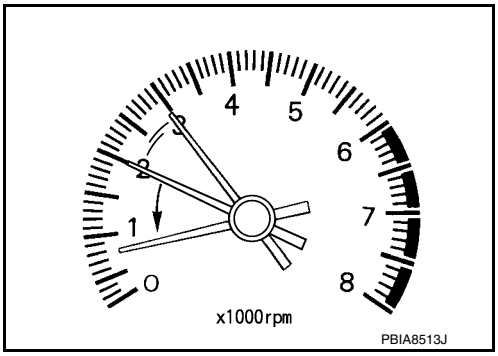

Is the inspection result normal?

YES >> GO TO 10.
NO >> GO TO 4.

4. PERFORM ACCELERATOR PEDAL RELEASED POSITION LEARNING

1. Stop engine.
2. Perform EC-659, "Work Procedure".

>> GO TO 5.

5. PERFORM THROTTLE VALVE CLOSED POSITION LEARNING

Perform EC-660, "Work Procedure".

>> GO TO 6.

6. PERFORM IDLE AIR VOLUME LEARNING

Perform EC-661, "Work Procedure".

Is Idle Air Volume Learning carried out successfully?

YES >> GO TO 7.
NO >> Follow the instruction of Idle Air Volume Learning. Then GO TO 4.

7. CHECK IDLE SPEED AGAIN

1. Start engine and warm it up to normal operating temperature.
2. Check idle speed.
   For procedure, refer to EC-911, "Work Procedure".
   For specification, refer to EC-917, "Idle Speed".

Is the inspection result normal?

YES >> GO TO 10.
NO >> GO TO 8.

8. DETECT MALFUNCTIONING PART

Check the Following.
- Check camshaft position sensor (PHASE) and circuit. Refer to EC-768, "Diagnosis Procedure".
- Check crankshaft position sensor (POS) and circuit. Refer to EC-765, "Diagnosis Procedure".

Is the inspection result normal?

YES >> GO TO 9.
NO >> Repair or replace malfunctioning part. Then GO TO 4.

9. CHECK ECM FUNCTION

1. Substitute with a non-malfunctioning ECM to check ECM function. (ECM may be the cause of the incident, although this is rare.)
2. Perform initialization of NVIS (NATS) system and registration of all NVIS (NATS) ignition key IDs. Refer to SEC-76, "ECM : Work Procedure".

>> GO TO 4.

10. CHECK IGNITION TIMING

1. Run engine at idle.
2. Check ignition timing with a timing light.
   For procedure, refer to EC-912, "Work Procedure".

For specification, refer to EC-917, "Ignition Timing".

Is the inspection result normal?

YES >> GO TO 19.
NO >> GO TO 11.

11. PERFORM ACCELERATOR PEDAL RELEASED POSITION LEARNING

1. Stop engine.
2. Perform EC-659, "Work Procedure".

>> GO TO 12.

12. PERFORM THROTTLE VALVE CLOSED POSITION LEARNING

Perform EC-660, "Work Procedure".

>> GO TO 13.

13. PERFORM IDLE AIR VOLUME LEARNING

Perform EC-661, "Work Procedure".

Is Idle Air Volume Learning carried out successfully?

YES >> GO TO 14.
NO >> Follow the instruction of Idle Air Volume Learning. Then GO TO 4.

14. CHECK IDLE SPEED AGAIN

1. Start engine and warm it up to normal operating temperature.
2. Check idle speed.
   For procedure, refer to EC-911, "Work Procedure".
   For specification, refer to EC-917, "Idle Speed".

Is the inspection result normal?

YES >> GO TO 15.
NO >> GO TO 17.

15. CHECK IGNITION TIMING AGAIN

1. Run engine at idle.
2. Check ignition timing with a timing light.
   For procedure, refer to EC-912, "Work Procedure".
   For specification, refer to EC-917, "Ignition Timing".

Is the inspection result normal?

YES >> GO TO 19.
NO >> GO TO 16.

16. CHECK TIMING CHAIN INSTALLATION

Check timing chain installation. Refer to EM-63, "Exploded View".

Is the inspection result normal?

YES >> GO TO 17.
NO >> Repair the timing chain installation. Then GO TO 4.

17. DETECT MALFUNCTIONING PART

Check the following.
- Check camshaft position sensor (PHASE) and circuit. Refer to EC-768, "Diagnosis Procedure".
- Check crankshaft position sensor (POS) and circuit. Refer to EC-765, "Diagnosis Procedure".

Is the inspection result normal?

YES >> GO TO 18.
NO >> Repair or replace malfunctioning part. Then GO TO 4.

18. CHECK ECM FUNCTION

1. Substitute with a non-malfunctioning ECM to check ECM function. (ECM may be the cause of the incident, although this is rare.)

2. Perform initialization of NVIS (NATS) system and registration of all NVIS (NATS) ignition key IDs. Refer to EC-657, "Work Procedure".

>> GO TO 4.

19. INSPECTION END

If ECM is replaced during this BASIC INSPECTION procedure, perform EC-657, "Work Procedure".

>> INSPECTION END

FUEL PRESSURE

Work Procedure

INFOID:0000000011489528

FUEL PRESSURE RELEASE

With CONSULT

1. Turn ignition switch ON.
2. Perform “FUEL PRESSURE RELEASE” in “WORK SUPPORT” mode with CONSULT.
3. Start engine.
4. After engine stalls, crank it 2 or 3 times to release all fuel pressure.
5. Turn ignition switch OFF.

Without CONSULT

1. Remove fuel pump fuse located in IPDM E/R.
2. Start engine.
3. After engine stalls, crank it 2 or 3 times to release all fuel pressure.
4. Turn ignition switch OFF.
5. Reinstall fuel pump fuse after servicing fuel system.

FUEL PRESSURE CHECK

CAUTION:

Before disconnecting fuel line, release fuel pressure from fuel line to eliminate danger.

NOTE:

- **Prepare pans or saucers under the disconnected fuel line because the fuel may spill out. The fuel pressure cannot be completely released because this models do not have fuel return system.**
- **Be careful not to scratch or get the fuel hose connection area dirty when servicing, so that the quick connector o-ring maintains seal ability.**
- **Use Fuel Pressure Gauge Kit [SST: — (J-44321)] and Fuel Pressure Adapter [SST: — (J-44321-6)] to check fuel pressure.**

1. Release fuel pressure to zero.
2. Remove fuel hose using Quick Connector Release [SST: — (J-45488)].
   - Do not twist or kink fuel hose because it is plastic hose.
   - Do not remove fuel hose from quick connector.
   - Keep fuel hose connections clean.
3. Install Fuel Pressure Adapter [SST: — (J-44321-6)] (B) and Fuel Pressure Gauge kit [SST: — (J44321)] (A) as shown in figure.
   - Do not distort or bend fuel rail tube when installing fuel pressure gauge adapter.
   - When reconnecting fuel hose, check the original fuel hose for damage and abnormality.

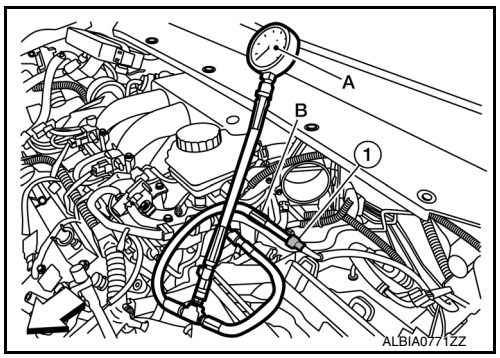

1 : Quick connector

4. Turn ignition switch ON (reactivate fuel pump) and check for fuel leakage.
5. Start engine and check for fuel leakage.
6. Read the indication of fuel pressure gauge kit [SST: — (J-44321)].
   - During fuel pressure check, check for fuel leakage from fuel connection every 3 minutes.

At idling : Approximately 350 kPa (3.57 kg/cm^2, 51 psi)

7. If result is unsatisfactory, go to next step.
8. Check the following.
   - Fuel hoses and fuel tubes for clogging
   - Fuel filter for clogging
   - Fuel pump

- Fuel pressure regulator for clogging

9. If OK, replace fuel pressure regulator.
   If NG, repair or replace malfunctioning part.
10. Before disconnecting Fuel Pressure Gauge kit [SST: — (J-44321)] and Fuel Pressure Adapter [SST: — (J-44321-6)], release fuel pressure to zero.

HOW TO SET SRT CODE

Description

INFOID:0000000011489529

OUTLINE

In order to set all SRTs, the self-diagnoses as in the “SRT ITEM” table must have been performed at least once. Each diagnosis may require actual driving for a long period of time under various conditions.

SRT ITEM

The table below shows required self-diagnostic items to set the SRT to “CMPLT”.

SRT item*1 (CONSULT indication)	Performance Priority*2	Required self-diagnostic items to set the SRT to “CMPLT”	Corresponding DTC No.
CATALYST	1	Three way catalyst function	P0420, P0430
HO2S	1	Air fuel ratio (A/F) sensor 1	P014C, P014D, P014E, P014F
		Heated oxygen sensor 2	P0137, P0157
		Heated oxygen sensor 2	P0138, P0158
		Heated oxygen sensor 2	P0139, P0159
EGR/VVT SYSTEM	2	Intake value timing control function	P0011, P0021

*1: Though displayed on the CONSULT screen, “HO2S HTR” is not SRT item.
*2: If completion of several SRTs is required, perform driving patterns (DTC confirmation procedure), one by one based on the priority for models with CONSULT.

SRT SERVICE PROCEDURE

If a vehicle has failed the state emissions inspection due to one or more SRT items indicating “INCMP”, review the flowchart diagnostic sequence, referring to the following flowchart.

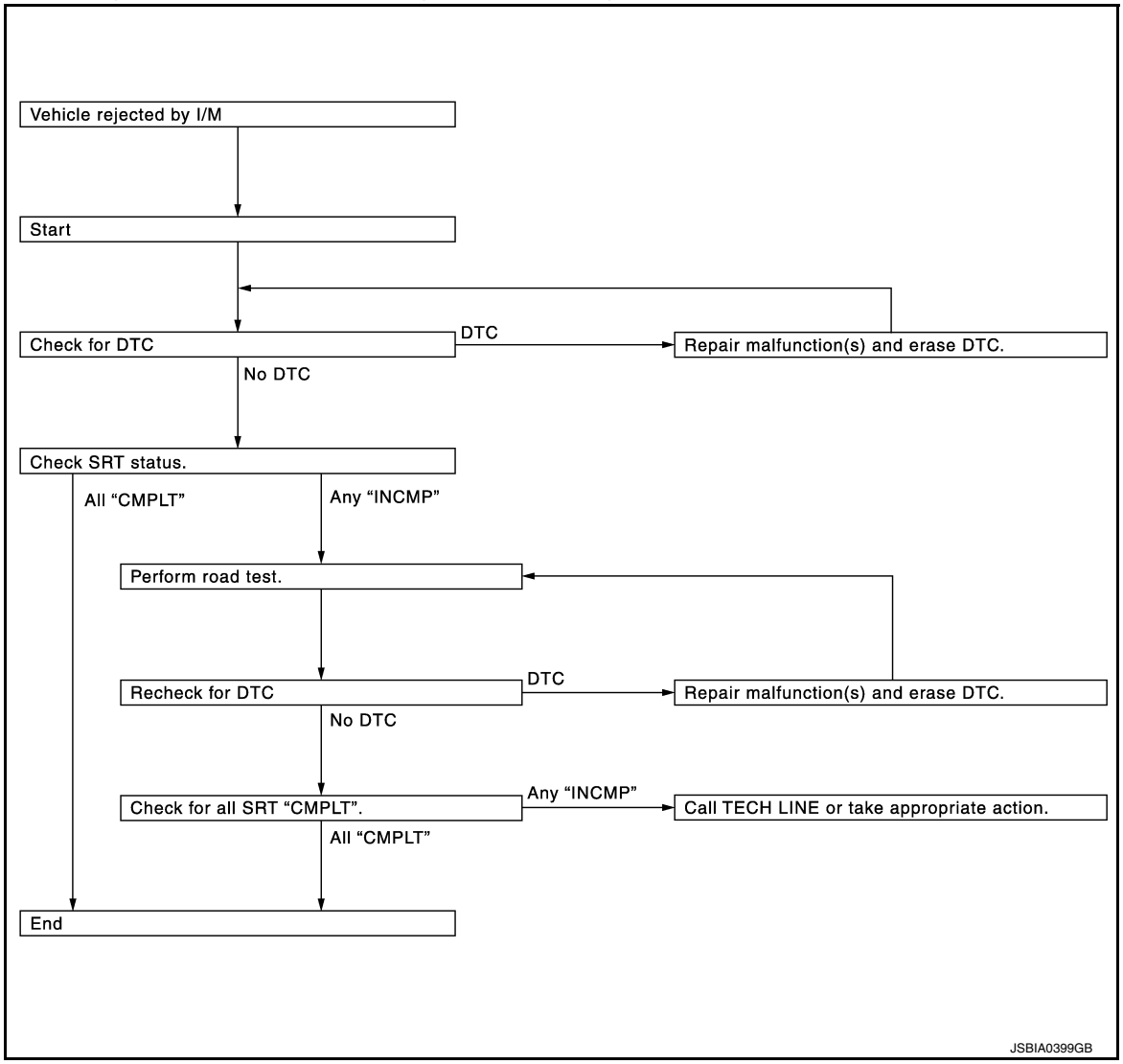

SRT Set Driving Pattern

INFOID:0000000011489530

CAUTION:

Always drive the vehicle in safe manner according to traffic conditions and obey all traffic laws.

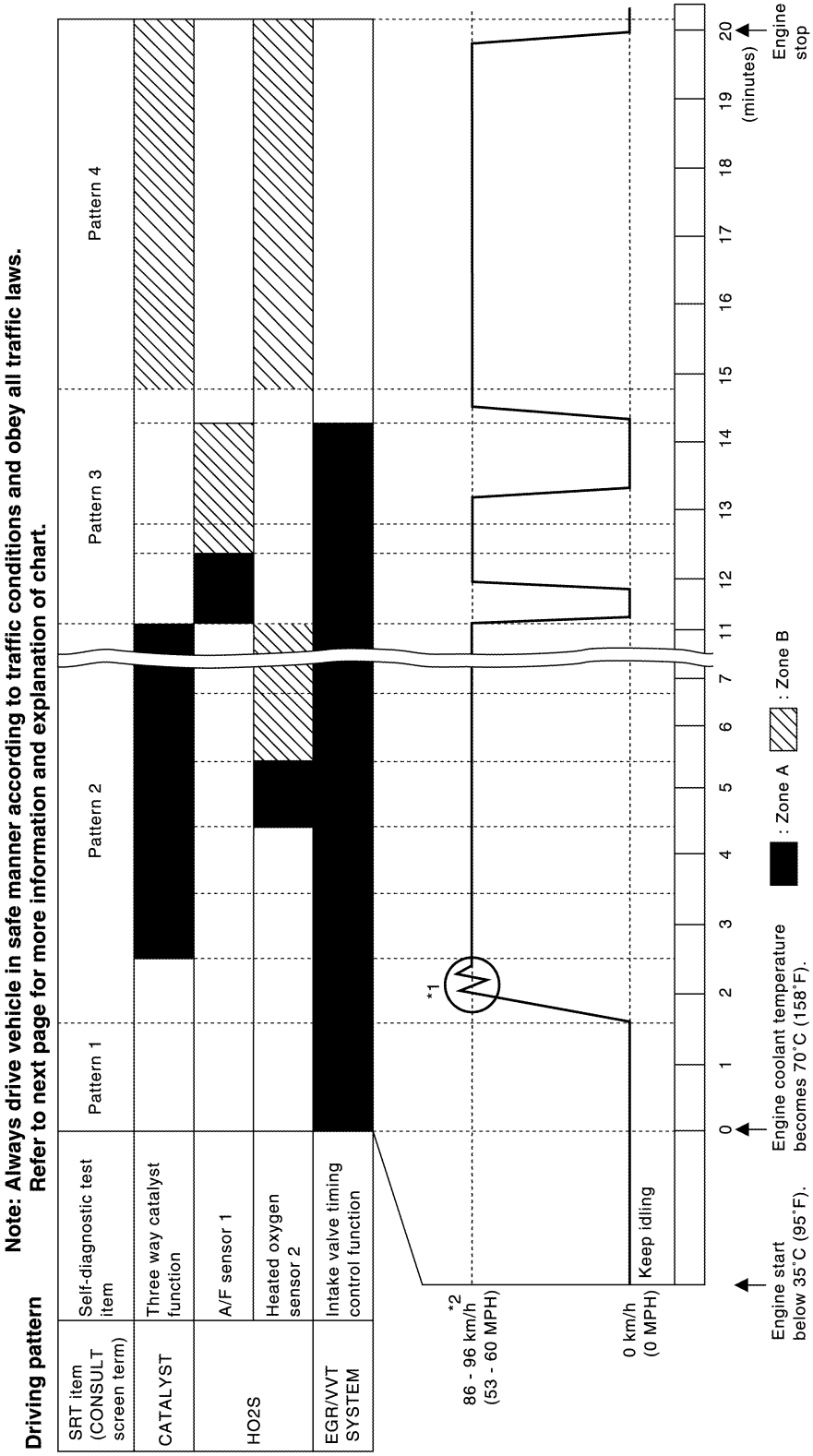

*1: Depress the accelerator pedal until vehicle speed is 90 km/h (56 MPH), then release the accelerator pedal and keep it released for more than 10 seconds. Depress the accelerator pedal until vehicle speed is 90 km/h (56 MPH) again.

*2: Checking the vehicle speed with GST is advised.

- The time required for each diagnosis varies with road surface conditions, weather, altitude, individual driving habits, etc.
- “Zone A” is the fastest time where required for the diagnosis under normal conditions*. If the diagnosis is not completed within “Zone A”, the diagnosis can still be performed within “Zone B”.

*: Normal conditions
- Sea level
- Flat road
- Ambient air temperature: 20 – 30°C (68 – 86°F)

NOTE:
Diagnosis is performed as quickly as possible under normal conditions. However, under other conditions, diagnosis may also be performed. [For example: ambient air temperature other than 20 – 30°C (68 – 86°F)]

Work Procedure

INFOID:0000000011489531

1. CHECK DTC

Check DTC.

Is any DTC detected?

YES >> Repair malfunction(s) and erase DTC. Refer to EC-610, "DTC Index".
NO >> GO TO 2.

2. CHECK SRT STATUS

With CONSULT
Select “SRT STATUS” in “DTC & SRT CONFIRMATION” mode with CONSULT.

Without CONSULT
Perform “SRT status” mode with EC-578, "On Board Diagnosis Function".

With GST
Select Service $01 with GST.

Is SRT code(s) set?

YES >> END.
NO-1 >> With CONSULT: GO TO 3.
NO-2 >> Without CONSULT: GO TO 4.

3. DTC CONFIRMATION PROCEDURE

1. Select “SRT WORK SUPPORT” in “DTC & SRT CONFIRMATION” mode with CONSULT.
2. For SRT(s) that is not set, perform the corresponding “DTC CONFIRMATION PROCEDURE” according to the “Performance Priority” in the “SRT ITEM” table. Refer to EC-671, "Description".
3. Check DTC.

Is any DTC detected?

YES >> Repair malfunction(s) and erase DTC. Refer to EC-610, "DTC Index".
NO >> GO TO 9.

4. PERFORM ROAD TEST

- Check the “Performance Priority” in the “SRT ITEM” table. Refer to EC-671, "Description".
- Perform the most efficient SRT set driving pattern to set the SRT properly. Refer to EC-672, "SRT Set Driving Pattern".
  In order to set all SRTs, the SRT set driving pattern must be performed at least once.

>> GO TO 5.

5. PATTERN 1

1. Check the vehicle condition;
- Engine coolant temperature is –10 to 35°C (14 to 95°F).
- Fuel tank temperature is more than 0°C (32°F).
2. Start the engine.
3. Keep engine idling until the engine coolant temperature is greater than 70°C (158°F)

NOTE:
ECM terminal voltage is follows;
- Engine coolant temperature
- –10 to 35°C (14 to 95°F): 3.0 – 4.3 V
- 70°(158°F): Less than 4.1 V

Refer to EC-593, "Reference Value".

>> GO TO 6.

6. PATTERN 2

1. Drive the vehicle. And depress the accelerator pedal until vehicle speed is 90 km/h (56 MPH), then release the accelerator pedal and keep it released for more than 10 seconds.
2. Depress the accelerator pedal until vehicle speed is 90 km/h (56 MPH) again

NOTE:
- Checking the vehicle speed with GST is advised.
- When steady-state driving is performed again even after it is interrupted, each diagnosis can be conducted. In this case, the time required for diagnosis may be extended.

>> GO TO 7.

7. PATTERN 3

- Operate vehicle following the driving pattern shown in the figure.
- Release the accelerator pedal during deceleration of vehicle speed from 90 km/h (56 MPH) to 0 km/h (0 MPH).

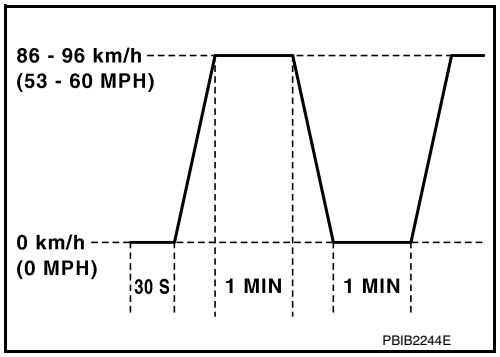

>> GO TO 8.

8. PATTERN 4

- The accelerator pedal must be held very steady during steady-state driving.
- If the accelerator pedal is moved, the test must be conducted again.

>> GO TO 9.

9. CHECK SRT STATUS

With CONSULT
Select “SRT STATUS” in “DTC & SRT CONFIRMATION” mode with CONSULT.

Without CONSULT
Perform “SRT status” mode with EC-578, "On Board Diagnosis Function".

With GST
Select Service $01 with GST.

Is SRT(s) set?

YES >> END.
NO >> Call TECH LINE or take appropriate action.

DTC/CIRCUIT DIAGNOSIS

TROUBLE DIAGNOSIS - SPECIFICATION VALUE

Description

INFOID:0000000011489535

The specification (SP) value indicates the tolerance of the value that is displayed in “SPEC” in “DATA MONITOR” mode of CONSULT during normal operation of the Engine Control System. When the value in “SPEC” in “DATA MONITOR” mode is within the SP value, the Engine Control System is confirmed OK. When the value in “SPEC” in “DATA MONITOR” mode is NOT within the SP value, the Engine Control System may have one or more malfunctions.
The SP value is used to detect malfunctions that may affect the Engine Control System, but will not illuminate the MIL.
The SP value will be displayed for the following three items:
- B/FUEL SCHDL (The fuel injection pulse width programmed into ECM prior to any learned on board correction)
- A/F ALPHA-B1/B2 (The mean value of air-fuel ratio feedback correction factor per cycle)
- MAS A/F SE-B1 (The signal voltage of the mass air flow sensor)

Component Function Check

INFOID:0000000011489536

1.START

Check that all of the following conditions are satisfied.
- Vehicle driven distance: More than 5,000 km (3,107 miles)
- Barometric pressure: 98.3 - 104.3 kPa (1.003 - 1.064 kg/cm^2, 14.25 - 15.12 psi)
- Atmospheric temperature: 20 - 30°C (68 - 86°F)
- Engine coolant temperature: 75 - 95°C (167 - 203°F)
- Transmission: Warmed-up
  - After the engine is warmed up to normal operating temperature, drive vehicle until “FLUID TEMP SE” (CVT fluid temperature sensor signal) indicates more than 60°C (140°F).
- Electrical load: Not applied
  - Rear window defogger switch, air conditioner switch lighting switch are OFF. Steering wheel is straight ahead.
- Engine speed: Idle

>> GO TO 2.

2.PERFORM “SPEC” OF “DATA MONITOR” MODE

With CONSULT
NOTE:
Perform “SPEC” in “DATA MONITOR” mode in maximum scale display.
1. Perform basic inspection. Refer to EC-665, "Work Procedure".
2. Select “B/FUEL SCHDL”, “A/F ALPHA-B1”, “A/F ALPHA-B2” and “MAS A/F SE-B1” in “SPEC” of “DATA MONITOR” mode with CONSULT.
3. Check that monitor items are within the SP value.

Is the measurement value within the SP value?

YES >> INSPECTION END
NO >> Proceed to EC-677, "Diagnosis Procedure".

Diagnosis Procedure

INFOID:0000000011489537

OVERALL SEQUENCE

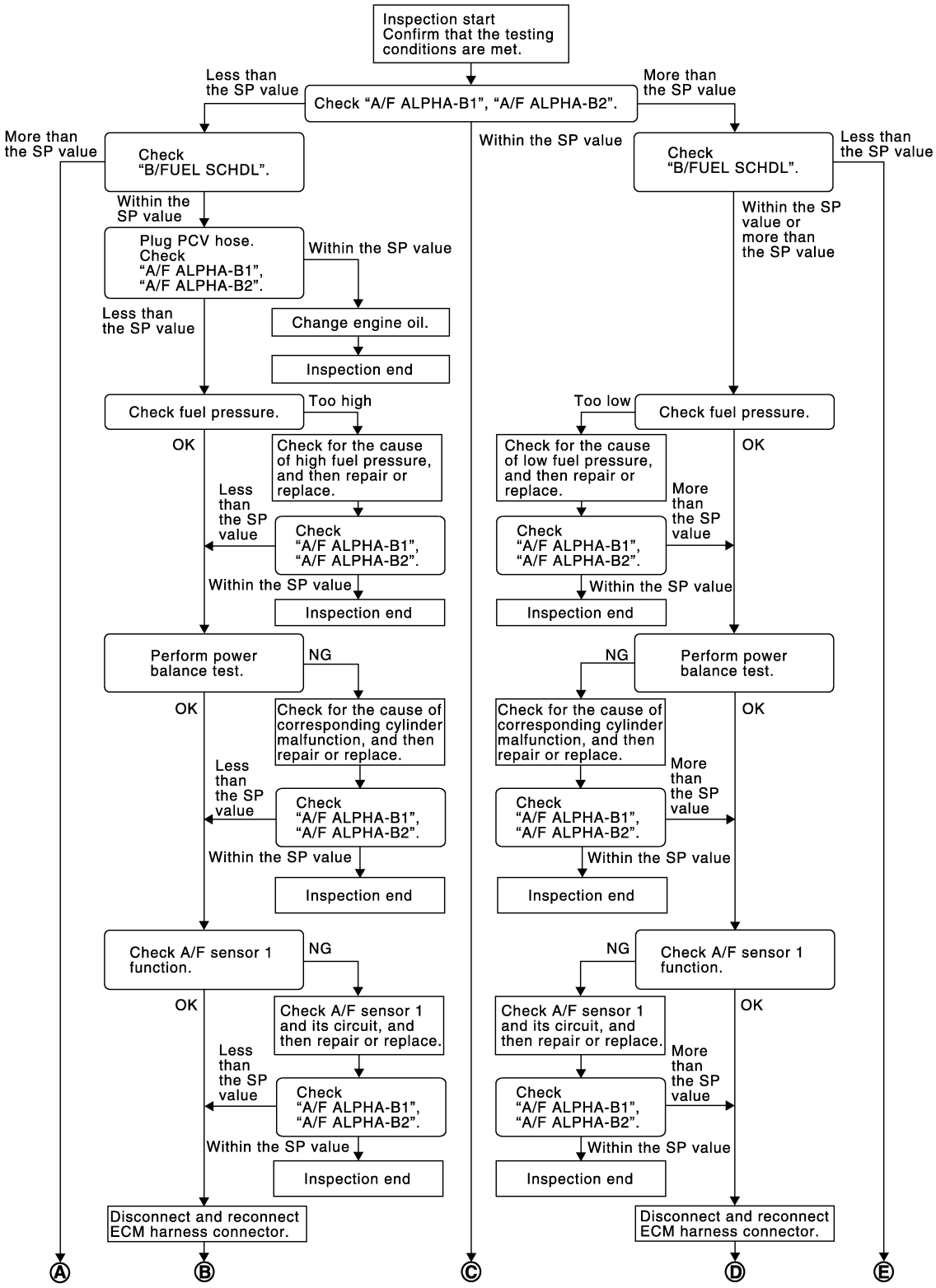

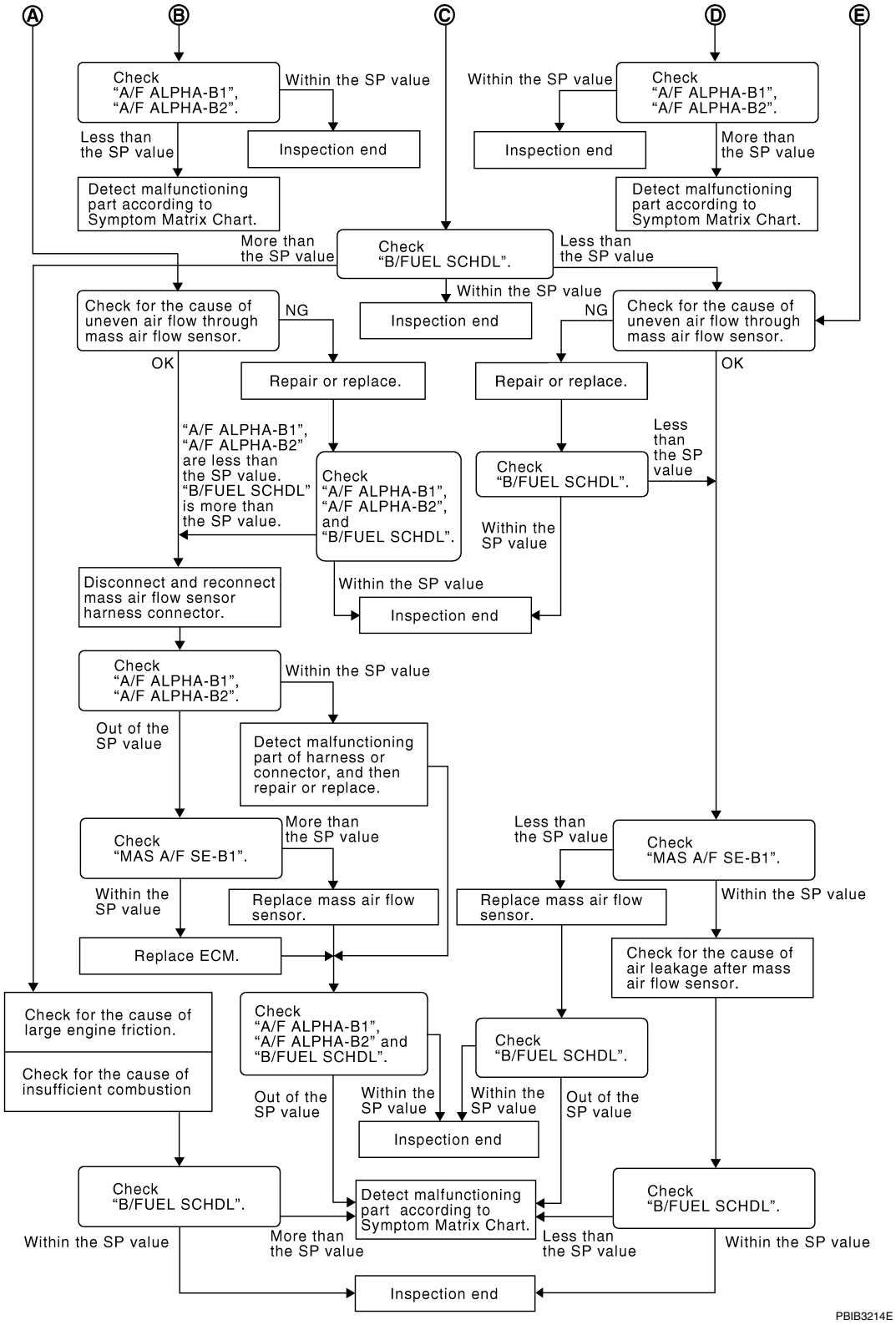

DETAILED PROCEDURE

1. CHECK "A/F ALPHA-B1", "A/F ALPHA-B2"

With CONSULT

1. Start engine.
2. Confirm that the testing conditions are met. Refer to EC-676, "Component Function Check".
3. Select "A/F ALPHA-B1", "A/F ALPHA-B2" in "SPEC" of "DATA MONITOR" mode, and check that each indication is within the SP value.

NOTE:
Check “A/F ALPHA-B1”, “A/F ALPHA-B2” for approximately 1 minute because they may fluctuate. It is NG if the indication is out of the SP value even a little.

Is the measurement value within the SP value?

YES >> GO TO 17.
NO-1 >> Less than the SP value: GO TO 2.
NO-2 >> More than the SP value: GO TO 3.

2. CHECK “B/FUEL SCHDL”

Select “B/FUEL SCHDL” in “SPEC” of “DATA MONITOR” mode, and check that the indication is within the SP value.

Is the measurement value within the SP value?

YES >> GO TO 4.
NO >> More than the SP value: GO TO 19.

3. CHECK “B/FUEL SCHDL”

Select “B/FUEL SCHDL” in “SPEC” of “DATA MONITOR” mode, and check that the indication is within the SP value.

Is the measurement value within the SP value?

YES >> GO TO 6.
NO-1 >> More than the SP value: GO TO 6.
NO-2 >> Less than the SP value: GO TO 25.

4. CHECK “A/F ALPHA-B1”, “A/F ALPHA-B2”

1. Stop the engine.
2. Disconnect PCV hose, and then plug it.
3. Start engine.
4. Select “A/F ALPHA-B1”, “A/F ALPHA-B2” in “SPEC” of “DATA MONITOR” mode, and check that each indication is within the SP value.

Is the measurement value within the SP value?

YES >> GO TO 5.
NO >> GO TO 6.

5. CHANGE ENGINE OIL

1. Stop the engine.
2. Change engine oil.

NOTE:
This symptom may occur when a large amount of gasoline is mixed with engine oil because of driving conditions (such as when engine oil temperature does not rise enough since a journey distance is too short during winter). The symptom will not be detected after changing engine oil or changing driving conditions.

>> INSPECTION END

6. CHECK FUEL PRESSURE

Check fuel pressure. (Refer to EC-669, "Work Procedure".)

Is the inspection result normal?

YES >> GO TO 9.
NO-1 >> Fuel pressure is too high: Replace “fuel filter and fuel pump assembly”, refer to FL-6, "Removal and Installation", and then GO TO 8.
NO-2 >> Fuel pressure is too low: GO TO 7.

7. DETECT MALFUNCTIONING PART

Check fuel hoses and fuel tubes for clogging.

Is the inspection result normal?

YES >> Replace “fuel filter and fuel pump assembly”, refer to FL-6, "Removal and Installation", and then GO TO 8.
NO >> Repair or replace malfunctioning part and then GO TO 8.

8. CHECK “A/F ALPHA-B1”, “A/F ALPHA-B2”

1. Start engine.
2. Select “A/F ALPHA-B1”, “A/F ALPHA-B2” in “SPEC” of “DATA MONITOR” mode, and check that each indication is within the SP value.

Is the measurement value within the SP value?

YES >> INSPECTION END
NO >> GO TO 9.

9. PERFORM POWER BALANCE TEST

1. Perform “POWER BALANCE” in “ACTIVE TEST” mode.
2. Check that the each cylinder produces a momentary engine speed drop.

Is the inspection result normal?

YES >> GO TO 12.
NO >> GO TO 10.

10. DETECT MALFUNCTIONING PART

Check the following below.
- Ignition coil and its circuit (Refer to EC-887, "Component Function Check".)
- Fuel injector and its circuit (Refer to EC-880, "Component Function Check".)
- Intake air leakage
- Low compression pressure (Refer to EM-22, "On-Vehicle Service".)

Is the inspection result normal?

YES >> Replace fuel injector, refer to EM-47, "Removal and Installation", and then GO TO 11.
NO >> Repair or replace malfunctioning part and then GO TO 11.

11. CHECK “A/F ALPHA-B1”, “A/F ALPHA-B2”

1. Start engine.
2. Select “A/F ALPHA-B1”, “A/F ALPHA-B2” in “SPEC” of “DATA MONITOR” mode, and check that each indication is within the SP value.

Is the measurement value within the SP value?

YES >> INSPECTION END
NO >> GO TO 12.

12. CHECK A/F SENSOR 1 FUNCTION

Perform all DTC CONFIRMATION PROCEDURE related with A/F sensor 1.
- For DTC P0130, P0150, refer to EC-712, "DTC Logic".
- For DTC P0131, P0151, refer to EC-716, "DTC Logic".
- For DTC P0132, P0152, refer to EC-719, "DTC Logic".
- For DTC P014C, P014D, P014E, P014F, refer to EC-740, "DTC Logic".

Are any DTCs detected?

YES >> GO TO 15.
NO >> GO TO 13.

13. CHECK A/F SENSOR 1 CIRCUIT

Perform Diagnostic Procedure according to corresponding DTC.

>> GO TO 14.

14. CHECK “A/F ALPHA-B1”, “A/F ALPHA-B2”

1. Start engine.
2. Select “A/F ALPHA-B1”, “A/F ALPHA-B2” in “SPEC” of “DATA MONITOR” mode, and check that each indication is within the SP value.

Is the measurement value within the SP value?

YES >> INSPECTION END
NO >> GO TO 15.

15. DISCONNECT AND RECONNECT ECM HARNESS CONNECTOR

1. Stop the engine.
2. Disconnect ECM harness connector. Check pin terminal and connector for damage, and then reconnect it.

>> GO TO 16.

16. CHECK “A/F ALPHA-B1”, “A/F ALPHA-B2”

1. Start engine.
2. Select “A/F ALPHA-B1”, “A/F ALPHA-B2” in “SPEC” of “DATA MONITOR” mode, and check that each indication is within the SP value.

Is the measurement value within the SP value?

YES >> INSPECTION END
NO >> Detect malfunctioning part according to EC-906, "Symptom Table".

17. CHECK “B/FUEL SCHDL”

Select “B/FUEL SCHDL” in “SPEC” of “DATA MONITOR” mode, and check that the indication is within the SP value.

Is the measurement value within the SP value?

YES >> INSPECTION END
NO-1 >> More than the SP value: GO TO 18.
NO-2 >> Less than the SP value: GO TO 25.

18. DETECT MALFUNCTIONING PART

1. Check for the cause of large engine friction. Refer to the following.
- Engine oil level is too high
- Engine oil viscosity
- Belt tension of power steering, alternator, A/C compressor, etc. is excessive
- Noise from engine
- Noise from transmission, etc.
2. Check for the cause of insufficient combustion. Refer to the following.
- Valve clearance malfunction
- Intake valve timing control function malfunction
- Camshaft sprocket installation malfunction, etc.

>> Repair or replace malfunctioning part, and then GO TO 30.

19. CHECK INTAKE SYSTEM

Check for the cause of uneven air flow through mass air flow sensor. Refer to the following.
- Crushed air ducts
- Malfunctioning seal of air cleaner element
- Uneven dirt of air cleaner element
- Improper specification of intake air system

Is the inspection result normal?

YES >> GO TO 21.
NO >> Repair or replace malfunctioning part, and then GO TO 20.

20. CHECK “A/F ALPHA-B1”, “A/F ALPHA-B2”, AND “B/FUEL SCHDL”

Select “A/F ALPHA-B1”, “A/F ALPHA-B2”, and “B/FUEL SCHDL” in “SPEC” of “DATA MONITOR” mode, and check that each indication is within the SP value.

Is the measurement value within the SP value?

YES >> INSPECTION END
NO >> “B/FUEL SCHDL” is more, “A/F ALPHA-B1”, “A/F ALPHA-B2” are less than the SP value: GO TO 21.

21. DISCONNECT AND RECONNECT MASS AIR FLOW SENSOR HARNESS CONNECTOR

1. Stop the engine.
2. Disconnect mass air flow sensor harness connector. Check pin terminal and connector for damage and then reconnect it again.

>> GO TO 22.

22. CHECK “A/F ALPHA-B1”, “A/F ALPHA-B2”

1. Start engine.
2. Select “A/F ALPHA-B1”, “A/F ALPHA-B2” in “SPEC” of “DATA MONITOR” mode, and check that each indication is within the SP value.

Is the measurement value within the SP value?

YES >> Detect malfunctioning part of mass air flow sensor circuit and repair it. Refer to EC-702, "Diagnosis Procedure". Then GO TO 29.
NO >> GO TO 23.

23. CHECK “MAS A/F SE-B1”

Select “MAS A/F SE-B1” in “SPEC” of “DATA MONITOR” mode, and check that the indication is within the SP value.

Is the measurement value within the SP value?

YES >> GO TO 24.
NO >> More than the SP value: Replace mass air flow sensor, refer to EM-24, "Removal and Installation", and then GO TO 29.

24. REPLACE ECM

Replace ECM. Refer to EC-916, "Removal and Installation".

>> GO TO 29.

25. CHECK INTAKE SYSTEM

Check for the cause of uneven air flow through mass air flow sensor. Refer to the following.
- Crushed air ducts
- Malfunctioning seal in air cleaner element
- Uneven dirt in air cleaner element
- Improper specification in intake air system

Is the inspection result normal?

YES >> GO TO 27.
NO >> Repair or replace malfunctioning part, and then GO TO 26.

26. CHECK “B/FUEL SCHDL”

Select “B/FUEL SCHDL” in “SPEC” of “DATA MONITOR” mode, and check that the indication is within the SP value.

Is the measurement value within the SP value?

YES >> INSPECTION END
NO >> Less than the SP value: GO TO 27.

27. CHECK “MAS A/F SE-B1”

Select “MAS A/F SE-B1” in “SPEC” of “DATA MONITOR” mode, and check that the indication is within the SP value.

Is the measurement value within the SP value?

YES >> GO TO 28.
NO >> Less than the SP value: Replace mass air flow sensor, refer to EM-24, "Removal and Installation", and then GO TO 30.

28. CHECK INTAKE SYSTEM

Check for the cause of air leakage after the mass air flow sensor. Refer to the following.
- Disconnection, looseness, and cracks in air duct
- Looseness of oil filler cap
- Disconnection of oil level gauge
- Open stuck, breakage, hose disconnection, or cracks in PCV valve
- Disconnection or cracks in EVAP purge hose, stuck open EVAP canister purge volume control solenoid valve
- Malfunctioning seal in rocker cover gasket

- Disconnection, looseness, or cracks in hoses, such as a vacuum hose, connecting to intake air system parts
- Malfunctioning seal in intake air system, etc.

>> GO TO 30.

29. CHECK “A/F ALPHA-B1”, “A/F ALPHA-B2”, AND “B/FUEL SCHDL”

Select “A/F ALPHA-B1”, “A/F ALPHA-B2”, and “B/FUEL SCHDL” in “SPEC” of “DATA MONITOR” mode, and check that each indication is within the SP value.

Is the measurement value within the SP value?

YES >> INSPECTION END
NO >> Detect malfunctioning part according to EC-906, "Symptom Table".

30. CHECK “B/FUEL SCHDL”

Select “B/FUEL SCHDL” in “SPEC” of “DATA MONITOR” mode, and then check that the indication is within the SP value.

Is the measurement value within the SP value?

YES >> INSPECTION END
NO >> Detect malfunctioning part according to EC-906, "Symptom Table".

POWER SUPPLY AND GROUND CIRCUIT

Diagnosis Procedure

INFOID:0000000011489538

1.CHECK FUSE

Check that there is no blowout in the following fuses.

Location	Fuse No.	Capacity
IPDM E/R	#44	15 A
	#56	10 A

Is the fuse fusing?

YES >> Replace the fuse after repairing the applicable circuit.
NO >> GO TO 2.

2.CHECK GROUND CONNECTION

1. Turn ignition switch OFF.
2. Check ground connection E9. Refer to PG-56, "Harness Layout".

Is the inspection result normal?

YES >> GO TO 3.
NO >> Repair or replace ground connection.

3.CHECK ECM GROUND CIRCUIT

1. Disconnect ECM harness connectors.
2. Check the continuity between ECM harness connector and ground.

+		–	Continuity
ECM			
Connector	Terminal		
F51	12	Ground	Existed
	16		
E16	123		
	124		
	127		
	128		

Is the inspection result normal?

YES >> GO TO 4.
NO >> Repair or replace error-detected parts.

4.CHECK ECM POWER SUPPLY (MAIN)-I

1. Reconnect ECM harness connector.
2. Turn ignition switch ON.
3. Check the voltage between ECM harness connector terminals.

ECM			Voltage
Connector	+	–	
	Terminal		
E16	121	128	Battery voltage

Is the inspection result normal?

YES >> GO TO 6.
NO >> GO TO 5.

5.CHECK ECM POWER SUPPLY (MAIN) CIRCUIT

1. Turn ignition switch OFF.
2. Disconnect ECM harness connectors.
3. Disconnect IPDM E/R harness connector.
4. Check the continuity between ECM harness connector and IPDM E/R harness connector.

+		–		Continuity
ECM		IPDM E/R		
Connector	Terminal	Connector	Terminal	
E16	121	F19	59	Existed

5. Also check harness for short to ground.

Is the inspection result normal?

YES >> Perform the trouble diagnosis for power supply circuit.
NO >> Repair or replace error-detected parts.

6. CHECK ECM POWER SUPPLY (MAIN)-II

1. Turn ignition switch OFF and wait at least 10 seconds.
2. Check the voltage between ECM harness connector terminals as per the following.

ECM			Condition	Voltage (Approx.)
Connector	+	–		
	Terminal			
E16	121	128	After turning ignition switch OFF, battery voltage will exist for a few seconds	Drop to 0 V

Is the inspection result normal?

YES >> GO TO 9.
NO >> GO TO 7.

7. CHECK ECM RELAY CONTROL SIGNAL

Check the voltage between ECM harness connector terminals as per the following.

ECM				Condition	Voltage (Approx.)
+		–			
Connector	Terminal	Connector	Terminal		
F51	31	E16	128	Ignition switch ON	0 V
				Turn ignition switch OFF and wait at least 10 seconds.	Battery voltage

Is the inspection result normal?

YES >> Check intermittent incident. Refer to GI-47, "Intermittent Incident".
NO >> GO TO 8.

8. CHECK ECM RELAY CONTROL SIGNAL CIRCUIT

1. Turn ignition switch OFF.
2. Disconnect ECM harness connector.
3. Disconnect IPDM E/R harness connector.
4. Check the continuity between ECM harness connector and IPDM E/R harness connector.

+		–		Continuity
ECM		IPDM E/R		
Connector	Terminal	Connector	Terminal	
F51	31	F24	72	Existed

5. Also check harness for short to ground and to power.

Is the inspection result normal?

YES >> Replace IPDM E/R. Refer to PCS-32, "Removal and Installation".
NO >> Repair or replace error-detected parts.

9. CHECK IGNITION SWITCH SIGNAL

1. Turn ignition switch ON.
2. Check the voltage between ECM harness connector terminals.

ECM			Condition	Voltage (Approx.)
Connector	+	–		
	Terminal			
E16	109	128	Ignition switch OFF	0 V
			Ignition switch ON	Battery voltage

Is the inspection result normal?

YES >> GO TO 11.
NO >> GO TO 10.

10. CHECK IGNITION SWITCH SIGNAL CIRCUIT

1. Turn ignition switch OFF.
2. Disconnect ECM harness connector.
3. Disconnect IPDM E/R harness connector.
4. Check the continuity between ECM harness connector and IPDM E/R harness connector.

+		–		Continuity
ECM		IPDM E/R		
Connector	Terminal	Connector	Terminal	
E16	109	F19	55	Existed

5. Also check harness for short to ground and to power.

Is the inspection result normal?

YES >> Perform the trouble diagnosis for power supply circuit.
NO >> Repair or replace error-detected parts.

11. CHECK ECM POWER SUPPLY (BACK-UP)

Check the voltage between ECM harness connector terminals.

ECM				Voltage
+		–		
Connector	Terminal	Connector	Terminal	
F51	26	E16	128	Battery voltage

Is the inspection result normal?

YES >> Check intermittent incident. Refer to GI-47, "Intermittent Incident".
NO >> GO TO 12.

12. CHECK ECM POWER SUPPLY (BACK-UP) CIRCUIT

1. Turn ignition switch OFF.
2. Disconnect ECM harness connector.
3. Disconnect IPDM E/R harness connector.
4. Check the continuity between ECM harness connector and IPDM E/R harness connector.

+		–		Continuity
ECM		IPDM E/R		
Connector	Terminal	Connector	Terminal	
F51	26	F19	58	Existed

5. Also check harness for short to ground.

Is the inspection result normal?

YES >> Perform the trouble diagnosis for power supply circuit.
NO >> Repair or replace error-detected parts.

U0101 CAN COMM CIRCUIT

Description

INFOID:0000000011489539

CAN (Controller Area Network) is a serial communication line for real time application. It is an on-vehicle multiplex communication line with high data communication speed and excellent error detection ability. Many electronic control units are equipped onto a vehicle, and each control unit shares information and links with other control units during operation (not independent). In CAN communication, control units are connected with 2 communication lines (CAN H line, CAN L line) allowing a high rate of information transmission with less wiring. Each control unit transmits/receives data but selectively reads required data only.

DTC Logic

INFOID:0000000011489540

DTC DETECTION LOGIC

DTC No.	CONSULT screen terms (Trouble diagnosis content)	DTC detecting condition	Possible cause
U0101	LOST COMM (TCM) (Lost Communication with TCM)	When ECM is not transmitting or receiving CAN communication signal of OBD (emission-related diagnosis) with TCM for 2 seconds or more.	• CAN communication line between TCM and ECM • CAN communication line open or shorted

DTC CONFIRMATION PROCEDURE

1.PERFORM DTC CONFIRMATION PROCEDURE

1. Turn ignition switch ON and wait at least 3 seconds.
2. Check DTC.

Is DTC detected?

YES >> Proceed to EC-688, "Diagnosis Procedure".
NO >> INSPECTION END

Diagnosis Procedure

INFOID:0000000011489541

Perform the trouble diagnosis for CAN communication system. Refer to LAN-21, "Trouble Diagnosis Flow Chart".

U1001 CAN COMM CIRCUIT

Description

INFOID:0000000011489542

CAN (Controller Area Network) is a serial communication line for real time application. It is an on-vehicle multiplex communication line with high data communication speed and excellent error detection ability. Many electronic control units are equipped onto a vehicle, and each control unit shares information and links with other control units during operation (not independent). In CAN communication, control units are connected with 2 communication lines (CAN H line, CAN L line) allowing a high rate of information transmission with less wiring. Each control unit transmits/receives data but selectively reads required data only.

DTC Logic

INFOID:0000000011489543

DTC DETECTION LOGIC

DTC No.	CONSULT screen terms (Trouble diagnosis content)	DTC detecting condition	Possible cause
U1001	CAN COMM CIRCUIT (CAN COMM CIRCUIT)	When ECM is not transmitting or receiving CAN communication signal other than OBD (emission related diagnosis) for 2 seconds or more.	• Harness or connectors (CAN communication line is open or shorted)

DTC CONFIRMATION PROCEDURE

1. PERFORM DTC CONFIRMATION PROCEDURE

1. Turn ignition switch ON and wait at least 3 seconds.
2. Check DTC.

Is DTC detected?

YES >> Proceed to EC-689, "Diagnosis Procedure".
NO >> INSPECTION END

Diagnosis Procedure

INFOID:0000000011489544

Perform the trouble diagnosis for CAN communication system. Refer to LAN-21, "Trouble Diagnosis Flow Chart".

P0011, P0021 IVT CONTROL

DTC Logic

INFOID:0000000011489545

DTC DETECTION LOGIC

NOTE:
If DTC P0011 or P0021 is displayed with DTC P0075 or P0081, first perform the trouble diagnosis for DTC P0075, P0081. Refer to EC-700, "DTC Logic".

DTC No.	CONSULT screen terms (Trouble diagnosis content)	DTC detecting condition	Possible cause
P0011	INT/V TIM CONT-B1 (“A” Camshaft Position - Timing Over-Advanced or System Performance bank 1)	There is a gap between angle of target and phase-control angle degree.	• Crankshaft position sensor (POS) • Camshaft position sensor (PHASE) • Intake valve timing control solenoid valve • Accumulation of debris to the signal pick-up portion of the camshaft • Timing chain installation • Foreign matter caught in the oil groove for intake valve timing control
P0021	INT/V TIM CONT-B2 (“B” Camshaft Position - Timing Over-Advanced or System Performance bank 2)		

DTC CONFIRMATION PROCEDURE

1.PRECONDITIONING

If DTC Confirmation Procedure has been previously conducted, always perform the following before conducting the next test.
1. Turn ignition switch OFF and wait at least 10 seconds.
2. Turn ignition switch ON.
3. Turn ignition switch OFF and wait at least 10 seconds.

TESTING CONDITION:
Before performing the following procedure, confirm that battery voltage is between 10 V and 16 V at idle.

>> GO TO 2.

2.PERFORM DTC CONFIRMATION PROCEDURE-I

With CONSULT
1. Turn ignition switch ON and select “DATA MONITOR” mode with CONSULT.
2. Start engine and warm it up to the normal operating temperature.
3. Maintain the following conditions for at least 6 consecutive seconds. Hold the accelerator pedal as steady as possible.

ENG SPEED	1,200 - 2,000 rpm
COOLANT TEMP/S	More than 60°C (140°F)
B/FUEL SCHDL	More than 7.3 msec
Selector lever	D position

CAUTION:
Always drive at a safe speed.

4. Stop vehicle with engine running and let engine idle for 10 seconds.
5. Check 1st trip DTC.

With GST
Follow the procedure “With CONSULT” above.

Is 1st trip DTC detected?

YES >> Proceed to EC-691, "Diagnosis Procedure"
NO >> GO TO 3.

3.PERFORM DTC CONFIRMATION PROCEDURE-II

With CONSULT

1. Maintain the following conditions for at least 20 consecutive seconds.

ENG SPEED	1,200 - 3,175 rpm (A constant rotation is maintained.)
COOLANT TEMP/S	More than 60°C (140°F)
Selector lever	1st or 2nd position
Driving location uphill	Driving vehicle uphill (Increased engine load will help maintain the driving conditions required for this test.)

CAUTION:
Always drive at a safe speed.

2. Check 1st trip DTC.

With GST

Follow the procedure "With CONSULT" above.

Is 1st trip DTC detected?

YES >> Proceed to EC-691, "Diagnosis Procedure"
NO >> INSPECTION END

Diagnosis Procedure

INFOID:0000000011489546

1. CHECK OIL PRESSURE WARNING LAMP

1. Start engine.
2. Check oil pressure warning lamp and confirm it is not illuminated.

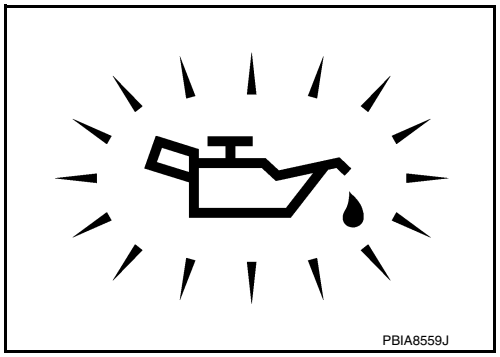

Is oil pressure warming lamp illuminated?

YES >> Check the engine oil level. Refer to LU-8, "Inspection".
NO >> GO TO 2.

2. CHECK INTAKE VALVE TIMING CONTROL SOLENOID VALVE

Check intake valve timing control solenoid valve. Refer to EC-692, "Component Inspection".

Is the inspection result normal?

YES >> GO TO 3.
NO >> Replace malfunctioning intake valve timing control solenoid valve. Refer to EM-53, "Valve Timing Control Cover (bank 1)", EM-53, "Valve Timing Control Cover (bank 1)".

3. CHECK CRANKSHAFT POSITION SENSOR (POS)

Check crankshaft position sensor (POS). Refer to EC-767, "Component Inspection".

Is the inspection result normal?

YES >> GO TO 4.
NO >> Replace crankshaft position sensor (POS). Refer to EM-37, "Removal and Installation (Upper Oil Pan)".

4. CHECK CAMSHAFT POSITION SENSOR (PHASE)

Check camshaft position sensor (PHASE). Refer to EC-770, "Component Inspection".

Is the inspection result normal?

YES >> GO TO 5.
NO >> Replace malfunctioning camshaft position sensor (PHASE). Refer to EM-43, "Removal and Installation (LH)", EM-44, "Removal and Installation (RH)".

5. CHECK CAMSHAFT (INTAKE)

Check the following.

- Accumulation of debris on the signal plate of camshaft rear end
- Chipping signal plate of camshaft rear end

Is the inspection result normal?

YES >> GO TO 6.
NO >> Remove debris and clean the signal plate of camshaft rear end or replace camshaft. Refer to EM-76, "Removal and Installation".

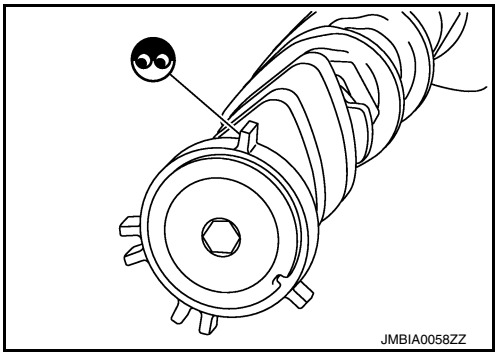

6. CHECK TIMING CHAIN INSTALLATION

Check service records for any recent repairs that may cause timing chain misalignment.

Are there any service records that may cause timing chain misalignment?

YES >> Check timing chain installation. Refer to EM-63, "Removal and Installation".
NO >> GO TO 7.

7. CHECK LUBRICATION CIRCUIT

Check lubrication circuit. Refer to EM-84, "Inspection after Installation".

Is the inspection result normal?

YES >> Check intermittent incident. Refer to GI-47, "Intermittent Incident".
NO >> Clean lubrication line.

Component Inspection

INFOID:0000000011489547

1. CHECK INTAKE VALVE TIMING CONTROL SOLENOID VALVE-I

1. Turn ignition switch OFF.
2. Disconnect intake valve timing control solenoid valve harness connector.
3. Check resistance between intake valve timing control solenoid valve terminals as per the following.

Intake valve timing control solenoid valve		Resistance
+	–	
Terminal		
1	2	7.0 - 7.7 Ω [at 20°C (68°F)]
1	Ground	∞ Ω (Continuity should not exist)
2		

Is the inspection result normal?

YES >> GO TO 2.
NO >> Replace malfunctioning intake valve timing control solenoid valve. Refer to EM-53, "Valve Timing Control Cover (bank 1)", EM-53, "Valve Timing Control Cover (bank 1)".

2. CHECK INTAKE VALVE TIMING CONTROL SOLENOID VALVE-II

1. Remove intake valve timing control solenoid valve. Refer to EM-53, "Valve Timing Control Cover (bank 1)", EM-53, "Valve Timing Control Cover (bank 1)".
2. Provide 12 V DC between intake valve timing control solenoid valve terminals 1 and 2, and then interrupt it. Check that the plunger moves as shown in the figure.
   CAUTION:
   Never apply 12 V DC continuously for 5 seconds or more. Doing so may result in damage to the coil in intake valve timing control solenoid valve.
   NOTE:
   Always replace O-ring when intake valve timing control solenoid valve is removed.

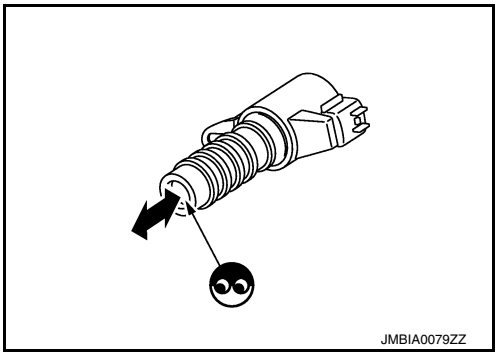

Is the inspection result normal?

YES >> INSPECTION END
NO >> Replace malfunctioning intake valve timing control solenoid valve. Refer to EM-53, "Valve Timing Control Cover (bank 1)", EM-53, "Valve Timing Control Cover (bank 1)".

P0031, P0032, P0051, P0052 A/F SENSOR 1 HEATER

DTC Logic

INFOID:0000000011489548

DTC DETECTION LOGIC

DTC No.	CONSULT screen terms (Trouble diagnosis content)	DTC detecting condition	Possible cause
P0031	A/F SEN1 HTR (B1) (HO2S heater control circuit low bank 1 sensor 1)	The current amperage in the A/F sensor 1 heater circuit is out of the normal range. (An excessively low voltage signal is sent to ECM through the A/F sensor 1 heater.)	• Harness or connectors (The A/F sensor 1 heater circuit is open or shorted.) • A/F sensor 1 heater
P0032	A/F SEN1 HTR (B1) (HO2S heater control circuit high bank 1 sensor 1)	The current amperage in the A/F sensor 1 heater circuit is out of the normal range. (An excessively high voltage signal is sent to ECM through the A/F sensor 1 heater.)	• Harness or connectors (The A/F sensor 1 heater circuit is shorted.) • A/F sensor 1 heater
P0051	A/F SEN1 HTR (B2) (HO2S heater control circuit low bank 2 sensor 1)	The current amperage in the A/F sensor 1 heater circuit is out of the normal range. (An excessively low voltage signal is sent to ECM through the A/F sensor 1 heater.)	• Harness or connectors (The A/F sensor 1 heater circuit is open or shorted.) • A/F sensor 1 heater
P0052	A/F SEN1 HTR (B2) (HO2S heater control circuit high bank 2 sensor 1)	The current amperage in the A/F sensor 1 heater circuit is out of the normal range. (An excessively high voltage signal is sent to ECM through the A/F sensor 1 heater.)	• Harness or connectors (The A/F sensor 1 heater circuit is shorted.) • A/F sensor 1 heater

DTC CONFIRMATION PROCEDURE

1. PRECONDITIONING

If DTC Confirmation Procedure has been previously conducted, always perform the following before conducting the next test.

1. Turn ignition switch OFF and wait at least 10 seconds.
2. Turn ignition switch ON.
3. Turn ignition switch OFF and wait at least 10 seconds.

TESTING CONDITION:

Before performing the following procedure, confirm that battery voltage is more than 11 V at idle.

>> GO TO 2.

2. PERFORM DTC CONFIRMATION PROCEDURE

1. Start engine and let it idle for at least 10 seconds.
2. Check 1st trip DTC.

Is 1st trip DTC detected?

YES >> Proceed to EC-694, "Diagnosis Procedure".
NG >> INSPECTION END

Diagnosis Procedure

INFOID:0000000011489549

1. CHECK AIR FUEL RATIO (A/F) SENSOR 1 POWER SUPPLY

1. Disconnect air fuel ratio (A/F) sensor 1 harness connector.
2. Turn ignition switch ON.
3. Check the voltage between A/F sensor 1 harness connector and ground.

DTC	A/F sensor 1			Ground	Voltage
	Bank	Connector	Terminal		
P0031, P0032	1	F5	4	Ground	Battery voltage
P0051, P0052	2	F65	4		

Is the inspection result normal?

YES >> GO TO 3.
NO >> GO TO 2.

2. CHECK AIR FUEL RATIO (A/F) SENSOR 1 POWER SUPPLY CIRCUIT

1. Turn ignition switch OFF.
2. Disconnect IPDM E/R harness connector.
3. Check the continuity between A/F sensor 1 harness connector and IPDM E/R harness connector.

DTC	A/F sensor 1			IPDM E/R		Continuity
	Bank	Connector	Terminal	Connector	Terminal	
P0031, P0032	1	F5	4	F19	52	Existed
P0051, P0052	2	F65	4		53	

Is the inspection result normal?

YES >> Perform the trouble diagnosis for power supply circuit.
NO >> Repair or replace error-detected parts.

3. CHECK A/F SENSOR 1 HEATER OUTPUT SIGNAL CIRCUIT

1. Turn ignition switch OFF.
2. Disconnect ECM harness connector.
3. Check harness continuity between A/F sensor 1 harness connector and ECM harness connector.

DTC	A/F sensor 1			ECM		Continuity
	Bank	Connector	Terminal	Connector	Terminal	
P0031, P0032	1	F5	3	F51	6	Existed
P0051, P0052	2	F65	3		3	

4. Also check harness for short to ground and short to power.

Is the inspection result normal?

YES >> GO TO 4.
NO >> Repair open circuit, short to ground or short to power in harness or connectors.

4. CHECK A/F SENSOR 1 HEATER

Check A/F sensor 1 heater. Refer to EC-695, "Component Inspection".

Is the inspection result normal?

YES >> Check intermittent incident. Refer to GI-47, "Intermittent Incident".
NO >> Replace malfunctioning air fuel ratio (A/F) sensor 1. Refer to EM-31, "Removal and Installation (bank 2)", EM-33, "Removal and Installation (bank 1)".

Component Inspection

INFOID:0000000011489550

1. CHECK AIR FUEL RATIO (A/F) SENSOR 1

1. Turn ignition switch OFF.
2. Disconnect A/F sensor 1 harness connector.
3. Check resistance between A/F sensor 1 terminals as per the following.

+	–	Resistance
A/F sensor 1		
Terminal		
3	4	1.8 - 2.44 Ω [at 25°C (77°F)]
	1	∞ Ω (Continuity should not exist)
	2	
4	1	
	2	

Is the inspection result normal?

YES >> INSPECTION END

NO >> Replace malfunctioning air fuel ratio (A/F) sensor 1. Refer to EM-31, "Removal and Installation (bank 2)", EM-33, "Removal and Installation (bank 1)".

P0037, P0038, P0057, P0058 HO2S2 HEATER

DTC Logic

INFOID:0000000011489551

DTC DETECTION LOGIC

DTC No.	CONSULT screen terms (Trouble diagnosis content)	DTC detecting condition	Possible cause
P0037	HO2S2 HTR (B1) (HO2S heater control circuit low bank 1 sensor 2)	The current amperage in the heated oxygen sensor 2 heater circuit is out of the normal range. (An excessively low voltage signal is sent to ECM through the heated oxygen sensor 2 heater.)	• Harness or connectors (The heated oxygen sensor 2 heater circuit is open or shorted.) • Heated oxygen sensor 2 heater
P0038	HO2S2 HTR (B1) (HO2S heater control circuit high bank 1 sensor 2)	The current amperage in the heated oxygen sensor 2 heater circuit is out of the normal range. (An excessively high voltage signal is sent to ECM through the heated oxygen sensor 2 heater.)	• Harness or connectors (The heated oxygen sensor 2 heater circuit is shorted.) • Heated oxygen sensor 2 heater
P0057	HO2S2 HTR (B2) (HO2S heater control circuit low bank 2 sensor 2)	The current amperage in the heated oxygen sensor 2 heater circuit is out of the normal range. (An excessively low voltage signal is sent to ECM through the heated oxygen sensor 2 heater.)	• Harness or connectors (The heated oxygen sensor 2 heater circuit is open or shorted.) • Heated oxygen sensor 2 heater
P0058	HO2S2 HTR (B2) (HO2S heater control circuit high bank 2 sensor 2)	The current amperage in the heated oxygen sensor 2 heater circuit is out of the normal range. (An excessively high voltage signal is sent to ECM through the heated oxygen sensor 2 heater.)	• Harness or connectors (The heated oxygen sensor 2 heater circuit is shorted.) • Heated oxygen sensor 2 heater

DTC CONFIRMATION PROCEDURE

1.PRECONDITIONING

If DTC Confirmation Procedure has been previously conducted, always perform the following before conducting the next test.
1. Turn ignition switch OFF and wait at least 10 seconds.
2. Turn ignition switch ON.
3. Turn ignition switch OFF and wait at least 10 seconds.

TESTING CONDITION:
Before performing the following procedure, confirm that battery voltage is between 10.5 V and 16 V at idle.

>> GO TO 2.

2.PERFORM DTC CONFIRMATION PROCEDURE

1. Start engine and warm it up to the normal operating temperature.
2. Turn ignition switch OFF and wait at least 10 seconds.
3. Turn ignition switch ON.
4. Turn ignition switch OFF and wait at least 10 seconds.
5. Start engine and keep the engine speed between 3,500 and 4,000 rpm for at least 1 minute under no load.
6. Let engine idle for 1 minute.
7. Check 1st trip DTC.

Is 1st tip DTC detected?

YES >> Proceed to EC-697, "Diagnosis Procedure".
NO >> INSPECTION END

Diagnosis Procedure

INFOID:0000000011489552

1.CHECK HO2S2 POWER SUPPLY

1. Disconnect heated oxygen sensor 2 (HO2S2) harness connector.
2. Turn ignition switch ON.
3. Check the voltage between HO2S2 harness connector and ground.

DTC	HO2S2			Ground	Voltage
	Bank	Connector	Terminal		
P0037, P0038	1	F13	2	Ground	Battery voltage
P0057, P0058	2	F12	2		

Is the inspection result normal?

YES >> GO TO 3.
NO >> GO TO 2.

2. CHECK HO2S2 SENSOR 1 POWER SUPPLY CIRCUIT

1. Turn ignition switch OFF.
2. Disconnect IPDM E/R harness connector.
3. Check the continuity between HO2S2 harness connector and IPDM E/R harness connector.

DTC	HO2S2			IPDM E/R		Continuity
	Bank	Connector	Terminal	Connector	Terminal	
P0037, P0038	1	F13	2	F19	52	Existed
P0057, P0058	2	F12	2		53	

Is the inspection result normal?

YES >> Perform the trouble diagnosis for power supply circuit.
NO >> Repair or replace error-detected parts.

3. CHECK HO2S2 HEATER OUTPUT SIGNAL CIRCUIT FOR OPEN AND SHORT

1. Turn ignition switch OFF.
2. Disconnect ECM harness connector.
3. Check the continuity between HO2S2 harness connector and ECM harness connector.

DTC	HO2S2			ECM		Continuity
	Bank	Connector	Terminal	Connector	Terminal	
P0037, P0038	1	F13	3	F51	37	Existed
P0057, P0058	2	F12	3		41	

4. Also check harness for short to ground and short to power.

Is the inspection result normal?

YES >> GO TO 4.
NO >> Repair open circuit, short to ground or short to power in harness or connectors.

4. CHECK HEATED OXYGEN SENSOR 2 HEATER

Check heated oxygen sensor 2 heater. Refer to EC-698, "Component Inspection".

Is the inspection result normal?

YES >> Check intermittent incident. Refer to GI-47, "Intermittent Incident".
NO >> Replace malfunctioning heated oxygen sensor 2. Refer to EM-31, "Removal and Installation (bank 2)", EM-33, "Removal and Installation (bank 1)".

Component Inspection

INFOID:0000000011489553

1. CHECK HEATED OXYGEN SENSOR 2 HEATER

1. Turn ignition switch OFF.
2. Disconnect heated oxygen sensor 2 harness connector.
3. Check resistance between HO2S2 terminals as per the following.

+	–	Resistance
Heated oxygen sensor 2		
Terminal		
2	3	3.4 - 4.4 Ω [at 25°C (77°F)]
1	2	∞ Ω (Continuity should not exist)
	3	
	4	
4	1	
	2	
	3	

Is the inspection result normal?

YES >> INSPECTION END

NO >> Replace malfunctioning heated oxygen sensor 2. Refer to EM-31, "Removal and Installation (bank 2)", EM-33, "Removal and Installation (bank 1)".

P0075, P0081 IVT CONTROL SOLENOID VALVE

DTC Logic

INFOID:0000000011489554

DTC DETECTION LOGIC

DTC No.	CONSULT screen terms (Trouble diagnosis content)	DTC detecting condition	Possible cause
P0075	INT/V TIM V/CIR-B1 (Intake valve control solenoid circuit bank 1)	An improper voltage is sent to the ECM through intake valve timing control solenoid valve.	• Harness or connectors (Intake valve timing control solenoid valve circuit is open or shorted.) • Intake valve timing control solenoid valve
P0081	INT/V TIM V/CIR-B2 (Intake valve control solenoid circuit bank 2)		

DTC CONFIRMATION PROCEDURE

1.PRECONDITIONING

If DTC Confirmation Procedure has been previously conducted, always perform the following before conducting the next test.
1. Turn ignition switch OFF and wait at least 10 seconds.
2. Turn ignition switch ON.
3. Turn ignition switch OFF and wait at least 10 seconds.

>> GO TO 2.

2.PERFORM DTC CONFIRMATION PROCEDURE

1. Start engine and let it idle for 5 seconds.
2. Check 1st trip DTC.

Is 1st trip DTC detected?

YES >> Proceed to EC-700, "Diagnosis Procedure".
NO >> INSPECTION END

Diagnosis Procedure

INFOID:0000000011489555

1.CHECK INTAKE VALVE TIMING CONTROL SOLENOID VALVE POWER SUPPLY

1. Turn ignition switch OFF.
2. Disconnect intake valve timing (IVT) control solenoid valve harness connector.
3. Turn ignition switch ON.
4. Check the voltage between intake valve timing control solenoid valve harness connector and ground with CONSULT or tester.

DTC	IVT control solenoid valve			Ground	Voltage
	Bank	Connector	Terminal		
P0075	1	F62	2	Ground	Battery voltage
P0081	2	F63	2		

Is the inspection result normal?

YES >> GO TO 2.
NO >> Repair open circuit, short to ground or short to power in harness or connectors.

2.CHECK INTAKE VALVE TIMING CONTROL SOLENOID VALVE OUTPUT SIGNAL CIRCUIT FOR OPEN AND SHORT

1. Turn ignition switch OFF.
2. Disconnect ECM harness connector.
3. Check the continuity between intake valve timing control solenoid valve harness connector and ECM harness connector.

DTC	IVT control solenoid valve			ECM		Continuity
	Bank	Connector	Terminal	Connector	Terminal	
P0075	1	F62	1	F52	55	Existed
P0081	2	F63	1		56	

4. Also check harness for short to ground and short to power.

Is the inspection result normal?

YES >> GO TO 3.
NO >> Repair open circuit, short to ground or short to power in harness or connectors.

3. CHECK INTAKE VALVE TIMING CONTROL SOLENOID VALVE

Check intake valve timing control solenoid valve. Refer to EC-701, "Component Inspection".

Is the inspection result normal?

YES >> Check intermittent incident. Refer to GI-47, "Intermittent Incident".
NO >> Replace malfunctioning intake valve timing control solenoid valve. Refer to EM-53, "Valve Timing Control Cover (bank 1)", EM-53, "Valve Timing Control Cover (bank 1)".

Component Inspection

INFOID:0000000011489556

1. CHECK INTAKE VALVE TIMING CONTROL SOLENOID VALVE-I

1. Turn ignition switch OFF.
2. Disconnect intake valve timing control solenoid valve harness connector.
3. Check resistance between intake valve timing control solenoid valve terminals as per the following.

Intake valve timing control solenoid valve		Resistance
+	–	
Terminal		
1	2	7.0 - 7.7 Ω [at 20°C (68°F)]
1	Ground	∞ Ω (Continuity should not exist)
2		

Is the inspection result normal?

YES >> GO TO 2.
NO >> Replace malfunctioning intake valve timing control solenoid valve. Refer to EM-53, "Valve Timing Control Cover (bank 1)", EM-53, "Valve Timing Control Cover (bank 1)".

2. CHECK INTAKE VALVE TIMING CONTROL SOLENOID VALVE-II

1. Remove intake valve timing control solenoid valve. Refer to EM-53, "Valve Timing Control Cover (bank 1)", EM-53, "Valve Timing Control Cover (bank 1)".
2. Provide 12 V DC between intake valve timing control solenoid valve terminals 1 and 2, and then interrupt it. Check that the plunger moves as shown in the figure.

CAUTION:
Never apply 12 V DC continuously for 5 seconds or more. Doing so may result in damage to the coil in intake valve timing control solenoid valve.
NOTE:
Always replace O-ring when intake valve timing control solenoid valve is removed.

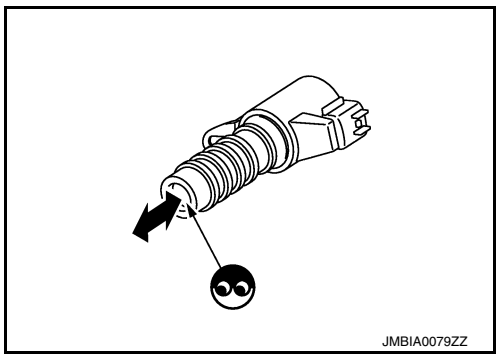

Is the inspection result normal?

YES >> INSPECTION END
NO >> Replace malfunctioning intake valve timing control solenoid valve. Refer to EM-53, "Valve Timing Control Cover (bank 1)", EM-53, "Valve Timing Control Cover (bank 1)".

P0102, P0103 MAF SENSOR

DTC Logic

INFOID:0000000011489560

DTC DETECTION LOGIC

DTC No.	CONSULT screen terms (Trouble diagnosis content)	DTC detecting condition	Possible cause
P0102	MAF SEN/CIRCUIT-B1 (Mass or volume air flow “A” circuit low input)	An excessively low voltage from the sensor is sent to ECM.	• Harness or connectors (The sensor circuit is open or shorted.) • Intake air leakage • Mass air flow sensor
P0103	MAF SEN/CIRCUIT-B1 (Mass or volume air flow “A” circuit high input)	An excessively high voltage from the sensor is sent to ECM.	• Harness or connectors (The sensor circuit is open or shorted.) • Mass air flow sensor

DTC CONFIRMATION PROCEDURE

1.PRECONDITIONING

If DTC Confirmation Procedure has been previously conducted, always perform the following before conducting the next test.

1. Turn ignition switch OFF and wait at least 10 seconds.
2. Turn ignition switch ON.
3. Turn ignition switch OFF and wait at least 10 seconds.

Which DTC is detected?

P0102 >> GO TO 2.
P0103 >> GO TO 3.

2.PERFORM DTC CONFIRMATION PROCEDURE FOR DTC P0102

1. Start engine and wait at least 5 seconds.
2. Check DTC.

Is DTC detected?

YES >> Proceed to EC-702, "Diagnosis Procedure".
NO >> INSPECTION END

3.PERFORM DTC CONFIRMATION PROCEDURE FOR DTC P0103-I

1. Turn ignition switch ON and wait at least 5 seconds.
2. Check DTC.

Is DTC detected?

YES >> Proceed to EC-702, "Diagnosis Procedure".
NO >> GO TO 4.

4.PERFORM DTC CONFIRMATION PROCEDURE FOR DTC P0103-II

1. Start engine and wait at least 5 seconds.
2. Check DTC.

Is DTC detected?

YES >> Proceed to EC-702, "Diagnosis Procedure".
NO >> INSPECTION END

Diagnosis Procedure

INFOID:0000000011489561

1.INSPECTION START

Confirm the detected DTC.

Which DTC is detected?

P0102 >> GO TO 2.
P0103 >> GO TO 3.

2.CHECK INTAKE SYSTEM

Check the following for connection.
- Air duct
- Vacuum hoses
- Intake air passage between air duct to intake manifold

Is the inspection result normal?

YES >> GO TO 3.
NO >> Reconnect the parts.

3. CHECK MAF SENSOR POWER SUPPLY

1. Disconnect mass air flow (MAF) sensor harness connector.
2. Turn ignition switch ON.
3. Check the voltage between MAF sensor harness connector and ground.

MAF sensor		Ground	Voltage
Connector	Terminal		
F31	5	Ground	Battery voltage

Is the inspection result normal?

YES >> GO TO 4.
NO >> Perform the trouble diagnosis for power supply circuit.

4. CHECK MAF SENSOR GROUND CIRCUIT FOR OPEN AND SHORT

1. Turn ignition switch OFF.
2. Disconnect ECM harness connector.
3. Check the continuity between MAF sensor harness connector and ECM harness connector.

MAF sensor		ECM		Continuity
Connector	Terminal	Connector	Terminal	
F31	4	F52	80	Existed

4. Also check harness for short to ground and short to power.

Is the inspection result normal?

YES >> GO TO 5.
NO >> Repair open circuit, short to ground or short to power in harness or connectors.

5. CHECK MAF SENSOR INPUT SIGNAL CIRCUIT FOR OPEN AND SHORT

1. Check the continuity between MAF sensor harness connector and ECM harness connector.

MAF sensor		ECM		Continuity
Connector	Terminal	Connector	Terminal	
F31	3	F52	82	Existed

2. Also check harness for short to ground and short to power.

Is the inspection result normal?

YES >> GO TO 6.
NO >> Repair open circuit, short to ground or short to power in harness or connectors.

6. CHECK MASS AIR FLOW SENSOR

Check mass air flow sensor. Refer to EC-703, "Component Inspection".

Is the inspection result normal?

YES >> Check intermittent incident. Refer to GI-47, "Intermittent Incident".
NO >> Replace mass air flow sensor. Refer to EM-24, "Removal and Installation".

Component Inspection

INFOID:0000000011489562

1. CHECK MASS AIR FLOW SENSOR-I

With CONSULT

1. Reconnect all harness connectors disconnected.
2. Start engine and warm it up to normal operating temperature.
3. Connect CONSULT and select “DATA MONITOR” mode.
4. Select “MAS A/F SE-B1” and check indication under the following conditions.

Monitor item	Condition	MAS A/F SE-B1 (V)
MAS A/F SE-B1	Ignition switch ON (Engine stopped.)	Approx. 0.4
	Idle (Engine is warmed-up to normal operating temperature.)	0.8 - 1.2
	2,500 rpm (Engine is warmed-up to normal operating temperature.)	1.6 - 1.9
	Idle to approximately 4,000 rpm	0.8 - 1.2 to Approx. 2.4*

*: Check for linear voltage rise in response to engine being increased to approximately 4,000 rpm.

Without CONSULT

1. Reconnect all harness connectors disconnected.
2. Start engine and warm it up to normal operating temperature.
3. Check the voltage between ECM harness connector terminals under the following conditions.

ECM			Condition	Voltage (V)
Connector	+	–		
	Terminal			
F52	82	80	Ignition switch ON (Engine stopped.)	Approx. 0.4
			Idle (Engine is warmed-up to normal operating temperature.)	0.8 - 1.2
			2,500 rpm (Engine is warmed-up to normal operating temperature.)	1.6 - 1.9
			Idle to approximately 4,000 rpm	0.8 - 1.2 to Approx. 2.4*

*: Check for linear voltage rise in response to engine being increased to approximately 4,000 rpm.

Is the inspection result normal?

YES >> INSPECTION END
NO >> GO TO 2.

2. CHECK FOR THE CAUSE OF UNEVEN AIR FLOW THROUGH MASS AIR FLOW SENSOR

Check for the cause of uneven air flow through mass air flow sensor. Refer to the following.

- Crushed air ducts
- Malfunctioning seal of air cleaner element
- Uneven dirt of air cleaner element
- Improper specification of intake air system parts

Is the inspection result normal?

YES >> GO TO 4.
NO >> GO TO 3.

3. CHECK MASS AIR FLOW SENSOR-II

With CONSULT

1. Repair or replace malfunctioning part.
2. Start engine and warm it up to normal operating temperature.
3. Connect CONSULT and select “DATA MONITOR” mode.
4. Select “MAS A/F SE-B1” and check indication under the following conditions.

Monitor item	Condition	MAS A/F SE-B1 (V)
MAS A/F SE-B1	Ignition switch ON (Engine stopped.)	Approx. 0.4
	Idle (Engine is warmed-up to normal operating temperature.)	0.8 - 1.2
	2,500 rpm (Engine is warmed-up to normal operating temperature.)	1.6 - 1.9
	Idle to approximately 4,000 rpm	0.8 - 1.2 to Approx. 2.4*

*: Check for linear voltage rise in response to engine being increased to approximately 4,000 rpm.

Without CONSULT

1. Repair or replace malfunctioning part.
2. Start engine and warm it up to normal operating temperature.
3. Check the voltage between ECM harness connector terminals under the following conditions.

ECM			Condition	Voltage (V)
Connector	+	–		
	Terminal			
F52	82	80	Ignition switch ON (Engine stopped.)	Approx. 0.4
			Idle (Engine is warmed-up to normal operating temperature.)	0.8 - 1.2
			2,500 rpm (Engine is warmed-up to normal operating temperature.)	1.6 - 1.9
			Idle to approximately 4,000 rpm	0.8 - 1.2 to Approx. 2.4*

*: Check for linear voltage rise in response to engine being increased to approximately 4,000 rpm.

Is the inspection result normal?

YES >> INSPECTION END
NO >> GO TO 4.

4. CHECK MASS AIR FLOW SENSOR-III

With CONSULT

1. Turn ignition switch OFF.
2. Disconnect mass air flow sensor harness connector and reconnect it again.
3. Start engine and warm it up to normal operating temperature.
4. Connect CONSULT and select “DATA MONITOR” mode.
5. Select “MAS A/F SE-B1” and check indication under the following conditions.

Monitor item	Condition	MAS A/F SE-B1 (V)
MAS A/F SE-B1	Ignition switch ON (Engine stopped.)	Approx. 0.4
	Idle (Engine is warmed-up to normal operating temperature.)	0.8 - 1.2
	2,500 rpm (Engine is warmed-up to normal operating temperature.)	1.6 - 1.9
	Idle to approximately 4,000 rpm	0.8 - 1.2 to Approx. 2.4*

*: Check for linear voltage rise in response to engine being increased to approximately 4,000 rpm.

Without CONSULT

1. Turn ignition switch OFF.
2. Disconnect mass air flow sensor harness connector and reconnect it again.
3. Start engine and warm it up to normal operating temperature.
4. Check the voltage between ECM harness connector terminals under the following conditions.

ECM			Condition	Voltage (V)
Connector	+	–		
	Terminal			
F52	82	80	Ignition switch ON (Engine stopped.)	Approx. 0.4
			Idle (Engine is warmed-up to normal operating temperature.)	0.8 - 1.2
			2,500 rpm (Engine is warmed-up to normal operating temperature.)	1.6 - 1.9
			Idle to approximately 4,000 rpm	0.8 - 1.2 to Approx. 2.4*

*: Check for linear voltage rise in response to engine being increased to approximately 4,000 rpm.

Is the inspection result normal?

YES >> INSPECTION END
NO >> Clean or replace mass air flow sensor. Refer to EM-24, "Removal and Installation".

P0112, P0113 IAT SENSOR

DTC Logic

INFOID:0000000011489567

DTC DETECTION LOGIC

DTC No.	CONSULT screen terms (Trouble diagnosis content)	DTC detecting condition	Possible cause
P0112	IAT SEN/CIRCUIT-B1 (Intake air temperature sensor 1 circuit low bank 1)	An excessively low voltage from the sensor is sent to ECM.	• Harness or connectors (The sensor circuit is open or shorted.) • Intake air temperature sensor
P0113	IAT SEN/CIRCUIT-B1 (Intake air temperature sensor 1 circuit high bank 1)	An excessively high voltage from the sensor is sent to ECM.	

DTC CONFIRMATION PROCEDURE

1.PRECONDITIONING

If DTC Confirmation Procedure has been previously conducted, always perform the following before conducting the next test.
1. Turn ignition switch OFF and wait at least 10 seconds.
2. Turn ignition switch ON.
3. Turn ignition switch OFF and wait at least 10 seconds.

>> GO TO 2.

2.PERFORM DTC CONFIRMATION PROCEDURE

1. Turn ignition switch ON and wait at least 5 seconds.
2. Check 1st trip DTC.

Is 1st trip DTC detected?

YES >> Proceed to EC-706, "Diagnosis Procedure".
NO >> INSPECTION END

Diagnosis Procedure

INFOID:0000000011489568

1.CHECK INTAKE AIR TEMPERATURE SENSOR POWER SUPPLY

1. Disconnect mass air flow sensor (with intake air temperature sensor) harness connector.
2. Turn ignition switch ON.
3. Check the voltage between mass air flow sensor harness connector and ground.

MAF sensor		Ground	Voltage
Connector	Terminal		
F31	2	Ground	Approx. 5 V

Is the inspection result normal?

YES >> GO TO 2.
NO >> Repair open circuit, short to ground or short to power in harness or connectors.

2.CHECK INTAKE AIR TEMPERATURE SENSOR GROUND CIRCUIT FOR OPEN AND SHORT

1. Turn ignition switch OFF.
2. Disconnect ECM harness connector.
3. Check harness continuity between mass air flow sensor harness connector and ECM harness connector.

MAF sensor		ECM		Continuity
Connector	Terminal	Connector	Terminal	
F31	1	F52	80	Existed

4. Also check harness for short to ground and short to power.

Is the inspection result normal?

YES >> GO TO 3.
NO >> Repair open circuit, short to ground or short to power in harness or connectors.

3. CHECK INTAKE AIR TEMPERATURE SENSOR

Check intake air temperature sensor. Refer to EC-707, "Component Inspection".

Is the inspection result normal?

YES >> Check intermittent incident. Refer to GI-47, "Intermittent Incident".
NO >> Replace mass air flow sensor. Refer to EM-24, "Exploded View".

Component Inspection

INFOID:0000000011489569

1. CHECK INTAKE AIR TEMPERATURE SENSOR

1. Turn ignition switch OFF.
2. Disconnect mass air flow sensor harness connector.
3. Check resistance between mass air flow sensor terminals as per the following.

Mass air flow sensor		Condition		Resistance (kΩ)
+	–			
Terminals				
2	1	Temperature [°C (°F)]	25 (77)	1.800 - 2.200

Is the inspection result normal?

YES >> INSPECTION END
NO >> Replace mass air flow sensor. Refer to EM-24, "Exploded View".

P0117, P0118 ECT SENSOR

DTC Logic

INFOID:0000000011489574

DTC DETECTION LOGIC

DTC No.	CONSULT screen terms (Trouble diagnosis content)	DTC detecting condition	Possible Cause
P0117	ECT SEN/CIRC (Engine coolant temperature sensor 1 circuit low)	An excessively low voltage from the sensor is sent to ECM.	• Harness or connectors (The sensor circuit is open or shorted.) • Engine coolant temperature sensor
P0118	ECT SEN/CIRC (Engine coolant temperature sensor 1 circuit high)	An excessively high voltage from the sensor is sent to ECM.	

DTC CONFIRMATION PROCEDURE

1.PRECONDITIONING

If DTC Confirmation Procedure has been previously conducted, always perform the following before conducting the next test.
1. Turn ignition switch OFF and wait at least 10 seconds.
2. Turn ignition switch ON.
3. Turn ignition switch OFF and wait at least 10 seconds.

>> GO TO 2.

2.PERFORM DTC CONFIRMATION PROCEDURE

1. Turn ignition switch ON and wait at least 5 seconds.
2. Check DTC.

Is DTC detected?

YES >> Proceed to EC-708, "Diagnosis Procedure".
NO >> INSPECTION END

Diagnosis Procedure

INFOID:0000000011489575

1.CHECK ECT SENSOR POWER SUPPLY

1. Disconnect engine coolant temperature (ECT) sensor harness connector.
2. Turn ignition switch ON.
3. Check the voltage between ECT sensor harness connector and ground.

ECT sensor		Ground	Voltage
Connector	Terminal		
F61	1	Ground	Approx. 5 V

Is the inspection result normal?

YES >> GO TO 2.
NO >> Repair open circuit, short to ground or short to power in harness or connectors.

2.CHECK ECT SENSOR GROUND CIRCUIT

1. Turn ignition switch OFF.
2. Disconnect ECM harness connector.
3. Check the continuity between ECT sensor harness connector and ECM harness connector.

ECT sensor		ECM		Continuity
Connector	Terminal	Connector	Terminal	
F61	2	F52	76	Existed

4. Also check harness for short to ground and short to power.

Is the inspection result normal?

YES >> GO TO 3.
NO >> Repair open circuit, short to ground or short to power in harness or connectors.

3. CHECK ENGINE COOLANT TEMPERATURE SENSOR

Check engine coolant temperature sensor. Refer to EC-709, "Component Inspection".

Is the inspection result normal?

YES >> Check intermittent incident. Refer to GI-47, "Intermittent Incident".
NO >> Replace engine coolant temperature sensor. Refer to CO-26, "Exploded View".

Component Inspection

INFOID:0000000011489576

1. CHECK ENGINE COOLANT TEMPERATURE SENSOR

1. Turn ignition switch OFF.
2. Disconnect engine coolant temperature sensor harness connector.
3. Remove engine coolant temperature sensor. Refer to CO-26, "Exploded View".
4. Check resistance between engine coolant temperature sensor terminals as per the following.

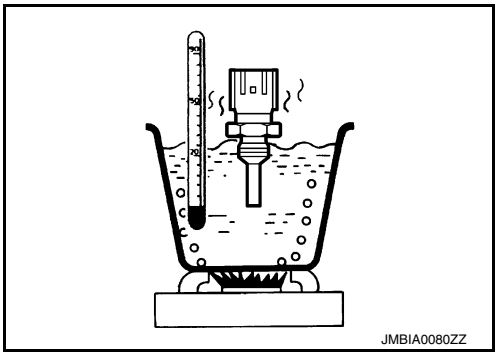

ECT sensor		Condition		Resistance (kΩ)
+	–			
Terminal				
1	2	Temperature [°C (°F)]	20 (68)	2.37 - 2.63
			50 (122)	0.68 - 1.00
			90 (194)	0.236 - 0.260

Is the inspection result normal?

YES >> INSPECTION END
NO >> Replace engine coolant temperature sensor. Refer to CO-26, "Exploded View".

P0122, P0123 TP SENSOR

DTC Logic

INFOID:0000000011489577

DTC DETECTION LOGIC

NOTE:
If DTC P0122 or P0123 is displayed with DTC P0643, first perform the trouble diagnosis for DTC P0643. Refer to EC-806, "DTC Logic".

DTC No.	CONSULT screen terms (Trouble diagnosis content)	DTC detecting condition	Possible cause
P0122	TP SEN 2/CIRC-B1 (Throttle/Pedal position sensor/switch “A” circuit low)	An excessively low voltage from the TP sensor 2 is sent to ECM.	• Harness or connectors (TP sensor 2 circuit is open or shorted.) • Electric throttle control actuator (TP sensor 2)
P0123	TP SEN 2/CIRC-B1 (Throttle/Pedal position sensor/switch “A” circuit high)	An excessively high voltage from the TP sensor 2 is sent to ECM.	

DTC CONFIRMATION PROCEDURE

1.PRECONDITIONING

If DTC Confirmation Procedure has been previously conducted, always perform the following before conducting the next test.
1. Turn ignition switch OFF and wait at least 10 seconds.
2. Turn ignition switch ON.
3. Turn ignition switch OFF and wait at least 10 seconds.

TESTING CONDITION:
Before performing the following procedure, confirm that battery voltage is more than 8 V at idle.

>> GO TO 2.

2.PERFORM DTC CONFIRMATION PROCEDURE

1. Start engine and let it idle for 1 second.
2. Check DTC.

Is DTC detected?

YES >> Proceed to EC-710, "Diagnosis Procedure".
NO >> INSPECTION END

Diagnosis Procedure

INFOID:0000000011489578

1.CHECK THROTTLE POSITION SENSOR 2 POWER SUPPLY

1. Disconnect electric throttle control actuator harness connector.
2. Turn ignition switch ON.
3. Check the voltage between electric throttle control actuator harness connector and ground.

Electric throttle control actuator		Ground	Voltage
Connector	Terminal		
F50	1	Ground	Approx. 5 V

Is the inspection result normal?

YES >> GO TO 2.
NO >> Repair open circuit, short to ground or short to power in harness or connectors.

2.CHECK THROTTLE POSITION SENSOR 2 GROUND CIRCUIT

1. Turn ignition switch OFF.
2. Disconnect ECM harness connector.
3. Check the continuity between electric throttle control actuator harness connector and ECM harness connector.

Electric throttle control actuator		ECM		Continuity
Connector	Terminal	Connector	Terminal	
F50	4	F51	19	Existed

4. Also check harness for short to ground and short to power.

Is the inspection result normal?

YES >> GO TO 3.
NO >> Repair open circuit, short to ground or short to power in harness or connectors.

3. CHECK THROTTLE POSITION SENSOR 2 INPUT SIGNAL CIRCUIT

1. Check the continuity between electric throttle control actuator harness connector and ECM harness connector.

Electric throttle control actuator		ECM		Continuity
Connector	Terminal	Connector	Terminal	
F50	3	F51	23	Existed

2. Also check harness for short to ground and short to power.

Is the inspection result normal?

YES >> GO TO 4.
NO >> Repair open circuit, short to ground or short to power in harness or connectors.

4. CHECK THROTTLE POSITION SENSOR

Check throttle position sensor. Refer to EC-711, "Component Inspection".

Is the inspection result normal?

YES >> Check intermittent incident. Refer to GI-47, "Intermittent Incident".
NO >> Replace electric throttle control actuator. Refer to EM-26, "Exploded View".

Component Inspection

INFOID:0000000011489579

1. CHECK THROTTLE POSITION SENSOR

1. Turn ignition switch OFF.
2. Reconnect all harness connectors disconnected.
3. Perform EC-660, "Work Procedure".
4. Turn ignition switch ON.
5. Set selector lever to D position.
6. Check the voltage between ECM harness connector terminals under the following conditions.

ECM			Condition		Voltage
Connector	+	–			
	Terminal				
F51	22	19	Accelerator pedal	Fully released	More than 0.36 V
				Fully depressed	Less than 4.75 V
	23			Fully released	Less than 4.75 V
				Fully depressed	More than 0.36 V

Is the inspection result normal?

YES >> INSPECTION END
NO >> Replace electric throttle control actuator. Refer to EM-26, "Exploded View".

P0130, P0150 A/F SENSOR 1

DTC Logic

INFOID:0000000011489589

DTC DETECTION LOGIC

To judge malfunctions, the diagnosis checks that the A/F signal computed by ECM from the A/F sensor 1 signal fluctuates according to fuel feedback control.

DTC No.	CONSULT screen terms (Trouble diagnosis content)	DTC detecting condition		Possible cause
P0130	A/F SENSOR1 (B1) (O2 sensor circuit bank 1 sensor 1)	A)	The A/F signal computed by ECM from the A/F sensor 1 signal is constantly in a range other than approx. 2.2 V.	• Harness or connectors (The A/F sensor 1 circuit is open or shorted.) • A/F sensor 1
		B)	The A/F signal computed by ECM from the A/F sensor 1 signal is constantly approx. 2.2 V.	
P0150	A/F SENSOR1 (B2) (O2 sensor circuit bank 2 sensor 1)	A)	The A/F signal computed by ECM from the A/F sensor 1 signal is constantly in a range other than approx. 2.2 V.	• Harness or connectors (The A/F sensor 1 circuit is open or shorted.) • A/F sensor 1
		B)	The A/F signal computed by ECM from the A/F sensor 1 signal is constantly approx. 2.2 V.	

DTC CONFIRMATION PROCEDURE

1.PRECONDITIONING

If DTC Confirmation Procedure has been previously conducted, always perform the following before conducting the next test.

1. Turn ignition switch OFF and wait at least 10 seconds.
2. Turn ignition switch ON.
3. Turn ignition switch OFF and wait at least 10 seconds.

TESTING CONDITION:

Before performing the following procedure, confirm that battery voltage is more than 11 V at idle.

>> GO TO 2.

2.PERFORM DTC CONFIRMATION PROCEDURE FOR MALFUNCTION A

1. Start engine and warm it up to normal operating temperature.
2. Let engine idle for 2 minutes.
3. Check 1st trip DTC.

Is 1st trip DTC detected?

YES >> Proceed to EC-714, "Diagnosis Procedure".
NO-1 >> With CONSULT: GO TO 3.
NO-2 >> With GST: GO TO 7.

3.CHECK AIR FUEL RATIO (A/F) SENSOR 1 FUNCTION

1. Start engine and warm it up to normal operating temperature.
2. Select “A/F SEN1 (B1)” or “A/F SEN1 (B2)” in “DATA MONITOR” mode with CONSULT.
3. Check “A/F SEN1 (B1)” or “A/F SEN1 (B2)” indication.

Does the indication fluctuate around 2.2 V?

YES >> GO TO 4.
NO >> Proceed to EC-714, "Diagnosis Procedure".

4.PERFORM DTC CONFIRMATION PROCEDURE FOR MALFUNCTION B-I

1. Select “A/F SEN1 (B1) P1276” (for DTC P0130) or “A/F SEN1 (B2) P1286” (for DTC P0150) of “A/F SEN1” in “DTC WORK SUPPORT” mode with CONSULT.
2. Touch “START”.
3. When the following conditions are met, “TESTING” will be displayed on the CONSULT screen.

ENG SPEED	1,000 - 3,200 rpm
VHCL SPEED SE	More than 64 km/h (40 mph)
B/FUEL SCHDL	1.0 - 10.0 msec
Selector lever	D position

If "TESTING" is not displayed after 20 seconds, retry from step 2.
CAUTION:
Always drive vehicle at a safe speed.

Is "TESTING" displayed on CONSULT screen?

YES >> GO TO 5.
NO >> Check A/F sensor 1 function again. GO TO 3.

5. PERFORM DTC CONFIRMATION PROCEDURE FOR MALFUNCTION B-II

Release accelerator pedal fully.
NOTE:
Never apply brake when releasing the accelerator pedal.

Which does "TESTING" change to?

COMPLETED>>GO TO 6.
OUT OF CONDITION>>Retry DTC CONFIRMATION PROCEDURE. GO TO 4.

6. PERFORM DTC CONFIRMATION PROCEDURE FOR MALFUNCTION B-III

Touch "SELF-DIAG RESULT".

Which is displayed on CONSULT screen?

OK >> INSPECTION END
NG >> Proceed to EC-714, "Diagnosis Procedure".

7. PERFORM COMPONENT FUNCTION CHECK FOR MALFUNCTION B

Perform component function check. Refer to EC-713, "Component Function Check".
NOTE:
Use component function check to check the overall function of the A/F sensor 1 circuit. During this check, a 1st trip DTC might not be confirmed.

Is the inspection result normal?

YES >> INSPECTION END
NO >> Proceed to EC-714, "Diagnosis Procedure".

Component Function Check

INFOID:0000000011489590

1. PERFORM COMPONENT FUNCTION CHECK

With GST

1. Start engine and warm it up to normal operating temperature.
2. Drive the vehicle at a speed of 80 km/h (50 MPH) for a few minutes in the suitable gear position.
3. Shift the selector lever to the D position, then release the accelerator pedal fully until the vehicle speed decreases to 50 km/h (31 MPH).
   CAUTION:
   Always drive vehicle at a safe speed.
   NOTE:
   Never apply brake when releasing the accelerator pedal.
4. Repeat steps 2 and 3 for 5 times.
5. Stop the vehicle and turn ignition switch OFF.
6. Wait at least 10 seconds and restart engine.
7. Repeat steps 2 and 3 for 5 times.
8. Stop the vehicle.
9. Check 1st trip DTC.

Is 1st trip DTC detected?

YES >> Proceed to EC-714, "Diagnosis Procedure".
NO >> INSPECTION END

Diagnosis Procedure

INFOID:0000000011489591

1. CHECK AIR FUEL RATIO (A/F) SENSOR 1 POWER SUPPLY

1. Disconnect A/F sensor 1 harness connector.
2. Turn ignition switch ON.
3. Check the voltage between A/F sensor 1 harness connector and ground.

DTC	A/F sensor 1			Ground	Voltage
	Bank	Connector	Terminal		
P0130	1	F5	4	Ground	Battery voltage
P0150	2	F65	4		

Is the inspection result normal?

YES >> GO TO 3.
NO >> GO TO 2.

2. CHECK AIR FUEL RATIO (A/F) SENSOR 1 POWER SUPPLY CIRCUIT

1. Turn ignition switch OFF.
2. Disconnect IPDM E/R harness connector.
3. Check the continuity between A/F sensor 1 harness connector and IPDM E/R harness connector.

DTC	A/F sensor 1			IPDM E/R		Continuity
	Bank	Connector	Terminal	Connector	Terminal	
P0130	1	F5	4	F19	52	Existed
P0150	2	F65	4		53	

Is the inspection result normal?

YES >> Perform the trouble diagnosis for power supply circuit.
NO >> Repair or replace error-detected parts.

3. CHECK A/F SENSOR 1 INPUT SIGNAL CIRCUIT

1. Turn ignition switch OFF.
2. Disconnect ECM harness connector.
3. Check the continuity between A/F sensor 1 harness connector and ECM harness connector.

DTC	A/F sensor 1			ECM		Continuity
	Bank	Connector	Terminal	Connector	Terminal	
P0130	1	F5	1	F52	69	Existed
			2		73	
P0150	2	F65	1		77	
			2		81	

4. Check the continuity between A/F sensor 1 harness connector and ground, or ECM harness connector and ground.

DTC	A/F sensor 1			Ground	Continuity
	Bank	Connector	Terminal		
P0130	1	F5	1	Ground	Not existed
			2		
P0150	2	F65	1		
			2		

DTC	ECM		Ground	Continuity
	Connector	Terminal		
P0130	F52	69	Ground	Not existed
		73		
P0150		77		
		81		

5. Also check harness for short to power.

Is the inspection result normal?

YES >> GO TO 4.
NO >> Repair open circuit, short to ground or short to power in harness or connectors.

4. CHECK INTERMITTENT INCIDENT

Check intermittent incident. Refer to GI-47, "Intermittent Incident".

Is the inspection result normal?

YES >> Replace malfunctioning air fuel ratio (A/F) sensor 1. Refer to EM-31, "Removal and Installation (bank 2)", EM-33, "Removal and Installation (bank 1)".
NO >> Repair or replace error-detected parts.

P0131, P0151 A/F SENSOR 1

DTC Logic

INFOID:0000000011489592

DTC DETECTION LOGIC

To judge the malfunction, the diagnosis checks that the A/F signal computed by ECM from the A/F sensor 1 signal is not inordinately low.

DTC No.	CONSULT screen terms (Trouble diagnosis content)	DTC detecting condition	Possible cause
P0131	A/F SENSOR1 (B1) (O2 sensor circuit low voltage bank 1 sensor 1)	• The A/F signal computed by ECM from the A/F sensor 1 signal is constantly approx. 0 V.	• Harness or connectors (The A/F sensor 1 circuit is open or shorted.) • A/F sensor 1
P0151	A/F SENSOR1 (B2) (O2 sensor circuit high voltage bank 2 sensor 1)		

DTC CONFIRMATION PROCEDURE

1.PRECONDITIONING

If DTC Confirmation Procedure has been previously conducted, always perform the following before conducting the next test.
1. Turn ignition switch OFF and wait at least 10 seconds.
2. Turn ignition switch ON.
3. Turn ignition switch OFF and wait at least 10 seconds.

TESTING CONDITION:
Before performing the following procedure, confirm that battery voltage is more than 10.5 V at idle.

>> GO TO 2.

2.CHECK A/F SENSOR 1 FUNCTION

With CONSULT
1. Start engine and warm it up to normal operating temperature.
2. Select “A/F SEN1 (B1)” or “A/F SEN1 (B2)” in “DATA MONITOR” mode with CONSULT.
3. Check “A/F SEN1 (B1)” or “A/F SEN1 (B2)” indication.

With GST
Follow the procedure “With CONSULT” above.

Is the indication constantly approx. 0 V?

YES >> Proceed to EC-717, "Diagnosis Procedure".
NO >> GO TO 3.

3.PERFORM DTC CONFIRMATION PROCEDURE

With CONSULT
1. Turn ignition switch OFF, wait at least 10 seconds.
2. Turn ignition switch ON.
3. Turn ignition switch OFF, wait at least 10 seconds and then restart engine.
4. Drive and accelerate vehicle to more than 40 km/h (25 MPH) within 20 seconds after restarting engine.
   CAUTION:
   Always drive vehicle at a safe speed.
5. Maintain the following conditions for approximately 20 consecutive seconds.

ENG SPEED	1,000 - 3,200 rpm
VHCL SPEED SE	More than 40 km/h (25 mph)
B/FUEL SCHDL	1.5 - 9.0 msec
Selector lever	Suitable position

NOTE:
- **Keep the accelerator pedal as steady as possible during cruising.**

- **If this procedure is not completed within 1 minute after restarting engine at step 1, return to step 1.**

6. Check 1st trip DTC.

With GST

Follow the procedure “With CONSULT” above.

Is 1st trip DTC detected?

YES >> Proceed to EC-717, "Diagnosis Procedure".
NO >> INSPECTION END

Diagnosis Procedure

INFOID:0000000011489593

1. CHECK AIR FUEL RATIO (A/F) SENSOR 1 POWER SUPPLY

1. Disconnect A/F sensor 1 harness connector.
2. Turn ignition switch ON.
3. Check the voltage between A/F sensor 1 harness connector and ground.

DTC	A/F sensor 1			Ground	Voltage
	Bank	Connector	Terminal		
P0131	1	F5	4	Ground	Battery voltage
P0151	2	F65	4		

Is the inspection result normal?

YES >> GO TO 3.
NO >> GO TO 2.

2. CHECK AIR FUEL RATIO (A/F) SENSOR 1 POWER SUPPLY CIRCUIT

1. Turn ignition switch OFF.
2. Disconnect IPDM E/R harness connector.
3. Check the continuity between A/F sensor 1 harness connector and IPDM E/R harness connector.

DTC	A/F sensor 1			IPDM E/R		Continuity
	Bank	Connector	Terminal	Connector	Terminal	
P0131	1	F5	4	F19	52	Existed
P0151	2	F65	4		53	

Is the inspection result normal?

YES >> Perform the trouble diagnosis for power supply circuit.
NO >> Repair or replace error-detected parts.

3. CHECK A/F SENSOR 1 INPUT SIGNAL CIRCUIT

1. Turn ignition switch OFF.
2. Disconnect ECM harness connector.
3. Check the continuity between A/F sensor 1 harness connector and ECM harness connector.

DTC	A/F sensor 1			ECM		Continuity
	Bank	Connector	Terminal	Connector	Terminal	
P0131	1	F5	1	F52	69	Existed
			2		73	
P0151	2	F65	1		77	
			2		81	

4. Check the continuity between A/F sensor 1 harness connector and ground, or ECM harness connector and ground.

DTC	A/F sensor 1			Ground	Continuity
	Bank	Connector	Terminal		
P0131	1	F5	1	Ground	Not existed
			2		
P0151	2	F65	1		
			2		

DTC	ECM		Ground	Continuity
	Connector	Terminal		
P0131	F52	69	Ground	Not existed
		73		
P0151		77		
		81		

5. Also check harness for short to power.

Is the inspection result normal?

YES >> GO TO 4.
NO >> Repair open circuit, short to ground or short to power in harness or connectors.

4. CHECK INTERMITTENT INCIDENT

Check intermittent incident. Refer to GI-47, "Intermittent Incident".

Is the inspection result normal?

YES >> Replace malfunctioning air fuel ratio (A/F) sensor 1. Refer to EM-31, "Removal and Installation (bank 2)", EM-33, "Removal and Installation (bank 1)".
NO >> Repair or replace error-detected parts.

P0132, P0152 A/F SENSOR 1

DTC Logic

INFOID:0000000011489594

DTC DETECTION LOGIC

To judge the malfunction, the diagnosis checks that the A/F signal computed by ECM from the A/F sensor 1 signal is not inordinately high.

DTC No.	CONSULT screen terms (Trouble diagnosis content)	DTC detecting condition	Possible cause
P0132	A/F SENSOR1 (B1) (O2 sensor circuit high voltage bank 1 sensor 1)	• The A/F signal computed by ECM from the A/F sensor 1 signal is constantly approx. 5 V.	• Harness or connectors (The A/F sensor 1 circuit is open or shorted.) • A/F sensor 1
P0152	A/F SENSOR1 (B2) (O2 sensor circuit high voltage bank 2 sensor 1)		

DTC CONFIRMATION PROCEDURE

1.PRECONDITIONING

If DTC Confirmation Procedure has been previously conducted, always perform the following before conducting the next test.
1. Turn ignition switch OFF and wait at least 10 seconds.
2. Turn ignition switch ON.
3. Turn ignition switch OFF and wait at least 10 seconds.

TESTING CONDITION:
Before performing the following procedure, confirm that battery voltage is more than 10.5 V at idle.

>> GO TO 2.

2.CHECK A/F SENSOR 1 FUNCTION

With CONSULT
1. Start engine and warm it up to normal operating temperature.
2. Select “A/F SEN1 (B1)” or “A/F SEN1 (B2)” in “DATA MONITOR” mode with CONSULT.
3. Check “A/F SEN1 (B1)” or “A/F SEN1 (B2)” indication.

With GST
Follow the procedure “With CONSULT” above.

Is the indication constantly approx. 5 V?

YES >> Proceed to EC-720, "Diagnosis Procedure".
NO >> GO TO 3.

3.PERFORM DTC CONFIRMATION PROCEDURE

With CONSULT
1. Turn ignition switch OFF and wait at least 10 seconds.
2. Turn ignition switch ON.
3. Turn ignition switch OFF, wait at least 10 seconds and then restart engine.
4. Drive and accelerate vehicle to more than 40 km/h (25 MPH) within 20 seconds after restarting engine.
   CAUTION:
   Always drive vehicle at a safe speed.
5. Maintain the following conditions for approximately 20 consecutive seconds.

ENG SPEED	1,000 - 3,200 rpm
VHCL SPEED SE	More than 40 km/h (25 mph)
B/FUEL SCHDL	1.5 - 9.0 msec
Selector lever	Suitable position

NOTE:
- **Keep the accelerator pedal as steady as possible during cruising.**

- **If this procedure is not completed within 1 minute after restarting engine at step 1, return to step 1.**

6. Check 1st trip DTC.

With GST

Follow the procedure “With CONSULT” above.

Is 1st trip DTC detected?

YES >> Proceed to EC-720, "Diagnosis Procedure".
NO >> INSPECTION END

Diagnosis Procedure

INFOID:0000000011489595

1. CHECK AIR FUEL RATIO (A/F) SENSOR 1 POWER SUPPLY

1. Disconnect A/F sensor 1 harness connector.
2. Turn ignition switch ON.
3. Check the voltage between A/F sensor 1 harness connector and ground.

DTC	A/F sensor 1			Ground	Voltage
	Bank	Connector	Terminal		
P0132	1	F5	4	Ground	Battery voltage
P0152	2	F65	4		

Is the inspection result normal?

YES >> GO TO 3.
NO >> GO TO 2.

2. CHECK AIR FUEL RATIO (A/F) SENSOR 1 POWER SUPPLY CIRCUIT

1. Turn ignition switch OFF.
2. Disconnect IPDM E/R harness connector.
3. Check the continuity between A/F sensor 1 harness connector and IPDM E/R harness connector.

DTC	A/F sensor 1			IPDM E/R		Continuity
	Bank	Connector	Terminal	Connector	Terminal	
P0132	1	F5	4	F19	52	Existed
P0152	2	F65	4		53	

Is the inspection result normal?

YES >> Perform the trouble diagnosis for power supply circuit.
NO >> Repair or replace error-detected parts.

3. CHECK A/F SENSOR 1 INPUT SIGNAL CIRCUIT FOR OPEN AND SHORT

1. Turn ignition switch OFF.
2. Disconnect ECM harness connector.
3. Check the continuity between A/F sensor 1 harness connector and ECM harness connector.

DTC	A/F sensor 1			ECM		Continuity
	Bank	Connector	Terminal	Connector	Terminal	
P0132	1	F5	1	F52	69	Existed
			2		73	
P0152	2	F65	1		77	
			2		81	

4. Check the continuity between A/F sensor 1 harness connector and ground, or ECM harness connector and ground.

DTC	A/F sensor 1			Ground	Continuity
	Bank	Connector	Terminal		
P0132	1	F5	1	Ground	Not existed
			2		
P0152	2	F65	1		
			2		

DTC	ECM		Ground	Continuity
	Connector	Terminal		
P0132	F52	69	Ground	Not existed
		73		
P0152		77		
		81		

5. Also check harness for short to power.

Is the inspection result normal?

YES >> GO TO 4.
NO >> Repair open circuit, short to ground or short to power in harness or connectors.

4. CHECK INTERMITTENT INCIDENT

Check intermittent incident. Refer to GI-47, "Intermittent Incident".

Is the inspection result normal?

YES >> Replace malfunctioning air fuel ratio (A/F) sensor 1. Refer to EM-31, "Removal and Installation (bank 2)", EM-33, "Removal and Installation (bank 1)".
NO >> Repair or replace error-detected parts.

P0137, P0157 HO2S2

DTC Logic

INFOID:0000000011489596

DTC DETECTION LOGIC

The heated oxygen sensor 2 has a much longer switching time between rich and lean than the air fuel ratio (A/F) sensor 1. The oxygen storage capacity of the three way catalyst (manifold) causes the longer switching time. To judge the malfunctions of heated oxygen sensor 2, ECM monitors whether the maximum voltage of the sensor is sufficiently high during various driving conditions such as fuel-cut.

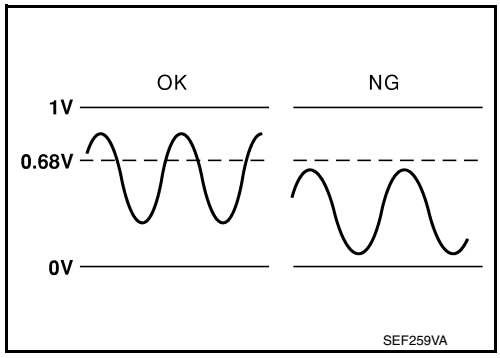

DTC No.	CONSULT screen terms (Trouble diagnosis content)	DTC detecting condition	Possible cause
P0137	HO2S2 (B1) (O2 sensor circuit low voltage bank 1 sensor 2)	The maximum voltage from the sensor does not reach the specified voltage.	• Harness or connectors (The sensor circuit is open or shorted) • Heated oxygen sensor 2 • Fuel pressure • Fuel injector • Intake air leakage
P0157	HO2S2 (B2) (O2 sensor circuit low voltage bank 2 sensor 2)		

DTC CONFIRMATION PROCEDURE

1. INSPECTION START

Will CONSULT be used?

Will CONSULT be used?

YES >> GO TO 2.
NO >> GO TO 5.

2. PRECONDITIONING

If DTC confirmation Procedure has been previously conducted, always perform the following before conducting the next test.

1. Turn ignition switch OFF and wait at least 10 seconds.
2. Turn ignition switch ON.
3. Turn ignition switch OFF and wait at least 10 seconds.

TESTING CONDITION:
For better results, perform “DTC WORK SUPPORT” at a temperature of 0 to 30°C (32 to 86°F).

>> GO TO 3.

3. PERFORM DTC CONFIRMATION PROCEDURE

With CONSULT

1. Turn ignition switch ON and select “DATA MONITOR” mode with CONSULT.
2. Start engine and warm it up to the normal operating temperature.
3. Turn ignition switch OFF and wait at least 10 seconds.
4. Turn ignition switch ON.
5. Turn ignition switch OFF and wait at least 10 seconds.
6. Start engine and keep the engine speed between 3,500 and 4,000 rpm for at least 1 minute under no load.
7. Let engine idle for 1 minute.
8. Check that “COOLANT TEMP/S” indicates more than 70°C (158°F).
   If not, warm up engine and go to next step when “COOLANT TEMP/S” indication reaches 70°C (158°F).
9. Open engine hood.

10. Select “HO2S2 (B1) P1147” (for DTC P0137) or “HO2S2 (B2) P1167” (for DTC P0157) of “HO2S2” in “DTC WORK SUPPORT” mode with CONSULT.
11. Follow the instruction of CONSULT display.
    NOTE:
    It will take at most 10 minutes until “COMPLETED” is displayed.
12. Touch “SELF-DIAG RESULTS”.

Which is displayed on CONSULT screen?

OK >> INSPECTION END
NG >> Proceed to EC-724, "Diagnosis Procedure".
CAN NOT BE DIAGNOSED>>GO TO 4.

4. PERFORM DTC CONFIRMATION PROCEDURE AGAIN

1. Turn ignition switch OFF and leave the vehicle in a cool place (soak the vehicle).
2. Perform DTC confirmation procedure again.

>> GO TO 3.

5. PERFORM COMPONENT FUNCTION CHECK

Perform component function check. Refer to EC-723, "Component Function Check".
NOTE:
Use component function check to check the overall function of the heated oxygen sensor 2 circuit. During this check, a 1st trip DTC might not be confirmed.

Is the inspection result normal?

YES >> INSPECTION END
NO >> Proceed to EC-724, "Diagnosis Procedure".

Component Function Check

INFOID:0000000011489597

1. PERFORM COMPONENT FUNCTION CHECK-I

Without CONSULT
1. Start engine and warm it up to the normal operating temperature.
2. Turn ignition switch OFF and wait at least 10 seconds.
3. Turn ignition switch ON.
4. Turn ignition switch OFF and wait at least 10 seconds.
5. Start engine and keep the engine speed between 3,500 and 4,000 rpm for at least 1 minute under no load.
6. Let engine idle for 1 minute.
7. Check the voltage between ECM harness connector terminals under the following conditions.

DTC	ECM			Condition	Voltage
	Connector	+	–		
		Terminal			
P0137	F52	57	59	Revving up to 4,000 rpm under no load at least 10 times	The voltage should be above 0.68 V at least once during this procedure.
P0157		58			

Is the inspection result normal?

YES >> INSPECTION END
NO >> GO TO 2.

2. PERFORM COMPONENT FUNCTION CHECK-II

Check the voltage between ECM harness connector terminals under the following conditions.

DTC	ECM			Condition	Voltage
	Connector	+	–		
		Terminal			
P0137	F52	57	59	Keeping engine at idle for 10 minutes	The voltage should be above 0.68 V at least once during this procedure.
P0157		58			

Is the inspection result normal?

YES >> INSPECTION END
NO >> GO TO 3.

3. PERFORM COMPONENT FUNCTION CHECK-III

Check the voltage between ECM harness connector terminals under the following conditions.

DTC	ECM			Condition	Voltage
	Connector	+	–		
		Terminal			
P0137	F52	57	59	Coasting from 80 km/h (50 MPH) with selector lever in the D position	The voltage should be above 0.68 V at least once during this procedure.
P0157		58			

Is the inspection result normal?

YES >> INSPECTION END
NO >> Proceed to EC-724, "Diagnosis Procedure".

Diagnosis Procedure

INFOID:0000000011489598

1. CLEAR MIXTURE RATIO SELF-LEARNING VALUE

1. Clear the mixture ratio self-learning value. Refer to EC-663, "Work Procedure".
2. Run engine for at least 10 minutes at idle speed.

Is the 1st trip DTC P0171 or P0174 detected? Is it difficult to start engine?

YES >> Perform trouble diagnosis for DTC P0171 or P0174. Refer to EC-745, "DTC Logic".
NO >> GO TO 2.

2. CHECK HO2S2 GROUND CIRCUIT

1. Turn ignition switch OFF.
2. Disconnect heated oxygen sensor 2 harness connector.
3. Disconnect ECM harness connector.
4. Check the continuity between heated oxygen sensor 2 (HO2S2) harness connector and ECM harness connector.

DTC	HO2S2			ECM		Continuity
	Bank	Connector	Terminal	Connector	Terminal	
P0137	1	F13	1	F52	59	Existed
P0157	2	F12	1			

5. Also check harness for short to ground and short to power.

Is the inspection result normal?

YES >> GO TO 3.
NO >> Repair open circuit, short to ground or short to power in harness or connectors.

3. CHECK HO2S2 INPUT SIGNAL CIRCUIT FOR OPEN AND SHORT

1. Check the continuity between HO2S2 harness connector and ECM harness connector.

DTC	HO2S2			ECM		Continuity
	Bank	Connector	Terminal	Connector	Terminal	
P0137	1	F13	4	F52	57	Existed
P0157	2	F12	4		58	

2. Check the continuity between HO2S2 harness connector and ground, or ECM harness connector and ground.

DTC	HO2S2			Ground	Continuity
	Bank	Connector	Terminal		
P0137	1	F13	4	Ground	Not existed
P0157	2	F12	4		

DTC	ECM		Ground	Continuity
	Connector	Terminal		
P0137	F52	57	Ground	Not existed
P0157		58		

3. Also check harness for short to power.

Is the inspection result normal?

YES >> GO TO 4.
NO >> Repair open circuit, short to ground or short to power in harness or connectors.

4. CHECK HEATED OXYGEN SENSOR 2

Check heated oxygen sensor 2. Refer to EC-725, "Component Inspection".

Is the inspection result normal?

YES >> Check intermittent incident. Refer to GI-47, "Intermittent Incident".
NO >> Replace malfunctioning heated oxygen sensor 2. Refer to EM-31, "Removal and Installation (bank 2)", EM-33, "Removal and Installation (bank 1)".

Component Inspection

INFOID:0000000011489599

1. INSPECTION START

Will CONSULT be used?

Will CONSULT be used?

YES >> GO TO 2.
NO >> GO TO 3.

2. CHECK HEATED OXYGEN SENSOR 2

With CONSULT

1. Turn ignition switch ON and select “DATA MONITOR” mode with CONSULT.
2. Start engine and warm it up to the normal operating temperature.
3. Turn ignition switch OFF and wait at least 10 seconds.
4. Start engine and keep the engine speed between 3,500 and 4,000 rpm for at least 1 minute under no load.
5. Let engine idle for 1 minute.
6. Select “FUEL INJECTION” in “ACTIVE TEST” mode, and select “HO2S2 (B1)/(B2)” as the monitor item with CONSULT.
7. Check “HO2S2 (B1)/(B2)” at idle speed when adjusting “FUEL INJECTION” to ± 25%.

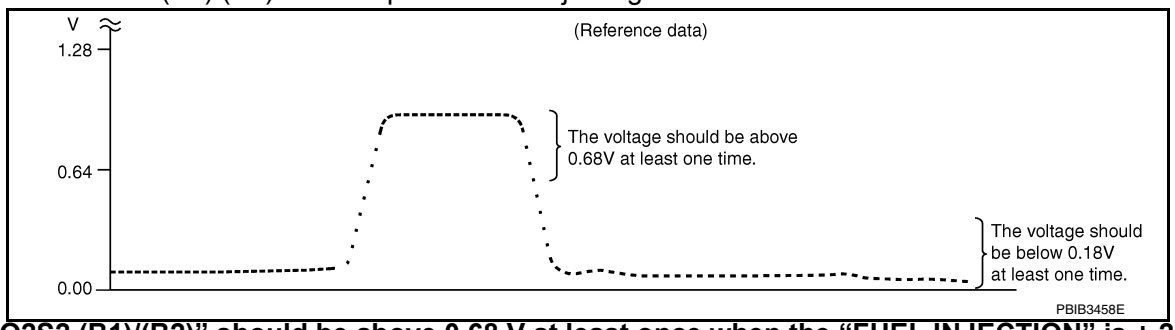

“HO2S2 (B1)/(B2)” should be above 0.68 V at least once when the “FUEL INJECTION” is + 25%.
“HO2S2 (B1)/(B2)” should be below 0.18 V at least once when the “FUEL INJECTION” is – 25%.

Is the inspection result normal?

YES >> INSPECTION END

NO >> Replace malfunctioning heated oxygen sensor 2. Refer to EM-31, "Removal and Installation (bank 2)", EM-33, "Removal and Installation (bank 1)".

3. CHECK HEATED OXYGEN SENSOR 2-I

Without CONSULT

1. Start engine and warm it up to the normal operating temperature.
2. Turn ignition switch OFF and wait at least 10 seconds.
3. Start engine and keep the engine speed between 3,500 and 4,000 rpm for at least 1 minute under no load.
4. Let engine idle for 1 minute.
5. Check the voltage between ECM harness connector terminals under the following conditions.

ECM			Condition	Voltage
Connector	+	–		
	Terminal			
F52	57	59	Revving up to 4,000 rpm under no load at least 10 times	The voltage should be above 0.68 V at least once during this procedure. The voltage should be below 0.18 V at least once during this procedure.
	58			

Is the inspection result normal?

YES >> INSPECTION END
NO >> GO TO 4.

4. CHECK HEATED OXYGEN SENSOR 2-II

Check the voltage between ECM harness connector terminals under the following conditions.

ECM			Condition	Voltage
Connector	+	–		
	Terminal			
F52	57	59	Keeping engine at idle for 10 minutes	The voltage should be above 0.68 V at least once during this procedure. The voltage should be below 0.18 V at least once during this procedure.
	58			

Is the inspection result normal?

YES >> INSPECTION END
NO >> GO TO 5.

5. CHECK HEATED OXYGEN SENSOR 2-III

Check the voltage between ECM harness connector terminals under the following conditions.

ECM			Condition	Voltage
Connector	+	–		
	Terminal			
F52	57	59	Coasting from 80 km/h (50 MPH) with selector lever in the D position	The voltage should be above 0.68 V at least once during this procedure. The voltage should be below 0.18 V at least once during this procedure.
	58			

Is the inspection result normal?

YES >> INSPECTION END
NO >> Replace malfunctioning heated oxygen sensor 2. Refer to EM-31, "Removal and Installation (bank 2)", EM-33, "Removal and Installation (bank 1)".

P0138, P0158 HO2S2

DTC Logic

INFOID:0000000011489600

DTC DETECTION LOGIC

The heated oxygen sensor 2 has a much longer switching time between rich and lean than the air fuel ratio (A/F) sensor 1. The oxygen storage capacity of the three way catalyst (manifold) causes the longer switching time.

MALFUNCTION A

To judge the malfunctions of heated oxygen sensor 2, ECM monitors whether the voltage is unusually high during various driving conditions such as fuel cut.

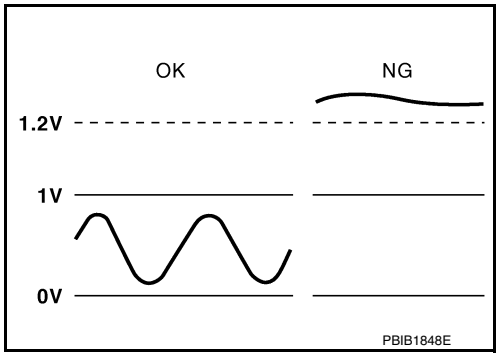

MALFUNCTION B

To judge the malfunctions of heated oxygen sensor 2, ECM monitors whether the minimum voltage of sensor is sufficiently low during various driving conditions such as fuel-cut.

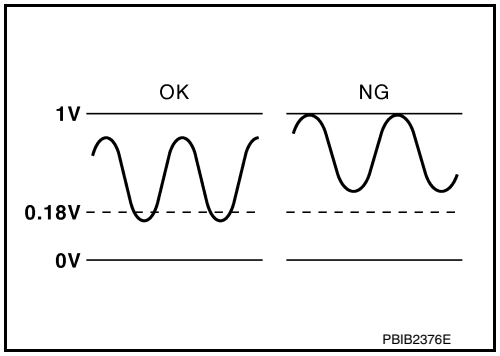

DTC No.	CONSULT screen terms (Trouble diagnosis content)	DTC detecting condition		Possible cause
P0138	HO2S2 (B1) (O2 sensor circuit high voltage bank 1 sensor 2)	A)	An excessively high voltage from the sensor is sent to ECM.	• Harness or connectors (The sensor circuit is open or shorted) • Heated oxygen sensor 2
		B)	The minimum voltage from the sensor is not reached to the specified voltage.	• Harness or connectors (The sensor circuit is open or shorted) • Heated oxygen sensor 2 • Fuel pressure • Fuel injector
P0158	HO2S2 (B2) (O2 sensor circuit high voltage bank 2 sensor2)	A)	An excessively high voltage from the sensor is sent to ECM.	• Harness or connectors (The sensor circuit is open or shorted) • Heated oxygen sensor 2
		B)	The minimum voltage from the sensor is not reached to the specified voltage.	• Harness or connectors (The sensor circuit is open or shorted) • Heated oxygen sensor 2 • Fuel pressure • Fuel injector

DTC CONFIRMATION PROCEDURE

1.PRECONDITIONING

If DTC Confirmation Procedure has been previously conducted, always perform the following before conducting the next test.

1. Turn ignition switch OFF and wait at least 10 seconds.
2. Turn ignition switch ON.
3. Turn ignition switch OFF and wait at least 10 seconds.

>> GO TO 2.

2. PERFORM DTC CONFIRMATION PROCEDURE FOR MALFUNCTION A

1. Start engine and warm it up to the normal operating temperature.
2. Turn ignition switch OFF and wait at least 10 seconds.
3. Turn ignition switch ON.
4. Turn ignition switch OFF and wait at least 10 seconds.
5. Start engine and keep the engine speed between 3,500 and 4,000 rpm for at least 1 minute under no load.
6. Let engine idle for 2 minutes.
7. Check 1st trip DTC.

Is 1st trip DTC detected?

YES >> Proceed to EC-729, "Diagnosis Procedure".
NO-1 >> With CONSULT: GO TO 3.
NO-2 >> Without CONSULT: GO TO 5.

3. PERFORM DTC CONFIRMATION PROCEDURE FOR MALFUNCTION B

NOTE:
For better results, perform “DTC WORK SUPPORT” at a temperature of 0 to 30°C (32 to 86°F).

1. Select “DATA MONITOR” mode with CONSULT.
2. Start engine and warm it up to the normal operating temperature.
3. Turn ignition switch OFF and wait at least 10 seconds.
4. Turn ignition switch ON.
5. Turn ignition switch OFF and wait at least 10 seconds.
6. Start engine and keep the engine speed between 3,500 and 4,000 rpm for at least 1 minute under no load.
7. Let engine idle for 1 minute.
8. Check that “COOLANT TEMP/S” indicates more than 70°C (158°F).
   If not, warm up engine and go to next step when “COOLANT TEMP/S” indication reaches 70°C (158°F).
9. Open engine hood.
10. Select “HO2S2 (B1) P1146” (for DTC P0138) or “HO2S2 (B2) P1166” (for DTC P0158) of “HO2S2” in “DTC WORK SUPPORT” mode with CONSULT.
11. Follow the instruction of CONSULT display.
    NOTE:
    It will take at most 10 minutes until “COMPLETED” is displayed.
12. Touch “SELF-DIAG RESULTS”.

Which is displayed on CONSULT screen?

OK >> INSPECTION END
NG >> Proceed to EC-729, "Diagnosis Procedure".
CON NOT BE DIAGNOSED>>GO TO 4.

4. PERFORM DTC CONFIRMATION PROCEDURE FOR MALFUNCTION B AGAIN

1. Turn ignition switch OFF and leave the vehicle in a cool place (soak the vehicle).
2. Perform DTC confirmation procedure again.

>> GO TO 3.

5. PERFORM COMPONENT FUNCTION CHECK FOR MALFUNCTION B

Perform component function check. Refer to EC-729, "Component Function Check".
NOTE:
Use component function check to check the overall function of the heated oxygen sensor 2 circuit. During this check, a 1st trip DTC might not be confirmed.

Is the inspection result normal?

YES >> INSPECTION END
NO >> Proceed to EC-729, "Diagnosis Procedure".

Component Function Check

INFOID:0000000011489601

1. PERFORM COMPONENT FUNCTION CHECK-1

Without CONSULT

1. Start engine and warm it up to the normal operating temperature.
2. Turn ignition switch OFF and wait at least 10 seconds.
3. Turn ignition switch ON.
4. Turn ignition switch OFF and wait at least 10 seconds.
5. Start engine and keep the engine speed between 3,500 and 4,000 rpm for at least 1 minute under no load.
6. Let engine idle for 1 minute.
7. Check the voltage between ECM harness connector terminals under the following conditions.

DTC	ECM			Condition	Voltage
	Connector	+	–		
		Terminal			
P0138	F52	57	59	Revving up to 4,000 rpm under no load at least 10 times	The voltage should be below 0.18 V at least once during this procedure.
P0158		58			

Is the inspection result normal?

YES >> INSPECTION END
NO >> GO TO 2.

2. PERFORM COMPONENT FUNCTION CHECK-2

Check the voltage between ECM harness connector terminals under the following conditions.

DTC	ECM			Condition	Voltage
	Connector	+	–		
		Terminal			
P0138	F52	57	59	Keeping engine speed at idle for 10 minutes	The voltage should be below 0.18 V at least once during this procedure.
P0158		58			

Is the inspection result normal?

YES >> INSPECTION END
NO >> GO TO 3.

3. PERFORM COMPONENT FUNCTION CHECK-3

Check the voltage between ECM harness connector terminals under the following conditions.

DTC	ECM			Condition	Voltage
	Connector	+	–		
		Terminal			
P0138	F52	57	59	Coasting from 80 km/h (50 MPH) with selector lever in the D position	The voltage should be below 0.18 V at least once during this procedure.
P0158		58			

Is the inspection result normal?

YES >> INSPECTION END
NO >> Proceed to EC-729, "Diagnosis Procedure".

Diagnosis Procedure

INFOID:0000000011489602

1. INSPECTION START

Confirm the detected malfunction (A or B). Refer to EC-727, "DTC Logic".

Which malfunction is detected?

A >> GO TO 2.
B >> GO TO 6.

2. CHECK HO2S2 CONNECTOR FOR WATER

1. Disconnect heated oxygen sensor 2 harness connector.
2. Check that water is not inside connectors.

Is the inspection result normal?

YES >> GO TO 3.
NO >> Repair or replace harness or connectors.

3. CHECK HO2S2 GROUND CIRCUIT

1. Disconnect heated oxygen sensor 2 harness connector.
2. Disconnect ECM harness connector.
3. Check the continuity between heated oxygen sensor 2 (HO2S2) harness connector and ECM harness connector.

DTC	HO2S2			ECM		Continuity
	Bank	Connector	Terminal	Connector	Terminal	
P0138	1	F13	1	F52	59	Existed
P0158	2	F12	1			

4. Also check harness for short to ground and short to power.

Is the inspection result normal?

YES >> GO TO 4.
NO >> Repair open circuit, short to ground or short to power in harness or connectors.

4. CHECK HO2S2 INPUT SIGNAL CIRCUIT

1. Check the continuity between HO2S2 harness connector and ECM harness connector.

DTC	HO2S2			ECM		Continuity
	Bank	Connector	Terminal	Connector	Terminal	
P0138	1	F13	4	F52	57	Existed
P0158	2	F12	4		58	

2. Check the continuity between HO2S2 harness connector and ground, or ECM harness connector and ground.

DTC	HO2S2			Ground	Continuity
	Bank	Connector	Terminal		
P0138	1	F13	4	Ground	Not existed
P0158	2	F12	4		

DTC	ECM		Ground	Continuity
	Connector	Terminal		
P0138	F52	57	Ground	Not existed
P0158		58		

3. Also check harness for short to power.

Is the inspection result normal?

YES >> GO TO 5.
NO >> Repair open circuit, short to ground or short to power in harness or connectors.

5. CHECK HEATED OXYGEN SENSOR 2

Check heated oxygen sensor 2. Refer to EC-732, "Component Inspection".

Is the inspection result normal?

YES >> Check intermittent incident. Refer to GI-47, "Intermittent Incident".

NO >> Replace malfunctioning heated oxygen sensor 2. Refer to EM-31, "Removal and Installation (bank 2)", EM-33, "Removal and Installation (bank 1)".

6. CLEAR MIXTURE RATIO SELF-LEARNING VALUE

1. Clear the mixture ratio self-learning value. Refer to EC-663, "Work Procedure".
2. Run engine for at least 10 minutes at idle speed.

Is the 1st trip DTC P0172 or P0175 detected? Is it difficult to start engine?

YES >> Perform trouble diagnosis for DTC P0172, P0175. Refer to EC-749, "DTC Logic".
NO >> GO TO 7.

7. CHECK HO2S2 GROUND CIRCUIT

1. Turn ignition switch OFF.
2. Disconnect heated oxygen sensor 2 harness connector.
3. Disconnect ECM harness connector.
4. Check the continuity between HO2S2 harness connector and ECM harness connector.

DTC	HO2S2			ECM		Continuity
	Bank	Connector	Terminal	Connector	Terminal	
P0138	1	F13	1	F52	59	Existed
P0158	2	F12	1			

5. Also check harness for short to ground and short to power.

Is the inspection result normal?

YES >> GO TO 8.
NO >> Repair open circuit, short to ground or short to power in harness or connectors.

8. CHECK HO2S2 INPUT SIGNAL CIRCUIT

1. Check the continuity between HO2S2 harness connector and ECM harness connector.

DTC	HO2S2			ECM		Continuity
	Bank	Connector	Terminal	Connector	Terminal	
P0138	1	F13	4	F52	57	Existed
P0158	2	F12	4		58	

2. Check the continuity between HO2S2 harness connector and ground, or ECM harness connector and ground.

DTC	HO2S2			Ground	Continuity
	Bank	Connector	Terminal		
P0138	1	F13	4	Ground	Not existed
P0158	2	F12	4		

DTC	ECM		Ground	Continuity
	Connector	Terminal		
P0138	F52	57	Ground	Not existed
P0158		58		

3. Also check harness for short to power.

Is the inspection result normal?

YES >> GO TO 9.
NO >> Repair open circuit, short to ground or short to power in harness or connectors.

9. CHECK HEATED OXYGEN SENSOR 2

Check heated oxygen sensor 2. Refer to EC-732, "Component Inspection"

Is the inspection result normal?

YES >> Check intermittent incident. Refer to GI-47, "Intermittent Incident".
NO >> Replace malfunctioning heated oxygen sensor 2. Refer to EM-31, "Removal and Installation (bank 2)", EM-33, "Removal and Installation (bank 1)".

Component Inspection

INFOID:0000000011489603

1. INSPECTION START

Will CONSULT be used?

Will CONSULT be used?

YES >> GO TO 2.
NO >> GO TO 3.

2. CHECK HEATED OXYGEN SENSOR 2

With CONSULT

1. Turn ignition switch ON and select “DATA MONITOR” mode with CONSULT.
2. Start engine and warm it up to the normal operating temperature.
3. Turn ignition switch OFF and wait at least 10 seconds.
4. Start engine and keep the engine speed between 3,500 and 4,000 rpm for at least 1 minute under no load.
5. Let engine idle for 1 minute.
6. Select “FUEL INJECTION” in “ACTIVE TEST” mode, and select “HO2S2 (B1)/(B2)” as the monitor item with CONSULT.
7. Check “HO2S2 (B1)/(B2)” at idle speed when adjusting “FUEL INJECTION” to ± 25%.

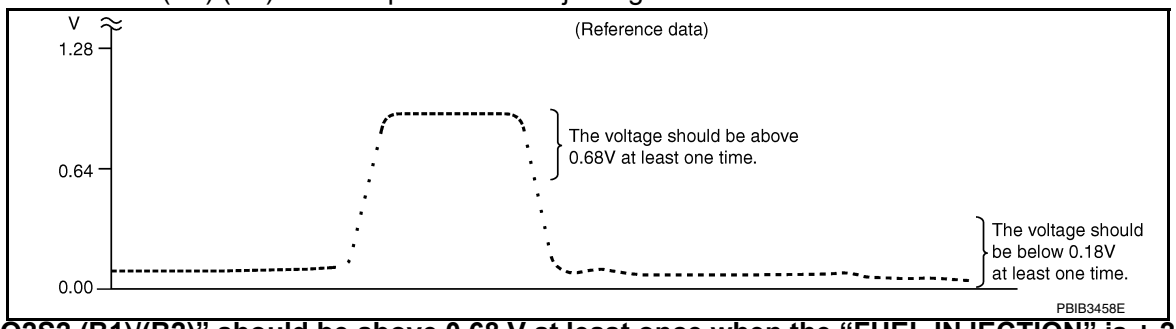

“HO2S2 (B1)/(B2)” should be above 0.68 V at least once when the “FUEL INJECTION” is + 25%.
“HO2S2 (B1)/(B2)” should be below 0.18 V at least once when the “FUEL INJECTION” is – 25%.

Is the inspection result normal?

YES >> INSPECTION END
NO >> Replace malfunctioning heated oxygen sensor 2. Refer to EM-31, "Removal and Installation (bank 2)", EM-33, "Removal and Installation (bank 1)".

3. CHECK HEATED OXYGEN SENSOR 2-I

Without CONSULT

1. Start engine and warm it up to the normal operating temperature.
2. Turn ignition switch OFF and wait at least 10 seconds.
3. Start engine and keep the engine speed between 3,500 and 4,000 rpm for at least 1 minute under no load.
4. Let engine idle for 1 minute.
5. Check the voltage between ECM harness connector terminals under the following conditions.

ECM			Condition	Voltage
Connector	+	–		
	Terminal			
F52	57	59	Revving up to 4,000 rpm under no load at least 10 times	The voltage should be above 0.68 V at least once during this procedure. The voltage should be below 0.18 V at least once during this procedure.
	58			

Is the inspection result normal?

YES >> INSPECTION END
NO >> GO TO 4.

4. CHECK HEATED OXYGEN SENSOR 2-II

Check the voltage between ECM harness connector terminals under the following conditions.

ECM			Condition	Voltage
Connector	+	–		
	Terminal			
F52	57	59	Keeping engine at idle for 10 minutes	The voltage should be above 0.68 V at least once during this procedure. The voltage should be below 0.18 V at least once during this procedure.
	58			

Is the inspection result normal?

YES >> INSPECTION END
NO >> GO TO 5.

5. CHECK HEATED OXYGEN SENSOR 2-III

Check the voltage between ECM harness connector terminals under the following conditions.

ECM			Condition	Voltage
Connector	+	–		
	Terminal			
F52	57	59	Coasting from 80 km/h (50 MPH) with selector lever in the D position	The voltage should be above 0.68 V at least once during this procedure. The voltage should be below 0.18 V at least once during this procedure.
	58			

Is the inspection result normal?

YES >> INSPECTION END
NO >> Replace malfunctioning heated oxygen sensor 2. Refer to EM-31, "Removal and Installation (bank 2)", EM-33, "Removal and Installation (bank 1)".

P0139, P0159 HO2S2

DTC Logic

INFOID:0000000011489604

DTC DETECTION LOGIC

The heated oxygen sensor 2 has a much longer switching time between rich and lean than the air fuel ratio (A/F) sensor 1. The oxygen storage capacity of the three way catalyst 1 causes the longer switching time. To judge the malfunctions of heated oxygen sensor 2, ECM monitors whether the switching response of the sensor's voltage is faster than specified during various driving conditions such as fuel cut.

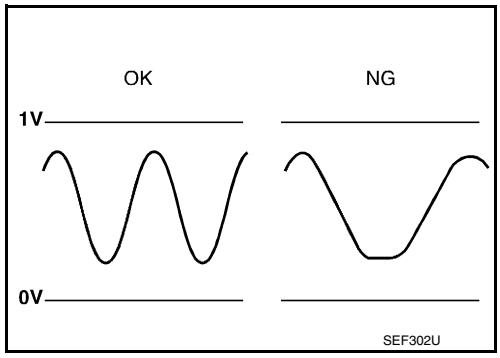

DTC No.	CONSULT screen terms (Trouble diagnosis content)	DTC detecting condition	Possible cause
P0139	HO2S2 (B1) (O2 sensor circuit slow response bank 1 sensor 2)	The switching time between rich and lean of a heated oxygen sensor 2 signal delays more than the specified time computed by ECM.	• Harness or connectors (The sensor circuit is open or shorted) • Heated oxygen sensor 2 • Fuel system • EVAP system • Intake air system
P0159	HO2S2 (B2) (O2 sensor circuit slow response bank 2 sensor2)		

DTC CONFIRMATION PROCEDURE

1.INSPECTION START

Do you have CONSULT?

Do you have CONSULT?

YES >> GO TO 2.
NO >> GO TO 7.

2.PRECONDITIONING

If DTC Confirmation Procedure has been previously conducted, always perform the following procedure before conducting the next test.

1. Turn ignition switch OFF and wait at least 10 seconds.
2. Turn ignition switch ON.
3. Turn ignition switch OFF and wait at least 10 seconds.

TESTING CONDITION:
For better results, perform “DTC WORK SUPPORT” at a temperature of 0 to 30°C (32 to 86°F).

>> GO TO 3.

3.PERFORM DTC CONFIRMATION PROCEDURE

With CONSULT

1. Turn ignition switch ON and select “DATA MONITOR” mode with CONSULT.
2. Start engine and warm it up to the normal operating temperature.
3. Turn ignition switch OFF and wait at least 10 seconds.
4. Turn ignition switch ON.
5. Turn ignition switch OFF and wait at least 10 seconds.
6. Start engine and keep the engine speed between 3,500 and 4,000 rpm for at least 1 minute under no load.
7. Let engine idle for 1 minute.
8. Make sure that “COOLANT TEMP/S” indicates more than 70°C (158°F).
9. Drive the vehicle in a proper gear at 60 km/h (38MPH) and maintain the speed.

CAUTION:

Always drive vehicle at a safe speed.

10. Release the accelerator pedal fully at least 5 seconds.
    CAUTION:
    - **Enable the engine brake.**
    - **Always drive carefully.**
    - **Never apply brake when releasing the accelerator pedal.**
11. Repeat step 9 and 10 at least 8 times.
12. Check the following item of “DATA MONITOR”.

DTC	Data monitor item	Status
P0139	HO2 S2 DIAG1 (B1)	CMPLT
	HO2 S2 DIAG2 (B1)	
P0159	HO2 S2 DIAG1 (B2)	
	HO2 S2 DIAG2 (B2)	

Is “CMPLT” displayed on CONSULT screen?

YES >> GO TO 6.
NO-1: “CMPLT” is not displayed on DIAG 1>>Perform DTC confirmation procedure again.
NO-2: “CMPLT” is not displayed on DIAG 2>>GO TO 4.

4. PERFORM DTC WORK SUPPORT

1. Open engine hood.
2. Select “HO2S2 (B1) P0139” or “HO2S2 (B2) P0159” of “HO2S2” in “DTC WORK SUPPORT” mode with CONSULT.
3. Start engine and follow the instruction of CONSULT display.
   NOTE:
   It will take at most 10 minutes until “COMPLETED” is displayed.

Is “COMPLETED” displayed on CONSULT screen?

YES >> GO TO 6.
NO >> GO TO 5.

5. PERFORM DTC CONFIRMATION PROCEDURE AGAIN

1. Turn ignition switch OFF and leave the vehicle in a cool place (soak the vehicle).
2. Perform DTC confirmation procedure again.

>> GO TO 3.

6. PERFORM SELF-DIAGNOSIS

With CONSULT
Perform ECM self-diagnosis.

Is DTC “P0139” or “P0159” detected?

YES >> Proceed to EC-736, "Diagnosis Procedure".
NO >> INSPECTION END

7. PERFORM COMPONENT FUNCTION CHECK

Perform component function check. Refer to EC-735, "Component Function Check".
NOTE:
Use component function check to check the overall function of the heated oxygen sensor 2 circuit. During this check, a 1st trip DTC might not be confirmed.

Is the inspection result normal?

YES >> INSPECTION END
NO >> Proceed to EC-736, "Diagnosis Procedure".

Component Function Check

INFOID:0000000011489605

1. PERFORM COMPONENT FUNCTION CHECK-I

Without CONSULT

1. Start engine and warm it up to the normal operating temperature.
2. Turn ignition switch OFF and wait at least 10 seconds.
3. Turn ignition switch ON.
4. Turn ignition switch OFF and wait at least 10 seconds.
5. Start engine and keep the engine speed between 3,500 and 4,000 rpm for at least 1 minute under no load.
6. Let engine idle for 1 minute.
7. Check the voltage between ECM harness connector terminals under the following conditions.

DTC	ECM			Condition	Voltage
	Connector	+	–		
		Terminal			
P0139	F52	57	59	Revving up to 4,000 rpm under no load at least 10 times	A change of voltage should be more than 0.96 V for 1 second during this procedure.
P0159		58			

Is the inspection result normal?

YES >> INSPECTION END
NO >> GO TO 2.

2. PERFORM COMPONENT FUNCTION CHECK-II

Check the voltage between ECM harness connector terminals under the following conditions.

DTC	ECM			Condition	Voltage
	Connector	+	–		
		Terminal			
P0139	F52	57	59	Keeping engine at idle for 10 minutes	A change of voltage should be more than 0.96 V for 1 second during this procedure.
P0159		58			

Is the inspection result normal?

YES >> INSPECTION END
NO >> GO TO 3.

3. PERFORM COMPONENT FUNCTION CHECK-III

Check the voltage between ECM harness connector terminals under the following conditions.

DTC	ECM			Condition	Voltage
	Connector	+	–		
		Terminal			
P0139	F52	57	59	Coasting from 80 km/h (50 MPH) in D position	A change of voltage should be more than 0.96 V for 1 second during this procedure.
P0159		58			

Is the inspection result normal?

YES >> INSPECTION END
NO >> Proceed to EC-736, "Diagnosis Procedure".

Diagnosis Procedure

INFOID:0000000011489606

1. CLEAR MIXTURE RATIO SELF-LEARNING VALUE

1. Clear the mixture ratio self-learning value. Refer to EC-663, "Work Procedure".
2. Run engine for at least 10 minutes at idle speed.

Is the 1st trip DTC P0171, P0172, P0174 or P0175 detected? Is it difficult to start engine?

YES >> Perform trouble diagnosis for DTC P0171, P0174 or P0172, P0175. Refer to EC-745, "DTC Logic" or EC-749, "DTC Logic".
NO >> GO TO 2.

2. CHECK HO2S2 GROUND CIRCUIT

1. Turn ignition switch OFF.

2. Disconnect heated oxygen sensor 2 harness connector.
3. Disconnect ECM harness connector.
4. Check the continuity between heated oxygen sensor 2 (HO2S2) harness connector and ECM harness connector.

DTC	HO2S2			ECM		Continuity
	Bank	Connector	Terminal	Connector	Terminal	
P0139	1	F13	1	F52	59	Existed
P0159	2	F12	1			

5. Also check harness for short to ground and short to power.

Is the inspection result normal?

YES >> GO TO 3.
NO >> Repair open circuit, short to ground or short to power in harness or connectors.

3. CHECK HO2S2 INPUT SIGNAL CIRCUIT

1. Check the continuity between HO2S2 harness connector and ECM harness connector.

DTC	HO2S2			ECM		Continuity
	Bank	Connector	Terminal	Connector	Terminal	
P0139	1	F13	4	F52	57	Existed
P0159	2	F12	4		58	

2. Check the continuity between HO2S2 harness connector and ground, or ECM harness connector and ground.

DTC	HO2S2			Ground	Continuity
	Bank	Connector	Terminal		
P0139	1	F13	4	Ground	Not existed
P0159	2	F12	4		

DTC	ECM		Ground	Continuity
	Connector	Terminal		
P0139	F52	57	Ground	Not existed
P0159		58		

3. Also check harness for short to power.

Is the inspection result normal?

YES >> GO TO 4.
NO >> Repair open circuit, short to ground or short to power in harness or connectors.

4. CHECK HEATED OXYGEN SENSOR 2

Check heated oxygen sensor 2. Refer to EC-737, "Component Inspection".

Is the inspection result normal?

YES >> Check intermittent incident. Refer to GI-47, "Intermittent Incident".
NO >> Replace malfunctioning heated oxygen sensor 2. Refer to EM-31, "Removal and Installation (bank 2)", EM-33, "Removal and Installation (bank 1)".

Component Inspection

INFOID:0000000011489607

1. INSPECTION START

Will CONSULT be used?

Will CONSULT be used?

YES >> GO TO 2.

NO >> GO TO 3.

2. CHECK HEATED OXYGEN SENSOR 2

With CONSULT

1. Turn ignition switch ON and select “DATA MONITOR” mode with CONSULT.
2. Start engine and warm it up to the normal operating temperature.
3. Turn ignition switch OFF and wait at least 10 seconds.
4. Start engine and keep the engine speed between 3,500 and 4,000 rpm for at least 1 minute under no load.
5. Let engine idle for 1 minute.
6. Select “FUEL INJECTION” in “ACTIVE TEST” mode, and select “HO2S2 (B1)/(B2)” as the monitor item with CONSULT.
7. Check “HO2S2 (B1)/(B2)” at idle speed when adjusting “FUEL INJECTION” to ± 25%.

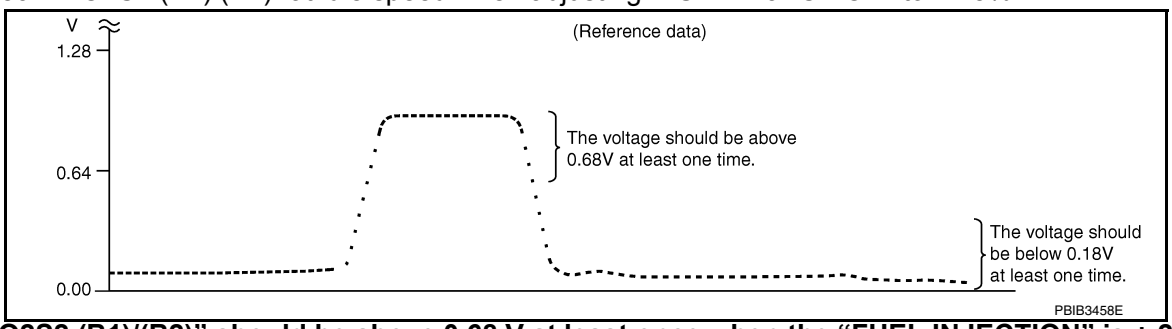

“HO2S2 (B1)/(B2)” should be above 0.68 V at least once when the “FUEL INJECTION” is + 25%.
“HO2S2 (B1)/(B2)” should be below 0.18 V at least once when the “FUEL INJECTION” is – 25%.

Is the inspection result normal?

YES >> INSPECTION END
NO >> Replace malfunctioning heated oxygen sensor 2. Refer to EM-31, "Removal and Installation (bank 2)", EM-33, "Removal and Installation (bank 1)".

3. CHECK HEATED OXYGEN SENSOR 2-I

Without CONSULT

1. Start engine and warm it up to the normal operating temperature.
2. Turn ignition switch OFF and wait at least 10 seconds.
3. Start engine and keep the engine speed between 3,500 and 4,000 rpm for at least 1 minute under no load.
4. Let engine idle for 1 minute.
5. Check the voltage between ECM harness connector terminals under the following conditions.

ECM			Condition	Voltage
Connector	+	–		
	Terminal			
F52	57	59	Revving up to 4,000 rpm under no load at least 10 times	The voltage should be above 0.68 V at least once during this procedure. The voltage should be below 0.18 V at least once during this procedure.
	58			

Is the inspection result normal?

YES >> INSPECTION END
NO >> GO TO 4.

4. CHECK HEATED OXYGEN SENSOR 2-II

Check the voltage between ECM harness connector terminals under the following conditions.

ECM			Condition	Voltage
Connector	+	–		
	Terminal			
F52	57	59	Keeping engine at idle for 10 minutes	The voltage should be above 0.68 V at least once during this procedure. The voltage should be below 0.18 V at least once during this procedure.
	58			

Is the inspection result normal?

YES >> INSPECTION END
NO >> GO TO 5.

5. CHECK HEATED OXYGEN SENSOR 2-III

Check the voltage between ECM harness connector terminals under the following conditions.

ECM			Condition	Voltage
Connector	+	–		
	Terminal			
F52	57	59	Coasting from 80 km/h (50 MPH) with selector lever in the D position	The voltage should be above 0.68 V at least once during this procedure. The voltage should be below 0.18 V at least once during this procedure.
	58			

Is the inspection result normal?

YES >> INSPECTION END
NO >> Replace malfunctioning heated oxygen sensor 2. Refer to EM-31, "Removal and Installation (bank 2)", EM-33, "Removal and Installation (bank 1)".

P014C, P014D, P014E, P014F A/F SENSOR 1

DTC Logic

INFOID:0000000011489608

DTC DETECTION LOGIC

To judge malfunctions, this diagnosis measures response time of the A/F signal computed by ECM from the A/F sensor 1 signal. The time is compensated by engine operating (speed and load), fuel feedback control constant, and the A/F sensor 1 temperature index. Judgment is based on whether the compensated time (the A/F signal cycling time index) is inordinately long or not.

DTC No.	CONSULT screen terms (Trouble diagnosis content)	DTC detecting condition	Possible Cause
P014C	A/F SENSOR1 (B1) (O2 sensor slow response - rich to lean bank 1 sensor 1)	• The response time of a A/F sensor 1 signal delays more than the specified time computed by ECM.	• Harness or connectors (The A/F sensor 1 circuit is open or shorted.) • A/F sensor 1
P014D	A/F SENSOR1 (B1) (O2 sensor slow response - lean to rich bank 1 sensor 1)		
P014E	A/F SENSOR1 (B2) (O2 sensor slow response - rich to lean bank 2 sensor 1)		
P014F	A/F SENSOR1 (B2) (O2 sensor slow response - lean to rich bank 2 sensor 1)		

DTC CONFIRMATION PROCEDURE

1.PRECONDITIONING

If DTC Confirmation Procedure has been previously conducted, always perform the following procedure before conducting the next test.

1. Turn ignition switch OFF and wait at least 10 seconds.
2. Turn ignition switch ON.
3. Turn ignition switch OFF and wait at least 10 seconds.

TESTING CONDITION:

Before performing the following procedure, confirm that battery voltage is more than 11 V at idle.

Do you have CONSULT?

YES >> GO TO 2.
NO >> GO TO 6.

2.PERFORM DTC CONFIRMATION PROCEDURE-1

With CONSULT

1. Start engine and warm it up to normal operating temperature.
2. Turn ignition switch OFF and wait at least 10 seconds.
3. Turn ignition switch ON.
4. Turn ignition switch OFF and wait at least 10 seconds.
5. Start engine and keep the engine speed between 3,500 and 4,000 rpm for at least 1minute under no load.
6. Let engine idle for 1 minute.
7. Increase the engine speed up to about 3,600 rpm and keep it for 10 seconds.
8. Fully release accelerator pedal and then let engine idle for about 1 minute.
9. Check the items status of “DATA MONITOR” as follows.

   NOTE:

   If “PRSNT” changed to “ABSNT”, refer to EC-676, "Component Function Check".

DTC	Data monitor item	Status
• P014C • P014D	A/F SEN1 DIAG3 (B1)	PRSNT
• P014E • P014F	A/F SEN1 DIAG3 (B2)	

Is “PRSNT” displayed on CONSULT screen?

YES >> GO TO 4.
NO >> GO TO 3.

3. PERFORM DTC CONFIRMATION PROCEDURE-2

With CONSULT

Perform DTC confirmation procedure-1 again.

Is “PRSNT” displayed on CONSULT screen?

YES >> GO TO 4.
NO >> Refer to EC-676, "Component Function Check".

4. PERFORM DTC CONFIRMATION PROCEDURE-2

With CONSULT

1. Wait for about 20 seconds at idle.
2. Check the items status of “DATA MONITOR” as follows.
   NOTE:
   If “CMPLT” changed to “INCMP”, refer to EC-676, "Component Function Check".

DTC	Data monitor item	Status
• P014C • P014D	A/F SEN1 DIAG1 (B1)	CMPLT
	A/F SEN1 DIAG2 (B1)	
• P014E • P014F	A/F SEN1 DIAG1 (B2)	
	A/F SEN1 DIAG2 (B2)	

Is “CMPLT” displayed on CONSULT screen?

YES >> GO TO 5.
NO >> Refer to EC-676, "Component Function Check".

5. PERFORM SELF-DIAGNOSIS

With CONSULT

Check the “SELF-DIAG RESULT”.

Is any DTC detected?

YES >> Proceed to EC-742, "Diagnosis Procedure".
NO >> INSPECTION END

6. CHECK AIR-FUEL RATIO SELF-LEARNING VALUE

With GST

1. Start engine and warm it up to normal operating temperature.
2. Select Service $01 with GST.
3. Calculate the total value of “Short term fuel trim” and “Long term fuel trim” indications.

Is the total percentage within ±15%?

YES >> GO TO 8.
NO >> GO TO 7.

7. DETECT MALFUNCTIONING PART

Check the following.
- Intake air leaks
- Exhaust gas leaks
- Incorrect fuel pressure
- Lack of fuel
- Fuel injector
- Incorrect PCV hose connection
- PCV valve
- Mass air flow sensor

>> Repair or replace malfunctioning part.

8. PERFORM DTC CONFIRMATION PROCEDURE

1. Turn ignition switch OFF and wait at least 10 seconds.
2. Turn ignition switch ON.
3. Turn ignition switch OFF and wait at least 10 seconds.
4. Start engine and keep the engine speed between 3,500 and 4,000 rpm for at least 1 minute under no load.
5. Let engine idle for 1 minute.
6. Increase the engine speed up to about 3,600 rpm and keep it for 10 seconds.
7. Fully release accelerator pedal and then let engine idle for about 1 minute.
8. Check 1st trip DTC.

Is 1st trip DTC detected?

YES >> Proceed to EC-742, "Diagnosis Procedure".
NO >> INSPECTION END

Diagnosis Procedure

INFOID:0000000011489609

1. RETIGHTEN A/F SENSOR 1

Loosen and retighten the A/F sensor 1. Refer to EM-31, "Removal and Installation (bank 2)", EM-33, "Removal and Installation (bank 1)".

>> GO TO 2.

2. CHECK EXHAUST GAS LEAK

1. Start engine and run it at idle.
2. Listen for an exhaust gas leak before three way catalyst 1.

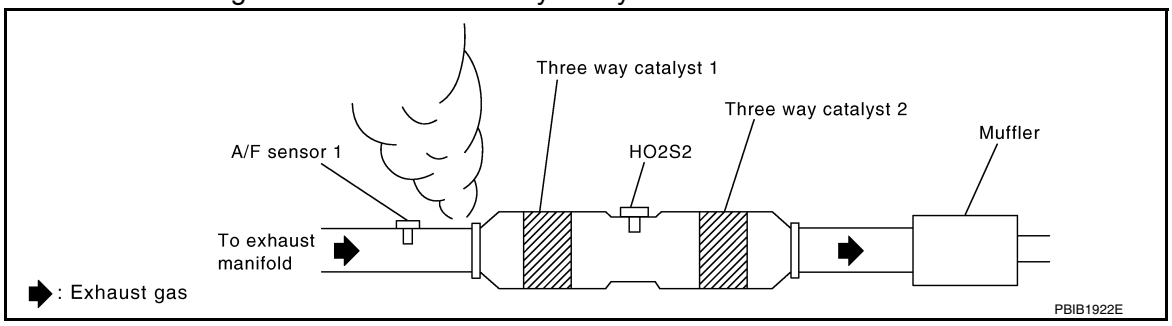

Is exhaust gas leak detected?

YES >> Repair or replace.
NO >> GO TO 3.

3. CHECK FOR INTAKE AIR LEAK

Listen for an intake air leak after the mass air flow sensor.

Is intake air leak detected?

YES >> Repair or replace.
NO >> GO TO 4.

4. CLEAR THE MIXTURE RATIO SELF-LEARNING VALUE

1. Clear the mixture ratio self-learning value. Refer to EC-663, "Work Procedure".
2. Run engine for at least 10 minutes at idle speed.

Is the 1st trip DTC P0171, P0172, P0174 or P0175 detected? Is it difficult to start engine?

YES >> Perform trouble diagnosis for DTC P0171, P0174 or P0172, P0175. Refer to EC-745, "DTC Logic" or EC-749, "DTC Logic".
NO >> GO TO 5.

5. CHECK AIR FUEL RATIO (A/F) SENSOR 1 POWER SUPPLY

1. Disconnect A/F sensor 1 harness connector.
2. Turn ignition switch ON.
3. Check the voltage between A/F sensor 1 harness connector and ground.

DTC	A/F sensor 1			Ground	Voltage
	Bank	Connector	Terminal		
• P014C • P014D	1	F5	4	Ground	Battery voltage
• P014E • P014F	2	F65	4		

Is the inspection result normal?

YES >> GO TO 7.
NO >> GO TO 6.

6. CHECK AIR FUEL RATIO (A/F) SENSOR 1 POWER SUPPLY CIRCUIT

1. Turn ignition switch OFF.
2. Disconnect IPDM E/R harness connector.
3. Check the continuity between A/F sensor 1 harness connector and IPDM E/R harness connector.

DTC	A/F sensor 1			IPDM E/R		Continuity
	Bank	Connector	Terminal	Connector	Terminal	
• P014C • P014D	1	F5	4	F19	52	Existed
• P014E • P014F	2	F65	4		53	

Is the inspection result normal?

YES >> Perform the trouble diagnosis for power supply circuit.
NO >> Repair or replace error-detected parts.

7. CHECK A/F SENSOR 1 INPUT SIGNAL CIRCUIT FOR OPEN AND SHORT

1. Turn ignition switch OFF.
2. Disconnect ECM harness connector.
3. Check the continuity between A/F sensor 1 harness connector and ECM harness connector.

DTC	A/F sensor 1			ECM		Continuity
	Bank	Connector	Terminal	Connector	Terminal	
• P014C • P014D	1	F5	1	F52	69	Existed
			2		73	
• P014E • P014F	2	F65	1		77	
			2		81	

4. Check the continuity between A/F sensor 1 harness connector and ground, or ECM harness connector and ground.

DTC	A/F sensor 1			Ground	Continuity
	Bank	Connector	Terminal		
• P014C • P014D	1	F5	1	Ground	Not existed
			2		
• P014E • P014F	2	F65	1		
			2		

DTC	ECM			Ground	Continuity
	Bank	Connector	Terminal		
• P014C • P014D	1	F52	69	Ground	Not existed
			73		
• P014E • P014F	2		77		
			81		

5. Also check harness for short to power.

Is the inspection result normal?

YES >> GO TO 8.
NO >> Repair open circuit, short to ground or short to power in harness or connectors.

8. CHECK AIR FUEL RATIO (A/F) SENSOR 1 HEATER

Check air fuel ratio (A/F) sensor 1 heater. Refer to EC-695, "Component Inspection".

Is the inspection result normal?

YES >> GO TO 9.
NO >> Replace malfunctioning air fuel ratio (A/F) sensor 1. Refer to EM-31, "Removal and Installation (bank 2)", EM-33, "Removal and Installation (bank 1)".

9. CHECK MASS AIR FLOW SENSOR

Check both mass air flow sensor (bank 1 and bank 2). Refer to EC-703, "Component Inspection".

Is the inspection result normal?

YES >> GO TO 10.
NO >> Replace malfunctioning mass air flow sensor. Refer to EM-24, "Removal and Installation".

10. CHECK PCV VALVE

Check PCV valve. Refer to EC-915, "Work Procedure".

Is the inspection result normal?

YES >> GO TO 11.
NO >> Repair or replace PCV valve. Refer to EC-534, "ENGINE CONTROL SYSTEM : Component Parts Location".

11. CHECK INTERMITTENT INCIDENT

Check intermittent incident. Refer to GI-47, "Intermittent Incident".

Is the inspection result normal?

YES >> Replace malfunctioning air fuel ratio (A/F) sensor 1. Refer to EM-31, "Removal and Installation (bank 2)", EM-33, "Removal and Installation (bank 1)".
NO >> Repair or replace error-detected parts.

P0171, P0174 FUEL INJECTION SYSTEM FUNCTION

DTC Logic

INFOID:0000000011489610

DTC DETECTION LOGIC

With the Air/Fuel Mixture Ratio Self-Learning Control, the actual mixture ratio can be brought closely to the theoretical mixture ratio based on the mixture ratio feedback signal from A/F sensor 1. The ECM calculates the necessary compensation to correct the offset between the actual and the theoretical ratios.
In case the amount of the compensation value is extremely large (the actual mixture ratio is too lean), the ECM judges the condition as the fuel injection system malfunction and illuminates the MIL (2 trip detection logic).

Sensor	Input signal to ECM	ECM function	Actuator
A/F sensor 1	Density of oxygen in exhaust gas (Mixture ratio feedback signal)	Fuel injection control	Fuel injector

DTC No.	CONSULT screen terms (Trouble diagnosis content)	DTC detecting condition	Possible cause
P0171	FUEL SYS-LEAN-B1 (System too lean bank 1)	• Fuel injection system does not operate properly. • The amount of mixture ratio compensation is too large. (The mixture ratio is too lean.)	• Intake air leakage • A/F sensor 1 • Fuel injector • Exhaust gas leakage • Incorrect fuel pressure • Lack of fuel • Mass air flow sensor • Incorrect PCV hose connection
P0174	FUEL SYS-LEAN-B2 (System too lean bank 2)		

DTC CONFIRMATION PROCEDURE

1.PRECONDITIONING

If DTC Confirmation Procedure has been previously conducted, always perform the following before conducting the next test.
1. Turn ignition switch OFF and wait at least 10 seconds.
2. Turn ignition switch ON.
3. Turn ignition switch OFF and wait at least 10 seconds.

>> GO TO 2.

2.PERFORM DTC CONFIRMATION PROCEDURE-I

1. Clear the mixture ratio self-learning value. Refer to EC-663, "Work Procedure".
2. Start engine.

Is it difficult to start engine?

YES >> GO TO 3.
NO >> GO TO 4.

3.RESTART ENGINE

If it is difficult to start engine, the fuel injection system has a malfunction, too.
Crank engine while depressing accelerator pedal.

NOTE:
- **When depressing accelerator pedal three-fourths (3/4) or more, the control system does not start the engine. Do not depress accelerator pedal too much.**

Does engine start?

YES >> Proceed to EC-746, "Diagnosis Procedure".
NO >> Check exhaust and intake air leakage visually.

4.PERFORM DTC CONFIRMATION PROCEDURE-II

1. Keep engine idle for at least 5 minutes.
2. Check 1st trip DTC.

Is 1st trip DTC detected?

YES >> Proceed to EC-746, "Diagnosis Procedure".
NO >> GO TO 5.

5. PERFORM DTC CONFIRMATION PROCEDURE-III

1. Turn ignition switch OFF and wait at least 10 seconds.
2. Start engine.
3. Maintain the following conditions for at least 10 consecutive minutes.
   Hold the accelerator pedal as steady as possible.

VHCL SPEED SE	50 - 120 km/h (31 - 75 mph)

CAUTION:
Always drive vehicle at a safe speed.

4. Check 1st trip DTC.

Is 1st trip DTC detected?

YES >> Proceed to EC-746, "Diagnosis Procedure".
NO >> INSPECTION END

Diagnosis Procedure

INFOID:0000000011489611

1. CHECK EXHAUST GAS LEAKAGE

1. Start engine and run it at idle.
2. Listen for an exhaust gas leakage before three way catalyst (manifold).

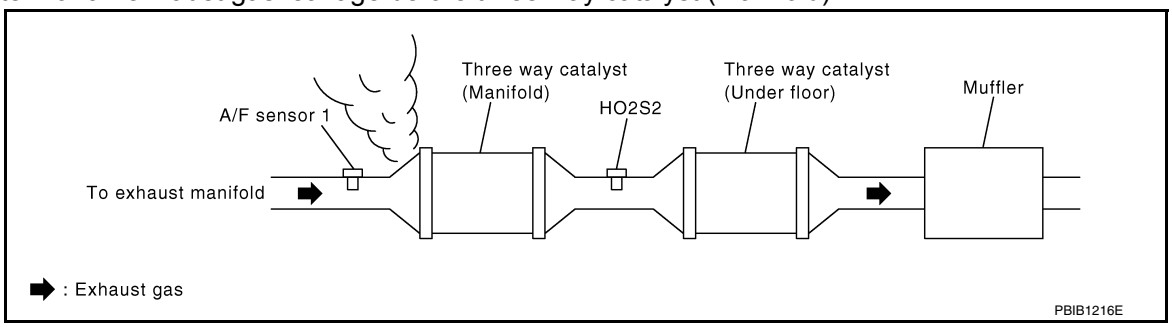

Is exhaust gas leakage detected?

YES >> Repair or replace malfunctioning part.
NO >> GO TO 2.

2. CHECK FOR INTAKE AIR LEAKAGE

1. Listen for an intake air leakage after the mass air flow sensor.
2. Check PCV hose connection.

Is intake air leakage detected?

YES >> Repair or replace malfunctioning part.
NO >> GO TO 3.

3. CHECK A/F SENSOR 1 INPUT SIGNAL CIRCUIT

1. Turn ignition switch OFF.
2. Disconnect corresponding A/F sensor 1 harness connector.
3. Disconnect ECM harness connector.
4. Check the continuity between A/F sensor 1 harness connector and ECM harness connector.

DTC	A/F sensor 1			ECM		Continuity
	Bank	Connector	Terminal	Connector	Terminal	
P0171	1	F5	1	F52	69	Existed
			2		73	
P0174	2	F65	1		77	
			2		81	

5. Check the continuity between A/F sensor 1 harness connector and ground, or ECM harness connector and ground.

DTC	A/F sensor 1			Ground	Continuity
	Bank	Connector	Terminal		
P0171	1	F5	1	Ground	Not existed
			2		
P0174	2	F65	1		
			2		

DTC	ECM		Ground	Continuity
	Connector	Terminal		
P0171	F52	69	Ground	Not existed
		73		
P0174		77		
		81		

6. Also check harness for short to power.

Is the inspection result normal?

YES >> GO TO 4.
NO >> Repair open circuit, short to ground or short to power in harness or connectors.

4. CHECK FUEL PRESSURE

1. Release fuel pressure to zero. Refer to EC-669, "Work Procedure".
2. Install fuel pressure gauge kit [SST: — (J-44321)] and check fuel pressure. Refer to EC-669, "Work Procedure".

At idling: Approximately 350 kPa (3.57 kg/cm^2, 51 psi)

Is the inspection result normal?

YES >> GO TO 6.
NO >> GO TO 5.

5. DETECT MALFUNCTIONING PART

Check fuel hoses and fuel tubes for clogging.

Is the inspection result normal?

YES >> Replace “fuel filter and fuel pump assembly”. Refer to FL-6, "Removal and Installation".
NO >> Repair or replace malfunctioning part.

6. CHECK MASS AIR FLOW SENSOR

With CONSULT

1. Install all removed parts.
2. Check “MASS AIR FLOW” in “DATA MONITOR” mode with CONSULT.
   For specification, refer to EC-917, "Mass Air Flow Sensor".

With GST

1. Install all removed parts.
2. Check mass air flow sensor signal in Service $01 with GST.
   For specification, refer to EC-917, "Mass Air Flow Sensor".

Is the measurement value within the specification?

YES >> GO TO 7.
NO >> Check connectors for rusted terminals or loose connections in the mass air flow sensor circuit or ground. Refer to EC-702, "Diagnosis Procedure".

7. CHECK FUNCTION OF FUEL INJECTOR

With CONSULT

1. Start engine.
2. Perform “POWER BALANCE” in “ACTIVE TEST” mode with CONSULT.
3. Check that each circuit produces a momentary engine speed drop.

With GST

1. Let engine idle.
2. Listen to each fuel injector operating sound.

Is the inspection result normal?

YES >> GO TO 8.
NO >> Perform trouble diagnosis for FUEL INJECTOR, refer to EC-880, "Diagnosis Procedure".

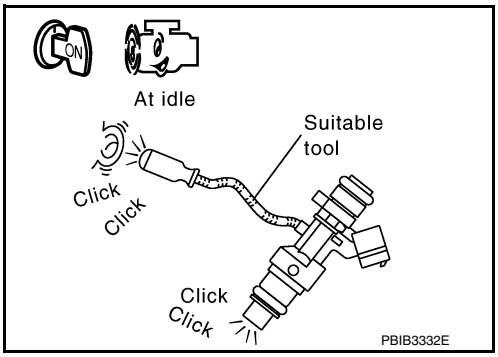

8. CHECK FUEL INJECTOR

1. Turn ignition switch OFF.
2. Confirm that the engine is cooled down and there are no fire hazards near the vehicle.
3. Disconnect all fuel injector harness connectors.
4. Remove fuel tube assembly. Refer to EM-47, "Removal and Installation".
   Keep fuel hose and all fuel injectors connected to fuel tube.
5. For DTC P0171, reconnect fuel injector harness connectors on bank 1.
   For DTC P0174, reconnect fuel injector harness connectors on bank 2.
6. Disconnect all ignition coil harness connectors.
7. Prepare pans or saucers under each fuel injector.
8. Crank engine for about 3 seconds.
   For DTC P0171, check that fuel sprays out from fuel injectors on bank 1.
   For DTC P0174, check that fuel sprays out from fuel injectors on bank 2.

Fuel should be sprayed evenly for each fuel injector.

Is the inspection result normal?

YES >> Check intermittent incident. Refer to GI-47, "Intermittent Incident".
NO >> Replace fuel injectors from which fuel does not spray out. Always replace O-ring with new ones. Refer to EM-47, "Removal and Installation".

P0172, P0175 FUEL INJECTION SYSTEM FUNCTION

DTC Logic

INFOID:0000000011489612

DTC DETECTION LOGIC

With the Air/Fuel Mixture Ratio Self-Learning Control, the actual mixture ratio can be brought closely to the theoretical mixture ratio based on the mixture ratio feedback signal from A/F sensor 1. The ECM calculates the necessary compensation to correct the offset between the actual and the theoretical ratios.
In case the amount of the compensation value is extremely large (the actual mixture ratio is too rich), the ECM judges the condition as the fuel injection system malfunction and illuminates the MIL (2 trip detection logic).

Sensor	Input signal to ECM	ECM function	Actuator
A/F sensor 1	Density of oxygen in exhaust gas (Mixture ratio feedback signal)	Fuel injection control	Fuel injector

DTC No.	CONSULT screen terms (Trouble diagnosis content)	DTC detecting condition	Possible cause
P0172	FUEL SYS-RICH-B1 (System too rich bank 1)	• Fuel injection system does not operate properly. • The amount of mixture ratio compensation is too large. (The mixture ratio is too rich.)	• A/F sensor 1 • Fuel injector • Exhaust gas leakage • Incorrect fuel pressure • Mass air flow sensor
P0175	FUEL SYS-RICH-B2 (System too rich bank 2)		

DTC CONFIRMATION PROCEDURE

1. PRECONDITIONING

If DTC Confirmation Procedure has been previously conducted, always perform the following before conducting the next test.
1. Turn ignition switch OFF and wait at least 10 seconds.
2. Turn ignition switch ON.
3. Turn ignition switch OFF and wait at least 10 seconds.

>> GO TO 2.

2. PERFORM DTC CONFIRMATION PROCEDURE-I

1. Clear the mixture ratio self-learning value. Refer to EC-663, "Work Procedure".
2. Start engine.

Is it difficult to start engine?

YES >> GO TO 3.
NO >> GO TO 4.

3. RESTART ENGINE

If it is difficult to start engine, the fuel injection system has a malfunction, too.
Crank engine while depressing accelerator pedal.

NOTE:
- **When depressing accelerator pedal three-fourths (3/4) or more, the control system does not start the engine. Do not depress accelerator pedal too much.**

Does engine start?

YES >> Proceed to EC-750, "Diagnosis Procedure".
NO >> Check exhaust and intake air leakage visually.

4. PERFORM DTC CONFIRMATION PROCEDURE-II

1. Keep engine idle for at least 5 minutes.
2. Check 1st trip DTC.

Is 1st trip DTC detected?

YES >> Proceed to EC-750, "Diagnosis Procedure".
NO >> GO TO 5.

5. PERFORM DTC CONFIRMATION PROCEDURE-III

1. Turn ignition switch OFF and wait at least 10 seconds.
2. Start engine.
3. Maintain the following conditions for at least 10 consecutive minutes.
   Hold the accelerator pedal as steady as possible.

VHCL SPEED SE	50 - 120 km/h (31 - 75 mph)

CAUTION:
Always drive vehicle at a safe speed.

4. Check 1st trip DTC.

Is 1st trip DTC detected?

YES >> Proceed to EC-750, "Diagnosis Procedure".
NO >> INSPECTION END

Diagnosis Procedure

INFOID:0000000011489613

1. CHECK EXHAUST GAS LEAKAGE

1. Start engine and run it at idle.
2. Listen for an exhaust gas leakage before three way catalyst (manifold).

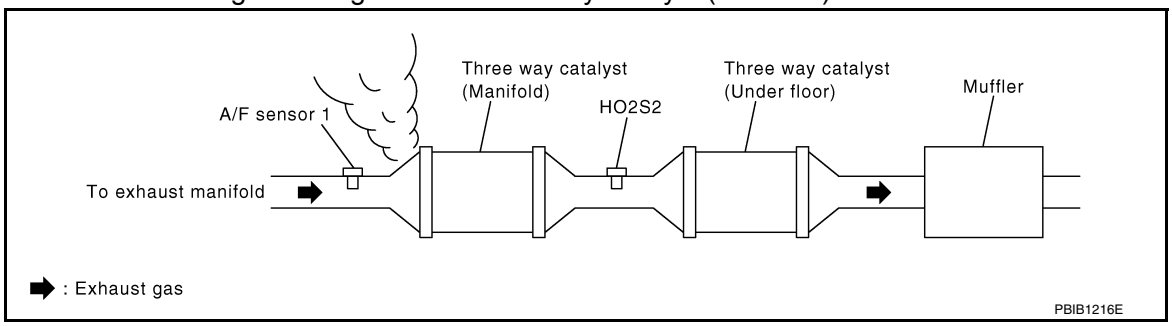

Is exhaust gas leakage detected?

YES >> Repair or replace malfunctioning part.
NO >> GO TO 2.

2. CHECK FOR INTAKE AIR LEAKAGE

Listen for an intake air leakage after the mass air flow sensor.

Is intake air leakage detected?

YES >> Repair or replace malfunctioning part.
NO >> GO TO 3.

3. CHECK A/F SENSOR 1 INPUT SIGNAL CIRCUIT

1. Turn ignition switch OFF.
2. Disconnect corresponding A/F sensor 1 harness connector.
3. Disconnect ECM harness connector.
4. Check the continuity between A/F sensor 1 harness connector and ECM harness connector.

DTC	A/F sensor 1			ECM		Continuity
	Bank	Connector	Terminal	Connector	Terminal	
P0172	1	F5	1	F52	69	Existed
			2		73	
P0175	2	F65	1		77	
			2		81	

5. Check the continuity between A/F sensor 1 harness connector and ground, or ECM harness connector and ground.

DTC	A/F sensor 1			Ground	Continuity
	Bank	Connector	Terminal		
P0172	1	F5	1	Ground	Not existed
			2		
P0175	2	F65	1		
			2		

DTC	ECM		Ground	Continuity
	Connector	Terminal		
P0172	F52	69	Ground	Not existed
		73		
P0175		77		
		81		

6. Also check harness for short to power.

Is the inspection result normal?

YES >> GO TO 4.
NO >> Repair open circuit, short to ground or short to power in harness or connectors.

4. CHECK FUEL PRESSURE

1. Release fuel pressure to zero. Refer to EC-669, "Work Procedure".
2. Install fuel pressure gauge kit [SST: — (J-44321)] and check fuel pressure. Refer to EC-669, "Work Procedure".

At idling: Approximately 350 kPa (3.57 kg/cm^2, 51 psi)

Is the inspection result normal?

YES >> GO TO 5.
NO >> Replace “fuel filter and fuel pump assembly”. Refer to FL-6, "Removal and Installation".

5. CHECK MASS AIR FLOW SENSOR

With CONSULT

1. Install all removed parts.
2. Check “MASS AIR FLOW” in “DATA MONITOR” mode with CONSULT.
   For specification, refer to EC-917, "Mass Air Flow Sensor".

With GST

1. Install all removed parts.
2. Check mass air flow sensor signal in “Service $01” with GST.
   For specification, refer to EC-917, "Mass Air Flow Sensor".

Is the measurement value within the specification?

YES >> GO TO 6.
NO >> Check connectors for rusted terminals or loose connections in the mass air flow sensor circuit or ground. Refer to EC-702, "Diagnosis Procedure".

6. CHECK FUNCTION OF FUEL INJECTOR

With CONSULT

1. Start engine.
2. Perform “POWER BALANCE” in “ACTIVE TEST” mode with CONSULT.
3. Check that each circuit produces a momentary engine speed drop.

With GST

1. Let engine idle.

2. Listen to each fuel injector operating sound.

Is the inspection result normal?

YES >> GO TO 7.
NO >> Perform trouble diagnosis for FUEL INJECTOR, refer to EC-880, "Diagnosis Procedure".

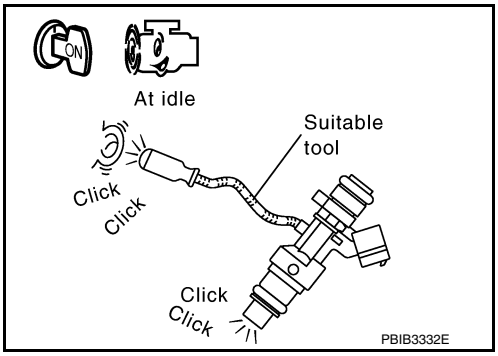

7. CHECK FUEL INJECTOR

1. Remove fuel injector assembly. Refer to EM-47, "Removal and Installation".
   Keep fuel hose and all fuel injectors connected to fuel tube.
2. Confirm that the engine is cooled down and there are no fire hazards near the vehicle.
3. Disconnect all fuel injector harness connectors.
4. Disconnect all ignition coil harness connectors.
5. Prepare pans or saucers under each fuel injectors.
6. Crank engine for about 3 seconds.
   Check fuel does not drip from fuel injector.

Is the inspection result normal?

YES >> Check intermittent incident. Refer to GI-47, "Intermittent Incident".
NO >> Replace the fuel injectors from which fuel is dripping. Always replace O-ring with new one. Refer to EM-47, "Removal and Installation".

P0197, P0198 EOT SENSOR

DTC Logic

INFOID:0000000011489625

DTC DETECTION LOGIC

DTC No.	CONSULT screen terms (Trouble diagnosis content)	DTC detecting condition	Possible Cause
P0197	EOT SEN/CIRC (Engine oil temperature sensor circuit low)	An excessively low voltage from the sensor is sent to ECM.	• Harness or connectors (The sensor circuit is open or shorted.) • Engine oil temperature sensor
P0198	EOT SEN/CIRC (Engine oil temperature sensor circuit high)	An excessively high voltage from the sensor is sent to ECM.	

DTC CONFIRMATION PROCEDURE

1.PRECONDITIONING

If DTC Confirmation Procedure has been previously conducted, always perform the following before conducting the next test.
1. Turn ignition switch OFF and wait at least 10 seconds.
2. Turn ignition switch ON.
3. Turn ignition switch OFF and wait at least 10 seconds.

>> GO TO 2.

2.PERFORM DTC CONFIRMATION PROCEDURE

1. Start engine and wait at least 5 seconds.
2. Check 1st trip DTC.

Is 1st trip DTC detected?

YES >> Proceed to EC-753, "Diagnosis Procedure".
NO >> INSPECTION END

Diagnosis Procedure

INFOID:0000000011489626

1.CHECK EOT SENSOR POWER SUPPLY

1. Disconnect engine oil temperature (EOT) sensor harness connector.
2. Turn ignition switch ON.
3. Check the voltage between EOT sensor harness connector and ground.

EOT sensor		Ground	Voltage
Connector	Terminal		
F68	1	Ground	Approx. 5 V

Is the inspection result normal?

YES >> GO TO 2.
NO >> Repair open circuit, short to ground or short to power in harness or connectors.

2.CHECK EOT SENSOR GROUND CIRCUIT FOR OPEN AND SHORT

1. Turn ignition switch OFF.
2. Disconnect ECM harness connector.
3. Check the continuity between EOT sensor harness connector and ECM harness connector.

EOT sensor		ECM		Continuity
Connector	Terminal	Connector	Terminal	
F68	2	F52	76	Existed

4. Also check harness for short to ground and short to power.

Is the inspection result normal?

YES >> GO TO 3.
NO >> Repair open circuit, short to ground or short to power in harness or connectors.

3. CHECK ENGINE OIL TEMPERATURE SENSOR

Check engine oil temperature sensor. Refer to EC-754, "Component Inspection".

Is the inspection result normal?

YES >> Check intermittent incident. Refer to GI-47, "Intermittent Incident".
NO >> Replace engine oil temperature sensor. Refer to EC-534, "ENGINE CONTROL SYSTEM : Component Parts Location".

Component Inspection

INFOID:0000000011489627

1. CHECK ENGINE OIL TEMPERATURE SENSOR

1. Turn ignition switch OFF.
2. Disconnect engine oil temperature sensor harness connector.
3. Remove engine oil temperature sensor. Refer to EC-534, "ENGINE CONTROL SYSTEM : Component Parts Location".
4. Check resistance between engine oil temperature sensor terminals by heating with hot water as shown in the figure.

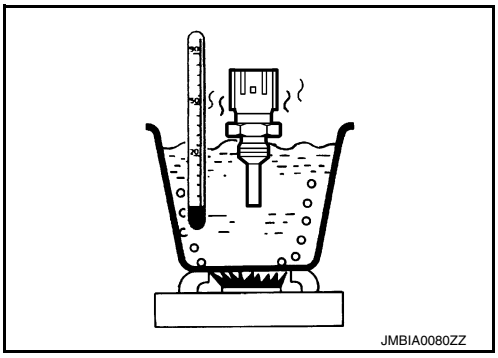

Terminals	Condition		Resistance (kΩ)
1 and 2	Temperature [°C (°F)]	20 (68)	2.37 - 2.63
		50 (122)	0.68 - 1.00
		90 (194)	0.236 - 0.260

Is the inspection result normal?

YES >> INSPECTION END
NO >> Replace engine oil temperature sensor. Refer to EC-534, "ENGINE CONTROL SYSTEM : Component Parts Location".

P0222, P0223 TP SENSOR

DTC Logic

INFOID:0000000011489628

DTC DETECTION LOGIC

NOTE:
If DTC P0222 or P0223 is displayed with DTC P0643, first perform the trouble diagnosis for DTC P0643. Refer to EC-806, "DTC Logic".

DTC No.	CONSULT screen terms (Trouble diagnosis content)	DTC detecting condition	Possible cause
P0222	TP SEN 1/CIRC-B1 (Throttle/Pedal position sensor/switch “B” circuit low)	An excessively low voltage from the TP sensor 1 is sent to ECM.	• Harness or connectors (TP sensor 1 circuit is open or shorted.) • Electric throttle control actuator (TP sensor 1)
P0223	TP SEN 1/CIRC-B1 (Throttle/Pedal position sensor/switch “B” circuit high)	An excessively high voltage from the TP sensor 1 is sent to ECM.	

DTC CONFIRMATION PROCEDURE

1.PRECONDITIONING

If DTC Confirmation Procedure has been previously conducted, always perform the following before conducting the next test.
1. Turn ignition switch OFF and wait at least 10 seconds.
2. Turn ignition switch ON.
3. Turn ignition switch OFF and wait at least 10 seconds.

TESTING CONDITION:
Before performing the following procedure, confirm that battery voltage is more than 10 V at idle.

>> GO TO 2.

2.PERFORM DTC CONFIRMATION PROCEDURE

1. Start engine and let it idle for 1 second.
2. Check DTC.

Is DTC detected?

YES >> Proceed to EC-755, "Diagnosis Procedure".
NO >> INSPECTION END

Diagnosis Procedure

INFOID:0000000011489629

1.CHECK THROTTLE POSITION SENSOR 1 POWER SUPPLY

1. Disconnect electric throttle control actuator harness connector.
2. Turn ignition switch ON.
3. Check the voltage between electric throttle control actuator harness connector and ground.

Electric throttle control actuator		Ground	Voltage
Connector	Terminal		
F50	1	Ground	Approx. 5 V

Is the inspection result normal?

YES >> GO TO 2.
NO >> Repair open circuit, short to ground or short to power in harness or connectors.

2.CHECK THROTTLE POSITION SENSOR 1 GROUND CIRCUIT

1. Turn ignition switch OFF.
2. Disconnect ECM harness connector.
3. Check the continuity between electric throttle control actuator and ECM harness connector.

Electric throttle control actuator		ECM		Continuity
Connector	Terminal	Connector	Terminal	
F50	4	F51	19	Existed

4. Also check harness for short to ground and short to power.

Is the inspection result normal?

YES >> GO TO 3.
NO >> Repair open circuit, short to ground or short to power in harness or connectors.

3. CHECK THROTTLE POSITION SENSOR 1 INPUT SIGNAL CIRCUIT

1. Check the continuity between electric throttle control actuator and ECM harness connector.

Electric throttle control actuator		ECM		Continuity
Connector	Terminal	Connector	Terminal	
F50	2	F51	22	Existed

2. Also check harness for short to ground and short to power.

Is the inspection result normal?

YES >> GO TO 4.
NO >> Repair open circuit, short to ground or short to power in harness or connectors.

4. CHECK THROTTLE POSITION SENSOR

Check throttle position sensor. Refer to EC-756, "Component Inspection".

Is the inspection result normal?

YES >> Check intermittent incident. Refer to GI-47, "Intermittent Incident".
NO >> Replace electric throttle control actuator. Refer to EM-26, "Removal and Installation".

Component Inspection

INFOID:0000000011489630

1. CHECK THROTTLE POSITION SENSOR

1. Turn ignition switch OFF.
2. Reconnect all harness connectors disconnected.
3. Perform EC-660, "Work Procedure".
4. Turn ignition switch ON.
5. Set selector lever to D position.
6. Check the voltage between ECM harness connector terminals under the following conditions.

ECM			Condition		Voltage
Connector	+	–			
	Terminal	Terminal			
F51	22	19	Accelerator pedal	Fully released	More than 0.36 V
				Fully depressed	Less than 4.75 V
	23			Fully released	Less than 4.75 V
				Fully depressed	More than 0.36 V

Is the inspection result normal?

YES >> INSPECTION END
NO >> Replace electric throttle control actuator. Refer to EM-26, "Removal and Installation".

P0300, P0301, P0302, P0303, P0304, P0305, P0306 MISFIRE

DTC Logic

INFOID:0000000011489631

DTC DETECTION LOGIC

When a misfire occurs, engine speed will fluctuate. If the engine speed fluctuates enough to cause the crankshaft position (CKP) sensor (POS) signal to vary, ECM can determine that a misfire is occurring.

Sensor	Input signal to ECM	ECM function
Crankshaft position sensor (POS)	Engine speed	On board diagnosis of misfire

The misfire detection logic consists of the following two conditions.

1. One Trip Detection Logic (Three Way Catalyst Damage)
   On the 1st trip, when a misfire condition occurs that can damage the three way catalyst (TWC) due to overheating, the MIL will blink.
   When a misfire condition occurs, the ECM monitors the CKP sensor signal every 200 engine revolutions for a change.
   When the misfire condition decreases to a level that will not damage the TWC, the MIL will turn off.
   If another misfire condition occurs that can damage the TWC on a second trip, the MIL will blink.
   When the misfire condition decreases to a level that will not damage the TWC, the MIL will remain on.
   If another misfire condition occurs that can damage the TWC, the MIL will begin to blink again.
2. Two Trip Detection Logic (Exhaust quality deterioration)
   For misfire conditions that will not damage the TWC (but will affect vehicle emissions), the MIL will only illuminate when the misfire is detected on a second trip. During this condition, the ECM monitors the CKP sensor signal every 1,000 engine revolutions.
   A misfire malfunction can be detected in any one cylinder or in multiple cylinders.

DTC No.	CONSULT screen terms (Trouble diagnosis content)	DTC detecting condition	Possible cause
P0300	MULTI CYL MISFIRE (Random/Multiple cylinder misfire detected)	Multiple cylinders misfire.	• Improper spark plug • Insufficient compression • Incorrect fuel pressure • The fuel injector circuit is open or shorted • Fuel injector • Intake air leakage • The ignition signal circuit is open or shorted • Lack of fuel • Signal plate • A/F sensor 1 • Incorrect PCV hose connection
P0301	CYL 1 MISFIRE (Cylinder 1 misfire detected)	No. 1 cylinder misfires.	
P0302	CYL 2 MISFIRE (Cylinder 2 misfire detected)	No. 2 cylinder misfires.	
P0303	CYL 3 MISFIRE (Cylinder 3 misfire detected)	No. 3 cylinder misfires.	
P0304	CYL 4 MISFIRE (Cylinder 4 misfire detected)	No. 4 cylinder misfires.	
P0305	CYL 5 MISFIRE (Cylinder 5 misfire detected)	No. 5 cylinder misfires.	
P0306	CYL 6 MISFIRE (Cylinder 6 misfire detected)	No. 6 cylinder misfires.	

DTC CONFIRMATION PROCEDURE

1. PRECONDITIONING

If DTC Confirmation Procedure has been previously conducted, always perform the following procedure before conducting the next test.

1. Turn ignition switch OFF and wait at least 10 seconds.
2. Turn ignition switch ON.
3. Turn ignition switch OFF and wait at least 10 seconds.

>> GO TO 2.

2. PERFORM DTC CONFIRMATION PROCEDURE-I

1. Start engine and warm it up to normal operating temperature.
2. Turn ignition switch OFF and wait at least 10 seconds.

3. Turn ignition switch ON.
4. Turn ignition switch OFF and wait at least 10 seconds.
5. Restart engine and let it idle for approximately 15 minutes.
6. Check 1st trip DTC.

Is 1st trip DTC detected?

YES >> Proceed to EC-758, "Diagnosis Procedure".
NO >> GO TO 3.

3. PERFORM DTC CONFIRMATION PROCEDURE-II

1. Turn ignition switch OFF and wait at least 10 seconds.
2. Turn ignition switch ON.
3. Turn ignition switch OFF and wait at least 10 seconds.
4. Start engine and drive the vehicle under similar conditions to (1st trip) Freeze Frame Data for a certain time. Refer to the table below.
   Hold the accelerator pedal as steady as possible.
   Similar conditions to (1st trip) Freeze Frame Data mean that the following conditions should be satisfied at the same time.
   CAUTION:
   Always drive vehicle in safe manner according to traffic conditions and obey all traffic laws when driving.

Engine speed	Engine speed in the freeze frame data ± 400 rpm
Vehicle speed	Vehicle speed in the freeze frame data ± 10 km/h (6 MPH)
Basic fuel schedule	Basic fuel schedule in freeze frame data × (1 ± 0.1)
Engine coolant temperature (T) condition	When the freeze frame data shows lower than 70°C (158°F), T should be lower than 70°C (158°F).
	When the freeze frame data shows higher than or equal to 70°C (158°F), T should be higher than or equal to 70°C (158°F).

Driving time varies according to the engine speed in the freeze frame data.

Engine speed	Time
Around 1,000 rpm	Approximately 10 minutes
Around 2,000 rpm	Approximately 5 minutes
More than 3,000 rpm	Approximately 3.5 minutes

5. Check 1st trip DTC.

Is 1st trip DTC detected?

YES >> Proceed to EC-758, "Diagnosis Procedure".
NO >> INSPECTION END

Diagnosis Procedure

INFOID:0000000011489632

1. CHECK FOR INTAKE AIR LEAKAGE AND PCV HOSE

1. Start engine and run it at idle speed.
2. Listen for the sound of the intake air leakage.
3. Check PCV hose connection.

Is intake air leakage detected?

YES >> Discover air leakage location and repair.
NO >> GO TO 2.

2. CHECK FOR EXHAUST SYSTEM CLOGGING

Stop engine and visually check exhaust tube, three way catalyst and muffler for dents.

Is the inspection result normal?

YES-1 >> With CONSULT: GO TO 3.
YES-2 >> Without CONSULT: GO TO 4.
NO >> Repair or replace malfunctioning part.

3. PERFORM POWER BALANCE TEST

With CONSULT

1. Start engine.
2. Perform “POWER BALANCE” in “ACTIVE TEST” mode with CONSULT.
3. Check that each circuit produces a momentary engine speed drop.

Is the inspection result normal?

YES >> GO TO 9.
NO >> GO TO 4.

4. CHECK FUNCTION OF FUEL INJECTOR

1. Start engine and let it idle.
2. Listen to each fuel injector make operation sound.

Clicking sound should be heard.

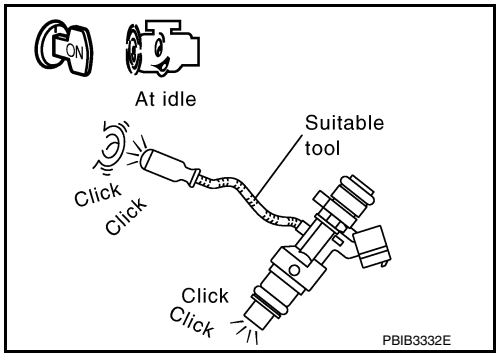

Is the inspection result normal?

YES >> GO TO 5.
NO >> Perform trouble diagnosis for FUEL INJECTOR, refer to EC-880, "Diagnosis Procedure".

5. CHECK FUNCTION OF IGNITION COIL-I

CAUTION:
Perform the following procedure in a place with no combustible objects and good ventilation.

1. Turn ignition switch OFF.
2. Remove fuel pump fuse in IPDM E/R to release fuel pressure.
   NOTE:
   Do not use CONSULT to release fuel pressure, or fuel pressure applies again during the following procedure.
3. Start engine.
4. After engine stalls, crank it 2 or 3 times to release all fuel pressure.
5. Turn ignition switch OFF.
6. Remove all ignition coil harness connectors to avoid the electrical discharge from the ignition coils.
7. Remove ignition coil and spark plug of the cylinder to be checked.
8. Crank engine for 5 seconds or more to remove combustion gas in the cylinder.
9. Connect spark plug and harness connector to ignition coil.
10. Fix ignition coil using a rope etc. with gap of 13 - 17 mm (0.52 - 0.66 in) between the edge of the spark plug and grounded metal portion as shown in the figure.
11. Crank engine for approximately 3 seconds, and check whether spark is generated between the spark plug and the grounded metal portion.

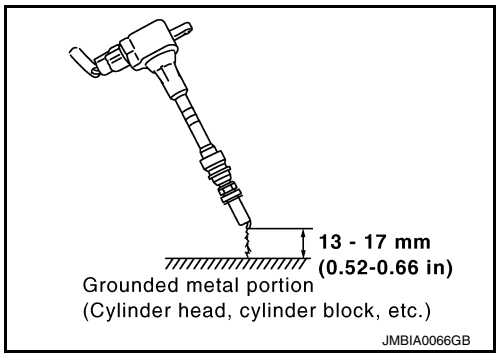

Spark should be generated.

CAUTION:
- **During the operation, always stay 0.5 m (19.7 in) or more away from the spark plug and the ignition coil. Be careful not to get an electrical shock while checking, because the electrical discharge voltage becomes 20 kV or more.**
- **It might damage the ignition coil if the gap of more than 17 mm (0.66 in) is made.**

NOTE:
When the gap is less than 13 mm (0.52 in), a spark might be generated even if the coil is malfunctioning.

Is the inspection result normal?

YES >> GO TO 9.
NO >> GO TO 6.

6. CHECK FUNCTION OF IGNITION COIL-II

1. Turn ignition switch OFF.
2. Disconnect spark plug and connect a non-malfunctioning spark plug.
3. Crank engine for approximately 3 seconds, and recheck whether spark is generated between the spark plug and the grounded metal portion.

Spark should be generated.

Is the inspection result normal?

YES >> GO TO 7.
NO >> Check ignition coil, power transistor and their circuits. Refer to EC-887, "Diagnosis Procedure".

7. CHECK SPARK PLUG

Check the initial spark plug for fouling, etc.

Is the inspection result normal?

YES >> Replace spark plug(s) with standard type one(s). For spark plug type, refer to EM-135, "Spark Plug".
NO >> Repair or clean spark plug. Then GO TO 8.

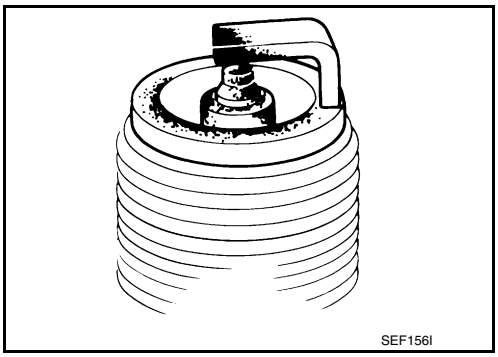

8. CHECK FUNCTION OF IGNITION COIL-III

1. Reconnect the initial spark plugs.
2. Crank engine for approximately 3 seconds, and recheck whether spark is generated between the spark plug and the grounded portion.

Spark should be generated.

Is the inspection result normal?

YES >> INSPECTION END
NO >> Replace spark plug(s) with standard type one(s). For spark plug type, refer to EM-135, "Spark Plug".

9. CHECK COMPRESSION PRESSURE

Check compression pressure. Refer to EM-22, "On-Vehicle Service".

Is the inspection result normal?

YES >> GO TO 10.
NO >> Check pistons, piston rings, valves, valve seats and cylinder head gaskets.

10. CHECK FUEL PRESSURE

1. Install all removed parts.
2. Release fuel pressure to zero. Refer to EC-669, "Work Procedure".
3. Install fuel pressure gauge kit [SST: — (J-44321)] and check fuel pressure. Refer to EC-669, "Work Procedure".

At idle: Approximately 350 kPa (3.57 kg/cm^2, 51 psi)

Is the inspection result normal?

YES >> GO TO 12.
NO >> GO TO 11.

11. DETECT MALFUNCTIONING PART

Check fuel hoses and fuel tubes for clogging.

Is the inspection result normal?

YES >> Replace “fuel filter and fuel pump assembly”. Refer to FL-6, "Removal and Installation".

NO >> Repair or replace malfunctioning part.

12. CHECK IGNITION TIMING

Check idle speed and ignition timing.
For procedure, refer to EC-665, "Work Procedure".
For specification, refer to EC-917, "Idle Speed" and EC-917, "Ignition Timing".

Is the inspection result normal?

YES >> GO TO 13.
NO >> Follow the EC-665, "Work Procedure".

13. CHECK A/F SENSOR 1 INPUT SIGNAL CIRCUIT

1. Turn ignition switch OFF.
2. Disconnect corresponding A/F sensor 1 harness connector.
3. Disconnect ECM harness connector.
4. Check the continuity between A/F sensor 1 harness connector and ECM harness connector.

A/F sensor 1			ECM		Continuity
Bank	Connector	Terminal	Connector	Terminal	
1	F5	1	F52	69	Existed
		2		73	
2	F65	1		77	
		2		81	

5. Check the continuity between A/F sensor 1 harness connector and ground, or ECM harness connector and ground.

A/F sensor 1			Ground	Continuity
Bank	Connector	Terminal		
1	F5	1	Ground	Not existed
		2		
2	F65	1		
		2		

ECM		Ground	Continuity
Connector	Terminal		
F52	69	Ground	Not existed
	73		
	77		
	81		

6. Also check harness for short to power.

Is the inspection result normal?

YES >> GO TO 14.
NO >> Repair open circuit, short to ground or short to power in harness or connectors.

14. CHECK A/F SENSOR 1 HEATER

Check A/F sensor 1 heater. Refer to EC-695, "Component Inspection".

Is the inspection result normal?

YES >> GO TO 15.
NO >> Replace malfunctioning A/F sensor 1. Refer to EM-31, "Removal and Installation (bank 2)", EM-33, "Removal and Installation (bank 1)".

15. CHECK MASS AIR FLOW SENSOR

With CONSULT

1. Check “MASS AIR FLOW” in “DATA MONITOR” mode with CONSULT.
2. For specification, refer to EC-917, "Mass Air Flow Sensor".

With GST

1. Check mass air flow sensor signal in Service $01 with GST.
2. For specification, refer to EC-917, "Mass Air Flow Sensor".

Is the measurement value within the specification?

YES >> GO TO 16.
NO >> Check connectors for rusted terminals or loose connections in the mass air flow sensor circuit or ground. Refer to EC-702, "Diagnosis Procedure".

16. CHECK SYMPTOM TABLE

Check items on the rough idle symptom in EC-906, "Symptom Table".

Is the inspection result normal?

YES >> GO TO 17.
NO >> Repair or replace malfunctioning part.

17. ERASE THE 1ST TRIP DTC

Some tests may cause a 1st trip DTC to be set.
Erase the 1st trip DTC from the ECM memory after performing the tests. Refer to EC-581, "CONSULT Function".

>> Check intermittent incident. Refer to GI-47, "Intermittent Incident".

P0327, P0328, P0332, P0333 KS

DTC Logic

INFOID:0000000011489633

DTC DETECTION LOGIC

DTC No.	CONSULT screen terms (Trouble diagnosis content)	DTC detected condition	Possible cause
P0327	KNOCK SEN/CIRC-B1 (Knock sensor 1 circuit low bank 1)	An excessively low voltage from the sensor is sent to ECM.	• Harness or connectors (The sensor circuit is open or shorted.) • Knock sensor
P0328	KNOCK SEN/CIRC-B1 (Knock sensor 1 circuit high bank 1)	An excessively high voltage from the sensor is sent to ECM.	
P0332	KNOCK SEN/CIRC-B2 (Knock sensor 2 circuit low bank 2)	An excessively low voltage from the sensor is sent to ECM.	
P0333	KNOCK SEN/CIRC-B1 (Knock sensor 2 circuit high bank 2)	An excessively high voltage from the sensor is sent to ECM.	

DTC CONFIRMATION PROCEDURE

1.PRECONDITIONING

If DTC Confirmation Procedure has been previously conducted, always perform the following before conducting the next test.
1. Turn ignition switch OFF and wait at least 10 seconds.
2. Turn ignition switch ON.
3. Turn ignition switch OFF and wait at least 10 seconds.

TESTING CONDITION:
Before performing the following procedure, confirm that battery voltage is more than 10 V at idle.

>> GO TO 2.

2.PERFORM DTC CONFIRMATION PROCEDURE

1. Start engine and run it for at least 5 seconds at idle speed.
2. Check 1st trip DTC.

Is 1st trip DTC detected?

YES >> Proceed to EC-763, "Diagnosis Procedure".
NO >> INSPECTION END

Diagnosis Procedure

INFOID:0000000011489634

1.CHECK KNOCK SENSOR GROUND CIRCUIT

1. Disconnect knock sensor harness connector and ECM harness connector.
2. Check the continuity between knock sensor harness connector and ECM harness connector.

DTC	Knock sensor			ECM		Continuity
	Bank	Connector	Terminal	Connector	Terminal	
P0327, P0328	1	F202	2	F52	91	Existed
P0332, P0333	2	F204	2			

3. Also check harness for short to ground and short to power.

Is the inspection result normal?

YES >> GO TO 2.
NO >> Repair open circuit, short to ground or short to power in harness or connectors.

2.CHECK KNOCK SENSOR INPUT SIGNAL CIRCUIT

1. Check the continuity between knock sensor harness connector and ECM harness connector.

DTC	Knock sensor			ECM		Continuity
	Bank	Connector	Terminal	Connector	Terminal	
P0327, P0328	1	F202	1	F52	85	Existed
P0332, P0333	2	F204	1		86	

2. Also check harness for short to ground and short to power.

Is the inspection result normal?

YES >> GO TO 3.
NO >> Repair open circuit, short to ground or short to power in harness or connectors.

3.CHECK KNOCK SENSOR

Check knock sensor. Refer to EC-764, "Component Inspection".

Is the inspection result normal?

YES >> Check intermittent incident. Refer to GI-47, "Intermittent Incident".
NO >> Replace malfunctioning knock sensor. Refer to EM-113, "Disassembly and Assembly".

Component Inspection

INFOID:0000000011489635

1.CHECK KNOCK SENSOR

1. Turn ignition switch OFF.
2. Disconnect knock sensor harness connector.
3. Check resistance between knock sensor terminal as per the following.
   NOTE:
   It is necessary to use an ohmmeter which can measure more than 10 MΩ.

Knock sensor		Resistance
+	-	
Terminals		
1	2	Approx. 532 - 588 kΩ [at 20°C (68°F)]

CAUTION:
Never use any knock sensors that have been dropped or physically damaged. Use only new ones.

Is the inspection result normal?

YES >> INSPECTION END
NO >> Replace malfunctioning knock sensor. Refer to EM-113, "Disassembly and Assembly".

P0335 CKP SENSOR (POS)

DTC Logic

INFOID:0000000011489636

DTC DETECTION LOGIC

DTC No.	CONSULT screen terms (Trouble diagnosis content)	DTC detecting condition	Possible cause
P0335	CKP SEN/CIRCUIT (Crankshaft position sensor “A” circuit)	• The crankshaft position sensor (POS) signal is not detected by the ECM during the first few seconds of engine cranking. • The proper pulse signal from the crankshaft position sensor (POS) is not sent to ECM while the engine is running. • The crankshaft position sensor (POS) signal is not in the normal pattern during engine running.	• Harness or connectors [CKP sensor (POS) circuit is open or shorted.] (APP sensor 2 circuit is shorted.) (EVAP control system pressure sensor circuit is shorted.) (Refrigerant pressure sensor circuit is shorted.) • Crankshaft position sensor (POS) • Accelerator pedal position sensor • EVAP control system pressure sensor • Refrigerant pressure sensor • Signal plate • Sensor power supply 2 circuit

DTC CONFIRMATION PROCEDURE

1.PRECONDITIONING

If DTC Confirmation Procedure has been previously conducted, always perform the following before conducting the next test.

1. Turn ignition switch OFF and wait at least 10 seconds.
2. Turn ignition switch ON.
3. Turn ignition switch OFF and wait at least 10 seconds.

TESTING CONDITION:

Before performing the following procedure, confirm that battery voltage is more than 10.5 V with ignition switch ON.

>> GO TO 2.

2.PERFORM DTC CONFIRMATION PROCEDURE

1. Start engine and let it idle for at least 5 seconds.
   If engine does not start, crank engine for at least 2 seconds.
2. Check 1st trip DTC.

Is 1st trip DTC detected?

YES >> Proceed to EC-765, "Diagnosis Procedure".
NO >> INSPECTION END

Diagnosis Procedure

INFOID:0000000011489637

1.CHECK CRANKSHAFT POSITION (CKP) SENSOR (POS) POWER SUPPLY

1. Disconnect crankshaft position (CKP) sensor (POS) harness connector.
2. Turn ignition switch ON.
3. Check the voltage between CKP sensor (POS) harness connector and ground.

CKP sensor (POS)		Ground	Voltage (V)
Connector	Terminal		
F11	1	Ground	Approx. 5

Is the inspection result normal?

YES >> GO TO 4.
NO >> GO TO 2.

2. CHECK CRANKSHAFT POSITION (CKP) SENSOR (POS) POWER SUPPLY CIRCUIT

1. Turn ignition switch ON.
2. Disconnect ECM harness connector.
3. Check the continuity between CKP sensor (POS) harness connector and ECM harness connector.

CKP sensor (POS)		ECM		Continuity
Connector	Terminal	Connector	Terminal	
F11	1	F52	54	Existed

Is the inspection result normal?

YES >> GO TO 3.
NO >> Repair or replace error-detected parts.

3. CHECK SENSOR POWER SUPPLY 2 CIRCUIT

Check sensor power supply 2 circuit. Refer to EC-900, "Diagnosis Procedure".

Is the inspection result normal?

YES >> Perform the trouble diagnosis for power supply circuit.
NO >> Repair or replace error-detected parts.

4. CHECK CKP SENSOR (POS) GROUND CIRCUIT

1. Turn ignition switch OFF.
2. Disconnect ECM harness connector.
3. Check the continuity between CKP sensor (POS) harness connector and ECM harness connector.

CKP sensor (POS)		ECM		Continuity
Connector	Terminal	Connector	Terminal	
F11	2	F52	84	Existed

4. Also check harness for short to ground and short to power.

Is the inspection result normal?

YES >> GO TO 5.
NO >> Repair or replace error-detected parts.

5. CHECK CKP SENSOR (POS) INPUT SIGNAL CIRCUIT FOR OPEN AND SHORT

1. Check the continuity between CKP sensor (POS) harness connector and ECM harness connector.

CKP sensor (POS)		ECM		Continuity
Connector	Terminal	Connector	Terminal	
F11	3	F52	89	Existed

2. Also check harness for short to ground and short to power.

Is the inspection result normal?

YES >> GO TO 6.
NO >> Repair or replace error-detected parts.

6. CHECK CRANKSHAFT POSITION SENSOR (POS)

Check crankshaft position sensor (POS). Refer to EC-767, "Component Inspection".

Is the inspection result normal?

YES >> GO TO 7.
NO >> Replace crankshaft position sensor (POS). Refer to EM-37, "Removal and Installation (Upper Oil Pan)".

7. CHECK GEAR TOOTH

Visually check for chipping signal plate gear tooth.

Is the inspection result normal?

YES >> Check intermittent incident. Refer to GI-47, "Intermittent Incident".

NO >> Replace the drive plate. Refer to EM-113, "Disassembly and Assembly".

Component Inspection

INFOID:0000000011489638

1. CHECK CRANKSHAFT POSITION SENSOR (POS)-I

1. Loosen the fixing bolt of the sensor.
2. Disconnect crankshaft position sensor (POS) harness connector.
3. Remove the sensor.
4. Visually check the sensor for chipping.

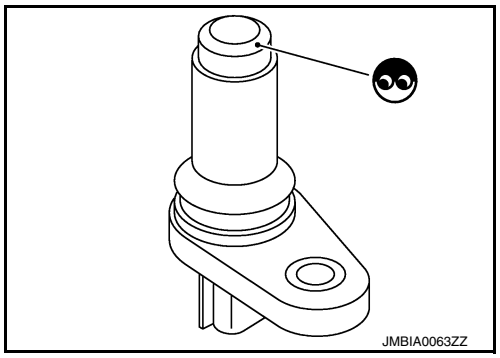

Is the inspection result normal?

YES >> GO TO 2.
NO >> Replace crankshaft position sensor (POS). Refer to EM-37, "Removal and Installation (Upper Oil Pan)".

2. CHECK CRANKSHAFT POSITION SENSOR (POS)-II

Check the resistance between crankshaft position sensor (POS) terminals as per the following.

Crankshaft position sensor (POS)		Resistance [at 25°C (77°F)]
+	–	
Terminal (Polarity)		
1	2	Except 0 or ∞ Ω
	3	
2	3	

Is the inspection result normal?

YES >> INSPECTION END
NO >> Replace crankshaft position sensor (POS). Refer to EM-37, "Removal and Installation (Upper Oil Pan)".

P0340, P0345 CMP SENSOR (PHASE)

DTC Logic

INFOID:0000000011489639

DTC DETECTION LOGIC

NOTE:
If DTC P0340 or P0345 is displayed with DTC P0643, first perform the trouble diagnosis for DTC P0643. Refer to EC-806, "DTC Logic".

DTC No.	CONSULT screen terms (Trouble diagnosis content)	DTC detecting condition	Possible cause
P0340	CMP SEN/CIRC-B1 (Camshaft position sensor “A” circuit bank 1)	• The cylinder No. signal is not sent to ECM for the first few seconds during engine cranking. • The cylinder No. signal is not sent to ECM during engine running. • The cylinder No. signal is not in the normal pattern during engine running.	• Harness or connectors (The sensor circuit is open or shorted) • Camshaft position sensor (PHASE) • Camshaft (INT) • Starter motor (Refer to STR-5, "System Description".) • Starting system circuit (Refer to STR-5, "System Description".) • Dead (Weak) battery
P0345	CMP SEN/CIRC-B2 (Camshaft position sensor “A” circuit bank 2)		

DTC CONFIRMATION PROCEDURE

1.PRECONDITIONING

If DTC Confirmation Procedure has been previously conducted, always perform the following before conducting the next test.
1. Turn ignition switch OFF and wait at least 10 seconds.
2. Turn ignition switch ON.
3. Turn ignition switch OFF and wait at least 10 seconds.

TESTING CONDITION:
Before performing the following procedure, confirm that battery voltage is more than 10.5 V with ignition switch ON.

>> GO TO 2.

2.PERFORM DTC CONFIRMATION PROCEDURE-I

1. Start engine and let it idle for at least 5 seconds.
   If engine does not start, crank engine for at least 2 seconds.
2. Check 1st trip DTC.

Is 1st trip DTC detected?

YES >> Proceed to EC-768, "Diagnosis Procedure".
NO >> GO TO 3.

3.PERFORM DTC CONFIRMATION PROCEDURE-I

1. Maintaining engine speed at more than 800 rpm for at least 5 seconds.
2. Check 1st trip DTC.

Is 1st trip DTC detected?

YES >> Proceed to EC-768, "Diagnosis Procedure".
NO >> INSPECTION END

Diagnosis Procedure

INFOID:0000000011489640

1.CHECK STARTING SYSTEM

Turn ignition switch to START position.

Does the engine turn over? Does the starter motor operate?

YES >> GO TO 2.
NO >> Check starting system. (Refer to STR-10, "Work Flow (With GR8-1200 NI)" or STR-14, "Work Flow (Without GR8-1200 NI)".)

2. CHECK CAMSHAFT POSITION (CMP) SENSOR (PHASE) POWER SUPPLY

1. Disconnect camshaft position (CMP) sensor (PHASE) harness connector.
2. Turn ignition switch ON.
3. Check the voltage between CMP sensor (PHASE) harness connector and ground.

DTC	CMP sensor (PHASE)			Ground	Voltage (V)
	Bank	Connector	Terminal		
P0340	1	F44	1	Ground	Approx. 5
P0345	2	F45	1		

Is the inspection result normal?

YES >> GO TO 3.
NO >> Repair open circuit, short to ground or short to power in harness or connectors.

3. CHECK CMP SENSOR (PHASE) GROUND CIRCUIT

1. Turn ignition switch OFF.
2. Disconnect ECM harness connector.
3. Check the continuity between CMP sensor (PHASE) harness connector and ECM harness connector.

DTC	CMP sensor (PHASE)			ECM		Continuity
	Bank	Connector	Terminal	Connector	Terminal	
P0340	1	F44	2	F52	88	Existed
P0345	2	F45	2		92	

4. Also check harness for short to ground and short to power.

Is the inspection result normal?

YES >> GO TO 4.
NO >> Repair open circuit, short to ground or short to power in harness or connectors.

4. CHECK CMP SENSOR (PHASE) INPUT SIGNAL CIRCUIT

1. Check the continuity between CMP sensor (PHASE) harness connector and ECM harness connector.

DTC	CMP sensor (PHASE)			ECM		Continuity
	Bank	Connector	Terminal	Connector	Terminal	
P0340	1	F44	3	F52	94	Existed
P0345	2	F45	3		93	

2. Also check harness for short to ground and short to power.

Is the inspection result normal?

YES >> GO TO 5.
NO >> Repair open circuit, short to ground or short to power in harness or connectors.

5. CHECK CAMSHAFT POSITION SENSOR (PHASE)

Check camshaft position sensor (PHASE). Refer to EC-770, "Component Inspection".

Is the inspection result normal?

YES >> GO TO 6.
NO >> Replace malfunctioning camshaft position sensor (PHASE). Refer to EM-43, "Removal and Installation (LH)", EM-44, "Removal and Installation (RH)".

6. CHECK CAMSHAFT (INT)

Check the following.

- Accumulation of debris to the signal plate of camshaft rear end
- Chipping signal plate of camshaft rear end

Is the inspection result normal?

YES >> Check intermittent incident. Refer to GI-47, "Intermittent Incident".

NO >> Remove debris and clean the signal plate of camshaft rear end or replace camshaft. Refer to EM-76, "Removal and Installation".

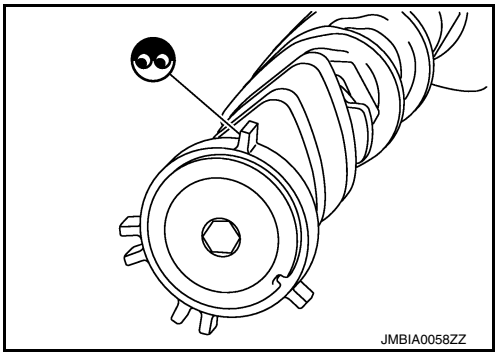

Component Inspection

INFOID:0000000011489641

1. CHECK CAMSHAFT POSITION SENSOR (PHASE)-I

1. Turn ignition switch OFF.
2. Loosen the fixing bolt of the sensor.
3. Disconnect camshaft position sensor (PHASE) harness connector.
4. Remove the sensor.
5. Visually check the sensor for chipping.

Is the inspection result normal?

YES >> GO TO 2.

NO >> Replace malfunctioning camshaft position sensor (PHASE). Refer to EM-43, "Removal and Installation (LH)", EM-44, "Removal and Installation (RH)".

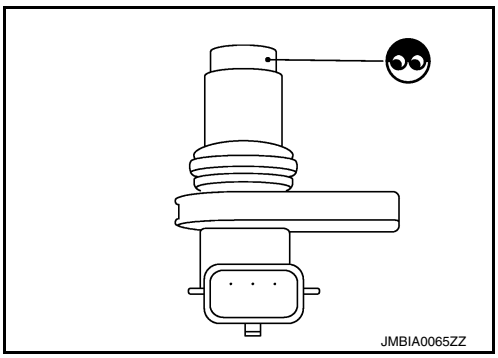

2. CHECK CAMSHAFT POSITION SENSOR (PHASE)-II

Check the resistance camshaft position sensor (PHASE) terminals as per the following.

Camshaft position sensor (PHASE)		Resistance [Ω at 25°C (77°F)]
+	–	
Terminals (Polarity)		
1	2	Except 0 or ∞
	3	
2	3	

Is the inspection result normal?

YES >> INSPECTION END

NO >> Replace malfunctioning camshaft position sensor (PHASE). Refer to EM-43, "Removal and Installation (LH)", EM-44, "Removal and Installation (RH)".

P0420, P0430 THREE WAY CATALYST FUNCTION

DTC Logic

INFOID:0000000011489642

DTC DETECTION LOGIC

The ECM monitors the switching frequency ratio of air fuel ratio (A/F) sensor 1 and heated oxygen sensor 2.
A three way catalyst (manifold) with high oxygen storage capacity will indicate a low switching frequency of heated oxygen sensor 2. As oxygen storage capacity decreases, the heated oxygen sensor 2 switching frequency will increase.
When the frequency ratio of A/F sensor 1 and heated oxygen sensor 2 approaches a specified limit value, the three way catalyst (manifold) malfunction is diagnosed.

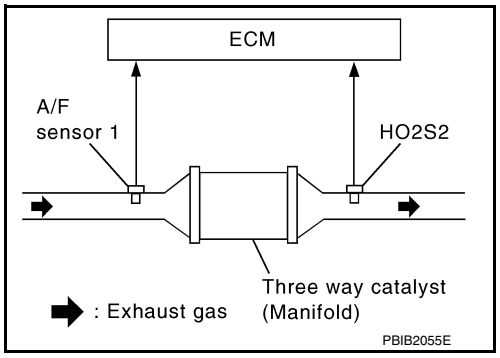

DTC No.	CONSULT screen terms (Trouble diagnosis content)	DTC detecting condition	Possible cause
P0420	TW CATALYST SYS-B1 (Catalyst system efficiency below threshold bank 1)	• Three way catalyst (manifold) does not operate properly. • Three way catalyst (manifold) does not have enough oxygen storage capacity.	• Three way catalyst (manifold) • Exhaust tube • Intake air leakage • Fuel injector • Fuel injector leakage • Spark plug • Improper ignition timing
P0430	TW CATALYST SYS-B2 (Catalyst system efficiency below threshold bank 2)		

DTC CONFIRMATION PROCEDURE

1. INSPECTION START

Will CONSULT be used?

Will CONSULT be used?

YES >> GO TO 2.
NO >> GO TO 7.

2. PRECONDITIONING

If DTC Confirmation Procedure has been previously conducted, always perform the following before conducting the next test.

1. Turn ignition switch OFF and wait at least 10 seconds.
2. Turn ignition switch ON.
3. Turn ignition switch OFF and wait at least 10 seconds.

TESTING CONDITION:
Do not maintain engine speed for more than the specified minutes below.

>> GO TO 3.

3. PERFORM DTC CONFIRMATION PROCEDURE-I

With CONSULT

1. Turn ignition switch ON and select “DATA MONITOR” mode with CONSULT.
2. Start engine and warm it up to the normal operating temperature.
3. Turn ignition switch OFF and wait at least 10 seconds.
4. Turn ignition switch ON.
5. Turn ignition switch OFF and wait at least 10 seconds.
6. Start engine and keep the engine speed between 3,500 and 4,000 rpm for at least 1 minute under no load.
7. Let engine idle for 1 minute.
8. Check that “COOLANT TEMP/S” indicates more than 70°C (158°F).
   If not, warm up engine and go to next step when “COOLANT TEMP/S” indication reaches 70°C (158°F).
9. Open engine hood.

10. Select “DTC & SRT CONFIRMATION” then “SRT WORK SUPPORT” mode with CONSULT.
11. Rev engine between 2,000 and 3,000 rpm and hold it for 3 consecutive minutes then release the accelerator pedal completely.
12. Check the indication of “CATALYST”.

Which is displayed on CONSULT screen?

CMPLT >> GO TO 6.
INCMP >> GO TO 4.

4. PERFORM DTC CONFIRMATION PROCEDURE-II

1. Wait 5 seconds at idle.
2. Rev engine between 2,000 and 3,000 rpm and maintain it until “INCMP” of “CATALYST” changes to “CMPLT” (It will take approximately 5 minutes).

Does the indication change to “CMPLT”?

YES >> GO TO 6.
NO >> GO TO 5.

5. PERFORM DTC CONFIRMATION PROCEDURE AGAIN

1. Stop engine and cool it down to less than 70°C (158°F).
2. Perform DTC CONFIRMATION PROCEDURE again.

>> GO TO 3.

6. PERFORM DTC CONFIRMATION PROCEDURE-III

Check 1st trip DTC.

Is 1st trip DTC detected?

YES >> Proceed to EC-773, "Diagnosis Procedure".
NO >> INSPECTION END

7. PERFORM COMPONENT FUNCTION CHECK

Perform component function check. Refer to EC-772, "Component Function Check".

NOTE:
Use component function check to check the overall function of the three way catalyst (manifold). During this check, a 1st trip DTC might not be confirmed.

Is the inspection result normal?

YES >> INSPECTION END
NO >> Proceed to EC-773, "Diagnosis Procedure".

Component Function Check

INFOID:0000000011489643

1. PERFORM COMPONENT FUNCTION CHECK

Without CONSULT

1. Start engine and warm it up to the normal operating temperature.
2. Turn ignition switch OFF and wait at least 10 seconds.
3. Turn ignition switch ON.
4. Turn ignition switch OFF and wait at least 10 seconds.
5. Start engine and keep the engine speed between 3,500 and 4,000 rpm for at least 1 minute under no load.
6. Let engine idle for 1 minute.
7. Open engine hood.
8. Check the voltage between ECM harness connector terminals under the following conditions.

DTC	ECM			Condition	Voltage (V)
	Connector	+	–		
		Terminal	Terminal		
P0420	F52	57	59	Keeping engine speed at 2,500 rpm constant under no load	The voltage fluctuation cycle takes more than 5 seconds. • 1 cycle: 0.6 - 1.0 → 0 - 0.3 → 0.6 - 1.0
P0430		58			

Is the inspection result normal?

YES >> INSPECTION END
NO >> Proceed to EC-773, "Diagnosis Procedure".

Diagnosis Procedure

INFOID:0000000011489644

1. CHECK EXHAUST SYSTEM

Visually check exhaust tubes and muffler for dents.

Is the inspection result normal?

YES >> GO TO 2.
NO >> Repair or replace malfunctioning part.

2. CHECK EXHAUST GAS LEAKAGE

1. Start engine and run it at idle.
2. Listen for an exhaust gas leakage before the three way catalyst (manifold).

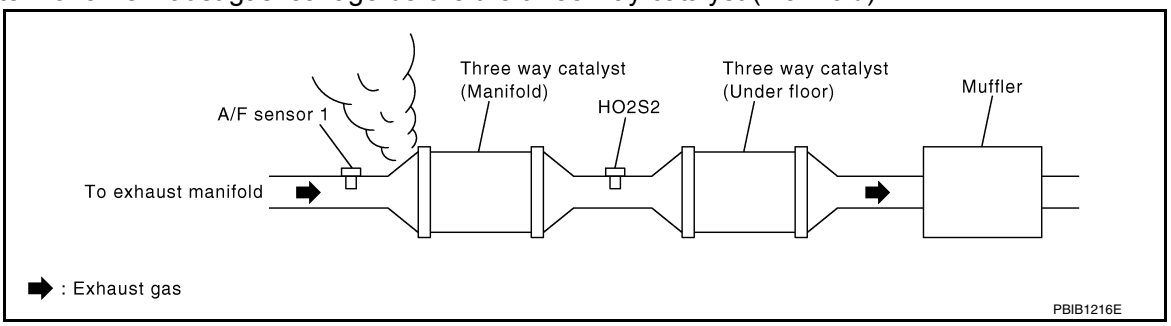

Is exhaust gas leakage detected?

YES >> Repair or replace malfunctioning part.
NO >> GO TO 3.

3. CHECK INTAKE AIR LEAKAGE

Listen for an intake air leakage after the mass air flow sensor.

Is intake air leakage detected?

YES >> Repair or replace malfunctioning part.
NO >> GO TO 4.

4. CHECK IGNITION TIMING

Check idle speed and ignition timing.
For procedure, refer to EC-665, "Work Procedure".
For specification, refer to EC-917, "Idle Speed" and EC-917, "Ignition Timing".

Is the inspection result normal?

YES >> GO TO 5.
NO >> Follow the EC-665, "Work Procedure".

5. CHECK FUEL INJECTORS

1. Stop engine and then turn ignition switch ON.
2. Check the voltage between ECM harness connector terminals.

ECM				Voltage
+		–		
Connector	Terminal	Connector	Terminal	
F51	33	E16	128	Battery voltage
	44			
	45			
	46			
	47			
	48			

Is the inspection result normal?

YES >> GO TO 6.
NO >> Perform EC-880, "Diagnosis Procedure".

6. CHECK FUNCTION OF IGNITION COIL-I

CAUTION:
Perform the following procedure in a place with no combustible objects and good ventilation.

1. Turn ignition switch OFF.
2. Remove fuel pump fuse in IPDM E/R to release fuel pressure.
   NOTE:
   Do not use CONSULT to release fuel pressure, or fuel pressure applies again during the following procedure.
3. Start engine.
4. After engine stalls, crank it 2 or 3 times to release all fuel pressure.
5. Turn ignition switch OFF.
6. Remove all ignition coil harness connectors to avoid the electrical discharge from the ignition coils.
7. Remove ignition coil and spark plug of the cylinder to be checked.
8. Crank engine for 5 seconds or more to remove combustion gas in the cylinder.
9. Connect spark plug and harness connector to ignition coil.
10. Fix ignition coil using a rope etc. with gap of 13 - 17 mm (0.52 - 0.66 in) between the edge of the spark plug and grounded metal portion as shown in the figure.
11. Crank engine for approximately 3 seconds, and check whether spark is generated between the spark plug and the grounded metal portion.

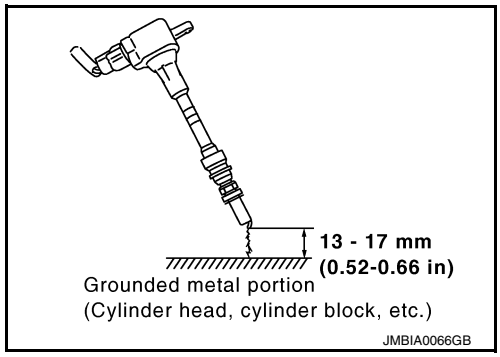

Spark should be generated.

CAUTION:
- **During the operation, always stay 0.5 m (19.7 in) or more away from the spark plug and the ignition coil. Be careful not to get an electrical shock while checking, because the electrical discharge voltage becomes 20 kV or more.**
- **It might cause to damage the ignition coil if the gap of more than 17 mm (0.66 in) is taken.**

NOTE:
When the gap is less than 13 mm (0.52 in), the spark might be generated even if the coil is malfunctioning.

Is the inspection result normal?

YES >> GO TO 10.
NO >> GO TO 7.

7. CHECK FUNCTION OF IGNITION COIL-II

1. Turn ignition switch OFF.
2. Disconnect spark plug and connect a known-good spark plug.
3. Crank engine for approximately 3 seconds, and recheck whether spark is generated between the spark plug and the grounded metal portion.

Spark should be generated.

Is the inspection result normal?

YES >> GO TO 8.
NO >> Check ignition coil, power transistor and their circuit. Refer to EC-887, "Diagnosis Procedure".

8. CHECK SPARK PLUG

Check the initial spark plug for fouling, etc.

Is the inspection result normal?

YES >> Replace spark plug(s) with standard type one(s). For spark plug type, refer to EM-135, "Spark Plug".
NO >> Repair or clean spark plug. Then GO TO 9.

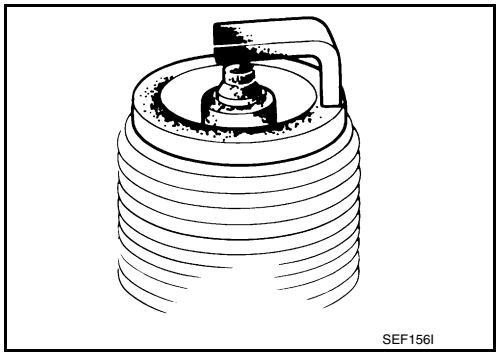

9. CHECK FUNCTION OF IGNITION COIL-III

1. Reconnect the initial spark plugs.
2. Crank engine for approximately 3 seconds, and recheck whether spark is generated between the spark plug and the grounded portion.

Spark should be generated.

Is the inspection result normal?

YES >> INSPECTION END
NO >> Replace spark plug(s) with standard type one(s). For spark plug type, refer to EM-135, "Spark Plug".

10. CHECK FUEL INJECTOR

1. Turn ignition switch OFF.
2. Remove fuel injector assembly. Refer to EM-47, "Removal and Installation".
   Keep fuel hose and all fuel injectors connected to fuel tube.
3. Disconnect all ignition coil harness connectors.
4. Reconnect all fuel injector harness connectors disconnected.
5. Turn ignition switch ON.
6. Check that the fuel does not drip from fuel injector.

Does fuel drip from fuel injector?

YES >> Replace the fuel injector(s) from which fuel is dripping. Refer to EM-47, "Removal and Installation".
NO >> GO TO 11.

11. CHECK INTERMITTENT INCIDENT

Check intermittent incident. Refer to GI-47, "Intermittent Incident".

Is the inspection result normal?

YES >> Replace three way catalyst assembly. Refer to EM-31, "Removal and Installation (bank 2)", EM-33, "Removal and Installation (bank 1)".
NO >> Repair or replace error-detected parts.

P0444 EVAP PURGE CONTROL VALVE

DTC Logic

INFOID:0000000011489651

DTC DETECTION LOGIC

DTC No.	CONSULT screen terms (Trouble diagnosis content)	DTC detecting condition	Possible cause
P0444	PURG VOLUME CONT/V (Evaporative emission system purge control valve circuit open)	An excessively low voltage signal is sent to ECM through the valve	• Harness or connectors (The solenoid valve circuit is open or shorted.) • EVAP canister purge volume control solenoid valve

DTC CONFIRMATION PROCEDURE

1.CONDITIONING

If DTC Confirmation Procedure has been previously conducted, always perform the following before conducting the next test.
1. Turn ignition switch OFF and wait at least 10 seconds.
2. Turn ignition switch ON.
3. Turn ignition switch OFF and wait at least 10 seconds.

TESTING CONDITION:
Before performing the following procedure, confirm battery voltage is more than 11 V at idle.

>> GO TO 2.

2.PERFORM DTC CONFIRMATION PROCEDURE

1. Start engine and let it idle for at least 13 seconds.
2. Check 1st trip DTC.

Is 1st trip DTC detected?

YES >> Proceed to EC-776, "Diagnosis Procedure".
NO >> INSPECTION END

Diagnosis Procedure

INFOID:0000000011489652

1.CHECK EVAP CANISTER PURGE VOLUME CONTROL SOLENOID VALVE POWER SUPPLY

1. Turn ignition switch OFF.
2. Disconnect EVAP canister purge volume control solenoid valve harness connector.
3. Turn ignition switch ON.
4. Check the voltage between EVAP canister purge volume control solenoid valve harness connector and ground.

EVAP canister purge volume control solenoid valve		Ground	Voltage
Connector	Terminal		
F16	1	Ground	Battery voltage

Is the inspection result normal?

YES >> GO TO 2.
NO >> Perform the trouble diagnosis for power supply circuit.

2.CHECK EVAP CANISTER PURGE VOLUME CONTROL SOLENOID VALVE OUTPUT SIGNAL CIRCUIT

1. Turn ignition switch OFF.
2. Disconnect ECM harness connector.
3. Check the continuity between EVAP canister purge volume control solenoid valve harness connector and ECM harness connector.

EVAP canister purge volume control solenoid valve		ECM		Continuity
Connector	Terminal	Connector	Terminal	
F16	2	F51	42	Existed

4. Also check harness for short to ground and short to power.

Is the inspection result normal?

YES-1 >> With CONSULT: GO TO 3.
YES-2 >> Without CONSULT: GO TO 4.
NO >> Repair open circuit, short to ground or short to power in harness or connectors.

3. CHECK EVAP CANISTER PURGE VOLUME CONTROL SOLENOID VALVE OPERATION

With CONSULT

1. Reconnect all harness connectors disconnected.
2. Start engine.
3. Perform “PURG VOL C/V” in “ACTIVE TEST” mode with CONSULT. Check that engine speed varies according to the valve opening.

Does engine speed vary according to the valve opening?

YES >> Check intermittent incident. Refer to GI-47, "Intermittent Incident".
NO >> GO TO 4.

4. CHECK EVAP CANISTER PURGE VOLUME CONTROL SOLENOID VALVE

Check EVAP canister purge volume control solenoid valve. Refer to EC-777, "Component Inspection".

Is the inspection result normal?

YES >> Check intermittent incident. Refer to GI-47, "Intermittent Incident".
NO >> Replace EVAP canister purge volume control solenoid valve. Refer to EC-534, "ENGINE CONTROL SYSTEM : Component Parts Location".

Component Inspection

INFOID:0000000011489653

1. CHECK EVAP CANISTER PURGE VOLUME CONTROL SOLENOID VALVE

With CONSULT

1. Turn ignition switch OFF.
2. Reconnect all harness connectors disconnected.
3. Disconnect EVAP purge hoses connected to EVAP canister purge volume control solenoid valve.
4. Turn ignition switch ON.
5. Select “PURG VOL C/V” in “ACTIVE TEST” mode with CONSULT.
6. Touch “Qd” and “Qu” on CONSULT screen to adjust “PURG VOL C/V” opening and check air passage continuity of EVAP canister purge volume control solenoid valve under the following conditions.

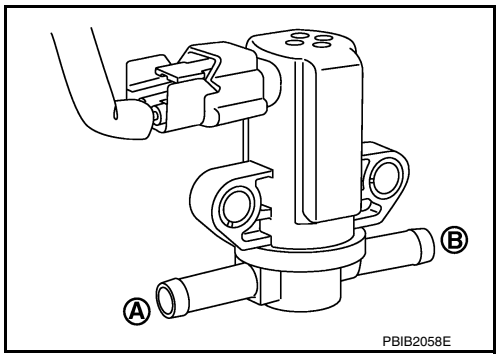

Condition (PURG VOL C/V value)	Air passage continuity between Ⓐ and Ⓑ
100%	Existed
0%	Not existed

Without CONSULT

1. Turn ignition switch OFF.
2. Disconnect EVAP canister purge volume control solenoid valve harness connector.
3. Disconnect EVAP purge hoses connected to EVAP canister purge volume control solenoid valve.

4. Check air passage continuity of EVAP canister purge volume control solenoid valve under the following conditions.

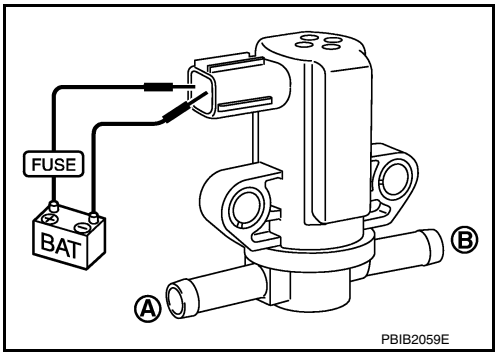

Condition	Air passage continuity between Ⓐ and Ⓑ
12 V direct current supply between terminals 1 and 2	Existed
No supply	Not existed

Is the inspection result normal?

YES >> INSPECTION END

NO >> Replace EVAP canister purge volume control solenoid valve. Refer to EC-534, "ENGINE CONTROL SYSTEM : Component Parts Location".

P0447 EVAP CANISTER VENT CONTROL VALVE

DTC Logic

INFOID:0000000011489654

DTC DETECTION LOGIC

DTC No.	CONSULT screen terms (Trouble diagnosis content)	DTC detecting condition	Possible cause
P0447	VENT CONTROL VALVE (Evaporative emission system vent control circuit open)	An improper voltage signal is sent to ECM through EVAP canister vent control valve.	• Harness or connectors (The valve circuit is open or shorted.) • EVAP canister vent control valve • Hoses (Hoses are connected incorrectly or clogged.)

DTC CONFIRMATION PROCEDURE

1. PRECONDITIONING

If DTC Confirmation Procedure has been previously conducted, always perform the following before conducting the next test.
1. Turn ignition switch OFF and wait at least 10 seconds.
2. Turn ignition switch ON.
3. Turn ignition switch OFF and wait at least 10 seconds.

TESTING CONDITION:
Before performing the following procedure, confirm battery voltage is more than 11 V at idle.

>> GO TO 2.

2. PERFORM DTC CONFIRMATION PROCEDURE

1. Start engine and wait at least 8 seconds.
2. Check 1st trip DTC.

Is 1st trip DTC detected?

YES >> Proceed to EC-779, "Diagnosis Procedure".
NO >> INSPECTION END

Diagnosis Procedure

INFOID:0000000011489655

1. INSPECTION START

Will CONSULT be used?

Will CONSULT be used?

YES >> GO TO 2.
NO >> GO TO 3.

2. CHECK EVAP CANISTER VENT CONTROL VALVE CIRCUIT

With CONSULT
1. Turn ignition switch OFF and then ON.
2. Select “VENT CONTROL/V” in “ACTIVE TEST” mode with CONSULT.
3. Touch “ON/OFF” on CONSULT screen.
4. Check for operating sound of the valve.

Clicking sound should be heard.

Is the inspection result normal?

YES >> GO TO 6.
NO >> GO TO 3.

3. CHECK EVAP CANISTER VENT CONTROL VALVE POWER SUPPLY

1. Turn ignition switch OFF.
2. Disconnect EVAP canister vent control valve harness connector.

3. Turn ignition switch ON.
4. Check the voltage between EVAP canister vent control valve harness connector and ground.

EVAP canister vent control valve		Ground	Voltage
Connector	Terminal		
B31	1	Ground	Battery voltage

Is the inspection result normal?

YES >> GO TO 4.
NO >> Perform the trouble diagnosis for power supply circuit.

4. CHECK EVAP CANISTER VENT CONTROL VALVE OUTPUT SIGNAL CIRCUIT

1. Turn ignition switch OFF.
2. Disconnect ECM harness connector.
3. Check the continuity between ECM harness connector and EVAP canister vent control valve harness connector.
   Refer to Wiring Diagram.

EVAP canister vent control valve		ECM		Continuity
Connector	Terminal	Connector	Terminal	
B31	2	E16	106	Existed

4. Also check harness for short to ground and short to power.

Is the inspection result normal?

YES >> GO TO 5.
NO >> Repair open circuit, short to ground or short to power in harness or connectors.

5. CHECK RUBBER TUBE FOR CLOGGING

1. Disconnect rubber tube connected to EVAP canister vent control valve.
2. Check the rubber tube for clogging.

Is the inspection result normal?

YES >> GO TO 6.
NO >> Clean the rubber tube using an air blower.

6. CHECK EVAP CANISTER VENT CONTROL VALVE

Check EVAP canister vent control valve. Refer to EC-780, "Component Inspection".

Is the inspection result normal?

YES >> Check intermittent incident. Refer to GI-47, "Intermittent Incident".
NO >> Replace EVAP canister vent control valve. Refer to FL-18, "Removal and Installation".

Component Inspection

INFOID:0000000011489656

1. CHECK EVAP CANISTER VENT CONTROL VALVE-I

1. Remove EVAP canister vent control valve from EVAP canister. Refer to FL-18, "Removal and Installation".
2. Check portion Ⓐ of EVAP canister vent control valve for rust.

Is it rusted?

YES >> Replace EVAP canister vent control valve. Refer to FL-18, "Removal and Installation".
NO >> GO TO 2.

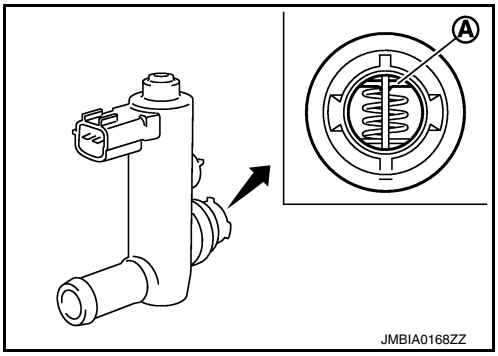

2. CHECK EVAP CANISTER VENT CONTROL VALVE-II

With CONSULT

1. Reconnect harness connectors disconnected.
2. Turn ignition switch ON.
3. Perform “VENT CONTROL/V” in “ACTIVE TEST” mode.
4. Check air passage continuity and operation delay time.
   Check that new O-ring is installed properly.

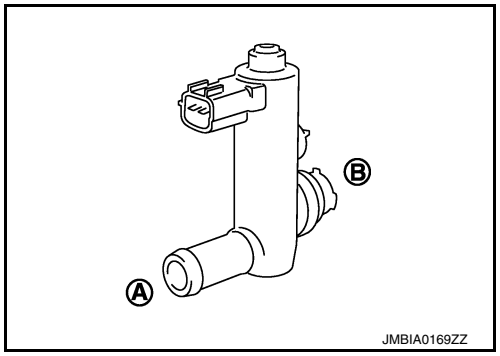

Condition VENT CONTROL/V	Air passage continuity between Ⓐ and Ⓑ
ON	Not existed
OFF	Existed

Operation takes less than 1 second.

Without CONSULT

1. Disconnect EVAP canister vent control valve harness connector.
2. Check air passage continuity and operation delay time under the following conditions.

Check that new O-ring is installed properly.

Condition	Air passage continuity between Ⓐ and Ⓑ
12 V direct current supply between terminals 1 and 2	Not existed
OFF	Existed

Operation takes less than 1 second.

Is the inspection result normal?

YES >> INSPECTION END
NO >> GO TO 3.

3. CHECK EVAP CANISTER VENT CONTROL VALVE-III

With CONSULT

1. Clean the air passage [portion Ⓐ to Ⓑ] of EVAP canister vent control valve using an air blower.
2. Perform “VENT CONTROL/V” in “ACTIVE TEST” mode.
3. Check air passage continuity and operation delay time.
   Check that new O-ring is installed properly.

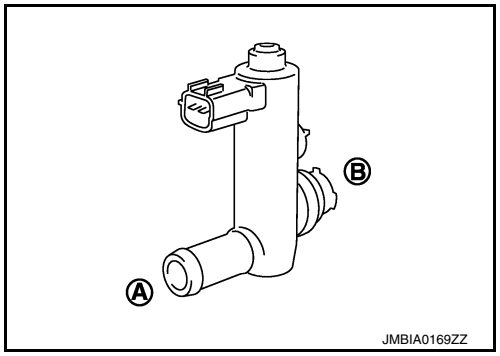

Condition VENT CONTROL/V	Air passage continuity between Ⓐ and Ⓑ
ON	No
OFF	Yes

Operation takes less than 1 second.

Without CONSULT

1. Clean the air passage [portion Ⓐ to Ⓑ] of EVAP canister vent control valve using an air blower.
2. Check air passage continuity and operation delay time under the following conditions.
   Check that new O-ring is installed properly.

Condition	Air passage continuity between Ⓐ and Ⓑ
12 V direct current supply between terminals (1) and (2)	No
OFF	Yes

Operation takes less than 1 second.

Is the inspection result normal?

YES >> INSPECTION END
NO >> Replace EVAP canister vent control valve. Refer to FL-18, "Removal and Installation".

P0452 EVAP CONTROL SYSTEM PRESSURE SENSOR

DTC Logic

INFOID:0000000011489663

DTC DETECTION LOGIC

DTC No.	CONSULT screen terms (Trouble diagnosis content)	DTC detecting condition	Possible cause
P0452	EVAP SYS PRES SEN (Evaporative emission system pressure sensor/switch low)	An excessively low voltage from the sensor is sent to ECM.	• Harness or connectors (EVAP control system pressure sensor circuit is open or shorted.) [CKP sensor (POS) circuit is shorted.] (APP sensor 2 circuit is shorted.) (Refrigerant pressure sensor circuit is shorted.) (Engine oil pressure sensor circuit is shorted.) • EVAP control system pressure sensor • Crankshaft position sensor (POS) • Accelerator pedal position sensor • Refrigerant pressure sensor • Engine oil pressure sensor • Sensor power supply 2 circuit

DTC CONFIRMATION PROCEDURE

1. PRECONDITIONING

If DTC Confirmation Procedure has been previously conducted, always perform the following before conducting the next test.

1. Turn ignition switch OFF and wait at least 10 seconds.
2. Turn ignition switch ON.
3. Turn ignition switch OFF and wait at least 10 seconds.

TESTING CONDITION:
Always perform test at a temperature of 5°C (41°F) or more.

>> GO TO 2.

2. PERFORM DTC CONFIRMATION PROCEDURE

With CONSULT

1. Start engine and warm it up to normal operating temperature.
2. Turn ignition switch OFF and wait at least 10 seconds.
3. Turn ignition switch ON.
4. Turn ignition switch OFF and wait at least 10 seconds.
5. Turn ignition switch ON.
6. Select “DATA MONITOR” mode with CONSULT.
7. Check that “FUEL T/TMP SE” is more than 0°C (32°F).
8. Start engine and wait at least 20 seconds.
9. Check 1st trip DTC.

With GST

1. Start engine and warm it up to normal operating temperature.
2. Set voltmeter probes to ECM harness connector terminals under the following conditions.

ECM		
Connector	+	–
	Terminal	
E16	111	120

3. Check that the voltage is less than 4.2 V.
4. Turn ignition switch OFF and wait at least 10 seconds.

5. Turn ignition switch ON.
6. Turn ignition switch OFF and wait at least 10 seconds.
7. Start engine and wait at least 20 seconds.
8. Check 1st trip DTC.

Is 1st trip DTC detected?

YES >> Proceed to EC-783, "Diagnosis Procedure".
NO >> INSPECTION END

Diagnosis Procedure

INFOID:0000000011489664

1. CHECK CONNECTOR

1. Disconnect EVAP control system pressure sensor harness connector.
2. Check that water is not inside connector.

Is the inspection result normal?

YES >> GO TO 2.
NO >> Repair or replace harness connector.

2. CHECK EVAP CONTROL SYSTEM PRESSURE SENSOR POWER SUPPLY

1. Turn ignition switch ON.
2. Check the voltage between EVAP control system pressure sensor harness connector and ground.

EVAP control system pressure sensor		Ground	Voltage (V)
Connector	Terminal		
B36	3	Ground	Approx. 5

Is the inspection result normal?

YES >> GO TO 5.
NO >> GO TO 3.

3. CHECK EVAP CONTROL SYSTEM PRESSURE SENSOR POWER SUPPLY CIRCUIT

1. Turn ignition switch OFF.
2. Disconnect ECM harness connector.
3. Check the continuity between EVAP control system pressure sensor harness connector and ECM harness connector.

EVAP control system pressure sensor		ECM		Continuity
Connector	Terminal	Connector	Terminal	
B36	3	E16	107	Existed

Is the inspection result normal?

YES >> GO TO 4.
NO >> Repair or replace harness connector.

4. CHECK SENSOR POWER SUPPLY 2 CIRCUIT

Check sensor power supply 2 circuit. Refer to EC-900, "Diagnosis Procedure".

Is the inspection result normal?

YES >> Perform the trouble diagnosis for power supply circuit.
NO >> Repair or replace error-detected parts.

5. CHECK EVAP CONTROL SYSTEM PRESSURE SENSOR GROUND CIRCUIT

1. Turn ignition switch OFF.
2. Disconnect ECM harness connector.
3. Check the continuity between EVAP control system pressure sensor harness connector and ECM harness connector.

EVAP control system pressure sensor		ECM		Continuity
Connector	Terminal	Connector	Terminal	
B36	1	E16	112	Existed

4. Also check harness for short to ground and short to power.

Is the inspection result normal?

YES >> GO TO 6.
NO >> Repair open circuit, short to ground or short to power in harness or connectors.

6. CHECK EVAP CONTROL SYSTEM PRESSURE SENSOR INPUT SIGNAL CIRCUIT

1. Check the continuity between EVAP control system pressure sensor harness connector and ECM harness connector.

EVAP control system pressure sensor		ECM		Continuity
Connector	Terminal	Connector	Terminal	
B36	2	E16	102	Existed

2. Also check harness for short to ground and short to power.

Is the inspection result normal?

YES >> GO TO 7.
NO >> Repair open circuit, short to ground or short to power in harness or connectors.

7. CHECK EVAP CONTROL SYSTEM PRESSURE SENSOR

Check EVAP control system pressure sensor. Refer to EC-784, "Component Inspection".

Is the inspection result normal?

YES >> Check intermittent incident. Refer to GI-47, "Intermittent Incident".
NO >> Replace EVAP control system pressure sensor. Refer to FL-18, "Removal and Installation".

Component Inspection

INFOID:0000000011489665

1. CHECK EVAP CONTROL SYSTEM PRESSURE SENSOR

1. Turn ignition switch OFF.
2. Remove EVAP control system pressure sensor with its harness connector. Refer to FL-18, "Removal and Installation".
   Always replace O-ring with a new one.
3. Install a vacuum pump to EVAP control system pressure sensor.
4. Turn ignition switch ON and check output voltage between ECM terminals under the following conditions.

ECM			Applied vacuum kPa (kg/cm^2, psi)	Voltage
Connector	+	–		
	Terminal	Terminal		
E16	102	112	Not applied	1.8 - 4.8 V
			-26.7 (-0.272, -3.87)	2.1 to 2.5 V lower than above value

CAUTION:
- **Always calibrate the vacuum pump gauge when using it.**
- **Never apply below -93.3 kPa (-0.952 kg/cm^2, -13.53 psi) or pressure over 101.3 kPa (1.033 kg/cm^2, 14.69 psi).**

Is the inspection result normal?

YES >> INSPECTION END
NO >> Replace EVAP control system pressure sensor. Refer to FL-18, "Removal and Installation".

P0453 EVAP CONTROL SYSTEM PRESSURE SENSOR

DTC Logic

INFOID:0000000011489666

DTC DETECTION LOGIC

DTC No.	CONSULT screen terms (Trouble diagnosis content)	DTC detecting condition	Possible cause
P0453	EVAP SYS PRES SEN (Evaporative emission system pressure sensor/switch high)	An excessively high voltage from the sensor is sent to ECM.	• Harness or connectors (EVAP control system pressure sensor circuit is open or shorted.) [CKP sensor (POS) circuit is shorted.] (APP sensor 2 circuit is shorted.) (Refrigerant pressure sensor circuit is shorted.) (Engine oil pressure sensor circuit is shorted.) • EVAP control system pressure sensor • Crankshaft position sensor (POS) • Accelerator pedal position sensor • Refrigerant pressure sensor • Engine oil pressure sensor • EVAP canister vent control valve • EVAP canister • Rubber hose from EVAP canister vent control valve to vehicle frame • Sensor power supply 2 circuit

DTC CONFIRMATION PROCEDURE

1. PRECONDITIONING

If DTC Confirmation Procedure has been previously conducted, always perform the following before conducting the next test.

1. Turn ignition switch OFF and wait at least 10 seconds.
2. Turn ignition switch ON.
3. Turn ignition switch OFF and wait at least 10 seconds.

TESTING CONDITION:
Always perform test at a temperature of 5°C (41°F) or more.

>> GO TO 2.

2. PERFORM DTC CONFIRMATION PROCEDURE

With CONSULT

1. Start engine and warm it up to normal operating temperature.
2. Turn ignition switch OFF and wait at least 10 seconds.
3. Turn ignition switch ON.
4. Turn ignition switch OFF and wait at least 10 seconds.
5. Turn ignition switch ON.
6. Select “DATA MONITOR” mode with CONSULT.
7. Check that “FUEL T/TMP SE” is more than 0°C (32°F).
8. Start engine and wait at least 20 seconds.
9. Check 1st trip DTC.

With GST

1. Start engine and warm it up to normal operating temperature.
2. Set voltmeter probes to ECM harness connector terminals.

ECM		
Connector	+	–
	Terminal	
E16	111	120

3. Check that the voltage is less than 4.2 V.
4. Turn ignition switch OFF and wait at least 10 seconds.
5. Turn ignition switch ON.
6. Turn ignition switch OFF and wait at least 10 seconds.
7. Start engine and wait at least 20 seconds.
8. Check 1st trip DTC.

Is 1st trip DTC detected?

YES >> Proceed to EC-786, "Diagnosis Procedure".
NO >> INSPECTION END

Diagnosis Procedure

INFOID:0000000011489667

1. CHECK CONNECTOR

1. Disconnect EVAP control system pressure sensor harness connector.
2. Check that water is not inside connectors.

Is the inspection result normal?

YES >> GO TO 2.
NO >> Repair or replace harness connector.

2. CHECK EVAP CONTROL SYSTEM PRESSURE SENSOR POWER SUPPLY

1. Turn ignition switch ON.
2. Check the voltage between EVAP control system pressure sensor harness connector and ground.

EVAP control system pressure sensor		Ground	Voltage (V)
Connector	Terminal		
B36	3	Ground	Approx. 5

Is the inspection result normal?

YES >> GO TO 5.
NO >> GO TO 3.

3. CHECK EVAP CONTROL SYSTEM PRESSURE SENSOR POWER SUPPLY CIRCUIT

1. Turn ignition switch OFF.
2. Disconnect ECM harness connector.
3. Check the continuity between EVAP control system pressure sensor harness connector and ECM harness connector.

EVAP control system pressure sensor		ECM		Continuity
Connector	Terminal	Connector	Terminal	
B36	3	E16	107	Existed

Is the inspection result normal?

YES >> GO TO 4.
NO >> Repair open circuit.

4. CHECK SENSOR POWER SUPPLY 2 CIRCUIT

Check sensor power supply 2 circuit. Refer to EC-900, "Diagnosis Procedure".

Is the inspection result normal?

YES >> Perform the trouble diagnosis for power supply circuit.
NO >> Repair or replace error-detected parts.

5. CHECK EVAP CONTROL SYSTEM PRESSURE SENSOR GROUND CIRCUIT

1. Turn ignition switch OFF.
2. Disconnect ECM harness connector.
3. Check the continuity between EVAP control system pressure sensor harness connector and ECM harness connector.

EVAP control system pressure sensor		ECM		Continuity
Connector	Terminal	Connector	Terminal	
B36	1	E16	112	Existed

4. Also check harness for short to ground and short to power.

Is the inspection result normal?

YES >> GO TO 6.
NO >> Repair open circuit, short to ground or short to power in harness or connectors.

6. CHECK EVAP CONTROL SYSTEM PRESSURE SENSOR INPUT SIGNAL CIRCUIT

1. Check the continuity between EVAP control system pressure sensor harness connector and ECM harness connector.

EVAP control system pressure sensor		ECM		Continuity
Connector	Terminal	Connector	Terminal	
B36	2	E16	102	Existed

2. Also check harness for short to ground and short to power.

Is the inspection result normal?

YES >> GO TO 7.
NO >> Repair open circuit, short to ground or short to power in harness or connectors.

7. CHECK RUBBER TUBE

1. Disconnect rubber tube connected to EVAP canister vent control valve.
2. Check the rubber tube for clogging.

Is the inspection result normal?

YES >> GO TO 8.
NO >> Clean the rubber tube using an air blower, repair or replace rubber tube.

8. CHECK EVAP CANISTER VENT CONTROL VALVE

Check EVAP canister vent control valve. Refer to EC-788, "Component Inspection".

Is the inspection result normal?

YES >> GO TO 9.
NO >> Replace EVAP canister vent control valve. Refer to FL-18, "Removal and Installation".

9. CHECK EVAP CONTROL SYSTEM PRESSURE SENSOR

Check EVAP control system pressure sensor. Refer to EC-788, "Component Inspection".

Is the inspection result normal?

YES >> GO TO 10.
NO >> Replace EVAP control system pressure sensor. Refer to FL-18, "Removal and Installation".

10. CHECK IF EVAP CANISTER IS SATURATED WITH WATER

1. Remove EVAP canister with EVAP canister vent control valve and EVAP control system pressure sensor attached. Refer to FL-18, "Removal and Installation".

2. Check if water will drain from the EVAP canister.

Does water drain from the EVAP canister?

YES >> GO TO 11.
NO >> Check intermittent incident. Refer to GI-47, "Intermittent Incident".

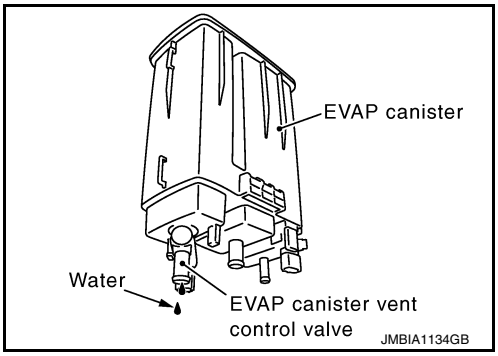

11. CHECK EVAP CANISTER

Weigh the EVAP canister with the EVAP canister vent control valve and EVAP control system pressure sensor attached.

The weight should be less than 2.1 kg (4.6 lb).

Is the inspection result normal?

YES >> Check intermittent incident. Refer to GI-47, "Intermittent Incident".
NO >> GO TO 12.

12. DETECT MALFUNCTIONING PART

Check the following.
- EVAP canister for damage
- EVAP hose between EVAP canister and vehicle frame for clogging or poor connection

>> Repair hose or replace EVAP canister. Refer to FL-18, "Removal and Installation".

Component Inspection

INFOID:0000000011489668

1. CHECK EVAP CONTROL SYSTEM PRESSURE SENSOR

1. Turn ignition switch OFF.
2. Remove EVAP control system pressure sensor with its harness connector. Refer to FL-18, "Removal and Installation".
   Always replace O-ring with a new one.
3. Install a vacuum pump to EVAP control system pressure sensor.
4. Turn ignition switch ON and check output voltage between ECM terminals under the following conditions.

ECM			Applied vacuum kPa (kg/cm^2, psi)	Voltage
Connector	+	–		
	Terminal	Terminal		
E16	102	112	Not applied	1.8 - 4.8 V
			-26.7 (-0.272, -3.87)	2.1 to 2.5 V lower than above value

CAUTION:
- **Always calibrate the vacuum pump gauge when using it.**
- **Never apply below -93.3 kPa (-0.952 kg/cm^2, -13.53 psi) or pressure over 101.3 kPa (1.033 kg/cm^2, 14.69 psi).**

Is the inspection result normal?

YES >> INSPECTION END
NO >> Replace EVAP control system pressure sensor. Refer to FL-18, "Removal and Installation".

P0500 VSS

Description

INFOID:0000000011489682

The vehicle speed signal is sent to the combination meter from the ABS actuator and electric unit (control unit) via the CAN communication line. The combination meter then sends a signal to the ECM via the CAN communication line.

DTC Logic

INFOID:0000000011489683

DTC DETECTION LOGIC

NOTE:
- **If DTC P0500 is displayed with DTC UXXXX, first perform the trouble diagnosis for DTC UXXXX.**
- **If DTC P0500 is displayed with DTC P0607, first perform the trouble diagnosis for DTC P0607. Refer to EC-805, "DTC Logic".**

DTC No.	Trouble diagnosis name	DTC detecting condition	Possible cause
P0500	Vehicle speed sensor	The vehicle speed signal sent to ECM is almost 0 km/h (0 MPH) even when vehicle is being driven.	• Harness or connectors (The CAN communication line is open or shorted) • Harness or connectors (The vehicle speed signal circuit is open or shorted) • Wheel sensor • Combination meter • ABS actuator and electric unit (control unit)

DTC CONFIRMATION PROCEDURE

1. INSPECTION START

Do you have CONSULT?

Do you have CONSULT?

YES >> GO TO 2.
NO >> GO TO 5.

2. PRECONDITIONING

If DTC Confirmation Procedure has been previously conducted, always perform the following procedure before conducting the next test.

1. Turn ignition switch OFF and wait at least 10 seconds.
2. Turn ignition switch ON.
3. Turn ignition switch OFF and wait at least 10 seconds.

>> GO TO 3.

3. CHECK VEHICLE SPEED SIGNAL

NOTE:
This procedure may be conducted with the drive wheels lifted in the shop or by driving the vehicle. If a road test is expected to be easier, it is unnecessary to lift the vehicle.

With CONSULT

1. Start engine (VDC switch OFF).
2. Read “VHCL SPEED SE” in “DATA MONITOR” mode with CONSULT. The vehicle speed on CONSULT should exceed 10 km/h (6 MPH) when rotating wheels with suitable gear position.

Is the inspection result normal?

YES >> GO TO 4.
NO >> Proceed to EC-790, "Diagnosis Procedure".

4. PERFORM DTC CONFIRMATION PROCEDURE

1. Select “DATA MONITOR” mode with CONSULT.
2. Warm engine up to normal operating temperature.
3. Maintain the following conditions for at least 50 consecutive seconds.

CAUTION:
Always drive vehicle at a safe speed.

ENG SPEED	1,400 - 6,000 rpm
COOLAN TEMP/S	More than 70°C (158°F)
B/FUEL SCHDL	5.5 - 31.8 msec
Selector lever	Except P or N position
PW/ST SIGNAL	OFF

4. Check 1st trip DTC.

Is 1st trip DTC detected?

YES >> Proceed to EC-790, "Diagnosis Procedure".
NO >> INSPECTION END

5. PERFORM COMPONENT FUNCTION CHECK

Perform component function check. Refer to EC-790, "Component Function Check".
Use component function check to check the overall function of the vehicle speed signal circuit. During this check, a 1st trip DTC might not be confirmed.

Is the inspection result normal?

YES >> INSPECTION END
NO >> Proceed to EC-790, "Diagnosis Procedure".

Component Function Check

INFOID:0000000011489684

1. PERFORM COMPONENT FUNCTION CHECK

With GST

1. Lift up drive wheels.
2. Start engine.
3. Read vehicle speed signal in Service $01 with GST.
   The vehicle speed signal on GST should be able to exceed 10 km/h (6 MPH) when rotating wheels with suitable gear position.

Is the inspection result normal?

YES >> INSPECTION END
NO >> Proceed to EC-790, "Diagnosis Procedure".

Diagnosis Procedure

INFOID:0000000011489685

1. CHECK THE ABS ACTUATOR AND ELECTRIC UNIT (CONTROL UNIT)

Refer to BRC-165, "CONSULT Function".

Is the inspection result normal?

YES >> GO TO 2.
NO >> Repair or replace.

2. CHECK THE COMBINATION METER

Refer to MWI-18, "CONSULT Function (METER/M&A)".

>> INSPECTION END

P0506 ISC SYSTEM

Description

INFOID:0000000011489686

The ECM controls the engine idle speed to a specified level through the fine adjustment of the air, which is let into the intake manifold, by operating the electric throttle control actuator. The operating of the throttle valve is varied to allow for optimum control of the engine idling speed. The crankshaft position sensor (POS) detects the actual engine speed and sends a signal to the ECM.
The ECM controls the electric throttle control actuator so that the engine speed coincides with the target value memorized in the ECM. The target engine speed is the lowest speed at which the engine can operate steadily. The optimum value stored in the ECM is determined by taking into consideration various engine conditions, such as during warming up, deceleration and engine load (air conditioner, power steering and cooling fan operation, etc.).

DTC Logic

INFOID:0000000011489687

DTC DETECTION LOGIC

NOTE:
If DTC P0506 is displayed with other DTC, first perform the trouble diagnosis for the other DTC.

DTC No.	CONSULT screen terms (Trouble diagnosis content)	DTC detecting condition	Possible cause
P0506	ISC SYSTEM (Idle air control system RPM lower than expected)	The idle speed is less than the target idle speed by 100 rpm or more.	• Electric throttle control actuator • Intake air leakage

DTC CONFIRMATION PROCEDURE

1.PRECONDITIONING

If DTC Confirmation Procedure has been previously conducted, always perform the following before conducting the next test.
1. Turn ignition switch OFF and wait at least 10 seconds.
2. Turn ignition switch ON.
3. Turn ignition switch OFF and wait at least 10 seconds.

If the target idle speed is out of the specified value, perform EC-661, "Work Procedure", before conducting DTC CONFIRMATION PROCEDURE.
TESTING CONDITION:
- **Before performing the following procedure, confirm that battery voltage is more than 11 V at idle.**
- **Always perform the test at a temperature above –10°C(14°F).**

>> GO TO 2.

2.PERFORM DTC CONFIRMATION PROCEDURE

1. Start engine and warm it up to normal operating temperature.
2. Turn ignition switch OFF and wait at least 10 seconds.
3. Turn ignition switch ON.
4. Turn ignition switch OFF and wait at least 10 seconds.
5. Restart engine and run it for at least 1 minute at idle speed.
6. Check 1st trip DTC.

Is 1st trip DTC detected?

YES >> Proceed to EC-791, "Diagnosis Procedure".
NO >> INSPECTION END

Diagnosis Procedure

INFOID:0000000011489688

1.CHECK INTAKE AIR LEAKAGE

1. Start engine and let it idle.
2. Listen for an intake air leakage after the mass air flow sensor.

Is intake air leakage detected?

YES >> Discover air leakage location and repair.
NO >> Replace ECM. Refer to EC-916, "Removal and Installation".

P0507 ISC SYSTEM

Description

INFOID:0000000011489689

The ECM controls the engine idle speed to a specified level through the fine adjustment of the air, which is let into the intake manifold, by operating the electric throttle control actuator. The operating of the throttle valve is varied to allow for optimum control of the engine idling speed. The crankshaft position sensor (POS) detects the actual engine speed and sends a signal to the ECM.
The ECM controls the electric throttle control actuator so that the engine speed coincides with the target value memorized in the ECM. The target engine speed is the lowest speed at which the engine can operate steadily. The optimum value stored in the ECM is determined by taking into consideration various engine conditions, such as during warming up, deceleration and engine load (air conditioner, power steering and cooling fan operation, etc.).

DTC Logic

INFOID:0000000011489690

DTC DETECTION LOGIC

NOTE:
If DTC P0507 is displayed with other DTC, first perform the trouble diagnosis for the other DTC.

DTC No.	CONSULT screen terms (Trouble diagnosis content)	DTC detecting condition	Possible cause
P0507	ISC SYSTEM (Idle air control system RPM higher than expected)	The idle speed is more than the target idle speed by 200 rpm or more.	• Electric throttle control actuator • Intake air leakage • PCV system

DTC CONFIRMATION PROCEDURE

1.PRECONDITIONING

If DTC Confirmation Procedure has been previously conducted, always perform the following before conducting the next test.
1. Turn ignition switch OFF and wait at least 10 seconds.
2. Turn ignition switch ON.
3. Turn ignition switch OFF and wait at least 10 seconds.

If the target idle speed is out of the specified value, perform EC-661, "Work Procedure", before conducting DTC Confirmation Procedure.
TESTING CONDITION:
- **Before performing the following procedure, confirm that battery voltage is more than 11 V at idle.**
- **Always perform the test at a temperature above −10°C(14°F).**

>> GO TO 2.

2.PERFORM DTC CONFIRMATION PROCEDURE

1. Start engine and warm it up to normal operating temperature.
2. Turn ignition switch OFF and wait at least 10 seconds.
3. Turn ignition switch ON.
4. Turn ignition switch OFF and wait at least 10 seconds.
5. Restart engine and run it for at least 1 minute at idle speed.
6. Check 1st trip DTC.

Is 1st trip DTC detected?

YES >> Proceed to EC-793, "Diagnosis Procedure".
NO >> INSPECTION END

Diagnosis Procedure

INFOID:0000000011489691

1.CHECK PCV HOSE CONNECTION

Confirm that PCV hose is connected correctly.

Is the inspection result normal?

YES >> GO TO 2.

NO >> Repair or replace malfunctioning part.

2. CHECK INTAKE AIR LEAKAGE

1. Start engine and let it idle.
2. Listen for an intake air leakage after the mass air flow sensor.

Is intake air leakage detected?

YES >> Discover air leakage location and repair.
NO >> Replace ECM. Refer to EC-916, "Removal and Installation".

P0520 EOP SENSOR

DTC Logic

INFOID:0000000011489695

DTC DETECTION LOGIC

DTC No.	CONSULT screen terms (Trouble diagnosis content)	DTC detecting condition	Possible cause
P0520	EOP SENSOR/SWITCH (Engine oil pressure sensor/ switch circuit)	ECM detects the following status continuously for 5 seconds or more: • A voltage signal transmitted from the engine oil pressure sensor is lower than 0.26 V. • A voltage signal transmitted from the engine oil pressure sensor is higher than 4.9 V.	• Harness or connectors (EOP sensor circuit is open or short-ed) • EOP sensor • Sensor power supply 2 circuit

DTC CONFIRMATION PROCEDURE

1.PRECONDITIONING

If DTC Confirmation Procedure has been previously conducted, always perform the following procedure before conducting the next test.

1. Turn ignition switch OFF and wait at least 10 seconds.
2. Turn ignition switch ON.
3. Turn ignition switch OFF and wait at least 10 seconds.

>> GO TO 2.

2.CHECK ENGINE OIL LEVEL

1. Turn ignition switch OFF.
2. Check engine oil level. Refer to LU-8, "Inspection".

Is inspection result normal?

YES >> GO TO 3.
NO >> Check engine oil leak. Refer to LU-8, "Inspection".

3.PERFORM DTC CONFIRMATION PROCEDURE

1. Start engine and let it idle for at least 5 seconds.
2. Check 1st trip DTC.

Is 1st trip DTC detected?

YES >> Proceed to EC-795, "Diagnosis Procedure".
NO >> INSPECTION END

Diagnosis Procedure

INFOID:0000000011489696

1.CHECK EOP SENSOR POWER SUPPLY-I

1. Turn ignition switch OFF.
2. Disconnect EOP sensor harness connector.
3. Turn ignition switch ON.
4. Check the voltage between EOP sensor harness connector terminals.

EOP sensor			Voltage (Approx.)
Connector	+	–	
	terminal		
F54	3	1	5 V

Is the inspection result normal?

YES >> GO TO 2.
NO >> GO TO 4.

2.CHECK EOP SENSOR SIGNAL CIRCUIT

1. Turn ignition switch OFF.
2. Disconnect ECM harness connectors.
3. Check the continuity between EOP sensor harness connector and ECM harness connector.

+		–		Continuity
EOP sensor		ECM		
Connector	Terminal	Connector	Terminal	
F54	2	F51	4	Existed

4. Also check harness for short to ground and short to power.

Is the inspection result normal?

YES >> GO TO 3.
NO >> Repair or replace error-detected parts.

3. CHECK EOP SENSOR

Check EOP sensor. Refer to EC-797, "Component Inspection".

Is the inspection result normal?

YES >> Check intermittent incident. Refer to GI-47, "Intermittent Incident".
NO >> Repair or replace error-detected parts.

4. CHECK EOP SENSOR POWER SUPPLY-II

Check the voltage between EOP sensor harness connector terminal and ground.

+		–	Voltage (Approx.)
EOP sensor			
Connector	Terminal		
F54	3	Ground	5 V

Is the inspection result normal?

YES >> GO TO 7.
NO >> GO TO 5.

5. CHECK EOP SENSOR POWER SUPPLY CIRCUIT

1. Turn ignition switch OFF.
2. Disconnect ECM harness connectors.
3. Check the continuity between EOP sensor harness connector and ECM harness connector.

+		–		Continuity
EOP sensor		ECM		
Connector	Terminal	Connector	Terminal	
F54	3	E16	107	Existed

4. Also check harness for short to ground and short to power.

Is the inspection result normal?

YES >> GO TO 6.
NO >> Repair or replace error-detected parts.

6. CHECK SENSOR POWER SUPPLY 2 CIRCUIT

Check sensor power supply 2 circuit. Refer to EC-900, "Diagnosis Procedure".

Is inspection result normal?

YES >> Perform the trouble diagnosis for power supply circuit.
NO >> Repair or replace error-detected parts.

7. CHECK EOP SENSOR GROUND CIRCUIT

1. Turn ignition switch OFF.
2. Disconnect ECM harness connector.

3. Check the continuity between EOP sensor harness connector and ECM harness connector.

+		–		Continuity
EOP sensor		ECM		
Connector	Terminal	Connector	Terminal	
F54	1	E16	112	Existed

Is the inspection result normal?

YES >> GO TO 8.
NO >> Repair or replace error-detected parts.

8. CHECK ECM GROUND CIRCUIT

Check the continuity between ECM harness connector and ground.

+		–	Continuity
ECM			
Connector	Terminal		
F51	12	Ground	Existed
	16		
E16	123		
	124		
	127		
	128		

Is the inspection result normal?

YES >> Check intermittent incident. Refer to GI-47, "Intermittent Incident".
NO >> Repair or replace error-detected parts.

Component Inspection

INFOID:0000000011489697

1. CHECK EOP SENSOR

1. Turn ignition switch OFF.
2. Disconnect EOP sensor harness connector.
3. Check resistance between EOP sensor connector terminals.

EOP sensor		Condition	Resistance (kΩ)
+	–		
Terminal			
1	2	None	4 – 10
	3		2 – 8
2	1		4 – 10
	3		1 – 3
3	1		2 – 8
	2		1 – 3

Is the inspection result normal?

YES >> INSPECTION END.
NO >> Replace EOP sensor. Refer to EC-534, "ENGINE CONTROL SYSTEM : Component Parts Location".

P0524 ENGINE OIL PRESSURE

DTC Logic

INFOID:0000000011489698

DTC DETECTION LOGIC

DTC No.	CONSULT screen terms (Trouble diagnosis content)	DTC detecting condition	Possible cause
P0524	ENGINE OIL PRESSURE (Engine oil pressure too low)	An EOP sensor signal voltage applied to ECM remains lower than the specified value continuously for 10 seconds or more when the engine speed is 1,000 rpm or more.	• Decrease in engine oil pressure • Decrease in engine oil level • Engine oil condition • EOP sensor • Engine body

DTC CONFIRMATION PROCEDURE

CAUTION:

If "EC-799, "Diagnosis Procedure"" is unfinished, be sure to perform Step 3 and 4.

1. PRECONDITIONING-1

If DTC Confirmation Procedure has been previously conducted, always perform the following procedure before conducting the next test.

1. Turn ignition switch OFF and wait at least 10 seconds.
2. Turn ignition switch ON.
3. Turn ignition switch OFF and wait at least 10 seconds.

TEST CONDITION:

Before performing the following procedure, confirm that battery voltage is 11 V or more at idle.

>> GO TO 2.

2. PRECONDITIONING-2

Is "Diagnosis Procedure" of DTC P0524 finished?

YES >> GO TO 3.
NO >> GO TO 4.

3. PERFORM DTC CONFIRMATION PROCEDURE

1. Start engine and warm it up to normal operating temperature.
2. Maintain the following conditions for about 10 consecutive seconds.

Selector lever	P or N position
Engine coolant temperature	70°C (158°F) or more
Engine speed	1,000 rpm or more

NOTE:
With engine speed set around 4,000 rpm, the phenomenon can be reproduced more easily.

3. Check DTC.

Is DTC detected?

YES >> Proceed to EC-799, "Diagnosis Procedure".
NO >> INSPECTION END

4. CHECK ENGINE OIL LEVEL

Check engine oil level. Refer to LU-8, "Inspection".

Is the inspection result normal?

YES >> GO TO 5.
NO >> Proceed to EC-799, "Diagnosis Procedure".

5. CHECK ENGINE OIL PRESSURE

With CONSULT

1. Turn ignition switch ON.
2. Select “DATA MONITOR” mode of “ENGINE” using CONSULT.
3. Start the engine and check that “EOP SENSOR” changes, according to engine speeds.

Monitor item	Condition		Value (Approx.)
EOP SENSOR	• Engine oil temperature: 80°C (176°F) • Selector lever: P or N position • Air conditioner switch: OFF • No load	Engine speed: Idle	1,450 mV or more
		Engine speed: 2,000 rpm	2,850 mV or more

Without CONSULT
Check engine oil pressure. Refer to LU-8, "Inspection".

Is the inspection result normal?

YES >> GO TO 3.
NO >> Proceed to EC-799, "Diagnosis Procedure".

Diagnosis Procedure

INFOID:0000000011489699

1. CHECK ENGINE OIL LEVEL

1. Turn ignition switch OFF.
2. Check engine oil level. Refer to LU-8, "Inspection".

Is the inspection result normal?

YES >> GO TO 2.
NO >> GO TO 4.

2. CHECK ENGINE OIL PRESSURE

With CONSULT
1. Turn ignition switch ON.
2. Select “DATA MONITOR” mode of “ENGINE” using CONSULT.
3. Start the engine and check that “EOP SENSOR” changes, according to engine speeds.

Monitor item	Condition		Value (Approx.)
EOP SENSOR	• Engine oil temperature: 80°C (176°F) • Selector lever: P or N position • Air conditioner switch: OFF • No load	Engine speed: Idle	1,450 mV or more
		Engine speed: 2,000 rpm	2,850 mV or more

Without CONSULT
Check engine oil level. Refer to LU-8, "Inspection".

Is the inspection result normal?

YES >> GO TO 3.
NO >> Check oil pump. Refer to LU-12, "Removal and Installation".

3. CHECK EOP SENSOR

Check EOP sensor. Refer to EC-800, "Component Inspection".

Is the inspection result normal?

YES >> Check intermittent incident. Refer to GI-47, "Intermittent Incident".
NO >> Repair or replace error-detected parts.

4. CHECK ENGINE OIL LEAKAGE

Check engine oil leakage. Refer to LU-6, "Lubrication Circuit".

Is the inspection result normal?

YES >> GO TO 5.
NO >> Repair or replace error-detected parts.

5. CHECK CAUSE OF ENGINE OIL CONSUMPTION

Check the following item.

Step	Inspection item	Equipment	Standard	Reference
1	PCV valve	EC-915, "Work Procedure"		
2	Exhaust front tube	Visual	• No blocking • No abnormal sounds	—
3	Oil pump	LU-12, "Removal and Installation"		
4	• Piston • Piston pin • Piston ring	• Piston to piston pin oil clearance • Piston ring side clearance • Piston ring end gap		EM-122
5	Cylinder block	• Cylinder block top surface distortion • Piston to cylinder bore clearance		EM-122

>> Repair or replace error-detected parts.

Component Inspection

INFOID:0000000011489700

1. CHECK EOP SENSOR

1. Turn ignition switch OFF.
2. Disconnect EOP sensor harness connector.
3. Check resistance between EOP sensor connector terminals.

EOP sensor		Condition	Resistance (kΩ)
+	–		
Terminal			
1	2	None	4 – 10
	3		2 – 8
2	1		4 – 10
	3		1 – 3
3	1		2 – 8
	2		1 – 3

Is the inspection result normal?

YES >> INSPECTION END.

NO >> Replace EOP sensor. Refer to EC-534, "ENGINE CONTROL SYSTEM : Component Parts Location".

P0603 ECM POWER SUPPLY

DTC Logic

INFOID:0000000011489701

DTC DETECTION LOGIC

DTC No.	CONSULT screen terms (Trouble diagnosis content)	DTC detecting condition	Possible cause
P0603	ECM BACK UP/CIRCUIT (Internal control module keep alive memory (KAM) error)	ECM back up RAM system does not function properly.	• Harness or connectors [ECM power supply (back up) circuit is open or shorted.] • ECM

DTC CONFIRMATION PROCEDURE

1.PRECONDITIONING

If DTC Confirmation Procedure has been previously conducted, always perform the following before conducting the next test.

1. Turn ignition switch OFF and wait at least 10 seconds.
2. Turn ignition switch ON.
3. Turn ignition switch OFF and wait at least 10 seconds.

>> GO TO 2.

2.PERFORM DTC CONFIRMATION PROCEDURE

1. Turn ignition switch ON and wait at least 10 second.
2. Turn ignition switch OFF and wait at least 5 minutes.
3. Turn ignition switch ON, wait at least 10 seconds.
4. Repeat steps 2 and 3 for five times.
5. Check 1st trip DTC.

Is 1st trip DTC detected?

YES >> Proceed to EC-801, "Diagnosis Procedure".
NO >> INSPECTION END

Diagnosis Procedure

INFOID:0000000011489702

1.CHECK ECM POWER SUPPLY

1. Turn ignition switch OFF.
2. Disconnect ECM harness connector.
3. Check the voltage between ECM harness connector terminals.

ECM				Voltage
+		–		
Connector	Terminal	Connector	Terminal	
F51	26	E16	128	Battery voltage

Is the inspection result normal?

YES >> GO TO 2.
NO >> Perform the trouble diagnosis for power supply circuit.

2.CHECK INTERMITTENT INCIDENT

Check intermittent incident. Refer to GI-47, "Intermittent Incident".

Is the inspection result normal?

YES >> GO TO 3.
NO >> Repair or replace error-detected parts.

3.PERFORM DTC CONFIRMATION PROCEDURE

1. Turn ignition switch ON.
2. Erase DTC.
3. Perform DTC CONFIRMATION PROCEDURE.
   See EC-801, "DTC Logic".

Is the 1st trip DTC P0603 displayed again?

YES >> Replace ECM. Refer to EC-916, "Removal and Installation".
NO >> INSPECTION END

P0605 ECM

DTC Logic

INFOID:0000000011489703

DTC DETECTION LOGIC

DTC No.	CONSULT screen terms (Trouble diagnosis content)	DTC detecting condition		Possible cause
P0605	ECM (Internal control module read only memory (ROM) error)	A)	ECM calculation function is malfunctioning.	• ECM
		B)	ECM EEP-ROM system is malfunctioning.	
		C)	ECM self shut-off function is malfunctioning.	

DTC CONFIRMATION PROCEDURE

1.PRECONDITIONING

If DTC Confirmation Procedure has been previously conducted, always perform the following before conducting the next test.
1. Turn ignition switch OFF and wait at least 10 seconds.
2. Turn ignition switch ON.
3. Turn ignition switch OFF and wait at least 10 seconds.

>> GO TO 2.

2.PERFORM DTC CONFIRMATION PROCEDURE FOR MALFUNCTION A

1. Turn ignition switch ON.
2. Check 1st trip DTC.

Is 1st trip DTC detected?

YES >> Proceed to EC-803, "Diagnosis Procedure".
NO >> GO TO 3.

3.PERFORM DTC CONFIRMATION PROCEDURE FOR MALFUNCTION B

1. Turn ignition switch ON and wait at least 1 second.
2. Turn ignition switch OFF, wait at least 10 seconds, and then turn it ON.
3. Check 1st trip DTC.

Is 1st trip DTC detected?

YES >> Proceed to EC-803, "Diagnosis Procedure".
NO >> GO TO 4.

4.PERFORM DTC CONFIRMATION PROCEDURE FOR MALFUNCTION C

1. Turn ignition switch ON and wait at least 1 second.
2. Turn ignition switch OFF, wait at least 10 seconds, and then turn it ON.
3. Repeat step 2 for 32 times.
4. Check 1st trip DTC.

Is 1st trip DTC detected?

YES >> Proceed to EC-803, "Diagnosis Procedure".
NO >> INSPECTION END

Diagnosis Procedure

INFOID:0000000011489704

1.INSPECTION START

1. Turn ignition switch ON.
2. Erase DTC.
3. Perform DTC CONFIRMATION PROCEDURE.
   See EC-803, "DTC Logic".

Is the 1st trip DTC P0605 displayed again?

YES >> Replace ECM. Refer to EC-916, "Removal and Installation".

NO >> INSPECTION END

P0607 ECM

DTC Logic

INFOID:0000000011489705

DTC DETECTION LOGIC

DTC No.	CONSULT screen terms (Trouble diagnosis content)	DTC detecting condition	Possible cause
P0607	ECM (Control module performance)	When detecting error during the initial diagnosis of CAN controller of ECM.	• ECM

DTC CONFIRMATION PROCEDURE

1.PERFORM DTC CONFIRMATION PROCEDURE

1. Turn ignition switch ON.
2. Check DTC.

Is DTC detected?

YES >> Proceed to EC-805, "Diagnosis Procedure".
NO >> INSPECTION END

Diagnosis Procedure

INFOID:0000000011489706

1.INSPECTION START

1. Turn ignition switch ON.
2. Erase DTC.
3. Perform DTC CONFIRMATION PROCEDURE.
   See EC-805, "DTC Logic".
4. Check DTC.

Is the DTC P0607 displayed again?

Yes >> Replace ECM. Refer to EC-916, "Removal and Installation".
No >> INSPECTION END

P0643 SENSOR POWER SUPPLY

Description

INFOID:0000000011489707

ECM supplies a voltage of 5 V to some of the sensors systematically divided into 2 groups, respectively. Accordingly, when a short circuit develops in a sensor power source, a malfunction may occur simultaneously in the sensors belonging to the same group as the short-circuited sensor.

Sensor power supply 1

- Accelerator pedal position (APP) sensor 1
- Camshaft position (CMP) sensor (PHASE)
- Electric throttle control actuator
- Battery current sensor

NOTE:
If sensor power supply 1 circuit is malfunctioning, DTC P0643 is displayed.

Sensor power supply 2

- Accelerator pedal position (APP) sensor 2
- Crankshaft position (CKP) sensor (POS)
- Refrigerant pressure sensor
- EVAP control system pressure sensor
- Engine oil pressure sensor

DTC Logic

INFOID:0000000011489708

DTC DETECTION LOGIC

DTC No.	CONSULT screen terms (Trouble diagnosis content)	DTC detecting condition	Possible cause
P0643	SENSOR POWER/CIRC (Sensor reference voltage “A” circuit high)	ECM detects a voltage of power source for sensor is excessively low or high.	Sensor power supply 1 circuit

DTC CONFIRMATION PROCEDURE

1.PRECONDITIONING

If DTC Confirmation Procedure has been previously conducted, always perform the following procedure before conducting the next test.

1. Turn ignition switch OFF and wait at least 10 seconds.
2. Turn ignition switch ON.
3. Turn ignition switch OFF and wait at least 10 seconds.

TESTING CONDITION:
Before performing the following procedure, confirm that battery voltage is more than 8 V at idle.

>> GO TO 2.

2.PERFORM DTC CONFIRMATION PROCEDURE

1. Start the engine and let it idle for 1 second.
2. Check DTC.

Is DTC detected?

YES >> Proceed to EC-806, "Diagnosis Procedure".
NO >> INSPECTION END

Diagnosis Procedure

INFOID:0000000011489709

1.CHECK SENSOR POWER SUPPLY 1

1. Turn ignition switch OFF.
2. Disconnect ECM harness connector.
3. Turn ignition switch ON.
4. Check the voltage between ECM harness connector and ground.

+		–	Voltage (Approx.)
ECM			
Connector	Terminal		
F51	24	Ground	5 V
F52	75		
	83		
	87		
E16	99		

Is the inspection result normal?

YES >> Check intermittent incident. Refer to GI-47, "Intermittent Incident".
NO >> GO TO 2.

2. CHECK SENSOR POWER SUPPLY 1 ROUTING CIRCUIT FOR SHORT

1. Turn ignition switch OFF.
2. Disconnect following sensor harness connector.
3. Check harness for short to power and to ground, between the following terminals.

ECM		Sensor		
+		Name	-	
Connector	Terminal		Connector	Terminal
F51	24	TP sensor	F50	1
F52	75	Battery current sensor	F34	1
	83	CMP sensor (PHASE) (bank 1)	F44	1
	87	CMP sensor (PHASE) (bank 2)	F45	1
E16	99	APP sensor 1	E31	4

Is the inspection result normal?

YES >> GO TO 3.
NO >> Repair or replace error-detected parts.

3. CHECK COMPONENTS

Check the following.
- Throttle position sensor (Refer to EC-711, "Component Inspection".)
- Battery current sensor (Refer to EC-818, "Component Inspection".)
- Camshaft position sensor (PHASE) (bank 1) (Refer to EC-770, "Component Inspection".)
- Camshaft position sensor (PHASE) (bank 2) (Refer to EC-770, "Component Inspection".)
- Accelerator pedal position sensor (Refer to EC-860, "Component Inspection".)

Is the inspection result normal?

YES >> Check intermittent incident. Refer to GI-47, "Intermittent Incident".
NO >> Replace malfunctioning component.

P0850 PNP SWITCH

Description

INFOID:0000000011489710

When the selector lever position is P or N, park/neutral position (PNP) signal from the transmission range switch is sent to ECM.

DTC Logic

INFOID:0000000011489711

DTC DETECTION LOGIC

DTC No.	CONSULT screen terms (Trouble diagnosis content)	DTC detecting condition	Possible cause
P0850	P-N POS SW/CIRCUIT (Park/Neutral switch input circuit)	The signal of the park/neutral position (PNP) signal does not change during driving after the engine is started.	• Harness or connectors [The park/neutral position (PNP) signal circuit is open or shorted.] • TCM

DTC CONFIRMATION PROCEDURE

1. INSPECTION START

Will CONSULT be used?

Will CONSULT be used?

YES >> GO TO 2.
NO >> GO TO 5.

2. PRECONDITIONING

If DTC Confirmation Procedure has been previously conducted, always perform the following before conducting the next test.

1. Turn ignition switch OFF and wait at least 10 seconds.
2. Turn ignition switch ON.
3. Turn ignition switch OFF and wait at least 10 seconds.

>> GO TO 3.

3. CHECK PNP SIGNAL

With CONSULT

1. Turn ignition switch ON.
2. Select “P/N POSI SW” in “DATA MONITOR” mode with CONSULT. Then check the “P/N POSI SW” signal under the following conditions.

Position (Selector lever)	Known-good signal
N or P position	ON
Except above position	OFF

Is the inspection result normal?

YES >> GO TO 4.
NO >> Proceed to EC-809, "Diagnosis Procedure".

4. PERFORM DTC CONFIRMATION PROCEDURE

1. Select “DATA MONITOR” mode with CONSULT.
2. Start engine and warm it up to normal operating temperature.
3. Maintain the following conditions for at least 50 consecutive seconds.
   CAUTION:
   Always drive vehicle at a safe speed.

ENG SPEED	1,100 - 6,375 rpm
COOLANT TEMP/S	More than 65°C (149°F)

B/FUEL SCHDL	2.2 - 31.8 msec
VHCL SPEED SE	More than 64 km/h (40 mph)
Selector lever	Suitable position

4. Check 1st trip DTC.

Is 1st trip DTC detected?

YES >> Proceed to EC-809, "Diagnosis Procedure".
NO >> INSPECTION END

5. PERFORM COMPONENT FUNCTION CHECK

Perform component function check. Refer to EC-809, "Component Function Check".

NOTE:
Use component function check to check the overall function of the park/neutral position (PNP) signal circuit. During this check, a 1st trip DTC might not be confirmed.

Is the inspection result normal?

YES >> INSPECTION END
NO >> Proceed to EC-809, "Diagnosis Procedure".

Component Function Check

INFOID:0000000011489712

1. PERFORM COMPONENT FUNCTION CHECK

1. Turn ignition switch ON.
2. Check the voltage between ECM harness connector terminals.

ECM			Condition		Voltage
Connector	+	–			
	Terminal				
E16	118	128	Selector lever position	P or N	Approx. 0 V
				Except above	Battery voltage

Is the inspection result normal?

YES >> INSPECTION END
NO >> Proceed to EC-809, "Diagnosis Procedure".

Diagnosis Procedure

INFOID:0000000011489713

1. CHECK TRANSMISSION RANGE SWITCH POWER SUPPLY

1. Turn ignition switch OFF.
2. Disconnect transmission range switch harness connector.
3. Turn ignition switch ON.
4. Check the voltage between transmission range switch harness connector and ground.

+		–	Voltage
Transmission range switch			
Connector	Terminal		
F36	7	Ground	Battery voltage

Is the inspection result normal?

YES >> GO TO 3.
NO >> GO TO 2.

2. CHECK TRANSMISSION RANGE SWITCH POWER SUPPLY CIRCUIT

1. Turn ignition switch OFF.
2. Disconnect IPDM E/R harness connector.
3. Check the continuity between transmission range switch harness connector and IPDM E/R harness connector.

+		–		Continuity
Transmission range switch		IPDM E/R		
Connector	Terminal	Connector	Terminal	
F36	7	F54	63	Existed

4. Also check harness for short to ground.

Is the inspection result normal?

YES >> Perform the trouble diagnosis for power supply circuit.
NO >> Repair or replace error-detected parts.

3. CHECK TRANSMISSION RANGE SWITCH SIGNAL CIRCUIT

1. Turn ignition switch OFF.
2. Disconnect ECM harness connector.
3. Check the continuity between transmission range switch harness connector and ECM harness connector.

+		–		Continuity
Transmission range switch		ECM		
Connector	Terminal	Connector	Terminal	
F36	10	E16	118	Existed

4. Also check harness for short to ground and to power.

Is the inspection result normal?

YES >> GO TO 4.
NO >> Repair or replace error-detected parts.

4. CHECK TRANSMISSION RANGE SWITCH

Check the transmission range switch. Refer to TM-108, "Component Inspection".

Is the inspection result normal?

YES >> Check intermittent incident. Refer to GI-47, "Intermittent Incident".
NO >> There is malfunction of transmission range switch. Replace transaxle assembly. Refer to TM-218, "Removal and Installation".

P1212 TCS COMMUNICATION LINE

Description

INFOID:0000000011489715

This CAN communication line is used to control the smooth engine operation during the TCS operation. Pulse signals are exchanged between ECM and “ABS actuator and electric unit (control unit)”.
Be sure to erase the malfunction information such as DTC not only for “ABS actuator and electric unit (control unit)” but also for ECM after TCS related repair.

DTC Logic

INFOID:0000000011489716

DTC DETECTION LOGIC

NOTE:
- **If DTC P1212 is displayed with DTC UXXXX, first perform the trouble diagnosis for DTC UXXXX.**
- **If DTC P1212 is displayed with DTC P0607, first perform the trouble diagnosis for DTC P0607. Refer to EC-805, "DTC Logic".**

Freeze frame data is not stored in the ECM for this self-diagnosis.

DTC No.	CONSULT screen terms (Trouble diagnosis content)	DTC detecting condition	Possible cause
P1212	TCS C/U FUNCTN (TCS control unit function)	ECM cannot receive the information from “ABS actuator and electric unit (control unit)” continuously.	• Harness or connectors (The CAN communication line is open or shorted.) • ABS actuator and electric unit (control unit) • Dead (Weak) battery

DTC CONFIRMATION PROCEDURE

1.PRECONDITIONING

If DTC Confirmation Procedure has been previously conducted, always perform the following before conducting the next test
1. Turn ignition switch OFF and wait at least 10 seconds.
2. Turn ignition switch ON.
3. Turn ignition switch OFF and wait at least 10 seconds.

TESTING CONDITION:
Before performing the following procedure, confirm that battery voltage is more than 10.5 V at idle.

>> GO TO 2.

2.PERFORM DTC CONFIRMATION PROCEDURE

1. Start engine and let it idle for at least 10 seconds.
2. Check 1st trip DTC.

Is 1st trip DTC detected?

YES >> Proceed to EC-811, "Diagnosis Procedure".
NO >> INSPECTION END

Diagnosis Procedure

INFOID:0000000011489717

Perform the trouble diagnosis for brake control system. Refer to BRC-187, "Work Flow".
NOTE:
If DTC P1212 is displayed with DTC UXXXX and/or P0607, perform the following trouble diagnosis.
- Trouble diagnosis for DTC UXXXX Refer to EC-610, "DTC Index".
- Trouble diagnosis for DTC P0607 Refer to EC-805, "DTC Logic".

P1217 ENGINE OVER TEMPERATURE

DTC Logic

INFOID:0000000011489718

DTC DETECTION LOGIC

NOTE:
- **If DTC P1217 is displayed with DTC UXXXX, first perform the trouble diagnosis for DTC UXXXX.**
- **If DTC P1217 is displayed with DTC P0607, first perform the trouble diagnosis for DTC P0607. Refer to EC-805, "DTC Logic".**

If the cooling fan or another component in the cooling system malfunctions, engine coolant temperature will rise.
When the engine coolant temperature reaches an abnormally high temperature condition, a malfunction is indicated.

DTC No.	CONSULT screen terms (Trouble diagnosis content)	DTC detecting condition	Possible cause
P1217	ENG OVER TEMP [Engine over temperature (Overheat)]	• Cooling fan does not operate properly (Overheat). • Cooling fan system does not operate properly (Overheat). • Engine coolant was not added to the system using the proper filling method. • Engine coolant is not within the specified range.	• Harness or connectors (Cooling fan circuit is open or shorted.) • IPDM E/R • Cooling fan control module • Cooling fan motor • Radiator hose • Radiator • Radiator cap • Reservoir tank • Water pump • Thermostat • Water control valve

CAUTION:
When a malfunction is indicated, be sure to replace the coolant. Refer to CO-10, "System Inspection". Also, replace the engine oil. Refer to MA-28, "ENGINE OIL : Changing Engine Oil".
1. **Fill radiator with coolant up to specified level with a filling speed of 2 liters per minute. Be sure to use coolant with the proper mixture ratio. Refer to MA-18, "FOR MEXICO : Engine Coolant Mixture Ratio".**
2. **After refilling coolant, run engine to ensure that no water-flow noise is emitted.**

DTC CONFIRMATION PROCEDURE

1.PERFORM COMPONENT FUNCTION CHECK

Perform component function check. Refer to EC-812, "Component Function Check".
NOTE:
Use component function check to check the overall function of the cooling fan. During this check, a DTC might not be confirmed.

Is the inspection result normal?

YES >> INSPECTION END
NO >> Proceed to EC-813, "Diagnosis Procedure".

Component Function Check

INFOID:0000000011489719

1.PERFORM COMPONENT FUNCTION CHECK-I

WARNING:
Never remove the radiator cap when the engine is hot. Serious burns could be caused by high pressure fluid escaping from the radiator.
Wrap a thick cloth around cap. Carefully remove the cap by turning it a quarter turn to allow built-up pressure to escape. Then turn the cap all the way off.

Check the coolant level in the reservoir tank and radiator.
Allow engine to cool before checking coolant level.

Is the coolant level in the reservoir tank and/or radiator below the proper range?

YES >> Proceed to EC-813, "Diagnosis Procedure".
NO >> GO TO 2.

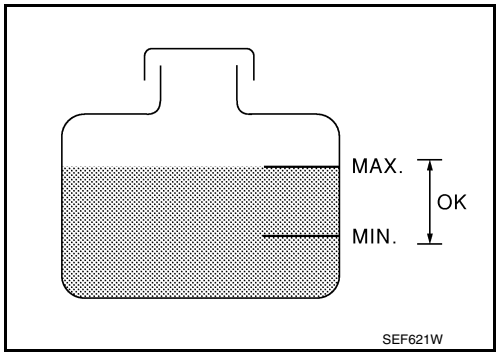

2. PERFORM COMPONENT FUNCTION CHECK-II

Confirm whether customer filled the coolant or not.

Did customer fill the coolant?

YES >> Proceed to EC-813, "Diagnosis Procedure".
NO >> GO TO 3.

3. PERFORM COMPONENT FUNCTION CHECK-III

With CONSULT
1. Turn ignition switch ON.
2. Perform “FAN DUTY CONTROL” in “ACTIVE TEST” mode of “ENGINE” using CONSULT.
3. Check that cooling fan speed varies according to the percentage.

Without CONSULT
1. Activate IPDM E/R auto active test and check cooling fan motors operation. Refer to PCS-8, "Diagnosis Description".
2. Check that cooling fan operates.

Is the inspection result normal?

YES >> INSPECTION END
NO >> Proceed to EC-813, "Diagnosis Procedure".

Diagnosis Procedure

INFOID:0000000011489720

1. CHECK COOLING FAN OPERATION

With CONSULT
1. Turn ignition switch ON.
2. Perform “FAN DUTY CONTROL” in “ACTIVE TEST” mode of “ENGINE” using CONSULT.
3. Check that cooling fan speed varies according to the percentage.

Without CONSULT
1. Activate IPDM E/R auto active test and check cooling fan motors operation. Refer to PCS-8, "Diagnosis Description".
2. Check that cooling fan operates.

Is the inspection result normal?

YES >> GO TO 2.
NO >> Proceed to EC-872, "Diagnosis Procedure".

2. CHECK COOLING SYSTEM FOR LEAK-I

Check cooling system for leak. Refer to CO-10, "System Inspection".

Is leakage detected?

YES >> GO TO 3.
NO >> GO TO 4.

3. CHECK COOLING SYSTEM FOR LEAK-II

Check the following for leak.
- Hose (Refer to CO-10, "System Inspection".)
- Radiator (Refer to CO-10, "System Inspection".)
- Water pump (Refer to CO-10, "System Inspection".)

>> Repair or replace malfunctioning part.

4. CHECK RADIATOR CAP

Check radiator cap. Refer to CO-10, "System Inspection".

Is the inspection result normal?

YES >> GO TO 5.
NO >> Replace radiator cap. Refer to CO-15, "Removal and Installation".

5. CHECK THERMOSTAT

Check thermostat. Refer to CO-24, "Removal and Installation".

Is the inspection result normal?

YES >> GO TO 6.
NO >> Replace thermostat. Refer to CO-24, "Removal and Installation".

6. CHECK ENGINE COOLANT TEMPERATURE SENSOR

Refer to EC-709, "Component Inspection".

Is the inspection result normal?

YES >> GO TO 7.
NO >> Replace engine coolant temperature sensor. Refer to CO-26, "Removal and Installation".

7. OVERHEATING CAUSE ANALYSIS

If the cause cannot be isolated, check the CO-6, "Troubleshooting Chart".

>> INSPECTION END

P1225 TP SENSOR

DTC Logic

INFOID:0000000011489721

DTC DETECTION LOGIC

DTC No.	CONSULT screen terms (Trouble diagnosis content)	DTC detecting condition	Possible cause
P1225	CTP LEARNING-B1 (Closed throttle position learning performance)	Closed throttle position learning value is excessively low.	• Electric throttle control actuator (TP sensor 1 and 2)

DTC CONFIRMATION PROCEDURE

1.PRECONDITIONING

If DTC Confirmation Procedure has been previously conducted, always perform the following before conducting the next test.

1. Turn ignition switch OFF and wait at least 10 seconds.
2. Turn ignition switch ON.
3. Turn ignition switch OFF and wait at least 10 seconds.

TESTING CONDITION:
Before performing the following procedure, confirm that battery voltage is more than 10 V at idle.

>> GO TO 2.

2.PERFORM DTC CONFIRMATION PROCEDURE

1. Turn ignition switch ON.
2. Turn ignition switch OFF and wait at least 10 seconds.
3. Turn ignition switch ON.
4. Check 1st trip DTC.

Is 1st trip DTC detected?

YES >> Proceed to EC-815, "Diagnosis Procedure".
NO >> INSPECTION END

Diagnosis Procedure

INFOID:0000000011489722

1.CHECK ELECTRIC THROTTLE CONTROL ACTUATOR VISUALLY

1. Turn ignition switch OFF.
2. Remove the intake air duct. Refer to EM-24, "Removal and Installation".
3. Check if foreign matter is caught between the throttle valve and the housing.

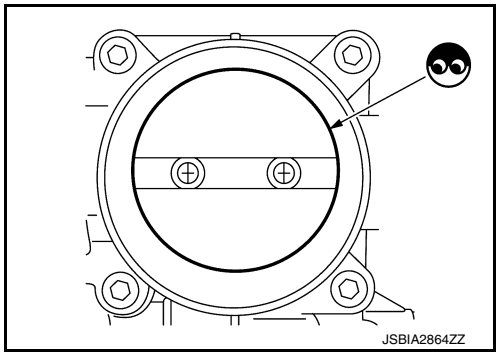

Is the inspection result normal?

YES >> GO TO 2.
NO >> Remove the foreign matter and clean the electric throttle control actuator inside, and then perform throttle valve closed position learning. Refer to EC-660, "Description".

2.REPLACE ELECTRIC THROTTLE CONTROL ACTUATOR

1. Replace electric throttle control actuator. Refer to EM-26, "Removal and Installation".
2. Go to EC-661, "Description".

>> INSPECTION END

P1226 TP SENSOR

DTC Logic

INFOID:0000000011489723

DTC DETECTION LOGIC

DTC No.	CONSULT screen terms (Trouble diagnosis content)	DTC detecting condition	Possible cause
P1226	CTP LEARNING-B1 (Closed throttle position learning performance)	Closed throttle position learning is not performed successfully, repeatedly.	• Electric throttle control actuator (TP sensor 1 and 2)

DTC CONFIRMATION PROCEDURE

1.PRECONDITIONING

If DTC Confirmation Procedure has been previously conducted, always perform the following before conducting the next test.
1. Turn ignition switch OFF and wait at least 10 seconds.
2. Turn ignition switch ON.
3. Turn ignition switch OFF and wait at least 10 seconds.

TESTING CONDITION:
Before performing the following procedure, confirm that battery voltage is more than 10 V at idle.

>> GO TO 2.

2.PERFORM DTC CONFIRMATION PROCEDURE

1. Turn ignition switch ON.
2. Turn ignition switch OFF and wait at least 10 seconds.
3. Turn ignition switch ON.
4. Repeat steps 2 and 3 for 32 times.
5. Check 1st trip DTC.

Is 1st trip DTC detected?

YES >> Proceed to EC-816, "Diagnosis Procedure".
NO >> INSPECTION END

Diagnosis Procedure

INFOID:0000000011489724

1.CHECK ELECTRIC THROTTLE CONTROL ACTUATOR VISUALLY

1. Turn ignition switch OFF.
2. Remove the intake air duct. Refer to EM-24, "Removal and Installation".
3. Check if foreign matter is caught between the throttle valve and the housing.

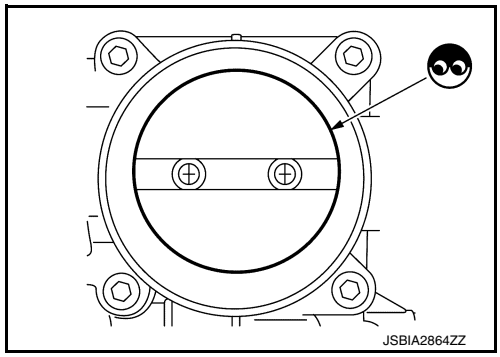

Is the inspection result normal?

YES >> GO TO 2.
NO >> Remove the foreign matter and clean the electric throttle control actuator inside, and then perform throttle valve closed position learning. Refer to EC-660, "Description".

2.REPLACE ELECTRIC THROTTLE CONTROL ACTUATOR

1. Replace electric throttle control actuator. Refer to EM-26, "Removal and Installation".
2. Go to EC-661, "Description".

>> INSPECTION END

P1550 BATTERY CURRENT SENSOR

DTC Logic

INFOID:0000000011489725

DTC DETECTION LOGIC

NOTE:
If DTC P1550 is displayed with DTC P0643, first perform the trouble diagnosis for DTC P0643. Refer to EC-806, "DTC Logic".

DTC No.	CONSULT screen terms (Trouble diagnosis content)	DTC detecting condition	Possible cause
P1550	BAT CURRENT SENSOR (Battery current sensor circuit range/performance)	The output voltage of the battery current sensor remains within the specified range while engine is running.	• Harness or connectors (The sensor circuit is open or shorted.) • Battery current sensor

DTC CONFIRMATION PROCEDURE

1.PRECONDITIONING

If DTC Confirmation Procedure has been previously conducted, always perform the following before conducting the next test.
1. Turn ignition switch OFF and wait at least 10 seconds.
2. Turn ignition switch ON.
3. Turn ignition switch OFF and wait at least 10 seconds.

TESTING CONDITION:
Before performing the following procedure, confirm that battery voltage is more than 8 V at idle.

>> GO TO 2.

2.PERFORM DTC CONFIRMATION PROCEDURE

1. Start engine and wait at least 10 seconds.
2. Check 1st trip DTC.

Is 1st trip DTC detected?

YES >> Proceed to EC-817, "Diagnosis Procedure".
NO >> INSPECTION END

Diagnosis Procedure

INFOID:0000000011489726

1.CHECK BATTERY CURRENT SENSOR POWER SUPPLY

1. Disconnect battery current sensor harness connector.
2. Turn ignition switch ON.
3. Check the voltage between battery current sensor harness connector and ground.

Battery current sensor		Ground	Voltage (V)
Connector	Terminal		
F34	1	Ground	Approx. 5

Is the inspection result normal?

YES >> GO TO 2.
NO >> Repair open circuit, short to ground or short to power in harness or connectors.

2.CHECK BATTERY CURRENT SENSOR GROUND CIRCUIT

1. Turn ignition switch OFF.
2. Disconnect ECM harness connector.
3. Check the continuity between battery current sensor harness connector and ECM harness connector.

Battery current sensor		ECM		Continuity
Connector	Terminal	Connector	Terminal	
F34	3	F52	68	Existed

4. Also check harness for short to ground and short to power.

Is the inspection result normal?

YES >> GO TO 3.
NO >> Repair open circuit, short to ground or short to power in harness or connectors.

3. CHECK BATTERY CURRENT SENSOR INPUT SIGNAL CIRCUIT

1. Check the continuity between battery current sensor harness connector and ECM harness connector.

Battery current sensor		ECM		Continuity
Connector	Terminal	Connector	Terminal	
F34	4	F52	66	Existed

2. Also check harness for short to ground and short to power.

Is the inspection result normal?

YES >> GO TO 4.
NO >> Repair open circuit, short to ground or short to power in harness or connectors.

4. CHECK BATTERY CURRENT SENSOR

Check battery current sensor. Refer to EC-818, "Component Inspection".

Is the inspection result normal?

YES >> Check intermittent incident. Refer to GI-47, "Intermittent Incident".
NO >> Replace battery negative cable assembly.

Component Inspection

INFOID:0000000011489727

1. CHECK BATTERY CURRENT SENSOR

1. Turn ignition switch OFF.
2. Reconnect harness connectors disconnected.
3. Disconnect battery negative cable.
4. Install jumper cable between battery negative terminal and body ground.
5. Turn ignition switch ON.
6. Check the voltage between ECM harness connector terminals under the following conditions.

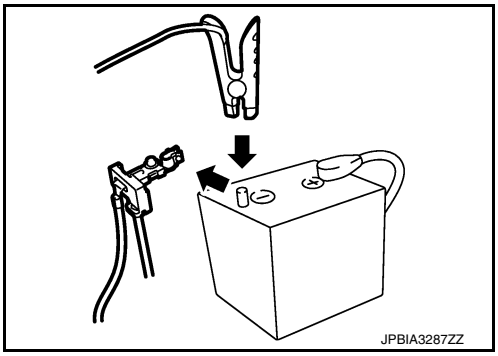

ECM			Voltage (V)
Connector	+	–	
	Terminal	Terminal	
F52	66	68	Approx. 2.5

Before measuring the terminal voltage, confirm that the battery is fully charged. Refer to PG-86, "How to Handle Battery".

Is the inspection result normal?

YES >> INSPECTION END
NO >> Replace battery negative cable assembly.

P1551, P1552 BATTERY CURRENT SENSOR

DTC Logic

INFOID:0000000011489728

DTC DETECTION LOGIC

NOTE:
If DTC P1551 or P1552 is displayed with DTC P0643, first perform the trouble diagnosis for DTC P0643. Refer to EC-806, "DTC Logic".

DTC No.	CONSULT screen terms (Trouble diagnosis content)	DTC detecting condition	Possible cause
P1551	BAT CURRENT SENSOR (Battery current sensor circuit low input)	An excessively low voltage from the sensor is sent to ECM.	• Harness or connectors (The sensor circuit is open or shorted.) • Battery current sensor
P1552	BAT CURRENT SENSOR (Battery current sensor circuit high input)	An excessively high voltage from the sensor is sent to ECM.	

DTC CONFIRMATION PROCEDURE

1. PRECONDITIONING

If DTC Confirmation Procedure has been previously conducted, always perform the following before conducting the next test.
1. Turn ignition switch OFF and wait at least 10 seconds.
2. Turn ignition switch ON.
3. Turn ignition switch OFF and wait at least 10 seconds.

TESTING CONDITION:
Before performing the following procedure, confirm that battery voltage is more than 8 V with ignition switch ON

>> GO TO 2.

2. PERFORM DTC CONFIRMATION PROCEDURE

1. Turn ignition switch ON and wait at least 10 seconds.
2. Check 1st trip DTC.

Is 1st trip DTC detected?

YES >> Proceed to EC-819, "Diagnosis Procedure".
NO >> INSPECTION END

Diagnosis Procedure

INFOID:0000000011489729

1. CHECK BATTERY CURRENT SENSOR POWER SUPPLY

1. Disconnect battery current sensor harness connector.
2. Turn ignition switch ON.
3. Check the voltage between battery current sensor harness connector and ground.

Battery current sensor		Ground	Voltage (V)
Connector	Terminal		
F34	1	Ground	Approx. 5

Is the inspection result normal?

YES >> GO TO 2.
NO >> Repair open circuit, short to ground or short to power in harness or connectors.

2. CHECK BATTERY CURRENT SENSOR GROUND CIRCUIT

1. Turn ignition switch OFF.
2. Disconnect ECM harness connector.
3. Check the continuity between battery current sensor harness connector and ECM harness connector.

Battery current sensor		ECM		Continuity
Connector	Terminal	Connector	Terminal	
F34	3	F52	68	Existed

4. Also check harness for short to ground and short to power.

Is the inspection result normal?

YES >> GO TO 3.
NO >> Repair open circuit, short to ground or short to power in harness or connectors.

3. CHECK BATTERY CURRENT SENSOR INPUT SIGNAL CIRCUIT

1. Check the continuity between battery current sensor harness connector and ECM harness connector.

Battery current sensor		ECM		Continuity
Connector	Terminal	Connector	Terminal	
F34	4	F52	66	Existed

2. Also check harness for short to ground and short to power.

Is the inspection result normal?

YES >> GO TO 4.
NO >> Repair open circuit, short to ground or short to power in harness or connectors.

4. CHECK BATTERY CURRENT SENSOR

Check battery current sensor. Refer to EC-824, "Component Inspection".

Is the inspection result normal?

YES >> Check intermittent incident. Refer to GI-47, "Intermittent Incident".
NO >> Replace battery negative cable assembly.

Component Inspection

INFOID:0000000011489730

1. CHECK BATTERY CURRENT SENSOR

1. Turn ignition switch OFF.
2. Reconnect harness connectors disconnected.
3. Disconnect battery negative cable.
4. Install jumper cable between battery negative terminal and body ground.
5. Turn ignition switch ON.
6. Check the voltage between ECM harness connector terminals under the following conditions.

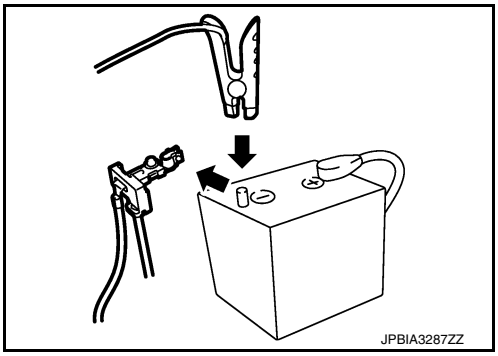

ECM			Voltage (V)
Connector	+	–	
	Terminal	Terminal	
F52	66	68	Approx. 2.5

Before measuring the terminal voltage, confirm that the battery is fully charged. Refer to PG-86, "How to Handle Battery".

Is the inspection result normal?

YES >> INSPECTION END
NO >> Replace battery negative cable assembly.

P1553 BATTERY CURRENT SENSOR

DTC Logic

INFOID:0000000011489731

DTC DETECTION LOGIC

NOTE:
If DTC P1553 is displayed with DTC P0643, first perform the trouble diagnosis for DTC P0643. Refer to EC-806, "DTC Logic".

DTC No.	CONSULT screen terms (Trouble diagnosis content)	DTC detecting condition	Possible cause
P1553	BAT CURRENT SENSOR (Battery current sensor performance)	The signal voltage transmitted from the sensor to ECM is higher than the amount of the maximum power generation.	• Harness or connectors (The sensor circuit is open or shorted.) • Battery current sensor

DTC CONFIRMATION PROCEDURE

1. PRECONDITIONING

If DTC Confirmation Procedure has been previously conducted, always perform the following before conducting the next test.
1. Turn ignition switch OFF and wait at least 10 seconds.
2. Turn ignition switch ON.
3. Turn ignition switch OFF and wait at least 10 seconds.

TESTING CONDITION:
Before performing the following procedure, confirm that battery voltage is more than 8 V at idle.

>> GO TO 2.

2. PERFORM DTC CONFIRMATION PROCEDURE

1. Start engine and wait at least 10 seconds.
2. Check 1st trip DTC.

Is 1st trip DTC detected?

YES >> Proceed to EC-821, "Diagnosis Procedure".
NO >> INSPECTION END

Diagnosis Procedure

INFOID:0000000011489732

1. CHECK BATTERY CURRENT SENSOR POWER SUPPLY

1. Disconnect battery current sensor harness connector.
2. Turn ignition switch ON.
3. Check the voltage between battery current sensor harness connector and ground.

Battery current sensor		Ground	Voltage (V)
Connector	Terminal		
F34	1	Ground	Approx. 5

Is the inspection result normal?

YES >> GO TO 2.
NO >> Repair open circuit, short to ground or short to power in harness or connectors.

2. CHECK BATTERY CURRENT SENSOR GROUND CIRCUIT

1. Turn ignition switch OFF.
2. Disconnect ECM harness connector.
3. Check the continuity between battery current sensor harness connector and ECM harness connector.

Battery current sensor		ECM		Continuity
Connector	Terminal	Connector	Terminal	
F34	3	F52	68	Existed

4. Also check harness for short to ground and short to power.

Is the inspection result normal?

YES >> GO TO 3.
NO >> Repair open circuit, short to ground or short to power in harness or connectors.

3. CHECK BATTERY CURRENT SENSOR INPUT SIGNAL CIRCUIT

1. Check the continuity between battery current sensor harness connector and ECM harness connector.

Battery current sensor		ECM		Continuity
Connector	Terminal	Connector	Terminal	
F34	4	F52	66	Existed

2. Also check harness for short to ground and short to power.

Is the inspection result normal?

YES >> GO TO 4.
NO >> Repair open circuit, short to ground or short to power in harness or connectors.

4. CHECK BATTERY CURRENT SENSOR

Check battery current sensor. Refer to EC-824, "Component Inspection".

Is the inspection result normal?

YES >> Check intermittent incident. Refer to GI-47, "Intermittent Incident".
NO >> Replace battery negative cable assembly.

Component Inspection

INFOID:0000000011489733

1. CHECK BATTERY CURRENT SENSOR

1. Turn ignition switch OFF.
2. Reconnect harness connectors disconnected.
3. Disconnect battery negative cable.
4. Install jumper cable between battery negative terminal and body ground.
5. Turn ignition switch ON.
6. Check the voltage between ECM harness connector terminals under the following conditions.

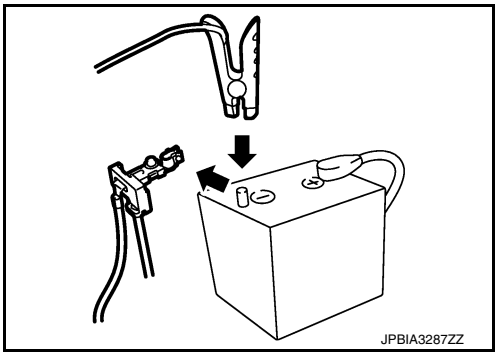

ECM			Voltage (V)
Connector	+	–	
	Terminal	Terminal	
F52	66	68	Approx. 2.5

Before measuring the terminal voltage, confirm that the battery is fully charged. Refer to PG-86, "How to Handle Battery".

Is the inspection result normal?

YES >> INSPECTION END
NO >> Replace battery negative cable assembly.

P1554 BATTERY CURRENT SENSOR

DTC Logic

INFOID:0000000011489734

DTC DETECTION LOGIC

NOTE:
If DTC P1554 is displayed with DTC P0643, first perform the trouble diagnosis for DTC P0643. Refer to EC-806, "DTC Logic".

DTC No.	CONSULT screen terms (Trouble diagnosis content)	DTC detecting condition	Possible cause
P1554	BAT CURRENT SENSOR (Battery current sensor performance)	The output voltage of the battery current sensor is lower than the specified value while the battery voltage is high enough.	• Harness or connectors (The sensor circuit is open or shorted.) • Battery current sensor

DTC CONFIRMATION PROCEDURE

1. PERFORM COMPONENT FUNCTION CHECK

Perform component function check. Refer to EC-823, "Component Function Check".
NOTE:
Use component function check to check the overall function of the battery current sensor circuit. During this check, a 1st trip DTC might not be confirmed.

Is the inspection result normal?

YES >> INSPECTION END
NO >> Proceed to EC-824, "Diagnosis Procedure".

Component Function Check

INFOID:0000000011489735

1. PRECONDITIONING

TESTING CONDITION:
- **Before performing the following procedure, confirm that battery voltage is more than 12.8 V at idle.**
- **Before performing the following procedure, confirm that all load switches and A/C switch are turned OFF.**

>> GO TO 2.

2. PERFORM COMPONENT FUNCTION CHECK

With CONSULT
1. Start engine and let it idle.
2. Select “BAT CUR SEN” in “DATA MONITOR” mode with CONSULT.
3. Check “BAT CUR SEN” indication for 10 seconds.
   “BAT CUR SEN” should be above 2,300mV at least once.

Without CONSULT
1. Start engine and let it idle.
2. Check voltage between ECM harness connector terminals under the following conditions.

ECM			Voltage (V)
Connector	+	–	
	Terminal		
F52	66	68	Above 2.3 at least once

Is the inspection result normal?

YES >> INSPECTION END
NO >> Proceed to EC-824, "Diagnosis Procedure"

Diagnosis Procedure

INFOID:0000000011489736

1. CHECK BATTERY CURRENT SENSOR POWER SUPPLY

1. Disconnect battery current sensor harness connector.
2. Turn ignition switch ON.
3. Check the voltage between battery current sensor harness connector and ground.

Battery current sensor		Ground	Voltage (V)
Connector	Terminal		
F34	1	Ground	Approx. 5

Is the inspection result normal?

YES >> GO TO 2.
NO >> Repair open circuit, short to ground or short to power in harness or connectors.

2. CHECK BATTERY CURRENT SENSOR GROUND CIRCUIT

1. Turn ignition switch OFF.
2. Disconnect ECM harness connector.
3. Check the continuity between battery current sensor harness connector and ECM harness connector.

Battery current sensor		ECM		Continuity
Connector	Terminal	Connector	Terminal	
F34	3	F52	68	Existed

4. Also check harness for short to ground and short to power.

Is the inspection result normal?

YES >> GO TO 3.
NO >> Repair open circuit, short to ground or short to power in harness or connectors.

3. CHECK BATTERY CURRENT SENSOR INPUT SIGNAL CIRCUIT

1. Check the continuity between battery current sensor harness connector and ECM harness connector.

Battery current sensor		ECM		Continuity
Connector	Terminal	Connector	Terminal	
F34	4	F52	66	Existed

2. Also check harness for short to ground and short to power.

Is the inspection result normal?

YES >> GO TO 4.
NO >> Repair open circuit, short to ground or short to power in harness or connectors.

4. CHECK BATTERY CURRENT SENSOR

Check battery current sensor. Refer to EC-824, "Component Inspection".

Is the inspection result normal?

YES >> Check intermittent incident. Refer to GI-47, "Intermittent Incident".
NO >> Replace battery negative cable assembly.

Component Inspection

INFOID:0000000011489737

1. CHECK BATTERY CURRENT SENSOR

1. Turn ignition switch OFF.
2. Reconnect harness connectors disconnected.

3. Disconnect battery negative cable.
4. Install jumper cable between battery negative terminal and body ground.
5. Turn ignition switch ON.
6. Check the voltage between ECM harness connector terminals under the following conditions.

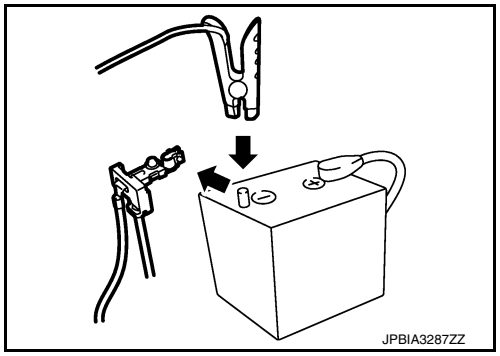

ECM			Voltage (V)
Connector	+	–	
	Terminal	Terminal	
F52	66	68	Approx. 2.5

Before measuring the terminal voltage, confirm that the battery is fully charged. Refer to PG-86, "How to Handle Battery".

Is the inspection result normal?

YES >> INSPECTION END
NO >> Replace battery negative cable assembly.

P1556, P1557 BATTERY TEMPERATURE SENSOR

DTC Logic

INFOID:0000000011489738

DTC DETECTION LOGIC

DTC No.	CONSULT screen terms (Trouble diagnosis content)	DTC detecting condition	Possible cause
P1556	BAT TMP SEN/CIRC (Battery temperature sensor circuit low input)	Signal voltage from Battery temperature sensor remains 0.16V or less for 5 seconds or more.	• Harness or connectors [Battery current sensor (Battery temperature sensor) circuit is shorted.] [Camshaft position sensor (PHESE) circuit is open or shorted.] (Accelerator pedal position sensor 2 circuit is shorted.) (Throttle position sensor circuit is shorted.) • Battery current sensor (Battery temperature sensor) • Camshaft position sensor (PHESE) • Accelerator pedal position sensor • Throttle position sensor
P1557	BAT TMP SEN/CIRC (Battery temperature sensor circuit high input)	Signal voltage from Battery temperature sensor remains 4.84V or more for 5 seconds or more.	

DTC CONFIRMATION PROCEDURE

1.PRECONDITIONING

1. Turn ignition switch OFF and wait at least 10 seconds.
2. Turn ignition switch ON.
3. Turn ignition switch OFF and wait at least 10 seconds.

TESTING CONDITION:
Before performing the following procedure, confirm that battery voltage is 10 V or more at idle.

>> GO TO 2.

2.PERFORM DTC CONFIRMATION PROCEDURE

1. Start the engine and let it idle at least 10 seconds.
2. Check 1st trip DTC.

Is 1st trip DTC detected?

YES >> Proceed to EC-826, "Diagnosis Procedure".
NO >> INSPECTION END

Diagnosis Procedure

INFOID:0000000011489739

1.CHECK BATTERY TEMPERATURE SENSOR INPUT SIGNAL

1. Disconnect battery current sensor harness connector.
2. Turn ignition switch ON.
3. Check the voltage between battery current sensor harness connector and ground.

Battery current sensor		Ground	Voltage (V)
Connector	Terminal		
F34	2	Ground	Approx. 5

Is the inspection result normal?

YES >> GO TO 3.
NO >> GO TO 2.

2.CHECK BATTERY TEMPERATURE SENSOR INPUT SIGNAL CIRCUIT

1. Turn ignition switch ON.
2. Disconnect ECM harness connector.

3. Check the continuity between battery current sensor harness connector and ECM harness connector.

Battery current sensor		ECM		Continuity
Connector	Terminal	Connector	Terminal	
F34	2	F52	67	Existed

Is the inspection result normal?

YES >> Perform the trouble diagnosis for power supply circuit.
NO >> Repair or replace error-detected parts.

3. CHECK BATTERY TEMPERATURE SENSOR GROUND CIRCUIT

1. Turn ignition switch OFF.
2. Disconnect ECM harness connector.
3. Check the continuity between battery current sensor harness connector and ECM harness connector.

Battery current sensor		ECM		Continuity
Connector	Terminal	Connector	Terminal	
F34	3	F52	68	Existed

4. Also check harness for short to ground and short to power.

Is the inspection result normal?

YES >> GO TO 4.
NO >> Repair open circuit, short to ground or short to power in harness or connectors.

4. CHECK BATTERY TEMPERATURE SENSOR

Check battery temperature sensor. Refer to EC-827, "Component Inspection (Battery Temperature Sensor)".

Is the inspection result normal?

YES >> Check intermittent incident. Refer to GI-47, "Intermittent Incident".
NO >> Replace battery negative cable assembly.

Component Inspection (Battery Temperature Sensor)

INFOID:0000000011489740

1. CHECK BATTERY TEMPERATURE SENSOR

1. Turn ignition switch OFF.
2. Disconnect battery current sensor.
3. Check the resistance between battery current sensor connector terminals.

Battery current sensor		Resistance
+	–	
Terminal		
2	3	continuity with the resistance value 100 Ω or more

Is the inspection result normal?

YES >> INSPECTION END
NO >> Replace battery negative cable assembly.

P1564 ASCD STEERING SWITCH

DTC Logic

INFOID:0000000011489741

DTC DETECTION LOGIC

NOTE:
If DTC P1564 is displayed with DTC P0605, first perform the trouble diagnosis for DTC P0605. Refer to EC-803, "DTC Logic".

DTC No.	CONSULT screen terms (Trouble diagnosis content)	DTC detecting condition	Possible cause
P1564	ASCD SW (ASCD steering switch)	• An excessively high voltage signal from the ASCD steering switch is sent to ECM. • ECM detects that input signal from the ASCD steering switch is out of the specified range. • ECM detects that the ASCD steering switch is stuck ON.	• Harness or connectors (The switch circuit is open or shorted.) • ASCD steering switch • ECM

DTC CONFIRMATION PROCEDURE

1.PRECONDITIONING

If DTC Confirmation Procedure has been previously conducted, always perform the following before conducting the next test.
1. Turn ignition switch OFF and wait at least 10 seconds.
2. Turn ignition switch ON.
3. Turn ignition switch OFF and wait at least 10 seconds.

>> GO TO 2.

2.PERFORM DTC CONFIRMATION PROCEDURE

1. Turn ignition switch ON and wait at least 10 seconds.
2. Press MAIN switch for at least 10 seconds, then release it and wait at least 10 seconds.
3. Press CANCEL switch for at least 10 seconds, then release it and wait at least 10 seconds.
4. Press RESUME/ACCELERATE switch for at least 10 seconds, then release it and wait at least 10 seconds.
5. Press SET/COAST switch for at least 10 seconds, then release it and wait at least 10 seconds.
6. Check DTC.

Is DTC detected?

YES >> Proceed to EC-828, "Diagnosis Procedure".
NO >> INSPECTION END

Diagnosis Procedure

INFOID:0000000011489742

1.CHECK ASCD STEERING SWITCH CIRCUIT

With CONSULT
1. Turn ignition switch ON.
2. Select “MAIN SW”, “CANCEL SW”, “RESUME/ACC SW” and “SET SW” in “DATA MONITOR” mode with CONSULT.
3. Check each item indication under the following conditions.

Monitor item	Condition		Indication
MAIN SW	ON/OFF (MAIN) switch	Pressed	ON
		Released	OFF
CANCEL SW	CANCEL switch	Pressed	ON
		Released	OFF

Monitor item	Condition		Indication
RESUME/ACC SW	ACCEL/RES switch	Pressed	ON
		Released	OFF
SET SW	COAST/SET switch	Pressed	ON
		Released	OFF

Without CONSULT

1. Turn ignition switch ON.
2. Check the voltage between ECM harness connector terminals under the following conditions.

ECM			Condition	Voltage (V)
Con-nector	+	–		
	Terminal	Terminal		
E16	101	108	ON/OFF (MAIN) switch: Pressed	Approx. 0
			CANCEL switch: Pressed	Approx. 1
			COAST/SET switch: Pressed	Approx. 2
			ACCEL/RES switch: Pressed	Approx. 3
			All ASCD steering switches: Released	Approx. 4

Is the inspection result normal?

YES >> Check intermittent incident. Refer to GI-47, "Intermittent Incident".
NO >> GO TO 2.

2. CHECK ASCD STEERING SWITCH GROUND CIRCUIT

1. Turn ignition switch OFF.
2. Disconnect ECM harness connector.
3. Disconnect combination switch harness connector M149.
4. Check the continuity between combination switch and ECM harness connector.

Combination switch	ECM		Continuity
Terminal	Connector	Terminal	
16	E16	108	Existed

5. Also check harness for short to ground and short to power.

Is the inspection result normal?

YES >> GO TO 3.
NO >> Repair or replace error-detected parts.

3. CHECK ASCD STEERING SWITCH INPUT SIGNAL CIRCUIT

1. Check the continuity between combination switch and ECM harness connector.

Combination switch	ECM		Continuity
Terminal	Connector	Terminal	
13	E16	101	Existed

2. Also check harness for short to ground and short to power.

Is the inspection result normal?

YES >> GO TO 4.
NO >> Repair or replace error-detected parts.

4. CHECK ASCD STEERING SWITCH

Check ASCD steering switch. Refer to EC-830, "Component Inspection".

Is the inspection result normal?

YES >> Check intermittent incident. Refer to GI-47, "Intermittent Incident".
NO >> Replace ASCD steering switch. Refer to ST-45, "Removal and Installation".

Component Inspection

INFOID:0000000011489743

1. CHECK ASCD STEERING SWITCH

1. Turn ignition switch OFF.
2. Disconnect combination switch (spiral cable) harness connector.
3. Check resistance between combination switch harness connector terminals as per the following.

Combination switch		Condition	Resistance (Ω)
Connector	Terminals		
M149	13 and 16	ON/OFF (MAIN) switch: Pressed	Approx. 0
		CANCEL switch: Pressed	Approx. 250
		COAST/SET switch: Pressed	Approx. 660
		ACCEL/RES switch: Pressed	Approx. 1,480
		All ASCD steering switches: Released	Approx. 4,000

Is the inspection result normal?

YES >> INSPECTION END
NO >> Replace ASCD steering switch. Refer to ST-45, "Removal and Installation".

P1572 ASCD BRAKE SWITCH

Description

INFOID:0000000011489744

When the brake pedal is depressed, brake pedal position switch is turned OFF and stop lamp switch is turned ON. ECM detects the state of the brake pedal by this input of two kinds (ON/OFF signal).
Refer to EC-557, "AUTOMATIC SPEED CONTROL DEVICE (ASCD) : System Description" for the ASCD function.

DTC Logic

INFOID:0000000011489745

DTC DETECTION LOGIC

NOTE:
- **If DTC P1572 is displayed with DTC P0605, first perform the trouble diagnosis for DTC P0605. Refer to EC-803, "DTC Logic".**
- **This self-diagnosis has the one trip detection logic. When malfunction A is detected, DTC is not stored in ECM memory. And in that case, 1st trip DTC and 1st trip freeze frame data are displayed. 1st trip DTC is erased when ignition switch OFF. And even when malfunction A is detected in two consecutive trips, DTC is not stored in ECM memory.**

DTC No.	CONSULT screen terms (Trouble diagnosis content)	DTC detecting condition		Possible cause
P1572	ASCD BRAKE SW (Brake pedal position switch)	A)	When the vehicle speed is above 30 km/h (19 MPH), ON signals from the stop lamp switch and the brake pedal position switch are sent to the ECM at the same time.	• Harness or connectors (The stop lamp switch circuit is shorted.) • Harness or connectors (The brake pedal position switch circuit is shorted.) • Stop lamp switch • Brake pedal position switch • Incorrect stop lamp switch installation • Incorrect brake pedal position switch installation • ECM
		B)	brake pedal position switch signal is not sent to ECM for extremely long time while the vehicle is driving.	

DTC CONFIRMATION PROCEDURE

1. INSPECTION START

Do you have CONSULT?

Do you have CONSULT?

YES >> GO TO 2.
NO >> GO TO 5.

2. PRECONDITIONING

If DTC Confirmation Procedure has been previously conducted, always turn ignition switch OFF and wait at least 10 seconds before conducting the next test.

NOTE:
Procedure for malfunction B is not described here. It takes extremely long time to complete procedure for malfunction B. By performing procedure for malfunction A, the incident that causes malfunction B can be detected.

>> GO TO 3.

3. PERFORM DTC CONFIRMATION PROCEDURE FOR MALFUNCTION A-I

1. Start engine (VDC switch OFF).
2. Select “DATA MONITOR” mode with CONSULT.
3. Press MAIN switch and make sure that CRUISE lamp lights up.
4. Drive the vehicle for at least 5 consecutive seconds under the following conditions.
   CAUTION:
   Always drive vehicle at a safe speed.
   NOTE:

This procedure may be conducted with the drive wheels lifted in the shop or by driving the vehicle. If a road test is expected to be easier, it is unnecessary to lift the vehicle.

VHCL SPEED SE	More than 30 km/h (19 mph)
Selector lever	Suitable position

5. Check 1st trip DTC.

Is 1st trip DTC detected?

YES >> Go to EC-833, "Diagnosis Procedure".
NO >> GO TO 4.

4. PERFORM DTC CONFIRMATION PROCEDURE A-II

1. Drive the vehicle for at least 5 consecutive seconds under the following conditions.
   CAUTION:
   Always drive vehicle at a safe speed.
   NOTE:
   This procedure may be conducted with the drive wheels lifted in the shop or by driving the vehicle. If a road test is expected to be easier, it is unnecessary to lift the vehicle.

VHCL SPEED SE	More than 30 km/h (19 mph)
Selector lever	Suitable position
Driving location	Depress the brake pedal for more than five seconds so as not to come off from the above-mentioned vehicle speed.

2. Check 1st trip DTC.

Is 1st trip DTC detected?

YES >> Go to EC-833, "Diagnosis Procedure".
NO >> INSPECTION END

5. PERFORM COMPONENT FUNCTION CHECK

Perform component function check. Refer to EC-832, "Component Function Check".

NOTE:
Use component function check to check the overall function of brake pedal position switch. During this check, a DTC might not be confirmed.

Is the inspection result normal?

YES >> INSPECTION END
NO >> Go to EC-833, "Diagnosis Procedure".

Component Function Check

INFOID:0000000011489746

1. PERFORM COMPONENT FUNCTION CHECK

1. Turn ignition switch ON.
2. Check the voltage between ECM harness connectors.

ECM			Condition		Voltage
Connector	+ Terminal	– Terminal			
E16	126	128	Brake pedal	Slightly depressed	Approx. 0 V
				Fully released	Battery voltage

Is the inspection result normal?

YES >> INSPECTION END
NO >> GO TO 2.

2. PERFORM COMPONENT FUNCTION CHECK-II

Check the voltage between ECM harness connectors.

ECM			Condition		Voltage
Connector	+ Terminal	– Terminal			
E16	122	128	Brake pedal	Slightly depressed	Battery voltage
				Fully released	Approx. 0 V

Is the inspection result normal?

YES >> INSPECTION END
NO >> Go to EC-833, "Diagnosis Procedure".

Diagnosis Procedure

INFOID:0000000011489747

1. CHECK OVERALL FUNCTION-I

With CONSULT

1. Turn ignition switch ON.
2. Select “BRAKE SW1” in “DATA MONITOR” mode with CONSULT.
3. Check “BRAKE SW1” indication under the following conditions.

Monitor item	Condition		Indication
BRAKE SW1	Brake pedal	Slightly depressed	OFF
		Fully released	ON

Without CONSULT

1. Turn ignition switch ON.
2. Check the voltage between ECM harness connectors.

ECM			Condition		Voltage
Connector	+ Terminal	– Terminal			
E16	126	128	Brake pedal	Slightly depressed	Approx. 0 V
				Fully released	Battery voltage

Is the inspection result normal?

YES >> GO TO 2.
NO >> GO TO 3.

2. CHECK OVERALL FUNCTION-II

With CONSULT

Check “BRAKE SW2” indication in “DATA MONITOR” mode.

Monitor item	Condition		Indication
BRAKE SW2	Brake pedal	Slightly depressed	ON
		Fully released	OFF

Without CONSULT

Check the voltage between ECM harness connectors.

ECM			Condition		Voltage
Connector	+	–			
	Terminal	Terminal			
E16	122	128	Brake pedal	Slightly depressed	Battery voltage
				Fully released	Approx. 0 V

Is the inspection result normal?

YES >> Check intermittent incident. Refer to GI-47, "Intermittent Incident".
NO >> GO TO 6.

3. CHECK BRAKE PEDAL POSITION SWITCH POWER SUPPLY

1. Turn ignition switch OFF.
2. Disconnect brake pedal position switch harness connector.
3. Turn ignition switch ON.
4. Check the voltage between brake pedal position switch harness connector and ground.

Brake pedal position switch		Ground	Voltage
Connector	Terminal		
E76	1	Ground	Battery voltage

Is the inspection result normal?

YES >> GO TO 4.
NO >> Repair or replace error-detected parts.

4. CHECK BRAKE PEDAL POSITION SWITCH INPUT SIGNAL CIRCUIT

1. Turn ignition switch OFF.
2. Disconnect ECM harness connector.
3. Check the continuity between brake pedal position switch harness connector and ECM harness connector.

Brake pedal position switch		ECM		Continuity
Connector	Terminal	Connector	Terminal	
E76	2	E16	126	Existed

4. Also check harness for short to ground and short to power.

Is the inspection result normal?

YES >> GO TO 5.
NO >> Repair open circuit, short to ground or short to power in harness or connectors.

5. CHECK BRAKE PEDAL POSITION SWITCH

Check brake pedal position switch. Refer to EC-836, "Component Inspection (Brake Pedal Position Switch)".

Is the inspection result normal?

YES >> Check intermittent incident. Refer to GI-47, "Intermittent Incident".
NO >> Replace brake pedal position switch. Refer to BR-20, "Removal and Installation".

6. CHECK STOP LAMP SWITCH SIGNAL CIRCUIT-I

1. Turn ignition switch OFF.
2. Remove stop lamp relay.
3. Check the voltage between stop lamp relay harness connector and ground.

+		–	Voltage
Stop lamp relay			
Connector	Terminal		
E39	3	Ground	Battery voltage

Is the inspection result normal?

YES >> GO TO 7.
NO >> Repair open circuit, short to ground or short to power in harness or connectors.

7. CHECK STOP LAMP SWITCH SIGNAL CIRCUIT-II

1. Check the continuity between stop lamp relay harness connector and ECM harness connector.

Stop lamp relay		ECM		Continuity
Connector	Terminal	Connector	Terminal	
E39	5	E16	126	Existed

2. Also check harness for short to ground and short to power.

Is the inspection result normal?

YES >> GO TO 8.
NO >> Repair open circuit, short to ground or short to power in harness or connectors.

8. CHECK STOP LAMP RELAY POWER SUPPLY CIRCUIT-I

Check the voltage between stop lamp relay harness connector terminals.

Stop lamp relay			Condition		Voltage
Connector	+	–			
	Terminal				
E39	1	2	Brake pedal	Slightly depressed	Battery voltage
				Fully released	Approx. 0 V

Is the inspection result normal?

YES >> GO TO 9.
NO >> GO TO 10.

9. CHECK STOP LAMP RELAY

Check stop lamp relay. Refer to EC-837, "Component Inspection (Stop Lamp Relay)".

Is the inspection result normal?

YES >> Check intermittent incident. Refer to GI-47, "Intermittent Incident".
NO >> Replace stop lamp relay.

10. CHECK STOP LAMP RELAY GROUND CIRCUIT

Check the continuity between stop lamp relay harness connector and ground.

Stop lamp relay		—	Continuity
Connector	Terminal		
E39	2	Ground	Existed

Is the inspection result normal?

YES >> GO TO 11.
NO >> Repair or replace error-detected parts.

11. CHECK STOP LAMP SWITCH POWER SUPPLY CIRCUIT

1. DIsconnect stop lamp switch harness connector.
2. Check the voltage between stop lamp switch harness connector and ground.

+		–	Voltage
Stop lamp switch			
Connector	Terminal		
E38	1	Ground	Battery voltage

Is the inspection result normal?

YES >> GO TO 12.
NO >> Repair open circuit, short to ground or short to power in harness or connectors.

12. CHECK STOP LAMP RELAY POWER SUPPLY CIRCUIT-II

1. Check the continuity between stop lamp switch harness connector and stop lamp relay harness connector.

Stop lamp switch		Stop lamp relay		Continuity
Connector	Terminal	Connector	Terminal	
E38	2	E39	1	Existed

2. Also check harness for short to ground and short to power.

Is the inspection result normal?

YES >> GO TO 13.
NO >> Repair open circuit, short to ground or short to power in harness or connectors.

13. CHECK STOP LAMP SWITCH

Check stop lamp switch. Refer to EC-836, "Component Inspection (Stop Lamp Switch)".

Is the inspection result normal?

YES >> Check intermittent incident. Refer to GI-47, "Intermittent Incident".
NO >> Replace stop lamp switch. Refer to BR-20, "Removal and Installation".

Component Inspection (Brake Pedal Position Switch)

INFOID:0000000011489748

1. CHECK BRAKE PEDAL POSITION SWITCH-I

1. Turn ignition switch OFF.
2. Disconnect brake pedal position switch harness connector.
3. Check the continuity between brake pedal position switch terminals under the following conditions.

Terminals	Condition		Continuity
1 and 2	Brake pedal	Fully released	Existed
		Slightly depressed	Not existed

Is the inspection result normal?

YES >> INSPECTION END
NO >> GO TO 2.

2. CHECK BRAKE PEDAL POSITION SWITCH-II

1. Adjust brake pedal position switch installation. Refer to BR-15, "Adjustment".
2. Check the continuity between brake pedal position switch terminals under the following conditions.

Terminals	Condition		Continuity
1 and 2	Brake pedal	Fully released	Existed
		Slightly depressed	Not existed

Is the inspection result normal?

YES >> INSPECTION END
NO >> Replace brake pedal position switch. Refer to BR-20, "Removal and Installation".

Component Inspection (Stop Lamp Switch)

INFOID:0000000011489749

1. CHECK STOP LAMP SWITCH-I

1. Turn ignition switch OFF.
2. Disconnect stop lamp switch harness connector.
3. Check harness continuity between stop lamp switch terminals under the following conditions.

Terminals	Condition		Continuity
1 and 2	Brake pedal	Fully released	Not existed
		Slightly depressed	Existed

Is the inspection result normal?

YES >> INSPECTION END
NO >> GO TO 2.

2. CHECK STOP LAMP SWITCH-II

1. Adjust stop lamp switch installation. Refer to BR-15, "Adjustment".
2. Check harness continuity between stop lamp switch terminals under the following conditions.

Terminals	Condition		Continuity
1 and 2	Brake pedal	Fully released	Not existed
		Slightly depressed	Existed

Is the inspection result normal?

YES >> INSPECTION END
NO >> Replace stop lamp switch. Refer to BR-20, "Removal and Installation".

Component Inspection (Stop Lamp Relay)

INFOID:0000000011616117

1. CHECK STOP LAMP RELAY

1. Turn ignition switch OFF.
2. Remove stop lamp relay.
3. Check the continuity between stop lamp relay terminals under the following conditions.

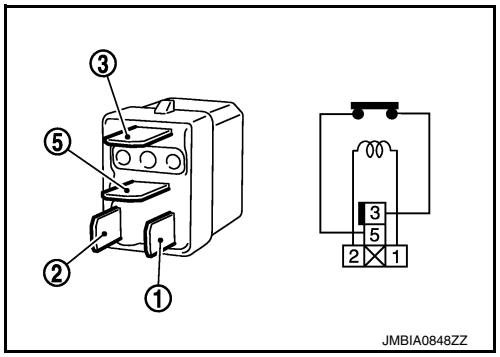

Terminals	Condition	Continuity
3 and 5	12V direct current supply between terminals 1 and 2	Existed
	No current supply	Not existed

Is the inspection result normal?

YES >> INSPECTION END
NO >> Replace stop lamp relay.

P1574 ASCD VEHICLE SPEED SENSOR

Description

INFOID:0000000011489750

The ECM receives two vehicle speed signals via CAN communication line. One is sent from combination meter, and the other is from TCM (Transmission control module). The ECM uses these signals for ASCD control. Refer to EC-557, "AUTOMATIC SPEED CONTROL DEVICE (ASCD) : System Description" for ASCD functions.

DTC Logic

INFOID:0000000011489751

DTC DETECTION LOGIC

NOTE:

- **If DTC P1574 is displayed with DTC UXXXX, first perform the trouble diagnosis for DTC UXXXX.**
- **If DTC P1574 is displayed with DTC P0500, first perform the trouble diagnosis for DTC P0500. Refer to EC-789, "DTC Logic".**
- **If DTC P1574 is displayed with DTC P0605, first perform the trouble diagnosis for DTC P0605. Refer to EC-803, "DTC Logic".**
- **If DTC P1574 is displayed with DTC P0607, first perform the trouble diagnosis for DTC P0607. Refer to EC-805, "DTC Logic".**

DTC No.	CONSULT screen terms (Trouble diagnosis content)	DTC detecting condition	Possible cause
P1574	ASCD VHL SPD SEN (ASCD vehicle speed sensor)	The difference the between two vehicle speed signals is out of the specified range.	• Harness or connectors (The CAN communication line is open or shorted.) • Combination meter • ABS actuator and electric unit (control unit) • Wheel sensor • TCM • ECM

DTC CONFIRMATION PROCEDURE

1.PRECONDITIONING

If DTC Confirmation Procedure has been previously conducted, always perform the following before conducting the next test.

1. Turn ignition switch OFF and wait at least 10 seconds.
2. Turn ignition switch ON.
3. Turn ignition switch OFF and wait at least 10 seconds.

>> GO TO 2.

2.PERFORM DTC CONFIRMATION PROCEDURE

1. Start engine (VDC switch OFF).
2. Drive the vehicle at more than 40 km/h (25 MPH).
   CAUTION:
   Always drive vehicle at a safe speed.
   NOTE:
   This procedure may be conducted with the drive wheels lifted in the shop or by driving the vehicle. If a road test is expected to be easier, it is unnecessary to lift the vehicle.
3. Check DTC.

Is DTC detected?

YES >> Proceed to EC-838, "Diagnosis Procedure".
NO >> INSPECTION END

Diagnosis Procedure

INFOID:0000000011489752

1.CHECK DTC WITH TCM

Check DTC with TCM. Refer to TM-47, "CONSULT Function".

Is the inspection result normal?

YES >> GO TO 2.
NO >> Perform trouble shooting relevant to DTC indicated.

2. CHECK DTC WITH ABS ACTUATOR AND ELECTRIC UNIT (CONTROL UNIT)

Check DTC with ABS actuator and electric unit (control unit). Refer to BRC-165, "CONSULT Function".

Is the inspection result normal?

YES >> GO TO 3.
NO >> Repair or replace malfunctioning part.

3. CHECK COMBINATION METER FUNCTION

Check combination meter function. Refer to MWI-18, "CONSULT Function (METER/M&A)".

>> INSPECTION END

P1700 CVT CONTROL SYSTEM

Description

INFOID:0000000011489753

This DTC is displayed with other DTC regarding TCM. Perform the trouble diagnosis for corresponding DTC. Refer to EC-610, "DTC Index". When this DTC is detected, the ASCD control is canceled.

P1715 INPUT SPEED SENSOR (PRIMARY SPEED SENSOR)

Description

INFOID:0000000011489754

ECM receives input speed sensor signal from TCM via the CAN communication line. ECM uses this signal for engine control.

DTC Logic

INFOID:0000000011489755

DTC DETECTION LOGIC

NOTE:

- **If DTC P1715 is displayed with DTC UXXXX first perform the trouble diagnosis for DTC UXXXX.**
- **If DTC P1715 is displayed with DTC P0335, first perform the trouble diagnosis for DTC P0335. Refer to EC-765, "DTC Logic".**
- **If DTC P1715 is displayed with DTC P0340, P0345, first perform the trouble diagnosis for DTC P0340, P0345. Refer to EC-768, "DTC Logic".**
- **If DTC P1715 is displayed with DTC P0605, first perform the trouble diagnosis for DTC P0605. Refer to EC-803, "DTC Logic".**
- **If DTC P1715 is displayed with DTC P0607, first perform the trouble diagnosis for DTC P0607. Refer to EC-805, "DTC Logic".**

DTC No.	CONSULT screen terms (Trouble diagnosis content)	DTC detecting condition	Possible cause
P1715	IN PULY SPEED [Input speed sensor (Primary speed sensor) (TCM output)]	Input speed sensor signal is different from the theoretical value calculated by ECM from output speed sensor signal and engine rpm signal.	• Harness or connectors (The CAN communication line is open or shorted) • Harness or connectors (Input speed sensor circuit is open or shorted) • TCM

DTC CONFIRMATION PROCEDURE

1. PRECONDITIONING

If DTC Confirmation Procedure has been previously conducted, always perform the following before conducting the next test.

1. Turn ignition switch OFF and wait at least 10 seconds.
2. Turn ignition switch ON.
3. Turn ignition switch OFF and wait at least 10 seconds.

>> GO TO 2.

2. PERFORM DTC CONFIRMATION PROCEDURE

1. Start engine.
2. Drive vehicle at a speed of more than 50 km/h (31 MPH) for at least 5 seconds.
3. Check 1st trip DTC.

Is 1st trip DTC detected?

YES >> Proceed to EC-841, "Diagnosis Procedure".
NO >> INSPECTION END

Diagnosis Procedure

INFOID:0000000011489756

1. CHECK DTC WITH TCM

Check DTC with TCM. Refer to TM-63, "DTC Index".

Is the inspection result normal?

YES >> Replace TCM. Refer to TM-198, "Removal and Installation".
NO >> Perform trouble shooting relevant to DTC indicated.

P1800 VIAS CONTROL SOLENOID VALVE 1

DTC Logic

INFOID:0000000011489757

DTC DETECTION LOGIC

DTC No.	CONSULT screen terms (Trouble diagnosis content)	DTC detecting condition	Possible cause
P1800	VIAS S/V CIRC-B1 (VIAS solenoid valve circuit bank 1)	An excessively low or high voltage signal is sent to ECM through the VIAS control solenoid valve 1.	• Harness or connectors (The solenoid valve 1 circuit is open or shorted.) • VIAS control solenoid valve 1

DTC CONFIRMATION PROCEDURE

1. CONDITIONING

If DTC Confirmation Procedure has been previously conducted, always perform the following before conducting the next test.
1. Turn ignition switch OFF and wait at least 10 seconds.
2. Turn ignition switch ON.
3. Turn ignition switch OFF and wait at least 10 seconds.

TESTING CONDITION:
Before performing the following procedure, confirm battery voltage is more than 11 V at idle.

>> GO TO 2.

2. PERFORM DTC CONFIRMATION PROCEDURE

1. Start engine and let it idle for at least 5 seconds.
2. Check 1st trip DTC.

Is 1st trip DTC detected?

YES >> Proceed to EC-842, "Diagnosis Procedure".
NO >> INSPECTION END

Diagnosis Procedure

INFOID:0000000011489758

1. CHECK VIAS CONTROL SOLENOID VALVE 1 POWER SUPPLY

1. Turn ignition switch OFF.
2. Disconnect VIAS control solenoid valve 1 harness connector.
3. Turn ignition switch ON.
4. Check the voltage between VIAS control solenoid valve 1 harness connector and ground.

VIAS control solenoid valve 1		Ground	Voltage
Connector	Terminal		
F66	1	Ground	Battery voltage

Is the inspection result normal?

YES >> GO TO 2.
NO >> Repair open circuit, short to ground or short to power in harness or connectors.

2. CHECK VIAS CONTROL SOLENOID VALVE 1 OUTPUT SIGNAL CIRCUIT

1. Turn ignition switch OFF.
2. Disconnect ECM harness connector.
3. Check the continuity between VIAS control solenoid valve 1 harness connector and ECM harness connector.

VIAS control solenoid valve 1		ECM		Continuity
Connector	Terminal	Connector	Terminal	
F66	2	F51	39	Existed

4. Also check harness for short to ground and short to power.

Is the inspection result normal?

YES >> GO TO 3.
NO >> Repair open circuit, short to ground or short to power in harness or connectors.

3. CHECK VIAS CONTROL SOLENOID VALVE 1

Check VIAS control solenoid valve 1. Refer to EC-843, "Component Inspection".

Is the inspection result normal?

YES >> Check intermittent incident. Refer to GI-47, "Intermittent Incident".
NO >> Replace VIAS control solenoid valve 1. Refer to EC-534, "ENGINE CONTROL SYSTEM : Component Parts Location".

Component Inspection

INFOID:0000000011489759

1. CHECK VIAS CONTROL SOLENOID VALVE 1

With CONSULT

1. Turn ignition switch OFF.
2. Reconnect all harness connectors disconnected.
3. Disconnect vacuum hoses connected to VIAS control solenoid valve 1.
4. Turn ignition switch ON.
5. Select “VIAS S/V-1” in “ACTIVE TEST” mode with CONSULT.
6. Check air passage continuity and operation delay time under the following conditions.

Condition (VIAS S/V-1)	Air passage continuity between Ⓐ and Ⓑ	Air passage continuity between Ⓐ and Ⓒ
ON	Existed	Not existed
OFF	Not existed	Existed

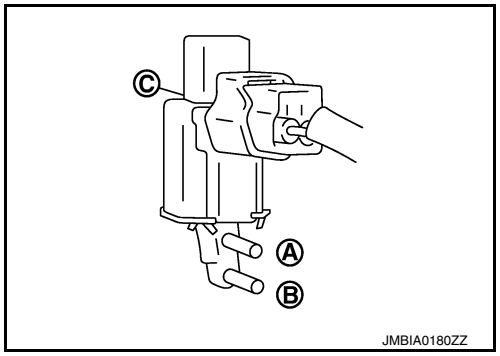

Without CONSULT

1. Turn ignition switch OFF.
2. Disconnect VIAS control solenoid valve 1 harness connector.
3. Disconnect vacuum hoses connected to VIAS volume control solenoid valve 1.
4. Check air passage continuity and operation delay time under the following conditions.

Condition	Air passage continuity between Ⓐ and Ⓑ	Air passage continuity between Ⓐ and Ⓒ
12 V direct current supply between terminals 1 and 2	Existed	Not existed
No supply	Not existed	Existed

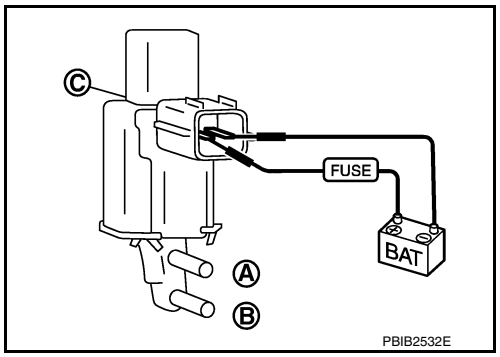

Is the inspection result normal?

YES >> INSPECTION END
NO >> Replace VIAS control solenoid valve 1. Refer to EC-534, "ENGINE CONTROL SYSTEM : Component Parts Location".

P1801 VIAS CONTROL SOLENOID VALVE 2

DTC Logic

INFOID:0000000011489760

DTC DETECTION LOGIC

DTC No.	CONSULT screen terms (Trouble diagnosis content)	DTC detecting condition	Possible cause
P1801	VIAS S/V CIRC-B2 (VIAS solenoid valve circuit bank 2)	An excessively low or high voltage signal is sent to ECM through the VIAS control solenoid valve 2.	• Harness or connectors (The solenoid valve 2 circuit is open or shorted.) • VIAS control solenoid valve 2

DTC CONFIRMATION PROCEDURE

1.CONDITIONING

If DTC Confirmation Procedure has been previously conducted, always perform the following before conducting the next test.
1. Turn ignition switch OFF and wait at least 10 seconds.
2. Turn ignition switch ON.
3. Turn ignition switch OFF and wait at least 10 seconds.

TESTING CONDITION:
Before performing the following procedure, confirm battery voltage is more than 11 V at idle.

>> GO TO 2.

2.PERFORM DTC CONFIRMATION PROCEDURE

1. Start engine and let it idle for at least 5 seconds.
2. Check 1st trip DTC.

Is 1st trip DTC detected?

YES >> Proceed to EC-844, "Diagnosis Procedure".
NO >> INSPECTION END

Diagnosis Procedure

INFOID:0000000011489761

1.CHECK VIAS CONTROL SOLENOID VALVE 2 POWER SUPPLY

1. Turn ignition switch OFF.
2. Disconnect VIAS control solenoid valve 2 harness connector.
3. Turn ignition switch ON.
4. Check the voltage between VIAS control solenoid valve 2 harness connector and ground.

VIAS control solenoid valve 2		Ground	Voltage
Connector	Terminal		
F67	1	Ground	Battery voltage

Is the inspection result normal?

YES >> GO TO 2.
NO >> Repair open circuit, short to ground or short to power in harness or connectors.

2.CHECK VIAS CONTROL SOLENOID VALVE 2 OUTPUT SIGNAL CIRCUIT FOR OPEN AND SHORT

1. Turn ignition switch OFF.
2. Disconnect ECM harness connector.
3. Check the continuity between VIAS control solenoid valve 2 harness connector and ECM harness connector.

VIAS control solenoid valve 2		ECM		Continuity
Connector	Terminal	Connector	Terminal	
F67	2	F51	40	Existed

4. Also check harness for short to ground and short to power.

Is the inspection result normal?

YES >> GO TO 3.
NO >> Repair open circuit, short to ground or short to power in harness or connectors.

3. CHECK VIAS CONTROL SOLENOID VALVE 2

Check VIAS control solenoid valve 2. Refer to EC-845, "Component Inspection".

Is the inspection result normal?

YES >> Check intermittent incident. Refer to GI-47, "Intermittent Incident".
NO >> Replace VIAS control solenoid valve 2. Refer to EC-534, "ENGINE CONTROL SYSTEM : Component Parts Location".

Component Inspection

INFOID:0000000011489762

1. CHECK VIAS CONTROL SOLENOID VALVE 2

With CONSULT

1. Turn ignition switch OFF.
2. Reconnect all harness connectors disconnected.
3. Disconnect vacuum hoses connected to VIAS control solenoid valve 2.
4. Turn ignition switch ON.
5. Select “VIAS S/V-2” in “ACTIVE TEST” mode with CONSULT.
6. Check air passage continuity and operation delay time under the following conditions.

Condition (VIAS S/V-2)	Air passage continuity between Ⓐ and Ⓑ	Air passage continuity between Ⓐ and Ⓒ
ON	Existed	Not existed
OFF	Not existed	Existed

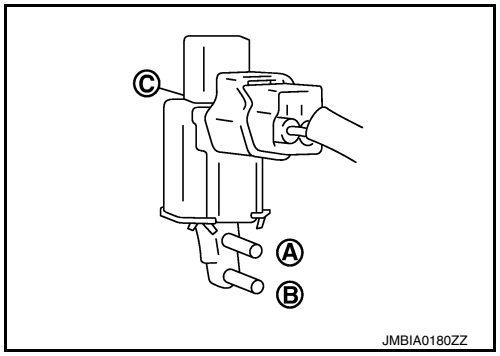

Without CONSULT

1. Turn ignition switch OFF.
2. Disconnect VIAS control solenoid valve 2 harness connector.
3. Disconnect vacuum hoses connected to VIAS volume control solenoid valve 2.
4. Check air passage continuity and operation delay time under the following conditions.

Condition	Air passage continuity between Ⓐ and Ⓑ	Air passage continuity between Ⓐ and Ⓒ
12 V direct current supply between terminals 1 and 2	Existed	Not existed
No supply	Not existed	Existed

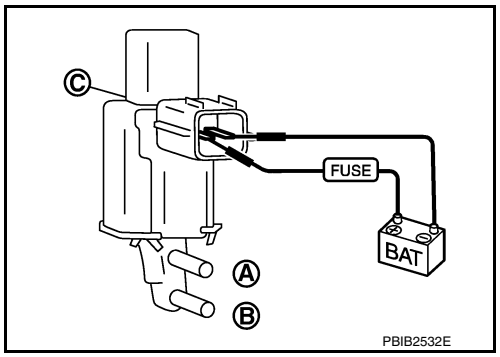

Is the inspection result normal?

YES >> INSPECTION END
NO >> Replace VIAS control solenoid valve 2. Refer to EC-534, "ENGINE CONTROL SYSTEM : Component Parts Location".

P1805 BRAKE SWITCH

Description

INFOID:0000000011489763

Brake switch signal is applied to the ECM via the stop lamp switch when the brake pedal is depressed. This signal is used mainly to decrease the engine speed when the vehicle is driven.

DTC Logic

INFOID:0000000011489764

DTC DETECTION LOGIC

DTC No.	CONSULT screen terms (Trouble diagnosis content)	DTC detecting condition	Possible cause
P1805	BRAKE SW/CIRCUIT (Stop lamp switch circuit)	A brake switch signal is not sent to ECM for extremely long time while the vehicle is driving.	• Harness or connectors (Stop lamp switch circuit is open or shorted.) • Stop lamp switch

DTC CONFIRMATION PROCEDURE

1. PERFORM DTC CONFIRMATION PROCEDURE

1. Turn ignition switch ON.
2. Fully depress the brake pedal for at least 5 seconds.
3. Erase the DTC with CONSULT.
4. Check 1st trip DTC.

Is 1st trip DTC detected?

YES >> Go to EC-846, "Diagnosis Procedure".
NO >> INSPECTION END

Diagnosis Procedure

INFOID:0000000011489765

1. CHECK STOP LAMP SWITCH CIRCUIT

1. Turn ignition switch OFF.
2. Check the stop lamp when depressing and releasing the brake pedal.

Brake pedal	Stop lamp
Fully released	Not illuminated
Slightly depressed	Illuminated

Is the inspection result normal?

YES >> Check intermittent incident. Refer to GI-47, "Intermittent Incident".
NO >> GO TO 2.

2. CHECK STOP LAMP SWITCH SIGNAL CIRCUIT-I

1. Turn ignition switch OFF.
2. Remove stop lamp relay.
3. Check the voltage between stop lamp relay harness connector and ground.

+		–	Voltage
Stop lamp relay			
Connector	Terminal		
E39	3	Ground	Battery voltage

Is the inspection result normal?

YES >> GO TO 3.
NO >> Repair open circuit, short to ground or short to power in harness or connectors.

3. CHECK STOP LAMP SWITCH SIGNAL CIRCUIT-II

1. Check the continuity between stop lamp relay harness connector and ECM harness connector.

Stop lamp relay		ECM		Continuity
Connector	Terminal	Connector	Terminal	
E39	5	E16	122	Existed

2. Also check harness for short to ground and short to power.

Is the inspection result normal?

YES >> GO TO 4.
NO >> Repair open circuit, short to ground or short to power in harness or connectors.

4. CHECK STOP LAMP RELAY POWER SUPPLY CIRCUIT-I

Check the voltage between stop lamp relay harness connector terminals.

Stop lamp relay			Condition		Voltage
Connector	+	–			
	Terminal				
E39	1	2	Brake pedal	Slightly depressed	Battery voltage
				Fully released	Approx. 0 V

Is the inspection result normal?

YES >> GO TO 5.
NO >> GO TO 6.

5. CHECK STOP LAMP RELAY

Check stop lamp relay. Refer to EC-848, "Component Inspection (Stop Lamp Relay)".

Is the inspection result normal?

YES >> Check intermittent incident. Refer to GI-47, "Intermittent Incident".
NO >> Replace stop lamp relay.

6. CHECK STOP LAMP RELAY GROUND CIRCUIT

Check the continuity between stop lamp relay harness connector and ground.

Stop lamp relay		—	Continuity
Connector	Terminal		
E39	2	Ground	Existed

Is the inspection result normal?

YES >> GO TO 7.
NO >> Repair or replace error-detected parts.

7. CHECK STOP LAMP SWITCH POWER SUPPLY CIRCUIT

1. DIsconnect stop lamp switch harness connector.
2. Check the voltage between stop lamp switch harness connector and ground.

+		–	Voltage
Stop lamp switch			
Connector	Terminal		
E38	1	Ground	Battery voltage

Is the inspection result normal?

YES >> GO TO 8.
NO >> Repair open circuit, short to ground or short to power in harness or connectors.

8. CHECK STOP LAMP RELAY POWER SUPPLY CIRCUIT-II

1. Check the continuity between stop lamp switch harness connector and stop lamp relay harness connector.

Stop lamp switch		Stop lamp relay		Continuity
Connector	Terminal	Connector	Terminal	
E38	2	E39	1	Existed

2. Also check harness for short to ground and short to power.

Is the inspection result normal?

YES >> GO TO 9.
NO >> Repair open circuit, short to ground or short to power in harness or connectors.

9. CHECK STOP LAMP SWITCH

Check stop lamp switch. Refer to EC-836, "Component Inspection (Stop Lamp Switch)".

Is the inspection result normal?

YES >> Check intermittent incident. Refer to GI-47, "Intermittent Incident".
NO >> Replace stop lamp switch. Refer to BR-20, "Removal and Installation".

Component Inspection (Stop Lamp Switch)

INFOID:0000000011489766

1. CHECK STOP LAMP SWITCH-I

1. Turn ignition switch OFF.
2. Disconnect stop lamp switch harness connector.
3. Check harness continuity between stop lamp switch terminals under the following conditions.

Terminals	Condition		Continuity
1 and 2	Brake pedal	Fully released	Not existed
		Slightly depressed	Existed

Is the inspection result normal?

YES >> INSPECTION END
NO >> GO TO 2.

2. CHECK STOP LAMP SWITCH-II

1. Adjust stop lamp switch installation. Refer to BR-15, "Adjustment".
2. Check harness continuity between stop lamp switch terminals under the following conditions.

Terminals	Condition		Continuity
1 and 2	Brake pedal	Fully released	Not existed
		Slightly depressed	Existed

Is the inspection result normal?

YES >> INSPECTION END
NO >> Replace stop lamp switch. Refer to BR-20, "Removal and Installation".

Component Inspection (Stop Lamp Relay)

INFOID:0000000011616119

1. CHECK STOP LAMP RELAY

1. Turn ignition switch OFF.
2. Remove stop lamp relay.

3. Check the continuity between stop lamp relay terminals under the following conditions.

Terminals	Condition	Continuity
3 and 5	12V direct current supply between terminals 1 and 2	Existed
	No current supply	Not existed

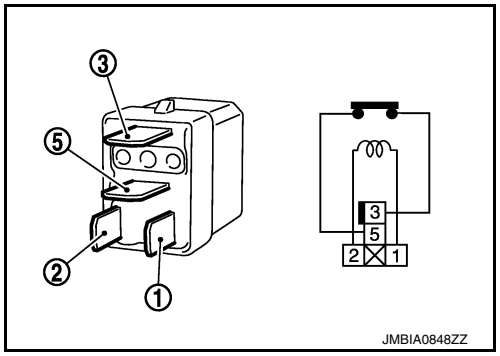

Is the inspection result normal?

YES >> INSPECTION END
NO >> Replace stop lamp relay.

P2100, P2103 THROTTLE CONTROL MOTOR RELAY

DTC Logic

INFOID:0000000011489769

DTC DETECTION LOGIC

DTC No.	CONSULT screen terms (Trouble diagnosis content)	DTC detecting condition	Possible cause
P2100	ETC MOT PWR-B1 (Throttle actuator “A” control motor circuit/open)	ECM detects that the voltage of power source for throttle control motor is excessively low.	• Harness or connectors (Throttle control motor relay circuit is open) • Throttle control motor relay
P2103	ETC MOT PWR-B1 (Throttle actuator “A” control motor circuit high)	ECM detects that the throttle control motor relay is stuck ON.	• Harness or connectors (Throttle control motor relay circuit is shorted) • Throttle control motor relay

DTC CONFIRMATION PROCEDURE

1.PRECONDITIONING

If DTC Confirmation Procedure has been previously conducted, always perform the following before conducting the next test.
1. Turn ignition switch OFF and wait at least 10 seconds.
2. Turn ignition switch ON.
3. Turn ignition switch OFF and wait at least 10 seconds.

TESTING CONDITION:
Before performing the following procedure, confirm that battery voltage is more than 8 V.

Witch DTC is detected?

P2100 >> GO TO 2.
P2103 >> GO TO 3.

2.PERFORM DTC CONFIRMATION PROCEDURE FOR DTC P2100

1. Turn ignition switch ON and wait at least 2 seconds.
2. Start engine and let it idle for 5 seconds.
3. Check DTC.

Is DTC detected?

YES >> Proceed to EC-850, "Diagnosis Procedure".
NO >> INSPECTION END

3.PERFORM DTC CONFIRMATION PROCEDURE FOR DTC P2103

1. Turn ignition switch ON and wait at least 1 second.
2. Check DTC.

Is DTC detected?

YES >> Proceed to EC-850, "Diagnosis Procedure".
NO >> INSPECTION END

Diagnosis Procedure

INFOID:0000000011489770

1.CHECK THROTTLE CONTROL MOTOR RELAY POWER SUPPLY CIRCUIT

1. Turn ignition switch OFF.
2. Disconnect ECM harness connector.
3. Disconnect IPDM E/R harness connector.
4. Check the continuity between IPDM E/R harness connector and ECM harness connector.

IPDM E/R		ECM		Continuity
Connector	Terminal	Connector	Terminal	
F19	57	F51	1	Existed

5. Also check harness for short to ground and short to power.

Is the inspection result normal?

YES >> GO TO 2.
NO >> Repair open circuit, short to ground or short to power in harness or connectors.

2. CHECK THROTTLE CONTROL MOTOR RELAY INPUT SIGNAL CIRCUIT

1. Check the continuity between IPDM E/R harness connector and ECM harness connector.

IPDM E/R		ECM		Continuity
Connector	Terminal	Connector	Terminal	
F24	65	F51	34	Existed

2. Also check harness for short to ground and short to power.

Is the inspection result normal?

YES >> Perform the trouble diagnosis for power supply circuit.
NO >> Repair open circuit, short to ground or short to power in harness or connectors.

P2101 ELECTRIC THROTTLE CONTROL FUNCTION

DTC Logic

INFOID:0000000011489771

DTC DETECTION LOGIC

NOTE:
If DTC P2101 is displayed with DTC P2100, first perform the trouble diagnosis for DTC P2100. Refer to EC-850, "DTC Logic".
If DTC P2101 is displayed with DTC P2119, first perform the trouble diagnosis for DTC P2119. Refer to EC-857, "DTC Logic".

DTC No.	CONSULT screen terms (Trouble diagnosis content)	DTC detecting condition	Possible cause
P2101	ETC FNCTN/CIRC-B1 (Throttle actuator “A” control motor circuit range/performance)	Electric throttle control function does not operate properly.	• Harness or connectors (Throttle control motor circuit is open or shorted) • Electric throttle control actuator

DTC CONFIRMATION PROCEDURE

1.PRECONDITIONING

If DTC Confirmation Procedure has been previously conducted, always perform the following before conducting the next test.
1. Turn ignition switch OFF and wait at least 10 seconds.
2. Turn ignition switch ON.
3. Turn ignition switch OFF and wait at least 10 seconds.

TESTING CONDITION:
Before performing the following procedure, confirm that battery voltage is more than 11 V when engine is running.

>> GO TO 2.

2.PERFORM DTC CONFIRMATION PROCEDURE

1. Turn ignition switch ON and wait at least 2 seconds.
2. Start engine and let it idle for 5 seconds.
3. Check DTC.

Is DTC detected?

YES >> Proceed to EC-852, "Diagnosis Procedure".
NO >> INSPECTION END

Diagnosis Procedure

INFOID:0000000011489772

1.CHECK THROTTLE CONTROL MOTOR RELAY INPUT SIGNAL

1. Check the voltage between ECM harness connector terminals.

ECM				Condition	Voltage
+		–			
Connector	Terminal	Condition	Terminal		
F51	34	E16	128	Ignition switch OFF	Approx. 0 V
				Ignition switch ON	Battery voltage

Is the inspection result normal?

YES >> GO TO 4.
NO >> GO TO 2.

2.CHECK THROTTLE CONTROL MOTOR RELAY POWER SUPPLY CIRCUIT

1. Turn ignition switch OFF.
2. Disconnect ECM harness connector.

3. Disconnect IPDM E/R harness connector.
4. Check the continuity between IPDM E/R harness connector and ECM harness connector.

IPDM E/R		ECM		Continuity
Connector	Terminal	Connector	Terminal	
F19	57	F51	1	Existed

5. Also check harness for short to ground and short to power.

Is the inspection result normal?

YES >> GO TO 3.
NO >> Repair open circuit, short to ground or short to power in harness or connectors.

3. CHECK THROTTLE CONTROL MOTOR RELAY INPUT SIGNAL CIRCUIT

1. Check the continuity between IPDM E/R harness connector and ECM harness connector.

IPDM E/R		ECM		Continuity
Connector	Terminal	Connector	Terminal	
F24	65	F51	34	Existed

2. Also check harness for short to ground and short to power.

Is the inspection result normal?

YES >> Perform the trouble diagnosis for power supply circuit.
NO >> Repair open circuit, short to ground or short to power in harness or connectors.

4. CHECK THROTTLE CONTROL MOTOR OUTPUT SIGNAL CIRCUIT FOR OPEN OR SHORT

1. Turn ignition switch OFF.
2. Disconnect electric throttle control actuator harness connector.
3. Disconnect ECM harness connector.
4. Check the continuity between electric throttle control actuator harness connector and ECM harness connector.

Electric throttle control actuator		ECM		Continuity
Connector	Terminal	Connector	Terminal	
F50	5	F51	5	Not existed
			2	Existed
	6		5	Existed
			2	Not existed

5. Also check harness for short to ground and short to power.

Is the inspection result normal?

YES >> GO TO 5.
NO >> Repair or replace malfunctioning part.

5. CHECK ELECTRIC THROTTLE CONTROL ACTUATOR VISUALLY

1. Remove the intake air duct. Refer to EM-24, "Removal and Installation".
2. Check if foreign matter is caught between the throttle valve and the housing.

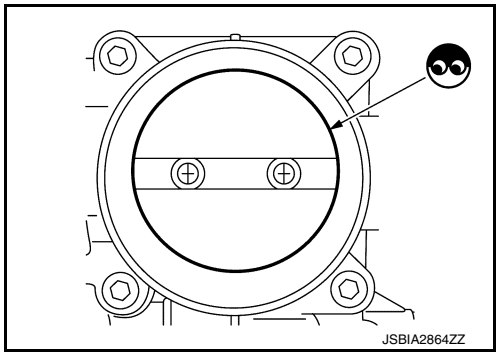

Is the inspection result normal?

YES >> GO TO 6.
NO >> Remove the foreign matter and clean the electric throttle control actuator inside, refer to EM-26, "Removal and Installation", and then perform throttle valve closed position learning. Refer to EC-660, "Description".

6. CHECK THROTTLE CONTROL MOTOR

Check throttle control motor. Refer to EC-854, "Component Inspection".

Is the inspection result normal?

YES >> GO TO 7.
NO >> Replace electric throttle control actuator. Refer to EM-26, "Removal and Installation".

7. CHECK INTERMITTENT INCIDENT

Check intermittent incident. Refer to GI-47, "Intermittent Incident".

Is the inspection result normal?

YES >> Replace electric throttle control actuator. Refer to EM-26, "Removal and Installation".
NO >> Repair or replace error-detected parts.

Component Inspection

INFOID:0000000011489773

1. CHECK THROTTLE CONTROL MOTOR

1. Turn ignition switch OFF.
2. Disconnect electric throttle control actuator harness connector.
3. Check resistance between electric throttle control actuator terminals as per the following.

Terminals	Resistance
5 and 6	Approx. 1 - 15 Ω [at 25°C (77°F)]

Is the inspection result normal?

YES >> INSPECTION END
NO >> Replace electric throttle control actuator. Refer to EM-26, "Removal and Installation".

P2118 THROTTLE CONTROL MOTOR

DTC Logic

INFOID:0000000011489774

DTC DETECTION LOGIC

DTC No.	CONSULT screen terms (Trouble diagnosis content)	DTC detecting condition	Possible cause
P2118	ETC MOT-B1 (Throttle actuator control motor current range/performance)	ECM detects short in both circuits between ECM and throttle control motor.	• Harness or connectors (Throttle control motor circuit is shorted.) • Electric throttle control actuator (Throttle control motor)

DTC CONFIRMATION PROCEDURE

1.PRECONDITIONING

If DTC Confirmation Procedure has been previously conducted, always perform the following before conducting the next test.

1. Turn ignition switch OFF and wait at least 10 seconds.
2. Turn ignition switch ON.
3. Turn ignition switch OFF and wait at least 10 seconds.

>> GO TO 2.

2.PERFORM DTC CONFIRMATION PROCEDURE

1. Turn ignition switch ON and wait at least 2 seconds.
2. Start engine and let it idle for 5 seconds.
3. Check DTC.

Is DTC detected?

YES >> Proceed to EC-855, "Diagnosis Procedure".
NO >> INSPECTION END

Diagnosis Procedure

INFOID:0000000011489775

1.CHECK THROTTLE CONTROL MOTOR OUTPUT SIGNAL CIRCUIT FOR OPEN AND SHORT

1. Disconnect electric throttle control actuator harness connector.
2. Disconnect ECM harness connector.
3. Check the continuity between electric throttle control actuator harness connector and ECM harness connector.

Electric throttle control actuator		ECM		Continuity
Connector	Terminal	Connector	Terminal	
F50	5	F51	5	Not existed
			2	Existed
	6		5	Existed
			2	Not existed

4. Also check harness for short to ground and short to power.

Is the inspection result normal?

YES >> GO TO 2.
NO >> Repair or replace malfunctioning part.

2.CHECK THROTTLE CONTROL MOTOR

Check throttle control motor. Refer to EC-856, "Component Inspection".

Is the inspection result normal?

YES >> Check intermittent incident. Refer to GI-47, "Intermittent Incident".

NO >> Replace electric throttle control actuator. Refer to EM-26, "Removal and Installation".

Component Inspection

INFOID:0000000011489776

1. CHECK THROTTLE CONTROL MOTOR

1. Turn ignition switch OFF.
2. Disconnect electric throttle control actuator harness connector.
3. Check resistance between electric throttle control actuator terminals as per the following.

Terminals	Resistance
5 and 6	Approx. 1 - 15 Ω [at 25°C (77°F)]

Is the inspection result normal?

YES >> INSPECTION END
NO >> Replace electric throttle control actuator. Refer to EM-26, "Removal and Installation".

P2119 ELECTRIC THROTTLE CONTROL ACTUATOR

DTC Logic

INFOID:0000000011489777

DTC DETECTION LOGIC

DTC No.	CONSULT screen terms (Trouble diagnosis content)	DTC detecting condition		Possible cause
P2119	ETC ACTR-B1 (Throttle actuator control throttle body range/performance)	A)	Electric throttle control actuator does not function properly due to the return spring malfunction.	• Electric throttle control actuator
		B)	Throttle valve opening angle in fail-safe mode is not in specified range.	
		C)	ECM detects that the throttle valve is stuck open.	

DTC CONFIRMATION PROCEDURE

1.PRECONDITIONING

If DTC Confirmation Procedure has been previously conducted, always perform the following before conducting the next test.

1. Turn ignition switch OFF and wait at least 10 seconds.
2. Turn ignition switch ON.
3. Turn ignition switch OFF and wait at least 10 seconds.

>> GO TO 2.

2.PERFORM DTC CONFIRMATION PROCEDURE FOR MALFUNCTION A AND B

1. Turn ignition switch ON and wait at least 1 second.
2. Shift selector lever to the D position and wait at least 3 seconds.
3. Shift selector lever to the P position.
4. Turn ignition switch OFF and wait at least 10 seconds.
5. Turn ignition switch ON and wait at least 1 second.
6. Shift selector lever to the D position and wait at least 3 seconds.
7. Shift selector lever to the P position.
8. Turn ignition switch OFF, wait at least 10 seconds, and then turn ON.
9. Check DTC.

Is DTC detected?

YES >> Proceed to EC-857, "Diagnosis Procedure".
NO >> GO TO 3.

3.PERFORM DTC CONFIRMATION PROCEDURE FOR MALFUNCTION C

1. Turn ignition switch ON and wait at least 1 second.
2. Shift selector lever to the D position and wait at least 3 seconds.
3. Shift selector lever to the N or P position.
4. Start engine and let it idle for 3 seconds.
5. Check DTC.

Is DTC detected?

YES >> Proceed to EC-857, "Diagnosis Procedure".
NO >> INSPECTION END

Diagnosis Procedure

INFOID:0000000011489778

1.CHECK ELECTRIC THROTTLE CONTROL ACTUATOR VISUALLY

1. Turn ignition switch OFF.
2. Remove the intake air duct. Refer to EM-26, "Removal and Installation".

3. Check if foreign matter is caught between the throttle valve and the housing.

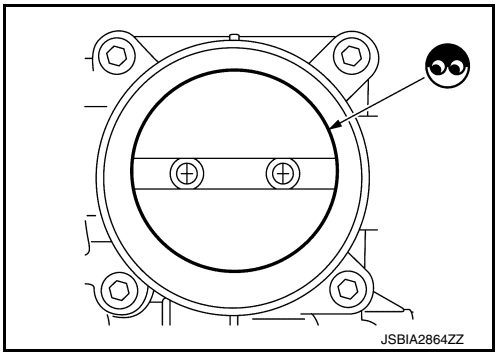

Is the inspection result normal?

YES >> GO TO 2.
NO >> Remove the foreign matter and clean the electric throttle control actuator inside, and then perform throttle valve closed position learning. Refer to EC-660, "Description".

2. REPLACE ELECTRIC THROTTLE CONTROL ACTUATOR

1. Replace electric throttle control actuator. Refer to EM-26, "Removal and Installation".
2. Go to EC-661, "Description".

>> INSPECTION END

P2122, P2123 APP SENSOR

DTC Logic

INFOID:0000000011489779

DTC DETECTION LOGIC

NOTE:
If DTC P2122 or P2123 is displayed with DTC P0643, first perform the trouble diagnosis for DTC P0643. Refer to EC-806, "DTC Logic".

DTC No.	CONSULT screen terms (Trouble diagnosis content)	DTC detecting condition	Possible cause
P2122	APP SEN 1/CIRC (Throttle/Pedal position sensor/ switch “D” circuit low)	An excessively low voltage from the APP sensor 1 is sent to ECM.	• Harness or connectors (APP sensor 1 circuit is open or shorted.) • Accelerator pedal position sensor (APP sensor 1)
P2123	APP SEN 1/CIRC (Throttle/Pedal position sensor/ switch “D” circuit high)	An excessively high voltage from the APP sensor 1 is sent to ECM.	

DTC CONFIRMATION PROCEDURE

1.PRECONDITIONING

If DTC Confirmation Procedure has been previously conducted, always perform the following before conducting the next test.
1. Turn ignition switch OFF and wait at least 10 seconds.
2. Turn ignition switch ON.
3. Turn ignition switch OFF and wait at least 10 seconds.

TESTING CONDITION:
Before performing the following procedure, confirm that battery voltage is more than 10 V at idle.

>> GO TO 2.

2.PERFORM DTC CONFIRMATION PROCEDURE

1. Start engine and let it idle for 1 second.
2. Check DTC.

Is DTC detected?

YES >> Proceed to EC-859, "Diagnosis Procedure".
NO >> INSPECTION END

Diagnosis Procedure

INFOID:0000000011489780

1.CHECK APP SENSOR 1 POWER SUPPLY

1. Disconnect accelerator pedal position (APP) sensor harness connector.
2. Turn ignition switch ON.
3. Check the voltage between APP sensor harness connector and ground.

APP sensor		Ground	Voltage (Approx.)
Connector	Terminal		
E31	4	Ground	5 V

Is the inspection result normal?

YES >> GO TO 2.
NO >> Repair open circuit, short to ground or short to power in harness or connectors.

2.CHECK APP SENSOR 1 GROUND CIRCUIT

1. Turn ignition switch OFF.
2. Disconnect ECM harness connector.
3. Check the continuity between APP sensor harness connector and ECM harness connector.

APP sensor		ECM		Continuity
Connector	Terminal	Connector	Terminal	
E31	2	E16	100	Existed

4. Also check harness for short to ground and short to power.

Is the inspection result normal?

YES >> GO TO 3.
NO >> Repair open circuit, short to ground or short to power in harness or connectors.

3. CHECK APP SENSOR 1 INPUT SIGNAL CIRCUIT

1. Check the continuity between APP sensor harness connector and ECM harness connector.

APP sensor		ECM		Continuity
Connector	Terminal	Connector	Terminal	
E31	3	E16	97	Existed

2. Also check harness for short to ground and short to power.

Is the inspection result normal?

YES >> GO TO 4.
NO >> Repair open circuit, short to ground or short to power in harness or connectors.

4. CHECK APP SENSOR

Check APP sensor. Refer to EC-860, "Component Inspection".

Is the inspection result normal?

YES >> Check intermittent incident. Refer to GI-47, "Intermittent Incident".
NO >> Replace accelerator pedal assembly. Refer to ACC-3, "Removal and Installation".

Component Inspection

INFOID:0000000011489781

1. CHECK ACCELERATOR PEDAL POSITION SENSOR

1. Reconnect all harness connectors disconnected.
2. Turn ignition switch ON.
3. Check the voltage between ECM harness connector terminals under the following conditions.

ECM			Condition		Voltage (V)
Connector	+	–			
	Terminal				
E16	97	100	Accelerator pedal	Fully released	0.5 - 1.0
				Fully depressed	4.2 - 4.8
	98	116		Fully released	0.25 - 0.50
				Fully depressed	2.0 - 2.5

Is the inspection result normal?

YES >> INSPECTION END
NO >> Replace accelerator pedal assembly. Refer to ACC-3, "Removal and Installation".

P2127, P2128 APP SENSOR

DTC Logic

INFOID:0000000011489782

DTC DETECTION LOGIC

DTC No.	CONSULT screen terms (Trouble diagnosis content)	DTC detecting condition	Possible cause
P2127	APP SEN 2/CIRC (Throttle/Pedal position sensor/switch “E” circuit low)	An excessively low voltage from the APP sensor 2 is sent to ECM.	• Harness or connectors (APP sensor 2 circuit is open or shorted.) [CKP sensor (POS) circuit is shorted.] (Refrigerant pressure sensor circuit is shorted.) (EVAP control system pressure sensor circuit is shorted.) • Accelerator pedal position sensor (APP sensor 2) • Crankshaft position sensor (POS) • EVAP control system pressure sensor • Refrigerant pressure sensor • Sensor power supply 2 circuit
P2128	APP SEN 2/CIRC (Throttle/Pedal position sensor/switch “E” circuit high)	An excessively high voltage from the APP sensor 2 is sent to ECM.	

DTC CONFIRMATION PROCEDURE

1.PRECONDITIONING

If DTC Confirmation Procedure has been previously conducted, always perform the following before conducting the next test.
1. Turn ignition switch OFF and wait at least 10 seconds.
2. Turn ignition switch ON.
3. Turn ignition switch OFF and wait at least 10 seconds.

TESTING CONDITION:
Before performing the following procedure, confirm that battery voltage is more than 8 V at idle.

>> GO TO 2.

2.PERFORM DTC CONFIRMATION PROCEDURE

1. Start engine and let it idle for 1 second.
2. Check DTC.

Is DTC detected?

YES >> Proceed to EC-861, "Diagnosis Procedure".
NO >> INSPECTION END

Diagnosis Procedure

INFOID:0000000011489783

1.CHECK APP SENSOR 2 POWER SUPPLY

1. Disconnect accelerator pedal position (APP) sensor harness connector.
2. Turn ignition switch ON.
3. Check the voltage between APP sensor harness connector and ground.

APP sensor		Ground	Voltage (V)
Connector	Terminal		
E31	5	Ground	Approx. 5

Is the inspection result normal?

YES >> GO TO 4.
NO >> GO TO 2.

2.CHECK APP SENSOR 2 POWER SUPPLY CIRCUIT

1. Turn ignition switch OFF.

2. Disconnect ECM harness connector.
3. Check the continuity between APP sensor harness connector and ECM harness connector.

APP sensor		ECM		Continuity
Connector	Terminal	Connector	Terminal	
E31	5	E16	103	Existed

Is the inspection result normal?

YES >> GO TO 3.
NO >> Repair open circuit.

3. CHECK SENSOR POWER SUPPLY 2 CIRCUIT

Check sensor power supply 2 circuit. Refer to EC-900, "Diagnosis Procedure".

Is the inspection result normal?

YES >> Perform the trouble diagnosis for power supply circuit.
NO >> Repair or replace error-detected parts.

4. CHECK APP SENSOR 2 GROUND CIRCUIT

1. Turn ignition switch OFF.
2. Disconnect ECM harness connector.
3. Check the continuity between APP sensor harness connector and ECM harness connector.

APP sensor		ECM		Continuity
Connector	Terminal	Connector	Terminal	
E31	1	E16	116	Existed

4. Also check harness for short to ground and short to power.

Is the inspection result normal?

YES >> GO TO 5.
NO >> Repair open circuit, short to ground or short to power in harness or connectors.

5. CHECK APP SENSOR 2 INPUT SIGNAL CIRCUIT

1. Check the continuity between APP sensor harness connector and ECM harness connector.

APP sensor		ECM		Continuity
Connector	Terminal	Connector	Terminal	
E31	6	E16	98	Existed

2. Also check harness for short to ground and short to power.

Is the inspection result normal?

YES >> GO TO 6.
NO >> Repair open circuit, short to ground or short to power in harness or connectors.

6. CHECK APP SENSOR

Check APP sensor. Refer to EC-862, "Component Inspection".

Is the inspection result normal?

YES >> Check intermittent incident. Refer to GI-47, "Intermittent Incident".
NO >> Replace accelerator pedal assembly. Refer to ACC-3, "Removal and Installation".

Component Inspection

INFOID:0000000011489784

1. CHECK ACCELERATOR PEDAL POSITION SENSOR

1. Reconnect all harness connectors disconnected.
2. Turn ignition switch ON.
3. Check the voltage between ECM harness connector terminals under the following conditions.

ECM			Condition		Voltage (V)
Connector	+	–			
	Terminal				
E16	97	100	Accelerator pedal	Fully released	0.5 - 1.0
				Fully depressed	4.2 - 4.8
	98	116		Fully released	0.25 - 0.50
				Fully depressed	2.0 - 2.5

Is the inspection result normal?

YES >> INSPECTION END

NO >> Replace accelerator pedal assembly. Refer to ACC-3, "Removal and Installation".

P2135 TP SENSOR

DTC Logic

INFOID:0000000011489785

DTC DETECTION LOGIC

NOTE:
If DTC P2135 is displayed with DTC P0643, first perform the trouble diagnosis for DTC P0643. Refer to EC-806, "DTC Logic".

DTC No.	CONSULT screen terms (Trouble diagnosis content)	DTC detecting condition	Possible cause
P2135	TP SENSOR-B1 (Throttle/Pedal position sensor/switch “A” / “B” voltage correlation)	Rationally incorrect voltage is sent to ECM compared with the signals from TP sensor 1 and TP sensor 2.	• Harness or connector (TP sensor 1 or 2 circuit is open or shorted.) • Electric throttle control actuator (TP sensor 1 or 2)

DTC CONFIRMATION PROCEDURE

1.PRECONDITIONING

If DTC Confirmation Procedure has been previously conducted, always perform the following before conducting the next test.
1. Turn ignition switch OFF and wait at least 10 seconds.
2. Turn ignition switch ON.
3. Turn ignition switch OFF and wait at least 10 seconds.

TESTING CONDITION:
Before performing the following procedure, confirm that battery voltage is more than 8 V at idle.

>> GO TO 2.

2.PERFORM DTC CONFIRMATION PROCEDURE

1. Start engine and let it idle for 1 second.
2. Check DTC.

Is DTC detected?

YES >> Proceed to EC-864, "Diagnosis Procedure".
NO >> INSPECTION END

Diagnosis Procedure

INFOID:0000000011489786

1.CHECK THROTTLE POSITION SENSOR POWER SUPPLY

1. Disconnect electric throttle control actuator harness connector.
2. Turn ignition switch ON.
3. Check the voltage between electric throttle control actuator harness connector and ground.

Electric throttle control actuator		Ground	Voltage (Approx.)
Connector	Terminal		
F50	1	Ground	5 V

Is the inspection result normal?

YES >> GO TO 2.
NO >> Repair open circuit, short to ground or short to power in harness or connectors.

2.CHECK THROTTLE POSITION SENSOR GROUND CIRCUIT

1. Turn ignition switch OFF.
2. Disconnect ECM harness connector.
3. Check the continuity between electric throttle control actuator harness connector and ECM harness connector.

Electric throttle control actuator		ECM		Continuity
Connector	Terminal	Connector	Terminal	
F50	4	F51	19	Existed

4. Also check harness for short to ground and short to power.

Is the inspection result normal?

YES >> GO TO 3.
NO >> Repair open circuit, short to ground or short to power in harness or connectors.

3. CHECK THROTTLE POSITION SENSOR INPUT SIGNAL CIRCUIT

1. Check the continuity between electric throttle control actuator harness connector and ECM harness connector.

Electric throttle control actuator		ECM		Continuity
Connector	Terminal	Connector	Terminal	
F50	2	F51	22	Existed
	3		23	

2. Also check harness for short to ground and short to power.

Is the inspection result normal?

YES >> GO TO 4.
NO >> Repair open circuit, short to ground or short to power in harness or connectors.

4. CHECK THROTTLE POSITION SENSOR

Check throttle position sensor. Refer to EC-865, "Component Inspection".

Is the inspection result normal?

YES >> Check intermittent incident. Refer to GI-47, "Intermittent Incident".
NO >> Replace electric throttle control actuator. Refer to EM-26, "Removal and Installation".

Component Inspection

INFOID:0000000011489787

1. CHECK THROTTLE POSITION SENSOR

1. Turn ignition switch OFF.
2. Reconnect all harness connectors disconnected.
3. Perform EC-660, "Description".
4. Turn ignition switch ON.
5. Shift selector lever position to D.
6. Check the voltage between ECM harness connector terminals under the following conditions.

ECM			Condition		Voltage
Connector	+	–			
	Terminal				
F51	22	19	Accelerator pedal	Fully released	More than 0.36 V
				Fully depressed	Less than 4.75 V
	23			Fully released	Less than 4.75 V
				Fully depressed	More than 0.36 V

Is the inspection result normal?

YES >> INSPECTION END
NO >> Replace electric throttle control actuator. Refer to EM-26, "Removal and Installation".

P2138 APP SENSOR

DTC Logic

INFOID:0000000011489788

DTC DETECTION LOGIC

NOTE:
If DTC P2138 is displayed with DTC P0643, first perform the trouble diagnosis for DTC P0643. Refer to EC-806, "DTC Logic".

DTC No.	CONSULT screen terms (Trouble diagnosis content)	DTC detecting condition	Possible cause
P2138	APP SENSOR (Throttle/Pedal position sensor/switch “D” / “E” voltage correlation)	Rationally incorrect voltage is sent to ECM compared with the signals from APP sensor 1 and APP sensor 2.	• Harness or connector (APP sensor 1 or 2 circuit is open or shorted.) [CKP sensor (POS) circuit is shorted.] (Refrigerant pressure sensor circuit is shorted.) (EVAP control system pressure sensor circuit is shorted.) • Accelerator pedal position sensor (APP sensor 1 or 2) • Crankshaft position sensor (POS) • EVAP control system pressure sensor • Refrigerant pressure sensor • Sensor power supply 2 circuit

DTC CONFIRMATION PROCEDURE

1.PRECONDITIONING

If DTC Confirmation Procedure has been previously conducted, always perform the following before conducting the next test.
1. Turn ignition switch OFF and wait at least 10 seconds.
2. Turn ignition switch ON.
3. Turn ignition switch OFF and wait at least 10 seconds.

TESTING CONDITION:
Before performing the following procedure, confirm that battery voltage is more than 8 V at idle.

>> GO TO 2.

2.PERFORM DTC CONFIRMATION PROCEDURE

1. Start engine and let it idle for 1 second.
2. Check DTC.

Is DTC detected?

YES >> Proceed to EC-866, "Diagnosis Procedure".
NO >> INSPECTION END

Diagnosis Procedure

INFOID:0000000011489789

1.CHECK APP SENSOR 1 POWER SUPPLY

1. Disconnect accelerator pedal position (APP) sensor harness connector.
2. Turn ignition switch ON.
3. Check the voltage between APP sensor harness connector and ground.

APP sensor		Ground	Voltage (Approx.)
Connector	Terminal		
E31	4	Ground	5 V

Is the inspection result normal?

YES >> GO TO 3.

NO >> GO TO 2.

2. CHECK APP SENSOR 1 POWER SUPPLY CIRCUIT

1. Turn ignition switch OFF.
2. Disconnect ECM harness connector.
3. Check the continuity between APP sensor harness connector and ECM harness connector.

APP sensor		ECM		Continuity
Connector	Terminal	Connector	Terminal	
E31	4	E16	99	Existed

Is the inspection result normal?

YES >> GO TO 3.
NO >> Repair or replace error-detected parts.

3. CHECK APP SENSOR 2 POWER SUPPLY

1. Turn ignition switch ON.
2. Check the voltage between APP sensor harness connector and ground.

APP sensor		Ground	Voltage (Approx.)
Connector	Terminal		
E31	5	Ground	5 V

Is the inspection result normal?

YES >> GO TO 6.
NO >> GO TO 4.

4. CHECK APP SENSOR 2 POWER SUPPLY CIRCUIT

1. Turn ignition switch OFF.
2. Disconnect ECM harness connector.
3. Check the continuity between APP sensor harness connector and ECM harness connector.

APP sensor		ECM		Continuity
Connector	Terminal	Connector	Terminal	
E31	5	E16	103	Existed

Is the inspection result normal?

YES >> GO TO 5.
NO >> Repair or replace error-detected parts.

5. CHECK SENSOR POWER SUPPLY 2 CIRCUIT

Check sensor power supply 2 circuit. Refer to EC-900, "Diagnosis Procedure".

Is the inspection result normal?

YES >> Perform the trouble diagnosis for power supply circuit.
NO >> Repair or replace error-detected parts.

6. CHECK APP SENSOR GROUND CIRCUIT

1. Turn ignition switch OFF.
2. Disconnect ECM harness connector.
3. Check the continuity between APP sensor harness connector and ECM harness connector.

APP sensor		ECM		Continuity
Connector	Terminal	Connector	Terminal	
E31	2	E16	100	Existed
	1		116	

4. Also check harness for short to ground and short to power.

Is the inspection result normal?

YES >> GO TO 7.
NO >> Repair open circuit, short to ground or short to power in harness or connectors.

7. CHECK APP SENSOR INPUT SIGNAL CIRCUIT

1. Check the continuity between APP sensor harness connector and ECM harness connector.

APP sensor		ECM		Continuity
Connector	Terminal	Connector	Terminal	
E31	3	E16	97	Existed
	6		98	

2. Also check harness for short to ground and short to power.

Is the inspection result normal?

YES >> GO TO 8.
NO >> Repair open circuit, short to ground or short to power in harness or connectors.

8. CHECK APP SENSOR

Check APP sensor. Refer to EC-868, "Component Inspection".

Is the inspection result normal?

YES >> Check intermittent incident. Refer to GI-47, "Intermittent Incident".
NO >> Replace accelerator pedal assembly. Refer to ACC-3, "Removal and Installation".

Component Inspection

INFOID:0000000011489790

1. CHECK ACCELERATOR PEDAL POSITION SENSOR

1. Reconnect all harness connectors disconnected.
2. Turn ignition switch ON.
3. Check the voltage between ECM harness connector terminals under the following conditions.

ECM			Condition		Voltage (V)
Connector	+	–			
	Terminal				
E16	97	100	Accelerator pedal	Fully released	0.5 - 1.0
				Fully depressed	4.2 - 4.8
	98	116		Fully released	0.25 - 0.50
				Fully depressed	2.0 - 2.5

Is the inspection result normal?

YES >> INSPECTION END
NO >> Replace accelerator pedal assembly. Refer to ACC-3, "Removal and Installation".

ASCD INDICATOR

Component Function Check

INFOID:0000000011489791

1.CHECK ASCD INDICATOR FUNCTION

Check ASCD indicator under the following conditions.

ASCD INDICATOR	CONDITION		SPECIFICATION
CRUISE	• Ignition switch: ON	• MAIN switch: Pressed at the 1st time →at the 2nd time	ON → OFF

Is the inspection result normal?

YES >> INSPECTION END
NO >> Proceed to EC-869, "Diagnosis Procedure".

Diagnosis Procedure

INFOID:0000000011489792

1.CHECK DTC

Check that DTC UXXXX is not displayed.

Is the inspection result normal?

YES >> GO TO 2.
NO >> Perform trouble diagnosis for DTC UXXXX.

2.CHECK COMBINATION METER FUNCTION

Check combination meter function. Refer to MWI-18, "CONSULT Function (METER/M&A)".

Is the inspection result normal?

YES >> GO TO 3.
NO >> Repair or replace malfunctioning part.

3.CHECK INTERMITTENT INCIDENT

Check intermittent incident. Refer to GI-47, "Intermittent Incident".

Is the inspection result normal?

YES >> Replace combination meter. Refer to MWI-85, "Removal and Installation".
NO >> Repair or replace error-detected parts.

BRAKE PEDAL POSITION SWITCH

Component Function Check

INFOID:0000000011489793

1. CHECK BRAKE PEDAL POSITION SWITCH FUNCTION

With CONSULT

1. Turn ignition switch ON.
2. Select “BRAKE SW1” in “DATA MONITOR” mode with CONSULT.
3. Check “BRAKE SW1” indication under the following conditions.

Monitor item	Condition		Indication
BRAKE SW1	Brake pedal	Slightly depressed	OFF
		Fully released	ON

Without CONSULT

1. Turn ignition switch ON.
2. Check the voltage between ECM harness connector terminals.

ECM			Condition		Voltage
Connector	+	–			
	Terminal				
E16	126	128	Brake pedal	Slightly depressed	Approx. 0 V
				Fully released	Battery voltage

Is the inspection result normal?

YES >> INSPECTION END
NO >> Proceed to EC-870, "Diagnosis Procedure".

Diagnosis Procedure

INFOID:0000000011489794

1. CHECK BRAKE PEDAL POSITION SWITCH POWER SUPPLY CIRCUIT

1. Turn ignition switch OFF.
2. Disconnect brake pedal position switch harness connector.
3. Turn ignition switch ON.
4. Check the voltage between brake pedal position switch harness connector and ground.

Brake pedal position switch		Ground	Voltage
Connector	Terminal		
E76	1	Ground	Battery voltage

Is the inspection result normal?

YES >> GO TO 3.
NO >> GO TO 2.

2. CHECK BRAKE PEDAL POSITION SWITCH POWER SUPPLY CIRCUIT

1. Turn ignition switch OFF.
2. Disconnect fuse block (J/B) harness connector.
3. Check the continuity between brake pedal position switch harness connector and fuse block (J/B) harness connector.

Brake pedal position switch		Fuse block (J/B)		Continuity
Connector	Terminal	Connector	Terminal	
E76	1	E28	1M	Existed

Is the inspection result normal?

YES >> Perform the trouble diagnosis for power supply circuit.

NO >> Repair or replace error-detected parts.

3. CHECK BRAKE PEDAL POSITION SWITCH INPUT SIGNAL CIRCUIT FOR OPEN AND SHORT

1. Turn ignition switch OFF.
2. Disconnect ECM harness connector.
3. Check the continuity between brake pedal position switch harness connector and ECM harness connector.

Brake pedal position switch		ECM		Continuity
Connector	Terminal	Connector	Terminal	
E76	2	E16	126	Existed

4. Also check harness for short to ground and short to power.

Is the inspection result normal?

YES >> GO TO 4.
NO >> Repair open circuit, short to ground or short to power in harness or connectors.

4. CHECK BRAKE PEDAL POSITION SWITCH

Check brake pedal position switch. Refer to EC-871, "Component Inspection (Brake Pedal Position Switch)".

Is the inspection result normal?

YES >> Check intermittent incident. Refer to GI-47, "Intermittent Incident".
NO >> Replace brake pedal position switch. Refer to BR-20, "Removal and Installation".

Component Inspection (Brake Pedal Position Switch)

INFOID:0000000011489795

1. CHECK BRAKE PEDAL POSITION SWITCH-I

1. Turn ignition switch OFF.
2. Disconnect BRAKE pedal position switch harness connector.
3. Check the continuity between BRAKE pedal position switch terminals under the following conditions.

Terminals	Condition		Continuity
1 and 2	Brake pedal	Fully released	Existed
		Slightly depressed	Not existed

Is the inspection result normal?

YES >> INSPECTION END
NO >> GO TO 2.

2. CHECK BRAKE PEDAL POSITION SWITCH-II

1. Adjust BRAKE pedal position switch installation. Refer to BR-15, "Adjustment".
2. Check the continuity between BRAKE pedal position switch terminals under the following conditions.

Terminals	Condition		Continuity
1 and 2	Brake pedal	Fully released	Existed
		Slightly depressed	Not existed

Is the inspection result normal?

YES >> INSPECTION END
NO >> Replace BRAKE pedal position switch. Refer to BR-20, "Removal and Installation".

COOLING FAN

Component Function Check

INFOID:0000000011489796

1. CHECK COOLING FAN FUNCTION

With CONSULT
1. Turn ignition switch ON.
2. Perform “FAN DUTY CONTROL” in “ACTIVE TEST” mode of “ENGINE” using CONSULT.
3. Check that cooling fan speed varies according to the percentage.

Without CONSULT
1. Activate IPDM E/R auto active test and check cooling fan motors operation. Refer to PCS-8, "Diagnosis Description".
2. Check that cooling fan operates.

Is the inspection result normal?

YES >> INSPECTION END
NO >> Proceed to EC-872, "Diagnosis Procedure".

Diagnosis Procedure

INFOID:0000000011489797

1. CHECK COOLING FAN CONTROL MODULE POWER SUPPLY

1. Turn ignition switch OFF.
2. Disconnect cooling fan control nodule harness connector.
3. Turn ignition switch ON.
4. Check the voltage between cooling fan control nodule harness connector and ground.

+		–	Voltage
Cooling fan control module			
Connector	Terminal		
E225	3	Ground	Battery voltage

Is the inspection result normal?

YES >> GO TO 5.
NO >> GO TO 2.

2. CHECK COOLING FAN CONTROL MODULE POWER SUPPLY CIRCUIT

1. Turn ignition switch OFF.
2. Disconnect cooling fan relay harness connector.
3. Check the continuity between cooling fan control nodule harness connector and cooling fan relay harness connector.

+		–		Continuity
Cooling fan control module		Cooling fan relay		
Connector	Terminal	Connector	Terminal	
E225	3	E82	5	Existed

4. Also check harness for short to ground.

Is the inspection result normal?

YES >> GO TO 3.
NO >> Repair or replace error-detected parts.

3. CHECK COOLING FAN RELAY POWER SUPPLY CIRCUIT

1. Disconnect IPDM E/R harness connector.
2. Check the continuity between cooling fan relay harness connector and IPDM E/R harness connector.

+		–		Continuity
Cooling fan relay		IPDM E/R		
Connector	Terminal	Connector	Terminal	
E82	2	E119	27	Existed

3. Also check harness for short to ground.

Is the inspection result normal?

YES >> GO TO 4.
NO >> Repair or replace error-detected parts.

4. CHECK COOLING FAN RELAY

Check cooling fan relay. Refer to EC-874, "Component Inspection (Cooling Fan Relay)".

Is the inspection result normal?

YES >> Perform the trouble diagnosis for power supply circuit.
NO >> Replace cooling fan relay.

5. CHECK COOLING FAN CONTROL MODULE GROUND CIRCUIT

1. Turn ignition switch OFF.
2. Check the continuity between cooling fan control nodule harness connector and ground.

+		–	Continuity
Cooling fan control module			
Connector	Terminal		
E225	1	Ground	Existed

3. Also check harness for short to power.

Is the inspection result normal?

YES >> GO TO 6.
NO >> Repair or replace error-detected parts.

6. CHECK COOLING FAN CONTROL SIGNAL CIRCUIT

1. Disconnect IPDM E/R harness connector.
2. Check the continuity between cooling fan control nodule harness connector and IPDM E/R harness connector.

+		–		Continuity
Cooling fan control module		IPDM E/R		
Connector	Terminal	Connector	Terminal	
E225	2	E218	93	Existed

3. Also check harness for short to ground and to power.

Is the inspection result normal?

YES >> GO TO 7.
NO >> Repair or replace error-detected parts.

7. CHECK COOLING FAN CONTROL MODULE OUTPUT SIGNAL CIRCUIT

1. Reconnect all harness connectors disconnected.
2. Disconnect cooling fan control module harness connector.
3. Turn ignition switch ON.
4. Check the voltage between cooling fan control module terminals and ground.

+		–	Voltage
Cooling fan control module			
Connector	Terminal		
E245	4	Ground	Battery voltage
E246	6		

Is the inspection result normal?

YES >> GO TO 8.
NO >> Repair or replace error-detected parts.

8. CHECK COOLING FAN MOTORS -1 AND -2

Check the cooling fan motor. Refer to EC-874, "Component Inspection (Cooling Fan Motor)".

YES >> Check intermittent incident. Refer to GI-47, "Intermittent Incident".
NO >> Replace cooling motor. Refer to CO-17, "Removal and Installation".

Component Inspection (Cooling Fan Motor)

INFOID:0000000011489798

1. CHECK COOLING FAN MOTOR

1. Turn ignition switch OFF.
2. Disconnect cooling fan control module harness connector.
3. Supply cooling fan control module harness connector terminals with battery voltage as per the following, and check operation.

Cooling fan control module				Operation
Motor	Connector	Terminal		
		+	–	
1	E245	4	5	Cooling fan operates.
2	E246	6	7	

Is the inspection result normal?

YES >> INSPECTION END
NO >> Replace malfunctioning cooling fan motor. Refer to CO-17, "Removal and Installation".

Component Inspection (Cooling Fan Relay)

INFOID:0000000011489799

1. CHECK COOLING FAN RELAY

1. Turn ignition switch OFF.
2. Remove cooling fan relay.
3. Check the continuity between cooling fan relay terminals under the following conditions.

Cooling fan relay		Conditions	Continuity
+	–		
Terminal			
3	5	12 V direct current supply between terminals ① and ②	Existed
		No current supply	Not existed

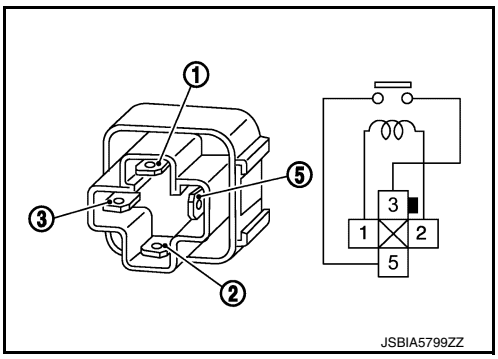

Is the inspection result normal?

YES >> INSPECTION END
NO >> Replace cooling fan relay.

ELECTRICAL LOAD SIGNAL

Description

INFOID:0000000011489800

The electrical load signal (Headlamp switch signal, rear window defogger switch signal, etc.) is transferred via the CAN communication.

Component Function Check

INFOID:0000000011489801

1. CHECK REAR WINDOW DEFOGGER SWITCH FUNCTION

1. Turn ignition switch ON.
2. Connect CONSULT and select “DATA MONITOR” mode.
3. Select “LOAD SIGNAL” and check indication under the following conditions.

Monitor item	Condition		Indication
LOAD SIGNAL	Rear window defogger switch	ON	ON
		OFF	OFF

Is the inspection result normal?

YES >> GO TO 2.
NO >> Proceed to EC-875, "Diagnosis Procedure".

2. CHECK LIGHTING SWITCH FUNCTION

Check “LOAD SIGNAL” indication under the following conditions.

Monitor item	Condition		Indication
LOAD SIGNAL	Lighting switch	ON at 2nd position	ON
		OFF	OFF

Is the inspection result normal?

YES >> GO TO 3.
NO >> Proceed to EC-875, "Diagnosis Procedure".

3. CHECK HEATER FAN CONTROL SWITCH FUNCTION

Select “HEATER FAN SW” and check indication under the following conditions.

Monitor item	Condition		Indication
HEATER FAN SW	Heater fan control switch	ON	ON
		OFF	OFF

Is the inspection result normal?

YES >> INSPECTION END
NO >> Proceed to EC-875, "Diagnosis Procedure".

Diagnosis Procedure

INFOID:0000000011489802

1. INSPECTION START

Confirm the malfunctioning circuit (rear window defogger, headlamp or heater fan). Refer to EC-875, "Component Function Check".

Which circuit is related to the incident?

Rear window defogger>>GO TO 2.
Headlamp>>GO TO 3.
Heater fan>>GO TO 4.

2. CHECK REAR WINDOW DEFOGGER SYSTEM

Check rear window defogger system. Refer to DEF-23, "Work Flow".

>> INSPECTION END

3. CHECK HEADLAMP SYSTEM

Check headlamp system. Refer to EXL-107, "Work Flow".

>> INSPECTION END

4. CHECK HEATER FAN CONTROL SYSTEM

Check heater fan control system. Refer to VTL-7, "System Description".

>> INSPECTION END

ELECTRONIC CONTROLLED ENGINE MOUNT

Component Function Check

INFOID:0000000011489803

1. CHECK OVERALL FUNCTION

1. Start engine and warm it up to normal operating temperature.
2. Shift selector position is D while depressing the brake pedal and parking brake pedal.
3. Disconnect electronic controlled engine mount control solenoid valve harness connector.
4. Check that body vibration increases compared to the condition of step 2 above (with vehicle stopped).

Is the inspection result normal?

YES >> INSPECTION END
NO >> EC-877, "Diagnosis Procedure".

Diagnosis Procedure

INFOID:0000000011489804

1. CHECK VACUUM SOURCE

1. Turn ignition switch OFF.
2. Reconnect electronic controlled engine mount control solenoid valve harness connector.
3. Disconnect vacuum hose connected to electronic controlled engine mount.
4. Start engine and let it idle.
5. Check vacuum hose for vacuum existence.

Vacuum should exist.

Is the inspection result normal?

YES >> GO TO 7.
NO >> GO TO 2.

2. CHECK VACUUM HOSES AND VACUUM GALLERY

1. Turn ignition switch OFF.
2. Check vacuum hoses and vacuum gallery for clogging, cracks or improper connection. Refer to EC-558, "ELECTRONIC CONTROLLED ENGINE MOUNT : System Description".

Is the inspection result normal?

YES >> GO TO 3.
NO >> Repair or replace vacuum hoses and vacuum gallery.

3. CHECK ELECTRONIC CONTROLLED ENGINE MOUNT CONTROL SOLENOID VALVE POWER SUPPLY

1. Disconnect electronic controlled engine mount control solenoid valve harness connector.
2. Turn ignition switch ON.
3. Check the voltage between front electronic controlled engine mount harness connector and ground.

Electronic controlled engine mount control solenoid valve		Ground	Voltage
Connector	Terminal		
F64	1	Ground	Battery voltage

Is the inspection result normal?

YES >> GO TO 5.
NO >> GO TO 4.

4. CHECK ELECTRONIC CONTROLLED ENGINE MOUNT CONTROL SOLENOID VALVE POWER SUPPLY CIRCUIT

1. Turn ignition switch OFF.
2. Disconnect fuse block (J/B) harness connector.
3. Check the continuity between electronic controlled engine mount harness connector and fuse block (J/B) harness connector.

Electronic controlled engine mount control solenoid valve		Fuse block (J/B)		Continuity
Connector	Terminal	Connector	Terminal	
F64	1	E28	1M	Existed

Is the inspection result normal?

YES >> Perform the trouble diagnosis for power supply circuit.
NO >> Repair or replace error-detected parts.

5. CHECK ELECTRONIC CONTROLLED ENGINE MOUNT CONTROL SOLENOID VALVE OUTPUT SIGNAL CIRCUIT FOR OPEN AND SHORT

1. Disconnect ECM harness connector.
2. Check the continuity between ECM harness connector and electronic controlled engine mount control solenoid valve harness connector.

ECM		Electronic controlled engine mount control solenoid valve		Continuity
Connector	Terminal	Connector	Terminal	
F51	38	F64	2	Existed

3. Also check harness for short to ground and short to power.

Is the inspection result normal?

YES >> GO TO 6.
NO >> Repair open circuit, short to ground or short to power in harness connectors.

6. CHECK ELECTRONIC CONTROLLED ENGINE MOUNT CONTROL SOLENOID VALVE

Check electronic controlled engine mount control solenoid valve. Refer to EC-878, "Component Inspection".

Is the inspection result normal?

YES >> GO TO 7.
NO >> Replace electronic controlled engine mount control solenoid valve. Refer to EC-534, "ENGINE CONTROL SYSTEM : Component Parts Location".

7. CHECK ELECTRONIC CONTROLLED ENGINE MOUNT

1. Turn ignition switch OFF.
2. Install vacuum pump (A) to electronic controlled engine mount ①.
3. Check that a vacuum is maintained when applying the vacuum of -40 kPa (-0.41 kg/cm^2, -5.8 psi) to electronic controlled engine mount.
4. Also visually check electronic controlled engine mount.

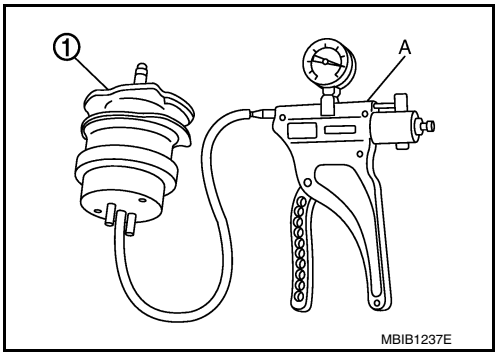

Is the inspection result normal?

YES >> GO TO 8.
NO >> Replace electronic controlled engine mount.

8. CHECK INTERMITTENT INCIDENT

Check intermittent incident. Refer to GI-47, "Intermittent Incident".

Is the inspection result normal?

YES >> Replace intake manifold collector. Refer to EM-26, "Removal and Installation".
NO >> Repair or replace error-detected parts.

Component Inspection

INFOID:0000000011489805

1. CHECK ELECTRONIC CONTROLLED ENGINE MOUNT CONTROL SOLENOID VALVE

With CONSULT

1. Turn ignition switch OFF.

2. Reconnect electronic controlled engine mount control solenoid valve harness connector.
3. Disconnect vacuum hoses connected to electronic controlled engine mount control solenoid valve.
4. Turn ignition switch ON.
5. Select “ENGINE MOUNTING” in “ACTIVE TEST” mode with CONSULT.
6. Check air passage continuity and operation delay time under the following conditions.

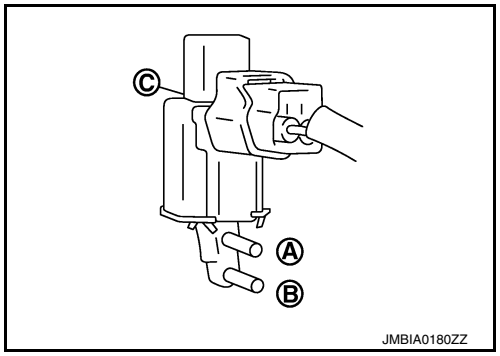

Condition (ENGINE MOUNTING)	Air passage continuity between Ⓐ and Ⓑ	Air passage continuity between Ⓐ and Ⓒ
TRVL	Existed	Not existed
IDLE	Not existed	Existed

Without CONSULT

1. Turn ignition switch OFF.
2. Disconnect electronic controlled engine mount control solenoid valve harness connector.
3. Disconnect vacuum hoses connected to electronic controlled engine mount control solenoid valve.
4. Check air passage continuity and operation delay time under the following conditions.

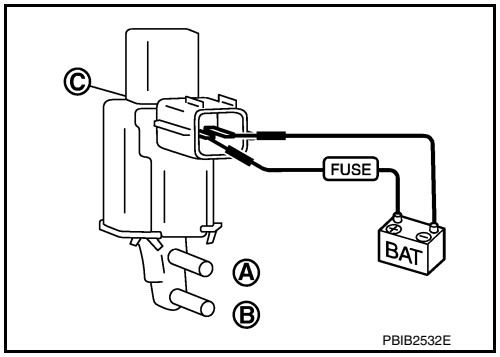

Condition	Air passage continuity between Ⓐ and Ⓑ	Air passage continuity between Ⓐ and Ⓒ
12 V direct current supply between terminals 1 and 2	Existed	Not existed
No supply	Not existed	Existed

Is the inspection result normal?

YES >> INSPECTION END

NO >> Replace electronic controlled engine mount control solenoid valve. Refer to EC-534, "ENGINE CONTROL SYSTEM : Component Parts Location".

FUEL INJECTOR

Component Function Check

INFOID:0000000011489806

1. INSPECTION START

Turn ignition switch to START.

Are any cylinders ignited?

YES >> GO TO 2.
NO >> Proceed to EC-880, "Diagnosis Procedure".

2. CHECK FUEL INJECTOR FUNCTION

With CONSULT

1. Start engine.
2. Perform “POWER BALANCE” in “ACTIVE TEST” mode with CONSULT.
3. Check that each circuit produces a momentary engine speed drop.

Without CONSULT

1. Start engine.
2. Listen to each fuel injector operating sound.

Clicking sound should be heard.

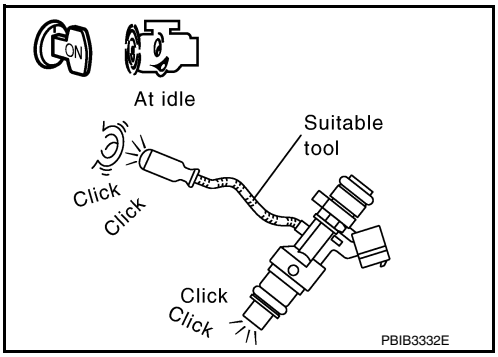

Is the inspection result normal?

YES >> INSPECTION END
NO >> Proceed to EC-880, "Diagnosis Procedure".

Diagnosis Procedure

INFOID:0000000011489807

1. CHECK FUEL INJECTOR POWER SUPPLY

1. Turn ignition switch OFF.
2. Disconnect fuel injector harness connector.
3. Turn ignition switch ON.
4. Check the voltage between fuel injector harness connector and ground.

Fuel injector			Ground	Voltage
Cylinder	Connector	Terminal		
1	F30	1	Ground	Battery voltage
2	F18	1		
3	F41	1		
4	F20	1		
5	F42	1		
6	F22	1		

Is the inspection result normal?

YES >> GO TO 3.
NO >> GO TO 2.

2. CHECK FUEL INJECTOR POWER SUPPLY CIRCUIT

1. Turn ignition switch OFF.
2. Disconnect IPDM E/R harness connector.
3. Check the continuity between fuel injector harness connector and IPDM E/R harness connector.

Fuel injector			IPDM E/R		Continuity
Cylinder	Connector	Terminal	Connector	Terminal	
1	F30	1	F19	54	Existed
2	F18	1		60	
3	F41	1		54	
4	F20	1		60	
5	F42	1		54	
6	F22	1		60	

Is the inspection result normal?

YES >> Perform the trouble diagnosis for power supply circuit.
NO >> Repair or replace error-detected parts.

3. CHECK FUEL INJECTOR OUTPUT SIGNAL CIRCUIT FOR OPEN AND SHORT

1. Turn ignition switch OFF.
2. Disconnect ECM harness connector.
3. Check the continuity between fuel injector harness connector and ECM harness connector.

Fuel injector			ECM		Continuity
Cylinder	Connector	Terminal	Connector	Terminal	
1	F30	2	F51	33	Existed
2	F18	2		44	
3	F41	2		48	
4	F20	2		47	
5	F42	2		46	
6	F22	2		45	

4. Also check harness for short to ground and short to power.

Is the inspection result normal?

YES >> GO TO 4.
NO >> Repair open circuit, short to ground or short to power in harness or connectors.

4. CHECK FUEL INJECTOR

Check fuel injector. Refer to EC-881, "Component Inspection".

Is the inspection result normal?

YES >> GO TO 5.
NO >> Replace malfunctioning fuel injector. Refer to EM-47, "Removal and Installation".

5. CHECK INTERMITTENT INCIDENT

Check intermittent incident. Refer to GI-47, "Intermittent Incident".

Is the inspection result normal?

YES >> Replace IPDM E/R. Refer to PCS-32, "Removal and Installation".
NO >> Repair or replace error-detected parts.

Component Inspection

INFOID:0000000011489808

1. CHECK FUEL INJECTOR

1. Turn ignition switch OFF.
2. Disconnect fuel injector harness connector.

3. Check resistance between fuel injector terminals as per the following.

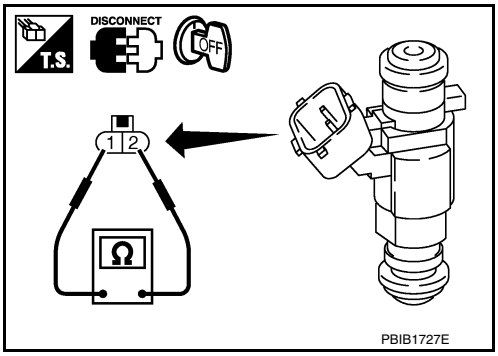

Terminals	Resistance
1 and 2	11.1 - 14.5 Ω [at 10 - 60°C (50 - 140°F)]

Is the inspection result normal?

YES >> INSPECTION END

NO >> Replace malfunctioning fuel injector. Refer to EM-47, "Removal and Installation".

FUEL PUMP

Component Function Check

INFOID:0000000011489809

1. CHECK FUEL PUMP FUNCTION

1. Turn ignition switch ON.
2. Pinch fuel feed hose with two fingers.

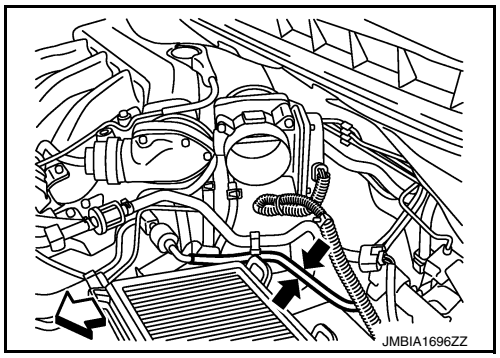

Fuel pressure pulsation should be felt on the fuel feed hose for 1 second after ignition switch is turned ON.

Is the inspection result normal?

YES >> INSPECTION END
NO >> EC-883, "Diagnosis Procedure".

Diagnosis Procedure

INFOID:0000000011489810

1. CHECK FUEL PUMP RELAY POWER SUPPLY-I

1. Turn ignition switch OFF.
2. Disconnect ECM harness connector.
3. Turn ignition switch ON.
4. Check the voltage between ECM harness connector terminals.

ECM				Voltage
+		–		
Connector	Terminal	Connector	Terminal	
F51	43	E16	128	Battery voltage

Is the inspection result normal?

YES >> GO TO 4.
NO >> GO TO 2.

2. CHECK FUEL PUMP RELAY POWER SUPPLY-II

Check the voltage between IPDM E/R harness connector and ground.

IPDM E/R		Ground	Voltage
Connector	Terminal		
F24	69	Ground	Battery voltage

Is the inspection result normal?

YES >> GO TO 3.
NO >> GO TO 11.

3. CHECK FUEL PUMP RELAY POWER SUPPLY CIRCUIT

1. Turn ignition switch OFF.
2. Disconnect IPDM E/R harness connector.
3. Check the continuity between ECM harness connector and IPDM E/R harness connector.

ECM		IPDM E/R		Continuity
Connector	Terminal	Connector	Terminal	
F51	43	F24	69	Existed

Is the inspection result normal?

YES >> Perform the trouble diagnosis for power supply circuit.

NO >> Repair or replace error-detected parts.

4. CHECK CONDENSER-2 POWER SUPPLY

1. Turn ignition switch OFF.
2. Reconnect all harness connectors disconnected.
3. Disconnect condenser-2 harness connector.
4. Turn ignition switch ON.
5. Check the voltage between condenser-2 harness connector and ground.

Condenser-2		Ground	Voltage
Connector	Terminal		
B52	1	Ground	Battery voltage should exist for 1 second after ignition switch is turned ON.

Is the inspection result normal?

YES >> GO TO 6.
NO >> GO TO 5.

5. CHECK CONDENSER-2 POWER SUPPLY CIRCUIT

1. Disconnect IPDM E/R harness connector.
2. Check the continuity between IPDM E/R harness connector and condenser-2 harness connector.

IPDM E/R		Condenser-2		Continuity
Connector	Terminal	Connector	Terminal	
E121	15	B52	1	Existed

3. Also check harness for short to ground and short to power.

Is the inspection result normal?

YES >> GO TO 11.
NO >> Perform the trouble diagnosis for power supply circuit.

6. CHECK CONDENSER-2 GROUND CIRCUIT

1. Turn ignition switch OFF.
2. Check the continuity between condenser-2 harness connector and ground.

Condenser-2		Ground	Continuity
Connector	Terminal		
B52	2	Ground	Existed

3. Also check harness for short to power.

Is the inspection result normal?

YES >> GO TO 7.
NO >> Repair open circuit or short to power in harness or connectors.

7. CHECK CONDENSER-2

Check condenser-2. Refer to EC-885, "Component Inspection (Condenser-2)".

Is the inspection result normal?

YES >> GO TO 8.
NO >> Replace condenser-2.

8. CHECK FUEL PUMP POWER SUPPLY CIRCUIT

1. Disconnect “fuel level sensor unit and fuel pump” harness connector.
2. Check harness continuity between IPDM E/R harness connector and “fuel level sensor unit and fuel pump” harness connector.

IPDM E/R		Fuel level sensor unit and fuel pump		Continuity
Connector	Terminal	Connector	Terminal	
E121	15	B72	6	Existed

Is the inspection result normal?

YES >> GO TO 9.
NO >> Repair open circuit or short to power in harness or connectors.

9. CHECK FUEL PUMP GROUND CIRCUIT

1. Disconnect “fuel level sensor unit and fuel pump” harness connector.
2. Check the continuity between “fuel level sensor unit and fuel pump” harness connector and ground.

Fuel level sensor unit and fuel pump		Ground	Continuity
Connector	Terminal		
B72	4	Ground	Existed

Is the inspection result normal?

YES >> GO TO 10.
NO >> Repair open circuit or short to power in harness or connectors.

10. CHECK FUEL PUMP

Check fuel pump. Refer to EC-885, "Component Inspection (Fuel Pump)".

Is the inspection result normal?

YES >> GO TO 11.
NO >> Replace fuel pump. Refer to FL-6, "Removal and Installation".

11. CHECK INTERMITTENT INCIDENT

Check intermittent incident. Refer to GI-47, "Intermittent Incident".

Is the inspection result normal?

YES >> Replace IPDM E/R. Refer to PCS-32, "Removal and Installation".
NO >> Repair or replace error-detected parts.

Component Inspection (Fuel Pump)

INFOID:0000000011489811

1. CHECK FUEL PUMP

1. Turn ignition switch OFF.
2. Disconnect “fuel level sensor unit (fuel pump)” harness connector.
3. Check resistance between “fuel level sensor unit (fuel pump)” terminals as follows.

Terminals	Resistance [at 25°C (77°F)]
4 and 6	0.2 - 5.0 Ω

Is the inspection result normal?

YES >> INSPECTION END
NO >> Replace fuel level sensor unit, fuel filter and fuel pump assembly. Refer to FL-6, "Removal and Installation".

Component Inspection (Condenser-2)

INFOID:0000000011489812

1. CHECK CONDENSER-2

1. Turn ignition switch OFF.
2. Disconnect condenser-2 harness connector.
3. Check resistance between condenser-2 terminals as per the following.

Terminals	Resistance
1 and 2	Above 1 MΩ [at 25°C (77°F)]

Is the inspection result normal?

YES >> INSPECTION END
NO >> Replace condenser-2.

IGNITION SIGNAL

Component Function Check

INFOID:0000000011489813

1. INSPECTION START

Turn ignition switch OFF, and restart engine.

Does the engine start?

YES-1 >> With CONSULT: GO TO 2.
YES-2 >> Without CONSULT: GO TO 3.
NO >> Proceed to EC-887, "Diagnosis Procedure".

2. CHECK IGNITION SIGNAL FUNCTION

With CONSULT

1. Perform “POWER BALANCE” in “ACTIVE TEST” mode with CONSULT.
2. Check that each circuit produces a momentary engine speed drop.

Is the inspection result normal?

YES >> INSPECTION END
NO >> Proceed to EC-887, "Diagnosis Procedure".

3. CHECK IGNITION SIGNAL FUNCTION

Without CONSULT

1. Let engine idle.
2. Read the voltage signal between ECM harness connector terminals with an oscilloscope.

ECM				Voltage signal
+		–		
Connector	Terminal	Connector	Terminal	
F51	9	E16	128	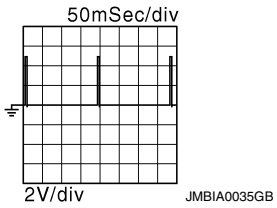
	10			
	11			
	13			
	14			
	15			

NOTE:

The pulse cycle changes depending on rpm at idle.

Is the inspection result normal?

YES >> INSPECTION END
NO >> Proceed to EC-887, "Diagnosis Procedure".

Diagnosis Procedure

INFOID:0000000011489814

1. CHECK ECM POWER SUPPLY

1. Turn ignition switch OFF, wait at least 10 seconds and then turn it ON.
2. Check the voltage between ECM harness connector terminals.

ECM				Voltage
Connector	Terminal	Connector	Terminal	
F51	31	E16	128	Battery voltage

Is the inspection result normal?

YES >> GO TO 2.
NO >> Refer to EC-684, "Diagnosis Procedure".

2. CHECK CONDENSER-1 POWER SUPPLY

1. Turn ignition switch OFF.
2. Disconnect condenser-1 harness connector.
3. Turn ignition switch ON.
4. Check the voltage between condenser-1 harness connector and ground.

Condenser-1		Ground	Voltage
Connector	Terminal		
F21	1	Ground	Battery voltage

Is the inspection result normal?

YES >> GO TO 4.
NO >> GO TO 3.

3. CHECK CONDENSER-1 POWER SUPPLY CIRCUIT

1. Turn ignition switch OFF.
2. Disconnect IPDM E/R harness connector.
3. Check the continuity between IPDM E/R harness connector and condenser-1 harness connector.

IPDM E/R		Condenser-1		Continuity
Connector	Terminal	Connector	Terminal	
F19	55	F21	1	Existed

4. Also check harness for short to ground and short to power.

Is the inspection result normal?

YES >> Refer to EC-684, "Diagnosis Procedure".
NO >> Repair open circuit, short to ground or short to power in harness or connectors.

4. CHECK CONDENSER-1 GROUND CIRCUIT

1. Turn ignition switch OFF.
2. Check the continuity between condenser-1 harness connector and ground.

Condenser-1		Ground	Continuity
Connector	Terminal		
F21	2	Ground	Existed

3. Also check harness for short to power.

Is the inspection result normal?

YES >> GO TO 5.
NO >> Repair open circuit or short to power in harness or connectors.

5. CHECK CONDENSER-1

Check condenser-1. Refer to EC-891, "Component Inspection (Condenser-1)"

Is the inspection result normal?

YES >> GO TO 6.
NO >> Replace condenser-1.

6. CHECK IGNITION COIL POWER SUPPLY

1. Reconnect all harness connectors disconnected.
2. Disconnect ignition coil harness connector-1.
3. Turn ignition switch ON.
4. Check the voltage between ignition coil harness connector and ground.

Ignition coil			Ground	Voltage
Cylinder	Connector	Terminal		
1	F47	3	Ground	Battery voltage
2	F8	3		
3	F48	3		
4	F9	3		
5	F49	3		
6	F10	3		

Is the inspection result normal?

YES >> GO TO 7.
NO >> Repair or replace harness or connectors.

7. CHECK IGNITION COIL GROUND CIRCUIT FOR OPEN AND SHORT

1. Turn ignition switch OFF.
2. Check the continuity between ignition coil harness connector and ground.

Ignition coil			Ground	Continuity
Cylinder	Connector	Terminal		
1	F47	2	Ground	Existed
2	F8	2		
3	F48	2		
4	F9	2		
5	F49	2		
6	F10	2		

3. Also check harness for short to power.

Is the inspection result normal?

YES >> GO TO 8.
NO >> Repair open circuit or short to power in harness or connectors.

8. CHECK IGNITION COIL OUTPUT SIGNAL CIRCUIT FOR OPEN AND SHORT

1. Disconnect ECM harness connector.
2. Check the continuity between ignition coil harness connector and ECM harness connector.

Ignition coil			ECM		Continuity
Cylinder	Connector	Terminal	Connector	Terminal	
1	F47	1	F51	11	Existed
2	F8	1		10	
3	F48	1		9	
4	F9	1		15	
5	F49	1		14	
6	F10	1		13	

3. Also check harness for short to ground and short to power.

Is the inspection result normal?

YES >> GO TO 9.
NO >> Repair open circuit, short to ground or short to power in harness or connectors.

9. CHECK IGNITION COIL WITH POWER TRANSISTOR

Check ignition coil with power transistor. Refer to EC-890, "Component Inspection (Ignition Coil with Power Transistor)".

Is the inspection result normal?

YES >> Check intermittent incident. Refer to GI-47, "Intermittent Incident".
NO >> Replace malfunctioning ignition coil with power transistor. Refer to EM-42, "Removal and Installation (LH)", EM-42, "Removal and Installation (RH)".

Component Inspection (Ignition Coil with Power Transistor)

INFOID:0000000011489815

1. CHECK IGNITION COIL WITH POWER TRANSISTOR-I

1. Turn ignition switch OFF.
2. Disconnect ignition coil harness connector.
3. Check resistance between ignition coil terminals as per the following.

Terminal No. (Polarity)	Resistance Ω [at 25°C (77°F)]
1 and 2	Except 0 or ∞
1 and 3	Except 0
2 and 3	

Is the inspection result normal?

YES >> GO TO 2.
NO >> Replace malfunctioning ignition coil with power transistor. Refer to EM-42, "Removal and Installation (LH)", EM-42, "Removal and Installation (RH)".

2. CHECK IGNITION COIL WITH POWER TRANSISTOR-II

CAUTION:
Perform the following procedure in a place with no combustible objects and good ventilation.

1. Turn ignition switch OFF.
2. Reconnect all harness connectors disconnected.
3. Remove fuel pump fuse in IPDM E/R to release fuel pressure.
   NOTE:
   Do not use CONSULT to release fuel pressure, or fuel pressure applies again during the following procedure.
4. Start engine.
5. After engine stalls, crank it 2 or 3 times to release all fuel pressure.
6. Turn ignition switch OFF.
7. Remove all ignition coil harness connectors to avoid the electrical discharge from the ignition coils.
8. Remove ignition coil and spark plug of the cylinder to be checked.
9. Crank engine for 5 seconds or more to remove combustion gas in the cylinder.
10. Connect spark plug and harness connector to ignition coil.
11. Fix ignition coil using a rope etc. with gap of 13 - 17 mm (0.52 - 0.66 in) between the edge of the spark plug and grounded metal portion as shown in the figure.
12. Crank engine for approximately 3 seconds, and check whether spark is generated between the spark plug and the grounded metal portion.

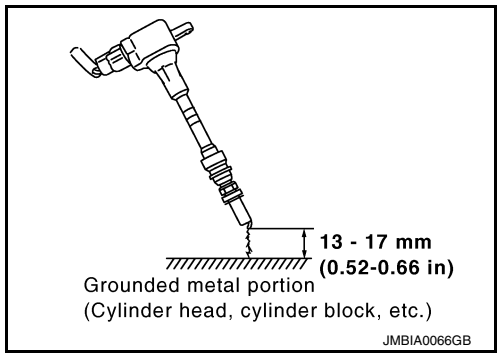

Spark should be generated.

CAUTION:
- **During the operation, always stay 0.5 m (19.7 in) or more away from the spark plug and the ignition coil. Be careful not to get an electrical shock while checking, because the electrical discharge voltage becomes 20 kV or more.**
- **It might cause to damage the ignition coil if the gap of more than 17 mm (0.66 in) is taken.**

NOTE:
When the gap is less than 13 mm (0.52 in), the spark might be generated even if the coil is malfunctioning.

Is the inspection result normal?

YES >> INSPECTION END

NO >> Replace malfunctioning ignition coil with power transistor. Refer to EM-42, "Removal and Installation (LH)", EM-42, "Removal and Installation (RH)".

Component Inspection (Condenser-1)

INFOID:0000000011489816

1. CHECK CONDENSER-1

1. Turn ignition switch OFF.
2. Disconnect condenser-1 harness connector.
3. Check resistance between condenser-1 terminals as per the following.

Terminals	Resistance
1 and 2	Above 1 MΩ [at 25C° (77C°)]

Is the inspection result normal?

YES >> INSPECTION END
NO >> Replace condenser-1.

INFORMATION DISPLAY (ASCD)

Component Function Check

INFOID:0000000011489817

1. CHECK INFORMATION DISPLAY

1. Start engine.
2. Press MAIN switch on ASCD steering switch.
3. Drive the vehicle at more than 40 km/h (25 MPH).
   CAUTION:
   Always drive vehicle at a safe speed.
4. Press SET/COAST switch.
5. Check that the reading of the speedometer shows the same value as the set speed indicated in the information display while driving the vehicle on a flat road.

Is the inspection result normal?

YES >> INSPECTION END
NO >> Proceed to EC-892, "Diagnosis Procedure".

Diagnosis Procedure

INFOID:0000000011489818

1. CHECK DTC

Check that DTC UXXXX, P0500 or P1574 is not displayed.

Is the inspection result normal?

YES >> GO TO 2.
NO-1 >> Perform trouble diagnosis for DTC UXXXX.
NO-2 >> Perform trouble diagnosis for DTC P0500. Refer to EC-789, "DTC Logic".
NO-3 >> Perform trouble diagnosis for DTC P1574. Refer to EC-838, "DTC Logic".

2. CHECK DTC WITH COMBINATION METER

Refer to MWI-18, "CONSULT Function (METER/M&A)".

Is the inspection result normal?

YES >> GO TO 3.
NO >> Perform trouble diagnosis for DTC indicated.

3. CHECK INTERMITTENT INCIDENT

Refer to GI-47, "Intermittent Incident".

Is the inspection result normal?

YES >> Replace combination meter. Refer to MWI-85, "Removal and Installation".
NO >> Repair or replace.

MALFUNCTION INDICATOR LAMP

Component Function Check

INFOID:0000000011489819

1.CHECK MIL FUNCTION

1. Turn ignition switch ON.
2. Check that MIL illuminates.

Is the inspection result normal?

YES >> INSPECTION END
NO >> Proceed to EC-893, "Diagnosis Procedure".

Diagnosis Procedure

INFOID:0000000011489820

1.CHECK DTC

Check that DTC UXXXX is not displayed.

Is the inspection result normal?

YES >> GO TO 2.
NO >> Perform trouble diagnosis for DTC UXXXX.

2.CHECK COMBINATION METER FUNCTION

Check combination meter function. Refer to MWI-18, "CONSULT Function (METER/M&A)".

Is the inspection result normal?

YES >> GO TO 3.
NO >> Repair or replace.

3.CHECK INTERMITTENT INCIDENT

Check intermittent incident. Refer to GI-47, "Intermittent Incident".

Is the inspection result normal?

YES >> Replace combination meter. Refer to MWI-85, "Removal and Installation".
NO >> Repair or replace error-detected parts.

ON BOARD REFUELING VAPOR RECOVERY (ORVR)

Component Function Check

INFOID:0000000011489821

1. CHECK ORVR FUNCTION

Check whether the following symptoms are present.
- Fuel odor from EVAP canister is strong.
- Cannot refuel/Fuel odor from the fuel filler opening is strong while refueling.

Are any symptoms present?

YES >> Proceed to EC-894, "Diagnosis Procedure".
NO >> INSPECTION END

Diagnosis Procedure

INFOID:0000000011489822

1. INSPECTION START

Check whether the following symptoms are present.
A: Fuel odor from EVAP canister is strong.
B: Cannot refuel/Fuel odor from the fuel filler opening is strong while refueling.

A or B

A >> GO TO 2.
B >> GO TO 7.

2. CHECK EVAP CANISTER

1. Remove EVAP canister with EVAP canister vent control valve and EVAP control system pressure sensor attached. Refer to FL-18, "Removal and Installation".
2. Weigh the EVAP canister with EVAP canister vent control valve and EVAP control system pressure sensor attached.
   The weight should be less than 2.1 kg (4.6 lb).

Is the inspection result normal?

YES >> GO TO 3.
NO >> GO TO 4.

3. CHECK IF EVAP CANISTER IS SATURATED WITH WATER

Check if water will drain from EVAP canister

Does water drain from the EVAP canister?

YES >> GO TO 4.
NO >> GO TO 6.

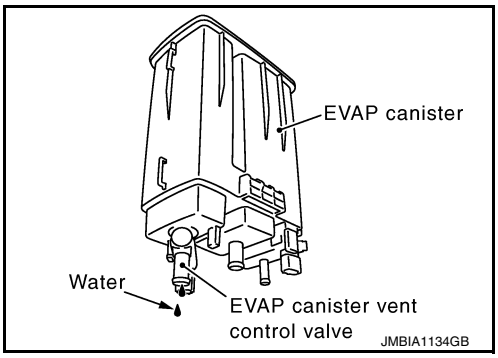

4. REPLACE EVAP CANISTER

Replace EVAP canister with a new one. Refer to FL-18, "Removal and Installation".

>> GO TO 5.

5. DETECT MALFUNCTIONING PART

Check the EVAP hose between EVAP canister and vehicle frame for clogging or poor connection.

>> Repair or replace EVAP hose. Refer to FL-20, "Removal and Installation".

6. CHECK REFUELING EVAP VAPOR CUT VALVE

Check refueling EVAP vapor cut valve. Refer to EC-896, "Component Inspection".

Is the inspection result normal?

YES >> INSPECTION END
NO >> Replace refueling EVAP vapor cut valve with fuel tank. Refer to FL-18, "Removal and Installation".

7. CHECK EVAP CANISTER

1. Remove EVAP canister with EVAP canister vent control valve and EVAP control system pressure sensor attached. Refer to FL-18, "Removal and Installation".
2. Weigh the EVAP canister with EVAP canister vent control valve and EVAP control system pressure sensor attached.
   The weight should be less than 2.1 kg (4.6 lb).

Is the inspection result normal?

YES >> GO TO 8.
NO >> GO TO 9.

8. CHECK IF EVAP CANISTER IS SATURATED WITH WATER

Check if water will drain from EVAP canister.

Does water drain from the EVAP canister?

YES >> GO TO 6.
NO >> GO TO 11.

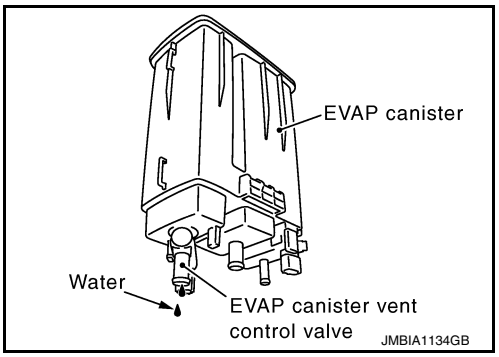

9. REPLACE EVAP CANISTER

Replace EVAP canister with a new one. Refer to FL-18, "Removal and Installation".

>> GO TO 10.

10. DETECT MALFUNCTIONING PART

Check the EVAP hose between EVAP canister and vehicle frame for clogging or poor connection.

>> Repair or replace EVAP hose. Refer to FL-20, "Removal and Installation".

11. CHECK VENT HOSES AND VENT TUBES

Check hoses and tubes between EVAP canister and refueling control valve for clogging, kinks, looseness and improper connection.

Is the inspection result normal?

YES >> GO TO 12.
NO >> Repair or replace hoses and tubes.

12. CHECK FILLER NECK TUBE

Check recirculation line for clogging, dents and cracks.

Is the inspection result normal?

YES >> GO TO 13.
NO >> Replace filler neck tube.

13. CHECK REFUELING EVAP VAPOR CUT VALVE

Check refueling EVAP vapor cut valve. Refer to EC-896, "Component Inspection".

Is the inspection result normal?

YES >> GO TO 14.
NO >> Replace refueling EVAP vapor cut valve with fuel tank. Refer to FL-18, "Removal and Installation".

14. CHECK FUEL FILLER TUBE

Check filler neck tube and hose connected to the fuel tank for clogging, dents and cracks.

Is the inspection result normal?

YES >> GO TO 15.
NO >> Replace fuel filler tube. Refer to FL-13, "Removal and Installation".

15. CHECK ONE-WAY FUEL VALVE-I

Check one-way valve for clogging.

Is the inspection result normal?

YES >> GO TO 16.
NO >> Repair or replace one-way fuel valve with fuel tank. Refer to FL-13, "Removal and Installation".

16. CHECK ONE-WAY FUEL VALVE-II

1. Check that fuel is drained from the tank.
2. Remove fuel filler tube and hose. Refer to FL-13, "Removal and Installation".
3. Check one-way fuel valve for operation as per the following.
   When a stick is inserted, the valve should open, when removing stick it should close.
   Do not drop any material into the tank.

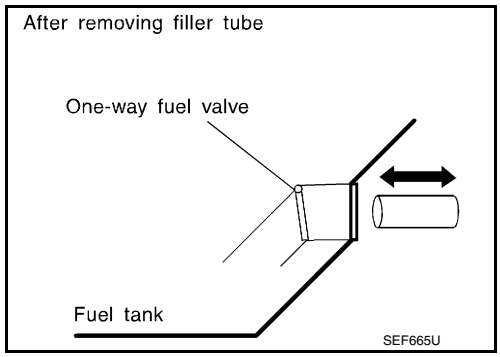

Is the inspection result normal?

YES >> INSPECTION END
NO >> Replace fuel filler tube or replace one-way fuel valve with fuel tank. Refer to FL-13, "Removal and Installation".

Component Inspection

INFOID:0000000011489823

1. INSPECTION START

Will CONSULT be used?

Will CONSULT be used?

YES >> GO TO 2.
NO >> GO TO 3.

2. CHECK REFUELING EVAP VAPOR CUT VALVE

With CONSULT

1. Turn ignition switch OFF.
2. Remove fuel tank. Refer to FL-13, "Removal and Installation".
3. Drain fuel from the tank as per the following:
- Remove fuel feed hose located on the fuel gauge retainer. Refer to FL-13, "Removal and Installation".
- Connect a spare fuel hose, one side to fuel gauge retainer where the hose was removed and the other side to a fuel container.
- Drain fuel using “FUEL PUMP RELAY” in “ACTIVE TEST” mode with CONSULT.
4. Check refueling EVAP vapor cut valve for being stuck to close as per the following.
   Blow air into the refueling EVAP vapor cut valve (from the end of EVAP/ORVR line hose), and check that the air flows freely into the tank.
5. Check refueling EVAP vapor cut valve for being stuck to open as per the following.
- Connect vacuum pump to hose end.
- Remove fuel gauge retainer with fuel gauge unit.

Always replace O-ring with new one.

- Turn fuel tank upside down.

- Apply vacuum pressure to hose end [–13.3 kPa (–0.136 kg/cm^2, –1.93 psi)] with fuel gauge retainer remaining open and check that the pressure is applicable.

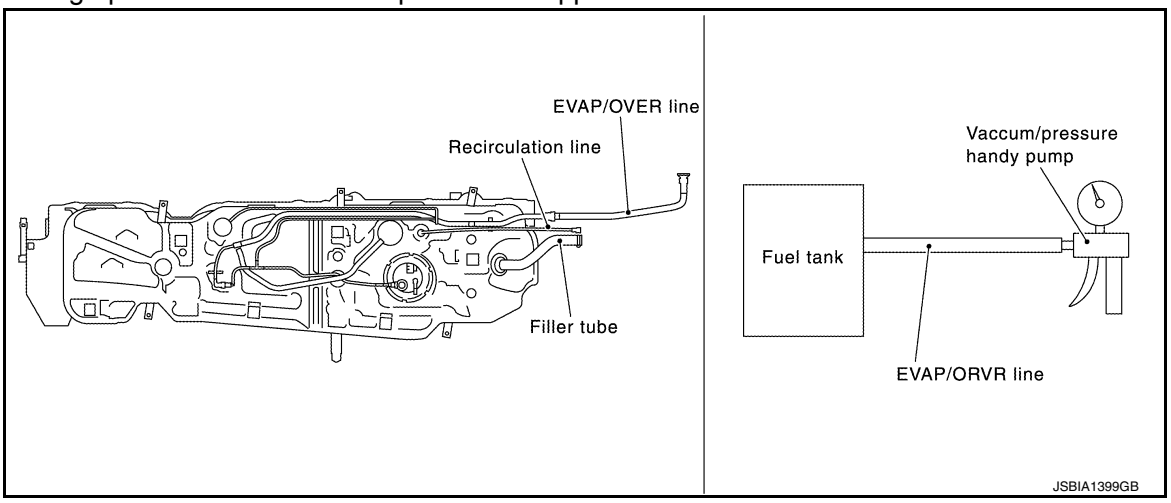

Is the inspection result normal?

YES >> INSPECTION END
NO >> Replace refueling EVAP vapor cut valve with fuel tank. Refer to FL-13, "Removal and Installation".

3. CHECK REFUELING EVAP VAPOR CUT VALVE

Without CONSULT

1. Turn ignition switch OFF.
2. Remove fuel tank. Refer to FL-13, "Removal and Installation".
3. Drain fuel from the tank as per the following:
- Remove fuel gauge retainer.
- Drain fuel from the tank using a handy pump into a fuel container.
4. Check refueling EVAP vapor cut valve for being stuck to close as per the following.
   Blow air into the refueling EVAP vapor cut valve (from the end of EVAP/ORVR line hose), and check that the air flows freely into the tank.
5. Check refueling EVAP vapor cut valve for being stuck to open as per the following.
- Connect vacuum pump to hose end.
- Remove fuel gauge retainer with fuel gauge unit.

Always replace O-ring with new one.

- Turn fuel tank upside down.
- Apply vacuum pressure to hose end [–13.3 kPa (–0.136 kg/cm^2, –1.93 psi)] with fuel gauge retainer remaining open and check that the pressure is applicable.

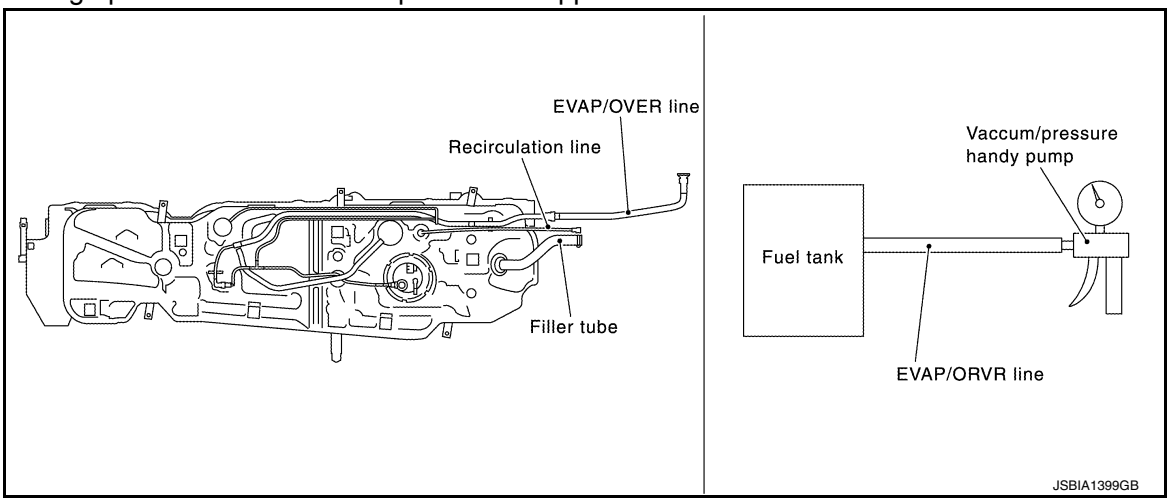

Is the inspection result normal?

YES >> INSPECTION END
NO >> Replace refueling EVAP vapor cut valve with fuel tank. Refer to FL-13, "Removal and Installation".

REFRIGERANT PRESSURE SENSOR

Component Function Check

INFOID:0000000011489824

1. CHECK REFRIGERANT PRESSURE SENSOR FUNCTION

1. Start engine and warm it up to normal operating temperature.
2. Turn A/C switch and blower fan switch ON.
3. Check the voltage between ECM harness connector terminals under the following conditions.

ECM			Voltage (V)
Connector	+	–	
	Terminal		
F52	63	64	1.0 - 4.0

Is the inspection result normal?

YES >> INSPECTION END
NO >> Proceed to EC-898, "Diagnosis Procedure".

Diagnosis Procedure

INFOID:0000000011489825

1. CHECK REFRIGERANT PRESSURE SENSOR POWER SUPPLY

1. Disconnect refrigerant pressure sensor harness connector.
2. Turn ignition switch ON.
3. Check the voltage between refrigerant pressure sensor harness connector and ground.

Refrigerant pressure sensor		Ground	Voltage (V)
Connector	Terminal		
E244	1	Ground	Approx. 5

Is the inspection result normal?

YES >> GO TO 3.
NO >> GO TO 2.

2. CHECK REFRIGERANT PRESSURE SENSOR POWER SUPPLY CIRCUIT

1. Turn ignition switch OFF.
2. Disconnect ECM harness connector.
3. Check the continuity between refrigerant pressure sensor harness connector and ECM harness connector.

Refrigerant pressure sensor		ECM		Continuity
Connector	Terminal	Connector	Terminal	
E244	1	F52	96	Existed

Is the inspection result normal?

YES >> Perform the trouble diagnosis for power supply circuit.
NO >> Repair or replace error-detected parts.

3. CHECK REFRIGERANT PRESSURE SENSOR GROUND CIRCUIT FOR OPEN AND SHORT

1. Turn ignition switch OFF.
2. Disconnect ECM harness connector.
3. Check the continuity between refrigerant pressure sensor harness connector and ECM harness connector.

Refrigerant pressure sensor		ECM		Continuity
Connector	Terminal	Connector	Terminal	
E244	3	F52	64	Existed

4. Also check harness for short to ground and short to power.

Is the inspection result normal?

YES >> GO TO 4.
NO >> Repair or replace error-detected parts.

4. CHECK REFRIGERANT PRESSURE SENSOR INPUT SIGNAL CIRCUIT FOR OPEN AND SHORT

1. Check the continuity between refrigerant pressure sensor harness connector and ECM harness connector.

Refrigerant pressure sensor		ECM		Continuity
Connector	Terminal	Connector	Terminal	
E244	2	F52	63	Existed

2. Also check harness for short to ground and short to power.

Is the inspection result normal?

YES >> GO TO 5.
NO >> Repair or replace error-detected parts.

5. CHECK INTERMITTENT INCIDENT

Check intermittent incident. Refer to GI-47, "Intermittent Incident".

Is the inspection result normal?

YES >> Replace refrigerant pressure sensor. Refer to HA-38, "CONDENSER : Removal and Installation".
NO >> Repair or replace error-detected parts.

SENSOR POWER SUPPLY2 CIRCUIT

Description

INFOID:0000000011489826

ECM supplies a voltage of 5 V to some of the sensors systematically divided into 2 groups, respectively. Accordingly, when a short circuit develops in a sensor power source, a malfunction may occur simultaneously in the sensors belonging to the same group as the short-circuited sensor.

Sensor power supply 1

- Accelerator pedal position (APP) sensor 1
- Camshaft position (CMP) sensor (PHASE)
- Electric throttle control actuator
- Battery current sensor

NOTE:
If sensor power supply 1 circuit is malfunctioning, DTC P0643 is displayed.

Sensor power supply 2

- Accelerator pedal position (APP) sensor 2
- Crankshaft position (CKP) sensor (POS)
- Refrigerant pressure sensor
- EVAP control system pressure sensor
- Engine oil pressure sensor

Diagnosis Procedure

INFOID:0000000011489827

1. CHECK SENSOR POWER SUPPLY 1

1. Turn ignition switch OFF.
2. Disconnect ECM harness connectors
3. Turn ignition switch ON.
4. Check the voltage between ECM harness connector and ground.

+		–	Voltage (Approx.)
ECM			
Connector	Terminal		
F52	54	Ground	5 V
	96		
E16	103		
	107		

Is the inspection result normal?

YES >> Check intermittent incident. Refer to GI-47, "Intermittent Incident".
NO >> GO TO 2.

2. CHECK SENSOR POWER SUPPLY 2 CIRCUIT

1. Turn ignition switch OFF.
2. Disconnect following sensors harness connector.
3. Check harness for short to power and short to ground, between the following terminals.

ECM		Sensor		
+		Name	+	
Connector	Terminal		Connector	Terminal
F52	54	CKP sensor (POS)	F11	1
	96	Refrigerant pressure sensor	E244	1
E16	103	APP sensor 2	E31	5
	107	EVAP control system pressure sensor	B36	3
		EOP sensor	F54	3

Is the inspection result normal?

YES >> GO TO 3.
NO >> Repair or replace error-detected parts.

3. CHECK COMPONENTS

Check the following.
- Crankshaft position sensor (POS) (Refer to EC-767, "Component Inspection".)
- Refrigerant pressure sensor (Refer to EC-898, "Diagnosis Procedure".)
- APP sensor 2 (Refer to EC-860, "Component Inspection".)
- EVAP control system pressure sensor (Refer to EC-784, "Component Inspection".)
- EOP sensor (Refer to EC-797, "Component Inspection".)

Is the inspection result normal?

YES >> Perform GI-47, "Intermittent Incident".
NO >> Replace malfunctioning component.

VARIABLE INDUCTION AIR SYSTEM

Component Function Check

INFOID:0000000011489828

1. CHECK OVERALL FUNCTION-I

With CONSULT

1. Start engine and warm it up to the normal operating temperature.
2. Perform “VIAS S/V-1” in “ACTIVE TEST” mode with CONSULT.
3. Turn VIAS control solenoid valve 1 “ON” and “OFF”, and check that power valve actuator 1 rod moves.

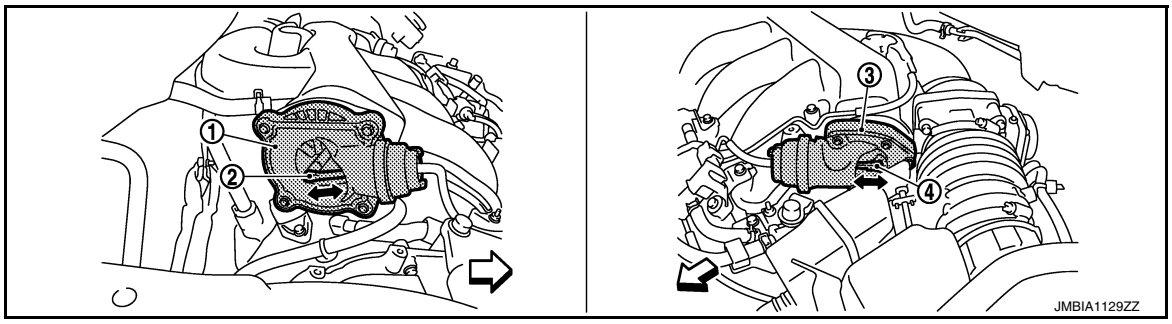

① Power valve actuator 1 ② Power valve actuator 1 rod ③ Power valve actuator 2
④ Power valve actuator 2 rod
⇦ : Vehicle front

Without CONSULT

1. Start engine and warm it up to the normal operating temperature.
2. Rev engine quickly up to approximately 5,000 rpm.
3. Check that power valve actuator 1 rod moves.

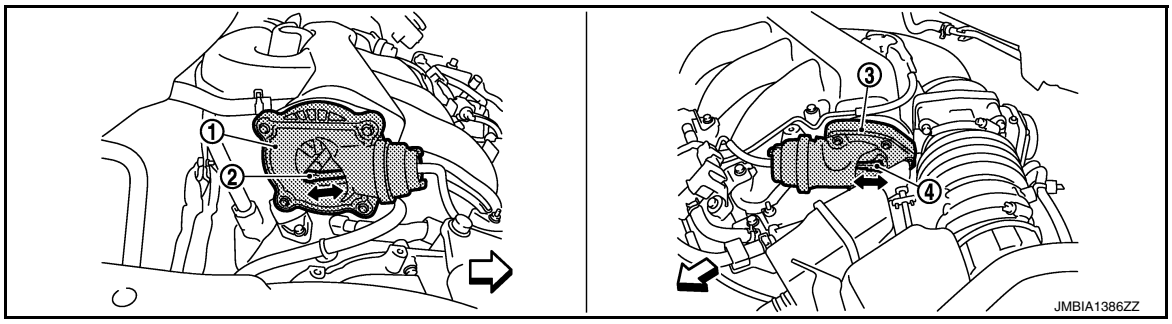

① Power valve actuator 1 ② Power valve actuator 1 rod ③ Power valve actuator 2
④ Power valve actuator 2 rod
⇦ : Vehicle front

Is the inspection result normal?

YES >> GO TO 2.
NO >> EC-903, "Diagnosis Procedure".

2. CHECK OVERALL FUNCTION-II

With CONSULT

1. Perform “VIAS S/V-2” in “ACTIVE TEST” mode with CONSULT.
2. Turn VIAS control solenoid valve 2 “ON” and “OFF”, and check that power valve actuator 2 rod moves.

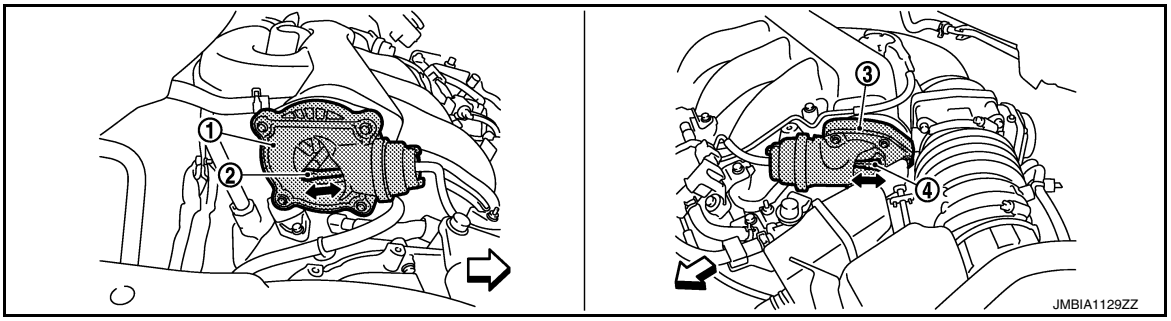

① Power valve actuator 1 ② Power valve actuator 1 rod ③ Power valve actuator 2
④ Power valve actuator 2 rod
⇦ : Vehicle front

Without CONSULT
1. When revving engine up to 5,000 rpm quickly.
2. Rev engine quickly up to approximately 5,000 rpm.
3. Check that power valve actuator 2 rod moves.

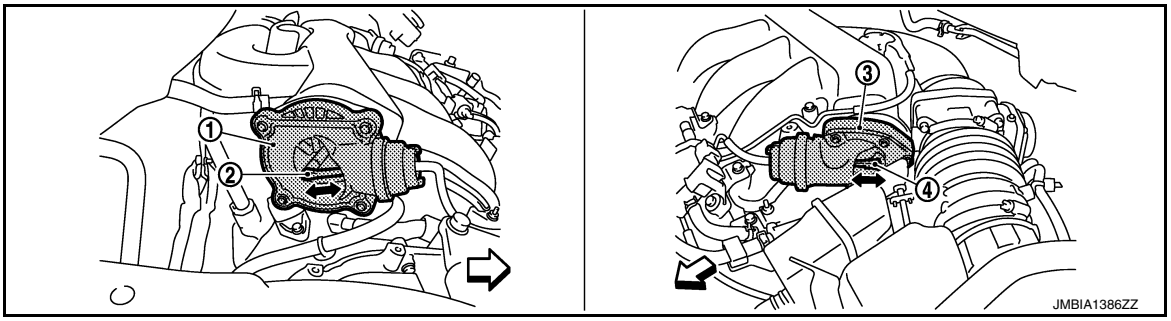

① Power valve actuator 1 ② Power valve actuator 1 rod ③ Power valve actuator 2
④ Power valve actuator 2 rod
⇦ : Vehicle front

Is the inspection result normal?

YES >> INSPECTION END
NO >> EC-903, "Diagnosis Procedure".

Diagnosis Procedure

INFOID:0000000011489829

1. INSPECTION START

Confirm the malfunctioning system (power valve 1 or power valve 2). Refer to EC-902, "Component Function Check".

Which system is related to the incident?

Power valve 1>>GO TO 2.
Power valve 2>>GO TO 6.

2. CHECK VACUUM EXISTENCE-I

With CONSULT
1. Stop engine and disconnect vacuum hose connected to power valve actuator 1.
2. Start engine and let it idle.
3. Perform “VIAS S/V-1” in “ACTIVE TEST” mode with CONSULT.
4. Turn VIAS control solenoid valve 1 ON and OFF, and check vacuum existence under the following conditions.

VIAS S/V-1	Vacuum
ON	Existed
OFF	Not existed

Without CONSULT

1. Stop engine and disconnect vacuum hose connected to power valve actuator 1.
2. Disconnect VIAS control solenoid valve 1 harness connector.
3. Start engine.
4. Rev engine quickly up to approximately 5,000 rpm.
5. Check vacuum existence under the following conditions.

Condition	Vacuum
Idle	Existed
Rev engine quickly up to approximately 5,000 rpm	Not existed

Is the inspection result normal?

YES >> Repair or replace power valve actuator 1. Refer to EC-534, "ENGINE CONTROL SYSTEM : Component Parts Location".
NO >> GO TO 3.

3. CHECK VACUUM TANK

1. Stop engine and disconnect vacuum hose connected to intake manifold collector.
2. Start engine and let it idle.
3. Check vacuum existence from intake manifold collector.

Does vacuum existence from the intake manifold collector?

YES >> GO TO 4.
NO >> Replace intake manifold collector. Refer to EM-26, "Removal and Installation".

4. CHECK VACUUM HOSE

1. Stop engine.
2. Check vacuum hose for crack, clogging, improper connection or disconnection. Refer to EC-565, "VARIABLE INDUCTION AIR SYSTEM : System Description".

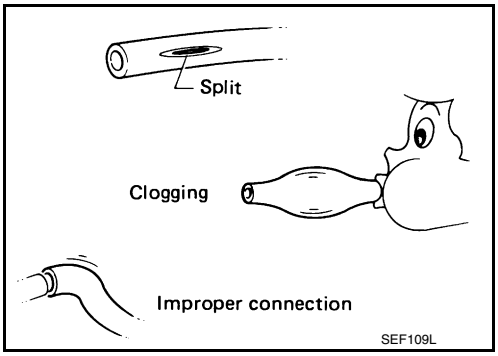

Is the inspection result normal?

YES >> GO TO 5.
NO >> Repair hoses or tubes.

5. CHECK VIAS CONTROL SOLENOID VALVE 1

Check VIAS control solenoid valve 1. Refer to EC-843, "Component Inspection".

Is the inspection result normal?

YES >> GO TO 8.
NO >> Replace VIAS control solenoid valve 1. Refer to EC-534, "ENGINE CONTROL SYSTEM : Component Parts Location".

6. CHECK VACUUM EXISTENCE-II

With CONSULT

1. Stop engine and disconnect vacuum hose connected to power valve actuator 2.
2. Start engine and let it idle.
3. Perform “VIAS S/V-2” in “ACTIVE TEST” mode with CONSULT.
4. Turn VIAS control solenoid valve 2 ON and OFF, and check vacuum existence under the following conditions.

VIAS S/V 2	Vacuum
ON	Existed
OFF	Not existed

Without CONSULT

1. Stop engine and disconnect vacuum hose connected to power valve actuator 2.
2. Disconnect VIAS control solenoid valve 1 harness connector.
3. Start engine.
4. Rev engine quickly up to approximately 5,000 rpm.
5. Check vacuum existence under the following conditions.

Condition	Operation
Idle	Existed
Rev engine quickly up to approximately 5,000 rpm	Not existed

Is the inspection result normal?

YES >> Repair or replace power valve actuator 2. Refer to EC-534, "ENGINE CONTROL SYSTEM : Component Parts Location".
NO >> GO TO 7.

7. CHECK VACUUM HOSE

1. Stop engine.
2. Check vacuum hose for crack, clogging, improper connection or disconnection. Refer to EC-565, "VARIABLE INDUCTION AIR SYSTEM : System Description".

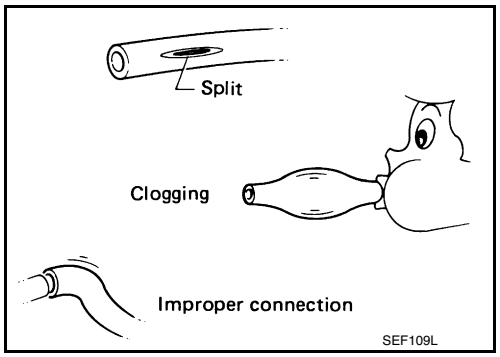

Is the inspection result normal?

YES >> GO TO 8.
NO >> Repair hoses or tubes.

8. CHECK VIAS CONTROL SOLENOID VALVE 2

Check VIAS control solenoid valve 2. Refer to EC-845, "Component Inspection".

Is the inspection result normal?

YES >> Check intermittent incident. Refer to GI-47, "Intermittent Incident".
NO >> Replace VIAS control solenoid valve 2. Refer to EC-534, "ENGINE CONTROL SYSTEM : Component Parts Location".

SYMPTOM DIAGNOSIS

ENGINE CONTROL SYSTEM SYMPTOMS

Symptom Table

INFOID:0000000011489830

SYSTEM — BASIC ENGINE CONTROL SYSTEM

		SYMPTOM													Reference page
		HARD/NO START/RESTART (EXCP. HA)	ENGINE STALL	HESITATION/SURGING/FLAT SPOT	SPARK KNOCK/DETONATION	LACK OF POWER/POOR ACCELERATION	HIGH IDLE/LOW IDLE	ROUGH IDLE/HUNTING	IDLING VIBRATION	SLOW/NO RETURN TO IDLE	OVERHEATS/WATER TEMPERATURE HIGH	EXCESSIVE FUEL CONSUMPTION	EXCESSIVE OIL CONSUMPTION	BATTERY DEAD (UNDER CHARGE)	
Warranty symptom code		AA	AB	AC	AD	AE	AF	AG	AH	AJ	AK	AL	AM	HA	
Fuel	Fuel pump circuit	1	1	2	3	2		2	2			3		2	EC-883
	Fuel pressure regulator system	3	3	4	4	4	4	4	4	4		4			EC-669
	Fuel injector circuit	1	1	2	3	2		2	2			2			EC-880
	Evaporative emission system	3	3	4	4	4	4	4	4	4		4			EC-561
Air	Positive crankcase ventilation system	3	3	4	4	4	4	4	4	4		4	1		EC-548
	Incorrect idle speed adjustment						1	1	1	1		1			EC-665
	Electric throttle control actuator	1	1	2	3	3	2	2	2	2		2		2	EC-852, EC-857
Ignition	Incorrect ignition timing adjustment	3	3	1	1	1		1	1			1			EC-665
	Ignition circuit	1	1	2	2	2		2	2			2			EC-887
Power supply and ground circuit		2	2	3	3	3		3	3		2	3			EC-684
Mass air flow sensor circuit		1	1	2	2	2		2	2			2			EC-702
Engine coolant temperature sensor circuit					3		3			3					EC-708
Air fuel ratio (A/F) sensor 1 circuit					3										EC-712, EC-716, EC-719, EC-740
Throttle position sensor circuit							2			2					EC-710, EC-755, EC-815, EC-816, EC-864
Accelerator pedal position sensor circuit				3	2	1									EC-806, EC-859, EC-861, EC-866
Knock sensor circuit				2								3			EC-763
Engine oil temperature sensor				4		2						3			EC-753

	SYMPTOM													Reference page
	HARD/NO START/RESTART (EXCP. HA)	ENGINE STALL	HESITATION/SURGING/FLAT SPOT	SPARK KNOCK/DETONATION	LACK OF POWER/POOR ACCELERATION	HIGH IDLE/LOW IDLE	ROUGH IDLE/HUNTING	IDLING VIBRATION	SLOW/NO RETURN TO IDLE	OVERHEATS/WATER TEMPERATURE HIGH	EXCESSIVE FUEL CONSUMPTION	EXCESSIVE OIL CONSUMPTION	BATTERY DEAD (UNDER CHARGE)	
Warranty symptom code	AA	AB	AC	AD	AE	AF	AG	AH	AJ	AK	AL	AM	HA	
Crankshaft position sensor (POS) circuit	2	2												EC-765
Camshaft position sensor (PHASE) circuit	3	2												EC-768
Vehicle speed signal circuit		2	3		3						3			EC-789
ECM	2	2	3	3	3	3	3	3	3	3	3			EC-801, EC-803
Intake valve timing control solenoid valve circuit		3	2		1	3	2	2	3		3			EC-700
PNP signal circuit			3		3		3	3			3			EC-808
VIAS control solenoid valve 1 circuit					1									EC-842
VIAS control solenoid valve 2 circuit					1									EC-844
Refrigerant pressure sensor circuit		2				3			3		4			EC-898
Cooling fan control module circuit	5	5	5	5	5		5	5	5	4	5			EC-872
Electrical load signal circuit							3							EC-875
Air conditioner circuit	2	2	3	3	3	3	3	3	3		3		2	HA-15
ABS actuator and electric unit (control unit)			4											BRC-187

1 - 6: The numbers refer to the order of inspection.

(continued on next page)

SYSTEM — ENGINE MECHANICAL & OTHER

		SYMPTOM													Reference page
		HARD/NO START/RESTART (EXCP. HA)	ENGINE STALL	HESITATION/SURGING/FLAT SPOT	SPARK KNOCK/DETONATION	LACK OF POWER/POOR ACCELERATION	HIGH IDLE/LOW IDLE	ROUGH IDLE/HUNTING	IDLING VIBRATION	SLOW/NO RETURN TO IDLE	OVERHEATS/WATER TEMPERATURE HIGH	EXCESSIVE FUEL CONSUMPTION	EXCESSIVE OIL CONSUMPTION	BATTERY DEAD (UNDER CHARGE)	
Warranty symptom code		AA	AB	AC	AD	AE	AF	AG	AH	AJ	AK	AL	AM	HA	
Fuel	Fuel tank	5	5												FL-5
	Fuel piping			5	5	5		5	5			5			
	Vapor lock														—
	Valve deposit	5		5	5	5		5	5			5			—
	Poor fuel (Heavy weight gasoline, Low octane)														—
Air	Air duct		5	5		5		5	5			5			EM-24
	Air cleaner														EM-15
	Air leakage from air duct (Mass air flow sensor — electric throttle control actuator)	5			5		5			5					EM-24
	Electric throttle control actuator														EM-26
	Air leakage from intake manifold/ Collector/Gasket														EM-26, EM-29
Cranking	Battery	1	1	1		1		1	1			1		1	PG-86
	Generator circuit														CHG-14 (With EXP-800 NI or GR8-1200 NI)*, CHG-17(Without EXP-800 NI or GR8-1200 NI)*
	Starter circuit	3													STR-10 (With GR8-1200 NI)*, STR-14 (Without GR8-1200 NI)*
	Signal plate	6													EM-95
	PNP signal	4													EC-808

		SYMPTOM													Reference page
		HARD/NO START/RESTART (EXCP. HA)	ENGINE STALL	HESITATION/SURGING/FLAT SPOT	SPARK KNOCK/DETONATION	LACK OF POWER/POOR ACCELERATION	HIGH IDLE/LOW IDLE	ROUGH IDLE/HUNTING	IDLING VIBRATION	SLOW/NO RETURN TO IDLE	OVERHEATS/WATER TEMPERATURE HIGH	EXCESSIVE FUEL CONSUMPTION	EXCESSIVE OIL CONSUMPTION	BATTERY DEAD (UNDER CHARGE)	
Warranty symptom code		AA	AB	AC	AD	AE	AF	AG	AH	AJ	AK	AL	AM	HA	
Engine	Cylinder head	5	5	5	5	5		5	5			5			EM-95
	Cylinder head gasket										4		3		
	Cylinder block	6	6	6	6	6		6	6			6	4		EM-122
	Piston														
	Piston ring														
	Connecting rod														
	Bearing														
	Crankshaft														
Valve mechanism	Timing chain	5	5	5	5	5		5	5			5			EM-63
	Camshaft														EM-76
	Intake valve timing control														EM-63
	Intake valve												3		EM-90
	Exhaust valve														
Exhaust	Exhaust manifold/Tube/Muffler/Gasket	5	5	5	5	5		5	5			5			EM-29, EX-4
	Three way catalyst														
Lubrication	Oil pan/Oil strainer/Oil pump/Oil filter/Oil gallery/Oil cooler	5	5	5	5	5		5	5			5			EM-36, LU-10, LU-12, LU-15
	Oil level (Low)/Filthy oil														LU-8
Cooling	Radiator/Hose/Radiator filler cap	5	5	5	5	5		5	5		4	5			CO-15, CO-26
	Thermostat									5					CO-24
	Water pump														CO-19
	Water gallery														CO-8
	Cooling fan									5					CO-17
	Coolant level (Low)/Contaminated coolant														CO-10
NVIS (NISSAN Vehicle Immobilizer System — NATS)		1	1												SEC-12

1 - 6: The numbers refer to the order of inspection.
*: For the details of the EXP-800 NI or GR8-1200 NI, refer to CHG-4, "Special Service Tool".

NORMAL OPERATING CONDITION

Description

INFOID:0000000011489831

FUEL CUT CONTROL (AT NO LOAD AND HIGH ENGINE SPEED)

If the engine speed is above 2,000 rpm under no load (for example, the selector lever position is P or N and engine speed is over 2,000 rpm) fuel will be cut off after some time. The exact time when the fuel is cut off varies based on engine speed.
Fuel cut will be operated until the engine speed reaches 1,100 rpm, then fuel cut will be cancelled.
NOTE:
This function is different from deceleration control listed under Multiport Fuel Injection (MFI) System, EC-553, "MULTIPORT FUEL INJECTION SYSTEM : System Description".

PERIODIC MAINTENANCE

IDLE SPEED

Work Procedure

INFOID:0000000011489832

1. CHECK IDLE SPEED

With CONSULT
Check idle speed in “DATA MONITOR” mode with CONSULT.
With GST
Check idle speed with Service $01 of GST.

>> INSPECTION END

IGNITION TIMING

Work Procedure

INFOID:0000000011489833

1. CHECK IGNITION TIMING

1. Attach timing light to loop wires ① as shown.

Ⓐ : Timing light

⇦ : Vehicle front

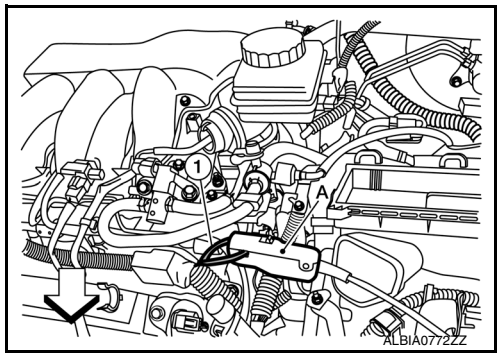

2. Check ignition timing.

>> INSPECTION END

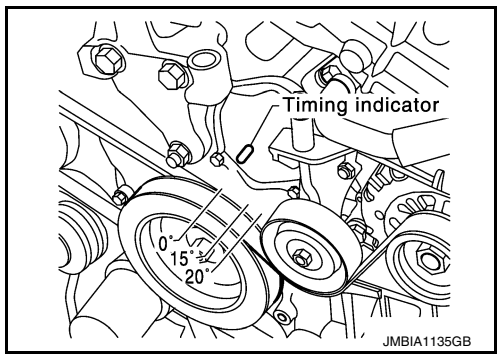

EVAP LEAK CHECK

Work Procedure

INFOID:0000000011489834

CAUTION:
- **Never use compressed air or a high pressure pump.**
- **Never exceed 4.12 kPa (0.042 kg/cm^2, 0.6 psi) of pressure in EVAP system.**

NOTE:
- Do not start engine.
- Improper installation of EVAP service port adapter (commercial service tool) to the EVAP service port may cause a leakage.

WITH CONSULT

1. To locate the EVAP leakage, install EVAP service port adapter (commercial service tool) and pressure pump to EVAP service port.
2. Turn ignition switch ON.
3. Select the “EVAP SYSTEM CLOSE” of “WORK SUPPORT MODE” with CONSULT.
4. Touch “START”. A bar graph (Pressure indicating display) will appear on the screen.
5. Apply positive pressure to the EVAP system until the pressure indicator reaches the middle of the bar graph.
6. Remove EVAP service port adapter (commercial service tool) and hose with pressure pump.
7. Locate the leakage using a leakage detector (commercial service tool). Refer to EC-561, "EVAPORATIVE EMISSION SYSTEM : System Description".

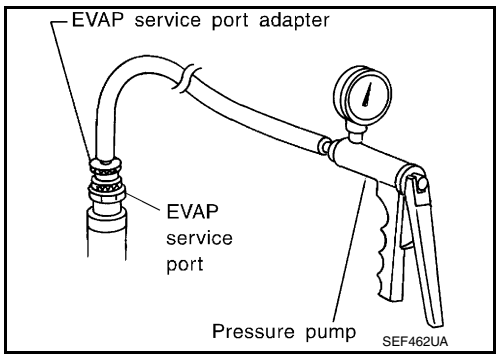

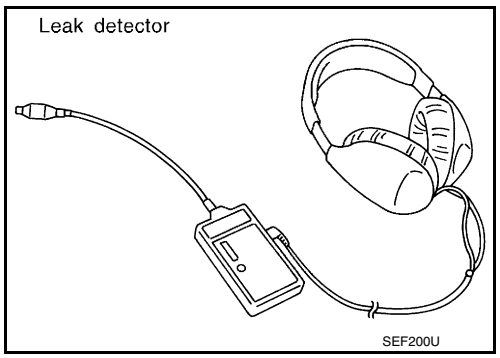

WITHOUT CONSULT

1. To locate the EVAP leakage, install EVAP service port adapter (commercial service tool) and pressure pump to EVAP service port.
2. Apply battery voltage between the terminals of EVAP canister vent control valve to make a closed EVAP system.
3. To locate the leakage, deliver positive pressure to the EVAP system until pressure gauge points reach 1.38 to 2.76 kPa (0.014 to 0.028 kg/cm^2, 0.2 to 0.4 psi).
4. Remove EVAP service port adapter (commercial service tool) and hose with pressure pump.

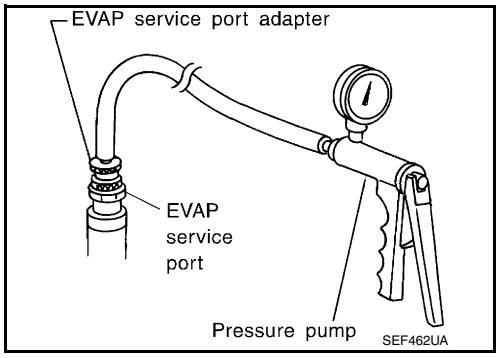

5. Locate the leakage using a leak detector (commercial service tool). Refer to EC-561, "EVAPORATIVE EMISSION SYSTEM : System Description".

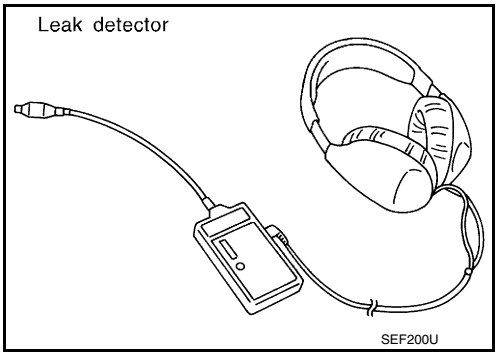

POSITIVE CRANKCASE VENTILATION

Work Procedure

INFOID:0000000011489835

1. CHECK PCV VALVE

With engine running at idle, remove PCV valve from rocker cover. A properly working valve makes a hissing noise as air passes through it. A strong vacuum should be felt immediately when a finger is placed over valve inlet.

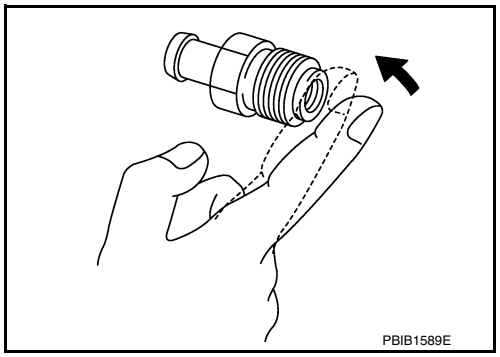

Is the inspection result normal?

YES >> INSPECTION END
NO >> Replace PCV valve.

REMOVAL AND INSTALLATION

ECM

Removal and Installation

INFOID:0000000011489836

CAUTION:
Perform ADDITIONAL SERVICE WHEN REPLACING ECM. Refer to EC-657, "Work Procedure".

REMOVAL

1. Remove front air duct. Refer to EM-24, "Exploded View".
2. Remove battery. Refer to PG-95, "Exploded View".
3. Disconnect ECM harness connectors. Refer to PG-10, "Harness Connector".
4. Remove ECM mounting nuts Ⓐ, and then remove ECM ①.

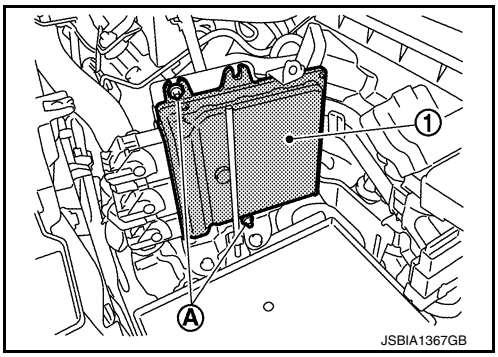

INSTALLATION
Install in the reverse order of removal.

SERVICE DATA AND SPECIFICATIONS (SDS)

SERVICE DATA AND SPECIFICATIONS (SDS)

Idle Speed

INFOID:0000000011489837

Condition	Specification
No load* (in P or N position)	625 ± 50 rpm

*: Under the following conditions
- A/C switch: OFF
- Electric load: OFF (Lights, heater fan & rear window defogger)
- Steering wheel: Kept in straight-ahead position

Ignition Timing

INFOID:0000000011489838

Condition	Specification
No load* (in P or N position)	12 ± 2° BTDC

*: Under the following conditions
- A/C switch: OFF
- Electric load: OFF (Lights, heater fan & rear window defogger)
- Steering wheel: Kept in straight-ahead position

Calculated Load Value

INFOID:0000000011489839

Condition	Specification (Using CONSULT or GST)
At idle	10 – 35 %
At 2,500 rpm	10 – 35 %

Mass Air Flow Sensor

INFOID:0000000011489840

Supply voltage	Battery voltage (11 – 14 V)
Output voltage at idle (in N position)	0.8 – 1.2 V*
Mass air flow (Using CONSULT or GST)	2.0 – 6.0 g/s at idle* 7.0 – 20.0 g/s at 2,500 rpm*

*: Engine is warmed up to normal operating temperature and running under no load.