SECTION ST
STEERING SYSTEM

CONTENTS

PRECAUTION

PRECAUTIONS

Precaution for Supplemental Restraint System (SRS) "AIR BAG" and "SEAT BELT PRE-TENSIONER"

INFOID:0000000009799967

The Supplemental Restraint System such as “AIR BAG” and “SEAT BELT PRE-TENSIONER”, used along with a front seat belt, helps to reduce the risk or severity of injury to the driver and front passenger for certain types of collision. This system includes seat belt switch inputs and dual stage front air bag modules. The SRS system uses the seat belt switches to determine the front air bag deployment, and may only deploy one front air bag, depending on the severity of a collision and whether the front occupants are belted or unbelted.
Information necessary to service the system safely is included in the “SRS AIR BAG” and “SEAT BELT” of this Service Manual.

WARNING:
Always observe the following items for preventing accidental activation.
- **To avoid rendering the SRS inoperative, which could increase the risk of personal injury or death in the event of a collision that would result in air bag inflation, all maintenance must be performed by an authorized NISSAN/INFINITI dealer.**
- **Improper maintenance, including incorrect removal and installation of the SRS, can lead to personal injury caused by unintentional activation of the system. For removal of Spiral Cable and Air Bag Module, see “SRS AIR BAG”.**
- **Never use electrical test equipment on any circuit related to the SRS unless instructed to in this Service Manual. SRS wiring harnesses can be identified by yellow and/or orange harnesses or harness connectors.**

PRECAUTIONS WHEN USING POWER TOOLS (AIR OR ELECTRIC) AND HAMMERS

WARNING:
Always observe the following items for preventing accidental activation.
- **When working near the Air Bag Diagnosis Sensor Unit or other Air Bag System sensors with the ignition ON or engine running, never use air or electric power tools or strike near the sensor(s) with a hammer. Heavy vibration could activate the sensor(s) and deploy the air bag(s), possibly causing serious injury.**
- **When using air or electric power tools or hammers, always switch the ignition OFF, disconnect the battery, and wait at least 3 minutes before performing any service.**

Service Notice or Precautions for Steering System

INFOID:0000000009236856

- In case of removing steering gear assembly, make the final tightening with grounded and unloaded vehicle condition, and then check wheel alignment.
- Observe the following precautions when disassembling.
- Before disassembly, thoroughly clean the outside of the unit.
- Disassembly should be done in a clean work area. It is important to prevent the internal parts from becoming contaminated by dirt or other foreign matter.
- For easier and proper assembly, place disassembled parts in order on a parts rack.
- Use nylon cloth or paper towels to clean the parts; common shop rags can leave lint that might interfere with their operation.
- Never reuse non-reusable parts.
- Before assembling, apply the specified grease to the directed parts.

PREPARATION

PREPARATION

Special Service Tools

INFOID:0000000009236857

The actual shapes of Kent-Moore tools may differ from those of special service tools illustrated here.

Tool number (Kent-Moore No.) Tool name		Description
ST27180001 (J-25726-A) Steering wheel puller	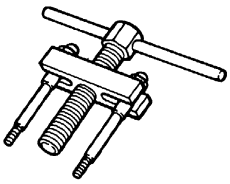 ZZA0819D	Removing steering wheel
ST3127S000 (J-25765-A) Preload gauge	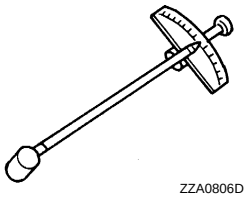 ZZA0806D	• Measuring steering wheel turning torque • Measuring steering column rotating torque • Measuring pinion rotating torque • Measuring ball joint rotating torque
KV48104400 (—) Teflon ring correcting tool a: 50 mm (1.97 in) dia. b: 36 mm (1.42 in) dia. c: 100 mm (3.94 in)	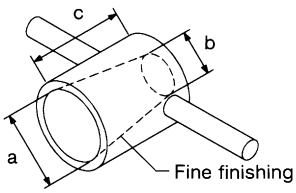 S-NT550	Installing rack Teflon ring
KV48103400 (—) Preload adapter	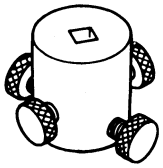 ZZA0824D	Measuring pinion rotating torque
ST35300000 (—) Drift a: 45.1 mm (1.776 in) dia. b: 59.0 mm (2.323 in) dia.	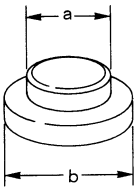 ZZA0881D	Installing oil pump oil seal

Tool number (Kent-Moore No.) Tool name	Description
KV48103500 (J-26357) Oil pressure gauge 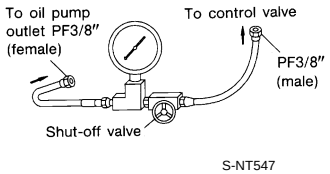	Measuring oil pump relief pressure
KV48102500 (J-33914) Oil pressure gauge adapter 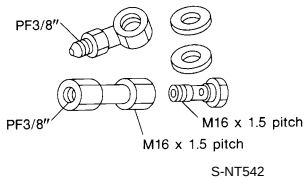	Measuring oil pump relief pressure

Commercial Service Tools

INFOID:0000000009236858

Tool name	Description
Power tool 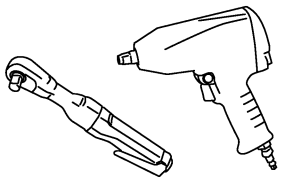	Loosening bolts and nuts
Ball joint remover 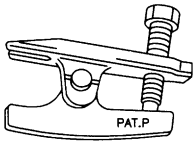	Removing steering outer socket
Open head 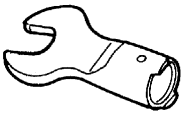	Tightening end cover assembly

Tool name	Description
Drift a: 15 mm (0.59 in) dia. b: 10 mm (0.39 in) dia. 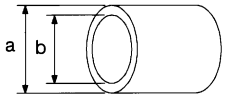 S-NT474	Installing rotor snap ring
Lint-free paper 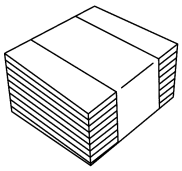 JSDIA4746ZZ	Power steering oil pump disassembly

Lubricant or/and Sealant

INFOID:0000000009809311

Name	Description	Note
Multi-purpose grease	Power steering oil pump	—

SYSTEM DESCRIPTION

COMPONENT PARTS

HEATED STEERING WHEEL SYSTEM

HEATED STEERING WHEEL SYSTEM : Component Parts Location

INFOID:0000000009641141

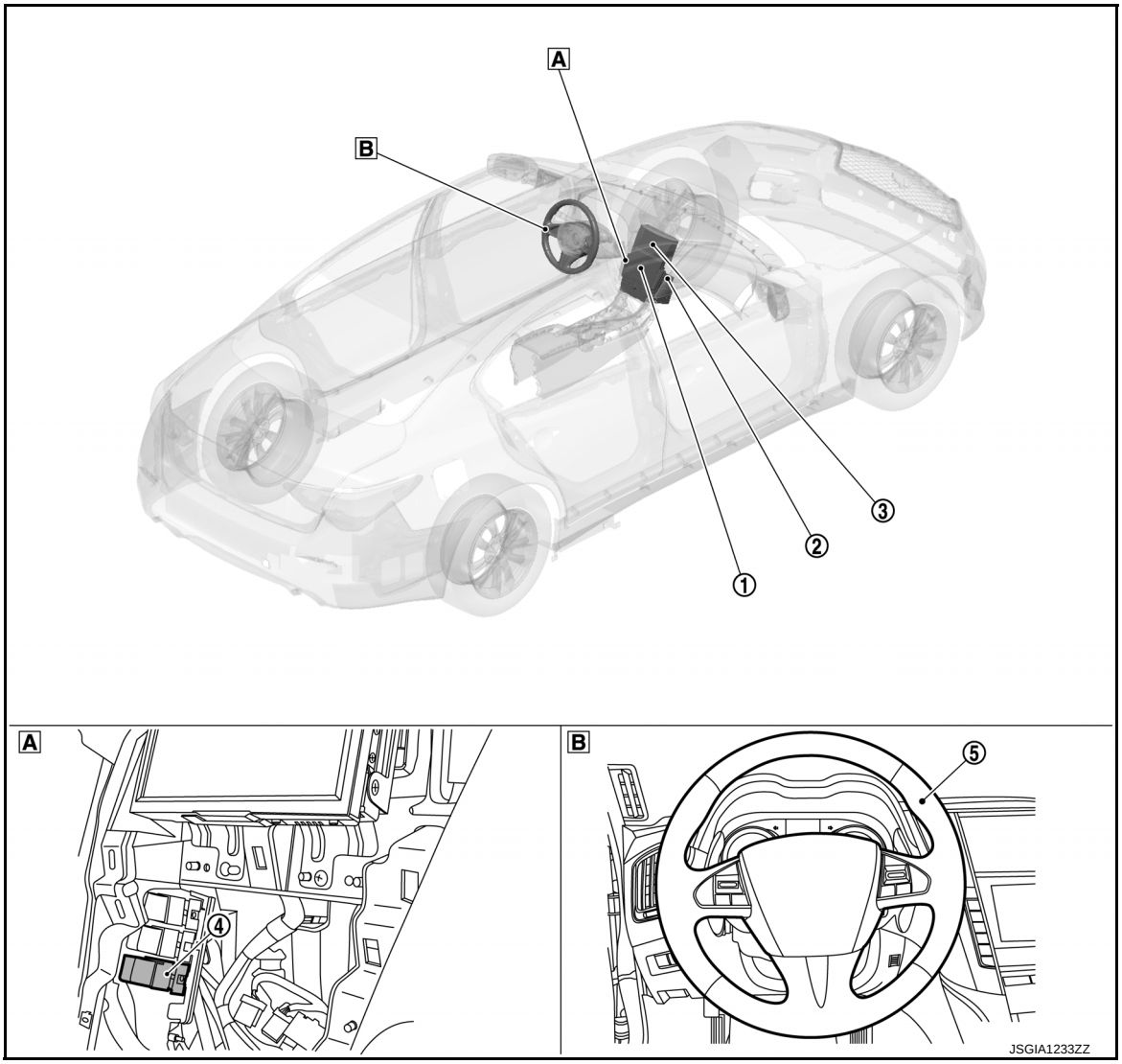

A At the back of integral switch

B Steering wheel

No.	Component	Function
①	Integral switch	• Changes the following settings according to the operation of the display part. - Steering heater function ON/OFF - Steering heater AUTO function ON/OFF • Transmits the following signals to display control unit via communication line. - Steering heater signal - Steering heater auto signal • Refer to AV-14, "Component Parts Location" for detailed installation location.
②	A/C auto amp.	• For the function, refer to ST-9, "HEATED STEERING WHEEL SYSTEM : A/C Auto Amp.". • Refer to HAC-5, "AUTOMATIC AIR CONDITIONING SYSTEM : Component Parts Location" for detailed installation location.
③	Display control unit	• Transmits the following signals received from integral switch to AC auto amp. via CAN communication. - Steering heater signal - Steering heater auto signal • Refer to AV-14, "Component Parts Location" for detailed installation location.
④	Heated steering wheel relay	ST-9, "HEATED STEERING WHEEL SYSTEM : Heated Steering Wheel Relay"
⑤	Heated steering wheel	ST-9, "HEATED STEERING WHEEL SYSTEM : Heated Steering Wheel"

HEATED STEERING WHEEL SYSTEM : Heated Steering Wheel

INFOID:0000000009641142

With the power supply from the heated steering wheel relay, the heated steering wheel controls temperature through the heating element ① and thermostat ② built into the steering wheel.

- Heating element: Generates heat by energization.
  NOTE:
  Heating element is located at the back of the steering wheel leather surface.
- Thermostat: Turns ON/OFF power supply according to the specified temperature.

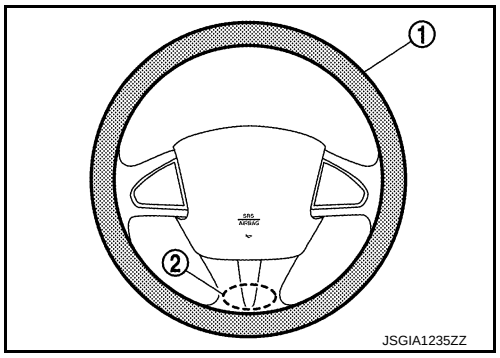

HEATED STEERING WHEEL SYSTEM : Heated Steering Wheel Relay

INFOID:0000000009641143

Through the control of the A/C auto amp., the heated steering wheel relay turns ON/OFF electricity to the heating element built-in the steering wheel. For location, refer to ST-8, "HEATED STEERING WHEEL SYSTEM : Component Parts Location".

HEATED STEERING WHEEL SYSTEM : A/C Auto Amp.

INFOID:0000000009641144

- A/C auto amp. turns ON/OFF the heated steering wheel relay, according to a signal transmitted from display control unit by CAN communication.
- The A/C auto amp. includes a timer. The heated steering wheel relay is turned OFF when the timer operating time reaches 30 minutes.
- Timer: Turns ON/OFF the heated steering wheel relay for a specified period of time
- For other information of A/C auto amp., refer to HAC-10, "A/C Auto Amp.".

SYSTEM

HEATED STEERING WHEEL SYSTEM

HEATED STEERING WHEEL SYSTEM : System Description

INFOID:0000000009641145

SYSTEM DIAGRAM

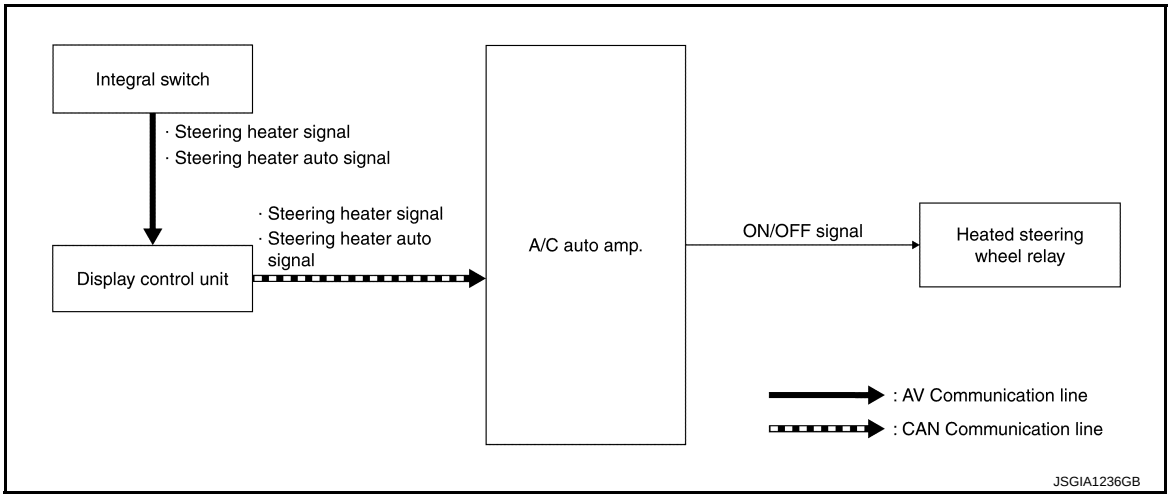

FUNCTION FLOW

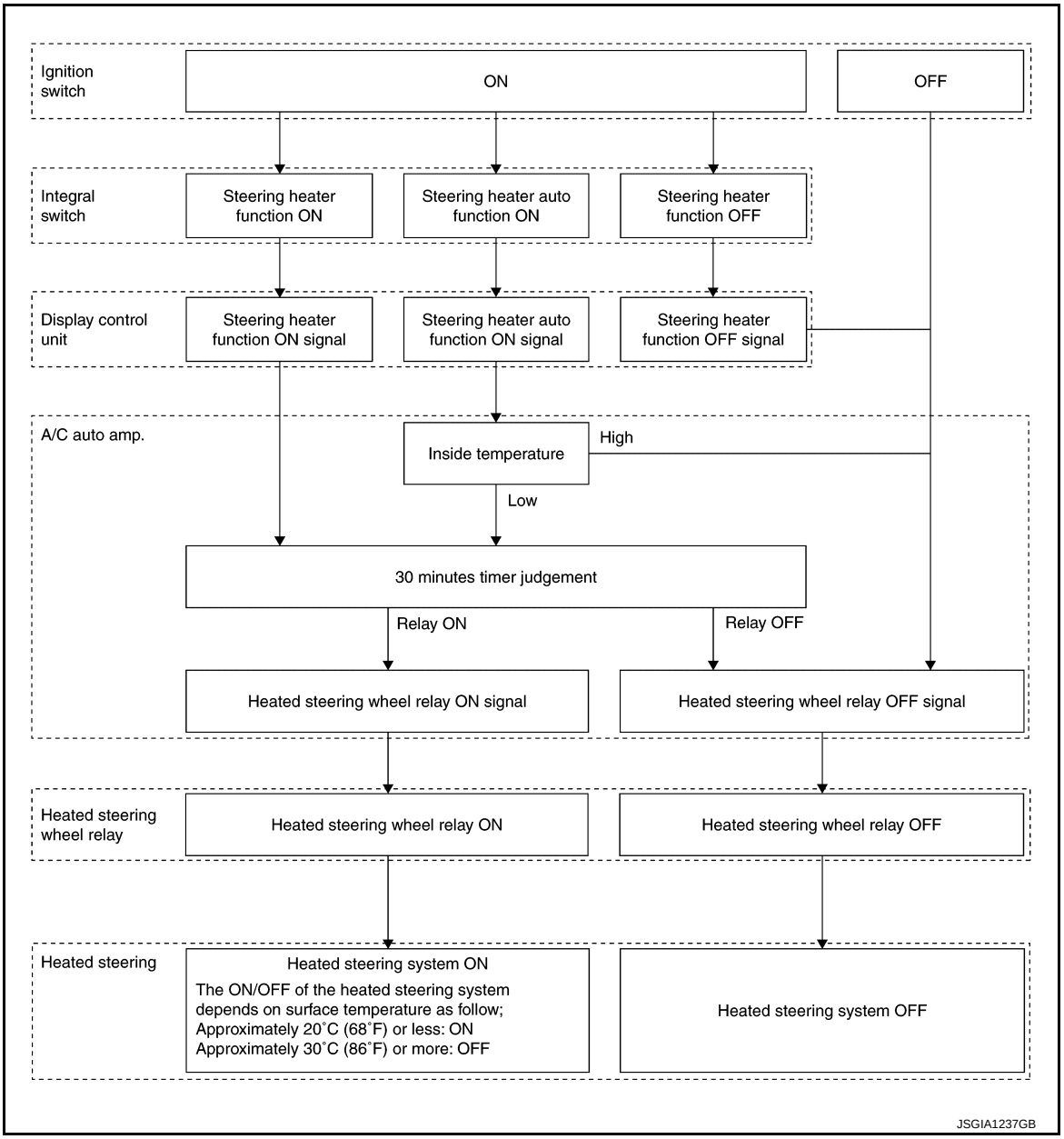

DESCRIPTION

Normal Control

- The heated steering wheel system maintains the surface temperature of the steering wheel between 20°C (68°F) and 30°C (86°F).
- Once steering heater function turns ON on the integral switch display, A/C auto amp. that has received signal via display control unit turns the heated steering wheel relay ON and electrifies to the heat elements built-in the steering wheel to heat the steering wheel.
- When steering heater function turns OFF, A/C auto amp. turns OFF the heated steering wheel relay and stops the electricity supply to the heat elements.
- When the surface temperature of the steering wheel is higher than 30°C (86°F), the thermostat built-in the steering wheel turns OFF, and electricity to the heating element is turned OFF. When the surface temperature drops to less than 20°C (68°F), the thermostat built-in the steering wheel turns ON, and electricity to the heating element is turned ON.

Auto Control

- Once steering heater auto function turns ON on the integral switch display part, the steering heater switches to the auto control.

- Under the auto control, A/C auto amp. turns the heated steering wheel relay ON and electrifies the heat elements built in the steering wheel to heat the steering wheel when the temperature in the passenger room is low.
- After the heated steering wheel relay turns ON, the electricity to the heat element switches ON/OFF corresponding to the steering wheel surface temperature as well as under the normal control.
- If ON⇔OFF operation of “Steering Heater” is performed on the integral switch display, the auto control is cancelled.

Timer Function

- The A/C auto amp. has a timer. After steering heater function or steering heater auto function turns ON, when operating time becomes more than the specified time (30 minutes), the A/C auto amp. turns OFF the heated steering wheel relay to stop heating.

Condition for Electrifying Heat Elements

Ignition switch	Timer function judgment result	Steering Heater Mode	Electrifying heat elements
ON	ON	Steering Heater ON	Turns ON/OFF corresponding to the steering wheel surface temperature.
		Steering Heater Auto ON	• Turns ON when the passenger room temperature is low. • Turns ON/OFF corresponding to the steering wheel surface temperature after electricity turns ON.
		• Steering Heater OFF • Steering Heater Auto OFF	OFF
	OFF	—	OFF
OFF	—	—	OFF

HEATED STEERING WHEEL SYSTEM : Circuit Diagram

INFOID:0000000009641146

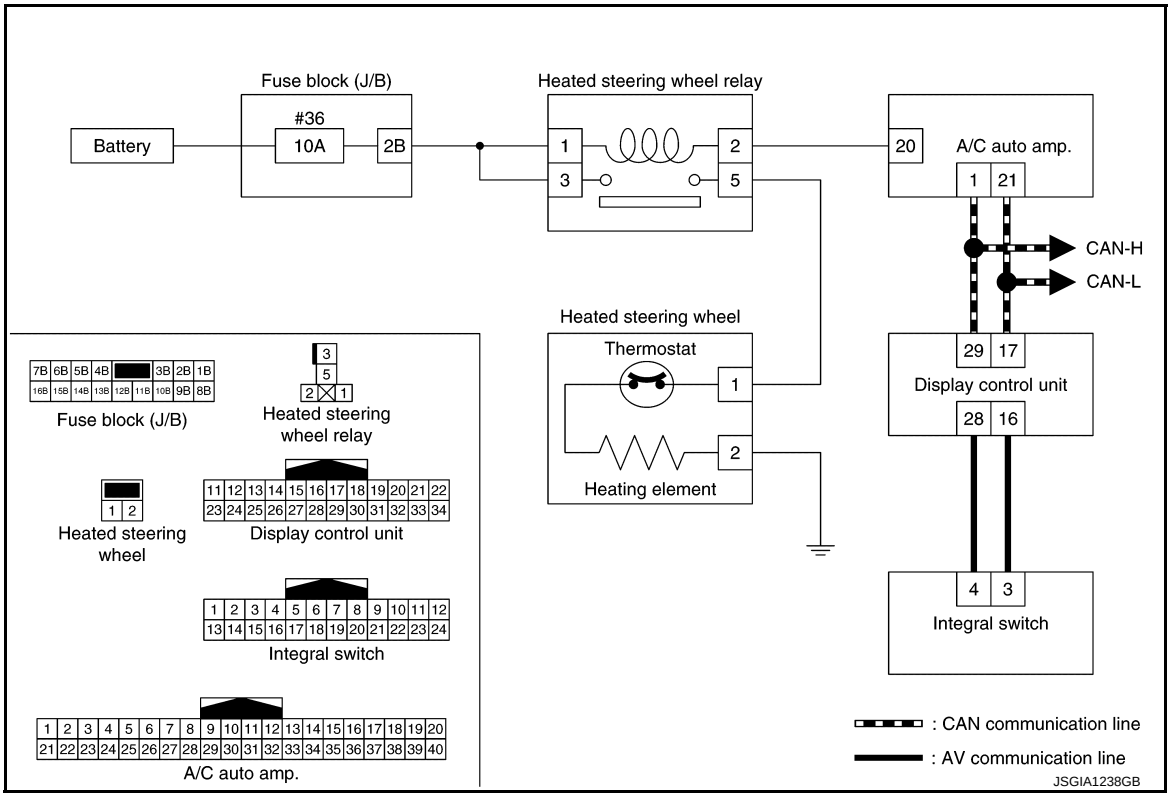

WIRING DIAGRAM

HEATED STEERING WHEEL

Wiring Diagram

INFOID:0000000009641147

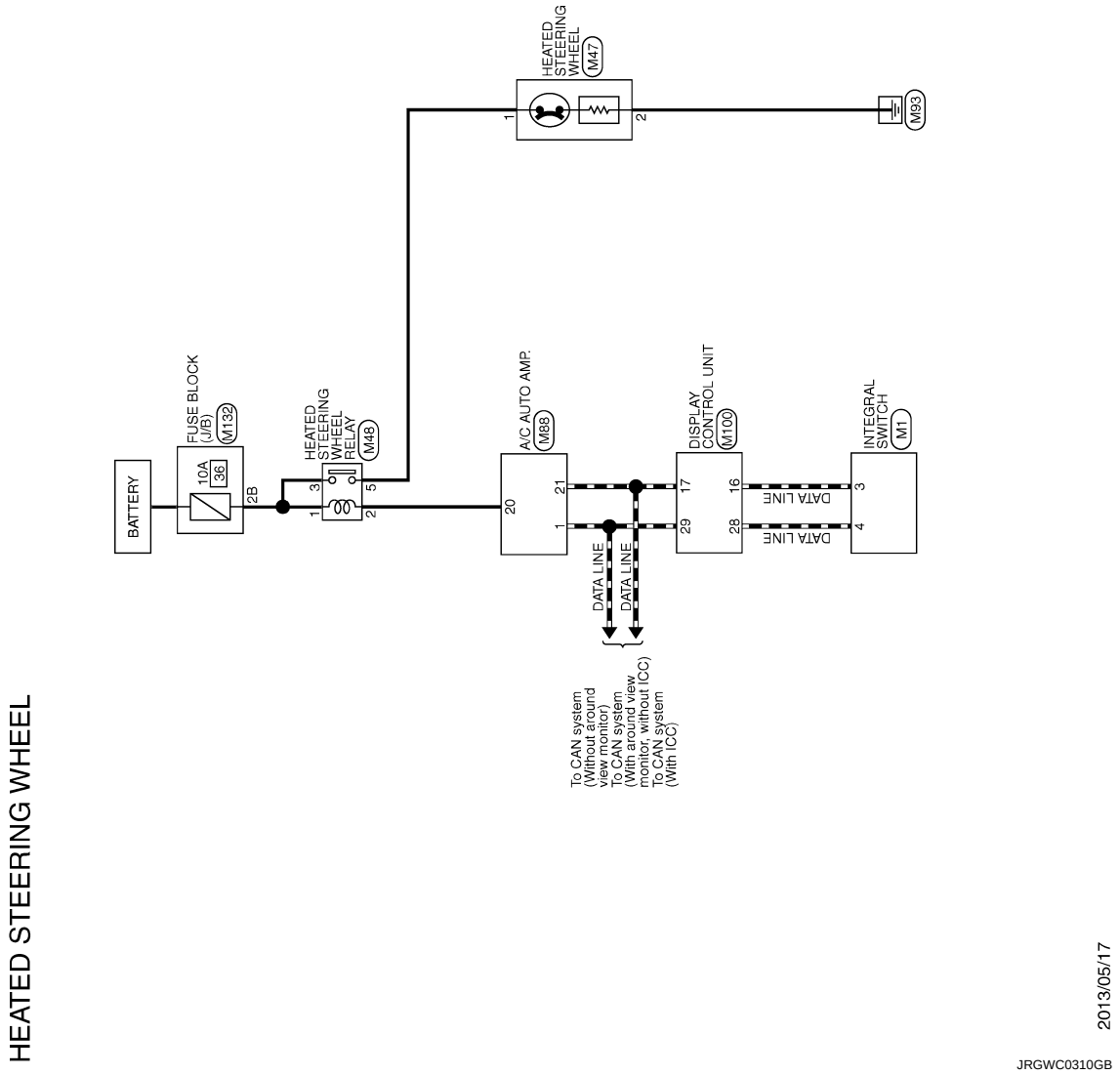

HEATED STEERING WHEEL

Connector No.	M1
Connector Name	INTEGRAL SWITCH
Connector Type	TH24FW-NH

H.S.

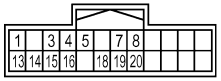

Terminal No.	Color Of Wire	Signal Name [Specification]
1	W	BAT
3	SB	AV COMM (L)
4	LG	AV COMM (H)
5	G	DOOR LOCK STATUS INDICATOR LAMP SIGNAL
7	W/B	DISK EJECT SIGNAL
8	G	HAZERD SIGNAL
13	B	GND
14	V	ACC
15	B	ILLUMINATION CONTROL SIGNAL
16	BG	DISK EJECT SIGNAL GROUND
18	R	IGN
19	BR	CAMERA SWITCH SIGNAL
20	LG	AIR BAG INDICATOR OFF SIGNAL

Connector No.	M47
Connector Name	HEATED STEERING WHEEL
Connector Type	NS02FW-CS

H.S.

Terminal No.	Color Of Wire	Signal Name [Specification]
1	BR	–
2	B	–

Connector No.	M48
Connector Name	HEATED STEERING WHEEL RELAY
Connector Type	MS02FL-M2-LC

H.S.

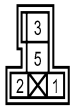

Terminal No.	Color Of Wire	Signal Name [Specification]
1	B	–
2	L	–
3	B	–
5	BR	–

Connector No.	M88
Connector Name	A/C AUTO AMP.
Connector Type	TH40FW-NH

H.S.

Terminal No.	Color Of Wire	Signal Name [Specification]
1	L	CAN-H
2	B	GND
3	W	BAT
7	G	AMBIENT SENS
9	R	SUNLOAD SENS
13	V	IGN SW ACC
16	P	LIN
17	R	DOOR MOTOR PWR SPLY
18	P	BLOWER MOTOR CONT
20	L	HEAT STRG WHL RLY CONT
21	P	CAN-L
22	B	GND
23	W	IGN SW ON
26	B	SENS GND
27	LG	IN-VEHICLE SENS
28	BR	INTAKE SENS
30	BG	EXH GAS/OUT ODOR DTCT SENS
37	B	GND
38	BG	IONIZER CONT
40	BG	ECV CONT

Connector No.	M100
Connector Name	DISPLAY CONTROL UNIT
Connector Type	TH24FW-NH

H.S.

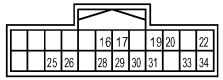

Terminal No.	Color Of Wire	Signal Name [Specification]
16	SB	AV COMM (L)
17	P	CAN-L
19	R	DIMMER SIGNAL
20	BR	REVERSE SIGNAL
22	B	GND
25	SB	–
26	BR	CAMERA SWITCH SIGNAL
28	LG	AV COMM (H)
29	L	CAN-H
30	R	IGN
31	R	VEHICLE SPEED SIGNAL (8-PULSE)
33	SB	ACC
34	Y	BAT

Connector No.	M132
Connector Name	FUSE BLOCK (J/B)
Connector Type	NS16FW-CS

H.S.

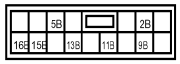

Terminal No.	Color Of Wire	Signal Name [Specification]
11B	LG	–
13B	P	–
15B	Y	–
16B	Y	–
2B	B	–
5B	R	–
9B	Y	–

JRGWC0311GB

BASIC INSPECTION

DIAGNOSIS AND REPAIR WORK FLOW

Work Flow (Heated Steering Wheel)

INFOID:0000000009641149

DETAILED FLOW

1. OBTAIN INFORMATION ABOUT SYMPTOM

Interview the customer to obtain the malfunction information (conditions and environment when the malfunction occurred) as much as possible when the customer brings the vehicle in.

CAUTION:

Customers are not professional. Never guess easily like “maybe the customer means that...,” or “maybe the customer mentions this symptom”.

>> GO TO 2.

2. REPRODUCE THE MALFUNCTION INFORMATION

Check the malfunction on the vehicle that the customer describes.
Inspect the relation of the symptoms and the condition when the symptoms occur.

>> GO TO 3.

3. IDENTIFY THE MALFUNCTIONING SYSTEM WITH “SYMPTOM DIAGNOSIS”

Use “Symptom diagnosis” from the symptom inspection result in step 2 and then identify where to start performing the diagnosis based on possible causes and symptoms.

>> GO TO 4.

4. IDENTIFY THE MALFUNCTIONING PARTS WITH “DTC/CIRCUIT DIAGNOSIS”

Perform the diagnosis with “DTC/circuit diagnosis” of the applicable system.

>> GO TO 5.

5. REPAIR OR REPLACE THE MALFUNCTIONING PARTS

Repair or replace the specified malfunctioning parts.

>> GO TO 6.

6. FINAL CHECK

Check that malfunctions are not reproduced when obtaining the malfunction information from the customer, referring to the symptom inspection result in step 2.

Are the malfunctions corrected?

YES >> INSPECTION END
NO >> GO TO 2.

STEERING WHEEL

Inspection

INFOID:0000000009236868

NEUTRAL POSITION STEERING WHEEL

1. Check that steering gear assembly, steering column assembly and steering wheel are installed in the correct position.
2. Check that wheel alignment is within specification. Refer to FSU-7, "VEHICLE SPEED SENSITIVE P/S : Inspection" (2WD), FSU-29, "VEHICLE SPEED SENSITIVE P/S : Inspection" (AWD).
3. Set the vehicle to the straight-ahead position and confirm steering wheel is in the neutral position.
   - Loosen outer socket lock nut and turn inner socket to left and right equally to make fine adjustments if steering wheel is not in the neutral position.

   CAUTION:
   If the adjustment is performed by using the inner socket, check wheel alignment after the adjustment. Refer to FSU-7, "VEHICLE SPEED SENSITIVE P/S : Inspection" (2WD), FSU-29, "VEHICLE SPEED SENSITIVE P/S : Inspection" (AWD).

STEERING WHEEL TURNING FORCE

1. Park vehicle on a level and dry surface, set parking brake.
2. Tires need to be inflated normal pressure. Refer to WT-68, "Tire Air Pressure".
3. Start engine.
4. Check steering wheel turning force when steering wheel has been turned 360° from neutral position.

Steering wheel turning force : **Refer to ST-57, "Steering Wheel".**

L : 185 mm (7.28 in)

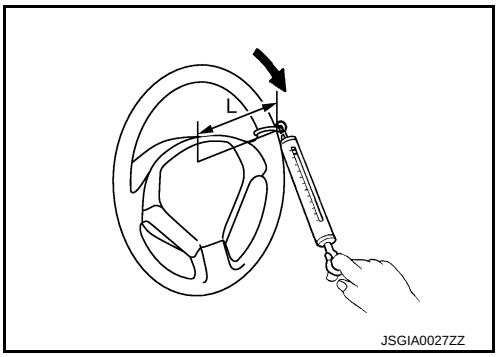

RACK SLIDING FORCE

1. Disconnect lower joint and steering knuckle from steering gear assembly. Refer to ST-39, "2WD : Removal and Installation" (2WD), ST-44, "AWD : Removal and Installation" (AWD).
2. Start and run the engine at idle to make sure steering fluid has reached normal operating temperature.

Fluid temperature : 50 – 80°C (122 – 176°F)

3. While pulling outer socket slowly in ±11.5 mm (±0.453 in) range from neutral position, make sure rack sliding force is within specification.

Rack sliding force : **Refer to ST-58, "Steering Gear And Linkage".**

4. If rack sliding force is not within specification, overhaul steering gear assembly.

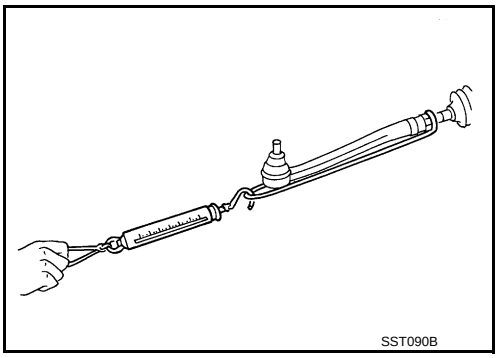

FRONT WHEEL TURNING ANGLE

1. Perform toe-in inspection. Refer to FSU-7, "VEHICLE SPEED SENSITIVE P/S : Inspection" (2WD), FSU-29, "VEHICLE SPEED SENSITIVE P/S : Inspection" (AWD).

   CAUTION:
   Perform front wheel turning angle inspection, after toe-in inspection.

2. Place front wheels on turning radius gauges and rear wheels on stands, so that vehicle can be level.
3. Check the maximum inner and outer wheel turning angles for LH and RH road wheels.

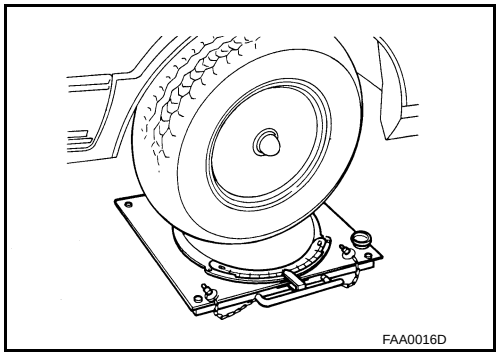

- With the engine at idle, turn steering wheel from full left stop to full right stop and measure the turning angles.

Inner wheel (Angle: A) **: Refer to ST-57, "Steering Angle".**

Outer wheel (Angle: B) **: Refer to ST-57, "Steering Angle".**

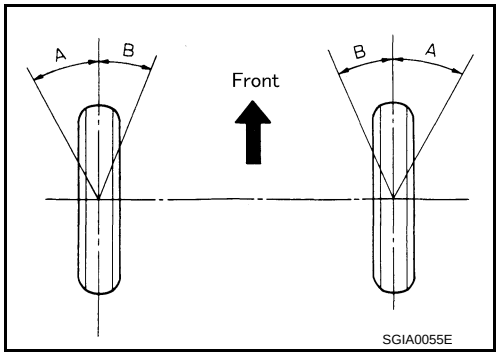

- Check the following items when turning angle is out of the standard.
- Check the neutral position of the rack stroke (L).

Rack stroke neutral position (L) **: Refer to ST-58, "Steering Gear And Linkage".**

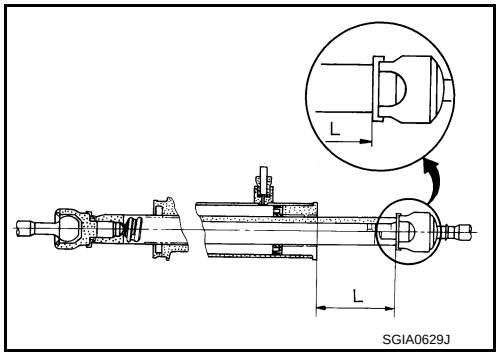

DTC/CIRCUIT DIAGNOSIS

HEATED STEERING WHEEL SYSTEM

Component Function Check

INFOID:0000000009641150

1. CHECK HEATED STEERING WHEEL SYSTEM

Check operate heated steering wheel system. Refer to ST-10, "HEATED STEERING WHEEL SYSTEM : System Description".

Is the inspection result normal?

YES >> INSPECTION END
NO >> Go to ST-18, "Diagnosis Procedure".

Diagnosis Procedure

INFOID:0000000009641151

1. CHECK HEATED STEERING WHEEL POWER SUPPLY

1. Switch heated steering mode to ON.
2. Check voltage between heated steering wheel relay harness connector and ground.

Terminals			Voltage (Approx.)
(+)		(–)	
Heated steering wheel relay		Ground	
Connector	Terminal		
M48	5	—	Battery voltage

Is the inspection result normal?

YES >> GO TO 6.
NO >> GO TO 2.

2. CHECK HEATED STEERING WHEEL RELAY

Check heated steering wheel relay. Refer to ST-20, "Component Inspection (Heated Steering Wheel Relay)".

Is the inspection result normal?

YES >> GO TO 3.
NO >> Replace heated steering wheel relay. Refer to ST-8, "HEATED STEERING WHEEL SYSTEM : Component Parts Location".

3. CHECK HEATED STEERING WHEEL RELAY POWER SUPPLY

1. Turn the ignition switch OFF.
2. Disconnect heated steering wheel relay harness connector.
3. Check voltage between heated steering wheel relay harness connector and ground.

Terminals			Voltage (Approx.)
(+)		(–)	
Heated steering wheel relay		Ground	
Connector	Terminal		
M48	1	—	Battery voltage
	3		

Is the inspection result normal?

YES >> GO TO 5.
NO >> GO TO 4.

4. CHECK HEATED STEERING WHEEL RELAY CIRCUIT (1)

1. Check 10A fuse (#36).
2. Disconnect fuse block (J/B) harness connector.

3. Check continuity between heated steering wheel relay harness connector terminal and fuse block (J/B) harness connector terminal.

Heated steering wheel relay		Fuse block (J/B)		Continuity
Connector	Terminal	Connector	Terminal	
M48	1	M132	2B	Existed
	3			

4. Check continuity between heated steering wheel relay harness connector terminal and ground.

Heated steering wheel relay		Ground	Continuity
Connector	Terminal	—	
M48	1	Ground	Not existed
	3		

Is the inspection result normal?

YES >> Perform trouble diagnosis for battery power supply circuit.
NO >> Repair or replace error-detected parts.

5. CHECK HEATED STEERING WHEEL RELAY CIRCUIT (2)

1. Disconnect heated steering wheel harness connector.
2. Check continuity between heated steering wheel relay harness connector terminal and A/C auto amp. harness connector terminal.

Heated steering wheel relay		A/C auto amp.		Continuity
Connector	Terminal	Connector	Terminal	
M48	2	M88	20	Existed

3. Check continuity between heated steering wheel relay harness connector terminal and ground.

Heated steering wheel relay		—	Continuity
Connector	Terminal		
M48	2	Ground	Not existed

Is the inspection result normal?

YES >> Repair or replace A/C auto amp.. Refer to HAC-113, "Removal and Installation".
NO >> Repair or replace error-detected parts.

6. CHECK HEATED STEERING WHEEL CIRCUIT

1. Disconnect heated steering wheel harness connector.
2. Check continuity between heated steering wheel relay harness connector and heated steering wheel harness connector.

Heated steering wheel relay		Heated steering wheel		Continuity
Connector	Terminal	Connector	Terminal	
M48	5	M47	1	Existed

3. Check continuity between heated steering wheel relay harness connector terminal and ground.

Heated steering wheel relay		—	Continuity
Connector	Terminal		
M48	5	Ground	Not existed

Is the inspection result normal?

YES >> GO TO 7.
NO >> Repair or replace error-detected parts.

7. CHECK HEATED STEERING WHEEL

Check heated steering wheel. Refer to ST-20, "Component Inspection (Heated Steering Wheel)".

Is the inspection result normal?

YES >> GO TO 8.
NO >> Replace heated steering wheel. Refer to ST-30, "Removal and Installation".

8. CHECK GROUND CIRCUIT

Check continuity between heated steering wheel harness connector terminal and ground.

Heated steering wheel		—	Continuity
Connector	Terminal		
M47	2	Ground	Existed

Is the inspection result normal?

YES >> Check the intermittent incident. Refer to GI-43, "Intermittent Incident".
NO >> Repair or replace damaged parts.

Component Inspection (Heated Steering Wheel)

INFOID:0000000009641153

1. CHECK HEATED STEERING WHEEL CONTINUITY

1. Turn ignition switch OFF.
2. Remove the heated steering wheel. Refer to ST-30, "Removal and Installation".
3. Check continuity between heated steering wheel harness connector terminal and ground.

Heated steering wheel	Condition	Continuity
Terminal		
1 – 2	Leather surface temperature of 20°C (68°F) or less	Existed
	Leather surface temperature of 30°C (86°F) or more	Not existed

Is the inspection result normal?

YES >> GO TO 2.
NO >> Replace heated steering wheel. Refer to ST-30, "Removal and Installation".

2. CHECK HEATED STEERING WHEEL RESISTANCE

Check resistance between heated steering wheel connector terminals.

Heated steering wheel	Condition	Resistance
Terminal		
1 – 2	Leather surface temperature of 20°C (68°F)	1.7 – 2.17 Ω

Is the inspection result normal?

YES >> INSPECTION END
NO >> Replace heated steering wheel. Refer to ST-30, "Removal and Installation".

Component Inspection (Heated Steering Wheel Relay)

INFOID:0000000009641154

1. CHECK HEATED STEERING WHEEL RELAY CONTINUITY

Check continuity between heated steering wheel relay terminals.

CAUTION:

- **Connect the fuse between the terminals when applying the voltage.**
- **To prevent damage, always observe the correct polarity.**
- **Prevent short-circuit.**

Heated steering wheel relay Terminal	Condition	Continuity
3 – 5	Apply 12 V direct current between terminals 1 and 2.	Existed
	Other conditions.	Not existed

Is the inspection result normal?

YES >> INSPECTION END

NO >> Replace heated steering wheel relay. Refer to ST-8, "HEATED STEERING WHEEL SYSTEM : Component Parts Location".

SYMPTOM DIAGNOSIS

HEATED STEERING WHEEL SYSTEM DOES NOT ACTIVATE

Description

INFOID:0000000009641160

- The heated steering wheel does not warm up.
- The heated steering wheel system cannot be turned OFF.

Diagnosis Procedure

INFOID:0000000009641161

1. CHECK HEATED STEERING WHEEL POWER SUPPLY

1. Switch heated steering mode to ON.
2. Check voltage between heated steering wheel relay harness connector and ground.

Terminals			Voltage (Approx.)
(+)		(–)	
Heated steering wheel relay		Ground	
Connector	Terminal		
M48	5	—	Battery voltage

Is the inspection result normal?

YES >> GO TO 6.
NO >> GO TO 2.

2. CHECK HEATED STEERING WHEEL RELAY

Check heated steering wheel relay. Refer to ST-20, "Component Inspection (Heated Steering Wheel Relay)".

Is the inspection result normal?

YES >> GO TO 3.
NO >> Replace heated steering wheel relay. Refer to ST-8, "HEATED STEERING WHEEL SYSTEM : Component Parts Location".

3. CHECK HEATED STEERING WHEEL RELAY POWER SUPPLY

1. Turn the ignition switch OFF.
2. Disconnect heated steering wheel relay harness connector.
3. Check voltage between heated steering wheel relay harness connector and ground.

Terminals			Voltage (Approx.)
(+)		(–)	
Heated steering wheel relay		Ground	
Connector	Terminal		
M48	1	—	Battery voltage
	3		

Is the inspection result normal?

YES >> GO TO 5.
NO >> GO TO 4.

4. CHECK HEATED STEERING WHEEL RELAY CIRCUIT (1)

1. Check 10A fuse (#36).
2. Disconnect fuse block (J/B) harness connector.
3. Check continuity between heated steering wheel relay harness connector terminal and fuse block (J/B) harness connector terminal.

Heated steering wheel relay		Fuse block (J/B)		Continuity
Connector	Terminal	Connector	Terminal	
M48	1	M132	2B	Existed
	3			

4. Check continuity between heated steering wheel relay harness connector terminal and ground.

Heated steering wheel relay		Ground	Continuity
Connector	Terminal	—	
M48	1	Ground	Not existed
	3		

Is the inspection result normal?

YES >> Perform trouble diagnosis for battery power supply circuit.
NO >> Repair or replace error-detected parts.

5. CHECK HEATED STEERING WHEEL RELAY CIRCUIT (2)

1. Disconnect heated steering wheel harness connector.
2. Check continuity between heated steering wheel relay harness connector terminal and A/C auto amp. harness connector terminal.

Heated steering wheel relay		A/C auto amp.		Continuity
Connector	Terminal	Connector	Terminal	
M48	2	M88	20	Existed

3. Check continuity between heated steering wheel relay harness connector terminal and ground.

Heated steering wheel relay		—	Continuity
Connector	Terminal		
M48	2	Ground	Not existed

Is the inspection result normal?

YES >> Repair or replace A/C auto amp.. Refer to HAC-113, "Removal and Installation".
NO >> Repair or replace error-detected parts.

6. CHECK HEATED STEERING WHEEL CIRCUIT

1. Disconnect heated steering wheel harness connector.
2. Check continuity between heated steering wheel relay harness connector and heated steering wheel harness connector.

Heated steering wheel relay		Heated steering wheel		Continuity
Connector	Terminal	Connector	Terminal	
M48	5	M47	1	Existed

3. Check continuity between heated steering wheel relay harness connector terminal and ground.

Heated steering wheel relay		—	Continuity
Connector	Terminal		
M48	5	Ground	Not existed

Is the inspection result normal?

YES >> GO TO 7.
NO >> Repair or replace error-detected parts.

7. CHECK HEATED STEERING WHEEL

Check heated steering wheel. Refer to ST-20, "Component Inspection (Heated Steering Wheel)".

Is the inspection result normal?

YES >> GO TO 8.
NO >> Replace heated steering wheel. Refer to ST-30, "Removal and Installation".

8. CHECK GROUND CIRCUIT

Check continuity between heated steering wheel harness connector terminal and ground.

Heated steering wheel		—	Continuity
Connector	Terminal		
M47	2	Ground	Existed

Is the inspection result normal?

YES >> Check the intermittent incident. Refer to GI-43, "Intermittent Incident".
NO >> Repair or replace damaged parts.

NOISE, VIBRATION AND HARSHNESS (NVH) TROUBLESHOOTING

NVH Troubleshooting Chart

INFOID:0000000009236882

2WD

Use the chart below to find the cause of the symptom. If necessary, repair or replace these parts.

Possible cause and SUSPECTED PARTS			Fluid level	Air in hydraulic system	Outer/inner socket ball joint swinging torque	Outer/inner socket ball joint rotating torque	Outer/inner socket ball joint end play	Steering fluid leakage	Steering wheel play	Steering gear rack sliding force	Drive belt looseness	Improper steering wheel	Improper installation or looseness of tilt lock lever	Mounting looseness	Steering column deformation or damage	Improper installation or looseness of steering column	Steering linkage looseness	PROPELLER SHAFT	DIFFERENTIAL	AXLE and SUSPENSION	TIRE	ROAD WHEEL	DRIVE SHAFT	BRAKE
Reference			ST-27, "Inspection"	ST-27, "Inspection"	ST-42, "2WD : Inspection and Adjustment"	ST-42, "2WD : Inspection and Adjustment"	ST-42, "2WD : Inspection and Adjustment"	ST-27, "Inspection"	ST-16, "Inspection"	ST-16, "Inspection"	EM-19, "Checking"	—	—	ST-38, "2WD : Exploded View"	ST-32, "Inspection and Adjustment"	ST-31, "Exploded View"	ST-38, "2WD : Exploded View"	NVH in DLN section.	NVH in DLN section.	NVH in FAX, RAX, FSU, RSU section.	NVH in WT section.	NVH in WT section.	NVH in RAX section.	NVH in BR section.
Symptom	Steering	Noise	×	×	×	×	×	×	×	×	×				×	×		×	×	×	×	×	×	×
		Shake										×	×	×				×		×	×	×	×	×
		Vibration										×	×	×	×	×		×		×	×		×	
		Shimmy										×		×			×			×	×	×		×
		Judder											×	×			×			×	×	×		×

×: Applicable

AWD

Use the chart below to find the cause of the symptom. If necessary, repair or replace these parts.

		Reference	ST-27, "Inspection"	ST-27, "Inspection"	ST-47, "AWD : Inspection"	ST-47, "AWD : Inspection"	ST-47, "AWD : Inspection"	ST-27, "Inspection"	ST-16, "Inspection"	ST-16, "Inspection"	EM-19, "Checking"	—	—	ST-43, "AWD : Exploded View"	ST-32, "Inspection and Adjustment"	ST-31, "Exploded View"	ST-43, "AWD : Exploded View"	NVH in DLN section.	NVH in DLN section.	NVH in FAX, RAX, FSU, RSU section.	NVH in WT section.	NVH in WT section.	NVH in FAX, RAX section.	NVH in BR section.
Possible cause and SUSPECTED PARTS			Fluid level	Air in hydraulic system	Outer/inner socket ball joint swinging torque	Outer/inner socket ball joint rotating torque	Outer/inner socket ball joint end play	Steering fluid leakage	Steering wheel play	Steering gear rack sliding force	Drive belt looseness	Improper steering wheel	Improper installation or looseness of tilt lock lever	Mounting looseness	Steering column deformation or damage	Improper installation or looseness of steering column	Steering linkage looseness	PROPELLER SHAFT	DIFFERENTIAL	AXLE and SUSPENSION	TIRE	ROAD WHEEL	DRIVE SHAFT	BRAKE
Symptom	Steering	Noise	×	×	×	×	×	×	×	×	×				×	×		×	×	×	×	×	×	×
		Shake										×	×	×				×		×	×	×	×	×
		Vibration										×	×	×	×	×		×		×	×		×	
		Shimmy										×		×			×			×	×	×		×
		Judder											×	×			×			×	×	×		×

×: Applicable

PERIODIC MAINTENANCE

POWER STEERING FLUID

Inspection

INFOID:0000000009236883

FLUID LEVEL

1. Check fluid level with engine stopped.
2. Ensure that fluid level is between MIN and MAX.
3. Fluid levels at HOT and COLD are different. Do not confuse them.

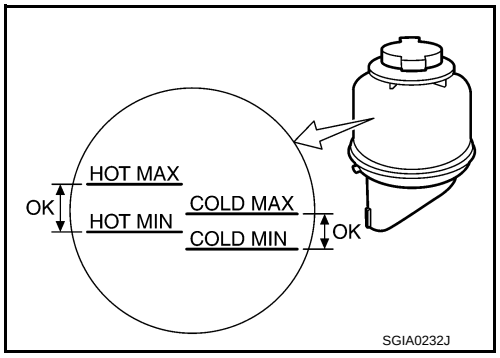

HOT : Fluid temperature 50 – 80°C (122 – 176°F)
COLD : Fluid temperature 0 – 30°C (32 – 86°F)

Recommended fluid : **Refer to MA-14, "FOR NORTH AMERICA : Fluids and Lubricants" (For North America), MA-15, "FOR MEXICO : Fluids and Lubricants" (For Mexico).**

Fluid capacity : **Refer to ST-57, "General Specifications".**

CAUTION:
- **The fluid level should not exceed the MAX line. Excessive fluid causes fluid leakage from the cap.**
- **Never reuse drained power steering fluid.**
- **Always use the specified fluid. Refer to MA-14, "FOR NORTH AMERICA : Fluids and Lubricants" (For North America), MA-15, "FOR MEXICO : Fluids and Lubricants" (For Mexico).**

FLUID LEAKAGE

Check hydraulic connections for fluid leakage, cracks, damage, looseness, or wear.

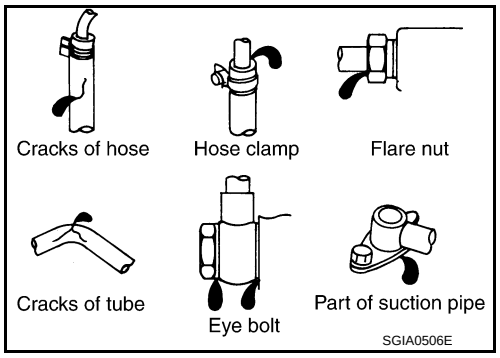

1. Run the engine until the fluid temperature reaches 50 to 80°C (122 to 176°F) in reservoir tank, and keep engine speed idle.
2. Turn steering wheel several times from full left stop to full right stop.
3. Hold steering wheel at each lock position for five seconds and carefully check for fluid leakage.
   CAUTION:
   Never hold the steering wheel in a locked position for more than 10 seconds. (There is the possibility that power steering oil pump assembly may be damaged.)
4. If fluid leakage at connections is noticed, then loosen flare nut and then retighten. Do not overtighten connector as this can damage O-ring, washer and connector.
5. If fluid leakage from oil pump is noticed, check oil pump. Refer to ST-53, "Inspection".
6. Check steering gear boots for accumulation of fluid leaked from steering gear.

AIR BLEEDING HYDRAULIC SYSTEM

If air bleeding is not complete, the following symptoms can be observed.
- Bubbles are created in reservoir tank.
- Clicking noise can be heard from oil pump.
- Excessive buzzing in the oil pump.

NOTE:
Fluid noise may occur in the steering gear or oil pump. This does not affect performance or durability of the system.

1. Turn steering wheel several times from full left stop to full right stop with engine off.
   CAUTION:
   Fill reservoir tank with a sufficient amount of fluid so that fluid level is not below the MIN line while turning steering wheel.
2. Start the engine and hold steering wheel at each lock position for 3 seconds at idle to check for fluid leakage.
3. Repeat step 2 above several times at approximately 3 seconds intervals.
   CAUTION:
   Never hold the steering wheel in a locked position for more than 10 seconds. (There is the possibility that oil pump may be damaged.)
4. Check fluid for bubbles and white contamination.
5. Stop the engine if bubbles and white contamination do not drain out. Perform step 2 and 3 above after waiting until bubbles and white contamination drain out.
6. Stop the engine, and then check fluid level.

STEERING WHEEL

Inspection

INFOID:0000000009236884

STEERING WHEEL AXIAL END PLAY

1. Check installation conditions of steering gear assembly, front suspension assembly, axle and steering column assembly.
2. Check if movement exists when steering wheel is moved up and down, to the left and right and to the axial direction.

Steering wheel axial end play : Refer to ST-57, "Steering Wheel".

3. Check the following items when steering wheel axial end play is out of the standard.
   - Check the steering column assembly mounting condition. Refer to ST-31, "Exploded View".
   - Check steering gear assembly mounting condition for looseness. Refer to ST-38, "2WD : Exploded View" (2WD), ST-43, "AWD : Exploded View" (AWD).

STEERING WHEEL PLAY

1. Turn steering wheel so that front wheels come to the straight-ahead position.
2. Start the engine and lightly turn steering wheel to the left and right until front wheels start to move.
3. Measure steering wheel movement on the outer circumference.

Steering wheel play : Refer to ST-57, "Steering Wheel".

4. Check the following items when steering wheel play is out of the standard.
   - Check backlash for each joint of steering column assembly.
   - Check installation condition of steering gear assembly.

REMOVAL AND INSTALLATION

STEERING WHEEL

Exploded View

INFOID:0000000009236885

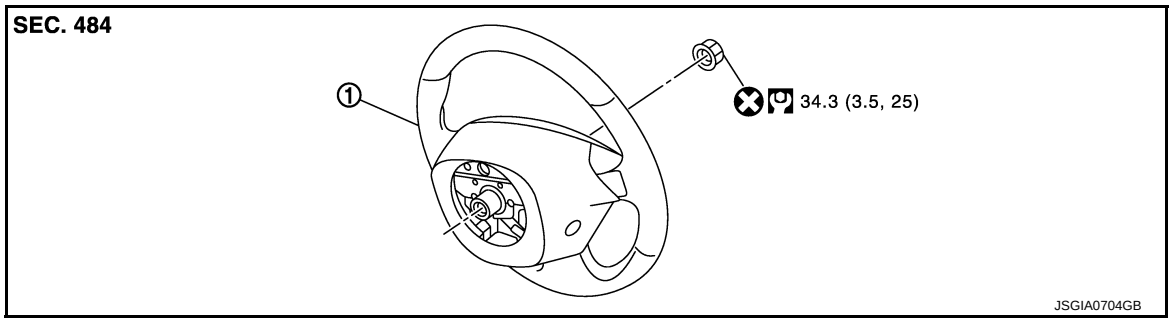

1 Steering wheel

: Always replace after every disassembly.

: N·m (kg-m, ft-lb)

Removal and Installation

INFOID:0000000009236886

REMOVAL

NOTE:

When reconnecting spiral cable, fix cable with a tape so that fixing case and rotating part keep aligned. This will omit neutral position alignment procedure during spiral cable installation.

1. Set the vehicle to the straight-ahead position.
2. Remove driver air bag module. Refer to SR-16, "Removal and Installation".
3. Remove steering wheel lock nut after steering is locked.
4. Remove steering wheel with the steering wheel puller (A) [SST: ST27180001 (J-25726-A)].
   NOTE:
   Put paint marks on the steering wheel and the column shaft head for supporting accurate positioning during the installation procedure.

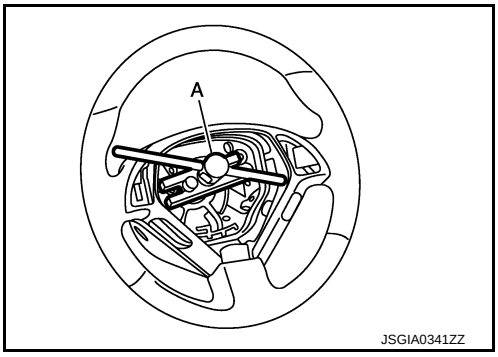

INSTALLATION

Note the following, and install in the reverse order of removal.

- Check the spiral cable neutral position after replacing or rotating spiral cable. Refer to SR-20, "Removal and Installation".
  CAUTION:
  Never twist spiral cable freely on excessively after it becomes tight (doing so may cause the cable to tear off).
- Never reuse steering wheel lock nut.

STEERING COLUMN

Exploded View

INFOID:0000000009236888

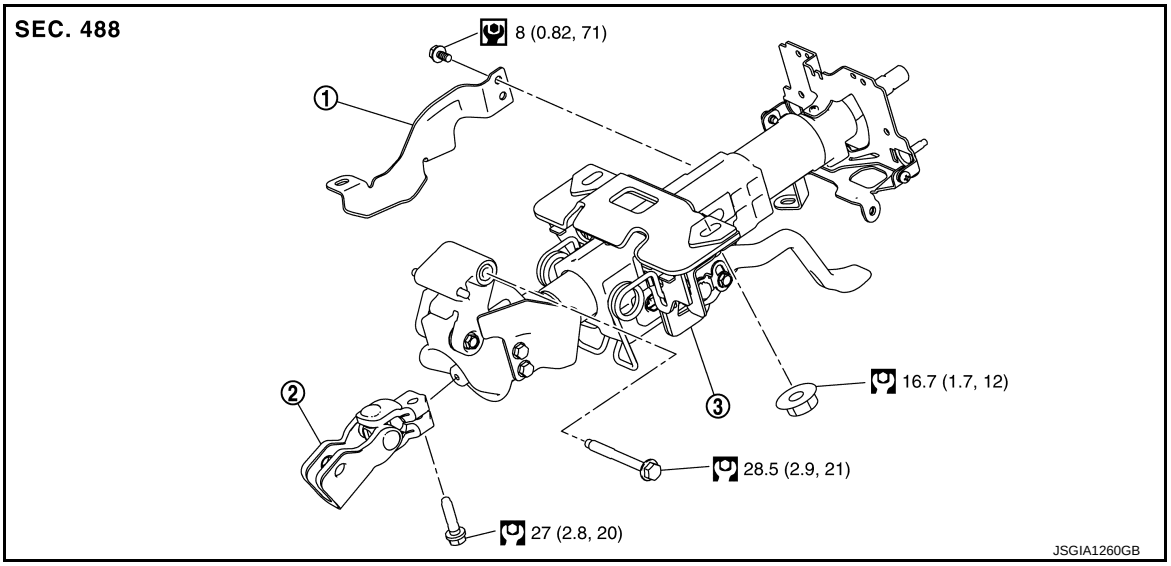

① Harness bracket ② Upper joint ③ Steering column assembly

: N·m (kg-m, ft-lb)

: N·m (kg-m, in-lb)

Removal and Installation

INFOID:0000000009236889

REMOVAL

CAUTION:

- **Never impact on the axis when removing steering column assembly.**
- **Be careful when removing steering column assembly from the vehicle because it is heavy.**
- **While removing the steering column assembly, never move the steering gear.**
- **When removing the steering column assembly, be careful not to allow the steering shaft to turn.**
- **To prevent a malfunction and deformation from occurring in the tilt mechanism, never apply excessive force to the tilt lever.**

1. Set the vehicle to the straight-ahead position.
2. Place the tilt to the highest level, and place the telescopic to the longest level.
3. Remove driver air bag module. Refer to SR-16, "Removal and Installation".
4. Remove steering wheel. Refer to ST-30, "Removal and Installation".
5. Remove instrument lower panel. Refer to IP-12, "Removal and Installation".
6. Remove the steering column cover. Refer to IP-12, "Removal and Installation".
7. Remove spiral cable. Refer to SR-20, "Removal and Installation".
8. Remove combination switch. Refer to BCS-99, "Removal and Installation".
9. Disconnect each switch harness connectors installed to steering column assembly.
10. Remove upper joint mounting bolt and nut (steering shaft side).
11. Separate the upper joint from steering shaft. Refer to ST-34, "Removal and Installation".
    CAUTION:
    - **Place a matching mark on both steering shaft and upper joint before removing steering shaft.**
    - **When removing upper joint, never insert a tool, such as a screwdriver, into the yoke groove to pull out the upper joint. In case of the violation of the above, replace upper joint with a new one.**
12. Remove steering column assembly.
    CAUTION:
    When removing the mounting, be careful not to drop the steering column assembly.

13. If necessary, remove upper joint, harness, band, and brackets.
14. Perform inspection after removal. Refer to ST-32, "Inspection and Adjustment".

INSTALLATION

Note the following, and install in the reverse order of removal.

CAUTION:

- **Never impact on the axis when removing steering column assembly.**
- **While removing the steering column assembly, never move the steering gear.**
- When installing steering shaft to upper joint, follow the procedure listed below.

- To tighten upper joint mounting nut (steering shaft side), manually tighten the bolt to check for scoring or galling before tightening the nut to the specified torque.

  CAUTION:

  Never reuse nut.

- After installation, check that there is no clearance Ⓐ between steering shaft ① and upper joint yoke ② and between steering shaft and mounting bolt ③.

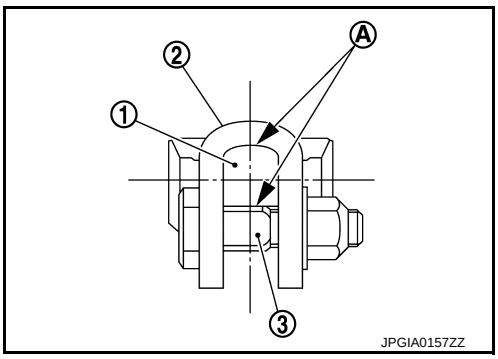

- When installing the steering column assembly ①, temporarily tighten the bolt and nuts before tightening to the specified torque, referring to the tightening method and the numerical order shown below:

Temporary tightening	1 → 2
Final tightening (Specified torque)	3 → 4

- Perform inspection after installation. Refer to ST-32, "Inspection and Adjustment".

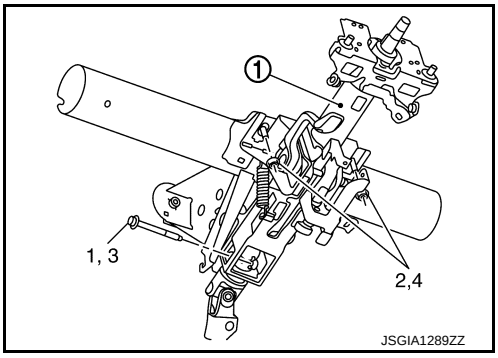

Inspection and Adjustment

INFOID:0000000009236890

INSPECTION AFTER REMOVAL

- Check each part of steering column assembly for damage or other malfunctions. Replace if necessary.
- Measure steering column rotating torque using a preload gauge (A) [SST: ST3127S000 (J-25765-A)]. Replace steering column assembly if the rotating torque is outside the standard.

Rotating torque : Refer to ST-57, "Steering Column".

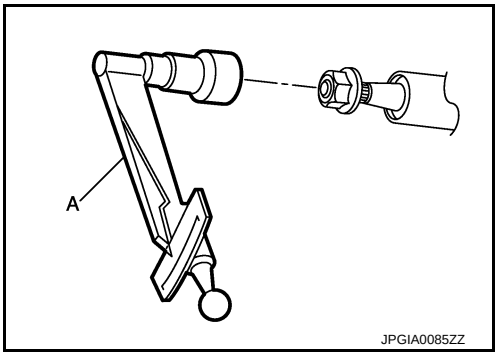

- Check the following items, if vehicle has been involved in a minor collision. Replace steering column assembly if outside the standard.

- Check the length (A) shown in the figure.

CAUTION:
Set the telescopic mechanism to its maximum length to measure the length of steering column.

Steering column length (A) **: Refer to ST-57, "Steering Column".**

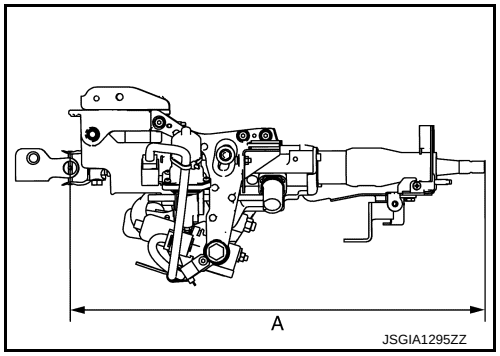

- Check the dimension “A” and “B” shown in the figure.

Impact displacement absorption part dimension (A) and (B) **: Refer to ST-57, "Steering Column".**

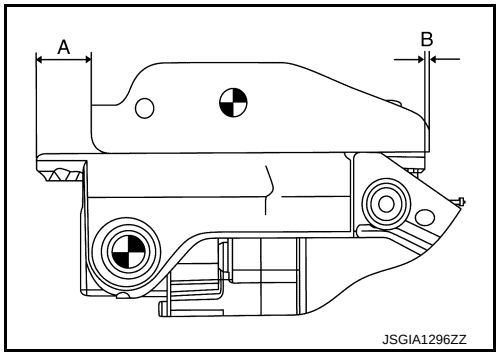

- Check that there is not the gap and unmatching in part Ⓐ between slide block ① and upper bracket ②.

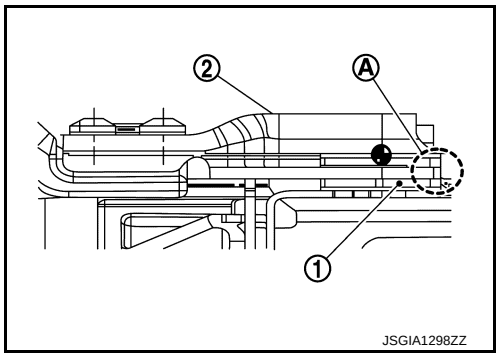

INSPECTION AFTER INSTALLATION

- Check each part of steering column assembly for damage or other malfunctions. Replace if necessary.
- Check that there is no malfunction, such as unusual steering feel or interference when operating tilt and telescopic.
- Check tilt and telescopic mechanism operating range (A), (B) as shown in the figure.

Tilt operating range (A) **: Refer to ST-57, "Steering Column".**

Telescopic operating range (B) **: Refer to ST-57, "Steering Column".**

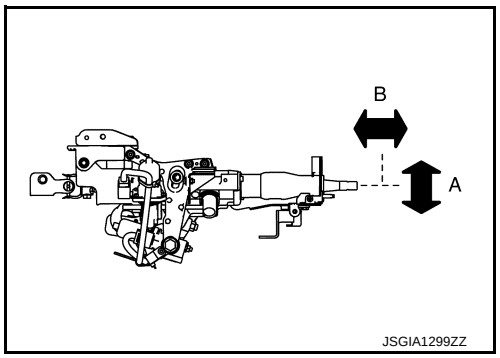

- Check the steering wheel play, neutral position steering wheel, steering wheel turning torque, and front wheel turning angle.
- Steering wheel play: Refer to ST-29, "Inspection".
- neutral position steering wheel, steering wheel turning torque, and front wheel turning angle: Refer to ST-16, "Inspection".
- Adjust neutral position of steering angle sensor. Refer to BRC-70, "Work Procedure".

STEERING SHAFT

Exploded View

INFOID:0000000009236891

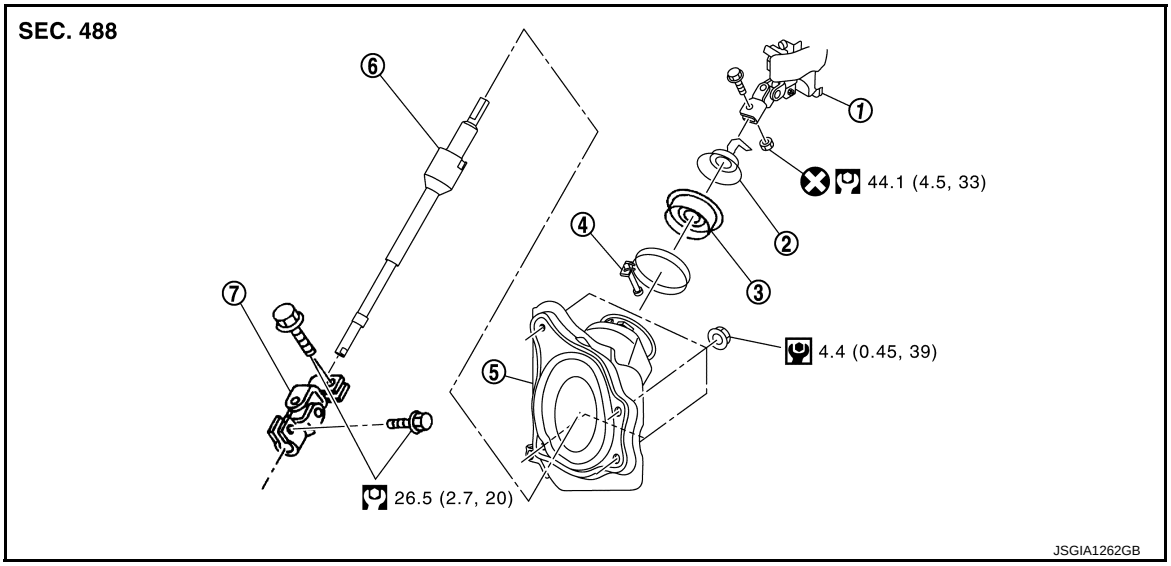

① Steering column assembly	② Collar	③ Hole cover seal
④ Clamp	⑤ Hole cover	⑥ Lower shaft
⑦ Lower joint		

: Always replace after every disassembly.

: N·m (kg-m, ft-lb)

: N·m (kg-m, in-lb)

Removal and Installation

INFOID:0000000009236892

REMOVAL

CAUTION:

Spiral cable may be cut if steering wheel turns while separating steering column assembly and steering gear assembly. Be sure to secure steering wheel using string to avoid turning.

1. Set vehicle to the straight-ahead position.
2. Fix the steering wheel.
3. Remove lower joint mounting bolt (steering gear side).
4. Separate the lower joint from the steering gear assembly by sliding the slide shaft (A: sliding range).
   CAUTION:
   - **Place a matching mark on both lower joint and steering gear assembly before removing lower joint.**
   - **When removing lower joint, never insert a tool, such as a screwdriver, into the yoke groove to pull out the lower joint. In case of the violation of the above, replace lower joint with a new one.**

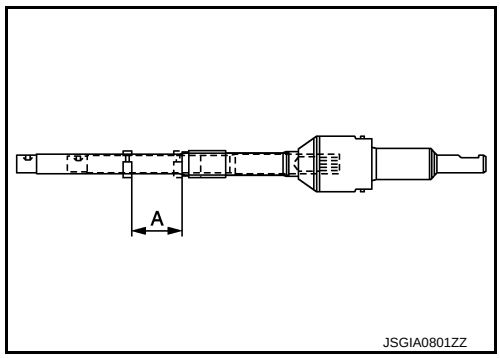

5. Remove the hole cover mounting nuts.
6. Remove upper joint mounting bolt and nut (steering shaft side).
   CAUTION:
   - **Never damage collar.**
   - **When removing upper joint, never insert a tool, such as a screwdriver, into the yoke groove to pull out the upper joint. In case of the violation of the above, replace upper joint with a new one.**
7. Remove the steering shaft and hole cover.

8. Remove hole cover seal and, clamp and collar.
9. Perform inspection after removal. Refer to ST-36, "Inspection".

INSTALLATION

Note the following, and install in the reverse order of removal.

CAUTION:

Spiral cable may be cut if steering wheel turns while separating steering column assembly and steering gear assembly. Be sure to secure steering wheel using string to avoid turning.

- When installing hole cover seal ① to hole cover ②, Insert hole cover seal end face Ⓐ until contacts hole cover end face Ⓑ.
- Never damage seal lip when inserting hole cover seal to steering shaft.

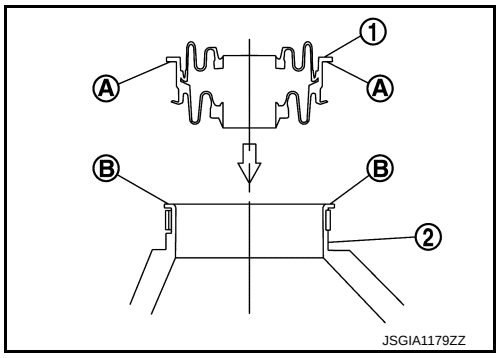

- Install clamp as shown in the figure.

A : 76 – 86°

⇦ : Vehicle upper

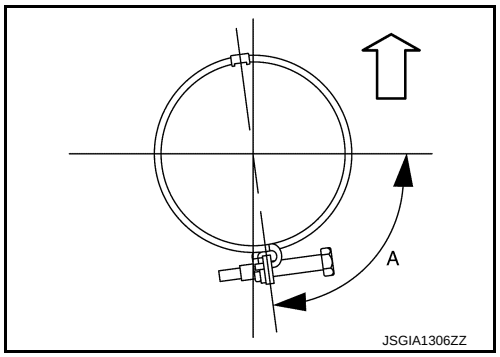

- Tighten the clamp to the specified torque and check the clamp length (A).

Clamp length (A) : 14.0 – 18.0 mm (0.551 – 0.709 in)

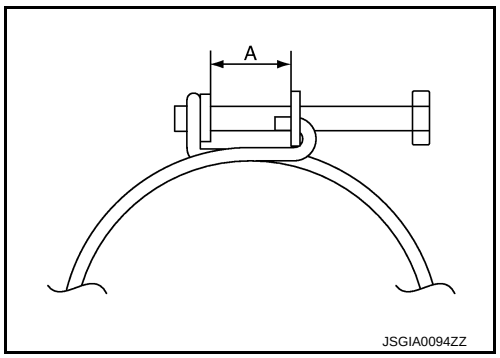

- For upper joint mounting bolt direction, refer to ST-34, "Exploded View". (Do not insert it from the other side.)
- When installing steering shaft to upper joint, follow the procedure listed below.

- To tighten upper joint mounting nut (steering shaft side), manually tighten the bolt to check for scoring or galling before tightening the bold to the specified torque.

  CAUTION:

  Never reuse upper joint mounting nut (steering shaft side).

- After installation, check that there is no clearance Ⓐ between steering shaft ① and upper joint yoke ② and between steering shaft and mounting bolt ③.

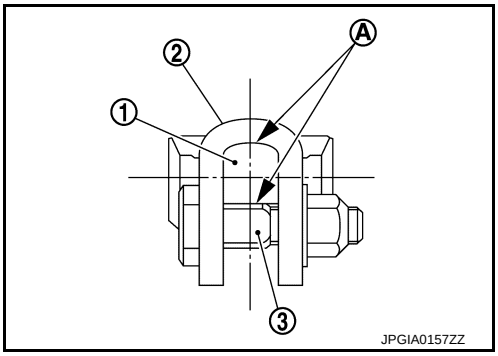

- When installing lower joint to steering gear assembly, follow the procedure listed below.
- Align slit of lower joint ① with rear cover cap projection Ⓐ, insert lower joint end face Ⓑ until contacts steering gear assembly end face Ⓒ.
- When tightening the lower joint mounting bolt (steering shaft side), manually tighten the bolt and check that there is no hook and scratch. Check that the bolt is properly placed in the groove of the steering gear assembly before tightening the bolt to the specified torque.
- Perform inspection after installation. Refer to ST-36, "Inspection".

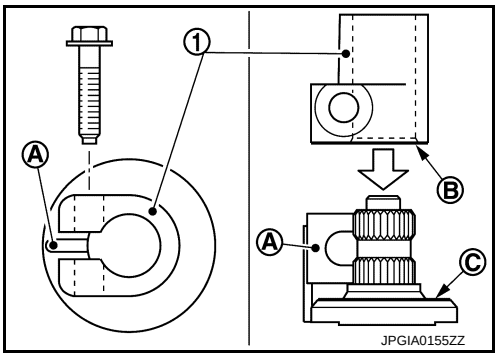

Inspection

INFOID:0000000009236893

INSPECTION AFTER REMOVAL

Check the following items and replace, if necessary.

- Check hole cover and hole cover seal for damage or other malfunctions.
- Check steering shaft for damage or other malfunctions.
- Check the length (A) of the steering shaft.

CAUTION:
Check the length extended position of the steering shaft.

Shaft length (A) : Refer to ST-57, "Steering Shaft".

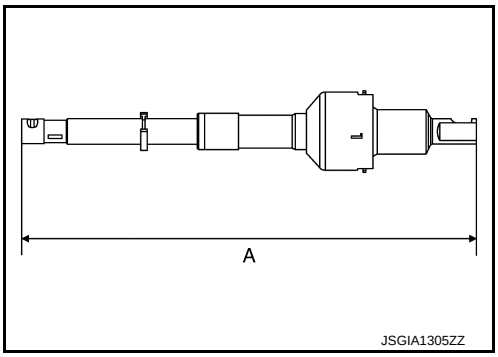

- Check the sliding range (A) of the steering shaft.

CAUTION:
Check the sliding range (between the extended position and the contracted position) of the steering shaft.

Shaft sliding range (A) : Refer to ST-57, "Steering Shaft".

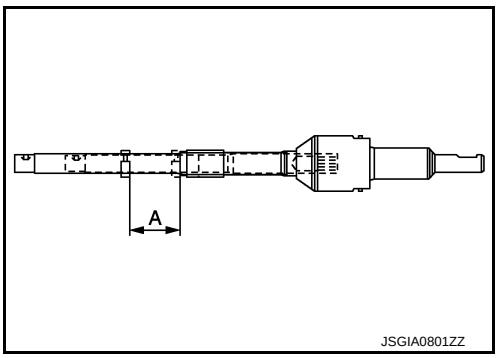

INSPECTION AFTER INSTALLATION

Check the following items and replace, if necessary.

- Check hole cover and hole cover seal for damage or other malfunctions.
- Check steering shaft for damage or other malfunctions.

- Check if steering wheel turns smoothly when it is turned several times fully to the end of the left and right.
- Check the steering wheel play, neutral position steering wheel, steering wheel turning torque, and front wheel turning angle.
  - Steering wheel play: Refer to ST-29, "Inspection".
  - neutral position steering wheel, steering wheel turning torque, and front wheel turning angle: Refer to ST-16, "Inspection".
- Adjust neutral position of steering angle sensor. Refer to BRC-70, "Work Procedure".

STEERING GEAR AND LINKAGE

2WD

2WD : Exploded View

INFOID:0000000009236898

REMOVAL

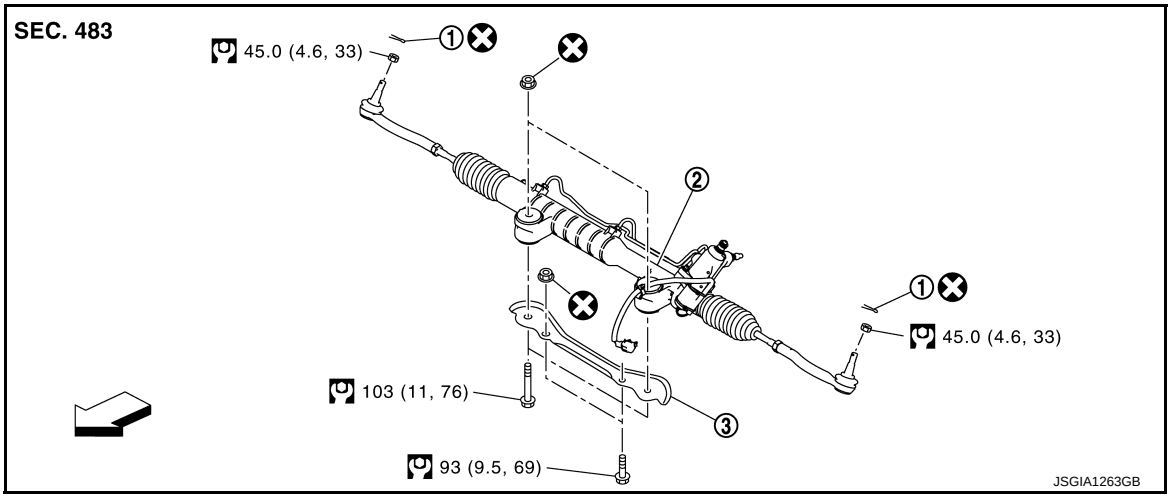

① Cotter pin ② Steering gear assembly ③ Rack stay

⇦: Vehicle front

⊗: Always replace after every disassembly.

: N·m (kg-m, ft-lb)

DISASSEMBLY

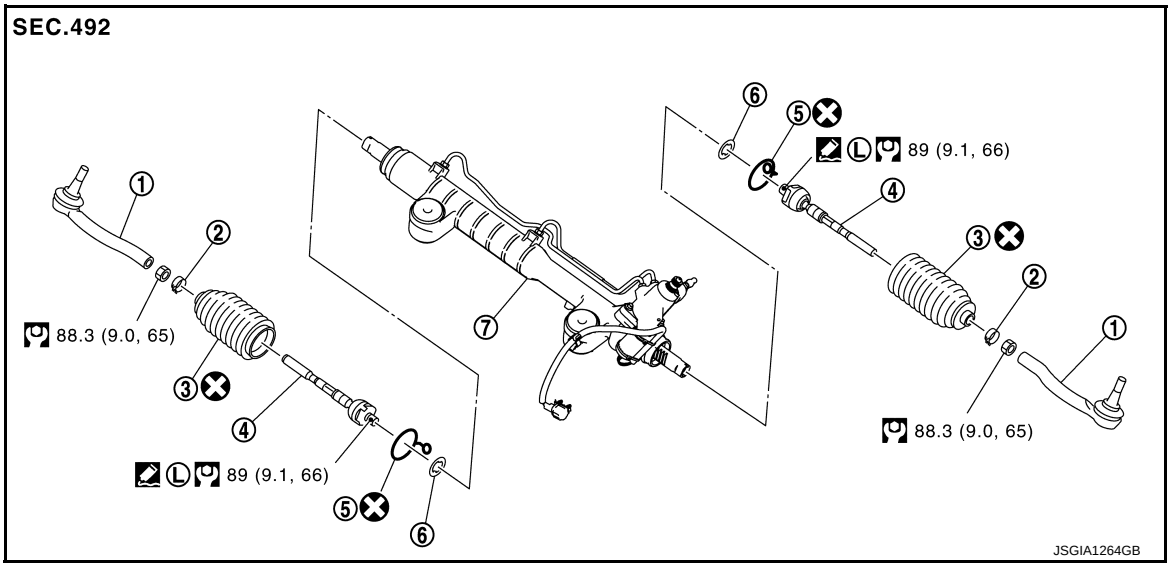

① Outer socket ② Boot clamp ③ Boot

④ Inner socket ⑤ Boot clamp (stainless wire) ⑥ Spacer

⑦ Gear housing assembly

⊗: Always replace after every disassembly.

: N·m (kg-m, ft-lb)

Ⓛ: Apply Genuine High Strength Thread Locking Sealant or equivalent. Refer to GI-22, "Recommended Chemical Products and Sealants".

2WD : Removal and Installation

INFOID:0000000009236899

REMOVAL

1. Set the vehicle to the straight-ahead position.
2. Remove tires. Refer to WT-62, "Exploded View".
3. Remove suspension member stay. Refer to FSU-21, "Removal and Installation".
4. Remove cotter pin, and then loosen the nut.
5. Remove steering outer socket from steering knuckle so as not to damage ball joint boot using a ball joint remover (commercial service tool).
   CAUTION:
   Temporarily tighten the nut to prevent damage to threads and to prevent the ball joint remover from suddenly coming off.
6. Remove high pressure piping and return hose of hydraulic piping, and then drain power steering fluid.
7. Remove power steering solenoid valve harness connector and harness clip.
8. Remove lower joint fixing bolt (steering gear side).
9. Separate the lower shaft from the steering gear assembly by sliding the side shaft (A: sliding range).
   CAUTION:
   - **When removing lower joint, never insert a tool, such as a screwdriver, into the yoke groove to pull out the lower joint. In case of the violation of the above, replace lower joint with a new one.**
   - **Spiral cable may be cut if steering wheel turns while separating steering column assembly and steering gear assembly. Be sure to secure steering wheel using string to avoid turning.**

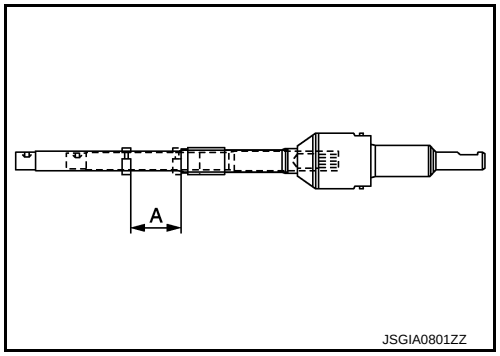

10. Remove steering gear assembly mounting bolts, and nuts.
11. Remove rack stay.
12. Remove steering gear assembly.

INSTALLATION

Note the following, and install in the reverse order of removal.

CAUTION:
Spiral cable may be cut if steering wheel turns while separating steering shaft and steering gear assembly. Be sure to secure steering wheel using string to avoid turning.

- Tighten the mounting bolts in the order shown in the figure when installing the steering gear assembly.

Temporary tightening: 1 ⇒ 2 ⇒ 3 ⇒ 4

Final tightening: 1 ⇒ 2 ⇒ 3 ⇒ 4

CAUTION:
Never reuse the steering gear assembly mounting nut.

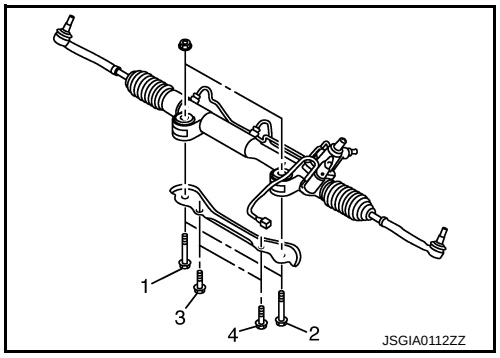

- When installing return hoses ①, refer to the figure.
  CAUTION:
  - **Never apply fluid to the hose and tube ②.**
  - **Insert hose securely until it contacts spool Ⓐ of tube.**
  - **Leave clearance (L) when installing clamp ③.**

  L : 3 – 8 mm (0.12 – 0.31 in)

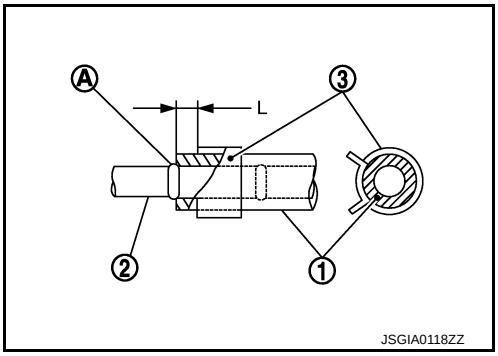

- When installing lower joint to steering gear assembly, follow the procedure listed below.
- Align slit of lower joint ① with rear cover cap projection Ⓐ, insert lower joint end face Ⓑ until contacts steering gear assembly end face Ⓒ.
- When tightening the lower joint mounting bolt (steering shaft side), manually tighten the bolt and check that there is no hook and scratch. Check that the bolt is properly placed in the groove of the steering gear assembly before tightening the bolt to the specified torque.
- Perform inspection after installation. Refer to ST-42, "2WD : Inspection and Adjustment".

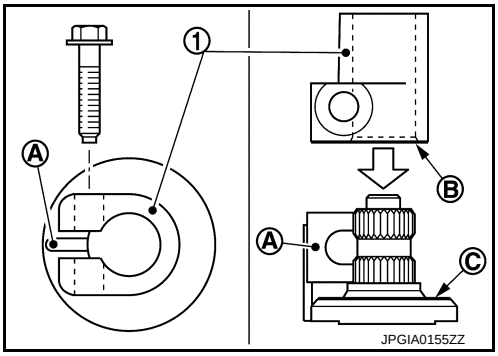

2WD : Disassembly and Assembly

INFOID:0000000009236900

DISASSEMBLY

1. Loosen outer socket lock nut, and remove outer socket.
2. Remove boot clamps, and then remove boot from inner socket.
   CAUTION:
   Never damage inner socket and gear housing assembly when removing boot. Inner socket and gear housing assembly must be replaced if inner socket and gear housing assembly are damaged because it may cause foreign material interfusion.
3. Remove inner socket from gear housing assembly.
4. Remove spacer from gear housing assembly.
   CAUTION:
   Never damage rack assembly.
5. Perform inspection after disassembly. Refer to ST-42, "2WD : Inspection and Adjustment".

ASSEMBLY

1. Install inner socket to gear housing assembly with the following procedure.

a. Install spacer to gear housing assembly.

b. Apply thread sealant into the thread of inner socket.
   Use Genuine High Strength Thread Locking Sealant or equivalent. Refer to GI-22, "Recommended Chemical Products and Sealants".

c. Screw inner socket into rack part and tighten at the specified torque.

2. Install large end of boot to gear housing assembly.
3. Install small end of boot to inner socket boot mounting groove.
4. Install boot clamp to boot small end.
5. Install boot clamp to the large side of boot with the following procedure.

CAUTION:
Never reuse boot clamp.

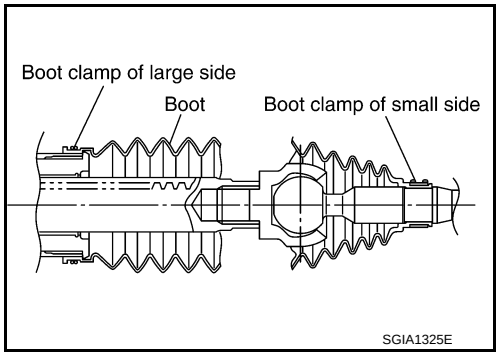

a. Tighten large side of boot with boot clamp (stainless wire).

Wire length (L) : 370 mm (14.57 in)

b. Wrap clamp around boot groove for two turns. Insert a flat-bladed screwdriver in loops on both ends of wire. Twist 4 to 4.5 turns while pulling them with force of approximately 98 N (10 kg, 22 lb).

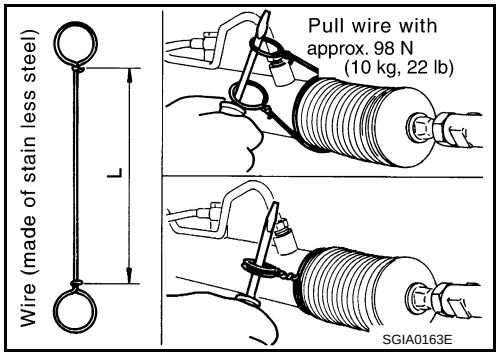

c. Twist boot clamp as shown. Pay attention to relationship between winding and twisting directions.

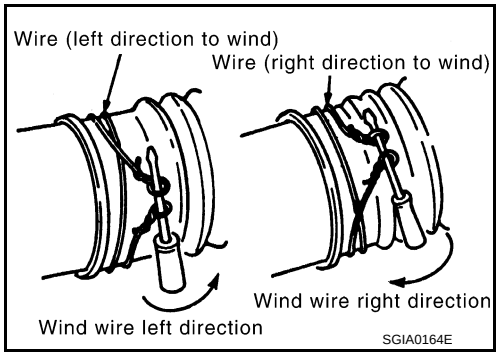

d. Twisted area (A) of clamp is in the adjusting screw side (1) as shown in the figure (to prevent contact with other parts).

A : 90°

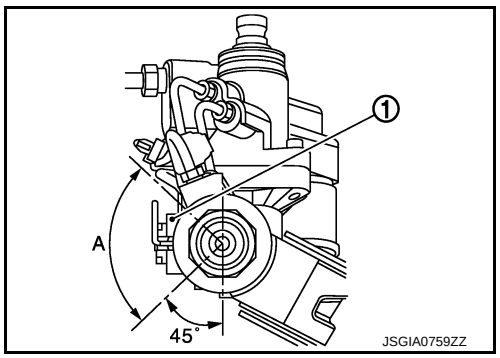

e. Bent cut end of the wire toward rack axial as shown in the figure after twisting the wire 4 to 4.5 turns so that cut end does not contact with boot.

CAUTION:
Keep gap from cylinder tube 5 mm (0.20 in) or more.

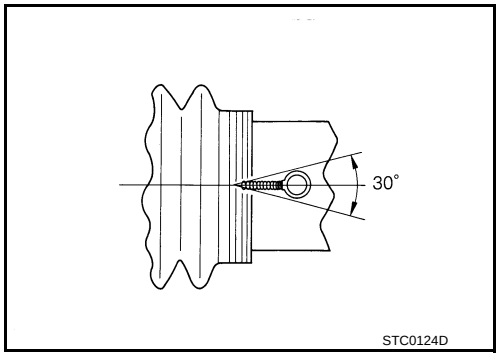

6. Adjust inner socket to standard length (L), and then tighten lock nut (1) to the specified torque. Check length again after tightening lock nut.

Inner socket length (L) **: Refer to ST-58, "Steering Gear And Linkage".**

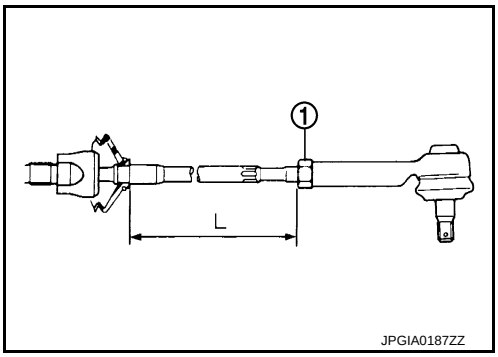

CAUTION:
- **When tightening the lock nut ①, be sure to fix outer socket ② with a wrench or an equivalent to prevent the ball joint from getting contact with the knuckle.**
- **Adjust toe-in after this procedure. The length achieved after toe-in adjustment is not necessary the above value.**

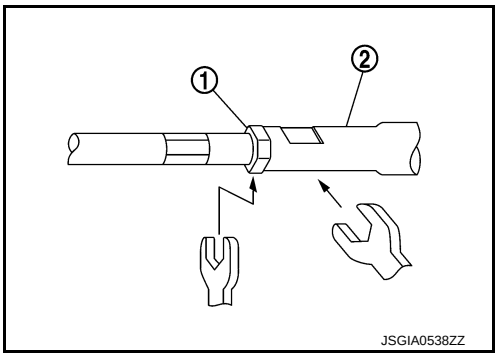

2WD : Inspection and Adjustment

INFOID:0000000009236901

INSPECTION AFTER DISASSEMBLY

Boot
Check boot for cracks, and replace it if a malfunction is detected.

Gear Housing Assembly
Check gear housing assembly for damage and scratches (inner wall). Replace if there are.

Outer Socket and Inner Socket
Check the following items and replace the component if it does not meet the standard.

BALL JOINT SWINGING FORCE
Hook a spring balance at the point and pull the spring balance. Make sure that the spring balance reads the specified value when ball stud and inner socket start to move. Replace outer socket and inner socket (gear housing assembly) if they are outside the standard.

Measuring point of outer socket ① : Ball stud upper side Ⓐ

Measuring point of inner socket ② : Point Ⓑ shown in the figure

Swinging force (Spring balance measurement) **: Refer to ST-58, "Steering Gear And Linkage".**

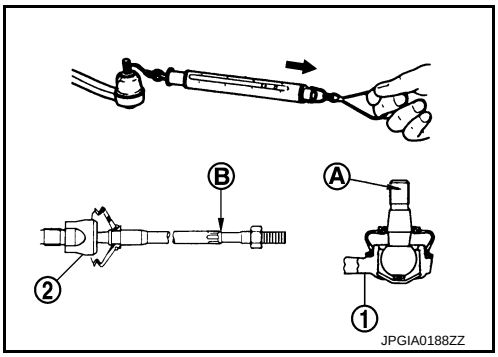

BALL JOINT ROTATING TORQUE

Make sure that the reading is within the following specified range using preload gauge (A) (SST: ST3127S000). Replace outer socket if the reading is outside the specified value.

Rotating torque : Refer to ST-58, "Steering Gear And Linkage".

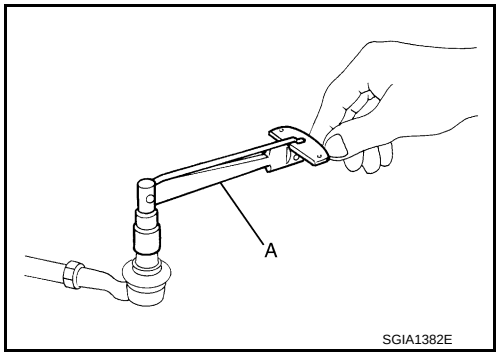

BALL JOINT AXIAL END PLAY

Apply an axial load of 490 N (50 kg, 110 lb) to ball stud. Using a dial indicator, measure amount of stud movement, and then make sure that the value is within the following specified range. Replace outer socket ① and inner socket (gear housing assembly) ② if the measured value is outside the standard.

Axial end play : Refer to ST-58, "Steering Gear And Linkage".

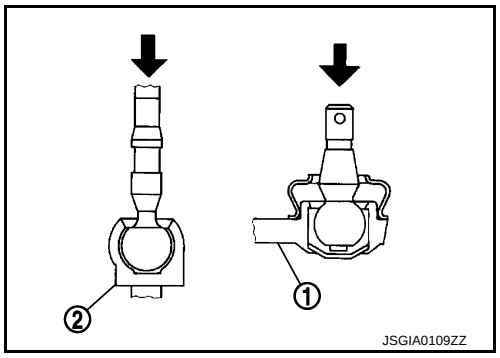

INSPECTION AFTER INSTALLATION

- Check if steering wheel turns smoothly when it is turned several times fully to the end of the left and right.
- Check the steering wheel play, neutral position steering wheel, steering wheel turning torque, and front wheel turning angle. Refer to ST-29, "Inspection".
- Check the fluid level, fluid leakage, and air bleeding hydraulic system. Refer to ST-16, "Inspection".
- After installation, bleed air from the steering hydraulic system. Refer to ST-27, "Inspection".
- Check wheel alignment. Refer to FSU-7, "VEHICLE SPEED SENSITIVE P/S : Inspection".
- Adjust neutral position of steering angle sensor. Refer to BRC-70, "Work Procedure".

AWD

AWD : Exploded View

INFOID:0000000009236902

REMOVAL

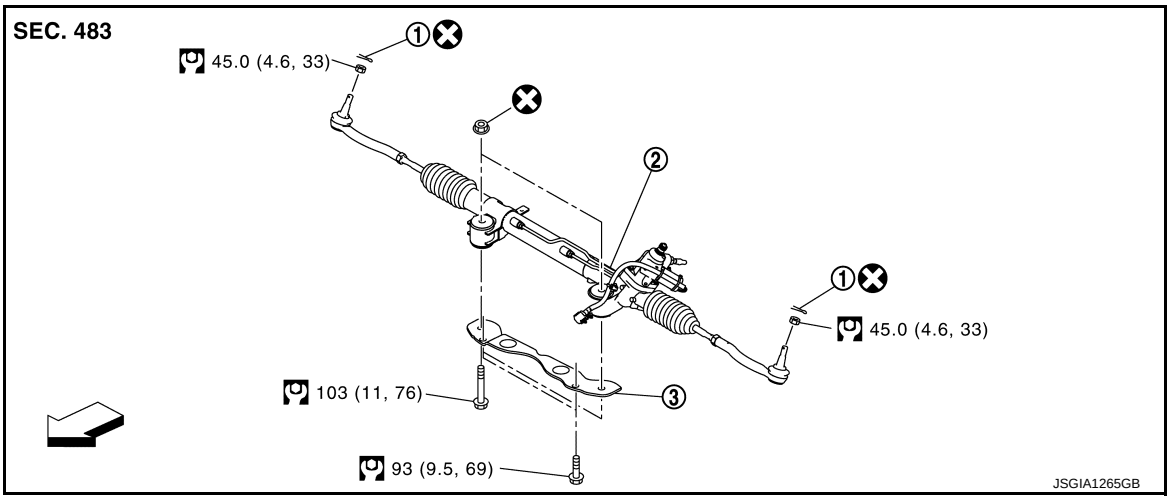

① Cotter pin ② Steering gear assembly ③ Rack stay

⇦: Vehicle front

⊗: Always replace after every disassembly.

: N·m (kg-m, ft-lb)

DISASSEMBLY

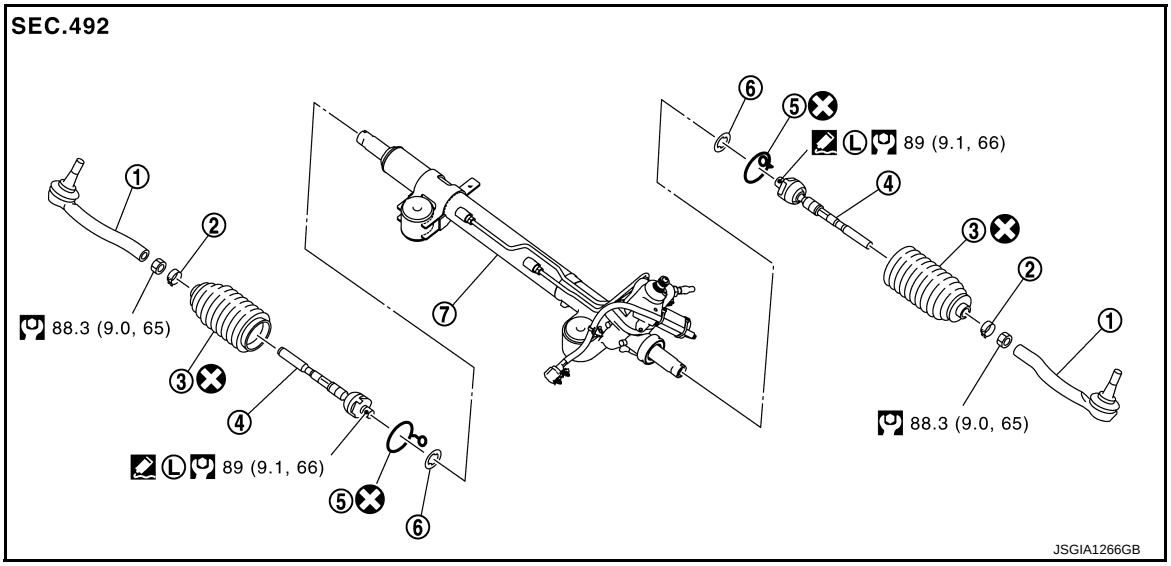

① Outer socket	② Boot clamp	③ Boot
④ Inner socket	⑤ Boot clamp (stainless wire)	⑥ Spacer
⑦ Gear housing assembly		

⊗: Always replace after every disassembly.

: N·m (kg-m, ft-lb)

Ⓛ: Apply Genuine High Strength Thread Locking Sealant or equivalent. Refer to GI-22, "Recommended Chemical Products and Sealants".

AWD : Removal and Installation

INFOID:0000000009236903

REMOVAL

1. Set the vehicle to the straight-ahead position.
2. Remove tires. Refer to WT-62, "Exploded View".
3. Remove suspension member stay. Refer to FSU-21, "Removal and Installation".
4. Remove cotter pin, and then loosen the nut.
5. Remove steering outer socket from steering knuckle so as not to damage ball joint boot using a ball joint remover (commercial service tool).
   CAUTION:
   Temporarily tighten the nut to prevent damage to threads and to prevent the ball joint remover from suddenly coming off.
6. Remove high pressure piping and return hose of hydraulic piping, and then drain power steering fluid.
7. Remove power steering solenoid valve harness connector and harness clip.
8. Remove lower joint fixing bolt (steering gear side).

9. Separate the lower shaft from the steering gear assembly by sliding the side shaft (A: sliding range).
   CAUTION:
   - **When removing lower joint, never insert a tool, such as a screwdriver, into the yoke groove to pull out the lower joint. In case of the violation of the above, replace lower joint with a new one.**
   - **Spiral cable may be cut if steering wheel turns while separating steering column assembly and steering gear assembly. Be sure to secure steering wheel using string to avoid turning.**

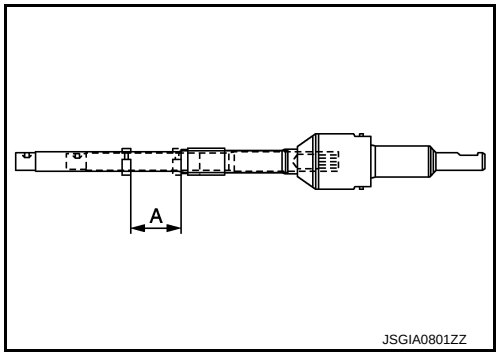

10. Remove steering gear assembly mounting bolts, and nuts.
11. Remove rack stay.
12. Remove steering gear assembly.

INSTALLATION

Note the following, and install in the reverse order of removal.

CAUTION:
Spiral cable may be cut if steering wheel turns while separating steering shaft and steering gear assembly. Be sure to secure steering wheel using string to avoid turning.

- Tighten the mounting bolts in the order shown in the figure when installing the steering gear assembly.

  Temporary tightening: 1 ⇒ 2 ⇒ 3 ⇒ 4

  Final tightening: 1 ⇒ 2 ⇒ 3 ⇒ 4

  CAUTION:
  Never reuse the steering gear assembly mounting nut.

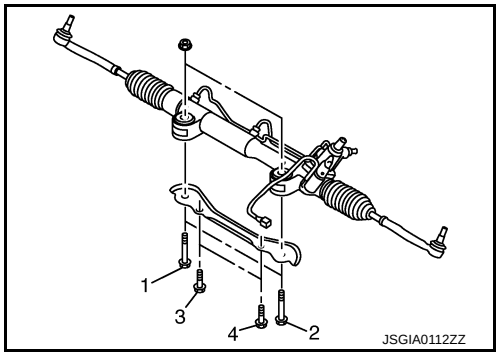

- When installing return hoses ①, refer to the figure.
  CAUTION:
  - **Never apply fluid to the hose and tube ②.**
  - **Insert hose securely until it contacts spool Ⓐ of tube.**
  - **Leave clearance (L) when installing clamp ③.**

  L : 3 – 8 mm (0.12 – 0.31 in)

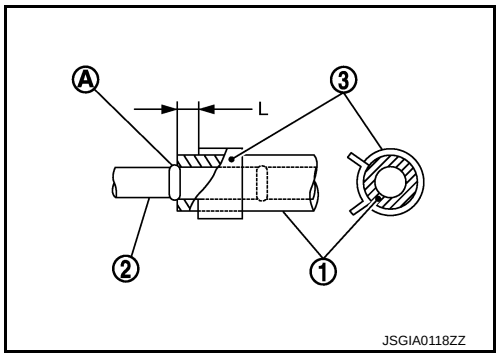

- When installing lower joint to steering gear assembly, follow the procedure listed below.
- Align slit of lower joint ① with rear cover cap projection Ⓐ, insert lower joint end face Ⓑ until contacts steering gear assembly end face Ⓒ.
- When tightening the lower joint mounting bolt (steering shaft side), manually tighten the bolt and check that there is no hook and scratch. Check that the bolt is properly placed in the groove of the steering gear assembly before tightening the bolt to the specified torque.
- Perform inspection after installation. Refer to ST-47, "AWD : Inspection".

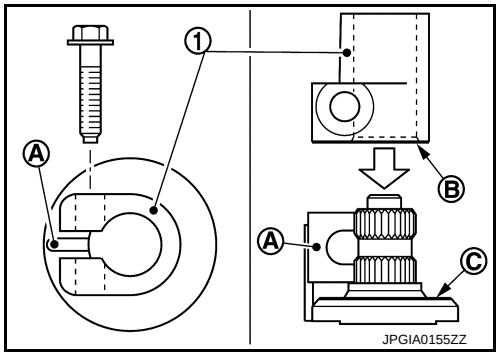

AWD : Disassembly and Assembly

INFOID:0000000009236904

DISASSEMBLY

1. Loosen outer socket lock nut, and remove outer socket.
2. Remove boot clamps, and then remove boot from inner socket.
   CAUTION:
   Never damage inner socket and gear housing assembly when removing boot. Inner socket and gear housing assembly must be replaced if inner socket and gear housing assembly are damaged because it may cause foreign material interfusion.
3. Remove inner socket from gear housing assembly.
4. Remove spacer from gear housing assembly.
   CAUTION:
   Never damage rack assembly.
5. Perform inspection after disassembly. Refer to ST-42, "2WD : Inspection and Adjustment".

ASSEMBLY

1. Install inner socket to gear housing assembly with the following procedure.

a. Install spacer to gear housing assembly.

b. Apply thread sealant into the thread of inner socket.
   Use Genuine High Strength Thread Locking Sealant or equivalent. Refer to GI-22, "Recommended Chemical Products and Sealants".

c. Screw inner socket into rack part and tighten at the specified torque.

2. Install large end of boot to gear housing assembly.
3. Install small end of boot to inner socket boot mounting groove.
4. Install boot clamp to boot small end.
5. Install boot clamp to the large side of boot with the following procedure.
   CAUTION:
   Never reuse boot clamp.

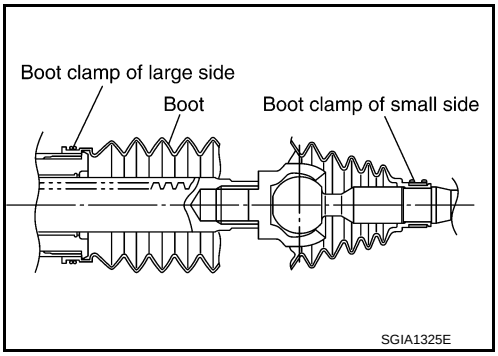

a. Tighten large side of boot with boot clamp (stainless wire).

   Wire length (L) : 370 mm (14.57 in)

b. Wrap clamp around boot groove for two turns. Insert a flat-bladed screwdriver in loops on both ends of wire. Twist 4 to 4.5 turns while pulling them with force of approximately 98 N (10 kg, 22 lb).

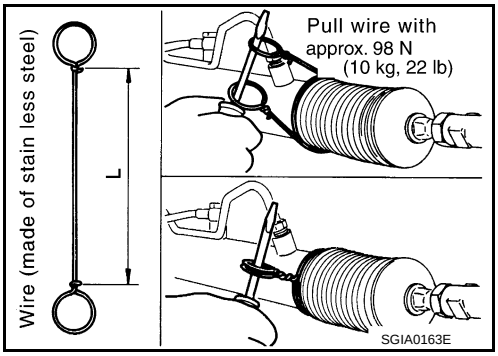

c. Twist boot clamp as shown. Pay attention to relationship between winding and twisting directions.

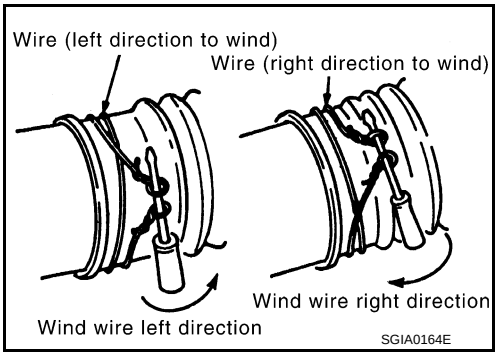

d. Twisted area (A) of clamp is in the adjusting screw side (1) as shown in the figure (to prevent contact with other parts).

A : 90°

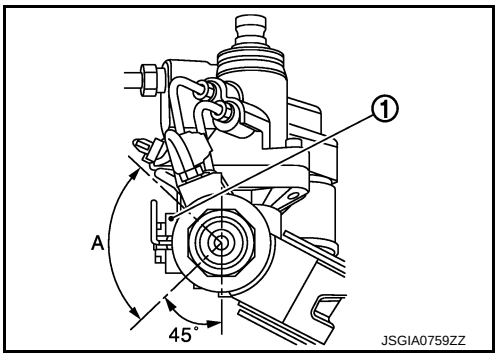

e. Bent cut end of the wire toward rack axial as shown in the figure after twisting the wire 4 to 4.5 turns so that cut end does not contact with boot.

CAUTION:

Keep gap from cylinder tube 5 mm (0.20 in) or more.

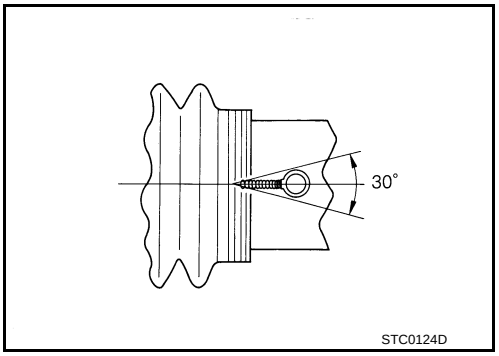

6. Adjust inner socket to standard length (L), and then tighten lock nut (1) to the specified torque. Check length again after tightening lock nut.

Inner socket length (L) : Refer to ST-58, "Steering Gear And Linkage".

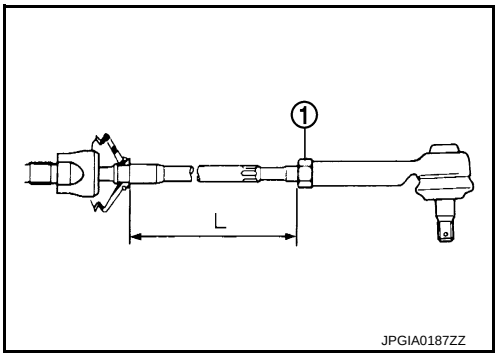

CAUTION:

- **When tightening the lock nut ①, be sure to fix outer socket ② with a wrench or an equivalent to prevent the ball joint from getting contact with the knuckle.**
- **Adjust toe-in after this procedure. The length achieved after toe-in adjustment is not necessary the above value.**

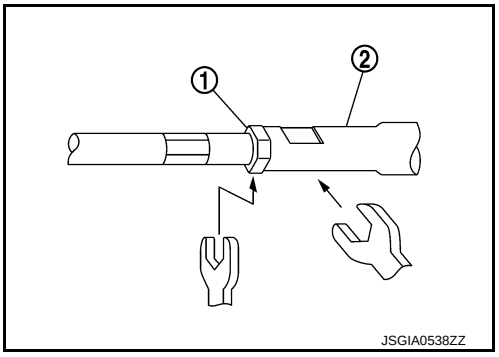

AWD : Inspection

INFOID:0000000009236905

INSPECTION AFTER DISASSEMBLY

Boot

Check boot for cracks, and replace it if a malfunction is detected.

Gear Housing Assembly

Check gear housing assembly for damage and scratches (inner wall). Replace if there are.

Outer Socket and Inner Socket

Check the following items and replace the component if it does not meet the standard.

BALL JOINT SWINGING FORCE

Hook a spring balance at the point and pull the spring balance. Make sure that the spring balance reads the specified value when ball stud and inner socket start to move. Replace outer socket and inner socket (gear housing assembly) if they are outside the standard.

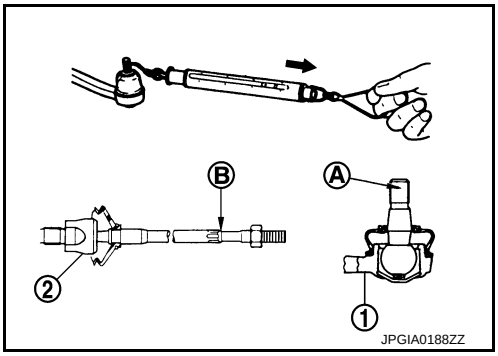

Measuring point of outer socket ① : Ball stud upper side Ⓐ

Measuring point of inner socket ② : Point Ⓑ shown in the figure

Swinging force (Spring balance measurement) **: Refer to ST-58, "Steering Gear And Linkage".**

BALL JOINT ROTATING TORQUE

Make sure that the reading is within the following specified range using preload gauge (A) (SST: ST3127S000). Replace outer socket if the reading is outside the specified value.

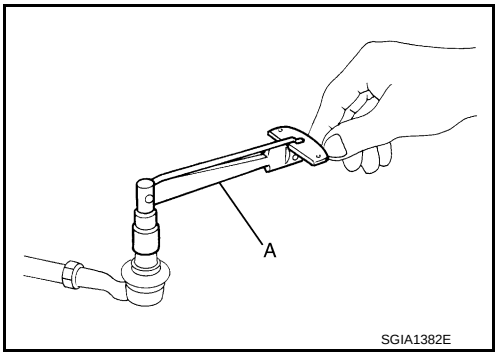

Rotating torque **: Refer to ST-58, "Steering Gear And Linkage".**

BALL JOINT AXIAL END PLAY

Apply an axial load of 490 N (50 kg, 110 lb) to ball stud. Using a dial indicator, measure amount of stud movement, and then make sure that the value is within the following specified range. Replace outer socket ① and inner socket (gear housing assembly) ② if the measured value is outside the standard.

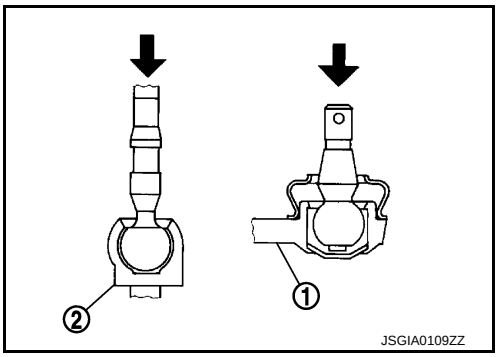

Axial end play **: Refer to ST-58, "Steering Gear And Linkage".**

INSPECTION AFTER INSTALLATION

- Check if steering wheel turns smoothly when it is turned several times fully to the end of the left and right.
- Check the steering wheel play, neutral position steering wheel, steering wheel turning torque, and front wheel turning angle. Refer to ST-29, "Inspection".
- Check the fluid level, fluid leakage, and air bleeding hydraulic system. Refer to ST-16, "Inspection".
- After installation, bleed air from the steering hydraulic system. Refer to ST-27, "Inspection".
- Check wheel alignment. Refer to FSU-7, "VEHICLE SPEED SENSITIVE P/S : Inspection".
- Adjust neutral position of steering angle sensor. Refer to BRC-70, "Work Procedure".

POWER STEERING OIL PUMP

Exploded View

INFOID:0000000009236906

REMOVAL

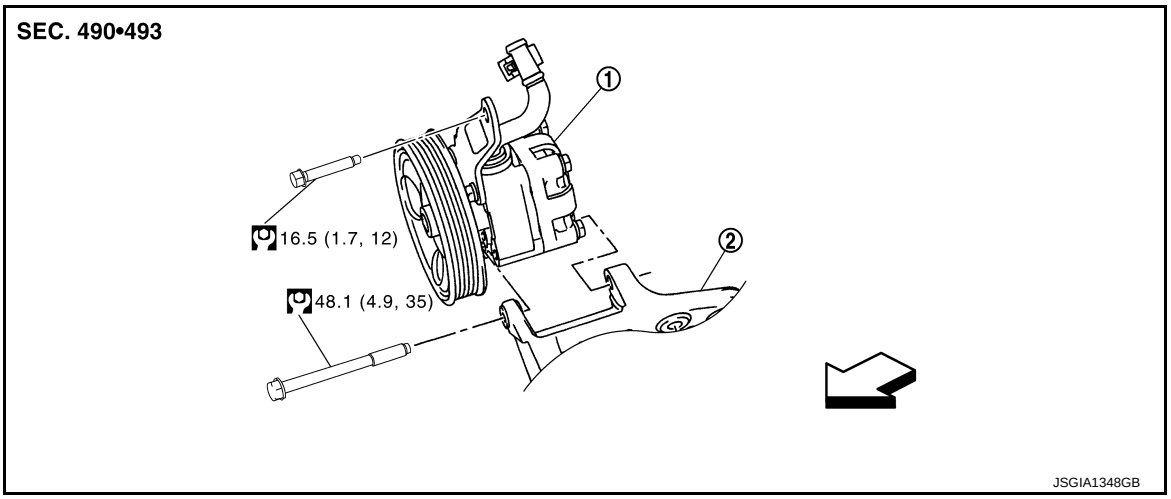

① Power steering oil pump ② Bracket

⇦: Vehicle front

: N·m (kg-m, ft-lb)

DISASSEMBLY

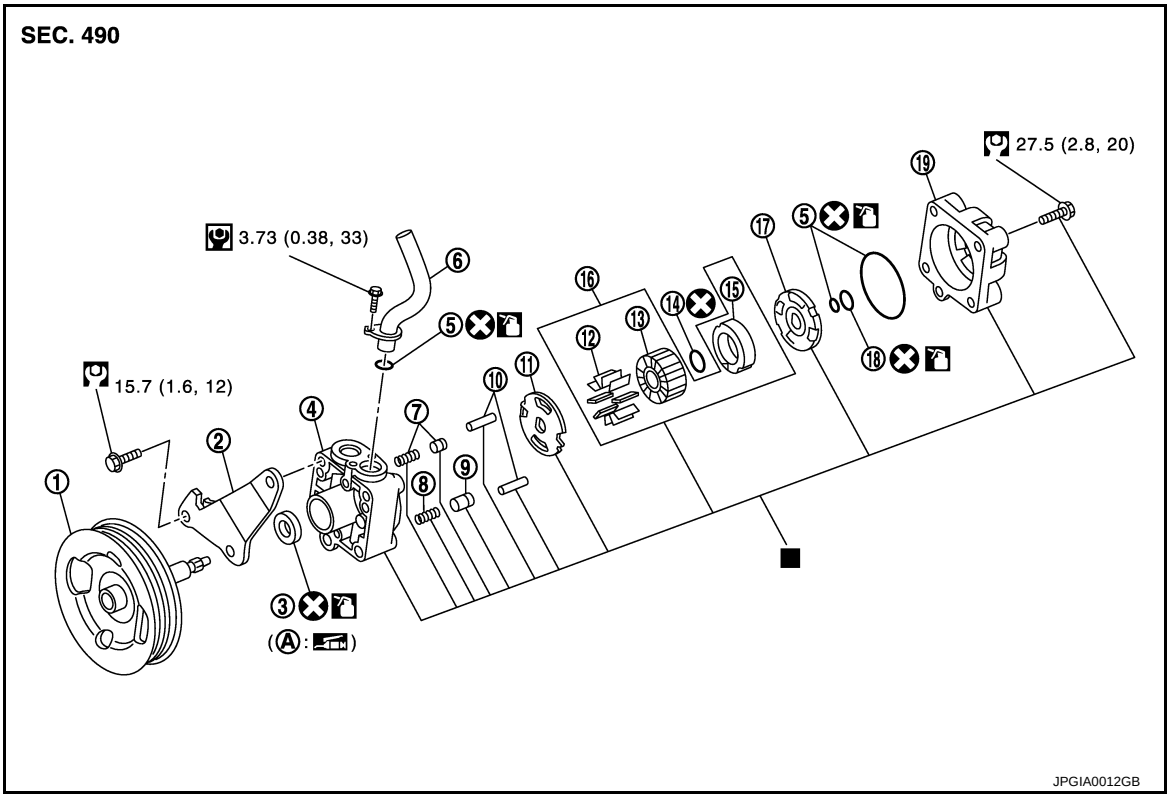

① Pulley ② Bracket ③ Oil seal

④ Body assembly ⑤ O-ring ⑥ Suction pipe

⑦ Flow control valve sub assembly ⑧ Flow control valve spring ⑨ Flow control valve

⑩ Dowel pin
⑪ Front side plate
⑫ Vane
⑬ Rotor
⑭ Snap ring
⑮ Cam ring
⑯ Cartridge
⑰ Rear side plate
⑱ Teflon ring
⑲ Rear cover
Ⓐ Oil seal lip

: Always replace after every disassembly.
: N·m (kg-m, ft-lb)
: N·m (kg-m, in-lb)
: Replace the parts as a set.
: Apply power steering fluid.
: Apply multi-purpose grease.

Removal and Installation

INFOID:0000000009236907

REMOVAL

1. Drain power steering fluid from reservoir tank.
   CAUTION:
   - **Never reuse drained power steering fluid.**
   - **Always use the specified fluid. Refer to MA-14, "FOR NORTH AMERICA : Fluids and Lubricants" (For North America), MA-15, "FOR MEXICO : Fluids and Lubricants" (For Mexico).**
2. Remove the right of the air cleaner case and air duct. Refer to EM-29, "Removal and Installation".
3. Remove drive belt from oil pump pulley. Refer to EM-28, "Removal and Installation".
4. Remove pressure sensor connector.
5. Remove copper washers and eye bolt (drain fluid from their pipings).
6. Remove suction hose (drain fluid from their pipings).
7. Remove oil pump mounting bolts, and then remove oil pump.

INSTALLATION

Note the following, and install in the reverse order of removal.

- When installing suction hoses (1), refer to the figure.
  CAUTION:
  - **Never apply fluid to the hose (1) and tube (2).**
  - **Insert hose securely until it contacts spool (A) of tube.**
  - **Leave clearance (L) when installing clamp (3).**

  L : 3 – 8 mm (0.12 – 0.31 in)

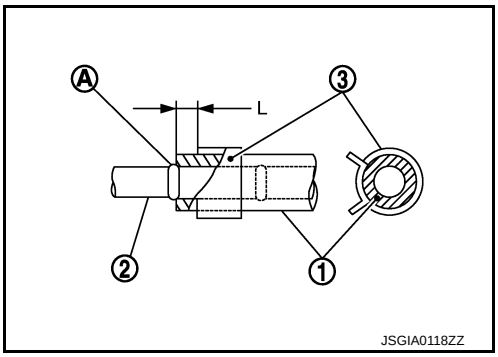

- When installing eye bolt (1) and copper washer (2) to oil pump (3), refer to the figure.
  CAUTION:
  - **Never reuse copper washer.**
  - **Apply power steering fluid to around copper washers, then install eye bolt.**
  - **Install eye bolt with eye joint (assembled to high pressure hose) (B) protrusion (A) facing with pump side cutout, and then tighten it to the specified torque after tightening by hand. Refer to ST-55, "2WD : Exploded View" (2WD), ST-56, "AWD : Exploded View" (AWD).**
  - **Securely insert harness connector to pressure sensor.**

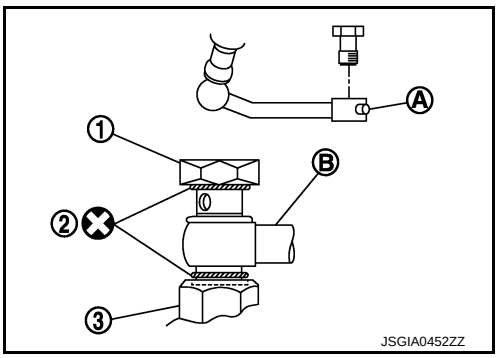

- Adjust belt tension. Refer to EM-19, "Tension Adjustment".

- Check fluid level, fluid leakage and air bleeding hydraulic system after the installation. Refer to ST-27, "Inspection".

Disassembly and Assembly

INFOID:0000000009236908

DISASSEMBLY

CAUTION:
- **Fix oil pump with a vise if necessary.**
- **Use copper plates when fixing with a vise.**

1. Perform inspection before disassembly. Refer to ST-53, "Inspection".
2. Remove rear cover mounting bolts, and then remove rear cover from body assembly.
3. Remove O-ring from body assembly.
4. Remove rear side plate from cartridge, and then remove Teflon ring and O-ring from rear side plate.
5. Remove snap ring using a snap ring pliers, and remove pulley from body assembly.
   CAUTION:
   Remove pulley so as not to be damaged when removing rotor snap ring.
6. Remove flow control valve, flow control valve spring, and flow control valve sub assembly from body assembly.
   CAUTION:
   Never drop and damage flow control valve, and flow control valve sub assembly when removing.
7. Remove oil seal from body assembly.
8. Remove mounting bolt of suction pipe, and then remove suction pipe from body assembly.
9. Remove O-ring from body assembly.
10. Remove bracket mounting bolts, and then remove bracket from body assembly.
11. Perform inspection after disassembly. Refer to ST-53, "Inspection".

ASSEMBLY

CAUTION:
- **Fix oil pump with a vise if necessary.**
- **Use copper plates when fixing with a vise.**

1. Apply recommended grease to oil seal lips. Apply recommended fluid to around oil seal, and then install oil seal to body assembly using a drift [SST: ST35300000 (—)].
   CAUTION:
   Never reuse oil seal.
2. Install bracket to body assembly.
3. If dowel pin has been removed, insert it into body assembly by hand. If it cannot be inserted by hand, lightly tap with a hammer.
4. Install flow control valve, flow control valve spring and flow control valve sub assembly to body assembly.
5. Install front side plate (3) with dowel pin (2) on flow control valve A (1) side as shown in the figure aligning with front side plate cutout (A) to body assembly (4).

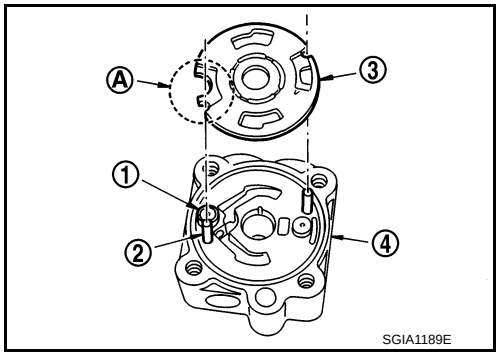

6. Install cam ring as shown in the figure.
7. Install pulley to body assembly.
   CAUTION:
   Never damage oil seal when installing pulley.

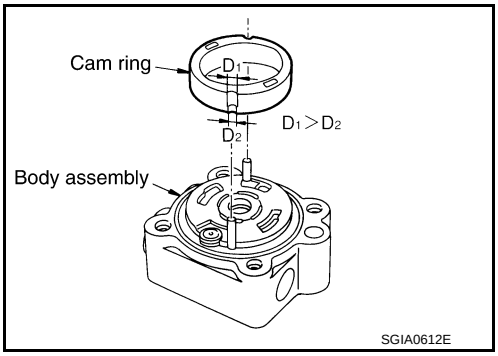

8. Install rotor so that mark faces body assembly, and then install it to pulley shaft.

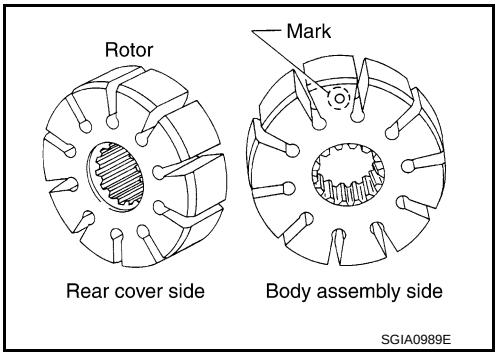

9. Install vane to rotor so that arc of vane faces cam ring side.
10. Install rotor snap ring to slit of pulley shaft using a hammer and a drift (commercial service tool).
    CAUTION:
    - **Never damage rotor and pulley shaft.**
    - **Oil pump assembly must be replaced if rotor is damaged.**

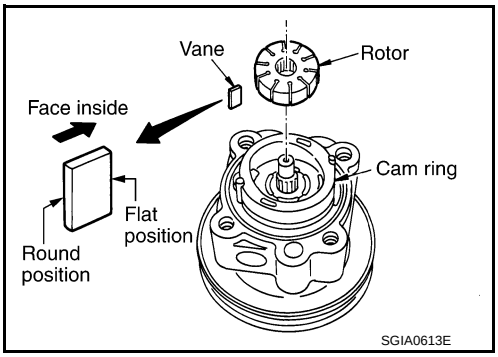

11. Install rear side plate with dowel pin A on flow control valve A side as shown in the figure aligning with rear side plate cutout B to cartridge.
12. Apply recommended fluid to O-ring, and then install O-ring to body assembly.
    CAUTION:
    Never reuse O-ring.
13. Apply recommended fluid to O-ring, and then install O-ring to rear side plate.
    CAUTION:
    Never reuse O-ring.

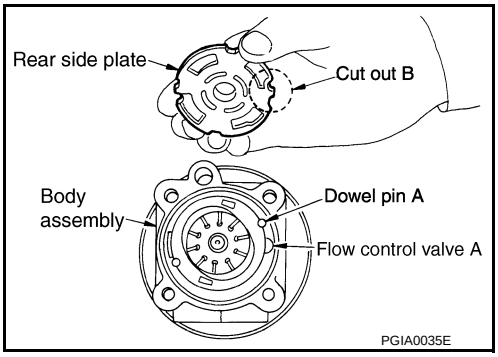

14. Apply recommended fluid to Teflon ring, and then install Teflon ring to rear side plate.
    CAUTION:
    Never reuse Teflon ring.
15. Install rear cover to body assembly, and then tighten mounting bolts to the specified torque.
16. Apply recommended fluid to O-ring, and then install O-ring to body assembly.
    CAUTION:
    Never reuse O-ring.
17. Install suction pipe to body assembly, and then tighten mounting bolts to the specified torque.
18. Perform inspection after assembly. Refer to ST-53, "Inspection".

Inspection

INFOID:0000000009236909

INSPECTION BEFORE DISASSEMBLY

Disassemble oil pump only when the following malfunctions occur.
- If oil leakage is found on oil pump.
- Oil pump pulley is damaged or deformed.
- Performance of oil pump is low.

INSPECTION AFTER DISASSEMBLY

Body Assembly and Rear Cover Inspection

Check body assembly and rear cover for internal damage. Replace oil pump assembly if necessary.

Cartridge Assembly Inspection

Check cam ring, rotor and vane for damage. Replace oil pump assembly if necessary.

Side Plate Inspection

Check side plate for damage. Replace oil pump assembly if necessary.

Flow Control Valve Inspection

Check flow control valve and spring for damage. Replace oil pump assembly if necessary.

INSPECTION AFTER ASSEMBLY

Relief Oil Pressure

CAUTION:

Make sure that belt tension is normal before starting the following procedure.

1. Connect the oil pressure gauge [SST: KV48103500 (J-26357)] and the oil pressure gauge adapter [SST: KV48102500 (J-33914)] between oil pump discharge connector and high-pressure hose. Bleed air from the hydraulic circuit while opening valve fully. Refer to ST-27, "Inspection".
2. Start engine. Run engine until oil temperature reaches 50 to 80°C (122 to 176°F).

   CAUTION:
   - **Leave the valve of the oil pressure gauge fully open while starting and running engine. If engine is started with the valve closed, the hydraulic pressure in oil pump goes up to the relief pressure along with unusual increase of oil temperature.**
   - **Be sure to keep hose clear of belts and other parts when engine is started.**
3. Fully close the oil pressure gauge valve with engine at idle and measure the relief oil pressure.

   Relief oil pressure : Refer to ST-58, "Oil Pump".

   CAUTION:

   Never keep valve closed for 10 seconds or longer.
4. Open the valve slowly after measuring. Repair oil pump if the relief oil pressure is outside the standard. Refer to ST-51, "Disassembly and Assembly".
5. Disconnect the oil pressure gauge from hydraulic circuit.

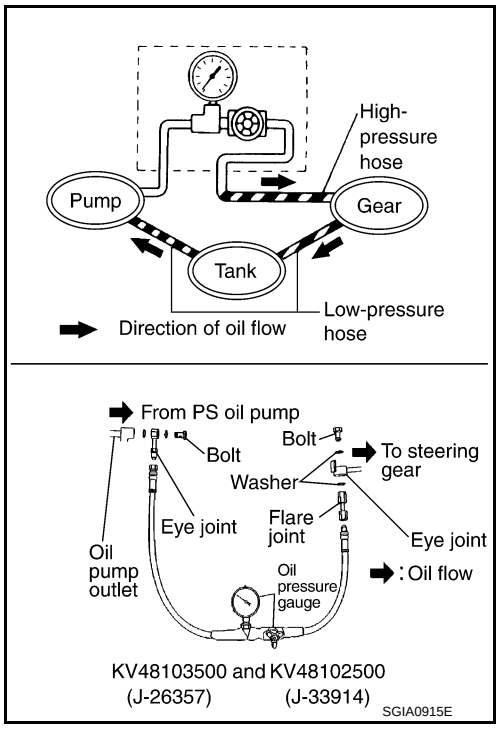

6. When installing eye bolt (1) and copper washer (2) to oil pump (3), refer to the figure.
   CAUTION:
   - **Never reuse copper washers.**
   - **Apply power steering fluid or equivalent to around copper washer, then install eye bolt.**
   - **Install eye bolt with eye joint (assembled to high pressure hose) (B) protrusion (A) facing with pump side cutout, and then tighten it to the specified torque after tightening by hand. Refer to ST-55, "2WD : Exploded View" (2WD), ST-56, "AWD : Exploded View" (AWD).**
   - **Securely insert harness connector to pressure sensor.**

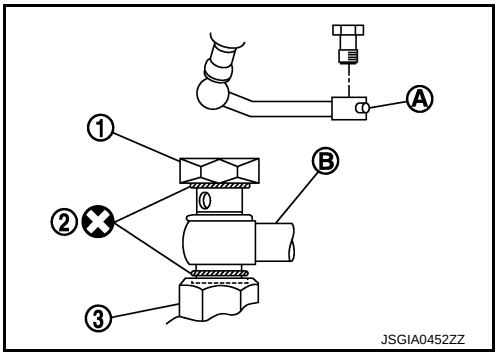

7. Check fluid level, fluid leakage and air bleeding hydraulic system after the installation. Refer to ST-27, "Inspection".

HYDRAULIC LINE

2WD

2WD : Exploded View

INFOID:0000000009236914

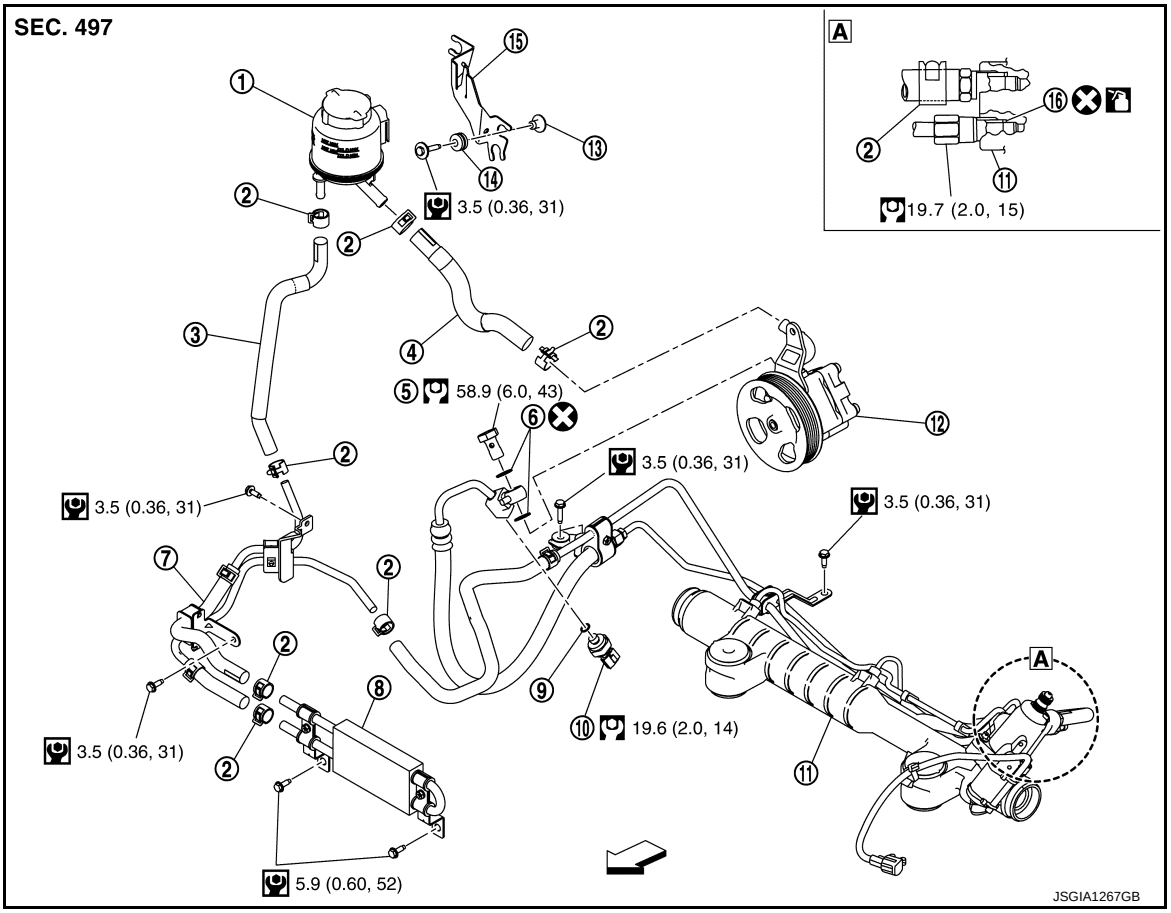

① Reservoir tank	② Clamp	③ Return hose
④ Suction hose	⑤ Eye bolt	⑥ Copper washer
⑦ High pressure piping and low pressure piping	⑧ Oil cooler	⑨ O-ring
⑩ Pressure sensor	⑪ Steering gear assembly	⑫ Power steering oil pump
⑬ Collar	⑭ Bushing	⑮ Reservoir tank bracket
⑯ O-ring		

⇦: Vehicle front

: N·m (kg-m, ft-lb)

: N·m (kg-m, in-lb)

: Always replace after every disassembly.

: Apply power steering fluid.

AWD

AWD : Exploded View

INFOID:0000000009236915

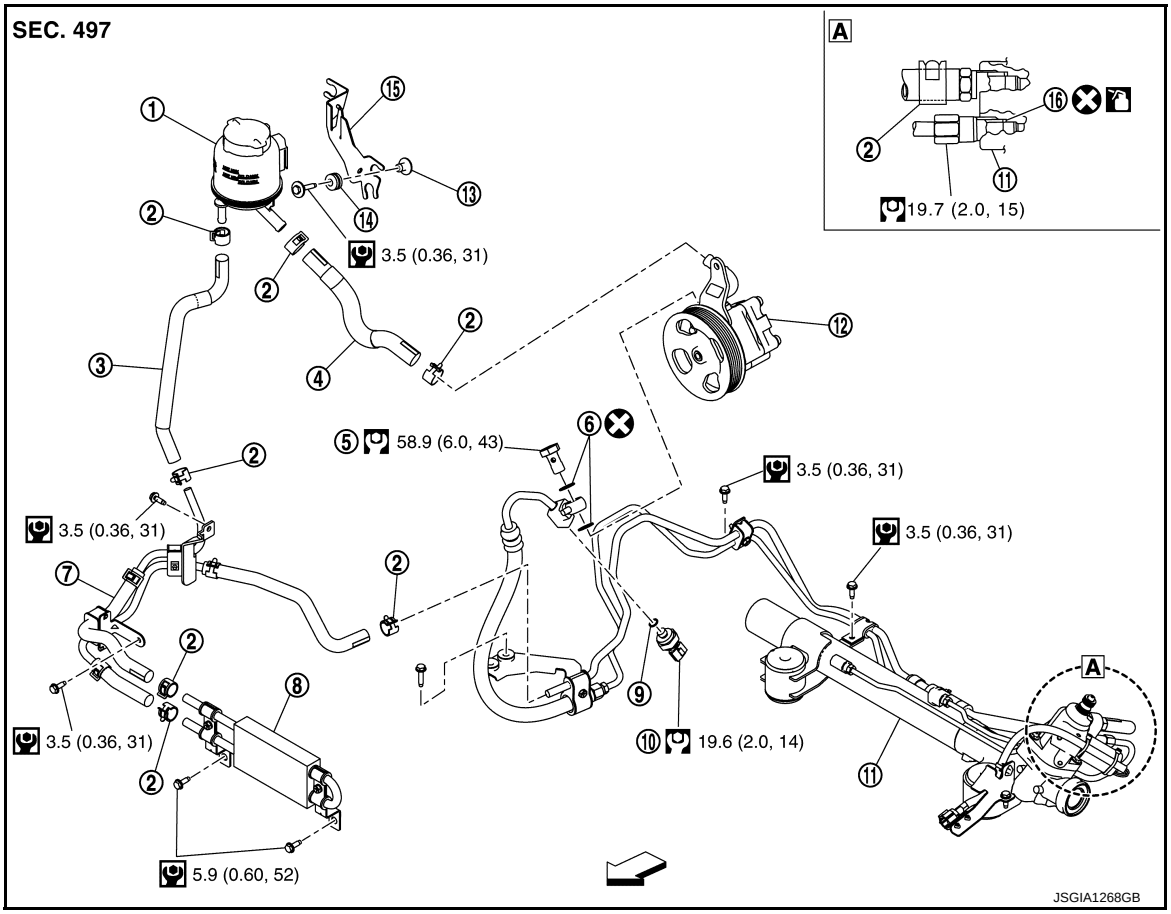

① Reservoir tank	② Clamp	③ Return hose
④ Suction hose	⑤ Eye bolt	⑥ Copper washer
⑦ High pressure piping and low pressure piping	⑧ Oil cooler	⑨ O-ring
⑩ Pressure sensor	⑪ Steering gear assembly	⑫ Power steering oil pump
⑬ Collar	⑭ Bushing	⑮ Reservoir tank bracket
⑯ O-ring		

⇦: Vehicle front

: N·m (kg-m, ft-lb)

: N·m (kg-m, in-lb)

: Always replace after every disassembly.

: Apply power steering fluid.

SERVICE DATA AND SPECIFICATIONS (SDS)

SERVICE DATA AND SPECIFICATIONS (SDS)

General Specifications

INFOID:0000000009236917

Steering gear model		PR26AF
Fluid capacity (Approx.)	ℓ (US qt, Imp qt)	1.0 (1, 7/8)

Steering Wheel

INFOID:0000000009236918

Item	Standard
Steering wheel axial end play	0 mm (0 in)
Steering wheel play on the outer circumference	0 – 35 mm (0 – 1.38 in)
Steering wheel turning force	39 N (4 kg-f, 9 lb-f)

Steering Angle

INFOID:0000000009236920

Unit: Degree minute (Decimal degree)

Item		Standard	
		2WD	AWD
Inner wheel	Minimum	35° 15′ (35.25°)	36° 00′ (36.00°)
	Nominal	38° 15′ (38.25°)	39° 00′ (39.00°)
	Maximum	39° 15′ (39.25°)	40° 00′ (40.00°)
Outer wheel	Nominal	32° 35′ (32.58°)	30° 40′ (30.67°)

Steering Column

INFOID:0000000009236921

Item		Standard
Rotating torque		0.49 N·m (0.05 kg-m, 4 in-lb) or less
Steering column length*		492 – 496 mm (19.37 – 19.53 in)
Impact dislacement absorption part dimension*	Mounting dimension A	0.4 mm (0.016 in) or less
	Mounting dimension B	1.5 mm (0.059 in) or less
Tilt operating range*		65 mm (2.56 in)
Telescopic operating range*		47 mm (1.85 in)

*: For measuring position, refer to ST-32, "Inspection and Adjustment".

Steering Shaft

INFOID:0000000009236924

Unit: mm (in)

Item	Standard
Steering shaft length*	508.8 (20.03) or more
Shaft sliding range*	83.7 (3.295) or more

*: For measuring position, refer to ST-36, "Inspection".

Steering Gear And Linkage

INFOID:0000000009236925

Item		Standard	
		2WD	AWD
Rack sliding force		217 – 275 N (22.2 – 28. 0 kg, 48.8 – 61.8 lb)	
Outer socket ball joint	Swing force* (Spring balance measurement)	1.5 – 42.7 N (0.15 – 4.3 kg, 0.33 – 9.5 lb)	
	Rotating torque	0.1 – 2.9 N·m (0.01 – 0.29 kg-m, 3 – 25 in-lb)	
	Axial play	0.5 mm (0.02 in) or less	
Inner socket ball joint	Swing force* (Spring balance measurement)	1.5 – 105.4 N (0.15 – 10.7 kg, 0.33 – 23.6 lb)	1.6 – 121.9 N (0.16 – 12.4 kg, 0.35 – 27.4 lb)
	Axial play	0.2 mm (0.008 in) or less	
Inner socket length		68.5 mm (2.697 in)	
Rack stroke neutral position		67.2 mm (2.646 in)	64.1 mm (2.524 in)

Oil Pump

INFOID:0000000009236930

Unit: kPa (kg/cm^2, psi)

Item	Standard
Relief oil pressure	8,430 – 9,430 (86.0 – 96.1, 1,223 – 1,367)

PRECAUTION

PRECAUTIONS

Precaution for Supplemental Restraint System (SRS) "AIR BAG" and "SEAT BELT PRE-TENSIONER"

INFOID:0000000009799994

The Supplemental Restraint System such as “AIR BAG” and “SEAT BELT PRE-TENSIONER”, used along with a front seat belt, helps to reduce the risk or severity of injury to the driver and front passenger for certain types of collision. This system includes seat belt switch inputs and dual stage front air bag modules. The SRS system uses the seat belt switches to determine the front air bag deployment, and may only deploy one front air bag, depending on the severity of a collision and whether the front occupants are belted or unbelted.
Information necessary to service the system safely is included in the “SRS AIR BAG” and “SEAT BELT” of this Service Manual.

WARNING:
Always observe the following items for preventing accidental activation.
- **To avoid rendering the SRS inoperative, which could increase the risk of personal injury or death in the event of a collision that would result in air bag inflation, all maintenance must be performed by an authorized NISSAN/INFINITI dealer.**
- **Improper maintenance, including incorrect removal and installation of the SRS, can lead to personal injury caused by unintentional activation of the system. For removal of Spiral Cable and Air Bag Module, see “SRS AIR BAG”.**
- **Never use electrical test equipment on any circuit related to the SRS unless instructed to in this Service Manual. SRS wiring harnesses can be identified by yellow and/or orange harnesses or harness connectors.**

PRECAUTIONS WHEN USING POWER TOOLS (AIR OR ELECTRIC) AND HAMMERS

WARNING:
Always observe the following items for preventing accidental activation.
- **When working near the Air Bag Diagnosis Sensor Unit or other Air Bag System sensors with the ignition ON or engine running, never use air or electric power tools or strike near the sensor(s) with a hammer. Heavy vibration could activate the sensor(s) and deploy the air bag(s), possibly causing serious injury.**
- **When using air or electric power tools or hammers, always switch the ignition OFF, disconnect the battery, and wait at least 3 minutes before performing any service.**

Service Notice or Precautions for Steering System

INFOID:0000000009728036

- In case of removing steering gear assembly, make the final tightening with grounded and unloaded vehicle condition, and then check wheel alignment.
- Observe the following precautions when disassembling.
- Before disassembly, thoroughly clean the outside of the unit.
- Disassembly should be done in a clean work area. It is important to prevent the internal parts from becoming contaminated by dirt or other foreign matter.
- For easier and proper assembly, place disassembled parts in order on a parts rack.
- Use nylon cloth or paper towels to clean the parts; common shop rags can leave lint that might interfere with their operation.
- Never reuse non-reusable parts.
- Before assembling, apply the specified grease to the directed parts.

PREPARATION

PREPARATION

Special Service Tools

INFOID:0000000009728037

Tool number (Kent-Moore No.) Tool name	Description
ST3127S000 (J-25765-A) Preload gauge 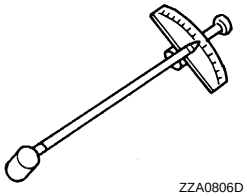 ZZA0806D	• Measuring steering wheel turning torque • Measuring steering column rotating torque • Measuring pinion rotating torque • Measuring ball joint rotating torque
ST27180001 (J-25726-A) Steering wheel puller 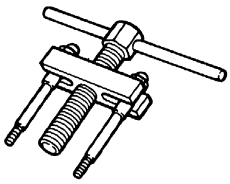 ZZA0819D	Removing steering wheel

Commercial Service Tools

INFOID:0000000009728038

Tool name	Description
Power tool 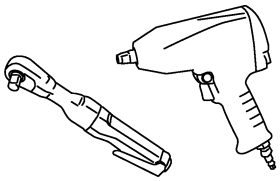 PBIC0190E	Loosening bolts and nuts
Ball joint remover 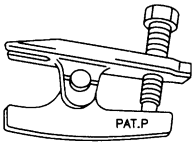 S-NT146	Removing steering outer socket

Lubricant or/and Sealant

INFOID:0000000009809654

Name	Description	Note
Multi-purpose grease	Power steering oil pump	—

SYSTEM DESCRIPTION

COMPONENT PARTS

HEATED STEERING WHEEL SYSTEM

HEATED STEERING WHEEL SYSTEM : Component Parts Location

INFOID:0000000009728039

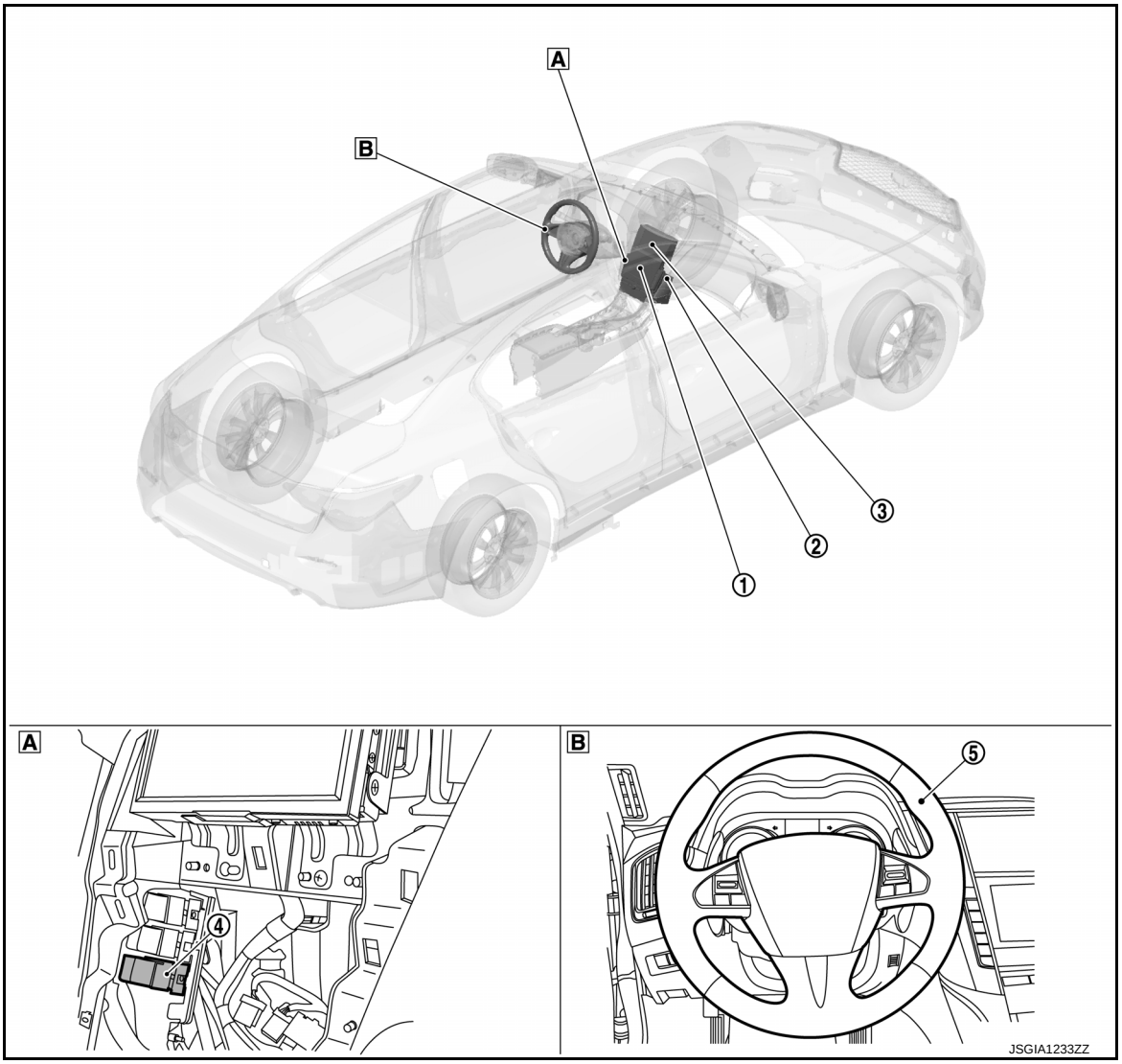

A At the back of integral switch

B Steering wheel

No.	Component	Function
①	Integral switch	• Changes the following settings according to the operation of the display part. - Steering heater function ON/OFF - Steering heater AUTO function ON/OFF • Transmits the following signals to display control unit via communication line. - Steering heater signal - Steering heater auto signal • Refer to AV-14, "Component Parts Location" for detailed installation location.
②	A/C auto amp.	• For the function, refer to ST-62, "HEATED STEERING WHEEL SYSTEM : A/C Auto Amp.". • Refer to HAC-5, "AUTOMATIC AIR CONDITIONING SYSTEM : Component Parts Location" for detailed installation location.
③	Display control unit	• Transmits the following signals received from integral switch to AC auto amp. via CAN communication. - Steering heater signal - Steering heater auto signal • Refer to AV-14, "Component Parts Location" for detailed installation location.
④	Heated steering wheel relay	ST-62, "HEATED STEERING WHEEL SYSTEM : Heated Steering Wheel Relay"
⑤	Heated steering wheel	ST-62, "HEATED STEERING WHEEL SYSTEM : Heated Steering Wheel"

HEATED STEERING WHEEL SYSTEM : Heated Steering Wheel

INFOID:0000000009728040

With the power supply from the heated steering wheel relay, the heated steering wheel controls temperature through the heating element ① and thermostat ② built into the steering wheel.

- Heating element: Generates heat by energization.
  NOTE:
  Heating element is located at the back of the steering wheel leather surface.
- Thermostat: Turns ON/OFF power supply according to the specified temperature.

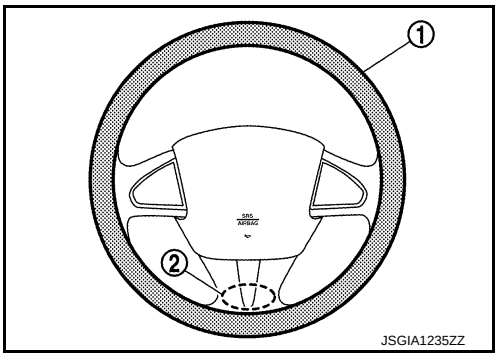

HEATED STEERING WHEEL SYSTEM : Heated Steering Wheel Relay

INFOID:0000000009728041

Through the control of the A/C auto amp., the heated steering wheel relay turns ON/OFF electricity to the heating element built-in the steering wheel. For location, refer to ST-61, "HEATED STEERING WHEEL SYSTEM : Component Parts Location".

HEATED STEERING WHEEL SYSTEM : A/C Auto Amp.

INFOID:0000000009728042

- A/C auto amp. turns ON/OFF the heated steering wheel relay, according to a signal transmitted from display control unit by CAN communication.
- The A/C auto amp. includes a timer. The heated steering wheel relay is turned OFF when the timer operating time reaches 30 minutes.
- Timer: Turns ON/OFF the heated steering wheel relay for a specified period of time
- For other information of A/C auto amp., refer to HAC-10, "A/C Auto Amp.".

SYSTEM

HEATED STEERING WHEEL SYSTEM

HEATED STEERING WHEEL SYSTEM : System Description

INFOID:0000000009728043

SYSTEM DIAGRAM

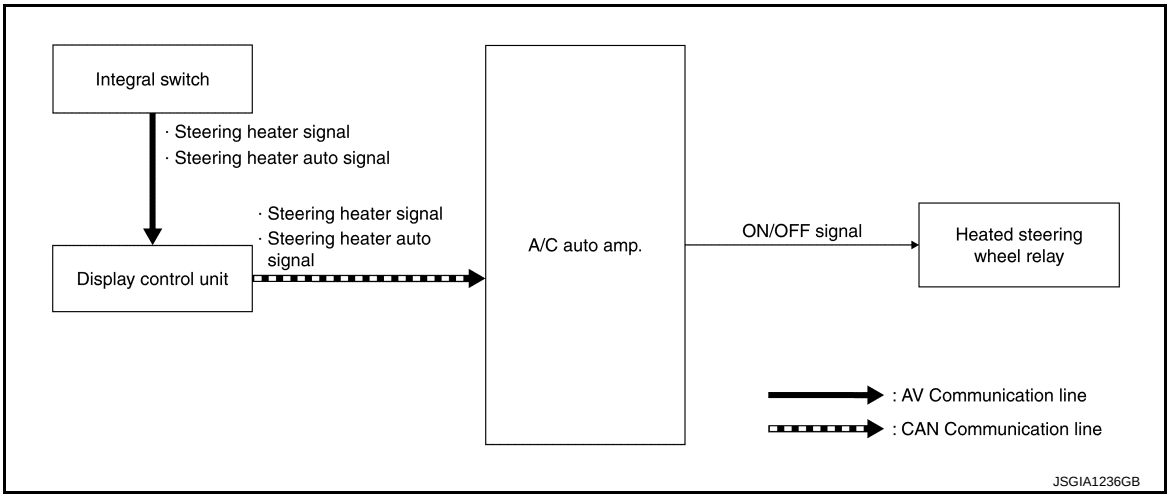

FUNCTION FLOW

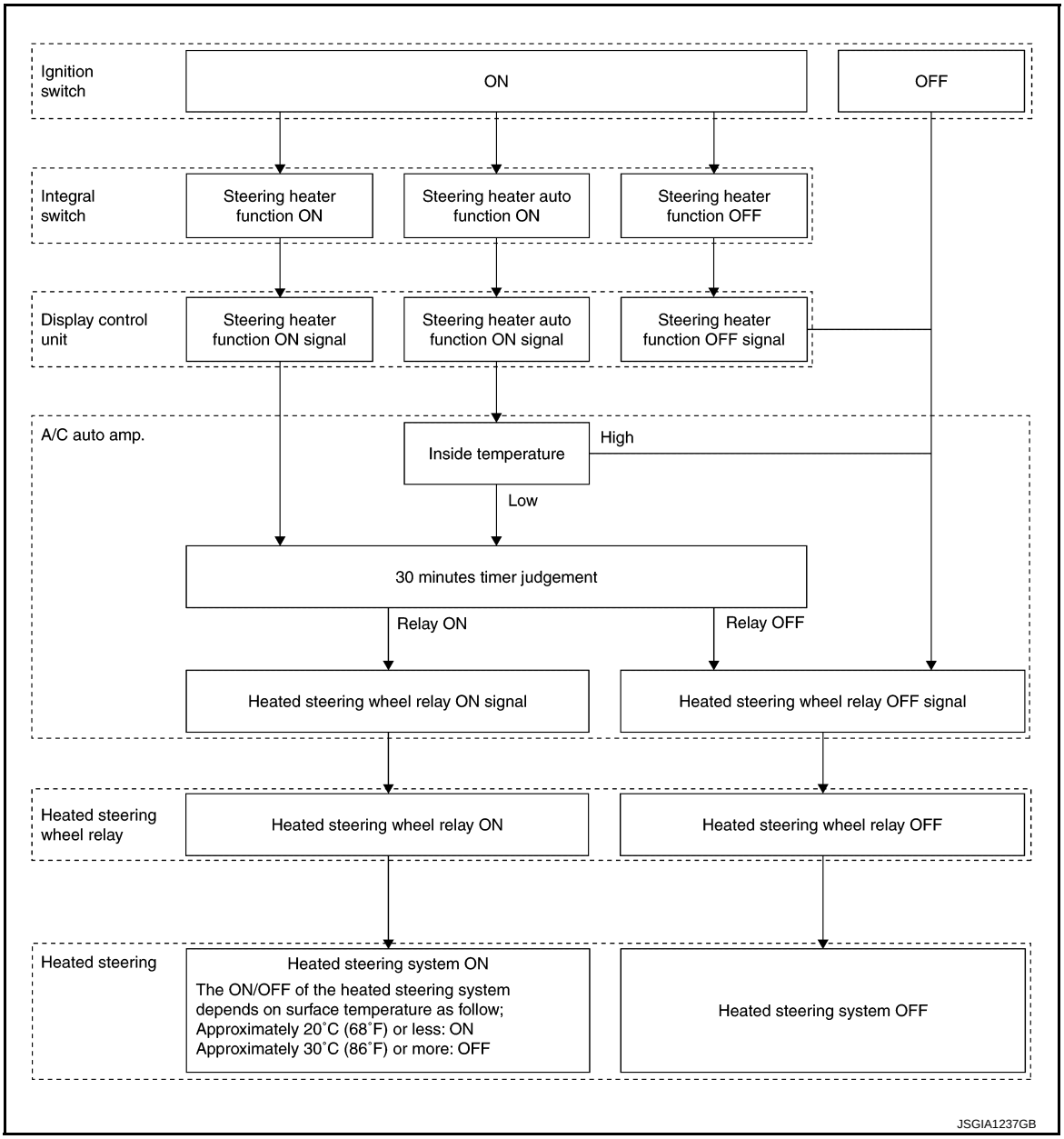

DESCRIPTION

Normal Control

- The heated steering wheel system maintains the surface temperature of the steering wheel between 20°C (68°F) and 30°C (86°F).
- Once steering heater function turns ON on the integral switch display, A/C auto amp. that has received signal via display control unit turns the heated steering wheel relay ON and electrifies to the heat elements built-in the steering wheel to heat the steering wheel.
- When steering heater function turns OFF, A/C auto amp. turns OFF the heated steering wheel relay and stops the electricity supply to the heat elements.
- When the surface temperature of the steering wheel is higher than 30°C (86°F), the thermostat built-in the steering wheel turns OFF, and electricity to the heating element is turned OFF. When the surface temperature drops to less than 20°C (68°F), the thermostat built-in the steering wheel turns ON, and electricity to the heating element is turned ON.

Auto Control

- Once steering heater auto function turns ON on the integral switch display part, the steering heater switches to the auto control.

- Under the auto control, A/C auto amp. turns the heated steering wheel relay ON and electrifies the heat elements built in the steering wheel to heat the steering wheel when the temperature in the passenger room is low.
- After the heated steering wheel relay turns ON, the electricity to the heat element switches ON/OFF corresponding to the steering wheel surface temperature as well as under the normal control.
- If ON⇔OFF operation of “Steering Heater” is performed on the integral switch display, the auto control is cancelled.

Timer Function

- The A/C auto amp. has a timer. After steering heater function or steering heater auto function turns ON, when operating time becomes more than the specified time (30 minutes), the A/C auto amp. turns OFF the heated steering wheel relay to stop heating.

Condition for Electrifying Heat Elements

Ignition switch	Timer function judgment result	Steering Heater Mode	Electrifying heat elements
ON	ON	Steering Heater ON	Turns ON/OFF corresponding to the steering wheel surface temperature.
		Steering Heater Auto ON	• Turns ON when the passenger room temperature is low. • Turns ON/OFF corresponding to the steering wheel surface temperature after electricity turns ON.
		• Steering Heater OFF • Steering Heater Auto OFF	OFF
	OFF	—	OFF
OFF	—	—	OFF

HEATED STEERING WHEEL SYSTEM : Circuit Diagram

INFOID:0000000009728044

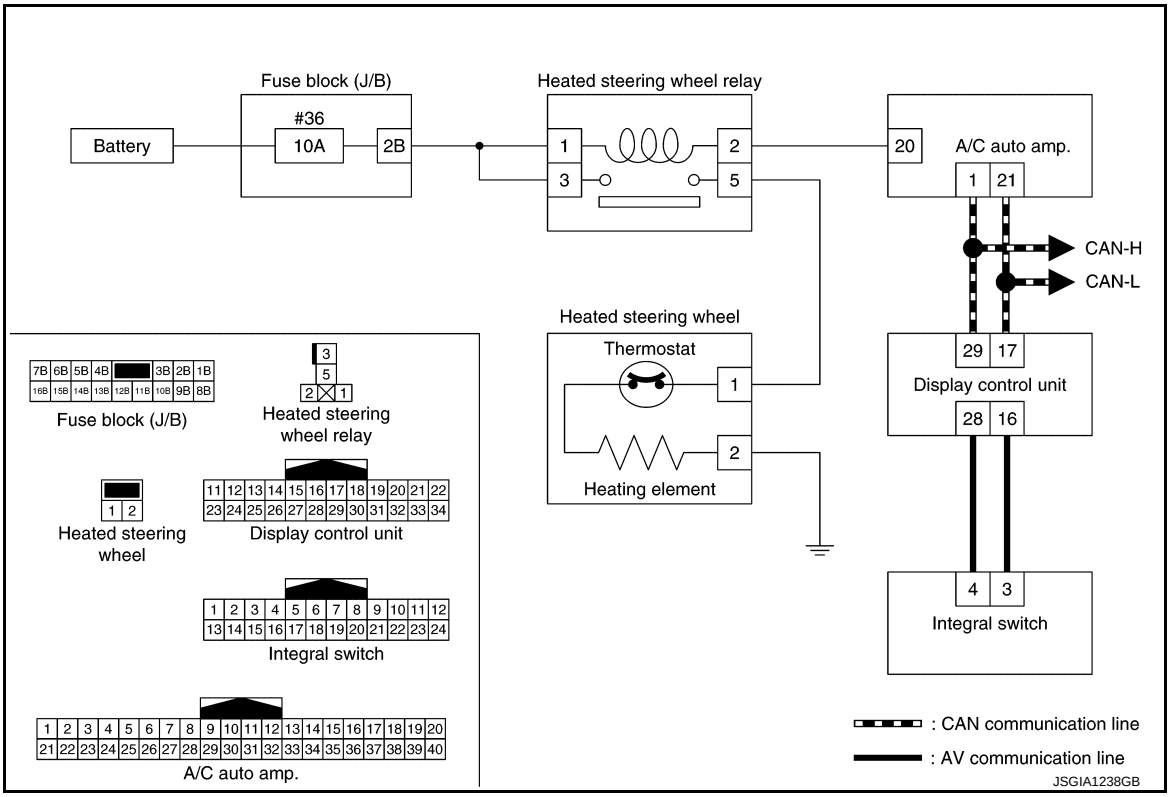

WIRING DIAGRAM

HEATED STEERING WHEEL

Wiring Diagram

INFOID:0000000009728045

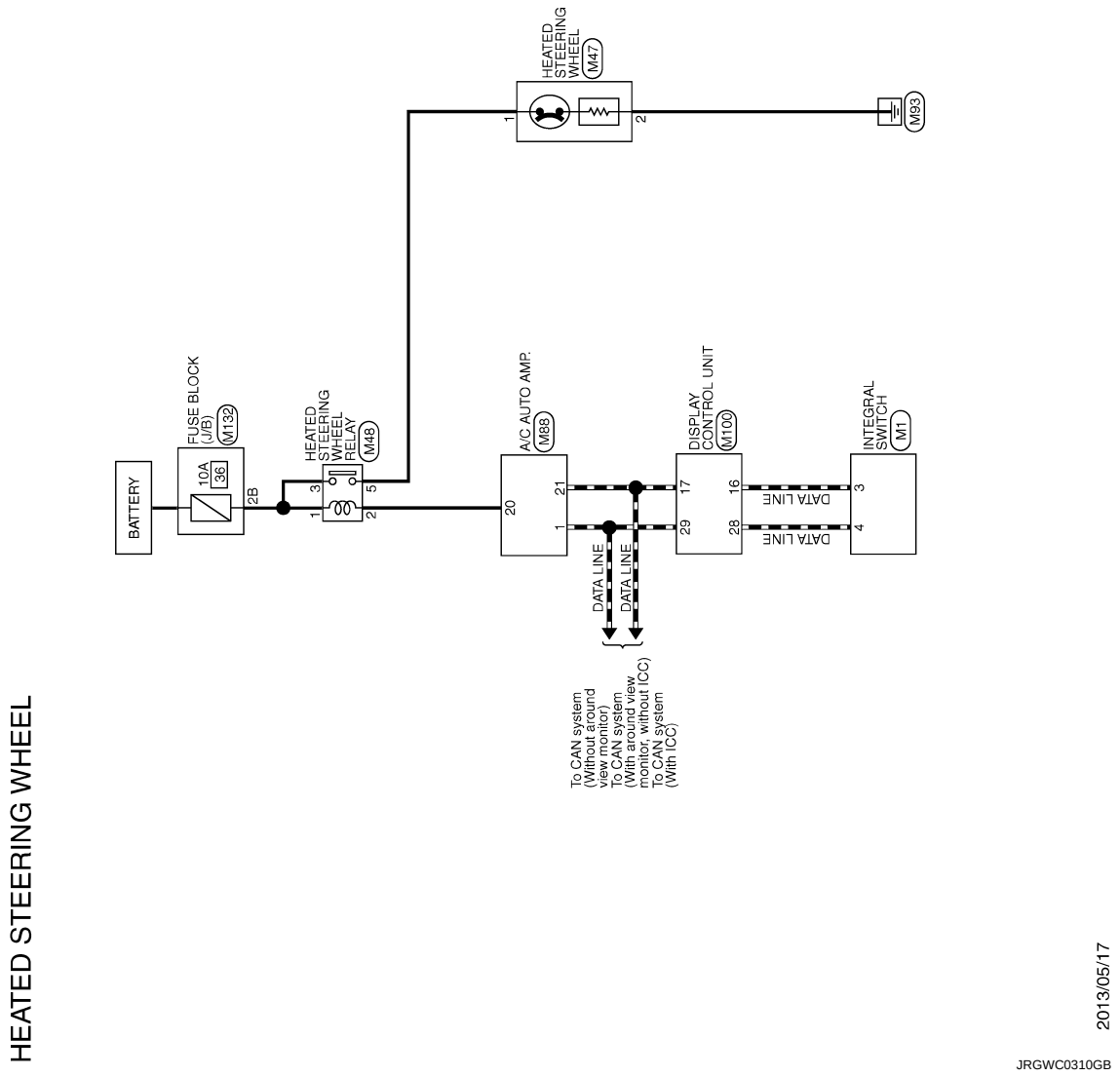

HEATED STEERING WHEEL

Connector No.	M1
Connector Name	INTEGRAL SWITCH
Connector Type	TH24FW-NH

H.S.

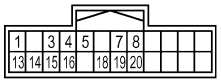

Terminal No.	Color Of Wire	Signal Name [Specification]
1	W	BAT
3	SB	AV COMM (L)
4	LG	AV COMM (H)
5	G	DOOR LOCK STATUS INDICATOR LAMP SIGNAL
7	W/B	DISK EJECT SIGNAL
8	G	HAZERD SIGNAL
13	B	GND
14	V	ACC
15	B	ILLUMINATION CONTROL SIGNAL
16	BG	DISK EJECT SIGNAL GROUND
18	R	IGN
19	BR	CAMERA SWITCH SIGNAL
20	LG	AIR BAG INDICATOR OFF SIGNAL

Connector No.	M47
Connector Name	HEATED STEERING WHEEL
Connector Type	NS02FW-CS

H.S.

Terminal No.	Color Of Wire	Signal Name [Specification]
1	BR	–
2	B	–

Connector No.	M48
Connector Name	HEATED STEERING WHEEL RELAY
Connector Type	MS02FL-M2-LC

H.S.

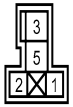

Terminal No.	Color Of Wire	Signal Name [Specification]
1	B	–
2	L	–
3	B	–
5	BR	–

Connector No.	M88
Connector Name	A/C AUTO AMP.
Connector Type	TH40FW-NH

H.S.

Terminal No.	Color Of Wire	Signal Name [Specification]
1	L	CAN-H
2	B	GND
3	W	BAT
7	G	AMBIENT SENS
9	R	SUNLOAD SENS
13	V	IGN SW ACC
16	P	LIN
17	R	DOOR MOTOR PWR SPLY
18	P	BLOWER MOTOR CONT
20	L	HEAT STRG WHL RLY CONT
21	P	CAN-L
22	B	GND
23	W	IGN SW ON
26	B	SENS GND
27	LG	IN-VEHICLE SENS
28	BR	INTAKE SENS
30	BG	EXH GAS/OUT ODOR DTCT SENS
37	B	GND
38	BG	IONIZER CONT
40	BG	ECV CONT

Connector No.	M100
Connector Name	DISPLAY CONTROL UNIT
Connector Type	TH24FW-NH

H.S.

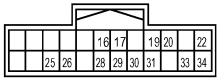

Terminal No.	Color Of Wire	Signal Name [Specification]
16	SB	AV COMM (L)
17	P	CAN-L
19	R	DIMMER SIGNAL
20	BR	REVERSE SIGNAL
22	B	GND
25	SB	–
26	BR	CAMERA SWITCH SIGNAL
28	LG	AV COMM (H)
29	L	CAN-H
30	R	IGN
31	R	VEHICLE SPEED SIGNAL (8-PULSE)
33	SB	ACC
34	Y	BAT

Connector No.	M132
Connector Name	FUSE BLOCK (J/B)
Connector Type	NS16FW-CS

H.S.

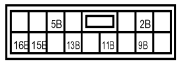

Terminal No.	Color Of Wire	Signal Name [Specification]
11B	LG	–
13B	P	–
15B	Y	–
16B	Y	–
2B	B	–
5B	R	–
9B	Y	–

JRGWC0311GB

BASIC INSPECTION

DIAGNOSIS AND REPAIR WORK FLOW

Work Flow (Heated Steering Wheel)

INFOID:0000000009728046

DETAILED FLOW

1.OBTAIN INFORMATION ABOUT SYMPTOM

Interview the customer to obtain the malfunction information (conditions and environment when the malfunction occurred) as much as possible when the customer brings the vehicle in.

CAUTION:

Customers are not professional. Never guess easily like “maybe the customer means that...,” or “maybe the customer mentions this symptom”.

>> GO TO 2.

2.REPRODUCE THE MALFUNCTION INFORMATION

Check the malfunction on the vehicle that the customer describes.
Inspect the relation of the symptoms and the condition when the symptoms occur.

>> GO TO 3.

3.IDENTIFY THE MALFUNCTIONING SYSTEM WITH “SYMPTOM DIAGNOSIS”

Use “Symptom diagnosis” from the symptom inspection result in step 2 and then identify where to start performing the diagnosis based on possible causes and symptoms.

>> GO TO 4.

4.IDENTIFY THE MALFUNCTIONING PARTS WITH “DTC/CIRCUIT DIAGNOSIS”

Perform the diagnosis with “DTC/circuit diagnosis” of the applicable system.

>> GO TO 5.

5.REPAIR OR REPLACE THE MALFUNCTIONING PARTS

Repair or replace the specified malfunctioning parts.

>> GO TO 6.

6.FINAL CHECK

Check that malfunctions are not reproduced when obtaining the malfunction information from the customer, referring to the symptom inspection result in step 2.

Are the malfunctions corrected?

YES >> INSPECTION END
NO >> GO TO 2.

STEERING WHEEL

Inspection

INFOID:0000000009728047

NEUTRAL POSITION STEERING WHEEL

1. Check that steering gear assembly, steering column assembly and steering wheel are installed in the correct position.
2. Check wheel alignment within specification. Refer to FSU-8, "DIRECT ADAPTIVE STEERING : Inspection" (2WD), FSU-30, "DIRECT ADAPTIVE STEERING : Inspection" (AWD).
3. Set the vehicle to the straight-ahead position and confirm steering wheel is in the neutral position.
   - Perform steering neutral position learning if steering wheel is not in the neutral position. Refer to BRC-70, "Work Procedure".

STEERING WHEEL TURNING FORCE

1. Park vehicle on a level and dry surface, set parking brake.
2. Tires need to be inflated normal pressure. Refer to WT-68, "Tire Air Pressure".
3. Start engine.
4. Check steering wheel turning force when steering wheel has been turned 360° from neutral position.

Steering wheel turning force **: Refer to ST-104, "Steering Wheel".**

L : 185 mm (7.28 in)

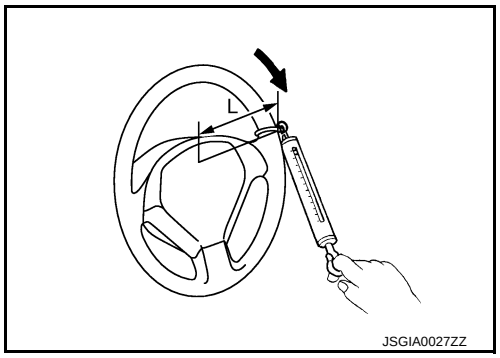

FRONT WHEEL TURNING ANGLE

1. Perform toe-in inspection. Refer to FSU-8, "DIRECT ADAPTIVE STEERING : Inspection" (2WD), FSU-30, "DIRECT ADAPTIVE STEERING : Inspection"(AWD).
   CAUTION:
   Perform front wheel turning angle inspection, after toe-in inspection.
2. Place front wheels on turning radius gauges and rear wheels on stands, so that vehicle can be level.
3. Check the maximum inner and outer wheel turning angles for LH and RH road wheels.

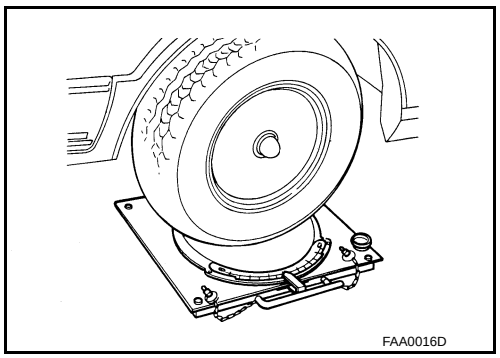

- Start the engine, and turn steering wheel from full left stop to full right stop and measure the turning angles (maximum inner wheel steering angle and maximum outer wheel steering angle).

A : Inner wheel angle
B : Outer wheel angle

Steering angle **: Refer to ST-104, "Steering Angle".**

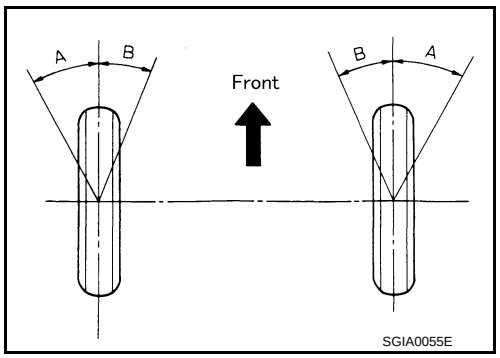

- Check the following items when turning angle is out of the standard.
  - Perform toe-in adjustment. Refer to FSU-8, "DIRECT ADAPTIVE STEERING : Inspection" (2WD), FSU-30, "DIRECT ADAPTIVE STEERING : Inspection"(AWD).
  - Steering angles are not adjustable. Check steering gear assembly, steering column assembly and front suspension components for wear or damage if any of the turning angles are different from the specified value. Replace any of them, if any non-standard condition exists.

DTC/CIRCUIT DIAGNOSIS

HEATED STEERING WHEEL SYSTEM

Component Function Check

INFOID:0000000009728048

1. CHECK HEATED STEERING WHEEL SYSTEM

Check operate heated steering wheel system. Refer to ST-63, "HEATED STEERING WHEEL SYSTEM : System Description".

Is the inspection result normal?

YES >> INSPECTION END
NO >> Go to ST-71, "Diagnosis Procedure".

Diagnosis Procedure

INFOID:0000000009728049

1. CHECK HEATED STEERING WHEEL POWER SUPPLY

1. Switch heated steering mode to ON.
2. Check voltage between heated steering wheel relay harness connector and ground.

Terminals			Voltage (Approx.)
(+)		(–)	
Heated steering wheel relay		Ground	
Connector	Terminal		
M48	5	—	Battery voltage

Is the inspection result normal?

YES >> GO TO 6.
NO >> GO TO 2.

2. CHECK HEATED STEERING WHEEL RELAY

Check heated steering wheel relay. Refer to ST-73, "Component Inspection (Heated Steering Wheel Relay)".

Is the inspection result normal?

YES >> GO TO 3.
NO >> Replace heated steering wheel relay. Refer to ST-61, "HEATED STEERING WHEEL SYSTEM : Component Parts Location".

3. CHECK HEATED STEERING WHEEL RELAY POWER SUPPLY

1. Turn the ignition switch OFF.
2. Disconnect heated steering wheel relay harness connector.
3. Check voltage between heated steering wheel relay harness connector and ground.

Terminals			Voltage (Approx.)
(+)		(–)	
Heated steering wheel relay		Ground	
Connector	Terminal		
M48	1	—	Battery voltage
	3		

Is the inspection result normal?

YES >> GO TO 5.
NO >> GO TO 4.

4. CHECK HEATED STEERING WHEEL RELAY CIRCUIT (1)

1. Check 10A fuse (#36).
2. Disconnect fuse block (J/B) harness connector.

3. Check continuity between heated steering wheel relay harness connector terminal and fuse block (J/B) harness connector terminal.

Heated steering wheel relay		Fuse block (J/B)		Continuity
Connector	Terminal	Connector	Terminal	
M48	1	M132	2B	Existed
	3			

4. Check continuity between heated steering wheel relay harness connector terminal and ground.

Heated steering wheel relay		Ground	Continuity
Connector	Terminal	—	
M48	1	Ground	Not existed
	3		

Is the inspection result normal?

YES >> Perform trouble diagnosis for battery power supply circuit.
NO >> Repair or replace error-detected parts.

5. CHECK HEATED STEERING WHEEL RELAY CIRCUIT (2)

1. Disconnect heated steering wheel harness connector.
2. Check continuity between heated steering wheel relay harness connector terminal and A/C auto amp. harness connector terminal.

Heated steering wheel relay		A/C auto amp.		Continuity
Connector	Terminal	Connector	Terminal	
M48	2	M88	20	Existed

3. Check continuity between heated steering wheel relay harness connector terminal and ground.

Heated steering wheel relay		—	Continuity
Connector	Terminal		
M48	2	Ground	Not existed

Is the inspection result normal?

YES >> Repair or replace A/C auto amp.. Refer to HAC-113, "Removal and Installation".
NO >> Repair or replace error-detected parts.

6. CHECK HEATED STEERING WHEEL CIRCUIT

1. Disconnect heated steering wheel harness connector.
2. Check continuity between heated steering wheel relay harness connector and heated steering wheel harness connector.

Heated steering wheel relay		Heated steering wheel		Continuity
Connector	Terminal	Connector	Terminal	
M48	5	M47	1	Existed

3. Check continuity between heated steering wheel relay harness connector terminal and ground.

Heated steering wheel relay		—	Continuity
Connector	Terminal		
M48	5	Ground	Not existed

Is the inspection result normal?

YES >> GO TO 7.
NO >> Repair or replace error-detected parts.

7. CHECK HEATED STEERING WHEEL

Check heated steering wheel. Refer to ST-73, "Component Inspection (Heated Steering Wheel)".

Is the inspection result normal?

YES >> GO TO 8.
NO >> Replace heated steering wheel. Refer to ST-86, "Removal and Installation".

8. CHECK GROUND CIRCUIT

Check continuity between heated steering wheel harness connector terminal and ground.

Heated steering wheel		—	Continuity
Connector	Terminal		
M47	2	Ground	Existed

Is the inspection result normal?

YES >> Check the intermittent incident. Refer to GI-43, "Intermittent Incident".
NO >> Repair or replace damaged parts.

Component Inspection (Heated Steering Wheel)

INFOID:0000000009728050

1. CHECK HEATED STEERING WHEEL CONTINUITY

1. Turn ignition switch OFF.
2. Remove the heated steering wheel. Refer to ST-86, "Removal and Installation".
3. Check continuity between heated steering wheel harness connector terminal and ground.

Heated steering wheel	Condition	Continuity
Terminal		
1 – 2	Leather surface temperature of 20°C (68°F) or less	Existed
	Leather surface temperature of 30°C (86°F) or more	Not existed

Is the inspection result normal?

YES >> GO TO 2.
NO >> Replace heated steering wheel. Refer to ST-86, "Removal and Installation".

2. CHECK HEATED STEERING WHEEL RESISTANCE

Check resistance between heated steering wheel connector terminals.

Heated steering wheel	Condition	Resistance
Terminal		
1 – 2	Leather surface temperature of 20°C (68°F)	1.7 – 2.17 Ω

Is the inspection result normal?

YES >> INSPECTION END
NO >> Replace heated steering wheel. Refer to ST-86, "Removal and Installation".

Component Inspection (Heated Steering Wheel Relay)

INFOID:0000000009728051

1. CHECK HEATED STEERING WHEEL RELAY CONTINUITY

Check continuity between heated steering wheel relay terminals.

CAUTION:

- **Connect the fuse between the terminals when applying the voltage.**
- **To prevent damage, always observe the correct polarity.**
- **Prevent short-circuit.**

Heated steering wheel relay Terminal	Condition	Continuity
3 – 5	Apply 12 V direct current between terminals 1 and 2.	Existed
	Other conditions.	Not existed

Is the inspection result normal?

YES >> INSPECTION END
NO >> Replace heated steering wheel relay. Refer to ST-61, "HEATED STEERING WHEEL SYSTEM : Component Parts Location".

SYMPTOM DIAGNOSIS

HEATED STEERING WHEEL SYSTEM DOES NOT ACTIVATE

Description

INFOID:0000000009728052

- The heated steering wheel does not warm up.
- The heated steering wheel system cannot be turned OFF.

Diagnosis Procedure

INFOID:0000000009728053

1. CHECK HEATED STEERING WHEEL POWER SUPPLY

1. Switch heated steering mode to ON.
2. Check voltage between heated steering wheel relay harness connector and ground.

Terminals			Voltage (Approx.)
(+)		(–)	
Heated steering wheel relay		Ground	
Connector	Terminal		
M48	5	—	Battery voltage

Is the inspection result normal?

YES >> GO TO 6.
NO >> GO TO 2.

2. CHECK HEATED STEERING WHEEL RELAY

Check heated steering wheel relay. Refer to ST-73, "Component Inspection (Heated Steering Wheel Relay)".

Is the inspection result normal?

YES >> GO TO 3.
NO >> Replace heated steering wheel relay. Refer to ST-61, "HEATED STEERING WHEEL SYSTEM : Component Parts Location".

3. CHECK HEATED STEERING WHEEL RELAY POWER SUPPLY

1. Turn the ignition switch OFF.
2. Disconnect heated steering wheel relay harness connector.
3. Check voltage between heated steering wheel relay harness connector and ground.

Terminals			Voltage (Approx.)
(+)		(–)	
Heated steering wheel relay		Ground	
Connector	Terminal		
M48	1	—	Battery voltage
	3		

Is the inspection result normal?

YES >> GO TO 5.
NO >> GO TO 4.

4. CHECK HEATED STEERING WHEEL RELAY CIRCUIT (1)

1. Check 10A fuse (#36).
2. Disconnect fuse block (J/B) harness connector.
3. Check continuity between heated steering wheel relay harness connector terminal and fuse block (J/B) harness connector terminal.

Heated steering wheel relay		Fuse block (J/B)		Continuity
Connector	Terminal	Connector	Terminal	
M48	1	M132	2B	Existed
	3			

4. Check continuity between heated steering wheel relay harness connector terminal and ground.

Heated steering wheel relay		Ground —	Continuity
Connector	Terminal		
M48	1	Ground	Not existed
	3		

Is the inspection result normal?

YES >> Perform trouble diagnosis for battery power supply circuit.
NO >> Repair or replace error-detected parts.

5. CHECK HEATED STEERING WHEEL RELAY CIRCUIT (2)

1. Disconnect heated steering wheel harness connector.
2. Check continuity between heated steering wheel relay harness connector terminal and A/C auto amp. harness connector terminal.

Heated steering wheel relay		A/C auto amp.		Continuity
Connector	Terminal	Connector	Terminal	
M48	2	M88	20	Existed

3. Check continuity between heated steering wheel relay harness connector terminal and ground.

Heated steering wheel relay		—	Continuity
Connector	Terminal		
M48	2	Ground	Not existed

Is the inspection result normal?

YES >> Repair or replace A/C auto amp.. Refer to HAC-113, "Removal and Installation".
NO >> Repair or replace error-detected parts.

6. CHECK HEATED STEERING WHEEL CIRCUIT

1. Disconnect heated steering wheel harness connector.
2. Check continuity between heated steering wheel relay harness connector and heated steering wheel harness connector.

Heated steering wheel relay		Heated steering wheel		Continuity
Connector	Terminal	Connector	Terminal	
M48	5	M47	1	Existed

3. Check continuity between heated steering wheel relay harness connector terminal and ground.

Heated steering wheel relay		—	Continuity
Connector	Terminal		
M48	5	Ground	Not existed

Is the inspection result normal?

YES >> GO TO 7.
NO >> Repair or replace error-detected parts.

7. CHECK HEATED STEERING WHEEL

Check heated steering wheel. Refer to ST-73, "Component Inspection (Heated Steering Wheel)".

Is the inspection result normal?

YES >> GO TO 8.
NO >> Replace heated steering wheel. Refer to ST-86, "Removal and Installation".

8. CHECK GROUND CIRCUIT

Check continuity between heated steering wheel harness connector terminal and ground.

Heated steering wheel		—	Continuity
Connector	Terminal		
M47	2	Ground	Existed

Is the inspection result normal?

YES >> Check the intermittent incident. Refer to GI-43, "Intermittent Incident".
NO >> Repair or replace damaged parts.

NOISE, VIBRATION AND HARSHNESS (NVH) TROUBLESHOOTING

NVH Troubleshooting Chart

INFOID:0000000009728054

2WD

Use the chart below to find the cause of the symptom. If necessary, repair or replace these parts.

Possible cause and SUSPECTED PARTS			Outer/inner socket ball joint swinging torque	Outer/inner socket ball joint rotating torque	Outer/inner socket ball joint end play	Steering wheel play	Steering gear rack sliding force	Improper steering wheel	Improper installation or looseness of tilt lock lever	Mounting looseness	Steering column deformation or damage	Improper installation or looseness of steering column	Steering linkage looseness	AXLE and SUSPENSION	TIRE	ROAD WHEEL	DRIVE SHAFT	BRAKE
Reference			ST-102, "Inspection"	ST-102, "Inspection"	ST-102, "Inspection"	ST-69, "Inspection"	ST-69, "Inspection"	—	—	ST-95, "Exploded View"	ST-89, "Inspection"	ST-87, "Exploded View"	ST-95, "Exploded View"	NVH in FAX, RAX, FSU, RSU section.	NVH in WT section.	NVH in WT section.	NVH in RAX section.	NVH in BR section.
Symptom	Steering	Noise	×	×	×	×	×				×	×		×	×	×	×	×
		Shake						×	×	×				×	×	×	×	×
		Vibration						×	×	×	×	×		×	×		×	
		Shimmy						×		×			×	×	×	×		×
		Judder							×	×			×	×	×	×		×

×: Applicable

AWD

Use the chart below to find the cause of the symptom. If necessary, repair or replace these parts.

Reference			ST-102, "Inspection"	ST-102, "Inspection"	ST-102, "Inspection"	ST-69, "Inspection"	ST-69, "Inspection"	—	—	ST-95, "Exploded View"	ST-89, "Inspection"	ST-87, "Exploded View"	ST-95, "Exploded View"	NVH in FAX, RAX, FSU, RSU section.	NVH in WT section.	NVH in WT section.	NVH in FAX, RAX section.	NVH in BR section.
Possible cause and SUSPECTED PARTS			Outer/inner socket ball joint swinging torque	Outer/inner socket ball joint rotating torque	Outer/inner socket ball joint end play	Steering wheel play	Steering gear rack sliding force	Improper steering wheel	Improper installation or looseness of tilt lock lever	Mounting looseness	Steering column deformation or damage	Improper installation or looseness of steering column	Steering linkage looseness	AXLE and SUSPENSION	TIRE	ROAD WHEEL	DRIVE SHAFT	BRAKE
Symptom	Steering	Noise	×	×	×	×	×				×	×		×	×	×	×	×
		Shake						×	×	×				×	×	×	×	×
		Vibration						×	×	×	×	×		×	×		×	
		Shimmy						×		×			×	×	×	×		×
		Judder							×	×			×	×	×	×		×

×: Applicable

PERIODIC MAINTENANCE

STEERING WHEEL

Inspection

INFOID:0000000009728055

STEERING WHEEL AXIAL END PLAY

1. Check installation conditions of steering gear assembly, front suspension assembly, axle and steering column assembly.
2. Check if movement exists when steering wheel is moved up and down, to the left and right and to the axial direction.

Steering wheel axial end play : Refer to ST-104, "Steering Wheel".

3. Check the following items when steering wheel axial end play is out of the standard.
   - Check the steering column assembly mounting condition. Refer to ST-87, "Exploded View".
   - Check steering gear assembly mounting condition for looseness. Refer to ST-95, "Exploded View".

STEERING WHEEL PLAY

1. Turn steering wheel so that front wheels come to the straight-ahead position.
2. Start the engine and lightly turn steering wheel to the left and right until front wheels start to move.
3. Measure steering wheel movement on the outer circumference.

Steering wheel play : Refer to ST-104, "Steering Wheel".

4. Check the following items when steering wheel play is out of the standard.
   - Check backlash for each joint of steering column assembly.
   - Check installation condition of steering gear assembly.

TOE-IN ADJUSTMENT

ALIGNMENT TESTER

ALIGNMENT TESTER : Inspection and Adjustment

INFOID:0000000009785366

WARNING:
Never move the vehicle during "DAST CALIBRATION (MODE1)" because the steering gear is held in neutral position until ignition switch is turned OFF
CAUTION:
- **Be careful for the moving parts, steering wheel and front wheels are steered automatically when start "DAST CALIBRATION (MODE1)".**
- **Do not rotate road wheels during the DAST calibration because the system is detected the vehicle running.**

1. PREPARATION

1. Set the vehicle to alignment tester. Then lift it up.
2. Connect the battery charger to protect the battery.
   NOTE:
   Much electricity is used in "DAST CALIBRATION (MODE1)".

>> GO TO 2.

2. ECU CONFIGURATION

With CONSULT
1. Connect the CONSULT.
2. Turn the ignition switch ON.
   CAUTION:
   Never start the engine.
3. Perform configuration for steering force control module. Refer to STC-140, "Work Procedure".
4. Perform configuration for steering angle main control module. Refer to STC-144, "Work Procedure".
5. Perform configuration for steering angle sub control module. Refer to STC-140, "Work Procedure".
6. Turn the ignition switch OFF.

>> GO TO 3.

3. DAST CALIBRATION (MODE1) [CLUTCH PHASE LEARNING]

With CONSULT
1. Turn the ignition switch ON.
   CAUTION:
   Never start the engine.
2. Perform "DAST CALIBRATION (MODE1)". Refer to STC-135, "Work Procedure".
3. Turn the ignition switch OFF.
   CAUTION:
   Be sure to perform this step.

>> GO TO 4.

4. DAST CALIBRATION (MODE1) [STEERING RACK NEUTRAL POSITION LEARNING]

With CONSULT
1. Turn the ignition switch ON.
   CAUTION:
   Never start the engine.
2. Perform "DAST CALIBRATION (MODE1)". Refer to STC-135, "Work Procedure".

>> GO TO 5.

5. ADJUSTMENT OF STEERING ANGLE SENSOR NEUTRAL POSITION

With CONSULT

1. On the CONSULT screen, select “ABS”>>“WORK SUPPORT”>>“ST ANGLE SENSOR ADJUSTMENT”.
2. Touch START.
   CAUTION:
   Never touch steering wheel while adjusting steering angle sensor.
3. After approx. 10 seconds, select “END”.
4. Turn ignition switch OFF, and then turn it ON again.
   CAUTION:
   Be sure to perform this step.

>> GO TO 6.

6. TOE-IN ADJUSTMENT

1. Adjust toe-in according to the specified value.

Toe-in : Refer to FSU-23, "Wheel Alignment" (2WD) or FSU-46, "Wheel Alignment" (AWD).

CAUTION:
- **Always evenly adjust both toe-in alternately and adjust the difference between the left and right to the standard.**
- **Always fix the steering inner socket when tightening the steering outer socket.**

NOTE:
Steering gear is held in neutral position until ignition switch is turned OFF

2. Turn the ignition switch OFF.

>> GO TO 7.

7. CHECK INNER SOCKET LENGTH

1. Check that inner socket length is in the specified value. Refer to ST-100, "Disassembly and Assembly".

Is the inspection result normal?

Yes >> GO TO 8.
No >> GO TO 1.

8. STEERING ANGLE INSPECTION

1. Turn the ignition switch ON.
2. Fully steer right and left. And check that the knock sound does not exist from the steering rack.

Is the inspection result normal?

Yes >> WORK END
No >> GO TO 9.

9. CHECK SUSPENSION AND STEERING PARTS INSTALLATION CONDITION

1. Check suspension and steering parts installation condition.

Is the inspection result normal?

Yes >> GO TO 5.
No >> Install suspension and steering parts properly. Then perform the toe-in adjustment again. GO TO 1.

EXCEPT ALIGNMENT TESTER

EXCEPT ALIGNMENT TESTER : Inspection and Adjustment

INFOID:0000000009785367

WARNING:
Never move the vehicle during “DAST CALIBRATION (MODE1)” because the steering gear is held in neutral position until ignition switch is turned OFF

CAUTION:
- **Be careful for the moving parts, steering wheel and front wheels are steered automatically when start “DAST CALIBRATION (MODE1)” and “DAST CALIBRATION (MODE2)”.**
- **Do not rotate road wheels during the DAST calibration because the system is detected the vehicle running.**

1. PREPARATION

1. Lift up the vehicle or set the vehicle on the turn table.
2. Connect the battery charger to protect the battery.
   NOTE:
   Much electricity is used in “DAST CALIBRATION (MODE1)”.

>> GO TO 2.

2. DAST CALIBRATION (MODE1) [CLUTCH PHASE LEARNING]

With CONSULT
1. Connect the CONSULT.
2. Turn the ignition switch ON.
   CAUTION:
   Never start the engine.
3. Perform “DAST CALIBRATION (MODE1)”. Refer to STC-135, "Work Procedure".
4. Turn the ignition switch OFF.
   CAUTION:
   Be sure to perform this step.

>> GO TO 3.

3. ECU CONFIGURATION

With CONSULT
1. Disconnect the battery charger.
2. Lift down the vehicle.
3. Turn the ignition switch ON.
4. Perform configuration for steering force control module. Refer to STC-140, "Work Procedure".
5. Perform configuration for steering angle main control module. Refer to STC-144, "Work Procedure".
6. Perform configuration for steering angle sub control module. Refer to STC-140, "Work Procedure".
7. Check that EPS warning lamp is turned ON.
   NOTE:
   Direct adaptive steering transfers to EPS mode.

>> GO TO 4.

4. TOE-IN ADJUSTMENT

1. Adjust toe-in according to the specified value.

   Toe-in : Refer to FSU-23, "Wheel Alignment" (2WD) or FSU-46, "Wheel Alignment" (AWD).

   CAUTION:
   - **Always evenly adjust both toe-in alternately and adjust the difference between the left and right to the standard.**
   - **Always fix the steering inner socket when tightening the steering outer socket.**

   NOTE:
   Steering gear is held in neutral position until ignition switch is turned OFF
2. Turn the ignition switch OFF.

>> GO TO 5.

5. DAST CALIBRATION (MODE1) [STEERING RACK NEUTRAL POSITION LEARNING]

With CONSULT
1. Turn the ignition switch ON.
   CAUTION:
   Never start the engine.
2. Perform “DAST CALIBRATION (MODE1)”. Refer to STC-135, "Work Procedure".

>> GO TO 6.

6. ADJUSTMENT OF STEERING ANGLE SENSOR NEUTRAL POSITION

With CONSULT

1. On the CONSULT screen, select “ABS”>>“WORK SUPPORT”>>“ST ANGLE SENSOR ADJUSTMENT”.
2. Touch START.
   CAUTION:
   Never touch steering wheel while adjusting steering angle sensor.
3. After approx. 10 seconds, select “END”.
4. Turn ignition switch OFF, and then turn it ON again.
   CAUTION:
   Be sure to perform this step.

>> GO TO 7.

7. DAST CALIBRATION (MODE2) [OFF-CENTER CALCULATION]

With CONSULT

1. Lift up the vehicle or set the vehicle on the turn table.
2. Connect the battery charger to protect the battery.
   NOTE:
   Much electricity is used in “DAST CALIBRATION (MODE2)”.
3. Turn the ignition switch ON.
   CAUTION:
   Never set the vehicle to READY/Never start the engine at this step.
4. Perform “DAST CALIBRATION (MODE2)”. Refer to STC-138, "Work Procedure".
5. Turn the ignition switch OFF.
6. Disconnect the battery charger.

>> GO TO 8.

8. STEERING RACK OFF-CENTER ADJUSTMENT

1. Adjust the off-center according to the displayed value.
- Positive value: Turn the inner socket to the ⇦ direction (Road wheel is moving to the left).
- Negative value: Turn the inner socket to the ⬅ direction (Road wheel is moving to the right).

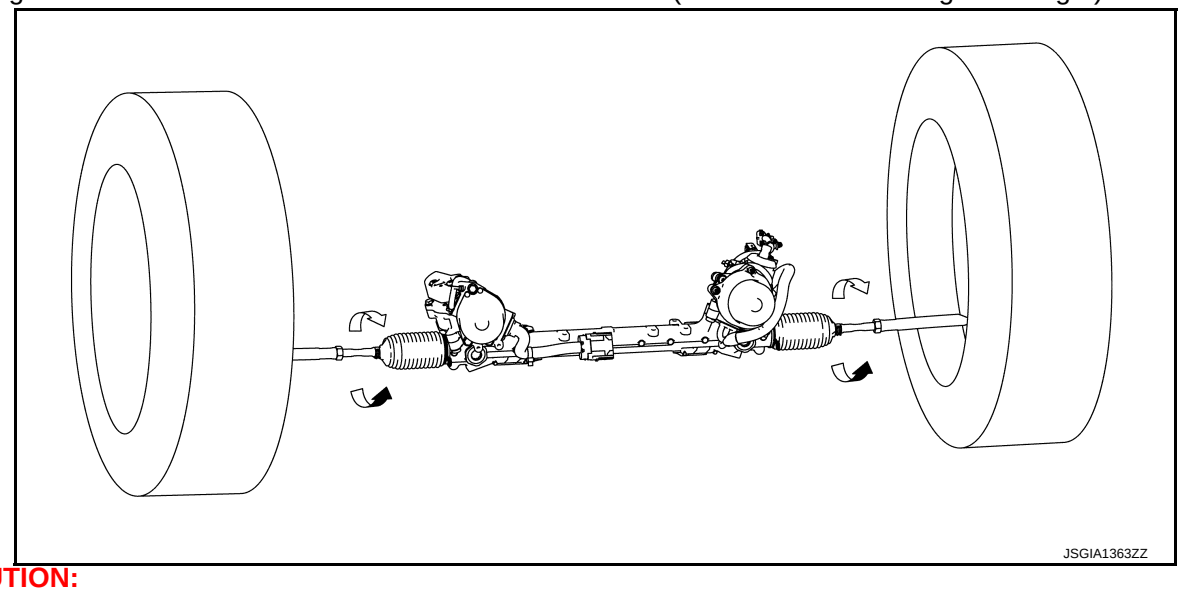

CAUTION:

- **Always evenly adjust both toe-in alternately and adjust the difference between the left and right to the standard.**
- **Always fix the steering inner socket when tightening the steering outer socket.**

2. Turn the ignition switch OFF.
   CAUTION:

Be sure to perform this step.

>> GO TO 9.

9. TOE-IN CONFIRMATION

1. Check toe-in.

Toe-in : Refer to FSU-23, "Wheel Alignment" (2WD) or FSU-46, "Wheel Alignment" (AWD).

Is the inspection result normal?

Yes >> GO TO 10.
No >> GO TO 1.

10. CHECK INNER SOCKET LENGTH

1. Check that inner socket length is in the specified value. Refer to ST-100, "Disassembly and Assembly".

Is the inspection result normal?

Yes >> GO TO 11.
No >> GO TO 1.

11. STEERING ANGLE INSPECTION

1. Turn the ignition switch ON.
2. Fully steer right and left. And check that the knock sound does not exist from the steering rack.

Is the inspection result normal?

Yes >> WORK END
No >> GO TO 12.

12. CHECK SUSPENSION AND STEERING PARTS INSTALLATION CONDITION

1. Check suspension and steering parts installation condition.

Is the inspection result normal?

Yes >> GO TO 1.
No >> Install suspension and steering parts properly. Then perform the toe-in adjustment again. GO TO 1.

REMOVAL AND INSTALLATION

STEERING WHEEL

Exploded View

INFOID:0000000009728056

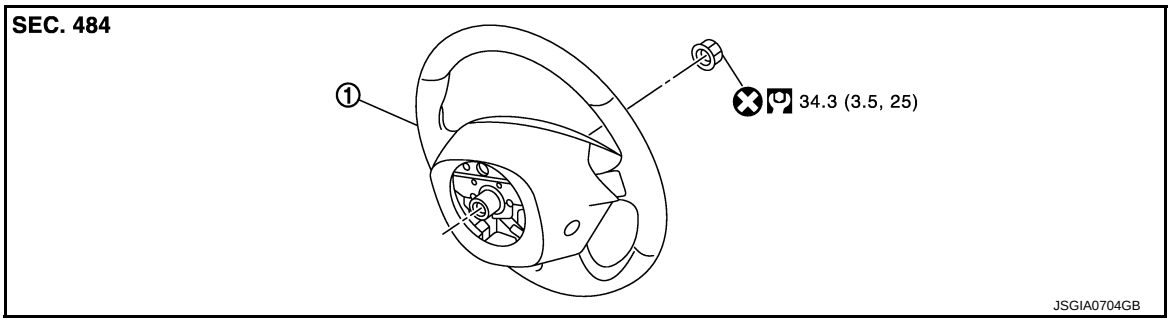

1 Steering wheel

: Always replace after every disassembly.

: N·m (kg-m, ft-lb)

Removal and Installation

INFOID:0000000009728057

REMOVAL

NOTE:

When reconnecting spiral cable, fix cable with a tape so that fixing case and rotating part keep aligned. This will omit neutral position alignment procedure during spiral cable installation.

1. Set vehicle to the straight-ahead position.
2. Remove driver air bag module. Refer to SR-16, "Removal and Installation".
3. Disconnect heated steering harness connector.
4. Remove steering wheel lock nut after steering is locked.
5. Remove steering wheel with the steering wheel puller (A) [SST: ST27180001 (J-25726-A)].
   NOTE:
   When removing, place a matching mark on both steering wheel and shaft of steering column assembly before removing.

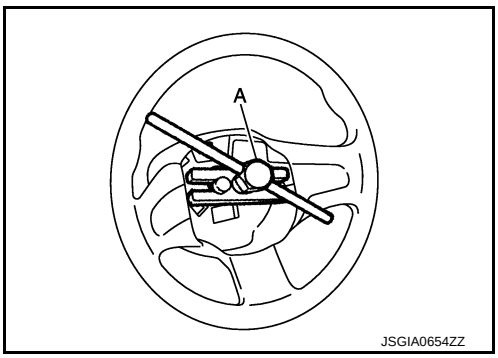

INSTALLATION

Note the following, and install in the reverse order of removal.

- Check the spiral cable neutral position after replacing or rotating spiral cable. Refer to SR-20, "Removal and Installation".
  CAUTION:
  Never twist spiral cable excessively after it becomes tight. (Twisting may cause the cable to be torn off.)
- Never reuse steering wheel lock nut.

CAUTION:

Perform additional service when removing/replacing steering wheel. Refer to STC-126, "Special Repair Requirement".

STEERING COLUMN

Exploded View

INFOID:0000000009728058

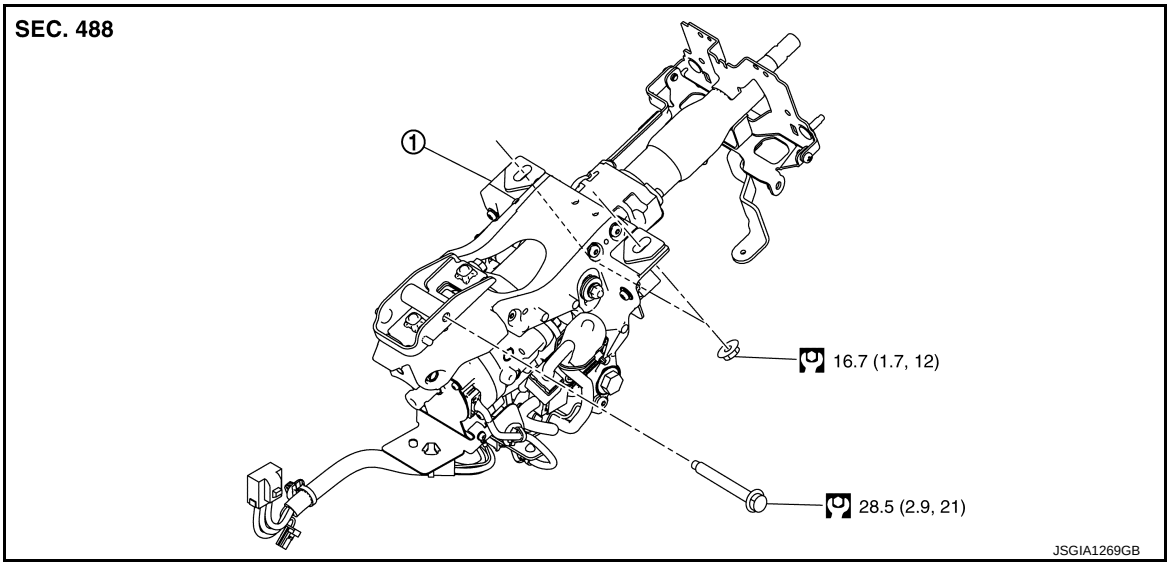

1 Steering column assembly

: N·m (kg-m, ft-lb)

CAUTION:
Never disassemble other than the parts shown in Exploded View.

Removal and Installation

INFOID:0000000009728059

REMOVAL

CAUTION:
- **Never impact on the axis when removing steering column assembly.**
- **Be careful when removing steering column assembly from the vehicle because it is heavy.**
- **While removing the steering column assembly, never move the steering gear.**
- **When removing the steering column assembly, be careful not to allow the steering shaft to turn.**
- **To prevent a malfunction and deformation from occurring in the tilt mechanism, never apply excessive force to the tilt lever.**

1. Set the vehicle to the straight-ahead position.
2. Place the tilt to the highest level.
   CAUTION:
   Securely lock the tilt lever.
3. Remove driver air bag module. Refer to SR-16, "Removal and Installation".
4. Remove steering wheel. Refer to ST-86, "Removal and Installation".
5. Remove instrument lower panel LH. Refer to IP-12, "Removal and Installation".
6. Remove the steering column cover. Refer to IP-12, "Removal and Installation".
7. Remove spiral cable. Refer to SR-20, "Removal and Installation".
8. Remove combination switch. Refer to BCS-99, "Removal and Installation".
9. Disconnect each harness connectors installed to steering column assembly.

10. Remove steering upper shaft mounting bolt ① (steering column assembly side).

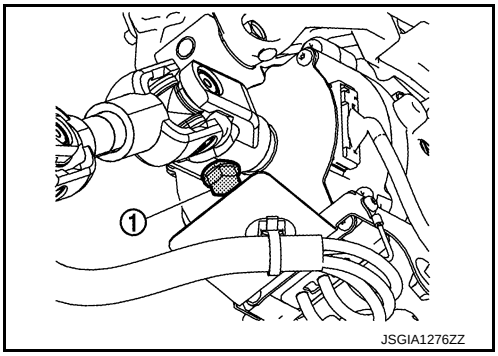

11. Remove steering column assembly.

CAUTION:

- **When removing the mounting, be careful not to drop the steering column assembly.**
- **When carrying the steering column assembly, never hold the harness bracket part. Hold the body of steering column assembly.**
- **When removing steering column assembly, never insert a tool, such as a screwdriver, into the yoke groove to pull out the steering upper shaft. In case of the violation of the above, replace steering upper shaft with a new one.**
- **When removing steering column assembly, fix the steering upper shaft using wire etc., because steering upper shaft may separate the steering column side and steering clutch side. Never separate steering upper shaft steering column side and steering clutch side.**
- **Place a matching marks Ⓐ on steering upper shaft ①. When the steering upper shaft is separated, use matching marks.**

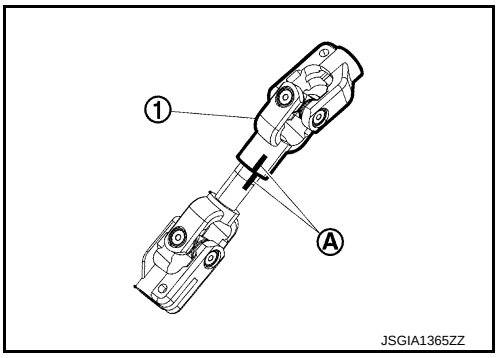

12. Perform inspection after removal. Refer to ST-89, "Inspection".

INSTALLATION

Note the following, and install in the reverse order of removal. Then perform inspection after installation. Refer to ST-89, "Inspection".

Steering Upper Shaft

CAUTION:

- **Never impact on the axis when removing steering column assembly.**
- **While removing the steering column assembly, never move the steering gear.**
- When installing steering shaft to steering column assembly, follow the procedure listed below.

- Align the part Ⓐ of steering column assembly ① and the part Ⓑ of steering upper shaft ② to install steering upper shaft and steering column assembly.

⇦ : Vehicle upper

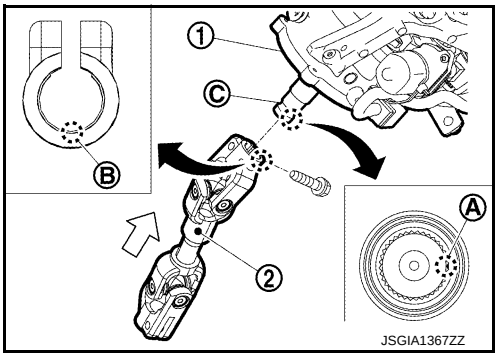

CAUTION:

When installing steering upper shaft from steering clutch assembly or steering column assembly, be careful with the vertical direction of the steering upper shaft.

- When connecting steering upper shaft (steering column side) and steering column shaft, make sure the bolt is securely seated in groove Ⓒ of steering column shaft.
- For steering upper shaft mounting bolt direction, refer to ST-87, "Exploded View". (Do not insert it from the other side.)

- To tighten steering upper shaft mounting bolt (steering column assembly side), manually tighten the bolt to check for scoring or galling before tightening the bold to the specified torque.

- When steering upper shaft ① is separated, align matching marks Ⓐ to connect steering upper shaft.

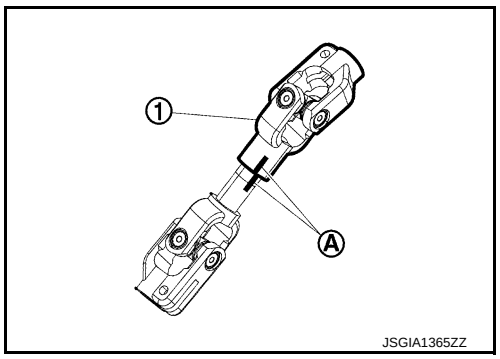

Steering Column Assembly

- When installing the steering column assembly ①, temporarily tighten the bolt and nuts before tightening to the specified torque, referring to the tightening method and the numerical order shown below:

Temporary tightening	1 → 2
Final tightening (Specified torque)	3 → 4

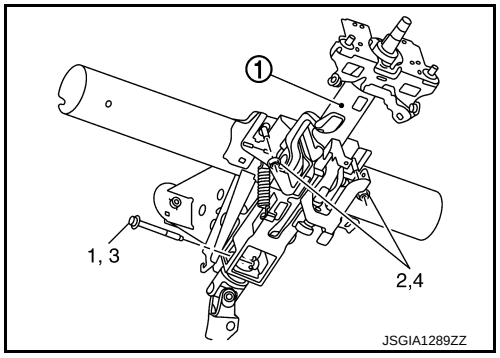

Ground Harness (If equipped.)

- Be sure to check ground harness ① connection securely.
- Confirm there is no interference with steering column assembly movements.
- If replacing the ground harness, fix it to main harness at the same position.

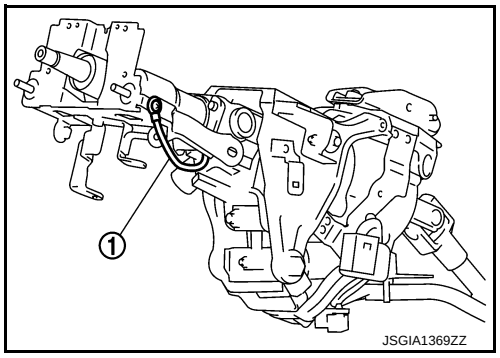

Inspection

INFOID:0000000009728060

INSPECTION AFTER REMOVAL

- Check each part of steering column assembly for damage or other malfunctions. Replace if necessary.
- Measure steering column rotating torque using a preload gauge (A) (SST: ST3127S000). Replace steering column assembly if the rotating torque is outside the standard.

Rotating torque : Refer to ST-104, "Steering Column".

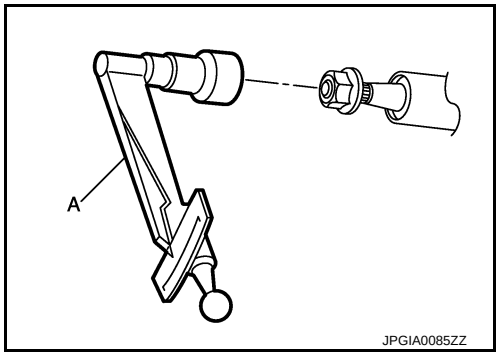

- Check the following items, if vehicle has been involved in a minor collision. Replace steering column assembly if outside the standard.

- Check the length “A” shown in the figure.

CAUTION:
Set the telescopic mechanism to its minimum length to measure the length of steering column.

Steering column length (A) **: Refer to ST-104, "Steering Column".**

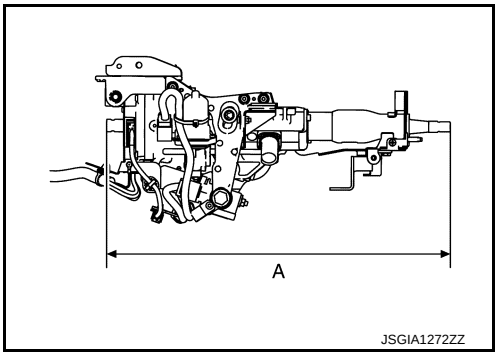

- Check the dimension “A” and “B” shown in the figure.

Impact displacement absorption part dimension (A) and (B) **: Refer to ST-104, "Steering Column".**

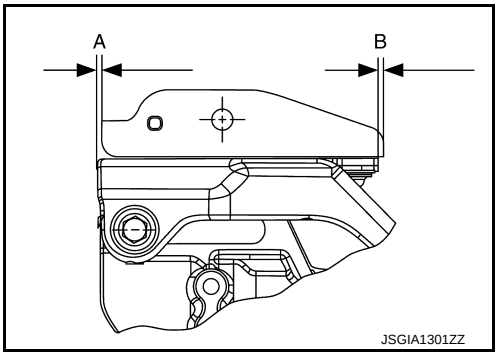

INSPECTION AFTER INSTALLATION

- Check each part of steering column assembly for damage or other malfunctions. Replace if necessary.
- Check that there is no malfunction, such as unusual steering feel or interference when operating tilt and telescopic.
- Check tilt and telescopic mechanism operating range “A”, “B” as shown in the figure.

Tilt operating range (A) **: Refer to ST-104, "Steering Column".**

Telescopic operating range (B) **: Refer to ST-104, "Steering Column".**

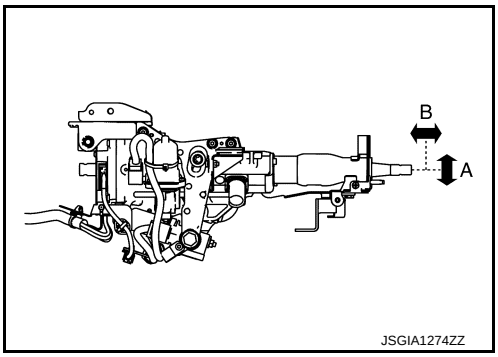

- Check the steering wheel play, neutral position steering wheel, steering wheel turning torque, and front wheel turning angle.
- Steering wheel play: Refer to ST-80, "Inspection".
- neutral position steering wheel, steering wheel turning torque, and front wheel turning angle: Refer to ST-69, "Inspection".

CAUTION:
Perform additional service when removing/replacing steering column assembly. Refer to STC-126, "Special Repair Requirement".

STEERING SHAFT

Exploded View

INFOID:0000000009728061

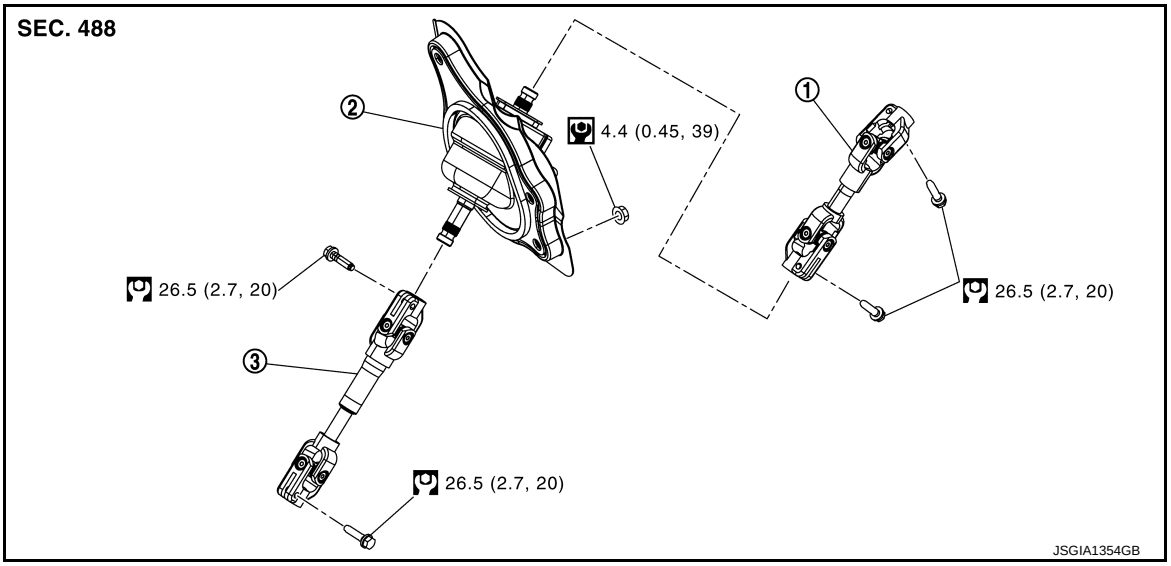

① Steering upper shaft ② Steering clutch assembly ③ Steering lower shaft assembly

: N·m (kg-m, ft-lb)

: N·m (kg-m, in-lb)

CAUTION:
Never disassemble other than the parts shown in Exploded View.

Removal and Installation

INFOID:0000000009728062

REMOVAL

CAUTION:
Spiral cable may be cut if steering wheel turns while separating steering column assembly and steering gear assembly. Be sure to secure steering wheel using string to avoid turning.

1. Set vehicle to the straight-ahead position.
2. Fix the steering wheel.
3. Remove accelerator pedal assembly. Refer to ACC-3, "MODELS WITHOUT DISTANCE CONTROL ASSIST SYSTEM : Removal and Installation" (Without distance control assist system), ACC-4, "MODELS WITH DISTANCE CONTROL ASSIST SYSTEM : Removal and Installation" (With distance control assist system).
4. Remove steering column assembly. Refer to ST-87, "Removal and Installation".
   CAUTION:
   - **When removing the mounting, be careful not to drop the steering column assembly.**
   - **When carrying the steering column assembly, never hold the harness bracket part. Hold the body of steering column assembly.**
   - **When removing steering column assembly, never insert a tool, such as a screwdriver, into the yoke groove to pull out the steering upper shaft. In case of the violation of the above, replace steering upper shaft with a new one.**
   - **When removing steering column assembly, fix the steering upper shaft using wire etc., because steering upper shaft may separate the steering column side and steering clutch side. Never separate steering upper shaft steering column side and steering clutch side.**

- **Place a matching marks Ⓐ on steering upper shaft ①. When the steering upper shaft is separated, use matching marks.**

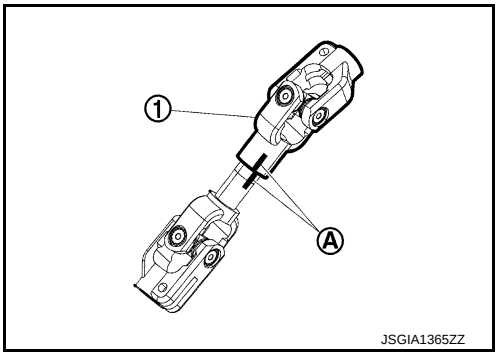

5. Remove steering clutch connector.
6. Move parking brake cable to interfere with work. Refer to PB-8, "Removal and Installation".
7. Remove hole cover mounting nut.
8. Remove steering lower shaft mounting bolt ① (steering gear side).

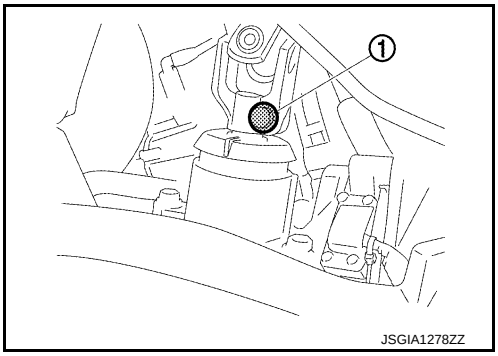

9. Remove steering shaft assembly from steering gear assembly.
   CAUTION:
   When removing steering shaft assembly, never insert a tool, such as a screwdriver, into the yoke groove to pull out the lower shaft. In case of the violation of the above, replace lower shaft with a new one.
10. Remove steering upper shaft and steering lower shaft from steering clutch assembly.
    CAUTION:
    Never separate steering upper shaft steering column side and steering clutch side.
11. Perform inspection after removal. Refer to ST-93, "Inspection".

INSTALLATION

Note the following, and install in the reverse order of removal.

CAUTION:

Spiral cable may be cut if steering wheel turns while separating steering column assembly and steering gear assembly. Be sure to secure steering wheel using string to avoid turning.

- When installing steering lower shaft to steering gear assembly, follow the procedure listed below.

- Align matching marks Ⓐ to install steering lower shaft ① and steering gear assembly ②.

  ⇦ : Vehicle upper

  CAUTION:
  When installing steering lower shaft from steering clutch assembly steering gear assembly, be careful with the vertical direction of the steering lower shaft.

- When connecting steering lower shaft (steering gear side) and steering gear assembly, make sure the bolt is securely seated in groove Ⓑ of steering gear assembly.

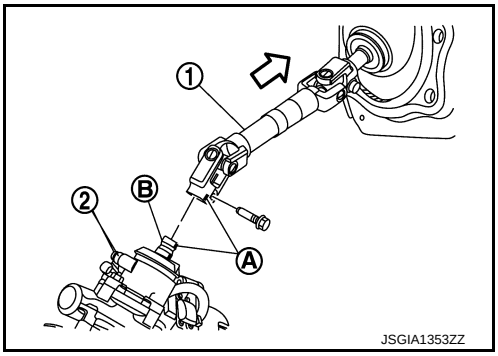

- For steering lower shaft mounting bolt direction, refer to ST-91, "Exploded View". (Do not insert it from the other side.)
- To tighten steering lower shaft mounting bolt (steering gear side), manually tighten the bolt to check for scoring or galling before tightening the bold to the specified torque.

- When installing steering shaft to steering column assembly, follow the procedure listed below.
- Align the part Ⓐ of steering column assembly ① and the part Ⓑ of steering upper shaft ② to install steering upper shaft and steering column assembly.

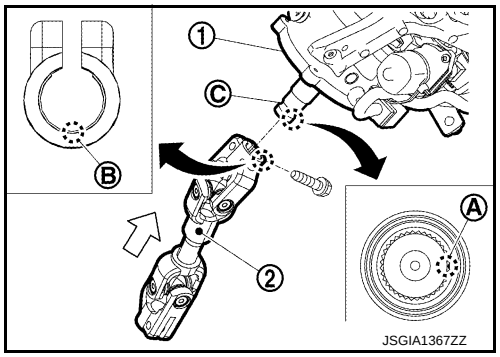

⇦ : Vehicle upper

CAUTION:
When installing steering upper shaft from steering clutch assembly or steering column assembly, be careful with the vertical direction of the steering upper shaft.

- When connecting steering upper shaft (steering column side) and steering column shaft, make sure the bolt is securely seated in groove Ⓒ of steering column shaft.
- For steering upper shaft mounting bolt direction, refer to ST-91, "Exploded View". (Do not insert it from the other side.)
- To tighten steering upper shaft mounting bolt (steering column assembly side), manually tighten the bolt to check for scoring or galling before tightening the bold to the specified torque.
- When steering upper shaft ① is separated, align matching marks Ⓐ to connect steering upper shaft.

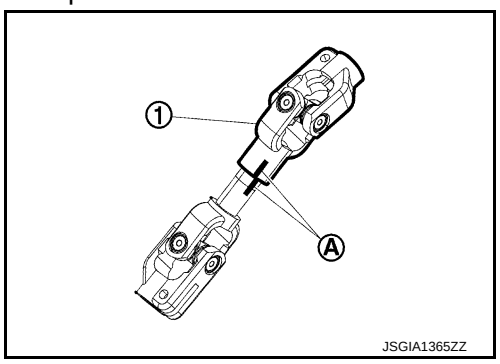

- If steering upper shaft has been replaced, install with the following procedure.

1. Install steering upper shaft to steering column assembly.
2. Tighten the steering upper shaft mounting bolt (steering column side) to the specified torque.
3. Remove the collar.
4. Move steering upper shaft sliding part to steering column side.
5. Install steering upper shaft to the steering clutch assembly.
6. Tighten the steering upper shaft mounting bolt (steering clutch side) to the specified torque.

- Perform inspection after installation. Refer to ST-93, "Inspection".

Inspection

INFOID:0000000009728063

INSPECTION AFTER REMOVAL

Check the following items and replace, if necessary.

- Check steering shaft for damage or other malfunctions.
- Check the length (A) of the steering lower shaft.

CAUTION:
Set the minimum length to measure the length of steering lower shaft.

Steering lower shaft length (A)	**Refer to ST-104, "Steering Shaft".**

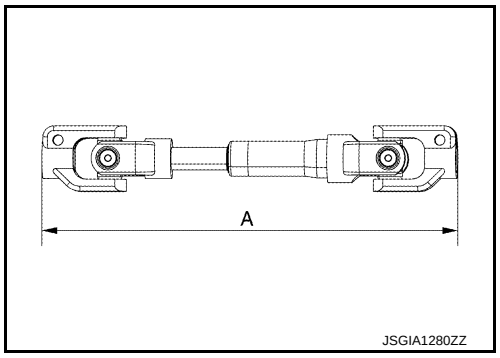

INSPECTION AFTER INSTALLATION

Check the following items and replace, if necessary.

- Check steering shaft for damage or other malfunctions.
- Check if steering wheel turns smoothly when it is turned several times fully to the end of the left and right.
- Check the steering wheel play, neutral position steering wheel, steering wheel turning torque, and front wheel turning angle.
- Steering wheel play: Refer to ST-80, "Inspection".
- neutral position steering wheel, steering wheel turning torque, and front wheel turning angle: Refer to ST-69, "Inspection".

CAUTION:

Perform additional service when removing/replacing steering upper shaft, steering lower shaft or steering clutch assembly. Refer to STC-126, "Special Repair Requirement".

STEERING GEAR AND LINKAGE

Exploded View

INFOID:0000000009728064

REMOVAL

2WD models

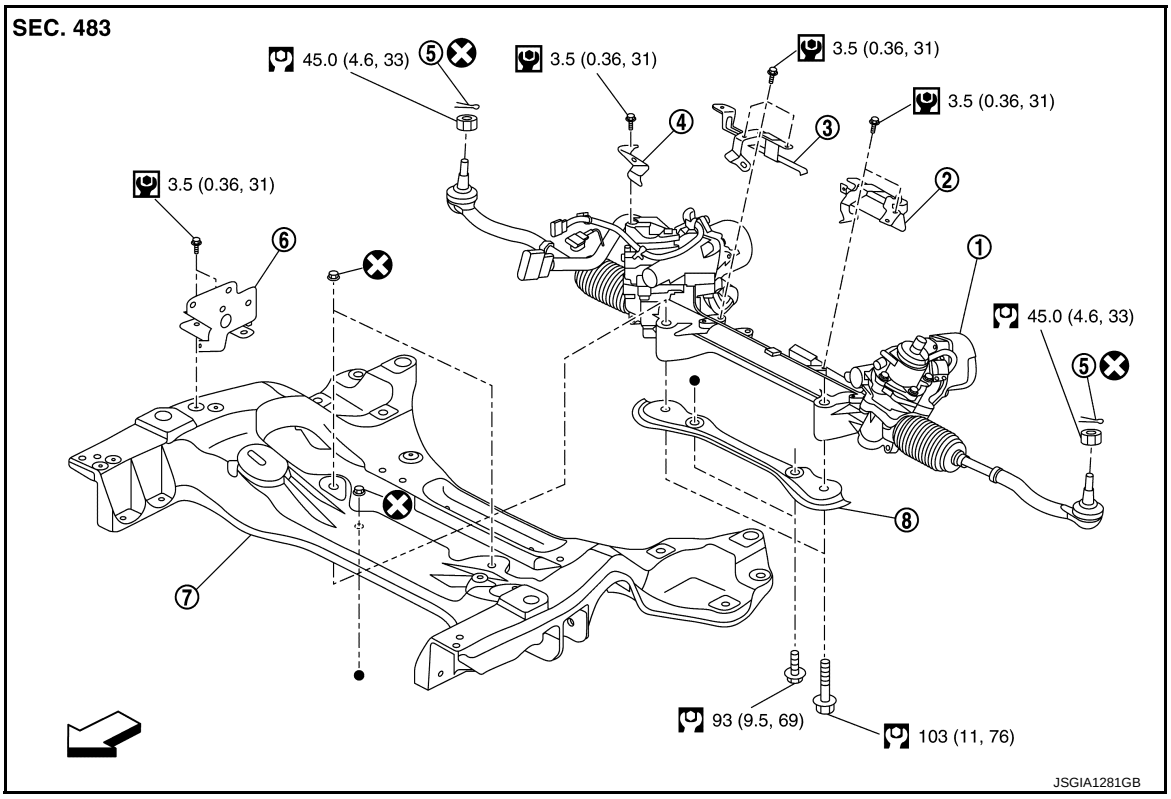

① Steering gear assembly	② Bracket	③ Bracket
④ Bracket	⑤ Cotter pin	⑥ Bracket
⑦ Front suspension member	⑧ Rack stay	

⇦: Vehicle front

⊗: Always replace after every disassembly.

: N·m (kg-m, ft-lb)

: N·m (kg-m, in-lb)

AWD models

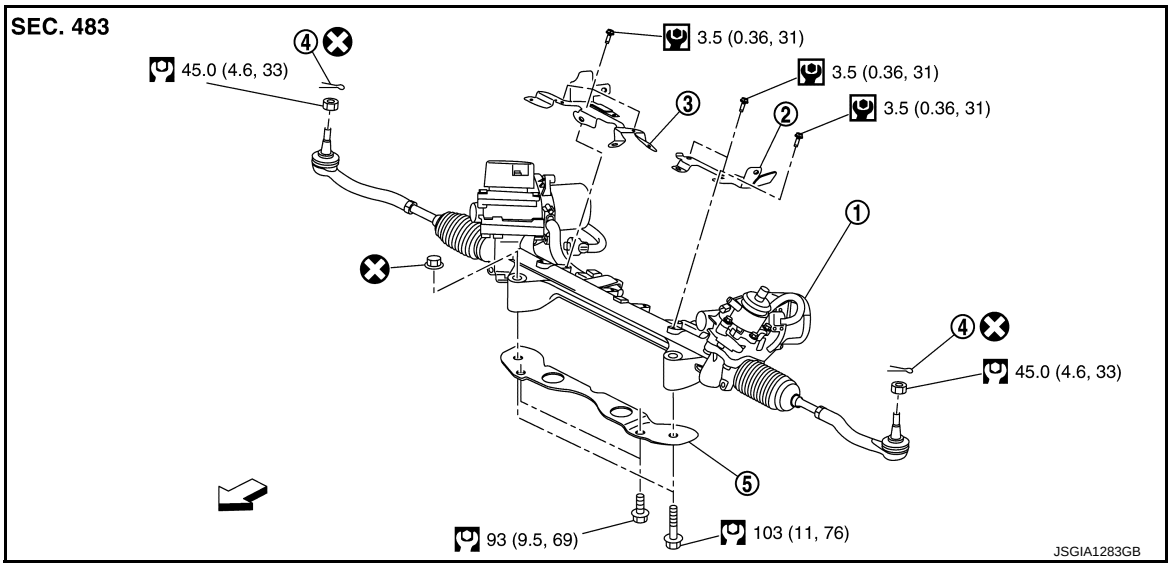

① Steering gear assembly ② Bracket ③ Bracket
④ Cotter pin ⑤ Rack stay

⇦: Vehicle front

⊗: Always replace after every disassembly.

: N·m (kg-m, ft-lb)

: N·m (kg-m, in-lb)

DISASSEMBLY

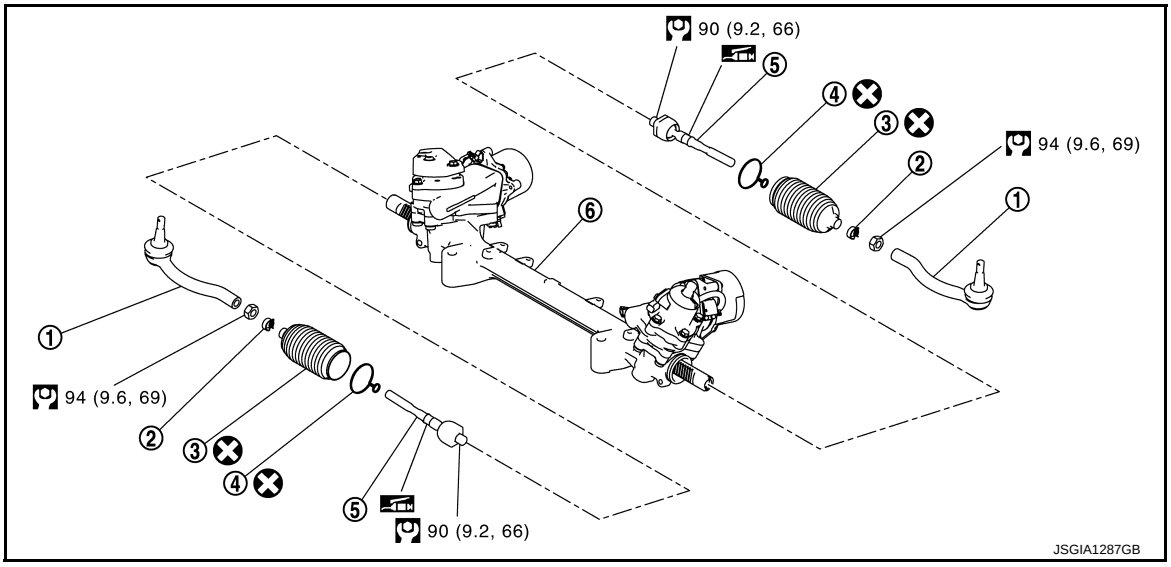

① Outer socket ② Boot clamp ③ Boot
④ Inner socket ⑤ Boot clamp (stainless wire) ⑥ Gear housing assembly

⊗: Always replace after every disassembly.

: N·m (kg-m, ft-lb)

: Apply multi-purpose grease.

Harness Layout

INFOID:0000000009728065

2WD models

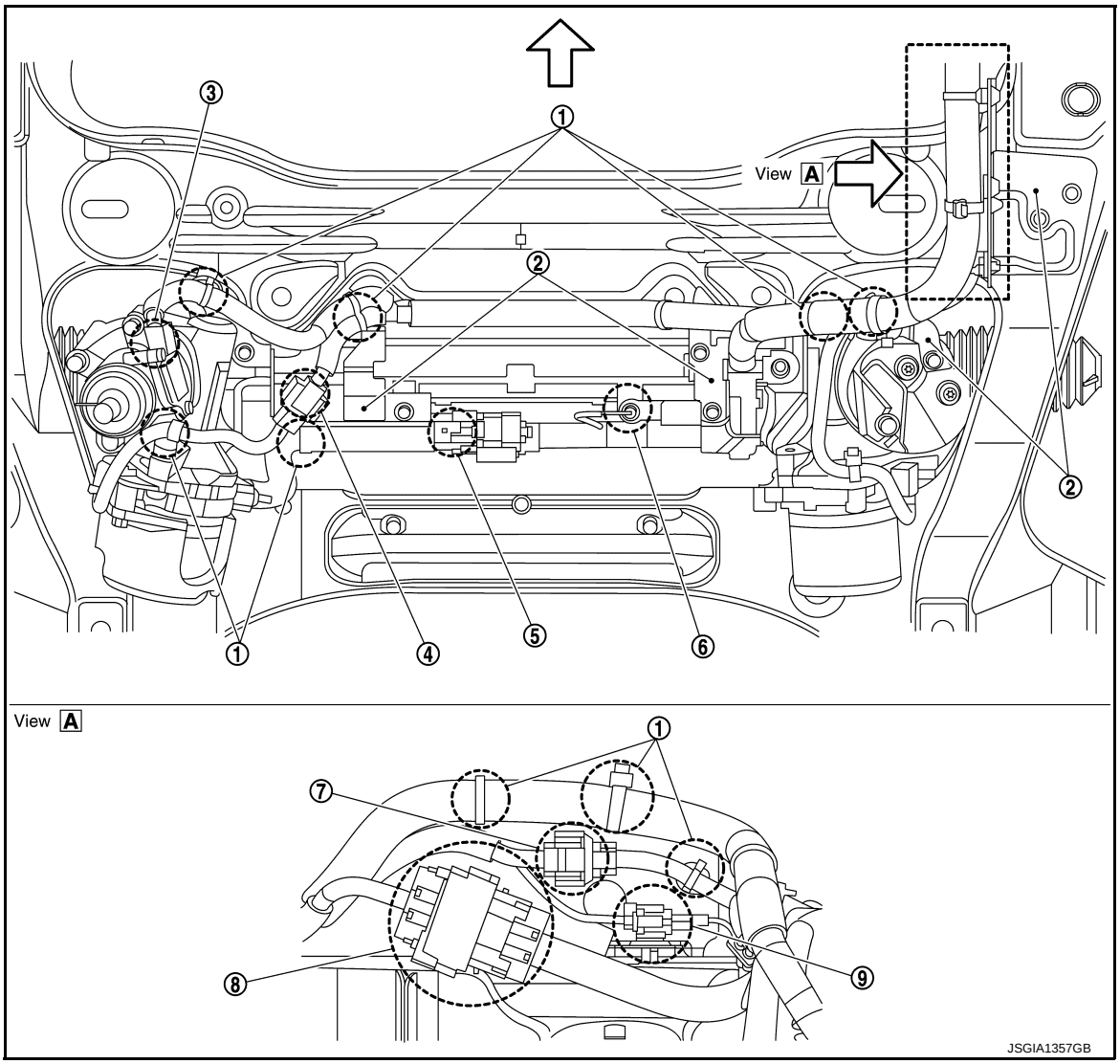

① Clip	② Harness bracket	③ Steering torque sensor harness connector
④ Main motor angle sensor harness connector	⑤ Steering angle main motor harness connector	⑥ Steering angle main motor ground terminal
⑦ Sub motor angle sensor harness connector	⑧ Steering angle sub motor harness connector	⑨ Steering angle sub motor harness ground connector

⇦: Vehicle front

AWD models

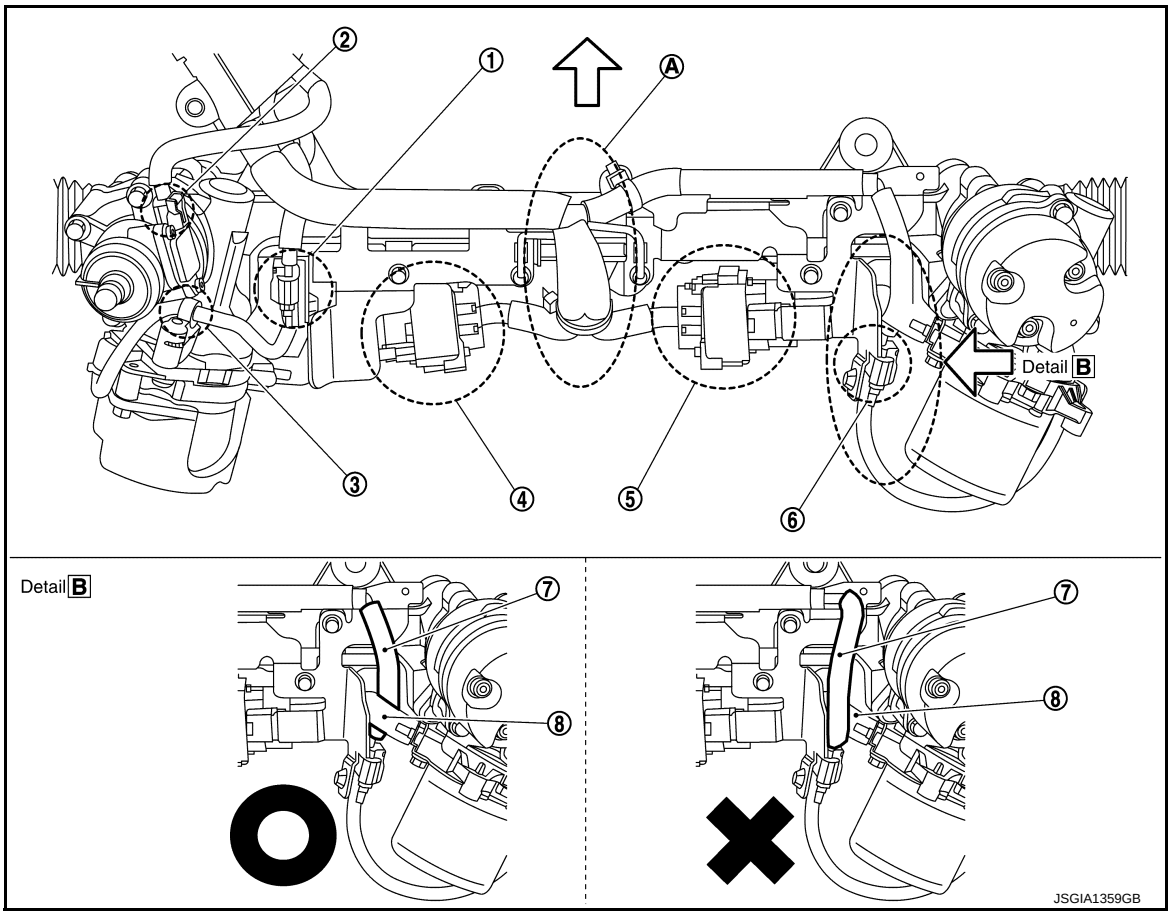

①	Main motor angle sensor harness connector	②	Steering torque sensor harness connector	③	Clip
④	Steering angle main motor harness connector	⑤	Steering angle sub motor harness connector	⑥	Sub motor angle sensor harness connector
⑦	Sub motor angle sensor harness	⑧	Steering angle sub motor harness		

⇦: Vehicle front

CAUTION:

- **Check that there is the enough clearance in Ⓐ part between steering angle motor harness and oil pan.**
- **When installing the sub motor angle sensor harness ⑦, place the sub motor angle sensor harness under the steering angle sub motor harness ⑧.**
- **After installation, check that there is the enough clearance between the front propeller shaft flange part and sub motor angle sensor harness.**

Removal and Installation

INFOID:0000000009728066

REMOVAL

1. Set the vehicle to the straight-ahead position.
2. Remove tires. Refer to WT-62, "Exploded View".
3. Remove front under cover. Refer to EXT-34, "FRONT UNDER COVER : Removal and Installation".
4. Remove cotter pin, and then loosen the nut.

5. Remove steering outer socket from steering knuckle so as not to damage ball joint boot using a ball joint remover (A) (commercial service tool).
   CAUTION:
   Temporarily tighten the nut to prevent damage to threads and to prevent the ball joint remover from suddenly coming off.

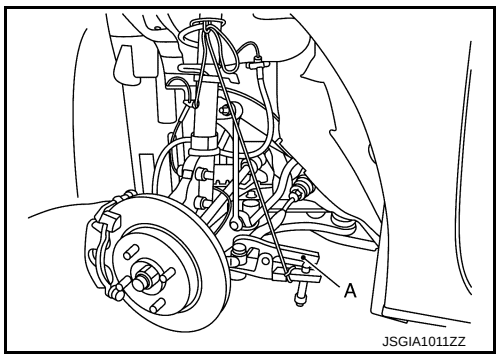

6. Remove steering shaft mounting bolt (steering gear side), and separate steering shaft from steering gear assembly. Refer to ST-91, "Removal and Installation".
   CAUTION:
   - **Spiral cable may be cut if steering wheel turns while separating steering shaft and steering gear assembly. Be sure to secure steering wheel using string to avoid turning.**
   - **When removing steering shaft, never insert a tool, such as a screwdriver, into the yoke groove to pull out the steering shaft. In case of the violation of the above, replace steering shaft with a new one.**
7. Remove rack stay.
8. Disconnect direct adaptive steering harness connector.
9. Remove direct adaptive steering harness mounting brackets and clips. For layout, refer to ST-95, "Exploded View".
10. Remove steering gear assembly mounting bolts, and nuts.
11. Set suitable jack to steering gear assembly.
    CAUTION:
    - **Never damage the steering gear assembly with a jack.**
    - **Check the stable condition when using a jack.**
12. Remove the steering gear assembly ① from the vehicle with rotating the steering gear assembly as shown.

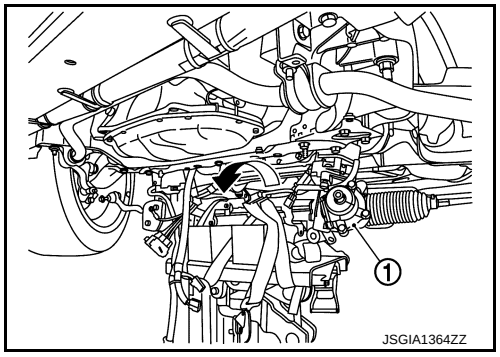

INSTALLATION

Note the following, and install in the reverse order of removal.

CAUTION:

Spiral cable may be cut if steering wheel turns while separating steering shaft and steering gear assembly. Be sure to secure steering wheel using string to avoid turning.

- When installing steering lower shaft to steering gear assembly, follow the procedure listed below.

- Align matching marks Ⓐ to install steering lower shaft ① and steering gear assembly ②.

  ⇦ : Vehicle upper

  CAUTION:
  When installing steering lower shaft from steering clutch assembly, be careful with the vertical direction of the steering lower shaft.

- When connecting steering lower shaft (steering gear side) and steering gear assembly, make sure the bolt is securely seated in groove Ⓑ of steering gear assembly.

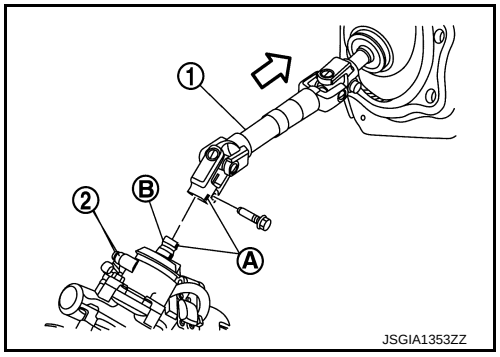

- To tighten steering mounting bolt (steering gear side), manually tighten the bolt to check for scoring or galling before tightening the bold to the specified torque.
- Perform inspection after installation. Refer to ST-102, "Inspection".

Disassembly and Assembly

INFOID:0000000009728067

DISASSEMBLY

CAUTION:

- **Never disassemble other than the parts shown in ST-95, "Exploded View".**
- **Disassemble and assemble steering gear assembly by fixing the mounting area with a vise using copper plates.**

1. Loosen outer socket lock nut, and remove outer socket.
2. Remove boot clamps, and then remove boot from inner socket.
   CAUTION:
   Never damage inner socket and gear housing assembly when removing boot. Inner socket and gear housing assembly must be replaced if inner socket and gear housing assembly are damaged because it may cause foreign material interfusion.
3. Remove inner socket from gear housing assembly.
4. Perform inspection after disassembly. Refer to ST-102, "Inspection".

ASSEMBLY

CAUTION:

Disassemble and assemble steering gear assembly by fixing the mounting area with a vise using copper plates.

1. Install inner socket to gear housing assembly.
2. Apply multi-purpose grease to inner socket Ⓐ part.

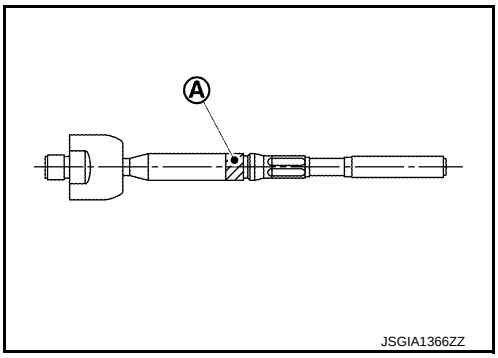

3. Install large end Ⓐ of boot ① to gear housing assembly.

   Ⓑ : Small end of boot

   CAUTION:
   Never reuse boot.
4. Install small end of boot to inner socket boot mounting groove.

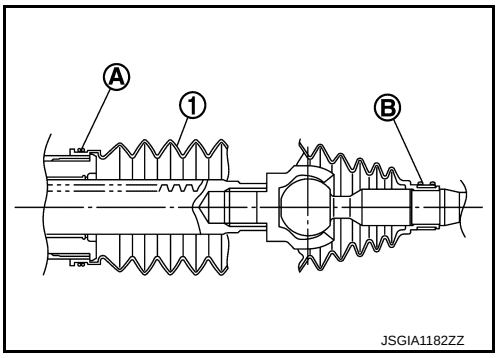

5. Install boot clamp to boot small end.
6. Install boot clamp to the large side of boot with the following procedure.
   CAUTION:
   Never reuse boot clamp.

a. Tighten large side of boot with boot clamp (stainless wire).

Wire length (L) : 376 mm (14.80 in)

b. Wrap clamp around boot groove for two turns. Insert a flat-bladed screwdriver in loops on both ends of wire. Twist 3 to 3.5 turns while pulling them with force of approximately 98 N (10 kg, 22 lb).

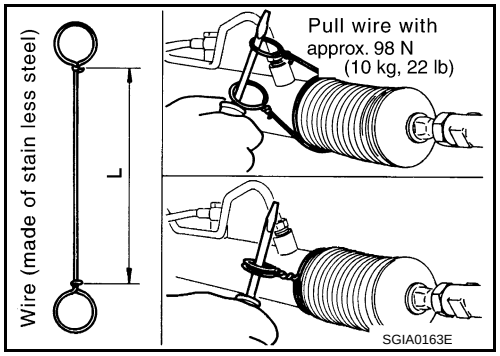

c. Twist boot clamp as shown. Pay attention to relationship between winding and twisting directions.

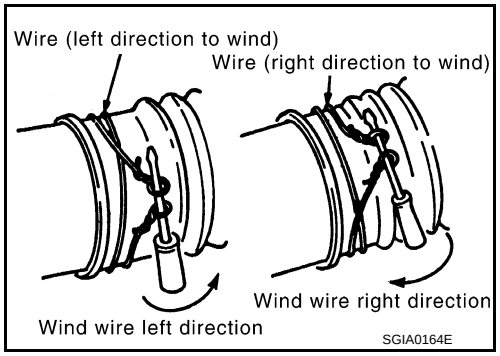

d. Twisted area Ⓐ of clamp is in the adjusting screw side ① as shown in the figure (to prevent contact with other parts).

Ⓐ **: 90°**

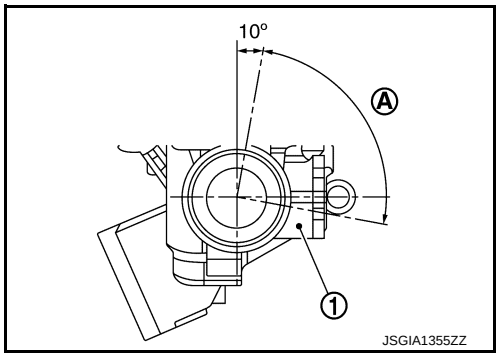

7. Adjust inner socket to standard length (L), and then tighten lock nut ① to the specified torque. Check length again after tightening lock nut.

Inner socket length (L) : Refer to ST-104, "Steering Gear and Linkage".

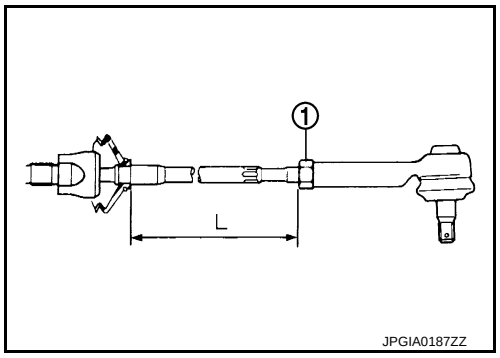

CAUTION:

- **When tightening the lock nut ①, be sure to fix outer socket ② with a wrench or an equivalent to prevent the ball joint from getting contact with the knuckle.**
- **Adjust toe-in after this procedure. The length achieved after toe-in adjustment is not necessary the above value.**

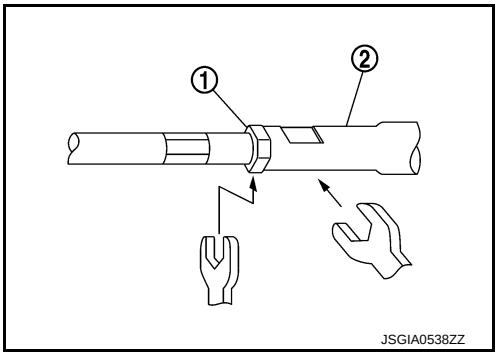

Inspection

INFOID:0000000009728068

INSPECTION AFTER DISASSEMBLY

Boot
- Check boot for cracks, and replace it if a malfunction is detected.

Gear Housing Assembly
Check gear housing assembly for damage and scratches (inner wall). Replace if there are.

Outer Socket and Inner Socket
Check the following items and replace the component if it does not meet the standard.

BALL JOINT SWINGING FORCE
Hook a spring balance at the point and pull the spring balance. Make sure that the spring balance reads the specified value when ball stud and inner socket start to move. Replace outer socket and inner socket (gear housing assembly) if they are outside the standard.

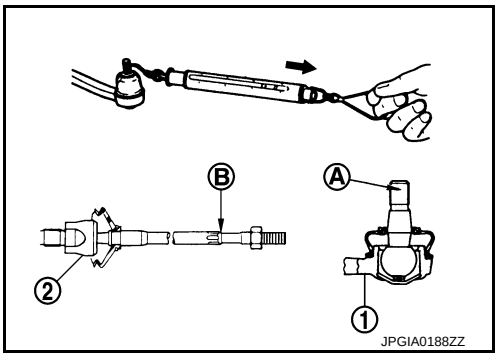

Measuring point of outer socket ①	: Ball stud upper side Ⓐ
Measuring point of inner socket ②	: Point Ⓑ shown in the figure

Swinging force (Spring balance measurement)	**: Refer to ST-104, "Steering Gear and Linkage".**

BALL JOINT ROTATING TORQUE
Make sure that the reading is within the following specified range using preload gauge (A) [SST: ST3127S000 (J-25765-A)]. Replace outer socket if the reading is outside the specified value.

Rotating torque	**: Refer to ST-104, "Steering Gear and Linkage".**

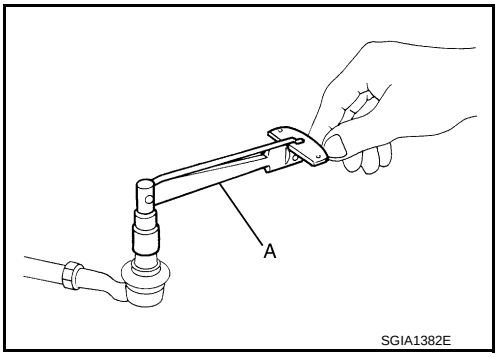

BALL JOINT AXIAL END PLAY

Apply an axial load of 490 N (50 kg, 110 lb) to ball stud. Using a dial indicator, measure amount of stud movement, and then make sure that the value is within the following specified range. Replace outer socket ① and inner socket (gear housing assembly) ② if the measured value is outside the standard.

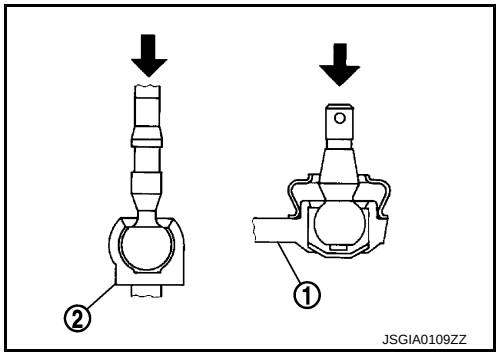

Axial end play **: Refer to ST-104, "Steering Gear and Linkage".**

INSPECTION AFTER INSTALLATION

- Check if steering wheel turns smoothly when it is turned several times fully to the end of the left and right.
- Check the steering wheel play, neutral position steering wheel, steering wheel turning torque, and front wheel turning angle.
  - Steering wheel play: Refer to ST-80, "Inspection".
  - Neutral position steering wheel, steering wheel turning torque, and front wheel turning angle: Refer to ST-69, "Inspection".
- Check wheel alignment. Refer to FSU-8, "DIRECT ADAPTIVE STEERING : Inspection" (2WD), FSU-30, "DIRECT ADAPTIVE STEERING : Inspection" (AWD).

CAUTION:

Perform additional service when removing/replacing steering gear assembly. Refer to STC-126, "Special Repair Requirement".

SERVICE DATA AND SPECIFICATIONS (SDS)

SERVICE DATA AND SPECIFICATIONS (SDS)

General Specifications

INFOID:0000000009728069

Steering gear model	PR26YA

Steering Wheel

INFOID:0000000009728070

Item	Standard
Steering wheel axial end play	0 mm (0 in)
Steering wheel play on the outer circumference	0 – 35 mm (0 – 1.38 in)
Steering wheel turning force	39 N (4 kg-f, 9 lb-f)

Steering Angle

INFOID:0000000009728071

Unit: Degree minute (Decimal degree)

Item		Standard
Inner wheel	Minimum	36° 00′ (36.0°)
	Nominal	39° 00′ (39.0°)
	Maximum	40° 00′ (40.0°)
Outer wheel	Nominal	30° 40′ (30.67°)

Steering Column

INFOID:0000000009728072

Item		Standard
Rotating torque		0.49 N·m (0.05 kg-m, 4 in-lb) or less
Steering column length*		527 mm (20.75 in) or less
Impact displacement absorption part dimension*	Dimension A	14.8 mm (0.583 in)
	Dimension B	0.6 mm (0.024 in)
Tilt operating range*		65 mm (2.56 in)
Telescopic operating range*		47 mm (1.85 in)

*: For measuring position, refer to ST-89, "Inspection".

Steering Shaft

INFOID:0000000009728073

Item	Standard	
	2WD	AWD
Steering lower shaft length*	266.6 mm (10.50 in) or more	239.6 mm (9.43 in) or more

*: For measuring position, refer to ST-93, "Inspection".

Steering Gear and Linkage

INFOID:0000000009728074

Item		Standard
Outer socket ball joint	Swing force* (Spring balance measurement)	4.81 – 45.7 N (0.50 – 4.66 kg-f, 1.08 – 10.27 lb-f)
	Rotating torque	0.3 – 2.9 N·m (0.03 – 0.29 kg-m, 3 – 25 in-lb)
	Axial end play	0.5 mm (0.020 in) or less

Item		Standard
Inner socket ball joint	Swing force* (Spring balance measurement)	8.9 – 64 N (0.91 – 6.52 kg-f, 2.00 – 14.38 lb-f)
	Axial end play	0.2 mm (0.008 in) or less
Inner socket length		68.5 mm (2.697 in) or less

*: For measuring position, refer to ST-102, "Inspection".