SECTION HAC

HEATER & AIR CONDITIONING CONTROL SYSTEM

CONTENTS

PRECAUTION

PRECAUTIONS

Precaution for Supplemental Restraint System (SRS) "AIR BAG" and "SEAT BELT PRE-TENSIONER"

INFOID:0000000011284585

The Supplemental Restraint System such as “AIR BAG” and “SEAT BELT PRE-TENSIONER”, used along with a front seat belt, helps to reduce the risk or severity of injury to the driver and front passenger for certain types of collision. This system includes seat belt switch inputs and dual stage front air bag modules. The SRS system uses the seat belt switches to determine the front air bag deployment, and may only deploy one front air bag, depending on the severity of a collision and whether the front occupants are belted or unbelted.
Information necessary to service the system safely is included in the “SRS AIR BAG” and “SEAT BELT” of this Service Manual.

WARNING:
Always observe the following items for preventing accidental activation.
- **To avoid rendering the SRS inoperative, which could increase the risk of personal injury or death in the event of a collision that would result in air bag inflation, all maintenance must be performed by an authorized NISSAN/INFINITI dealer.**
- **Improper maintenance, including incorrect removal and installation of the SRS, can lead to personal injury caused by unintentional activation of the system. For removal of Spiral Cable and Air Bag Module, see “SRS AIR BAG”.**
- **Never use electrical test equipment on any circuit related to the SRS unless instructed to in this Service Manual. SRS wiring harnesses can be identified by yellow and/or orange harnesses or harness connectors.**

PRECAUTIONS WHEN USING POWER TOOLS (AIR OR ELECTRIC) AND HAMMERS

WARNING:
Always observe the following items for preventing accidental activation.
- **When working near the Air Bag Diagnosis Sensor Unit or other Air Bag System sensors with the ignition ON or engine running, never use air or electric power tools or strike near the sensor(s) with a hammer. Heavy vibration could activate the sensor(s) and deploy the air bag(s), possibly causing serious injury.**
- **When using air or electric power tools or hammers, always switch the ignition OFF, disconnect the battery, and wait at least 3 minutes before performing any service.**

Precautions for Removing Battery Terminal

INFOID:0000000011566866

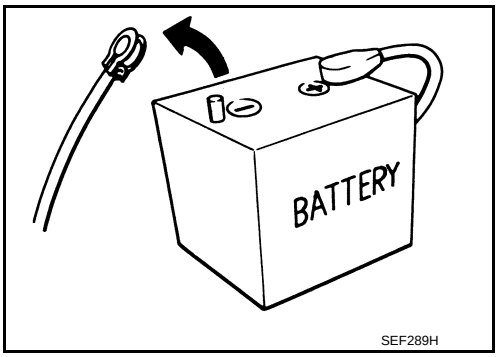

- When removing the 12V battery terminal, turn OFF the ignition switch and wait at least 30 seconds.
  NOTE:
  ECU may be active for several tens of seconds after the ignition switch is turned OFF. If the battery terminal is removed before ECU stops, then a DTC detection error or ECU data corruption may occur.
- For vehicles with the 2-batteries, be sure to connect the main battery and the sub battery before turning ON the ignition switch.
  NOTE:
  If the ignition switch is turned ON with any one of the terminals of main battery and sub battery disconnected, then DTC may be detected.
- After installing the 12V battery, always check "Self Diagnosis Result" of all ECUs and erase DTC.
  NOTE:
  The removal of 12V battery may cause a DTC detection error.

SYSTEM DESCRIPTION

COMPONENT PARTS

AUTOMATIC AIR CONDITIONING SYSTEM

AUTOMATIC AIR CONDITIONING SYSTEM : Component Parts Location

INFOID:0000000011284586

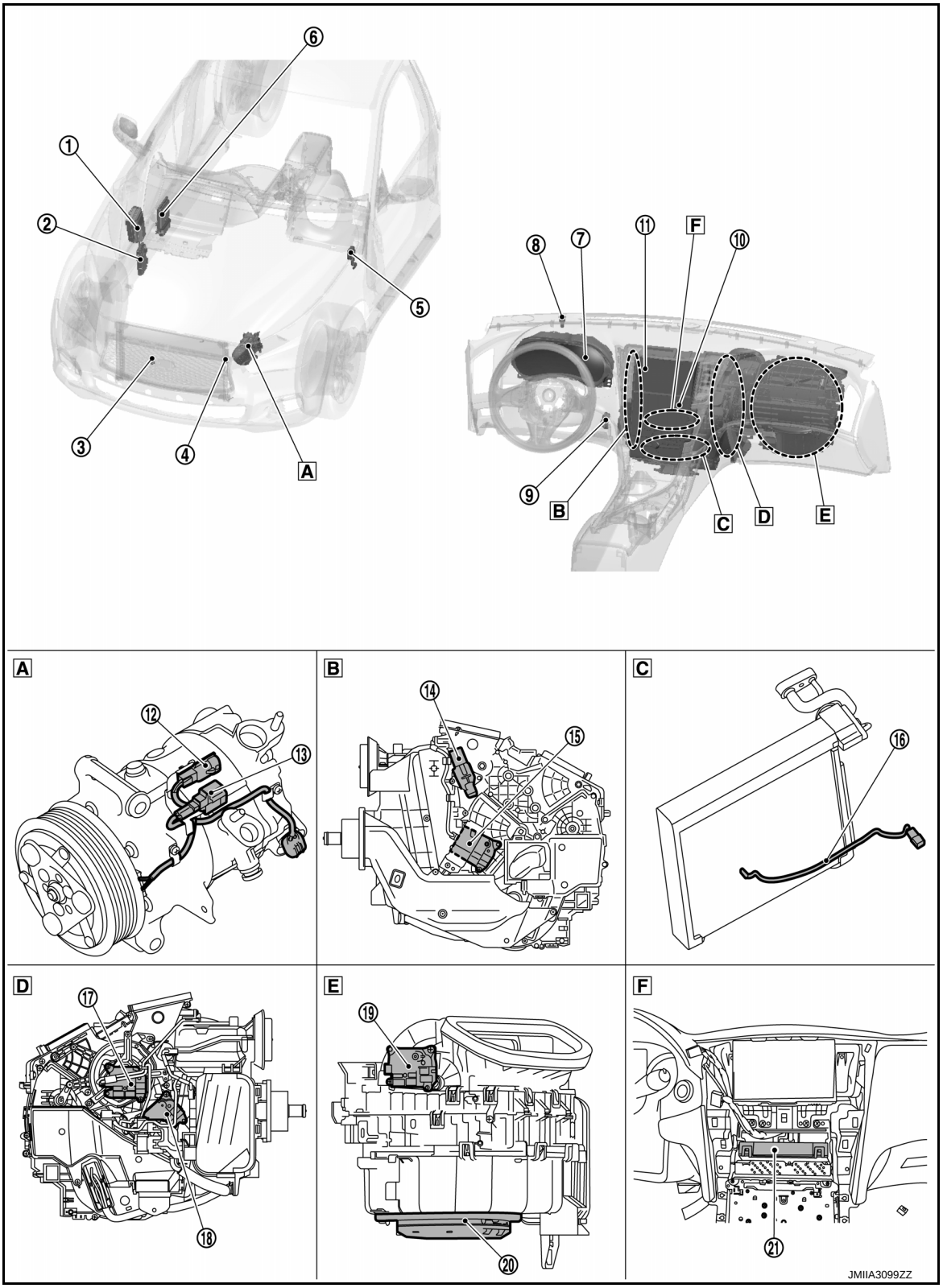

COMPONENT PARTS

A Compressor
B Left side of heater & cooling unit assembly
C Evaporator
D Right side of heater & cooling unit assembly
E Blower unit assembly
F Integral switch is removed

No.	Component	Function
①	IPDM E/R	A/C relay is integrated in IPDM E/R. IPDM E/R operates A/C relay when receiving A/C compressor request signal from ECM via CAN communication line. Refer to PCS-5, "Component Parts Location" for detailed installation location.
②	BCM	BCM transmits key ID signal to A/C auto amp. via CAN communication line. Refer to BCS-4, "BODY CONTROL SYSTEM : Component Parts Location" for detailed installation location.
③	Ambient sensor	HAC-10, "Ambient Sensor"
④	Refrigerant pressure sensor	HAC-11, "Refrigerant Pressure Sensor"
⑤	Chassis control module	Chassis control module transmits key link signal and log-in permit signal to auto amp. via CAN communication line. Refer to DAS-394, "Component Parts Location" for detailed installation location.
⑥	ECM	ECM, when receiving A/C ON signal and blower fan ON signal from A/C auto amp., transmits A/C compressor request signal to IPDM E/R via CAN communication line according to status of the engine and refrigerant pressure. ECM transmits engine coolant temperature signal to A/C auto amp. via CAN communication line. Refer to EC-17, "ENGINE CONTROL SYSTEM : Component Parts Location" for detailed installation location.
⑦	Combination meter	Combination meter transmits vehicle speed signal to A/C auto amp. via CAN communication line.
⑧	Sunload sensor	HAC-11, "Sunload Sensor"
⑨	In-vehicle sensor	HAC-11, "In-vehicle Sensor"
⑩	Integral switch	HAC-10, "Integral Switch"
⑪	Display control unit	Display control unit receives A/C switch operation signal from integral switch, and transmits it to A/C auto amp. via CAN communication line. Display control unit transmits voice recognition signal and user information signal to A/C auto amp. via CAN communication line. Display control unit receives A/C display signal from A/C auto amp. via CAN communication line, and transmits it to integral switch. Refer to AV-14, "Component Parts Location" for detailed installation location.
⑫	Magnet clutch	HAC-9, "COMPRESSOR : Magnet Clutch"
⑬	ECV (Electrical Control Valve)	HAC-9, "COMPRESSOR : ECV (Electrical Control Valve)"
⑭	Aspirator	HAC-8, "HEATER & COOLING UNIT ASSEMBLY : Aspirator"
⑮	Air mix door motor (Driver side)	HAC-8, "HEATER & COOLING UNIT ASSEMBLY : Air Mix Door Motor (Driver Side)"
⑯	Intake sensor	HAC-8, "HEATER & COOLING UNIT ASSEMBLY : Intake Sensor"
⑰	Mode door motor	HAC-8, "HEATER & COOLING UNIT ASSEMBLY : Mode Door Motor"
⑱	Air mix door motor (Passenger side)	HAC-8, "HEATER & COOLING UNIT ASSEMBLY : Air Mix Door Motor (Passenger Side)"
⑲	Intake door motor	HAC-9, "BLOWER UNIT ASSEMBLY : Intake Door Motor"
⑳	Blower motor	HAC-9, "BLOWER UNIT ASSEMBLY : Blower Motor"
㉑	A/C auto amp.	HAC-10, "A/C Auto Amp."

ACCS (ADVANCED CLIMATE CONTROL SYSTEM)

ACCS (ADVANCED CLIMATE CONTROL SYSTEM) : Component Parts Location

INFOID:0000000011284587

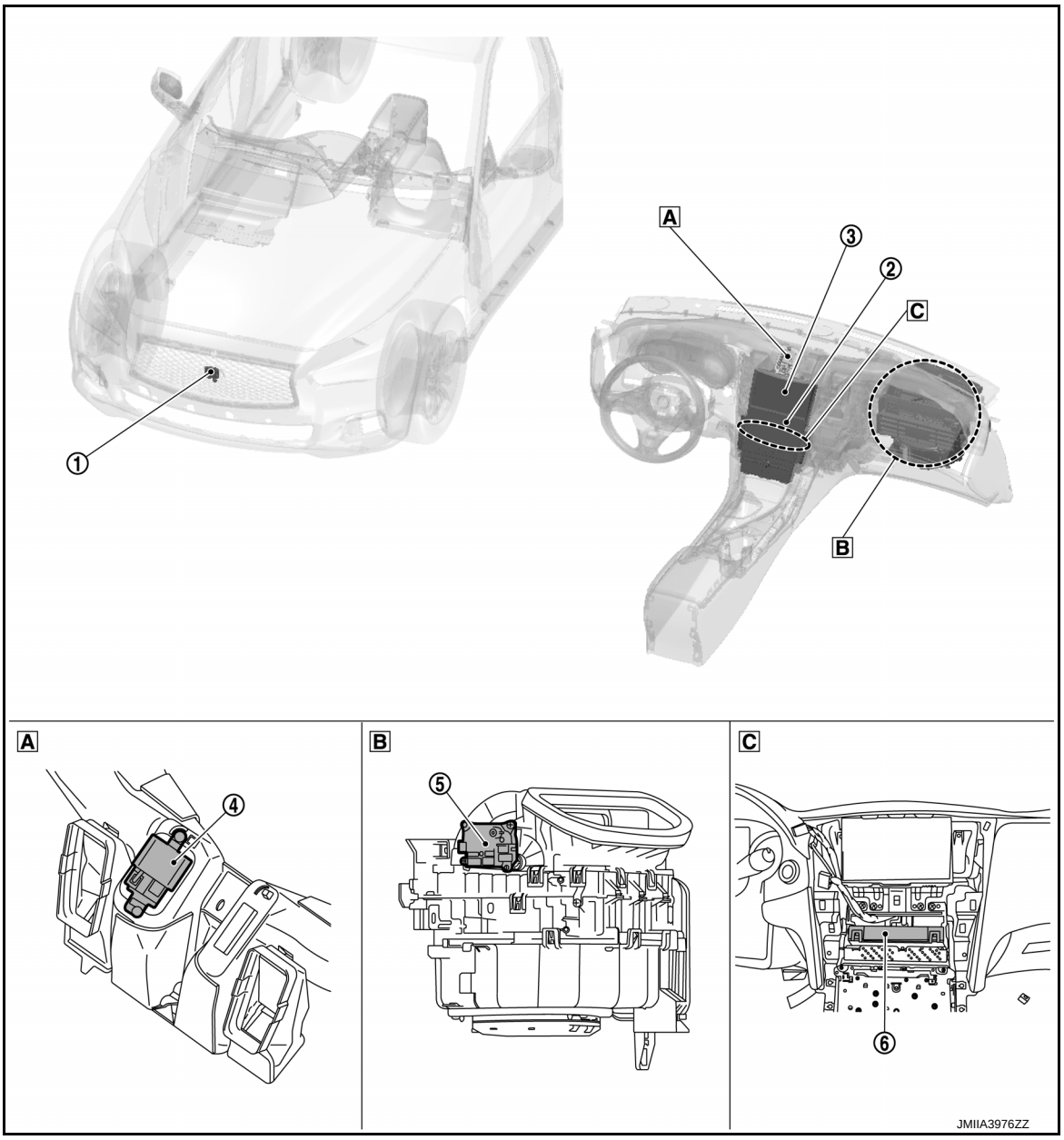

A Instrument panel assembly is removed

B Blower unit assembly

C Integral switch is removed

No.	Component	Function
①	Exhaust gas/outside odor detecting sensor	HAC-10, "Exhaust Gas/Outside Odor Detecting Sensor"
②	Integral switch	HAC-10, "Integral Switch"
③	Display control unit	Display control unit receives A/C switch operation signal from integral switch, and transmits it to A/C auto amp. via CAN communication line. Display control unit receives A/C display signal from A/C auto amp. via CAN communication line, and transmits it to integral switch. Refer to AV-14, "Component Parts Location" for detailed installation location.
④	Ionizer	HAC-12, "Ionizer"

No.	Component	Function
⑤	Intake door motor	HAC-9, "BLOWER UNIT ASSEMBLY : Intake Door Motor"
⑥	A/C auto amp.	HAC-10, "A/C Auto Amp."

HEATER & COOLING UNIT ASSEMBLY

HEATER & COOLING UNIT ASSEMBLY : Aspirator

INFOID:0000000011284588

The aspirator generates the vacuum by the air blown from the heater & cooling unit assembly and draws the air of the passenger room to the in-vehicle sensor area via the aspirator duct.

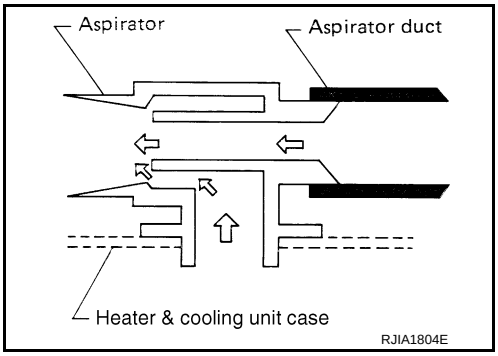

HEATER & COOLING UNIT ASSEMBLY : Intake Sensor

INFOID:0000000011284589

Intake sensor measures temperature of evaporator fin temperature. The sensor uses a thermistor which is sensitive to the change in temperature. The electrical resistance of the thermistor decreases as temperature increases.

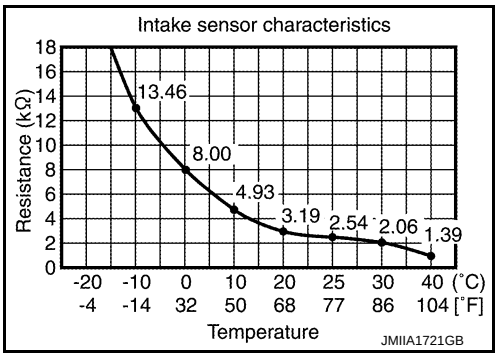

HEATER & COOLING UNIT ASSEMBLY : Air Mix Door Motor (Driver Side)

INFOID:0000000011284590

- Air mix door motor (driver side) consists of motor that drives door, PBR (Potentio Balance Register) that detects door position and LCU (Local Control Unit) that perform multiplex communication control (LIN) with A/C auto amp. Refer to HAC-17, "AUTOMATIC AIR CONDITIONING SYSTEM : Door Control".
- Rotation of motor is transmitted to air mix door (driver side) by link and lever. Air flow temperature is switched.

HEATER & COOLING UNIT ASSEMBLY : Air Mix Door Motor (Passenger Side)

INFOID:0000000011284591

- Air mix door motor (passenger side) consists of motor that drives door, PBR (Potentio Balance Register) that detects door position and LCU (Local Control Unit) that perform multiplex communication control (LIN) with A/C auto amp. Refer to HAC-17, "AUTOMATIC AIR CONDITIONING SYSTEM : Door Control".
- Rotation of motor is transmitted to air mix door (passenger side) by link and lever. Air flow temperature is switched.

HEATER & COOLING UNIT ASSEMBLY : Mode Door Motor

INFOID:0000000011284592

- Mode door motor consists of motor that drives door, PBR (Potentio Balance Register) that detects door position and LCU (Local Control Unit) that perform multiplex communication control (LIN) with A/C auto amp. Refer to HAC-17, "AUTOMATIC AIR CONDITIONING SYSTEM : Door Control".
- Rotation of motor is transmitted to mode door (ventilator door, foot door, and defroster door) by link and lever. Air outlet is switched.

BLOWER UNIT ASSEMBLY

BLOWER UNIT ASSEMBLY : Intake Door Motor

INFOID:0000000011284593

- Intake door motor consists of motor that drives door, PBR (Potentio Balance Register) that detects door position and LCU (Local Control Unit) that perform multiplex communication control (LIN) with A/C auto amp. Refer to HAC-17, "AUTOMATIC AIR CONDITIONING SYSTEM : Door Control".
- Rotation of motor is transmitted to intake door by lever. Air inlet is switched.

BLOWER UNIT ASSEMBLY : Blower Motor

INFOID:0000000011284594

- The blower motor utilizes a brush-less motor with a rotating magnet.
- Quietness is improved over previous motors where the brush was the point of contact and the coil rotated.

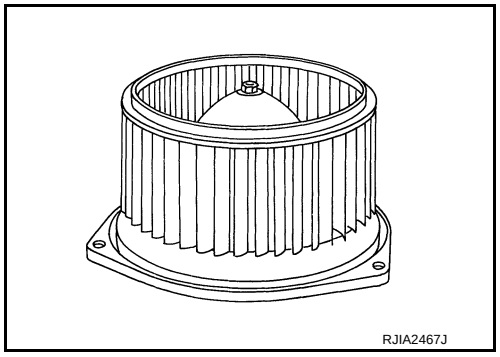

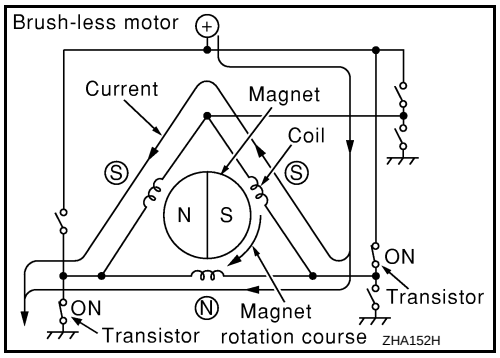

COMPRESSOR

COMPRESSOR : Magnet Clutch

INFOID:0000000011284595

DESCRIPTION

Compressor is driven by the magnet clutch which is magnetized by electric power supply.

STRUCTURE AND OPERATION

- Magnet clutch consists of pulley, clutch disc, and field coil.
  - Pulley is connected with crankshaft pulley of engine via drive belt and is always rotated while engine is running.
  - Clutch disc is connected with drive shaft of compressor.
  - Field coil, which becomes a strong electric magnet when electricity is supplied, strongly pulls clutch disc and presses it to pulley.
- When A/C relay integrated in IPDM E/R turns ON, electricity is supplied to field coil, clutch disc is presses to pulley, and engine rotational movement is transmitted from crankshaft pulley ⇒ drive belt ⇒ pulley ⇒ clutch disc ⇒ drive shaft. Compressor is operated. When A/C relay turns OFF, electricity is not supplied to field coil, and clutch disc is released from pulley. Compressor is not operated.

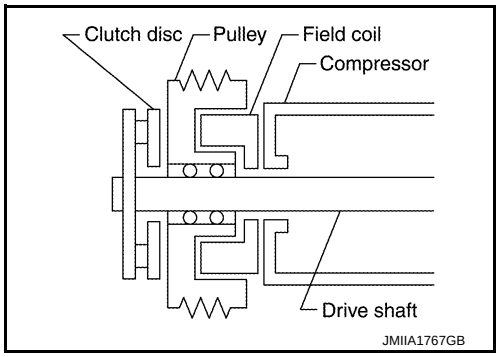

COMPRESSOR : ECV (Electrical Control Valve)

INFOID:0000000011284596

ECV (electrical control valve) is installed on the compressor and controls it for emitting appropriate amount of refrigerant when necessary.

Integral Switch

INFOID:0000000011284597

Integral switch has switches and display that can set and indicate the operation of automatic air conditioning system. Integral switch transmits setting status to A/C auto amp. through the display control unit via communication line. A/C auto amp. controls automatic air conditioning system.

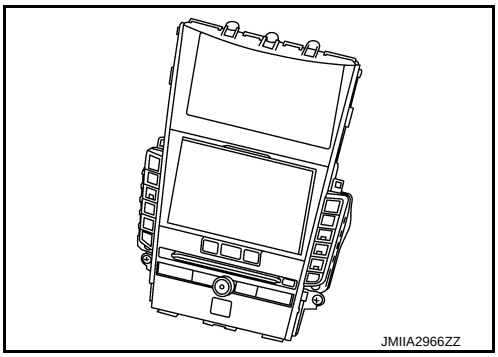

A/C Auto Amp.

INFOID:0000000011284598

A/C auto amp. controls automatic air conditioning system by inputting and calculating signals from each sensor and each switch. A/C auto amp. has self-diagnosis function. Diagnosis of automatic air conditioning system can be performed quickly.

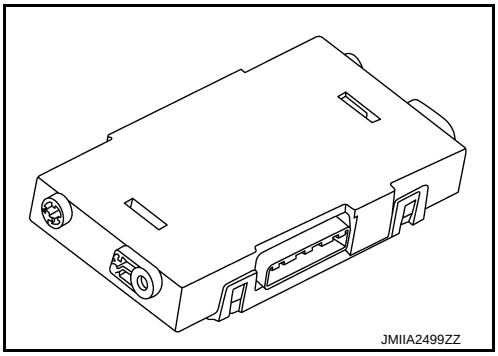

Ambient Sensor

INFOID:0000000011284599

Ambient sensor measures ambient air temperature. The sensor uses a thermistor which is sensitive to the change in temperature. The electrical resistance of the thermistor decreases as temperature increases.

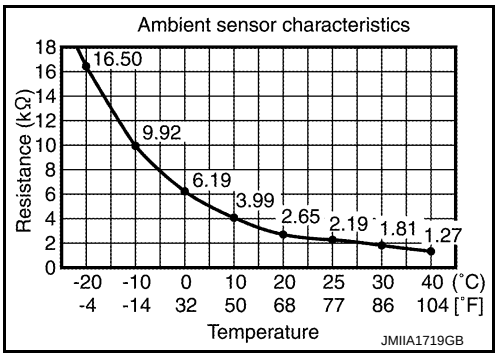

Exhaust Gas/Outside Odor Detecting Sensor

INFOID:0000000011284600

DESCRIPTION

Exhaust gas/outside odor detecting sensor detects ambient atmospheric CO, NO_2 and unpleasant odor, and converts them to values of resistance. The values are converted to signals with the exhaust gas/outside odor detecting sensor internal circuit, then the A/C auto amp. inputs the signals.

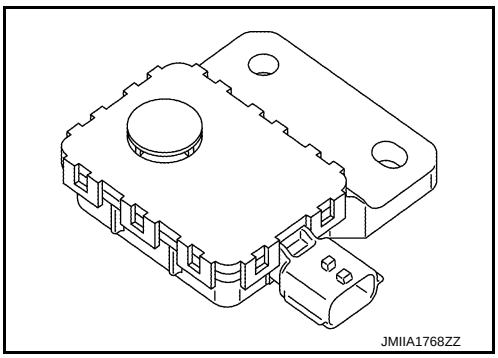

STRUCTURE AND OPERATION

Exhaust gas/outside odor detecting sensor has a construction that detects CO, NO_2 and unpleasant odor by exhaust gas/outside odor detecting sensor element from the air intake of the case through a filter (waterproof sheet). It sends output signals to the A/C auto amp. in response to a resistance value conversion by exhaust gas/outside odor detecting sensor elements. A/C auto amp. controls intake door motor to prevent a smell of exhaust gas and unpleasant ambient odor from getting into the vehicle by performing corrections according to various driving conditions.

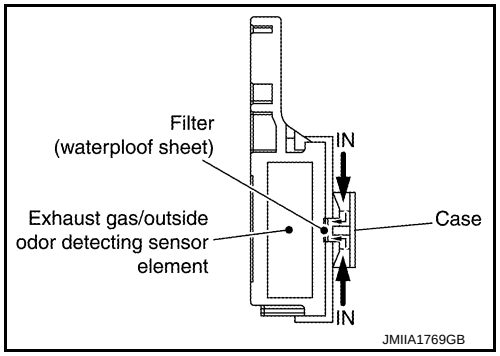

In-vehicle Sensor

INFOID:0000000011284601

In-vehicle sensor measures temperature of intake air that flows through aspirator to passenger room. The sensor uses a thermistor which is sensitive to the change in temperature. The electrical resistance of the thermistor decreases as temperature increases.

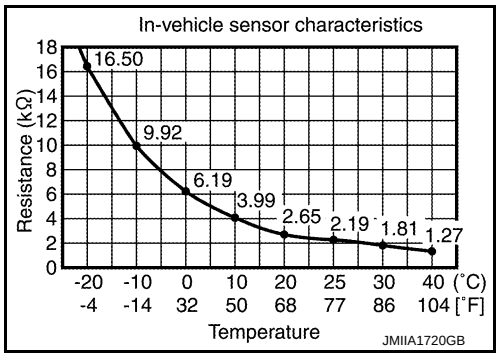

Sunload Sensor

INFOID:0000000011284602

Sunload sensor measures sunload amount. This sensor converts sunload amount to voltage signal by photodiode and transmits to A/C auto amp.

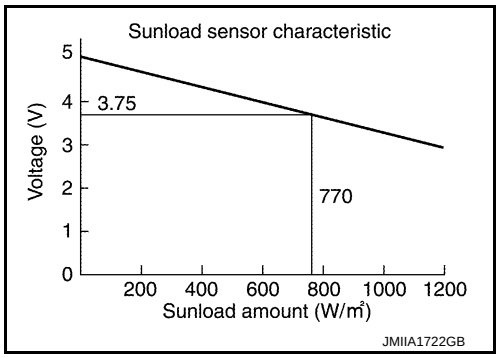

Refrigerant Pressure Sensor

INFOID:0000000011284603

DESCRIPTION

- The refrigerant pressure sensor converts high-pressure side refrigerant pressure into voltage and outputs it to ECM.
- ECM operates cooling system protection and idle speed control according to voltage value that is input.

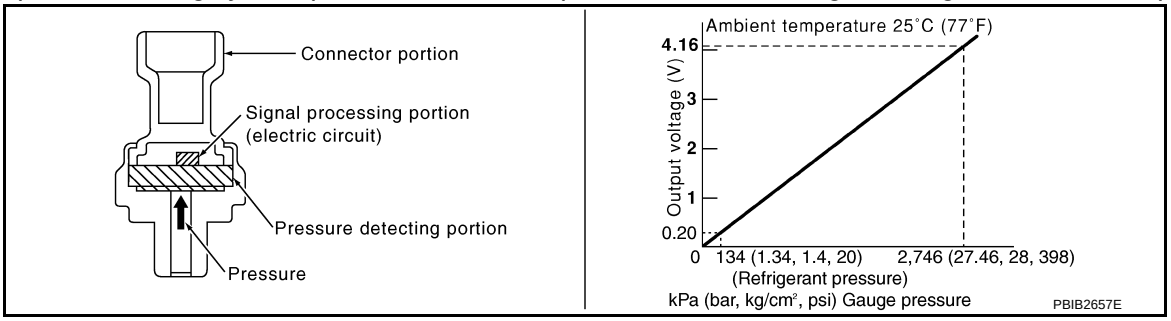

STRUCTURE AND OPERATION

- The refrigerant pressure sensor is a capacitance type sensor. It consists of a pressure detection area and a signal processing area.

- The pressure detection area, which is a variable capacity condenser, changes internal static capacitance according to pressure force.
- The signal processing area detects the static capacitance of the pressure detection area, converts the static capacitance into a voltage value, and transmits the voltage value to ECM.

Ionizer

INFOID:0000000011284604

High density Plasmacluster™ ion generator is adopted to increase the effect in maintaining skin moisture as well as the effect against mold, viruses, allergens, and odors.

NOTE:

- Plasmacluster™ ion technology developed by Sharp Corporation is installed in this item.
- Plasmacluster™ is a trademark of Sharp Corporation.

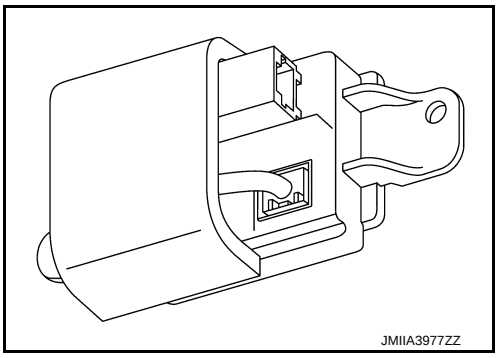

SYSTEM

AUTOMATIC AIR CONDITIONING SYSTEM

AUTOMATIC AIR CONDITIONING SYSTEM : System Description

INFOID:0000000011284605

SYSTEM DIAGRAM

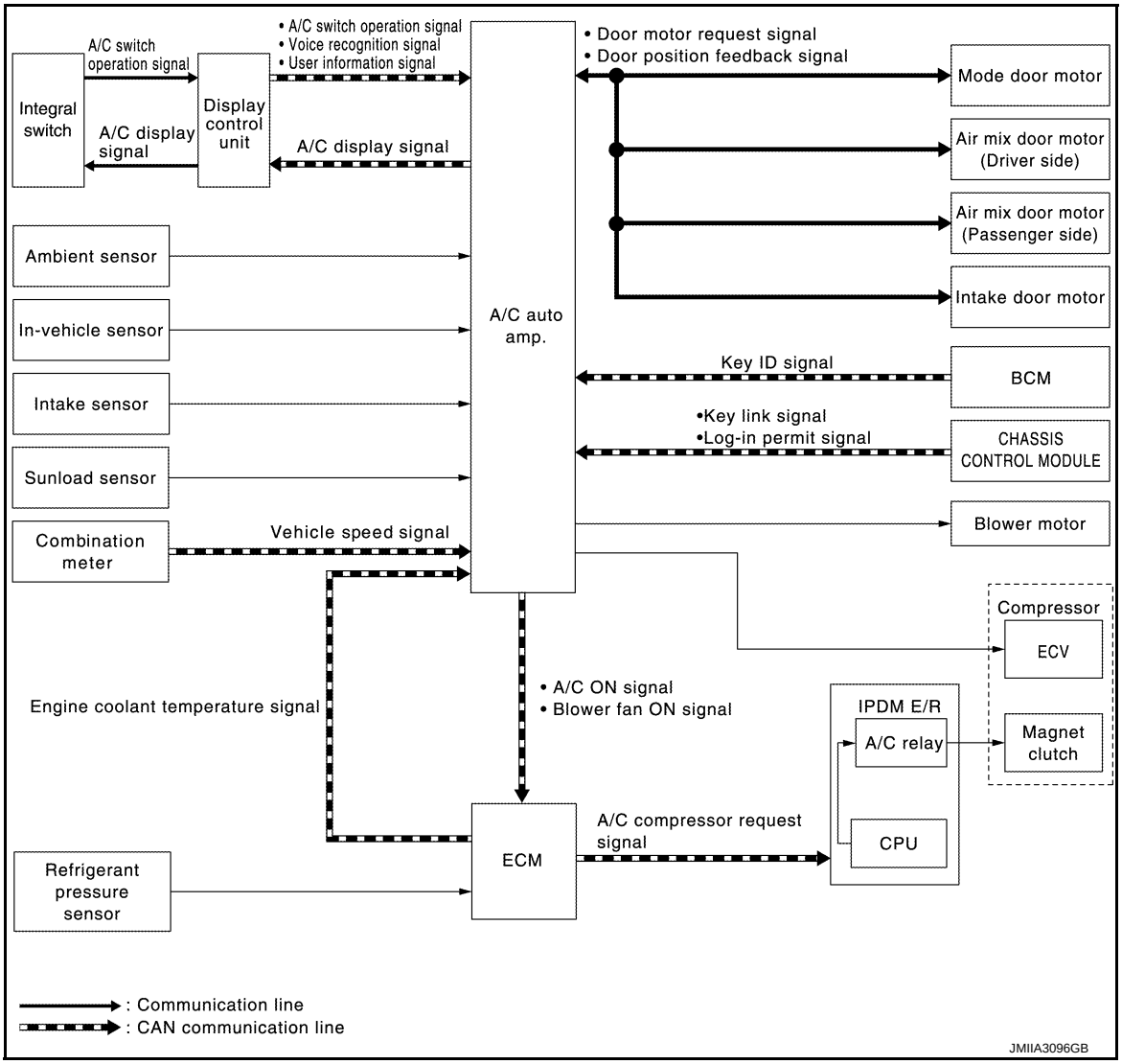

DESCRIPTION

- Automatic air conditioning system is controlled by each function of A/C auto amp., ECM and IPDM E/R.
- Each operation of air conditioning system can be controlled by integral switch.

CONTROL BY A/C AUTO AMP.

- HAC-14, "AUTOMATIC AIR CONDITIONING SYSTEM : Temperature Control"
- HAC-15, "AUTOMATIC AIR CONDITIONING SYSTEM : Air Outlet Control"
- HAC-15, "AUTOMATIC AIR CONDITIONING SYSTEM : Air Flow Control"
- HAC-16, "AUTOMATIC AIR CONDITIONING SYSTEM : Air Inlet Control"
- HAC-16, "AUTOMATIC AIR CONDITIONING SYSTEM : Compressor Control"
- HAC-17, "AUTOMATIC AIR CONDITIONING SYSTEM : Door Control"
- HAC-20, "AUTOMATIC AIR CONDITIONING SYSTEM : Login ID Control"
- Correction for input value

Ambient temperature correction
- A/C auto amp. inputs the temperature detected by ambient sensor as the ambient temperature.
- A/C auto amp. performs the correction of the temperature detected by ambient sensor for air conditioning control.

- A/C auto amp. selects and uses the initial value of ambient temperature data depending on the engine coolant temperature when turning the ignition switch from OFF to ON. The detection temperature of the ambient sensor is used when engine coolant temperature is low [less than approximately 56°C (133°F)]. The memory data (before the ignition switch is OFF) when the engine is warmed up [approximately 56°C (133°F) or more].
- The correction of the ambient temperature is not performed when the detection temperature of the ambient temperature is less than approximately –20°C (–4°F).

In-vehicle temperature correction
- A/C auto amp. inputs the temperature detected by in-vehicle sensor as the in-vehicle temperature.
- A/C auto amp. performs the correction of the temperature detected by in-vehicle sensor for air conditioning control.
- A/C auto amp. performs the correction so that the recognition passenger room temperature changes depending on the difference between the detected passenger room temperature and the recognition passenger room temperature. If the difference is large, the changing is early. The changing becomes slow as the difference becomes small.

Intake temperature correction
- A/C auto amp. inputs the temperature detected by intake sensor as the intake temperature (evaporator temperature).
- A/C auto amp. performs the correction of the temperature detected by intake sensor for air conditioning control.
- A/C auto amp. performs the correction so that the recognition intake temperature changes depending on the difference between the detected intake temperature and the recognition intake temperature. If the difference is large, the changing is early. The changing becomes slow as the difference becomes small.

Sunload amount correction
- A/C auto amp. inputs the sunload amount detected by sunload sensor.
- A/C auto amp. performs the correction of the sunload amount detected by sunload sensor for air conditioning control.
- When the sunload amount suddenly changes, for example when entering a tunnel, perform the correction so that the recognition sunload amount of the A/C auto amp. changes slowly.

Set temperature correction
- A/C auto amp. performs the correction to the target temperature set by the temperature control switch so as to match the temperature felt by the passengers depending on the ambient temperature detected by ambient sensor and controls it so that the in-vehicle temperature is always the most suitable.

CONTROL BY ECM
- HAC-16, "AUTOMATIC AIR CONDITIONING SYSTEM : Compressor Control"
- Cooling fan control. Refer to EC-51, "COOLING FAN CONTROL : System Description".

CONTROL BY IPDM E/R
- HAC-16, "AUTOMATIC AIR CONDITIONING SYSTEM : Compressor Control"
- Cooling fan control. Refer to PCS-6, "RELAY CONTROL SYSTEM : System Description".

AUTOMATIC AIR CONDITIONING SYSTEM : Temperature Control

INFOID:0000000011284606

- When ignition switch is in the ON position, A/C auto amp. always automatically controls temperature regardless of air conditioner operational state.
- A/C auto amp. calculates the target air mix door opening angle depending on set temperature, in-vehicle temperature, ambient temperature, and sunload.
- Air mix door is controlled depending on the comparison of current air mix door opening angle and target air mix door opening angle.
- Regardless of in-vehicle temperature, ambient temperature, and sunload, air mix door is fixed at the fully cold position when set temperature is 18.0°C (60°F), and at the fully hot position when set temperature is 32.0°C (90°F).

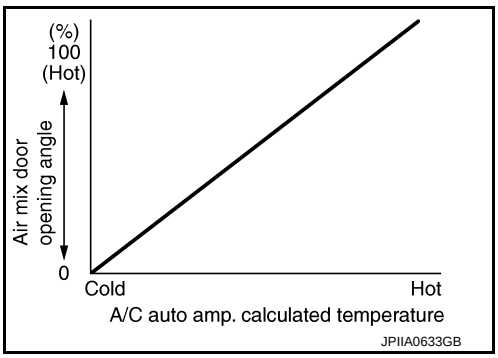

AUTOMATIC AIR CONDITIONING SYSTEM : Air Outlet Control

INFOID:0000000011284607

- While air outlet is in automatic control, A/C auto amp. selects the mode door position depending on a target air mix door angle and outlet air temperature calculated from sunload.
- If ambient temperature is excessively low, D/F is selected to prevent windshield fogging when air outlet is set to FOOT.

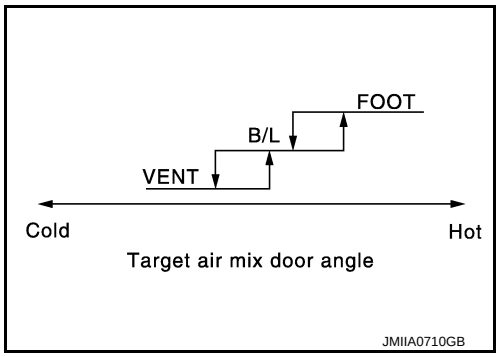

AUTOMATIC AIR CONDITIONING SYSTEM : Air Flow Control

INFOID:0000000011284608

DESCRIPTION

- A/C auto amp. changes duty ratio of blower motor control signal and controls air flow continuously. When air flow is increased, duty ratio of blower motor control signal gradually increases to prevent a sudden increase in air flow.
- In addition to manual control and automatic control, air flow control is compose of starting fan speed control, low coolant temperature starting control, high in-vehicle temperature starting control, blower speed control at door motor operation and fan speed control at voice recognition

AUTOMATIC AIR FLOW CONTROL

- A/C auto amp. decides target air flow depending on target air mix door opening angle.
- A/C auto amp. changes duty ratio of blower motor control signal and controls air flow continuously so that air flow matches to target air flow.
- When air outlet is VENT or B/L, the minimum air flow is changed depending on sunload.

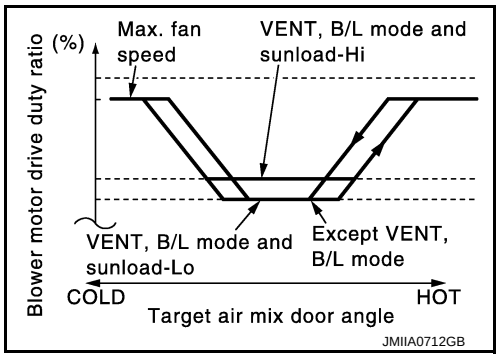

STARTING FAN SPEED CONTROL

When blower motor is activated, A/C auto amp. gradually increases duty ratio of blower motor control signal to prevent a sudden increase in discharge air flow. ($T_1 - T_2$ = approximately 20 seconds)

NOTE:

Do not perform the starting air flow control when the discharge outlet is set to DEF.

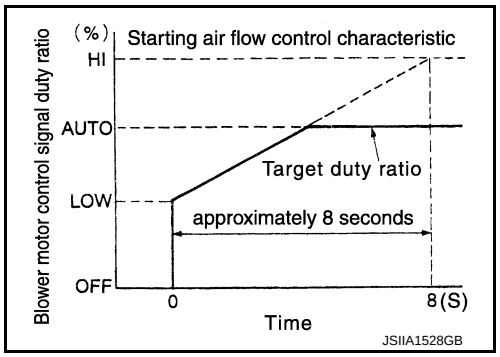

LOW COOLANT TEMPERATURE STARTING CONTROL

If the engine coolant temperature is 56°C (133°F) or less, to prevent a cold discharged air flow, A/C auto amp. suspends blower motor activation for the maximum 150 seconds depending on target air mix door opening angle. After this, blower motor control signal is increased gradually, and blower motor is activated.

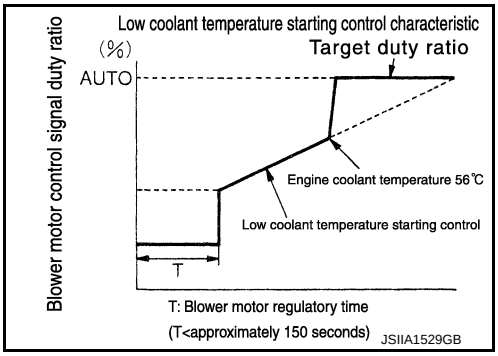

FAN SPEED CONTROL AT DOOR MOTOR OPERATION

When mode door motor is activated while air flow is more than the specified value, A/C auto amp. reduces temporarily fan speed so that mode door moves smoothly.

HIGH IN-VEHICLE TEMPERATURE STARTING CONTROL

When evaporator temperature is high [intake sensor value is 35°C (95°F) or more], to prevent a hot discharged air flow, A/C auto amp. suspends blower motor activation for approximately 3 seconds so that evaporator is cooled by refrigerant.

FAN SPEED CONTROL AT VOICE RECOGNITION

When the voice control (voice command) switch is operated during air flow automatic control, A/C auto amp. decreases the air flow of the blower motor once and controls the air flow so as not to disturb the voice recognition function. This control continues while voice recognition function is operating.

AUTOMATIC AIR CONDITIONING SYSTEM : Air Inlet Control

INFOID:0000000011284609

- While air inlet is in automatic control, A/C auto amp. selects air inlet (fresh air intake, 20% fresh air intake, or recirculation) depending on set temperature, in-vehicle temperature, and ambient temperature.
- Air inlet is fixed to 80% FRE, only when the conditions are satisfied as follows:
- Air inlet is FOOT or D/F
- Ambient temperature is –2°C (28°F) or less

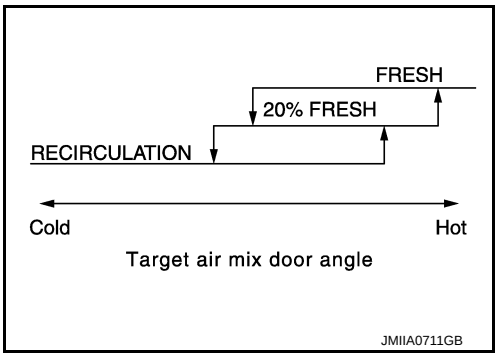

AUTOMATIC AIR CONDITIONING SYSTEM : Compressor Control

INFOID:0000000011284610

DESCRIPTION

- When the compressor activation condition is satisfied while blower motor is activated, A/C auto amp. transmits A/C ON signal and blower fan ON signal to ECM via CAN communication line.
- ECM judges the conditions of each sensor (Refrigerant pressure sensor signal, accelerator position signal, etc.), and transmits the A/C compressor request signal to IPDM E/R via CAN communication line.
- By receiving the A/C compressor request signal from ECM, IPDM E/R turns the A/C relay to ON, and activates the compressor. Refer to PCS-6, "RELAY CONTROL SYSTEM : System Description".

CONTROL BY A/C AUTO AMP.

Low Temperature Protection Control

When intake sensor detects that evaporator fin temperature is ⓐ [–5.0°C (23.0°F)] or less, A/C auto amp. requests ECM to turn the compressor OFF, and stops the compressor.
When the air temperature returns to ⓑ [1.0°C (33.8°F)] or more, the compressor is activated.

NOTE:
Target temperature upper limit value of evaporator can be changed using “TARGET EVAPORATOR TEMP UPPER LIMIT SETTING” in “WORK SUPPORT” mode of CONSULT. Refer to HAC-59, "Setting of Target Evaporator Temperature Upper Limit Value".

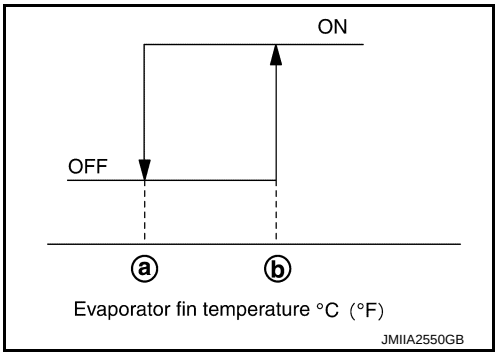

Refrigerant Discharge Amount Control
- When setting temperature is full cold or air outlet is other than DEF, A/C auto amp. controls the refrigerant discharge amount by adjust the duty ratio of ECV according to required amount of cooling capacity.
- When evaporator temperature is target temperature upper limit value or more, A/C auto amp. increases the discharge amount.
- When evaporator temperature is less than target temperature upper limit value, A/C auto amp. reduces the discharge amount.

NOTE:
Target temperature upper limit value of evaporator can be changed using “TARGET EVAPORATOR TEMP UPPER LIMIT SETTING” in “WORK SUPPORT” mode of CONSULT. Refer to HAC-59, "Setting of Target Evaporator Temperature Upper Limit Value".

Compressor Oil Circulation Control
When the engine starts, A/C auto amp. activates the compressor for a few seconds and circulates the compressor oil once.

CONTROL BY ECM

Compressor Protection Control at Pressure Malfunction
The high-pressure side value that is detected by refrigerant pressure sensor is as per the following state, ECM requests IPDM E/R to turn A/C relay OFF and stop the compressor.
- 3.12 MPa (31.82 kg/cm^2, 452.4 psi) or more (When the engine speed is less than 1,500 rpm)
- 2.74 MPa (27.95 kg/cm^2, 397.3 psi) or more (When the engine speed is 1,500 rpm or more)
- 0.12 MPa (1.22 kg/cm^2, 17.4 psi) or less

Air Conditioning Cut Control
When the engine condition is high load, ECM makes the A/C relay to OFF, and stops the compressor. Refer to EC-49, "AIR CONDITIONING CUT CONTROL : System Description".

AUTOMATIC AIR CONDITIONING SYSTEM : Door Control

INFOID:0000000011284611

DOOR MOTOR CONTROL

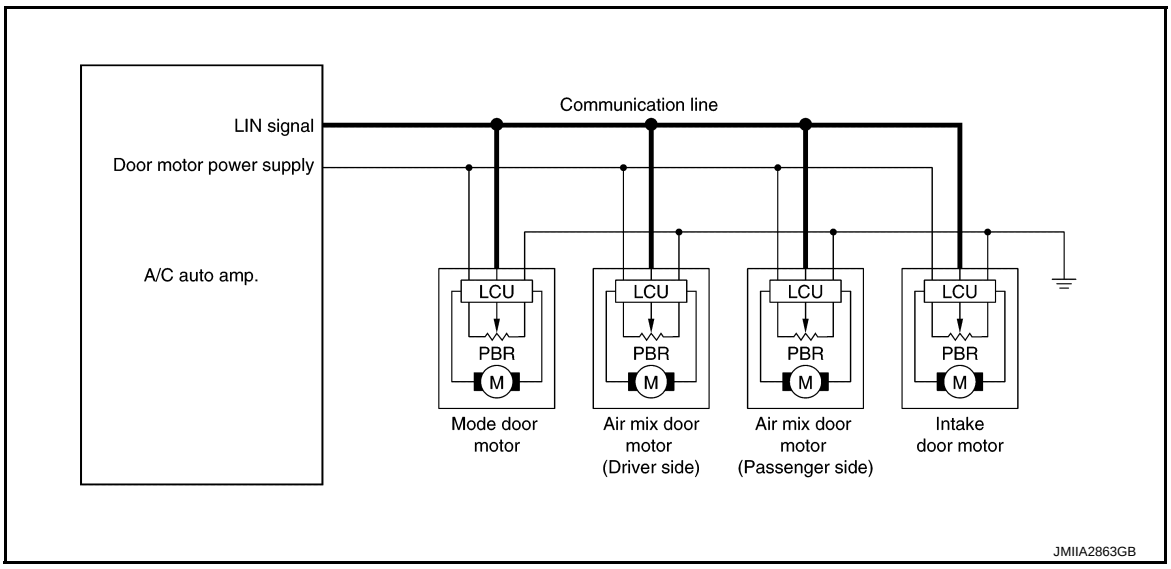

- LCU (Local Control Unit) is built in to each door motor. And detects door position by PBR (Potentio Balance Resistor).
- A/C auto amp. communicates with each LCU via communication line. And receives each door position feedback signal from each LCU.
- Each LCU controls each door to the appropriate position depending on the control signal from A/C auto amp. when the door movement is complete, transmits the signal of door movement completion to A/C auto amp.

SWITCH AND THEIR CONTROL FUNCTION

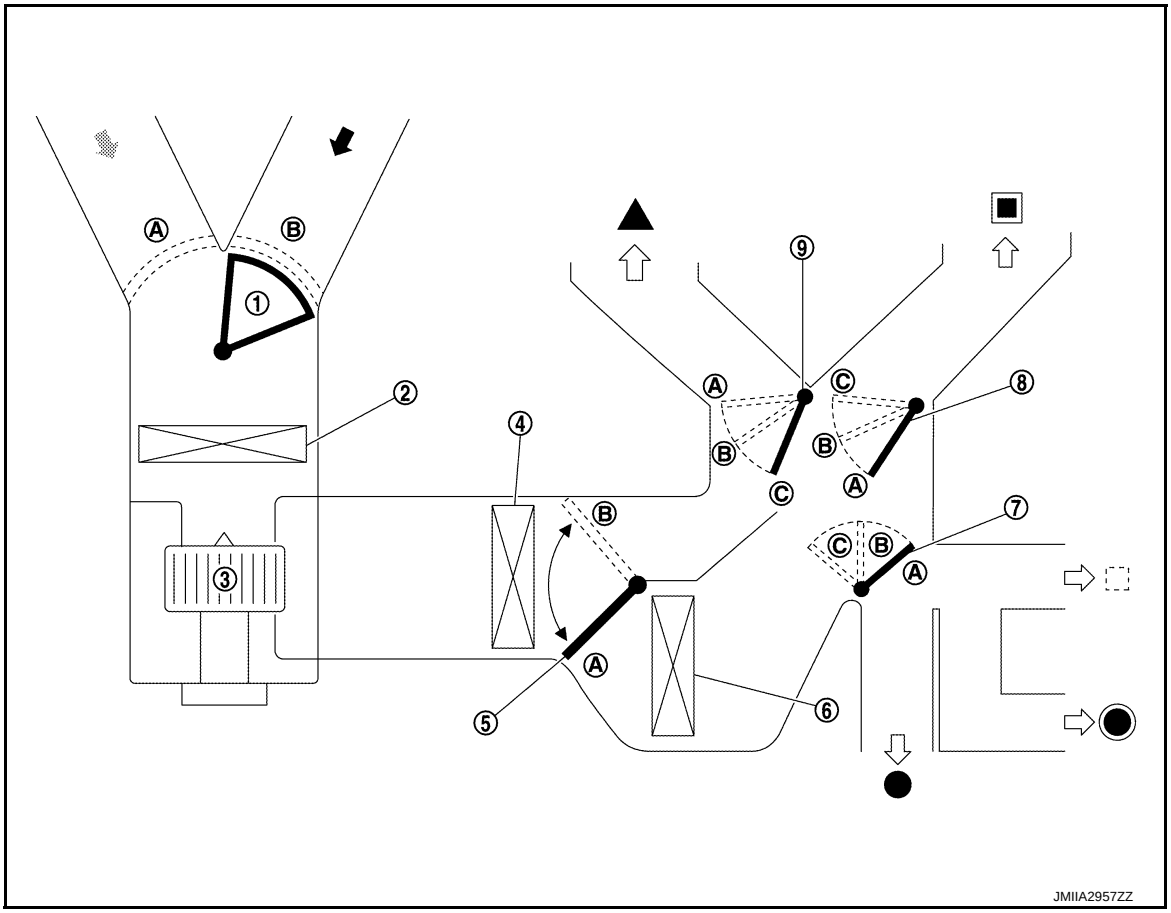

① Intake door	② In-cabine microfilter*1/Air conditioner filter*2	③ Blower motor
④ Evaporator	⑤ Air mix door (driver side/passenger side)	⑥ Heater core
⑦ Foot door	⑧ Ventilator door	⑨ Defroster door
Fresh air	Recirculation air	Discharge air
Defroster	Ventilator	Front foot
Rear foot	Rear ventilator*3	

- *1: Except for Mexico
- *2: For Mexico
- *3: With rear ventilator

Switch position				Door position					
				Mode door					
				Ventilator door	Foot door	Defroster door	Intake door	Air mix door (Driver side)	Air mix door (Passenger side)
AUTO switch				AUTO			—	—	—
MODE switch				Ⓐ	Ⓐ	Ⓐ			
				Ⓑ	Ⓑ	Ⓐ			
				Ⓒ	Ⓒ	(Ⓑ*2 or Ⓐ)*3			
				Ⓒ	Ⓑ	Ⓑ			
DEF switch				Ⓒ	Ⓐ	Ⓒ			
Intake switch*1	REC			—	—	—	Ⓐ		
	FRE						Ⓑ		
Temperature control switch (Driver side)	DUAL switch: OFF	Full cold 18.0°C (60°F)					—	Ⓐ	
		18.5°C – 31.5°C (61°F – 89°F)						AUTO	
		Full hot 32.0°C (90°F)						Ⓑ	
Temperature control switch (Driver side)	DUAL switch: ON	Full cold 18.0°C (60°F)						Ⓐ	—
		18.5°C – 31.5°C (61°F – 89°F)						AUTO	
		Full hot 32.0°C (90°F)						Ⓑ	
Temperature control switch (Passenger side)		Full cold 18.0°C (60°F)						—	Ⓐ
		18.5°C – 31.5°C (61°F – 89°F)							AUTO
		Full hot 32.0°C (90°F)							Ⓑ
ON·OFF switch		OFF		Ⓒ	Ⓒ	(Ⓑ*2 or Ⓐ)*3			—

*1: Air inlet status is displayed by indicator during activating automatic control

*2: Default setting

*3: It can be changed using “BLOW SET” in “WORK SUPPORT” mode of CONSULT. Refer to HAC-59, "Foot Position Setting Trimmer".

AIR DISTRIBUTION

With rear ventilator

Discharge air flow							
MODE/DEF setting position		Air outlet/distribution					
		Ventilator			Foot		Defroster
		Front		Rear	Front	Rear	
		Center	Side				
		40%	45%	15%	—	—	—
		21%	25%	14%	25%	15%	—
	Defrostor door open setting	—	9%	18%	32%	20%	21%
	Defrostor door close setting	—	11%	23%	41%	25%	—
		—	7%	15%	27%	17%	34%
		—	11%	18%	—	—	71%

Without rear ventilator

Discharge air flow						
MODE/DEF setting position		Air outlet/distribution				
		Ventilator		Foot		Defroster
		Center	Side	Front	Rear	
		47%	53%	—	—	—
		24%	29%	29%	18%	—
	Defrostor door open setting	—	10%	39%	25%	26%
	Defrostor door close setting	—	13%	53%	34%	—
		—	8%	32%	20%	40%
		—	12%	—	—	88%

AUTOMATIC AIR CONDITIONING SYSTEM : Login ID Control

INFOID:0000000011284612

DESCRIPTION

- A/C auto amp. memorizes air conditioning system settings for each user information. (Maximum: 3users information)
- Key ID signal is transmitted from BCM, and A/C auto amp. identifies Intelligent Key.
- User information signal is transmitted from display control unit, and A/C auto amp. identifies user information.
- Air conditioning system setting items are as per the following table.

Conditions	Default value
Setting temperature (Setting value)	25°C
Fan switch (Setting value)	OFF
Air inlet (REC/FRE/AUTO)	AUTO
Air outlet (VENT / B/L / FOOT / D/F / DEF)	FOOT
A/C switch	OFF
AUTO switch	OFF
DUAL switch	OFF
Heated seat switch*1	OFF

Conditions	Default value
Heated seat temperature setting*1	Middle setting
Heated steering wheel system AUTO control*2	OFF

- *1: With heated seat system
- *2: With heated steering wheel system
- For details of login ID control, refer to DMS-9, "LOG-IN FUNCTION : System Description".

Operation Description

Memory
- When ignition switch is turned from ON to OFF, A/C auto amp. associates user information with the Intelligent Key identified at that time.
- A/C auto amp. memorizes air conditioning system settings immediately before ignition switch is turned to OFF, as an individual air conditioning system settings of the associated user information.

Readout
- When ignition switch is turned to ON, A/C auto amp. sets individual air conditioning system settings memorized to the user information associated with the Intelligent Key identified at that time.
- When the user information identified at that time is changed, A/C auto amp. changes air conditioning system settings into individual air conditioning system settings memorized to the user information after user information is changed.

AUTOMATIC AIR CONDITIONING SYSTEM : Circuit Diagram

INFOID:0000000011284613

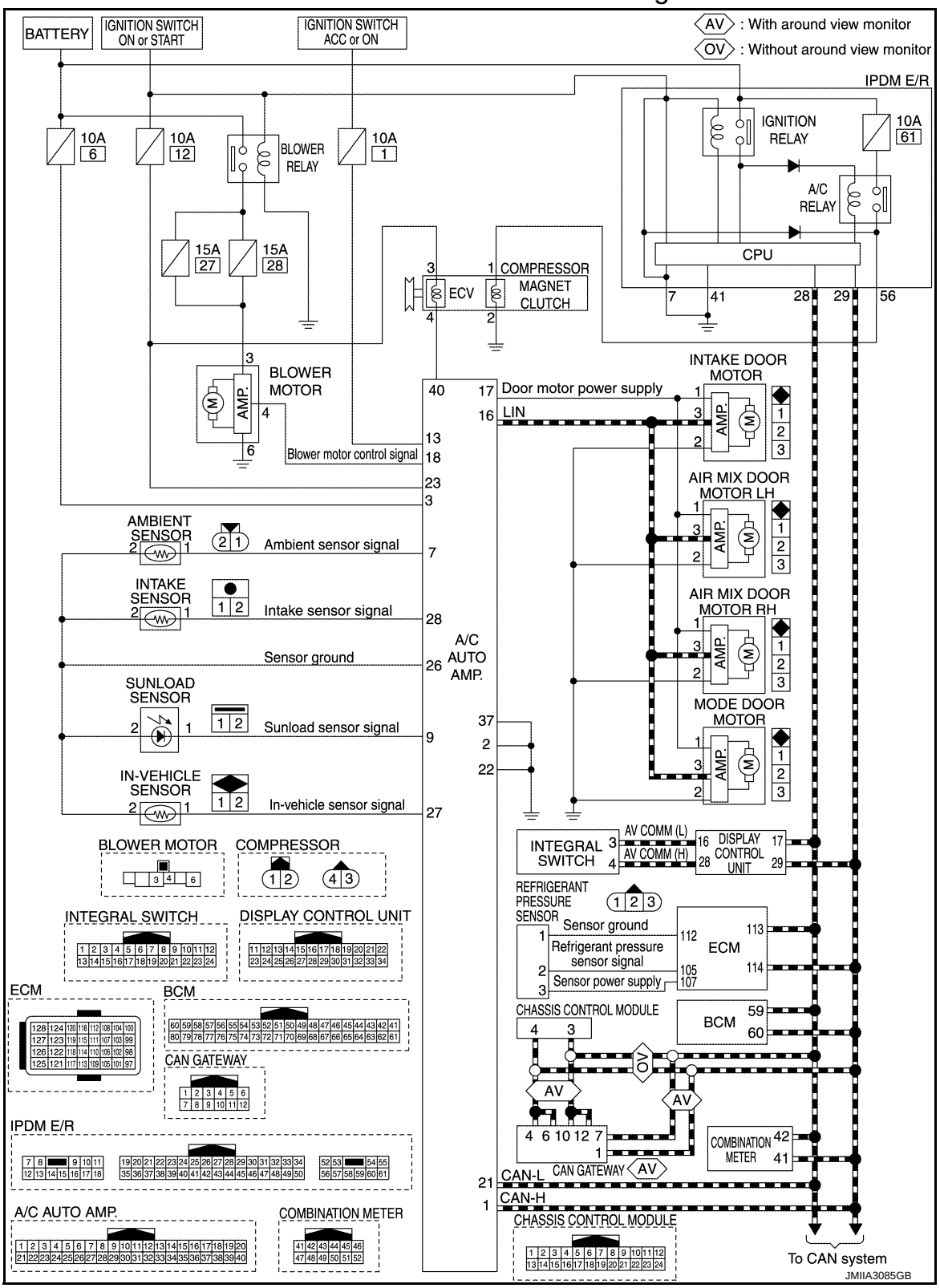

AUTOMATIC AIR CONDITIONING SYSTEM : Fail-safe

INFOID:0000000011567530

FAIL-SAFE FUNCTION

If a communication error exists between the A/C auto amp. and display control unit for 30 seconds or longer, air conditioning is controlled under the following conditions:

When ambient temperature is less than 3°C (37°F) and engine coolant temperature is less than 56°C (133°F)

Compressor	**: ON**
Air outlet	**: DEF**
Air inlet	**: FRE (Fresh air intake)**
Blower fan speed	**: AUTO**
Set temperature	**: Setting before communication error occurs**

When ambient temperature is 3°C (37°F) or more, or engine coolant temperature is 56°C (133°F) or more

Compressor	**: ON**
Air outlet	**: AUTO**
Air inlet	**: FRE (Fresh air intake)**
Blower fan speed	**: AUTO**
Set temperature	**: Setting before communication error occurs**

NOTE:
When ambient temperature is less than 3°C (37°F) and engine coolant temperature is less than 56°C (133°F), low coolant temperature starting control do not operated.

ACCS (ADVANCED CLIMATE CONTROL SYSTEM)

ACCS (ADVANCED CLIMATE CONTROL SYSTEM) : System Description

INFOID:0000000011284615

SYSTEM DIAGRAM

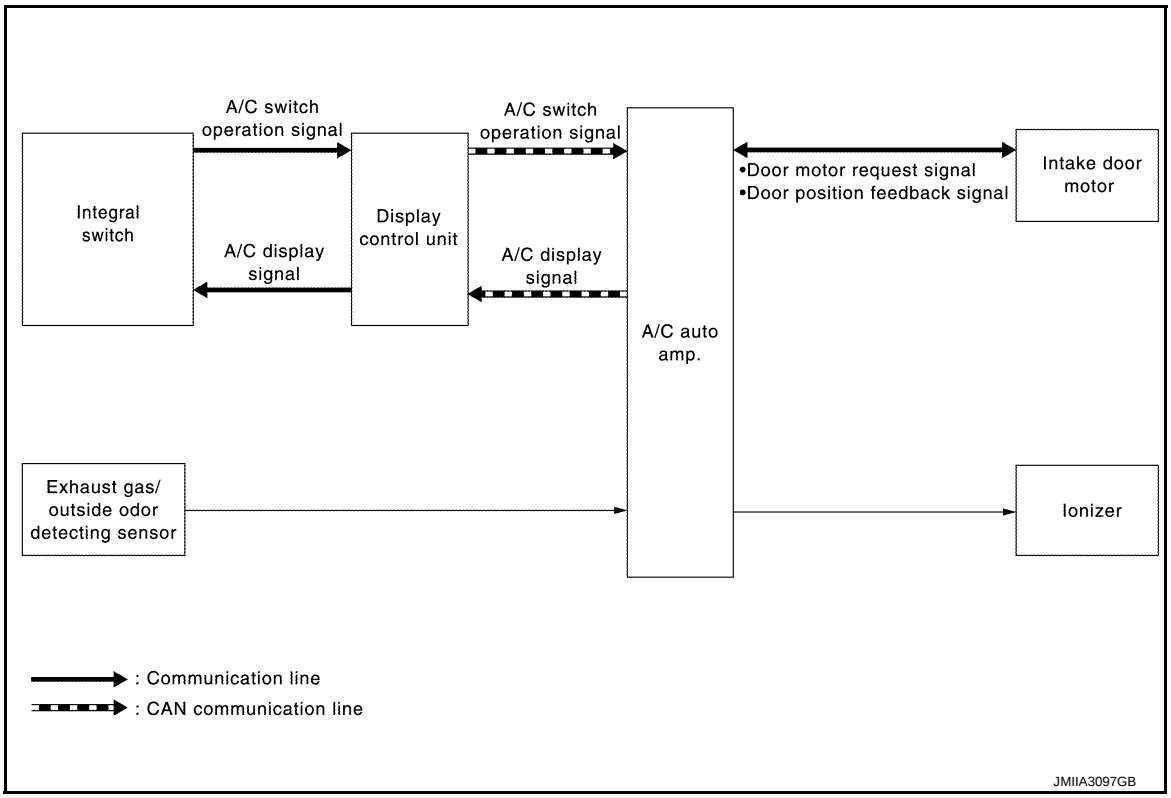

SYSTEM DESCRIPTION

- ACCS (advanced climate control system) controls passenger room air. It maintains the cleanliness of the passenger room air using an high performance microfilter and a combination of each of the following functions.
- HAC-24, "ACCS (ADVANCED CLIMATE CONTROL SYSTEM) : Automatic Intake Control (Exhaust Gas / Outside Odor Detecting Mechanism)"
- HAC-24, "ACCS (ADVANCED CLIMATE CONTROL SYSTEM) : Plasmacluster Control"

NOTE:
- Plasmacluster™ ion technology developed by Sharp Corporation is installed in this item.
- Plasmacluster™ is a trademark of Sharp Corporation.

- Various operations of ACCS (advanced climate control system) are transmitted from integral switch to display control unit via communication line and from display control unit to A/C auto amp. via CAN communication. A/C auto amp. sends each indication information to display control unit via CAN communication. display control unit displays each indication information that is received.

ACCS (ADVANCED CLIMATE CONTROL SYSTEM) : Automatic Intake Control (Exhaust Gas / Outside Odor Detecting Mechanism)

INFOID:0000000011284616

DESCRIPTION

In addition to air inlet automatic control of automatic air conditioning system, A/C auto amp. controls automatically air inlet according to signal from exhaust gas/outside odor detecting sensor, so that unpleasant outside odor does not enter in passenger room.

OPERATION DESCRIPTION

- When auto intake switch is touched while blower motor is operated and DEF switch is OFF, auto intake indicator and intake switch indicator lamp turn ON. Air inlet is fixed to recirculation for approximately 5 minutes, and then is switched to automatic intake control (exhaust gas/outside odor detecting mechanism).
- Air inlet switches to recirculation when exhaust gas or outside odor is detected while automatic intake control (exhaust gas/outside odor detecting mechanism) is operated. After that, air inlet switches to fresh air intake when exhaust gas or outside odor becomes not detectable.

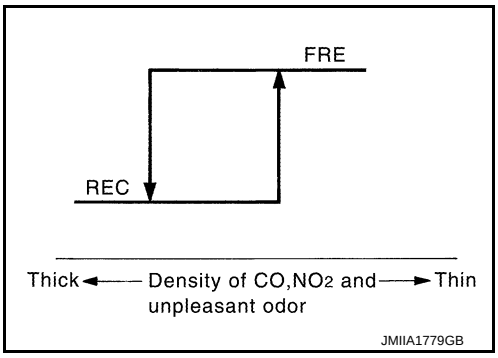

NOTE:

- Sensitivity of exhaust gas/outside odor detecting sensor can be changed. Refer to HAC-60, "Exhaust Gas/outside Odor Detecting Sensor Sensitivity Adjustment Function".
- Automatic intake control (exhaust gas / outside odor detecting mechanism) does not operate when ambient temperature is –2°C (28°F) or less. In this case, control is only for control of automatic air inlet of automatic air conditioning system.

ACCS (ADVANCED CLIMATE CONTROL SYSTEM) : Plasmacluster Control

INFOID:0000000011284617

DESCRIPTION

Plasmacluster™ ion restrains microbes, reduces odor on interior surface, and maintains passenger's skin moisture* by including high density Plasmacluster™ ion in front air conditioning outlet air flow.

*: Effect depends on individual difference and operating conditions. Tasted by Soiken CO., Ltd. Ion density is 25,000 pcs/cm^3. Skin moisture is measured at the temple of person being tested.

OPERATION DESCRIPTION

- Plasmacluster™ control operates by interlocking to blower motor. Plasmacluster™ control operates when blower motor operates.
- Control status is displayed on air conditioning system display screen. Refer to HAC-28, "ACCS (ADVANCED CLIMATE CONTROL SYSTEM) : Switch Name and Function".

NOTE:

- Plasmacluster™ ion technology developed by Sharp Corporation is installed in this item.
- Plasmacluster™ is a trademark of Sharp Corporation.

ACCS (ADVANCED CLIMATE CONTROL SYSTEM) : Circuit Diagram

INFOID:0000000011284618

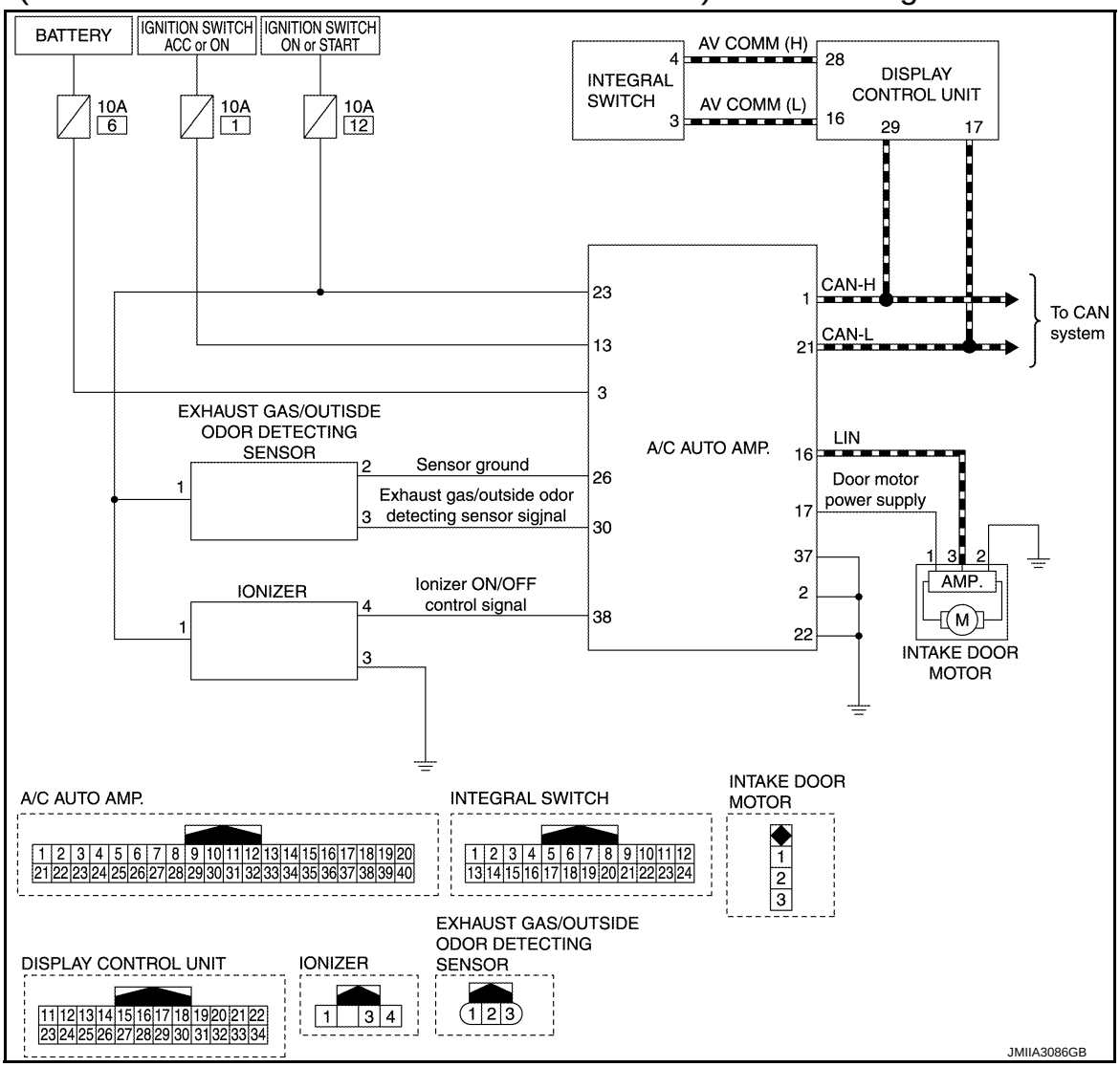

OPERATION

AUTOMATIC AIR CONDITIONING SYSTEM

AUTOMATIC AIR CONDITIONING SYSTEM : Switch Name and Function

INFOID:0000000011284619

OPERATION AND DISPLAY

Lower Touch Screen Display (Example)

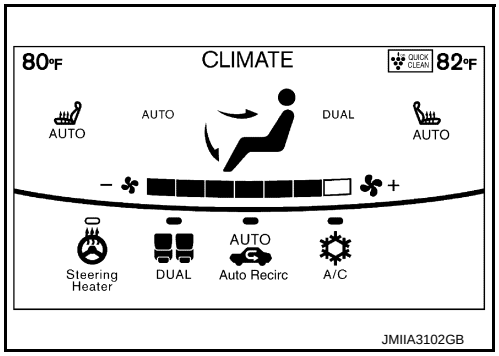

- Air conditioning system state is indicated on lower touch screen display.
- When any integral switch except intake switch is pressed while air conditioning system is in the ON position, the display changes to status indication display.

Controller (Integral switch)

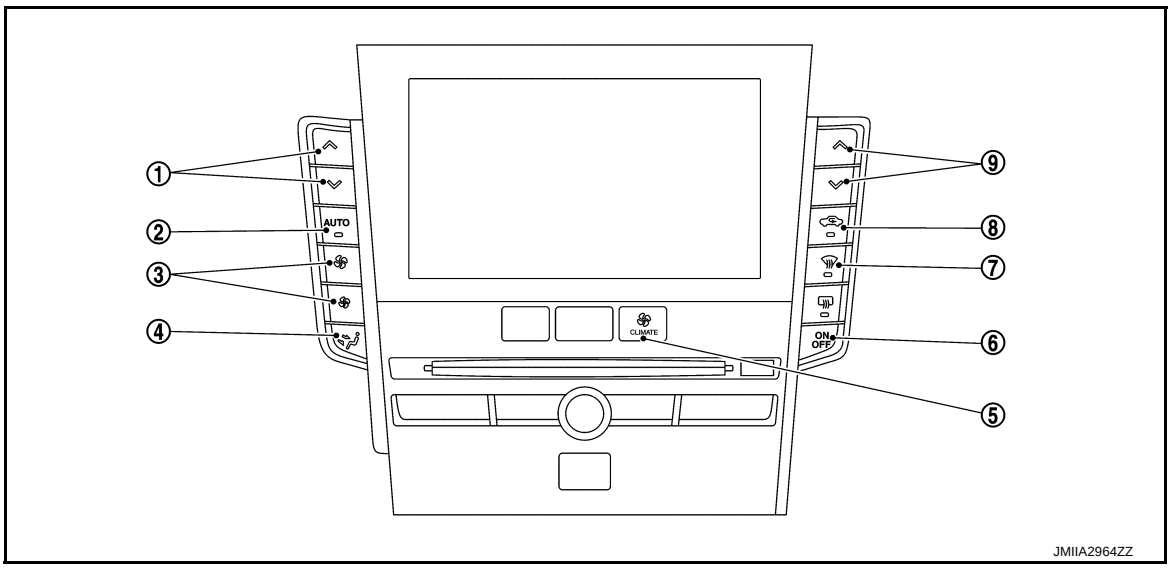

①	Temperature control switch (Driver side)	②	AUTO switch	③	Fan switch
④	MODE switch	⑤	CLIMATE switch	⑥	ON/OFF switch
⑦	DEF switch	⑧	Intake switch	⑨	Temperature control switch (Passenger side)

Switch Operation

Switch name	Function
Temperature control switch (Driver side)	Setting temperature is selected using this switch within a range between 18.0°C (60°F) and 32.0°C (90°F) at a rate of 0.5°C (1°F) per adjustment. • ∧ Press: Setting temperature increases • ∨ Press: Setting temperature decreases **NOTE:** When air conditioning system is OFF, setting temperature can not be selected.
AUTO switch	When this switch is pressed, switch indicator lamp and “AUTO” indicator on display, and then air conditioning system starts automatic control. **NOTE:** • When air inlet is not selected manually, air inlet changes to automatic control.
Fan switch	Fan speed is selected within a range of 1st – 7th speed using this switch. **NOTE:** • Air conditioning system turns ON when this switch is operated while air conditioning system is in OFF status. • Automatic air flow control is released (“AUTO” is not displayed) when this switch is pressed while air conditioning system is in automatic control (“AUTO” is displayed).
MODE switch	• Air outlet can be changes from VENT ⇒ B/L ⇒ FOOT ⇒ D/F ⇒ VENT each time this switch is pressed. **NOTE:** • Air outlet can be changed when air conditioning system is in the OFF position. • Automatic air outlet control is released (“AUTO” is not displayed) when this switch is pressed while air conditioning system is in automatic control (“AUTO” is displayed).
CLIMATE switch	“Climate” menu is indicated on display when this switch is pressed.
ON/OFF switch	• When this switch is pressed while air conditioning system is operated, air conditioning system turns OFF. • When air conditioning system turns OFF, air inlet and air outlet become the following status. - Air outlet: FOOT - Air inlet: Fresh air intake • When this switch is pressed while air conditioning system is not operated, air conditioning system turns ON in the condition before turning OFF.
DEF switch	DEF mode (switch indicator lamp) changes between ON ⇔ OFF each time this switch is pressed. When DEF switch is pressed while air conditioning system is in the ON position • When DEF mode turns ON, air conditioning system becomes the following status. - Air outlet: DEF - Air flow: Automatic control (If fan speed other than “AUTO” is selected before pressing DEF switch, fan speed is manual control) - Air inlet: Fresh air intake - Compressor: ON **NOTE:** A/C switch indicator is not changed from before turning ON DEF mode. • When DEF mode turns OFF, air conditioning system status returns to the previous status before DEF mode is selected. But, the following state is continued. - Air inlet: Fresh air intake - Compressor: ON **NOTE:** A/C switch indicator is not changed from before turning OFF DEF mode. When DEF switch is pressed while air conditioning system is in the OFF position • Air conditioning system turns ON and becomes the following status. - Air outlet: DEF - Air flow: Automatic control - Air inlet: Fresh air intake - Compressor: ON • When DEF mode turns OFF, entire air conditioning system is set to auto mode. **NOTE:** Automatic control is released when this switch is pressed while air conditioning system is in automatic control.

Switch name	Function
Intake switch	• Air inlet changes between recirculation (REC) ⇔ fresh air intake (FRE) each time this switch is pressed. - Intake switch indicator lamp ON: Recirculation - Intake switch indicator lamp OFF: Fresh air intake **NOTE:** • Air inlet can be changed when air conditioning system is in the OFF position.
Temperature control switch (Passenger side)	• The system is set to LH/RH independent status (“DUAL” displays) by operating this switch. Outlet air flow temperature of passenger side can be changed without changing outlet air flow temperature of driver side. • Setting temperature is selected using this switch within a range between 18.0°C (60°F) and 32.0°C (90°F) at a rate of 0.5°C (1°F) per adjustment. - ∧ Press: Setting temperature increases - ∨ Press: Setting temperature decreases **NOTE:** • When air conditioning system is OFF, setting temperature can not be selected. • When DEF mode is ON, temperature control switch (passenger side) is inoperative.

AUTOMATIC AIR CONDITIONING SYSTEM : Menu Displayed by Pressing Each Switch

INFOID:0000000011284620

“CLIMATE” MENU

Air conditioning system state is displayed on lower touch screen display when CLIMATE switch of integral switch is pressed, and each switch on the display can be opareted.

Switch Operation

Menu		Function
DUAL switch	DUAL	When DUAL mode is selected, “DUAL” is indicated on the display. Left and right ventilation temperature separately control changes between ON ⇔ OFF each time this switch is pressed while blower motor is operated. **NOTE:** • Setting temperature for passenger side is the same as that for driver side when left and right ventilation temperature separately control is OFF. • DUAL switch operation is not accepted when DEF mode is ON.
A/C switch	A/C	ON ⇔ OFF of compressor is selected. **NOTE:** • Selection does not operate when blower motor is OFF. • When mode position is D/F or DEF, “A/C” is turned ON forcibly.
Fan switch	+	Fan speed is selected within a range of 1st – 7th speed using this switch. **NOTE:** • Air conditioning system turns ON when this switch is operated while air conditioning system is in OFF status. • Automatic air flow control is released (“AUTO” is not displayed) when this switch is pressed while air conditioning system is in automatic control (“AUTO” is displayed).
	–	
Mode switch		• Air outlet can be changes from VENT ⇒ B/L ⇒ FOOT ⇒ D/F ⇒ VENT each time this switch is pressed. **NOTE:** • Air outlet can be changed when air conditioning system is in the OFF position. • Automatic air outlet control is released (“AUTO” is not displayed) when this switch is pressed while air conditioning system is in automatic control (“AUTO” is displayed).

ACCS (ADVANCED CLIMATE CONTROL SYSTEM)

ACCS (ADVANCED CLIMATE CONTROL SYSTEM) : Switch Name and Function

INFOID:0000000011284621

DISPLAY

Plasmacluster™ ion display

- Plasmacluster™ control state is indicated on lower touch screen display.
- Plasmacluster ™ ion display is switched as shown in the figure depending on air flow.

NOTE:

- Plasmacluster™ ion technology developed by Sharp Corporation is installed in this item.
- Plasmacluster™ is a trademark of Sharp Corporation.

- When air flow is small

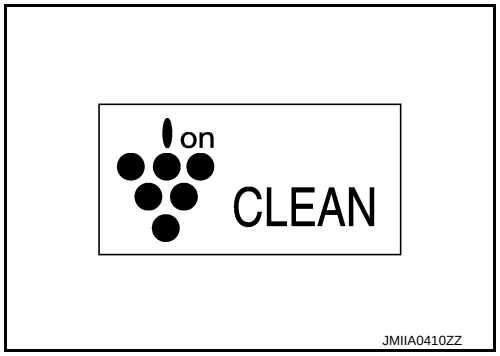

- When air flow is large

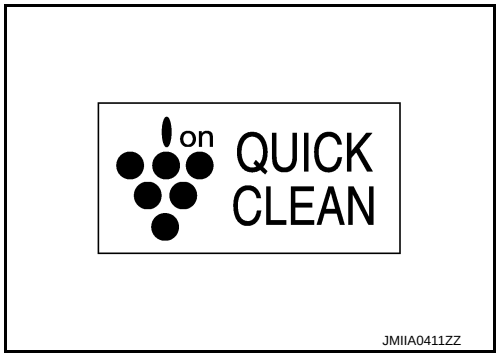

“CLIMATE” MENU OPERATON

Air conditioning system state is displayed on lower touch screen display when CLIMATE switch of integral switch is pressed, and auto intake switch on the display can be opareted.

Switch Operation

Menu		Function
Auto intake switch	AUTO Auto Recirc	• Automatic intake control (exhaust gas/outside odor detecting mechanism) (indicator) changes between ON ⇔ OFF each time when AUTO intake switch is touched while blower motor is activated. • Air conditioning becomes the following status when AUTO intake switch is turned ON. - Air inlet: Recirculation [After approximately 5 minutes, air inlet is switched to automatic intake control (exhaust gas/outside odor detecting mechanism).] - A/C switch: ON • Air conditioning becomes the following status when AUTO intake switch is turned OFF. - Air inlet: Fresh air intake - A/C switch: Stays ON **NOTE:** • Interlocking condition of A/C switch can be changed. Refer to HAC-60, "Auto Intake Switch Interlocking Movement Change Function". • AUTO intake switch operation is not accepted when the following status. - Air outlet: D/F or DEF - Ambient temperature: 0°C or less

DIAGNOSIS SYSTEM (A/C AUTO AMP.)

Description

INFOID:0000000011284622

Air conditioning system performs self-diagnosis, operation check, function diagnosis, and various settings using diagnosis function of each control unit.

ECU	Diagnostic item (CONSULT)	
A/C auto amp.	HVAC	Self Diagnostic Result
		Data Monitor
		Active Test
		Work support
ECM	ENGINE	Self Diagnostic Result
		Data Monitor
IPDM E/R	IPDM E/R	Self Diagnostic Result
		Data Monitor
	Auto active test	

CONSULT Function

INFOID:0000000011284623

CONSULT performs the following functions via CAN communication with A/C auto amp.

Diagnostic mode	Description
Ecu Identification	Displays the part number of A/C auto amp.
Self Diagnostic Result	Displays the diagnosis results judged by A/C auto amp.
Data Monitor	Displays the input/output signal of A/C auto amp.
Active Test	The signals used to activate each device are forcibly supplied from A/C auto amp.
Work support	Changes the setting for each setting function.
Configuration	• The vehicle specification that is written in A/C auto amp. can be displayed or stored. • The vehicle specification can be written when A/C auto amp. is replaced.

NOTE:
Diagnosis should be performed with engine running. Door motor operation speeds become slower and NO results may be returned even for normal operation if battery voltage drops below 12 V during self-diagnosis.

ECU IDENTIFICATION

Part number of A/C auto amp. can be checked.

SELF-DIAGNOSIS RESULTS

Diagnosis result that is judged by A/C auto amp. can be checked. Refer to HAC-37, "DTC Index".

DATA MONITOR

Input/output signal of A/C auto amp. can be checked.
NOTE:
The following table includes information (items) inapplicable to this vehicle. For information (items) applicable to this vehicle, refer to CONSULT display items.

Display item list

Monitor item [Unit]		Description
AMB TEMP SEN	[°C (°F)]	Ambient temperature value converted from ambient sensor signal received from ambient sensor
IN-VEH TEMP	[°C (°F)]	In-vehicle temperature value converted from in-vehicle sensor signal received from in-vehicle sensor
INT TEMP SEN	[°C (°F)]	Evaporator fin temperature value converted from intake sensor signal received from intake sensor

Monitor item [Unit]		Description
SUNLOAD SEN	[w/m^2]	Sunload value converted from sunload sensor signal received from sunload sensor
AMB SEN CAL	[°C (°F)]	Ambient temperature value calculated by A/C auto amp.
IN-VEH CAL	[°C (°F)]	In-vehicle temperature value calculated by A/C auto amp.
INT TEMP CAL	[°C (°F)]	Evaporator fin temperature value calculated by A/C auto amp.
SUNL SEN CAL	[w/m^2]	Sunload value calculated by A/C auto amp.
COMP REQ SIG	[On/Off]	Displays A/C ON signal ON/OFF status transmitted to ECM.
COMP ECV DUTY	[%]	Duty ratio of ECV (electrical control valve) judged by A/C auto amp.
FAN REQ SIG	[On/Off]	Displays blower fan ON signal ON/OFF status transmitted to ECM.
FAN DUTY		Duty ratio of blower motor judged by A/C auto amp.
XM		Target discharge air temperature (Driver side) judged by A/C auto amp. depending on the temperature setting and the value from each sensor.
ENG COOL TEMP	[°C (°F)]	Engine coolant temperature signal value received from ECM via CAN communication
VEHICLE SPEED	[Mph (km/h)]	Vehicle speed signal value received from combination meter via CAN communication.
BLOWER MOT VOLT	[V]	**NOTE:** This item is indicated, but not monitored.
GAS SEN LEVEL*		Contamination level of ambient air that is judged by A/C auto amp. according to value from exhaust gas / outside odor detecting sensor.

*: With ACCS

ACTIVE TEST

The signals used to activate each device forcibly supplied from A/C auto amp. operation check of air conditioning system can be performed.

Test item	Description
HVAC TEST	The operation check of air conditioning system can be performed by selecting the mode. Refer to the following table for the conditions of each mode.

Check each output device

	Test item						
	MODE 1	MODE 2	MODE 3	MODE 4	MODE 5	MODE 6	MODE 7
Mode door motor position	VENT	VENT	B/L	FOOT	D/F	DEF	DEF
Intake door motor position	REC	REC	20% FRE	FRE	FRE	FRE	FRE
Air mix door motor (driver side) position	FULL COLD	FULL COLD	FULL COLD	FULL HOT	FULL HOT	FULL HOT	FULL HOT
Air mix door motor (passenger side) position	FULL COLD	FULL COLD	FULL COLD	FULL HOT	FULL HOT	FULL HOT	FULL HOT
Blower motor control signal (duty ratio)	29%	29%	59%	91%	91%	59%	91%
Magnet clutch (A/C request signal)	ON	ON	ON	OFF	OFF	ON	ON
ECV duty ratio	100%	100%	50%	0%	0%	100%	100%
Ionizer*	ON	ON	OFF	ON	ON	OFF	OFF

*: With ACCS

NOTE:

Perform the inspection of each output device after starting the engine because the compressor is operated.

WORK SUPPORT

Setting change of each setting functions can be performed.

Work item	Description	Refer to
TEMP SET CORRECT	Setting change of temperature setting trimmer can be performed.	HAC-58, "Temperature Setting Trimmer"
REC MEMORY SET	Setting change of inlet port memory function (REC) can be performed.	HAC-58, "Inlet Port Memory Function (REC)"
FRE MEMORY SET	Setting change of inlet port memory function (FRE) can be performed.	HAC-59, "Inlet Port Memory Function (FRE)"
BLOW SET	In FOOT mode, the air blowing to DEF can change ON/OFF.	HAC-59, "Foot Position Setting Trimmer"
GAS SENSOR ADJUSTMENT*	Setting change of exhaust gas / outside odor detecting sensor sensitivity adjustment function can be performed.	HAC-60, "Exhaust Gas/ outside Odor Detecting Sensor Sensitivity Adjustment Function"
CLEAN SW SET*	Setting change of auto intake switch interlocking movement change function can be performed.	HAC-60, "Auto Intake Switch Interlocking Movement Change Function"
TARGET EVAPORATOR TEMP UPPER LIMIT SETTING	Setting change of evaporator target temperature upper limit value can be performed.	HAC-59, "Setting of Target Evaporator Temperature Upper Limit Value"

*: With ACCS

NOTE:

When the battery cable is disconnected from the negative terminal or when the battery voltage becomes 10 V or less, the setting of WORK SUPPORT may be cancelled.

CONFIGURATION

The vehicle specification that is written in A/C auto amp. can be displayed or stored.
The vehicle specification can be written when A/C auto amp. is replaced.
Refer to HAC-56, "Description".

ECU DIAGNOSIS INFORMATION

A/C AUTO AMP.

Reference Value

INFOID:0000000011284624

CONSULT DATA MONITOR REFERENCE VALUES

NOTE:

The following table includes information (items) inapplicable to this vehicle. For information (items) applicable to this vehicle, refer to CONSULT display items.

Monitor item	Condition		Value/Status
AMB TEMP SEN	Ignition switch ON		Equivalent to ambient temperature
IN-VEH TEMP	Ignition switch ON		Equivalent to in-vehicle temperature
INT TEMP SEN	Ignition switch ON		Equivalent to evaporator fin temperature
SUNLOAD SEN	Ignition switch ON		Equivalent to sunload amount
AMB SEN CAL	Ignition switch ON		Equivalent to ambient temperature
IN-VEH CAL	Ignition switch ON		Equivalent to in-vehicle temperature
INT TEMP CAL	Ignition switch ON		Equivalent to evaporator fin temperature
SUNL SEN CAL	Ignition switch ON		Equivalent to sunload amount
COMP REQ SIG	Engine: Run at idle after warming up	A/C switch: ON (Compressor operation status)	On
		A/C switch: OFF	Off
COMP ECV DUTY	Engine: Run at idle after warming up	Active test (HVAC test): MODE 1	100%
		Active test (HVAC test): MODE 2	100%
		Active test (HVAC test): MODE 3	50%
		Active test (HVAC test): MODE 4	0%
		Active test (HVAC test): MODE 5	0%
		Active test (HVAC test): MODE 6	100%
		Active test (HVAC test): MODE 7	100%
FAN REQ SIG	Engine: Run at idle after warming up	Blower motor: ON	On
		Blower motor: OFF	Off
FAN DUTY	Engine: Run at idle after warming up	Blower motor: ON	25 – 79
		Blower motor: OFF	0
XM	Ignition switch ON		Value according to target air flow temperature (driver side)

Monitor item	Condition	Value/Status
ENG COOL TEMP	Ignition switch ON	Equivalent to engine coolant temperature
VEHICLE SPEED	Turn drive wheels and compare CONSULT value with the speedometer indication.	Equivalent to speedometer reading
BLOWER MOT VOLT	**NOTE:** This item is indicated, but not monitored.	0 V
GAS SEN LEVEL*	Ignition switch ON	Values depending on contamination of ambient air

*: With ACCS

TERMINAL LAYOUT

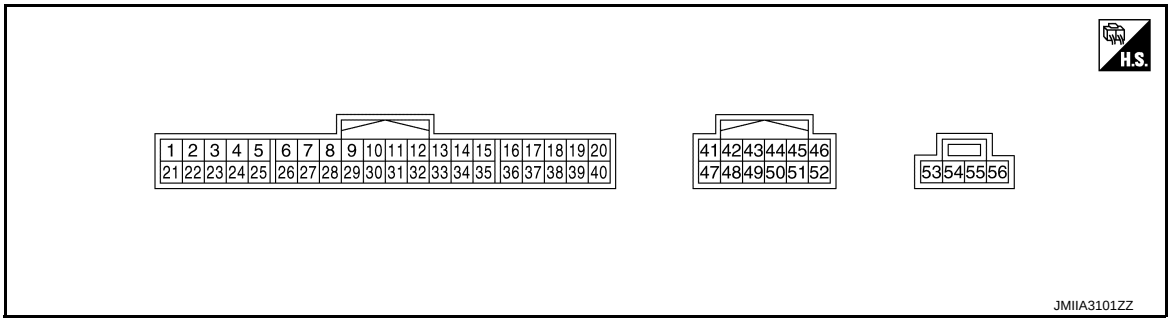

PHYSICAL VALUES

Terminal No. (Wire color)		Description		Condition	Value
+	–	Signal name	Input/ Output		
1 (L)	—	CAN-H	Input/ Output	—	—
2 (B)	Ground	Ground	—	Ignition switch ON	0 – 0.1 V
3 (W)	Ground	Battery power supply	Input	Ignition switch OFF	11 – 14 V
7 (G)	Ground	Ambient sensor signal	Input	Ignition switch ON	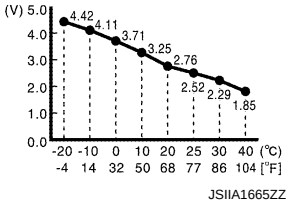
9 (R)	Ground	Sunload sensor signal	Input	Ignition switch ON	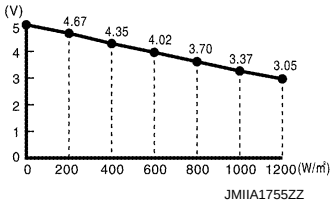
13 (V)	Ground	Accessory power supply	Input	Ignition switch ACC or ON	11 – 14 V

Terminal No. (Wire color)		Description		Condition		Value
+	–	Signal name	Input/ Output			
16 (P)	Ground	Door motor LIN signal	Input/ Output	Ignition switch ON		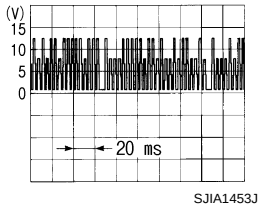
17 (R)	Ground	Door motor power supply	Output	Ignition switch ON		11 – 14 V
18 (P)	Ground	Blower motor control signal	Output	• Ignition switch ON • Blower motor: 1st speed (manual)		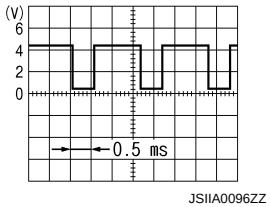
20*1 (L)	Ground	Heated steering wheel relay control signal	Output	Ignition switch ON	Within 30 seconds after turning ON the heated steering switch.	0 V
					Other than the above	12 V
21 (P)	—	CAN-L	Input/ Output	—		—
22 (B)	Ground	Ground	—	Ignition switch ON		0 – 0.1 V
23 (W)	Ground	Ignition power supply	Input	Ignition switch ON		11 – 14 V
26 (B)	Ground	Sensor ground	—	Ignition switch ON		0 – 0.1 V
27 (LG)	Ground	In-vehicle sensor signal	Input	Ignition switch ON		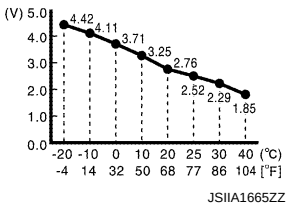
28 (BR)	Ground	Intake sensor signal	Input	Ignition switch ON		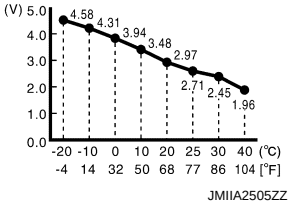

Terminal No. (Wire color)		Description		Condition		Value
+	–	Signal name	Input/ Output			
30*2 (BG)	Ground	Exhaust gas / outside odor detecting sensor signal	Input	Ignition switch ON **NOTE:** The signal is depending on measurement environment of the vehicle		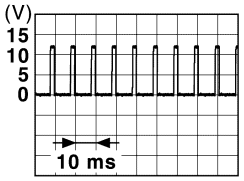 JMIIA2115GB
37 (B)	Ground	Door motor ground	—	Ignition switch ON		0 – 0.1 V
38*2 (BG)	Ground	Ionizer ON/OFF control signal	Output	• Ignition switch ON • Blower motor: OFF		9.5 – 13.5 V
				• Ignition switch ON • Blower motor: ON		0 – 0.5 V
40 (BG)	Ground	ECV control signal	Output	Ignition switch ON	ACTIVE TEST (HVAC TEST: MODE1)	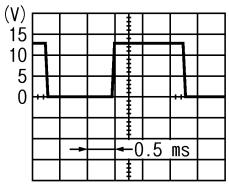 SJIA1607E
43*3 (BG)	Ground	Heat sensor ground LH	—	Ignition switch ON		0 – 0.1 V
44*3 (R)	Ground	Heat sensor ground RH	—	Ignition switch ON		0 – 0.1 V
45*3 (BR)	Ground	Heat sensor signal RH	Input	Ignition switch ON		5 V
				Other than above		0 V
46*3 (R)	Ground	Heat sensor signal LH	Input	Ignition switch ON		5 V
				Other than above		0 V
53*3 (V)	Ground	Heated seat control signal RH	Output	Heated seat ON		0 V
				Heated seat OFF		Battery voltage
54*3 (B)	Ground	Ground	—	Ignition switch ON		0 – 0.1 V
55*3 (GR)	Ground	Heated seat control signal LH	Output	Heated seat ON		0 V
				Heated seat OFF		Battery voltage
56*3 (B)	Ground	Ground	—	Ignition switch ON		0 – 0.1 V

- *1: With heated steering wheel system
- *2: With ACCS
- *3: With heated seat system

Fail-safe

INFOID:0000000011284625

FAIL-SAFE FUNCTION

If a communication error exists between the A/C auto amp. and display control unit for 30 seconds or longer, air conditioning is controlled under the following conditions:

When ambient temperature is less than 3°C (37°F) and engine coolant temperature is less than 56°C (133°F)

Compressor	**: ON**
Air outlet	**: DEF**
Air inlet	**: FRE (Fresh air intake)**
Blower fan speed	**: AUTO**
Set temperature	**: Setting before communication error occurs**

When ambient temperature is 3°C (37°F) or more, or engine coolant temperature is 56°C (133°F) or more

Compressor	**: ON**
Air outlet	**: AUTO**
Air inlet	**: FRE (Fresh air intake)**
Blower fan speed	**: AUTO**
Set temperature	**: Setting before communication error occurs**

NOTE:
When ambient temperature is less than 3°C (37°F) and engine coolant temperature is less than 56°C (133°F), low coolant temperature starting control do not operated.

DTC Index

INFOID:0000000011284626

DTC	Items (CONSULT screen terms)	Reference
U1000	CAN COMM CIRCUIT	HAC-62, "DTC Description"
U1010	CONTROL UNIT (CAN)	HAC-63, "DTC Description"
B2578	IN-VEHICLE SENSOR	HAC-64, "DTC Description"
B2579	IN-VEHICLE SENSOR	
B257B	AMBIENT SENSOR	HAC-67, "DTC Description"
B257C	AMBIENT SENSOR	
B2581	INTAKE SENSOR	HAC-70, "DTC Description"
B2582	INTAKE SENSOR	
B262A*1	GAS SENSOR*2	HAC-73, "DTC Description"
B262B*1	GAS SENSOR*2	
B2630*3	SUNLOAD SENSOR	HAC-76, "DTC Description"
B2631*3	SUNLOAD SENSOR	
B2632	DR AIR MIX DOOR MOT	HAC-79, "DTC Description"
B2633	DR AIR MIX DOOR MOT	
B2634	PASS AIR MIX DOOR MOT	HAC-82, "DTC Description"
B2635	PASS AIR MIX DOOR MOT	
B2636	DR VENT DOOR FAIL	HAC-85, "DTC Description"
B2637	DR B/L DOOR FAIL	
B2638	DR D/F1 DOOR FAIL	
B2639	DR DEF DOOR FAIL	
B263D	FRE DOOR FAIL	HAC-88, "DTC Description"
B263E	20P FRE DOOR FAIL	
B263F	REC DOOR FAIL	
B2654	D/F2 DOOR FAIL	HAC-85, "DTC Description"
B2655	B/L2 DOOR FAIL	

DTC	Items (CONSULT screen terms)	Reference
B2657*1	GAS SENSOR CIRCUIT*2	HAC-73, "DTC Description"
B2658*1	GAS SENSOR CIRCUIT*2	
B27B0	A/C AUTO AMP.	HAC-91, "DTC Description"
B277E*4	HEAT SENSOR (DRIVER SIDE)	SE-53, "DTC Description"
B277F*4	HEAT SENSOR (DRIVER SIDE)	SE-55, "DTC Description"
B27AF*4	HEAT SENSOR (PASSENGER SIDE)	SE-57, "DTC Description"
B27CF*4	HEAT SENSOR (PASSENGER SIDE)	SE-59, "DTC Description"

*1: With ACCS
*2: This item indicates the exhaust gas/outside odor detecting sensor.
*3: Perform self-diagnosis under sunshine. When performing indoors, aim a light (more than 60 W) at sunload sensor, otherwise self-diagnosis indicates even though the sunload sensor is functioning normally.
*4: With heated seat system

ECM, IPDM E/R

List of ECU Reference

INFOID:0000000011284627

ECU	Reference
ECM	EC-87, "Reference Value"
	EC-104, "Fail safe"
	EC-106, "DTC Inspection Priority Chart"
	EC-108, "DTC Index"
IPDM E/R	PCS-16, "Reference Value"
	PCS-22, "Fail-safe"
	PCS-23, "DTC Index"

WIRING DIAGRAM

AUTOMATIC AIR CONDITIONING SYSTEM

Wiring Diagram

INFOID:0000000011284628

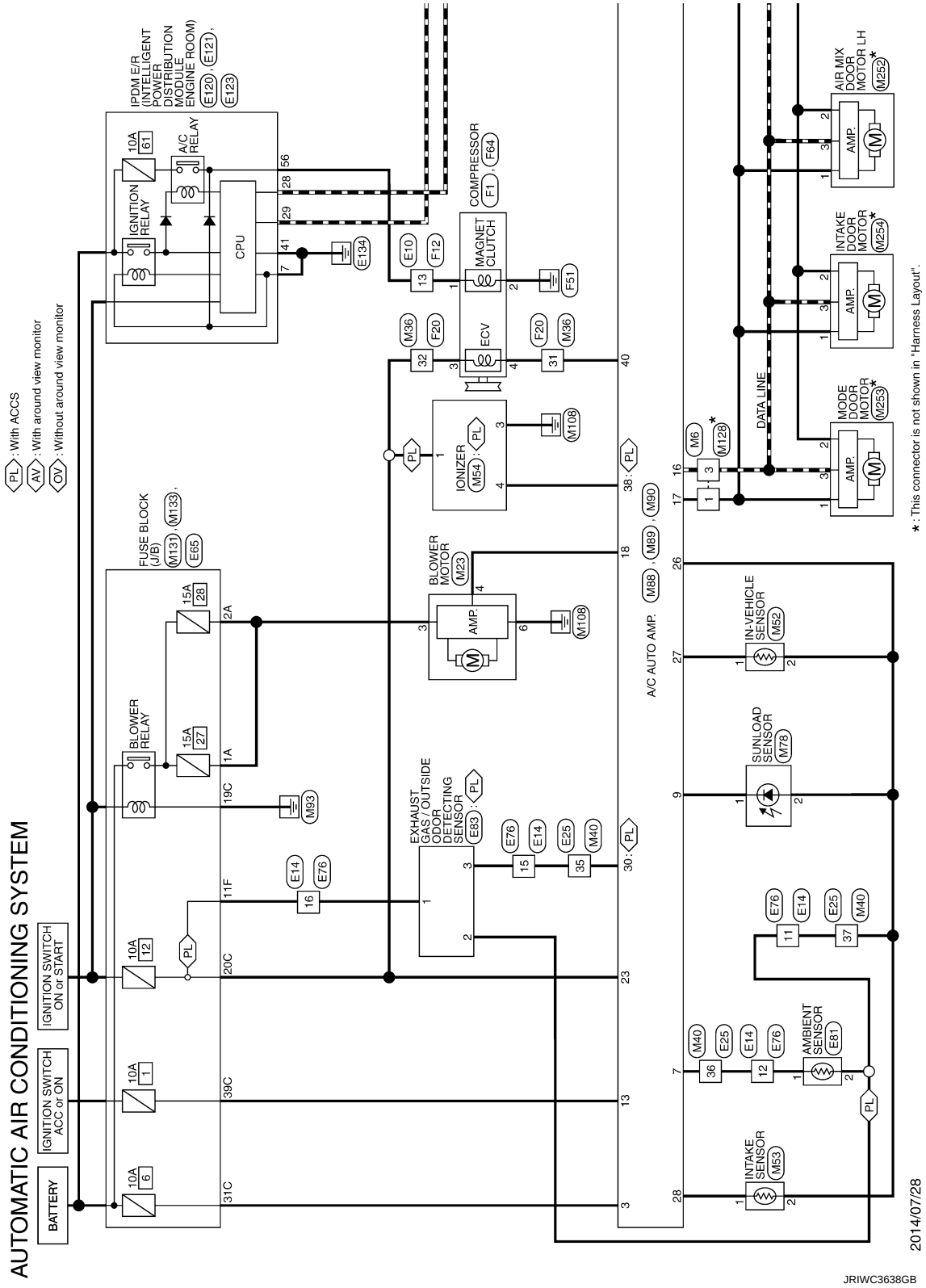

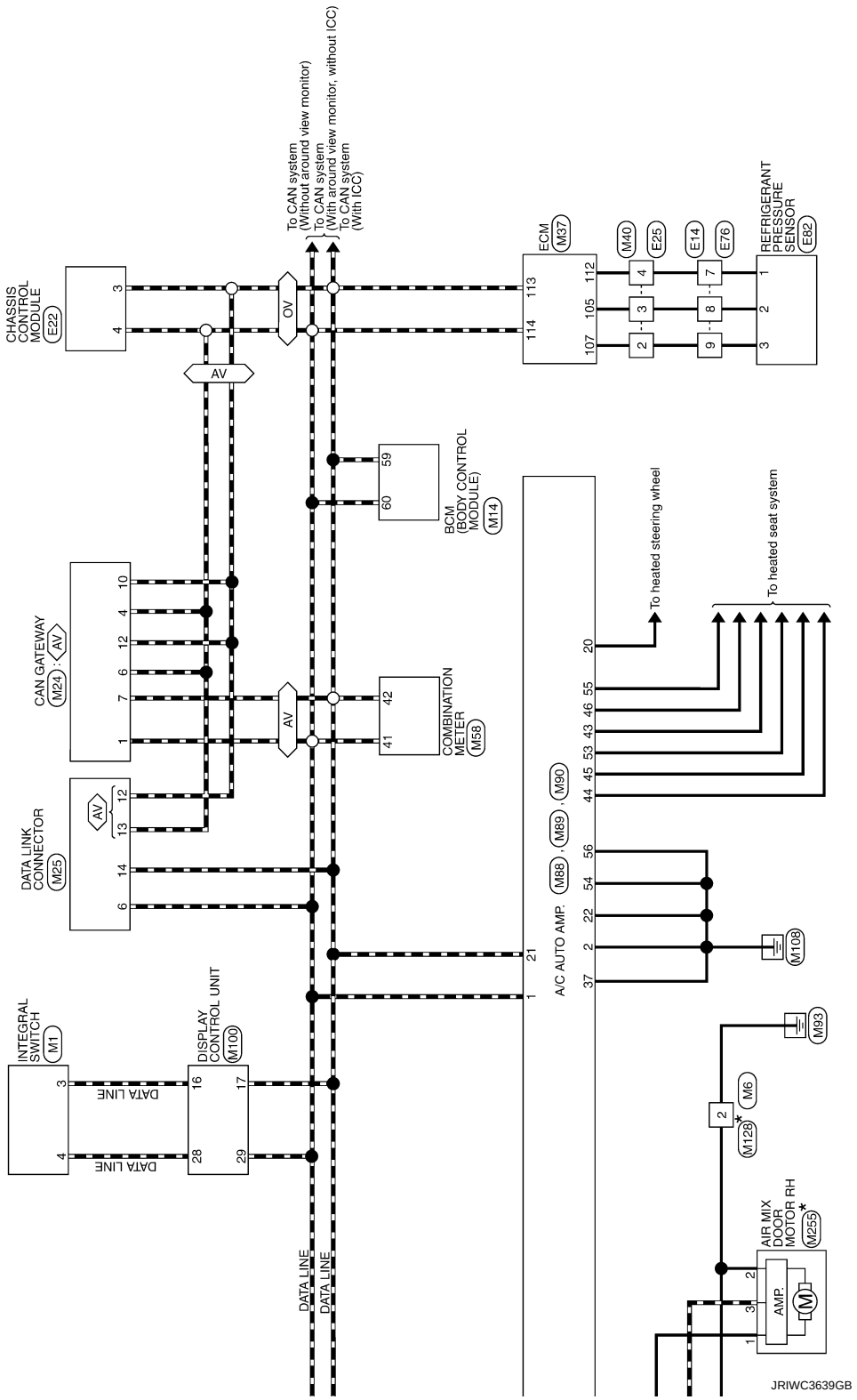
CHASSIS CONTROL MODULE (E22)
To CAN system (Without around view monitor)
To CAN system (With around view monitor, without ICC)
To CAN system (With ICC)
ECM (M37)
REFRIGERANT PRESSURE SENSOR (E82)
(M40) (E25) (E14) (E76)
BCM (BODY CONTROL MODULE) (M14)
CAN GATEWAY (M24) : AV
COMBINATION METER (M58)
DATA LINK CONNECTOR (M25)
To heated steering wheel
To heated seat system
A/C AUTO AMP. (M88), (M89), (M90)
INTEGRAL SWITCH (M1)
DISPLAY CONTROL UNIT (M100)
DATA LINE
AV
OV
(M108)
(M93)
(M6)
(M128)*
AIR MIX DOOR MOTOR RH* (M255)
AMP.
JRIWC3639GB

AUTOMATIC AIR CONDITIONING SYSTEM

Connector No.	E10
Connector Name	WIRE TO WIRE
Connector Type	SAA36MB-RS8-SHZ8

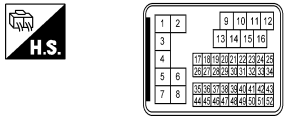

Terminal No.	Color Of Wire	Signal Name [Specification]
1	L/Y	-
2	SHIELD	-
3	L/B	-
4	SHIELD	-
5	BR	-
6	SB	-
7	G	-
8	W	-
9	W	-
10	Y	-
11	P	-
12	SB	-
13	L	-
14	G	-
15	LG	-
16	BR	-
17	L	-
18	P	-
19	GR	-
20	G	-
21	V	-
22	Y	-
23	L	-
24	GR	-
25	V	-
26	BR	-
27	W	-
28	V	-
29	BR	-
30	R	-
31	P	-
32	G	-
33	B	-
34	BG	-
35	LG	-
36	W	-
37	SHIELD	-
38	L	-
39	P	-
40	R	-
41	W	-
42	LG	-
43	G	-
44	V	-
45	Y	-
46	SHIELD	-
47	W	-
48	BR	-
49	G	-
50	B	-
51	SB	-
52	R	-

Connector No.	E14
Connector Name	WIRE TO WIRE
Connector Type	SAA18MB-RS10-SJZ2

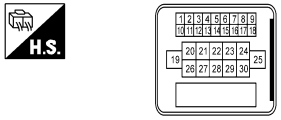

Terminal No.	Color Of Wire	Signal Name [Specification]
4	Y	-
5	L	-
6	B	-
7	BR	-
8	LG	-
9	W	-
11	V	-
12	R	-
13	B	-
14	P	-
15	GR	-
16	V	-
17	B	-
18	P	-
21	B	-
22	SHIELD	-
23	P	-
24	L	-
25	V	-
26	B	-
28	B	-

Connector No.	E22
Connector Name	CHASIS CONTROL MODULE
Connector Type	TH24FW-NH

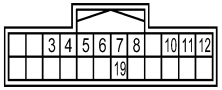

Terminal No.	Color Of Wire	Signal Name [Specification]
3	P	CAN-L
4	L	CAN-H
5	V	DRIVE MODE SELECT SW (UP)
6	G	DRIVE MODE SELECT SW (DOWN)
7	W	CHASSIS COMM-L
8	W	CHASSIS COMM-L
10	G	IGN
11	L	CHASSIS COMM-H
12	B	GROUND
19	L	CHASSIS COMM-H

Connector No.	E25
Connector Name	WIRE TO WIRE
Connector Type	TH80FW-CS16-TM4

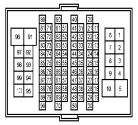

Terminal No.	Color Of Wire	Signal Name [Specification]
2	W	-
3	LG	-
4	BR	-
6	V	-
7	L	-
10	BR	-
11	L	-
12	GR	-
13	W	-
14	B	-
15	SB	-
16	Y	-
17	BR	-
18	P	-
31	Y	-
32	GR	-
35	GR	-
36	R	-
37	V	-
38	L	-
39	Y	-
40	SB	-
41	LG	-
44	Y	-
45	W	-
46	B	-
47	G	-
48	SHIELD	-
49	R	-
50	BR	-
51	L	-
52	W	-
53	V	-
54	P	-
55	W	-
56	SB	-
57	BG	-
58	B	-
59	W	-
61	R	-
62	SB	-
63	LG	-
64	Y	-
65	SB	-
66	GR	-
67	LG	-
68	BG	-

JRIWC3640GB

AUTOMATIC AIR CONDITIONING SYSTEM

Terminal No.	Color Of Wire	Signal Name [Specification]
71	LG	-
72	V	-
73	G	-
74	BR	-
75	V	-
78	P	-
79	SB	-
83	R	-
86	BG	-
91	G	-
92	Y	-
94	GR	-
95	BG	-
96	W	-
97	LG	-
98	L	-
99	P	-
100	SHIELD	-

Connector No.	E76
Connector Name	WIRE TO WIRE
Connector Type	SAA18FB-RS10-SJZ2

H.S.

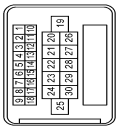

Terminal No.	Color Of Wire	Signal Name [Specification]
4	Y	-
5	L	-
6	B	-
7	V	-
8	LG	-
9	GR	-
11	LG	-
12	BG	-
13	B	-
14	R	-
15	G	-
16	V	-
17	B	-
18	P	-
21	B	-
22	SHIELD	-
23	P	-
24	L	-
25	V	-
26	B	-
28	B	-

Connector No.	E81
Connector Name	AMBIENT SENSOR
Connector Type	RS02FB

H.S.

Terminal No.	Color Of Wire	Signal Name [Specification]
1	BG	-
2	LG	-

Connector No.	E82
Connector Name	REFRIGERANT PRESSURE SENSOR
Connector Type	RK03FB

H.S.

Terminal No.	Color Of Wire	Signal Name [Specification]
1	V	-
2	LG	-
3	GR	-

Connector No.	E83
Connector Name	EXHAUST GAS / OUTSIDE ODOR DETECTING SENSOR
Connector Type	RH03FB

H.S.

Terminal No.	Color Of Wire	Signal Name [Specification]
1	V	AQS_POWER
2	P	AQS_S_GND
3	G	AQS_S_OUTPUT

Connector No.	E120
Connector Name	IPDM E/R (INTELLIGENT POWER DISTRIBUTION MODULE ENGINE ROOM)
Connector Type	NS12FW-CS

H.S.

Terminal No.	Color Of Wire	Signal Name [Specification]
7	B/W	-
9	P	-
10	LG	-
11	V	-
13	Y	-
14	SB	-
15	Y	-
17	GR	-
18	L	-

Connector No.	E65
Connector Name	FUSE BLOCK (J/B)
Connector Type	TH12FW-NH

H.S.

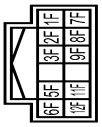

Terminal No.	Color Of Wire	Signal Name [Specification]
11F	G	-
12F	W	-
1F	V	-
2F	BR	-
3F	P	-
5F	P	-
6F	L	-
7F	R	-
8F	L	-
9F	L	-

JRIWC3641GB

AUTOMATIC AIR CONDITIONING SYSTEM

Connector No.	E121
Connector Name	IPDM E/R (INTELLIGENT POWER DISTRIBUTION MODULE ENGINE ROOM)
Connector Type	TH32FW-NH

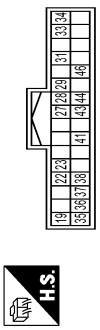

Terminal No.	Color Of Wire	Signal Name [Specification]
19	P	-
22	BG	-
23	LG	-
27	GR	-
28	P	-
29	L	-
31	G	-
33	SB	-
34	Y	-
35	G	-
36	SB	-
37	GR	-
38	BR	-
41	GR	-
43	V	-
44	GR	-
46	R	-

Connector No.	E123
Connector Name	IPDM E/R (INTELLIGENT POWER DISTRIBUTION MODULE ENGINE ROOM)
Connector Type	NS10FW-CS

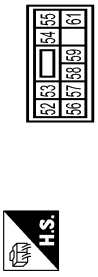

Terminal No.	Color Of Wire	Signal Name [Specification]
52	G	-
53	BR	-
54	Y	-
55	W	-
56	L	-
57	P	-
58	SB	-
59	V	-
61	GR	-

Connector No.	F1
Connector Name	COMPRESSOR
Connector Type	RH02FB

Terminal No.	Color Of Wire	Signal Name [Specification]
1	L	-
2	B	-

Connector No.	F12
Connector Name	WIRE TO WIRE
Connector Type	SAA36FB-RS8-SHZ8

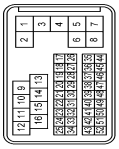

Terminal No.	Color Of Wire	Signal Name [Specification]
1	L/Y	-
2	SHIELD	-
3	L/B	-
4	SHIELD	-
5	BR	-
6	GR	-
7	G	-
8	W	-
9	W	-
10	G	-
11	R	-
12	P	-
13	L	-
14	LG	-
15	P	-
16	Y	-
17	L	-
18	P	-
19	GR	-
20	BG	-
21	LG	-
22	W	-
23	Y	-
24	LG	-
25	V	-
26	W	-
27	V	-
28	BR	-
29	LG	-
30	R	-
31	P	-
32	GR	-
33	B	-
34	BG	-
35	LG	-
36	SB	-
37	SHIELD	-
38	W	-
39	Y	-
40	G	-
41	B	-
42	GR	-
43	R	-
44	BG	-
45	Y	-
46	SHIELD	-
47	W	-
48	LG	-
49	L	-
50	R	-
51	SB	-
52	G	-

Connector No.	F20
Connector Name	WIRE TO WIRE
Connector Type	TK36FW-NS10

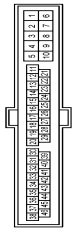

Terminal No.	Color Of Wire	Signal Name [Specification]
1	Y	-
4	R	-
5	B	-
6	W	-
7	G	-
8	BG	-
9	Y	-
10	GR	-
21	LG	-
22	B	-
31	BG	-
32	Y	-
34	BG	-

Connector No.	F64
Connector Name	COMPRESSOR
Connector Type	RK02FGY

Terminal No.	Color Of Wire	Signal Name [Specification]
3	Y	-
4	BG	-

JRIWC3642GB

AUTOMATIC AIR CONDITIONING SYSTEM

Connector No.	M1
Connector Name	INTEGRAL SWITCH
Connector Type	TH24FW-NH

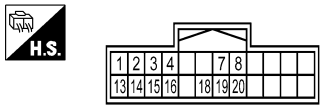

Terminal No.	Color Of Wire	Signal Name [Specification]
1	W	BAT
2	R	ILL(TAIL_LAMP)
3	SB	AV COMM (L)
4	LG	AV COMM (H)
7	W/B	DISK EJECT SIGNAL
8	G	HAZERD SIGNAL
13	B	GND
14	V	ACC
15	B	ILLUMINATION CONTROL SIGNAL
16	BG	DISK EJECT SIGNAL GROUND
18	R	IGN
19	BR	CAMERA SWITCH SIGNAL
20	LG	AIR BAG INDICATOR OFF SIGNAL

Connector No.	M6
Connector Name	WIRE TO WIRE
Connector Type	A03MW-P

Terminal No.	Color Of Wire	Signal Name [Specification]
1	R	-
2	B	-
3	P	-

Connector No.	M14
Connector Name	BCM (BODY CONTROL MODULE)
Connector Type	TH40FB-NH

Terminal No.	Color Of Wire	Signal Name [Specification]
48	R	PUSH-BTN IGN SW ILL PWR
52	G	DONGLE LINK
54	V	COMM LINE
55	R	RAIN SENSOR
59	P	CAN-L
60	L	CAN-H
61	G	REAR WINDOW DEF RLY CONT
62	R	STARTER RLY CONT
64	V	I-KEY WARN BUZZER
65	B	OUTS HD LAMP CONT
66	B	BLOWER FAN RLY CONT
67	W/B	IGN RLYAY (F/B) CONT
68	R	DIMMER
69	GR	A/T SHIFT SELECT PWR SPLY
70	B	IGN RLYAY (IPDM E/R) CONT
71	G	DR DOOR REQ SW
72	SB	PASS DOOR REQ SW
75	BR	COMBI SW INPUT 5
76	BG	COMBI SW INPUT 4
77	V	COMBI SW INPUT 3
78	Y	COMBI SW INPUT 2
79	LG	COMBI SW INPUT 1
80	L	TR LID OPNR SW

Connector No.	M23
Connector Name	BLOWER MOTOR
Connector Type	NS03FW-M3

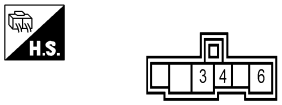

Terminal No.	Color Of Wire	Signal Name [Specification]
3	Y	-
4	P	-
6	B	-

Connector No.	M24
Connector Name	CAN GATEWAY
Connector Type	TH12FW-NH

Terminal No.	Color Of Wire	Signal Name [Specification]
1	L	CAN-H
3	W	BATTERY
4	L	CAN-H
5	B	GND
6	L	CAN-H
7	P	CAN-L
9	R	IGN
10	R	CAN-L
11	B	GND
12	R	CAN-L

Connector No.	M25
Connector Name	DATA LINK CONNECTOR
Connector Type	BD16FW

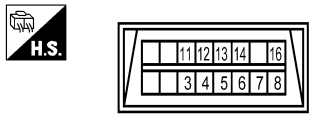

Terminal No.	Color Of Wire	Signal Name [Specification]
3	SB	AV COMM (L)
4	B	EARTH
5	B	EARTH
6	L	CAN-H
7	V	KLINE
8	W	IGN_SW
11	LG	AV COMM (H)
12	R	CAN-L
13	L	CAN-H
14	P	CAN-L
16	W	POWER

Connector No.	M36
Connector Name	WIRE TO WIRE
Connector Type	TK36MW-NS10

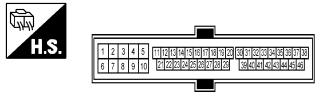

Terminal No.	Color Of Wire	Signal Name [Specification]
1	Y	-
4	R	-
5	B	-
6	W	-
7	W	-
8	BG	-
9	R	-
10	R	-
21	LG	-

JRIWC3643GB

AUTOMATIC AIR CONDITIONING SYSTEM

22	B	-
31	BG	-
32	W	-
34	BG	-

Connector No.	M37
Connector Name	ECM
Connector Type	RH24FGY-RZ8-R-LH-Z

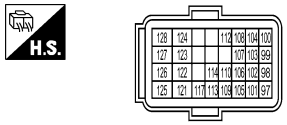

Terminal No.	Color Of Wire	Signal Name [Specification]
97	Y	ACCELERATOR PEDAL POSITION SENSOR 1
98	BR	ACCELERATOR PEDAL POSITION SENSOR 2
99	W	SENSOR POWER SUPPLY (ACCELERATOR PEDAL POSITION SENSOR 1)
100	G	SENSOR GROUND (ACCELERATOR PEDAL POSITION SENSOR 1)
101	SB	ASCD/ICC STEERING SWITCH
102	LG	EVAP CONTROL SYSTEM PRESSURE SENSOR
103	L	SENSOR POWER SUPPLY (ACCELERATOR PEDAL POSITION SENSOR 2)
104	R	SENSOR GROUND (ACCELERATOR PEDAL POSITION SENSOR 2)
105	L	REFRIGERANT PRESSURE SENSOR
106	P	FUEL TANK TEMPERATURE SENSOR
107	GR	SENSOR POWER SUPPLY (EVAP CONTROL SYSTEM PRESSURE SENSOR, REFRIGERANT PRESSURE SENSOR)
108	Y	SENSOR GROUND (ASCD/ICC STEERING SWITCH)
109	BR	TRANSMISSION RANGE SWITCH
110	V	ENGINE SPEED SIGNAL OUTPUT
112	V	GNDA PDPRES/FTPRES
113	P	CAN COMMUNICATION LINE
114	L	CAN COMMUNICATION LINE
117	V	DATA LINK CONNECTOR
121	LG	EVAP CANISTER VENT CONTROL VALVE
122	SB	STOP LAMP SWITCH
123	B	ECM GROUND
124	B	ECM GROUND
125	R	POWER SUPPLY FOR ECM
126	BG	BRAKE PEDAL POSITION SWITCH
127	B	ECM GROUND
128	B	ECM GROUND

Connector No.	M40
Connector Name	WIRE TO WIRE
Connector Type	TH80MW-CS16-TM4

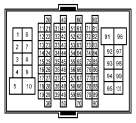

Terminal No.	Color Of Wire	Signal Name [Specification]
2	GR	-
3	L	-
4	V	-
6	W/B	-
7	V	-
10	W	-
11	W	-
12	B	-
13	GR	-
14	B	-
15	SB	-
16	B	-
17	LG	-
18	B	-
31	W	-
32	V	-
35	BG	-
36	G	-
37	B	-
38	L	-
39	Y	-
40	GR	-
41	L	-
44	BR	-
45	W	-
46	G	-
47	R	-
48	SHIELD	-
49	B	-
50	BR	-
51	L	-
52	W	-
53	G	-
54	Y	-
55	P	-
56	BG	-
57	GR	-
58	B	-
59	SB	-
61	W/B	-
62	SB	-
63	LG	-
64	Y	-
65	R	-
66	V	-
67	LG	-
68	BG	-
71	V	-
72	LG	-
73	R	-
74	BR	-
75	B	-
78	G	-
79	R	-
83	R	-
86	V	-
91	W	-
92	R	-
94	BG	-
95	BR	-
96	W	-
97	LG	-
98	Y	-
99	BR	-
100	SHIELD	-

Connector No.	M52
Connector Name	IN-VEHICLE SENSOR
Connector Type	A02FW

Terminal No.	Color Of Wire	Signal Name [Specification]
1	LG	-
2	B	-

Connector No.	M53
Connector Name	INTAKE SENSOR
Connector Type	C02FW

Terminal No.	Color Of Wire	Signal Name [Specification]
1	BR	-
2	B	-

Connector No.	M54
Connector Name	IONIZER
Connector Type	TH04FW-NH

Terminal No.	Color Of Wire	Signal Name [Specification]
1	W	IGN
3	B	GND
4	BG	ION_ON_OFF

JRIWC3644GB

AUTOMATIC AIR CONDITIONING SYSTEM

Connector No.	M58
Connector Name	COMBINATION METER
Connector Type	TH12FW-NH

H.S.

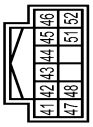

Terminal No.	Color Of Wire	Signal Name [Specification]
41	L	CAN-H
42	P	CAN-L
43	B	ILLUMINATION CONTROL SIGNAL
44	Y	FUEL LEVEL SENSOR GROUND
45	W	BATTERY POWER SUPPLY
46	R	IGNITION SIGNAL
47	LG	AV COMMUNICATION SIGNAL (H)
48	SB	AV COMMUNICATION SIGNAL (L)
51	BR	FUEL LEVEL SENSOR SIGNAL
52	B	GROUND

Connector No.	M88
Connector Name	A/C AUTO AMP.
Connector Type	TH40FW-NH

H.S.

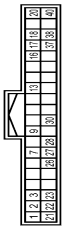

Terminal No.	Color Of Wire	Signal Name [Specification]
1	L	CAN-H
2	B	GND
3	W	BAT
7	G	AMBIENT SENS
9	R	SUNLOAD SENS
13	V	IGN SW ACC
16	P	LIN
17	R	DOOR MOTOR PWR SPLY
18	P	BLOWER MOTOR CONT
20	L	HEAT STRG WHL RLY CONT
21	P	CAN-L
22	B	GND
23	W	IGN SW ON
26	B	SENS GND
27	LG	IN-VEHICLE SENS
28	BR	INTAKE SENS
30	BG	EXH GAS/OUT ODOR DTCT SENS
37	B	GND
38	BG	IONIZER CONT
40	BG	ECV CONT

Connector No.	M78
Connector Name	SUNLOAD SENSOR
Connector Type	K02FB

H.S.

Terminal No.	Color Of Wire	Signal Name [Specification]
1	R	-
2	B	-

Connector No.	M89
Connector Name	A/C AUTO AMP.
Connector Type	TH12FW-NH

H.S.

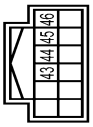

Terminal No.	Color Of Wire	Signal Name [Specification]
43	BG	SEAT_HTR_SENS_GND2
44	R	SEAT_HTR_SENS_GND1
45	BR	SEAT_HTR_SENS1
46	R	SEAT_HTR_SENS2

Connector No.	M90
Connector Name	A/C AUTO AMP.
Connector Type	NS04FW-CS

H.S.

Terminal No.	Color Of Wire	Signal Name [Specification]
53	V	SEAT_HTR1
54	B	SEAT_HEATER1_GND(POWER)
55	GR	SEAT_HTR2
56	B	SEAT_HEATER2_GND(POWER)

Connector No.	M100
Connector Name	DISPLAY CONTROL UNIT
Connector Type	TH24FW-NH

H.S.

Terminal No.	Color Of Wire	Signal Name [Specification]
16	SB	AV COMM (L)
17	P	CAN-L
19	R	DIMMER SIGNAL
20	BR	REVERSE SIGNAL
22	B	GND
25	SB	-
26	BR	CAMERA SWITCH SIGNAL
28	LG	AV COMM (H)
29	L	CAN-H
30	R	IGN
31	R	VEHICLE SPEED SIGNAL (8-PULSE)
33	SB	ACC
34	Y	BAT

Connector No.	M128
Connector Name	WIRE TO WIRE
Connector Type	A03FW

H.S.

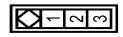

Terminal No.	Color Of Wire	Signal Name [Specification]
1	R	-
2	B	-
3	P	-

JRIWC3645GB

AUTOMATIC AIR CONDITIONING SYSTEM

Connector No.	M131
Connector Name	FUSE BLOCK (J/B)
Connector Type	M02FW-LC

Terminal No.	Color Of Wire	Signal Name [Specification]
1A	Y	-
2A	Y	-

Connector No.	M133
Connector Name	FUSE BLOCK (J/B)
Connector Type	TH40FW-NH

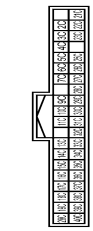

Terminal No.	Color Of Wire	Signal Name [Specification]
10C	V	-
11C	V	-
13C	L	-
14C	Y	-
15C	R	-
16C	R	-
17C	L	-
18C	BG	- [Without DRPO]
18C	P	- [With DRPO]
19C	B	-
20C	W	-
21C	L	-
22C	L	-
23C	L	-
25C	LG	-
26C	SB	-
27C	P	-
28C	W	-
29C	W	-
2C	R	-
30C	R	-
31C	W	-
32C	R	-
33C	B	-
34C	W/B	-
35C	SB	-
36C	R	-
37C	W	-
38C	SB	-
39C	V	-
3C	P	-
40C	G	-
4C	P	-
5C	P	-
6C	G	-
7C	G	-
9C	V	-

Connector No.	M252
Connector Name	AIR MIX DOOR MOTOR LH
Connector Type	A03FW

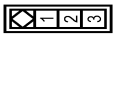

Terminal No.	Color Of Wire	Signal Name [Specification]
1	L	-
2	B	-
3	L	-

Connector No.	M253
Connector Name	MODE DOOR MOTOR
Connector Type	A03FW

Terminal No.	Color Of Wire	Signal Name [Specification]
1	L	-
2	B	-
3	L	-

Connector No.	M254
Connector Name	INTAKE DOOR MOTOR
Connector Type	A03FW

Terminal No.	Color Of Wire	Signal Name [Specification]
1	L	-
2	B	-
3	L	-

Connector No.	M255
Connector Name	AIR MIX DOOR MOTOR RH
Connector Type	A03FW

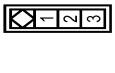

Terminal No.	Color Of Wire	Signal Name [Specification]
1	L	-
2	B	-
3	L	-

JRIWC3646GB

BASIC INSPECTION

DIAGNOSIS AND REPAIR WORK FLOW

Work Flow

INFOID:0000000011284629

OVERALL SEQUENCE

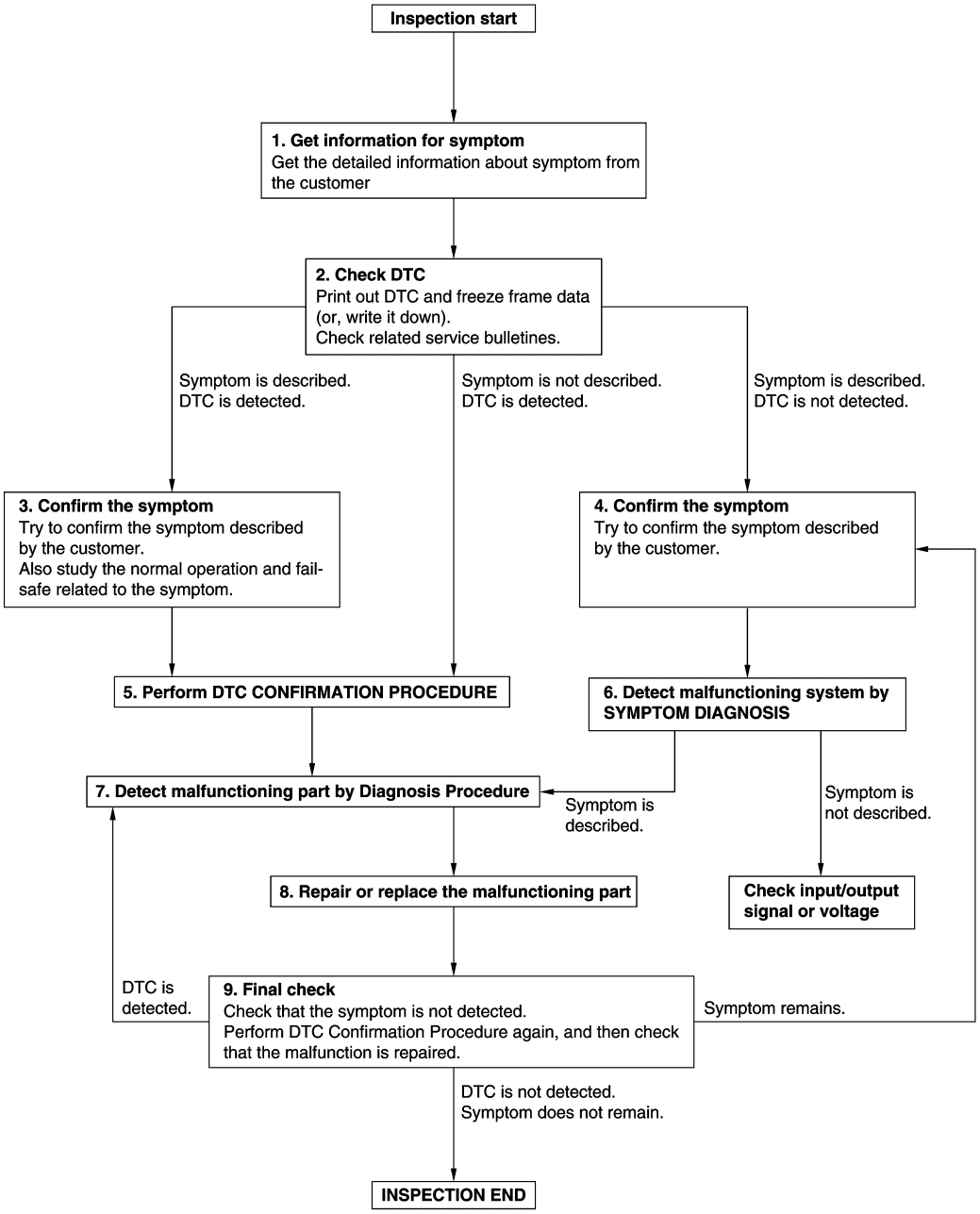

JMKIA8652GB

DETAILED FLOW

1. GET INFORMATION FOR SYMPTOM

1. Get detailed information from the customer about the symptom (the condition and the environment when the incident/malfunction occurs).
2. Check operation condition of the function that is malfunctioning.

>> GO TO 2.

2. CHECK DTC

1. Check DTC.
2. Perform the following procedure if DTC is detected.
- Record DTC and freeze frame data (Print them out using CONSULT.)
- Erase DTC.
- Study the relationship between the cause detected by DTC and the symptom described by the customer.
3. Check related service bulletins for information.

Are any symptoms described and any DTC detected?

Symptom is described, DTC is detected>>GO TO 3.
Symptom is described, DTC is not detected>>GO TO 4.
Symptom is not described, DTC is detected>>GO TO 5.

3. CONFIRM THE SYMPTOM

Try to confirm the symptom described by the customer.
Also study the normal operation and fail-safe related to the symptom.
Verify relation between the symptom and the condition when the symptom is detected.

>> GO TO 5.

4. CONFIRM THE SYMPTOM

Try to confirm the symptom described by the customer.
Verify relation between the symptom and the condition when the symptom is detected.

>> GO TO 6.

5. PERFORM DTC CONFIRMATION PROCEDURE

Perform DTC CONFIRMATION PROCEDURE for the detected DTC, and then check that DTC is detected again. At this time, always connect CONSULT to the vehicle, and check self diagnostic results in real time.
If two or more DTCs are detected, refer to DTC INSPECTION PRIORITY CHART, and determine trouble diagnosis order.

NOTE:
- Freeze frame data is useful if the DTC is not detected.
- Perform Component Function Check if DTC CONFIRMATION PROCEDURE is not included on Service Manual. This simplified check procedure is an effective alternative though DTC cannot be detected during this check.
  If the result of Component Function Check is NG, it is the same as the detection of DTC by DTC CONFIRMATION PROCEDURE.

Is DTC detected?

YES >> GO TO 7.
NO >> Check according to GI-42, "Intermittent Incident".

6. DETECT MALFUNCTIONING SYSTEM BY SYMPTOM DIAGNOSIS

Detect malfunctioning system according to SYMPTOM DIAGNOSIS based on the confirmed symptom in step 4, and determine the trouble diagnosis order based on possible causes and symptom.

Is the symptom described?

YES >> GO TO 7.
NO >> Monitor input data from related sensors or check voltage of related module terminals using CONSULT.

7. DETECT MALFUNCTIONING PART BY DIAGNOSTIC PROCEDURE

Inspect according to Diagnostic Procedure of the system.

Is malfunctioning part detected?

YES >> GO TO 8.
NO >> Check according to GI-42, "Intermittent Incident".

8. REPAIR OR REPLACE THE MALFUNCTIONING PART

1. Repair or replace the malfunctioning part.
2. Reconnect parts or connectors disconnected during Diagnostic Procedure again after repair and replacement.
3. Check DTC. If DTC is detected, erase it.

>> GO TO 9.

9. FINAL CHECK

When DTC is detected in step 2, perform DTC CONFIRMATION PROCEDURE again, and then check that the malfunction is repaired securely.
When symptom is described by the customer, refer to confirmed symptom in step 3 or 4, and check that the symptom is not detected.

Is DTC detected and does symptom remain?

YES-1 >> DTC is detected: GO TO 7.
YES-2 >> Symptom remains: GO TO 4.
NO >> Before returning the vehicle to the customer, always erase DTC.

OPERATION INSPECTION
AUTOMATIC AIR CONDITIONING SYSTEM

AUTOMATIC AIR CONDITIONING SYSTEM : Work Procedure

INFOID:0000000011284630

DESCRIPTION
The purpose of the operation inspection is to check that the individual system operates normally.

Check condition : Engine running at normal operating temperature.

OPERATION INSPECTION
1. CHECK MEMORY FUNCTION

1. Press AUTO switch to activate air conditioning.
2. Set temperature to 32.0°C (90°F) by operating temperature control switch (driver side).
3. Press ON·OFF switch.
4. Turn ignition switch OFF.
5. Turn ignition switch ON.
6. Press AUTO switch.
7. Check that the set temperature 32.0°C (90°F) is maintained.

Is the inspection result normal?

YES >> GO TO 2.
NO >> GO TO 10.

2. CHECK FAN SPEED

1. Start engine.
2. Operate fan switch and check that fan speed changes.
3. Check operation for all fan speeds.

Is the inspection result normal?

YES >> GO TO 3.
NO >> GO TO 10.

3. CHECK AIR OUTLET

1. Operate fan switch to set the fan speed to maximum speed.
2. Operate MODE switch and DEF switch.
3. Check that air outlets change according to each indicated air outlet by placing a hand in front of the outlets.

Is the inspection result normal?

YES >> GO TO 4.
NO >> GO TO 10.

4. CHECK AIR INLET

1. Press intake switch to set the air inlet to recirculation. The intake switch indicator lamp turns ON.
2. Listen to intake sound and confirm air inlets change.
3. Press intake switch again to set the air inlet to fresh air intake. The intake switch indicator lamp turns OFF.
4. Listen to intake sound and confirm air inlets change.

Is the inspection result normal?

YES >> GO TO 5.
NO >> GO TO 10.

5. CHECK COMPRESSOR

1. Touch A/C switch. The A/C switch indicator turns ON.
2. Check visually and by sound that the compressor operates.
3. Touch A/C switch again. The A/C switch indicator turns OFF.
4. Check that compressor stops.

Is the inspection result normal?

YES >> GO TO 6.

NO >> GO TO 10.

6. CHECK DISCHARGE AIR TEMPERATURE

1. Operate temperature control switch (driver side).
2. Check that discharge air temperature (driver side) changes.
3. Operate temperature control switch (passenger side). (DUAL switch indicator turns ON.)
4. Check that discharge air temperature (passenger side) changes.
5. Touch DUAL switch. DUAL switch indicator turns OFF.
6. Check that air temperature setting (LH/RH) is unified to the driver side temperature setting.

Is the inspection result normal?

YES >> GO TO 7.
NO >> GO TO 10.

7. CHECK WITH TEMPERATURE SETTING LOWERED

1. Operate compressor.
2. Operate temperature control switch (driver side) to lower the set temperature to 18.0°C (60°F).
3. Check that cool air blows from the air outlets.

Is the inspection result normal?

YES >> GO TO 8.
NO >> GO TO 10.

8. CHECK TEMPERATURE INCREASE

1. Warm up engine to the normal operating temperature.
2. Operate temperature control dial (driver side) to raise the set temperature to 32.0°C (90°F).
3. Check that warm air blows from the air outlets.

Is the inspection result normal?

YES >> GO TO 9.
NO >> GO TO 10.

9. CHECK AUTO MODE

1. Press AUTO switch and check that AUTO indicator lamp turns ON.
2. Operate temperature control switch (driver side) to check that fan speed or air outlet changes (the air outlet or fan speed varies depending on the ambient temperature, in-vehicle temperature, set temperature, and etc.).

Is the inspection result normal?

YES >> INSPECTION END
NO >> GO TO 10.

10. CHECK SELF-DIAGNOSIS WITH CONSULT

1. Perform self-diagnosis with CONSULT.
2. Check that any DTC is detected.

Is any DTC detected?

YES >> Refer to HAC-37, "DTC Index", and perform the appropriate diagnosis.
NO >> GO TO 11.

11. CHECK FAIL-SAFE ACTIVATION

Check that symptom is applied to the fail-safe activation. Refer to HAC-36, "Fail-safe".

>> Refer to HAC-105, "Symptom Table", and perform the appropriate diagnosis.

ACCS (ADVANCED CLIMATE CONTROL SYSTEM)

ACCS (ADVANCED CLIMATE CONTROL SYSTEM) : Work Procedure

INFOID:0000000011284631

DESCRIPTION

The purpose of the operational check is to check that the individual system operates normally.

NOTE:

Check that automatic air conditioning system operates normally. Refer to HAC-52, "AUTOMATIC AIR CONDITIONING SYSTEM : Work Procedure".

Check condition : Engine running

OPERATION INSPECTION

1. CHECK PLASMACLUSTER™ CONTROL

Check the ionizer operation sound (whirring sound) in the duct by putting an ear to the center ventilator grille (driver side) outlet while pressing fan switch and OFF switch alternately.

Is the inspection result normal?

YES >> GO TO 2.
NO >> GO TO 4.

2. CHECK PLASMACLUSTER™ CONTROL OPERATION STATUS

Operate fan switch. Visually check that status indicator in lower touch screen display changes in accordance with the following table.

Fan speed	Lower touch screen display (ion indicator)
1st - 3rd	CLEAN
4th - 7th	QUICK CLEAN

Is the inspection result normal?

YES >> GO TO 3.
NO >> GO TO 4.

3. CHECK AUTOMATIC INTAKE CONTROL (EXHAUST GAS/OUTSIDE ODOR DETECTING MECHANISM)

1. Operate fan switch to set the fan speed to maximum speed.
2. Touch auto intake switch to set the air inlet to recirculation. The auto intake switch indicator and intake switch indicator lamp turn ON.
3. Listen to intake sound and confirm air inlets change.
4. Wait approximately for 5 minutes until air inlet switches to fresh air intake.
5. Apply cigarette smoke or similar substance to exhaust gas/outside odor detecting sensor portion.
6. Listen to intake sound and confirm air inlets change to recirculation.

Is the inspection result normal?

YES >> INSPECTION END
NO >> GO TO 4.

4. CHECK SELF-DIAGNOSIS WITH CONSULT

1. Perform self-diagnosis with CONSULT.
2. Check that any DTC is detected.

Is any DTC detected?

YES >> Refer to HAC-37, "DTC Index" and perform the appropriate diagnosis.
NO >> Refer to HAC-107, "Symptom Table" and perform the appropriate diagnosis.

ADDITIONAL SERVICE WHEN REPLACING CONTROL UNIT (A/C AUTO AMP.)

Description

INFOID:0000000011284632

When replacing A/C auto amp., save or print current vehicle specification with CONSULT “Configuration” before replacement.

BEFORE REPLACEMENT

NOTE:
If “READ CONFIGURATION” can not be used, use the “WRITE CONFIGURATION - Manual setting” after replacing A/C auto amp.

AFTER REPLACEMENT

CAUTION:
- **When replacing A/C auto amp., you must perform “WRITE CONFIGURATION” with CONSULT.**
- **Never perform “WRITE CONFIGURATION” except for new A/C auto amp.**

Work Procedure

INFOID:0000000011284633

1. SAVING VEHICLE SPECIFICATION

CONSULT Configuration
Perform “READ CONFIGURATION” to save or print current vehicle specification. Refer to HAC-56, "Description".
NOTE:
If “READ CONFIGURATION” can not be used, use the “WRITE CONFIGURATION - Manual setting” after replacing A/C auto amp.

>> GO TO 2.

2. REPLACE A/C AUTO AMP.

Replace A/C auto amp. Refer to HAC-113, "Removal and Installation".

>> GO TO 3.

3. WRITING VEHICLE SPECIFICATION

CONSULT Configuration
Perform “WRITE CONFIGURATION - Config file” or “WRITE CONFIGURATION - Manual setting” to write vehicle specification. Refer to HAC-56, "Work Procedure".

>> WORK END

CONFIGURATION (HVAC)

Description

INFOID:0000000011284634

Vehicle specification needs to be written with CONSULT because it is not written after replacing A/C auto amp. Configuration has three functions as follows

Function	Description
READ CONFIGURATION	• Reads the vehicle configuration of current A/C auto amp. • Saves the read vehicle configuration.
WRITE CONFIGURATION - Manual setting	Writes the vehicle configuration with manual setting.
WRITE CONFIGURATION - Config file	Writes the vehicle configuration with saved data.

CAUTION:
- **When replacing A/C auto amp., you must perform “WRITE CONFIGURATION” with CONSULT.**
- **Never perform “WRITE CONFIGURATION” except for new A/C auto amp.**

Work Procedure

INFOID:0000000011284635

1. WRITING MODE SELECTION

CONSULT Configuration
Select “CONFIGURATION” of A/C auto amp.

When writing saved data>>GO TO 2.
When writing manually>>GO TO 3.

2. PERFORM “WRITE CONFIGURATION - CONFIG FILE”

CONSULT Configuration
Perform “WRITE CONFIGURATION - Config file”.

>> WORK END

3. PERFORM “WRITE CONFIGURATION - MANUAL SETTING”

CONSULT Configuration
Select "WRITE CONFIGURATION - Manual setting" to write vehicle specifications into the A/C auto amp. For data to write, refer to HAC-56, "Configuration List".

CAUTION:
- **Thoroughly read and understand the vehicle specification. Incorrect settings may result in abnormal control of ECU.**
- **Make sure to select “SETTING” even if the indicated configuration of brand new A/C auto amp. is same as the desirable configuration. If not, configuration which is set automatically by selecting vehicle model can not be memorized.**

NOTE:
If items are not displayed, touch “SETTING”. Refer to HAC-56, "Configuration List" for written items and setting value.

>> GO TO 4.

4. OPERATION CHECK

Confirm that each function controlled by A/C auto amp. operates normally.

>> WORK END

Configuration List

INFOID:0000000011284636

CAUTION:

Thoroughly read and understand the vehicle specification. ECU control may not operate normally if the setting is not correct.

Setting Item	
Item	Value
HANDLE	LHD
ENG	TYPE1

SYSTEM SETTING

Temperature Setting Trimmer

INFOID:0000000011284637

DESCRIPTION

If the temperature felt by the customer is different from the air flow temperature controlled by the temperature setting, the A/C auto amp. control temperature can be adjusted to compensate for the temperature setting.

HOW TO SET

With CONSULT

Perform “TEMP SET CORRECT” of HVAC work support item.

Work support items	Display (°C)	Display (°F)
TEMP SET CORRECT	3.0	6
	2.5	5
	2.0	4
	1.5	3
	1.0	2
	0.5	1
	0 (initial status)	0 (initial status)
	–0.5	–1
	–1.0	–2
	–1.5	–3
	–2.0	–4
	–2.5	–5
	–3.0	–6

NOTE:

- When –3.0°C (–6°F) is corrected on the temperature setting set as 25.0°C (77°F) the temperature controlled by A/C auto amp. is 25.0°C (77°F) –3.0°C (–6°F) = 22.0°C (72°F) and the temperature becomes lower than the temperature setting.
- When the battery cable is disconnected from the negative terminal or when the battery voltage becomes 10 V or less, the setting of the difference between the set temperature and control temperature may be cancelled.

Inlet Port Memory Function (REC)

INFOID:0000000011284638

DESCRIPTION

- If the ignition switch is turned to the OFF position while the intake switch is set to ON (recirculation), “Perform the memory” or “Do not perform the memory” of intake switch ON (recirculation) condition can be selected.
- If “Perform the memory” was set, the intake switch will be ON (recirculation) when turning the ignition switch to the ON position again.
- If “Do not perform the memory” was set, the air inlets will be controlled automatically when turning the ignition switch to the ON position again.

HOW TO SET

With CONSULT

Perform the “REC MEMORY SET” of HVAC work support item.

Work support items	Display	Setting
REC MEMORY SET	WITHOUT (initial status)	Perform the memory of manual REC
	WITH	Do not perform the memory of manual REC (auto control)

NOTE:

When the battery cable is disconnected from the negative terminal or when the battery voltage becomes 10 V or less, the setting of the REC memory function may be cancelled.

Inlet Port Memory Function (FRE)

INFOID:0000000011284639

DESCRIPTION

- If the ignition switch is turned to the OFF position while the intake switch is set to DFF (fresh air intake), “Perform the memory” or “Do not perform the memory” of intake switch OFF (fresh air intake) condition can be selected.
- If “Perform the memory” was set, the intake switch will be OFF (fresh air intake) when turning the ignition switch to the ON position again.
- If “Do not perform the memory” was set, the air inlets will be controlled automatically when turning the ignition switch to the ON position again.

HOW TO SET

With CONSULT

Perform the “FRE MEMORY SET” of HVAC work support item.

Work support items	Display	Setting
FRE MEMORY SET	WITHOUT	Perform the memory of manual FRE
	WITH (initial status)	Do not perform the memory of manual FRE (auto control)

NOTE:

When the battery cable is disconnected from the negative terminal or when the battery voltage becomes 10 V or less, the setting of the FRE memory function may be cancelled.

Foot Position Setting Trimmer

INFOID:0000000011284640

DESCRIPTION

In FOOT mode, the air blowing to DEF can change ON/OFF.

HOW TO SET

With CONSULT

Perform the “BLOW SET” of HVAC work support item.

Work support items	Display	Defroster door position	
		Auto control	Manual control
BLOW SET	Mode1	OPEN	CLOSE
	Mode2 (initial status)	OPEN	OPEN
	Mode3	CLOSE	OPEN
	Mode4	CLOSE	CLOSE

NOTE:

When the battery cable is disconnected from the negative terminal or when the battery voltage becomes 10 V or less, the setting of the discharge air mix ratio in FOOT mode may be cancelled.

Setting of Target Evaporator Temperature Upper Limit Value

INFOID:0000000011284641

DESCRIPTION

Setting of upper limit value of target evaporator temperature can be changed. Control characteristic of compressor control (freezing protection control and refrigerant discharge amount control) changes according to change of the setting, and then operation ratio of compressor and refrigerant discharge amount are changed. According to change of the setting, control characteristic focusing on the fuel consumption can be adjusted to control characteristic focusing on the cooling capacity.

HOW TO SET

With CONSULT

Perform “TARGET EVAPORATOR TEMP UPPER LIMIT SETTING” in “WORK SUPPORT” mode of “HVAC” using CONSULT.

Work support items	Display	Setting
TARGET EVAPORATOR TEMP UPPER LIMIT SETTING	Initial setting	Setting 1
	Low	Setting 4
	Middle (initial status)	Setting 3
	High	Setting 2

Setting	Target evaporator temperature upper limit value	Evaporator freezing protection control	Refrigerant discharge amount control
Setting 1	10°C (50°F)	Minimum operation ratio of compressor	Minimum refrigerant discharge amount
Setting 2	7°C (45°F)	Operation ratio of compressor increases from setting 1.	Refrigerant discharge amount increases from setting 1.
Setting 3	5°C (41°F)	Operation ratio of compressor increases from setting 2.	Refrigerant discharge amount increases from setting 2.
Setting 4	3°C (37°F)	Operation ratio of compressor increases from setting 3.	Refrigerant discharge amount increases from setting 3.

NOTE:
When the battery cable is disconnected from the negative terminal or when the battery voltage becomes 10 V or less, the setting of the target evaporator temperature upper limit setting may be cancelled.

Exhaust Gas/outside Odor Detecting Sensor Sensitivity Adjustment Function

INFOID:0000000011284642

DESCRIPTION

According to customer's sense of smell, exhaust gas / outside odor detecting sensor sensitivity can be changed.

HOW TO SET

With CONSULT
Perform the "GAS SENSOR ADJUSTMENT" of HVAC work support item.

Work support items	Display	Setting
GAS SENSOR ADJUSTMENT	2	More sensitive setting than display 1 (REC earlier than display 1.)
	1	More sensitive setting than normal setting (REC earlier than normal operation.)
	0 (initial status)	Normal
	–1	Less sensitive setting than normal setting (REC later than normal operation.)
	–2	Less sensitive setting than display –1 (REC later than display –1.)

NOTE:
When the battery cable is disconnected from the negative terminal or when the battery voltage becomes 10 V or less, the setting of WORK SUPPORT may be cancelled.

Auto Intake Switch Interlocking Movement Change Function

INFOID:0000000011284643

DESCRIPTION

Condition for interlocking movement of auto intake switch and A/C switch can be changed. In addition operation of the auto intake switch, which activates the automatic intake control (exhaust gas / outside odor detecting mechanism), can be set to become available when the A/C switch is ON.

HOW TO SET

With CONSULT
Perform the "CLEAN SW SET" of HVAC work support item.

Work support items	Display	Setting
CLEAN SW SET	Mode1	Initial setting
	Mode2	Setting 1
	Mode3 (Initinal status)	Setting 2
	Mode4	Setting 3

Setting	Setting status
Initial setting	When the auto intake switch is ON, the A/C switch is also turned ON in synchronization with the auto intake switch. Control of the auto intake switch is functional even when the A/C switch is turned OFF.
Setting 1	When the auto intake switch is ON, the A/C switch is not turned ON in synchronization with the auto intake switch. Control of the auto intake switch is functional even when the A/C switch is turned OFF.
Setting 2	When the auto intake switch is ON, the A/C switch is also turned ON in synchronization with the auto intake switch. When the A/C switch is turned OFF, the auto intake switch is turned OFF in synchronization with the A/C switch.
Setting 3	Auto intake switch can be turned ON only when A/C switch is ON. When the A/C switch is turned OFF, the auto intake switch is turned OFF in synchronization with the A/C switch.

NOTE:
When the battery cable is disconnected from the negative terminal or when the battery voltage becomes 10 V or less, the setting of WORK SUPPORT may be cancelled.

DTC/CIRCUIT DIAGNOSIS

U1000 CAN COMM CIRCUIT

DTC Description

INFOID:0000000011284644

CAN (Controller Area Network) is a serial communication system for real time application. It is an on-vehicle multiplex communication system with high data communication speed and excellent error detection ability. Many electronic control units are equipped onto vehicles, and each control unit shares information and links with other control units during operation (not independent). In CAN communication, control units are connected with two communication lines (CAN-H line, CAN-L line) allowing a high rate of information transmission with less wiring. Each control unit transmits/receives data but selectively reads required data only.
CAN Communication Signal Chart. Refer to LAN-42, "CAN COMMUNICATION SYSTEM : CAN Communication Signal Chart".

DTC DETECTION LOGIC

DTC No.	CONSULT screen terms (Trouble diagnosis content)	DTC detection condition
U1000	CAN COMM CIRCUIT (CAN COMM CIRCUIT)	When A/C auto amp. is not transmitting or receiving CAN communication signal for 2 seconds or more.

POSSIBLE CAUSE

CAN communication system

FAIL-SAFE

—

DTC CONFIRMATION PROCEDURE

1. PERFORM SELF-DIAGNOSIS

With CONSULT
1. Turn ignition switch ON and wait for 2 seconds or more.
2. Select “Self Diagnostic Result” mode of “HVAC” using CONSULT.
3. Check DTC.

Is DTC detected?

YES >> Refer to HAC-62, "Diagnosis Procedure".
NO-1 >> To check malfunction sysmptom before repair: Refer to GI-42, "Intermittent Incident".
NO-2 >> Confirmation after repair: INSPECTION END

Diagnosis Procedure

INFOID:0000000011284645

1. CHECK CAN COMMUNICATION SYSTEM

Check CAN communication system. Refer to LAN-24, "Trouble Diagnosis Flow Chart".

>> INSPECTION END

U1010 CONTROL UNIT (CAN)

DTC Description

INFOID:0000000011284646

DTC DETECTION LOGIC

DTC No.	CONSULT screen terms (Trouble diagnosis content)	DTC detection condition
U1010	CONTROL UNIT(CAN) [CONTROL UNIT(CAN)]	When detecting error during the initial diagnosis of CAN controller of A/C auto amp.

POSSIBLE CAUSE

A/C auto amp.

FAIL-SAFE

—

DTC CONFIRMATION PROCEDURE

1. PERFORM SELF-DIAGNOSIS

With CONSULT

1. Turn ignition switch ON.
2. Select “Self Diagnostic Result” mode of “HVAC” using CONSULT.
3. Check DTC.

Is DTC detected?

YES >> Refer to HAC-63, "Diagnosis Procedure".
NO-1 >> To check malfunction sysmptom before repair: Refer to GI-42, "Intermittent Incident".
NO-2 >> Confirmation after repair: INSPECTION END

Diagnosis Procedure

INFOID:0000000011284647

1. REPLACE A/C AUTO AMP.

Replace A/C auto amp. Refer to HAC-113, "Removal and Installation".

>> INSPECTION END

B2578, B2579 IN-VEHICLE SENSOR

DTC Description

INFOID:0000000011284648

DTC DETECTION LOGIC

DTC No.	CONSULT screen terms (Trouble diagnosis content)	DTC detection condition
B2578	IN-VEHICLE SENSOR (In-vehicle sensor)	The in-vehicle sensor recognition temperature is too high [more than 100°C (212°F)].
B2579		The in-vehicle sensor recognition temperature is too low [less than –42°C (–44°F)].

POSSIBLE CAUSE

- In-vehicle sensor
- A/C auto amp.
- Harness or connectors (The sensor circuit is open or shorted.)

FAIL-SAFE

—

DTC CONFIRMATION PROCEDURE

1. CHECK DTC PRIORITY

If DTC B2578 or B2579 are displayed with DTC U1000 or U1010, first perform the confirmation procedure (trouble diagnosis) for DTC U1000 or U1010.

Is applicable DTC detected?

YES >> Perform diagnosis of applicable. U1000: Refer to HAC-62, "DTC Description". U1010: Refer to HAC-63, "DTC Description".

NO >> GO TO 2.

2. PERFORM DTC CONFIRMATION PROCEDURE

With CONSULT

1. Turn ignition switch ON.
2. Select “Self Diagnostic Result” mode of “HVAC” using CONSULT.
3. Check DTC.

Is DTC detected?

YES >> Refer to HAC-64, "Diagnosis Procedure".

NO-1 >> To check malfunction sysmptom before repair: Refer to GI-42, "Intermittent Incident".

NO-2 >> Confirmation after repair: INSPECTION END

Diagnosis Procedure

INFOID:0000000011284649

1. CHECK DTC PRIORITY

If DTC B2578 or B2579 are displayed with DTC U1000 or U1010, first perform the confirmation procedure (trouble diagnosis) for DTC U1000 or U1010.

Is applicable DTC detected?

YES >> Perform diagnosis of applicable. U1000: Refer to HAC-62, "DTC Description". U1010: Refer to HAC-63, "DTC Description".

NO >> GO TO 2.

2. CHECK IN-VEHICLE SENSOR SIGNAL

1. Turn ignition switch ON.
2. Check voltage between A/C auto amp. harness connector terminal and ground.

+		–	Voltage
A/C auto amp.			
Connector	Terminal		
M88	27	Ground	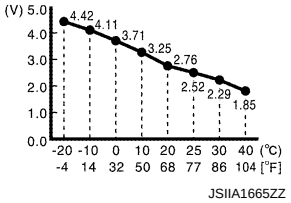

Is the inspection result normal?

YES >> GO TO 8.
NO >> GO TO 3.

3. CHECK IN-VEHICLE SENSOR POWER SUPPLY

1. Turn ignition switch OFF.
2. Disconnect in-vehicle sensor connector.
3. Turn ignition switch ON.
4. Check voltage between in-vehicle sensor harness connector and ground.

+		–	Voltage (Approx.)
In-vehicle sensor			
Connector	Terminal		
M52	1	Ground	5 V

Is the inspection result normal?

YES >> GO TO 4.
NO >> GO TO 6.

4. CHECK IN-VEHICLE SENSOR GROUND CIRCUIT FOR OPEN

1. Turn ignition switch OFF.
2. Disconnect A/C auto amp. connector.
3. Check continuity between in-vehicle sensor harness connector and A/C auto amp harness connector.

In-vehicle sensor		A/C auto amp.		Continuity
Connector	Terminal	Connector	Terminal	
M52	2	M88	26	Existed

Is the inspection result normal?

YES >> GO TO 5.
NO >> Repair harness or connector.

5. CHECK IN-VEHICLE SENSOR

Check in-vehicle sensor. Refer to HAC-66, "Component Inspection".

Is the inspection result normal?

YES >> Replace A/C auto amp. Refer to HAC-113, "Removal and Installation".
NO >> Replace in-vehicle sensor. Refer to HAC-116, "Removal and Installation".

6. CHECK IN-VEHICLE SENSOR POWER SUPPLY CIRCUIT FOR OPEN

1. Turn ignition switch OFF.
2. Disconnect A/C auto amp. connector.
3. Check continuity between in-vehicle sensor harness connector and A/C auto amp. harness connector.

In-vehicle sensor		A/C auto amp.		Continuity
Connector	Terminal	Connector	Terminal	
M52	1	M88	27	Existed

Is the inspection result normal?

YES >> GO TO 7.
NO >> Repair harness or connector.

7. CHECK IN-VEHICLE SENSOR POWER SUPPLY CIRCUIT FOR SHORT

Check continuity between in-vehicle sensor harness connector and ground.

In-vehicle sensor		—	Continuity
Connector	Terminal		
M52	1	Ground	Not existed

Is the inspection result normal?

YES >> Replace A/C auto amp. Refer to HAC-113, "Removal and Installation".
NO >> Repair harness or connector.

8. CHECK INTERMITTENT INCIDENT

Check intermittent incident. Refer to GI-42, "Intermittent Incident".

Is the inspection result normal?

YES >> Replace A/C auto amp. Refer to HAC-113, "Removal and Installation".
NO >> Repair or replace malfunctioning parts.

Component Inspection

INFOID:0000000011284650

1. CHECK IN-VEHICLE SENSOR

1. Remove in-vehicle sensor. Refer to HAC-116, "Removal and Installation".
2. Check resistance between in-vehicle sensor terminals. Refer to applicable table for the normal value.

Terminal		Condition	Resistance: kΩ
		Temperature: °C (°F)	
1	2	–20 (–4)	16.50
		–10 (14)	9.92
		0 (32)	6.19
		10 (50)	3.99
		20 (68)	2.65
		25 (77)	2.19
		30 (86)	1.81
		40 (104)	1.27

Is the inspection result normal?

YES >> INSPECTION END
NO >> Replace in-vehicle sensor. Refer to HAC-116, "Removal and Installation".

B257B, B257C AMBIENT SENSOR

DTC Description

INFOID:0000000011284651

DTC DETECTION LOGIC

DTC No.	CONSULT screen terms (Trouble diagnosis content)	DTC detection condition
B257B	AMBIENT SENSOR (Ambient sensor)	The ambient sensor recognition temperature is too high [more than 100°C (212°F)].
B257C		The ambient sensor recognition temperature is too low [less than –42°C (–44°F)].

POSSIBLE CAUSE

- Ambient sensor
- A/C auto amp.
- Harness or connectors (The sensor circuit is open or shorted.)

FAIL-SAFE

—

DTC CONFIRMATION PROCEDURE

1. CHECK DTC PRIORITY

If DTC B257B or B257C are displayed with DTC U1000 or U1010, first perform the confirmation procedure (trouble diagnosis) for DTC U1000 or U1010.

Is applicable DTC detected?

YES >> Perform diagnosis of applicable. U1000: Refer to HAC-62, "DTC Description". U1010: Refer to HAC-63, "DTC Description".

NO >> GO TO 2.

2. PERFORM DTC CONFIRMATION PROCEDURE

With CONSULT

1. Turn ignition switch ON.
2. Select “Self Diagnostic Result” mode of “HVAC” using CONSULT.
3. Check DTC.

Is DTC detected?

YES >> Refer to HAC-67, "Diagnosis Procedure".

NO-1 >> To check malfunction sysmptom before repair: Refer to GI-42, "Intermittent Incident".

NO-2 >> Confirmation after repair: INSPECTION END

Diagnosis Procedure

INFOID:0000000011284652

1. CHECK DTC PRIORITY

If DTC B257B or B257C are displayed with DTC U1000 or U1010, first perform the confirmation procedure (trouble diagnosis) for DTC U1000 or U1010.

Is applicable DTC detected?

YES >> Perform diagnosis of applicable. U1000: Refer to HAC-62, "DTC Description". U1010: Refer to HAC-63, "DTC Description".

NO >> GO TO 2.

2. CHECK AMBIENT SENSOR SIGNAL

1. Turn ignition switch ON.
2. Check voltage between A/C auto amp. harness connector terminal and ground.

+		–	Voltage
A/C auto amp.			
Connector	Terminal		
M88	7	Ground	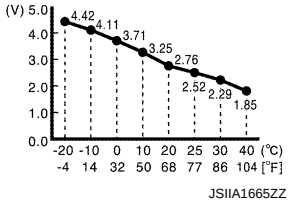

Is the inspection result normal?

YES >> GO TO 8.
NO >> GO TO 3.

3. CHECK AMBIENT SENSOR POWER SUPPLY

1. Turn ignition switch OFF.
2. Disconnect ambient sensor connector.
3. Turn ignition switch ON.
4. Check voltage between ambient sensor harness connector and ground.

+		–	Voltage (Approx.)
Ambient sensor			
Connector	Terminal		
E81	1	Ground	5 V

Is the inspection result normal?

YES >> GO TO 4.
NO >> GO TO 6.

4. CHECK AMBIENT SENSOR GROUND CIRCUIT FOR OPEN

1. Turn ignition switch OFF.
2. Disconnect A/C auto amp. connector.
3. Check continuity between ambient sensor harness connector and A/C auto amp harness connector.

Ambient sensor		A/C auto amp.		Continuity
Connector	Terminal	Connector	Terminal	
E81	2	M88	26	Existed

Is the inspection result normal?

YES >> GO TO 5.
NO >> Repair harness or connector.

5. CHECK AMBIENT SENSOR

Check ambient sensor. Refer to HAC-69, "Component Inspection".

Is the inspection result normal?

YES >> Replace A/C auto amp. Refer to HAC-113, "Removal and Installation".
NO >> Replace ambient sensor. Refer to HAC-115, "Removal and Installation".

6. CHECK AMBIENT SENSOR POWER SUPPLY CIRCUIT FOR OPEN

1. Turn ignition switch OFF.
2. Disconnect A/C auto amp. connector.
3. Check continuity between ambient sensor harness connector and A/C auto amp. harness connector.

Ambient sensor		A/C auto amp.		Continuity
Connector	Terminal	Connector	Terminal	
E81	1	M88	7	Existed

Is the inspection result normal?

YES >> GO TO 7.
NO >> Repair harness or connector.

7. CHECK AMBIENT SENSOR POWER SUPPLY CIRCUIT FOR SHORT

Check continuity between ambient sensor harness connector and ground.

Ambient sensor		—	Continuity
Connector	Terminal		
E81	1	Ground	Not existed

Is the inspection result normal?

YES >> Replace A/C auto amp. Refer to HAC-113, "Removal and Installation".
NO >> Repair harness or connector.

8. CHECK INTERMITTENT INCIDENT

Check intermittent incident. Refer to GI-42, "Intermittent Incident".

Is the inspection result normal?

YES >> Replace A/C auto amp. Refer to HAC-113, "Removal and Installation".
NO >> Repair or replace malfunctioning parts.

Component Inspection

INFOID:0000000011284653

1. CHECK AMBIENT SENSOR

1. Remove ambient sensor. Refer to HAC-115, "Removal and Installation".
2. Check resistance between ambient sensor terminals. Refer to applicable table for the normal value.

Terminal		Condition Temperature: °C (°F)	Resistance: kΩ
1	2	–20 (–4)	16.50
		–10 (14)	9.92
		0 (32)	6.19
		10 (50)	3.99
		20 (68)	2.65
		25 (77)	2.19
		30 (86)	1.81
		40 (104)	1.27

Is the inspection result normal?

YES >> INSPECTION END
NO >> Replace ambient sensor. Refer to HAC-115, "Removal and Installation".

B2581, B2582 INTAKE SENSOR

DTC Description

INFOID:0000000011284654

DTC DETECTION LOGIC

DTC No.	CONSULT screen terms (Trouble diagnosis content)	DTC detection condition
B2581	INTAKE SENSOR (Intake sensor)	The intake sensor recognition temperature is too high [more than 100°C (212°F)].
B2582		The intake sensor recognition temperature is too low [less than –42°C (–44°F)].

POSSIBLE CAUSE

- Intake sensor
- A/C auto amp.
- Harness or connectors (The sensor circuit is open or shorted.)

FAIL-SAFE

—

DTC CONFIRMATION PROCEDURE

1. CHECK DTC PRIORITY

If DTC B2581 or B2582 are displayed with DTC U1000 or U1010, first perform the confirmation procedure (trouble diagnosis) for DTC U1000 or U1010.

Is applicable DTC detected?

YES >> Perform diagnosis of applicable. U1000: Refer to HAC-62, "Diagnosis Procedure". U1010: Refer to HAC-63, "Diagnosis Procedure".

NO >> GO TO 2.

2. PERFORM DTC CONFIRMATION PROCEDURE

With CONSULT

1. Turn ignition switch ON.
2. Select “Self Diagnostic Result” mode of “HVAC” using CONSULT.
3. Check DTC.

Is DTC detected?

YES >> Refer to HAC-70, "Diagnosis Procedure".

NO-1 >> To check malfunction sysmptom before repair: Refer to GI-42, "Intermittent Incident".

NO-2 >> Confirmation after repair: INSPECTION END

Diagnosis Procedure

INFOID:0000000011284655

1. CHECK DTC PRIORITY

If DTC B2581 or B2582 are displayed with DTC U1000 or U1010, first perform the confirmation procedure (trouble diagnosis) for DTC U1000 or U1010.

Is applicable DTC detected?

YES >> Perform diagnosis of applicable. U1000: Refer to HAC-62, "Diagnosis Procedure". U1010: Refer to HAC-63, "Diagnosis Procedure".

NO >> GO TO 2.

2. CHECK INTAKE SENSOR SIGNAL

1. Turn ignition switch ON.
2. Check voltage between A/C auto amp. harness connector terminal and ground

+		–	Voltage
A/C auto amp.			
Connector	Terminal		
M88	28	Ground	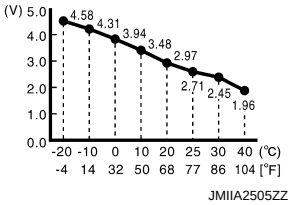

Is the inspection result normal?

YES >> GO TO 8.
NO >> GO TO 3.

3. CHECK INTAKE SENSOR POWER SUPPLY

1. Turn ignition switch OFF.
2. Disconnect intake sensor connector.
3. Turn ignition switch ON.
4. Check voltage between intake sensor harness connector and ground.

+		–	Voltage (Approx.)
Intake sensor			
Connector	Terminal		
M53	1	Ground	5 V

Is the inspection result normal?

YES >> GO TO 4.
NO >> GO TO 6.

4. CHECK INTAKE SENSOR GROUND CIRCUIT FOR OPEN

1. Turn ignition switch OFF.
2. Disconnect A/C auto amp. connector.
3. Check continuity between intake sensor harness connector and A/C auto amp harness connector.

Intake sensor		A/C auto amp.		Continuity
Connector	Terminal	Connector	Terminal	
M53	2	M88	26	Existed

Is the inspection result normal?

YES >> GO TO 5.
NO >> Repair harness or connector.

5. CHECK INTAKE SENSOR

Check intake sensor. Refer to HAC-72, "Component Inspection".

Is the inspection result normal?

YES >> Replace A/C auto amp. Refer to HAC-113, "Removal and Installation".
NO >> Replace intake sensor. Refer to HAC-118, "Removal and Installation".

6. CHECK INTAKE SENSOR POWER SUPPLY CIRCUIT FOR OPEN

1. Turn ignition switch OFF.
2. Disconnect A/C auto amp. connector.
3. Check continuity between intake sensor harness connector and A/C auto amp. harness connector.

Intake sensor		A/C auto amp.		Continuity
Connector	Terminal	Connector	Terminal	
M53	1	M88	28	Existed

Is the inspection result normal?

YES >> GO TO 7.
NO >> Repair harness or connector.

7. CHECK INTAKE SENSOR POWER SUPPLY CIRCUIT FOR SHORT

Check continuity between intake sensor harness connector and ground.

Intake sensor		—	Continuity
Connector	Terminal		
M53	1	Ground	Not existed

Is the inspection result normal?

YES >> Replace A/C auto amp. Refer to HAC-113, "Removal and Installation".
NO >> Repair harness or connector.

8. CHECK INTERMITTENT INCIDENT

Check intermittent incident. Refer to GI-42, "Intermittent Incident".

Is the inspection result normal?

YES >> Replace A/C auto amp. Refer to HAC-113, "Removal and Installation".
NO >> Repair or replace malfunctioning parts.

Component Inspection

INFOID:0000000011284656

1. CHECK INTAKE SENSOR

1. Remove intake sensor. Refer to HAC-118, "Removal and Installation".
2. Check resistance between intake sensor terminals. Refer to applicable table for the normal value.

Terminal		Condition	Resistance: kΩ
		Temperature: °C (°F)	
1	2	–20 (–4)	23.60
		–10 (14)	13.46
		0 (32)	8.00
		10 (50)	4.93
		20 (68)	3.19
		25 (77)	2.54
		30 (86)	2.06
		40 (104)	1.39

Is the inspection result normal?

YES >> INSPECTION END
NO >> Replace intake sensor. Refer to HAC-118, "Removal and Installation".

B262A, B262B, B2657, B2658 EXHAUST GAS/OUTSIDE ODOR DETECTING SENSOR

DTC Description

INFOID:0000000011284657

DTC DETECTION LOGIC

DTC No.	CONSULT screen terms (Trouble diagnosis content)	DTC detection condition
B262A	GAS SENSOR (Gas Sensor)	Exhaust gas/outside odor detecting sensor duty ratio 10% or less.
B262B		Exhaust gas/outside odor detecting sensor duty ratio 90% or more.
B2657	GAS SENSOR CIRCUIT (Gas Sensor Circuit)	Exhaust gas/outside odor detecting sensor duty ratio 0%.
B2658		Exhaust gas/outside odor detecting sensor duty ratio 100%.

POSSIBLE CAUSE

- Exhaust gas/outside odor detecting sensor
- A/C auto amp.
- Harness or connectors (The sensor circuit is open or shorted.)

FAIL-SAFE

—

DTC CONFIRMATION PROCEDURE

1. CHECK DTC PRIORITY

If DTC B262A, B262B, B2657 or B2658 are displayed with DTC U1000 or U1010, first perform the confirmation procedure (trouble diagnosis) for DTC U1000 or U1010.

Is applicable DTC detected?

YES >> Perform diagnosis of applicable. U1000: Refer to HAC-62, "DTC Description". U1010: Refer to HAC-63, "DTC Description".

NO >> GO TO 2.

2. PERFORM DTC CONFIRMATION PROCEDURE

With CONSULT

1. Turn ignition switch ON.
2. Select “Self Diagnostic Result” mode of “HVAC” using CONSULT.
3. Check DTC.

Is DTC detected?

YES >> Refer to HAC-73, "Diagnosis Procedure".

NO-1 >> To check malfunction sysmptom before repair: Refer to GI-42, "Intermittent Incident".

NO-2 >> Confirmation after repair: INSPECTION END

Diagnosis Procedure

INFOID:0000000011284658

1. CHECK DTC PRIORITY

If DTC B262A, B262B, B2657 or B2658 are displayed with DTC U1000 or U1010, first perform the confirmation procedure (trouble diagnosis) for DTC U1000 or U1010.

Is applicable DTC detected?

YES >> Perform diagnosis of applicable. U1000: Refer to HAC-62, "DTC Description". U1010: Refer to HAC-63, "DTC Description".

NO >> GO TO 2.

2. CHECK FUSE

1. Turn ignition switch OFF.
2. Check 10 A fuse [No. 12, located in fuse block (J/B)]

NOTE:

Refer to PG-97, "Fuse, Connector and Terminal Arrangement".

Is the inspection result normal?

YES >> GO TO 3.
NO >> Replace blown fuse after repairing the affected circuit if a fuse is blown.

3. CHECK EXHAUST GAS/OUTSIDE ODOR DETECTING SENSOR POWER SUPPLY

1. Disconnect exhaust gas/outside odor detecting sensor connector.
2. Turn ignition switch ON.
3. Check voltage between exhaust gas/outside odor detecting sensor harness and ground.

+		–	Voltage (Approx.)
Exhaust gas/outside odor detecting sensor			
Connector	Terminal		
E83	1	Ground	Battery voltage

Is the inspection result normal?

YES >> GO TO 4.
NO >> Repair harness or connector between exhaust gas/outside odor detecting sensor and fuse.

4. CHECK EXHAUST GAS/OUTSIDE ODOR DETECTING SENSOR GROUND CIRCUIT FOR OPEN

1. Turn ignition switch OFF.
2. Check continuity between exhaust gas/outside odor detecting sensor harness connector and ground.

Exhaust gas/outside odor detecting sensor		—	Continuity
Connector	Terminal		
E83	2	Ground	Existed

Is the inspection result normal?

YES >> GO TO 5.
NO >> Repair harness or connector.

5. CHECK EXHAUST GAS/OUTSIDE ODOR DETECTING SENSOR SIGNAL CIRCUIT

1. Turn ignition switch ON.
2. Check voltage between exhaust gas/outside odor detecting sensor harness and ground.

+		–	Voltage (Approx.)
Exhaust gas/outside odor detecting sensor			
Connector	Terminal		
E83	3	Ground	12 V

Is the inspection result normal?

YES >> Replace exhaust gas/outside odor detecting sensor. Refer to HAC-119, "Removal and Installation".
NO >> GO TO 6.

6. CHECK EXHAUST GAS/OUTSIDE ODOR DETECTING SENSOR SIGNAL CIRCUIT FOR OPEN

1. Turn ignition switch OFF.
2. Disconnect A/C auto amp. connector.
3. Check continuity between exhaust gas/outside odor detecting sensor harness connector and A/C auto amp. connector.

Exhaust gas/outside odor detecting sensor		A/C auto amp.		Continuity
Connector	Terminal	Connector	Terminal	
E83	3	M88	30	Existed

Is the inspection result normal?

YES >> GO TO 7.
NO >> Repair harness or connector.

7. CHECK EXHAUST GAS/OUTSIDE ODOR DETECTING SENSOR INPUT SIGNAL CIRCUIT FOR SHORT

Check continuity between exhaust gas/outside odor detecting sensor harness connector and ground.

Exhaust gas/outside odor detecting sensor		—	Continuity
Connector	Terminal		
E83	3	Ground	Not existed

Is the inspection result normal?

YES >> Replace A/C auto amp. Refer to HAC-113, "Removal and Installation".
NO >> Repair harness or connector.

B2630, B2631 SUNLOAD SENSOR

DTC Description

INFOID:0000000011284659

DTC DETECTION LOGIC

NOTE:
Sunload sensor may register a malfunction when indoors, at dusk, or at other times when light is insufficient. When performing the diagnosis indoors, use a lamp (60 W or more) that is pointed at the sunload sensor.

DTC No.	CONSULT screen terms (Trouble diagnosis content)	DTC detection condition
B2630	SUNLOAD SENSOR (Sunload sensor)	Detected calorie at sunload sensor 1677 W/m^2 (1442 kcal/m^2·h) or more.
B2631		Detected calorie at sunload sensor 33 W/m^2 (28 kcal/m^2·h) or less.

POSSIBLE CAUSE

- Sunload sensor
- A/C auto amp.
- Harness or connectors (The sensor circuit is open or shorted.)

FAIL-SAFE

—

DTC CONFIRMATION PROCEDURE

1. CHECK DTC PRIORITY

If DTC B2630 or B2631 are displayed with DTC U1000 or U1010, first perform the confirmation procedure (trouble diagnosis) for DTC U1000 or U1010.

Is applicable DTC detected?

YES >> Perform diagnosis of applicable. U1000: Refer to HAC-62, "DTC Description". U1010: Refer to HAC-63, "DTC Description".
NO >> GO TO 2.

2. PERFORM DTC CONFIRMATION PROCEDURE

With CONSULT
1. Turn ignition switch ON.
2. Select “Self Diagnostic Result” mode of “HVAC” using CONSULT.
3. Check DTC.

Is DTC detected?

YES >> Refer to HAC-76, "Diagnosis Procedure".
NO-1 >> To check malfunction sysmptom before repair: Refer to GI-42, "Intermittent Incident".
NO-2 >> Confirmation after repair: INSPECTION END

Diagnosis Procedure

INFOID:0000000011284660

1. CHECK DTC PRIORITY

If DTC B2630 or B2631 are displayed with DTC U1000 or U1010, first perform the confirmation procedure (trouble diagnosis) for DTC U1000 or U1010.

Is applicable DTC detected?

YES >> Perform diagnosis of applicable. U1000: Refer to HAC-62, "DTC Description". U1010: Refer to HAC-63, "DTC Description".
NO >> GO TO 2.

2. CHECK SUNLOAD SENSOR SIGNAL

1. Turn ignition switch ON.
2. Check voltage between A/C auto amp. harness connector terminal and ground.

+		–	Voltage
A/C auto amp.			
Connector	Terminal		
M88	9	Ground	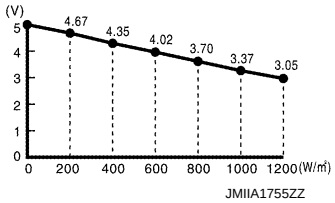

Is the inspection result normal?

YES >> GO TO 8.
NO >> GO TO 3.

3. CHECK SUNLOAD SENSOR POWER SUPPLY

1. Turn ignition switch OFF.
2. Disconnect sunload sensor connector.
3. Turn ignition switch ON.
4. Check voltage between sunload sensor harness connector and ground.

+		–	Voltage (Approx.)
Sunload sensor			
Connector	Terminal		
M78	1	Ground	5 V

Is the inspection result normal?

YES >> GO TO 4.
NO >> GO TO 6.

4. CHECK SUNLOAD SENSOR GROUND CIRCUIT FOR OPEN

1. Turn ignition switch OFF.
2. Disconnect A/C auto amp. connector.
3. Check continuity between sunload sensor harness connector and A/C auto amp harness connector.

Sunload sensor		A/C auto amp.		Continuity
Connector	Terminal	Connector	Terminal	
M78	2	M88	26	Existed

Is the inspection result normal?

YES >> GO TO 5.
NO >> Repair harness or connector.

5. REPLACE SUNLOAD SENSOR

1. Replace sunload sensor. Refer to HAC-117, "Removal and Installation".
2. Perform DTC confirmation procedure. Refer to HAC-76, "DTC Description".
3. Check DTC.

Is DTC detected?

YES >> Replace A/C auto amp. Refer to HAC-113, "Removal and Installation".
NO >> INSPECTION END

6. CHECK SUNLOAD SENSOR POWER SUPPLY CIRCUIT FOR OPEN

1. Turn ignition switch OFF.
2. Disconnect A/C auto amp. connector.
3. Check continuity between sunload sensor harness connector and A/C auto amp. harness connector.

Sunload sensor		A/C auto amp.		Continuity
Connector	Terminal	Connector	Terminal	
M78	1	M88	9	Existed

Is the inspection result normal?

YES >> GO TO 7.
NO >> Repair harness or connector.

7. CHECK SUNLOAD SENSOR POWER SUPPLY CIRCUIT FOR SHORT

Check continuity between sunload sensor harness connector and ground.

Sunload sensor		—	Continuity
Connector	Terminal		
M78	1	Ground	Not existed

Is the inspection result normal?

YES >> Replace A/C auto amp. Refer to HAC-113, "Removal and Installation".
NO >> Repair harness or connector.

8. CHECK INTERMITTENT INCIDENT

Check intermittent incident. Refer to GI-42, "Intermittent Incident".

Is the inspection result normal?

YES >> Replace A/C auto amp. Refer to HAC-113, "Removal and Installation".
NO >> Repair or replace malfunctioning parts.

B2632, B2633 AIR MIX DOOR MOTOR (DRIVER SIDE)

DTC Description

INFOID:0000000011284661

DTC DETECTION LOGIC

DTC No.	CONSULT screen terms (Trouble diagnosis content)	DTC detection condition
B2632	DR AIR MIX DOOR MOT (Driver side air mix door motor)	Air mix door motor (driver side) PBR position 95% or more
B2633		Air mix door motor (driver side) PBR position 5% or less

POSSIBLE CAUSE

- Air mix door motor (driver side)
- Air mix door motor (driver side) installation condition
- A/C auto amp.
- Harness and connector [Air mix door motor (driver side) circuit is open or shorted]

FAIL-SAFE

—

DTC CONFIRMATION PROCEDURE

1. CHECK DTC PRIORITY

If DTC B2632 or B2633 are displayed with DTC U1000 or U1010, first perform the confirmation procedure (trouble diagnosis) for DTC U1000 or U1010.

Is applicable DTC detected?

YES >> Perform diagnosis of applicable. U1000: Refer to HAC-62, "DTC Description". U1010: Refer to HAC-63, "DTC Description".

NO >> GO TO 2.

2. PERFORM DTC CONFIRMATION PROCEDURE

With CONSULT

1. Turn ignition switch ON.
2. Select “Self Diagnostic Result” mode of “HVAC” using CONSULT.
3. Check DTC.

Is DTC detected?

YES >> Refer to HAC-79, "Diagnosis Procedure".

NO-1 >> To check malfunction sysmptom before repair: Refer to GI-42, "Intermittent Incident".

NO-2 >> Confirmation after repair: INSPECTION END

Diagnosis Procedure

INFOID:0000000011284662

1. CHECK DTC PRIORITY

If DTC B2632 or B2633 are displayed with DTC U1000 or U1010, first perform the confirmation procedure (trouble diagnosis) for DTC U1000 or U1010.

Is applicable DTC detected?

YES >> Perform diagnosis of applicable. U1000: Refer to HAC-62, "DTC Description". U1010: Refer to HAC-63, "DTC Description".

NO >> GO TO 2.

2. CHECK AIR MIX DOOR MOTOR (DRIVER SIDE) POWER SUPPLY

1. Turn ignition switch ON.
2. Check voltage between air mix door motor LH harness connector and ground.

+		–	Voltage
Air mix door motor LH			
Connector	Terminal		
M252	1	Ground	11 – 14 V

Is the inspection result normal?

YES >> GO TO 3.
NO >> GO TO 6.

3. CHECK AIR MIX DOOR MOTOR (DRIVER SIDE) GROUND CIRCUIT FOR OPEN

1. Turn ignition switch OFF.
2. Disconnect air mix door motor LH connector.
3. Check continuity between air mix door motor LH harness connector and ground.

Air mix door motor LH		Ground	Continuity
Connector	Terminal		
M252	2		Existed

Is the inspection result normal?

YES >> GO TO 4.
NO >> Repair harness or connector.

4. CHECK AIR MIX DOOR MOTOR (DRIVER SIDE) LIN SIGNAL

1. Connect air mix door motor LH connector.
2. Turn ignition switch ON.
3. Confirm output waveform between air mix door motor LH harness connector and ground using oscilloscope.

+		–	Output waveform
Air mix door motor LH			
Connector	Terminal		
M252	3	Ground	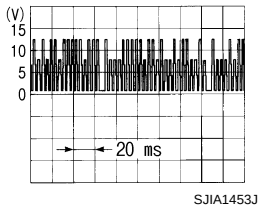

Is the inspection result normal?

YES >> GO TO 5.
NO >> GO TO 7.

5. CHECK INSTALLATION OF AIR MIX DOOR MOTOR (DRIVER SIDE)

Check air mix door motor (driver side) is properly installed. Refer to HAC-121, "Exploded View".

Is the inspection result normal?

YES >> Replace air mix door motor (driver side). Refer to HAC-121, "AIR MIX DOOR MOTOR : Removal and Installation".
NO >> Repair or replace malfunctioning part.

6. CHECK AIR MIX DOOR MOTOR (DRIVER SIDE) POWER SUPPLY CIRCUIT FOR OPEN

1. Turn ignition switch OFF.
2. Disconnect air mix door motor LH and A/C auto amp. connector.
3. Check continuity between air mix door motor LH harness connector and A/C auto amp. harness connector.

Air mix door motor LH		A/C auto amp.		Continuity
Connector	Terminal	Connector	Terminal	
M252	1	M88	17	Existed

Is the inspection result normal?

YES >> Replace A/C auto amp. Refer to HAC-113, "Removal and Installation".
NO >> Repair harness or connector.

7. CHECK AIR MIX DOOR MOTOR (DRIVER SIDE) LIN SIGNAL CIRCUIT FOR OPEN

1. Turn ignition switch OFF.
2. Disconnect air mix door motor LH and A/C auto amp. connector.
3. Check continuity between air mix door motor LH harness connector and A/C auto amp. harness connector.

Air mix door motor LH		A/C auto amp.		Continuity
Connector	Terminal	Connector	Terminal	
M252	3	M88	16	Existed

Is the inspection result normal?

YES >> Replace A/C auto amp. Refer to HAC-113, "Removal and Installation".
NO >> Repair harness or connector.

B2634, B2635 AIR MIX DOOR MOTOR (PASSENGER SIDE)

DTC Description

INFOID:0000000011284663

DTC DETECTION LOGIC

DTC No.	CONSULT screen terms (Trouble diagnosis content)	DTC detection condition
B2634	PASS AIR MIX DOOR MOT (Passenger side air mix door motor)	Air mix door motor (passenger side) PBR position 95% or more
B2635		Air mix door motor (passenger side) PBR position 5% or less

POSSIBLE CAUSE

- Air mix door motor (passenger side)
- Air mix door motor (passenger side) installation condition
- A/C auto amp.
- Harness and connector [Air mix door motor (passenger side) circuit is open or shorted]

FAIL-SAFE

—

DTC CONFIRMATION PROCEDURE

1. CHECK DTC PRIORITY

If DTC B2634 or B2635 are displayed with DTC U1000 or U1010, first perform the confirmation procedure (trouble diagnosis) for DTC U1000 or U1010.

Is applicable DTC detected?

YES >> Perform diagnosis of applicable. U1000: Refer to HAC-62, "DTC Description". U1010: Refer to HAC-63, "DTC Description".

NO >> GO TO 2.

2. PERFORM DTC CONFIRMATION PROCEDURE

With CONSULT

1. Turn ignition switch ON.
2. Select “Self Diagnostic Result” mode of “HVAC” using CONSULT.
3. Check DTC.

Is DTC detected?

YES >> Refer to HAC-82, "Diagnosis Procedure".

NO-1 >> To check malfunction sysmptom before repair: Refer to GI-42, "Intermittent Incident".

NO-2 >> Confirmation after repair: INSPECTION END

Diagnosis Procedure

INFOID:0000000011284664

1. CHECK DTC PRIORITY

If DTC B2634 or B2635 are displayed with DTC U1000 or U1010, first perform the confirmation procedure (trouble diagnosis) for DTC U1000 or U1010.

Is applicable DTC detected?

YES >> Perform diagnosis of applicable. U1000: Refer to HAC-62, "DTC Description". U1010: Refer to HAC-63, "DTC Description".

NO >> GO TO 2.

2. CHECK AIR MIX DOOR MOTOR (PASSENGER SIDE) POWER SUPPLY

1. Turn ignition switch ON.
2. Check voltage between mode door motor RH harness connector and ground.

+		–	Voltage
Air mix door motor RH			
Connector	Terminal		
M255	1	Ground	11 – 14 V

Is the inspection result normal?

YES >> GO TO 3.
NO >> GO TO 6.

3. CHECK AIR MIX DOOR MOTOR (PASSENGER SIDE) GROUND CIRCUIT FOR OPEN

1. Turn ignition switch OFF.
2. Disconnect air mix door motor RH connector.
3. Check continuity between air mix door motor RH harness connector and ground.

Air mix door motor RH		Ground	Continuity
Connector	Terminal		
M255	2		Existed

Is the inspection result normal?

YES >> GO TO 4.
NO >> Repair harness or connector.

4. CHECK AIR MIX DOOR MOTOR (PASSENGER SIDE) LIN SIGNAL

1. Connect air mix door motor RH connector.
2. Turn ignition switch ON.
3. Confirm output waveform between air mix door motor RH harness connector and ground using oscilloscope.

+		–	Output waveform
Air mix door motor RH			
Connector	Terminal		
M255	3	Ground	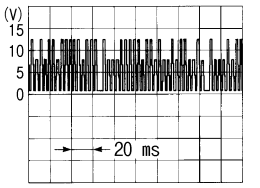 SJIA1453J

Is the inspection result normal?

YES >> GO TO 5.
NO >> GO TO 7.

5. CHECK INSTALLATION OF AIR MIX DOOR MOTOR (PASSENGER SIDE)

Check air mix door motor (passenger side) is properly installed. Refer to HAC-121, "Exploded View".

Is the inspection result normal?

YES >> Replace air mix door motor (passenger side). Refer to HAC-121, "AIR MIX DOOR MOTOR : Removal and Installation".
NO >> Repair or replace malfunctioning part.

6. CHECK AIR MIX DOOR MOTOR (PASSENGER SIDE) POWER SUPPLY CIRCUIT FOR OPEN

1. Turn ignition switch OFF.
2. Disconnect air mix door motor RH and A/C auto amp. connector.
3. Check continuity between air mix door motor RH harness connector and A/C auto amp. harness connector.

Air mix door motor RH		A/C auto amp.		Continuity
Connector	Terminal	Connector	Terminal	
M255	1	M88	17	Existed

Is the inspection result normal?

YES >> Replace A/C auto amp. Refer to HAC-113, "Removal and Installation".
NO >> Repair harness or connector.

7. CHECK AIR MIX DOOR MOTOR (PASSENGER SIDE) LIN SIGNAL CIRCUIT FOR OPEN

1. Turn ignition switch OFF.
2. Disconnect air mix door motor RH and A/C auto amp. connector.
3. Check continuity between air mix door motor RH harness connector and A/C auto amp. harness connector.

Air mix door motor RH		A/C auto amp.		Continuity
Connector	Terminal	Connector	Terminal	
M255	3	M88	16	Existed

Is the inspection result normal?

YES >> Replace A/C auto amp. Refer to HAC-113, "Removal and Installation".
NO >> Repair harness or connector.

B2636, B2637, B2638, B2639, B2654, B2655 MODE DOOR MOTOR

DTC Description

INFOID:0000000011284665

DTC DETECTION LOGIC

DTC No.	CONSULT screen terms (Trouble diagnosis content)	DTC detection condition
B2636	DR VENT DOOR FAIL (DR VENT DOOR FAIL)	When the malfunctioning door position is detected at VENT position
B2637	DR B/L DOOR FAIL (DR B/L DOOR FAIL)	When the malfunctioning door position is detected at B/L position
B2638	DR D/F1 DOOR FAIL (DR D/F1 DOOR FAIL)	When the malfunctioning door position is detected at FOOT position
B2639	DR DEF DOOR FAIL (DR DEF DOOR FAIL)	When the malfunctioning door position is detected at DEF position
B2654	D/F2 DOOR FAIL (D/F2 DOOR FAIL)	When the malfunctioning door position is detected at D/F position
B2655	B/L2 DOOR FAIL (B/L2 DOOR FAIL)	When the malfunctioning door position is detected at B/L2 position

POSSIBLE CAUSE

- Mode door motor
- Mode door motor control linkage installation condition
- A/C auto amp.
- Harness and connector (Mode door motor circuit is open or shorted)

FAIL-SAFE

—

DTC CONFIRMATION PROCEDURE

1. CHECK DTC PRIORITY

If DTC B2636, B2637, B2638, B2639, B2654 or B2655 are displayed with DTC U1000 or U1010, first perform the confirmation procedure (trouble diagnosis) for DTC U1000 or U1010.

Is applicable DTC detected?

YES >> Perform diagnosis of applicable. U1000: Refer to HAC-62, "DTC Description". U1010: Refer to HAC-63, "DTC Description".

NO >> GO TO 2.

2. PERFORM DTC CONFIRMATION PROCEDURE

With CONSULT

1. Turn ignition switch ON.
2. Select “Self Diagnostic Result” mode of “HVAC” using CONSULT.
3. Check DTC.

Is DTC detected?

YES >> Refer to HAC-85, "Diagnosis Procedure".

NO-1 >> To check malfunction sysmptom before repair: Refer to GI-42, "Intermittent Incident".

NO-2 >> Confirmation after repair: INSPECTION END

Diagnosis Procedure

INFOID:0000000011284666

1. CHECK DTC PRIORITY

If DTC B2636, B2637, B2638, B2639, B2654 or B2655 are displayed with DTC U1000 or U1010, first perform the confirmation procedure (trouble diagnosis) for DTC U1000 or U1010.

Is applicable DTC detected?

YES >> Perform diagnosis of applicable. U1000: Refer to HAC-62, "DTC Description". U1010: Refer to HAC-63, "DTC Description".

NO >> GO TO 2.

2. CHECK MODE DOOR MOTOR POWER SUPPLY

1. Turn ignition switch ON.
2. Check voltage between mode door motor harness connector and ground.

+		–	Voltage
Mode door motor			
Connector	Terminal		
M253	1	Ground	11 – 14 V

Is the inspection result normal?

YES >> GO TO 3.
NO >> GO TO 6.

3. CHECK MODE DOOR MOTOR GROUND CIRCUIT FOR OPEN

1. Turn ignition switch OFF.
2. Disconnect mode door motor connector.
3. Check continuity between mode door motor harness connector and ground.

Mode door motor		Ground	Continuity
Connector	Terminal		
M253	2		Existed

Is the inspection result normal?

YES >> GO TO 4.
NO >> Repair harness or connector.

4. CHECK MODE DOOR MOTOR LIN SIGNAL

1. Connect mode door motor connector.
2. Turn ignition switch ON.
3. Confirm output waveform between mode door motor harness connector and ground using oscilloscope.

+		–	Output waveform
Mode door motor			
Connector	Terminal		
M253	3	Ground	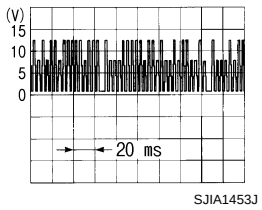

Is the inspection result normal?

YES >> GO TO 5.
NO >> GO TO 7.

5. CHECK INSTALLATION OF MODE DOOR MOTOR

Check mode door motor is properly installed. Refer to HAC-121, "Exploded View".

Is the inspection result normal?

YES >> Replace mode door motor. Refer to HAC-123, "MODE DOOR MOTOR : Removal and Installation".
NO >> Repair or replace malfunctioning part.

6. CHECK MODE DOOR MOTOR POWER SUPPLY CIRCUIT FOR OPEN

1. Turn ignition switch OFF.

2. Disconnect mode door motor and A/C auto amp. connector.
3. Check continuity between mode door motor harness connector and A/C auto amp. harness connector.

Mode door motor		A/C auto amp.		Continuity
Connector	Terminal	Connector	Terminal	
M253	1	M88	17	Existed

Is the inspection result normal?

YES >> Replace A/C auto amp. Refer to HAC-113, "Removal and Installation".
NO >> Repair harness or connector.

7. CHECK MODE DOOR MOTOR LIN SIGNAL CIRCUIT FOR OPEN

1. Turn ignition switch OFF.
2. Disconnect mode door motor and A/C auto amp. connector.
3. Check continuity between mode door motor harness connector and A/C auto amp. harness connector.

Mode door motor		A/C auto amp.		Continuity
Connector	Terminal	Connector	Terminal	
M253	3	M88	16	Existed

Is the inspection result normal?

YES >> Replace A/C auto amp. Refer to HAC-113, "Removal and Installation".
NO >> Repair harness or connector.

B263D, B263E, B263F INTAKE DOOR MOTOR

DTC Description

INFOID:0000000011284667

DTC DETECTION LOGIC

DTC No.	CONSULT screen terms (Trouble diagnosis content)	DTC detection condition
B263D	FRE DOOR FAIL (FRE DOOR FAIL)	When the malfunctioning intake door position is detected at FRE position
B263E	20P FRE DOOR FAIL (20P FRE DOOR FAIL)	When the malfunctioning intake door position is detected at 20% FRE position
B263F	REC DOOR FAIL (REC DOOR FAIL)	When the malfunctioning intake door position is detected at REC position

POSSIBLE CAUSE

- Intake door motor
- Intake door motor control linkage installation condition
- A/C auto amp.
- Harness and connector (Intake door motor circuit is open or shorted)

FAIL-SAFE

—

DTC CONFIRMATION PROCEDURE

1. CHECK DTC PRIORITY

If DTC B263D, B263E or B263F are displayed with DTC U1000 or U1010, first perform the confirmation procedure (trouble diagnosis) for DTC U1000 or U1010.

Is applicable DTC detected?

YES >> Perform diagnosis of applicable. U1000: Refer to HAC-62, "DTC Description". U1010: Refer to HAC-63, "DTC Description".

NO >> GO TO 2.

2. PERFORM DTC CONFIRMATION PROCEDURE

With CONSULT

1. Turn ignition switch ON.
2. Select “Self Diagnostic Result” mode of “HVAC” using CONSULT.
3. Check DTC.

Is DTC detected?

YES >> Refer to HAC-88, "Diagnosis Procedure".

NO-1 >> To check malfunction sysmptom before repair: Refer to GI-42, "Intermittent Incident".

NO-2 >> Confirmation after repair: INSPECTION END

Diagnosis Procedure

INFOID:0000000011284668

1. CHECK DTC PRIORITY

If DTC B263D, B263E or B263F are displayed with DTC U1000 or U1010, first perform the confirmation procedure (trouble diagnosis) for DTC U1000 or U1010.

Is applicable DTC detected?

YES >> Perform diagnosis of applicable. U1000: Refer to HAC-62, "DTC Description". U1010: Refer to HAC-63, "DTC Description".

NO >> GO TO 2.

2. CHECK INTAKE DOOR MOTOR POWER SUPPLY

1. Turn ignition switch ON.
2. Check voltage between intake door motor harness connector and ground.

+		–	Voltage
Intake door motor			
Connector	Terminal		
M254	1	Ground	11 – 14 V

Is the inspection result normal?

YES >> GO TO 3.
NO >> GO TO 6.

3. CHECK INTAKE DOOR MOTOR GROUND CIRCUIT FOR OPEN

1. Turn ignition switch OFF.
2. Disconnect intake door motor connector.
3. Check continuity between intake door motor harness connector and ground.

Intake door motor		Ground	Continuity
Connector	Terminal		
M254	2		Existed

Is the inspection result normal?

YES >> GO TO 4.
NO >> Repair harness or connector.

4. CHECK INTAKE DOOR MOTOR LIN SIGNAL

1. Connect intake door motor connector.
2. Turn ignition switch ON.
3. Confirm output waveform between intake door motor harness connector and ground using oscilloscope.

+		–	Output waveform
Intake door motor			
Connector	Terminal		
M254	3	Ground	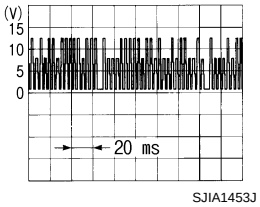

Is the inspection result normal?

YES >> GO TO 5.
NO >> GO TO 7.

5. CHECK INSTALLATION OF INTAKE DOOR MOTOR

Check intake door motor is properly installed. Refer to HAC-121, "Exploded View".

Is the inspection result normal?

YES >> Replace intake door motor. Refer to HAC-123, "INTAKE DOOR MOTOR : Removal and Installation".
NO >> Repair or replace malfunctioning part.

6. CHECK INTAKE DOOR MOTOR POWER SUPPLY CIRCUIT FOR OPEN

1. Turn ignition switch OFF.
2. Disconnect intake door motor and A/C auto amp. connector.
3. Check continuity between intake door motor harness connector and A/C auto amp. harness connector.

Intake door motor		A/C auto amp.		Continuity
Connector	Terminal	Connector	Terminal	
M254	1	M88	17	Existed

Is the inspection result normal?

YES >> Replace A/C auto amp. Refer to HAC-113, "Removal and Installation".
NO >> Repair harness or connector.

7. CHECK INTAKE DOOR MOTOR LIN SIGNAL CIRCUIT FOR OPEN

1. Turn ignition switch OFF.
2. Disconnect intake door motor and A/C auto amp. connector.
3. Check continuity between intake door motor harness connector and A/C auto amp. harness connector.

Intake door motor		A/C auto amp.		Continuity
Connector	Terminal	Connector	Terminal	
M254	3	M88	16	Existed

Is the inspection result normal?

YES >> Replace A/C auto amp. Refer to HAC-113, "Removal and Installation".
NO >> Repair harness or connector.

B27B0 A/C AUTO AMP.

DTC Description

INFOID:0000000011284669

DTC DETECTION LOGIC

DTC No.	CONSULT screen terms (Trouble diagnosis content)	DTC detection condition
B27B0	A/C AUTO AMP. (A/C auto amp.)	A/C auto amp. EEPROM system is malfunctioning.

POSSIBLE CAUSE

A/C auto amp.

FAIL-SAFE

—

DTC CONFIRMATION PROCEDURE

1. CHECK DTC PRIORITY

If DTC B27B0 is displayed with DTC U1000 or U1010, first perform the confirmation procedure (trouble diagnosis) for DTC U1000 or U1010.

Is applicable DTC detected?

YES >> Perform diagnosis of applicable. U1000: Refer to HAC-62, "DTC Description". U1010: Refer to HAC-63, "DTC Description".

NO >> GO TO 2.

2. PERFORM DTC CONFIRMATION PROCEDURE

With CONSULT

1. Turn ignition switch ON.
2. Select “Self Diagnostic Result” mode of “HVAC” using CONSULT.
3. Check DTC.

Is DTC detected?

YES >> Refer to HAC-91, "Diagnosis Procedure".

NO-1 >> To check malfunction sysmptom before repair: Refer to GI-42, "Intermittent Incident".

NO-2 >> Confirmation after repair: INSPECTION END

Diagnosis Procedure

INFOID:0000000011284670

1. CHECK DTC PRIORITY

If DTC B27B0 is displayed with DTC U1000 or U1010, first perform the confirmation procedure (trouble diagnosis) for DTC U1000 or U1010.

Is applicable DTC detected?

YES >> Perform diagnosis of applicable. U1000: Refer to HAC-62, "DTC Description". U1010: Refer to HAC-63, "DTC Description".

NO >> GO TO 2.

2. PERFORM SELF DIAGNOSTIC

With CONSULT

1. Turn ignition switch ON.
2. Select “Self Diagnostic Result” mode of “HVAC” using CONSULT.
3. Touch “ERASE”.
4. Turn ignition switch OFF.
5. Turn ignition switch ON.
6. Perform “DTC CONFIRMATION PROCEDURE”. Refer to HAC-37, "DTC Index".

Is DTC detected again?

YES >> Replace A/C auto amp. Refer to HAC-113, "Removal and Installation".

NO >> INSPECTION END

POWER SUPPLY AND GROUND CIRCUIT

A/C AUTO AMP.

A/C AUTO AMP. : Diagnosis Procedure

INFOID:0000000011284671

1. CHECK FUSE (IGNITION POWER SUPPLY)

1. Turn ignition switch OFF.
2. Check 10 A fuses [No. 12, located in fuse block (J/B)].
   NOTE:
   Refer to PG-97, "Fuse, Connector and Terminal Arrangement".

Is the inspection result normal?

YES >> GO TO 2.
NO >> Replace the blown fuse after repairing the affected circuit if a fuse is blown.

2. CHECK A/C AUTO AMP. IGNITION POWER SUPPLY

1. Disconnect A/C auto amp. connector.
2. Turn ignition switch ON.
3. Check voltage between A/C auto amp. harness connector and ground.

+		–	Voltage
A/C auto amp.			
Connector	Terminal		
M88	23	Ground	11 – 14 V

Is the inspection result normal?

YES >> GO TO 3.
NO >> Repair harness or connector between A/C auto amp. and fuse.

3. CHECK FUSE (ACCESSORY POWER SUPPLY)

1. Turn ignition switch OFF.
2. Check 10 A fuses [No. 1, located in fuse block (J/B)].
   NOTE:
   Refer to PG-97, "Fuse, Connector and Terminal Arrangement".

Is the inspection result normal?

YES >> GO TO 4.
NO >> Replace the blown fuse after repairing the affected circuit if a fuse is blown.

4. CHECK A/C AUTO AMP. ACCESSORY POWER SUPPLY

1. Disconnect A/C auto amp. connector.
2. Turn ignition switch ACC.
3. Check voltage between A/C auto amp. harness connector and ground.

+		–	Voltage
A/C auto amp.			
Connector	Terminal		
M88	13	Ground	11 – 14 V

Is the inspection result normal?

YES >> GO TO 5.
NO >> Repair harness or connector between A/C auto amp. and fuse.

5. CHECK FUSE (BATTERY POWER SUPPLY)

1. Turn ignition switch OFF.
2. Check 10 A fuse [No. 6, located in fuse block (J/B)].
   NOTE:
   Refer to PG-97, "Fuse, Connector and Terminal Arrangement".

Is the inspection result normal?

YES >> GO TO 6.
NO >> Replace the blown fuse after repairing the affected circuit if a fuse is blown.

6. CHECK A/C AUTO AMP. BATTERY POWER SUPPLY

1. Disconnect A/C auto amp. connector.
2. Check voltage between A/C auto amp. harness connector and ground.

+		–	Voltage
A/C auto amp.			
Connector	Terminal		
M88	3	Ground	11 – 14 V

Is the inspection result normal?

YES >> GO TO 7.
NO >> Repair harness or connector between A/C auto amp. and fuse.

7. CHECK A/C AUTO AMP. GROUND CIRCUIT FOR OPEN

1. Turn ignition switch OFF.
2. Check continuity between A/C auto amp. harness connector and ground.

A/C auto amp.		—	Continuity
Connector	Terminal		
M88	2	Ground	Existed
	22		
	37		
	54		
	56		

Is the inspection result normal?

YES >> Replace A/C auto amp. Refer to HAC-113, "Removal and Installation".
NO >> Repair harness or connector.

DOOR MOTOR

Diagnosis Procedure

INFOID:0000000011284672

NOTE:
If all of door motor DTCs are detected, check this circuit.

1. CHECK DOOR MOTOR POWER SUPPLY

1. Turn ignition switch ON.
2. Check voltage between intake door motor harness connector and ground.

+		–	Voltage
Intake door motor			
Connector	Terminal		
M254	1	Ground	11 – 14 V

Is the inspection result normal?

YES >> GO TO 2.
NO >> GO TO 7.

2. CHECK DOOR MOTOR GROUND CIRCUIT FOR OPEN

1. Turn ignition switch OFF.
2. Disconnect intake door motor and connector.
3. Check continuity between intake door motor harness connector ground.

Intake door motor		Ground	Continuity
Connector	Terminal		
M254	2		Existed

Is the inspection result normal?

YES >> GO TO 3.
NO >> Repair harness or connector.

3. CHECK DOOR MOTOR LIN SIGNAL

1. Connect A/C auto amp. connector.
2. Turn ignition switch ON.
3. Confirm output waveform between A/C auto amp. harness connector and ground using oscilloscope.

+		–	Output waveform
A/C auto amp.			
Connector	Terminal		
M88	16	Ground	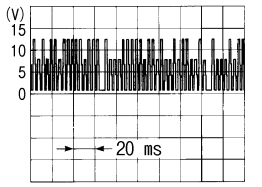 SJIA1453J

Is the inspection result normal?

YES >> GO TO 4.
NO >> GO TO 6.

4. CHECK DOOR MOTOR LIN SIGNAL CIRCUIT FOR OPEN

1. Turn ignition switch OFF.
2. Disconnect A/C auto amp. and intake door motor connector.
3. Check continuity between A/C auto amp. harness connector and intake door motor harness connector.

A/C auto amp.		Intake door motor		Continuity
Connector	Terminal	Connector	Terminal	
M88	16	M254	3	Existed

Is the inspection result normal?

YES >> GO TO 5.
NO >> Repair harness or connector.

5. CHECK INTERMITTENT INCIDENT

Check intermittent incident. Refer to GI-42, "Intermittent Incident".

>> INSPECTION END

6. CHECK DOOR MOTOR LIN SIGNAL CIRCUIT FOR SHORT

1. Turn ignition switch OFF.
2. Disconnect following connectors.
- A/C auto amp.
- Air mix door motor RH
- Air mix door motor LH
- Mode door motor
- Intake door motor
3. Check continuity between A/C auto amp. harness connector and ground.

A/C auto amp.		—	Continuity
Connector	Terminal		
M88	16	Ground	Not existed

Is the inspection result normal?

YES >> Replace A/C auto amp. Refer to HAC-113, "Removal and Installation".
NO >> Repair harness or connector.

7. CHECK DOOR MOTOR POWER SUPPLY CIRCUIT FOR OPEN

1. Turn ignition switch OFF.
2. Disconnect intake door motor and A/C auto amp. connector.
3. Check continuity between intake door motor harness connector and A/C auto amp. harness connector.

Intake door motor		A/C auto amp.		Continuity
Connector	Terminal	Connector	Terminal	
M254	1	M88	17	Existed

Is the inspection result normal?

YES >> GO TO 8.
NO >> Repair harness or connector.

8. CHECK DOOR MOTOR POWER SUPPLY CIRCUIT FOR SHORT

1. Disconnect following connectors.
- Air mix door motor RH
- Air mix door motor LH
- Mode door motor
2. Check continuity between A/C auto amp. harness connector and ground.

A/C auto amp.		—	Continuity
Connector	Terminal		
M88	17	Ground	Not existed

Is the inspection result normal?

YES >> Replace A/C auto amp. Refer to HAC-113, "Removal and Installation".
NO >> Repair harness or connector.

BLOWER MOTOR

Diagnosis Procedure

INFOID:0000000011284673

1. CHECK FUSE

1. Turn ignition switch OFF.
2. Check 15 A fuses [Nos. 27 and 28, located in the fuse block (J/B)].
   NOTE:
   Refer to PG-97, "Fuse, Connector and Terminal Arrangement".

Is the inspection result normal?

YES >> GO TO 2.
NO >> Replace the fuse after repairing the applicable circuit.

2. CHECK BLOWER MOTOR POWER SUPPLY

1. Disconnect the blower motor connector.
2. Turn the ignition switch ON.
3. Check voltage between blower motor harness connector and ground.

+		–	Voltage (Approx.)
Blower motor			
Connector	Terminal		
M23	3	Ground	Battery voltage

Is the inspection result normal?

YES >> GO TO 3.
NO >> GO TO 6.

3. CHECK BLOWER MOTOR GROUND CIRCUIT

1. Turn the ignition switch OFF.
2. Check continuity between blower motor harness connector and ground.

Blower motor		—	Continuity
Connector	Terminal		
M23	6	Ground	Existed

Is the inspection result normal?

YES >> GO TO 4.
NO >> Repair the harnesses or connectors.

4. CHECK BLOWER MOTOR CONTROL SIGNAL CIRCUIT

1. Disconnect the A/C auto amp. connector.
2. Check for continuity between the blower motor harness connector and A/C auto amp. harness connector.

Blower motor		A/C auto amp.		Continuity
Connector	Terminal	Connector	Terminal	
M23	4	M88	18	Existed

Is the inspection result normal?

YES >> GO TO 5.
NO >> Repair the harnesses or connectors.

5. CHECK BLOWER MOTOR CONTROL SIGNAL

1. Reconnect blower motor connector and A/C auto amp. connector.
2. Turn the ignition switch ON.
3. Operate the MODE switch to VENT position.
4. Change fan speed from Lo to Hi, and check duty ratios between blower motor harness connector and ground by using an oscilloscope.

NOTE:
Calculate the drive signal duty ratio as shown in the figure.
T2 = Approx. 1.6 ms

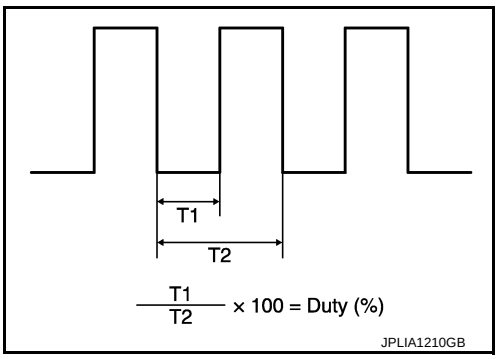

Blower motor		Condition	Duty ratio (Approx.)
Connector	Terminal	Fan speed (manual) VENT mode	
M23	4	1st	25 %
		2nd	31 %
		3rd	37 %
		4th	45 %
		5th	55 %
		6th	65 %
		7th	79 %

Is the inspection result normal?

YES >> Replace blower motor. Refer to VTL-17, "BLOWER MOTOR : Removal and Installation".
NO >> Replace the A/C auto amp. Refer to HAC-113, "Removal and Installation".

6. CHECK BLOWER MOTOR RELAY GROUND CIRCUIT

1. Turn the ignition switch OFF.
2. Check continuity between fuse block (J/B) harness connector and ground.

Fuse block (J/B)		—	Continuity
Connector	Terminal		
M133	19C	Ground	Existed

Is the inspection result normal?

YES >> GO TO 7.
NO >> Repair the harnesses or connectors.

7. CHECK BLOWER RELAY

Check blower relay. Refer to HAC-99, "Component Inspection (Blower Relay)".

Is the inspection result normal?

YES >> Repair harness or connector between blower motor and fuse block (J/B).
NO >> Replace blower relay.

Component Inspection (Blower Motor)

INFOID:0000000011284674

1. CHECK BLOWER MOTOR-I

1. Remove blower motor.
2. Check that there is not any mixing foreign object in the blower motor.

Is the inspection result normal?

YES >> GO TO 2.
NO >> Replace blower motor. Refer to VTL-17, "BLOWER MOTOR : Removal and Installation".

2. CHECK BLOWER MOTOR-II

Check that there is not breakage or damage in the blower motor.

Is the inspection result normal?

YES >> GO TO 3.
NO >> Replace blower motor. Refer to VTL-17, "BLOWER MOTOR : Removal and Installation".

3. CHECK BLOWER MOTOR-III

Check that blower motor turns smoothly.

Is the inspection result normal?

YES >> INSPECTION END
NO >> Replace blower motor. Refer to VTL-17, "BLOWER MOTOR : Removal and Installation".

Component Inspection (Blower Relay)

INFOID:0000000011284675

1. CHECK BLOWER RELAY

1. Turn ignition switch OFF.
2. Remove blower relay.
3. Check continuity between blower relay terminal 3 and 5 when voltage is supplied between terminal 1 and 2.

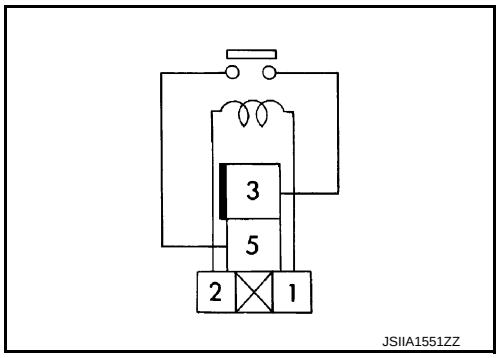

Terminal		Voltage	Continuity
3	5	ON	Existed
		OFF	Not existed

Is the inspection result normal?

YES >> INSPECTION END
NO >> Replace blower relay.

MAGNET CLUTCH

Component Function Check

INFOID:0000000011284676

1. CHECK MAGNET CLUTCH OPERATION

Perform auto active test of IPDM E/R. Refer to PCS-11, "Diagnosis Description".

Does it operate normally?

YES >> INSPECTION END
NO >> Refer to HAC-100, "Diagnosis Procedure".

Diagnosis Procedure

INFOID:0000000011284677

1. CHECK FUSE

1. Turn ignition switch OFF.
2. Check 10 A fuse (No. 61, located in IPDM E/R).
   NOTE:
   Refer to PG-97, "Fuse, Connector and Terminal Arrangement".

Is the inspection result normal?

YES >> GO TO 2.
NO >> Replace the blown fuse after repairing the affected circuit if a fuse is blown.

2. CHECK MAGNET CLUTCH MAGNET CLUTCH POWER SUPPLY

1. Disconnect compressor connector.
2. Select “HVAC TEST” in “Active Test” mode of “HVAC” using CONSULT.
3. Check voltage between compressor harness connector and ground.

+		-	Test item		Voltage
Compressor					
Connector	Terminal				
F1	1	Ground	HVAC TEST	MODE1	9 – 16 V
				OFF	0 – 1 V

Is the inspection result normal?

YES >> GO TO 4.
NO >> GO TO 3.

3. CHECK MAGNET CLUTCH POWER SUPPLY CIRCUIT FOR OPEN

1. Disconnect IPDM E/R connector.
2. Check continuity between IPDM E/R harness connector and compressor harness connector.

IPDM E/R		Compressor		Continuity
Connector	Terminal	Connector	Terminal	
E123	56	F1	1	Existed

Is the inspection result normal?

YES >> Replace IPDM E/R. Refer to PCS-38, "Removal and Installation".
NO >> Repair harness or connector.

4. CHECK MAGNET CLUTCH GROUND CIRCUIT FOR OPEN

Check continuity between compressor harness connector and ground.

Compressor		—	Continuity
Connector	Terminal		
F1	2	Ground	Existed

Is the inspection result normal?

YES >> Replace compressor. Refer to HA-30, "Removal and Installation".
NO >> Repair harness or connector.

ECV (ELECTRICAL CONTROL VALVE)

Diagnosis Procedure

INFOID:0000000011284678

1. CHECK ECV POWER SUPPLY CIRCUIT

1. Turn ignition switch OFF.
2. Disconnect compressor connector.
3. Turn ignition switch ON.
4. Check voltage between compressor harness connector and ground.

+		–	Voltage (Approx.)
Compressor			
Connector	Terminal		
F64	3	Ground	Battery voltage

Is the inspection result normal?

YES >> GO TO 2.
NO >> Repair harness or connector between compressor and fuse.

2. CHECK ECV CONTROL SIGNAL CIRCUIT FOR OPEN

1. Turn ignition switch OFF.
2. Disconnect A/C auto amp. connector.
3. Check continuity between compressor harness connector and A/C auto amp. harness connector.

Compressor		A/C auto amp.		Continuity
Connector	Terminal	Connector	Terminal	
F64	4	M88	40	Existed

Is the inspection result normal?

YES >> GO TO 3
NO >> Repair harness or connector.

3. CHECK ECV

Check ECV. Refer to HAC-102, "Component Inspection".

Is the inspection result normal?

YES >> Replace A/C auto amp. Refer to HAC-113, "Removal and Installation".
NO >> Replace compressor. Refer to HA-30, "Removal and Installation".

Component Inspection

INFOID:0000000011284679

1. CHECK ECV

Check continuity between compressor terminals.

Terminal		Continuity
3	4	Existed

Is the inspection result normal?

YES >> INSPECTION END
NO >> Replace compressor. Refer to HA-30, "Removal and Installation".

IONIZER

Diagnosis Procedure

INFOID:0000000011284680

1. CHECK IONIZER POWER SUPPLY

1. Turn ignition switch OFF.
2. Disconnect ionizer connector.
3. Turn ignition switch ON.
4. Check voltage between ionizer harness connector and ground.

+		–	Voltage (Approx.)
Ionizer			
Connector	Terminal		
M54	1	Ground	Battery voltage

Is the inspection result normal?

YES >> GO TO 2.
NO >> Repair harness or connector between ionizer and fuse block (J/B).

2. CHECK IONIZER GROUND CIRCUIT FOR OPEN

1. Turn ignition switch OFF.
2. Check continuity between ionizer harness connector and ground.

Ionizer		—	Continuity
Connector	Terminal		
M54	3	Ground	Existed

Is the inspection result normal?

YES >> GO TO 3.
NO >> Repair harness or connector.

3. CHECK IONIZER (ON/OFF) CONTROL SIGNAL

1. Connect ionizer connector.
2. Disconnect A/C auto amp. connector.
3. Turn ignition switch ON.
4. Check voltage between A/C auto amp. harness connector and ground.

+		–	Voltage
A/C auto amp.			
Connector	Terminal		
M88	38	Ground	9.5 – 13.5 V

Is the inspection result normal?

YES >> Replace A/C auto amp. Refer to HAC-113, "Removal and Installation".
NO >> GO TO 4.

4. CHECK IONIZER (ON/OFF) CONTROL SIGNAL CIRCUIT FOR OPEN

1. Turn ignition switch OFF.
2. Disconnect ionizer connector.
3. Check continuity between A/C auto amp. harness connector and ionizer harness connector.

Ionizer		A/C auto amp.		Continuity
Connector	Terminal	Connector	Terminal	
M54	4	M88	38	Existed

Is the inspection result normal?

YES >> GO TO 5.
NO >> Repair harness or connector.

5. CHECK IONIZER (ON/OFF) CONTROL SIGNAL CIRCUIT FOR SHORT

Check continuity between A/C auto amp. harness connector and ground.

Ionizer		—	Continuity
Connector	Terminal		
M54	4	Ground	Not existed

Is the inspection result normal?

YES >> Replace ionizer. Refer to HAC-124, "Removal and Installation".
NO >> Repair harness or connector.

SYMPTOM DIAGNOSIS

AUTOMATIC AIR CONDITIONER SYSTEM

Symptom Table

INFOID:0000000011284681

NOTE:
Perform self-diagnoses with CONSULT before performing the symptom diagnosis. If any DTC is detected, perform the corresponding diagnosis.

Symptom		Corresponding malfunction part	Check item/Reference
• Air conditioning cannot be controlled. • Operation status of air conditioning is not indicated on display.	Fail-safe activates.	• Communication signal (Integral switch ⇔ Display control unit) circuit • Integral switch • Display control unit	AV-160, "Work Flow"
	Fail-safe does not activates.	• A/C auto amp. ignition power supply or ground circuit • A/C auto amp.	HAC-92, "A/C AUTO AMP. : Diagnosis Procedure"
• Memory function does not operate normally. • The setting is not maintained. (It returns to initial condition.)		• A/C auto amp. battery power supply circuit • A/C auto amp.	HAC-92, "A/C AUTO AMP. : Diagnosis Procedure"
Discharge air temperature does not change.	Driver side	Air mix door motor (driver side) system installation condition	Check air mix door motor (driver side) system is properly installed. Refer to HAC-121, "Exploded View".
	Passenger side	Air mix door motor (passenger side) system installation condition	Check air mix door motor (passenger side) system is properly installed. Refer to HAC-121, "Exploded View".
Air outlet does not change.		Mode door motor system installation condition	Check mode door motor system is properly installed. Refer to HAC-121, "Exploded View".
Air inlet does not change.		Intake door motor system installation condition	Check intake door motor system is properly installed. Refer to HAC-121, "Exploded View".
Blower motor operation is malfunctioning.		• Power supply system of blower motor • Circuit between blower motor and A/C auto amp. • Blower motor • A/C auto amp.	HAC-97, "Diagnosis Procedure"
Compressor does not operate.		• Magnet clutch • Magnet clutch power supply circuit • IPDM E/R (A/C relay) • The circuit between ECM and refrigerant pressure sensor • Refrigerant pressure sensor • CAN communication circuit • A/C auto amp.	HAC-100, "Diagnosis Procedure"
• Insufficient cooling. • No cool air comes out. (Air flow volume is normal.)		• Magnet clutch control system • Drive belt slipping • Cooler cycle • ECV • Air leakage from each duct • Temperature setting trimmer	HAC-108, "Diagnosis Procedure"
• Insufficient heating. • No warm air comes out. (Air flow volume is normal.)		• Engine cooling system • Heater hose • Heater core • Air leakage from each duct • Temperature setting trimmer	HAC-110, "Diagnosis Procedure"

Symptom		Corresponding malfunction part	Check item/Reference
Noise is heard when the A/C system operates.	During compressor operation.	Cooler cycle	HA-27, "Symptom Table"
	During blower motor operation.	• Mixing any foreign object in blower motor • Blower motor fan breakage • Blower motor rotation inferiority	HAC-98, "Component Inspection (Blower Motor)"
Login ID control does not operate. (Air conditioning function only		A/C auto amp.	Replace A/C auto amp. Refer to HAC-113, "Removal and Installation".

ACCS (ADVANCED CLIMATE CONTROL SYSTEM)

Symptom Table

INFOID:0000000011284682

NOTE:
- Perform self-diagnoses with on board diagnosis and CONSULT, before performing the symptom diagnosis. If any malfunction result or DTC is detected, perform the corresponding diagnosis.
- The following table is based on the condition that front automatic air conditioning system operates normally.

Symptom	Corresponding malfunction part	Check item/Reference
Auto intake switch cannot be operated. [Automatic intake control (exhaust gas / outside odor detecting mechanism) does not operate]	• Communication signal (Integral switch ⇔ Display control unit) circuit • Integral switch • Display control unit	AV-160, "Work Flow"
Plasmacluster™ ion does not operate.	• Ionizer power supply circuit • Ionizer ON/OFF control signal circuit • Ionizer • A/C auto amp.	Refer to HAC-103, "Diagnosis Procedure".
Operation status of Plasmacluster™ ion does not switch according to air flow.	A/C auto amp	Replace A/C auto amp. Refer to HAC-113, "Removal and Installation".

INSUFFICIENT COOLING

Description

INFOID:0000000011284683

Symptom
- Insufficient cooling
- No cool air comes out. (Air flow volume is normal.)

Diagnosis Procedure

INFOID:0000000011284684

NOTE:
Perform self-diagnoses with CONSULT before performing symptom diagnosis. If any DTC is detected, perform the corresponding diagnosis.

1. CHECK MAGNET CLUTCH OPERATION

1. Turn ignition switch ON.
2. Operate fan switch.
3. Touch A/C switch.
4. Check that A/C indicator turns ON. Check visually and by sound that compressor operates.
5. Touch A/C switch again.
6. Check that A/C indicator turns OFF. Check that compressor stops.

Is the inspection result normal?

YES >> GO TO 2.
NO >> Perform diagnosis of “COMPRESSOR DOES NOT OPERATE” in “SYMPTOM DIAGNOSIS”. Refer to HAC-111, "Diagnosis Procedure".

2. CHECK DRIVE BELT

Check tension of drive belt. Refer to EM-21, "Inspection".

Is the inspection result normal?

YES >> GO TO 3.
NO >> Adjust or replace drive belt depending on the inspection results.

3. CHECK REFRIGERANT CYCLE PRESSURE

Connect recovery/recycling recharging equipment to the vehicle and perform pressure inspection with gauge. Refer to HA-27, "Symptom Table".

Is the inspection result normal?

YES >> GO TO 4.
NO >> Repair or replace parts depending on the inspection results.

4. CHECK ECV

Perform ECV circuit diagnosis. Refer to HAC-102, "Diagnosis Procedure".

Is the inspection result normal?

YES >> GO TO 5.
NO >> Repair or replace parts depending on the inspection results.

5. CHECK AIR LEAKAGE FROM EACH DUCT

Check duct and nozzle, etc. of the air conditioning system for leakage.

Is the inspection result normal?

YES >> GO TO 6.
NO >> Repair or replace parts depending on the inspection results.

6. CHECK SETTING OF TEMPERATURE SETTING TRIMMER

1. Check setting value of temperature setting trimmer. Refer to HAC-58, "Temperature Setting Trimmer".
2. Check that temperature setting trimmer is set to “+ direction”.
   NOTE:
   The control temperature can be set with the setting of the temperature setting trimmer.
3. Set difference between the set temperature and control temperature to “0”.

Is inspection result normal?

YES >> INSPECTION END
NO >> Replace A/C auto amp. Refer to HAC-113, "Removal and Installation".

INSUFFICIENT HEATING

Description

INFOID:0000000011284685

Symptom
- Insufficient heating
- No warm air comes out. (Air flow volume is normal.)

Diagnosis Procedure

INFOID:0000000011284686

NOTE:
Perform self-diagnoses with CONSULT before performing symptom diagnosis. If any DTC is detected, perform the corresponding diagnosis.

1. CHECK COOLING SYSTEM

1. Check engine coolant level and check for leakage. Refer to CO-8, "Inspection".
2. Check reservoir tank cap. Refer to CO-13, "RESERVOIR TANK CAP : Inspection".
3. Check water flow sounds of the engine coolant. Refer to CO-9, "Refilling".

Is the inspection result normal?

YES >> GO TO 2.
NO >> Refill engine coolant and repair or replace the parts depending on the inspection results.

2. CHECK HEATER HOSE

Check installation of heater hose by visually or touching.

Is the inspection result normal?

YES >> GO TO 3.
NO >> Repair or replace parts depending on the inspection results.

3. CHECK HEATER CORE

1. Check temperature of inlet hose and outlet hose of heater core.
2. Check that inlet side of heater core is hot and the outlet side is slightly lower than/almost equal to the inlet side.
   CAUTION:
   Always perform the temperature inspection in a short period of time because the engine coolant temperature is very hot.

Is the inspection result normal?

YES >> GO TO 4.
NO >> Replace heater core. Refer to HA-45, "HEATER CORE : Removal and Installation".

4. CHECK AIR LEAKAGE FROM EACH DUCT

Check duct and nozzle, etc. of the air conditioning system for air leakage.

Is the inspection result normal?

YES >> GO TO 5.
NO >> Repair or replace parts depending on the inspection results.

5. CHECK SETTING OF TEMPERATURE SETTING TRIMMER

1. Check setting value of temperature setting trimmer. Refer to HAC-58, "Temperature Setting Trimmer".
2. Check that temperature setting trimmer is set to “– direction”.
   NOTE:
   The control temperature can be set by the temperature setting trimmer.
3. Set difference between the set temperature and control temperature to “0”.

Are the symptoms solved?

YES >> INSPECTION END
NO >> Replace A/C auto amp. Refer to HAC-113, "Removal and Installation".

COMPRESSOR DOES NOT OPERATE

Description

INFOID:0000000011284687

SYMPTOM

Compressor does not operate.

Diagnosis Procedure

INFOID:0000000011284688

NOTE:

- Perform self-diagnoses with CONSULT before performing symptom diagnosis. If any DTC is detected, perform the corresponding diagnosis.
- Check that refrigerant is enclosed in cooler cycle normally. If refrigerant amount is shortage from proper amount, perform the inspection of refrigerant leakage.

1. CHECK MAGNET CLUTCH OPERATION

Check magnet clutch. Refer to HAC-100, "Component Function Check".

Does it operate normally?

YES >> GO TO 2.
NO >> Repair or replace malfunctioning parts.

2. CHECK REFRIGERANT PRESSURE SENSOR

Check refrigerant pressure sensor. Refer to EC-567, "Component Function Check".

Is the inspection result normal?

YES >> GO TO 3.
NO >> Repair or replace malfunctioning parts.

3. CHECK ECM OUTPUT SIGNAL

With CONSULT

1. Select “DATA MONITOR” mode of “ECM” using CONSULT.
2. Select “AIR COND SIG” and “HEATER FAN SW”, and check status under the following conditions.

Monitor item	Condition		Status
AIR COND SIG	A/C switch	OFF (A/C indicator: OFF)	Off
		ON (A/C indicator: ON)	On
HEATER FAN SW	Blower motor	OFF	Off
		ON	On

Is the inspection result normal?

YES >> Replace IPDM E/R. Refer to PCS-38, "Removal and Installation".
NO >> Replace ECM. Refer to EC-580, "Removal and Installation".

REMOVAL AND INSTALLATION

INTEGRAL SWITCH

Removal and Installation

INFOID:0000000011284689

REMOVAL

Remove integral switch. Refer to AV-273, "Removal and Installation".

INSTALLATION

Install in the reverse order of removal.

A/C AUTO AMP.

Removal and Installation

INFOID:0000000011284690

REMOVAL

CAUTION:

Before replacing A/C auto amp., perform "READ CONFIGURATION" to save or print current vehicle specification. Refer to HAC-55, "Description".

1. Remove console upper finisher. Refer to IP-24, "Removal and Installation".
2. Remove fixing screws Ⓐ.

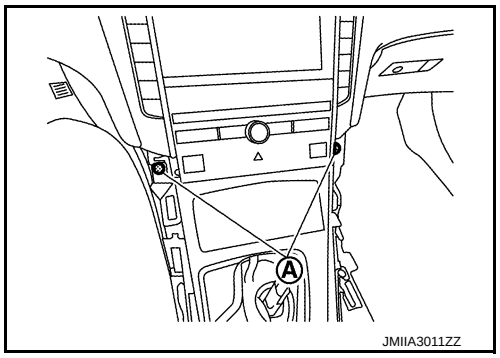

3. Disengage fixing metal clips according to numerical order 1→3 indicated by arrows as shown in the figure, and then move console finisher assembly to secure work space.

: Metal clip

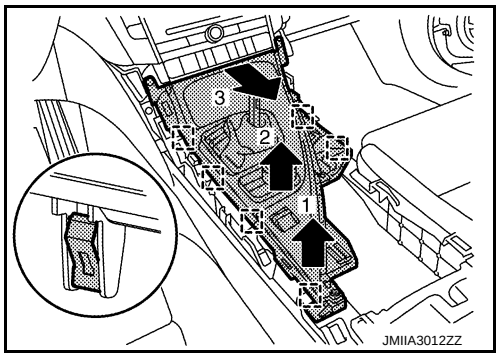

4. Remove instrument finisher C and D. Refer to IP-13, "Removal and Installation".
5. Remove integral switch. Refer to IP-13, "Removal and Installation".
6. Remove fixing screws Ⓐ, and then pull out AV & NAVI control unit.

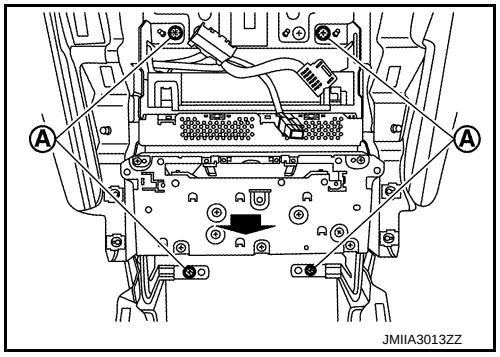

7. Remove fixing screws Ⓐ

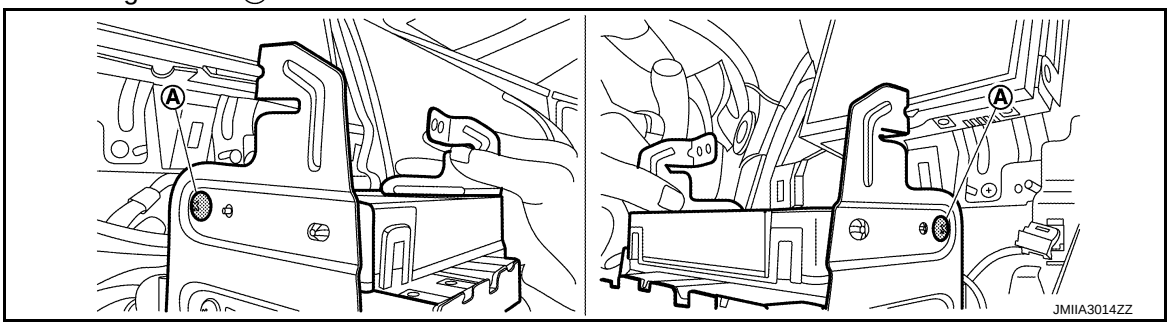

8. Disconnect harness connectors, and then remove A/C auto amp..

INSTALLATION

Install in the reverse order of removal.

CAUTION:

Be sure to perform "WRITE CONFIGRATION" when replacing A/C auto amp. Refer to HAC-55, "Description".

AMBIENT SENSOR

Removal and Installation

INFOID:0000000011284691

REMOVAL

1. Remove air duct (inlet). Refer to EM-30, "Removal and Installation".
2. Disconnect harness connector, and then remove ambient sensor.

INSTALLATION

Install in the reverse order of removal.

IN-VEHICLE SENSOR

Removal and Installation

INFOID:0000000011284692

REMOVAL

1. Remove instrument lower panel LH. Refer to IP-13, "Removal and Installation".
2. Remove fixing screw Ⓐ, and then remove in-vehicle sensor.

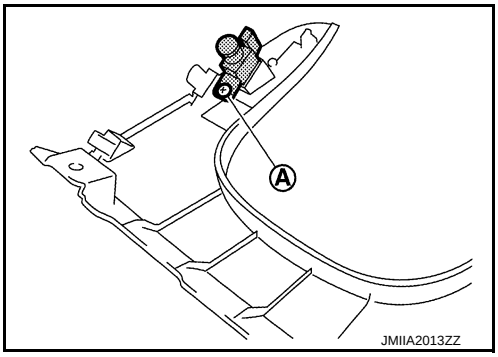

INSTALLATION

Install in the reverse order of removal.

SUNLOAD SENSOR

Removal and Installation

INFOID:0000000011284693

REMOVAL

1. Apply protective tape (A) on front speaker grille to protect it from damage.

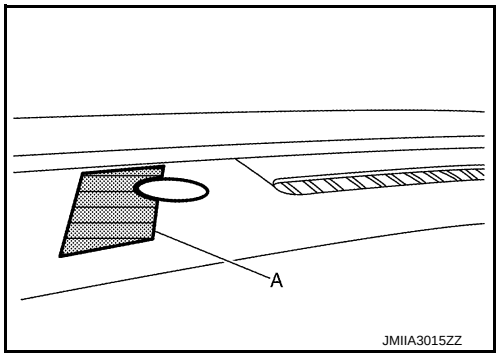

2. Disengage fixing pawls using a remover tool (A), and then pull up sunload sensor.

   : Pawl

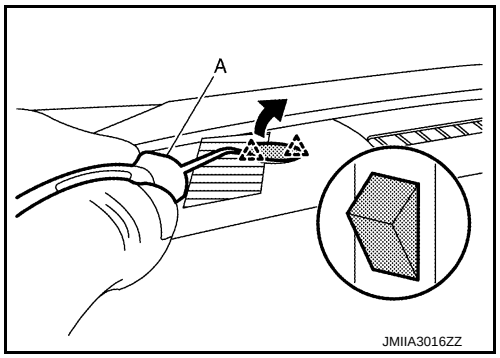

3. Disconnect harness connector, and then remove sunload sensor.

INSTALLATION

Install in the reverse order of removal.

INTAKE SENSOR

Exploded View

INFOID:0000000011284694

Refer to HA-41, "Exploded View".

Removal and Installation

INFOID:0000000011284695

REMOVAL

1. Remove evaporator assembly. Refer to HA-46, "EVAPORATOR : Removal and Installation".
2. Remove intake sensor from evaporator assembly.

INSTALLATION

Note the following items, and then install in the reverse order of removal.

CAUTION:

- **Replace O-rings with new ones. Then apply the compressor oil to them when installing.**
- **Mark the mounting position of intake sensor bracket prior to removal so that the reinstalled sensor can be located in the same position.**
- **Never rotate the bracket insertion part when removing and installing the intake sensor.**
- **Check for leakages when recharging refrigerant. Refer to HA-19, "Leak Test".**

EXHAUST GAS/OUTSIDE ODOR SENSOR

Removal and Installation

INFOID:0000000011284696

REMOVAL

1. Remove air duct (inlet). Refer to EM-30, "Removal and Installation".
2. Remove mounting bolt, and then disconnect harness connector.
3. Remove exhaust gas/outside odor sensor.

INSTALLATION

Install in the reverse order of removal.

REFRIGERANT PRESSURE SENSOR

Exploded View

INFOID:0000000011284697

Refer to HA-37, "Exploded View".

Removal and Installation

INFOID:0000000011284698

REMOVAL

CAUTION:

Perform lubricant return operation before each refrigeration system disassembly. However, if a large amount of refrigerant or lubricant is detected, never perform lubricant return operation. Refer to HA-23, "Perform Lubricant Return Operation".

1. Use a refrigerant collecting equipment (for HFC-134a) to discharge the refrigerant. Refer to HA-21, "Recycle Refrigerant".
2. Remove air duct (inlet). Refer to EM-30, "Removal and Installation".
3. Clean refrigerant pressure sensor and its surrounding area, and then remove dust and rust from refrigerant pressure sensor.
   CAUTION:
   Be sure to clean carefully.
4. Disconnect harness connector Ⓐ from refrigerant pressure sensor ①.

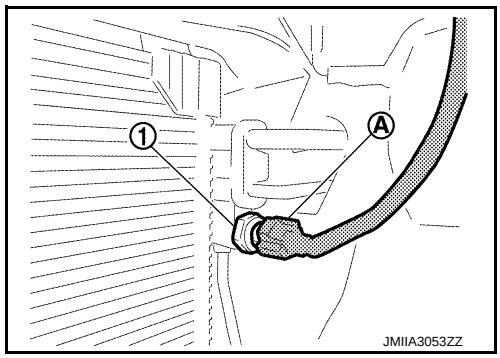

5. Remove mounting bolt Ⓐ, and then disconnect condenser pipe assembly ①.

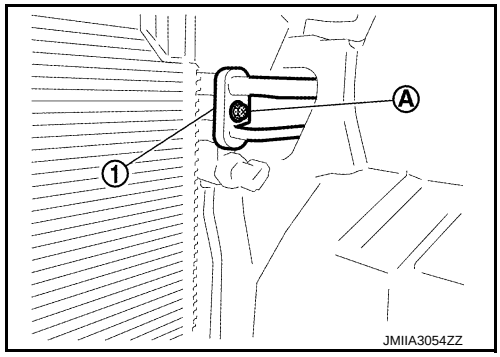

6. Remove refrigerant pressure sensor from condenser assembly.
   CAUTION:
   - **Never to damage core surface of condenser assembly.**
   - **Cap or wrap the joint of the condenser assembly and refrigerant pressure sensor with suitable material such as vinyl tape to avoid the entry of air.**

INSTALLATION

Note the following items, and then install in the reverse order of removal.

CAUTION:

- **Replace O-ring with new one. Then apply compressor oil to them when installing.**
- **Check for leakages when recharging refrigerant. Refer to HA-19, "Leak Test".**

DOOR MOTOR

Exploded View

INFOID:0000000011284699

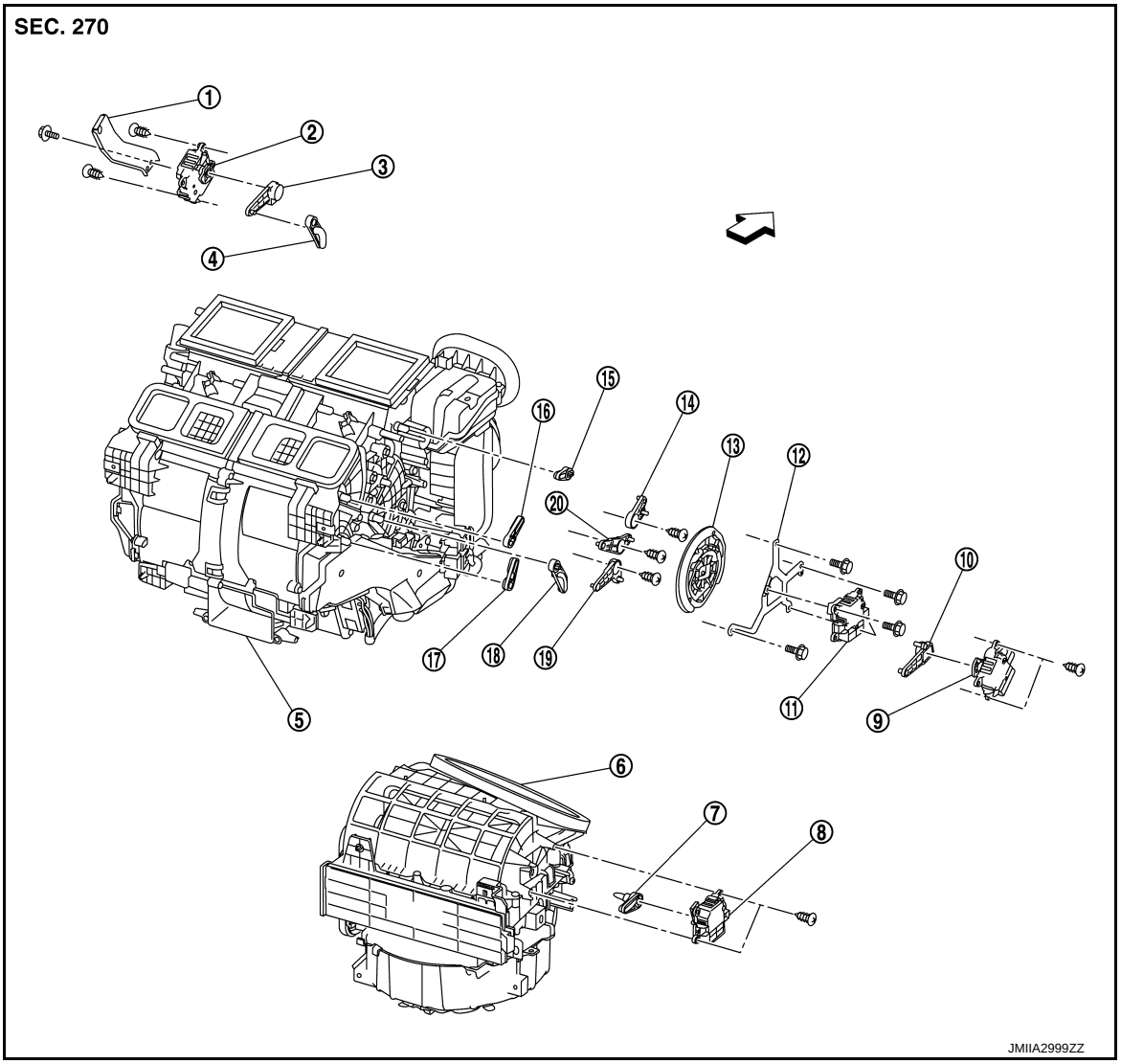

① Harness bracket	② Air mix door motor LH	③ Air mix door link LH
④ Air mix door lever LH	⑤ Heater & cooling unit assembly	⑥ Blower unit assembly
⑦ Intake door lever	⑧ Intake door motor	⑨ Air mix door motor RH
⑩ Air mix door link RH	⑪ Mode door motor	⑫ Mode door motor bracket
⑬ Main link	⑭ Defroster door link	⑮ Defroster door lever
⑯ Ventilator door lever	⑰ Foot door lever	⑱ Air mix door lever RH
⑲ Foot door link	⑳ Ventilator door link	
⇦ : Vehicle front		

AIR MIX DOOR MOTOR

AIR MIX DOOR MOTOR : Removal and Installation

INFOID:0000000011284700

REMOVAL

Driver Side

1. Set the temperature at 18°C (64°F).
   CAUTION:
   The angle may be out, when installing the air mix door motor to the air mix door, unless the above procedure is performed.
2. Disconnect the battery cable from the negative terminal.
3. Remove heater & cooling unit assembly. Refer to HA-43, "HEATER & COOLING UNIT ASSEMBLY : Removal and Installation".
4. Remove fixing screw Ⓐ, and then remove harness bracket ①.

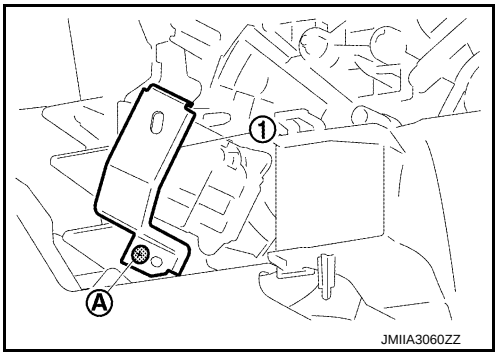

5. Remove fixing screws Ⓐ and disconnect harness connector Ⓑ, and then remove air mix door motor LH ①.

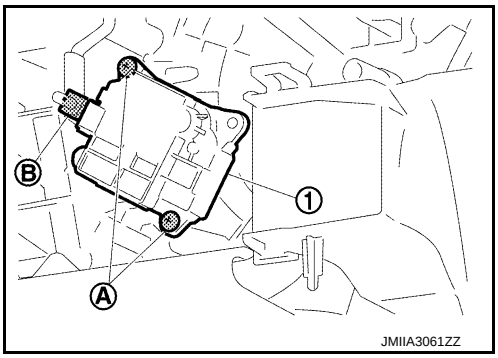

Passenger Side

1. Set the temperature at 18°C (64°F).
   CAUTION:
   The angle may be out, when installing the air mix door motor to the air mix door, unless the above procedure is performed.
2. Disconnect the battery cable from the negative terminal.
3. Remove heater & cooling unit assembly. Refer to HA-43, "HEATER & COOLING UNIT ASSEMBLY : Removal and Installation".
4. Remove fixing screws Ⓑ, and disconnect harness connector Ⓒ, and then remove air mix door motor RH ①.

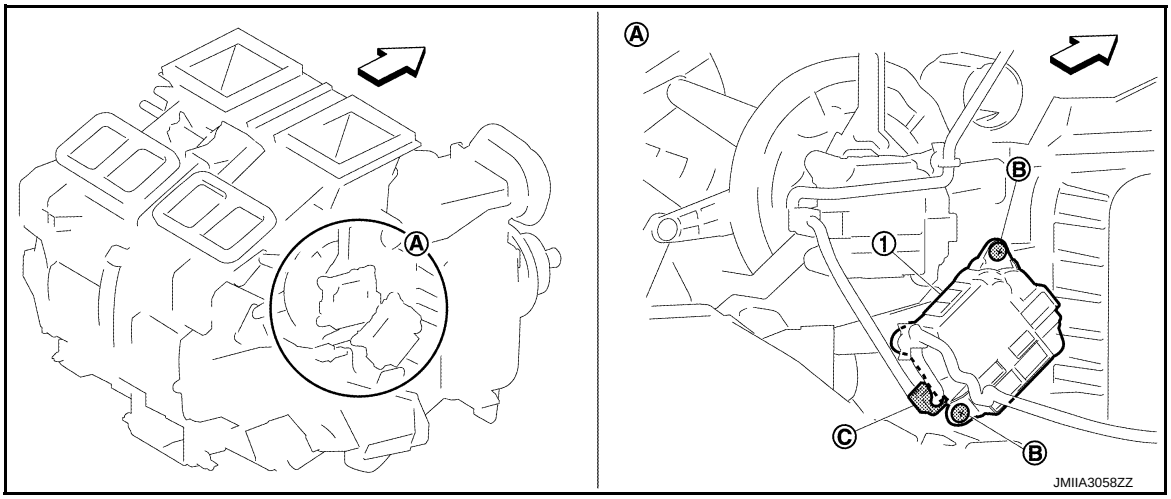

⇦ : Vehicle front

INSTALLATION
Install in the reverse order of removal.

INTAKE DOOR MOTOR

INTAKE DOOR MOTOR : Removal and Installation

INFOID:0000000011284701

REMOVAL

1. Remove blower unit assembly. Refer to VTL-16, "BLOWER UNIT : Removal and Installation".
2. Remove fixing screws Ⓐ, and then remove intake door motor ①.

⇦ : Vehicle front

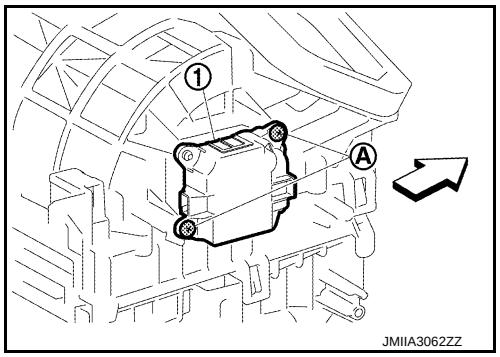

INSTALLATION
Install in the reverse order of removal.

MODE DOOR MOTOR

MODE DOOR MOTOR : Removal and Installation

INFOID:0000000011284702

REMOVAL

1. Remove heater & cooling unit assembly. Refer to HA-43, "HEATER & COOLING UNIT ASSEMBLY : Removal and Installation".
2. Remove fixing screws Ⓑ and disconnect harness connector Ⓒ, and then remove mode door motor ①.

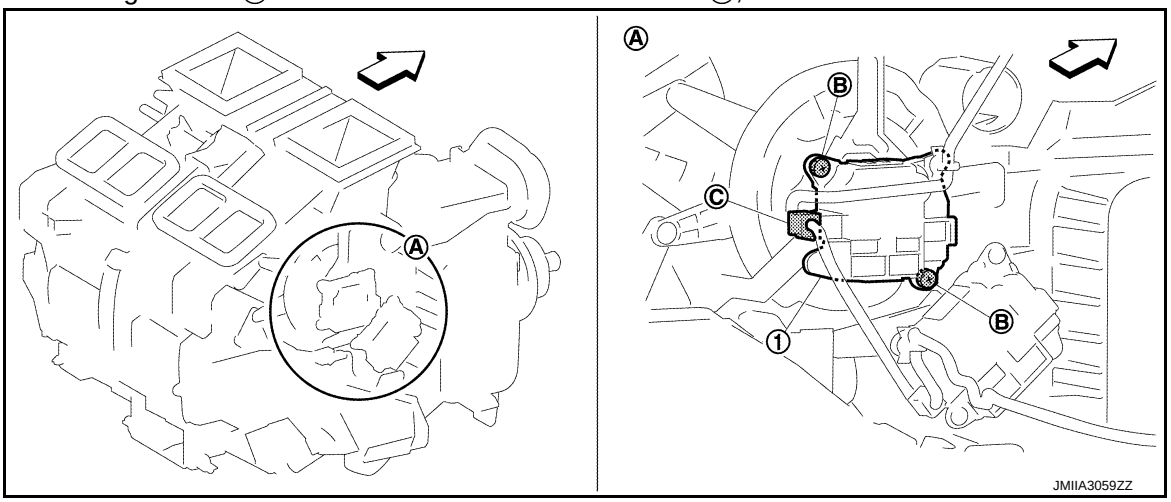

⇦ : Vehicle front

INSTALLATION
Install in the reverse order of removal.

IONIZER

Exploded View

INFOID:0000000011284703

Refer to VTL-6, "Exploded View".

Removal and Installation

INFOID:0000000011284704

Removal

1. Remove instrument panel assembly. Refer to IP-13, "Removal and Installation".
2. Disconnect harness connector.
3. Remove fixing clips, and then remove ionizer.
   CAUTION:
   Never tough the surface (ceramic part) of the ionizer. It is the discharge electrode.

INSTALLATION

Note the following item, and then install in the reverse order of removal.

CAUTION:

If there is dirt, use a clean cloth and clean the discharge electrode (ceramic part) of the ionizer.