SECTION PWC

POWER WINDOW CONTROL SYSTEM

CONTENTS

PRECAUTION 4

PRECAUTIONS 4
Precaution for Supplemental Restraint System (SRS) "AIR BAG" and "SEAT BELT PRE-TENSIONER" 4
Precautions for Removing Battery Terminal 4

PREPARATION 5

PREPARATION 5
Commercial Service Tools 5

SYSTEM DESCRIPTION 6

COMPONENT PARTS 6
Component Parts Location 6
Power Window Main Switch 7
Front Power Window Switch (Passenger side) 7
Rear Power Window Switch 7
Power Window Motor 8

SYSTEM 9
System Description 9
Circuit Diagram 11
Fail-safe 11

DIAGNOSIS SYSTEM (BCM) 13

COMMON ITEM 13
COMMON ITEM : CONSULT Function (BCM - COMMON ITEM) 13

RETAIND PWR 14
RETAIND PWR : CONSULT Function (BCM - RETAINED PWR) 14

INTELLIGENT KEY 15
INTELLIGENT KEY : CONSULT Function (BCM - INTELLIGENT KEY) 15

ECU DIAGNOSIS INFORMATION 19

BCM (BODY CONTROL MODULE) 19
List of ECU Reference 19

POWER WINDOW MAIN SWITCH 20
Reference Value 20
Fail-safe 21

FRONT POWER WINDOW SWITCH (PASSENGER SIDE) 22
Reference Value 22
Fail-safe 23

REAR POWER WINDOW SWITCH LH 24
Reference Value 24
Fail-safe 25

REAR POWER WINDOW SWITCH RH 26
Reference Value 26
Fail-safe 27

WIRING DIAGRAM 28

POWER WINDOW SYSTEM 28
Wiring Diagram 28

BASIC INSPECTION 36

DIAGNOSIS AND REPAIR WORK FLOW 36
Work Flow 36

ADDITIONAL SERVICE WHEN REMOVING BATTERY NEGATIVE TERMINAL 37
Description 37
Work Procedure 37

ADDITIONAL SERVICE WHEN REPLACING POWER WINDOW MAIN SWITCH 38
Description 38
Work Procedure 38

SYSTEM INITIALIZATION 39
Description 39
Work Procedure 39

CHECK ANTI-PINCH FUNCTION 40
Description 40
Work Procedure 40

DTC/CIRCUIT DIAGNOSIS 41

POWER SUPPLY AND GROUND CIRCUIT 41

POWER WINDOW MAIN SWITCH 41
POWER WINDOW MAIN SWITCH : Diagnosis Procedure 41

FRONT POWER WINDOW SWITCH (PASSENGER SIDE) 42
FRONT POWER WINDOW SWITCH (PASSENGER SIDE) : Diagnosis Procedure 42

REAR POWER WINDOW SWITCH 43
REAR POWER WINDOW SWITCH : Diagnosis Procedure 43

POWER WINDOW MOTOR 45

DRIVER SIDE 45
DRIVER SIDE : Component Function Check 45
DRIVER SIDE : Diagnosis Procedure 45

PASSENGER SIDE 45
PASSENGER SIDE : Component Function Check ... 46
PASSENGER SIDE : Diagnosis Procedure 46

REAR LH 46
REAR LH : Component Function Check 47
REAR LH : Diagnosis Procedure 47

REAR RH 47
REAR RH : Component Function Check 47
REAR RH : Diagnosis Procedure 48

ENCODER 49

DRIVER SIDE 49
DRIVER SIDE : Component Function Check 49
DRIVER SIDE : Diagnosis Procedure 49

PASSENGER SIDE 51
PASSENGER SIDE : Component Function Check ... 51
PASSENGER SIDE : Diagnosis Procedure 51

REAR LH 53
REAR LH : Component Function Check 53
REAR LH : Diagnosis Procedure 53

REAR RH 55
REAR RH : Component Function Check 55
REAR RH : Diagnosis Procedure 55

DOOR KEY CYLINDER SWITCH 58
Component Function Check 58
Diagnosis Procedure 58
Component Inspection 59

POWER WINDOW SERIAL LINK 60

POWER WINDOW MAIN SWITCH 60
POWER WINDOW MAIN SWITCH : Diagnosis Procedure 60

FRONT POWER WINDOW SWITCH (PASSENGER SIDE) 61
FRONT POWER WINDOW SWITCH (PASSENGER SIDE) : Diagnosis Procedure 61

REAR POWER WINDOW SWITCH LH 62
REAR POWER WINDOW SWITCH LH : Diagnosis Procedure 62

REAR POWER WINDOW SWITCH RH 63
REAR POWER WINDOW SWITCH RH : Diagnosis Procedure 63

SYMPTOM DIAGNOSIS 65

NONE OF THE POWER WINDOWS CAN BE OPERATED USING ANY SWITCH 65
Diagnosis Procedure 65

DRIVER SIDE POWER WINDOW ALONE DOES NOT OPERATE 66
Diagnosis Procedure 66

FRONT PASSENGER SIDE POWER WINDOW DOES NOT OPERATE 67

WHEN BOTH POWER WINDOW MAIN SWITCH AND FRONT POWER WINDOW SWITCH ARE OPERATED 67
WHEN BOTH POWER WINDOW MAIN SWITCH AND FRONT POWER WINDOW SWITCH ARE OPERATED : Diagnosis Procedure 67

WHEN FRONT POWER WINDOW SWITCH (PASSENGER SIDE) IS OPERATED 67
WHEN FRONT POWER WINDOW SWITCH (PASSENGER SIDE) IS OPERATED : Diagnosis Procedure 67

WHEN POWER WINDOW MAIN SWITCH IS OPERATED 67
WHEN POWER WINDOW MAIN SWITCH IS OPERATED : Diagnosis Procedure 67

REAR LH SIDE POWER WINDOW ALONE DOES NOT OPERATE 68

WHEN BOTH POWER WINDOW MAIN SWITCH AND REAR POWER WINDOW SWITCH LH ARE OPERATED 68
WHEN BOTH POWER WINDOW MAIN SWITCH AND REAR POWER WINDOW SWITCH LH ARE OPERATED : Diagnosis Procedure 68

WHEN REAR POWER WINDOW SWITCH LH IS OPERATED 68

WHEN REAR POWER WINDOW SWITCH LH IS OPERATED : Diagnosis Procedure 68

WHEN POWER WINDOW MAIN SWITCH IS OPERATED 68
WHEN POWER WINDOW MAIN SWITCH IS OPERATED : Diagnosis Procedure 68

REAR RH SIDE POWER WINDOW ALONE DOES NOT OPERATE 69

WHEN BOTH POWER WINDOW MAIN SWITCH AND REAR POWER WINDOW SWITCH RH ARE OPERATED 69
WHEN BOTH POWER WINDOW MAIN SWITCH AND REAR POWER WINDOW SWITCH RH ARE OPERATED : Diagnosis Procedure 69

WHEN REAR POWER WINDOW SWITCH RH IS OPERATED 69
WHEN REAR POWER WINDOW SWITCH RH IS OPERATED : Diagnosis Procedure 69

WHEN POWER WINDOW MAIN SWITCH IS OPERATED 69
WHEN POWER WINDOW MAIN SWITCH IS OPERATED : Diagnosis Procedure 69

AUTO OPERATION DOES NOT OPERATE BUT MANUAL OPERATE NORMALLY 70

DRIVER SIDE 70
DRIVER SIDE : Diagnosis Procedure 70

PASSENGER SIDE 70
PASSENGER SIDE : Diagnosis Procedure 70

REAR LH 70
REAR LH : Diagnosis Procedure 70

REAR RH 71
REAR RH : Diagnosis Procedure 71

ANTI-PINCH FUNCTION DOES NOT OPERATE 72
Diagnosis Procedure 72

POWER WINDOW RETAINED POWER OPERATION DOES NOT OPERATE PROPERLY ... 73
Diagnosis Procedure 73

DOOR KEY CYLINDER SWITCH DOES NOT OPERATE POWER WINDOWS 74
Diagnosis Procedure 74

KEYLESS POWER WINDOW DOWN DOES NOT OPERATE 75
Diagnosis Procedure 75

POWER WINDOW LOCK SWITCH DOES NOT FUNCTION 76
Diagnosis Procedure 76

POWER WINDOW SWITCH ILLUMINATION DOES NOT ILLUMINATE 77

DRIVER SIDE 77
DRIVER SIDE : Diagnosis Procedure 77

PASSENGER SIDE 77
PASSENGER SIDE : Diagnosis Procedure 77

REAR LH 77
REAR LH : Diagnosis Procedure 77

REAR RH 77
REAR RH : Diagnosis Procedure 77

REMOVAL AND INSTALLATION 78

POWER WINDOW MAIN SWITCH 78
Removal and Installation 78

REAR POWER WINDOW SWITCH 79
Removal and Installation 79

PRECAUTION

PRECAUTIONS

Precaution for Supplemental Restraint System (SRS) "AIR BAG" and "SEAT BELT PRE-TENSIONER"

INFOID:0000000011280966

The Supplemental Restraint System such as “AIR BAG” and “SEAT BELT PRE-TENSIONER”, used along with a front seat belt, helps to reduce the risk or severity of injury to the driver and front passenger for certain types of collision. This system includes seat belt switch inputs and dual stage front air bag modules. The SRS system uses the seat belt switches to determine the front air bag deployment, and may only deploy one front air bag, depending on the severity of a collision and whether the front occupants are belted or unbelted. Information necessary to service the system safely is included in the “SRS AIR BAG” and “SEAT BELT” of this Service Manual.

WARNING:

Always observe the following items for preventing accidental activation.

- **To avoid rendering the SRS inoperative, which could increase the risk of personal injury or death in the event of a collision that would result in air bag inflation, all maintenance must be performed by an authorized NISSAN/INFINITI dealer.**
- **Improper maintenance, including incorrect removal and installation of the SRS, can lead to personal injury caused by unintentional activation of the system. For removal of Spiral Cable and Air Bag Module, see “SRS AIR BAG”.**
- **Never use electrical test equipment on any circuit related to the SRS unless instructed to in this Service Manual. SRS wiring harnesses can be identified by yellow and/or orange harnesses or harness connectors.**

PRECAUTIONS WHEN USING POWER TOOLS (AIR OR ELECTRIC) AND HAMMERS

WARNING:

Always observe the following items for preventing accidental activation.

- **When working near the Air Bag Diagnosis Sensor Unit or other Air Bag System sensors with the ignition ON or engine running, never use air or electric power tools or strike near the sensor(s) with a hammer. Heavy vibration could activate the sensor(s) and deploy the air bag(s), possibly causing serious injury.**
- **When using air or electric power tools or hammers, always switch the ignition OFF, disconnect the battery, and wait at least 3 minutes before performing any service.**

Precautions for Removing Battery Terminal

INFOID:0000000011561469

- When removing the 12V battery terminal, turn OFF the ignition switch and wait at least 30 seconds.
  NOTE:
  ECU may be active for several tens of seconds after the ignition switch is turned OFF. If the battery terminal is removed before ECU stops, then a DTC detection error or ECU data corruption may occur.
- For vehicles with the 2-batteries, be sure to connect the main battery and the sub battery before turning ON the ignition switch.
  NOTE:
  If the ignition switch is turned ON with any one of the terminals of main battery and sub battery disconnected, then DTC may be detected.

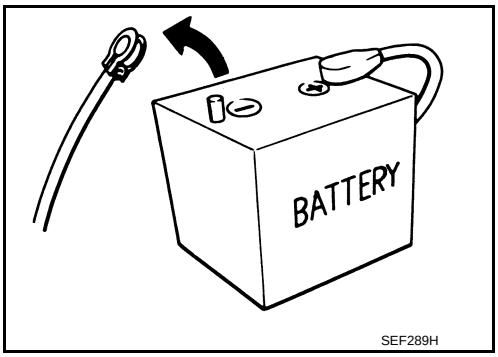

- After installing the 12V battery, always check "Self Diagnosis Result" of all ECUs and erase DTC.
  NOTE:
  The removal of 12V battery may cause a DTC detection error.

PREPARATION

PREPARATION

Commercial Service Tools

INFOID:0000000011280967

Tool name	Description
Remover tool 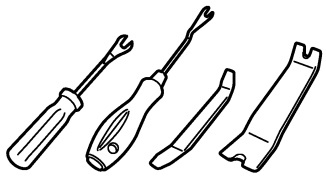 JMKIA3050ZZ	Removes the clips, pawls and metal clips

SYSTEM DESCRIPTION

COMPONENT PARTS

Component Parts Location

INFOID:0000000011280968

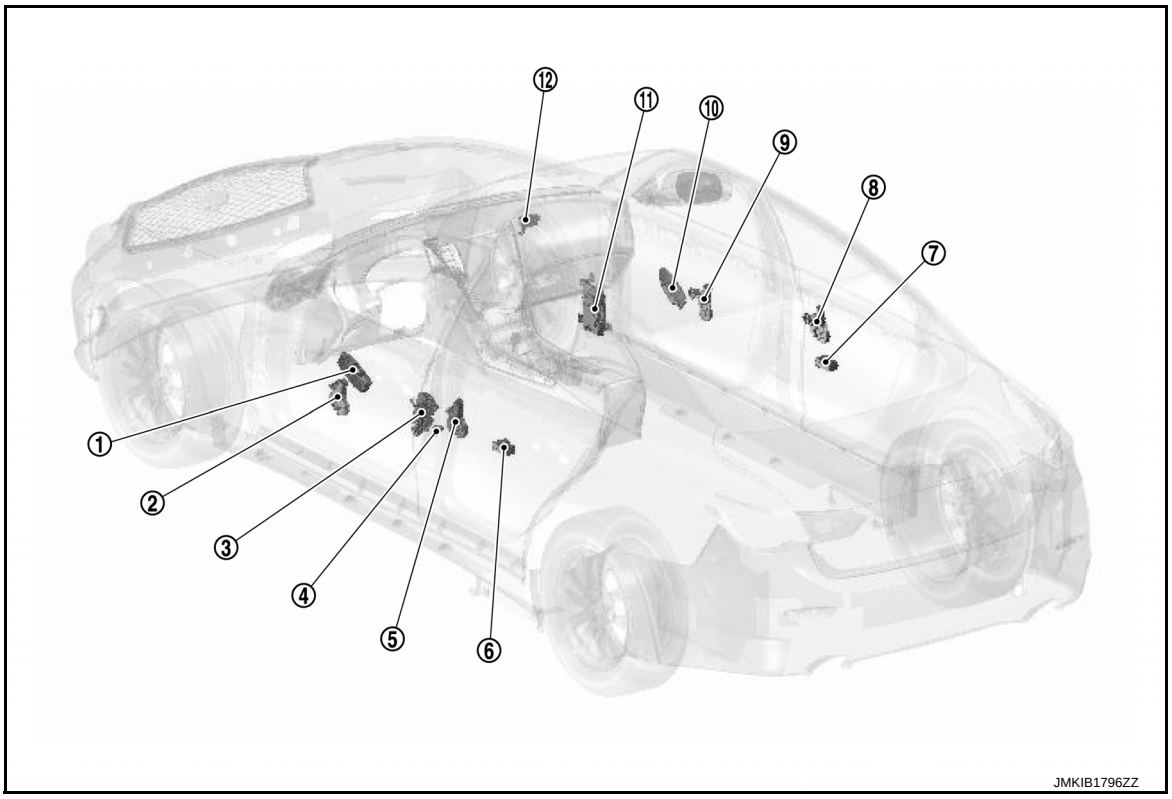

No.	Component	Function
①	Power window main switch	Refer to PWC-7, "Power Window Main Switch".
②	Front power window motor (driver side)	Refer to PWC-8, "Power Window Motor".
③	Front door lock assembly (driver side) (door key cylinder switch)	Transmits operation condition of door key cylinder switch to power window main switch. Refer to DLK-12, "DOOR LOCK SYSTEM : Front Door Lock Assembly".
④	Front door switch (driver side)	Detects door open/close condition and transmits to BCM. Refer to DLK-11, "DOOR LOCK SYSTEM : Door Switch".
⑤	Rear power window motor LH	Refer to PWC-8, "Power Window Motor".
⑥	Rear power window switch LH	Refer to PWC-7, "Rear Power Window Switch".
⑦	Rear power window switch RH	Refer to PWC-7, "Rear Power Window Switch".
⑧	Rear power window motor RH	Refer to PWC-8, "Power Window Motor".
⑨	Front power window motor (passenger side)	Refer to PWC-8, "Power Window Motor".
⑩	Front power window switch (passenger side)	Refer to PWC-7, "Front Power Window Switch (Passenger side)".

No.	Component	Function
⑪	BCM	• Supplies power supply to power window switch. • Controls retained power. • Receives key ID signal from remote keyless entry receiver. • Controls keyless power window operation via serial link. Refer to BCS-4, "BODY CONTROL SYSTEM : Component Parts Location".
⑫	Remote keyless entry receiver	Receives key ID signal from the Intelligent Key, and then transmits to BCM.Refer to DLK-13, "DOOR LOCK SYSTEM : Remote Keyless Entry Receiver".

Power Window Main Switch

INFOID:0000000011280969

- Integrates the module.
- Power window main switch controls all power windows.
- Power window main switch integrates UP/DOWN switch, power window lock switch, door mirror remote control switch, and door lock/unlock switch.
- Power window main switch controls power window lock function, AUTO UP/DOWN function.
- Receives encoder pulse signal, and then controls anti-pinch system.

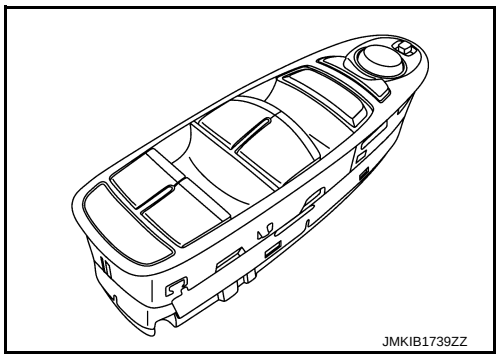
JMKIB1739ZZ

Front Power Window Switch (Passenger side)

INFOID:0000000011280970

- Integrates the module.
- Front power window switch (passenger side) transmits AUTO UP/DOWN signal to power window motor (passenger side).
- Receives AUTO UP/DOWN signal from BCM, and then transmits to power window motor (passenger side).
- Receives encoder pulse signal, and then controls anti-pinch system.

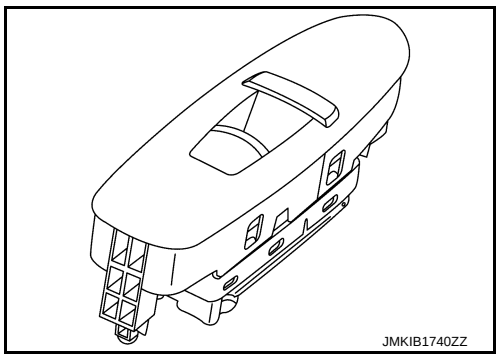
JMKIB1740ZZ

Rear Power Window Switch

INFOID:0000000011280971

- Integrates the module.
- Each power window switch transmits AUTO UP/DOWN signal to each motor.
- Receives AUTO UP/DOWN signal from BCM, and then transmits to each motor.
- Receives encoder pulse signal, and then controls anti-pinch system.

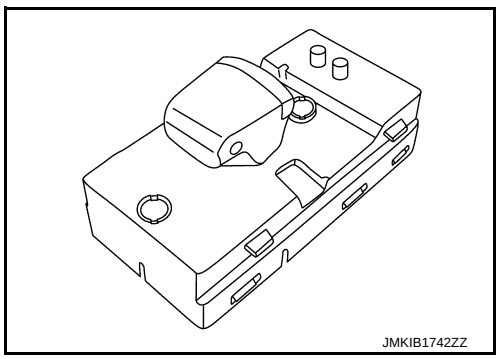
JMKIB1742ZZ

Power Window Motor

INFOID:0000000011280972

- Integrates the encoder.
- Starts operation according to signals from each power window switch.
- Transmits each power window motor rotation as a pulse signal to each power window switch.
- Excepting power window motor for driver door, starts operation according to signals from power window main switch or each power window switch.

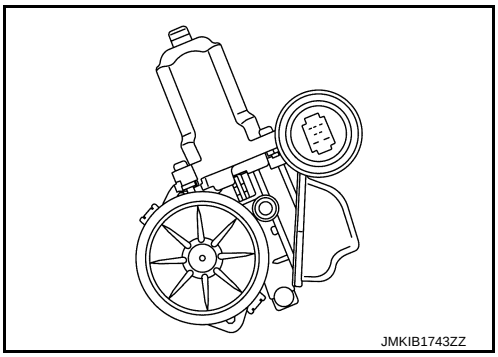

SYSTEM

System Description

INFOID:0000000011280973

SYSTEM DIAGRAM

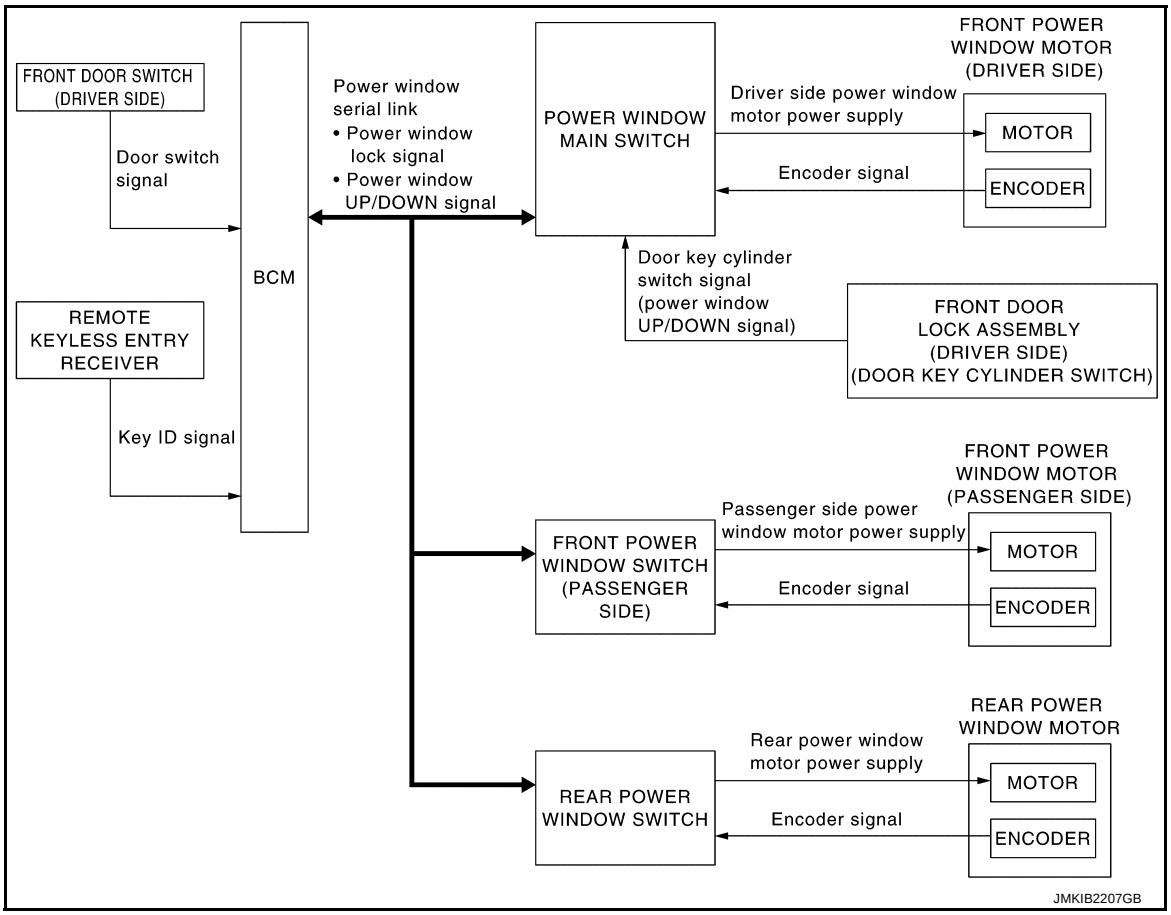

POWER WINDOW OPERATION

- Power window system is activated by each power window switch when ignition switch turns ON.
- Power window main switch opens/closes all door glass.
- Front and rear power window switch opens/closes the corresponding door glass.
- AUTO UP/DOWN operation can be performed when power window main switch turns to AUTO.
- Power window lock switch can lock all power windows other than driver seat.
- If door glass receives resistance that is the specified value or more while power window of driver seat is in AUTO-UP operation, power window of driver seat operates in the reverse direction.

POWER WINDOW AUTO-OPERATION

- AUTO UP/DOWN operation can be performed when each power window switch turns to AUTO.
- Encoder continues detecting the movement of power window motor and transmits to power window switch as the encoder pulse signal while power window motor is operating.
- Power window switch reads the changes of encoder signal and stops AUTO operation when door glass is at fully opened/closed position.
- Power window motor is operable in case encoder is malfunctioning.

POWER WINDOW SERIAL LINK

- All power window switches and BCM transmit and receive the power window serial link.
- Power window serial link transmits power window UP/DOWN signal and power window lock signal.

RETAINED POWER OPERATION

Retained power operation is an additional power supply function that enables power window system to operate for 45 seconds after ignition switch turns OFF.

RETAINED POWER FUNCTION CANCEL CONDITIONS

- Front door (driver side) CLOSE (door switch OFF) → OPEN (door switch ON).

- When ignition switch turns ON again.
- When timer times out. (45 seconds)

POWER WINDOW LOCK

Ground circuit inside power window main switch shuts off when power window lock switch is ON. This inhibits power window switch operation except with the power window main switch.

ANTI-PINCH SYSTEM

- Pinch foreign material in the door glass during AUTO-UP operation, and it is the anti-pinch function that lowers the door glass [front: 150 mm (5.9 in), rear: 116 mm (4.5 in)] when detected.
- Encoder continues detecting the movement of power window motor and transmits to power window switch as the encoder pulse signal while power window motor is operating.
- Resistance is applied to the power window motor rotation that changes the frequency of encoder pulse signal if foreign material is trapped in the door glass.
- Power window switch controls to lower the window glass for [front: 150 mm (5.9 in), rear: 116 mm (4.5 in)] after it detects encoder pulse signal frequency change.

OPERATION CONDITION

- When all door glass AUTO-UP operation is performed (anti-pinch function does not operate just before the door glass closes and is fully closed)

NOTE:

Depending on environment and driving conditions, if a similar impact or load is applied to the door glass, it may lower.

DOOR KEY CYLINDER SWITCH OPERATION

Hold the door key cylinder to the LOCK or UNLOCK direction for 1 seconds or more to OPEN or CLOSE all power windows when ignition switch is OFF. In addition, it stops when key position is moved to NEUTRAL when operating.

OPERATION CONDITION

- Ignition switch OFF.
- Hold door key cylinder to LOCK position for 1 seconds or more to perform CLOSE operation of the door glass.
- Hold door key cylinder to UNLOCK position for 1 seconds or more to perform OPEN operation of the door glass.

KEYLESS POWER WINDOW DOWN FUNCTION

All power windows open when the unlock button on Intelligent Key is activated and kept pressed for more than 3 seconds with the ignition switch OFF. The windows keep opening if the unlock button is continuously pressed.

The power window opening stops when the following operations are performed.

- When encoder in power window motor detects BDC.
- When the ignition switch is turned ON while the power window opening is operated.
- When the unlock button is released.

While retained power operation activate, keyless power window down function cannot be operated.

Circuit Diagram

INFOID:0000000011280974

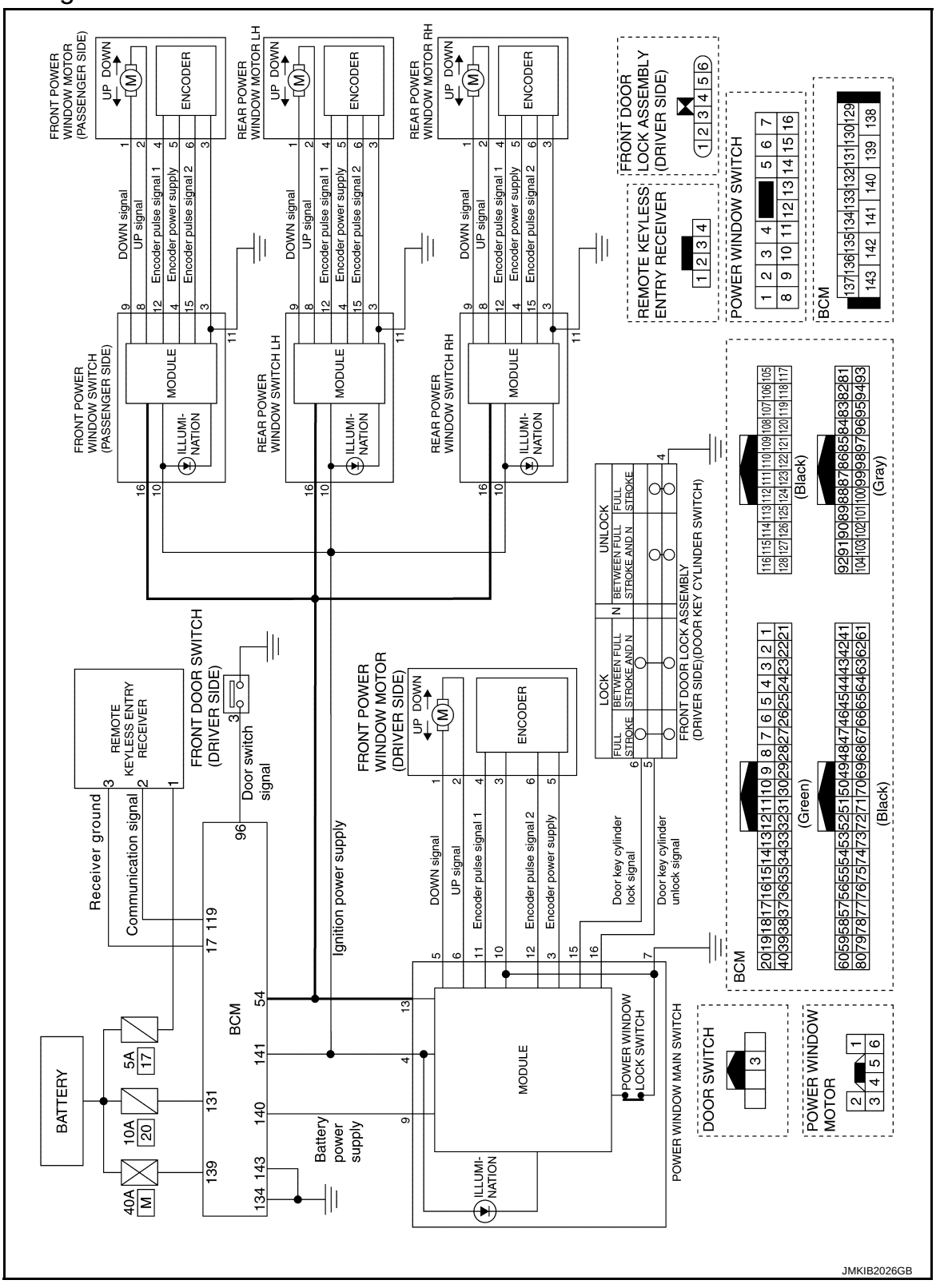

Fail-safe

INFOID:0000000011280975

FAIL-SAFE CONTROL

Switches to fail-safe control when malfunction is detected in encoder signal that detects up/down speed and direction of door glass. Switches to fail-safe control when a signal that is out of the specified value is detected between the fully closed position and the actual position of the glass.

Malfunction	Malfunction condition
Pulse sensor malfunction	When one pulse signal that is the specified value or more is detected continuously for the specified time or more, while door glass is being operated UP or DOWN.
Both pulse sensors malfunction	When both pulse signals are not detected continuously for the specified time or more, while door glass is being operated UP or DOWN.
Pulse direction malfunction	When a pulse signal indicating that window is moving in the opposite direction against the power window motor is detected for the specified value or more, while door glass is being operated UP or DOWN.
Glass recognition position malfunction 1	When the actual door glass position that is out of specified value is detected compared to the door glass fully closed position memorized in module, while door glass is being operated UP or DOWN.
Glass recognition position malfunction 2	When pulse count that is out of the door glass full stroke value or more is detected, while door glass is being operated UP or DOWN.

If fail-safe control, the system changes to a non-initialized condition and the following function do not operate.
- Auto-up operation
- Anti-pinch function
- Retained power function

When fail-safe control is activated, perform initialization procedure to recover. If a malfunction is detected in power window switch or more, fail-safe control is activated again.

DIAGNOSIS SYSTEM (BCM)

COMMON ITEM

COMMON ITEM : CONSULT Function (BCM - COMMON ITEM)

INFOID:0000000011561460

APPLICATION ITEM

CONSULT performs the following functions via CAN communication with BCM.

Diagnosis mode	Function Description
Work Support	Changes the setting for each system function.
Self Diagnostic Result	Displays the diagnosis results judged by BCM.
CAN Diag Support Monitor	Monitors the reception status of CAN communication viewed from BCM.
Data Monitor	The BCM input/output signals are displayed.
Active Test	The signals used to activate each device are forcibly supplied from BCM.
Ecu Identification	The BCM part number is displayed.
Configuration	• Read and save the vehicle specification. • Write the vehicle specification when replacing BCM.

SYSTEM APPLICATION

BCM can perform the following functions for each system.

NOTE:

It can perform the diagnosis modes except the following for all sub system selection items.

×: Applicable item

System	Sub system selection item	Diagnosis mode		
		Work Support	Data Monitor	Active Test
Door lock	DOOR LOCK	×	×	×
Rear window defogger	REAR DEFOGGER	×	×	×
Warning chime	BUZZER		×	×
Interior room lamp timer	INT LAMP	×	×	×
Exterior lamp	HEAD LAMP	×	×	×
Wiper and washer	WIPER	×	×	×
Turn signal and hazard warning lamps	FLASHER	×	×	×
—	AIR CONDITONER*		×	×
• Intelligent Key system • Engine start system	INTELLIGENT KEY	×	×	×
Combination switch	COMB SW		×	
Body control system	BCM	×		
IVIS - NATS	IMMU	×	×	×
Interior room lamp battery saver	BATTERY SAVER	×	×	×
Trunk lid open	TRUNK		×	
Vehicle security system	THEFT ALM	×	×	×
RAP system	RETAINED PWR		×	
Signal buffer system	SIGNAL BUFFER		×	×
TPMS	AIR PRESSURE MONITOR			×

*: This item is not used.

FREEZE FRAME DATA (FFD)

The BCM records the following vehicle condition at the time a particular DTC is detected, and displays on CONSULT.

CONSULT screen item	Indication/Unit	Description	
Vehicle Speed	km/h	Vehicle speed of the moment a particular DTC is detected	
Odo/Trip Meter	km	Total mileage (Odometer value) of the moment a particular DTC is detected	
Vehicle Condition	SLEEP>LOCK	Power position status of the moment a particular DTC is detected*	While turning BCM status from low power consumption mode to normal mode (Power supply position is “LOCK”*)
	SLEEP>OFF		While turning BCM status from low power consumption mode to normal mode (Power supply position is “OFF”.)
	LOCK>ACC		While turning power supply position from “LOCK” *to “ACC”
	ACC>ON		While turning power supply position from “ACC” to “IGN”
	RUN>ACC		While turning power supply position from “RUN” to “ACC” (Vehicle is stopping and selector lever is except P position.)
	CRANK>RUN		While turning power supply position from “CRANKING” to “RUN” (From cranking up the engine to run it)
	RUN>URGENT		While turning power supply position from “RUN“ to “ACC” (Emergency stop operation)
	ACC>OFF		While turning power supply position from “ACC” to “OFF”
	OFF>LOCK		While turning power supply position from “OFF” to “LOCK”*
	OFF>ACC		While turning power supply position from “OFF” to “ACC”
	ON>CRANK		While turning power supply position from “IGN” to “CRANKING”
	OFF>SLEEP		While turning BCM status from normal mode (Power supply position is “OFF”.) to low power consumption mode
	LOCK>SLEEP		While turning BCM status from normal mode (Power supply position is “LOCK”*.) to low power consumption mode
	LOCK		Power supply position is “LOCK” (Ignition switch OFF)*
	OFF		Power supply position is “OFF” (Ignition switch OFF)
	ACC		Power supply position is “ACC” (Ignition switch ACC)
	ON		Power supply position is “IGN” (Ignition switch ON with engine stopped)
	ENGINE RUN		Power supply position is “RUN” (Ignition switch ON with engine running)
	CRANKING		Power supply position is “CRANKING” (At engine cranking)
IGN Counter	0 - 39	The number of times that ignition switch is turned ON after DTC is detected • The number is 0 when a malfunction is detected now. • The number increases like 1 → 2 → 3...38 → 39 after returning to the normal condition whenever ignition switch OFF → ON. • The number is fixed to 39 until the self-diagnosis results are erased if it is over 39.	

NOTE:
*: Power supply position shifts to “LOCK” from “OFF”, when ignition switch is in the OFF position, selector lever is in the P position, and any of the following conditions are met.
- Closing door
- Opening door
- Door is locked using door request switch
- Door is locked using Intelligent Key

The power supply position shifts to “ACC” when the push-button ignition switch (push switch) is pushed at “LOCK”.

RETAIND PWR

RETAIND PWR : CONSULT Function (BCM - RETAINED PWR)

INFOID:0000000011280977

Data monitor

NOTE:
The following table includes information (items) inapplicable to this vehicle. For information (items) applicable to this vehicle, refer to CONSULT display items.

Monitor Item	Description
DOOR SW-DR	Indicates [ON/OFF] condition of driver side door switch.
DOOR SW-AS	Indicates [ON/OFF] condition of passenger side door switch.

INTELLIGENT KEY

INTELLIGENT KEY : CONSULT Function (BCM - INTELLIGENT KEY)

INFOID:0000000011561529

WORK SUPPORT

Monitor item	Description
INSIDE ANT DIAGNOSIS	This function allows inside key antenna self-diagnosis
LOCK/UNLOCK BY I-KEY	Door lock function (door request switch) mode can be changed to operation in this mode • On: Operate • Off: Non-operation
ENGINE START BY I-KEY	Engine start function mode can be changed to operation with this mode • On: Operate • Off: Non-operation
TRUNK/GLASS HATCH OPEN	Reminder function (trunk lid opener request switch) mode can be changed to operation with this mode • On: Operate • Off: Non-operation
AUTO LOCK SET	Auto door lock operation time can be changed in this mode • MODE 1: OFF • MODE 2: 30 sec. • MODE 3: 1 minute • MODE 4: 2 minutes • MODE 5: 3 minutes • MODE 6: 4 minutes • MODE 7: 5 minutes
SHORT CRANKING OUTPUT	Starter motor can operate during the times below • 70 msec • 100 msec • 200 msec
CONFIRM KEY FOB ID	It can be checked whether Intelligent Key ID code is registered or not in this mode
RETRACTABLE MIRROR SET	**NOTE:** This item is displayed, but cannot be used
TOUCH SENSOR UNLOCK FUNCTION SETTING	One touch unlock function can be changed to operation with this mode • On: Operate • Off: Non-operation
IGN/ACC BATTERY SAVER	Ignition battery saver system mode can be changed to operation with this mode • On: Operate • Off: Non-operation
REMOTE ENGINE STARTE	**NOTE:** This item is displayed, but cannot be used
INTELLIGENT KEY LINK SET	**NOTE:** This item is displayed, but cannot be used
ANSWER BACK	Reminder function (door request switch and Intelligent Key) mode can be selected from the following with this mode • On: S mode (buzzer or horn reminder non-operation) • Off: C mode (buzzer or horn operate)
ANSWER BACK I-KEY LOCK UN-LOCK	Reminder function (door request switch) mode can be selected from the following with this mode • BUZZER: Sound Intelligent Key warning buzzer • HORN: Sound horn • Off: Only hazard warning lamp operate • INVALID: This item is displayed, but cannot be used

Monitor item	Description
ANSWERBACK KEYLESS LOCK UNLOCK	Reminder function (Intelligent Key) mode can be selected from the following with this mode • On: Horn and hazard warning lamp operate • Off: Only hazard warning lamp operate
WELCOME LIGHT OP SET	**NOTE:** This item is displayed, but cannot be used

SELF-DIAG RESULT

Refer to BCS-62, "DTC Index".

DATA MONITOR

NOTE:

The following table includes information (items) inapplicable to this vehicle. For information (items) applicable to this vehicle, refer to CONSULT display items.

Monitor Item	Condition
REQ SW -DR	Indicates [On/Off] condition of front door request switch (driver side)
REQ SW -AS	Indicates [On/Off] condition of front door request switch (passenger side)
REQ SW -BD/TR	Indicates [On/Off] condition of trunk lid opener request switch
PUSH SW	Indicates [On/Off] condition of push-button ignition switch
SHFTLCK SLNID PWR SPLY	Indicates [On/Off] condition of the power supply from BCM to shift lock solenoid
CLUCH SW	**NOTE:** This item is displayed, but cannot be monitored
BRAKE SW 1	Indicates [On/Off]* condition of stop lamp switch power supply
BRAKE SW 2	Indicates [On/Off] condition of stop lamp switch
DETE/CANCL SW	Indicates [On/Off] condition of P position
SFT PN/N SW	Indicates [On/Off] condition of P or N position
UNLK SEN -DR	Indicates [On/Off] condition of driver door UNLOCK status
PUSH SW -IPDM	Indicates [On/Off] condition of push-button ignition switch
IGN RLY1 -F/B	Indicates [On/Off] condition of ignition relay 1
DETE SW -IPDM	Indicates [On/Off] condition of P position
SFT PN -IPDM	Indicates [On/Off] condition of P or N position
SFT P -MET	Indicates [On/Off] condition of P position
SFT N -MET	Indicates [On/Off] condition of N position
ENGINE STATE	Indicates [STOP/STALL/CRANK/RUN] condition of engine states
VEH SPEED 1	Display the vehicle speed signal received from combination meter by numerical value [km/h]
VEH SPEED 2	Display the vehicle speed signal received from ABS or VDC or TCM by numerical value [km/h]
DOOR STAT-DR	Indicates [LOCK/READY/UNLK] condition of driver door status
DOOR STAT-AS	Indicates [LOCK/READY/UNLK] condition of passenger door status
DOOR STAT-RR	Indicates [LOCK/READY/UNLK] condition of rear door RH status
DOOR STAT-RL	Indicates [LOCK/READY/UNLK] condition of rear door LH status
BK DOOR STATE	**NOTE:** This item is displayed, but cannot be monitored
ID OK FLAG	Indicates [Set/Reset] condition of Intelligent Key ID
PRMT ENG STRT	Indicates [Set/Reset] condition of engine start possibility
PRMT RKE STRT	**NOTE:** This item is displayed, but cannot be monitored
I-KEY OK FLAG	Indicates [KEY On/NOT On] condition of Intelligent Key ID and Intelligent Key is detected inside vehicle
PRBT ENG STRT	Indicates whether or not the engine is in start prohibited status

Monitor Item	Condition
ID AUTHENT CANCEL TIMER	Indicates whether or not it is in engine start possible status when Intelligent Key verification is unnecessary
ACC BATTERY SAVER	Indicates [On/Off] whether or not ignition battery saver is in operation
CRNK PRBT TMR	Indicates [On/Off] whether or not in cranking prohibited status due to starter motor protection function operation
AUT CRANK TMR	Indicates [On/Off] whether or not in AUTO CRANKING MODE status
CRNK PRBT TME	Indicates the time for changing from cranking prohibited status to cranking possible status
AUT CRANK TMR	Indicates the time that AUTO CRANKING MODE operates
CRANKING TME	Indicates the cranking operation time
SHORT CRANK	**NOTE:** This item is displayed, but not used
DETE SW PWR	Indicates [On/Off] condition of the power supply from BCM to the A/T shift selector (detention switch)
IGN RLY3-REQ	Indicates [On/Off] condition of blower relay control signal
ACC RLY-REQ	Indicates [On/Off] condition of accessory relay control signal
RKE OPE COUN1	When remote keyless entry receiver receives the signal transmitted while operating on Intelligent Key, the numerical value start changing
RKE OPE COUN2	**NOTE:** This item is displayed, but cannot be monitored
TRNK/HAT MNTR	Indicates [On/Off] condition of trunk room lamp switch
RKE-LOCK	Indicates [On/Off] condition of LOCK signal from Intelligent Key
RKE-UNLOCK	Indicates [On/Off] condition of UNLOCK signal from Intelligent Key
RKE-TR/BD	Indicates [On/Off] condition of trunk open signal from Intelligent Key
RKE-PANIC	Indicates [On/Off] condition of panic alarm signal from Intelligent Key
RKE-MODE CHG	**NOTE:** This item is displayed, but cannot be monitored
RKE PBD	**NOTE:** This item is displayed, but cannot be monitored

*: OFF is displayed when brake pedal is depressed while brake switch power supply is OFF.

ACTIVE TEST

Test item	Description
OUTSIDE BUZZER	This test is able to check Intelligent Key warning buzzer operation • On: Operates • Off: Non-operation
INSIDE BUZZER	This test is able to check warning chime in combination meter operation • Take Out: Take away warning chime sounds when CONSULT screen is touched • Key: Key warning chime sounds when CONSULT screen is touched • Knob: OFF position warning chime sounds when CONSULT screen is touched • Off: Non-operation
INDICATOR	This test is able to check information display (combination meter) operation • KEY ON: [Intelligent Key system malfunction] displays when CONSULT screen is touched • KEY IND: [Steering lock unit ID registration complete] displays when CONSULT screen is touched • Off: Non-operation
INT LAMP	This test is able to check interior room lamp operation • On: Operates • Off: Non-operation
FLASHER	This test is able to check hazard warning lamp operation The hazard warning lamps are activated after “LH/RH/Off” on CONSULT screen is touched

Test item	Description
HORN	This test is able to check horn operation • On: Operates
IGN CONT2	This test is able to operate the blower relay in fuse block (J/B) • On: Operates • Off: Non-operation
ENGINE SW ILLUMI	This test is able to check push-ignition switch illumination operation Push-ignition switch illumination illuminates when “On” on CONSULT screen is touched
PUSH SWITCH INDICATOR	This test is able to check push-ignition switch indicator operation when “On” on CONSULT screen is touched
ACC CONT	This test is able to operate the accessory relay in fuse block (J/B) • On: Operates • Off: Non-operation
IGN CONT1	This test is able to operate the ignition relay in IPDM E/R • On: Operates • Off: Non-operation
IGNITION RELAY	This test is able to operate the ignition relay in fuse block (J/B) • On: Operates • Off: Non-operation
ST CONT LOW	This test is able to operate the starter relay in IPDM E/R • On: Non-operation • Off: Operates
BATTERY SAVER	This test is able to check interior room lamp battery saver operation • On: Outputs interior room lamp power supply to turn interior room lamps ON. • Off: Cuts interior room lamp power supply to turn interior room lamps OFF.
TRUNK/BACK DOOR	This test is able to check trunk lid open operation. This actuator opens when “Open” on CONSULT screen is touched.
RETRACTABLE MIRROR	**NOTE:** This item is displayed, but cannot be used
INTELLIGENT KEY LINK(CAN)	**NOTE:** This item is displayed, but cannot be used
REVERSE LAMP TEST	**NOTE:** This item is displayed, but cannot be used
DOOR HANDLE LAMP TEST	This test is able to check outside handle lamp operation • On: Operates • Off: Non-operation
DR SEAT LAMP TEST	**NOTE:** This item is displayed, but cannot be used
AS SEAT LAMP TEST	**NOTE:** This item is displayed, but cannot be used
SHIFT SPOT LAMP TEST	**NOTE:** This item is displayed, but cannot be used
TRUNK/LUGGAGE LAMP TEST	This test is able to check trunk room lamp operation • On: Operates • Off: Non-operation
KEYFOB P/W TEST	This test is able to check keyless power window up/down operation • Up: Non-operation • Down*: Power window and sunroof open • Off: Non-operation
SHIFTLOCK SORENOID TEST	**NOTE:** This item is displayed, but cannot be used

*: When ignition switch is OFF, driver door opened, power window and sunroof is closed.

ECU DIAGNOSIS INFORMATION

BCM (BODY CONTROL MODULE)

List of ECU Reference

INFOID:0000000011280979

ECU	Reference
BCM	BCS-35, "Reference Value"
	BCS-60, "Fail-safe"
	BCS-61, "DTC Inspection Priority Chart"
	BCS-62, "DTC Index"

POWER WINDOW MAIN SWITCH

Reference Value

INFOID:0000000011280980

TERMINAL LAYOUT

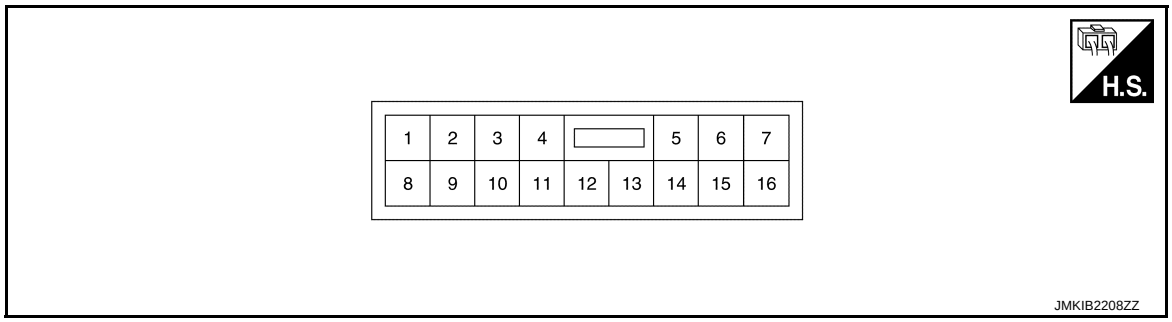

PHYSICAL VALUES

Terminal No. (wire color)		Description		Condition	Voltage (V)
+	-	Signal name	Input/ Output		
3 (V)	Ground	Encoder power supply	Output	When ignition switch ON or power window timer operates.	9 - 16
4 (Y)	Ground	Ignition power supply	Input	Ignition switch ON	9 - 16
				Other than above	0 - 1
5 (G)	Ground	Front power window motor (driver side) DOWN signal	Output	When front switch (driver side) in power window main switch is operated DOWN	9 - 16
6 (L)	Ground	Front power window motor (driver side) UP signal	Output	When front switch (driver side) in power window main switch is operated UP	9 - 16
7 (B)	Ground	Ground	—	—	0 - 1
9 (BR)	Ground	Battery power supply	Input	—	9 - 16
10 (B)	Ground	Encoder ground	—	—	0 - 1
11 (GR)	Ground	Encoder pulse signal 1	Input	When power window motor operates.	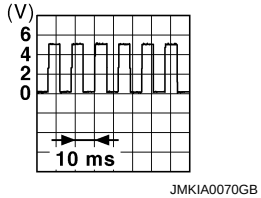 JMKIA0070GB
12 (BR)	Ground	Encoder pulse signal 2	Input	When power window motor operates.	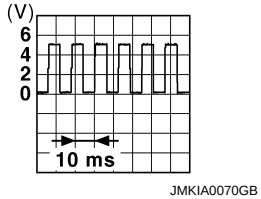 JMKIA0070GB

Terminal No. (wire color)		Description		Condition	Voltage (V)
+	-	Signal name	Input/ Output		
13 (SB)	Ground	Power window serial link	Input/ Output	IGN SW ON or power window timer operating.	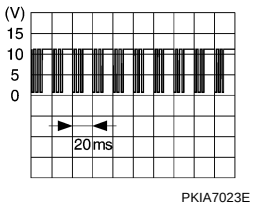 PKIA7023E
15 (V)	Ground	Door key cylinder switch LOCK signal	Input	Key position (Neutral →Locked)	4 - 6 → 0 - 1
16 (Y)	Ground	Door key cylinder switch UNLOCK signal	Input	Key position (Neutral →Unlocked)	4 - 6 → 0 - 1

Fail-safe

INFOID:0000000011561463

FAIL-SAFE CONTROL

Switches to fail-safe control when malfunction is detected in encoder signal that detects up/down speed and direction of door glass. Switches to fail-safe control when a signal that is out of the specified value is detected between the fully closed position and the actual position of the glass.

Malfunction	Malfunction condition
Pulse sensor malfunction	When one pulse signal that is the specified value or more is detected continuously for the specified time or more, while door glass is being operated UP or DOWN.
Both pulse sensors malfunction	When both pulse signals are not detected continuously for the specified time or more, while door glass is being operated UP or DOWN.
Pulse direction malfunction	When a pulse signal indicating that window is moving in the opposite direction against the power window motor is detected for the specified value or more, while door glass is being operated UP or DOWN.
Glass recognition position malfunction 1	When the actual door glass position that is out of specified value is detected compared to the door glass fully closed position memorized in module, while door glass is being operated UP or DOWN.
Glass recognition position malfunction 2	When pulse count that is out of the door glass full stroke value or more is detected, while door glass is being operated UP or DOWN.

If fail-safe control, the system changes to a non-initialized condition and the following function do not operate.
- Auto-up operation
- Anti-pinch function
- Retained power function

When fail-safe control is activated, perform initialization procedure to recover. If a malfunction is detected in power window switch or more, fail-safe control is activated again.

FRONT POWER WINDOW SWITCH (PASSENGER SIDE)

Reference Value

INFOID:0000000011280982

TERMINAL LAYOUT

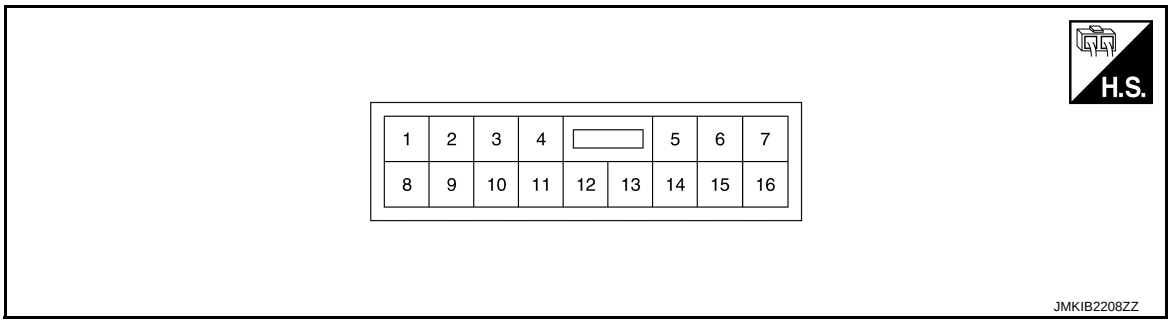

PHYSICAL VALUES

Terminal No. (wire color)		Description		Condition	Voltage (V)
+	-	Signal name	Input/ Output		
3 (LG)	Ground	Encoder ground	—	—	0 - 1
4 (V)	Ground	Encoder power supply	Output	When ignition switch ON or power window timer operates	9 - 16
8 (L)	Ground	Front power window motor (passenger side) UP signal	Output	When front power window motor (passenger side) is operated UP	9 - 16
9 (G)	Ground	Front power window motor (passenger side) DOWN signal	Output	When front power window motor (passenger side) is operated DOWN	9 - 16
10 (Y)	Ground	Ignition power supply	Input	Ignition switch ON	9 - 16
				Other than above	9 - 16
11 (B)	Ground	Ground	—	—	0 - 1
12 (GR)	Ground	Encoder pulse signal 1	Input	When power window motor operates	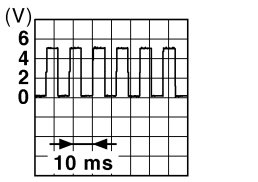

Terminal No. (wire color)		Description		Condition	Voltage (V)
+	-	Signal name	Input/ Output		
15 (BR)	Ground	Encoder pulse signal 2	Input	When power window motor operates	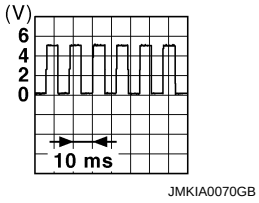 JMKIA0070GB
16 (GR)	Ground	Power window serial link	Input/ Output	When ignition switch ON or power window timer operates	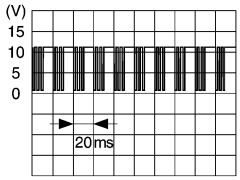 PKIA7023E

Fail-safe

INFOID:0000000011561464

FAIL-SAFE CONTROL

Switches to fail-safe control when malfunction is detected in encoder signal that detects up/down speed and direction of door glass. Switches to fail-safe control when a signal that is out of the specified value is detected between the fully closed position and the actual position of the glass.

Malfunction	Malfunction condition
Pulse sensor malfunction	When one pulse signal that is the specified value or more is detected continuously for the specified time or more, while door glass is being operated UP or DOWN.
Both pulse sensors malfunction	When both pulse signals are not detected continuously for the specified time or more, while door glass is being operated UP or DOWN.
Pulse direction malfunction	When a pulse signal indicating that window is moving in the opposite direction against the power window motor is detected for the specified value or more, while door glass is being operated UP or DOWN.
Glass recognition position malfunction 1	When the actual door glass position that is out of specified value is detected compared to the door glass fully closed position memorized in module, while door glass is being operated UP or DOWN.
Glass recognition position malfunction 2	When pulse count that is out of the door glass full stroke value or more is detected, while door glass is being operated UP or DOWN.

If fail-safe control, the system changes to a non-initialized condition and the following function do not operate.
- Auto-up operation
- Anti-pinch function
- Retained power function

When fail-safe control is activated, perform initialization procedure to recover. If a malfunction is detected in power window switch or more, fail-safe control is activated again.

REAR POWER WINDOW SWITCH LH

Reference Value

INFOID:0000000011280984

TERMINAL LAYOUT

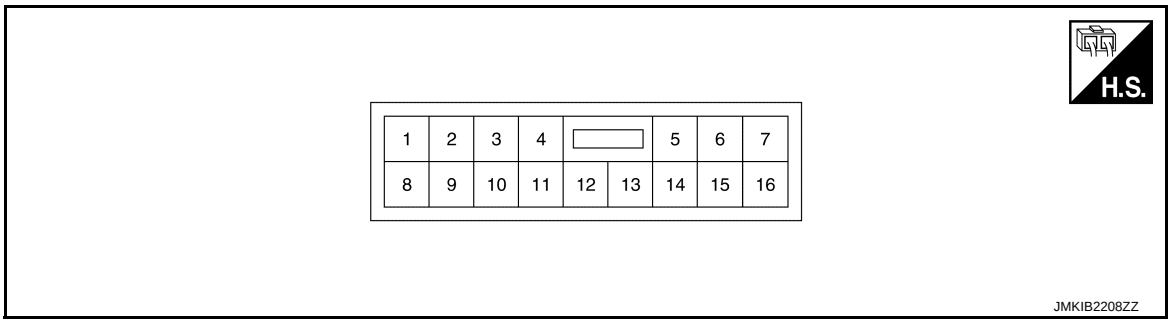

PHYSICAL VALUES

Terminal No. (wire color)		Description		Condition	Voltage (V)
+	-	Signal name	Input/ Output		
3 (BR)	Ground	Encoder ground	—	—	0 - 1
4 (SB)	Ground	Encoder power supply	Output	When ignition switch ON or power window timer operates	9 - 16
8 (R)	Ground	Rear power window motor LH UP signal	Output	When rear power window motor LH is operated UP	9 - 16
9 (L)	Ground	Rear power window motor LH DOWN signal	Output	When rear power window motor LH is operated DOWN	9 - 16
10 (W)	Ground	Ignition power supply	Input	Ignition switch ON	9 - 16
				Other than above	0 - 1
11 (B)	Ground	Ground	—	—	0 - 1
12 (GR)	Ground	Encoder pulse signal 1	Input	When power window motor operates	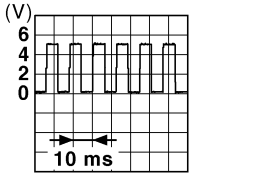

Terminal No. (wire color)		Description		Condition	Voltage (V)
+	-	Signal name	Input/ Output		
15 (BG)	Ground	Encoder pulse signal 2	Input	When power window motor operates.	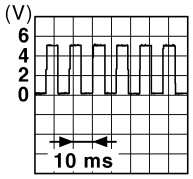 JMKIA0070GB
16 (Y)	Ground	Power window serial link	Input/ Output	When ignition switch ON or power window timer operates	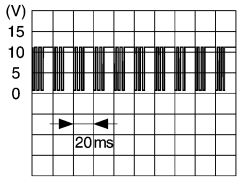 PKIA7023E

Fail-safe

INFOID:0000000011561465

FAIL-SAFE CONTROL

Switches to fail-safe control when malfunction is detected in encoder signal that detects up/down speed and direction of door glass. Switches to fail-safe control when a signal that is out of the specified value is detected between the fully closed position and the actual position of the glass.

Malfunction	Malfunction condition
Pulse sensor malfunction	When one pulse signal that is the specified value or more is detected continuously for the specified time or more, while door glass is being operated UP or DOWN.
Both pulse sensors malfunction	When both pulse signals are not detected continuously for the specified time or more, while door glass is being operated UP or DOWN.
Pulse direction malfunction	When a pulse signal indicating that window is moving in the opposite direction against the power window motor is detected for the specified value or more, while door glass is being operated UP or DOWN.
Glass recognition position malfunction 1	When the actual door glass position that is out of specified value is detected compared to the door glass fully closed position memorized in module, while door glass is being operated UP or DOWN.
Glass recognition position malfunction 2	When pulse count that is out of the door glass full stroke value or more is detected, while door glass is being operated UP or DOWN.

If fail-safe control, the system changes to a non-initialized condition and the following function do not operate.
- Auto-up operation
- Anti-pinch function
- Retained power function

When fail-safe control is activated, perform initialization procedure to recover. If a malfunction is detected in power window switch or more, fail-safe control is activated again.

REAR POWER WINDOW SWITCH RH

Reference Value

INFOID:0000000011280986

TERMINAL LAYOUT

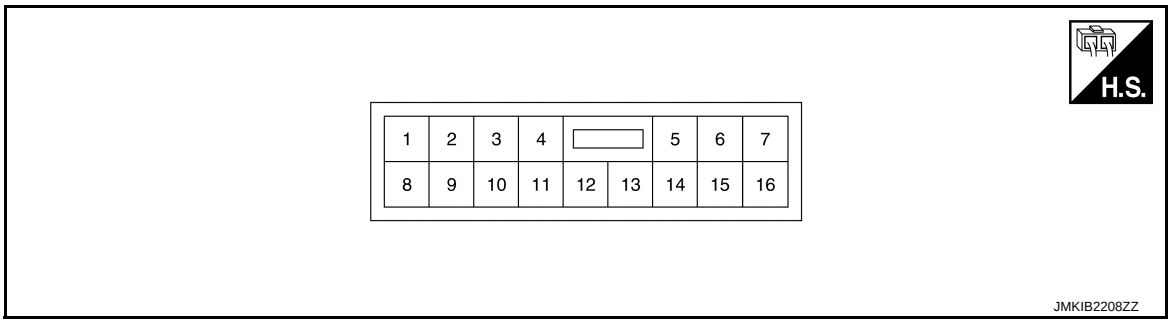

PHYSICAL VALUES

Terminal No. (wire color)		Description		Condition	Voltage (V)
+	-	Signal name	Input/ Output		
3 (V)	Ground	Encoder ground	—	—	0 - 1
4 (SB)	Ground	Encoder power supply	Output	When ignition switch ON or power window timer operates	9 - 16
8 (R)	Ground	Rear power window motor RH UP signal	Output	When rear power window motor RH is operated UP	9 - 16
9 (L)	Ground	Rear power window motor RH DOWN signal	Output	When rear power window motor RH is operated DOWN	9 - 16
10 (W)	Ground	Ignition power supply	Input	Ignition switch ON	9 - 16
				Other than above	0 - 1
11 (B)	Ground	Ground	—	—	0 - 1
12 (GR)	Ground	Encoder pulse signal 1	Input	When power window motor operates	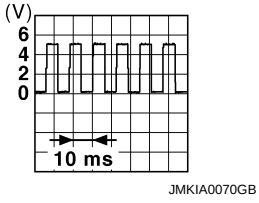

Terminal No. (wire color)		Description		Condition	Voltage (V)
+	-	Signal name	Input/ Output		
15 (BG)	Ground	Encoder pulse signal 2	Input	When power window motor operates.	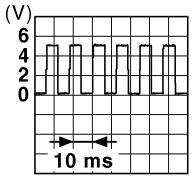 JMKIA0070GB
16 (Y)	Ground	Power window serial link	Input/ Output	When ignition switch ON or power window timer operates	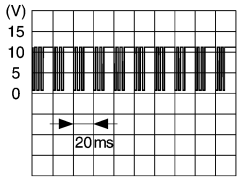 PKIA7023E

Fail-safe

INFOID:0000000011561466

FAIL-SAFE CONTROL

Switches to fail-safe control when malfunction is detected in encoder signal that detects up/down speed and direction of door glass. Switches to fail-safe control when a signal that is out of the specified value is detected between the fully closed position and the actual position of the glass.

Malfunction	Malfunction condition
Pulse sensor malfunction	When one pulse signal that is the specified value or more is detected continuously for the specified time or more, while door glass is being operated UP or DOWN.
Both pulse sensors malfunction	When both pulse signals are not detected continuously for the specified time or more, while door glass is being operated UP or DOWN.
Pulse direction malfunction	When a pulse signal indicating that window is moving in the opposite direction against the power window motor is detected for the specified value or more, while door glass is being operated UP or DOWN.
Glass recognition position malfunction 1	When the actual door glass position that is out of specified value is detected compared to the door glass fully closed position memorized in module, while door glass is being operated UP or DOWN.
Glass recognition position malfunction 2	When pulse count that is out of the door glass full stroke value or more is detected, while door glass is being operated UP or DOWN.

If fail-safe control, the system changes to a non-initialized condition and the following function do not operate.
- Auto-up operation
- Anti-pinch function
- Retained power function

When fail-safe control is activated, perform initialization procedure to recover. If a malfunction is detected in power window switch or more, fail-safe control is activated again.

WIRING DIAGRAM

POWER WINDOW SYSTEM

Wiring Diagram

INFOID:0000000011280988

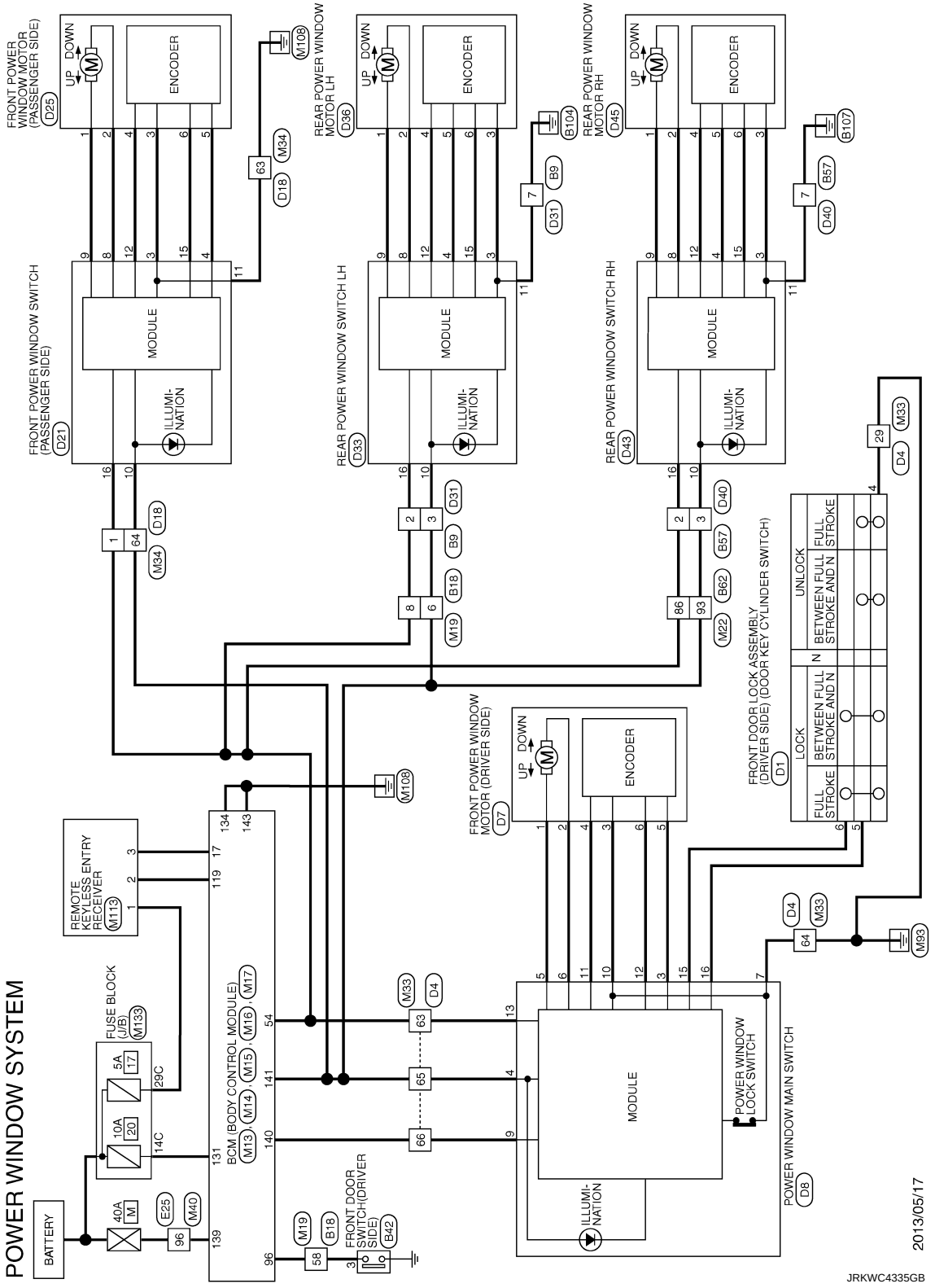

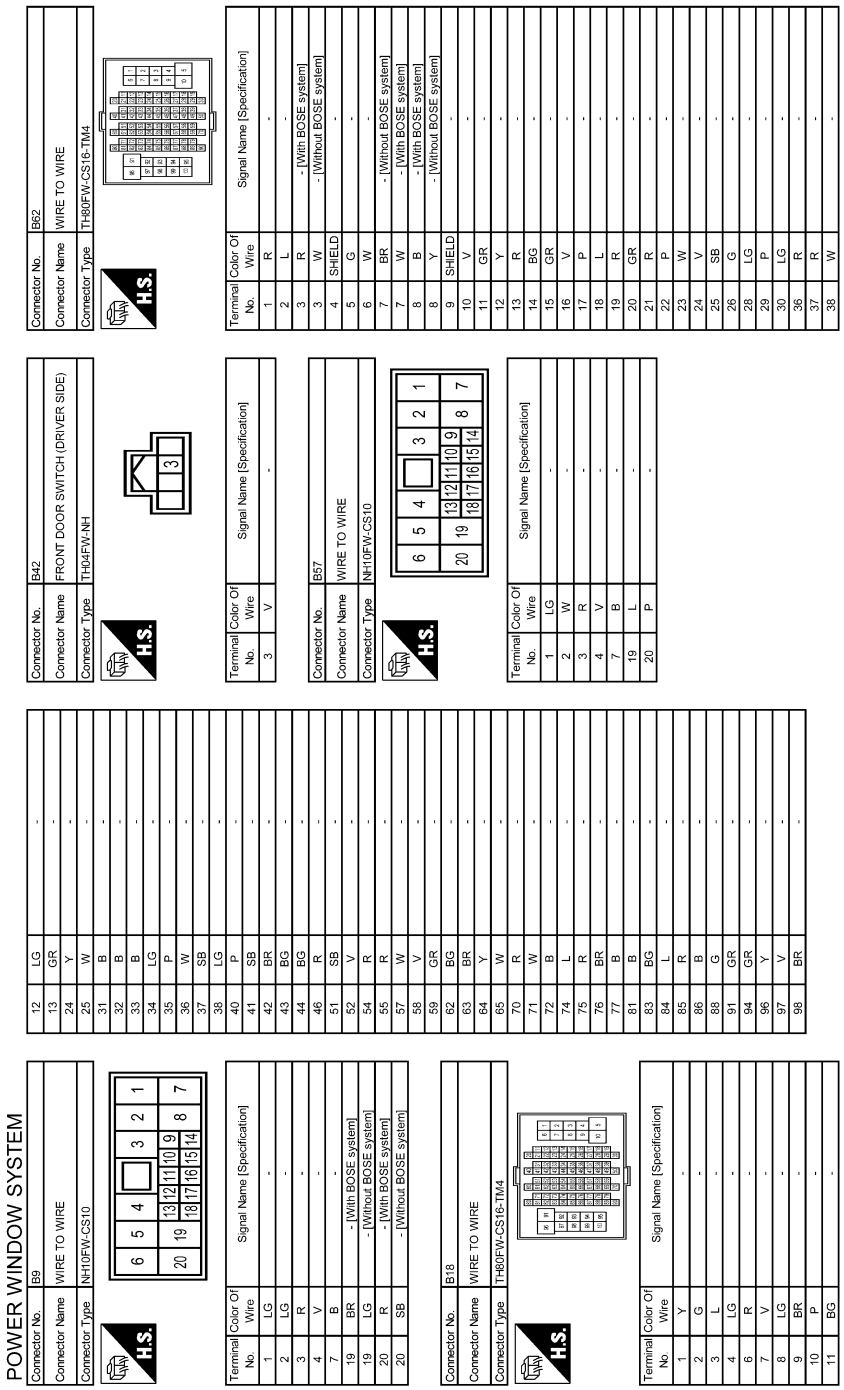

JRKWE1743GB

POWER WINDOW SYSTEM

39	W
45	G
46	SHIELD
47	G
48	BG
49	G
52	Y
53	R
54	GR
57	R
58	P
59	LG
62	P
63	L
64	W
66	LG
68	L
69	P
71	R
72	G
73	SHIELD
76	GR
84	BR
85	BG
86	W
87	LG
89	LG
90	V
92	W
93	R
94	R
95	Y
96	W
97	L
99	BR
100	BR

Connector No.	D1
Connector Name	FRONT DOOR LOCK ASSEMBLY (DRIVER SIDE)
Connector Type	E06FGY-RS

H.S.

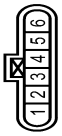

Terminal No.	Color Of Wire	Signal Name [Specification]
1	P	-
2	LG	-
3	W	-
4	B	-
5	Y	-
6	V	-

Connector No.	D4
Connector Name	WIRE TO WIRE
Connector Type	NH06FW-TS12

H.S.

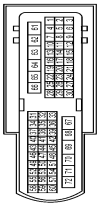

Terminal No.	Color Of Wire	Signal Name [Specification]
6	V	-
8	G	-
9	GR	-
10	Y	-
11	SHIELD	-
12	BG	-
13	L	-
14	B	-
15	Y	-
16	GR	-
17	R	-
18	GR	-
19	R	-
20	W	-

21	LG
22	W
23	L
24	G
25	BR
26	R
27	BR
28	V
29	B
30	W
31	P
32	Y
33	BR
34	L
35	R
36	GR
37	G
40	P
41	L
43	BG
44	Y
46	W
47	R
49	BR
50	B
52	V
53	GR
55	GR
56	BR
57	R
58	L
59	V
60	G
61	BG
62	Y
63	SB
64	B
65	Y
66	BR
68	Y
69	L
70	W
71	LG
72	P

Connector No.	D7
Connector Name	FRONT POWER WINDOW MOTOR (DRIVER SIDE)
Connector Type	TB06FW-1V-LC

H.S.

Terminal No.	Color Of Wire	Signal Name [Specification]
1	G	-
2	L	-
3	B	-
4	GR	-
5	V	-
6	BR	-

Connector No.	D8
Connector Name	POWER WINDOW MAIN SWITCH
Connector Type	NS16FW-CS

H.S.

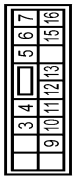

Terminal No.	Color Of Wire	Signal Name [Specification]
3	V	ENCODER +
4	Y	+B
5	G	DN
6	L	UP
7	B	-
9	BR	IGN
10	B	ENCODER_GND
11	GR	ENCODER_SIG1
12	BR	ENCODER_SIG2
13	SB	COM
15	V	LOCK_SW
16	Y	UNLOCK_SW

JRKWE1744GB

POWER WINDOW SYSTEM

Connector No.	D18
Connector Name	WIRE TO WIRE
Connector Type	NH60FW-TS12

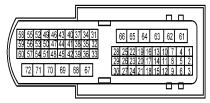

Terminal No.	Color Of Wire	Signal Name [Specification]
1	GR	-
2	P	-
5	BR	-
6	Y	-
8	W	-
9	L	-
10	L	-
11	GR	-
13	Y	-
14	R	-
16	R	-
17	B	-
18	W	-
19	B	-
20	G	-
21	SHIELD	-
22	GR	-
23	BG	-
24	B	-
25	BR	-
26	V	-
27	G	-
28	V	-
29	Y	-
30	R	-
49	LG	-
52	P	-
55	L	-
56	Y	-
57	R	-
58	SB	-
59	R	-
60	G	-
63	B	-
64	Y	-
65	BR	-
66	GR	-
69	W	-
70	L	-
71	BG	-
72	Y	-

Connector No.	D21
Connector Name	FRONT POWER WINDOW SWITCH (PASSENGER SIDE)
Connector Type	NS16FW-CS

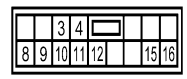

Terminal No.	Color Of Wire	Signal Name [Specification]
3	LG	ENCODER_GND
4	V	ENCODER_+
8	L	UP
9	G	DOWN
10	Y	+B
11	B	-
12	GR	ENCODER_SIG1
15	BR	ENCODER_SIG2
16	GR	COM

Connector No.	D25
Connector Name	FRONT POWER WINDOW MOTOR (PASSENGER SIDE)
Connector Type	TB06FW-1V-LC

Terminal No.	Color Of Wire	Signal Name [Specification]
1	G	-
2	L	-
3	LG	-
4	GR	-
5	V	-
6	BR	-

Connector No.	D31
Connector Name	WIRE TO WIRE
Connector Type	NH10MW-CS10

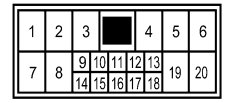

Terminal No.	Color Of Wire	Signal Name [Specification]
1	BR	-
2	Y	-
3	W	-
4	V	-
7	B	-
19	P	- [With BOSE system]
19	R	- [Without BOSE system]
20	BR	- [With BOSE system]
20	L	- [Without BOSE system]

Connector No.	D33
Connector Name	REAR POWER WINDOW SWITCH LH
Connector Type	NS16FW-CS

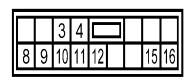

Terminal No.	Color Of Wire	Signal Name [Specification]
3	BR	-
4	SB	ENCODER_+
8	R	MOTOR_UP
9	L	MOTOR_DN
10	W	+B
11	B	-
12	GR	ENCODER_SIG1
15	BG	ENCODER_SIG2
16	Y	COM

Connector No.	D36
Connector Name	REAR POWER WINDOW MOTOR LH
Connector Type	TB06FW-1V-LC

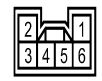

Terminal No.	Color Of Wire	Signal Name [Specification]
1	L	-
2	R	-
3	BR	-
4	GR	-
5	SB	-
6	BG	-

Connector No.	D40
Connector Name	WIRE TO WIRE
Connector Type	NH10MW-CS10

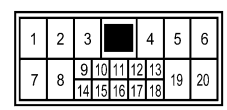

Terminal No.	Color Of Wire	Signal Name [Specification]
1	BR	-
2	Y	-
3	W	-
4	V	-
7	B	-
19	P	- [With BOSE system]
19	R	- [Without BOSE system]
20	BR	- [With BOSE system]
20	L	- [Without BOSE system]

JRKWE1745GB

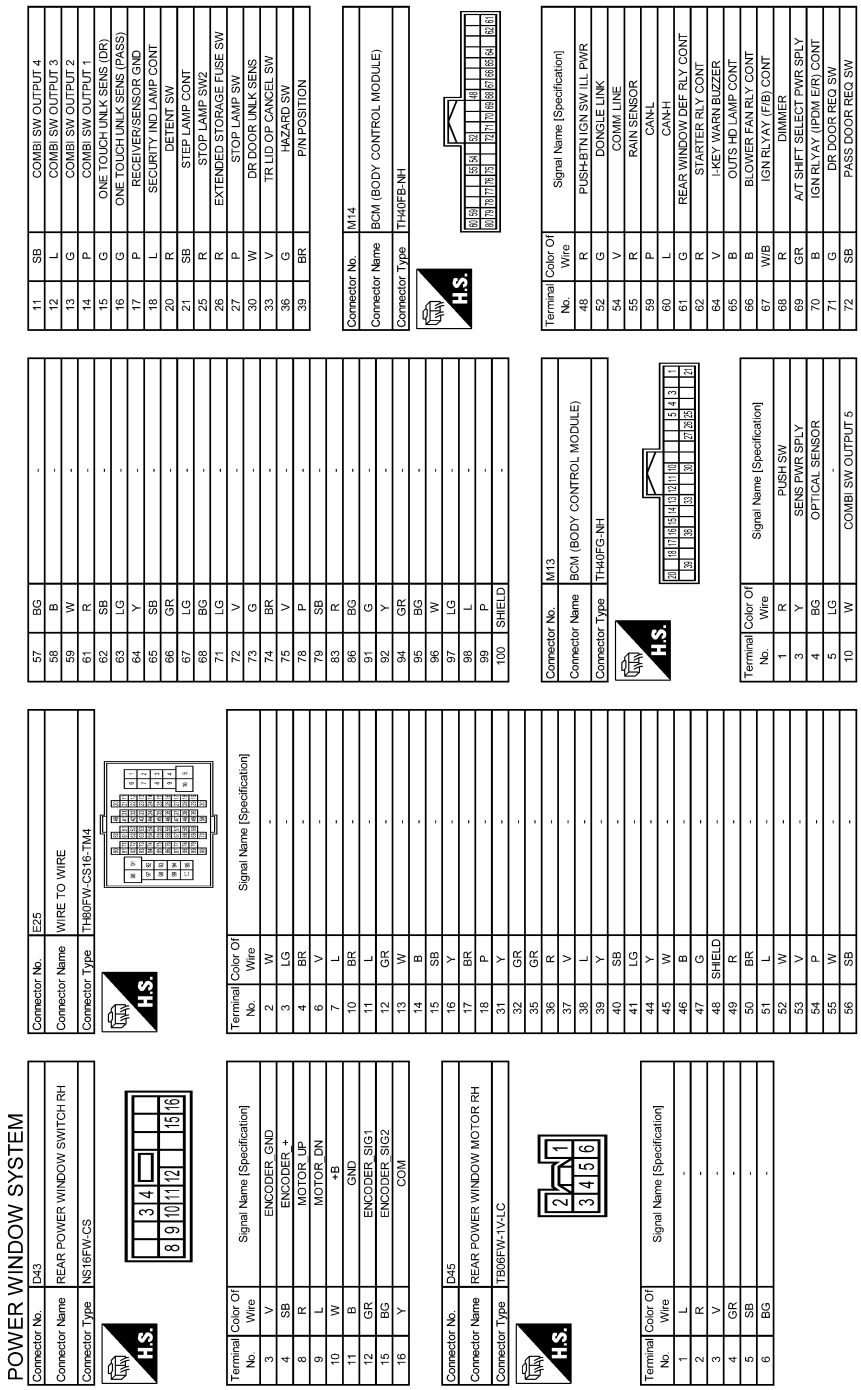

JRKWE1746GB

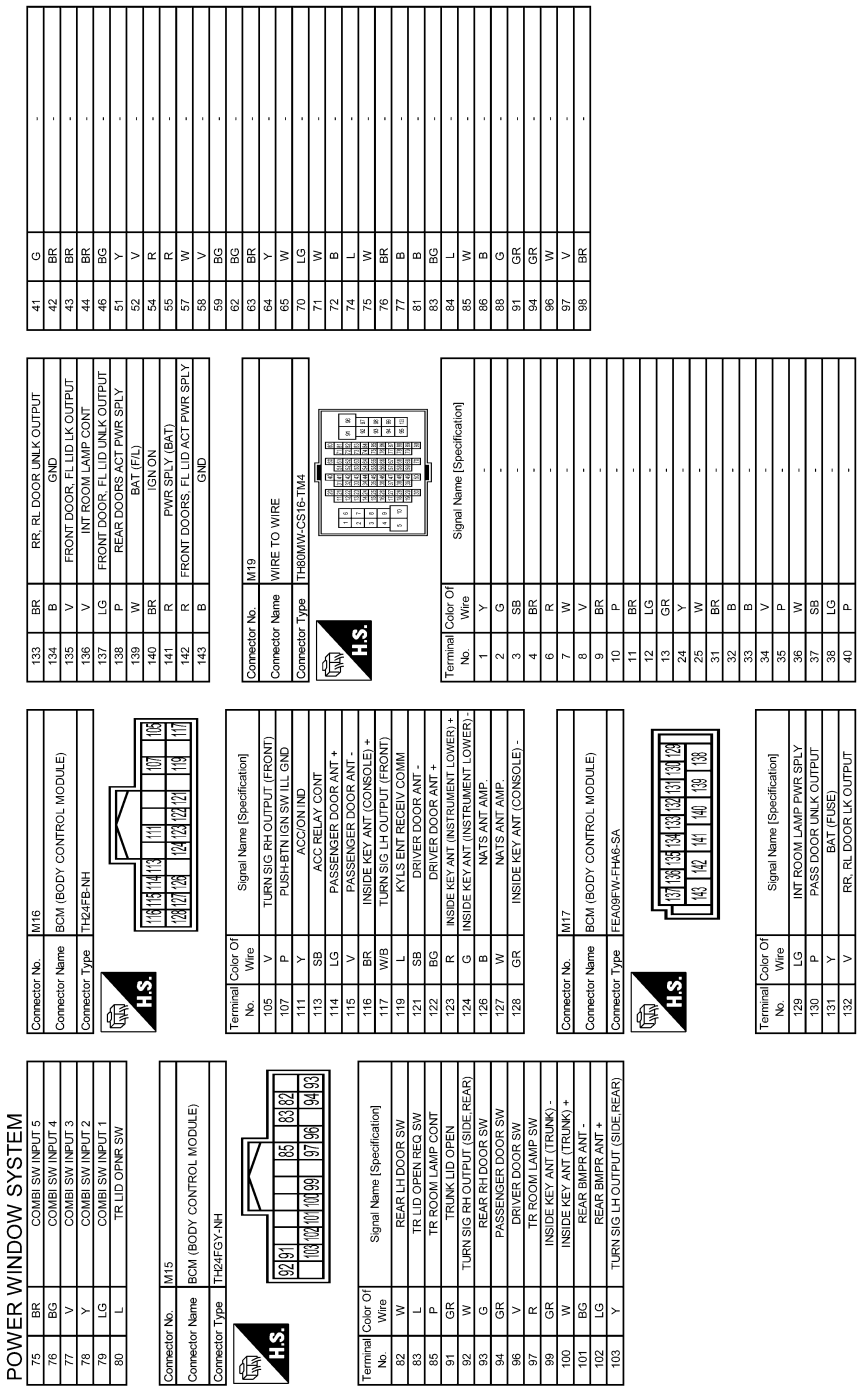

JRKWE1747GB

POWER WINDOW SYSTEM

Connector No.	M22
Connector Name	WIRE TO WIRE
Connector Type	TH60MW-CS16-TM4

H.S.

Terminal No.	Color Of Wire	Signal Name [Specification]
1	LG	-
2	L	-
3	R	-
4	SHIELD	-
5	G	-
6	BG	-
7	LG	-
8	P	-
9	SHIELD	-
10	V	-
11	GR	-
12	V	-
13	LG	-
14	LG	-
15	P	-
16	SB	- [With DCM]
16	V	- [Without DCM]
17	Y	-
18	L	-
19	G	-
20	GR	-
21	R	-
22	W	-
23	L	-
24	V	-
25	LG	-
26	GR	-
28	LG	-
29	SB	-
30	LG	-
36	R	-
37	R	-
38	W	-
39	V	-
45	G	-
46	SHIELD	-

Terminal No.	Color Of Wire	Signal Name [Specification]
47	G	-
48	BR	-
49	SB	-
52	Y	-
53	R	-
54	GR	-
57	R	-
58	SB	-
59	LG	-
62	V	-
63	L	-
64	W	-
66	R	-
68	L	-
69	P	-
71	R	-
72	G	-
73	SHIELD	-
76	V	-
84	BR	-
85	BR	-
86	V	-
87	LG	-
89	BR	-
90	V	-
92	W	-
93	R	-
94	R	-
95	Y	-
96	W	-
97	L	-
99	BR	-
100	BR	-

Connector No.	M33
Connector Name	WIRE TO WIRE
Connector Type	NH60MW-TS12

H.S.

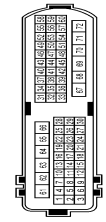

Terminal No.	Color Of Wire	Signal Name [Specification]
6	R	-
8	GR	-
9	GR	-
10	W	-
11	SHIELD	-
12	P	-
13	SB	-
14	LG	-
15	Y	-
16	Y	-
17	P	-
18	W/B	-
19	LG	- [With DRPO]
19	Y	- [Without DRPO]
20	V	-
21	B	-
22	BG	- [Without DRPO]
22	G	- [With DRPO]
23	L	-
24	Y	-
25	BG	- [Without DRPO]
25	L	- [With DRPO]
26	Y	-
27	GR	-
28	V	-
29	B	-
30	W	-
31	B	-
32	SB	-
33	L	-
34	BR	-
35	LG	-
36	W	-
37	B	-
40	P	-
41	SB	-
43	Y	-
44	BG	-
46	BR	-
47	G	-
49	V	-
50	B	-
52	BR	-
53	B	-
55	BG	-
56	LG	-
57	V	-
58	R	-

Connector No.	M34
Connector Name	WIRE TO WIRE
Connector Type	NH60MW-TS12

H.S.

Terminal No.	Color Of Wire	Signal Name [Specification]
59	G	-
60	L	-
61	G	-
62	R	-
63	V	-
64	B	-
65	R	-
66	BR	-
68	P	-
69	V	-
70	W	-
71	LG	-
72	V	-

Terminal No.	Color Of Wire	Signal Name [Specification]
1	V	-
2	R	-
5	L	-
6	R	-
8	W	-
9	GR	-
10	V	-
11	Y	-
13	LG	-
14	W	-
16	G	-
17	B	-
18	W	-
19	B	-
20	SB	- [With DRPO]
20	Y	- [Without DRPO]
21	SHIELD	-
22	B	-
23	BG	- [Without DRPO]
23	P	- [With DRPO]
24	G	-

JRKWE1748GB

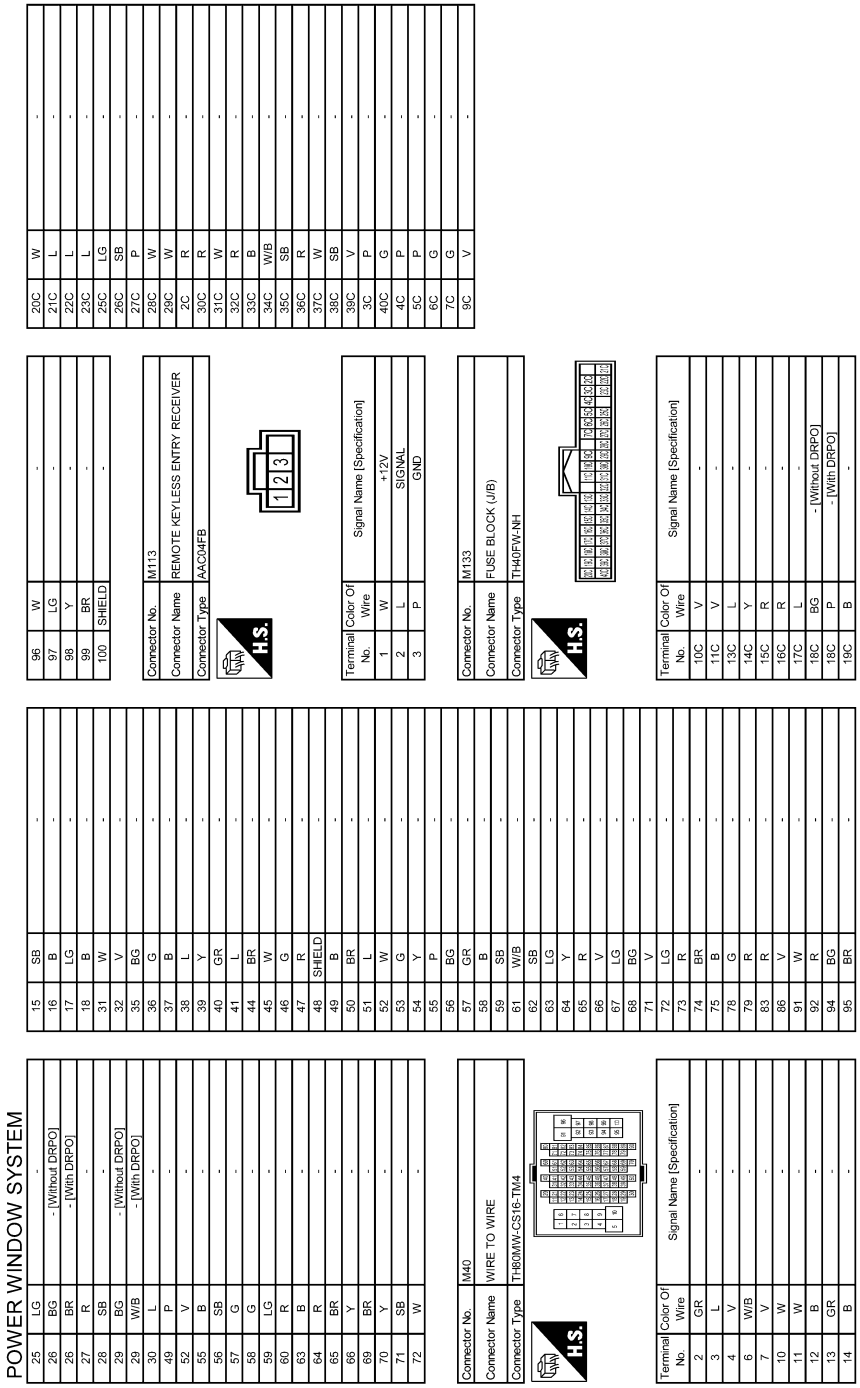

JRKWE1749GB

BASIC INSPECTION

DIAGNOSIS AND REPAIR WORK FLOW

Work Flow

INFOID:0000000011280989

DETAILED FLOW

1.OBTAIN INFORMATION ABOUT SYMPTOM

Interview the customer to obtain as much malfunction information (conditions and environment when the malfunction occurred) as possible when the customer brings the vehicle in.

>> GO TO 2.

2.REPRODUCE THE MALFUNCTION INFORMATION

Check the malfunction on the vehicle that the customer describes.
Inspect the relation of the symptoms and the condition when the symptoms occur.

>> GO TO 3.

3.IDENTIFY THE MALFUNCTIONING SYSTEM WITH “SYMPTOM DIAGNOSIS”

Use “Symptom diagnosis” from the symptom inspection result in step 2. Then identify where to start the diagnosis based on possible causes and symptoms.

>> GO TO 4.

4.IDENTIFY MALFUNCTIONING PARTS WITH “DTC/CIRCUIT DIAGNOSIS”

Perform the diagnosis with “DTC/CIRCUIT DIAGNOSIS” of the applicable system.

>> GO TO 5.

5.REPAIR OR REPLACE THE MALFUNCTIONING PARTS

Repair or replace the specified malfunctioning parts.

>> GO TO 6.

6.FINAL CHECK

Check that malfunctions are not reproduced when obtaining the malfunction information from the customer, referring to the symptom inspection result in step 2.

Is the malfunctioning part repaired or replaced?

YES >> Trouble diagnosis is completed.
NO >> GO TO 3.

ADDITIONAL SERVICE WHEN REMOVING BATTERY NEGATIVE TERMINAL

Description

INFOID:0000000011280990

Initialize the system if any of the following work has been done.
- When control unit replaced.
- Electric power supply to power window switch or motor is interrupted by blown fuse or disconnection and connection of the negative terminal of battery, etc.
- Removal and installation of regulator assembly.
- Power supply to the power window main switch or power window motor is cut off by the removal of battery terminal or if the battery fuse is blown.
- Disconnection and connection of power window main switch harness connector.
- Removal and installation of motor from regulator assembly.
- Operation of regulator assembly as an independent unit.
- Removal and installation of door glass.
- Removal and installation of door glass run.

The following specified operations can not be performed under the non-initialized condition.
- Auto-up operation
- Anti-pinch function

Work Procedure

INFOID:0000000011280991

1.SYSTEM INITIALIZATION

Perform system initialization. Refer to PWC-39, "Work Procedure".

>> GO TO 2.

2.CHECK ANTI-PINCH FUNCTION

Check anti-pinch function. Refer to PWC-40, "Work Procedure".

>> END

ADDITIONAL SERVICE WHEN REPLACING POWER WINDOW MAIN SWITCH

Description

INFOID:0000000011280992

When the control unit replaced, the initialization in necessary for normal operation of power window system.

CAUTION:

The following specified operations can not be performed under the non-initialized condition.

- **Auto-up operation**
- **Anti-pinch function**

Work Procedure

INFOID:0000000011280993

1.SYSTEM INITIALIZATION

Perform system initialization. Refer to PWC-39, "Work Procedure".

>> GO TO 2.

2.CHECK ANTI-PINCH FUNCTION

Check anti-pinch function. Refer to PWC-40, "Work Procedure".

>> END

SYSTEM INITIALIZATION

Description

INFOID:0000000011280994

Initialize the system if any of the following work has been done.
- When control unit replaced.
- Electric power supply to power window switch or motor is interrupted by blown fuse or disconnection and connection of the negative terminal of battery, etc.
- Removal and installation of regulator assembly.
- Power supply to the power window main switch or power window motor is cut off by the removal of battery terminal or if the battery fuse is blown.
- Disconnection and connection of power window main switch harness connector.
- Removal and installation of motor from regulator assembly.
- Operation of regulator assembly as an independent unit.
- Removal and installation of door glass.
- Removal and installation of door glass run.

The following specified operations can not be performed under the non-initialized condition.
- Auto-up operation
- Anti-pinch function

Work Procedure

INFOID:0000000011280995

1.STEP 1

1. Turn ignition switch ON.
2. Operate power window switch to fully open the window. (This operation is unnecessary if the window is already fully open)

>> GO TO 2.

2.STEP 2

Continue pulling the power window switch UP (AUTO-UP operation). Even after glass stops at fully closed position, keep pulling the switch for 2 seconds or more.

>> GO TO 3.

3.STEP 3

Check that auto-up function operates normally.

>> GO TO 4.

4.STEP 4

Check anti-pinch function. Refer to PWC-40, "Work Procedure".

>> END

CHECK ANTI-PINCH FUNCTION

Description

INFOID:0000000011280996

Initialize the system if any of the following work has been done.
- When control unit replaced.
- Electric power supply to power window switch or motor is interrupted by blown fuse or disconnection and connection of the negative terminal of battery, etc.
- Removal and installation of regulator assembly.
- Power supply to the power window main switch or power window motor is cut off by the removal of battery terminal or if the battery fuse is blown.
- Disconnection and connection of power window main switch harness connector.
- Removal and installation of motor from regulator assembly.
- Operation of regulator assembly as an independent unit.
- Removal and installation of door glass.
- Removal and installation of door glass run.

The following specified operations can not be performed under the non-initialized condition.
- Auto-up operation
- Anti-pinch function

Work Procedure

INFOID:0000000011280997

1.STEP 1

Fully open the door window.

>> GO TO 2.

2.STEP 2

Place a piece of wood near fully closed position.

>> GO TO 3.

3.STEP 3

Close door glass completely with AUTO-UP.

>> GO TO 4.

4.STEP 4

Check the following conditions
- Check that glass lowers for approximately [front: 150 mm (5.9 in), rear: 116 mm (4.5 in)] without pinching piece of wood and stops.
- Check that glass does not rise not when operating the power window main switch while lowering.

CAUTION:
- **Perform initial setting when auto-up operation or anti-pinch function does not operate normally.**
- **Check that AUTO-UP operates before inspection when system initialization is performed.**
- **Do not check with hands and other body parts because they may be pinched. Do not get pinched.**
- **It may switch to fail-safe mode if open/close operation is performed continuously without full close. Perform initial setting in that situation. Refer to PWC-39, "Work Procedure".**

>> END

DTC/CIRCUIT DIAGNOSIS

POWER SUPPLY AND GROUND CIRCUIT

POWER WINDOW MAIN SWITCH

POWER WINDOW MAIN SWITCH : Diagnosis Procedure

INFOID:0000000011280998

1.CHECK POWER SUPPLY CIRCUIT 1

1. Turn ignition switch OFF.
2. Disconnect power window main switch connectors.
3. Turn ignition switch ON.
4. Check voltage between power window main switch harness connector and ground.

(+)		(–)	Voltage (V)
Power window main switch			
Connector	Terminal		
D8	4	Ground	9 - 16
	9		

Is the inspection result normal?

YES >> GO TO 2.
NO >> GO TO 3.

2.CHECK GROUND CIRCUIT

1. Turn ignition switch OFF.
2. Check continuity between power window main switch harness connector and ground.

Power window main switch		Ground	Continuity
Connector	Terminal		
D8	7		Existed

Is the inspection result normal?

YES >> GO TO 4.
NO >> Repair or replace harness.

3.CHECK POWER SUPPLY CIRCUIT 2

1. Turn ignition switch OFF.
2. Disconnect BCM connector.
3. Check continuity between BCM harness connector and power window main switch harness connector.

BCM		Power window main switch		Continuity
Connector	Terminal	Connector	Terminal	
M17	140	D8	9	Existed
	141		4	

4. Check continuity between BCM harness connector and ground.

BCM		Ground	Continuity
Connector	Terminal		
M17	140		Not existed
	141		

Is the inspection result normal?

YES >> Replace BCM. Refer toBCS-98, "Removal and Installation" .
NO >> Repair or replace harness.

4.CHECK INTERMITTENT INCIDENT

Refer to GI-42, "Intermittent Incident".

>> INSPECTION END

FRONT POWER WINDOW SWITCH (PASSENGER SIDE)

FRONT POWER WINDOW SWITCH (PASSENGER SIDE) : Diagnosis Procedure

INFOID:0000000011280999

1.CHECK POWER SUPPLY CIRCUIT 1

1. Turn ignition switch OFF.
2. Disconnect front power window switch (passenger side) connector.
3. Turn ignition switch ON.
4. Check voltage between front power window switch (passenger side) harness connector and ground.

(+)		(–)	Voltage (V)
Front power window switch (passenger side)			
Connector	Terminal		
D21	10	Ground	9 - 16

Is the inspection result normal?

YES >> GO TO 2.
NO >> GO TO 3.

2.CHECK GROUND CIRCUIT

1. Turn ignition switch OFF.
2. Check continuity between front power window switch (passenger side) harness connector and ground.

Front power window switch (passenger side)		Ground	Continuity
Connector	Terminal		
D21	11		Existed

Is the inspection result normal?

YES >> GO TO 4.
NO >> Repair or replace harness.

3.CHECK POWER SUPPLY CIRCUIT 2

1. Turn ignition switch OFF.
2. Disconnect BCM connector.
3. Check continuity between BCM harness connector and front power window switch (passenger side) harness connector.

BCM		Front power window switch (passenger side)		Continuity
Connector	Terminal	Connector	Terminal	
M17	141	D21	10	Existed

4. Check continuity between BCM harness connector and ground.

BCM		Ground	Continuity
Connector	Terminal		
M17	141		Not existed

Is the inspection result normal?

YES >> Replace BCM. Refer to BCS-98, "Removal and Installation".
NO >> Repair or replace harness.

4.CHECK INTERMITTENT INCIDENT

Refer to GI-42, "Intermittent Incident".

>> INSPECTION END

REAR POWER WINDOW SWITCH

REAR POWER WINDOW SWITCH : Diagnosis Procedure

INFOID:0000000011281000

1.CHECK POWER SUPPLY CIRCUIT 1

1. Turn ignition switch OFF.
2. Disconnect rear power window switch connector.
3. Turn ignition switch ON.
4. Check voltage between rear power window switch harnes connector and ground.

(+)			(–)	Voltage (V)
Rear power window switch				
Connector		Terminal		
LH	D33	10	Ground	9 - 16
RH	D43			

Is the inspection result normal?

YES >> GO TO 2.
NO >> GO TO 3.

2.CHECK GROUND CIRCUIT

1. Turn ignition switch OFF.
2. Check continuity between rear power window switch harness connector and ground.

Rear power window switch			Ground	Continuity
Connector		Terminal		
LH	D33	11		Existed
RH	D43			

Is the inspection result normal?

YES >> GO TO 4.
NO >> Repair or replace harness.

3.CHECK POWER SUPPLY CIRCUIT 2

1. Turn ignition switch OFF.
2. Disconnect BCM connector.
3. Check continuity between BCM harness connector and rear power window switch harness connector.

BCM		Rear power window switch			Continuity
Connector	Terminal	Connector		Terminal	
M17	141	LH	D33	10	Existed
		RH	D43		

4. Check continuity between BCM harness connector and ground.

BCM		Ground	Continuity
Connector	Terminal		
M17	141		Not existed

Is the inspection result normal?

YES >> Replace BCM. Refer to BCS-98, "Removal and Installation".
NO >> Repair or replace harness.

4.CHECK INTERMITTENT INCIDENT

Refer to GI-42, "Intermittent Incident".

>> INSPECTION END

POWER WINDOW MOTOR

DRIVER SIDE

DRIVER SIDE : Component Function Check

INFOID:0000000011281001

1.CHECK POWER WINDOW MOTOR CIRCUIT

Check front power window motor (driver side) operation with power window main switch.

Is the inspection result normal?

YES >> Front power window motor (driver side) is OK.
NO >> Refer to PWC-45, "DRIVER SIDE : Diagnosis Procedure".

DRIVER SIDE : Diagnosis Procedure

INFOID:0000000011281002

1.CHECK FRONT POWER WINDOW MOTOR INPUT SIGNAL

1. Turn ignition switch OFF.
2. Disconnect front power window motor (driver side) connector.
3. Turn ignition switch ON.
4. Check voltage between front power window motor (driver side) harness connector and ground.

(+)		(–)	Condition		Voltage (V)
Front power window motor (driver side)					
Connector	Terminal				
D7	2	Ground	Power window main switch	NEUTRAL	0 - 1
				UP	9 - 16
	1			NEUTRAL	0 - 1
				DOWN	9 - 16

Is the inspection result normal?

YES >> Replace front power window motor (driver side). Refer to GW-38, "Removal and Installation".
NO >> GO TO 2.

2.CHECK POWER WINDOW MOTOR CIRCUIT

1. Turn ignition switch OFF.
2. Disconnect power window main switch connector.
3. Check continuity between power window main switch harness connector and front power window motor (driver side) harness connector.

Power window main switch		Front power window motor (driver side)		Continuity
Connector	Terminal	Connector	Terminal	
D8	5	D7	1	Existed
	6		2	

4. Check continuity between power window main switch harness connector and ground.

Power window main switch		Ground	Continuity
Connector	Terminal		
D8	5		Not existed
	6		

Is the inspection result normal?

YES >> Replace power window main switch. Refer to PWC-78, "Removal and Installation".
NO >> Repair or replace harness.

PASSENGER SIDE

PASSENGER SIDE : Component Function Check

INFOID:0000000011281003

1. CHECK POWER WINDOW MOTOR CIRCUIT

Check front power window motor (passenger side) operation with power window main switch or front power window switch (passenger side).

Is the inspection result normal?

YES >> Front power window motor (passenger side) is OK.
NO >> Refer to PWC-46, "PASSENGER SIDE : Diagnosis Procedure".

PASSENGER SIDE : Diagnosis Procedure

INFOID:0000000011281004

1. CHECK FRONT POWER WINDOW MOTOR INPUT SIGNAL

1. Turn ignition switch OFF.
2. Disconnect front power window motor (passenger side) connector.
3. Turn ignition switch ON.
4. Check voltage between front power window motor (passenger side) harness connector and ground.

(+)		(–)	Condition		Voltage (V)
Front power window motor (passenger side)					
Connector	Terminal				
D25	2	Ground	Front power window switch (passenger side)	NEUTRAL	0 - 1
				UP	9 - 16
	1			NEUTRAL	0 - 1
				DOWN	9 - 16

Is the inspection result normal?

YES >> Replace front power window motor (passenger side). Refer to GW-38, "Removal and Installation".
NO >> GO TO 2.

2. CHECK POWER WINDOW MOTOR CIRCUIT

1. Turn ignition switch OFF.
2. Disconnect front power window switch (passenger side) connector.
3. Check continuity between front power window switch (passenger side) harness connector and front power window motor (passenger side) harness connector.

Front power window switch (passenger side)		Front power window motor (passenger side)		Continuity
Connector	Terminal	Connector	Terminal	
D21	8	D25	2	Existed
	9		1	

4. Check continuity between front power window switch (passenger side) connector and ground.

Front power window switch (passenger side)		Ground	Continuity
Connector	Terminal		
D21	8		Not existed
	9		

Is the inspection result normal?

YES >> Replace front power window switch (passenger side). Refer to PWC-78, "Removal and Installation".
NO >> Repair or replace harness.

REAR LH

REAR LH : Component Function Check

INFOID:0000000011281005

1.CHECK POWER WINDOW MOTOR CIRCUIT

Check rear power window motor LH operation with power window main switch or rear power window switch LH.

Is the inspection result normal?

YES >> Rear power window motor LH is OK.
NO >> Refer to PWC-47, "REAR LH : Diagnosis Procedure".

REAR LH : Diagnosis Procedure

INFOID:0000000011281006

1.CHECK REAR POWER WINDOW MOTOR INPUT SIGNAL

1. Turn ignition switch OFF.
2. Disconnect rear power window motor LH connector.
3. Turn ignition switch ON.
4. Check voltage between rear power window motor LH harness connector and ground.

(+)		(–)	Condition		Voltage (V)
Rear power window motor LH					
Connector	Terminal				
D36	2	Ground	Rear power window switch LH	NEUTRAL	0 - 1
				UP	9 - 16
	1			NEUTRAL	0 - 1
				DOWN	9 - 16

Is the inspection result normal?

YES >> Replace rear power window motor LH. Refer to GW-46, "Removal and Installation".
NO >> GO TO 2.

2.CHECK POWER WINDOW MOTOR CIRCUIT

1. Turn ignition switch OFF.
2. Disconnect rear power window switch LH connector.
3. Check continuity between rear power window switch LH harness connector and rear power window motor LH harness connector.

Rear power window switch LH		Rear power window motor LH		Continuity
Connector	Terminal	Connector	Terminal	
D33	8	D36	2	Existed
	9		1	

4. Check continuity between rear power window switch LH harness connector and ground.

Rear power window switch LH		Ground	Continuity
Connector	Terminal		
D33	8		Not existed
	9		

Is the inspection result normal?

YES >> Replace rear power window switch LH. Refer to PWC-79, "Removal and Installation".
NO >> Repair or replace harness.

REAR RH

REAR RH : Component Function Check

INFOID:0000000011281007

1. CHECK POWER WINDOW MOTOR CIRCUIT

Check rear power window motor RH operation with power window main switch or rear power window switch RH.

Is the inspection result normal?

YES >> Rear power window motor RH is OK.
NO >> Refer to PWC-48, "REAR RH : Diagnosis Procedure".

REAR RH : Diagnosis Procedure

INFOID:0000000011281008

1.CHECK REAR POWER WINDOW MOTOR INPUT SIGNAL

1. Turn ignition switch OFF.
2. Disconnect rear power window motor RH connector.
3. Turn ignition switch ON.
4. Check voltage between rear power window motor RH harness connector and ground.

(+)		(–)	Condition		Voltage (V)
Rear power window motor RH					
Connector	Terminal				
D45	2	Ground	Rear power window switch RH	NEUTRAL	0 - 1
				UP	9 - 16
	1			NEUTRAL	0 - 1
				DOWN	9 - 16

Is the inspection result normal?

YES >> Replace rear power window motor RH. Refer to GW-46, "Removal and Installation".
NO >> GO TO 2.

2.CHECK POWER WINDOW MOTOR CIRCUIT

1. Turn ignition switch OFF.
2. Disconnect rear power window switch RH connector.
3. Check continuity between rear power window switch RH harness connector and rear power window motor RH harness connector.

Rear power window switch RH		Rear power window motor RH		Continuity
Connector	Terminal	Connector	Terminal	
D43	8	D45	2	Existed
	9		1	

4. Check continuity between rear power window switch RH harness connector and ground.

Rear power window switch RH		Ground	Continuity
Connector	Terminal		
D43	8		Not existed
	9		

Is the inspection result normal?

YES >> Replace rear power window switch RH. Refer to PWC-79, "Removal and Installation".
NO >> Repair or replace harness.

ENCODER
DRIVER SIDE

DRIVER SIDE : Component Function Check

INFOID:0000000011281009

1.CHECK ENCODER

Check that driver side door glass performs AUTO open/close operation normally by power window main switch.

Is the inspection result normal?

YES >> Encoder is OK.
NO >> Refer to PWC-49, "DRIVER SIDE : Diagnosis Procedure".

DRIVER SIDE : Diagnosis Procedure

INFOID:0000000011281010

1.CHECK ENCODER SIGNAL

1. Turn ignition switch ON.
2. Check signal between power window main switch harness connector and ground with oscilloscope.

(+)		(–)	Signal (Reference value)
Power window main switch			
Connector	Terminal		
D8	11	Ground	Refer to following signal
	12		

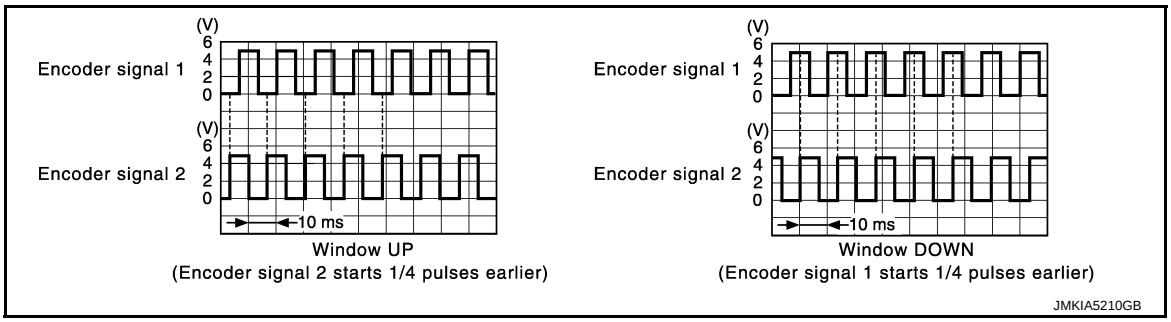

Is the inspection result normal?

YES >> Replace power window main switch. Refer to PWC-78, "Removal and Installation".
NO >> GO TO 2.

2.CHECK ENCORDER SIGNAL CIRCUIT

1. Turn ignition switch OFF.
2. Disconnect power window main switch connector and front power window motor (driver side) connector.
3. Check continuity between power window main switch harness connector and front power window motor (driver side) harness connector.

Power window main switch		Front power window motor (driver side)		Continuity
Connector	Terminal	Connector	Terminal	
D8	11	D7	4	Existed
	12		6	

4. Check continuity between power window main switch harness connector and ground.

Power window main switch		Ground	Continuity
Connector	Terminal		
D8	11		Not existed
	12		

Is the inspection result normal?

YES >> GO TO 3.
NO >> Repair or replace harness.

3. CHECK ENCORDER POWER SUPPLY CIRCUIT 1

1. Connect power window main switch connector.
2. Turn ignition switch ON.
3. Check voltage between front power window motor (driver side) harness connector and ground.

(+)		(–)	Voltage (V)
Front power window motor (driver side)			
Connector	Terminal		
D7	5	Ground	9 - 16

Is the inspection result normal?

YES >> GO TO 5.
NO >> GO TO 4.

4. CHECK ENCORDER POWER SUPPLY CIRCUIT 2

1. Turn ignition switch OFF.
2. Disconnect power window main switch connector.
3. Check continuity between power window main switch harness connector and front power window motor (driver side) harness connector.

Power window main switch		Front power window motor (driver side)		Continuity
Connector	Terminal	Connector	Terminal	
D8	3	D7	5	Existed

4. Check continuity between power window main switch harness connector and ground.

Power window main switch		Ground	Continuity
Connector	Terminal		
D8	3		Not existed

Is the inspection result normal?

YES >> Replace power window main switch. Refer to PWC-78, "Removal and Installation".
NO >> Repair or replace harness.

5. CHECK GROUND CIRCUIT 1

1. Turn ignition switch OFF.
2. Disconnect power window main switch connector.
3. Check continuity between power window main switch harness connector and front power window motor (driver side) harness connector.

Power window main switch		Front power window motor (driver side)		Continuity
Connector	Terminal	Connector	Terminal	
D8	10	D7	3	Existed

Is the inspection result normal?

YES >> GO TO 6.
NO >> Repair or replace harness.

6. CHECK GROUND CIRCUIT 2

1. Connect power window main switch connector.
2. Check continuity between power window main switch connector and ground.

Power window main switch		Ground	Continuity
Connector	Terminal		
D8	10		Existed

Is the inspection result normal?

YES >> Replace front power window motor (driver side). Refer to GW-38, "Removal and Installation".
NO >> Replace power window main switch. Refer to PWC-78, "Removal and Installation".

PASSENGER SIDE

PASSENGER SIDE : Component Function Check

INFOID:0000000011281011

1.CHECK ENCODER

Check that passenger side door glass performs AUTO open/close operation normally by power window main switch or front power window switch (passenger side).

Is the inspection result normal?

YES >> Encoder is OK.
NO >> Refer to PWC-51, "PASSENGER SIDE : Diagnosis Procedure".

PASSENGER SIDE : Diagnosis Procedure

INFOID:0000000011281012

1.CHECK ENCODER SIGNAL

1. Turn ignition switch ON.
2. Check signal between front power window switch (passenger side) harness connector and ground with oscilloscope.

(+)		(–)	Signal (Reference value)
Front power window switch (passenger side)			
Connector	Terminal		
D21	12	Ground	Refer to following signal
	15		

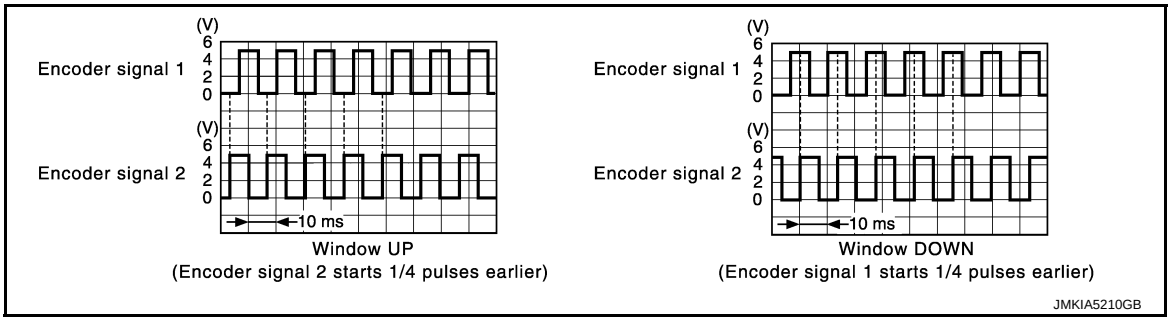

Is the inspection result normal?

YES >> Replace front power window switch (passenger side). Refer to PWC-78, "Removal and Installation".
NO >> GO TO 2.

2.CHECK ENCORDER SIGNAL CIRCUIT

1. Turn ignition switch OFF.
2. Disconnect front power window switch (passenger side) connector and front power window motor (passenger side) connector.
3. Check continuity between front power window switch (passenger side) harness connector and front power window motor (passenger side) harness connector.

Front power window switch (passenger side)		Front power window motor (passenger side)		Continuity
Connector	Terminal	Connector	Terminal	
D21	12	D25	4	Existed
	15		6	

4. Check continuity between front power window switch (passenger side) harness connector and ground.

Front power window switch (passenger side)		Ground	Continuity
Connector	Terminal		
D21	12		Not existed
	15		

Is the inspection result normal?

YES >> GO TO 3.
NO >> Repair or replace harness.

3. CHECK ENCORDER POWER SUPPLY CIRCUIT 1

1. Connect front power window switch (passenger side) connector.
2. Turn ignition switch ON.
3. Check voltage between front power window motor (passenger side) harness connector and ground.

(+)		(–)	Voltage (V)
Front power window motor (passenger side)			
Connector	Terminal		
D25	5	Ground	9 - 16

Is the inspection result normal?

YES >> GO TO 5.
NO >> GO TO 4.

4. CHECK ENCORDER POWER SUPPLY CIRCUIT 2

1. Turn ignition switch OFF.
2. Disconnect front power window switch (passenger side) connector.
3. Check continuity between front power window switch (passenger side) harness connector and front power window motor (passenger side) harness connector.

Front power window switch (passenger side)		Front power window motor (passenger side)		Continuity
Connector	Terminal	Connector	Terminal	
D21	4	D25	5	Existed

4. Check continuity between front power window switch (passenger side) harness connector and ground.

Front power window switch (passenger side)		Ground	Continuity
Connector	Terminal		
D21	4		Not existed

Is the inspection result normal?

YES >> Replace front power window switch (passenger side). Refer to PWC-78, "Removal and Installation".
NO >> Repair or replace harness.

5. CHECK GROUND CIRCUIT 1

1. Turn ignition switch OFF.
2. Disconnect front power window switch (passenger side) connector.
3. Check continuity between front power window switch (passenger side) harness connector and front power window motor (passenger side) harness connector.

Front power window switch (passenger side)		Front power window motor (passenger side)		Continuity
Connector	Terminal	Connector	Terminal	
D21	3	D25	3	Existed

Is the inspection result normal?

YES >> GO TO 6.
NO >> Repair or replace harness.

6. CHECK GROUND CIRCUIT 2

1. Connect front power window switch (passenger side) connector.
2. Check continuity between front power window switch (passenger side) connector and ground.

Front power window switch (passenger side)		Ground	Continuity
Connector	Terminal		
D21	3		Existed

Is the inspection result normal?

YES >> Replace front power window motor (passenger side). Refer to GW-38, "Removal and Installation".
NO >> Replace front power window switch (passenger side). Refer to PWC-78, "Removal and Installation".

REAR LH

REAR LH : Component Function Check

INFOID:0000000011281013

1. CHECK ENCODER OPERATION

Check that rear door LH glass performs AUTO open/close operation normally by power window main switch or rear power window switch LH.

Is the inspection result normal?

YES >> Encoder operation is OK.
NO >> Refer to PWC-53, "REAR LH : Diagnosis Procedure".

REAR LH : Diagnosis Procedure

INFOID:0000000011281014

1. CHECK ENCODER SIGNAL

1. Turn ignition switch ON.
2. Check signal between rear power window switch LH harness connector and ground with oscilloscope.

(+)		(–)	Signal (Reference value)
Rear power window switch LH			
Connector	Terminal		
D33	12	Ground	Refer to following signal
	15		

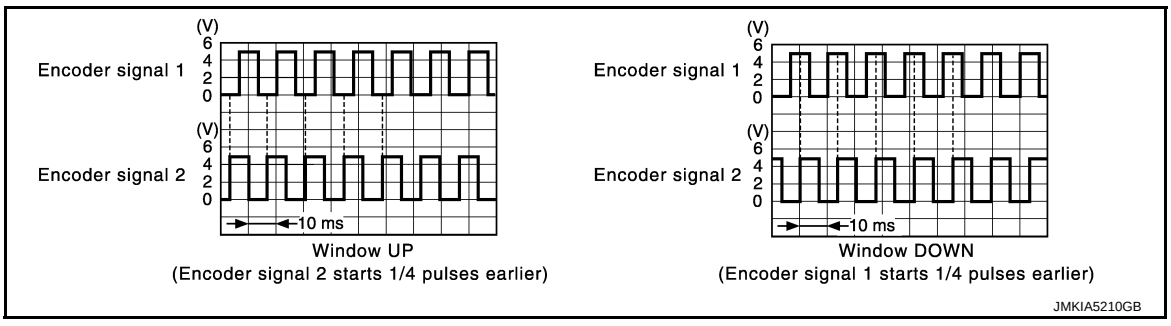

Is the inspection result normal?

YES >> Replace rear power window switch LH. Refer to PWC-79, "Removal and Installation".

NO >> GO TO 2.

2.CHECK ENCORDER SIGNAL CIRCUIT

1. Turn ignition switch OFF.
2. Disconnect rear power window switch LH connector and rear power window motor LH connector.
3. Check continuity between rear power window switch LH harness connector and rear power window motor LH harness connector.

Rear power window switch LH		Rear power window motor LH		Continuity
Connector	Terminal	Connector	Terminal	
D33	12	D36	4	Existed
	15		6	

4. Check continuity rear power window switch LH harness connector and ground.

Rear power window switch LH		Ground	Continuity
Connector	Terminal		
D33	12		Not existed
	15		

Is the inspection result normal?

YES >> GO TO 3.
NO >> Repair or replace harness.

3.CHECK ENCORDER POWER SUPPLY CIRCUIT 1

1. Connect rear power window switch LH connector.
2. Turn ignition switch ON.
3. Check voltage between rear power window motor LH harness connector and ground.

(+)		(–)	Voltage (V)
Rear power window motor LH			
Connector	Terminal		
D36	5	Ground	9 - 16

Is the inspection result normal?

YES >> GO TO 5.
NO >> GO TO 4.

4.CHECK ENCORDER POWER SUPPLY CIRCUIT2

1. Turn ignition switch OFF.
2. Disconnect rear power window switch LH connector.
3. Check continuity between rear power window switch LH harness connector and rear power window motor LH harness connector.

Rear power window switch LH		Rear power window motor LH		Continuity
Connector	Terminal	Connector	Terminal	
D33	4	D36	5	Existed

4. Check continuity between rear power window switch LH harness connector and ground.

Rear power window switch LH		Ground	Continuity
Connector	Terminal		
D33	4		Not existed

Is the inspection result normal?

YES >> Replace rear power window switch LH. Refer to PWC-79, "Removal and Installation".
NO >> Repair or replace harness.

5.CHECK GROUND CIRCUIT 1

1. Turn ignition switch OFF.
2. Disconnect rear power window switch LH harness connector.
3. Check continuity between rear power window switch LH harness connector and rear power window motor LH harness connector.

Rear power window switch LH		Rear power window motor LH		Continuity
Connector	Terminal	Connector	Terminal	
D33	3	D36	3	Existed

Is the inspection result normal?

YES >> GO TO 6.
NO >> Repair or replace harness.

6.CHECK GROUND CIRCUIT 2

1. Connect rear power window switch LH connector.
2. Check continuity between rear power window switch LH connector and ground.

Rear power window switch LH		Ground	Continuity
Connector	Terminal		
D33	3		Existed

Is the inspection result normal?

YES >> Replace rear power window motor LH. Refer to GW-46, "Removal and Installation".
NO >> Replace rear power window switch LH. Refer to PWC-79, "Removal and Installation".

REAR RH

REAR RH : Component Function Check

INFOID:0000000011281015

1.CHECK ENCODER OPERATION

Check that rear door RH glass performs AUTO open/close operation normally by power window main switch or rear power window switch RH.

Is the inspection result normal?

YES >> Encoder operation is OK.
NO >> Refer to PWC-55, "REAR RH : Diagnosis Procedure".

REAR RH : Diagnosis Procedure

INFOID:0000000011281016

1.CHECK ENCODER SIGNAL

1. Turn ignition switch ON.
2. Check signal between rear power window switch RH harness connector and ground with oscilloscope.

(+)		(–)	Signal (Reference value)
Rear power window switch RH			
Connector	Terminal		
D43	12	Ground	Refer to following signal
	15		

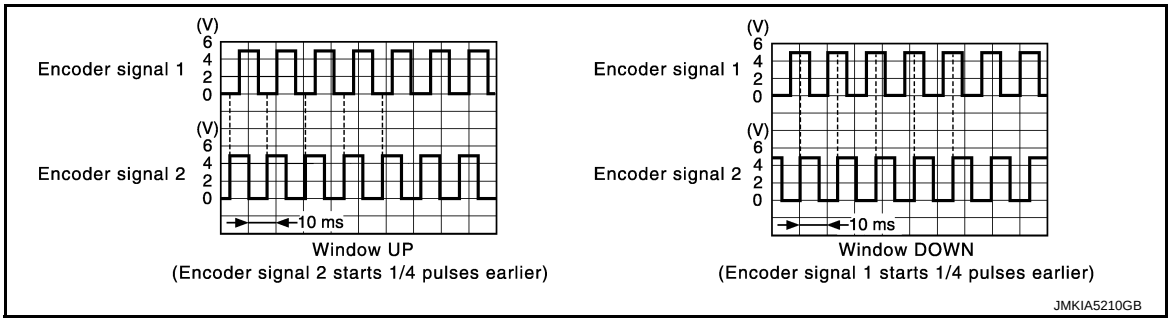

Is the inspection result normal?

YES >> Replace rear power window switch RH. Refer to PWC-79, "Removal and Installation".
NO >> GO TO 2.

2.CHECK ENCODER SIGNAL CIRCUIT

1. Turn ignition switch OFF.
2. Disconnect rear power window switch RH connector and rear power window motor RH connector.
3. Check continuity between rear power window switch RH harness connector and rear power window motor RH harness connector.

Rear power window switch RH		Rear power window motor RH		Continuity
Connector	Terminal	Connector	Terminal	
D43	12	D45	4	Existed
	15		6	

4. Check continuity rear power window switch RH harness connector and ground.

Rear power window switch RH		Ground	Continuity
Connector	Terminal		
D43	12		Not existed
	15		

Is the inspection result normal?

YES >> GO TO 3.
NO >> Repair or replace harness.

3.CHECK ENCODER POWER SUPPLY CIRCUIT 1

1. Connect rear power window switch RH connector.
2. Turn ignition switch ON.
3. Check voltage between rear power window motor RH harness connector and ground.

(+)		(–)	Voltage (V)
Rear power window motor RH			
Connector	Terminal		
D45	5	Ground	9 - 16

Is the inspection result normal?

YES >> GO TO 5.
NO >> GO TO 4.

4.CHECK ENCORDER POWER SUPPLY CIRCUIT 2

1. Turn ignition switch OFF.
2. Disconnect rear power window switch RH connector.
3. Check continuity between rear power window switch RH harness connector and rear power window motor RH harness connector.

Rear power window switch RH		Rear power window motor RH		Continuity
Connector	Terminal	Connector	Terminal	
D43	4	D45	5	Existed

4. Check continuity between rear power window switch RH harness connector and ground.

Rear power window switch RH		Ground	Continuity
Connector	Terminal		
D43	4		Not existed

Is the inspection result normal?

YES >> Replace rear power window switch RH. Refer to PWC-79, "Removal and Installation".
NO >> Repair or replace harness.

5.CHECK GROUND CIRCUIT 1

1. Turn ignition switch OFF.
2. Disconnect rear power window switch RH harness connector.
3. Check continuity between rear power window switch RH harness connector and rear power window motor RH harness connector.

Rear power window switch RH		Rear power window motor RH		Continuity
Connector	Terminal	Connector	Terminal	
D43	3	D45	3	Existed

Is the inspection result normal?

YES >> GO TO 6.
NO >> Repair or replace harness.

6.CHECK GROUND CIRCUIT 2

1. Connect rear power window switch RH connector.
2. Check continuity between rear power window switch RH connector and ground.

Rear power window switch RH		Ground	Continuity
Connector	Terminal		
D43	3		Existed

Is the inspection result normal?

YES >> Replace rear power window motor RH. Refer to GW-46, "Removal and Installation".
NO >> Replace rear power window switch RH. Refer to PWC-79, "Removal and Installation".

DOOR KEY CYLINDER SWITCH

Component Function Check

INFOID:0000000011281017

1.CHECK DOOR KEY CYLINDER SWITCH INPUT SIGNAL

Refer to DLK-100, "Component Function Check".

Is the inspection result normal?

YES >> Door key cylinder switch is OK.
NO >> Refer to PWC-58, "Diagnosis Procedure".

Diagnosis Procedure

INFOID:0000000011281018

1.CHECK DOOR KEY CYLINDER SWITCH SIGNAL

1. Turn ignition switch OFF.
2. Disconnect front door lock assembly (driver side) (door key cylinder switch) connect.
3. Turn ignition switch ON.
4. Check voltage between front door lock assembly (driver side) (door key cylinder switch) harness connector and ground.

(+)		(–)	Voltage (V)
Front door lock assembly (driver side) (door key cylinder switch)			
Connector	Terminal		
D1	5	Ground	4 - 6
	6		

Is the inspection result normal?

YES >> GO TO 3.
NO >> GO TO 2.

2.CHECK DOOR KEY CYLINDER SWITCH CIRCUIT

1. Turn ignition switch OFF.
2. Disconnect power window main switch connector.
3. Check continuity between power window main switch harness connector and front door lock assembly (driver side) (door key cylinder switch) harness connector.

Power window main switch		Front door lock assembly (driver side) (door key cylinder switch)		Continuity
Connector	Terminal	Connector	Terminal	
D8	15	D1	6	Existed
	16		5	

4. Check continuity between power window main switch harness connector and ground.

Power window main switch		Ground	Continuity
Connector	Terminal		
D8	15	Ground	Not existed
	16		

Is the inspection result normal?

YES >> Replace power window main switch. Refer to PWC-78, "Removal and Installation".
NO >> Repair or replace harness.

3.CHECK DOOR KEY CYLINDER SWITCH GROUND CIRCUIT

Check continuity between front door lock assembly (driver side) (door key cylinder switch) harness connector and ground.

Front door lock assembly (driver side) (door key cylinder switch)		Ground	Continuity
Connector	Terminal		
D1	4		Existed

Is the inspection result normal?

YES >> GO TO 4.
NO >> Repair or replace harness.

4.CHECK DOOR KEY CYLINDER SWITCH

Check front door lock assembly (driver side) (door key cylinder switch).
Refer to PWC-59, "Component Inspection".

Is the inspection result normal?

YES >> GO TO 5.
NO >> Replace front door lock assembly (driver side) (door key cylinder switch). Refer to DLK-223, "DOOR LOCK : Removal and Installation".

5.CHECK INTERMITTENT INCIDENT

Refer to GI-42, "Intermittent Incident".

>> INSPECTION END

Component Inspection

INFOID:0000000011281019

COMPONENT INSPECTION

1.CHECK DOOR KEY CYLINDER SWITCH

1. Turn ignition switch OFF.
2. Disconnect front door lock assembly (driver side) (door key cylinder switch) connector.
3. Check front door lock assembly (driver side) (door key cylinder switch).

Front door lock assembly (driver side) (door key cylinder switch)		Key position	Continuity
Terminal			
5	4	Unlock	Existed
		Neutral / Lock	Not existed
6		Lock	Existed
		Neutral / Unlock	Not existed

Is the inspection result normal?

YES >> INSPECTION END
NO >> Replace front door lock assembly (driver side) (door key cylinder switch). Refer to DLK-224, "OUTSIDE HANDLE : Removal and Installation".

POWER WINDOW SERIAL LINK
POWER WINDOW MAIN SWITCH
POWER WINDOW MAIN SWITCH : Diagnosis Procedure

INFOID:0000000011281020

1.CHECK POWER WINDOW SWITCH INPUT SIGNAL

1. Turn ignition switch ON.
2. Check signal between power window main switch harness connector and ground with oscilloscope.

(+)		(–)	Signal (Reference value)
power window main switch			
Connector	Terminal		
D8	13	Ground	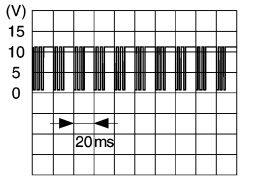

PKIA7023E

Is the inspection result normal?

YES >> GO TO 4.
NO >> GO TO 2.

2.CHECK POWER WINDOW SERIAL LINK SIGNAL

1. Turn ignition switch OFF.
2. Disconnect power window main switch connector.
3. Turn ignition switch ON.
4. Check voltage between power window main switch harness connector and ground.

(+)		(–)	Voltage (V)
Power window main switch			
Connector	Terminal		
D8	13	Ground	9 - 16

Is the inspection result normal?

YES >> Replace power window main switch. Refer to PWC-78, "Removal and Installation".
NO >> GO TO 3.

3.CHECK POWER WINDOW SERIAL LINK CIRCUIT

1. Disconnect BCM connector and power window main switch connector.
2. Check continuity between BCM harness connector and power window main switch harness connector.

BCM		Power window main switch		Continuity
Connector	Terminal	Connector	Terminal	
M14	54	D8	13	Existed

3. Check continuity between BCM harness connector and ground.

BCM		Ground	Continuity
Connector	Terminal		
M14	54		Not existed

Is the inspection result normal?

YES >> Replace BCM. Refer to BCS-98, "Removal and Installation".
NO >> Repair or replace harness.

4. CHECK INTERMITTENT INCIDENT

Refer to GI-42, "Intermittent Incident".

>> INSPECTION END

FRONT POWER WINDOW SWITCH (PASSENGER SIDE)

FRONT POWER WINDOW SWITCH (PASSENGER SIDE) : Diagnosis Procedure

INFOID:0000000011281021

1. CHECK POWER WINDOW SWITCH INPUT SIGNAL

1. Turn ignition switch ON.
2. Check signal between front power window switch (passenger side) harness connector and ground with oscilloscope.

(+)		(–)	Signal (Reference value)
Front power window switch (passenger side)			
Connector	Terminal		
D21	16	Ground	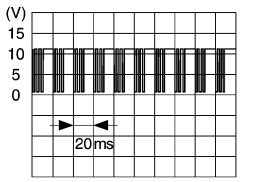

PKIA7023E

Is the inspection result normal?

YES >> Replace front power window switch (passenger side). Refer to PWC-78, "Removal and Installation".

NO >> GO TO 2.

2. CHECK POWER WINDOW SERIAL LINK SIGNAL

1. Turn ignition switch OFF.
2. Disconnect front power window switch (passenger side) connector.
3. Turn ignition switch ON.
4. Check voltage between front power window switch (passenger side) harness connector and ground.

(+)		(–)	Voltage (V)
Front power window switch (passenger side)			
Connector	Terminal		
D21	16	Ground	9 - 16

Is the inspection result normal?

YES >> Replace power window main switch. Refer to PWC-78, "Removal and Installation".

NO >> GO TO 3.

3. CHECK POWER WINDOW SERIAL LINK CIRCUIT

1. Disconnect power window main switch connector.
2. Check continuity between power window main switch harness connector and front power window switch (passenger side) harness connector.

Power window main switch		Front power window switch (passenger side)		Continuity
Connector	Terminal	Connector	Terminal	
D8	13	D21	16	Existed

3. Check continuity between power window main switch harness connector and ground.

Power window main switch		Ground	Continuity
Connector	Terminal		
D8	13		Not existed

Is the inspection result normal?

YES >> GO TO 4.
NO >> Repair or replace harness.

4.CHECK INTERMITTENT INCIDENT

Refer to GI-42, "Intermittent Incident".

>> INSPECTION END

REAR POWER WINDOW SWITCH LH

REAR POWER WINDOW SWITCH LH : Diagnosis Procedure

INFOID:0000000011281022

1.CHECK POWER WINDOW SWITCH INPUT SIGNAL

1. Turn ignition switch ON.
2. Check signal between rear power window switch LH harness connector and ground with oscilloscope.

(+)		(–)	Signal (Reference value)
Rear power window switch LH			
Connector	Terminal		
D33	16	Ground	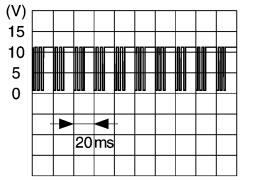

PKIA7023E

Is the inspection result normal?

YES >> Replace rear power window switch LH. Refer to PWC-79, "Removal and Installation".
NO >> GO TO 2.

2.CHECK POWER WINDOW SERIAL LINK SIGNAL

1. Turn ignition switch OFF.
2. Disconnect rear power window switch LH connector.
3. Turn ignition switch ON.
4. Check voltage between rear power window switch LH harness connector and ground.

(+)		(–)	Voltage (V)
Rear power window switch LH			
Connector	Terminal		
D33	16	Ground	9 - 16

Is the inspection result normal?

YES >> Replace power window main switch. Refer to PWC-78, "Removal and Installation".
NO >> GO TO 3.

3.CHECK POWER WINDOW SERIAL LINK CIRCUIT

1. Disconnect power window main switch connector.
2. Check continuity between power window main switch harness connector and rear power window switch LH harness connector.

Power window main switch		Rear power window switch LH		Continuity
Connector	Terminal	Connector	Terminal	
D8	13	D33	16	Existed

3. Check continuity between power window main switch harness connector and ground.

Power window main switch		Ground	Continuity
Connector	Terminal		
D8	13		Not existed

Is the inspection result normal?

YES >> GO TO 4.
NO >> Repair or replace harness.

4. CHECK INTERMITTENT INCIDENT

Refer to GI-42, "Intermittent Incident".

>> INSPECTION END

REAR POWER WINDOW SWITCH RH

REAR POWER WINDOW SWITCH RH : Diagnosis Procedure

INFOID:0000000011281023

1. CHECK POWER WINDOW SWITCH INPUT SIGNAL

1. Turn ignition switch ON.
2. Check signal between rear power window switch RH harness connector and ground with oscilloscope.

(+)		(–)	Signal (Reference value)
Rear power window switch RH			
Connector	Terminal		
D43	16	Ground	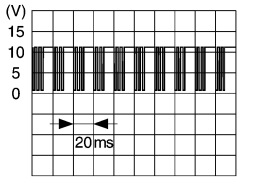

PKIA7023E

Is the inspection result normal?

YES >> Replace rear power window switch RH. Refer to PWC-79, "Removal and Installation".
NO >> GO TO 2.

2. CHECK POWER WINDOW SERIAL LINK SIGNAL

1. Turn ignition switch OFF.
2. Disconnect rear power window switch RH connector.
3. Turn ignition switch ON.
4. Check voltage between rear power window switch RH harness connector and ground.

(+)		(–)	Voltage (V)
Rear power window switch RH			
Connector	Terminal		
D43	16	Ground	9 - 16

Is the inspection result normal?

YES >> Replace power window main switch. Refer to PWC-78, "Removal and Installation".
NO >> GO TO 3.

3.CHECK POWER WINDOW SERIAL LINK CIRCUIT

1. Disconnect power window main switch connector.
2. Check continuity between power window main switch harness connector and rear power window switch RH harness connector.

Power window main switch		Rear power window switch RH		Continuity
Connector	Terminal	Connector	Terminal	
D8	13	D43	16	Existed

3. Check continuity between power window main switch harness connector and ground.

Power window main switch		Ground	Continuity
Connector	Terminal		
D8	13		Not existed

Is the inspection result normal?

YES >> GO TO 4.
NO >> Repair or replace harness.

4.CHECK INTERMITTENT INCIDENT

Refer to GI-42, "Intermittent Incident".

>> INSPECTION END

SYMPTOM DIAGNOSIS

NONE OF THE POWER WINDOWS CAN BE OPERATED USING ANY SWITCH

Diagnosis Procedure

INFOID:0000000011281024

1. CHECK BCM POWER SUPPLY AND GROUND CIRCUIT

Check BCM power supply and ground circuit.
Refer to BCS-91, "Diagnosis Procedure".

Is the inspection result normal?

YES >> GO TO 2.
NO >> Repair or replace the malfunctioning parts.

2. CHECK POWER WINDOW MAIN SWITCH POWER SUPPLY AND GROUND CIRCUIT

Check power window switch power supply and ground circuit.
Refer to PWC-41, "POWER WINDOW MAIN SWITCH : Diagnosis Procedure".

Is the inspection result normal?

YES >> GO TO 3.
NO >> Repair or replace the malfunctioning parts.

3. CONFIRM THE OPERATION

Confirm the operation again.

Is the result normal?

YES >> Check intermittent incident. Refer to GI-42, "Intermittent Incident".
NO >> GO TO 1.

DRIVER SIDE POWER WINDOW ALONE DOES NOT OPERATE

Diagnosis Procedure

INFOID:0000000011281025

1.CHECK DRIVER SIDE POWER WINDOW MOTOR

Check front power window motor (driver side).
Refer to PWC-45, "DRIVER SIDE : Component Function Check".

Is the measurement value within the specification?

YES >> GO TO 2.
NO >> Repair or replace the malfunctioning parts.

2.CONFIRM THE OPERATION

Confirm the operation again.

Is the result normal?

YES >> Check intermittent incident. Refer to GI-42, "Intermittent Incident".
NO >> GO TO 1.

FRONT PASSENGER SIDE POWER WINDOW DOES NOT OPERATE WHEN BOTH POWER WINDOW MAIN SWITCH AND FRONT POWER WINDOW SWITCH ARE OPERATED

WHEN BOTH POWER WINDOW MAIN SWITCH AND FRONT POWER WINDOW SWITCH ARE OPERATED : Diagnosis Procedure

INFOID:0000000011281026

1.CHECK FRONT POWER WINDOW SWITCH (PASSENGER SIDE) POWER SUPPLY AND GROUND CIRCUIT

Check front power window switch (passenger side) power supply and ground circuit.
Refer to PWC-42, "FRONT POWER WINDOW SWITCH (PASSENGER SIDE) : Diagnosis Procedure".

Is the inspection result normal?

YES >> GO TO 2.
NO >> Repair or replace the malfunctioning parts.

2.CHECK PASSENGER SIDE POWER WINDOW MOTOR CIRCUIT

Check front power window motor (passenger side) circuit.
Refer to PWC-46, "PASSENGER SIDE : Component Function Check".

Is the inspection result normal?

YES >> GO TO 3.
NO >> Repair or replace the malfunctioning parts.

3.CONFIRM THE OPERATION

Confirm the operation again.

Is the result normal?

YES >> Check intermittent incident. Refer to GI-42, "Intermittent Incident".
NO >> GO TO 1.

WHEN FRONT POWER WINDOW SWITCH (PASSENGER SIDE) IS OPERATED

WHEN FRONT POWER WINDOW SWITCH (PASSENGER SIDE) IS OPERATED : Diagnosis Procedure

INFOID:0000000011281027

1.REPLACE FRONT POWER WINDOW SWITCH (PASSENGER SIDE)

Replace front power window switch (passenger side).
Refer to PWC-78, "Removal and Installation".

>> INSPECTION END

WHEN POWER WINDOW MAIN SWITCH IS OPERATED

WHEN POWER WINDOW MAIN SWITCH IS OPERATED : Diagnosis Procedure

INFOID:0000000011281028

1.CHECK FRONT POWER WINDOW SWITCH (PASSENGER SIDE) SERIAL LINK CIRCUIT

Check front power window switch (passenger side) serial link circuit.
Refer to PWC-61, "FRONT POWER WINDOW SWITCH (PASSENGER SIDE) : Diagnosis Procedure".

Is the inspection result normal?

YES >> GO TO 2.
NO >> Repair or replace the malfunctioning parts.

2.CONFIRM THE OPERATION

Confirm the operation again.

Is the result normal?

YES >> Check intermittent incident. Refer to GI-42, "Intermittent Incident".
NO >> GO TO 1.

REAR LH SIDE POWER WINDOW ALONE DOES NOT OPERATE

WHEN BOTH POWER WINDOW MAIN SWITCH AND REAR POWER WINDOW SWITCH LH ARE OPERATED

WHEN BOTH POWER WINDOW MAIN SWITCH AND REAR POWER WINDOW SWITCH LH ARE OPERATED : Diagnosis Procedure

INFOID:0000000011281029

1.CHECK REAR POWER WINDOW SWITCH POWER SUPPLY AND GROUND CIRCUIT

Check rear power window switch power supply and ground circuit.
Refer to PWC-43, "REAR POWER WINDOW SWITCH : Diagnosis Procedure".

Is the inspection result normal?

YES >> GO TO 2.
NO >> Repair or replace the malfunctioning parts.

2.CHECK REAR POWER WINDOW MOTOR LH

Check rear power window motor LH.
Refer to PWC-47, "REAR LH : Component Function Check".

Is the inspection result normal?

YES >> GO TO 3.
NO >> Repair or replace the malfunctioning parts.

3.CONFIRM THE OPERATION

Confirm the operation again.

Is the result normal?

YES >> Check intermittent incident. Refer to GI-42, "Intermittent Incident".
NO >> GO TO 1.

WHEN REAR POWER WINDOW SWITCH LH IS OPERATED

WHEN REAR POWER WINDOW SWITCH LH IS OPERATED : Diagnosis Procedure

INFOID:0000000011281030

1.REPLACE REAR POWER WINDOW SWITCH LH

Replace rear power window switch LH.
Refer to PWC-79, "Removal and Installation".

>> INSPECTION END

WHEN POWER WINDOW MAIN SWITCH IS OPERATED

WHEN POWER WINDOW MAIN SWITCH IS OPERATED : Diagnosis Procedure

INFOID:0000000011281031

1.CHECK REAR POWER WINDOW SWITCH LH SERIAL LINK CIRCUIT

Check rear power window switch LH serial link circuit.
Refer to PWC-62, "REAR POWER WINDOW SWITCH LH : Diagnosis Procedure".

Is the inspection result normal?

YES >> GO TO 2.
NO >> Repair or replace the malfunctioning parts.

2.CONFIRM THE OPERATION

Confirm the operation again.

Is the result normal?

YES >> Check intermittent incident. Refer to GI-42, "Intermittent Incident".
NO >> GO TO 1.

REAR RH SIDE POWER WINDOW ALONE DOES NOT OPERATE

WHEN BOTH POWER WINDOW MAIN SWITCH AND REAR POWER WINDOW SWITCH RH ARE OPERATED

WHEN BOTH POWER WINDOW MAIN SWITCH AND REAR POWER WINDOW SWITCH RH ARE OPERATED : Diagnosis Procedure

INFOID:0000000011281032

1. CHECK REAR POWER WINDOW SWITCH POWER SUPPLY AND GROUND CIRCUIT

Check rear power window switch power supply and ground circuit.
Refer to PWC-43, "REAR POWER WINDOW SWITCH : Diagnosis Procedure".

Is the inspection result normal?

YES >> GO TO 2.
NO >> Repair or replace the malfunctioning parts.

2. CHECK REAR POWER WINDOW MOTOR RH

Check rear power window motor RH.
Refer to PWC-47, "REAR RH : Component Function Check".

Is the inspection result normal?

YES >> GO TO 3.
NO >> Repair or replace the malfunctioning parts.

3. CONFIRM THE OPERATION

Confirm the operation again.

Is the result normal?

YES >> Check intermittent incident. Refer to GI-42, "Intermittent Incident".
NO >> GO TO 1.

WHEN REAR POWER WINDOW SWITCH RH IS OPERATED

WHEN REAR POWER WINDOW SWITCH RH IS OPERATED : Diagnosis Procedure

INFOID:0000000011281033

1. REPLACE REAR POWER WINDOW SWITCH RH

Replace rear power window switch RH.
Refer to PWC-79, "Removal and Installation"

>> INSPECTION END

WHEN POWER WINDOW MAIN SWITCH IS OPERATED

WHEN POWER WINDOW MAIN SWITCH IS OPERATED : Diagnosis Procedure

INFOID:0000000011281034

1. CHECK REAR POWER WINDOW SWITCH RH SERIAL LINK CIRCUIT

Check rear power window switch RH serial link circuit.
Refer to PWC-63, "REAR POWER WINDOW SWITCH RH : Diagnosis Procedure".

Is the inspection result normal?

YES >> GO TO 2.
NO >> Repair or replace the malfunctioning parts.

2. CONFIRM THE OPERATION

Confirm the operation again.

Is the result normal?

YES >> Check intermittent incident. Refer to GI-42, "Intermittent Incident".
NO >> GO TO 1.

AUTO OPERATION DOES NOT OPERATE BUT MANUAL OPERATE NORMALLY

DRIVER SIDE

DRIVER SIDE : Diagnosis Procedure

INFOID:0000000011281035

1.PERFORM INITIALIZATION PROCEDURE

Initialization procedure is performed and operation is confirmed.
Refer to PWC-37, "Work Procedure".

Is the inspection result normal?

YES >> INSPECTION END
NO >> GO TO 2.

2.CHECK ENCODER (DRIVER SIDE) CIRCUIT

Check encoder (driver side) circuit.
Refer to PWC-49, "DRIVER SIDE : Component Function Check".

Is the inspection result normal?

YES >> GO TO 3.
NO >> Repair or replace the malfunctioning parts.

3.CONFIRM THE OPERATION

Confirm the operation again.

Is the result normal?

YES >> Check intermittent incident. Refer to GI-42, "Intermittent Incident".
NO >> GO TO 1.

PASSENGER SIDE

PASSENGER SIDE : Diagnosis Procedure

INFOID:0000000011281036

1.PERFORM INITIALIZATION PROCEDURE

Initialization procedure is performed and operation is confirmed.
Refer to PWC-37, "Work Procedure".

Is the inspection result normal?

YES >> INSPECTION END
NO >> GO TO 2.

2.CHECK ENCODER (PASSENGER SIDE) CIRCUIT

Check encoder (passenger side) circuit.
Refer to PWC-51, "PASSENGER SIDE : Component Function Check".

Is the inspection result normal?

YES >> GO TO 3.
NO >> Repair or replace the malfunctioning parts.

3.CONFIRM THE OPERATION

Confirm the operation again.

Is the result normal?

YES >> Check intermittent incident. Refer to GI-42, "Intermittent Incident".
NO >> GO TO 1.

REAR LH

REAR LH : Diagnosis Procedure

INFOID:0000000011281037

1.PERFORM INITIALIZATION PROCEDURE

Initialization procedure is performed and operation is confirmed.

Refer to PWC-37, "Work Procedure"

Is the inspection result normal?

YES >> INSPECTION END
NO >> GO TO 2.

2. CHECK ENCODER (REAR LH) CIRCUIT

Check encoder (rear LH) circuit.
Refer to PWC-53, "REAR LH : Component Function Check".

Is the inspection result normal?

YES >> GO TO 3.
NO >> Repair or replace the malfunctioning parts.

3. CONFIRM THE OPERATION

Confirm the operation again.

Is the result normal?

YES >> Check intermittent incident. Refer to GI-42, "Intermittent Incident".
NO >> GO TO 1.

REAR RH

REAR RH : Diagnosis Procedure

INFOID:0000000011281038

1. PERFORM INITIALIZATION PROCEDURE

Initialization procedure is performed and operation is confirmed.
Refer to PWC-37, "Work Procedure".

Is the inspection result normal?

YES >> INSPECTION END
NO >> GO TO 2.

2. CHECK ENCODER (REAR RH) CIRCUIT

Check encoder (rear RH) circuit.
Refer to PWC-55, "REAR RH : Component Function Check".

Is the inspection result normal?

YES >> GO TO 3.
NO >> Repair or replace the malfunctioning parts.

3. CONFIRM THE OPERATION

Confirm the operation again.

Is the result normal?

YES >> Check intermittent incident. Refer to GI-42, "Intermittent Incident".
NO >> GO TO 1.

ANTI-PINCH FUNCTION DOES NOT OPERATE

Diagnosis Procedure

INFOID:0000000011281039

1.CHECK POWER WINDOW AUTO OPERATION

Check AUTO operation of the door when anti-pinch function does not operate.

Is the inspection result normal?

YES >> GO TO 2.
NO >> Refer to PWC-70, "DRIVER SIDE : Diagnosis Procedure" (driver side), PWC-70, "PASSENGER SIDE : Diagnosis Procedure" (passenger side), PWC-70, "REAR LH : Diagnosis Procedure" (rear LH), PWC-71, "REAR RH : Diagnosis Procedure" (rear RH).

2.CONFIRM THE OPERATION

Confirm the operation again.

Is the inspection result normal?

YES >> Check intermittent incident. Refer to GI-42, "Intermittent Incident".
NO >> GO TO 1.

POWER WINDOW RETAINED POWER OPERATION DOES NOT OPERATE PROPERLY

Diagnosis Procedure

INFOID:0000000011281040

1.CHECK DOOR SWITCH

Check door switch.
Refer to DLK-111, "Component Function Check".

Is the inspection result normal?

YES >> GO TO 2.
NO >> Repair or replace the malfunctioning parts.

2.CHECK POWER WINDOW MAIN SWITCH SERIAL LINK CIRCUIT

Check power window main switch serial link circuit.
Refer to PWC-60, "POWER WINDOW MAIN SWITCH : Diagnosis Procedure".

Is the inspection result normal?

YES >> GO TO 3.
NO >> Repair or replace the malfunctioning parts.

3.CONFIRM THE OPERATION

Confirm the operation again.

Is the result normal?

YES >> Check intermittent incident. Refer to GI-42, "Intermittent Incident".
NO >> GO TO 1.

DOOR KEY CYLINDER SWITCH DOES NOT OPERATE POWER WINDOWS

Diagnosis Procedure

INFOID:0000000011281041

1.PERFORM INITIALIZATION PROCEDURE

Perform Initialization procedure and check that inspection result is normal.
Refer to PWC-37, "Work Procedure"

Is the inspection result normal?

YES >> INSPECTION END
NO >> GO TO 2.

2.CHECK DRIVER SIDE DOOR LOCK ASSEMBLY (DOOR KEY CYLINDER SWITCH)

Check driver side door lock assembly (door key cylinder switch).
Refer to PWC-58, "Component Function Check"

Is the inspection result normal?

YES >> GO TO 3.
NO >> Repair or replace the malfunctioning parts.

3.CONFIRM THE OPERATION

Confirm the operation again.

Is the result normal?

YES >> Check intermittent incident. Refer to GI-42, "Intermittent Incident"
NO >> GO TO 1.

KEYLESS POWER WINDOW DOWN DOES NOT OPERATE

Diagnosis Procedure

INFOID:0000000011281042

1.CHECK POWER WINDOW OPERATION

Check power window operation.

Does power window up/down with power window main switch?

YES >> GO TO 2.
NO >> Refer to PWC-65, "Diagnosis Procedure".

2.CHECK DOOR LOCK OPERATION

Check door lock/unlock using Intelligent Key.

Does door lock/unlock using Intelligent Key?

YES >> GO TO 3.
NO >> Refer to DLK-146, "Diagnosis Procedure".

3.CHECK “KEYFOB P/W TEST” IN “ACTIVE TEST”

Check “KEYFOB P/W TEST” in “ACTIVE TEST”.
Refer to DLK-51, "INTELLIGENT KEY : CONSULT Function (BCM - INTELLIGENT KEY)".

Is the inspection result normal?

YES >> Replace power window main switch. Refer to PWC-78, "Removal and Installation".
NO >> GO TO 4.

4.REPLACE POWER WINDOW MAIN SWITCH

1. Replace power window main switch. Refer to PWC-78, "Removal and Installation".
2. Confirm the operation again.

Is the inspection result normal?

YES >> INSPECTION END.
NO >> Replace BCM. Refer to BCS-98, "Removal and Installation".

POWER WINDOW LOCK SWITCH DOES NOT FUNCTION

Diagnosis Procedure

INFOID:0000000011281043

1.REPLACE POWER WINDOW MAIN SWITCH

Replace power window main switch. Refer to PWC-78, "Removal and Installation".

>> INSPECTION END

POWER WINDOW SWITCH ILLUMINATION DOES NOT ILLUMINATE

DRIVER SIDE

DRIVER SIDE : Diagnosis Procedure

INFOID:0000000011281044

1. REPLACE POWER WINDOW MAIN SWITCH

Replace power window main switch.
Refer to PWC-78, "Removal and Installation".

>> INSPECTION END

PASSENGER SIDE

PASSENGER SIDE : Diagnosis Procedure

INFOID:0000000011281045

1. REPLACE FRONT POWER WINDOW SWITCH (PASSENGER SIDE)

Replace front power window switch (passenger side).
Refer to PWC-78, "Removal and Installation".

>> INSPECTION END

REAR LH

REAR LH : Diagnosis Procedure

INFOID:0000000011281046

1. REPLACE REAR POWER WINDOW SWITCH LH

Replace rear power window switch LH.
Refer to PWC-79, "Removal and Installation".

>> INSPECTION END

REAR RH

REAR RH : Diagnosis Procedure

INFOID:0000000011281047

1. REPLACE REAR POWER WINDOW SWITCH RH

Replace rear power window switch RH.
Refer to PWC-79, "Removal and Installation".

>> INSPECTION END

REMOVAL AND INSTALLATION

POWER WINDOW MAIN SWITCH

Removal and Installation

INFOID:0000000011281048

REMOVAL

1. Remove front door finisher. Refer to INT-13, "FRONT DOOR FINISHER : Removal and Installation".
2. Remove power window main switch mounting screws Ⓐ, and then remove power window main switch ① from front door finisher ②.

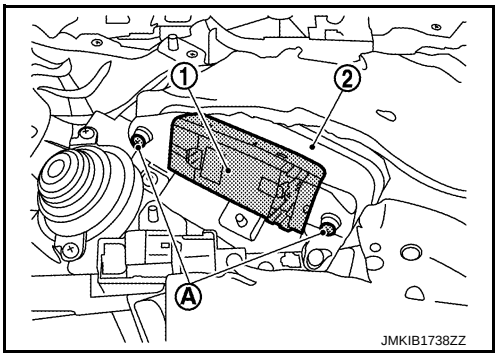

INSTALLATION

Install in the reverse order of removal.

NOTE:

- If power window main switch is replaced or is removed, it is necessary to perform the initialization procedure. Refer to PWC-39, "Work Procedure".
- The same procedure is also performed for front power window switch (passenger side).

REAR POWER WINDOW SWITCH

Removal and Installation

INFOID:0000000011281049

CAUTION:
Never bend the pawl of rear door finisher.

REMOVAL

1. Remove rear door finisher. Refer to INT-18, "REAR DOOR FINISHER : Removal and Installation".
2. Remove rear power window switch ① from rear door finisher ②.

: Pawl

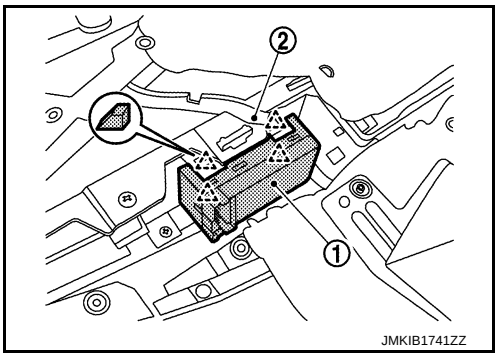

INSTALLATION

Install in the reverse order of removal.