PROPELLER SHAFT & DIFFERENTIAL CARRIER

SECTION PD

CONTENTS

CONTENTS (Cont'd)

Noise, Vibration and Harshness (NVH) Troubleshooting

NBPD0049

NVH TROUBLESHOOTING CHART

NBPD0049S01

Use the chart below to help you find the cause of the symptom. If necessary, repair or replace these parts.

Possible cause and SUSPECTED PARTS			Uneven rotation torque	Excessive center bearing axial end play	Center bearing mounting (insulator) cracks, damage or deterioration	Excessive joint angle	Rotation imbalance	Excessive runout	Rough gear tooth	Improper gear contact	Tooth surfaces worn	Incorrect backlash	Companion flange excessive runout	Improper gear oil	PROPELLER SHAFT	DIFFERENTIAL	DRIVE SHAFT	AXLE	SUSPENSION	TIRES	ROAD WHEEL	BRAKES	STEERING
Reference page			—	—	—	—	PD-4	PD-4	PD-18, 41	PD-24, 50	PD-18, 41	PD-13, 37	—	—	Refer to PROPELLER SHAFT in this chart.	Refer to DIFFERENTIAL in this chart.	NVH in AX section	NVH in AX section	NVH in SU section	NVH in SU section	NVH in SU section	NVH in BR section	NVH in ST section
Symptom	PROPELLER SHAFT	Noise	×	×	×	×	×	×								×	×	×	×	×	×	×	×
		Shake				×											×	×	×	×	×	×	×
		Vibration	×	×	×	×	×	×									×	×	×	×			×
	DIFFERENTIAL	Noise							×	×	×	×	×	×	×		×	×	×	×	×	×	×

×: Applicable

Components

NBPD0002

FRONT PROPELLER SHAFT

NBPD0002S01

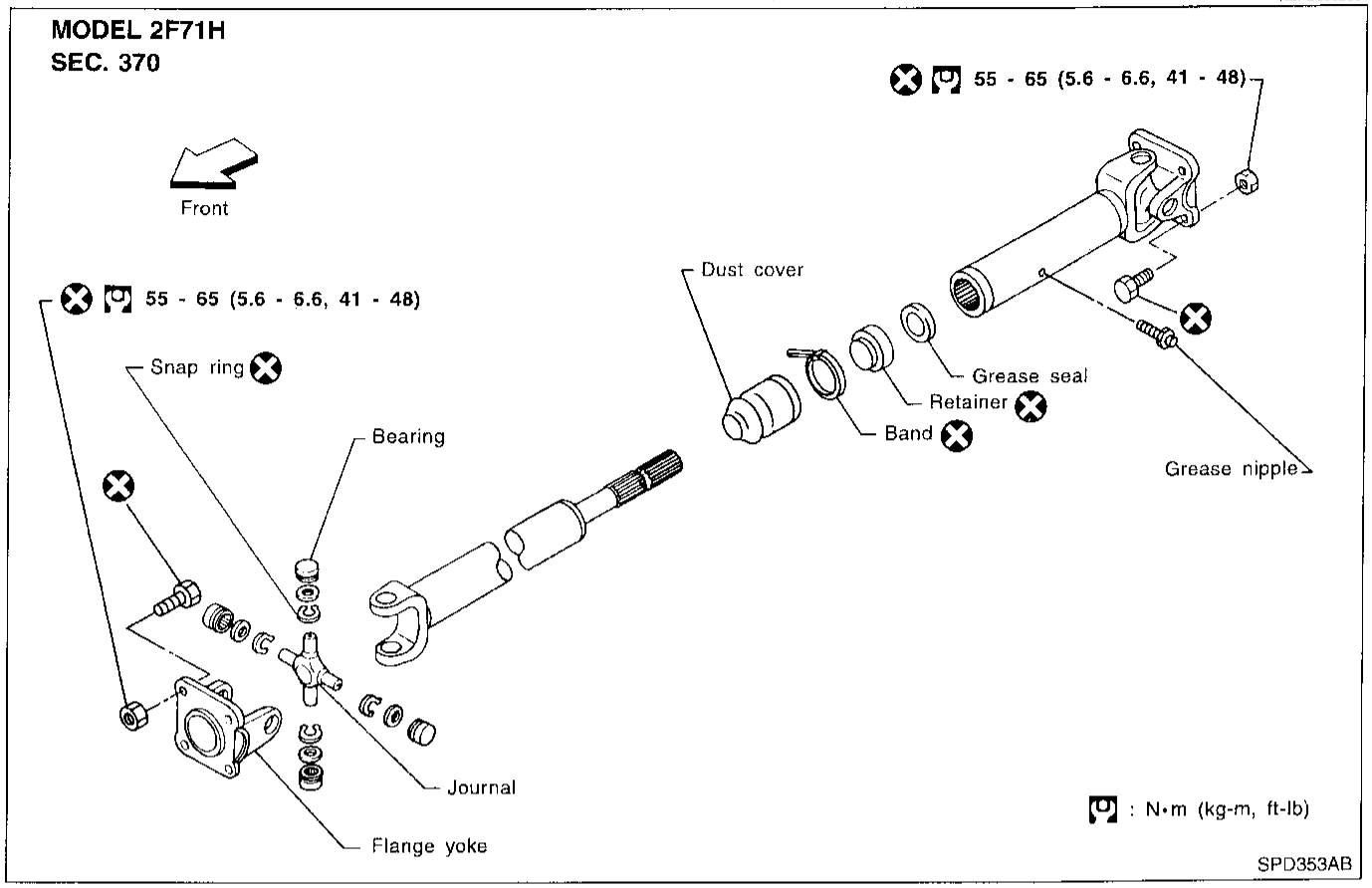

REAR PROPELLER SHAFT

NBPD0002S02

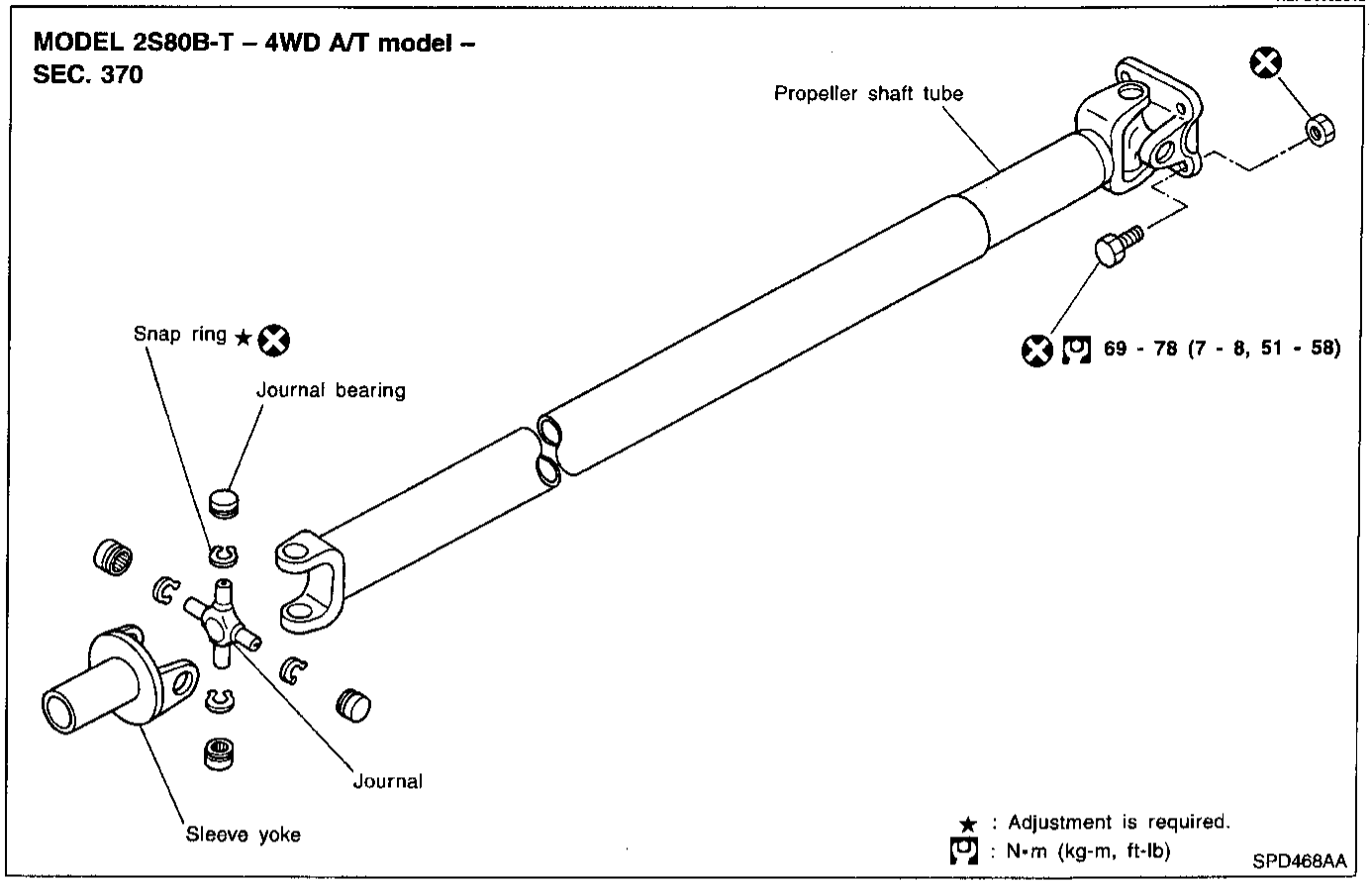

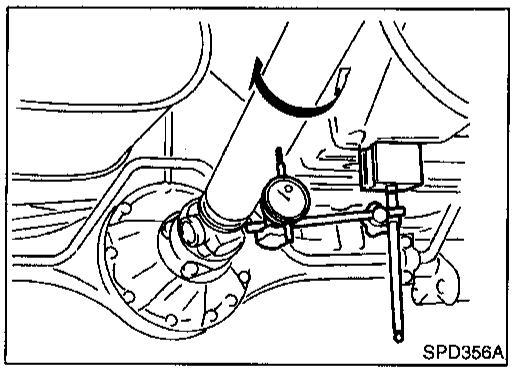

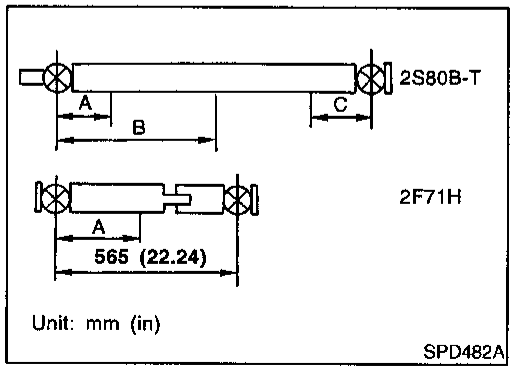

On-vehicle Service

PROPELLER SHAFT VIBRATION

NBPD0003

If vibration is present at high speed, inspect propeller shaft runout first.

1. Raise rear wheels.
2. Measure propeller shaft runout at several points by rotating final drive companion flange with hands.

   Runout limit: 0.6 mm (0.024 in)

Propeller shaft runout measuring points:

Unit: mm (in)

Distance	A	B	C
2S80B-T	280 (11.02)	480 (18.90)	266.5 (10.49)
2F71H	179.5 (7.07)	—	—

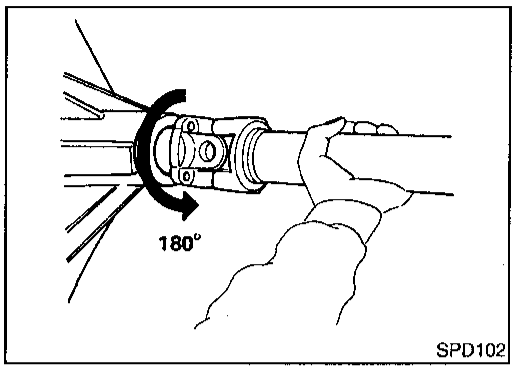

SPD102

3. If runout exceeds specifications, disconnect propeller shaft at final drive companion flange; then rotate companion flange 180 degrees and reconnect propeller shaft.
4. Check runout again. If runout still exceeds specifications, replace propeller shaft assembly.
5. Perform road test.

APPEARANCE CHECKING

NBPD0004

- Inspect propeller shaft tube surface for dents or cracks. If damaged, replace propeller shaft assembly.
- If center bearing is noisy or damaged, replace center bearing.

Removal and Installation

NBPD0005

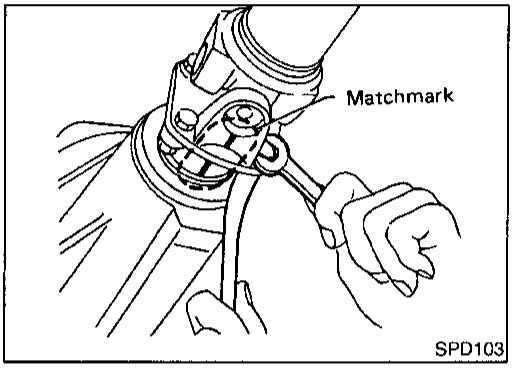

SPD103

- Put matchmarks on flanges and separate propeller shaft from final drive.

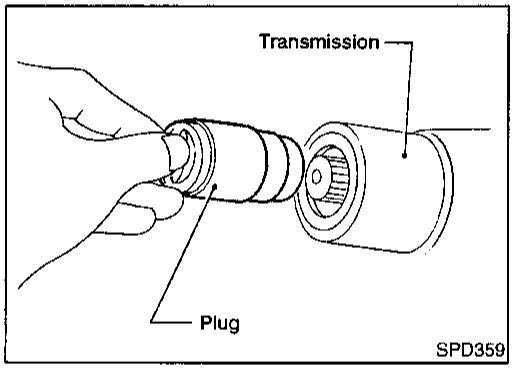

SPD359

- Draw out propeller shaft from transmission and plug up rear end of transmission rear extension housing.

Inspection

NBPD0006

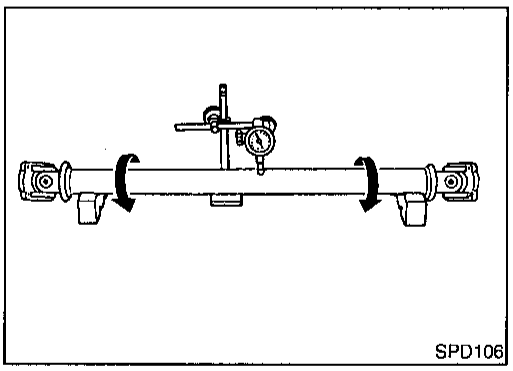
SPD106

- Inspect propeller shaft runout. If runout exceeds specifications, replace propeller shaft assembly.

  Runout limit: 0.6 mm (0.024 in)

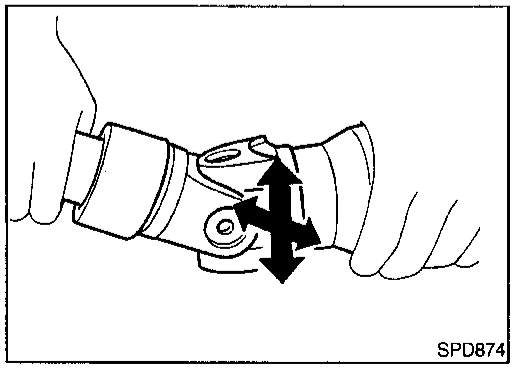
SPD874

- If the play exceeds specifications, replace propeller shaft assembly.

  Journal axial play:
  0.02 mm (0.0008 in) or less

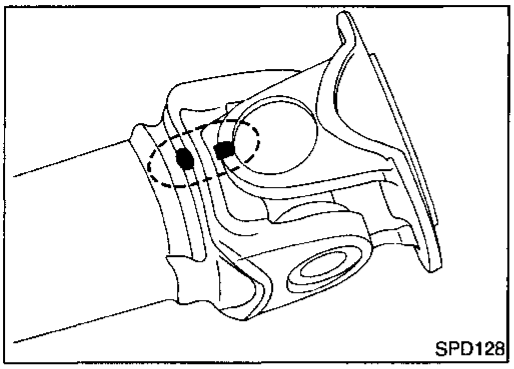

Disassembly

NBPD0007

JOURNAL (71H AND 80B)

NBPD0007S02

1. Put matchmarks on shaft and flange or yoke.

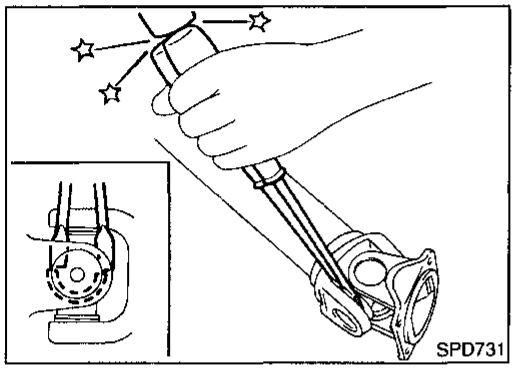

2. Remove snap ring.

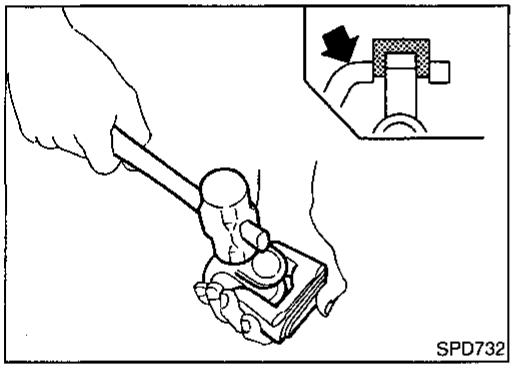

3. Remove pushed out journal bearing by lightly tapping yoke with a hammer, taking care not to damage journal and yoke hole.

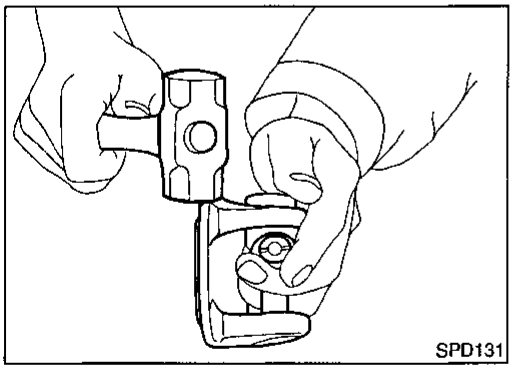

4. Remove bearing at opposite side in above operation.

Put marks on disassembled parts so that they can be reinstalled in their original positions from which they were removed.

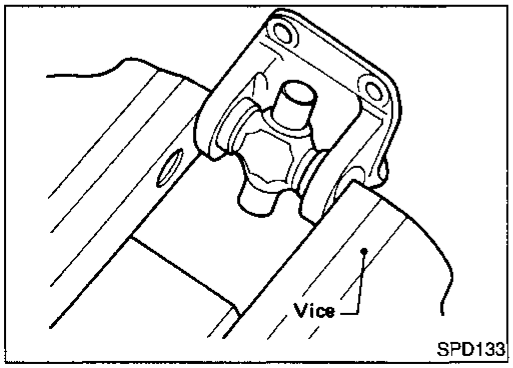

Assembly

NBPD0008

JOURNAL (71H AND 80B)

NBPD0008S02

1. Assemble journal bearing. Apply recommended multi-purpose grease on bearing inner surface.

When assembling, be careful that needle bearing does not fall down.

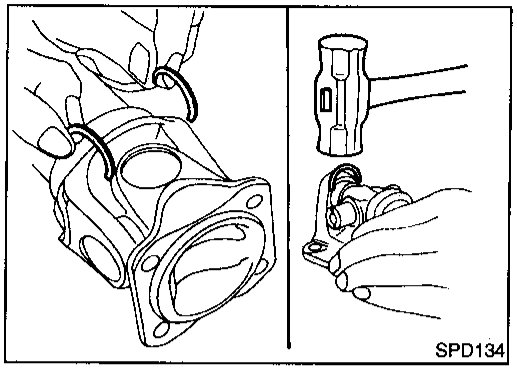

2. Select snap ring that will provide specified play in axial direction of journal, and install them.
   Refer to SDS, PD-56.

Select snap rings with a difference in thickness at both sides within 0.06 mm (0.0024 in).

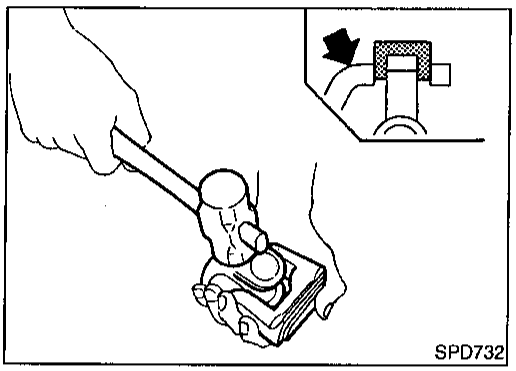

3. Adjust thrust clearance between bearing and snap ring to zero by tapping yoke.

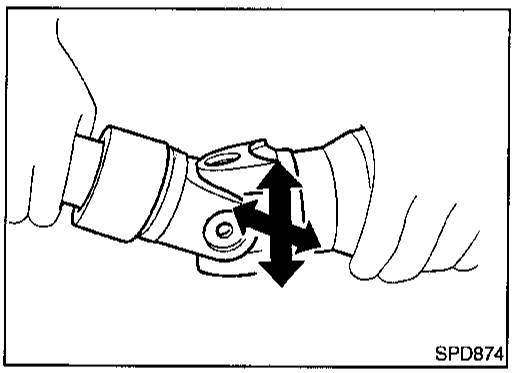

4. Check to see that journal moves smoothly and check for axial play.
   Axial play: 0.02 mm (0.0008 in) or less

Preparation

SPECIAL SERVICE TOOLS

NBPD0013

The actual shapes of Kent-Moore tools may differ from those of special service tools illustrated here.

Tool number (Kent-Moore No.) Tool name	Description
ST3127S000 (See J25765-A) Preload gauge 1 GG91030000 (J25765) Torque wrench 2 HT62940000 (—) Socket adapter 3 HT62900000 (—) Socket adapter	Measuring pinion bearing preload and total preload 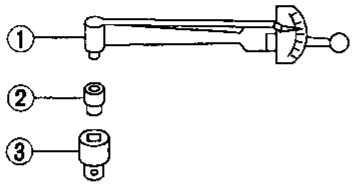 NT124
KV38100800 (J34310, J25604-01) Differential attachment	Mounting final drive (To use, make a new hole.) **a: 152 mm (5.98 in)** 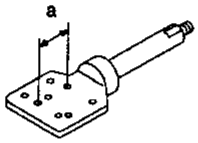 NT119
KV38108300 (—) Companion flange wrench	Removing and installing propeller shaft lock nut, and drive pinion lock nut 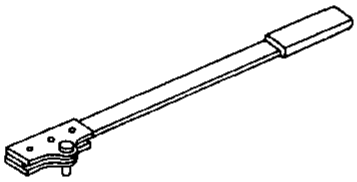 NT771
ST3090S000 (—) Drive pinion rear inner race puller set 1 ST30031000 (J22912-01) Puller 2 ST30901000 (J26010-01) Base	Removing and installing drive pinion rear inner cone **a: 79 mm (3.11 in) dia.** **b: 45 mm (1.77 in) dia.** **c: 35 mm (1.38 in) dia.** 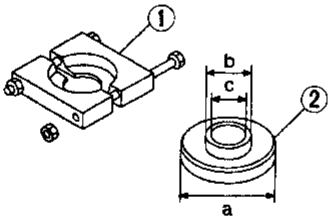 NT527
ST3306S001 Differential side bearing puller set 1 ST33051001 (J22888-20) Body 2 ST33061000 (J8107-2) Adapter	Removing and installing differential side bearing inner cone **a: 28.5 mm (1.122 in) dia.** **b: 38 mm (1.50 in) dia.** 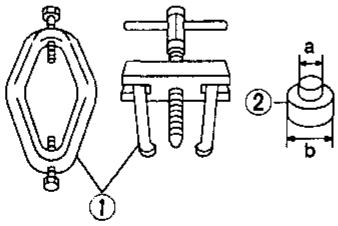 NT072
KV38100300 (J25523) Differential side bearing drift	Installing side bearing inner cone **a: 54 mm (2.13 in) dia.** **b: 46 mm (1.81 in) dia.** **c: 32 mm (1.26 in) dia.** 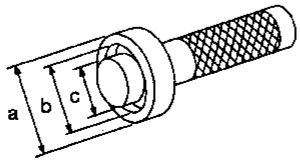 NT085

Tool number (Kent-Moore No.) Tool name	Description	
KV38100600 (J25267) Side bearing spacer drift	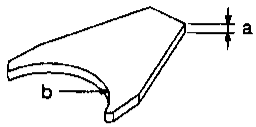 NT528	Installing side bearing spacer **a: 8 mm (0.31 in)** **b: R42.5 mm (1.673 in)**
ST30611000 (J25742-1) Drift	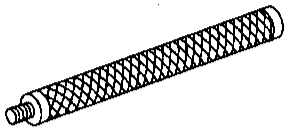 NT090	Installing pinion rear bearing outer race (Use with ST30621000 or ST30613000.)
ST30621000 (J25742-5) Drift	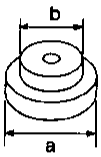 NT073	Installing pinion rear bearing outer race (Use with ST30611000.) **a: 79 mm (3.11 in) dia.** **b: 59 mm (2.32 in) dia.**
ST30613000 (J25742-3) Drift	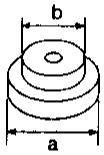 NT073	Installing pinion front bearing outer race (Use with ST30611000.) **a: 72 mm (2.83 in) dia.** **b: 48 mm (1.89 in) dia.**
KV38100500 (J25273) Gear carrier front oil seal drift	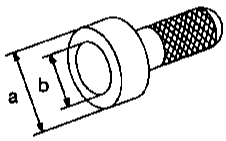 NT115	Installing front oil seal **a: 85 mm (3.35 in) dia.** **b: 60 mm (2.36 in) dia.**
KV38100200 (J26233) Gear carrier side oil seal drift	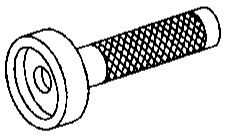 NT120	Installing side oil seal
(J34309) Differential shim selector	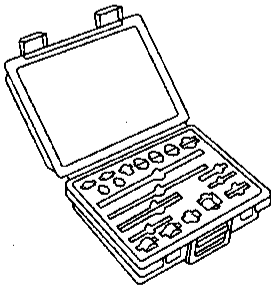 NT134	Adjusting bearing pre-load and gear height
(J25269-4) Side bearing discs (2 Req'd)	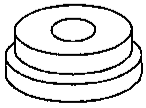 NT136	Selecting pinion height adjusting washer

Tool number (Kent-Moore No.) Tool name	Description
(J8129) Spring gauge	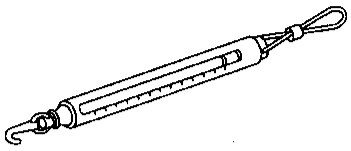 NT127 Measuring carrier turning torque

Noise, Vibration and Harshness (NVH) Troubleshooting

NBPD0050

Refer to "NVH TROUBLESHOOTING CHART", PD-2.

On-vehicle Service

FRONT OIL SEAL REPLACEMENT

NBPD0014

1. Remove front propeller shaft.
2. Loosen drive pinion nut.
   Tool number: KV38108300 (—)

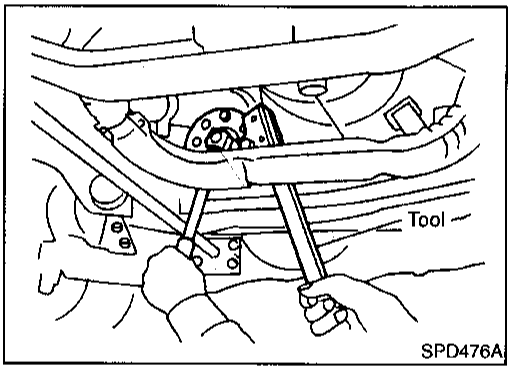

SPD476A

3. Remove companion flange.

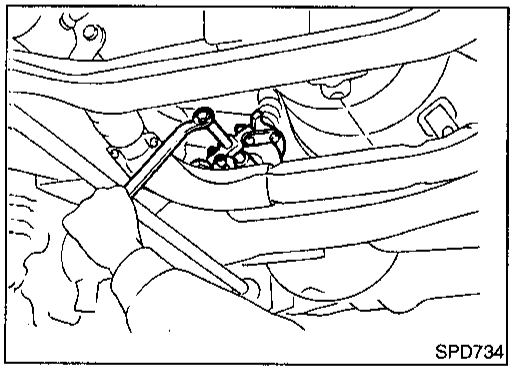
SPD734

4. Remove front oil seal.

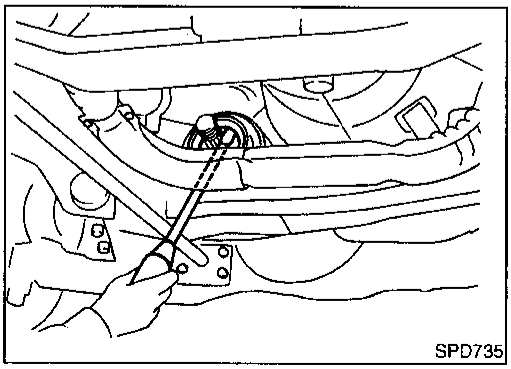
SPD735

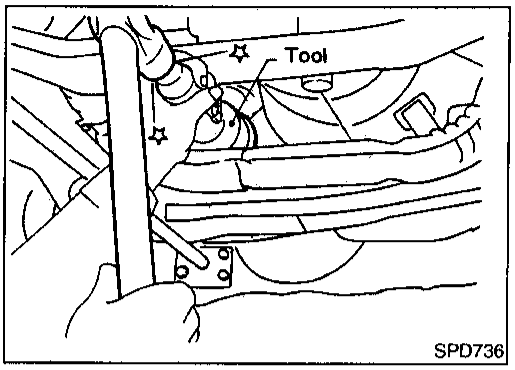

5. Apply multi-purpose grease to cavity at sealing lips of oil seal. Press front oil seal into carrier.
6. Install companion flange and drive pinion nut.
7. Install propeller shaft.

Tool number:
KV38100500 (J25273)

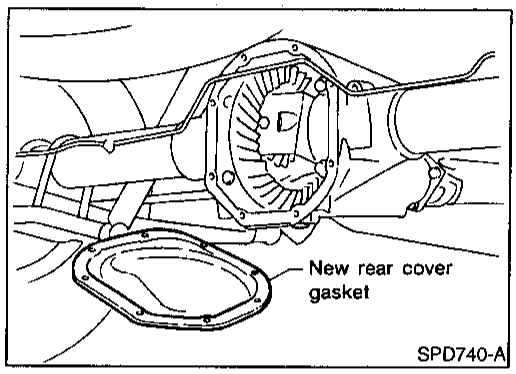

REAR COVER GASKET REPLACEMENT

NBPD0015

1. Drain gear oil.
2. Remove rear cover and rear cover gasket.
3. Install new rear cover gasket and rear cover.
4. Fill final drive with recommended gear oil.

Components

NBPD0016

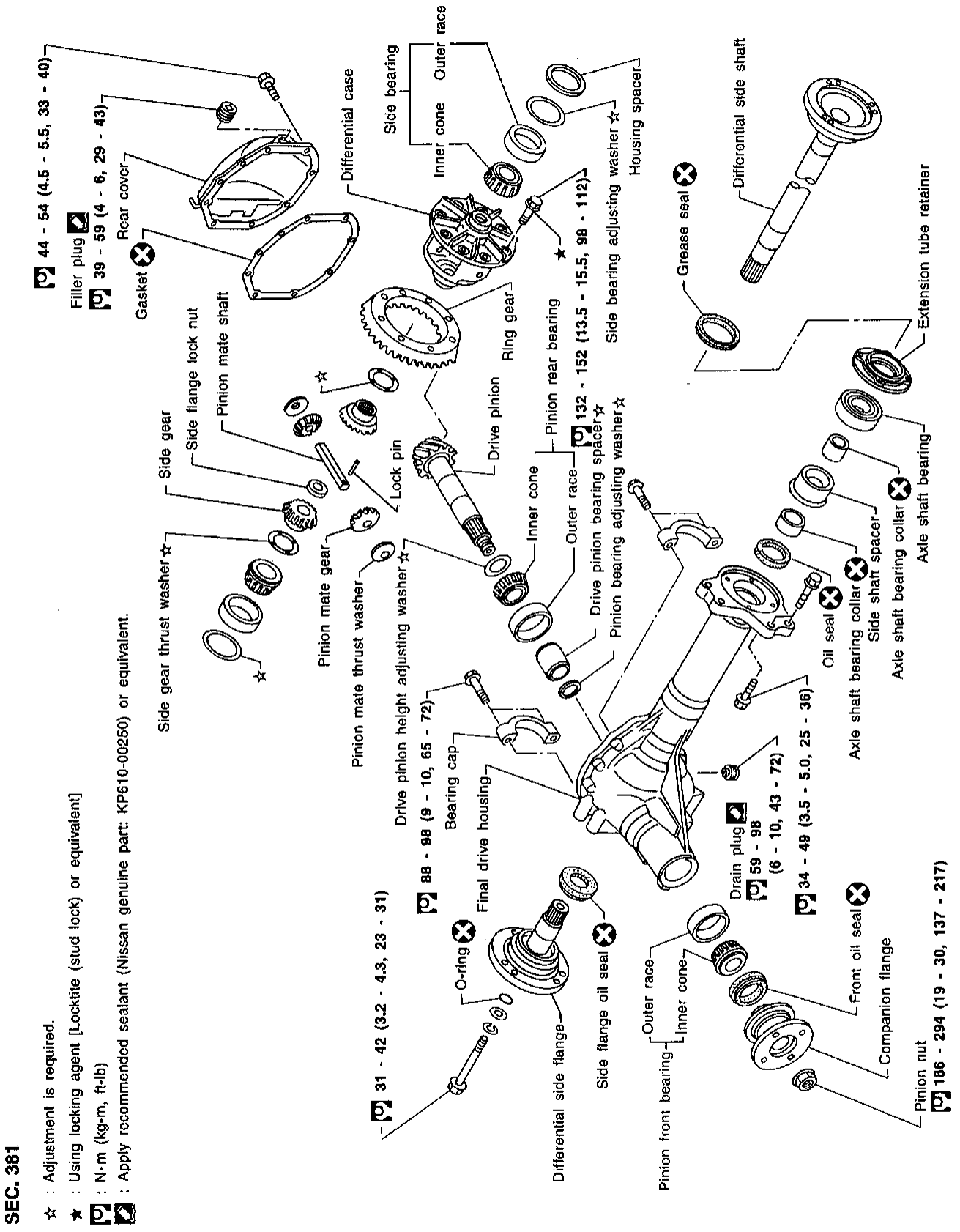

SEC. 381

☆ : Adjustment is required.

★ : Using locking agent [Locktite (stud lock) or equivalent]

: N·m (kg-m, ft-lb)

: Apply recommended sealant (Nissan genuine part: KP610-00250) or equivalent.

SPD357AD

Removal and Installation

NBPD0017

REMOVAL

NBPD0017S01

- Remove front of propeller shaft.
  Plug front end of transfer.
- Remove drive shaft. Refer to AX section ("Drive Shaft", "FRONT AXLE").
- Remove front final drive mounting bolts.

CAUTION:
Be careful not to damage spline, sleeve yoke and front oil seal when removing propeller shaft.

INSTALLATION

NBPD0017S02

- Fill final drive with recommended gear oil.

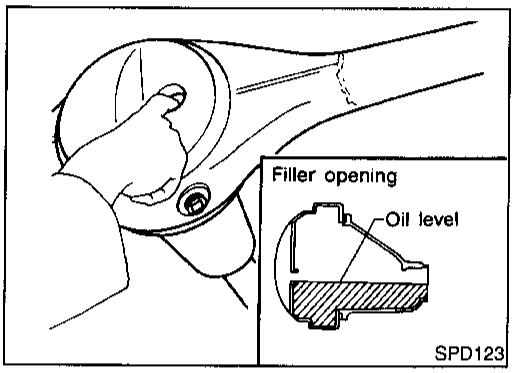

Disassembly

NBPD0018

PRE-INSPECTION

NBPD0018S01

Before disassembling final drive, perform the following inspection.

- Total preload

a) Turn drive pinion in both directions several times to set bearing rollers.

b) Check total preload with Tool.

Tool number: ST3127S000 (J25765-A)
Total preload:
1.4 - 1.7 N·m (14 - 17 kg-cm, 12 - 15 in-lb)

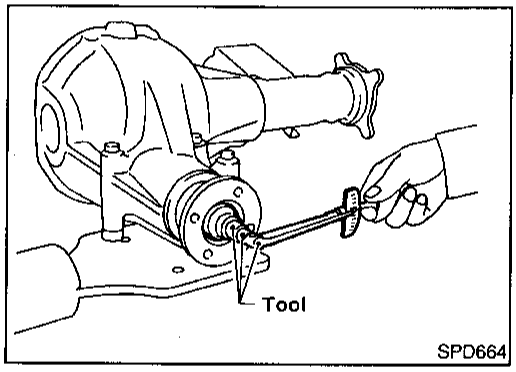

- Ring gear to drive pinion backlash
  Check backlash of ring gear with a dial indicator at several points.

Ring gear-to-drive pinion backlash:
0.10 - 0.15 mm (0.0039 - 0.0059 in)

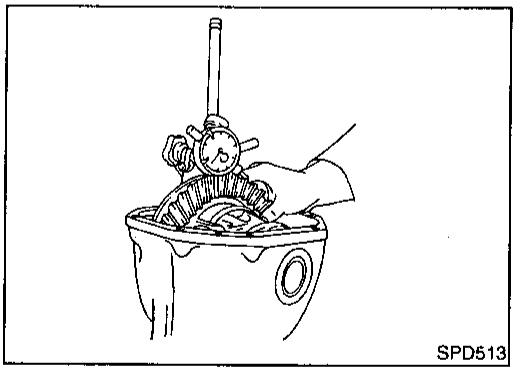

- Ring gear runout
  Check runout of ring gear with a dial indicator.

Runout limit:
0.05 mm (0.0020 in)

- Tooth contact
  Check tooth contact. Refer to "TOOTH CONTACT", PD-24.

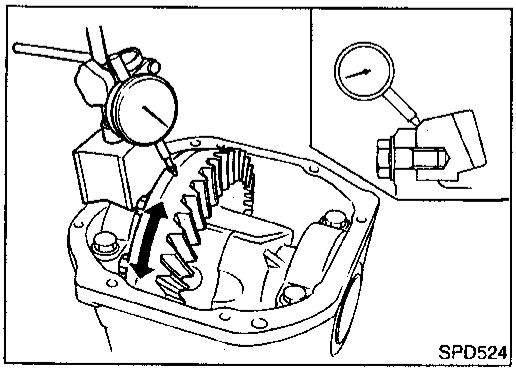

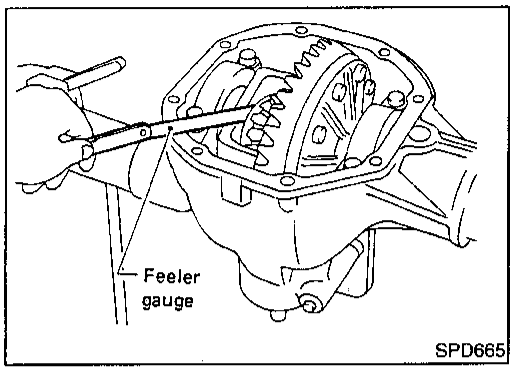

- Side gear to pinion mate gear backlash
  Using a feeler gauge, measure clearance between side gear thrust washer and differential case.
  Clearance between side gear thrust washer and differential case:
  Less than 0.15 mm (0.0059 in)

FINAL DRIVE HOUSING

NBPD0016S02

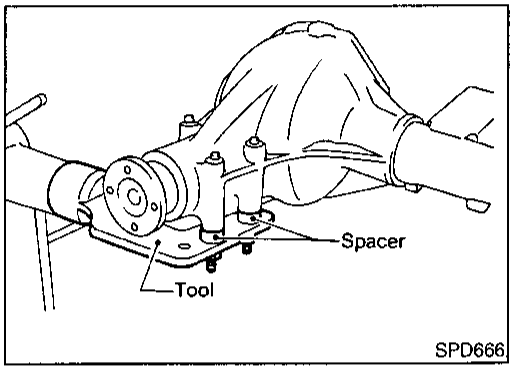

1. Using three spacers [20 mm (0.79 in)], mount final drive assembly on Tool.
   Tool number:
   KV38100800 (J34310, J25604-01)

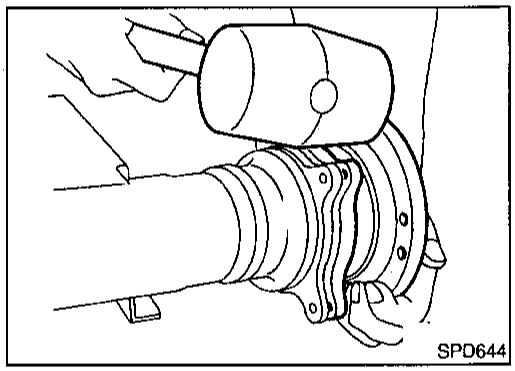

2. Remove differential side shaft assembly.

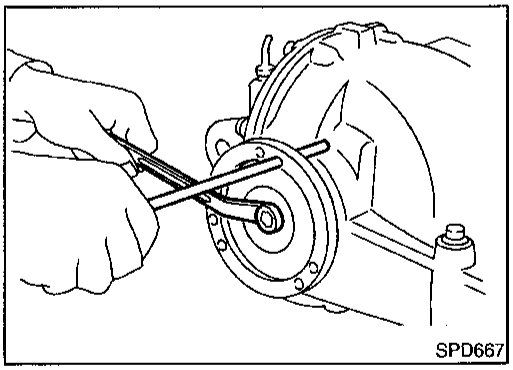

3. Remove differential side flange.

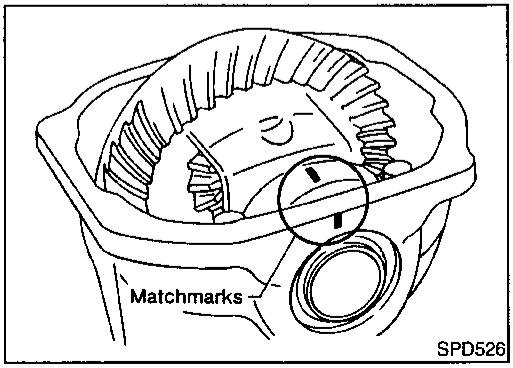

4. Put matchmarks on one side of side bearing cap with paint or punch to ensure that it is replaced in proper position during reassembly.

Bearing caps are line-bored during manufacture and should be put back in their original places.

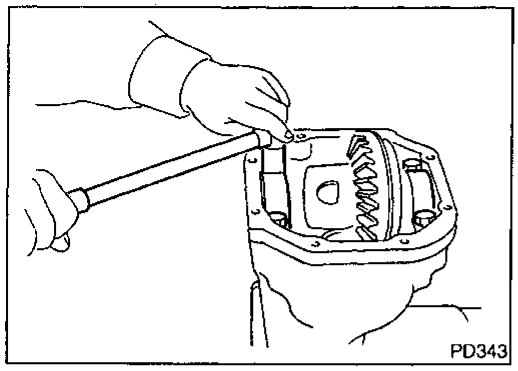

5. Remove side bearing caps.

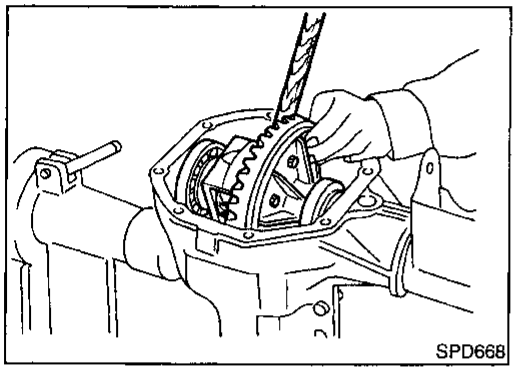

6. Remove differential case assembly with a pry bar.

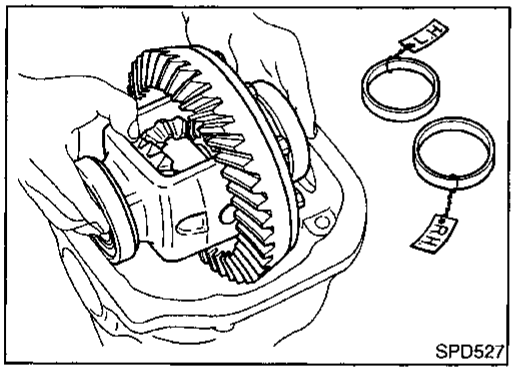

Be careful to keep the side bearing outer races together with their respective inner cones — do not mix them up.

CAUTION:
Side bearing spacer is placed on either the left or right depending upon final drive gear ratio. It should be labeled so that it may be replaced correctly.

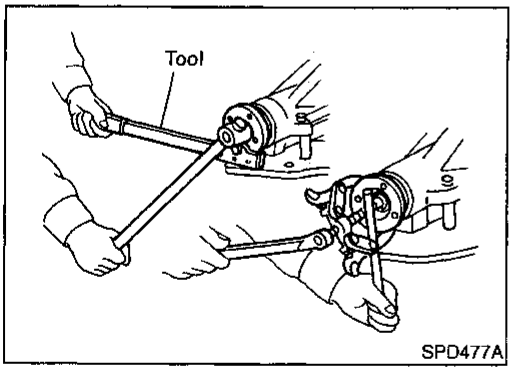

7. Loosen drive pinion nut.
   Tool number: KV38108300 (—)
8. Remove companion flange with puller.

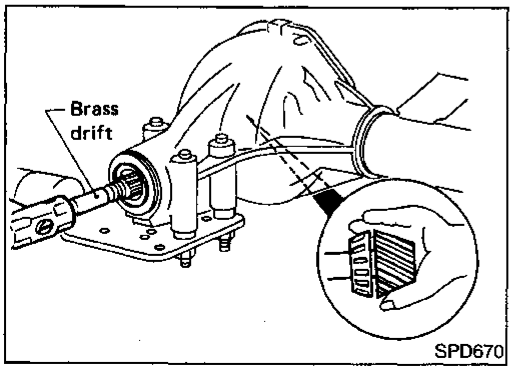

9. Take out drive pinion together with rear bearing inner cone, drive pinion bearing spacer and pinion bearing adjusting washer.
10. Remove front oil seal and pinion front bearing inner cone.

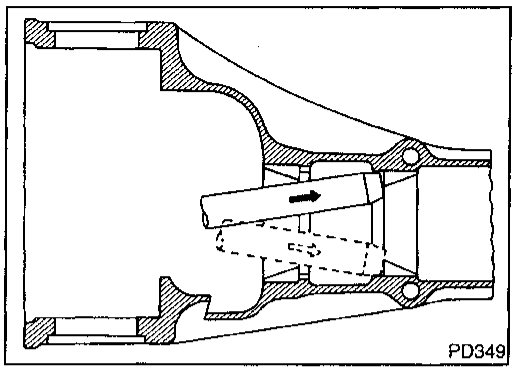

11. Remove pinion bearing outer races with a brass drift.

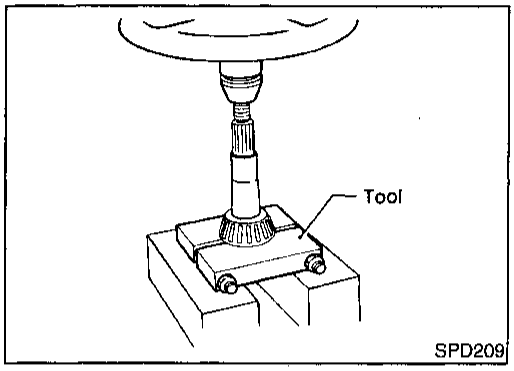

12. Remove pinion rear bearing inner cone and drive pinion height adjusting washer.
    Tool number: ST30031000 (J22912-01)

DIFFERENTIAL CASE

NBPD0018S03

1. Remove side bearing inner cones.

To prevent damage to bearing, engage puller jaws in grooves.

Tool number:
A ST33051001 (J22888-20)
B ST33061000 (J8107-2)

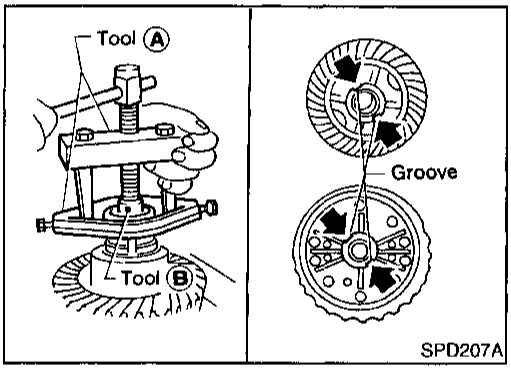

Be careful not to confuse the right and left hand parts.
Keep bearing and bearing race for each side together.

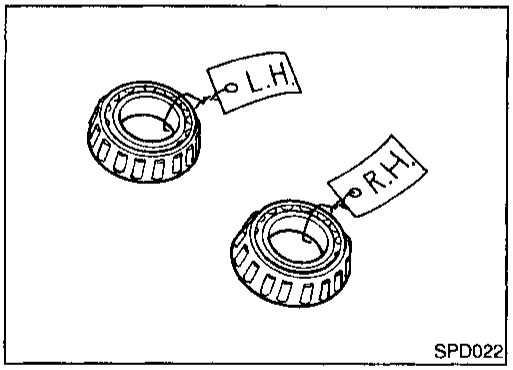

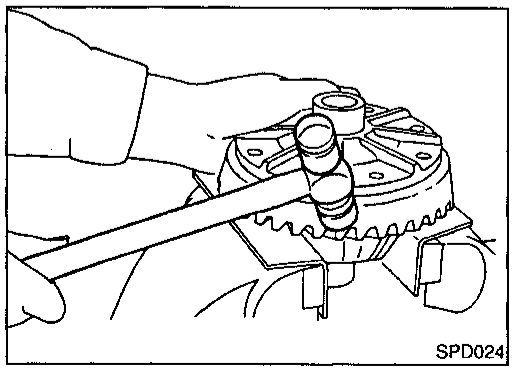

2. Loosen ring gear bolts in a criss-cross pattern.
3. Tap ring gear off the differential case with a soft hammer.

Tap evenly all around to keep ring gear from binding.

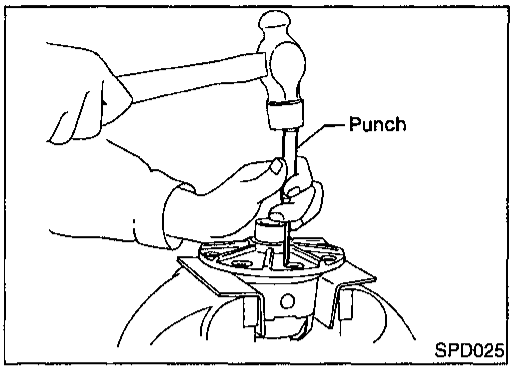

4. Punch off pinion mate shaft lock pin from ring gear side.

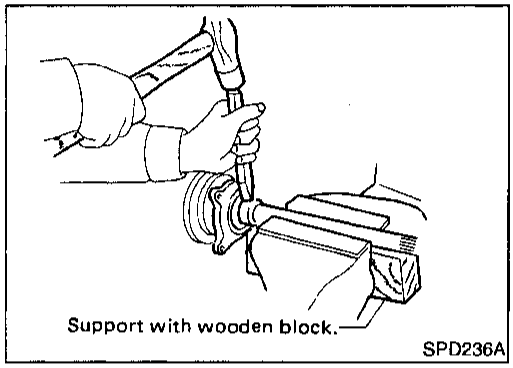

DIFFERENTIAL SIDE SHAFT

NBPD0018S04

1. Cut collar with cold chisel. Be careful not to damage differential side shaft.

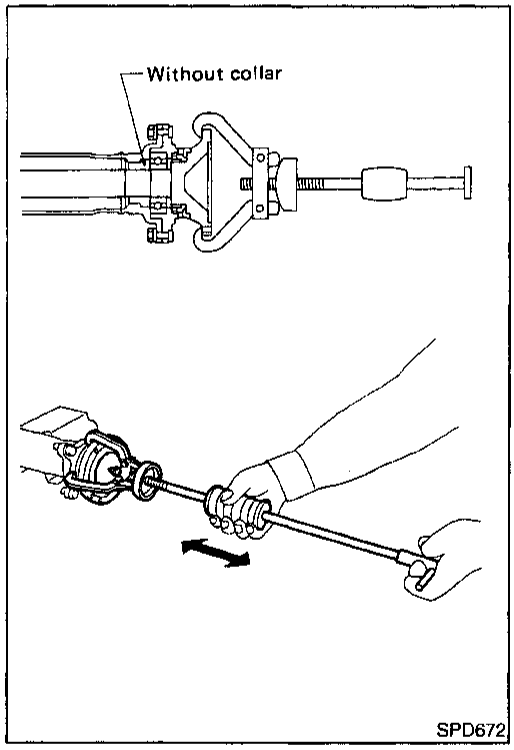

2. Reinstall differential side shaft into extension tube and secure with bolts. Remove rear axle bearing by drawing out differential side shaft from rear axle bearing with puller.

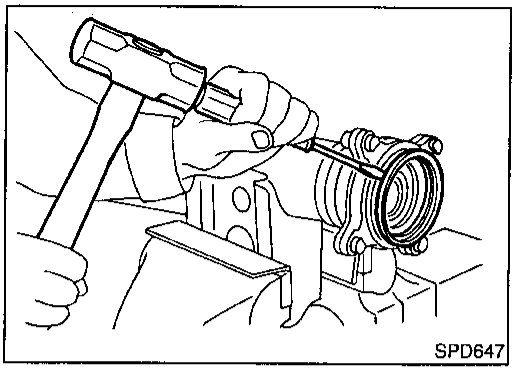
SPD647

3. Remove grease seal and oil seal.

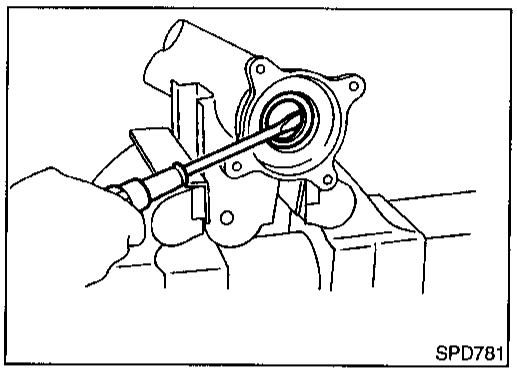
SPD781

Inspection

NBPD0019

RING GEAR AND DRIVE PINION

NBPD0019S01

Check gear teeth for scoring, cracking or chipping.
If any damaged part is evident, replace ring gear and drive pinion as a set (hypoid gear set).

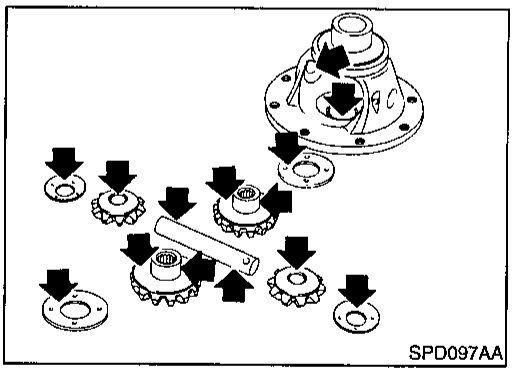
SPD097AA

DIFFERENTIAL CASE ASSEMBLY

NBPD0019S02

Check mating surfaces of differential case, side gears, pinion mate gears, pinion mate shaft and thrust washers.

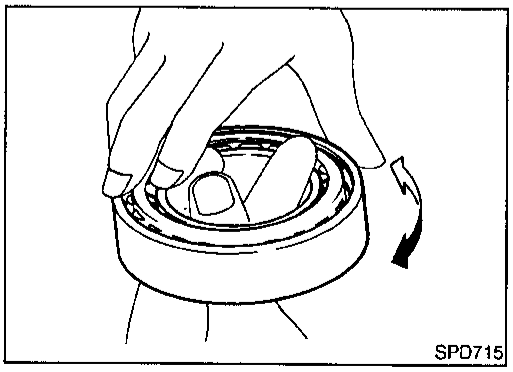
SPD715

BEARING

NBPD0019S03

1. Thoroughly clean bearing.
2. Check bearing for wear, scratches, pitting or flaking.
   Check tapered roller bearing for smooth rotation. If damaged, replace outer race and inner cone as a set.

Adjustment

NBPD0020

For quiet and reliable final drive operation, the following five adjustments must be made correctly:

1. Side bearing preload
2. Pinion gear height
3. Pinion bearing preload
4. Ring gear-to-pinion backlash. Refer to SDS, PD-57.
5. Ring and pinion gear tooth contact pattern

SIDE BEARING PRELOAD

NBPD0020S01

A selection of carrier side bearing adjusting washer is required for successful completion of this procedure.

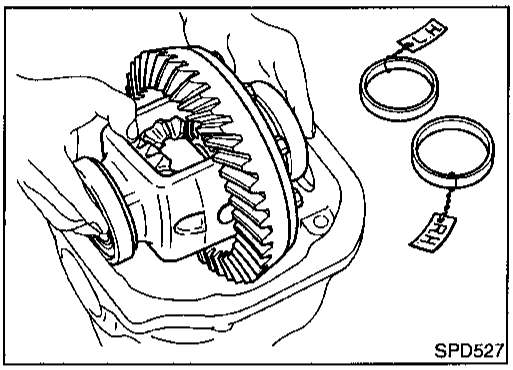

SPD527

1. Make sure all parts are clean and that the bearings are well lubricated with light oil or "DEXRON™" type automatic transmission fluid.
2. Place the differential carrier, with side bearings and bearing races installed, into the final drive housing.

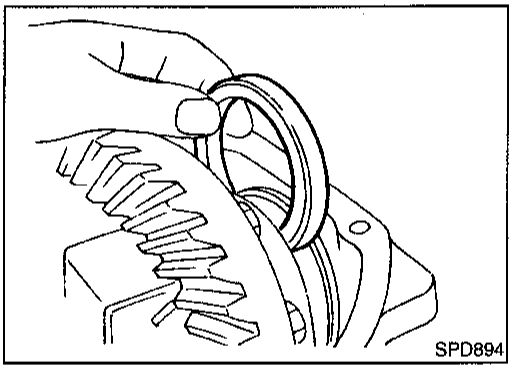
SPD894

3. Put the side bearing spacer in place.

CAUTION:
Side bearing spacer is placed on either the right or left depending upon final drive gear ratio. Be sure to replace it on the correct side.

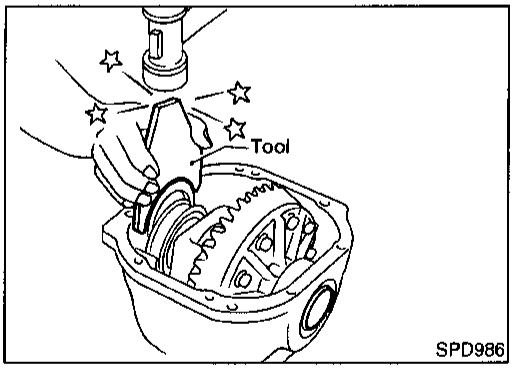

SPD986

4. Using Tool, install original carrier side bearing preload shims on the carrier end, opposite the ring gear.
   Tool number: KV38100600 (J25267)

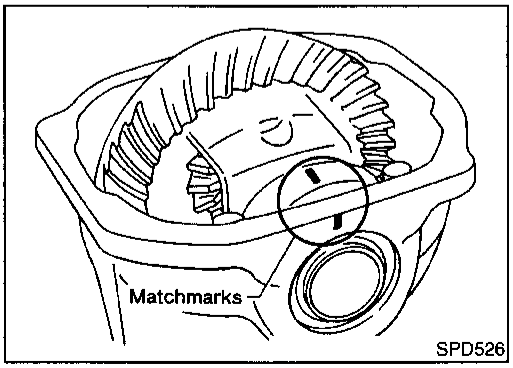

SPD526

5. Install the side bearing caps in their correct locations and torque the bearing cap retaining bolts.
   Specification:
   88 - 98 N·m (9 - 10 kg-m, 65 - 72 ft-lb)
6. Turn the carrier several times to seat the bearings.

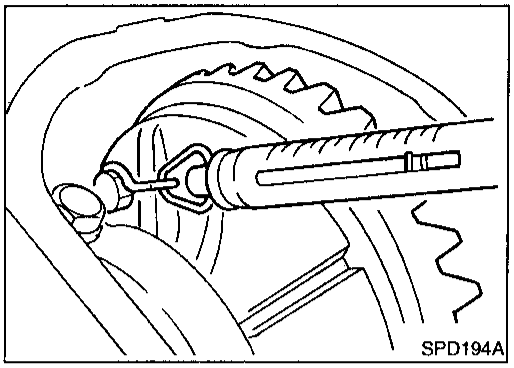
SPD194A

7. Measure the turning torque of the carrier at the ring gear retaining bolts with a spring gauge, J8129.
   Specification:
   34.3 - 39.2 N (3.5 - 4.0 kg, 7.7 - 8.8 lb) of pulling force at the ring gear bolt

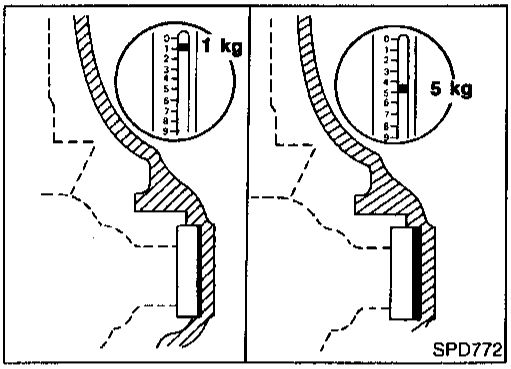

SPD772

8. If the carrier turning torque is not within the specification range, increase or decrease the total thickness of the side bearing adjusting washers until the turning torque is correct. If the turning torque is less than the specified range, install washers of greater thickness; if the turning torque is greater than the specification, install thinner washers. See the SDS section for washer dimensions and part numbers.
9. Record the total amount of washer thickness required for the correct carrier side bearing preload.

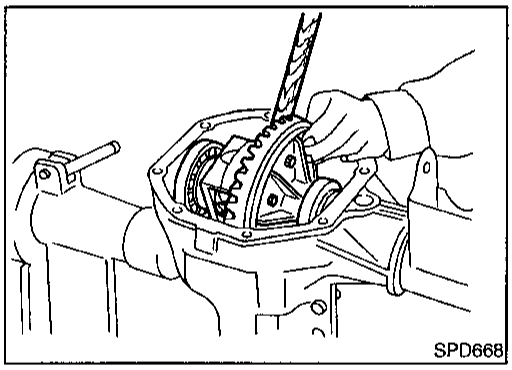
SPD668

10. Remove the carrier from the final drive housing, saving the selected preload washers for later use during the assembly of the final drive unit.

PINION GEAR HEIGHT AND PINION BEARING PRELOAD

NBPD0020S02

1. Make sure all parts are clean and that the bearings are well lubricated.
2. Assemble the pinion gear bearings into the pinion pre-load shim selector Tool, J34309.

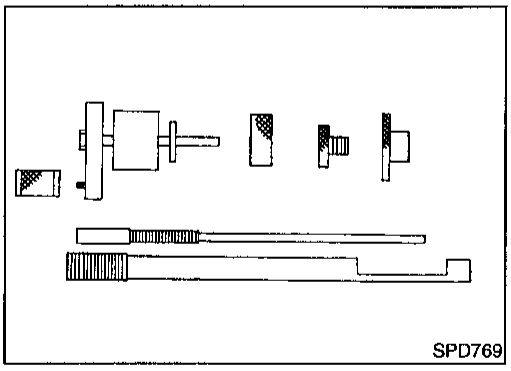
SPD769

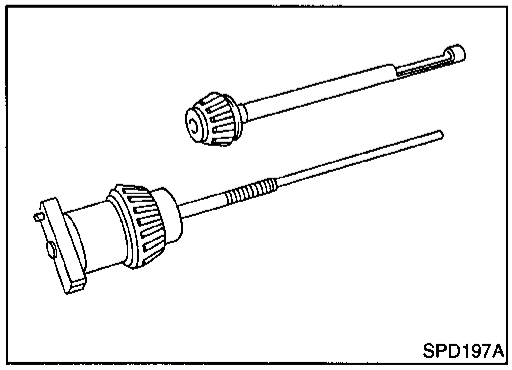
SPD197A

- **Front Pinion Bearing** — make sure the J34309-3 front pinion bearing seat is secured tightly against the J34309-2 gauge anvil. Then turn the front pinion bearing pilot, J34309-5, to secure the bearing in its proper position.
- **Rear Pinion Bearing** — the rear pinion bearing pilot, J34309-15, is used to center the rear pinion bearing only. The rear pinion bearing locking seat, J34309-4, is used to lock the bearing to the assembly.

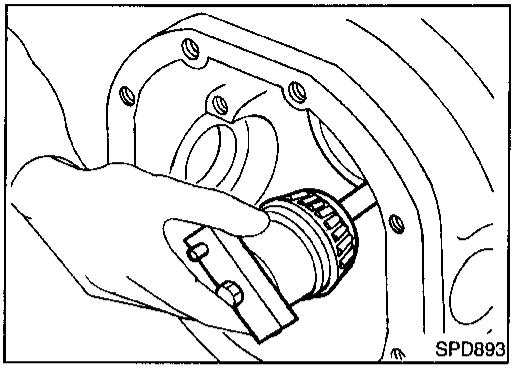

3. Place the pinion preload shim selector Tool, J34309-1, gauge screw assembly with the pinion rear bearing inner cone installed into the final drive housing.

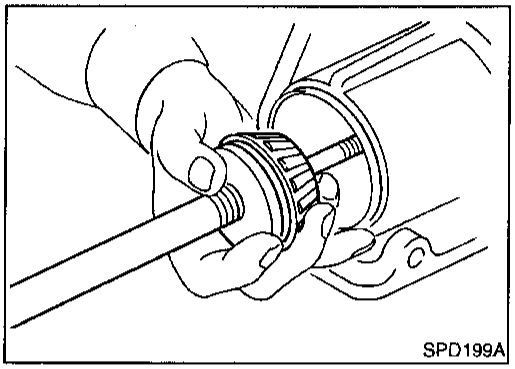

4. Assemble the front pinion bearing inner cone and the J34309-2 gauge anvil together with the J34309-1 gauge screw in the final drive housing. Make sure that the pinion height gauge plate, J34309-16, will turn a full 360 degrees, and tighten the two sections together by hand.

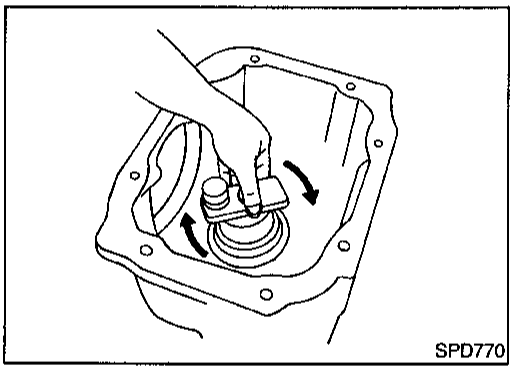

5. Turn the assembly several times to seat the bearings.

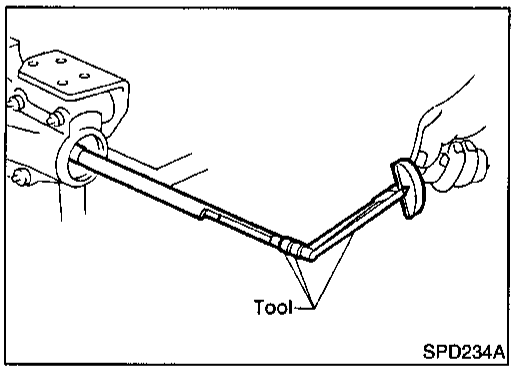

6. Measure the turning torque at the end of the J34309-2 gauge anvil using torque wrench J25765A.

   Turning torque specification:

   1.0 - 1.3 N·m (10 - 13 kg-cm, 8.7 - 11.3 in-lb)

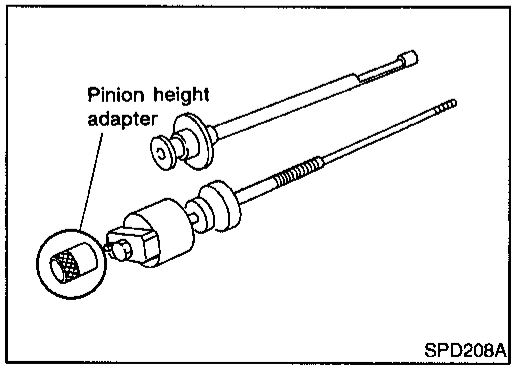

7. Place the J34309-1 "R200A" pinion height adapter onto the gauge plate and tighten it by hand.

CAUTION:
Make sure all machined surfaces are clean.

Adjustment (Cont'd)

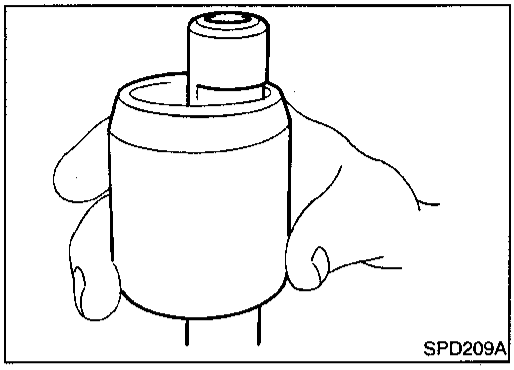
SPD209A

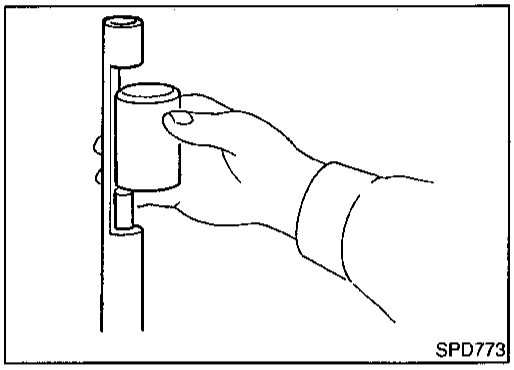
SPD773

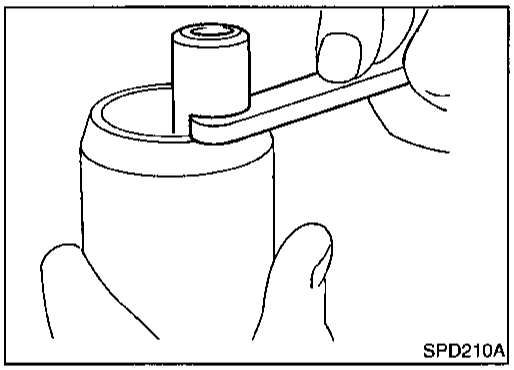
SPD210A

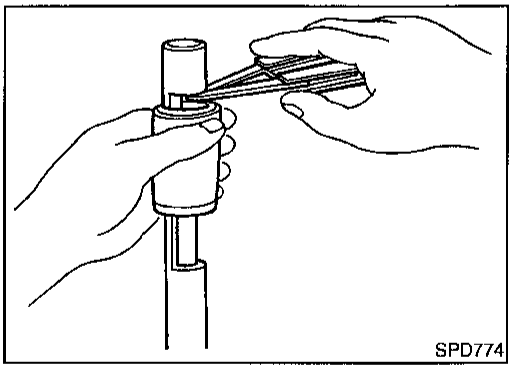
SPD774

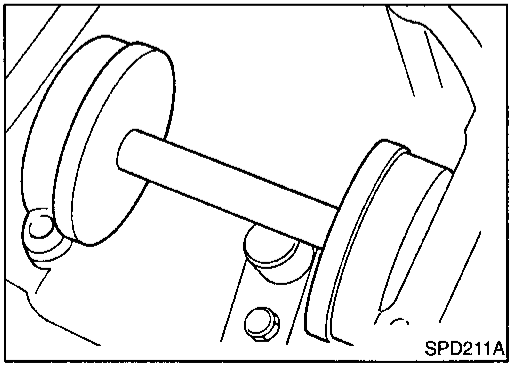
SPD211A

PINION BEARING PRELOAD WASHER SELECTION

8. Place the solid pinion bearing spacer, small end first, over the J34309-2 gauge anvil and seat the small end squarely against the tip of the J34309-1 gauge screw in the tool recessed portion.

9. Select the correct thickness of pinion bearing preload adjusting washer using a standard gauge of 3.5 mm (0.138 in) and your J34309-101 feeler gauge. The exact measure you get with your gauges is the thickness of the adjusting washer required. Select the correct washer.

   Drive pinion bearing preload adjusting washer:

   Refer to SDS, PD-58.

10. Set your selected, correct pinion bearing preload adjusting washer aside for use when assembling the pinion gear and bearings into the final drive.

PINION HEIGHT ADJUSTING WASHER SELECTION

11. Now, position the side bearing discs, J25269-4, and arbor firmly into the side bearing bores.

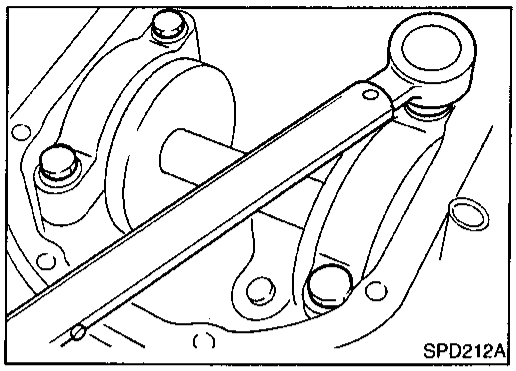

12. Install the side bearing caps and tighten the cap bolts.
    Specification:
    88 - 98 N·m (9 - 10 kg-m, 65 - 72 ft-lb)

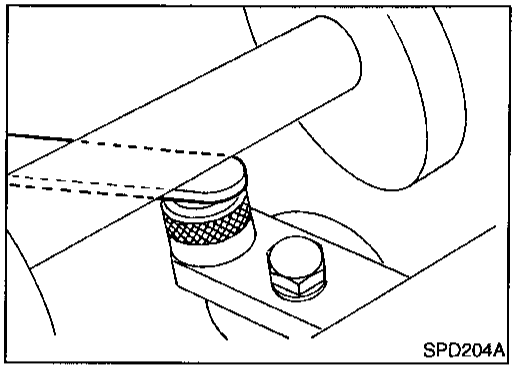

13. Select the correct standard pinion height adjusting washer thickness by using a standard gauge of 3.0 mm (0.118 in) and your J34309-101 feeler gauge. Measure the gap between the J34309-11 "R200A" pinion height adapter and the arbor.

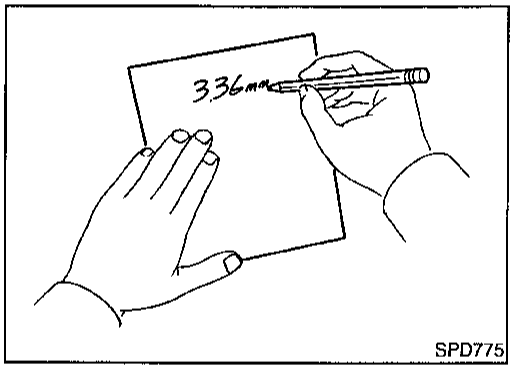

14. Write down your exact total measurement.

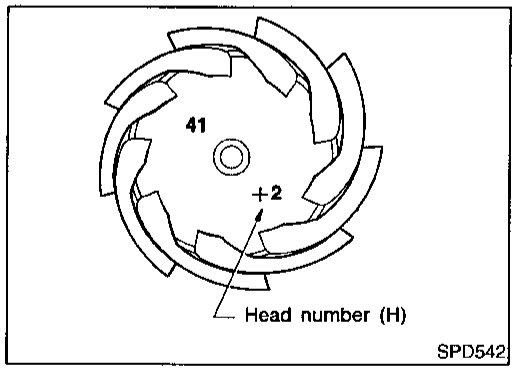

15. Correct the pinion height washer size by referring to the "pinion head number".

There are two numbers painted on the pinion gear. The first one refers to the pinion and ring gear as a matched set and should be the same as the number on the ring gear. The second number is the "pinion head height number", and it refers to the ideal pinion height from standard for quietest operation. Use the following chart to determine the correct pinion height washer. Refer to SDS, PD-58.

Pinion Head Height Number	Add or Remove from the Standard Pinion Height Washer Thickness Measurement
–6	Add 0.06 mm (0.0024 in)
–5	Add 0.05 mm (0.0020 in)
–4	Add 0.04 mm (0.0016 in)
–3	Add 0.03 mm (0.0012 in)
–2	Add 0.02 mm (0.0008 in)
–1	Add 0.01 mm (0.0004 in)
0	Use the selected washer thickness
+1	Subtract 0.01 mm (0.0004 in)
+2	Subtract 0.02 mm (0.0008 in)
+3	Subtract 0.03 mm (0.0012 in)
+4	Subtract 0.04 mm (0.0016 in)
+5	Subtract 0.05 mm (0.0020 in)
+6	Subtract 0.06 mm (0.0024 in)

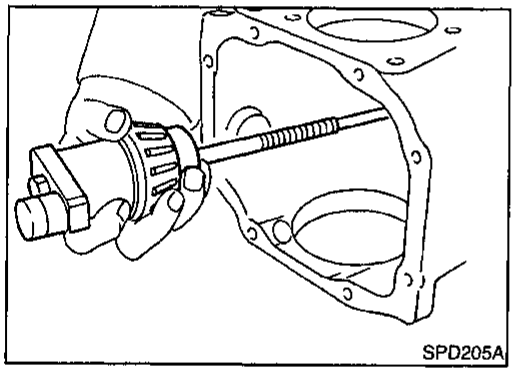
SPD205A

16. Remove the J34309 pinion preload shim selector tool from the final drive housing and disassemble to retrieve the pinion bearings.

TOOTH CONTACT

NBPD0020S03

Gear tooth contact pattern check is necessary to verify correct relationship between ring gear and drive pinion.
Hypoid gear sets which are not positioned properly in relation to one another may be noisy, or have short life, or both. With a pattern check, the most desirable contact for low noise level and long life can be assured.

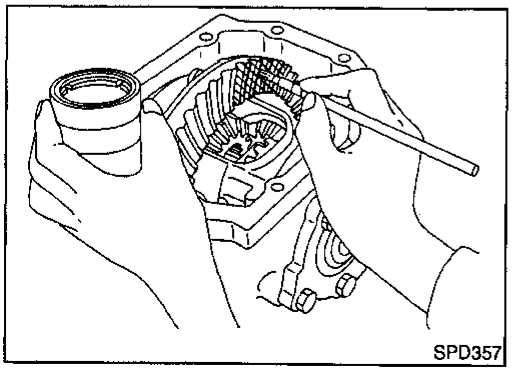
SPD357

1. Thoroughly clean ring gear and drive pinion teeth.
2. Sparingly apply a mixture of powdered ferric oxide and oil or equivalent to 3 or 4 teeth of ring gear drive side.

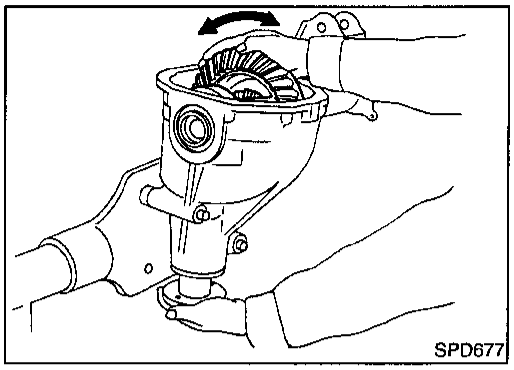

3. Hold companion flange steady by hand and rotate the ring gear in both directions.

Usually the pattern will be correct if shims are correctly calculated and the backlash is correct. However, in rare cases, trial and error processes may be employed to obtain a correct pattern. The tooth pattern is the best indication of how well a differential has been set up.

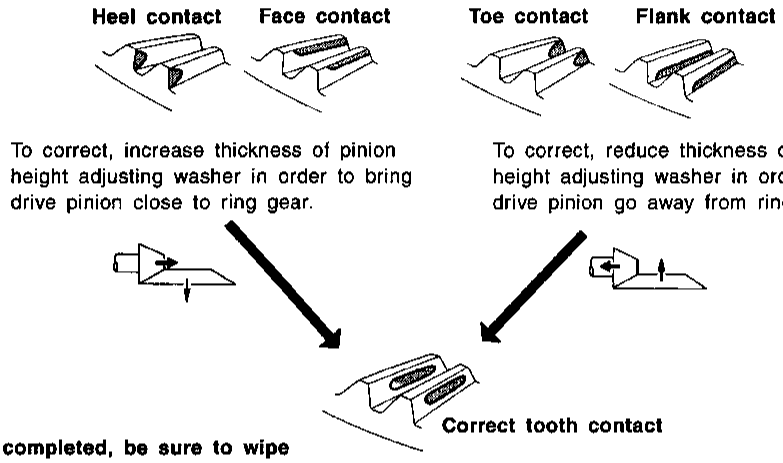

When adjustment is completed, be sure to wipe off completely the ferric oxide and oil or their equivalent.

SPD007-B

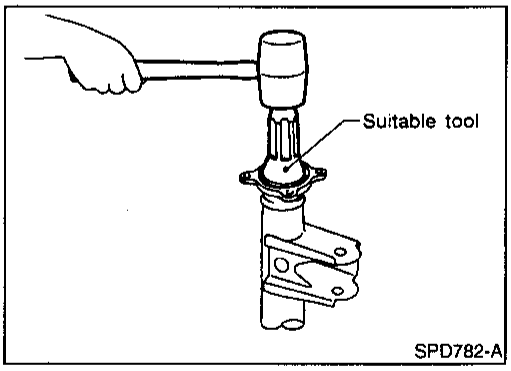

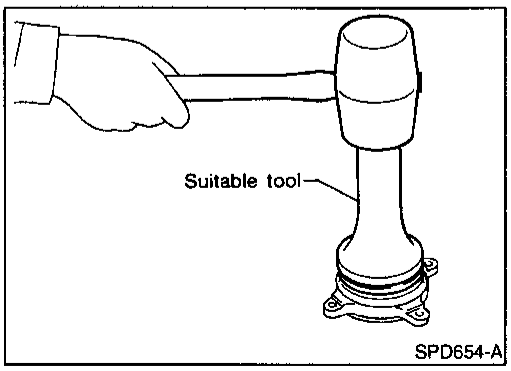

Assembly

NBPD0021

DIFFERENTIAL SIDE SHAFT

NBPD0021S01

1. Install oil seal and grease seal.

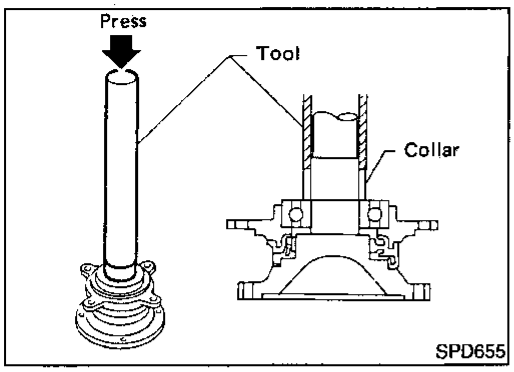

2. Install extension tube retainer, rear axle bearing and rear axle shaft bearing collar on differential side shaft.

DIFFERENTIAL CASE

NBPD0021S02

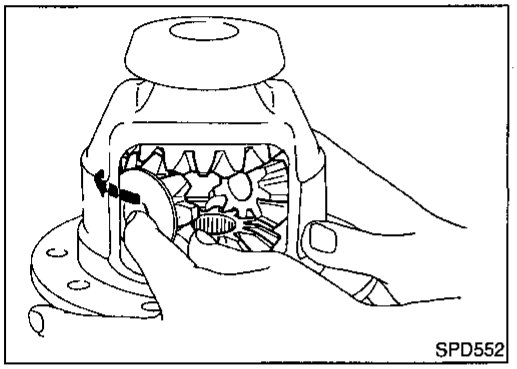

1. Install side gears, pinion mate gears and thrust washers into differential case.

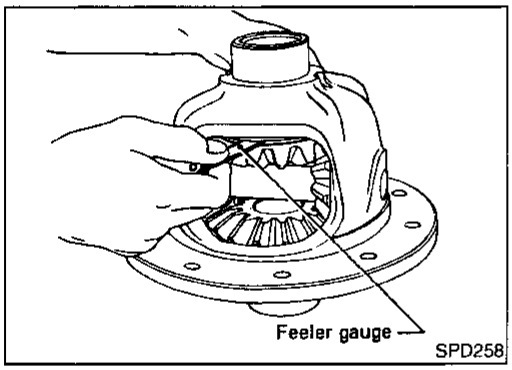

2. Fit pinion mate shaft to differential case so that it meets lock pin holes.
3. Adjust backlash between side gear and pinion mate gear by selecting side gear thrust washer.
   Refer to SDS, PD-57.

   Backlash between side gear and pinion mate gear (Clearance between side gear thrust washer and differential case):

   Less than 0.15 mm (0.0059 in)

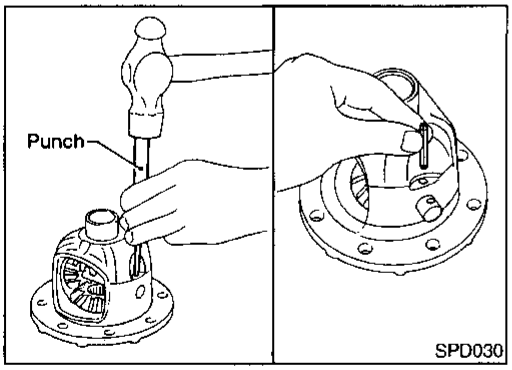

4. Install pinion mate shaft lock pin with a punch.

Make sure lock pin is flush with case.

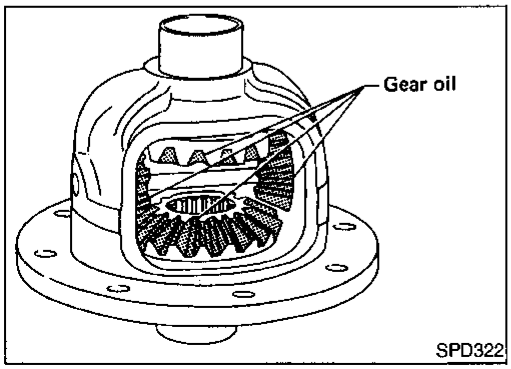

5. Apply gear oil to gear tooth surfaces and thrust surfaces and check to see they turn properly.

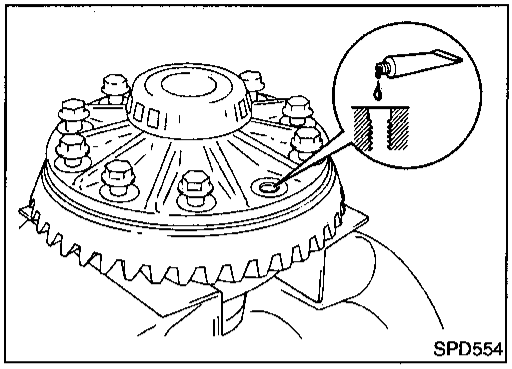

6. Install differential case assembly on ring gear.
7. Apply locking agent [Locktite (stud lock) or equivalent] to ring gear bolts, and install them.

Tighten bolts in a criss-cross pattern, lightly tapping bolt head with a hammer.

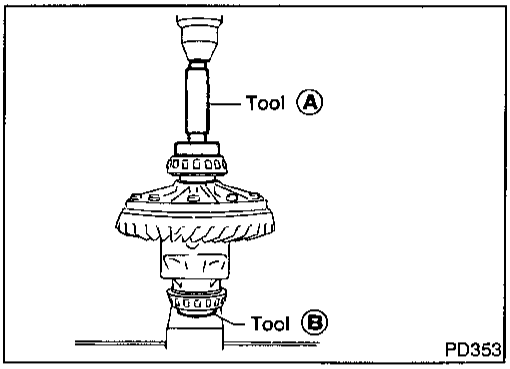

8. Press-fit side bearing inner cones on differential case with Tool.

Tool number:
A KV38100300 (J25523)
B ST33061000 (J8107-2)

FINAL DRIVE HOUSING

NBPD0021S03

1. Press-fit front and rear bearing outer races with Tools.

Tool number:
A ST30611000 (J25742-1)
B ST30621000 (J25742-5)
C ST30613000 (J25742-3)

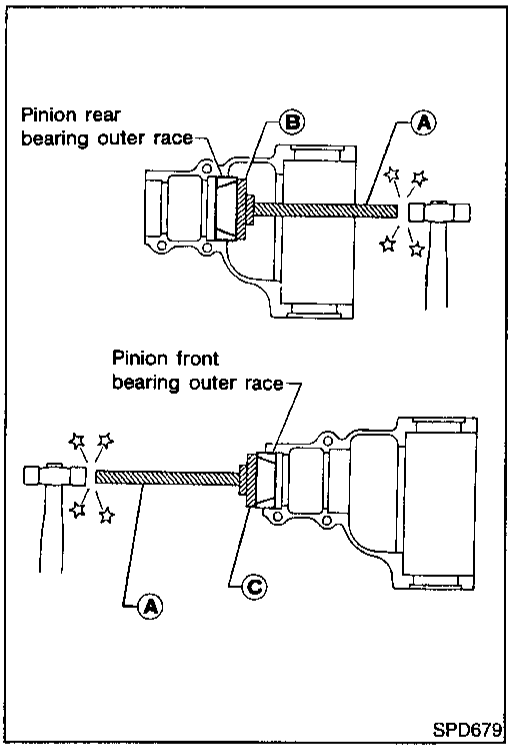

2. Select drive pinion height adjusting washer and pinion bearing adjusting washer. Refer to "PINION GEAR HEIGHT AND PINION BEARING PRELOAD", PD-20.
3. Install drive pinion height adjusting washer in drive pinion, and press-fit pinion rear bearing inner cone in it, using press and Tool.

Tool number:
ST30901000 (J26010-01)

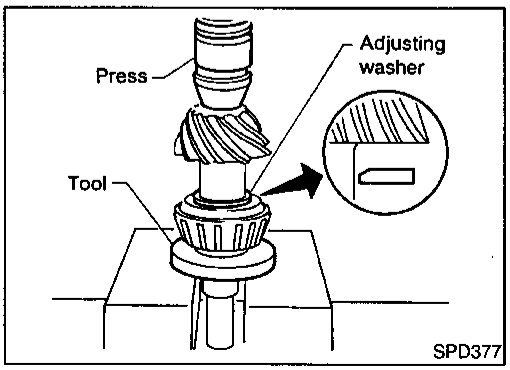

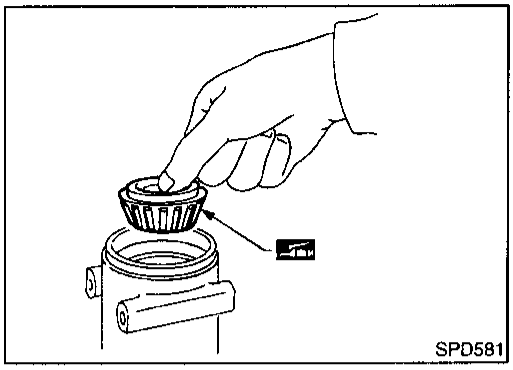

4. Place pinion front bearing inner cone in final drive housing.

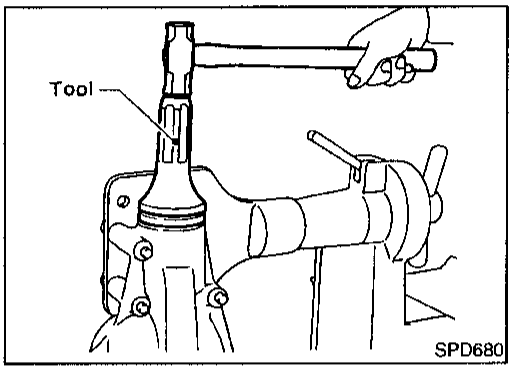

5. Apply multi-purpose grease to cavity at sealing lips of oil seal. Install front oil seal.

   Tool number:
   KV38100500 (J25273)

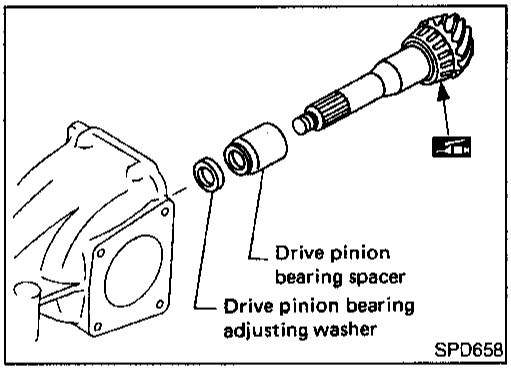

6. Place drive pinion bearing spacer, drive pinion bearing adjusting washer and drive pinion in final drive housing.

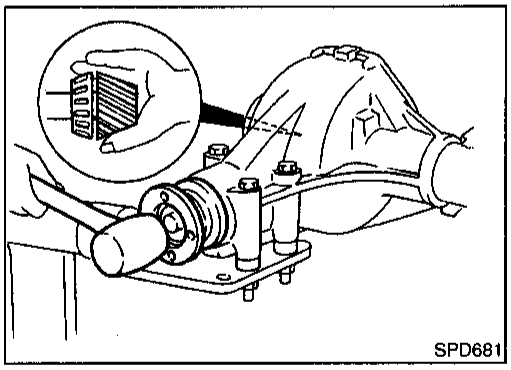

7. Insert companion flange into drive pinion by tapping the companion flange with a soft hammer.

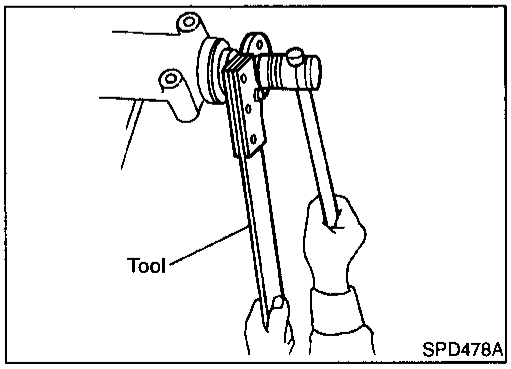

8. Tighten pinion nut to the specified torque.

The threaded portion of drive pinion and pinion nut should be free from oil or grease.

Tool number: KV38108300 (—)

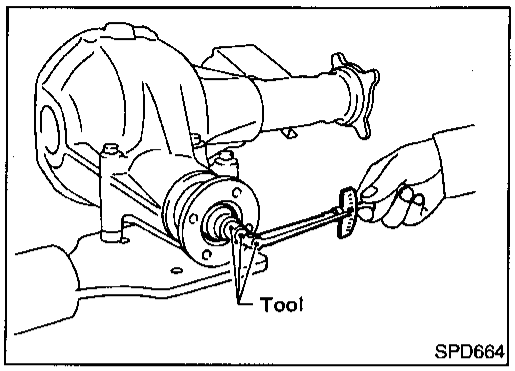

9. Turn drive pinion in both directions several revolutions, and measure pinion bearing preload.
   Tool number: ST3127S000 (J25765-A)
   Pinion bearing preload:
   1.1 - 1.4 N·m (11 - 14 kg-cm, 9.5 - 12.2 in-lb)

When pinion bearing preload is outside the specifications, replace pinion bearing adjusting washer and spacer with a different thickness.

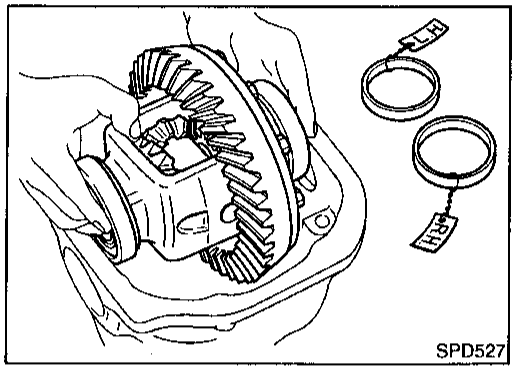

10. Select side bearing adjusting washer.
    Refer to "SIDE BEARING PRELOAD", PD-19.
11. Install differential case assembly with side bearing outer races into final drive housing.

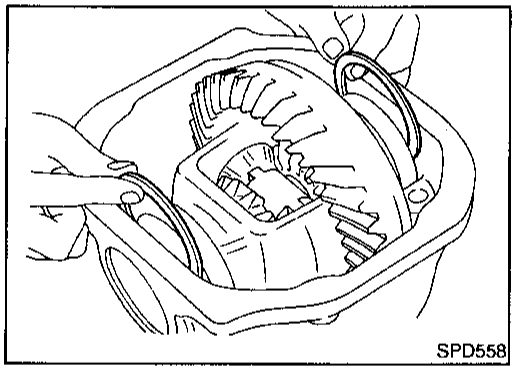

12. Insert left and right side bearing adjusting washers in place between side bearings and final drive housing.

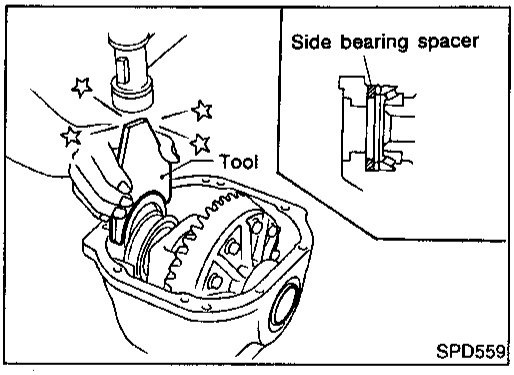

13. Drive in side bearing spacer with Tool.
    Tool number: KV38100600 (J25267)

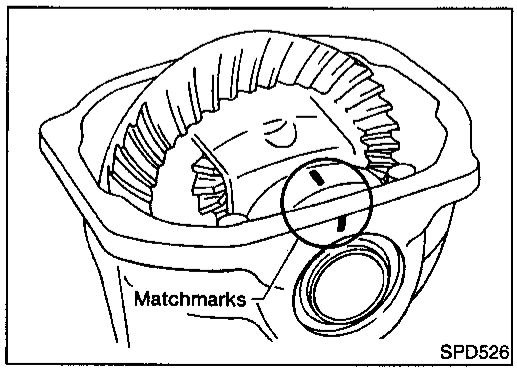

14. Align mark on bearing cap with that on final drive housing and install bearing cap on final drive housing.

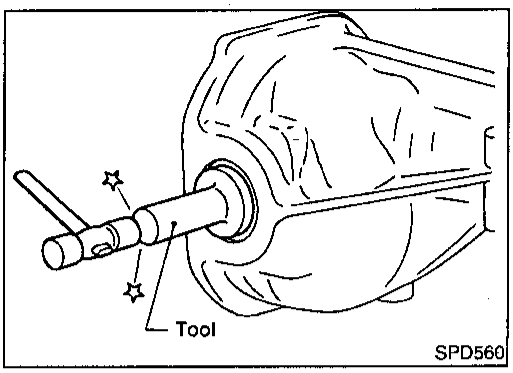

15. Apply multi-purpose grease to cavity at sealing lips of oil seal. Install side oil seal.
    Tool number: KV38100200 (J26233)

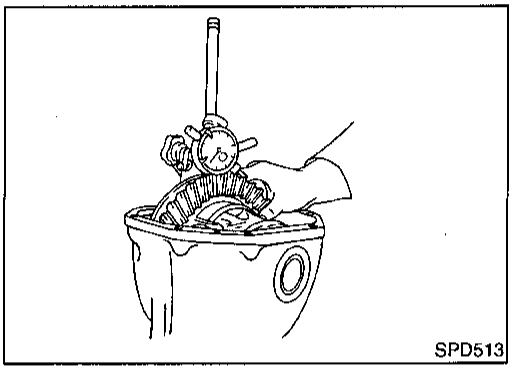

16. Measure ring gear to drive pinion backlash with a dial indicator.
    Ring gear-to-drive pinion backlash:
    0.10 - 0.15 mm (0.0039 - 0.0059 in)

- If backlash is too small, decrease thickness of right shim and increase thickness of left shim by the same amount.
  If backlash is too great, reverse the above procedure.

Never change the total amount of shims as it will change the bearing preload.

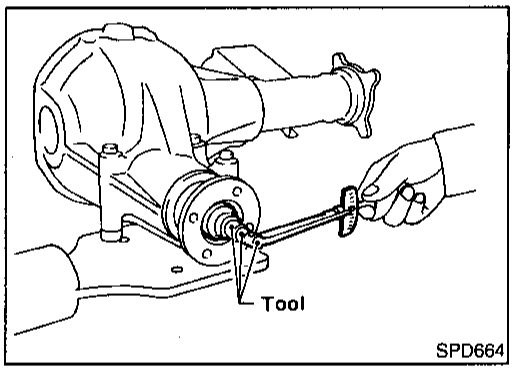

17. Check total preload with Tool.
    When checking preload, turn drive pinion in both directions several times to set bearing rollers.
    Tool number: ST3127S000 (J25765-A)
    Total preload:
    1.4 - 1.7 N·m (14 - 17 kg-cm, 12 - 15 in-lb)

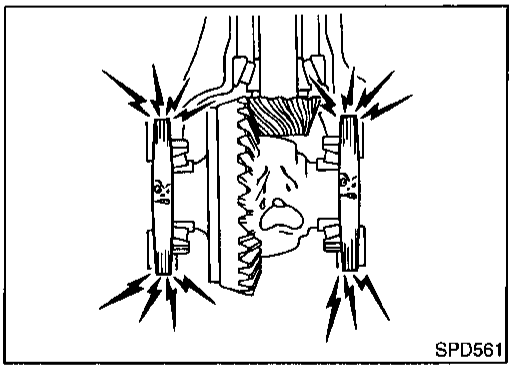

- If preload is too great, remove the same amount of shim from each side.
- If preload is too small, add the same amount of shim to each side.

Never add or remove a different number of shims for each side as it will change ring gear to drive pinion backlash.

18. Recheck ring gear to drive pinion backlash because increase or decrease in thickness of shims will cause change of ring gear-to-pinion backlash.

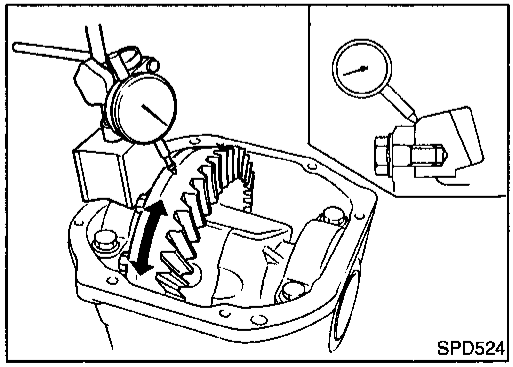

19. Check runout of ring gear with a dial indicator.
    Runout limit:
    0.05 mm (0.0020 in)

- If backlash varies excessively in different places, the variance may have resulted from foreign matter caught between the ring gear and the differential case.
- If the backlash varies greatly when the runout of the ring gear is within a specified range, the hypoid gear set or differential case should be replaced.

20. Check tooth contact. Refer to "TOOTH CONTACT", PD-24.
21. Install rear cover and gasket.

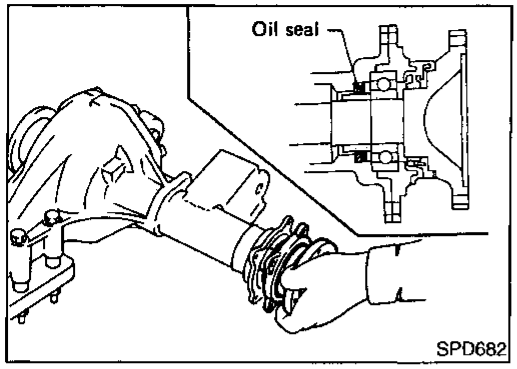

22. Install differential side shaft assembly.

Preparation

SPECIAL SERVICE TOOLS

NBPD0029

The actual shapes of Kent-Moore tools may differ from those of special service tools illustrated here.

Tool number (Kent-Moore No.) Tool name	Description
ST3127S000 (See J25765-A) Preload gauge 1 GG91030000 (J25765) Torque wrench 2 HT62940000 (—) Socket adapter 3 HT62900000 (—) Socket adapter	Measuring pinion bearing preload and total preload 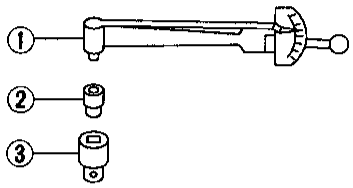 NT124
ST06340000 (J24310, J34310) Differential attachment	Mounting final drive 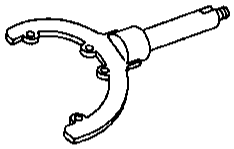 NT140
ST32580000 (J34312) Differential side bearing adjusting nut wrench	Adjusting side bearing preload and backlash (ring gear-drive pinion) 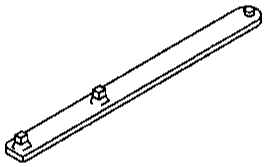 NT141
KV38108300 (—) Companion flange wrench	Removing and installing propeller shaft lock nut, and drive pinion lock nut 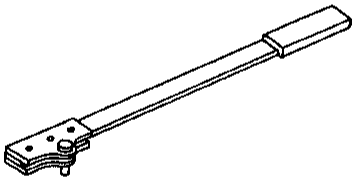 NT771
ST3090S000 (—) Drive pinion rear inner race puller set 1 ST30031000 (J22912-01) Puller 2 ST30901000 (J26010-01) Base	Removing and installing drive pinion rear inner cone **a: 79 mm (3.11 in) dia.** **b: 45 mm (1.77 in) dia.** **c: 35 mm (1.38 in) dia.** 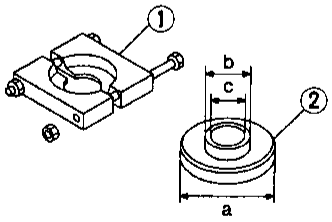 NT527
ST3306S001 Differential side bearing puller set 1 ST33051001 (J22888-20) Body 2 ST33061000 (J8107-2) Adapter	Removing and installing differential side bearing inner cone **a: 28.5 mm (1.122 in) dia.** **b: 38 mm (1.50 in) dia.** 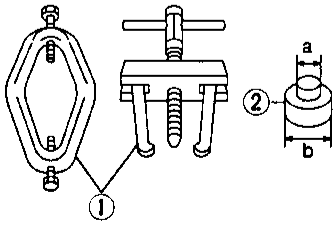 NT072

Tool number (Kent-Moore No.) Tool name	Description	
ST33190000 (J25523) Differential side bearing drift	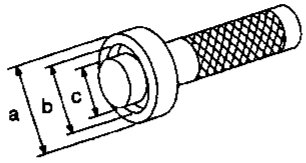 NT085	Installing side bearing inner cone **a: 52 mm (2.05 in) dia.** **b: 45.5 mm (1.791 in) dia.** **c: 34 mm (1.34 in) dia.**
ST33081000 (—) Side bearing puller adapter	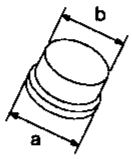 NT431	Installing side bearing inner cone **a: 43 mm (1.69 in) dia.** **b: 33.5 mm (1.319 in) dia.**
ST30611000 (J25742-1) Drift	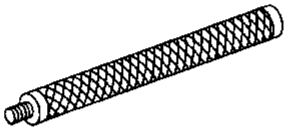 NT090	Installing pinion rear bearing outer race (Use with ST30621000 or ST30613000)
ST30621000 (J25742-5) Drift	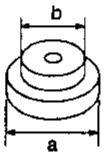 NT073	Installing pinion rear bearing outer race **a: 79 mm (3.11 in) dia.** **b: 59 mm (2.32 in) dia.**
ST30613000 (J25742-3) Drift	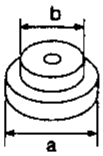 NT073	Installing pinion front bearing outer race (Use with ST30611000) **a: 72 mm (2.83 in) dia.** **b: 48 mm (1.89 in) dia.**
KV381025S0 (—) Oil seal fitting tool 1 ST30720000 (J25405) Drift bar 2 KV38102510 (—) Drift	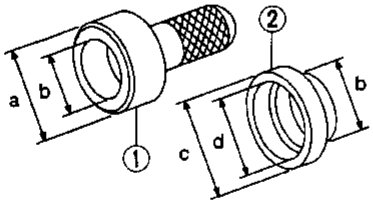 NT525	Installing front oil seal **a: 77 mm (3.03 in) dia.** **b: 55 mm (2.17 in) dia.** **c: 71 mm (2.80 in) dia.** **d: 65 mm (2.56 in) dia.**
(J34309) Differential shim selector	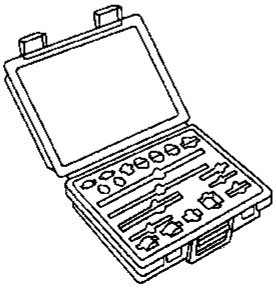 NT134	Adjusting bearing pre-load and gear height

Preparation (Cont'd)

Tool number (Kent-Moore No.) Tool name	Description	
(J25269-18) Side bearing discs (2 Req'd)	 NT135	Selecting pinion height adjusting washer
KV381052S0 (—) Rear axle shaft dummy 1 KV38105210 (—) Torque wrench side 2 KV38105220 (—) Vice side	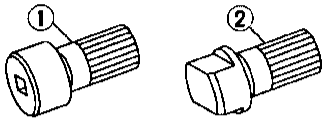 NT142	Checking differential torque on limited slip differential
KV38100500 (J25273) Gear carrier front oil seal drift	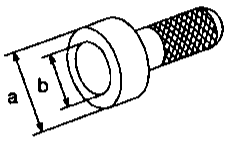 NT115	Installing front oil seal **a: 85 mm (3.35 in) dia.** **b: 60 mm (2.36 in) dia.**

Noise, Vibration and Harshness (NVH) Troubleshooting

NBPD0051

Refer to "NVH TROUBLESHOOTING CHART", PD-2.

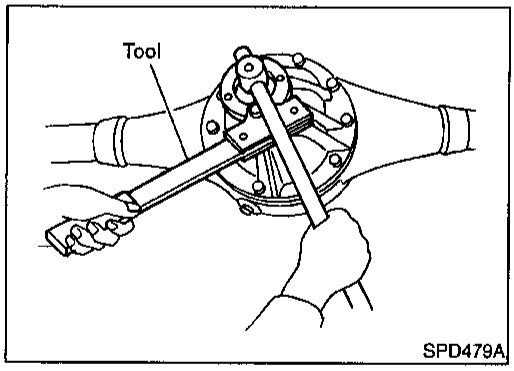

SPD479A

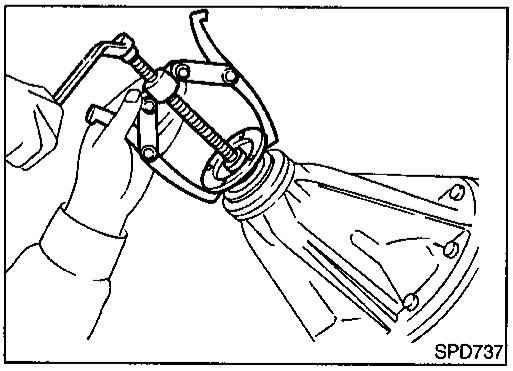
SPD737

On-vehicle Service

FRONT OIL SEAL REPLACEMENT

NBPD0030

1. Remove propeller shaft.
2. Loosen drive pinion nut.
   Tool number: KV38108300 (—)
3. Remove companion flange.

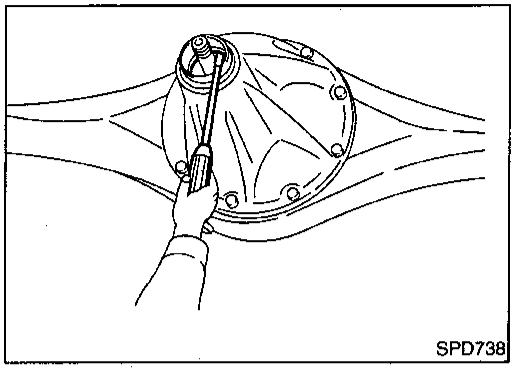

4. Remove front oil seal.

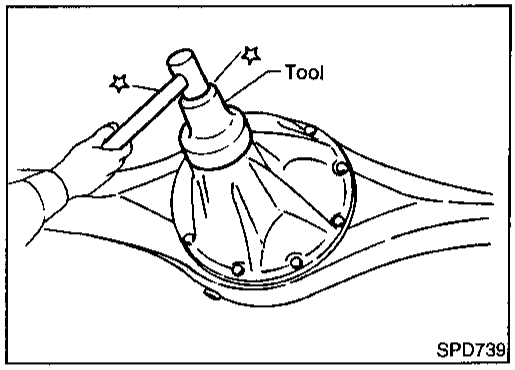

5. Apply multi-purpose grease to cavity at sealing lips of oil seal. Press front oil seal into carrier.
   Tool number:
   KV38100500 (J25273)
6. Install companion flange and drive pinion nut.
7. Install rear propeller shaft.

Components

NBPD0031

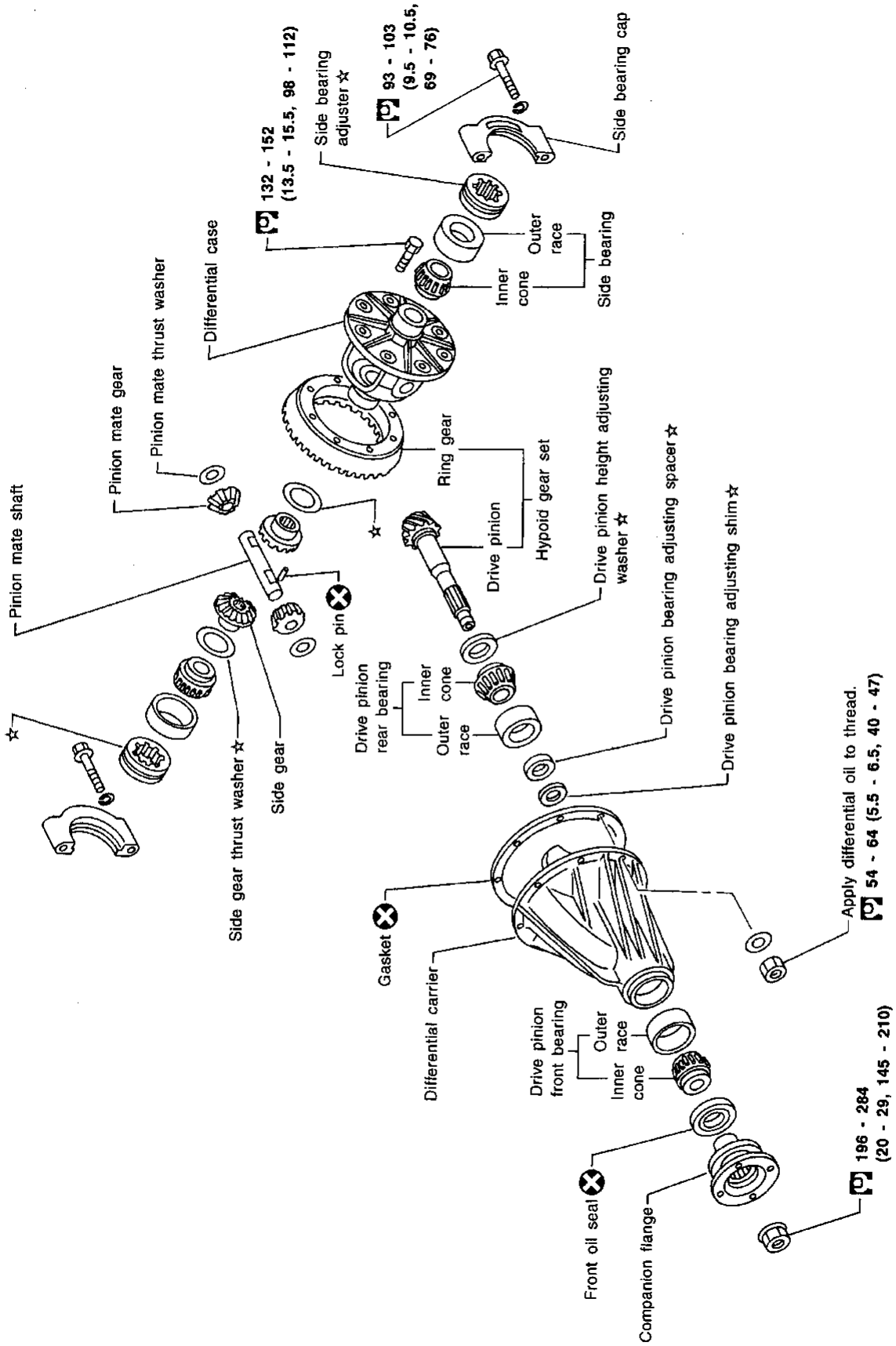

: N•m (kg-m, ft-lb)
☆ : Adjustment is required.

SPD362A

Removal and Installation

NBPD0032

REMOVAL

NBPD0032S01

- Remove rear of propeller shaft.
  Plug front end of transfer.
- Remove axle shaft.
  Refer to AX section ("REAR AXLE").
- Remove rear final drive mounting bolts.

CAUTION:
Be careful not to damage spline, sleeve yoke and front oil seal when removing propeller shaft.

INSTALLATION

NBPD0032S02

- Fill final drive with recommended gear oil.

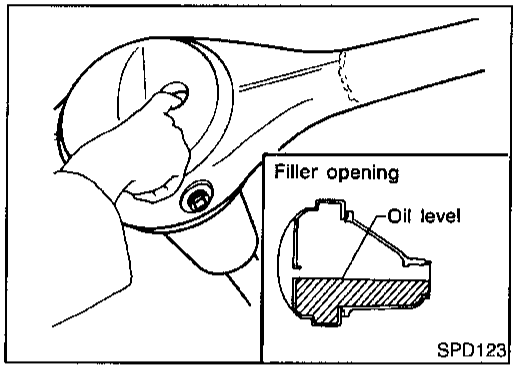

- Pay attention to the direction of gasket.

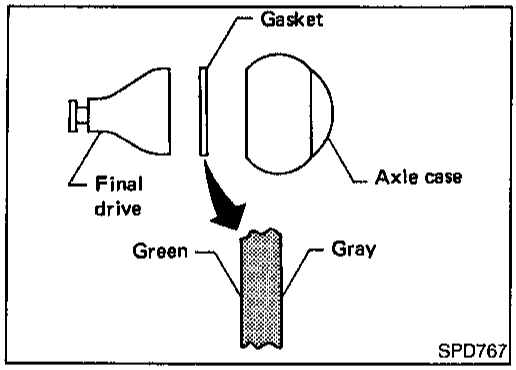

Disassembly

NBPD0033

PRE-INSPECTION

NBPD0033S01

Before disassembling final drive, perform the following inspection.

- Total preload

a) Turn drive pinion in both directions several times to seat bearing rollers correctly.

b) Check total preload with Tool.
   Tool number: ST3127S000 (J25765-A)
   Total preload:
   1.7 - 2.5 N·m (17 - 25 kg-cm, 15 - 22 in-lb)

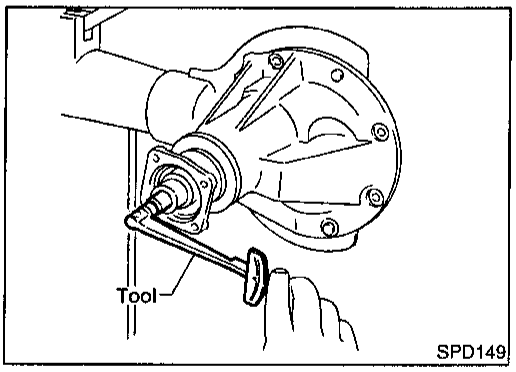

- Ring gear to drive pinion backlash
  Check backlash of ring gear with a dial indicator at several points.
  Ring gear-to-drive pinion backlash:
  0.13 - 0.18 mm (0.0051 - 0.0071 in)

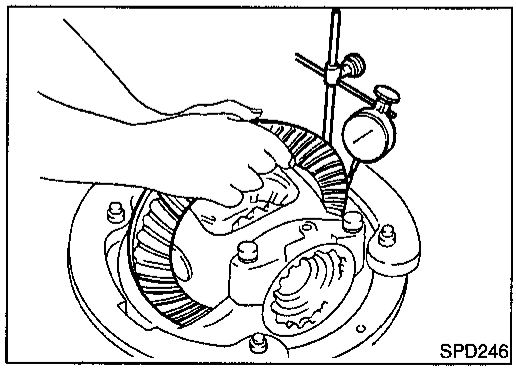

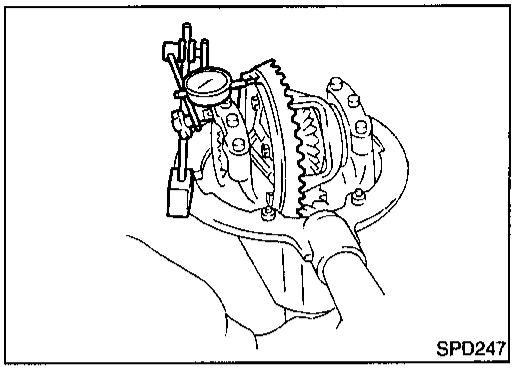

- Ring gear runout
  Check runout of ring gear with a dial indicator.
  Runout limit:
  0.08 mm (0.0031 in)

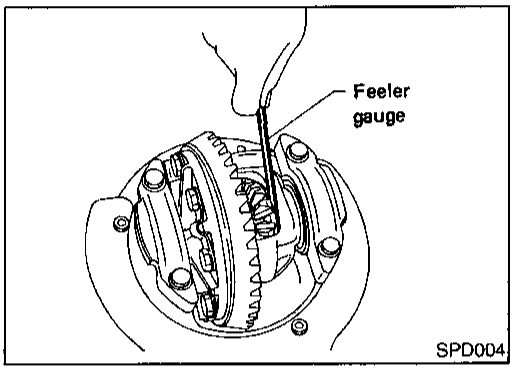

- Tooth contact
  Check tooth contact. Refer to "TOOTH CONTACT", PD-50.
- Side gear to pinion mate gear backlash
  Measure clearance between side gear thrust washer and differential case with a feeler gauge.
  Clearance between side gear thrust washer and differential case:
  0.10 - 0.20 mm (0.0039 - 0.0079 in)

DIFFERENTIAL CARRIER

NBPD0033S02

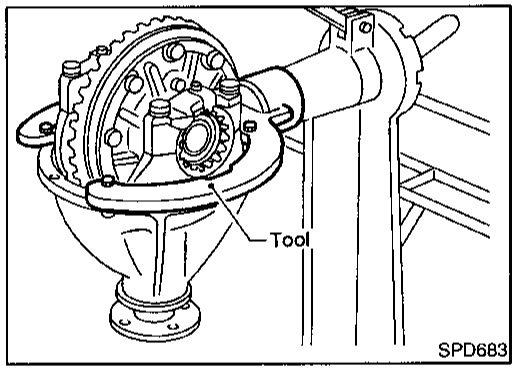

1. Mount final drive assembly on Tool.
   Tool number:
   ST06340000 (J24310, J34310)

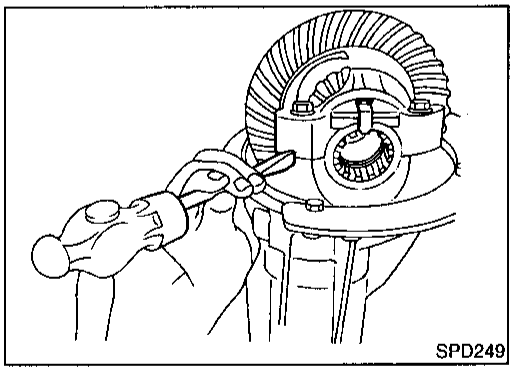

2. Put matchmarks on one side of side bearing cap with paint or punch to ensure that it is replaced in proper position during reassembly.

Bearing caps are line-bored during manufacture and should be put back in their original places.

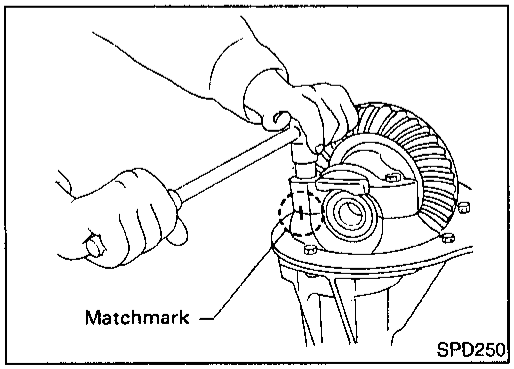

3. Remove side lock fingers and side bearing caps.

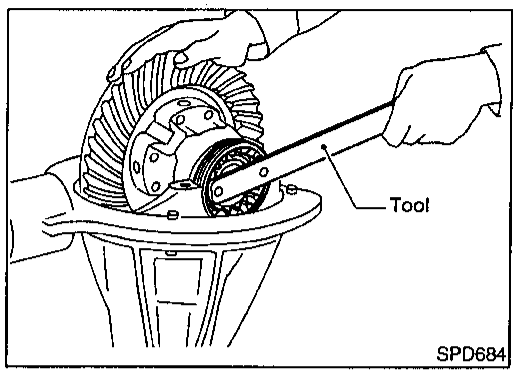

4. Remove side bearing adjuster with Tool.
   Tool number: ST32580000 (J34312)

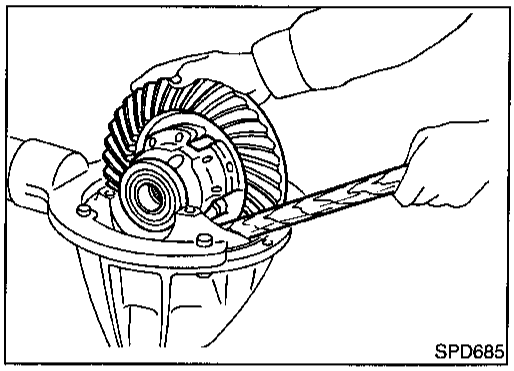

5. Remove differential case assembly with a pry bar.

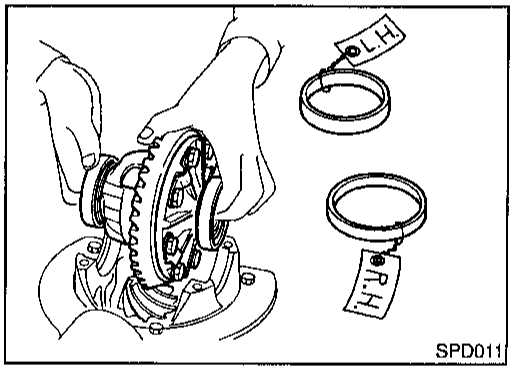

Be careful to keep the side bearing outer races together with their respective inner cones — do not mix them up.

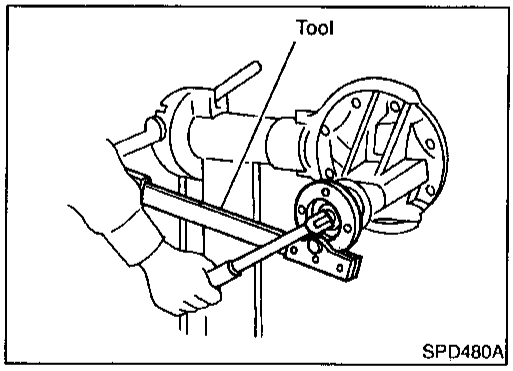

6. Remove drive pinion nut with Tool.
   Tool number: KV38108300 (—)
7. Remove companion flange with puller.

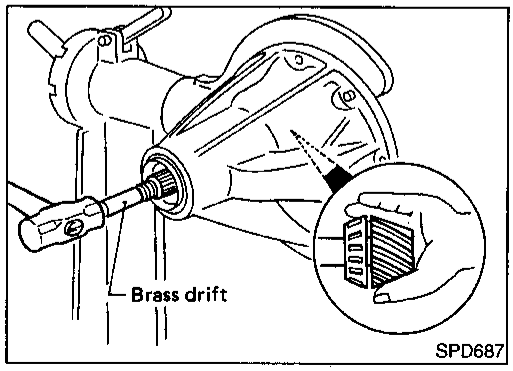

8. Take out drive pinion together with pinion rear bearing inner cone, drive pinion bearing spacer and pinion bearing adjusting shim.

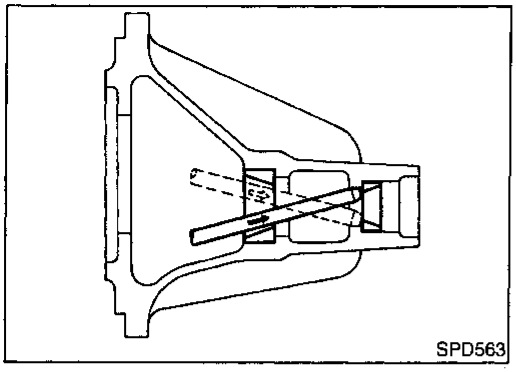

9. Remove front oil seal and pinion front bearing inner cone.
10. Remove pinion bearing outer races with a brass drift.

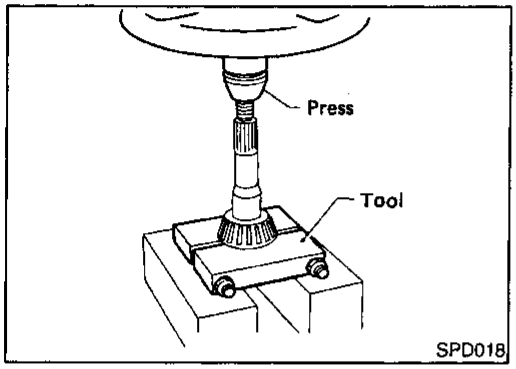

11. Remove pinion rear bearing inner cone and drive pinion adjusting washer.
    Tool number: ST30031000 (J22912-01)

DIFFERENTIAL CASE

NBPD0033S03

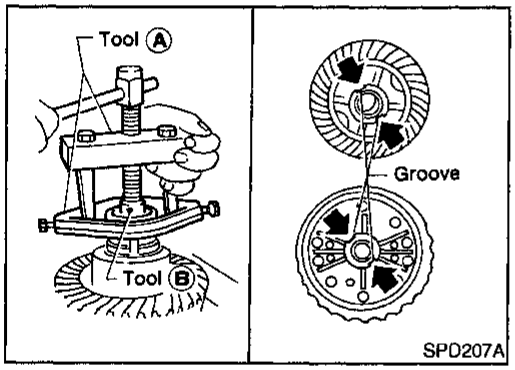

1. Remove side bearing inner cones.
   To prevent damage to bearing, engage puller jaws in groove.
   Tool number:
   A ST33051001 (J22888-20)
   B ST33061000 (J8107-2)

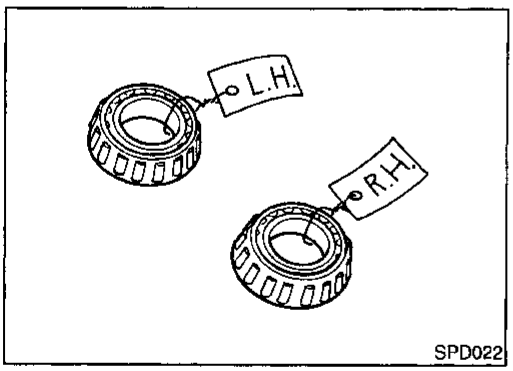

Be careful not to confuse the left and right hand parts. Keep bearing and bearing race for each side together.

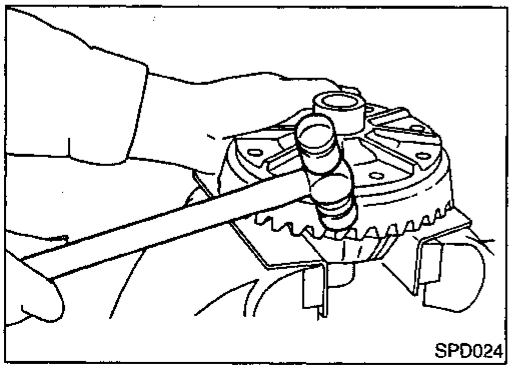

2. Loosen ring gear bolts in a criss-cross pattern.
3. Tap ring gear off differential case with a soft hammer.

Tap evenly all around to keep ring gear from binding.

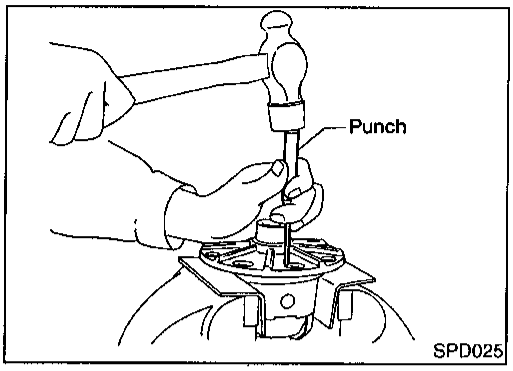

4. Drive out pinion mate shaft lock pin, with punch from ring gear side.

Lock pin is calked at pin hole mouth on differential case.

Inspection

NBPD0034

RING GEAR AND DRIVE PINION

NBPD0034S01

Check gear teeth for scoring, cracking or chipping.
If any damaged part is evident, replace ring gear and drive pinion as a set (hypoid gear set).

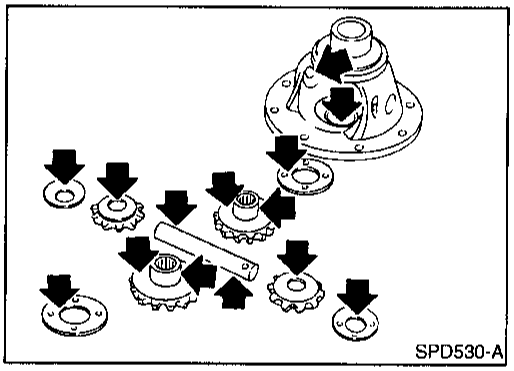

DIFFERENTIAL CASE ASSEMBLY

NBPD0034S02

Check mating surfaces of differential case, side gears, pinion mate gears, pinion mate shaft, and thrust washers.

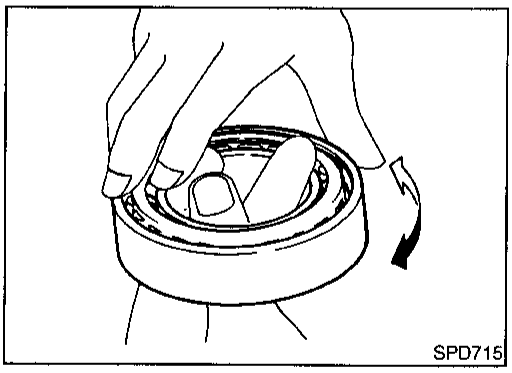

BEARING

NBPD0034S03

1. Thoroughly clean bearing.
2. Check bearings for wear, scratches, pitting or flaking.
   Check tapered roller bearing for smooth rotation. If damaged, replace outer race and inner cone as a set.

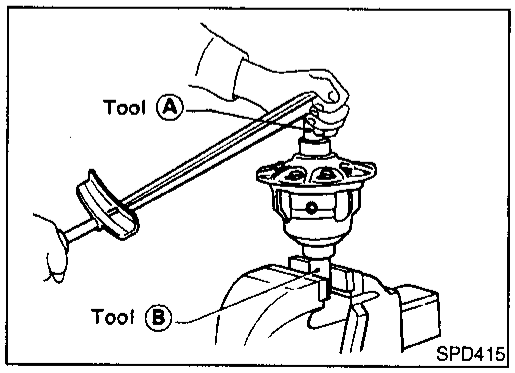

Limited Slip Differential

PREPARATION FOR DISASSEMBLY

NBPD0035

Checking Differential Torque

NBPD0035S01

Measure differential torque with Tool.
If it is not within the specifications, inspect components of limited slip differential.

Differential torque:
88 - 108 N·m (9 - 11 kg-m, 65 - 80 ft-lb)
Tool number: A KV38105210 (—)
Tool number: B KV38105220 (—)

DISASSEMBLY

NBPD0036

SEC. 380

No. of discs and plates (One side)

Model	H233B
Friction disc	2
Friction plate	9
Spring plate	2

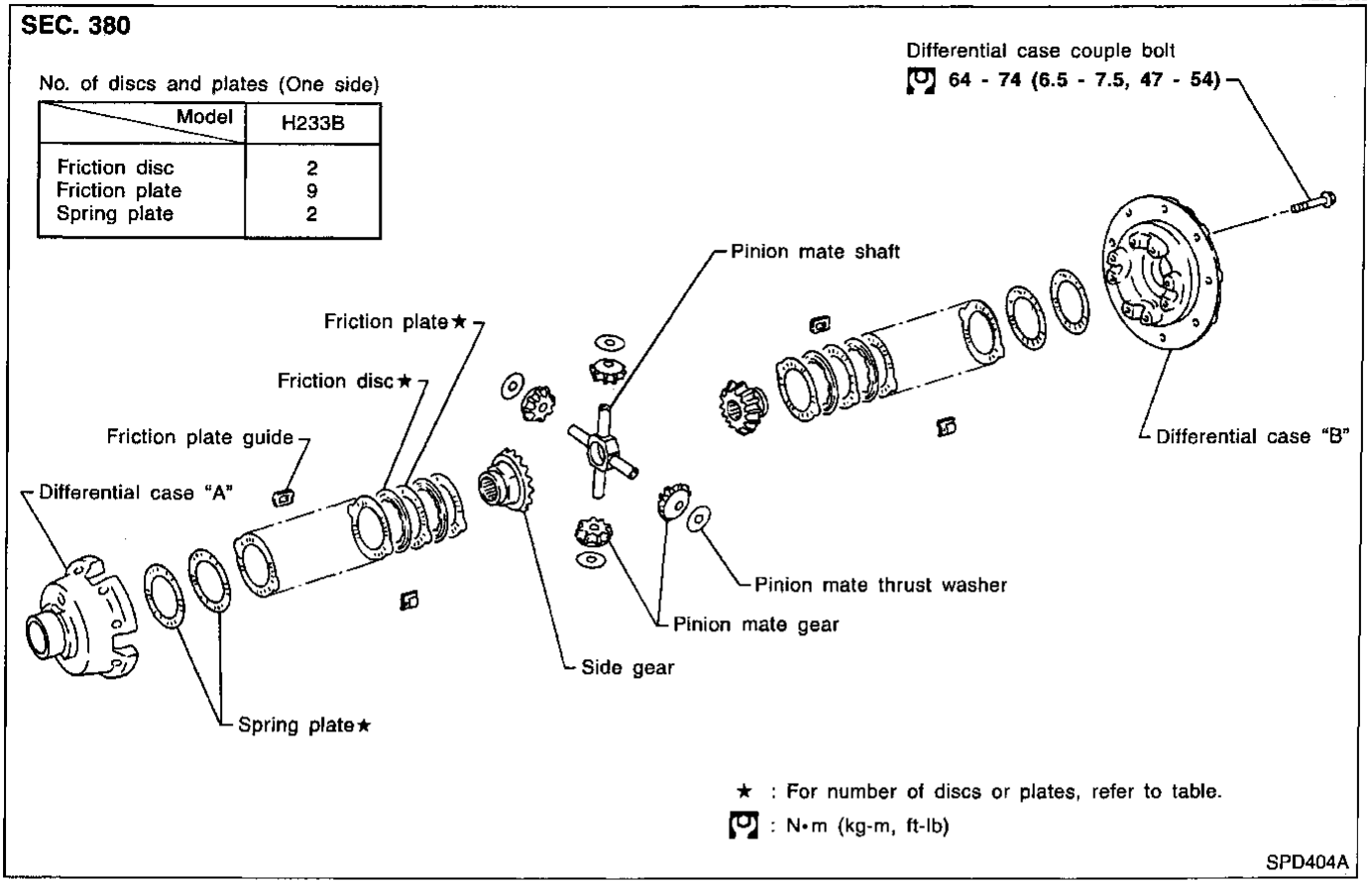

CAUTION:
Do not run engine when one wheel (rear) is off the ground.

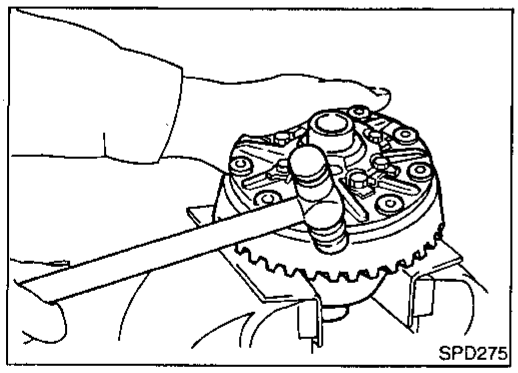

1. Remove side bearing inner cone with Tool.
2. Loosen ring gear bolts in a criss-cross pattern.
3. Tap ring gear off gear case with a soft hammer.

Tap evenly all around to keep ring gear from binding.

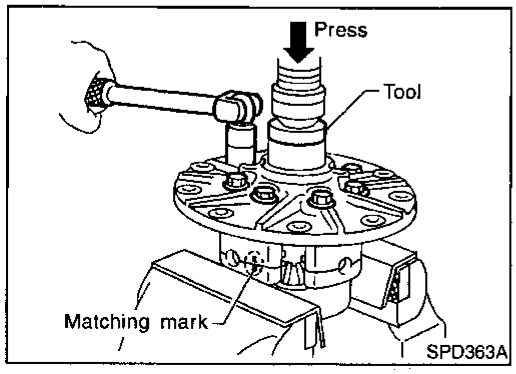

4. Remove couple bolts on differential cases A and B with a press.
   Tool number: ST33081000 (—)
5. Separate differential case A and B.
   Draw out component parts (discs and plates, etc.).

Put marks on gears and pressure rings so that they can be reinstalled in their original positions from which they were removed.

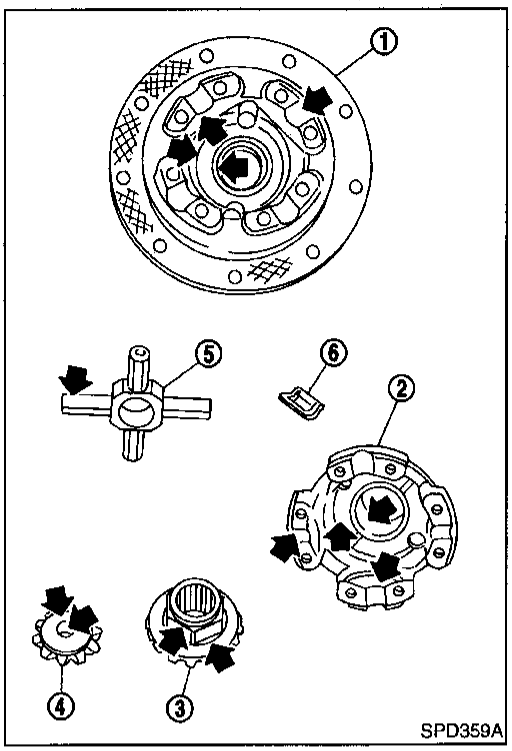

INSPECTION

NBPD0037

Contact Surfaces

NBPD0037S01

1. Clean the disassembled parts in suitable solvent and blow dry with compressed air.
2. If following surfaces are found with burrs or scratches, smooth with oil stone.
   1 Differential case B
   2 Differential case A
   3 Side gear
   4 Pinion mate gear
   5 Pinion mate shaft
   6 Friction plate guide

Disc and Plate

NBPD0037S02

1. Clean the discs and plates in suitable solvent and blow dry with compressed air.
2. Inspect discs and plates for wear, nicks and burrs.

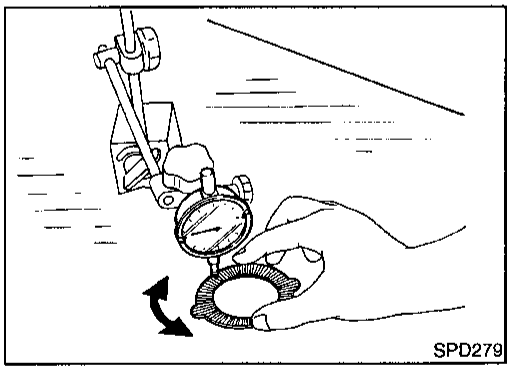

3. To test if friction disc or plate is not distorted, place it on a surface plate and rotate it by hand with indicating finger of dial gauge resting against disc or plate surface.
   Allowable warpage:
   0.08 mm (0.0031 in)
   If it exceeds limits, replace with a new plate to eliminate possibility of clutch slippage or sticking.

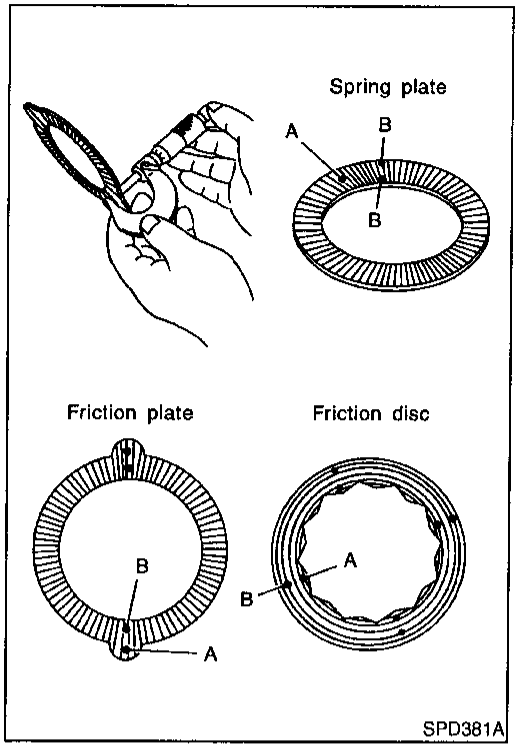

4. Measure frictional surfaces and projected portions of friction disc, friction plate, spring plate, and determine each part's differences to see if the specified wear limit has been exceeded.

If any part has worn beyond the wear limit, and deformed or fatigued, replace it with a new one that is the same thickness as the projected portion.

Wear limit:

0.1 mm (0.004 in) or less

A – B = Wear limit mm (in)

●: Measuring points
A: Projected portion
B: Frictional surface

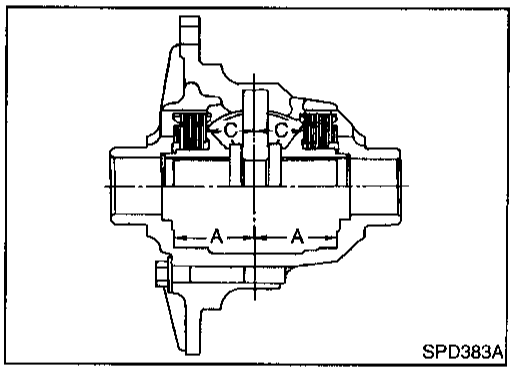

ADJUSTMENT

NBPD0038

Friction Disc and Friction Plate End Play

NBPD0038S01

End play of friction disc and friction plate can be calculated by using following equation and should be adjusted within following range. Adjustment can be made by selecting friction disc having two different thicknesses.

End play E:

0.05 - 0.15 mm (0.0020 - 0.0059 in)

E = A – (B + C)

A: Length of differential case contact surface to differential case inner bottom.
B: Total thickness of friction discs, friction plates, spring disc and spring plate in differential case on one side.
C: Length of differential case contact surface to back side of side gear.

1. Measure values of "A".

Standard length A:

49.50 - 49.55 mm (1.9488 - 1.9508 in)

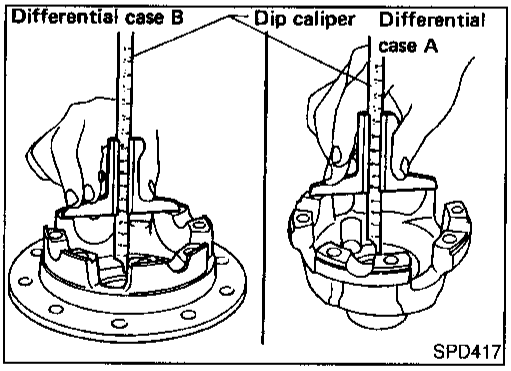

2. Measure thickness of each disc and plate.

Total thickness "B":

19.24 - 20.26 mm (0.7575 - 0.7976 in)

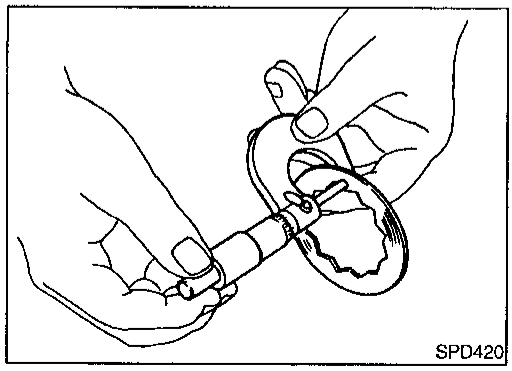

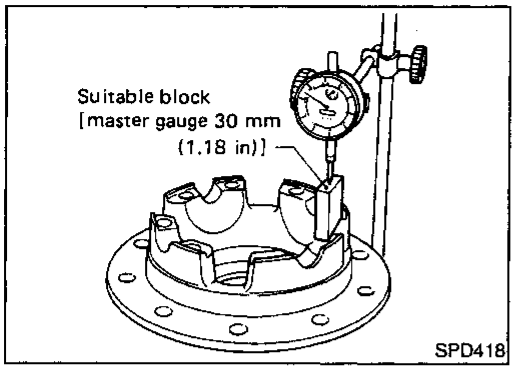

3. Measure values of "C".
a. Attach a dial indicator to the base plate.
b. Place differential case B on the base plate, and install a master gauge on case B.
Then adjust the dial indicator scale to zero with its tip on the master gauge.

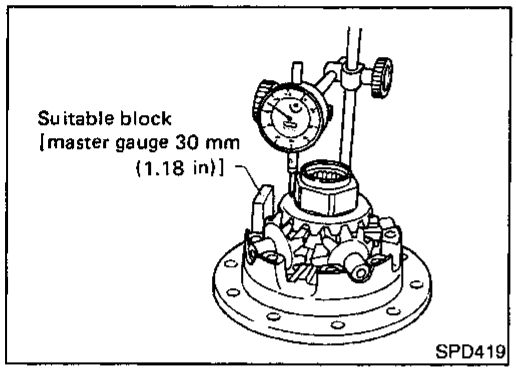

c. Install pinion mate gears, side gears and pinion mate shaft in differential case B.
d. Set dial indicator's tip on the side gear, and read the indication.
Example:
E = A – D = A – (B + C) = 0.05 to 0.15 mm
A = 49.52 mm
B = 19.45 mm
C = 29.7 mm
D = B + C
49.15 (D) = 19.45 (B) + 29.7 (C)
E = A – D
0.37 (E) = 49.52 (A) – 49.15 (D)

From the above equation, end play of 0.37 mm exceeds the specified range of 0.05 to 0.15 mm.
Select suitable discs and plates to adjust correctly.

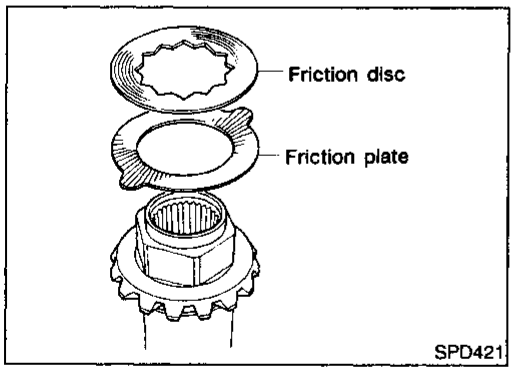

ASSEMBLY

NBPD0039

Prior to assembling discs and plates, properly lubricate them by dipping them in limited slip differential oil.

1. Alternately position specified number of friction plates and friction discs on rear of side gear.

Always position a friction plate first on rear of side gear.

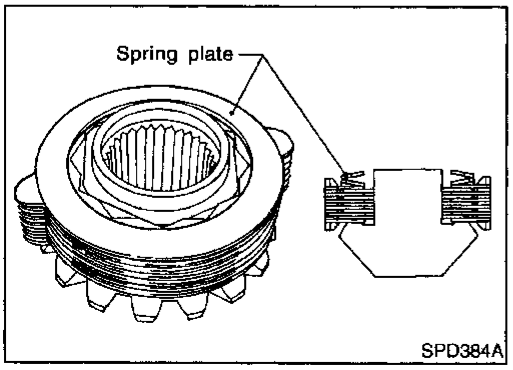

2. Install spring plate.

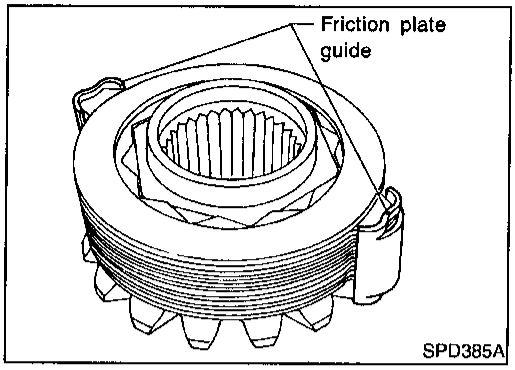

3. Install friction plate guides.

Correctly align the raised portions of friction plates, and apply grease to inner surfaces of friction plate guides to prevent them from falling.

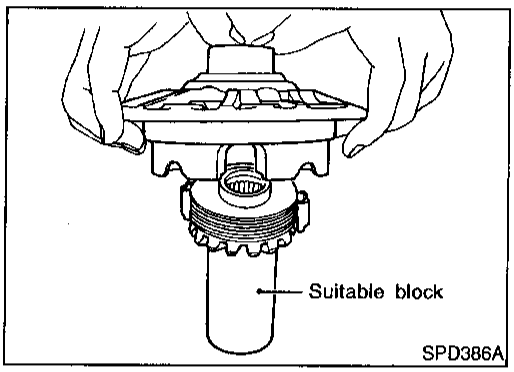

4. Install differential case B over side gear, discs, plates and friction plate guide assembly.

- **Install differential case B while supporting friction plate guides with your middle finger inserted through oil hole in differential case.**
- **Be careful not to detach spring disc from the hexagonal part of the side gear.**

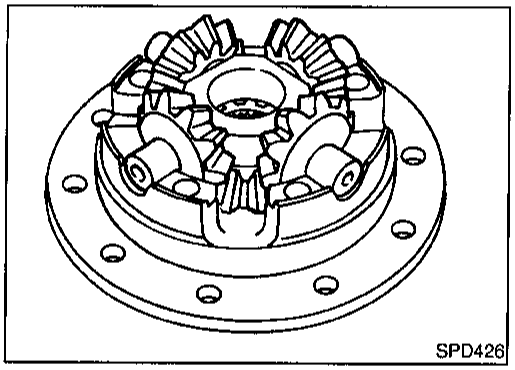

5. Install pinion mate gears and pinion mate thrust washers on pinion mate shaft, then install pinion mate shaft in differential case B.

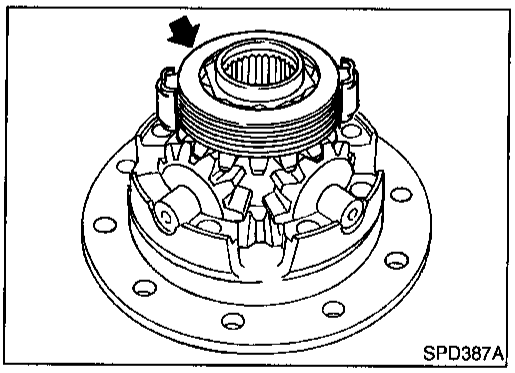

6. Install side gear to pinion mate gears.
7. Install each disc and plate.

Use same procedures as outlined in steps 1. through 4. above.

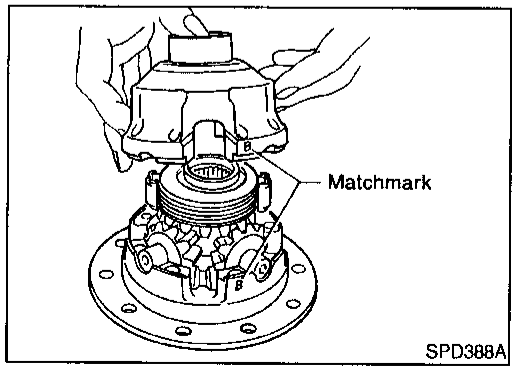

8. Install differential case A.

Position differential cases A and B by correctly aligning marks stamped on cases.

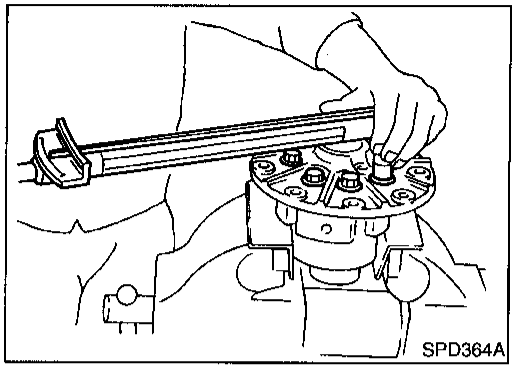
SPD364A

9. Tighten differential case couple bolts.
10. Place ring gear on differential case and tighten ring gear bolts.

Tighten bolts in a criss-cross pattern, lightly tapping bolt head with a hammer.
Then bend up lock straps to lock the bolts in place.

11. Install side bearing inner cone.
12. Check differential torque.

Adjustment

NBPD0040

For quiet and reliable final drive operation, the following five adjustments must be made correctly:

1. Side bearing preload
2. Pinion gear height
3. Side bearing preload
4. Ring gear-to-pinion backlash. Refer to SDS, PD-59.
5. Ring and pinion gear tooth contact pattern

PINION GEAR HEIGHT

NBPD0040S01

1. Make sure all parts are clean and that the bearings are well lubricated.
2. Assemble the pinion gear bearings into the pinion pre-load shim selector tool, J34309.

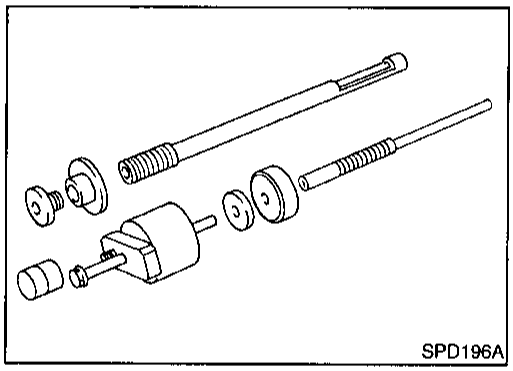
SPD196A

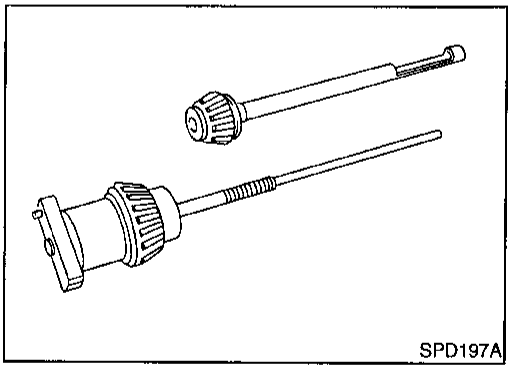
SPD197A

- **Rear Pinion Bearing** — the rear pinion bearing pilot, J34309-8, is used to center the rear pinion bearing only. The rear pinion bearing locking seat, J34309-4, is used to lock the bearing to the assembly.
- **Front Pinion Bearing** — make sure the J34309-3, front pinion bearing seat is secured tightly against the J34309-2 gauge anvil. Then turn the front pinion bearing pilot, J34309-5, to secure the bearing in its proper position.

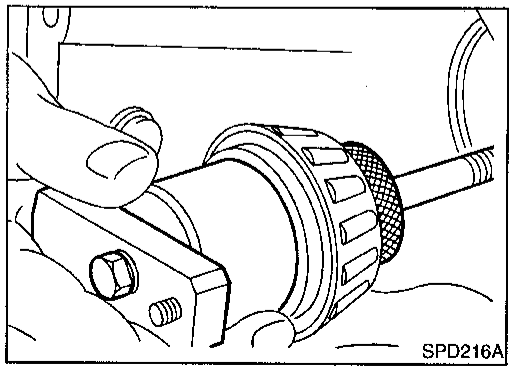
SPD216A

3. Place the pinion preload shim selector tool gauge screw assembly, J34309-1, with the pinion rear bearing inner cone installed, into the final drive housing.

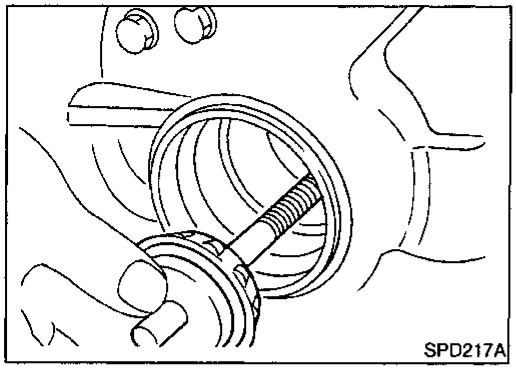

4. Install the J34309-2 gauge anvil with the front pinion bearing into the final drive housing and assemble it to the J34309-1 gauge screw. Make sure that the J34309-16 gauge plate will turn a full 360 degrees, and tighten the two sections by hand to set bearing pre-load.
5. Turn the assembly several times to seat the bearings.

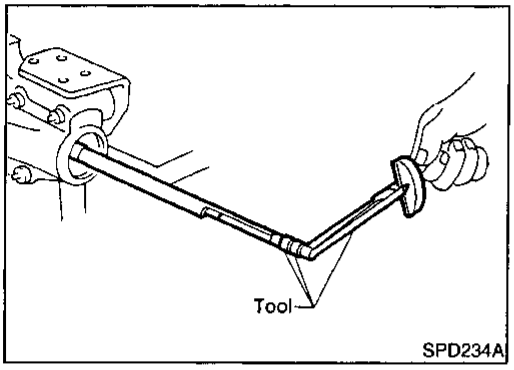

6. Measure the turning torque at the end of the J34309-2 gauge anvil using torque wrench J25765A.
   Turning torque specification:
   0.4 - 0.9 N·m (4 - 9 kg-cm, 3.5 - 7.8 in-lb)

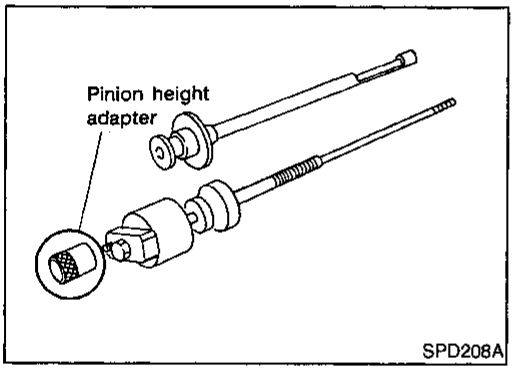

7. Place the J34309-12 "H233B" pinion height adapter onto the gauge plate and tighten it by hand.

CAUTION:
Make sure all machined surfaces are clean.

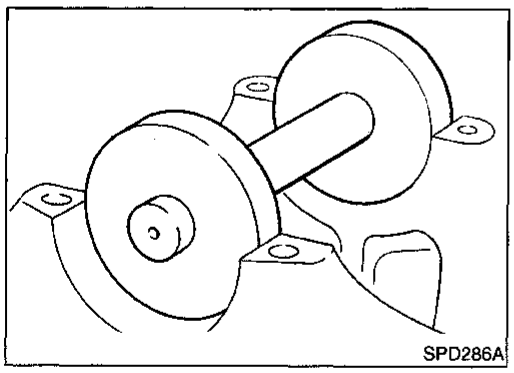

PINION HEIGHT ADJUSTING WASHER SELECTION

8. Position the J25269-18 side bearing discs and the arbor into the side bearing bores.

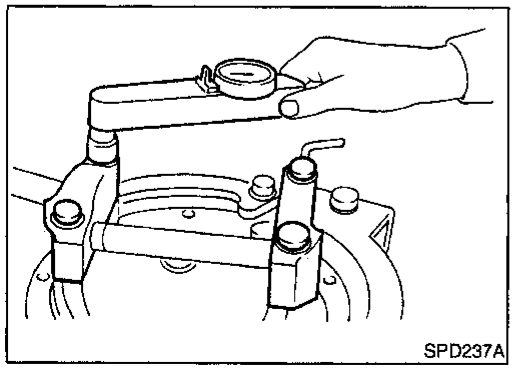

9. Install the bearing caps and torque the bolts.
   Specification:
   93 - 103 N·m (9.5 - 10.5 kg-m, 69 - 76 ft-lb)

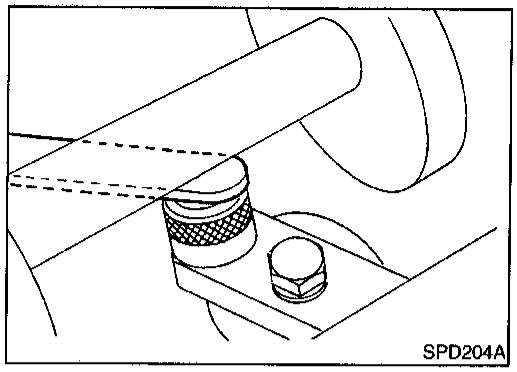

10. Select the correct standard pinion height adjusting washer thickness using a standard gauge of 2.5, 3.0, or 3.5 mm (0.098, 0.118, or 0.138 in) and your J34309-101 feeler gauge. Measure the distance between the J34309-12 "H233B" pinion height adapter and the arbor.

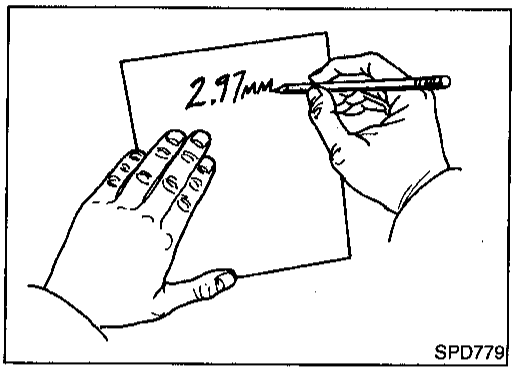

11. Write down your exact total measurement.

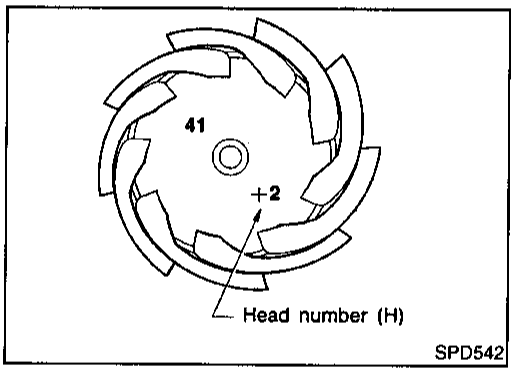

12. Correct the pinion height washer size by referring to the "pinion head height number".

There are two numbers painted on the pinion gear. The first one refers to the pinion and ring gear as a matched set and should be the same as the number on the ring gear. The second number is the "pinion head height number", and it refers to the ideal pinion height from standard for the quietest operation. Use the following chart to determine the correct pinion height washer. Refer to SDS, PD-60.

Pinion Head Height Number	Add or Remove from the Selected Standard Pinion Height Washer Thickness Measurement
–6	Add 0.06 mm (0.0024 in)
–5	Add 0.05 mm (0.0020 in)
–4	Add 0.04 mm (0.0016 in)
–3	Add 0.03 mm (0.0012 in)
–2	Add 0.02 mm (0.0008 in)
–1	Add 0.01 mm (0.0004 in)
0	Use the selected washer thickness
+1	Subtract 0.01 mm (0.0004 in)
+2	Subtract 0.02 mm (0.0008 in)
+3	Subtract 0.03 mm (0.0012 in)
+4	Subtract 0.04 mm (0.0016 in)
+5	Subtract 0.05 mm (0.0020 in)
+6	Subtract 0.06 mm (0.0024 in)

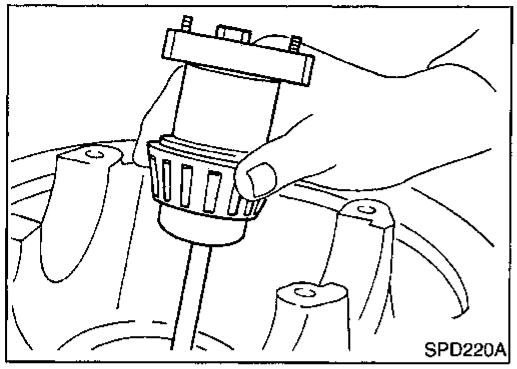

13. Remove the J34309 pinion preload shim selector tool from the final drive housing and disassemble to retrieve the pinion bearings.

TOOTH CONTACT

NBPD0040S02

Gear tooth contact pattern check is necessary to verify correct relationship between ring gear and drive pinion.
Hypoid gear sets which are not positioned properly in relation to one another may be noisy, or have short life or both. With a pattern check, the most desirable contact for low noise level and long life can be assured.

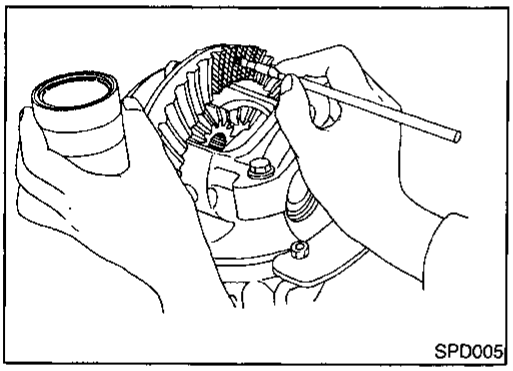

1. Thoroughly clean ring gear and drive pinion teeth.
2. Sparingly apply a mixture of powdered ferric oxide and oil or equivalent to 3 or 4 teeth of ring gear drive side.

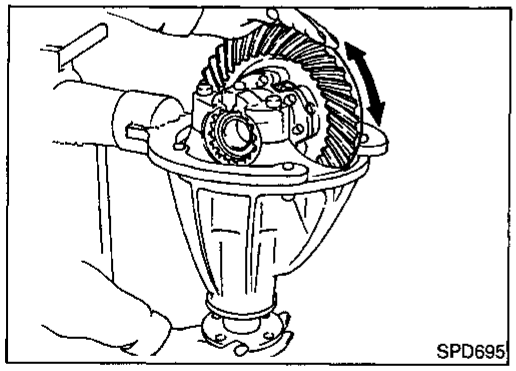

3. Hold companion flange steady by hand and rotate the ring gear in both directions.

Usually the pattern will be correct if shims are correctly calculated and the backlash is correct. However, in rare cases, trial and error processes may be employed to obtain a correct pattern. The tooth pattern is the best indication of how well a differential has been set up.

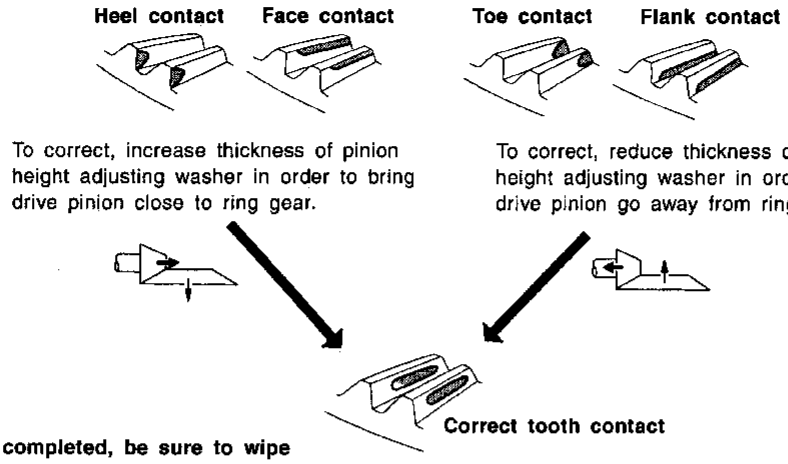

When adjustment is completed, be sure to wipe off completely the ferric oxide and oil or their equivalent.

SPD007-B

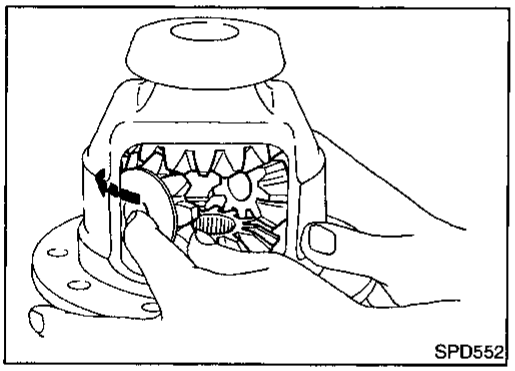

Assembly

NBPD0041

DIFFERENTIAL CASE

NBPD0041S01

1. Install side gears, pinion mate gears and thrust washers into differential case.

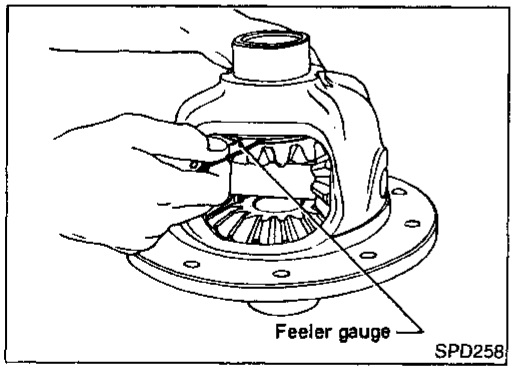

2. Fit pinion mate shaft to differential case so that it meets lock pin holes.
3. Adjust backlash between side gear and pinion mate gear by selecting side gear thrust washer.
   Refer to SDS, PD-59.

   Backlash between side gear and pinion mate gear (Clearance between side gear thrust washer and differential case):

   0.10 - 0.20 mm (0.0039 - 0.0079 in)

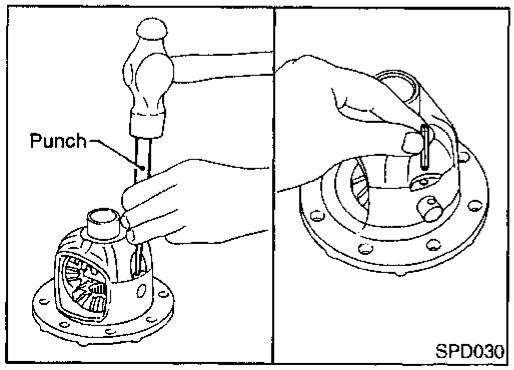

4. Install pinion mate shaft lock pin with a punch.

Make sure lock pin is flush with case.

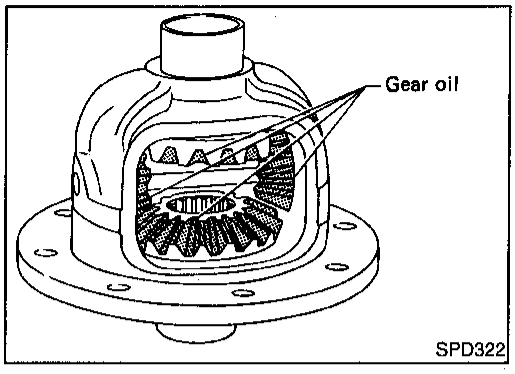

5. Apply gear oil to gear tooth surfaces and thrust surfaces and check to see they turn properly.
6. Install differential case assembly on ring gear.

Tighten bolts in a criss-cross pattern, lightly tapping bolt head with a hammer.

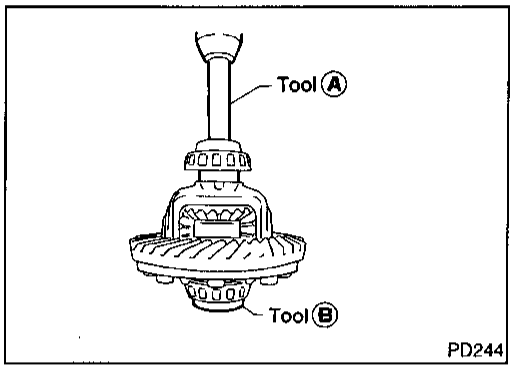

7. Press-fit side bearing inner cones on differential case with Tool.

Tool number:
A ST33190000 (J25523)
B ST33081000 (—)

DIFFERENTIAL CARRIER

NBPD0041S02

1. Press-fit front and rear bearing outer races with Tools.

Tool number:
A ST30611000 (J25742-1)
B ST30621000 (J25742-5)
C ST30613000 (J25742-3)

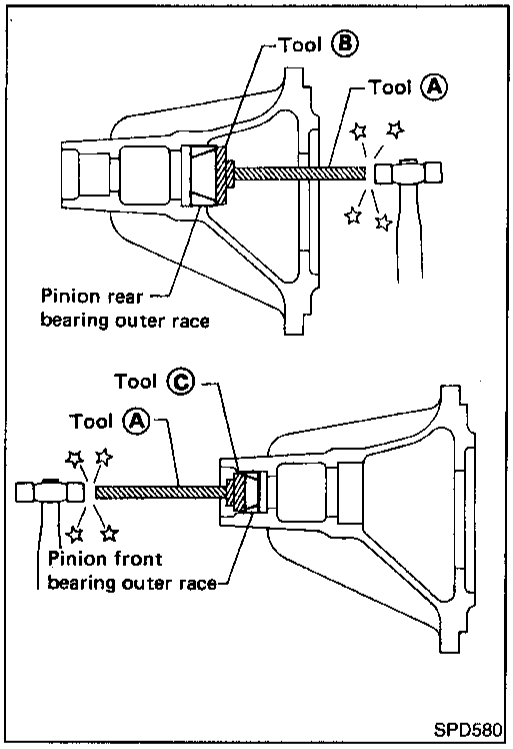

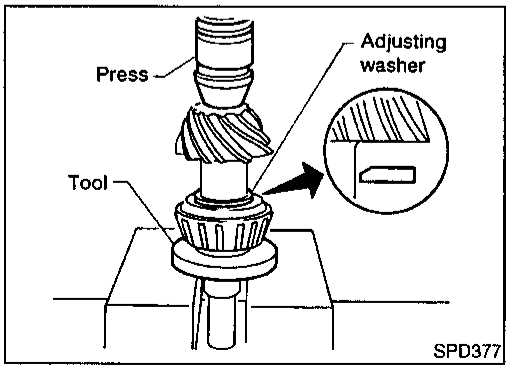

2. Select drive pinion height adjusting washer. Refer to "Adjustment", PD-47.
3. Install drive pinion adjusting washer in drive pinion, and press-fit pinion rear bearing inner cone in it, with press and Tool.

Tool number:
ST30901000 (J26010-01)

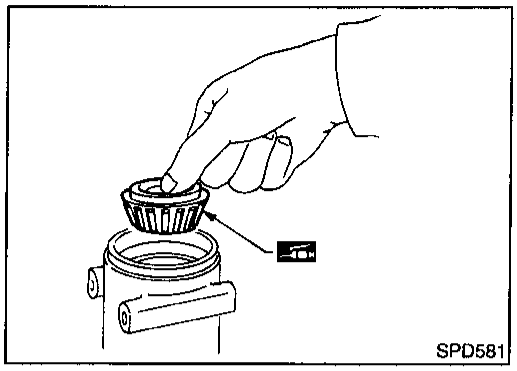

4. Place pinion front bearing inner cone in gear carrier.

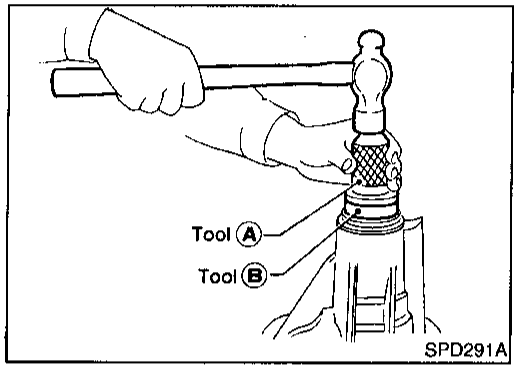

5. Apply multi-purpose grease to cavity at sealing lips of oil seal. Install front oil seal.

Tool number:

A ST30720000 (J25405)

B KV38102510 (—)

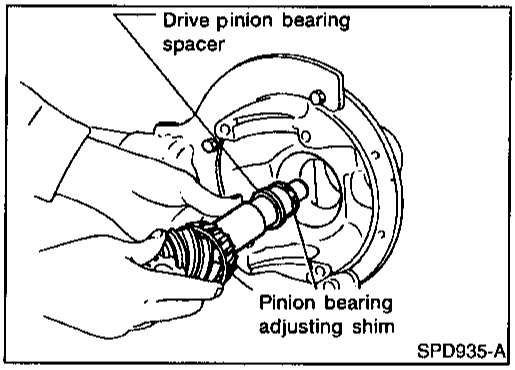

6. Install drive pinion bearing spacer, pinion bearing adjusting shim and drive pinion in gear carrier.

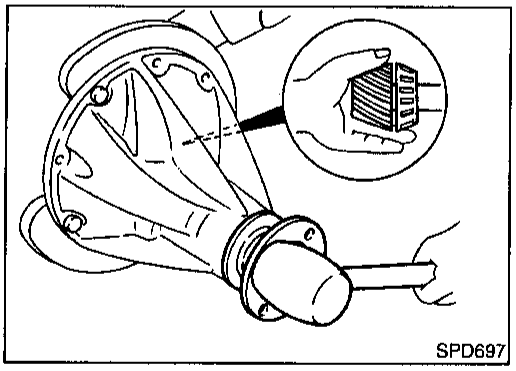

7. Insert companion flange into drive pinion by tapping the companion flange with a soft hammer.

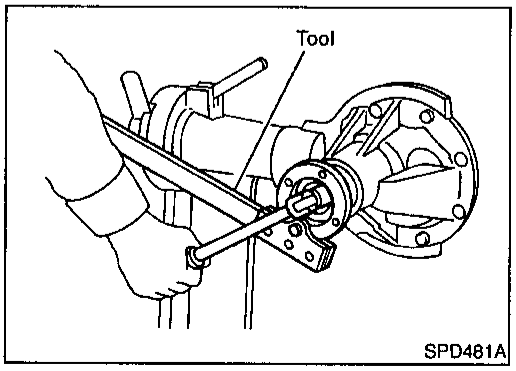

8. Tighten pinion nut to the specified torque.

The threaded portion of drive pinion and pinion nut should be free from oil or grease.

Tool number: KV38108300 (—)

Assembly (Cont'd)

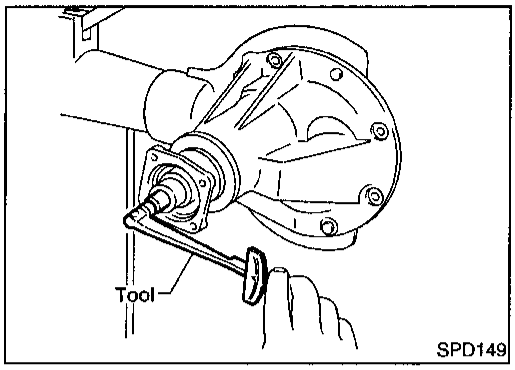

9. Turn drive pinion in both directions several times, and measure pinion bearing preload.

   Tool number: ST3127S000 (J25765-A)

   Pinion bearing preload (Without front oil seal):

   1.4 - 1.7 N·m (14 - 17 kg-cm, 12 - 15 in-lb)

If preload is out of specification, adjust the thickness of spacer and shim combination by replacing shim and spacer with thinner one.

- Start from the combination of thickest spacer and shim.
- Combine each spacer and shim thickness one by one until the correct specification are achieved.

   Drive pinion bearing preload adjusting spacer and shim:

   Refer to SDS, PD-60.

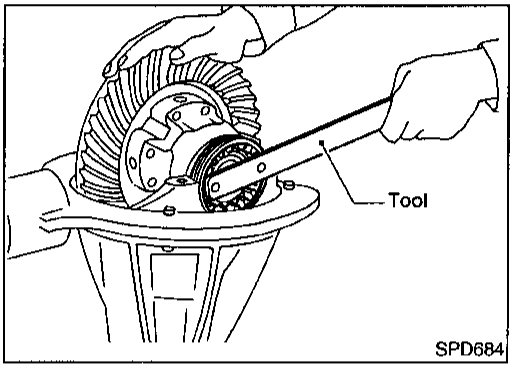

10. Install differential case assembly with side bearing outer races into gear carrier.
11. Position side bearing adjusters on gear carrier with threads properly engaged; screw in adjusters lightly at this stage of assembly.

   Tool number: ST32580000 (J34312)

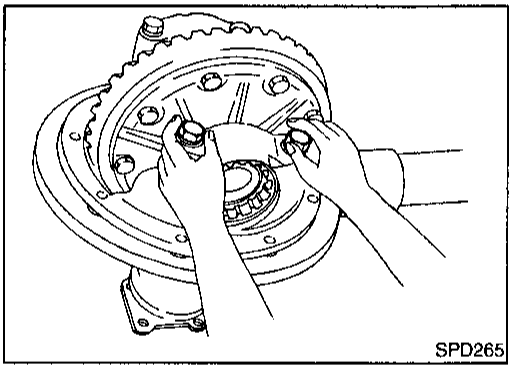

12. Align mark on bearing cap with that on gear carrier and install bearing cap on gear carrier.

- Do not tighten at this point to allow further tightening of side bearing adjusters.

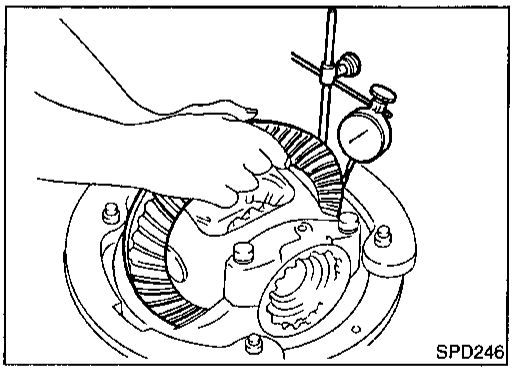

13. Tighten both right and left side bearing adjusters alternately and measure ring gear backlash and total preload at the same time. Adjust right and left side bearing adjusters by tightening them alternately so that proper ring gear backlash and total preload can be obtained.

   Ring gear-to-drive pinion backlash:

   0.13 - 0.18 mm (0.0051 - 0.0071 in)

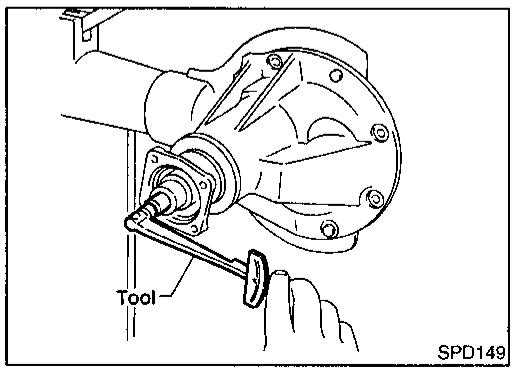

- **When checking preload, turn drive pinion in both directions several times to set bearing rollers.**

   Tool number: ST3127S000 (J25765-A)

   Total preload:

   1.7 - 2.5 N·m (17 - 25 kg-cm, 15 - 22 in-lb)

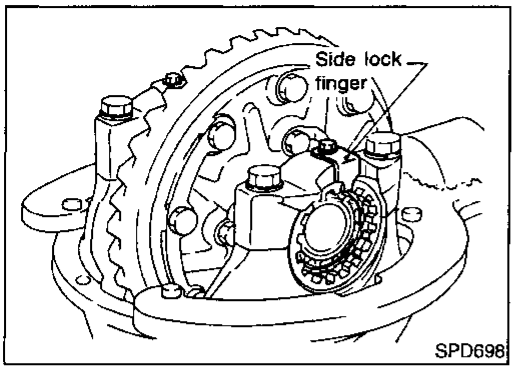

14. Tighten side bearing cap bolts.
15. Install side lock finger in place to prevent rotation during operation.

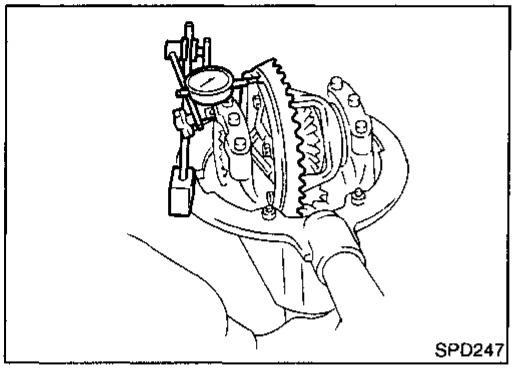

16. Check runout of ring gear with a dial indicator.
    Runout limit: 0.08 mm (0.0031 in)
- If backlash varies excessively in different places, the variance may have resulted from foreign matter caught between the ring gear and the differential case.
- If the backlash varies greatly when the runout of the ring gear is within a specified range, the hypoid gear set or differential case should be replaced.

17. Check tooth contact. Refer to "TOOTH CONTACT", PD-50.

General Specifications

NBPD0009

Location	Front	Rear
Propeller shaft model	2F71H	2S80B-T
Number of joints	2	
Coupling method with transmission	Flange type	Sleeve type
Type of journal bearings	Solid type (disassembly type)	
Distance between yokes mm (in)	71 (2.80)	80 (3.15)
Shaft length (Spider to spider) mm (in)	565 (22.24)	927 (36.50)
Shaft outer diameter mm (in)	50.8 (2.000)	75 and 63.5 (2.95 and 2.500)

Service Data

NBPD0010

Unit: mm (in)

Propeller shaft runout limit	0.6 (0.024)
Journal axial play	0.02 (0.0008) or less

Snap Ring (80B)

NBPD0011

Unit: mm (in)

Thickness	Color	Part number
1.99 (0.0783)	White	37146-C9400
2.02 (0.0795)	Yellow	37147-C9400
2.05 (0.0807)	Red	37148-C9400
2.08 (0.0819)	Green	37149-C9400
2.11 (0.0831)	Blue	37150-C9400
2.14 (0.0843)	Light brown	37151-C9400
2.17 (0.0854)	Black	37152-C9400
2.20 (0.0866)	No paint	37153-C9400

Snap Ring (71H)

NBPD0012

Unit: mm (in)

Thickness	Color	Part number
1.99 (0.0783)	White	37146-01G00
2.02 (0.0795)	Yellow	37147-01G00
2.05 (0.0807)	Red	37148-01G00
2.08 (0.0819)	Green	37149-01G00
2.11 (0.0831)	Blue	37150-01G00
2.14 (0.0843)	Light brown	37151-01G00
2.17 (0.0854)	Pink	37152-01G00
2.20 (0.0866)	No paint	37153-01G00

R200A

NBPD0022

GENERAL SPECIFICATIONS

NBPD0022S01

Front final drive	Standard
	R200A
	2-pinion
Gear ratio	4.636
Number of teeth (Ring gear/drive pinion)	51/11
Oil capacity (Approx.) ℓ (US pt, Imp pt)	1.85 (3-7/8, 3-1/4)

RING GEAR RUNOUT

NBPD0022S02

Ring gear runout limit mm (in)	0.05 (0.0020)

SIDE GEAR ADJUSTMENT

NBPD0022S03

Side gear backlash (Clearance between side gear and differential case) mm (in)	Less than 0.15 (0.0059)

	Thickness mm (in)	Part number
Available side gear thrust washers	0.75 (0.0295)	38424-N3110
	0.78 (0.0307)	38424-N3111
	0.81 (0.0319)	38424-N3112
	0.84 (0.0331)	38424-N3113
	0.87 (0.0343)	38424-N3114
	0.90 (0.0354)	38424-N3115
	0.93 (0.0366)	38424-N3116

SIDE BEARING ADJUSTMENT

NBPD0022S04

Differential carrier assembly turning resistance N (kg, lb)	34.3 - 39.2 (3.5 - 4.0, 7.7 - 8.8)

	Thickness mm (in)	Part number
Available side bearing adjusting washers	2.00 (0.0787)	38453-N3100
	2.05 (0.0807)	38453-N3101
	2.10 (0.0827)	38453-N3102
	2.15 (0.0846)	38453-N3103
	2.20 (0.0866)	38453-N3104
	2.25 (0.0886)	38453-N3105
	2.30 (0.0906)	38453-N3106
	2.35 (0.0925)	38453-N3107
	2.40 (0.0945)	38453-N3108
	2.45 (0.0965)	38453-N3109
	2.50 (0.0984)	38453-N3110
	2.55 (0.1004)	38453-N3111
	2.60 (0.1024)	38453-N3112

TOTAL PRELOAD ADJUSTMENT

NBPD0022S05

Total preload N·m (kg-cm, in-lb)	1.4 - 1.7 (14 - 17, 12 - 15)
Ring gear backlash mm (in)	0.10 - 0.15 (0.0039 - 0.0059)

DRIVE PINION HEIGHT ADJUSTMENT

NBPD0022S06

	Thickness mm (in)	Part number
Available pinion height adjusting washers	3.09 (0.1217)	38154-P6017
	3.12 (0.1228)	38154-P6018
	3.15 (0.1240)	38154-P6019
	3.18 (0.1252)	38154-P6020
	3.21 (0.1264)	38154-P6021
	3.24 (0.1276)	38154-P6022
	3.27 (0.1287)	38154-P6023
	3.30 (0.1299)	38154-P6024
	3.33 (0.1311)	38154-P6025
	3.36 (0.1323)	38154-P6026
	3.39 (0.1335)	38154-P6027
	3.42 (0.1346)	38154-P6028
	3.45 (0.1358)	38154-P6029
	3.48 (0.1370)	38154-P6030
	3.51 (0.1382)	38154-P6031
	3.54 (0.1394)	38154-P6032
	3.57 (0.1406)	38154-P6033
	3.60 (0.1417)	38154-P6034
	3.63 (0.1429)	38154-P6035
	3.66 (0.1441)	38154-P6036

DRIVE PINION PRELOAD ADJUSTMENT

NBPD0022S07

Drive pinion bearing preload adjusting method		Adjusting washer and spacer
Drive pinion preload with front oil seal N·m (kg-cm, in-lb)		1.1 - 1.4 (11 - 14, 9.5 - 12.2)
	Thickness mm (in)	Part number
Available drive pinion bearing preload adjusting washers	3.81 (0.1500)	38125-61001
	3.83 (0.1508)	38126-61001
	3.85 (0.1516)	38127-61001
	3.87 (0.1524)	38128-61001
	3.89 (0.1531)	38129-61001
	3.91 (0.1539)	38130-61001
	3.93 (0.1547)	38131-61001
	3.95 (0.1555)	38132-61001
	3.97 (0.1563)	38133-61001
	3.99 (0.1571)	38134-61001
	4.01 (0.1579)	38135-61001
	4.03 (0.1587)	38136-61001
	4.05 (0.1594)	38137-61001
	4.07 (0.1602)	38138-61001
	4.09 (0.1610)	38139-61001
	Length mm (in)	Part number
Available drive pinion bearing preload adjusting spacers	54.50 (2.1457)	38165-B4000
	54.80 (2.1575)	38165-B4001
	55.10 (2.1693)	38165-B4002
	55.40 (2.1811)	38165-B4003
	55.70 (2.1929)	38165-B4004
	56.00 (2.2047)	38165-61001

H233B

NBPD0042

GENERAL SPECIFICATIONS

NBPD0042S01

Rear final drive	Standard	Optional
	H233B	
	2-pinion	LSD
Gear ratio	4.636	
Number of teeth (Ring gear/drive pinion)	51/11	
Oil capacity (Approx.) ℓ (US pt, Imp pt)	2.8 (5-7/8, 4-7/8)	

RING GEAR RUNOUT

NBPD0042S02

Ring gear runout limit mm (in)	0.08 (0.0031)

SIDE GEAR ADJUSTMENT

NBPD0042S03

Side gear backlash (Clearance between side gear and differential case) mm (in)		0.10 - 0.20 (0.0039 - 0.0079)
Available side gear thrust washers	Thickness mm (in)	Part number
	1.75 (0.0689) 1.80 (0.0709) 1.85 (0.0728)	38424-T5000 38424-T5001 38424-T5002

DIFFERENTIAL TORQUE ADJUSTMENT (LSD MODELS)

NBPD0042S04

Differential torque N·m (kg-m, ft-lb)		88 - 108 (9 - 11, 65 - 80)
Number of discs and plates (One side)	Friction disc	2
	Friction plate	9
	Spring plate	2
Wear limit of plate and disc mm (in)		0.1 (0.004)
Allowable warpage of friction disc and plate mm (in)		0.08 (0.0031)

Available discs and plates	Plate name	Thickness mm (in)	Part number
	Friction disc	1.48 - 1.52 (0.0583 - 0.0598) 1.38 - 1.42 (0.0543 - 0.0559) 1.58 - 1.62 (0.0622 - 0.0638)	38433-C6002 (Standard type) 38433-C6004 (Adjusting type) 38433-C6003 (Adjusting type)
	Friction plate	1.48 - 1.52 (0.0583 - 0.0598)	38432-C6001
	Spring plate	1.48 - 1.52 (0.0583 - 0.0598)	38435-S9200

TOTAL PRELOAD ADJUSTMENT

NBPD0042S05

Total preload N·m (kg-cm, in-lb)	1.7 - 2.5 (17 - 25, 15 - 22)
Ring gear backlash mm (in)	0.13 - 0.18 (0.0051 - 0.0071)
Side bearing adjusting method	Side adjuster

DRIVE PINION HEIGHT ADJUSTMENT

NBPD0042S06

	Thickness mm (in)	Part number
Available pinion height adjust washers	2.58 (0.1016)	38151-01J00
	2.61 (0.1028)	38151-01J01
	2.64 (0.1039)	38151-01J02
	2.67 (0.1051)	38151-01J03
	2.70 (0.1063)	38151-01J04
	2.73 (0.1075)	38151-01J05
	2.76 (0.1087)	38151-01J06
	2.79 (0.1098)	38151-01J07
	2.82 (0.1110)	38151-01J08
	2.85 (0.1122)	38151-01J09
	2.88 (0.1134)	38151-01J10
	2.91 (0.1146)	38151-01J11
	2.94 (0.1157)	38151-01J12
	2.97 (0.1169)	38151-01J13
	3.00 (0.1181)	38151-01J14
	3.03 (0.1193)	38151-01J15
	3.06 (0.1205)	38151-01J16
	3.09 (0.1217)	38151-01J17
	3.12 (0.1228)	38151-01J18
	3.15 (0.1240)	38151-01J19
	3.18 (0.1252)	38151-01J60
	3.21 (0.1264)	38151-01J61
	3.24 (0.1276)	38151-01J62
	3.27 (0.1287)	38151-01J63
	3.30 (0.1299)	38151-01J64
	3.33 (0.1311)	38151-01J65
	3.36 (0.1323)	38151-01J66
	3.39 (0.1335)	38151-01J67
	3.42 (0.1346)	38151-01J68
	3.45 (0.1358)	38151-01J69
	3.48 (0.1370)	38151-01J70
	3.51 (0.1382)	38151-01J71
	3.54 (0.1394)	38151-01J72
	3.57 (0.1406)	38151-01J73
	3.60 (0.1417)	38151-01J74
	3.63 (0.1429)	38151-01J75
	3.66 (0.1441)	38151-01J76

DRIVE PINION PRELOAD ADJUSTMENT

NBPD0042S07

Drive pinion bearing preload adjusting method		Adjusting shim and spacer
Drive pinion preload without front oil seal N·m (kg-cm, in-lb)		1.4 - 1.7 (14 - 17, 12 - 15)
	Thickness mm (in)	Part number
Available front drive pinion bearing adjusting shims	2.31 (0.0909)	38125-82100
	2.33 (0.0917)	38126-82100
	2.35 (0.0925)	38127-82100
	2.37 (0.0933)	38128-82100
	2.39 (0.0941)	38129-82100
	2.41 (0.0949)	38130-82100
	2.43 (0.0957)	38131-82100
	2.45 (0.0965)	38132-82100
	2.47 (0.0972)	38133-82100
	2.49 (0.0980)	38134-82100
	2.51 (0.0988)	38135-82100
	2.53 (0.0996)	38136-82100
	2.55 (0.1004)	38137-82100
	2.57 (0.1012)	38138-82100
	2.59 (0.1020)	38139-82100
	Thickness mm (in)	Part number
Available drive pinion bearing adjusting spacers	4.50 (0.1772)	38165-76000
	4.75 (0.1870)	38166-76000
	5.00 (0.1969)	38167-76000
	5.25 (0.2067)	38166-01J00
	5.50 (0.2165)	38166-01J10