BRAKE SYSTEM

SECTION BR

CONTENTS

PRECAUTIONS 3
Supplemental Restraint System (SRS) "AIR BAG" and "SEAT BELT PRE-TENSIONER"....3
Precautions for Brake System....3
Wiring Diagrams and Trouble Diagnoses....4
PREPARATION 5
Special Service Tools 5
Commercial Service Tools 5
NOISE, VIBRATION AND HARSHNESS (NVH) TROUBLESHOOTING 6
NVH Troubleshooting Chart....6
ON-VEHICLE SERVICE 7
Checking Brake Fluid Level....7
Checking Brake Line 7
Changing Brake Fluid 7
Bleeding Brake System 8
BRAKE HYDRAULIC LINE 9
Hydraulic Circuit....9
Removal....9
Inspection....10
Installation....10
PROPORTIONING VALVE 11
Inspection....11
Removal and Installation 11
BRAKE PEDAL AND BRACKET 12
Removal and Installation 12
Inspection....12
Adjustment 12
MASTER CYLINDER 14
Removal....14
Disassembly....15
Inspection....15
Assembly 15
Installation....16
BRAKE BOOSTER 17
On-vehicle Service....17
OPERATING CHECK 17
AIRTIGHT CHECK 17
Removal....17
Inspection....17
OUTPUT ROD LENGTH CHECK 17
Installation....18
VACUUM HOSE 19
Removal and Installation 19
Inspection....19
HOSES AND CONNECTORS 19
CHECK VALVE 19
FRONT DISC BRAKE 20
Components....20
Pad Replacement 20
Removal....21
Disassembly....22
Inspection....22
CALIPER....22
ROTOR....22
Assembly 23
Installation....23
Brake Burnishing Procedure....23
REAR DRUM BRAKE 24
Components....24
Removal....24
Inspection....25
WHEEL CYLINDER....25
Wheel Cylinder Overhaul....26
Inspection....26
DRUM....26
LINING....26
Installation....26
PARKING BRAKE CONTROL 28
Components....28
Removal and Installation 28
Inspection....28
Adjustment 29

ABS

DESCRIPTION 30
Purpose....30
Operation 30

CONTENTS (Cont'd)

ABS Hydraulic Circuit 30
System Components 31
System Description 31
SENSOR 31
CONTROL UNIT (BUILT-IN ABS ACTUATOR AND ELECTRIC UNIT) 31
ABS ACTUATOR AND ELECTRIC UNIT 31
G SENSOR (4WD MODELS ONLY) 32
Component Parts and Harness Connector Location 33
Schematic 34
Wiring Diagram - ABS - 35
ON BOARD DIAGNOSTIC SYSTEM DESCRIPTION 39
Self-diagnosis 39
FUNCTION 39
SELF-DIAGNOSIS PROCEDURE 39
HOW TO READ SELF-DIAGNOSTIC RESULTS (MALFUNCTION CODES) 40
HOW TO ERASE SELF-DIAGNOSTIC RESULTS (MALFUNCTION CODES) 40
CONSULT-II 41
CONSULT-II APPLICATION TO ABS 41
ECU (ABS CONTROL UNIT) PART NUMBER MODE 41
CONSULT-II Inspection Procedure 42
SELF-DIAGNOSIS PROCEDURE 42
SELF-DIAGNOSTIC RESULTS MODE 43
DATA MONITOR PROCEDURE 44
ACTIVE TEST PROCEDURE 45
DATA MONITOR MODE 46
ACTIVE TEST MODE 46
TROUBLE DIAGNOSIS - INTRODUCTION 47
How to Perform Trouble Diagnoses for Quick and Accurate Repair 47
INTRODUCTION 47
TROUBLE DIAGNOSIS - BASIC INSPECTION 48
Preliminary Check 48
Ground Circuit Check 51
ABS ACTUATOR AND ELECTRIC UNIT GROUND 51
TROUBLE DIAGNOSIS - GENERAL DESCRIPTION 52
Malfunction Code/Symptom Chart 52
TROUBLE DIAGNOSES FOR SELF-DIAGNOSTIC ITEMS 54
Wheel Sensor or Rotor 54
DIAGNOSTIC PROCEDURE 54
ABS Actuator Solenoid Valve or Solenoid Valve Relay 57
DIAGNOSTIC PROCEDURE 57
Motor Relay or Motor 59
DIAGNOSTIC PROCEDURE 59
Low Voltage 61
DIAGNOSTIC PROCEDURE 61
G Sensor and Circuit 63
DIAGNOSTIC PROCEDURE 63
Control Unit 65
DIAGNOSTIC PROCEDURE 65
TROUBLE DIAGNOSES FOR SYMPTOMS 66
1. ABS Works Frequently 66
2. Unexpected Pedal Action 66
3. Long Stopping Distance 68
4. ABS Does Not Work 68
5. Pedal Vibration and Noise 69
6. Warning Lamp Does Not Come On When Ignition Switch Is Turned On 70
7. Warning Lamp Stays On When Ignition Switch Is Turned On 72
8. Vehicle Vibrates Excessively When ABS Is Operating 75
REMOVAL AND INSTALLATION 78
Front Wheel Sensor 78
Rear Wheel Sensor 78
Front Sensor Rotor 79
REMOVAL 79
INSTALLATION 79
Rear Sensor Rotor 79
REMOVAL 79
INSTALLATION 79
G Sensor 79
ABS Actuator and Electric Unit 80
REMOVAL 80
INSTALLATION 80

SERVICE DATA AND SPECIFICATIONS (SDS) 81
General Specifications 81
Disc Brake 81
Drum Brake 81
Brake Pedal 81
Parking Brake Control 82

Supplemental Restraint System (SRS) "AIR BAG" and "SEAT BELT PRE-TENSIONER"

NBBR0122

The Supplemental Restraint System such as "AIR BAG" and "SEAT BELT PRE-TENSIONER" used along with a seat belt, helps to reduce the risk or severity of injury to the driver and front passenger for certain types of collision. The SRS system composition which is available to INFINITI QX4 is as follows:

- For a frontal collision
  The Supplemental Restraint System consists of driver air bag module (located in the center of the steering wheel), front passenger air bag module (located on the instrument panel on passenger side), seat belt pre-tensioners, a diagnosis sensor unit, warning lamp, wiring harness and spiral cable.
- For a side collision
  The Supplemental Restraint System consists of side air bag module (located in the outer side of front seat), satellite sensor, diagnosis sensor unit (one of components of air bags for a frontal collision), wiring harness, warning lamp (one of components of air bags for a frontal collision).

Information necessary to service the system safely is included in the **RS section** of this Service Manual.

WARNING:

- **To avoid rendering the SRS inoperative, which could increase the risk of personal injury or death in the event of a collision which would result in air bag inflation, all maintenance must be performed by an authorized INFINITI dealer.**
- **Improper maintenance, including incorrect removal and installation of the SRS, can lead to personal injury caused by unintentional activation of the system. For removal of Spiral Cable and Air Bag Module, see the RS section.**
- **Do not use electrical test equipment on any circuit related to the SRS unless instructed to in this Service Manual. SRS wiring harnesses can be identified by yellow harness connector (and by yellow harness protector or yellow insulation tape before the harness connectors).**

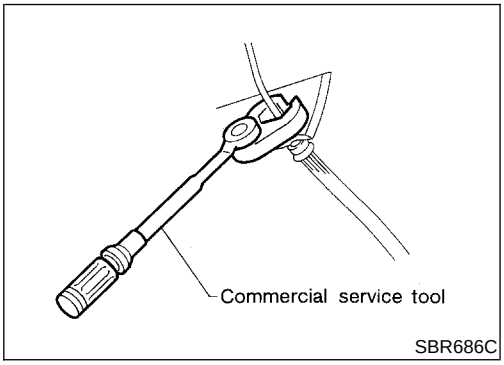

Precautions for Brake System

NBBR0002

- **Use brake fluid "DOT 3".**
- **Never reuse drained brake fluid.**
- **Be careful not to splash brake fluid on painted areas; it may cause paint damage. If brake fluid is splashed on painted areas, wash it away with water immediately.**
- **To clean master cylinder parts, disc brake caliper parts or wheel cylinder parts, use clean brake fluid.**
- **Never use mineral oils such as gasoline or kerosene. They will ruin rubber parts of hydraulic system.**
- **Use flare nut wrench when removing and installing brake tubes.**
- **Always torque brake lines when installing.**

WARNING:

- **Clean brakes with a vacuum dust collector to minimize risk of health hazard from powder caused by friction.**

Wiring Diagrams and Trouble Diagnoses

NBBR0003

When you read wiring diagrams, refer to the following:

- GI-12, “HOW TO READ WIRING DIAGRAMS”
- EL-10, “POWER SUPPLY ROUTING” for power distribution circuit

When you perform trouble diagnoses, refer to the following:

- GI-36, “HOW TO FOLLOW TEST GROUPS IN TROUBLE DIAGNOSES”
- GI-25, “HOW TO PERFORM EFFICIENT DIAGNOSIS FOR AN ELECTRICAL INCIDENT”

Special Service Tools

NBBR0004

The actual shapes of Kent-Moore tools may differ from those of special service tools illustrated here.

Tool number (Kent-Moore No.) Tool name	Description
KV40106500 (J25852-B) Rear wheel bearing puller	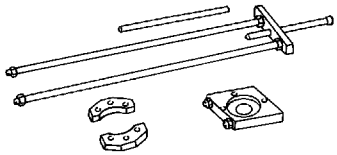 NT724 Removing rear wheel sensor rotor

Commercial Service Tools

NBBR0005

Tool name	Description
1 Flare nut crowfoot 2 Torque wrench	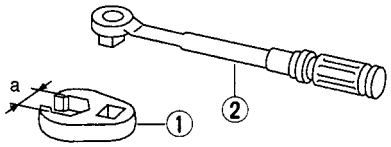 NT360 Removing and installing each brake piping **a: 10 mm (0.39 in)**
Brake fluid pressure gauge	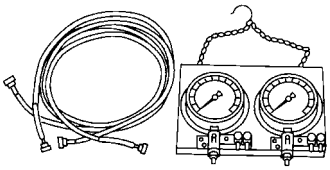 NT151 Measuring brake fluid pressure
Rear wheel sensor rotor drift	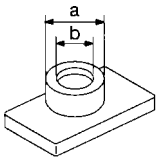 NT509 Installing rear wheel sensor rotor **a: 75 mm (2.95 in) dia.** **b: 63 mm (2.48 in) dia.**

NVH Troubleshooting Chart

NBBR0085S01

Use the chart below to help you find the cause of the symptom. If necessary, repair or replace these parts.

Reference page			BR-20, 26	BR-20, 26	BR-24	BR-20	—	—	BR-22, 26	—	—	—	BR-23	BR-26	PD-4	PD-4	AX-3	AX-3	SU-3	SU-3	SU-3	ST-6
Possible cause and SUSPECTED PARTS			Linings or pads - damaged	Linings or pads - uneven wear	Return spring damaged	Shims damaged	Rotor or drum imbalance	Rotor or drum damage	Rotor or drum runout	Rotor or drum deformation	Rotor or drum deflection	Rotor or drum rust	Rotor thickness variation	Drum out of round	PROPELLER SHAFT	DIFFERENTIAL	DRIVE SHAFT	AXLE	SUSPENSION	TIRES	ROAD WHEEL	STEERING
Symptom	BRAKE	Noise	×	×	×	×									×	×	×	×	×	×	×	×
		Shake					×								×		×	×	×	×	×	×
		Shimmy, Judder					×	×	×	×	×	×	×	×				×	×	×	×	×

×: Applicable

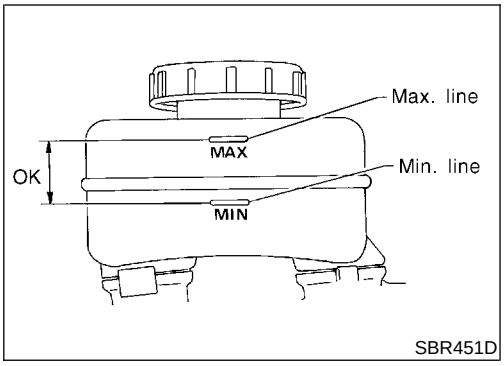

SBR451D

Checking Brake Fluid Level

NBBR0006

- Check fluid level in reservoir tank. It should be between Max and Min lines on reservoir tank.
- If fluid level is extremely low, check brake system.
- If the brake warning lamp comes on, check brake fluid level switch and parking brake switch.

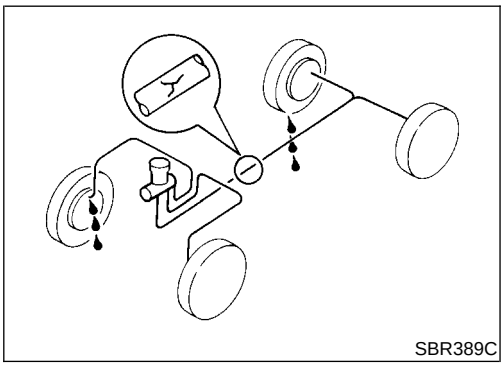
SBR389C

Checking Brake Line

NBBR0007

CAUTION:

If leakage occurs around joints, retighten or, if necessary, replace damaged parts.

1. Check brake lines (tubes and hoses) for cracks, deterioration or other damage. Replace any damaged parts.
2. Check for oil leakage by fully depressing brake pedal while engine is running.

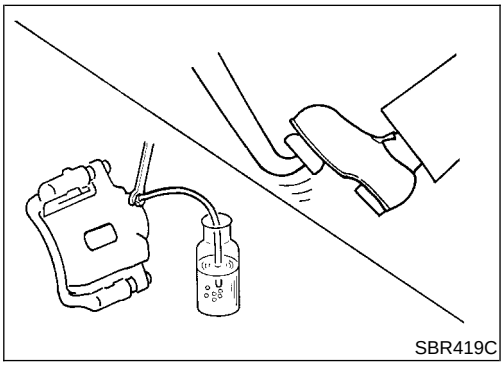
SBR419C

Changing Brake Fluid

NBBR0008

CAUTION:

- **Refill with new brake fluid "DOT 3".**
- **Always keep fluid level higher than minimum line on reservoir tank.**
- **Never reuse drained brake fluid.**
- **Be careful not to splash brake fluid on painted areas; it may cause paint damage. If brake fluid is splashed on painted areas, wash it away with water immediately.**

1. Clean inside of reservoir tank, and refill with new brake fluid.
2. Connect a vinyl tube to each air bleeder valve.
3. Drain brake fluid from each air bleeder valve by depressing brake pedal.
4. Refill until brake fluid comes out of each air bleeder valve.
   Use same procedure as in bleeding hydraulic system to refill brake fluid.
   Refer to "Bleeding Brake System", BR-8.

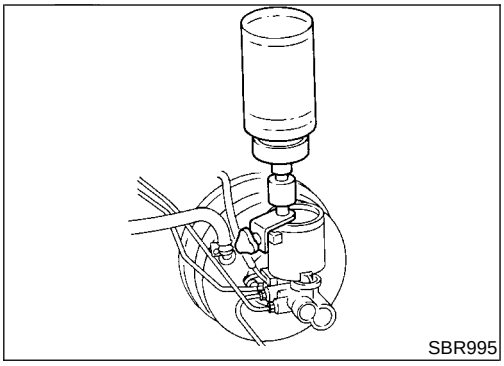
SBR995

Bleeding Brake System

=NBBR0009

CAUTION:

- **Carefully monitor brake fluid level at master cylinder during bleeding operation.**
- **If master cylinder is suspected to have air inside, bleed air from master cylinder first. Refer to "Installation", "MASTER CYLINDER", BR-16.**
- **Fill reservoir with new brake fluid "DOT 3". Make sure it is full at all times while bleeding air out of system.**
- **Place a container under master cylinder to avoid spillage of brake fluid.**
- **Turn ignition switch OFF and disconnect ABS actuator and electric unit connectors or battery ground cable.**
- **Bleed air in the following order.**

1. Left rear brake
2. Right rear brake
3. Left front brake
4. Right front brake

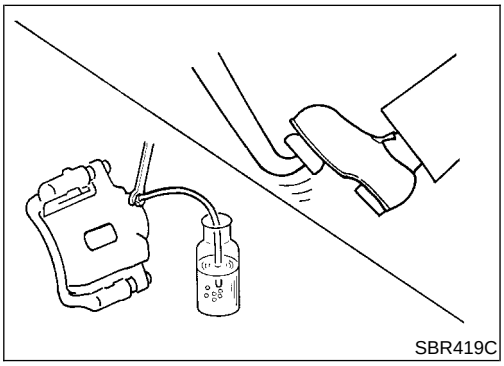
SBR419C

1. Connect a transparent vinyl tube to air bleeder valve.
2. Fully depress brake pedal several times.
3. With brake pedal depressed, open air bleeder valve to release air.
4. Close air bleeder valve.
5. Release brake pedal slowly.
6. Repeat steps 2. through 5. until clear brake fluid comes out of air bleeder valve.
7. Tighten air bleeder valve.

   : 7 - 9 N·m (0.7 - 0.9 kg-m, 61 - 78 in-lb)

Hydraulic Circuit

NBBR0010

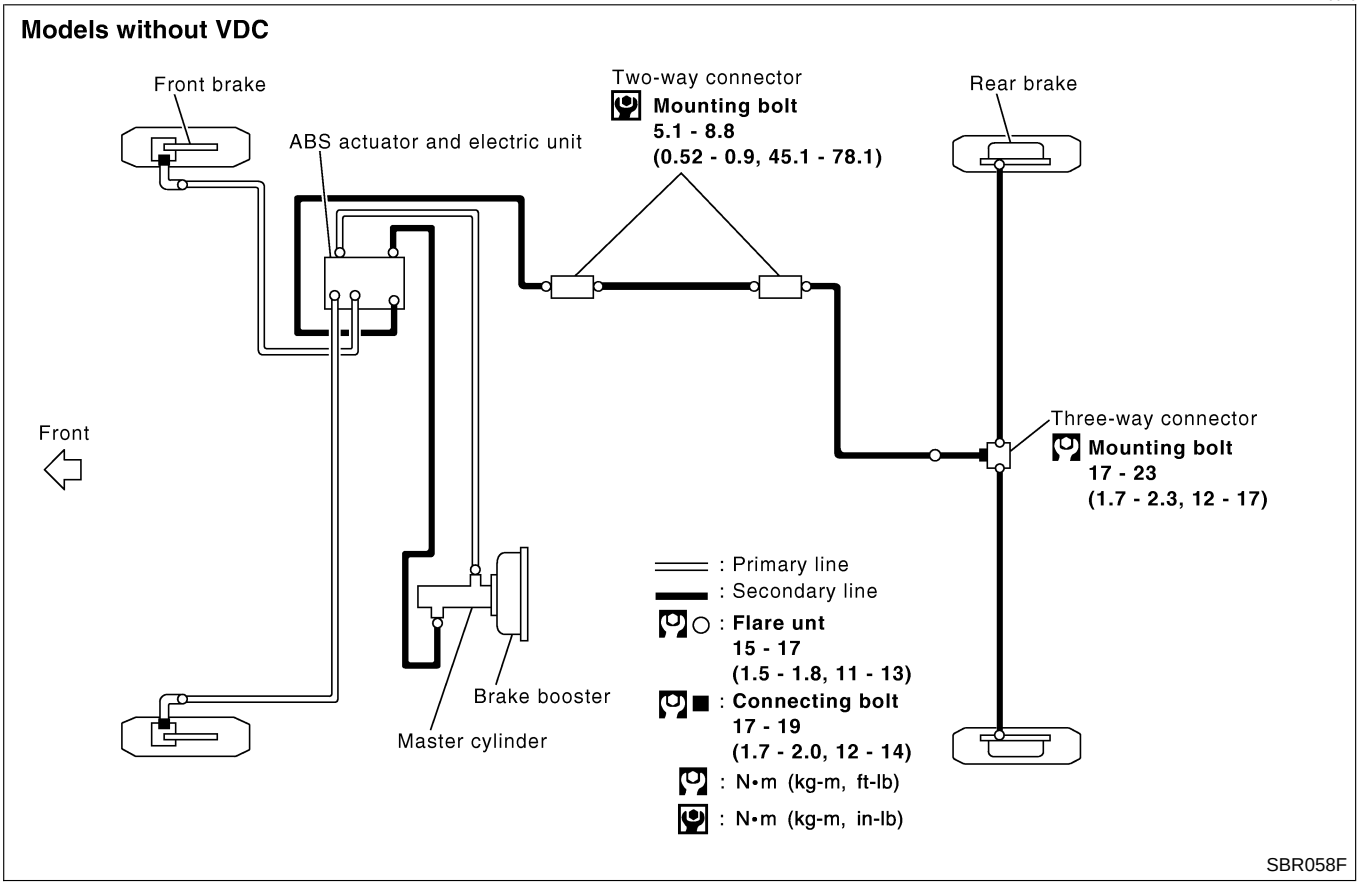

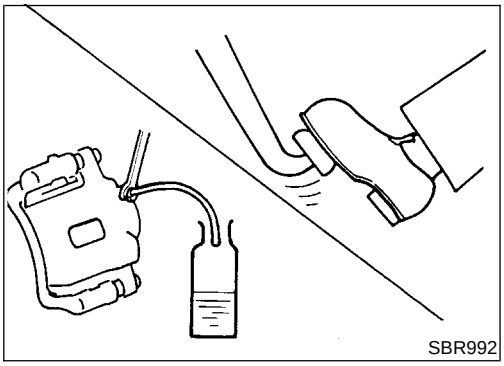

Removal

NBBR0011

CAUTION:

- **Be careful not to splash brake fluid on painted areas; it may cause paint damage. If brake fluid is splashed on painted areas, wash it away with water immediately.**
- **All hoses must be free from excessive bending, twisting and pulling.**

1. Connect vinyl tube to air bleeder valve.
2. Drain brake fluid from each air bleeder valve by depressing brake pedal.
3. Remove flare nut connecting brake tube and hose, then withdraw lock spring.
4. Cover openings to prevent entrance of dirt whenever disconnecting brake line.

Inspection

NBBR0012

Check brake lines (tubes and hoses) for cracks, deterioration or other damage. Replace any damaged parts.

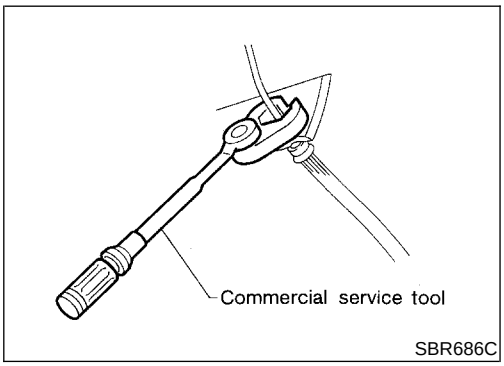

Installation

NBBR0013

CAUTION:

- **Refill with new brake fluid “DOT 3”.**
- **Never reuse drained brake fluid.**

1. Tighten all flare nuts and connecting bolts.

   Flare nut:

   : 15 - 17 N·m (1.5 - 1.8 kg-m, 11 - 13 ft-lb)

   Connecting bolt:

   : 17 - 19 N·m (1.7 - 2.0 kg-m, 12 - 14 ft-lb)

2. Refill until new brake fluid comes out of each air bleeder valve.
3. Bleed air. Refer to “Bleeding Brake System”, BR-8.

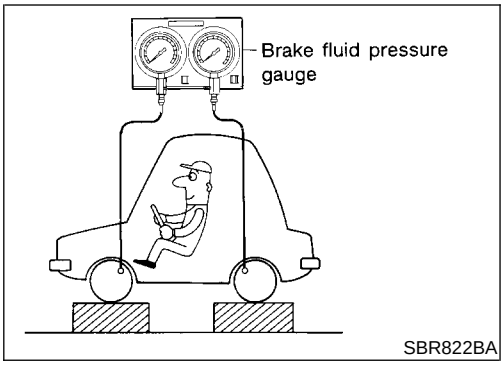

SBR822BA

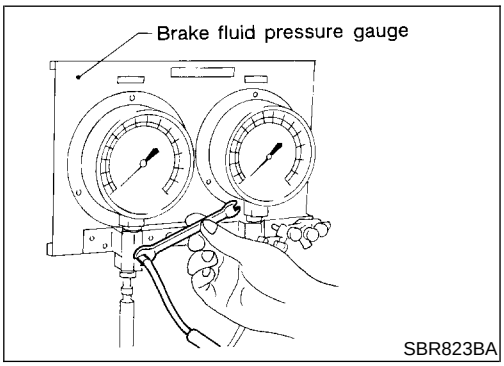

SBR823BA

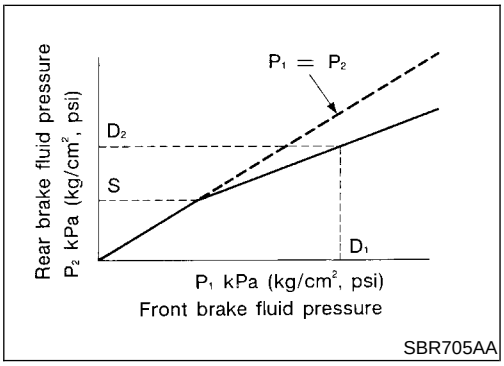

SBR705AA

Inspection

NBBR0116

CAUTION:

- **Carefully monitor brake fluid level at master cylinder.**
- **Use new brake fluid "DOT 3".**
- **Be careful not to splash brake fluid on painted areas; it may cause paint damage. If brake fluid is splashed on paint areas, wash it away with water immediately.**
- **Depress pedal slowly when raising front brake pressure.**
- **Check rear brake pressure 2 seconds after front brake pressure reaches specified value.**
- **Disconnect harness connectors from ABS actuator and electric unit before checking.**

1. Remove front LH tire.
2. Connect tool to air bleeders on front LH brake caliper and rear LH or RH brake wheel cylinder.
3. Install front LH tire.

Before installing front LH tire, confirm the tool is not touching the front LH wheel.

4. Bleed air from the tool.
5. Check fluid pressure by depressing brake pedal.

kPa (kg/cm^2, psi)

Applied pressure (Front brake) D_1	6,375 (65, 924)
Output pressure (Rear brake) D_2	3,432 - 3,825 (35 - 39, 498 - 555)

If output pressure is out of specifications, replace master cylinder assembly.

6. Bleed air after disconnecting the tool. Refer to "Bleeding Brake System", BR-8.
7. Install front LH tire.

Removal and Installation

NBBR0117

Always replace together with master cylinder as an assembly.

- Refer to "MASTER CYLINDER", BR-14.

Removal and Installation

NBBR0016

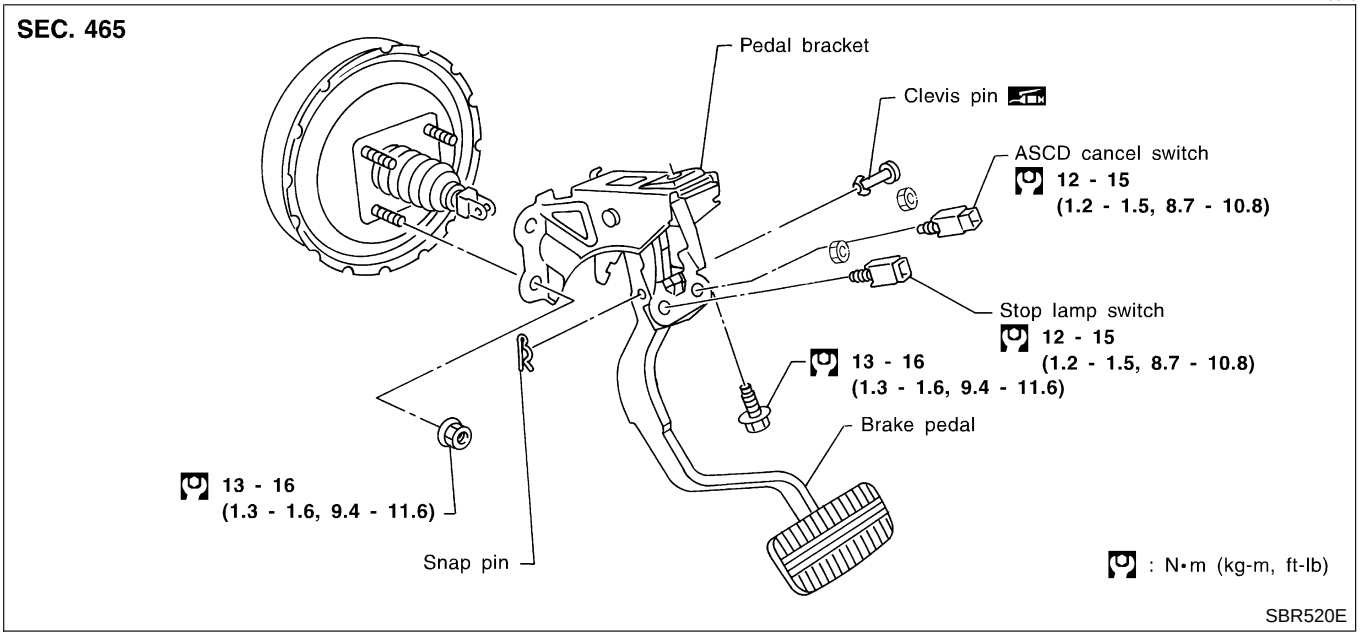

Inspection

NBBR0017

Check brake pedal for following items.

- Brake pedal bend
- Clevis pin deformation
- Crack of any welded portion
- Crack or deformation of clevis pin stopper

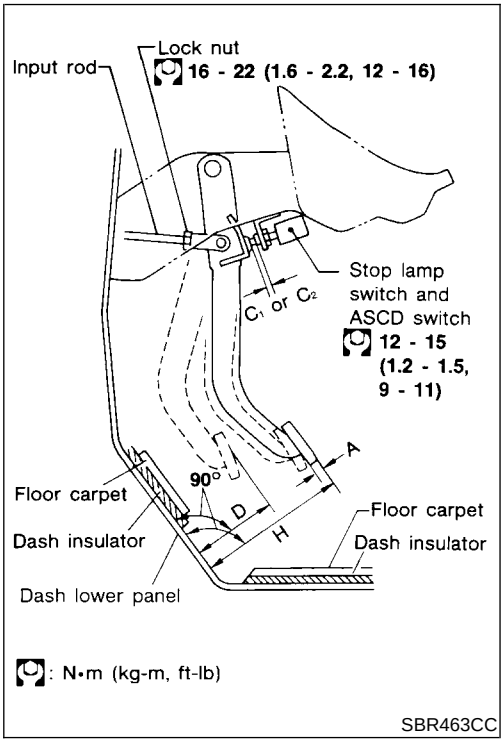

Adjustment

NBBR0018

Check brake pedal free height from metal panel.

H: Free height

Refer to SDS (BR-81).

D: Depressed height

Refer to SDS (BR-81).

Under force of 490 N (50 kg, 110 lb) with engine running

C_1, C_2: Clearance between pedal stopper and threaded end of stop lamp switch and ASCD switch

0.3 - 1.0 mm (0.012 - 0.039 in)

A: Pedal free play

1 - 3 mm (0.04 - 0.12 in)

If necessary, adjust brake pedal free height.

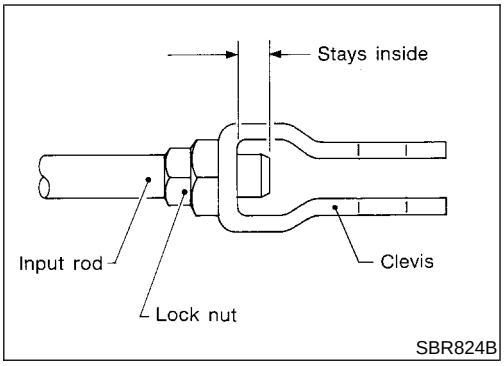

1. Loosen lock nut and adjust pedal free height by turning brake booster input rod. Then tighten lock nut.

Make sure that tip of input rod stays inside.

2. Adjust clearance "C_1" and "C_2" with stop lamp switch and ASCD switch respectively. Then tighten lock nuts.
3. Check pedal free play.

Make sure that stop lamp is off when pedal is released.

4. Check brake pedal's depressed height while engine is running. If depressed height is below specified value, check brake system for leaks, accumulation of air or any damage to components (master cylinder, wheel cylinder, etc.). Then make necessary repairs.

Removal

NBBR0019

CAUTION:

- **Be careful not to splash brake fluid on painted areas; it may cause paint damage. If brake fluid is splashed on painted areas, wash it away with water immediately.**
- **In the case of brake fluid leakage from the master cylinder, disassemble the cylinder. Then check piston cups for deformation or scratches and replace necessary parts.**

1. Connect a vinyl tube to air bleeder valve.
2. Drain brake fluid from each air bleeder valve, depressing brake pedal to empty fluid from master cylinder.
3. Remove brake pipe flare nuts.
4. Remove master cylinder mounting nuts.

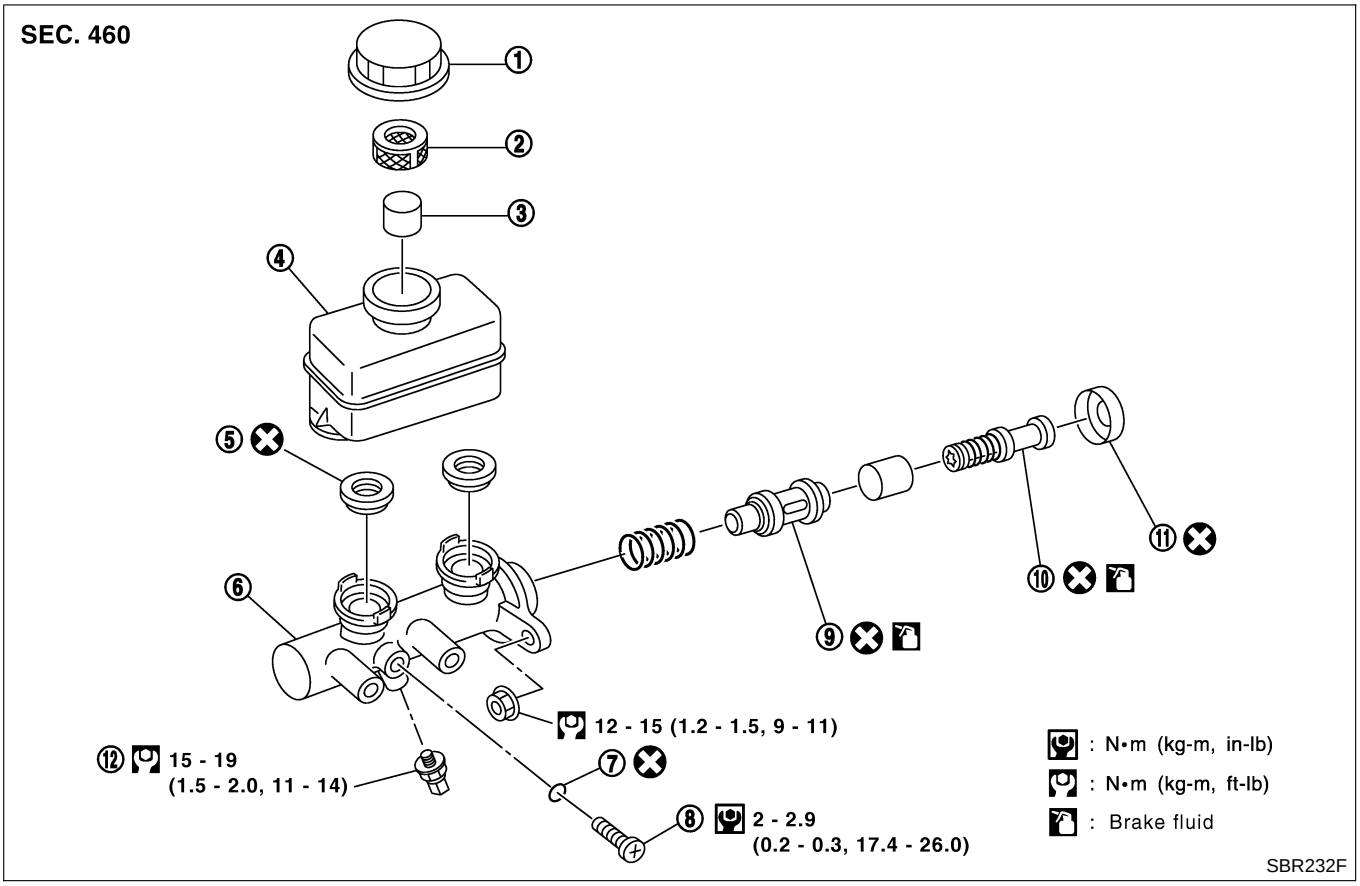

1. Reservoir cap
2. Oil filter
3. Float
4. Reservoir tank
5. Seal
6. Cylinder body
7. O-ring
8. Piston stopper
9. Secondary piston assembly
10. Primary piston assembly
11. Stopper cap
12. Pressure sensor (With ACCS model only)

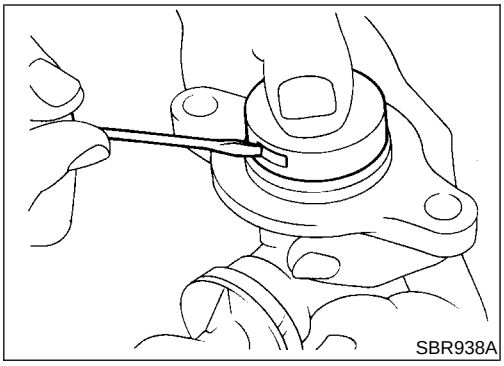
SBR938A

Disassembly

NBBR0020

1. Bend claws of stopper cap outward.

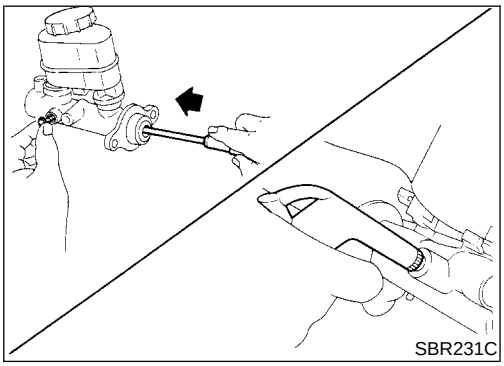
SBR231C

2. Remove piston stopper while piston is pushed into cylinder.
3. Remove piston assemblies.

If it is difficult to remove secondary piston assembly, gradually apply compressed air through fluid outlet.

4. Draw out reservoir tank.

Inspection

NBBR0021

Check master cylinder inner wall for pin holes or scratches. Replace if damaged.

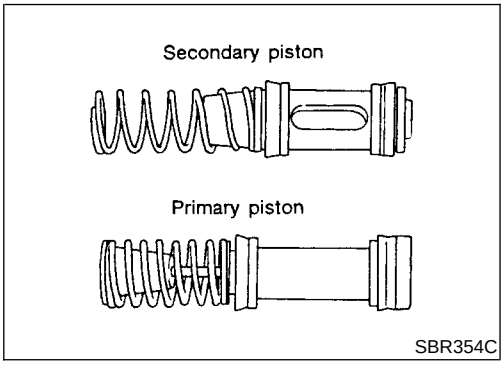

SBR354C

Assembly

NBBR0022

1. Insert secondary piston assembly. Then insert primary piston assembly.

- **Pay attention to direction of piston cups in figure at left. Also, insert pistons squarely to avoid scratches on cylinder bore.**
- **Pay attention to alignment of secondary piston slit with valve stopper mounting hole of cylinder body.**

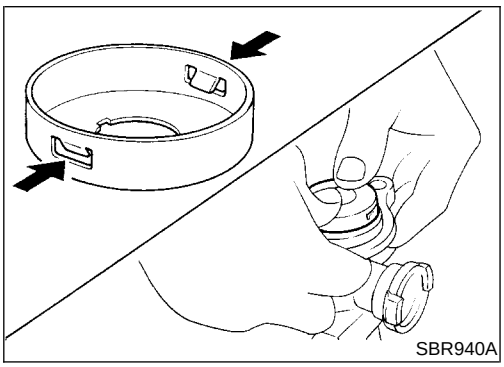
SBR940A

2. Install stopper cap.

Before installing stopper cap, ensure that claws are bent inward.

3. Push reservoir tank seals into cylinder body.
4. Push reservoir tank into cylinder body.

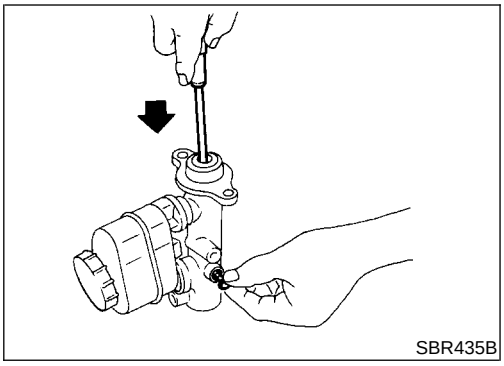
SBR435B

5. Install piston stopper while piston is pushed into cylinder.

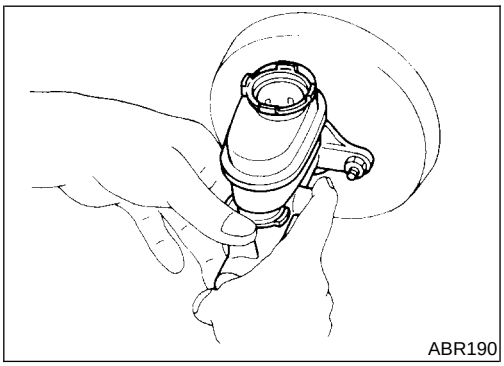
ABR190

Installation

NBBR0023

CAUTION:

- **Refill with new brake fluid "DOT 3".**
- **Never reuse drained brake fluid.**

1. Place master cylinder onto brake booster and secure mounting nuts lightly.
2. Torque mounting nuts.
   : 12 - 15 N·m (1.2 - 1.5 kg-m, 9 - 11 ft-lb)
3. Fill up reservoir tank with new brake fluid.
4. Plug all ports on master cylinder with fingers to prevent air suction while releasing brake pedal.
5. Have driver depress brake pedal slowly several times until no air comes out of master cylinder.
6. Fit brake lines to master cylinder.
7. Tighten flare nuts.
   : 15 - 17 N·m (1.5 - 1.8 kg-m, 11 - 13 ft-lb)
8. Bleed air. Refer to "Bleeding Brake System", BR-8.

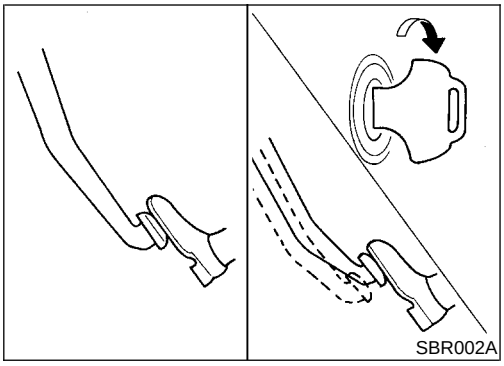
SBR002A

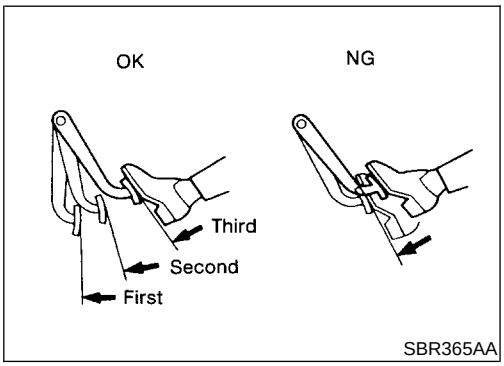

SBR365AA

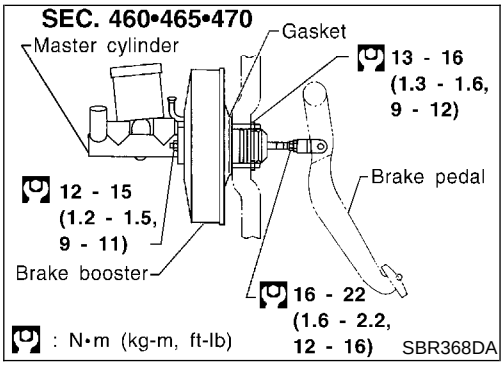

SBR368DA

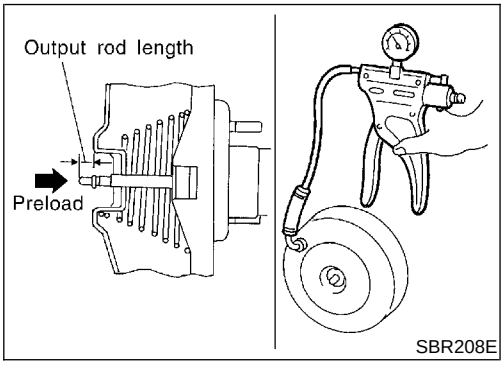

SBR208E

On-vehicle Service

NBBR0024

OPERATING CHECK

NBBR0024S01

1. Depress brake pedal several times with engine off. After exhausting vacuum, make sure there is no change in pedal stroke.
2. Depress brake pedal, then start engine. If pedal goes down slightly, operation is normal.

AIRTIGHT CHECK

NBBR0024S02

1. Start engine, and stop it after one or two minutes. Depress brake pedal several times slowly. Booster is airtight if pedal stroke is less each time.
2. Depress brake pedal while engine is running, and stop engine with pedal depressed. The pedal stroke should not change after holding pedal down for **30 seconds**.

Removal

NBBR0025

CAUTION:

- **Be careful not to splash brake fluid on painted areas; it may cause paint damage. If brake fluid is splashed on painted areas, wash it away with water immediately.**
- **Be careful not to deform or bend brake pipes, during removal of booster.**

Inspection

NBBR0026

OUTPUT ROD LENGTH CHECK

NBBR0026S01

1. Apply vacuum of −66.7 kPa (−500 mmHg, −19.69 inHg) to brake booster with a hand vacuum pump.
2. Add preload of 19.6 N (2.0 kg, 4.4 lb) to output rod.
3. Check output rod length.

   Specified length:

   10.275 - 10.525 mm (0.4045 - 0.4144 in)

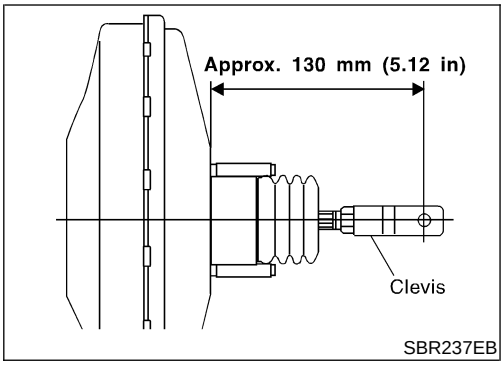

Installation

=NBBR0027

CAUTION:

- **Be careful not to deform or bend brake pipes during installation of booster.**
- **Replace clevis pin if damaged.**
- **Refill with new brake fluid “DOT 3”.**
- **Never reuse drained brake fluid.**
- **Take care not to damage brake booster mounting bolt thread when installing. Due to the narrow angle of installation, the threads can be damaged by the dash panel.**

1. Before fitting booster, temporarily adjust clevis to dimension shown.
2. Fit booster, then secure mounting nuts (brake pedal bracket to brake booster) lightly.
3. Connect brake pedal and booster input rod with clevis pin.
4. Secure mounting nuts.

   Specification: 13 - 16 N·m (1.3 - 1.6 kg-m, 9 - 12 ft-lb)
5. Install master cylinder. Refer to “Installation” in “MASTER CYLINDER”, BR-16.
6. Adjust brake pedal height and free play. Refer to “Adjustment” in “BRAKE PEDAL AND BRACKET”, BR-12.
7. Secure lock nut for clevis.

   : 16 - 22 N·m (1.6 - 2.2 kg-m, 12 - 16 ft-lb)
8. Bleed air. Refer to “Bleeding Brake System”, BR-8.

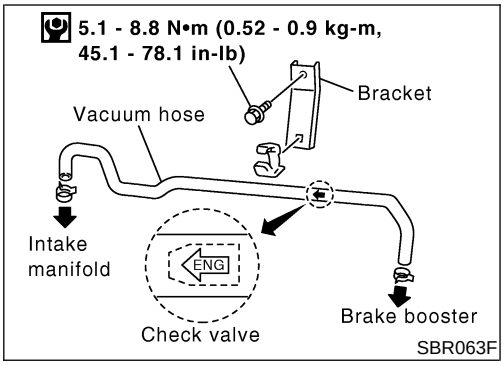

Removal and Installation

NBBR0151

CAUTION:

When installing vacuum hoses, pay attention to the following points.

- **Do not apply any oil or lubricants to vacuum hose and check valve.**
- **Insert vacuum tube into vacuum hose as shown.**

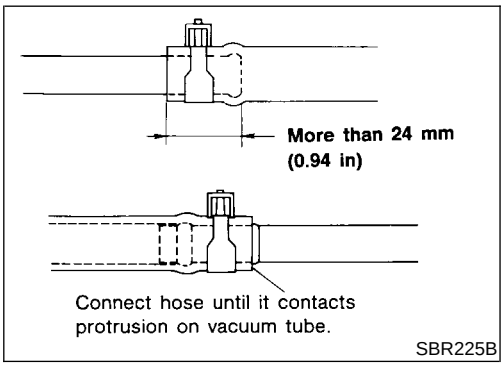

- **Install check valve, paying attention to its direction.**

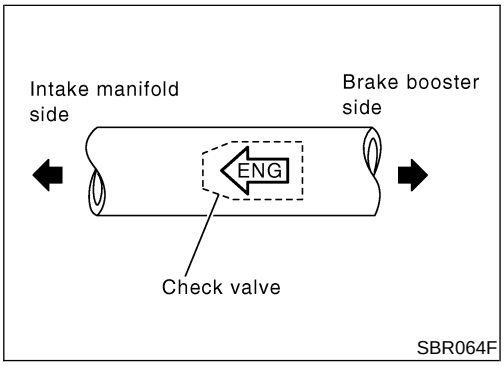

Inspection

NBBR0152

HOSES AND CONNECTORS

NBBR0152S01

Check vacuum lines, connections and check valve for airtightness, improper attachment chafing and deterioration.

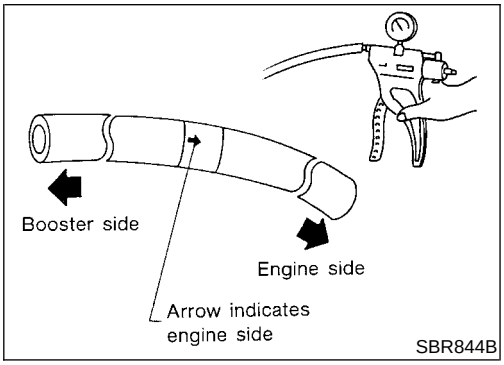

CHECK VALVE

NBBR0152S02

Check vacuum with a vacuum pump.

Connect to booster side	Vacuum should exist.
Connect to engine side	Vacuum should not exist.

Components

NBBR0031

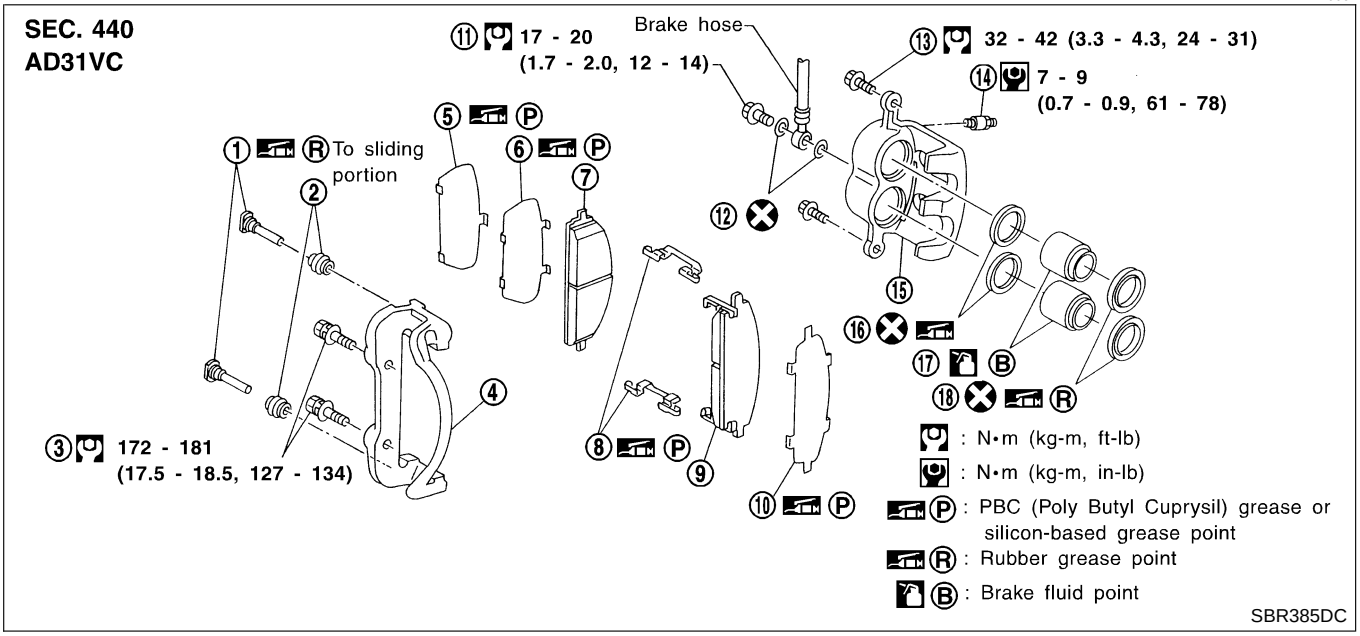

1. Main pin
2. Pin boot
3. Torque member fixing bolt
4. Torque member
5. Shim cover
6. Inner shim
7. Inner pad
8. Pad retainer
9. Outer pad
10. Outer shim
11. Connecting bolt
12. Copper washer
13. Main pin bolt
14. Bleed valve
15. Cylinder body
16. Piston seal
17. Piston
18. Piston boot

Pad Replacement

NBBR0032

WARNING:

Clean brakes with a vacuum dust collector to minimize the hazard of airborne particles or other materials.

CAUTION:

- **When cylinder body is open, do not depress brake pedal, or piston will pop out.**
- **Be careful not to damage piston boot or get oil on rotor. Always replace shims when replacing pads.**
- **If shims are rusted or show peeling of the rubber coat, replace them with new shims.**
- **It is not necessary to remove connecting bolt except for disassembly or replacement of caliper assembly. In this case, suspend cylinder body with wire so as not to stretch brake hose.**
- **Carefully monitor brake fluid level because brake fluid will return to reservoir when pushing back piston.**

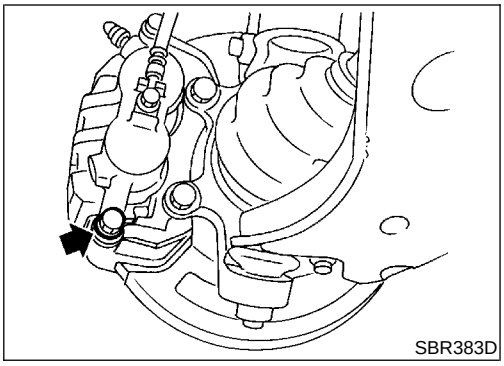

1. Remove master cylinder reservoir cap.
2. Remove lower pin bolt.

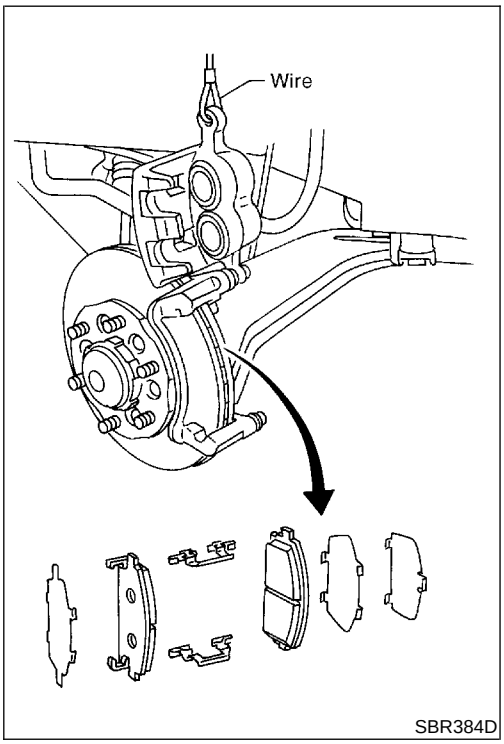

3. Open cylinder body upward. Then remove pad retainers, and inner and outer shims.

   Standard pad thickness:
   11.0 mm (0.433 in)
   Pad wear limit:
   2.0 mm (0.079 in)

Carefully monitor brake fluid level because brake fluid will return to reservoir when pushing back piston.

Removal

NBBR0033

WARNING:
Clean brake pads with a vacuum dust collector to minimize the hazard of airborne particles or other materials.

CAUTION:
Suspend caliper assembly with wire so as not to stretch brake hose.

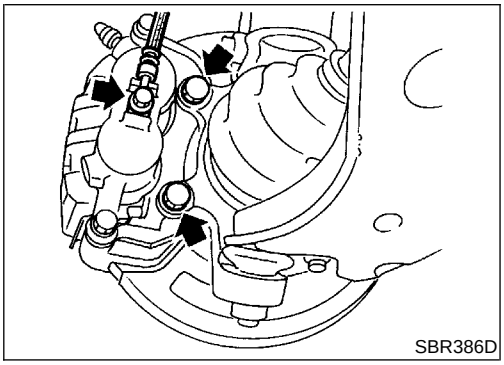

Remove torque member fixing bolts and connecting bolt.
It is not necessary to remove connecting bolt except for disassembly or replacement of caliper assembly. In this case, suspend caliper assembly with wire so as not to stretch brake hose.

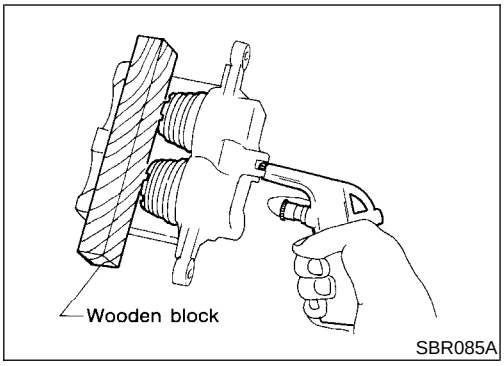

Disassembly

NBBR0034

WARNING:
Do not place your fingers in front of piston.

CAUTION:
Do not scratch or score cylinder wall.

1. Push out piston with dust seal with compressed air.
2. Remove piston seal with a suitable tool.

Inspection

NBBR0035

CALIPER

NBBR0035S01

Cylinder Body

NBBR0035S0101

- Check inside surface of cylinder for score, rust, wear, damage or presence of foreign objects. If any of the above conditions are observed, replace cylinder body.
- Minor damage from rust or foreign objects may be eliminated by polishing surface with a fine emery paper. Replace cylinder body if necessary.

CAUTION:
Use brake fluid to clean. Never use mineral oil.

Piston

NBBR0035S0102

Check piston for score, rust, wear, damage or presence of foreign objects. Replace if any of the above conditions are observed.

CAUTION:
Piston sliding surface is plated. Do not polish with emery paper even if rust or foreign objects are stuck to sliding surface.

Slide Pin, Pin Bolt and Pin Boot

NBBR0035S0103

Check for wear, cracks, rust or other damage. Replace if any of the above conditions are observed.

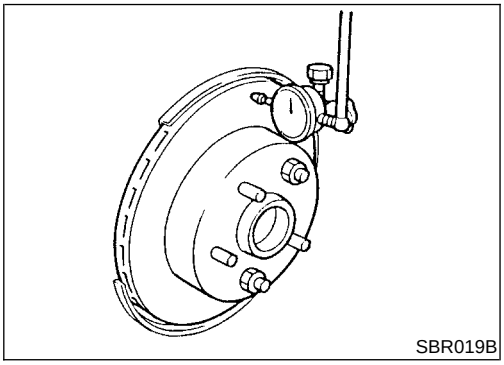

ROTOR

NBBR0035S02

Runout

NBBR0035S0201

1. Secure rotor to wheel hub with at least two nuts (M12 × 1.25).
2. Check runout using a dial indicator.

Make sure that wheel bearing axial end play is within the specifications before measuring. Refer to AX-4, “Front Wheel Bearing”.

Maximum runout:
0.1 mm (0.004 in)

3. If the runout is out of specification, find minimum runout position as follows:

a. Remove nuts and rotor from wheel hub.
b. Shift the rotor one hole and secure rotor to wheel hub with nuts.
c. Measure runout.
d. Repeat steps a. to c. so that minimum runout position can be found.

4. If the runout is still out of specification, turn rotor with on-car brake lathe (“MAD, DL-8700”, “AMMCO 700 and 705” or equivalent).

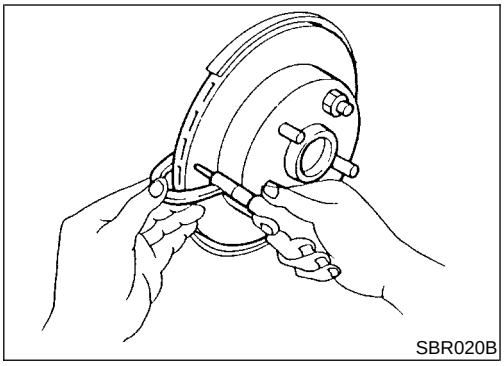
SBR020B

Thickness

NBBR0035S0202

Thickness variation (At least 8 positions):
Maximum 0.015 mm (0.0006 in)

If thickness variation exceeds the specification, turn rotor with on-car brake lathe.

Rotor repair limit:
26.0 mm (1.024 in)

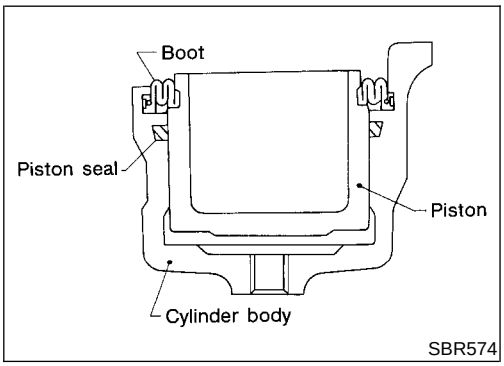

SBR574

Assembly

NBBR0036

1. Insert piston seal into groove on cylinder body.
2. With piston boot fitted to piston, insert piston boot into groove on cylinder body and install piston.
3. Properly secure piston boot

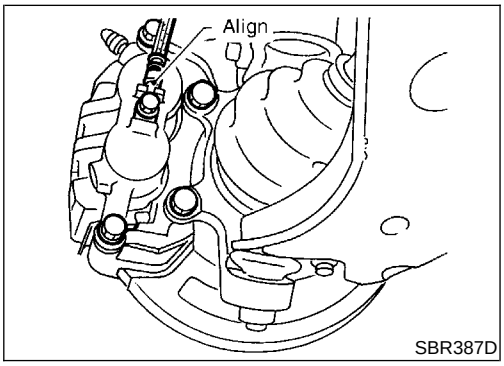

SBR387D

Installation

NBBR0037

CAUTION:

- **Refill with new brake fluid "DOT 3".**
- **Never reuse drained brake fluid.**

1. Install caliper assembly.
2. Install brake hose to caliper securely.
3. Install all parts and secure all bolts.
4. Bleed air. Refer to "Bleeding Brake System", BR-8.

Brake Burnishing Procedure

NBBR0086

When experiencing soft brake pedal feel at very low mileage, or after replacing the rotor, burnish the brake pad contact surfaces according to the following procedures.

CAUTION:

Only perform this procedure under safe road and traffic conditions. Use extreme caution.

1. Drive the vehicle on a straight smooth road at 50 km/h (31 MPH).
2. Use medium brake pedal/foot effort to bring the vehicle to a complete stop from 50 km/h (31 MPH). Adjust brake pedal/foot pressure such that vehicle stopping time equals 3 to 5 seconds.
3. To cool the brake system, drive the vehicle at 50 km/h (31 MPH) for 1 minute without stopping.
4. Repeat steps 1 to 3 10 times or more to complete the burnishing procedure.

Components

NBBR0038

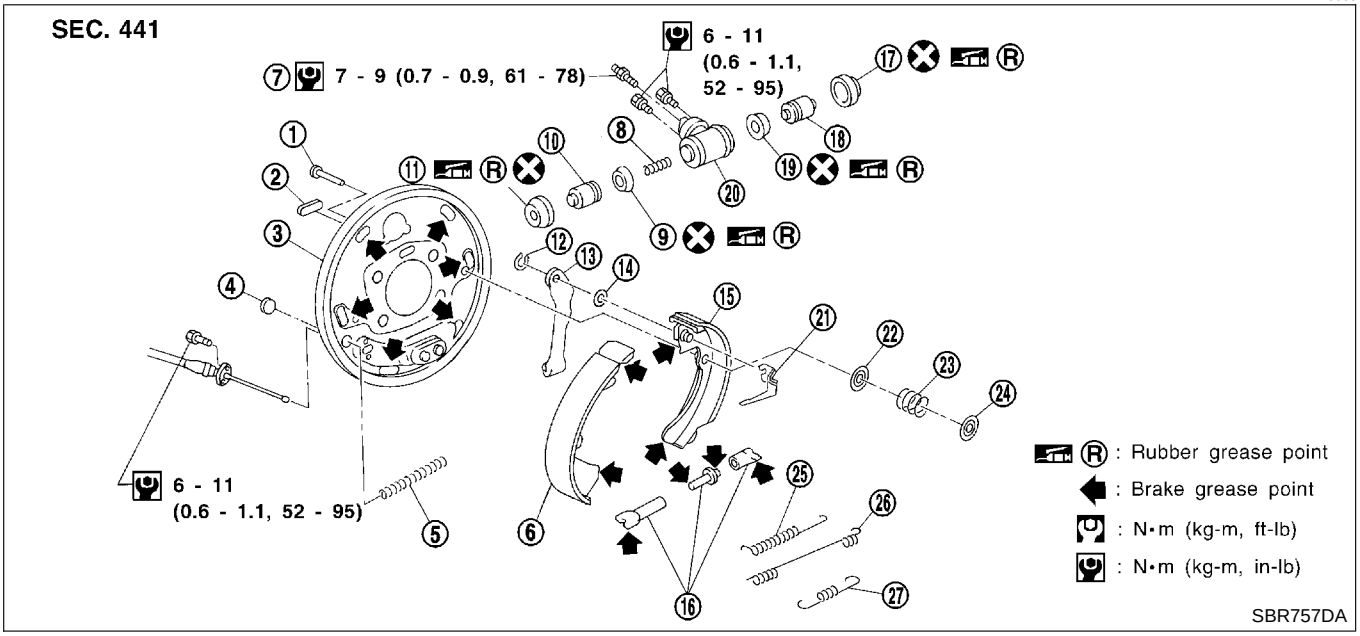

1. Shoe hold pin
2. Plug
3. Back plate
4. Check plug
5. Spring
6. Shoe (leading side)
7. Air bleeder
8. Spring
9. Piston cup
10. Piston
11. Boot
12. Retainer ring
13. Toggle lever
14. Wave washer
15. Shoe (trailing side)
16. Adjuster
17. Boot
18. Piston
19. Piston cup
20. Wheel cylinder
21. Adjuster lever
22. Spring seat
23. Shoe hold spring
24. Retainer
25. Adjuster spring
26. Return spring (upper)
27. Return spring (lower)

Removal

NBBR0039

WARNING:

Clean brake lining with a vacuum dust collector to minimize the hazard of airborne asbestos or other materials.

CAUTION:

Make sure parking brake lever is released completely.

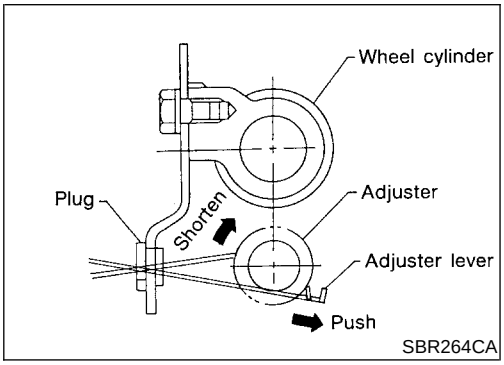

1. Release parking brake lever fully, then remove drum.
   If drum is hard to remove, the following procedures should be carried out.

a. Remove plug. Then shorten adjuster to make clearance between brake shoe and drum as shown.

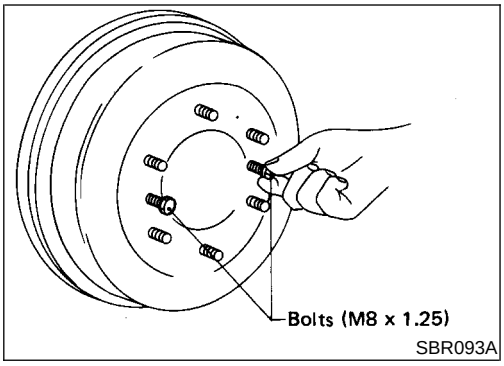

SBR093A

b. Tighten the two bolts gradually.

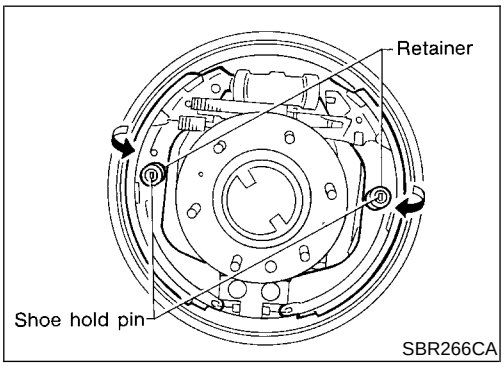

SBR266CA

2. After removing shoe hold pin by rotating push retainer, remove leading shoe then remove trailing shoe. Remove spring by rotating shoes in direction arrow.

Be careful not to damage wheel cylinder piston boots.

3. Remove adjuster.

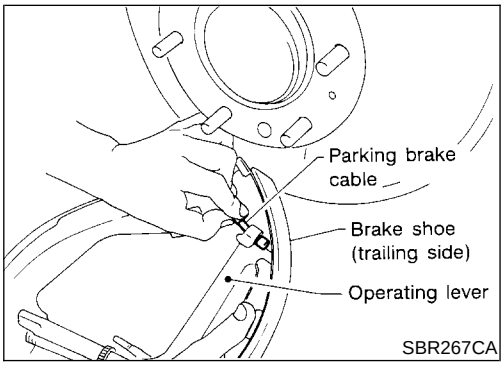

SBR267CA

4. Disconnect parking brake cable from toggle lever.

Be careful not to damage parking brake cable when separating it.

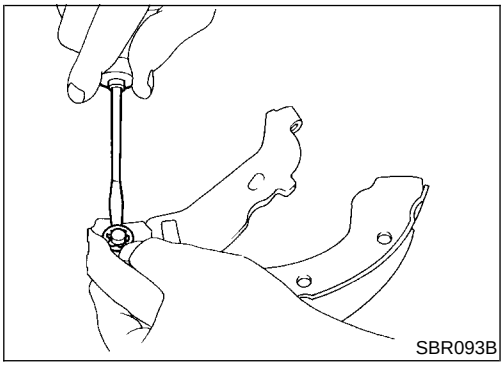
SBR093B

5. Remove retainer ring with a suitable tool. Then separate toggle lever and brake shoe.

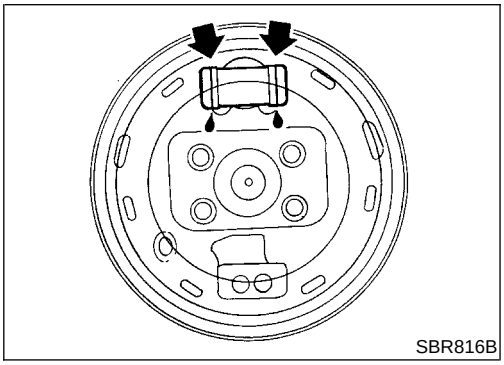
SBR816B

Inspection

NBBR0040

WHEEL CYLINDER

NBBR0040S01

- Check wheel cylinder for leakage.
- Check for wear, damage and loose conditions. Replace if any such condition exists.

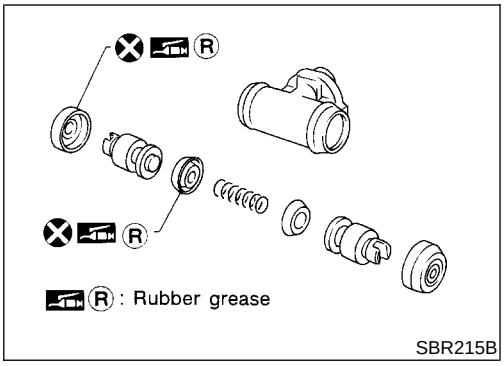

SBR215B

Wheel Cylinder Overhaul

NBBR0041

- Check all internal parts for wear, rust and damage. Replace if necessary.
- Pay attention so as not to scratch cylinder when installing pistons.

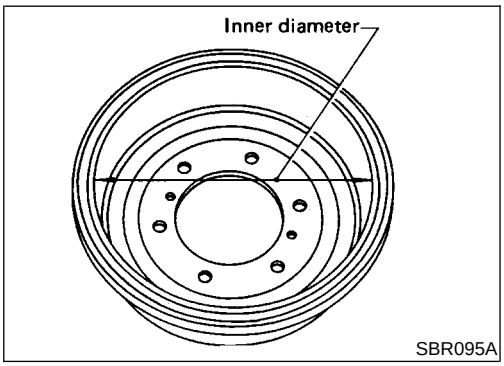

SBR095A

Inspection

NBBR0042

DRUM

NBBR0042S01

Maximum inner diameter: 296.5 mm (11.67 in)
Out-of-roundness: 0.03 mm (0.0012 in) or less

- Contact surface should be fine finished with No. 120 to 150 emery paper.
- Using a drum lathe, lathe brake drum if it shows scoring, partial wear or stepped wear.
- After brake drum has been completely reconditioned or replaced, check drum and shoes for proper contact pattern.

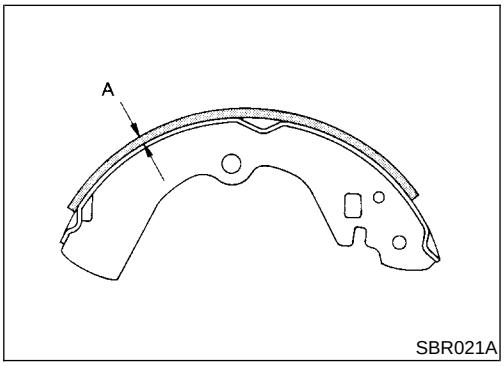

SBR021A

LINING

NBBR0042S02

Check lining thickness.

Standard lining thickness:
6.1 mm (0.240 in)
Lining wear limit (A):
1.5 mm (0.059 in)

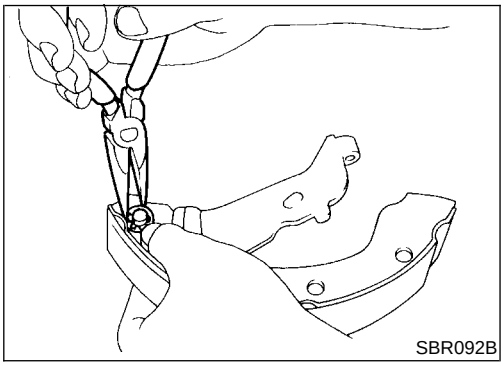
SBR092B

Installation

NBBR0043

Always perform shoe clearance adjustment. Refer to BR-29.

1. Fit toggle lever to brake shoe (trailing side) with retainer ring.

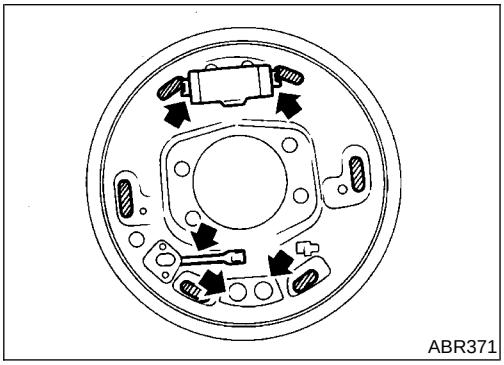
ABR371

2. Apply brake grease to the contact areas (indicated by arrows and hatching) shown at left.

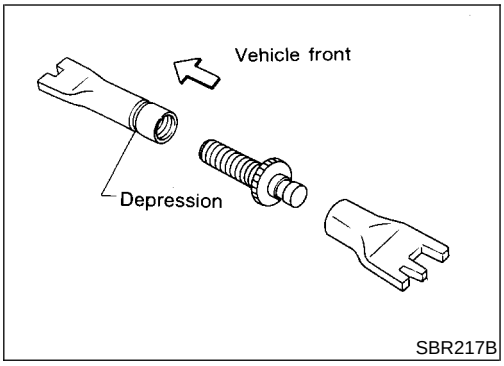

3. Shorten adjuster by rotating it.

- **Pay attention to direction of adjuster.**

Wheel	Screw	Depression
Left	Left-hand thread	Yes
Right	Right-hand thread	No

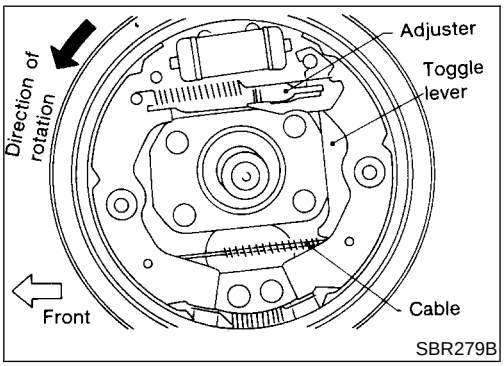

4. Connect parking brake cable to toggle lever.
5. Install all parts.

Be careful not to damage wheel cylinder piston boots.

6. Check all parts are installed properly.

Pay attention to direction of adjuster assembly.

7. Install brake drum.
8. When installing new wheel cylinder or overhauling wheel cylinder, bleed air. Refer to "Bleeding Brake System", BR-8.
9. Adjust parking brake. Refer to "Adjustment", "PARKING BRAKE CONTROL", BR-29.

Components

NBBR0044

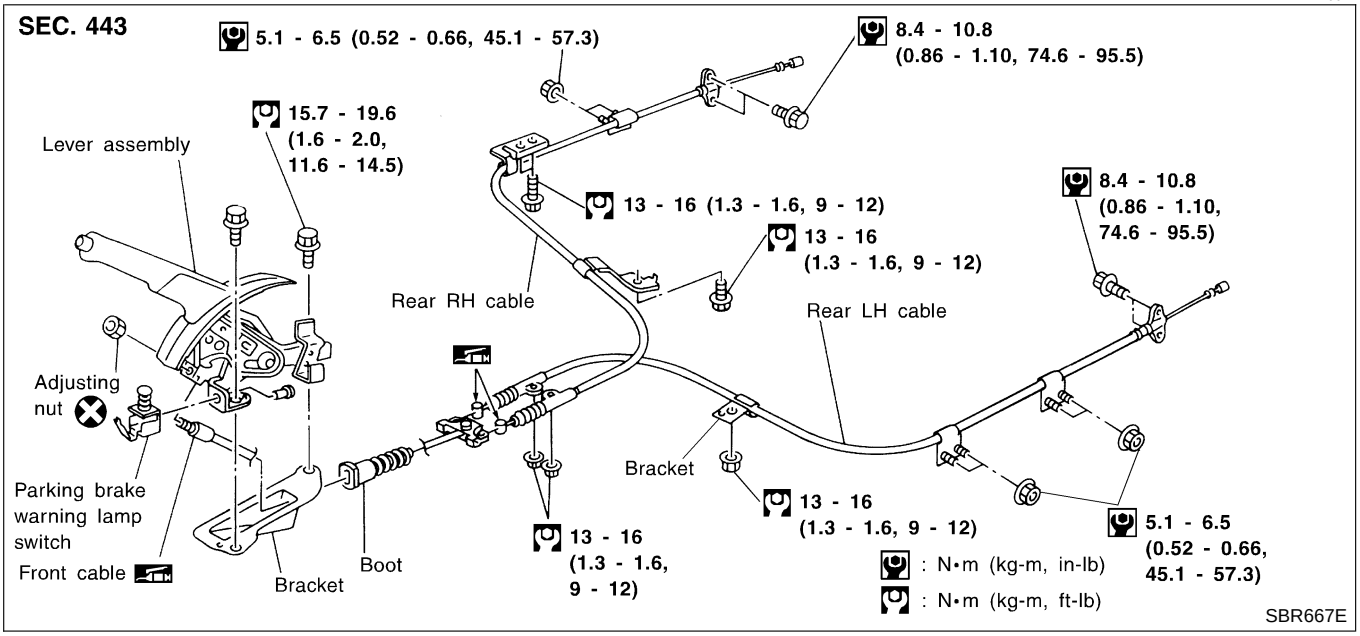

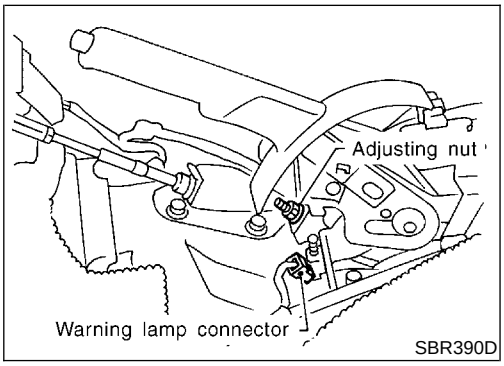

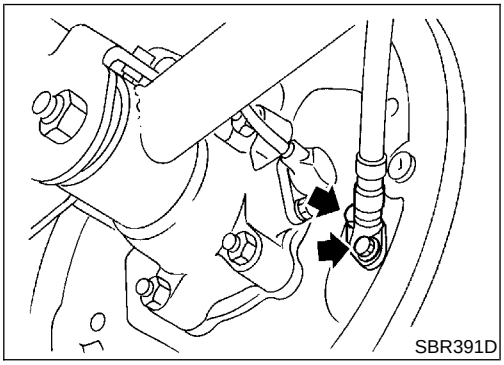

Removal and Installation

NBBR0045

1. To remove parking brake cable, first remove center console.
2. Disconnect warning lamp connector.
3. Remove bolts, slacken off and remove adjusting nut.
4. Disconnect cable. Refer to “Removal”, “REAR DRUM BRAKE”, BR-24.

Inspection

NBBR0046

1. Check control lever for wear or other damage. Replace if necessary.
2. Check wires for discontinuity or deterioration. Replace if necessary.
3. Check warning lamp and switch. Replace if necessary.
4. Check parts at each connecting portion and, if deformed or damaged, replace.

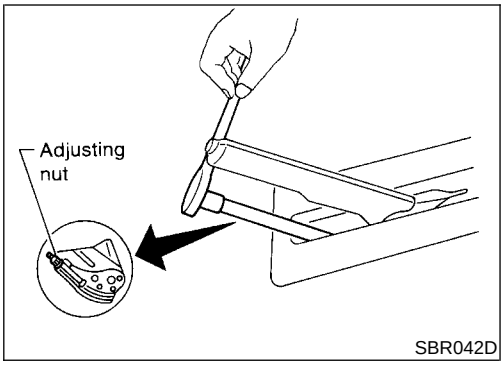

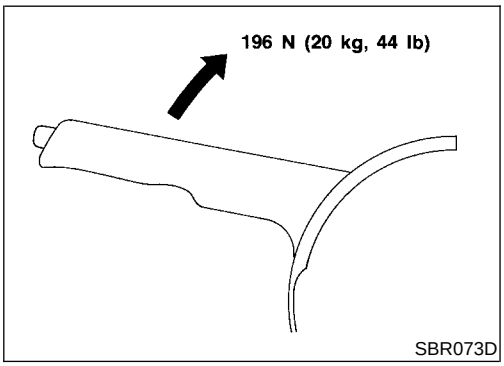

Adjustment

NBBR0047

1. Adjust clearance between shoe and drum as follows:
a. Release parking brake lever and loosen adjusting nut.
b. Depress brake pedal fully at least 10 times with engine running.
2. Pull control lever 4 - 5 notches. Then adjust control lever by turning adjusting nut.
3. Pull control lever with specified amount of force. Check lever stroke and ensure smooth operation.

   Number of notches: 6 - 8

4. Bend warning lamp switchplate to ensure:

- Warning lamp comes on when lever is lifted “A” notches.
- Warning lamp goes out when lever is fully released.

   Number of “A” notches: 1 or less

Purpose

NBBR0087

The Anti-Lock Brake System (ABS) consists of electronic and hydraulic components. It allows for control of braking force so locking of the wheels can be avoided.

1) Improves proper tracking performance through steering wheel operation.
2) Eases obstacle avoidance through steering wheel operation.
3) Improves vehicle stability.

Operation

NBBR0088

- When the vehicle speed is less than 10 km/h (6 MPH) this system does not work.
- The Anti-Lock Brake System (ABS) has a self-test function. The system turns on the ABS warning lamp for 1 second each time the ignition switch is turned “ON”. After the engine is started, the ABS warning lamp turns off. The system performs a test the first time the vehicle reaches 6 km/h (4 MPH). A mechanical noise may be heard as the ABS performs this self-test. This is a normal part of the self-test feature. If a malfunction is found during this check, the ABS warning lamp will stay on.
- While driving, a mechanical noise may be heard during ABS operation. This is a normal condition.

ABS Hydraulic Circuit

NBBR0089

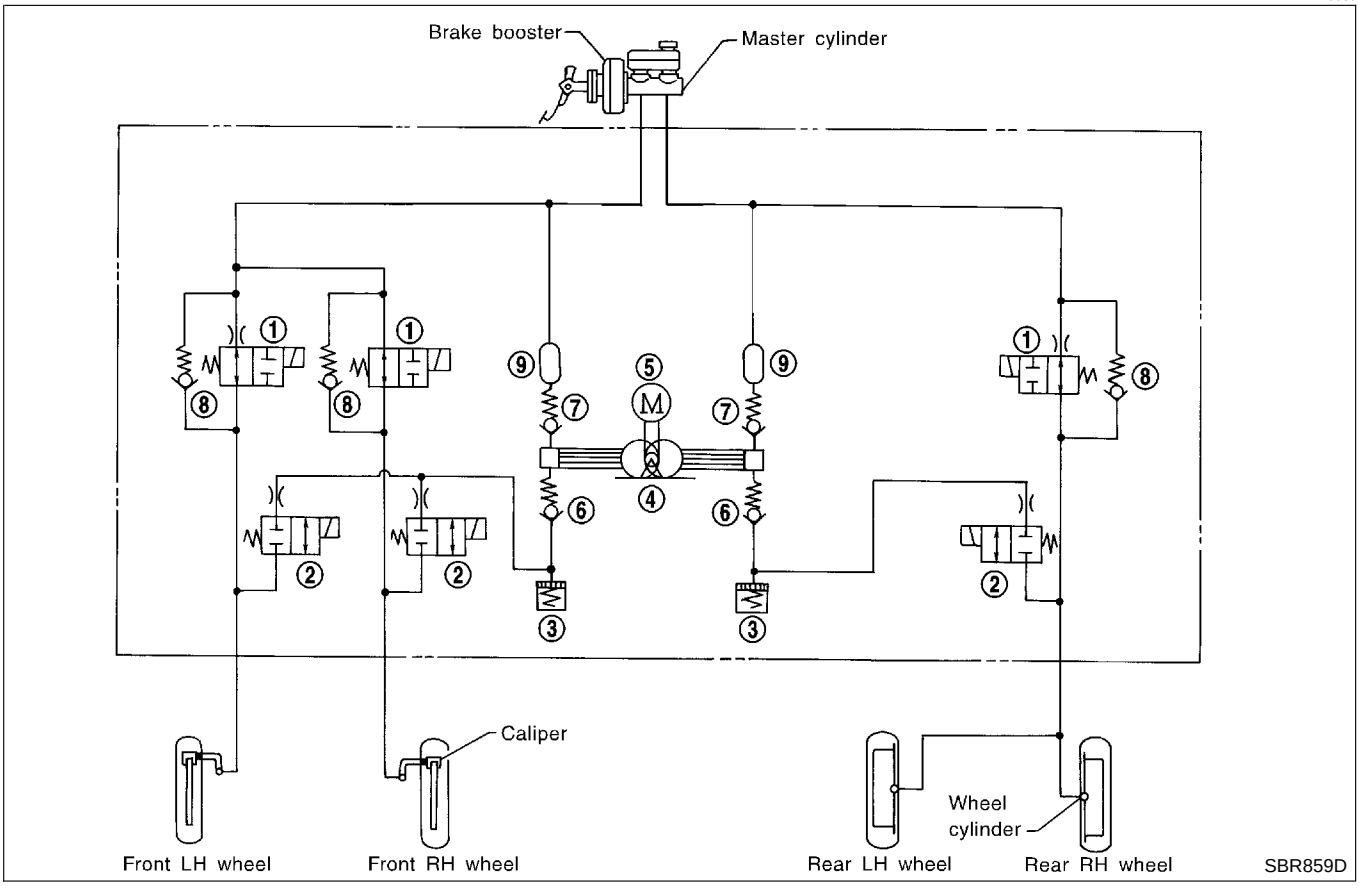

1. Inlet solenoid valve
2. Outlet solenoid valve
3. Reservoir
4. Pump
5. Motor
6. Inlet valve
7. Outlet valve
8. Bypass check valve
9. Damper

System Components

NBBR0090

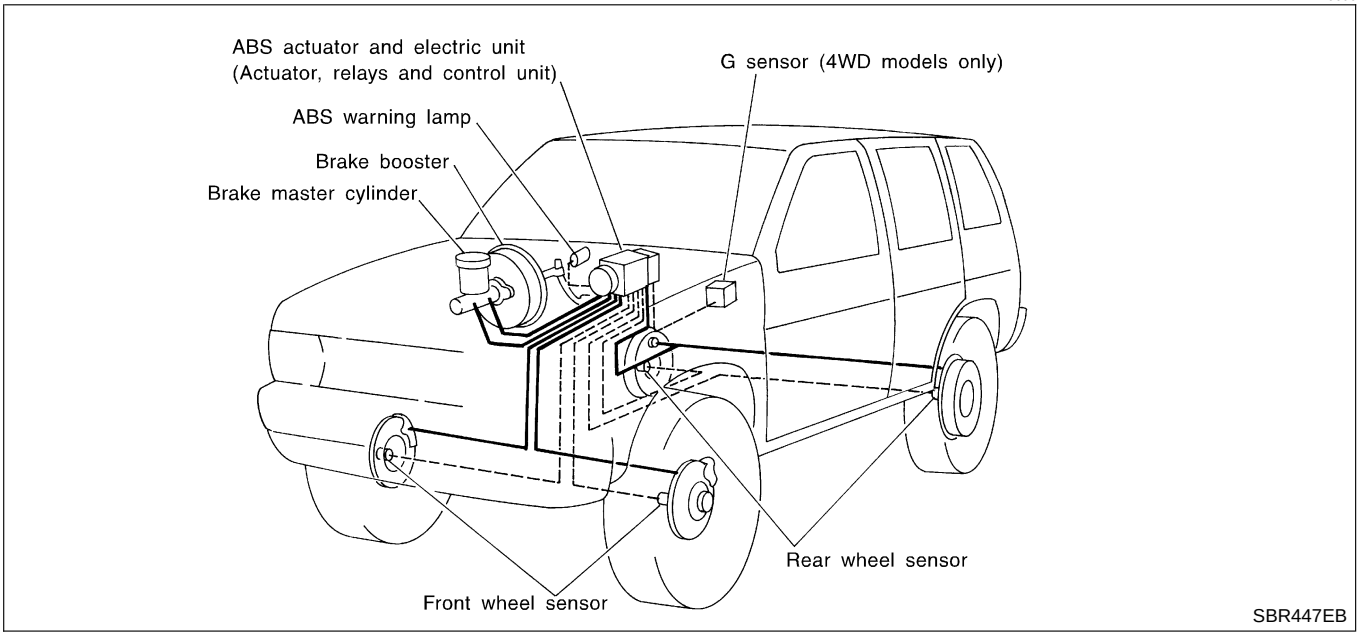

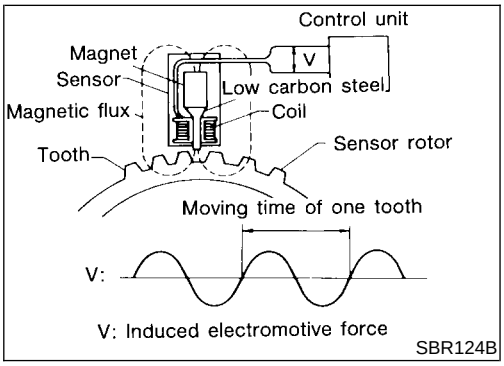

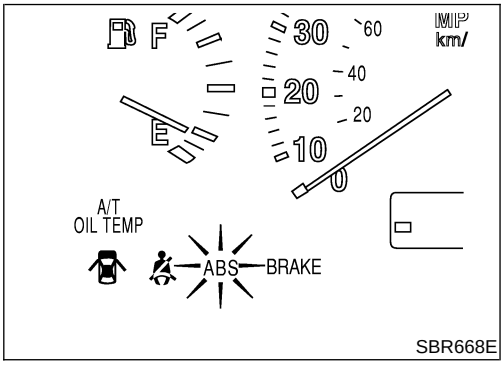

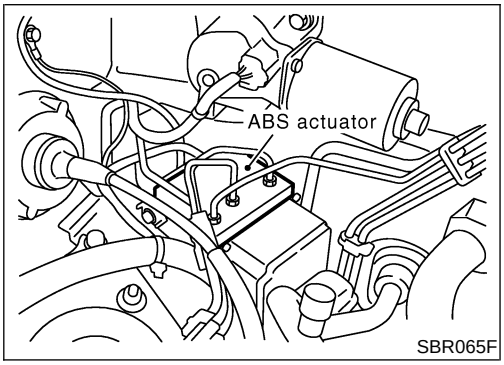

System Description

NBBR0091

SENSOR

NBBR0091S01

The sensor unit consists of a gear-shaped sensor rotor and a sensor element. The element contains a bar magnet around which a coil is wound. The front sensors are installed on the front spindles and the rear sensors are installed on the rear spindles. As the wheel rotates, the sensor generates a sine-wave pattern. The frequency and voltage increase(s) as the rotating speed increases.

CONTROL UNIT (BUILT-IN ABS ACTUATOR AND ELECTRIC UNIT)

NBBR0091S02

The control unit computes the wheel rotating speed by the signal current sent from the sensor. Then it supplies a DC current to the actuator solenoid valve. It also controls ON-OFF operation of the valve relay and motor relay. If any electrical malfunction should be detected in the system, the control unit causes the warning lamp to light up. In this condition, the ABS will be deactivated by the control unit, and the vehicle's brake system reverts to normal operation. (For control unit layout, refer to ABS ACTUATOR AND ELECTRIC UNIT, BR-31.)

ABS ACTUATOR AND ELECTRIC UNIT

NBBR0091S03

The ABS actuator and electric unit contains:

- An electric motor and pump
- Two relays
- Six solenoid valves, each inlet and outlet for
  — LH front
  — RH front
  — Rear
- ABS control unit

This component controls the hydraulic circuit and increases, holds or decreases hydraulic pressure to all or individual wheels. The ABS actuator and electric unit is serviced as an assembly.

ABS Actuator Operation

NBBR0091S0301

		Inlet solenoid valve	Outlet solenoid valve	
Normal brake operation		OFF (Open)	OFF (Closed)	Master cylinder brake fluid pressure is directly transmitted to caliper via the inlet solenoid valve.
ABS operation	Pressure hold	ON (Closed)	OFF (Closed)	Hydraulic circuit is shut off to hold the caliper brake fluid pressure.
	Pressure decrease	ON (Closed)	ON (Open)	Caliper brake fluid is sent to reservoir via the outlet solenoid valve. Then it is pushed up to the master cylinder by pump.
	Pressure increase	OFF (Open)	OFF (Closed)	Master cylinder brake fluid pressure is transmitted to caliper.

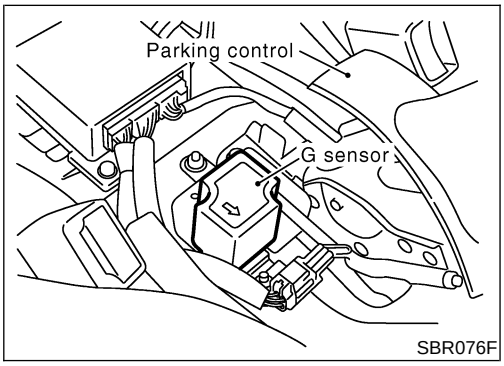

G SENSOR (4WD MODELS ONLY)

NBBR0091S05

The G sensor senses deceleration during braking to determine whether the vehicle is being driven on a high μ road (asphalt road, etc.) or a low μ road (snow-covered road, etc.). It then sends a signal to the ABS control unit.

The reed switch turns on when it is affected by a magnetic field. During sudden deceleration (braking on a high μ road), the weight moves and the magnet in the weight moves away from the reed switch. The magnetic field then diminishes and the reed switch turns off.

Component Parts and Harness Connector Location

NBBR0146

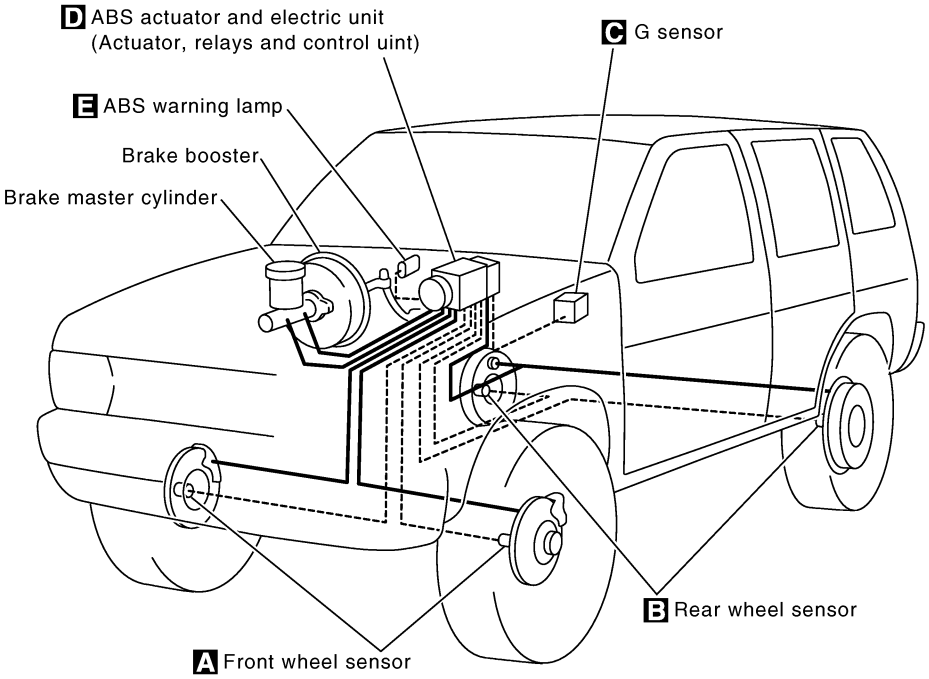

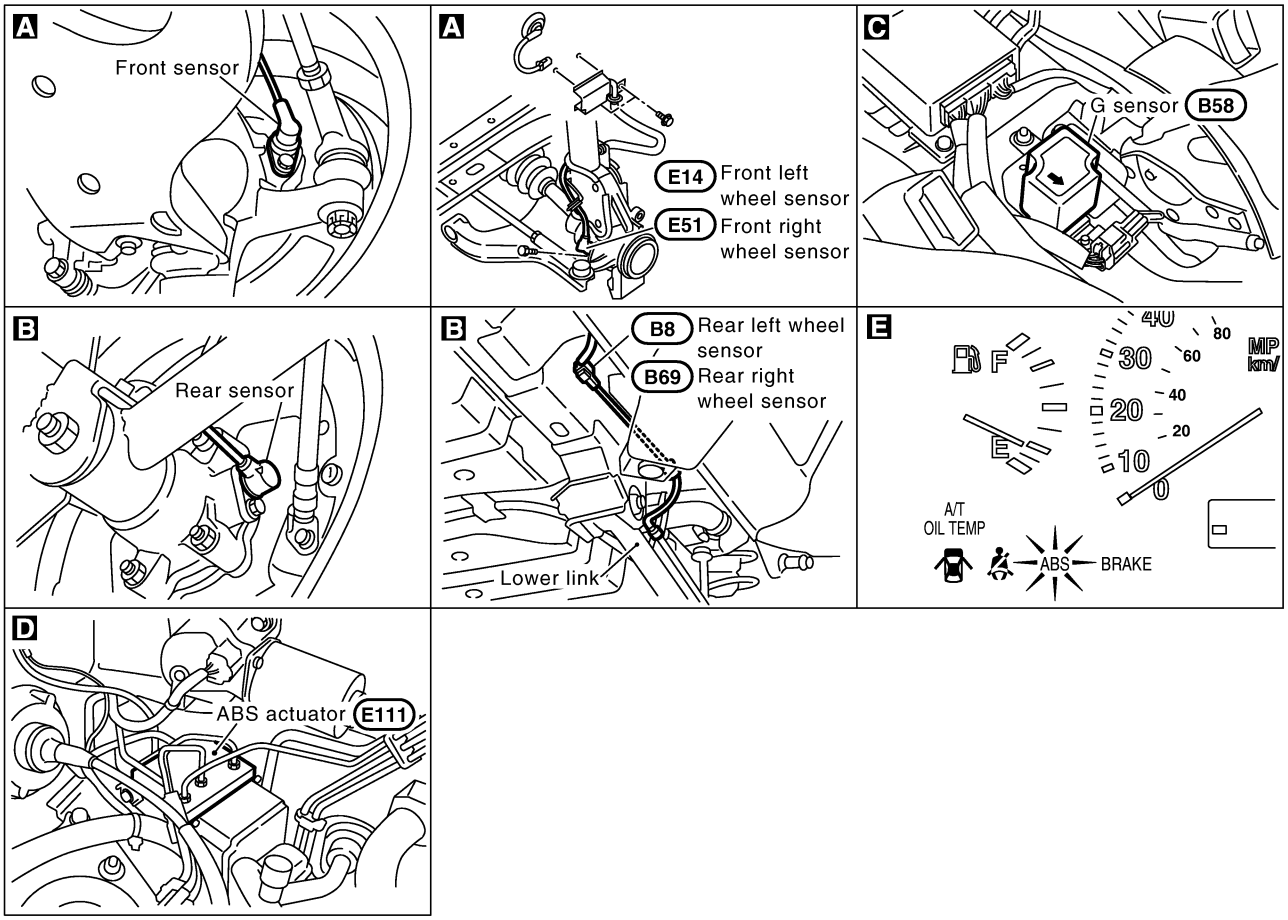

SBR233F

Schematic

NBBR0147

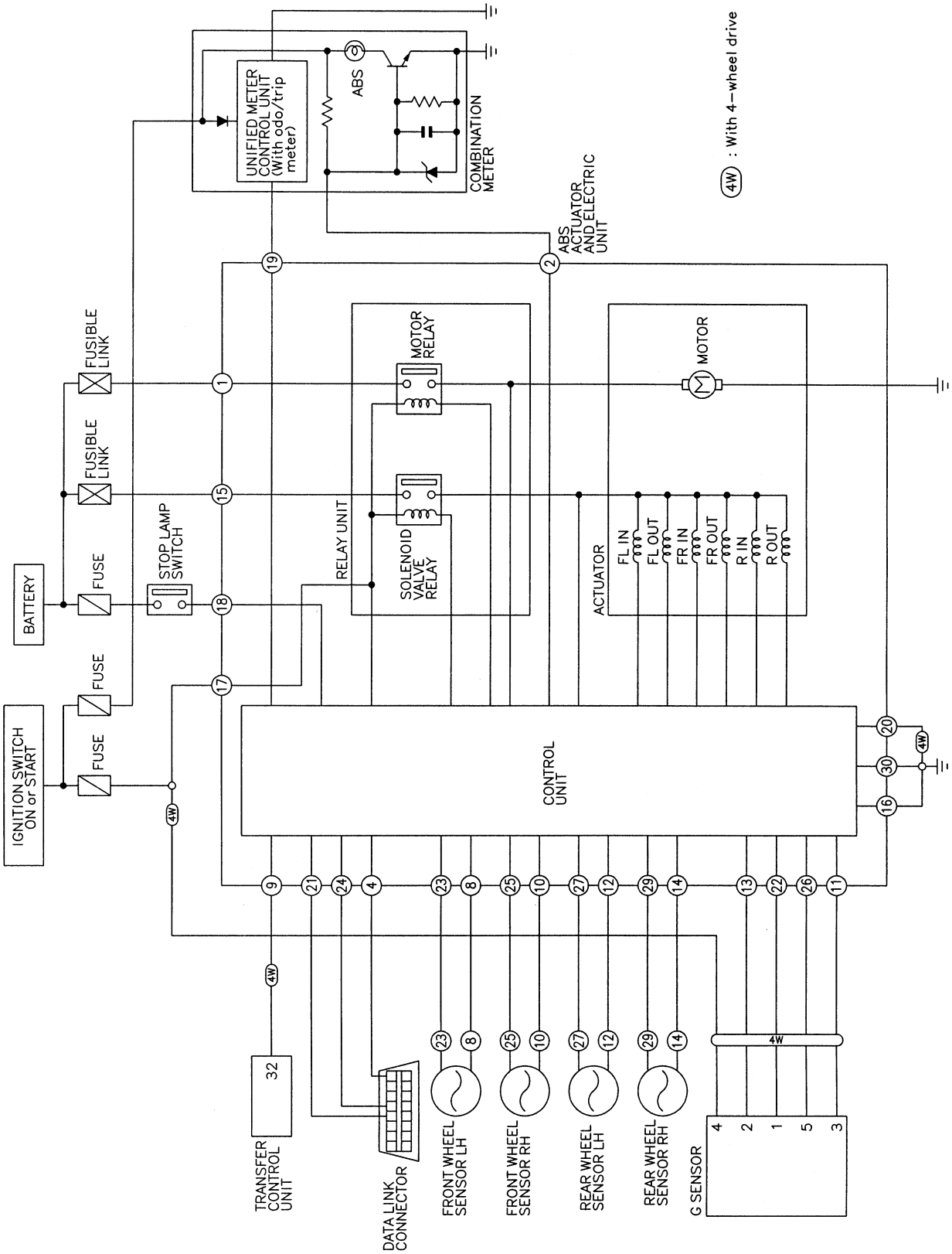

MBR644A

Wiring Diagram — ABS —

NBBR0148

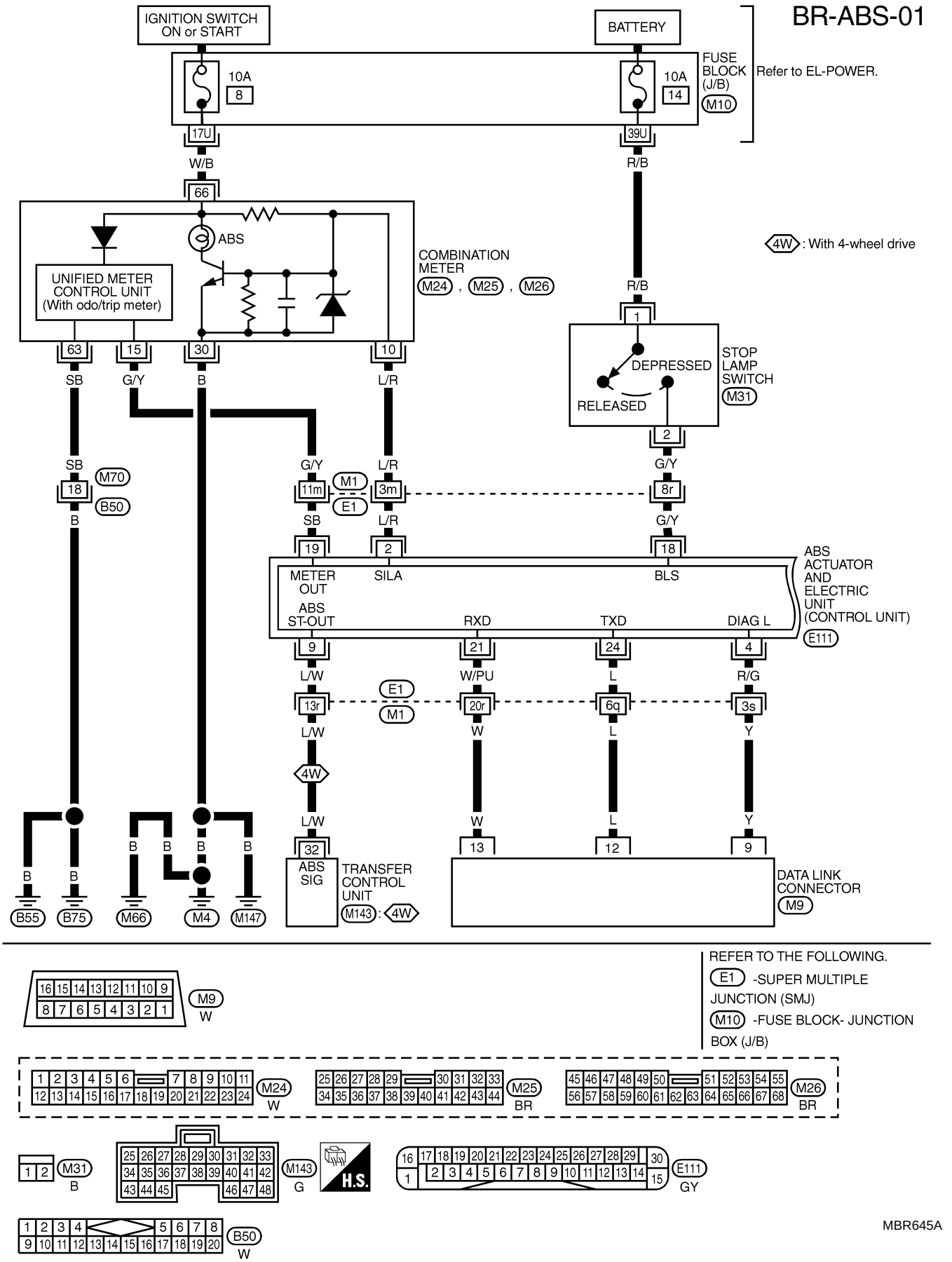

REFER TO THE FOLLOWING.
E1 -SUPER MULTIPLE JUNCTION (SMJ)
M10 -FUSE BLOCK- JUNCTION BOX (J/B)

MBR645A

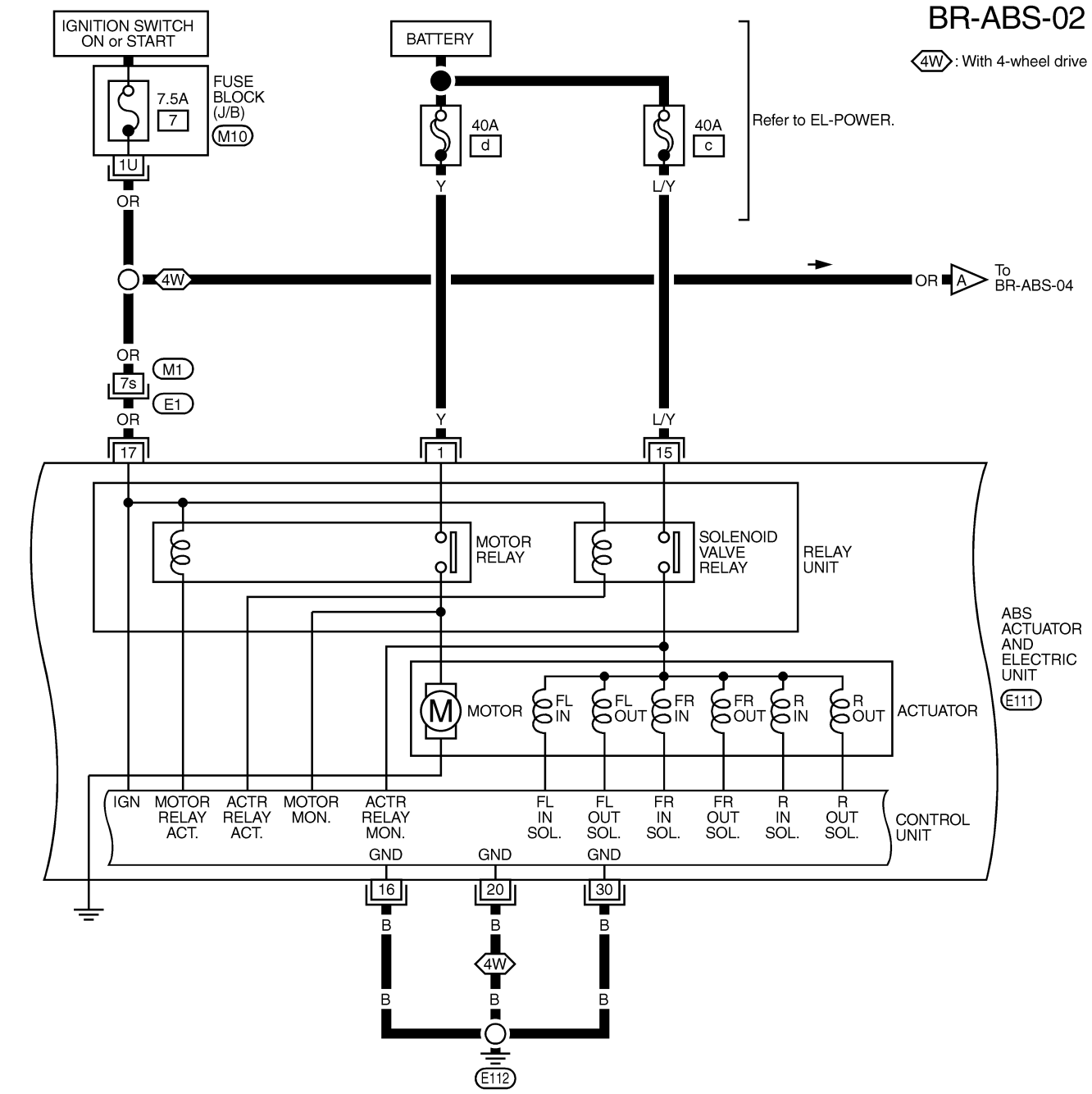

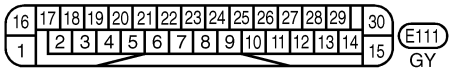

REFER TO THE FOLLOWING.

E1 -SUPER MULTIPLE JUNCTION (SMJ)

M10 -FUSE BLOCK-JUNCTION BOX (J/B)

MBR646A

BR-ABS-03

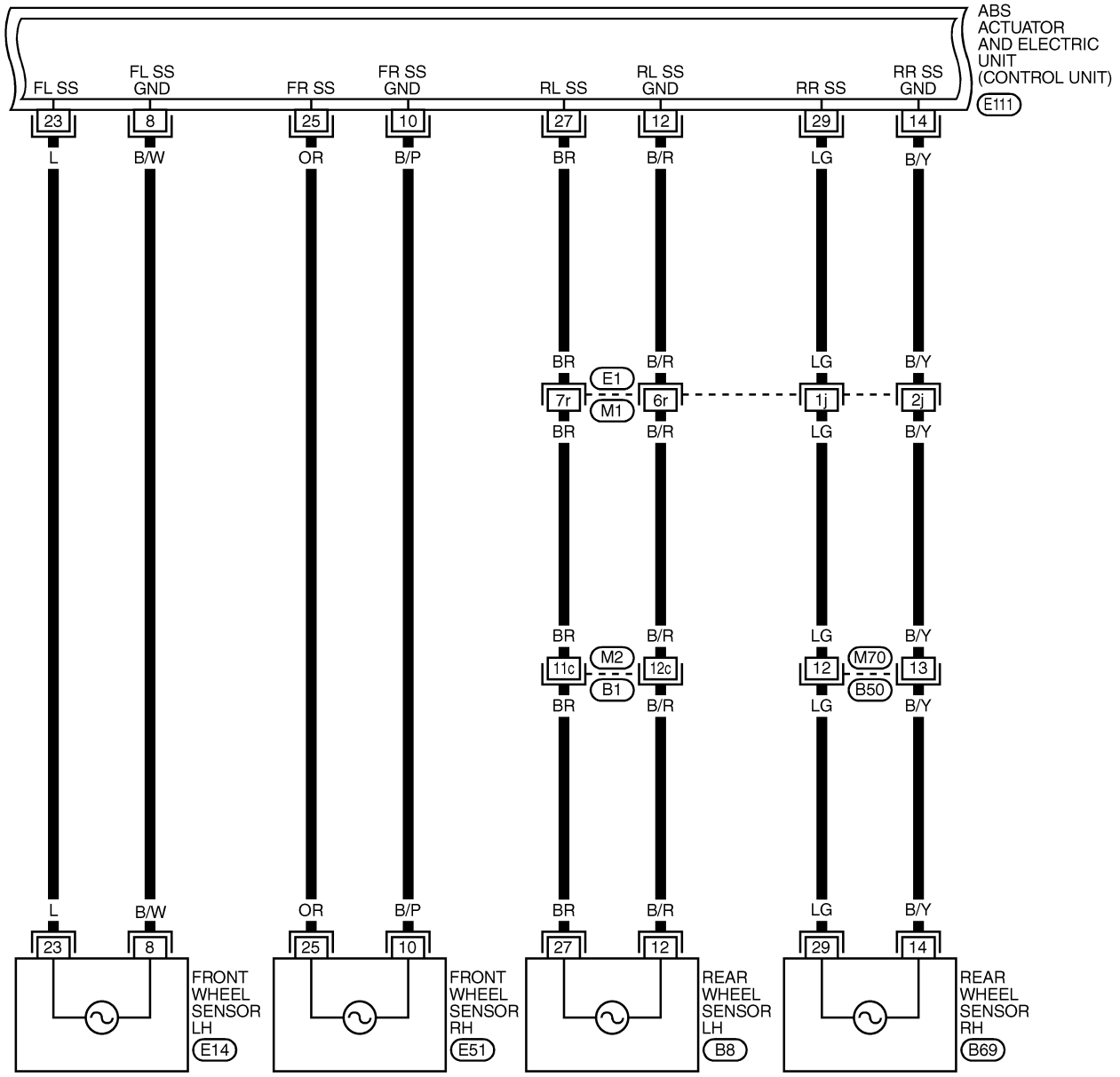

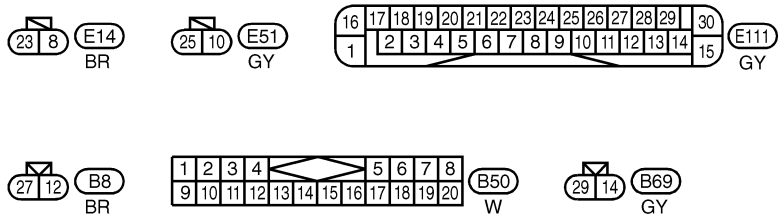

REFER TO THE FOLLOWING.
E1 , B1 -SUPER MULTIPLE JUNCTION(SMJ)

MBR474A

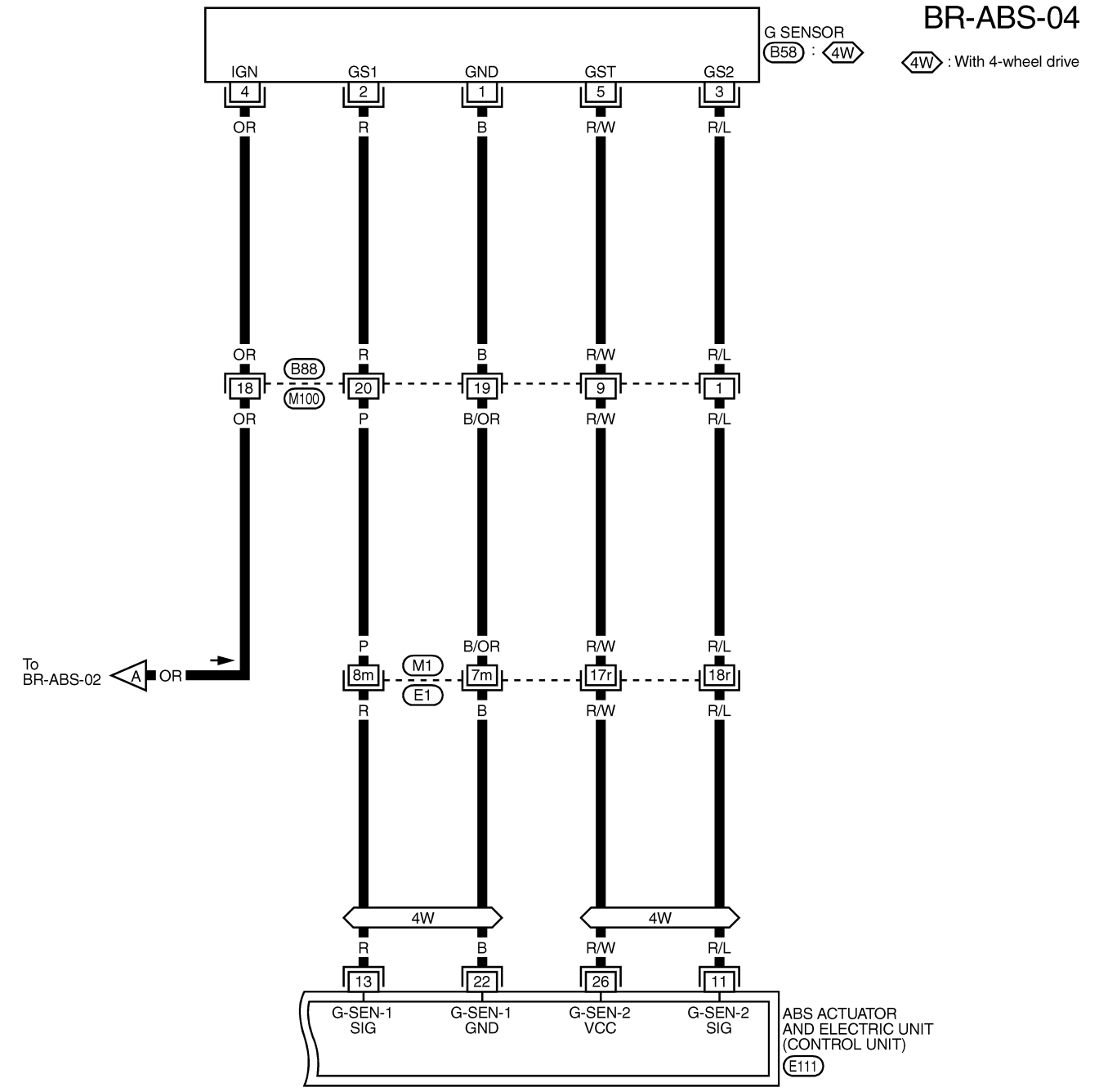

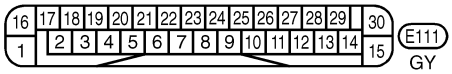

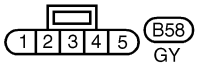

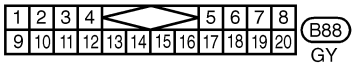

REFER TO THE FOLLOWING.

E1 -SUPER MULTIPLE JUNCTION (SMJ)

MBR647A

Self-diagnosis

NBBR0095

FUNCTION

NBBR0095S01

- When a problem occurs in the ABS, the warning lamp on the instrument panel comes on. To start the self-diagnostic results mode, ground the self-diagnostic (check) terminal located on data link connector. The location of the malfunction is indicated by the warning lamp flashing.

SELF-DIAGNOSIS PROCEDURE

NBBR0095S02

1. Drive vehicle over 30 km/h (19 MPH) for at least one minute.
2. Turn ignition switch OFF.
3. Ground terminal 9 of data link connector with a suitable harness.
4. Turn ignition switch ON while grounding terminal 9.
   Do not depress brake pedal.

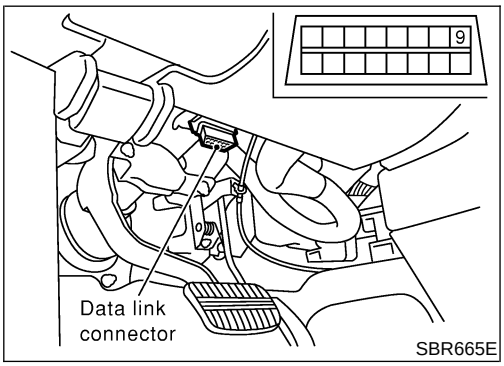

SBR665E

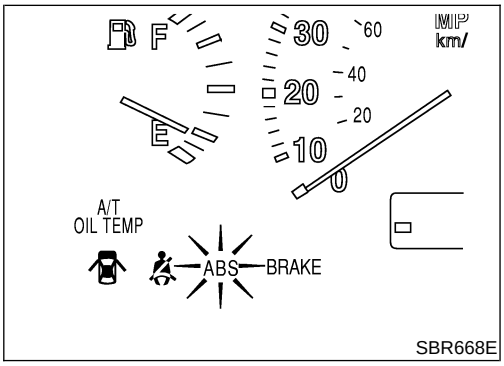

SBR668E

5. After 3.0 seconds, the warning lamp starts flashing to indicate the malfunction code No. (See NOTE.)
6. Verify the location of the malfunction with the malfunction code chart. Refer to BR-52. Then make the necessary repairs following the diagnostic procedures.
7. After the malfunctions are repaired, erase the malfunction codes stored in the control unit. Refer to BR-40.
8. Rerun the self-diagnostic results mode to verify that the malfunction codes have been erased.
9. Disconnect the check terminal from the ground. The self-diagnostic results mode is now complete.
10. Check warning lamp for deactivation after driving vehicle over 30 km/h (19 MPH) for at least one minute.
11. After making certain that warning lamp does not come on, test the ABS in a safe area to verify that it functions properly.

NOTE:
The indication terminates after 5 minutes.
However, when the ignition switch is turned from OFF to ON, the indication starts flashing again.

HOW TO READ SELF-DIAGNOSTIC RESULTS (MALFUNCTION CODES)

=NBBR0095S03

1. Determine the code No. by counting the number of times the warning lamp flashes on and off.
2. When several malfunctions occur at one time, up to three code numbers can be stored; the latest malfunction will be indicated first.
3. The indication begins with the start code 12. After that a maximum of three code numbers appear in the order of the latest one first. The indication then returns to the start code 12 to repeat (the indication will stay on for five minutes at the most).
4. The malfunction code chart is given on page BR-52.

Example: Code No. 32 REAR SENSOR SHORT-CIRCUIT

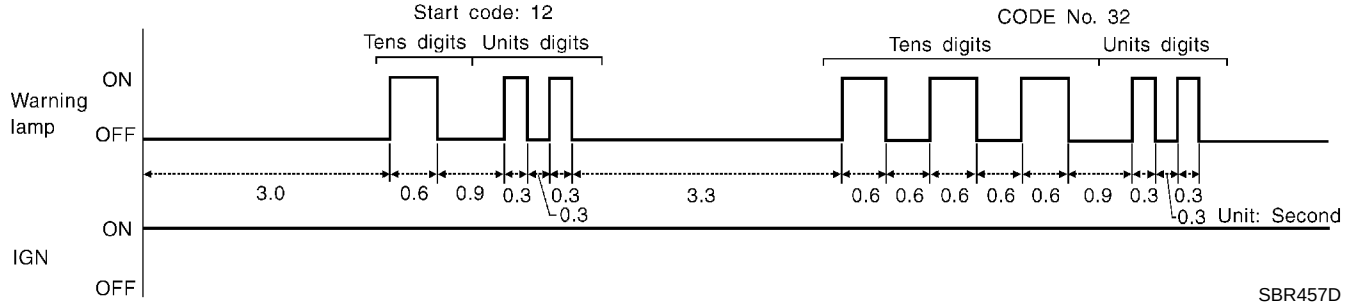

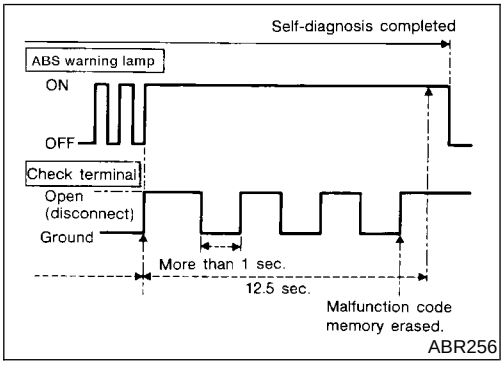

HOW TO ERASE SELF-DIAGNOSTIC RESULTS (MALFUNCTION CODES)

NBBR0095S04

1. Disconnect the check terminal from ground (ABS warning lamp will stay lit).
2. Within 12.5 seconds, ground the check terminal three times. Each terminal ground must last more than 1 second. The ABS warning lamp goes out after the erase operation has been completed.
3. Perform self-diagnosis again. Refer to BR-39. Only the start-code should appear, no malfunction codes.

CONSULT-II

CONSULT-II APPLICATION TO ABS

=NBBR0128

NBBR0128S03

ITEM	SELF-DIAGNOSTIC RESULTS	DATA MONITOR	ACTIVE TEST
Front right wheel sensor	×	×	—
Front left wheel sensor	×	×	—
Rear right wheel sensor	×	×	—
Rear left wheel sensor	×	×	—
DECEL G-sensor 1	×	×	×
DECEL G-sensor 2	×	×	×
ABS sensor	×	—	—
Stop lamp switch	—	×	—
Front right inlet solenoid valve	×	×	×
Front right outlet solenoid valve	×	×	×
Front left inlet solenoid valve	×	×	×
Front left outlet solenoid valve	×	×	×
Rear inlet solenoid valve	×	×	×
Rear outlet solenoid valve	×	×	×
Actuator solenoid valve relay	×	×	—
Actuator motor relay (ABS MOTOR is shown on the Data Monitor screen.)	×	×	×
ABS warning lamp	—	×	—
Battery voltage	×	×	—
Control unit	×	—	—
ABS operating signal	—	×	×

×: Applicable
—: Not applicable

ECU (ABS CONTROL UNIT) PART NUMBER MODE

NBBR0128S04

Ignore the ECU part number displayed in the ECU PART NUMBER MODE. Refer to parts catalog to order the ECU.

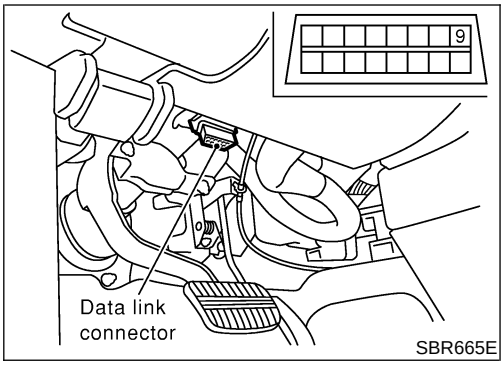

SBR665E

CONSULT-II Inspection Procedure

=NBBR0129

SELF-DIAGNOSIS PROCEDURE

NBBR0129S01

1. Turn ignition switch OFF.
2. Connect CONSULT-II to data link connector.
3. Start engine.
4. Drive vehicle over 30 km/h (19 MPH) for at least one minute.

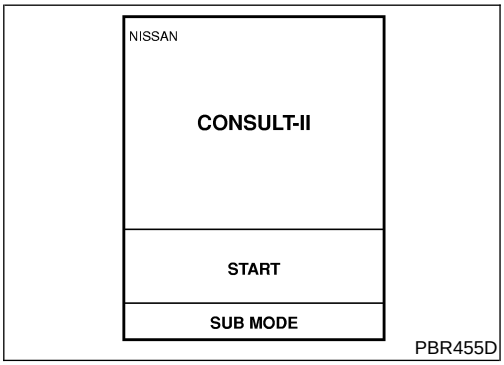

PBR455D

5. Stop vehicle with engine running and touch “START” on CONSULT-II screen.

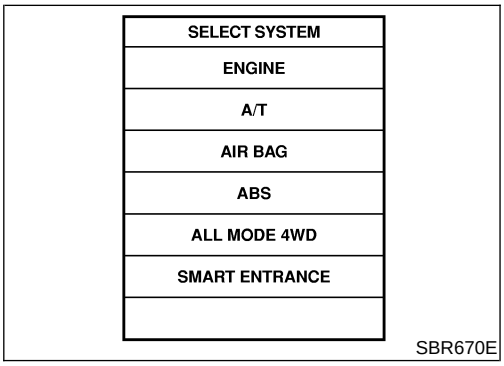

SBR670E

6. Touch “ABS”.

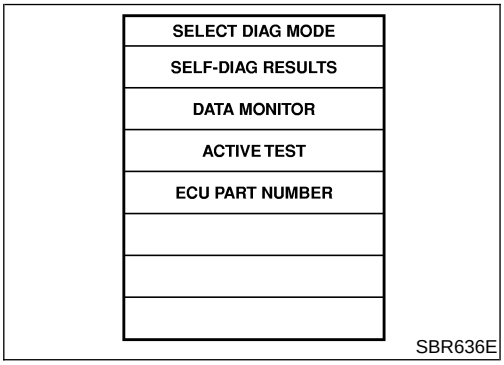

SBR636E

7. Touch “SELF-DIAG RESULTS”.

- The screen shows the detected malfunction and how many times the ignition switch has been turned ON since the malfunction.

8. Make the necessary repairs following the diagnostic procedures.

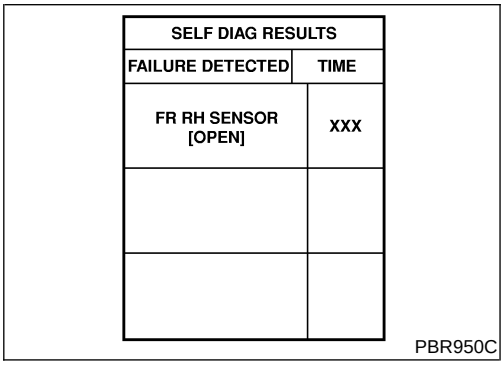

PBR950C

9. After the malfunctions are repaired, erase the self-diagnostic results stored in the control unit by touching “ERASE”.
10. Check warning lamp for deactivation after driving vehicle over 30 km/h (19 MPH) for at least one minute.
11. Test the ABS in a safe area to verify that it functions properly.

NOTE:
“SELF-DIAG RESULTS” screen shows the detected malfunction and how many times the ignition switch has been turned since the malfunction.

SELF-DIAGNOSTIC RESULTS MODE

NBBR0129S07

Diagnostic item	Diagnostic item is detected when ...	Reference Page
FR RH SENSOR★1 [OPEN]	● Circuit for front right wheel sensor is open. (An abnormally high input voltage is entered.)	BR-54
FR LH SENSOR★1 [OPEN]	● Circuit for front left wheel sensor is open. (An abnormally high input voltage is entered.)	BR-54
RR RH SENSOR★1 [OPEN]	● Circuit for rear right sensor is open. (An abnormally high input voltage is entered.)	BR-54
RR LH SENSOR★1 [OPEN]	● Circuit for rear left sensor is open. (An abnormally high input voltage is entered.)	BR-54
FR RH SENSOR★1 [SHORT]	● Circuit for front right wheel sensor is shorted. (An abnormally low input voltage is entered.)	BR-54
FR LH SENSOR★1 [SHORT]	● Circuit for front left wheel sensor is shorted. (An abnormally low input voltage is entered.)	BR-54
RR RH SENSOR★1 [SHORT]	● Circuit for rear right sensor is shorted. (An abnormally low input voltage is entered.)	BR-54
RR LH SENSOR★1 [SHORT]	● Circuit for rear left sensor is shorted. (An abnormally low input voltage is entered.)	BR-54
ABS SENSOR★1 [ABNORMAL SIGNAL]	● Teeth damage on sensor rotor or improper installation of wheel sensor. (Abnormal wheel sensor signal is entered.)	BR-54
FR RH IN ABS SOL [OPEN, SHORT]	● Circuit for front right inlet solenoid valve is open. (An abnormally low output voltage is entered.)	BR-57
FR LH IN ABS SOL [OPEN, SHORT]	● Circuit for front left inlet solenoid valve is open. (An abnormally low output voltage is entered.)	BR-57
FR RH OUT ABS SOL [OPEN, SHORT]	● Circuit for front right outlet solenoid valve is open. (An abnormally low output voltage is entered.)	BR-57
FR LH OUT ABS SOL [OPEN, SHORT]	● Circuit for front left outlet solenoid valve is open. (An abnormally low output voltage is entered.)	BR-57
RR IN ABS SOL [OPEN, SHORT]	● Circuit for rear inlet solenoid valve is shorted. (An abnormally high output voltage is entered.)	BR-57
RR OUT ABS SOL [OPEN, SHORT]	● Circuit for rear outlet solenoid valve is shorted. (An abnormally high output voltage is entered.)	BR-57
ABS ACTUATOR RELAY [ABNORMAL]	● Actuator solenoid valve relay is ON, even if control unit sends off signal. ● Actuator solenoid valve relay is OFF, even if control unit sends on signal.	BR-57
ABS MOTOR RELAY [ABNORMAL]	● Circuit for ABS motor relay is open or shorted. ● Circuit for actuator motor is open or shorted. ● Actuator motor relay is stuck.	BR-59
BATTERY VOLT [VB-LOW]	● Power source voltage supplied to ABS control unit is abnormally low.	BR-61
CONTROL UNIT	● Function of calculation in ABS control unit has failed.	BR-65
FR & RR G-SEN [ABNORMAL]	● DECEL G sensor output is abnormally higher or lower than specifications.	BR-63
FR & RR G-SEN TEST [ABNORMAL]	● Output voltage is always constant due to G sensor malfunction.	BR-63
G-SEN TEST [ABNORMAL]	● G sensor malfunction is detected during self-diagnosis.	BR-63
EXT SIGNAL CIRCUIT	● Circuit of ABS operating signal is open, or an output voltage is abnormally higher or lower than the specified value due to short-circuit of control wire to ground or some power supply circuit.	BR-63

★1: If one or more wheels spin on a rough or slippery road for 40 seconds or more, the ABS warning lamp will illuminate. This does

not indicate a malfunction. Only in the case of the short-circuit (Code Nos. 26, 22, 32 and 36), after repair the ABS warning lamp also illuminates when the ignition switch is turned ON. In this case, drive the vehicle at speeds greater than 30 km/h (19 MPH) for approximately 1 minute as specified in "SELF-DIAGNOSIS PROCEDURE", BR-39. Check to ensure that the ABS warning lamp goes out while the vehicle is being driven.

DATA MONITOR PROCEDURE

NBBR0129S03

1. Turn ignition switch OFF.
2. Connect CONSULT-II to data link connector for CONSULT-II.
3. Turn ignition switch ON.
4. Touch "START" on CONSULT-II screen.

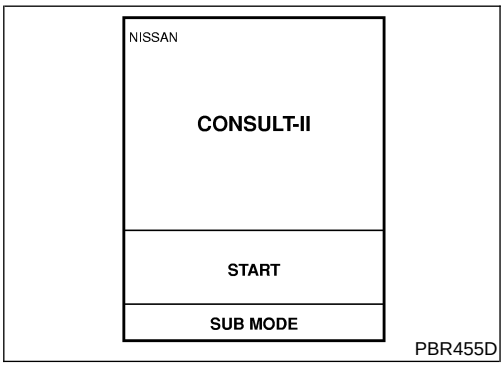

PBR455D

5. Touch "ABS".

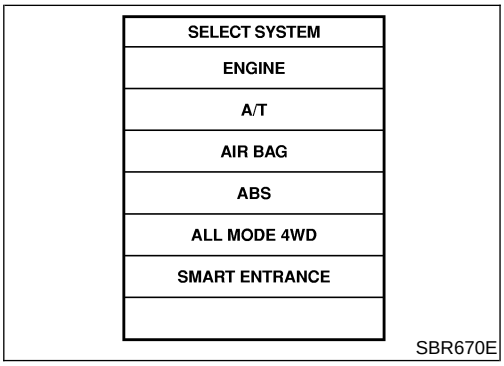

SBR670E

6. Touch "DATA MONITOR".

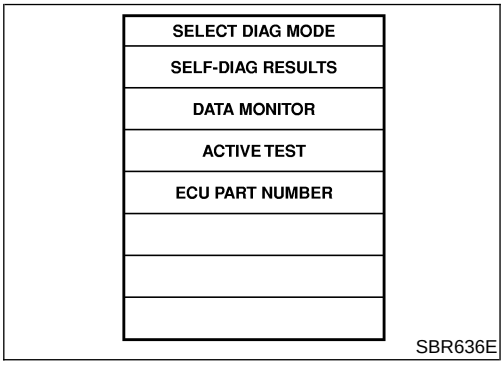

SBR636E

7. Touch "SETTING" on "SELECT MONITOR ITEM" screen.

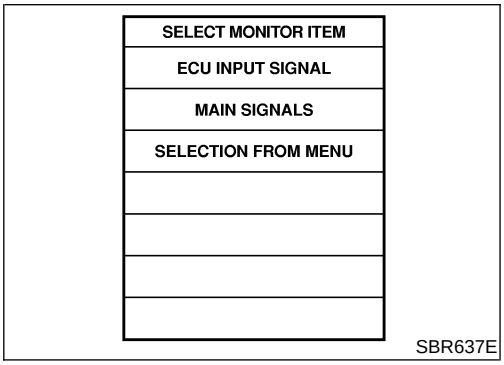

SBR637E

ACTIVE TEST PROCEDURE

=NBBR0129S04

- When conducting Active test, vehicle must be stationary.
- When ABS warning lamp stays on, never conduct Active test.

1. Turn ignition switch OFF.
2. Connect CONSULT-II to data link connector.
3. Start engine.
4. Touch "START" on CONSULT-II screen.

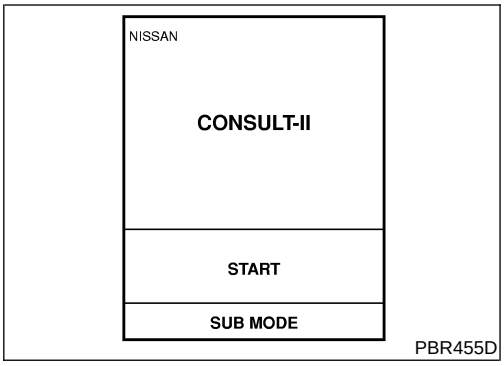

PBR455D

5. Touch "ABS".

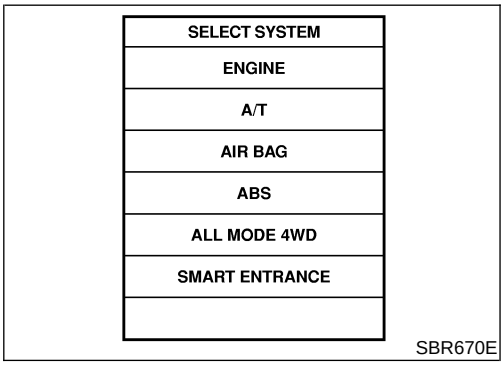

SBR670E

6. Touch "ACTIVE TEST".

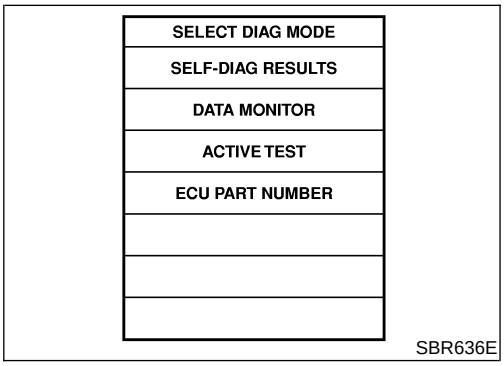

SBR636E

7. Select active test item by touching screen.

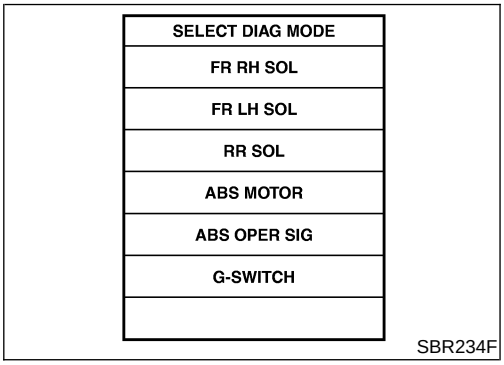

SBR234F

8. Touch "START".
9. Carry out the active test by touching screen key.

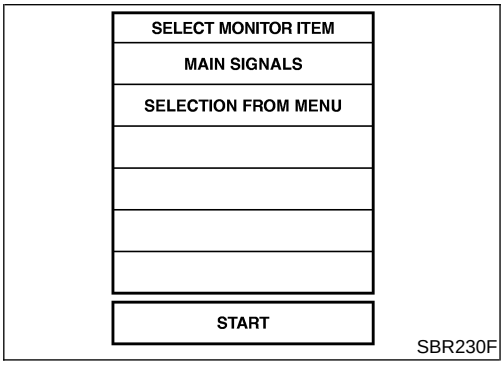

SBR230F

DATA MONITOR MODE

=NBBR0129S08

MONITOR ITEM	CONDITION	SPECIFICATION
FR RH SENSOR FR LH SENSOR RR RH SENSOR RR LH SENSOR	Drive vehicle. (Each wheel is rotating.)	Wheel speed signal (Almost the same speed as speedometer.)
STOP LAMP SW	Brake is depressed.	Depress the pedal: ON Release the pedal: OFF
FR & RR G SEN	Vehicle is driven. Vehicle is stopped. Brake is applied.	During sudden braking while driving on high µ roads (asphalt roads, etc.): OFF While vehicle is stopped or during constant-speed driving: ON
FR RH IN SOL FR RH OUT SOL FR LH IN SOL FR LH OUT SOL RR IN SOL RR OUT SOL	1. Drive vehicle at speeds over 30 km/h (19 MPH) for at least 1 minute. 2. Engine is running.	Operating conditions for each solenoid valve are indicated. ABS is not operating: OFF
MOTOR RELAY		ABS is not operating: OFF ABS is operating: ON
ACTUATOR RELAY	Ignition switch is ON or engine is running.	Ignition switch ON (Engine stops): OFF Engine running: ON
WARNING LAMP		ABS warning lamp is turned on: ON ABS warning lamp is turned off: OFF
BATTERY VOLT		Power supply voltage for control unit
ABS OPER SIG		ABS is not operating: OFF ABS is operating: ON

ACTIVE TEST MODE

NBBR0129S09

TEST ITEM	CONDITION	JUDGEMENT		
FR RH SOLENOID FR LH SOLENOID RR SOLENOID	Engine is running.	Brake fluid pressure control operation		
			IN SOL	OUT SOL
		UP (Increase):	OFF	OFF
		KEEP (Hold):	ON	OFF
		DOWN (Decrease):	ON	ON
ABS MOTOR		ABS actuator motor ON: Motor runs (ABS motor relay ON) OFF: Motor stops (ABS motor relay OFF)		
ABS OPER SIG	Ignition switch is ON or engine is running.	ON: Set ABS OPER SIG "ON" (ABS is operating.) OFF: Set ABS OPER SIG "OFF" (ABS is not operating.)		
G SENSOR	Ignition switch is ON.	G SENSOR ON: Set G SENSOR MONITOR "ON" (G sensor circuit is closed.) OFF: Set G SENSOR MONITOR "OFF" (G sensor circuit is open.)		

NOTE:
Active test will automatically stop ten seconds after the test starts. (TEST IS STOPPED monitor shows ON.)

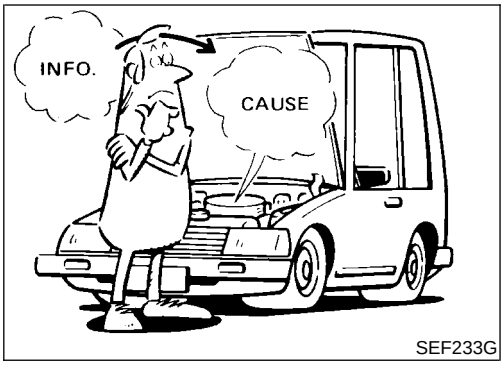

SEF233G

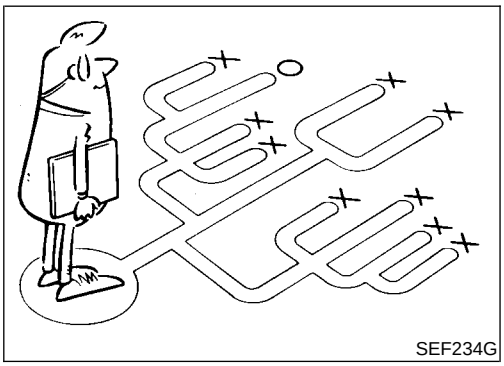
SEF234G

How to Perform Trouble Diagnoses for Quick and Accurate Repair

NBBR0098

INTRODUCTION

NBBR0098S01

The ABS system has an electronic control unit to control major functions. The control unit accepts input signals from sensors and instantly drives the actuators. It is essential that both kinds of signals are proper and stable. It is also important to check for conventional problems: such as air leaks in booster lines, lack of brake fluid, or other problems with the brake system.

It is much more difficult to diagnose a problem that occurs intermittently rather than continuously. Most intermittent problems are caused by poor electric connections or faulty wiring. In this case, careful checking of suspicious circuits may help prevent the replacement of good parts.

A visual check only may not find the cause of the problems, so a road test should be performed.

Before undertaking actual checks, take a few minutes to talk with a customer who approaches with an ABS complaint. The customer is a very good source of information on such problems; especially intermittent ones. By talking to the customer, find out what symptoms are present and under what conditions they occur. Start your diagnosis by looking for “conventional” problems first. This is one of the best ways to troubleshoot brake problems on an ABS controlled vehicle.

Also check related Service bulletins for information.

Preliminary Check

NBBR0099

1	CHECK BRAKE FLUID	
Check brake fluid for contamination.		
Has brake fluid been contaminated?		
Yes	▶	Replace. GO TO 2.
No	▶	GO TO 2.

2	CHECK BRAKE FLUID LEVEL	
Check brake fluid level in reservoir tank. Low fluid level may indicate brake pad wear or leakage from brake line.		
Is brake fluid filled between MAX and MIN lines on reservoir tank?		
Yes	▶	GO TO 3.
No	▶	Fill up brake fluid. GO TO 3.

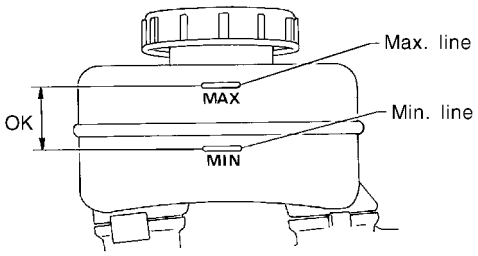

SBR451D

3	CHECK BRAKE LINE	
Check brake line for leakage.		
Is leakage present at or around brake lines, tubes or hoses or are any of these parts cracked or damaged?		
Yes	▶	Repair. GO TO 4.
No	▶	GO TO 4.

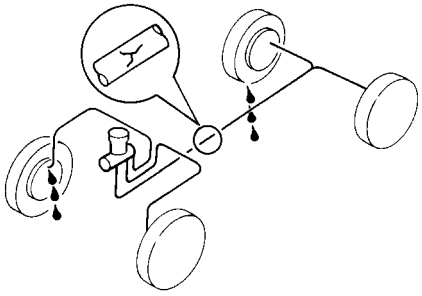

SBR389C

4	CHECK BRAKE BOOSTER OPERATION	
Check brake booster for operation and air tightness. Refer to "On-vehicle Service", "BRAKE BOOSTER", BR-17.		
Is brake booster airtight and functioning properly?		
Yes	▶	GO TO 5.
No	▶	Replace. GO TO 5.

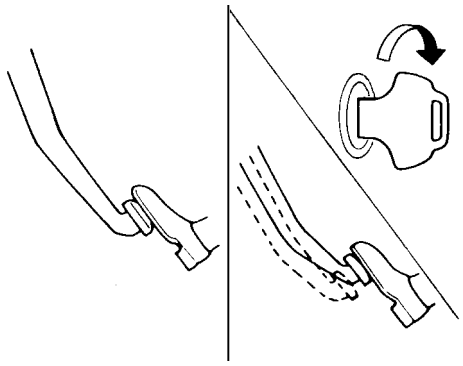

SBR058C

5	CHECK BRAKE PAD AND ROTOR	
Check brake pad and rotor. Refer to (BR-20, BR-22).		
Are brake pads and rotors functioning properly?		
Yes	▶	GO TO 6.
No	▶	Replace.

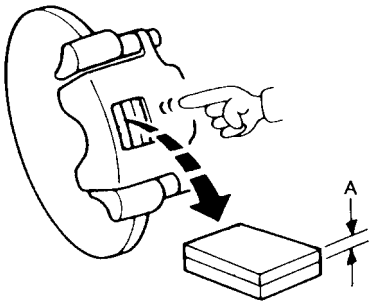

SBR059C

6	RECHECK BRAKE FLUID LEVEL	
Check brake fluid level in reservoir tank again.		

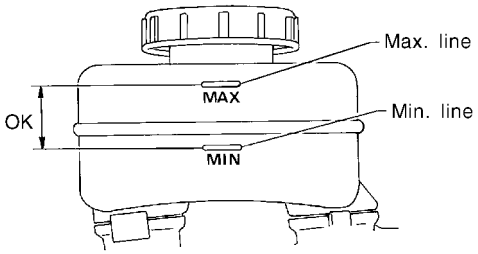

SBR451D

Is brake fluid filled between MAX and MIN lines on reservoir tank?

Yes	▶	GO TO 7.
No	▶	Fill up brake fluid.

7	CHECK WARNING LAMP ACTIVATION	
Check warning lamp activation.		

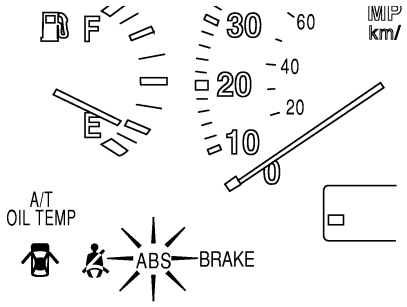

SBR672E

Does warning lamp turn on when ignition switch is turned ON?

Yes	▶	GO TO 8.
No	▶	Check fuse, warning lamp bulb and warning lamp circuit.

8	CHECK WARNING LAMP DEACTIVATION	
Check warning lamp for deactivation after engine is started.		

Does warning lamp turn off when engine is started?

Yes	▶	GO TO 9.
No	▶	Go to Self-diagnosis (BR-39, BR-42).

9	DRIVE VEHICLE	
Drive vehicle at speeds over 30 km/h (19 MPH) for at least one minute.		

Does warning lamp remain off after vehicle has been driven at 30 km/h (19 MPH) for at least one minute?

Yes	▶	**INSPECTION END**
No	▶	Go to Self-diagnosis (BR-39, BR-42).

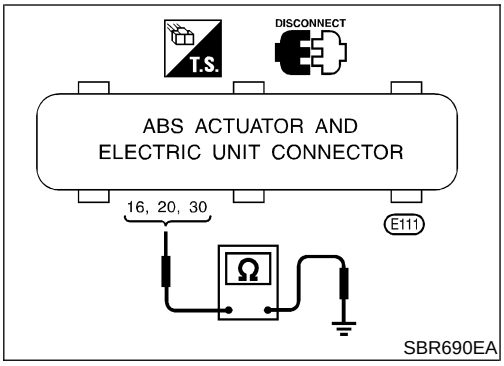

Ground Circuit Check

=NBBR0130

ABS ACTUATOR AND ELECTRIC UNIT GROUND

NBBR0130S01

- Check continuity between ABS actuator and electric unit connector terminals and ground.

  Continuity should exist.

Malfunction Code/Symptom Chart

NBBR0149

Code No. (No. of warning lamp flashes)	Malfunctioning part	Reference Page
12	Self-diagnosis could not detect any malfunctions.	—
17 ★4	G sensor and circuit	BR-63
18 ★1	Sensor rotor	BR-54
21 ★1	Front right sensor (open-circuit)	BR-54
22 ★1	Front right sensor (short-circuit)	BR-54
25 ★1	Front left sensor (open-circuit)	BR-54
26 ★1	Front left sensor (short-circuit)	BR-54
31 ★1	Rear right sensor (open-circuit)	BR-54
32 ★1	Rear right sensor (short-circuit)	BR-54
35 ★1	Rear left sensor (open-circuit)	BR-54
36 ★1	Rear left sensor (short-circuit)	BR-54
41	Actuator front right outlet solenoid valve	BR-57
42	Actuator front right inlet solenoid valve	BR-57
45	Actuator front left outlet solenoid valve	BR-57
46	Actuator front left inlet solenoid valve	BR-57
55	Actuator rear outlet solenoid valve	BR-57
56	Actuator rear inlet solenoid valve	BR-57
57 ★2	Power supply (Low voltage)	BR-61
61 ★3	Actuator motor or motor relay	BR-59
63	Solenoid valve relay	BR-57
64	FR & RR G sensor	BR-63
65	FR & RR G sensor input signal abnormal	BR-63
66	FR & RR G sensor test abnormal	BR-63
71	Control unit	BR-65
ABS works frequently	—	BR-66
Unexpected pedal action	—	BR-66
Long stopping distance	—	BR-68
ABS does not work	—	BR-68
Pedal vibration and noise	—	BR-69
Warning lamp does not come on when ignition switch is turned ON.	Fuse, warning lamp bulb or warning lamp circuit Control unit	BR-70
Warning lamp stays on when ignition switch is turned ON.	Control unit power supply circuit Warning lamp bulb circuit Control unit or control unit connector Solenoid valve relay stuck Power supply for solenoid valve relay coil	BR-72
Vehicle vibrates excessively when ABS is operating.	ABS control unit to TCM circuit	BR-75

★1: If one or more wheels spin on a rough or slippery road for 40 seconds or more, the ABS warning lamp will illuminate. This does not indicate a malfunction. Only in the case of the short-circuit (Code Nos. 26, 22, 32 and 36), after repair the ABS warning lamp also

illuminates when the ignition switch is turned ON. In this case, drive the vehicle at speeds greater than 30 km/h (19 MPH) for approximately 1 minute as specified in "SELF-DIAGNOSIS PROCEDURE", BR-42. Check to ensure that the ABS warning lamp goes out while the vehicle is being driven.

★2: The trouble code "57", which refers to a low power supply voltage, does not indicate that the ABS control unit is malfunctioning. Do not replace the ABS control unit with a new one.

★3: The trouble code "61" can sometimes appear when the ABS motor is not properly grounded. If it appears, be sure to check the condition of the ABS motor ground circuit connection.

Wheel Sensor or Rotor

DIAGNOSTIC PROCEDURE

NBBR0132

Malfunction code No. 21, 22, 25, 26, 31, 32, 35, 36 or 18

NOTE:
Wheel position should be distinguished by code No. except code No. 18 (sensor rotor).

1	INSPECTION START
Wheel sensor inspection	

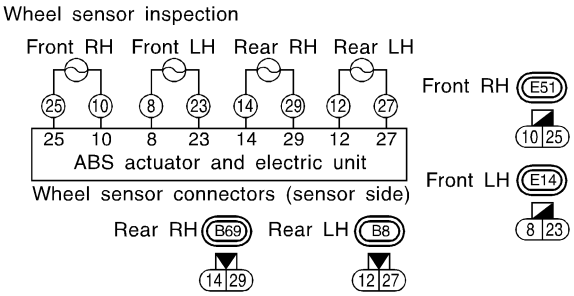

SBR691E

▶	GO TO 2.

2	CHECK CONNECTOR
1. Disconnect connectors from ABS actuator and electric unit and wheel sensor of malfunction code No. Check terminals for damage or loose connection. Then reconnect connectors. 2. Carry out self-diagnosis again.	
Does warning lamp activate again?	
Yes ▶	GO TO 3.
No ▶	**INSPECTION END**

3	CHECK WHEEL SENSOR ELECTRICAL

1. Disconnect ABS actuator and electric unit connector.
2. Check resistance between ABS actuator and electric unit connector E111 terminals.
   Code No. 21 or 22 (Front RH wheel)
   Terminals 10 and 25
   Code No. 25 or 26 (Front LH wheel)
   Terminals 8 and 23
   Code No. 31 or 32 (Rear RH wheel)
   Terminals 14 and 29
   Code No. 35 or 36 (Rear LH wheel)
   Terminals 12 and 27

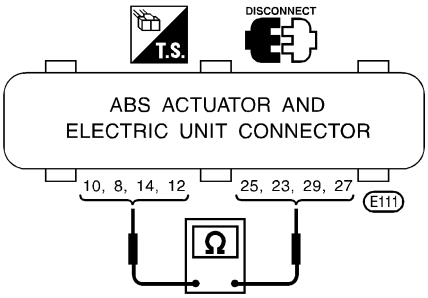

SBR692EB

Resistance:
Front 0.9 - 1.1 kΩ
Rear 1.44 - 1.76 kΩ

Is front resistance 0.9 - 1.1 kΩ and rear resistance 1.44 - 1.76 kΩ?

Yes	▶	GO TO 5.
No	▶	GO TO 4.

4	CHECK WHEEL SENSOR

Check each sensor for resistance.

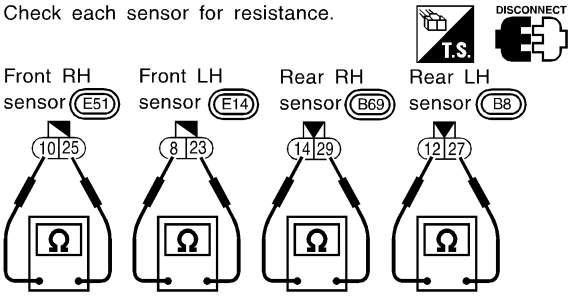

SBR693E

Resistance:
Front 0.9 - 1.1 kΩ
Rear 1.44 - 1.76 kΩ

Is front resistance 0.9 - 1.1 kΩ and rear resistance 1.44 - 1.76 kΩ?

Yes	▶	**Check the following.** If NG, repair harness or connectors. • Harness connectors E111, E14, E51, B8, B69 • Harness for open or short between wheel sensor connectors and ABS actuator and electric unit
No	▶	Replace wheel sensor.

5	CHECK TIRE	
Check for inflation pressure, wear and size of each tire. (See NOTE.)		
Are tire pressure and size correct and is tire wear within specifications?		
Yes	▶	GO TO 6.
No	▶	Adjust tire pressure or replace tire(s). (See NOTE.)

6	CHECK WHEEL BEARING	
Check wheel bearing axial end play. (See NOTE.)		
Is wheel bearing axial end play within specifications?		
Yes	▶	GO TO 7.
No	▶	Check wheel bearing. Refer to AX-19, AX-4, "Front wheel bearing" and "Rear wheel bearing".

7	CHECK SENSOR ROTOR	
Check sensor rotor for teeth damage. (See NOTE.)		
Is sensor rotor free from damage?		
Yes	▶	Check ABS actuator and electric unit pin terminals for damage or the connection of ABS actuator and electric unit harness connector. Reconnect ABS actuator and electric unit harness connector. Then retest.
No	▶	Replace sensor rotor. (See NOTE.)

ABS Actuator Solenoid Valve or Solenoid Valve Relay

DIAGNOSTIC PROCEDURE

=NBBR0133

Malfunction code No. 41, 45, 55, 42, 46, 56, 63

1	INSPECTION START

Solenoid valve relay inspection

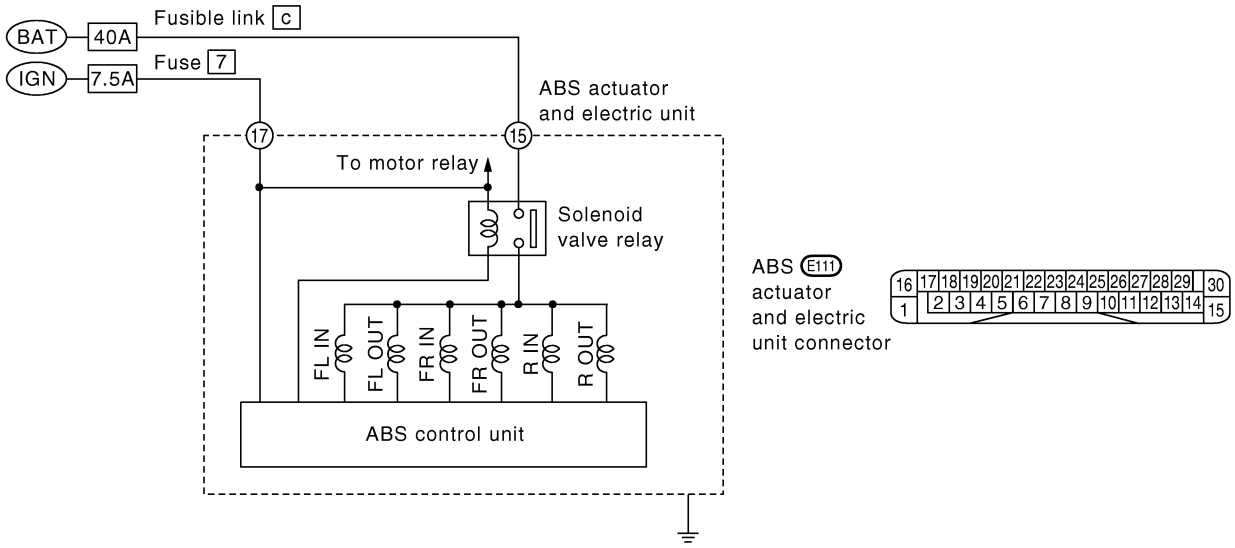

SBR239F

	▶	GO TO 2.

2	CHECK FUSIBLE LINK	
Check 40A fusible link **c**. For fusible link layout, refer to EL-10, “POWER SUPPLY ROUTING”.		
Is fusible link OK?		
Yes	▶	GO TO 3.
No	▶	GO TO 6.

3	CHECK CONNECTOR	
1. Disconnect connector from ABS actuator and electric unit. Check terminals for damage or loose connection. Then reconnect connector. 2. Carry out self-diagnosis again.		
Does warning lamp activate again?		
Yes	▶	GO TO 4.
No	▶	**INSPECTION END**

4	CHECK ABS ACTUATOR AND ELECTRIC UNIT GROUND CIRCUIT	
Refer to “ABS ACTUATOR AND ELECTRIC UNIT GROUND” in “Ground Circuit Check”, BR-51.		
Is ground circuit OK?		
Yes	▶	GO TO 5.
No	▶	Repair harness or connector.

5	CHECK SOLENOID VALVE POWER SUPPLY CIRCUIT

1. Disconnect ABS actuator and electric unit connector.
2. Check voltage between ABS actuator and electric unit connector E111 terminal 15 and ground.

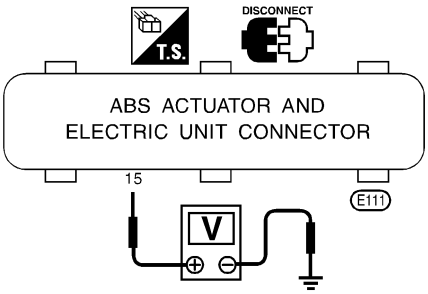

SBR695EB

Does battery voltage exist?

Yes	▶	Replace ABS actuator and electric unit.
No	▶	**Check the following.** If NG, repair harness or connectors. ● Harness connector E111 ● Harness for open or short between ABS actuator and electric unit and fusible link

6	REPLACE FUSIBLE LINK

Replace fusible link.

Does the fusible link blow out when ignition switch is turned ON?

Yes	▶	GO TO 7.
No	▶	**INSPECTION END**

7	CHECK SOLENOID VALVE RELAY POWER SUPPLY CIRCUIT FOR SHORT

1. Disconnect battery cable and ABS actuator and electric unit connector.
2. Check continuity between ABS actuator and electric unit connector E111 terminal 15 and ground.

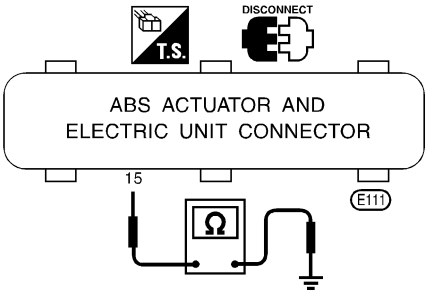

SBR696EB

Continuity should not exist.

Does continuity exist?

Yes	▶	**Check the following.** If NG, repair harness or connector. ● Harness connector E111 ● Harness for open or short between ABS actuator and electric unit and fusible link
No	▶	Replace ABS actuator and electric unit.

Motor Relay or Motor

DIAGNOSTIC PROCEDURE

=NBBR0134

Malfunction code No. 61

1	INSPECTION START

ABS motor relay inspection

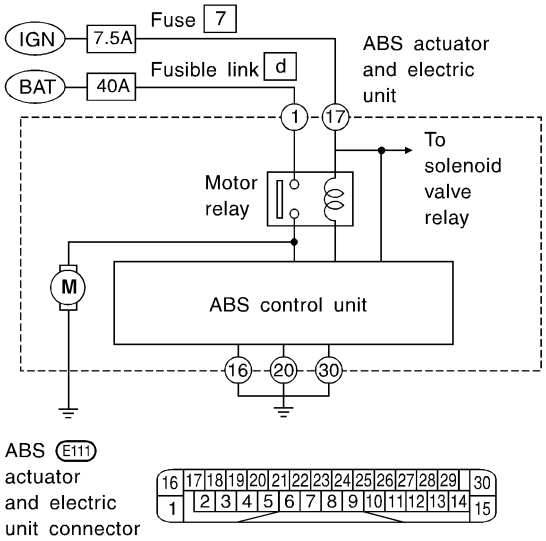

SBR697EA

▶	GO TO 2.

2	CHECK FUSIBLE LINK

Check 40A fusible link **d**. For fusible link layout, refer to EL-10, “POWER SUPPLY ROUTING”.

Is fusible link OK?

Yes	▶	GO TO 3.
No	▶	GO TO 6.

3	CHECK CONNECTOR

1. Disconnect ABS actuator and electric unit connector. Check terminals for damage or loose connection. Then reconnect connector.
2. Carry out self-diagnosis again.

Does warning lamp activate again?

Yes	▶	GO TO 4.
No	▶	**INSPECTION END**

4	CHECK ABS ACTUATOR AND ELECTRIC UNIT GROUND CIRCUIT

Refer to “ABS ACTUATOR AND ELECTRIC UNIT GROUND” in “Ground Circuit Check”, BR-51.

Is ground circuit OK?

Yes	▶	GO TO 5.
No	▶	Repair harness or connector.

5	CHECK MOTOR RELAY POWER SUPPLY CIRCUIT

1. Disconnect ABS actuator and electric unit connector.
2. Check voltage between ABS actuator and electric unit connector E111 terminal 1 and ground.

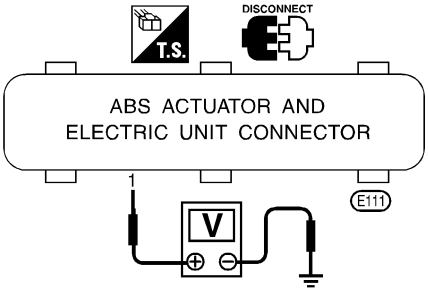

SBR698EB

Does battery voltage exist?

Yes	▶	Replace ABS actuator and electric unit.
No	▶	**Check the following.** If NG, repair harness or connector. ● Harness connector E111 ● Harness for open or short between ABS actuator and electric unit and fusible link

6	REPLACE FUSIBLE LINK

Replace fusible link.

Does the fusible link blow out when ignition switch is turned ON?

Yes	▶	GO TO 7.
No	▶	**INSPECTION END**

7	CHECK ABS ACTUATOR MOTOR POWER SUPPLY CIRCUIT FOR SHORT

1. Disconnect battery cable and ABS actuator and electric unit connector.
2. Check continuity between ABS actuator and electric unit connector E111 terminal 1 and ground.

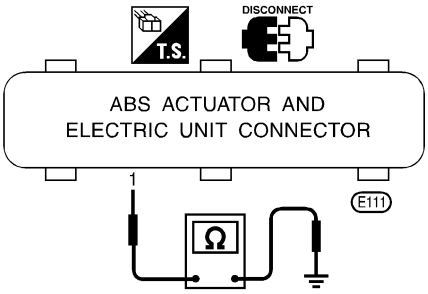

SBR699EB

Continuity should not exist.

Does continuity exist?

Yes	▶	**Check the following.** If NG, repair harness or connector. ● Harness connector E111 ● Harness for open or short between ABS actuator and electric unit and fusible link
No	▶	Replace ABS actuator and electric unit.

Low Voltage

DIAGNOSTIC PROCEDURE

NBBR0135

Malfunction code No. 57

1	INSPECTION START
ABS actuator and electric unit power supply and ground circuit inspection	

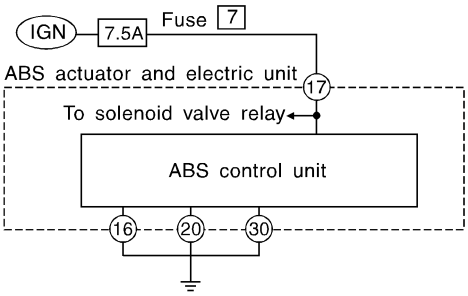

SBR700E

▶	GO TO 2.

2	CHECK FUSE
Check 7.5A fuse No. 7. For fuse layout, refer to EL-10, “POWER SUPPLY ROUTING”.	
Is fuse OK?	
Yes ▶	GO TO 3.
No ▶	GO TO 6.

3	CHECK CONNECTOR
1. Disconnect ABS actuator and electric unit connector. Check terminals for damage or loose connections. Then reconnect connector. 2. Carry out self-diagnosis again.	
Does warning lamp activate again?	
Yes ▶	GO TO 4.
No ▶	**INSPECTION END**

4	CHECK ABS ACTUATOR AND ELECTRIC UNIT GROUND CIRCUIT
Refer to “ABS ACTUATOR AND ELECTRIC UNIT GROUND” in “Ground Circuit Check”, BR-51.	
Is ground circuit OK?	
Yes ▶	GO TO 5.
No ▶	Repair harness or connector.

5	CHECK ABS ACTUATOR AND ELECTRIC UNIT POWER SUPPLY CIRCUIT

1. Disconnect ABS actuator and electric unit connector.
2. Check voltage between ABS actuator and electric unit connector E111 terminal 17 and ground.

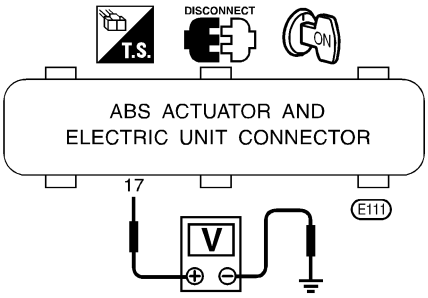

SBR701EB

Does battery voltage exist when ignition switch is turned ON?

Yes	▶	Replace ABS actuator and electric unit.
No	▶	**Check the following.** If NG, repair harness or connector. ● Harness connector E111 ● Harness for open or short between ABS actuator and electric unit and fuse

6	REPLACE FUSE

Replace fuse.

Does the fuse blow out when ignition switch is turned ON?

Yes	▶	GO TO 7.
No	▶	**INSPECTION END**

7	CHECK ABS ACTUATOR AND ELECTRIC UNIT POWER SUPPLY CIRCUIT FOR SHORT

1. Disconnect battery cable and ABS actuator and electric unit connector.
2. Check continuity between ABS actuator and electric unit connector E111 terminal 17 and ground.

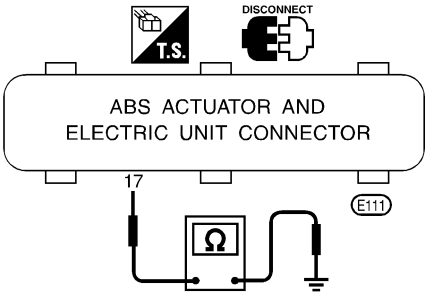

SBR702EB

Continuity should not exist.

Does continuity exist?

Yes	▶	**Check the following.** If NG, repair harness or connector. ● Harness connector E111 ● Harness for open or short between ABS actuator and electric unit and fuse
No	▶	Replace ABS actuator and electric unit.

G Sensor and Circuit

DIAGNOSTIC PROCEDURE

NBBR0150

Malfunction code No. 17, 64, 65, 66, 68

1	INSPECTION START

G sensor inspection

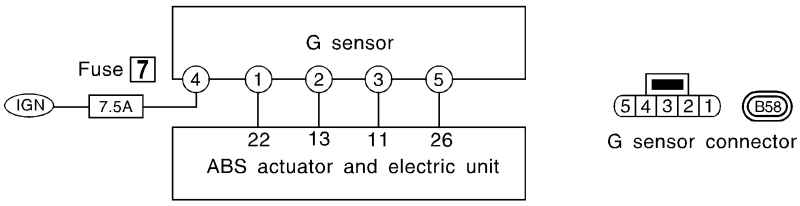

SBR869E

▶	GO TO 2.

2	CHECK CONNECTOR

1. Disconnect ABS actuator and electric unit and G sensor connectors. Check terminals for damage or loose connection. Then reconnect connectors.
2. Carry out self-diagnosis again.

Does warning lamp active again?

Yes	▶	GO TO 3.
No	▶	**INSPECTION END**

3	CHECK G SENSOR POWER SUPPLY CIRCUIT

1. Disconnect G sensor connector B58.
2. Check voltage between G sensor connector terminal 4 and ground.

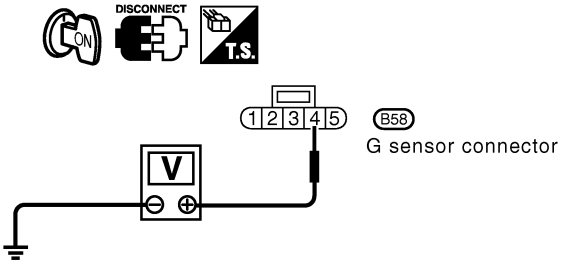

SBR070F

Does battery voltage exist?

Yes	▶	GO TO 4.
No	▶	**Check the following. If NG, repair harness or connectors.** ● Harness connectors E111, B58 ● Harness for open or short between G sensor and ABS actuator and electric unit.

4	CHECK G SENSOR ELECTRICAL

1. Connect G sensor body side terminal and sensor side terminal with suitable harness.
2. Check voltage between terminals 1 and 2, 1 and 3 under the following conditions.

G sensor condition

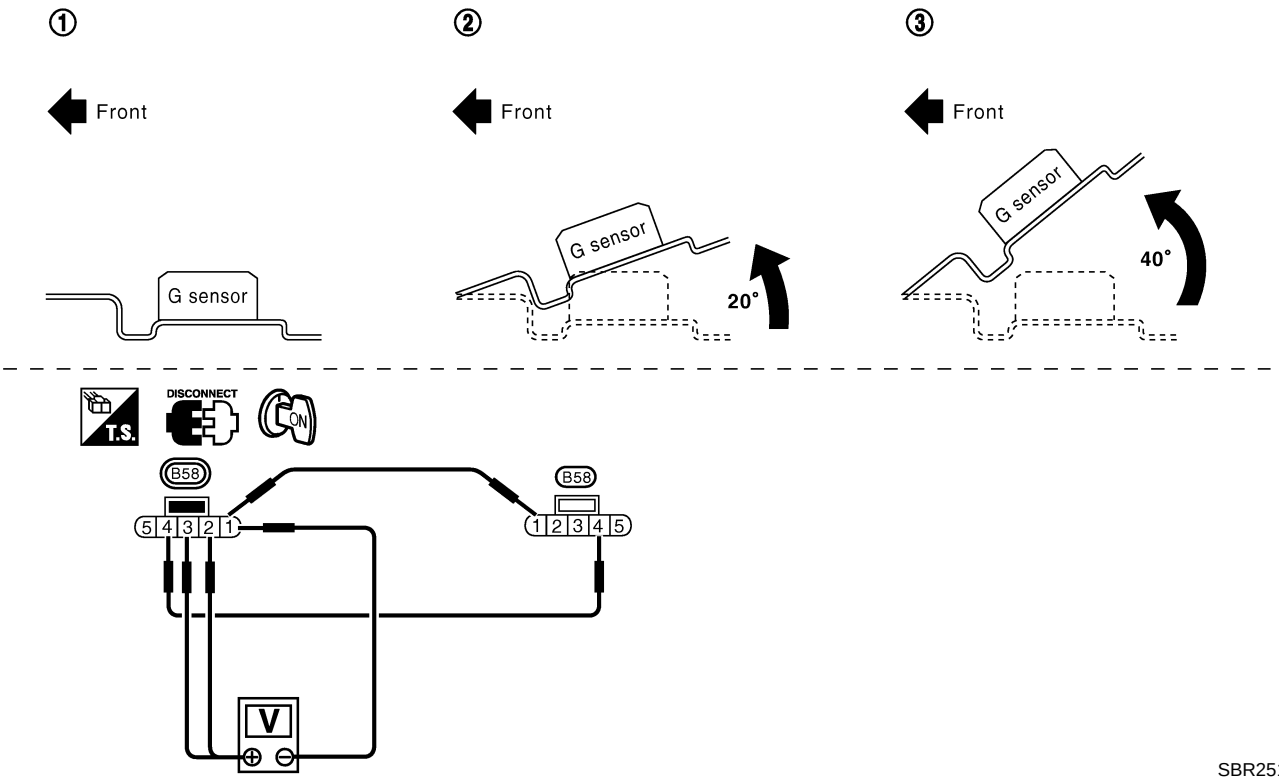

SBR251F

G sensor condition	Voltage between terminals 1 and 2	Voltage between terminals 1 and 3
1	Approx. 5V	Approx. 5V
2	Approx. 10V	Approx. 10V
3	Approx. 5V	Approx. 10V

MTBL0661

Is voltage OK?

Yes ▶	Check ABS actuator and electric unit pin terminals for damage or the connection of ABS actuator and electric unit harness connector. Then retest.
No ▶	Replace G sensor.

Control Unit

DIAGNOSTIC PROCEDURE

=NBBR0137

Malfunction code No. 71

1	INSPECTION START
ABS actuator and electric unit power supply and ground circuit inspection	

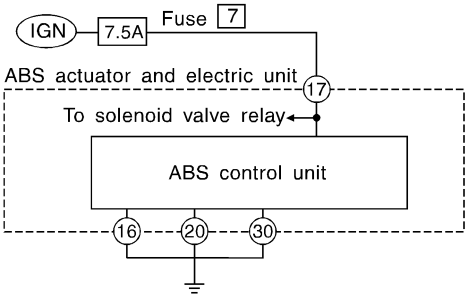

SBR706E

▶	GO TO 2.

2	CHECK CONNECTOR
1. Disconnect ABS actuator and electric unit connector. Check terminals for damage or loose connection. Then reconnect connector. 2. Carry out self-diagnosis again.	
Does warning lamp activate again?	
Yes ▶	GO TO 3.
No ▶	**INSPECTION END**

3	CHECK ABS ACTUATOR AND ELECTRIC UNIT POWER SUPPLY CIRCUIT
Check voltage. Refer to “5. CHECK ABS ACTUATOR AND ELECTRIC UNIT POWER SUPPLY CIRCUIT” in “DIAGNOSTIC PROCEDURE”, “Low Voltage”, BR-61.	
Does battery voltage exist when ignition switch is turned ON?	
Yes ▶	GO TO 4.
No ▶	Repair.

4	CHECK WARNING LAMP INDICATION
Does warning lamp indicate code No. 71 again?	
Yes or No	
Yes ▶	Replace ABS actuator and electric unit.
No ▶	Inspect the system according to the code No.

1. ABS Works Frequently

NBBR0138

1	CHECK BRAKE FLUID PRESSURE	
Check brake fluid pressure distribution. Refer to BR-11, “Inspection”, “PROPORTIONING VALVE”.		
Is brake fluid pressure distribution normal?		
Yes	▶	GO TO 2.
No	▶	Repair. Then perform Preliminary Check. Refer to BR-48.

2	CHECK WHEEL SENSOR	
1. Check wheel sensor connector for terminal damage or loose connections. 2. Perform wheel sensor mechanical check. Refer to “7. CHECK SENSOR ROTOR” in “DIAGNOSTIC PROCEDURE”, “Wheel Sensor or Rotor”, BR-54.		
Is wheel sensor mechanism OK?		
Yes	▶	GO TO 3.
No	▶	Repair.

3	CHECK FRONT AXLE	
Check front axles for excessive looseness. Refer to AX-4, “Front Wheel Bearing”.		
Is front axle installed properly?		
Yes	▶	Go to “3. CHECK WARNING LAMP INDICATION” in “2. Unexpected Pedal Action”, BR-66.
No	▶	Repair.

2. Unexpected Pedal Action

NBBR0139

1	CHECK BRAKE PEDAL STROKE	
Check brake pedal stroke.		
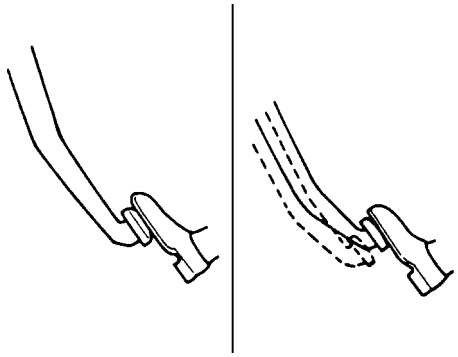 SBR540A		
Is brake pedal stroke excessively large?		
Yes	▶	Perform Preliminary Check. Refer to BR-48.
No	▶	GO TO 2.

2	CHECK MECHANICAL BRAKE SYSTEM PERFORMANCE	
Disconnect ABS actuator and electric unit connector and check whether brake is effective. **Does brake system function properly when brake pedal is depressed?**		
Yes	▶	GO TO 3.
No	▶	Perform Preliminary Check. Refer to BR-48.

3	CHECK WARNING LAMP INDICATION	
Ensure warning lamp remains off while driving. 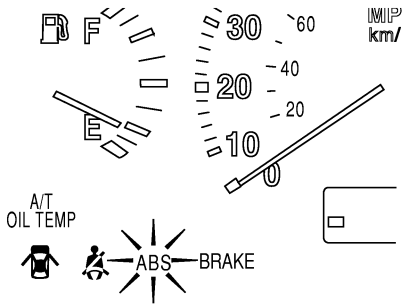 SBR672E **Is warning lamp turned off?**		
Yes	▶	GO TO 4.
No	▶	Carry out self-diagnosis. Refer to BR-39, BR-42.

4	CHECK WHEEL SENSOR	
1. Check wheel sensor connector for terminal damage or loose connection. 2. Perform wheel sensor mechanical check. Refer to "7. CHECK SENSOR ROTOR" in "DIAGNOSTIC PROCEDURE", "Wheel Sensor or Rotor", BR-54. **Is wheel sensor mechanism OK?**		
Yes	▶	Check ABS actuator and electric unit pin terminals for damage or the connection of ABS actuator and electric unit harness connector. Reconnect ABS actuator and electric unit harness connector. Then retest.
No	▶	Repair.

3. Long Stopping Distance

=NBBR0140

1	CHECK MECHANICAL BRAKE SYSTEM PERFORMANCE	
Disconnect ABS actuator and electric unit connector and check whether stopping distance is still long. **Does brake system function properly when brake pedal is depressed?**		
Yes	▶	Perform Preliminary Check and air bleeding (if necessary).
No	▶	Go to “3. CHECK WARNING LAMP INDICATION” in “2. Unexpected Pedal Action”, BR-66.

NOTE:
Stopping distance may be longer for vehicles without ABS when road condition is slippery.

4. ABS Does Not Work

NBBR0141

1	CHECK WARNING LAMP INDICATION	
Does the ABS warning lamp activate? **Yes or No**		
Yes	▶	Carry out self-diagnosis. Refer to BR-39, BR-42.
No	▶	Go to “3. CHECK WARNING LAMP INDICATION” in “2. Unexpected Pedal Action”, BR-66.

NOTE:
ABS does not work when vehicle speed is under 10 km/h (6 MPH).

5. Pedal Vibration and Noise

NBBR0142

1	INSPECTION START
Pedal vibration and noise inspection	

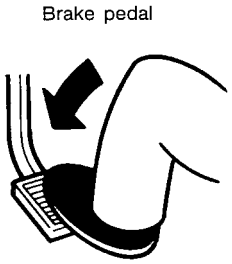

SAT797A

	▶	GO TO 2.

2	CHECK SYMPTOM	
1. Apply brake. 2. Start engine. **Does the symptom appear only when engine is started?**		
Yes	▶	Carry out self-diagnosis. Refer to BR-39, BR-42.
No	▶	Go to “3. CHECK WARNING LAMP INDICATION” in “2. Unexpected Pedal Action”, BR-66.

NOTE:
ABS may operate and cause vibration under any of the following conditions.

- Applying brake gradually when shifting or operating clutch.
- Low friction (slippery) road.
- High speed cornering.
- Driving over bumps and pot holes.
- Engine speed is over 5,000 rpm with vehicle stopped.

6. Warning Lamp Does Not Come On When Ignition Switch Is Turned On

NBBR0143

1	INSPECTION START
Warning lamp circuit inspection	

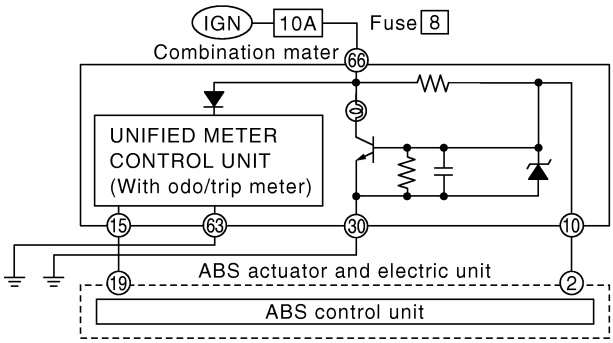

SBR237F

▶	GO TO 2.

2	CHECK FUSE
Check 10A fuse No. 8. For fuse layout, refer to EL-10, “POWER SUPPLY ROUTING”.	
Is fuse OK?	
Yes ▶	GO TO 3.
No ▶	Replace fuse.

3	CHECK WARNING LAMP ACTIVATE
Disconnect ABS actuator and electric unit connector.	

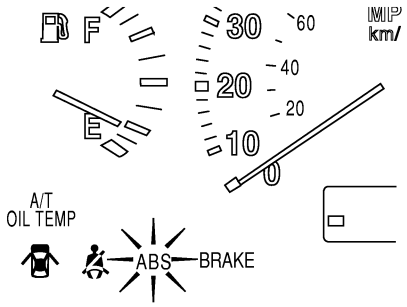

SBR672E

Does the warning lamp activate?	
Yes ▶	Replace ABS actuator and electric unit.
No ▶	GO TO 4.

4	CHECK HARNESS FOR SHORT

1. Disconnect ABS actuator and electric unit connector and combination meter connector M24.
2. Check continuity between ABS actuator and electric unit connector E111 terminal 2.

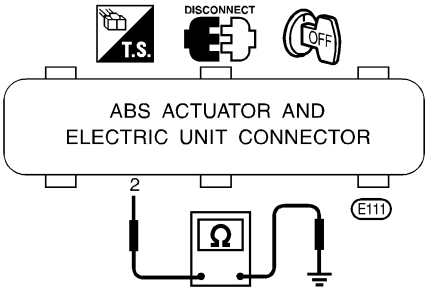

SBR708EB

Continuity should not exist.

Does continuity exist?

Yes	▶	Repair harness or connectors.
No	▶	**Check combination meter.** Refer to EL-148, "WARNING LAMPS".

7. Warning Lamp Stays On When Ignition Switch Is Turned On

=NBBR0144

1	INSPECTION START

ABS control unit inspection

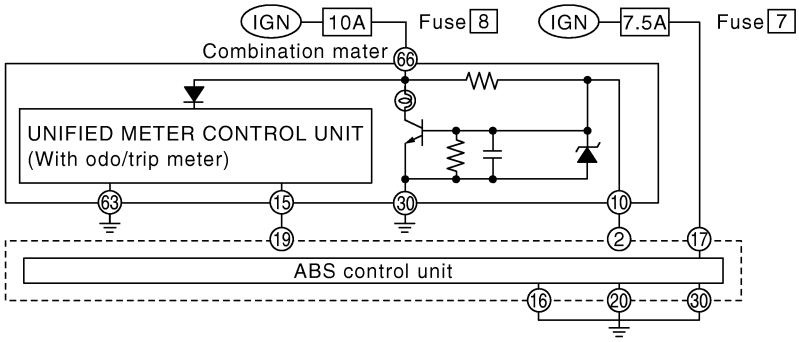

SBR238F

	▶	GO TO 2.

2	CHECK FUSE	
Check 7.5A fuse No. 7. For fuse layout, refer to EL-10, “POWER SUPPLY ROUTING”.		
Is fuse OK?		
Yes	▶	GO TO 3.
No	▶	GO TO 8.

3	CHECK HARNESS CONNECTOR	
Check ABS actuator and electric unit pin terminals for damage or bad connection of ABS actuator and electric unit harness connector. Reconnect ABS actuator and electric unit harness connector. Then retest.		
Does warning lamp stay on when ignition switch is turned ON?		
Yes	▶	GO TO 4.
No	▶	**INSPECTION END**

4	CHECK ABS ACTUATOR AND ELECTRIC UNIT GROUND CIRCUIT	
Refer to “ABS ACTUATOR AND ELECTRIC UNIT GROUND” in “Ground Circuit Check”, BR-51.		
Is ground circuit OK?		
Yes	▶	GO TO 5.
No	▶	Repair harness or connector.

5	CHECK ABS ACTUATOR AND ELECTRIC UNIT POWER SUPPLY CIRCUIT

1. Disconnect ABS actuator and electric unit connector.
2. Check voltage between ABS actuator and electric unit connector E111 terminal 17 and ground.

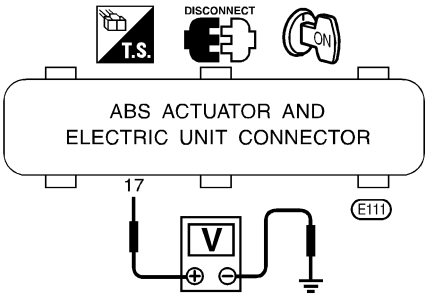

SBR701EB

Does battery voltage exist when ignition switch is turned ON?

Yes	▶	GO TO 6.
No	▶	**Check the following.** If NG, repair harness or connector. ● Harness connector E111 ● Harness for open or short between ABS actuator and electric unit and fuse

6	CHECK WARNING LAMP

1. Disconnect ABS actuator and electric unit connector.
2. Connect suitable wire between ABS actuator and electric unit connector E111 terminal 2 and ground.

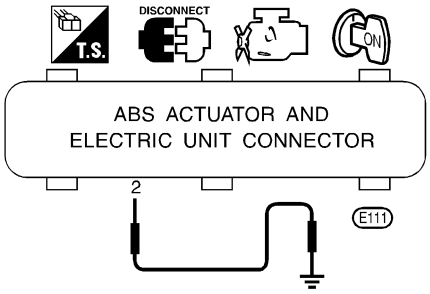

SBR713EB

Does the warning lamp deactivate?

Yes	▶	Replace ABS actuator and electric unit.
No	▶	GO TO 7.

7	CHECK ABS WARNING LAMP CONTROL CIRCUIT FOR OPEN

1. Disconnect combination meter connector M24.
2. Check continuity between combination meter connector M24 terminal 10 and ABS actuator and electric unit connector E111 (body side) terminal 2.
   NOTE:
   Connect positive lead of multimeter to1combination meter connector M24 terminal 10 and negative lead to ABS actuator and electric unit connector E111 terminal 2.

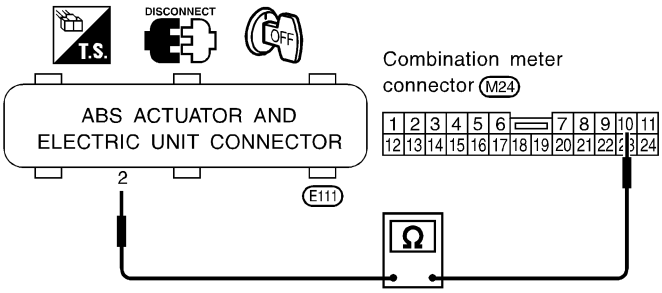

SBR710EB

Continuity should exist.

Does continuity exist?

Yes	▶	**Check combination meter.** Refer to EL-148, "WARNING LAMPS".
No	▶	Repair harness or connectors.

8	REPLACE FUSE

Replace fuse.

Does the fuse blow out when ignition switch is turned ON?

Yes	▶	GO TO 9.
No	▶	**INSPECTION END**

9	CHECK ABS ACTUATOR AND ELECTRIC UNIT POWER SUPPLY CIRCUIT FOR SHORT

1. Disconnect battery cable and ABS actuator and electric unit connector.
2. Check continuity between ABS actuator and electric unit connector E111 terminal 17 and ground.

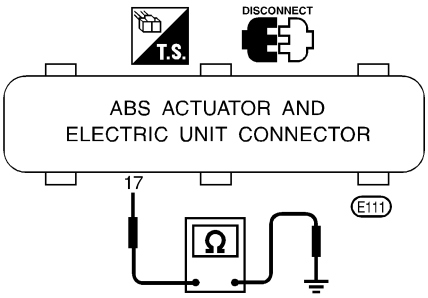

SBR702EB

Continuity should not exist.

Does continuity exist?

Yes	▶	**Check the following.** If NG, repair harness or connector. • Harness connector E111 • Harness for open or short between ABS actuator and electric unit and fuse
No	▶	Replace ABS actuator and electric unit.

8. Vehicle Vibrates Excessively When ABS Is Operating

=NBBR0145

- While ABS is operating, brake pedal vibrates slightly. This is not a problem.
- If vehicle vibration is greater in the AUTO mode than in the 2WD mode, there is the possibility of failure in the communication line between the ABS control unit and transfer control unit. Check and locate the cause of the problem.

1	INSPECTION START
Inspection for excessive vibration of vehicle	

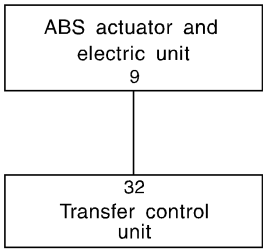

SBR711E

▶	GO TO 2.

2	CARRY OUT SELF-DIAGNOSIS
Perform self-diagnosis for the ABS actuator and electric unit and transfer control unit. **Are there any malfunctions?**	
Yes ▶	GO TO 3.
No ▶	GO TO 4.

3	INSPECTION OR REPAIR
Inspect or repair the system according to the self-diagnostic item.	
OK ▶	GO TO 4.

4	CHECK CIRCUIT

1. Disconnect connectors from ABS actuator and electric unit and transfer control unit. Check terminals for damage or loose connection.
2. Check continuity between ABS actuator and electric unit connector terminal 9 and transfer control unit connector terminal 32.

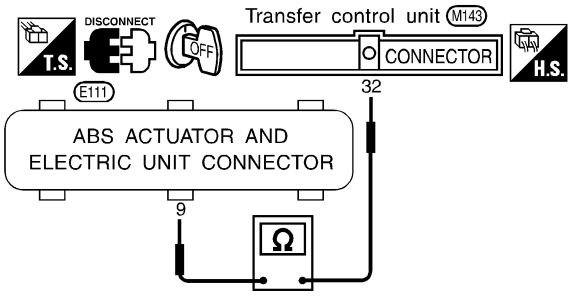

SBR712EA

Does continuity exist?

Yes	▶	GO TO 5.
No	▶	**Check the following.** ● Harness connectors E111, M143 ● Harness for open or short between ABS actuator and electric unit and transfer control unit If NG, repair harness or connectors.

5	CHECK ABS OPERATING SIGNAL CIRCUIT

1. Reconnect only ABS actuator and electric unit connector.
2. Check continuity between transfer control unit connector terminal 32 and ground.
   Continuity should not exist.

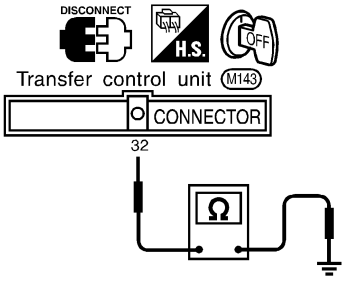

SBR510E

Does continuity exist?

Yes	▶	Replace ABS actuator and electric unit.
No	▶	GO TO 6.

6	CHECK ABS OPERATING SIGNAL

1. Connect CONSULT-II to Data Link Connector.
2. Turn ignition switch "ON". Set CONSULT-II in the active test mode to output an ABS operating signal. (Refer to "ACTIVE TEST PROCEDURE", "CONSULT-II Inspection Procedure", BR-45.)
3. An ABS operating signal lasts for 10 seconds. During the time the signal is being output, check resistance between transfer control unit connector terminal 32 and ground.
   Resistance: 0.5Ω, max.

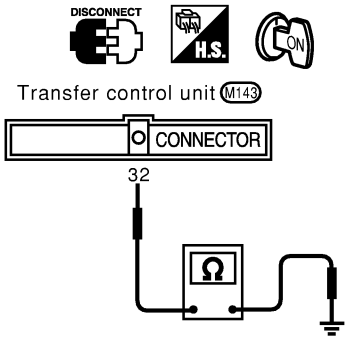

ACTIVE TEST	
ABS OPER SIG	OFF
MONITOR	
ABS OPER SIG	OFF

SBR680E

Is resistance within specifications?

Yes	▶	CHECK transfer control unit. Refer to TF-85, "ABS OPERATION SIGNAL".
No	▶	Replace ABS actuator and electric unit.

CAUTION:
Be careful not to damage sensor edge and sensor rotor teeth. When removing the front or rear wheel hub assembly, disconnect the ABS wheel sensor from the assembly and move it away.

Front Wheel Sensor

NBBR0079S01

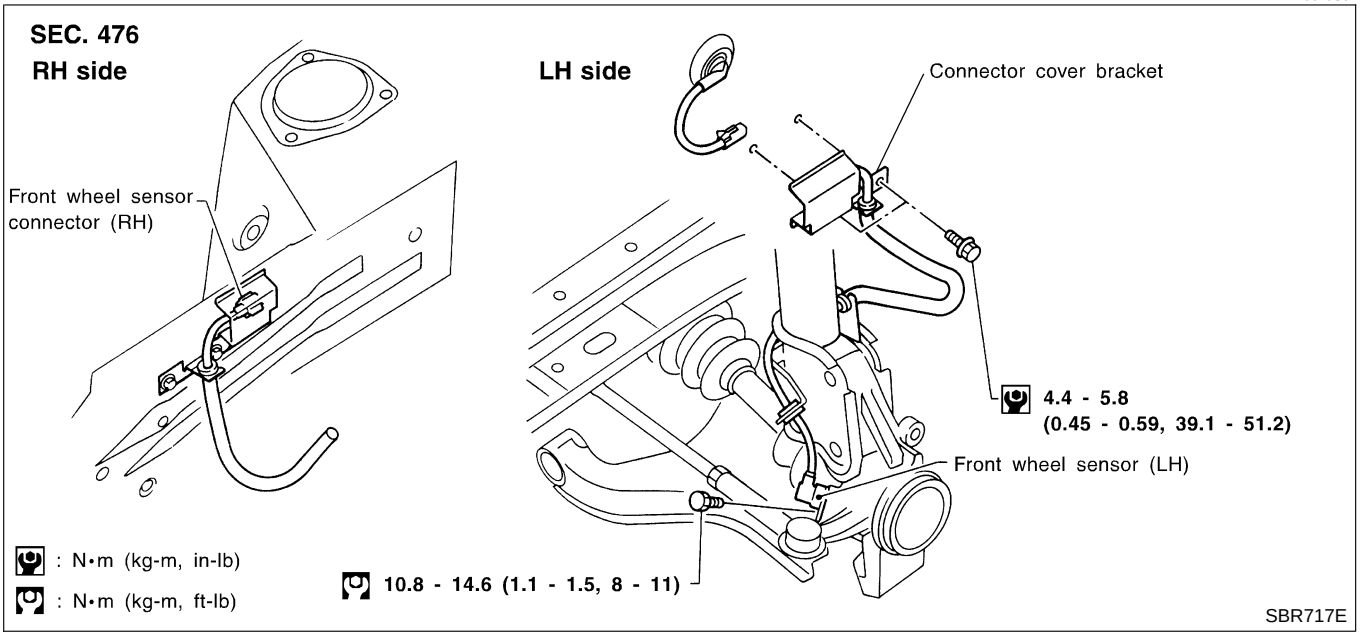

Rear Wheel Sensor

NBBR0079S02

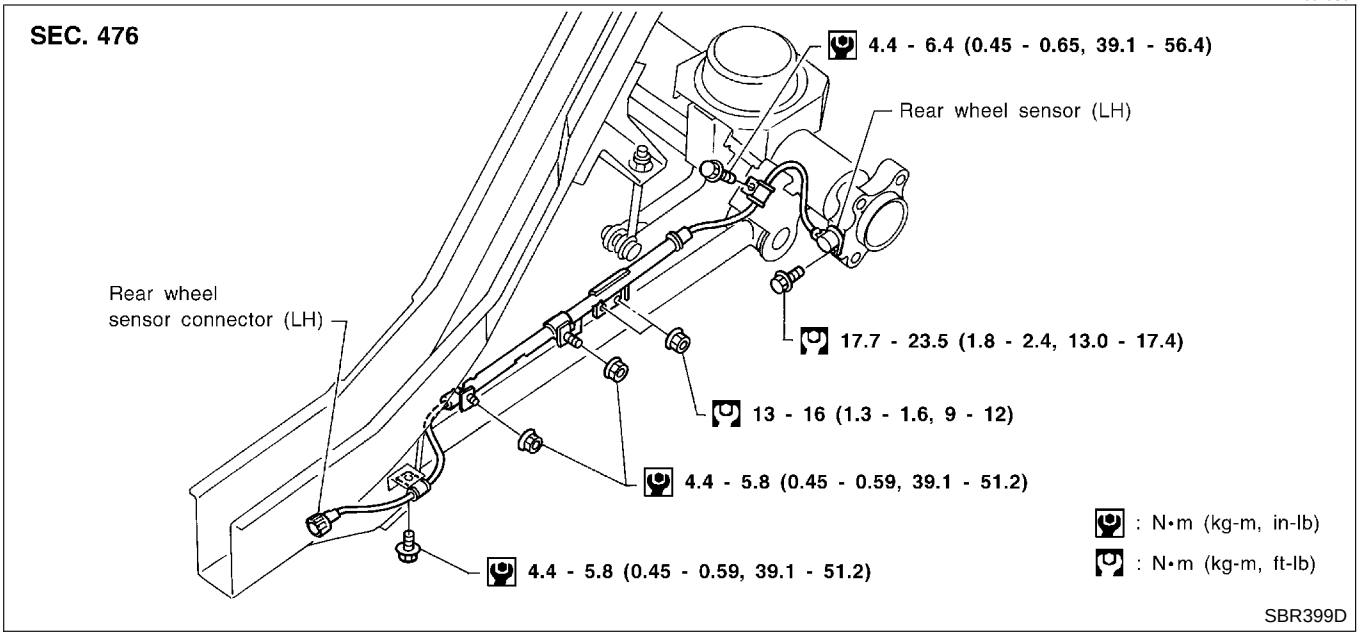

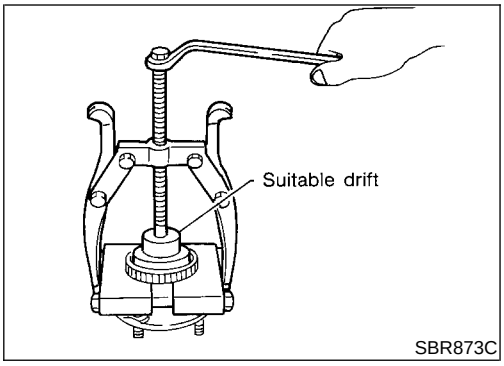

Front Sensor Rotor

NBBR0079S03

REMOVAL

NBBR0079S0301

1. Remove the front wheel hub. Refer to AX-9, “Disassembly”.
2. Remove the sensor rotor using suitable puller, drift and bearing replacer.

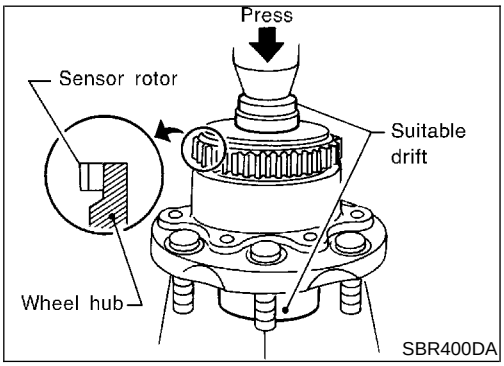

INSTALLATION

NBBR0079S0302

Install the sensor rotor using suitable drift and press.

- Always replace sensor rotor with new one.
- Pay attention to the direction of front sensor rotor as shown in figure.

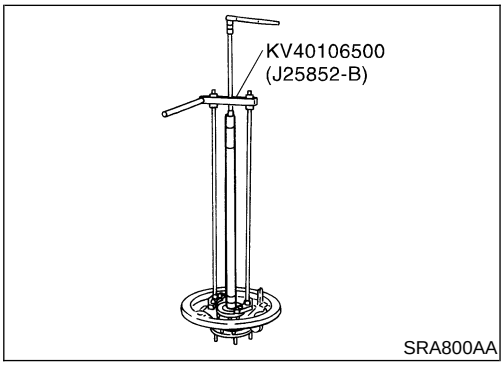

Rear Sensor Rotor

NBBR0079S04

REMOVAL

NBBR0079S0401

- Remove the sensor rotor using Tool.

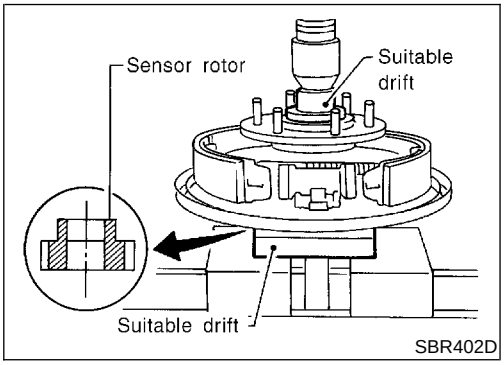

INSTALLATION

NBBR0079S0402

Install the sensor rotor using suitable drift and press.

- Always replace sensor rotor with new one.
- Pay attention to the direction of front sensor rotor as shown in figure.

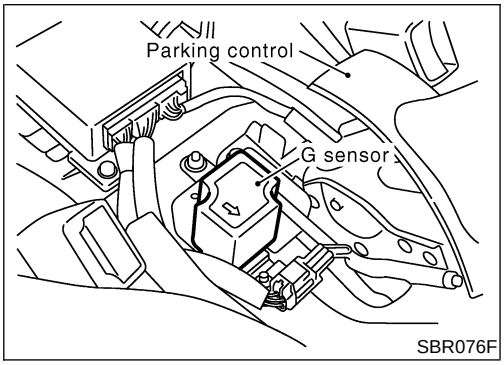

G Sensor

NBBR0079S06

Always replace G sensor if bumped or dropped. Otherwise, performance characteristics of G sensor will be changed, which in turn changes ABS control performance characteristics.

ABS Actuator and Electric Unit

NBBR0079S07

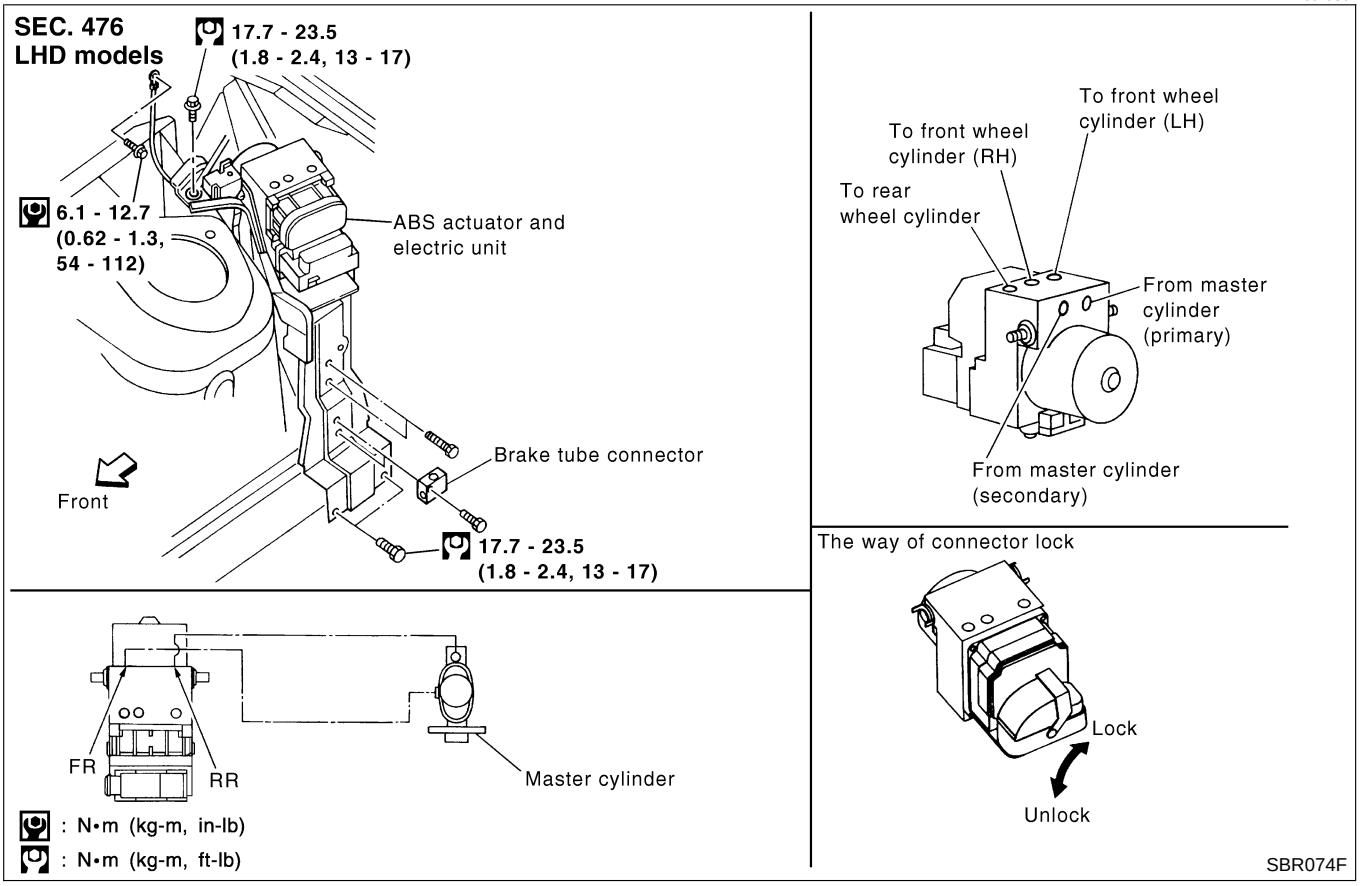

REMOVAL

NBBR0079S0701

1. Disconnect battery cable.
2. Drain brake fluid. Refer to “Changing Brake Fluid”, BR-7.
3. Remove mounting bracket fixing bolts and nuts.
4. Disconnect connector, brake pipes and remove fixing nuts and actuator ground cable.

INSTALLATION

NBBR0079S0702

CAUTION:

After installation, refill brake fluid. Then bleed air. Refer to “Bleeding Brake System”, BR-8.

1. Tighten actuator ground cable.

Place ground cable at a notch of mounting bracket.

2. Connect brake pipes temporarily.
3. Tighten fixing bolts and nuts.
4. Tighten brake pipes.
5. Connect connector and battery cable.

General Specifications

NBBR0118
Unit: mm (in)

Applied model		Models without ACC	Models with ACC
Front brake	Brake model	AD31VC	
	Cylinder bore diameter × number of pistons	44.45 (1.7500) × 2	
	Pad Length × width × thickness	132.0 × 52.5 × 11 (5.20 × 2.067 × 0.43)	
	Rotor outer diameter × thickness	300 × 28 (11.81 × 1.10)	
Rear brake	Brake model	LT30C	
	Cylinder bore diameter	22.23 (7/8)	
	Lining length × width × thickness	296 × 50 × 6.1 (11.65 × 1.97 × 0.240)	
	Drum inner diameter	295.0 (11.61)	
Master cylinder	Bore diameter	25.40 (1)	
Control valve	Valve model	Proportioning valve within master cylinder	
	Split point kPa (kg/cm^2, psi) × reducing ratio	2,942 (30, 427) × 0.2	
Brake booster	Booster model	M215T	R215T
	Diaphragm diameter	Pri: 230 (9.06) Sec: 205 (8.07)	
Recommended brake fluid		DOT 3	

Disc Brake

NBBR0119
Unit: mm (in)

Brake model		AD31VC
Pad wear limit	Minimum thickness	2.0 (0.079)
Rotor repair limit	Minimum thickness	26.0 (1.024)

Drum Brake

NBBR0120
Unit: mm (in)

Brake model		LT30C
Lining wear limit	Minimum thickness	1.5 (0.059)
Drum repair limit	Maximum inner diameter	296.5 (11.67)
	Out-of-round limit	0.03 (0.0012)

Brake Pedal

NBBR0121
Unit: mm (in)

Transmission		A/T
Free height “H”*		175 - 185 (6.89 - 7.28)
Depressed height “D”* [under force of 490 N (50 kg, 110 lb) with engine running]		70 (2.76)
Clearance “C” between pedal stopper and threaded end of stop lamp switch or ASCD switch		0.3 - 1.0 (0.012 - 0.039)
Pedal free play	At clevis	1.0 - 3.0 (0.039 - 0.118)
	At pedal pad	1 - 3 (0.04 - 0.12)

*: Measured from surface of metal panel to pedal pad

Parking Brake Control

NBBR0084

Unit: notch

Control Type	Center lever
Lever stroke [under force of 196 N (20 kg, 44 lb)]	6 - 8
Lever stroke when warning switch comes on	1 or less