SECTION HAC

HEATER & AIR CONDITIONING CONTROL SYSTEM

CONTENTS

AUTOMATIC AIR CONDITIONER

BASIC INSPECTION 4

DIAGNOSIS AND REPAIR WORKFLOW 4
- Work Flow 4

INSPECTION AND ADJUSTMENT 7
- Description & Inspection 7
- Temperature Setting Trimmer 9
- Foot Position Setting Trimmer 10
- Inlet Port Memory Function 11
- Exhaust Gas/Outside Odor Detecting Sensor Sensitivity Adjustment Function (With ACCS) 11
- Auto Intake Interlocking Movement Change Function (With ACCS) 12

SYSTEM DESCRIPTION 13

COMPRESSOR CONTROL FUNCTION 13
- Description 13
- Fail-Safe 13
- Component Part Location 14
- Component Description 16

AUTOMATIC AIR CONDITIONER SYSTEM 17
- System Diagram 17
- System Description 17
- Component Part Location 25
- Component Description 27

ACCS (ADVANCE CLIMATE CONTROL SYSTEM) 29
- System Diagram 29
- System Description 29
- Component Part Location 31
- Component Description 32

CAN COMMUNICATION SYSTEM 33
- System Description 33

MODE DOOR CONTROL SYSTEM 34
- System Diagram 34
- System Description 34

AIR MIX DOOR CONTROL SYSTEM 36
- System Diagram 36
- System Description 36

INTAKE DOOR CONTROL SYSTEM 38
- System Diagram 38
- System Description 38

BLOWER MOTOR CONTROL SYSTEM 40
- System Diagram 40
- System Description 40

MAGNET CLUTCH CONTROL SYSTEM 42
- System Diagram 42
- System Description 42

DIAGNOSIS SYSTEM (UNIFIED METER & A/C AMP.) 44
- Diagnosis Description 44
- CONSULT Function 48

DTC/CIRCUIT DIAGNOSIS 50

POWER SUPPLY AND GROUND CIRCUIT FOR AUTO AMP. 50
- Description 50
- Component Function Check 50
- Diagnosis Procedure 50

MODE DOOR MOTOR 52
- Description 52
- Component Function Check 52
- Diagnosis Procedure 52

AIR MIX DOOR MOTOR 54
- Description 54
- Component Function Check 54
- Diagnosis Procedure 54

INTAKE DOOR MOTOR 57

Description 57
Component Function Check 57
Diagnosis Procedure 57

BLOWER MOTOR 59
Description 59
Component Function Check 59
Diagnosis Procedure 59
Component Inspection 62

MAGNET CLUTCH 63
Description 63
Component Function Check 63
Diagnosis Procedure 63

ECV (ELECTRICAL CONTROL VALVE) 65
Description 65
Diagnosis Procedure 65

AMBIENT SENSOR 67
Description 67
Component Function Check 67
Diagnosis Procedure 67
Component Inspection 68

IN-VEHICLE SENSOR 70
Description 70
Component Function Check 70
Diagnosis Procedure 70
Component Inspection 71

SUNLOAD SENSOR 73
Description 73
Component Function Check 73
Diagnosis Procedure 73
Component Inspection 74

INTAKE SENSOR 76
Description 76
Component Function Check 76
Diagnosis Procedure 76
Component Inspection 77

EXHAUST GAS/OUTSIDE ODOR DETECTING SENSOR 78
Description 78
Component Function Check 78
Diagnosis Procedure 78

IONIZER 81
Description 81
Component Function Check 81
Diagnosis Procedure 81

ECU DIAGNOSIS INFORMATION 83

UNIFIED METER AND A/C AMP. 83
Reference Value 83
Wiring Diagram - AIR CONDITIONER CONTROL SYSTEM - 85
Fail-Safe 93

ECM 95
Reference Value 95

SYMPTOM DIAGNOSIS 112

AIR CONDITIONER CONTROL 112
Diagnosis Chart By Symptom 112

INSUFFICIENT COOLING 113
Description 113
Inspection procedure 113

INSUFFICIENT HEATING 115
Description 115
Inspection procedure 115

NOISE 117
Description 117
Inspection procedure 117

SELF-DIAGNOSIS CANNOT BE PERFORMED 119
Description 119
Inspection procedure 119

MEMORY FUNCTION DOES NOT OPERATE. 120
Description 120
Inspection procedure 120

PRECAUTION 121

PRECAUTIONS 121
Precautions for Removing Battery Terminal 121
Precaution for Supplemental Restraint System (SRS) "AIR BAG" and "SEAT BELT PRE-TENSIONER" 121

REMOVAL AND INSTALLATION 122

PRESET SWITCH 122
Exploded View 122
Removal and Installation 122

UNIFIED METER AND A/C AMP. 123
Exploded View 123
Removal and Installation 123

AMBIENT SENSOR 124
Exploded View 124
Removal and Installation 124

IN-VEHICLE SENSOR 125
Exploded View 125
Removal and Installation 125

SUNLOAD SENSOR 126
Exploded View 126
Removal and Installation 126

INTAKE SENSOR 127
Exploded View 127
Removal and Installation 129

EXHAUST GAS/OUTSIDE ODOR DETECTING SENSOR **130**
Exploded View 130
Removal and Installation 130

REFRIGERANT PRESSURE SENSOR **131**
Exploded View 131
Removal and Installation 131

DOOR MOTOR **132**
Exploded View 132

INTAKE DOOR MOTOR **132**
INTAKE DOOR MOTOR : Removal and Installation 132

MODE DOOR MOTOR **133**
MODE DOOR MOTOR : Removal and Installation. 133

AIR MIX DOOR MOTOR **133**
AIR MIX DOOR MOTOR : Removal and Installation 133

IONIZER **135**
Exploded View 135
Removal and Installation 135

BASIC INSPECTION

DIAGNOSIS AND REPAIR WORKFLOW

Work Flow

INFOID:0000000010594531

OVERALL SEQUENCE

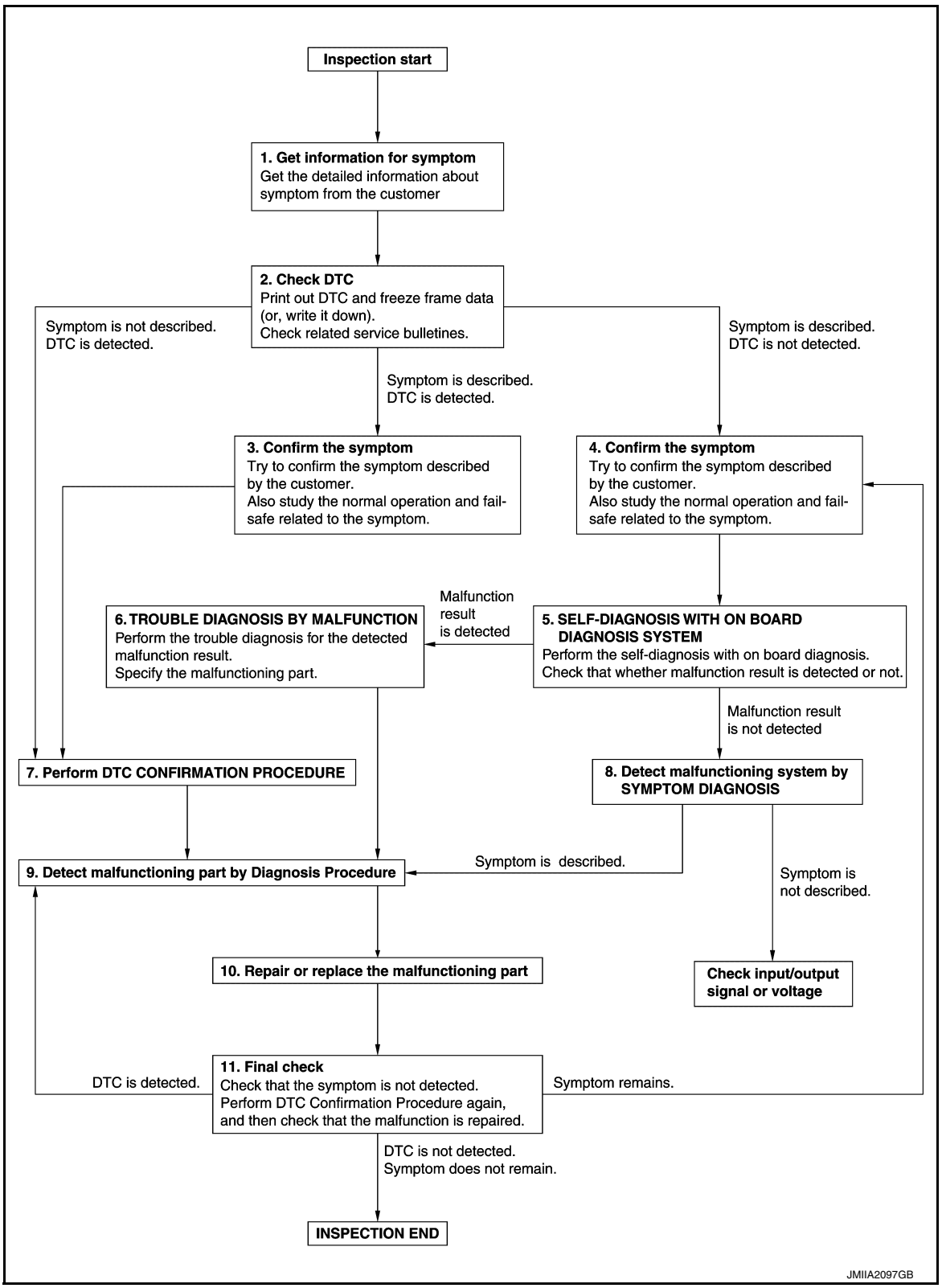

DETAILED FLOW

1. GET INFORMATION FOR SYMPTOM

1. Get detailed information from the customer about the symptom (the condition and the environment when the incident/malfunction occurs).
2. Check operation condition of the function that is malfunctioning.

>> GO TO 2.

2. CHECK DTC

1. Check DTC.
2. Perform the following procedure if DTC is detected.
- Record DTC and freeze frame data (Print them out using CONSULT.)
- Erase DTC.
- Study the relationship between the cause detected by DTC and the symptom described by the customer.
3. Check related service bulletins for information.

Are any symptoms described and any DTC detected?

Symptom is described, DTC is detected>>GO TO 3.
Symptom is described, DTC is not detected>>GO TO 4.
Symptom is not described, DTC is detected>>GO TO 7.

3. CONFIRM THE SYMPTOM

Try to confirm the symptom described by the customer.
Also study the normal operation and fail-safe related to the symptom.
Verify relation between the symptom and the condition when the symptom is detected.

>> GO TO 7.

4. CONFIRM THE SYMPTOM

Try to confirm the symptom described by the customer.
Also study the normal operation and fail-safe related to the symptom.
Verify relation between the symptom and the condition when the symptom is detected.

>> GO TO 5.

5. SELF-DIAGNOSIS WITH ON BOARD DIAGNOSIS SYSTEM

Perform the self-diagnosis with on board diagnosis. Check that whether malfunction result is detected or not.

Is malfunction result detected?

YES >> GO TO 6.
NO >> GO TO 8.

6. TROUBLE DIAGNOSIS BY MALFUNCTION

Perform the trouble diagnosis for the detected malfunction result. Specify the malfunctioning part.

>> GO TO 9.

7. PERFORM DTC CONFIRMATION PROCEDURE

Perform DTC CONFIRMATION PROCEDURE for the detected DTC, and then check that DTC is detected again. At this time, always connect CONSULT to the vehicle, and check self diagnostic results in real time.
If two or more DTCs are detected, refer to DTC INSPECTION PRIORITY CHART, and determine trouble diagnosis order.

NOTE:
- Freeze frame data is useful if the DTC is not detected.
- Perform Component Function Check if DTC CONFIRMATION PROCEDURE is not included on Service Manual. This simplified check procedure is an effective alternative though DTC cannot be detected during this check.
  If the result of Component Function Check is NG, it is the same as the detection of DTC by DTC CONFIRMATION PROCEDURE.

Is DTC detected?

YES >> GO TO 9.
NO >> Check according to GI-45, "Intermittent Incident".

8. DETECT MALFUNCTIONING SYSTEM BY SYMPTOM DIAGNOSIS

Detect malfunctioning system according to SYMPTOM DIAGNOSIS based on the confirmed symptom in step 4, and determine the trouble diagnosis order based on possible causes and symptom.

Is the symptom described?

YES >> GO TO 9.
NO >> Monitor input data from related sensors or check voltage of related module terminals using CONSULT.

9. DETECT MALFUNCTIONING PART BY DIAGNOSIS PROCEDURE

Inspect according to Diagnosis Procedure of the system.

Is malfunctioning part detected?

YES >> GO TO 10.
NO >> Check according to GI-45, "Intermittent Incident".

10. REPAIR OR REPLACE THE MALFUNCTIONING PART

1. Repair or replace the malfunctioning part.
2. Reconnect parts or connectors disconnected during Diagnosis Procedure again after repair and replacement.
3. Check DTC. If DTC is detected, erase it.

>> GO TO 11.

11. FINAL CHECK

When DTC is detected in step 2, perform DTC CONFIRMATION PROCEDURE again, and then check that the malfunction is repaired securely.
When symptom is described by the customer, refer to confirmed symptom in step 3 or 4, and check that the symptom is not detected.

Is DTC detected and does symptom remain?

YES-1 >> DTC is detected: GO TO 9.
YES-2 >> Symptom remains: GO TO 4.
NO >> Before returning the vehicle to the customer, always erase DTC.

INSPECTION AND ADJUSTMENT

Description & Inspection

INFOID:0000000010594532

DESCRIPTION

The purpose of the operational check is to check that the individual system operates normally.

Conditions : Engine running at normal operating temperature

INSPECTION PROCEDURE

1. CHECK MEMORY FUNCTION

1. Turn the ignition switch ON.
2. Turn temperature control dial (driver side) clockwise until 32°C (90°F) is displayed.
3. Press the OFF switch.
4. Turn the ignition switch OFF.
5. Turn the ignition switch ON.
6. Press the AUTO switch.
7. Check that the temperature setting before turning the ignition switch OFF is stored.

Is the inspection result normal?

YES >> GO TO 2.
NO >> Memory function malfunction: HAC-120, "Inspection procedure".

2. CHECK THE BLOWER MOTOR SPEED

1. Start the engine.
2. Press fan (UP:+) switch. Check that the fan speed changes. Check the operation for all fan speeds.
3. Set the fan speed to max speed.

Is the inspection result normal?

YES >> GO TO 3.
NO >> Blower motor system malfunction: HAC-59, "Diagnosis Procedure".

3. CHECK DISCHARGE AIR

1. Press the MODE switch and the DEF switch.
2. Check that the air outlets change according to each indicated air outlet by placing a hand in front of the outlets. Refer to VTL-6, "System Description".

Is the inspection result normal?

YES-1 >> GO TO 4. (WITHOUT ACCS)
YES-2 >> GO TO 5. (WITH ACCS)
NO >> Mode door system malfunction: HAC-52, "Diagnosis Procedure".

4. CHECK INTAKE AIR (WITHOUT ACCS)

1. Press intake switch. REC indicator turns ON.
2. Press intake switch again. FRE indicator turns ON.
3. Listen for intake door position change. (Slight change of blower sound can be heard.)

NOTE:
Confirm that the compressor clutch is engaged (sound or visual inspection) and the intake door position is at FRE when D/F or DEF is selected.

Is the inspection result normal?

YES >> GO TO 6.
NO >> Intake door system malfunction: HAC-57, "Diagnosis Procedure".

5. CHECK INTAKE AIR (WITH ACCS)

1. Press AUTO switch. AUTO INTAKE indicator and REC indicator turns ON (auto intake mode).
2. Press intake switch. AUTO INTAKE indicator and REC indicator turns OFF (fixed FRE mode).
3. Press intake switch again. REC indicator turns ON (fixed REC mode).
4. Press intake switch again. AUTO INTAKE indicator and REC indicator turns ON (auto intake mode).
5. Listen for intake door position change. (Slight change of blower sound can be heard.)

NOTE:

Confirm that the compressor clutch is engaged (sound or visual inspection) and the intake door position is at FRE when D/F or DEF is selected.

Is the inspection result normal?

YES >> GO TO 6.
NO >> Intake door system malfunction: HAC-57, "Diagnosis Procedure".

6. CHECK A/C SWITCH

1. Press the A/C switch.
2. A/C switch indicator turns ON.
   Confirm that the compressor clutch engages (sound or visual inspection).

Is the inspection result normal?

YES >> GO TO 7.
NO >> Magnet clutch system malfunction: HAC-63, "Diagnosis Procedure".

7. CHECK WITH TEMPERATURE SETTING LOWERED

1. Turn temperature control dial (driver side) counterclockwise until 18°C (60°F) is displayed.
2. Check that the cool air blows from the outlets.

Is the inspection result normal?

YES >> GO TO 8.
NO >> Insufficient cooling: HAC-113, "Inspection procedure".

8. CHECK WITH TEMPERATURE SETTING RAISED

1. Turn temperature control dial (driver side) clockwise until 32°C (90°F) is displayed.
2. Check that the warm air blows from the outlets.

Is the inspection result normal?

YES >> GO TO 9.
NO >> Insufficient heating: HAC-115, "Inspection procedure".

9. CHECK LEFT AND RIGHT VENTILATION TEMPERATURE SEPARATELY CONTROL SYSTEM FUNCTION

1. Press the DUAL switch, and then check that “DUAL” is shown on the display.
2. Operate temperature control dial (driver side). Check that the discharge air temperature (driver side) changes.
3. Operate the temperature control dial (passenger side). Check that the discharge air temperature (passenger side) changes.
4. Press the DUAL switch, and then check that the temperature setting (LH/RH) is unified to the driver side temperature setting.

Is the inspection result normal?

YES >> GO TO 10.
NO >> Refer to HAC-112, "Diagnosis Chart By Symptom" and perform the appropriate diagnosis.

10. CHECK AUTO MODE

1. Press the AUTO switch, and then check that “AUTO” is shown on the display.
2. Check that the discharge air and blower speed depend on ambient temperature, in-vehicle temperature and temperature setting.

Is the inspection result normal?

YES-1 >> INSPECTION END (WITHOUT ACCS)
YES-2 >> GO TO 11. (WITH ACCS)
NO >> Refer to HAC-112, "Diagnosis Chart By Symptom" and perform the appropriate diagnosis.

11. CHECK PLASMACLUSTER ION CONTROL FUNCTION (WITH ACCS)

1. Turn ignition switch OFF and restart the engine.
2. Ion indicator is shown on the display.
3. Press OFF switch.
4. Ion indicator is turned OFF.

Is the inspection result normal?

YES >> GO TO 12.
NO >> Refer to HAC-81, "Diagnosis Procedure".

12. CHECK ION CONTROL MODE (WITH ACCS)

1. Turn ignition switch OFF and restart the engine.
2. Operate fan control dial to the blower fan lowest speed and highest speed. Check display of ion indicator each time blower fan is at lowest speed and at highest speed.

When blower fan speed is at lowest speed: CLEAN

When blower fan speed is at highest speed: QUICK CLEAN

Is the inspection result normal?

YES >> INSPECTION END
NO >> Replace unified meter and A/C amp.

Temperature Setting Trimmer

INFOID:0000000010594533

DESCRIPTION

The trimmer compensates for differences in range of ±3°C (±6°F) between temperature setting (displayed digitally) and temperature felt by customer.

Operating procedures for this trimmer are as per the following:

1. Begin self-diagnosis STEP-5 mode. Refer to HAC-44, "Diagnosis Description".
2. Press fan (UP: +) switch to set system in auxiliary mode.
3. Display shows “61” in auxiliary mechanism. It takes approximately 3 seconds to enable setting operation.
4. Turn temperature control dial (driver side) as desired. Temperature will change at a rate of 0.5°C (1.0°F) each time a dial is turned.

CAUTION:

A decimal point is not indicated on the display.

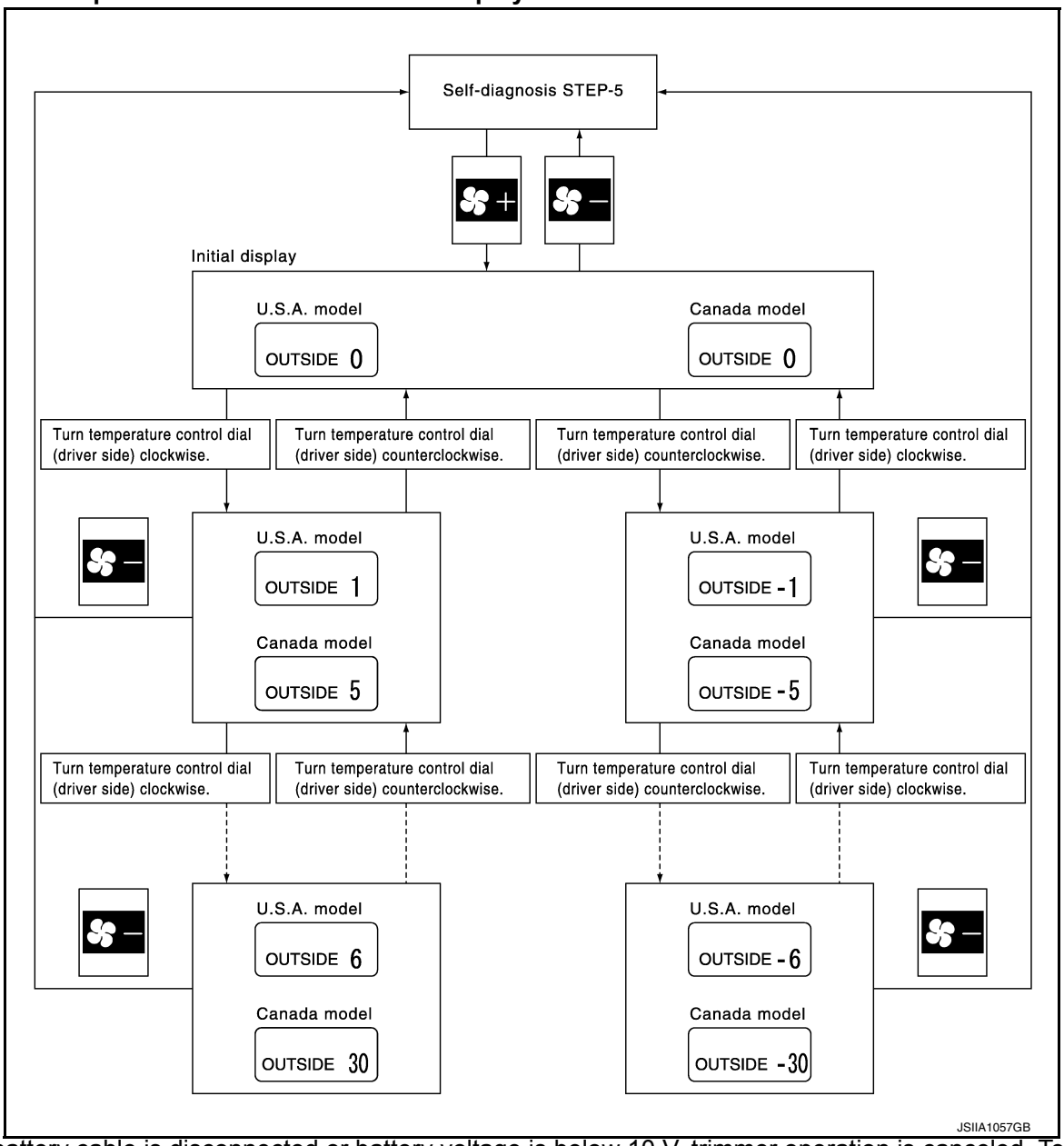

When battery cable is disconnected or battery voltage is below 10 V, trimmer operation is canceled. Temperature set becomes that of initial condition, i.e. 0°C (0°F).

Foot Position Setting Trimmer

INFOID:0000000010594534

DESCRIPTION

Wind distribution ratio in FOOT mode can be set.

Operating procedures for this trimmer are as per the following:

1. Begin self-diagnosis STEP-5 mode. Refer to HAC-44, "Diagnosis Description".
2. Press fan (UP:+) switch to set system in auxiliary mode.

3. Press mode switch as desired.

Display	Discharge air flow									
	Automatically controls the mode door					Manually controls the mode door				
	VENT		FOOT		DEF	VENT		FOOT		DEF
	Front	Rear	Front	Rear		Front	Rear	Front	Rear	
(Initial setting)	10%	12%	33%	22%	23%	10%	12%	33%	22%	23%
	10%	12%	33%	22%	23%	13%	16%	43%	28%	–
	13%	16%	43%	28%	–	10%	12%	33%	22%	23%
	13%	16%	43%	28%	–	13%	16%	43%	28%	–

JSIIA0894GB

When battery cable is disconnected or battery voltage is below 10 V, trimmer operation is canceled. Wind distribution ratio set becomes that of initial condition.

Inlet Port Memory Function

INFOID:0000000010594535

DESCRIPTION

When ignition switch is turned from OFF to ON, inlet port can be set to AUTO or manual.

Operating procedures for this trimmer are as per the following:
1. Begin self-diagnosis STEP-5 mode. Refer to HAC-44, "Diagnosis Description".
2. Press fan (UP:+) switch to set system in auxiliary mode.
3. Press intake switch as desired.

FRE indicator	REC indicator	Setting status		Setting changeover method
		FRE	REC	
OFF	ON	AUTO control (Initial setting)	Manual REC status is memorized. (Initial setting)	Intake switch: ON
ON	ON	Manual FRE status is memorized.	Manual REC status is memorized.	
ON	OFF	Manual FRE status is memorized.	AUTO control	
OFF	OFF	AUTO control	AUTO control	

When battery cable is disconnected or battery voltage is below 10 V, memory function is canceled. Memory function set becomes that of initial condition.

Exhaust Gas/Outside Odor Detecting Sensor Sensitivity Adjustment Function (With ACCS)

INFOID:0000000010594536

DESCRIPTION

According to customer's sense of smell, exhaust gas / outside odor detecting sensor sensitivity can be changed.

Operating procedures for this trimmer are as follows:
1. Begin self-diagnosis STEP-5 mode. Refer to HAC-44, "Diagnosis Description".
2. Press fan (UP: +) switch two times to set system in auxiliary mode.
3. Turn temperature control dial (driver side) as desired.

Display	Setting
71	Less sensitive setting than display 72 setting (the change to REC is later than display 72 operation)
72	Less sensitive setting than normal setting (the change to REC is later than normal operation)
73	Normal (Initial setting)
74	More sensitive setting than normal setting (the change to REC is earlier than normal operation)
75	More sensitive setting than display 74 setting (the change to REC is earlier than display 74 operation)

NOTE:
When battery cable is disconnected or battery voltage is below 10 V, exhaust gas/outside odor detecting sensor sensitivity adjustment function is canceled. Exhaust gas / outside odor detecting sensor sensitivity adjustment function set becomes that of initial condition.

Auto Intake Interlocking Movement Change Function (With ACCS)

INFOID:0000000010594537

DESCRIPTION

Conditions for interlocking movement of intake switch (auto intake mode) and A/C switch can be changed. In addition, operation of the intake switch, which activates the auto intake control system, can be set to become available when the A/C switch is ON.

Operating procedures for this trimmer are as follows:
1. Begin self-diagnosis STEP-5 mode. Refer to HAC-44, "Diagnosis Description".
2. Press fan (UP:+) switch three times to set system in auxiliary mode.
3. Press A/C switch and intake switch as desired.

A/C indicator	AUTO INTAKE indicator	Setting status
ON	ON	A/C switch indicator turns ON automatically when auto intake mode is selected with Intake switch. Auto intake mode continues after A/C switch turns OFF.
OFF	ON	A/C switch indicator stays OFF when auto intake mode is selected with Intake switch. Auto intake mode continues after A/C switch turns OFF.
ON	OFF	A/C switch indicator turns ON automatically when auto intake mode is selected with Intake switch. When A/C switch turns OFF, auto intake mode turns OFF automatically. (Initial setting)
OFF	OFF	Auto intake mode can be set only when A/C switch is ON. When A/C switch turns OFF, auto intake mode turns OFF automatically.

NOTE:
When battery cable is disconnected or battery voltage is below 10 V, auto intake interlocking movement change function is canceled. Auto intake interlocking movement change function set becomes that of initial condition.

SYSTEM DESCRIPTION

COMPRESSOR CONTROL FUNCTION

Description

INFOID:0000000010594538

PRINCIPLE OF OPERATION

Compressor is not activated.

Functional circuit diagram

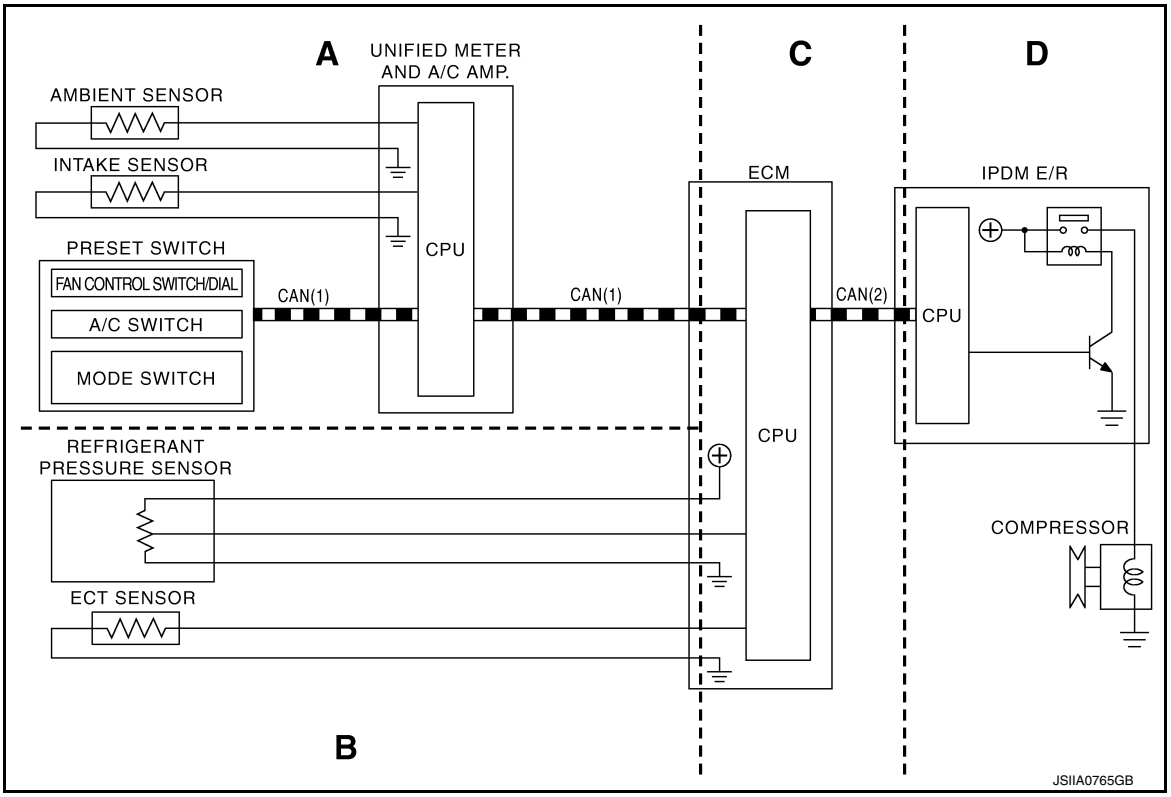

CAN(1) : A/C switch signal
: Blower fan motor switch signal

CAN(2) : A/C compressor request signal

Functional initial inspection chart

Location		A	B	C	D
CONSULTI	ECM DATA MONITOR		Yes	Yes	
	IPDM E/R DATA MONITOR			Yes	
AUTO ACTIVE TEST					Yes
Self-diagnosis function (except CAN diagnosis)		Yes			

Fail-Safe

INFOID:0000000010594539

FAIL-SAFE FUNCTION

- If a communication error exists between the unified meter and A/C amp., and preset switch for 30 seconds or longer, air conditioner is controlled under the following conditions:

Compressor : ON
Air outlet : AUTO
Air inlet : FRE (Fresh)

Blower fan speed	**: AUTO**
Set temperature	**: Setting before communication error occurs**
Display	**: OFF**

Component Part Location

INFOID:0000000010594540

ENGINE COMPARTMENT

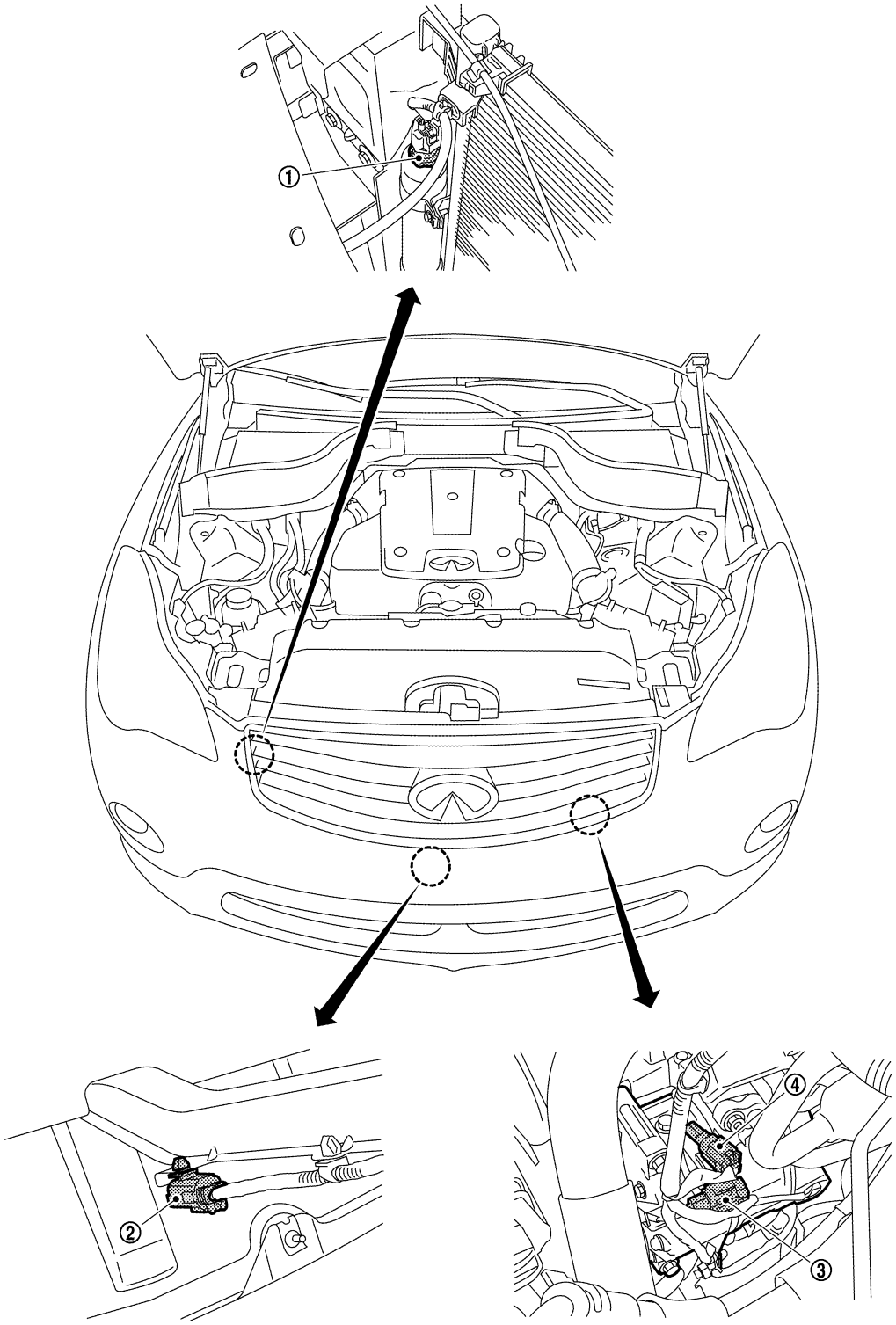

JPIIA0715ZZ

1. Refrigerant pressure sensor
2. Ambient sensor
3. Compressor (magnet clutch)
4. Compressor (ECV)

PASSENGER COMPARTMENT

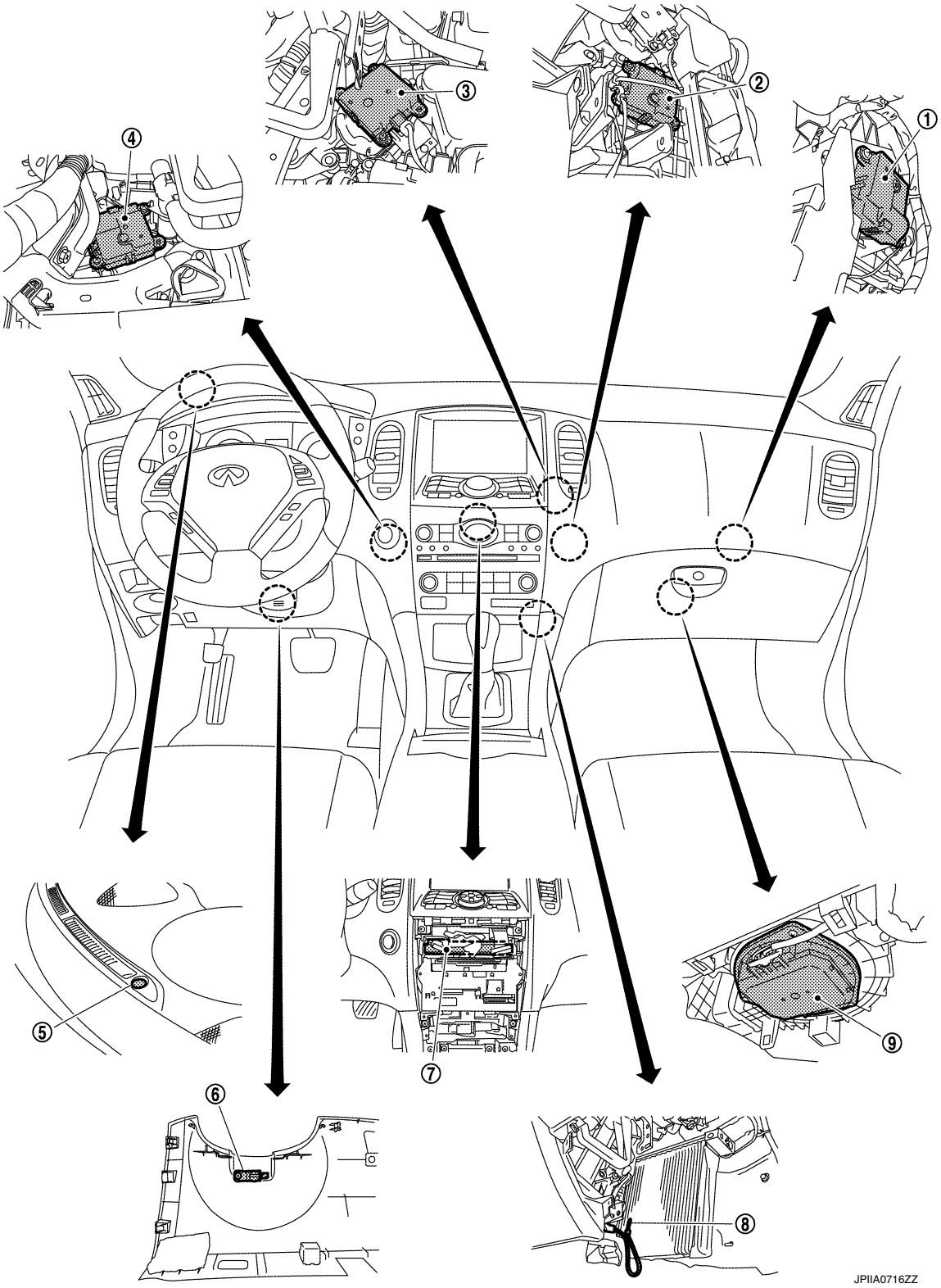

1. Intake door motor
2. Air mix door motor (passenger side)
3. Mode door motor

4. Air mix door motor (driver side)
5. Sunload sensor
6. In-vehicle sensor
7. Unified meter and A/C amp.
8. Intake sensor
9. Blower motor

Component Description

INFOID:0000000010594541

Component	Reference
Air mix door motor	HAC-54, "Description"
Ambient sensor	HAC-67, "Description"
Blower motor	HAC-59, "Description"
Compressor (Magnet clutch)	HAC-63, "Description"
Compressor (ECV)	HAC-65, "Description"
intake door motor	HAC-57, "Description"
intake sensor	HAC-76, "Description"
In-vehicle sensor	HAC-70, "Description"
Mode door motor	HAC-52, "Description"
Refrigerant pressure sensor	EC-529, "Description"
Sunload sensor	HAC-73, "Description"
Unified meter and A/C amp.	HAC-50, "Description"

AUTOMATIC AIR CONDITIONER SYSTEM

System Diagram

INFOID:0000000010594542

CONTROL SYSTEM

The control system consists of input sensors, switches, unified meter and A/C amp. (microcomputer) and outputs. The relationship of these components is as shown in the figure below:

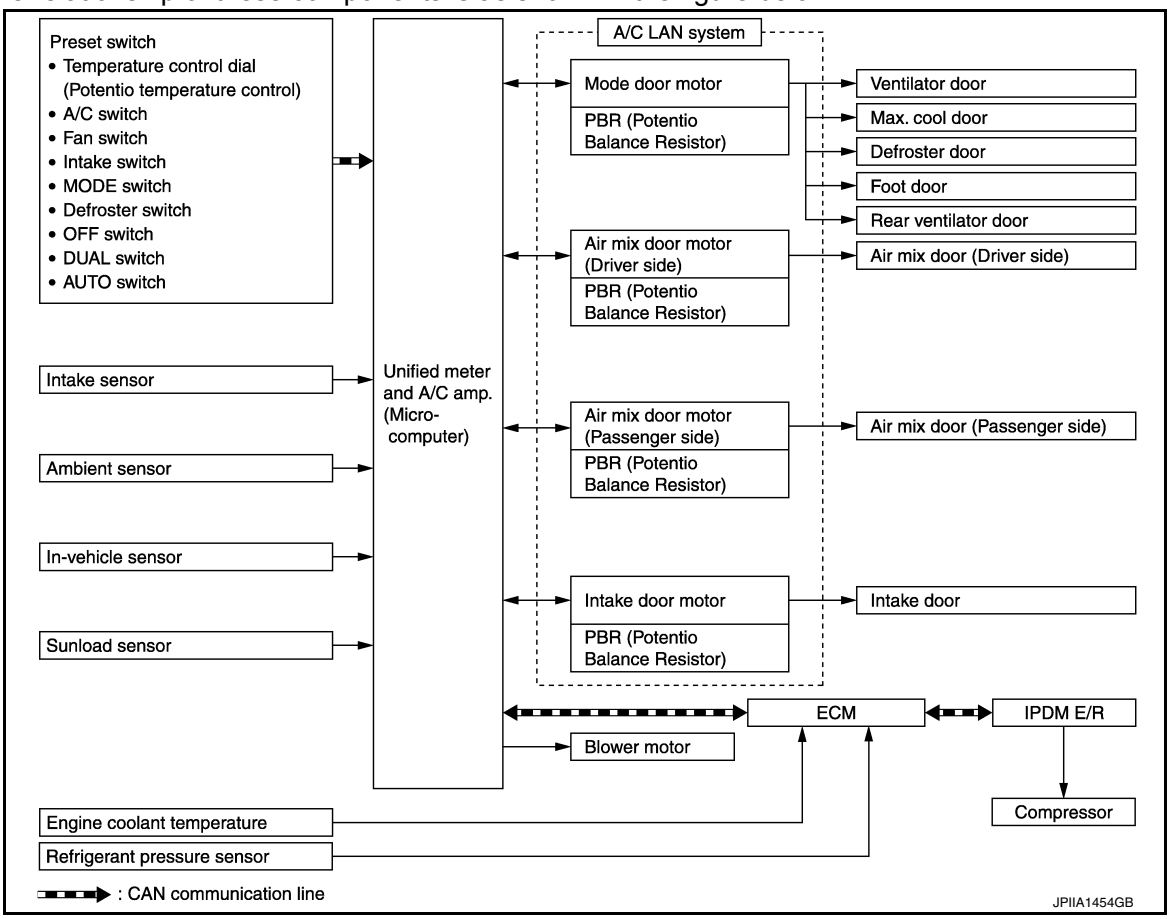

System Description

INFOID:0000000010594543

CONTROL OPERATION

Display Screen

The operation status of the system is displayed on the screen.

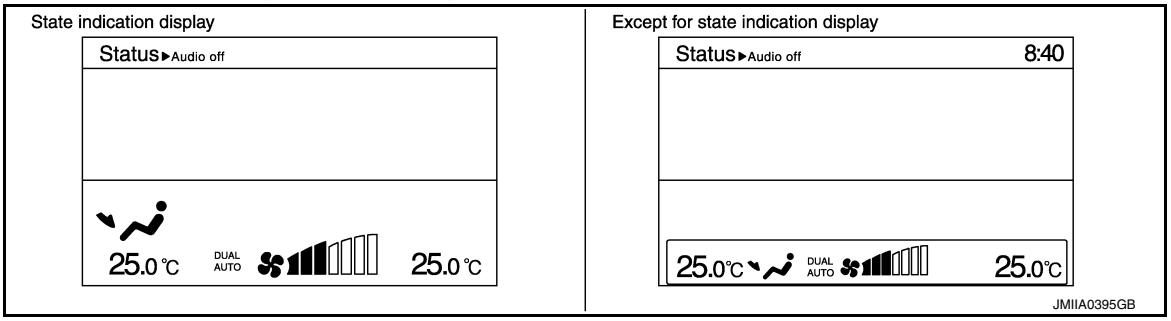

Preset Switch

Without ACCS

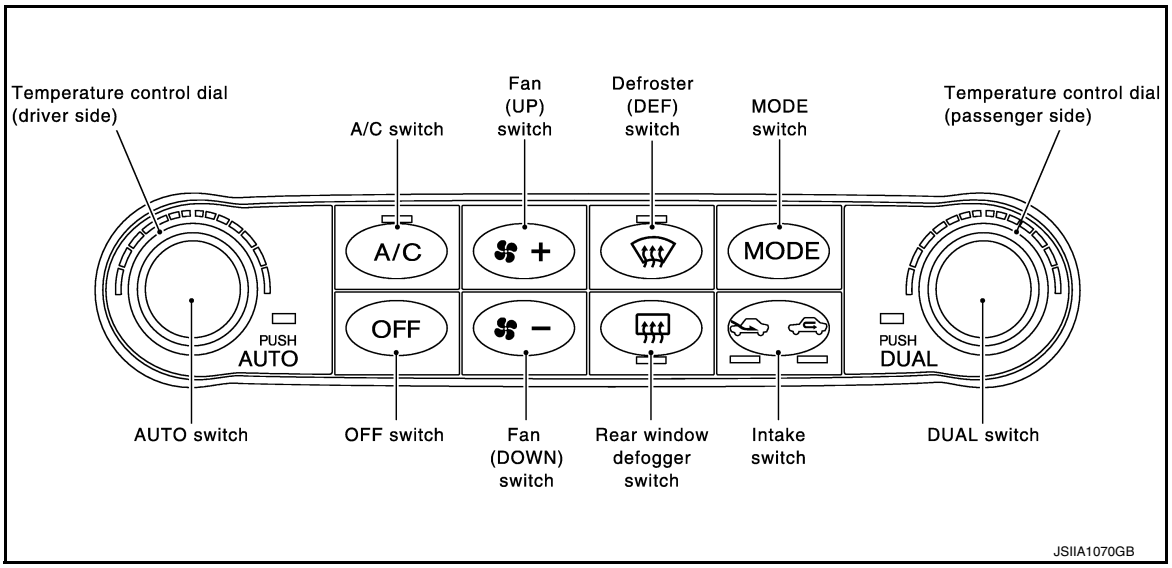

With ACCS

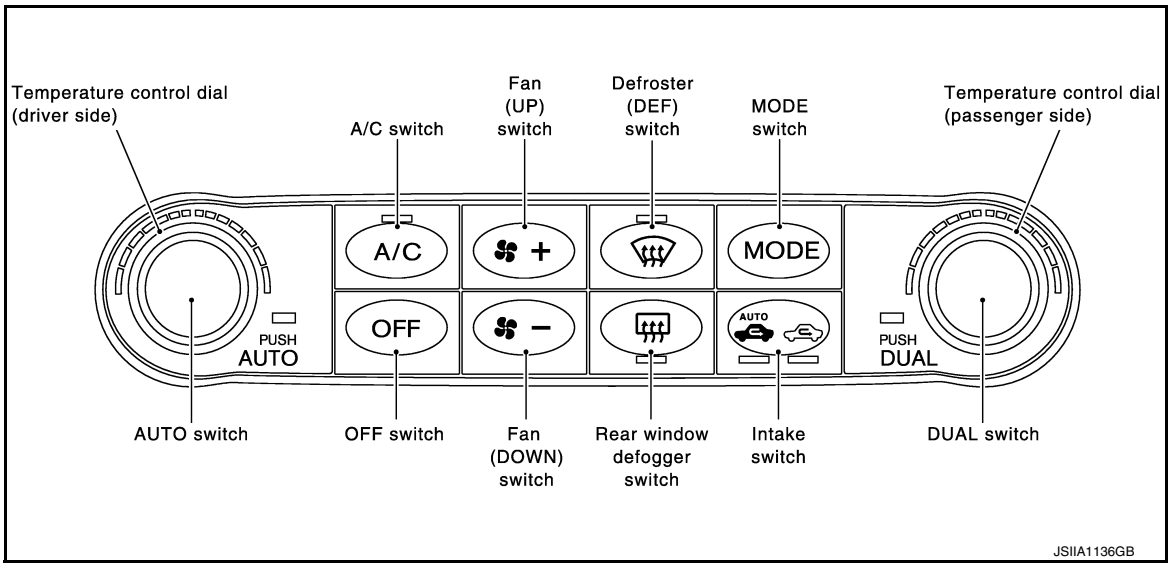

MODE Switch
The air discharge outlets are controlled with this switch.

Temperature Control Dial (Potentio Temperature Control) (Driver Side)
The set temperature is increased or decreased with this dial.

Temperature Control Dial (Potentio Temperature Control) (Passenger Side)
- The set temperature is increased or decreased with this dial.
- When the temperature control dial is turned, DUAL switch indicator turns ON.

AUTO Switch
- The compressor, intake doors, air mix doors, mode doors and blower speed are automatically controlled so that the in-vehicle temperature will reach, and be maintained at the set temperature selected by the operator.
- When pressing AUTO switch, air inlet, air outlet, fan speed, and discharge air temperature are automatically controlled.

Defroster (DEF) Switch
Mode doors are set to the defrost position with this switch. Also, intake doors are set to the outside air position, and compressor turns ON.

A/C Switch
Compressor is ON or OFF with this switch.
(Pressing the A/C switch when the A/C switch is ON turns OFF the A/C switch and compressor.)

FAN Switches

The blower speed is manually controlled with this switch. Seven speeds are available for manual control (as shown on the display screen).

OFF Switch

Compressor and blower are OFF, air inlet is set to FRE, and mode position is set to foot position.

Rear Window Defogger Switch

When indicator is ON, rear window is defogged.

Intake Switch (Without ACCS)

- When intake switch is ON, FRE indicator turns ON, and air inlet is fixed to FRE.
- When intake switch is pressed again, REC indicator turns ON, and air inlet is fixed to REC.
- When intake switch is pressed for approximately 2 seconds or longer, FRE and REC indicators blink twice. Then, automatic control mode is entered. Inlet status is displayed by indicator even during automatic controlled.
- When REC indicator is turned OFF, shifting mode position to D/F or DEF or when compressor is turned from ON to OFF, intake mode position is fixed to FRE mode.

Intake Switch (With ACCS)

- When AUTO switch is pressed, AUTO intake indicator and REC indicator turns ON, and air inlet is automatic control.
- When intake switch is pressed, AUTO intake indicator and REC indicator turns OFF, and air inlet is fixed to FRE.
- When intake switch is pressed again, REC indicator turns ON, and air inlet is fixed to REC.
- Then auto intake mode is entered, inlet status is displayed by REC indicator even during automatic controlled.
- When REC indicator is turned OFF, shifting mode position to D/F or DEF or when compressor is turned from ON to OFF, intake mode position is fixed to FRE mode.

DUAL Switch

- When the DUAL switch indicator is ON, the driver side and passenger side temperature can each be set independently.
- When the DUAL switch indicator is OFF, the driver side setting temperature is applied to both sides.

DISCHARGE AIR FLOW

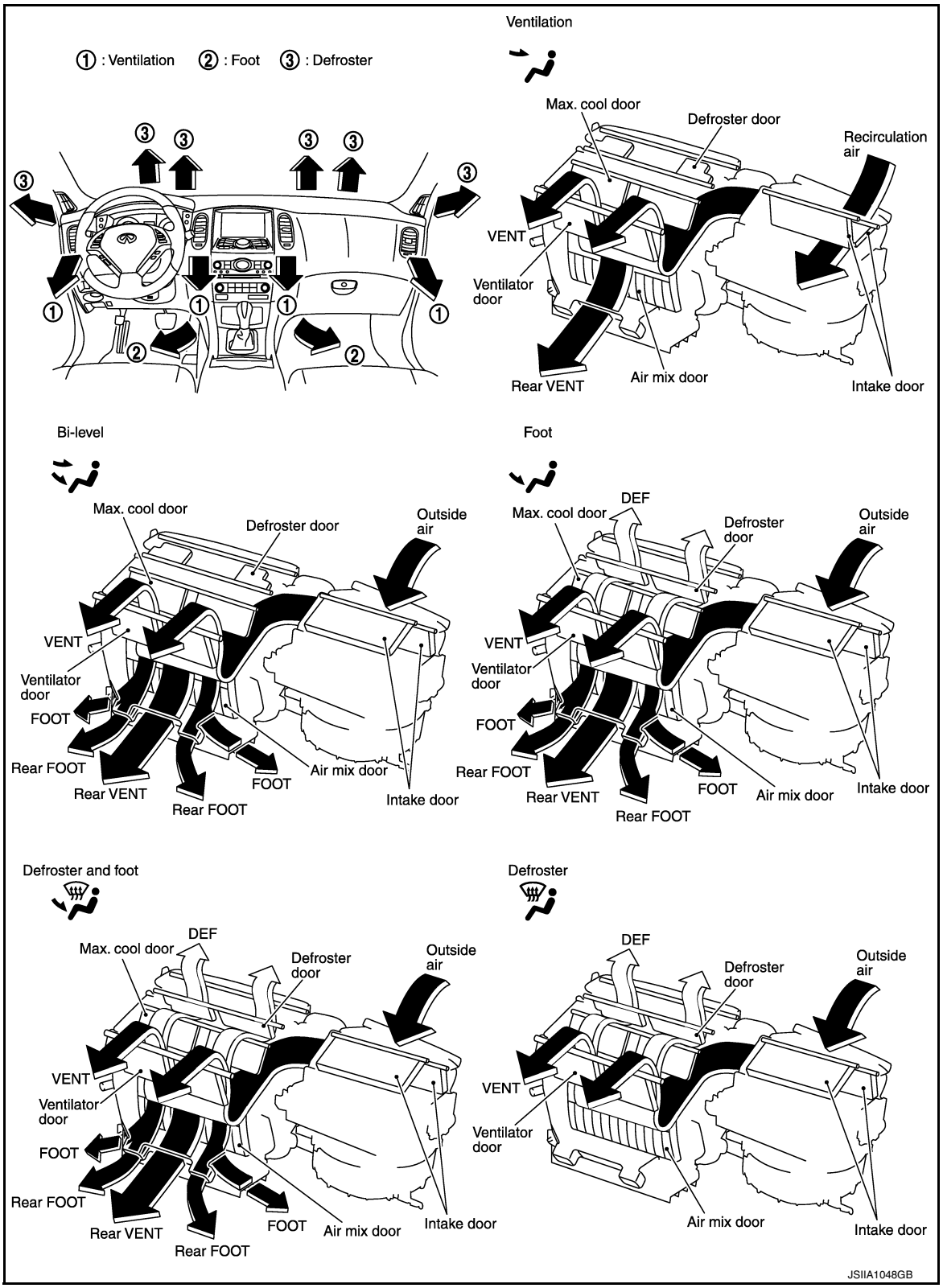

SWITCHES AND THEIR CONTROL FUNCTION

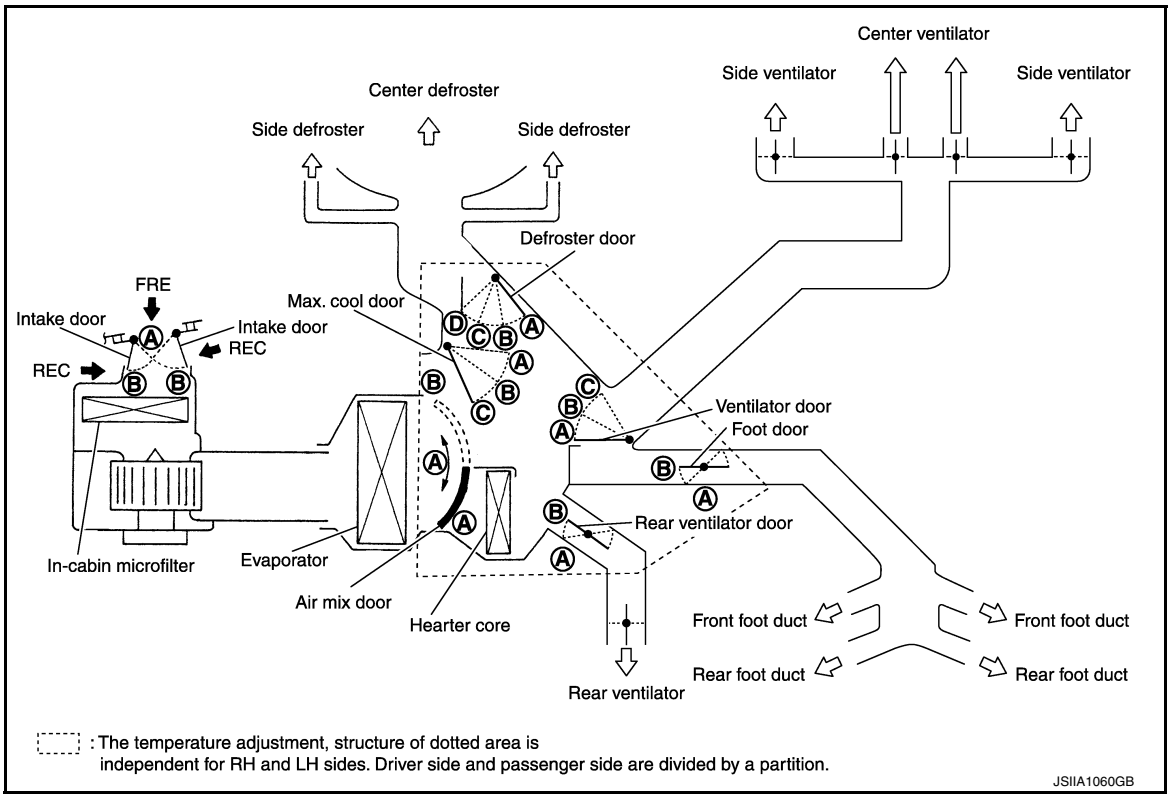

Without ACCS

Switch position		Door position							
		Ventilator door	Max. cool door	Defroster door	Foot door	Rear ventilator door	Intake door	Air mix door (Driver side)	Air mix door (Passenger side)
AUTO switch		AUTO							

Switch position				Door position							
				Ventilator door	Max. cool door	Defroster door	Foot door	Rear ventilator door	Intake door	Air mix door (Driver side)	Air mix door (Passenger side)
MODE switch	VENT			A	A	D	B	B	—	—	—
	B/L			B	B	D	B	B			
	FOOT			C	C	C	B	B			
	D/F					B	B	B	B		
DEF switch						A	A	A	B		
Intake switch	FRE			—	—	—	—	—	B*		
	REC								A*		
DUAL switch	DUAL								—		ON
	OFF										OFF
Temperature control dial (Driver side)	DUAL switch: OFF	18.0°C (60°F)								A	
		18.5°C ⇔ 31.5°C (61°F ⇔ 89°F)								AUTO	
		32.0°C (90°F)								B	
Temperature control dial (Driver side)	DUAL switch: ON	18.0°C (60°F)								A	—
		18.5°C ⇔ 31.5°C (61°F ⇔ 89°F)								AUTO	
		32.0°C (90°F)								B	
Temperature control dial (Passenger side)		18.0°C (60°F)								—	A
		18.5°C ⇔ 31.5°C (61°F ⇔ 89°F)									AUTO
		32.0°C (90°F)									B
OFF switch				C	C	C	B	B	B	—	—

*: Inlet status is displayed by indicator when activating automatic control

With ACCS

Switch position		Door position							
		Ventilator door	Max. cool door	Defroster door	Foot door	Rear ventilator door	Intake door	Air mix door (Driver side)	Air mix door (Passenger side)
AUTO switch		AUTO							

Switch position				Door position							
				Ventilator door	Max. cool door	Defroster door	Foot door	Rear ventilator door	Intake door	Air mix door (Driver side)	Air mix door (Passenger side)
MODE switch	VENT			A	A	D	B	B	—	—	—
	B/L			B	B	D	B	B			
	FOOT			C	C	C	B	B			
	D/F					B	B	B	B		
DEF switch						A	A	A	B		
Intake switch	AUTO	AUTO		—	—	—	—	—	AUTO*2		
	REC								A*1		
	FRE								B*1		
DUAL switch	DUAL								—		ON
	OFF										OFF
Temperature control dial (Driver side)	DUAL switch: OFF	18.0°C (60°F)								A	
		18.5°C ⇔ 31.5°C (61°F ⇔ 89°F)								AUTO	
		32.0°C (90°F)								B	
Temperature control dial (Driver side)	DUAL switch: ON	18.0°C (60°F)								A	—
		18.5°C ⇔ 31.5°C (61°F ⇔ 89°F)								AUTO	
		32.0°C (90°F)								B	
Temperature control dial (Passenger side)		18.0°C (60°F)								—	A
		18.5°C ⇔ 31.5°C (61°F ⇔ 89°F)									AUTO
		32.0°C (90°F)									B
OFF switch				C	C	C	B	B	B	—	—

*1: Inlet status is displayed by indicator when activating automatic control

*2: Intake door control applies a exhaust gas / outside odor detecting sensor

AIR CONDITIONER LAN CONTROL SYSTEM

The LAN (Local Area Network) system consists of unified meter and A/C amp., mode door motor, air mix door motors and intake door motor.

A configuration of these components is as shown in the figure below.

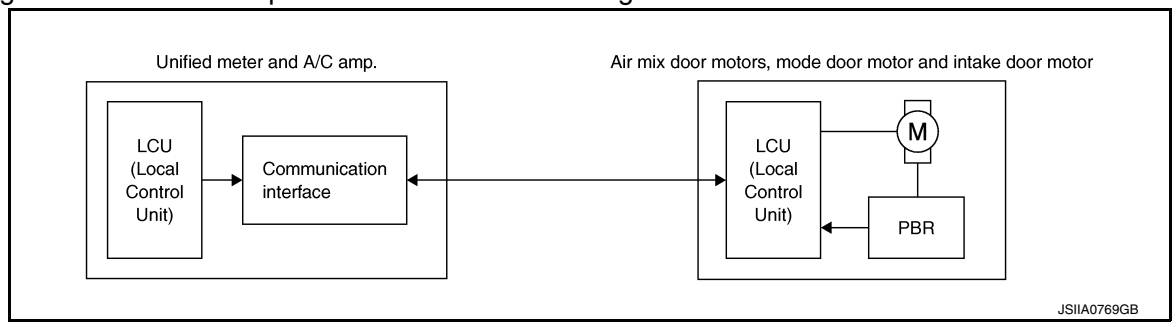

SYSTEM CONSTRUCTION

A small network is constructed between the unified meter and A/C amp., mode door motor, air mix door motors and intake door motor. The unified meter and A/C amp. and motors are connected by data transmission lines and motor power supply lines. The LAN network is built through the ground circuits of each door motor.

Addresses, motor opening angle signals, motor stop signals and error checking messages are all transmitted through the data transmission lines connecting the unified meter and A/C amp. and each door motor.

The following functions are contained in LCUs built into the mode door motor, the air mix door motors and the intake door motor.

- Address
- Motor opening angle signals
- Data transmission
- Motor stop and drive decision
- Opening angle sensor (PBR function)
- Comparison
- Decision (Unified meter and A/C amp. indicated value and motor opening angle comparison)

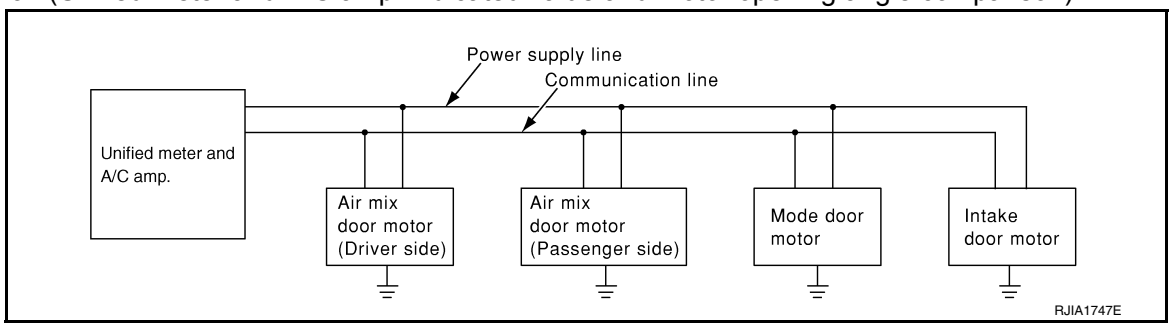

Operation

The unified meter and A/C amp. receives data from each of the sensors. The unified meter and A/C amp. sends mode door, air mix door and intake door opening angle data to the mode door motor LCU, air mix door motor LCUs and intake door motor LCU.

The mode door motor, air mix door motors and intake door motor read their respective signals according to the address signal. Opening angle indication signals received from the unified meter and A/C amp. and each of the motor position sensors is compared by the LCUs in each door motor with the existing decision and opening angles. Subsequently, HOT/COLD, DEF/VENT and FRE/REC operation is selected. The new selection data is returned to the unified meter and A/C amp.

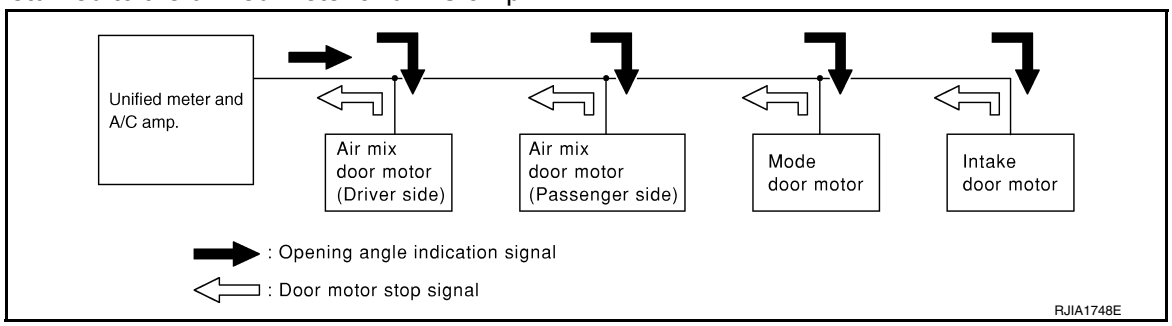

Transmission Data and Transmission Order

Unified meter and A/C amp. data is transmitted consecutively to each of the doors motor following the form as shown in the figure below.

START:

- Initial compulsory signal is sent to each of the door motors.

ADDRESS:

- Data sent from the unified meter and A/C amp. are selected according to data-based decisions made by the mode door motor, air mix door motors and intake door motor.
- If the addresses are identical, the opening angle data and error check signals are received by the door motor LCUs. The LCUs then make the appropriate error decision. If the opening angle data have no error, door control begins.
- If an error exists, the received data are rejected and corrected data received. Finally, door control is based upon the corrected opening angle data.

OPENING ANGLE:
- Data that shows the indicated door opening angle of each door motor.

ERROR CHECK:
- In this procedure, transmitted and received data is checked for errors. Error data are then compiled. The error check prevents corrupted data from being used by the mode door motor, the air mix door motors and the intake door motor. Error data can be related to the following symptoms.
- Malfunction of electrical frequency
- Poor electrical connections
- Signal leakage from transmission lines
- Signal level fluctuation

STOP SIGNAL:
- At the end of each transmission, a stop operation, in-operation, or internal malfunction message is delivered to the unified meter and A/C amp. This completes one data transmission and control cycle.

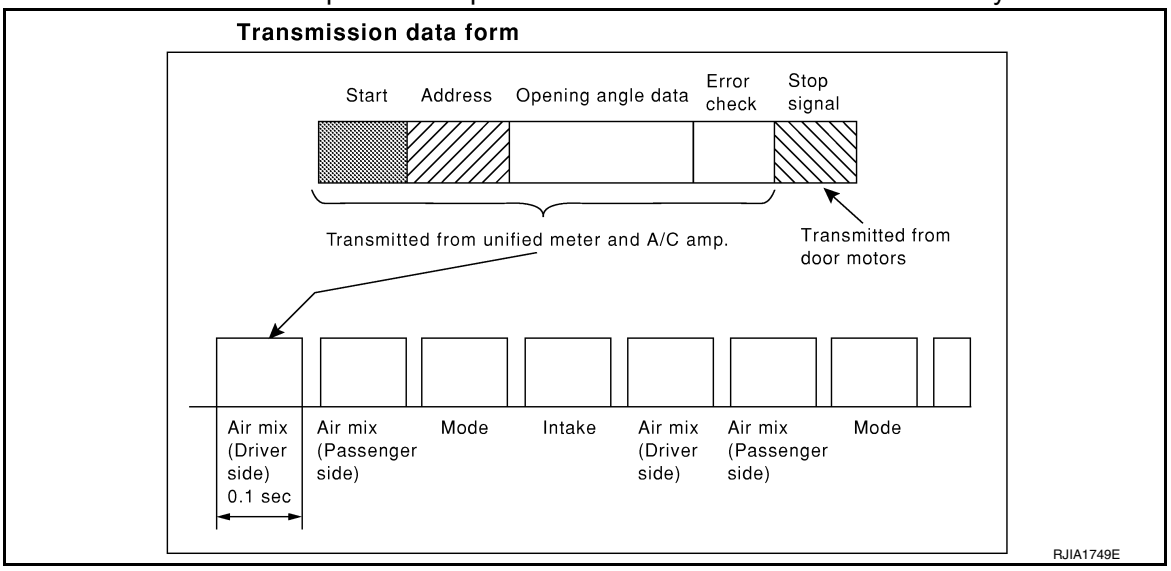

Component Part Location

INFOID:0000000010594544

ENGINE COMPARTMENT

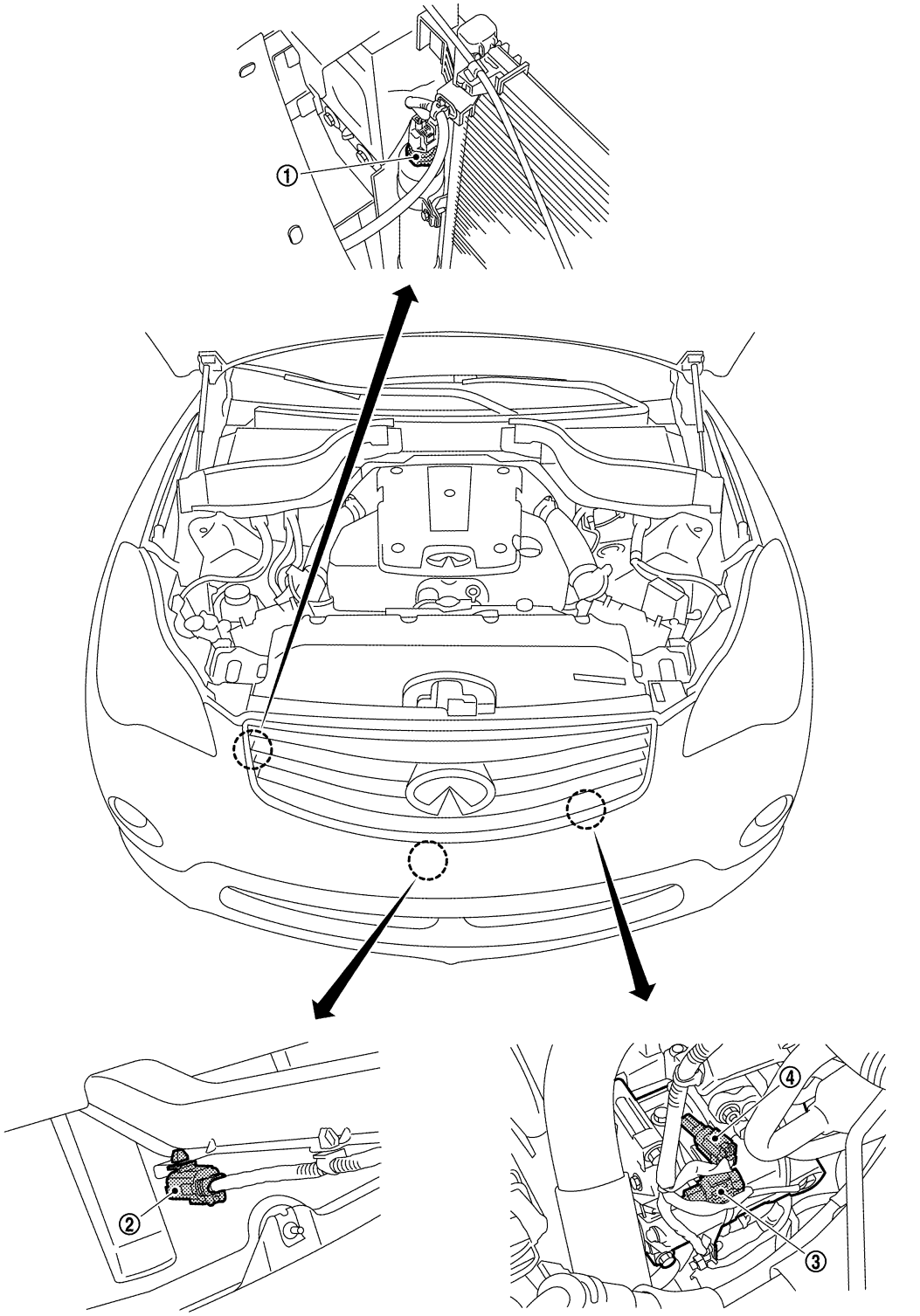

1. Refrigerant pressure sensor
2. Ambient sensor
3. Compressor (magnet clutch)
4. Compressor (ECV)

PASSENGER COMPARTMENT

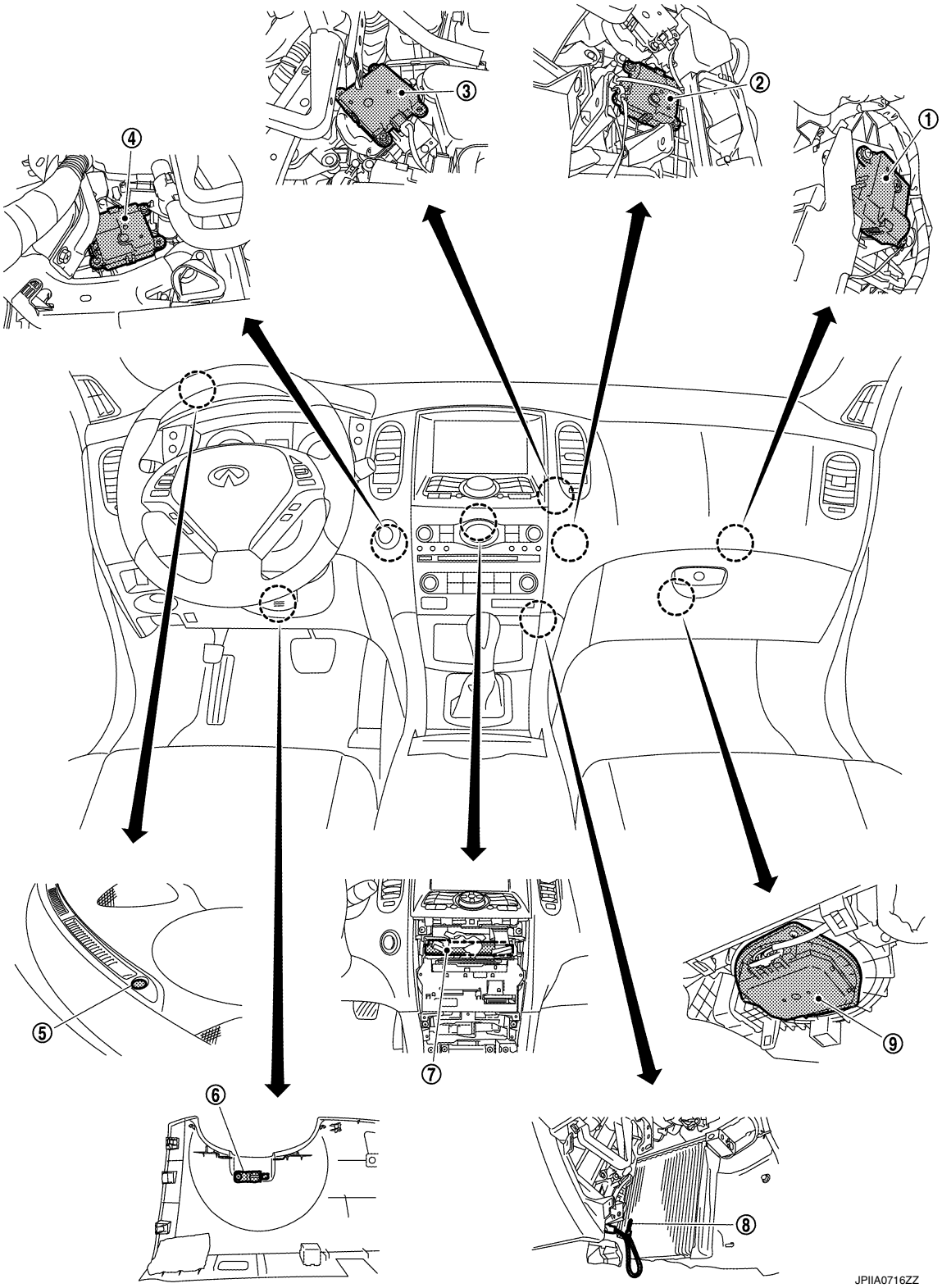

1. Intake door motor
2. Air mix door motor (passenger side)
3. Mode door motor
4. Air mix door motor (driver side)
5. Sunload sensor
6. In-vehicle sensor
7. Unified meter and A/C amp.
8. Intake sensor
9. Blower motor

Component Description

INFOID:0000000010594545

Component	Reference
Air mix door motor	HAC-54, "Description"
Ambient sensor	HAC-67, "Description"
Blower motor	HAC-59, "Description"
Compressor (Magnet clutch)	HAC-63, "Description"
Compressor (ECV)	HAC-65, "Description"
intake door motor	HAC-57, "Description"
intake sensor	HAC-76, "Description"
In-vehicle sensor	HAC-70, "Description"
Mode door motor	HAC-52, "Description"
Refrigerant pressure sensor	EC-529, "Description"
Sunload sensor	HAC-73, "Description"
Unified meter and A/C amp.	HAC-50, "Description"

ACCS (ADVANCE CLIMATE CONTROL SYSTEM)

System Diagram

INFOID:0000000010594546

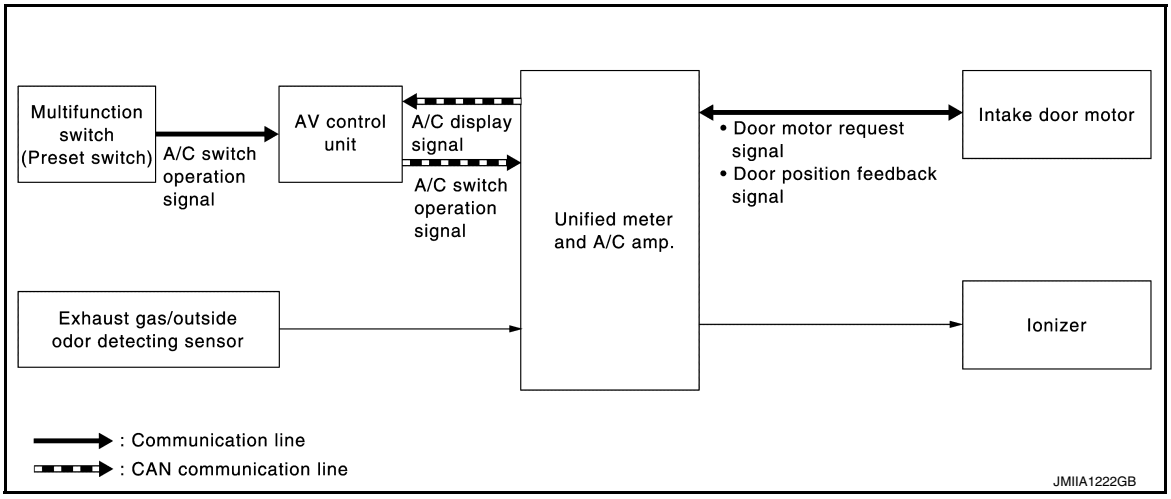

System Description

INFOID:0000000010594547

- ACCS (advanced climate control system) controls passenger room air. It maintains the cleanliness of the passenger room air using an in-cabin microfilter and a combination of each of the following functions.
- Automatic intake control (exhaust gas / outside odor detecting mechanism)
- Plasmacluster™ control

NOTE:

- Plasmacluster™ ion technology developed by Sharp Corporation is installed in this item.
- Plasmacluster™ is a trademark of Sharp Corporation.

- Various operations of ACCS (advanced climate control system) are transmitted from preset switch to AV control unit via communication line and from AV control unit to unified meter and A/C amp. via CAN communication. unified meter and A/C amp. sends each indication information to AV control unit via CAN communication. AV control unit displays each indication information that is received.

AUTOMATIC INTAKE CONTROL (EXHAUST GAS / OUTSIDE ODOR DETECTING MECHANISM)

Description

In addition to air inlet automatic control of automatic air conditioning system, unified meter and A/C amp. controls automatically air inlet according to signal from exhaust gas / outside odor detecting sensor, so that unpleasant outside odor does not enter in passenger room.

Operation Description

- When pressing auto intake switch while blower motor is operated and DEF switch is OFF, auto intake switch indicator lamp and intake switch indicator lamp turn ON. Air inlet is fixed to recirculation for approximately 5 minutes, and then is switched to automatic intake control (exhaust gas / outside odor detecting mechanism).
- Air inlet switches to recirculation when exhaust gas or outside odor is detected while automatic intake control (exhaust gas / outside odor detecting mechanism) is operated. After that, air inlet switches to fresh air intake when exhaust gas or outside odor becomes not detectable.

NOTE:

- Sensitivity of exhaust gas / outside odor detecting sensor can be changed. Refer to HAC-11, "Exhaust Gas/ Outside Odor Detecting Sensor Sensitivity Adjustment Function (With ACCS)".
- Automatic intake control (exhaust gas / outside odor detecting mechanism) does not operate when ambient temperature is –2°C (28°F) or less. In this case, control is only for control of automatic air inlet of automatic air conditioning system.

PLASMACLUSTER™ CONTROL

Description

Plasmacluster™ control eliminates microbes and reduces odor on interior surface by including high density Plasmacluster™ ion in air conditioning outlet air flow.

Operation Description

- Plasmacluster™ control operates by interlocking to blower motor. Plasmacluster™ control operates when blower motor operates.
- Control status is displayed on air conditioning system display screen.
- Plasmacluster™ system switches display according to air flow volume as shown in the following figure.

- When air flow is low.

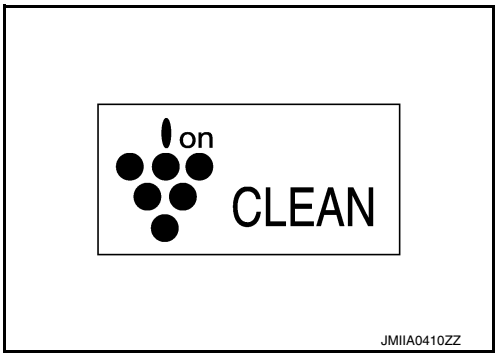

- When air flow is high.

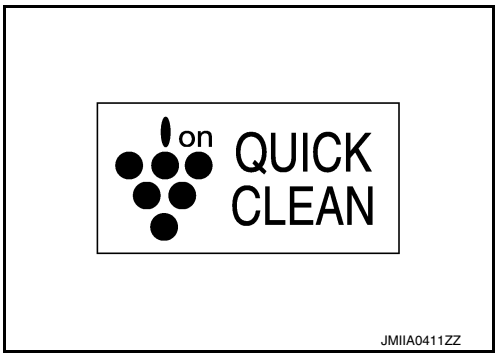

Component Part Location

INFOID:0000000010594548

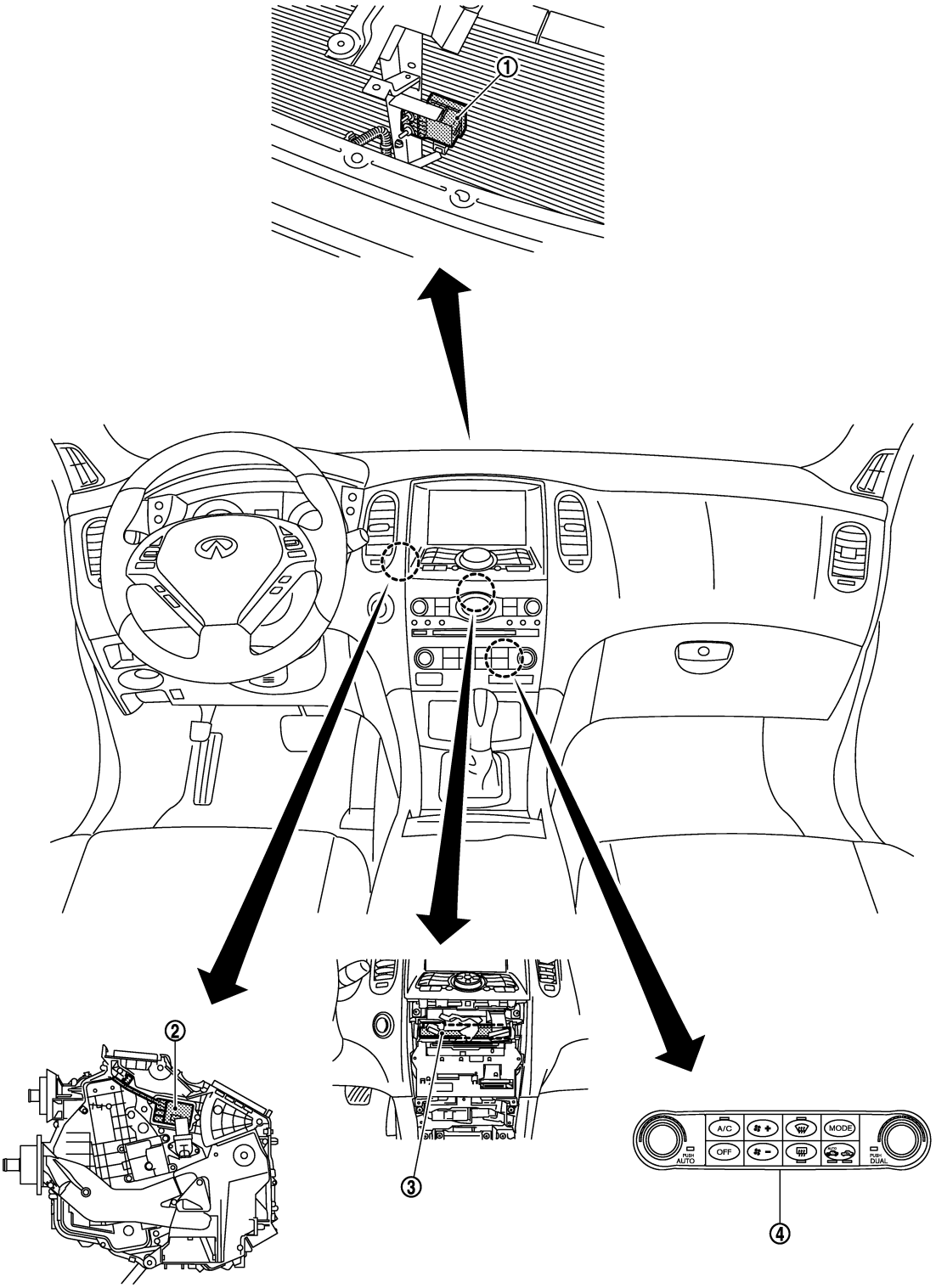

JMIIA0483ZZ

1. Exhaust gas / outside odor detecting sensor
2. Ionizer
3. Unified meter and A/C amp.
4. Preset switch

Component Description

INFOID:0000000010594549

Component	Description
Ion indicator	Plasmacluster ion generation function operating condition is displayed in the ion indicator in the display.
Exhaust gas / outside odor detecting sensor	HAC-78, "Description"
Ionizer	HAC-81, "Description"
Unified meter and A/C amp.	The unified meter and A/C amp. controls ionizer ON/OFF and shifts an ion generation function.
Preset switch (AUTO intake indicator)	The auto intake control system is ON or OFF by the AUTO intake indicator is turned ON.

CAN COMMUNICATION SYSTEM

System Description

INFOID:0000000010594550

CAN (Controller Area Network) is a serial communication line for real time application. It is an on-vehicle multiplex communication line with high data communication speed and excellent error detection ability. Many electronic control units are equipped onto a vehicle, and each control unit shares information and links with other control units during operation (not independent). In CAN communication, control units are connected with 2 communication lines (CAN-H line, CAN-L line) allowing a high rate of information transmission with less wiring. Each control unit transmits/receives data but selectively reads required data only. For details, refer to LAN-25, "CAN System Specification Chart".

MODE DOOR CONTROL SYSTEM

System Diagram

INFOID:0000000010594551

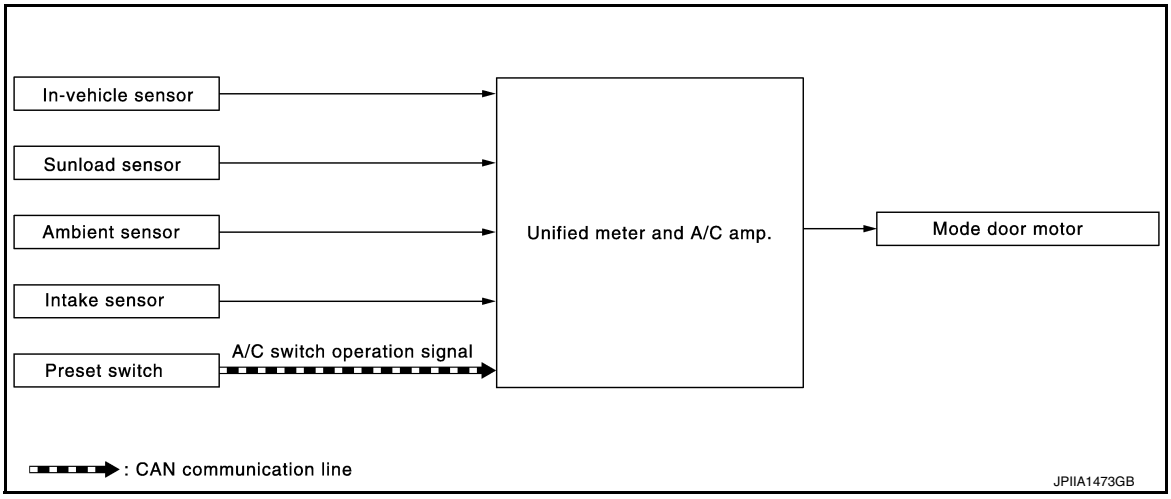

System Description

INFOID:0000000010594552

The mode door is automatically controlled by the temperature setting, ambient temperature, in-vehicle temperature, intake temperature and amount of sunload.

SYSTEM OPERATION

- The unified meter and A/C amp. receives data from each of the sensors.
- The unified meter and A/C amp. sends air mix door, mode door and intake door opening angle data to the air mix door motor LCU(s), mode door motor LCU and intake door motor LCU.
- The air mix door motor(s), mode door motor and intake door motor read their respective signals according to the address signal. Opening angle indication signals received from the unified meter and A/C amp. and each of the motor position sensors are compared by the LCUs in each door motor with the existing decision and opening angles.
- Subsequently, HOT/COLD, DEF/VENT and FRE/REC operation is selected. The new selection data are returned to the unified meter and A/C amp.

Door Motor Circuit

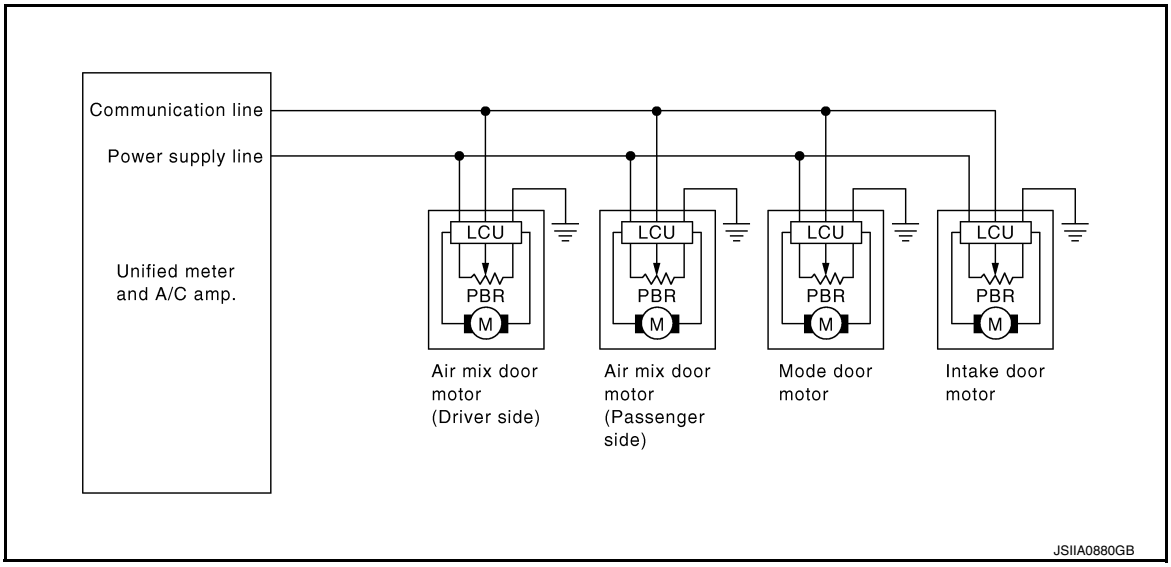

Mode Door Control Specification

Mode position can be selected manually by pressing MODE switch or DEF switch of the preset switch. This enables to fix a mode position. Automatic control by unified meter and A/C amp. Pressing AUTO switch allows automatic control by unified meter and A/C amp. During the automatic control of mode position, a mode door position (VENT, B/L, FOOT, or D/F) is selected based on a target air mix door opening angle and sunload depending on a temperature calculated by unified meter and A/C amp. In addition, D/F is selected to prevent windshield fogging only when ambient temperature is extremely low with mode position FOOT.

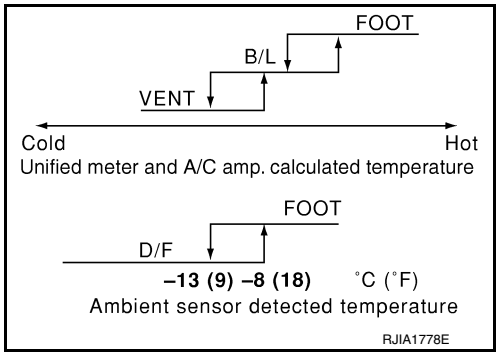

AIR MIX DOOR CONTROL SYSTEM

System Diagram

INFOID:0000000010594553

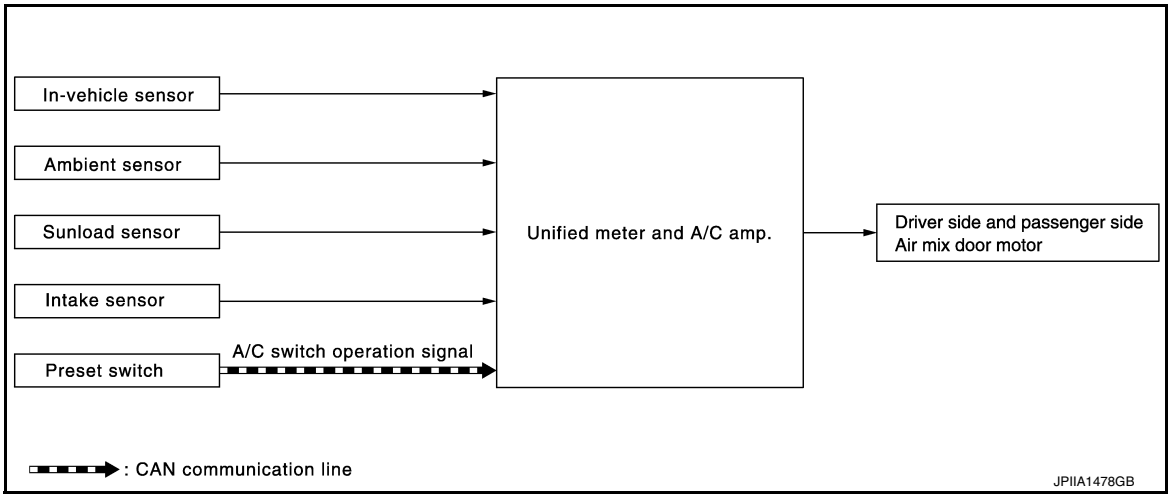

System Description

INFOID:0000000010594554

The air mix doors are automatically controlled so that in-vehicle temperature is maintained at a predetermined value by the temperature setting, ambient temperature, in-vehicle temperature and amount of sunload.

SYSTEM OPERATION

- The unified meter and A/C amp. receives data from each of the sensors. The unified meter and A/C amp. sends air mix doors, mode door and intake door opening angle data to the air mix door motor LCUs, mode door motor LCU and intake door motor LCU.
- The air mix door motors, mode door motor and intake door motor read their respective signals according to the address signal. Opening angle indication signals received from the unified meter and A/C amp. and each of the motor position sensors are compared by the LCUs in each door motor with the existing decision and opening angles. Subsequently, HOT/COLD, DEF/VENT and FRE/REC operation is selected. The new selection data are returned to the unified meter and A/C amp.

Door Motor Circuit

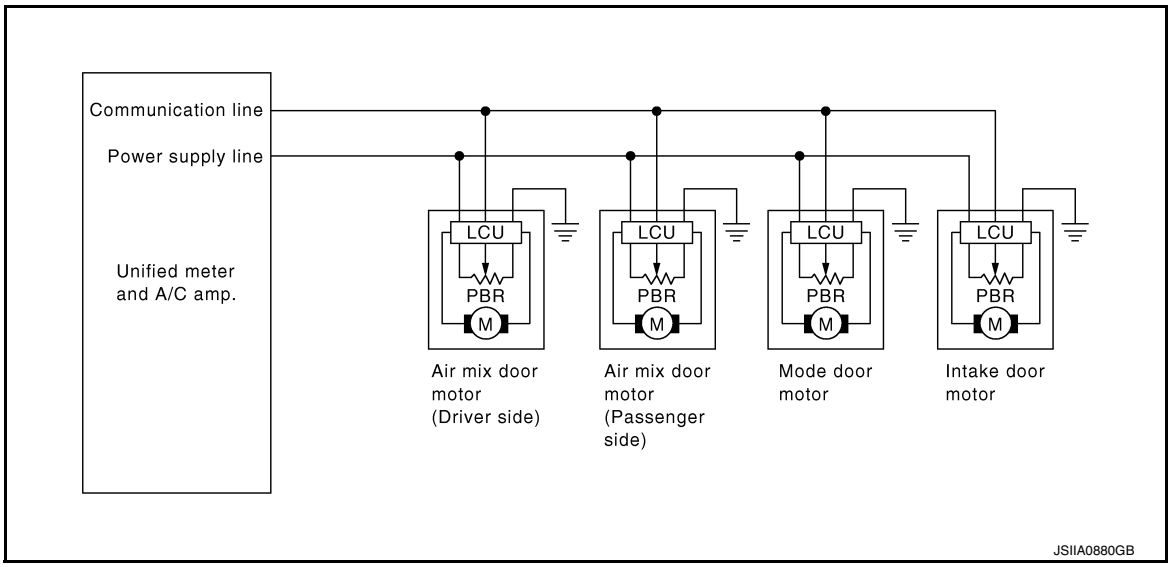

Air Mix Door Control Specification

When ignition switch is ON, unified meter and A/C amp. continuously and automatically controls temperatures regardless of air conditioner operational condition. When setting a target temperature with temperature control dial, unified meter and A/C amp. corrects the set temperature and decides a target air mix door opening angle. Unified meter and A/C amp. controls air mix door according to the target air mix door opening angle and current air mix door opening angle for keeping an optimum air mix door opening angle. When a temperature is set at 18°C (64°F), air mix door is fixed at full cold, and when a temperature is set at 32°C (90°F), it is set at full hot.

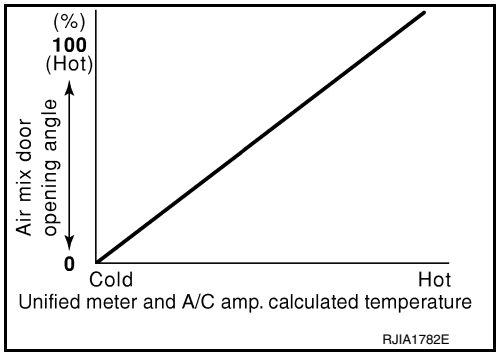

Potentio Temperature Control (PTC)

The PTC (1) is built into the preset switch. It can be set at an interval of 0.5°C (1.0°F) in the 18°C (64°F) to 32°C (90°F) temperature range by turning temperature control dial. The set temperature is displayed.

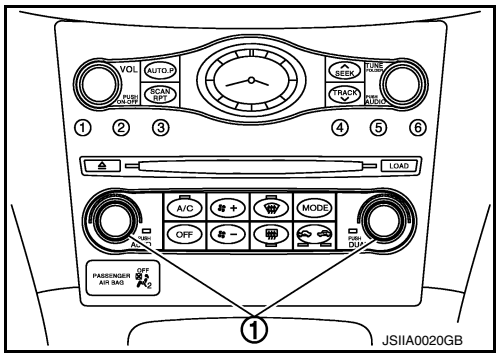

INTAKE DOOR CONTROL SYSTEM

System Diagram

INFOID:0000000010594555

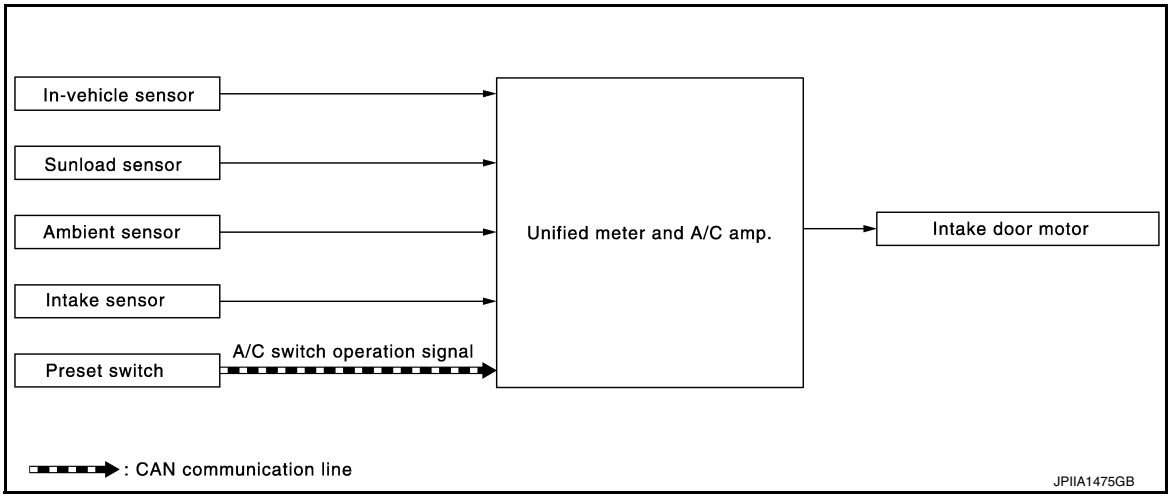

System Description

INFOID:0000000010594556

The intake doors are automatically controlled by the temperature setting, ambient temperature, in-vehicle temperature, intake temperature, amount of sunload and ON/OFF operation of the compressor.

SYSTEM OPERATION

The intake door control judges intake door position based on the ambient temperature, the intake air temperature and the in-vehicle temperature. When shifting mode position D/F, when the DEF or OFF switches are pressed, or when A/C switch is OFF, the unified meter and A/C amp. sets the intake door at the FRE position.

Door Motor Circuit

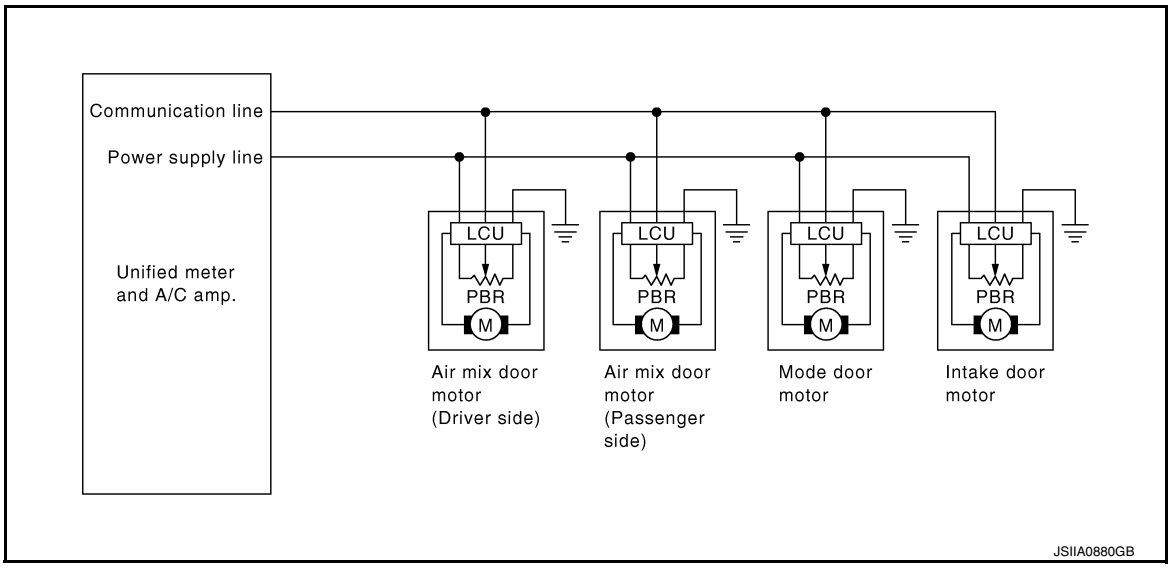

Intake Door Control Specification

Intake door position is basically fixed at FRE when FRE indicators of DEF switch and intake switch turn ON, and fixed at REC when REC indicator of intake switch turns ON.
Intake door automatic control selects FRE, 20 - 80%FRE, or REC depending on a target air mix door opening angle, based on in-vehicle temperature, ambient temperature, and sunload.

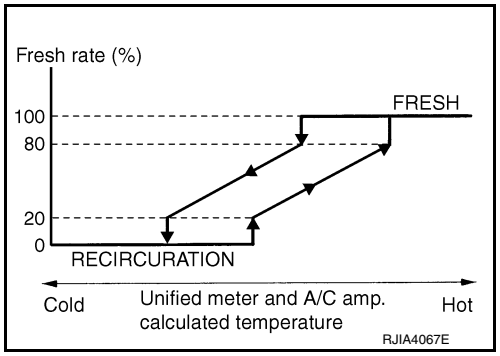

BLOWER MOTOR CONTROL SYSTEM

System Diagram

INFOID:0000000010594557

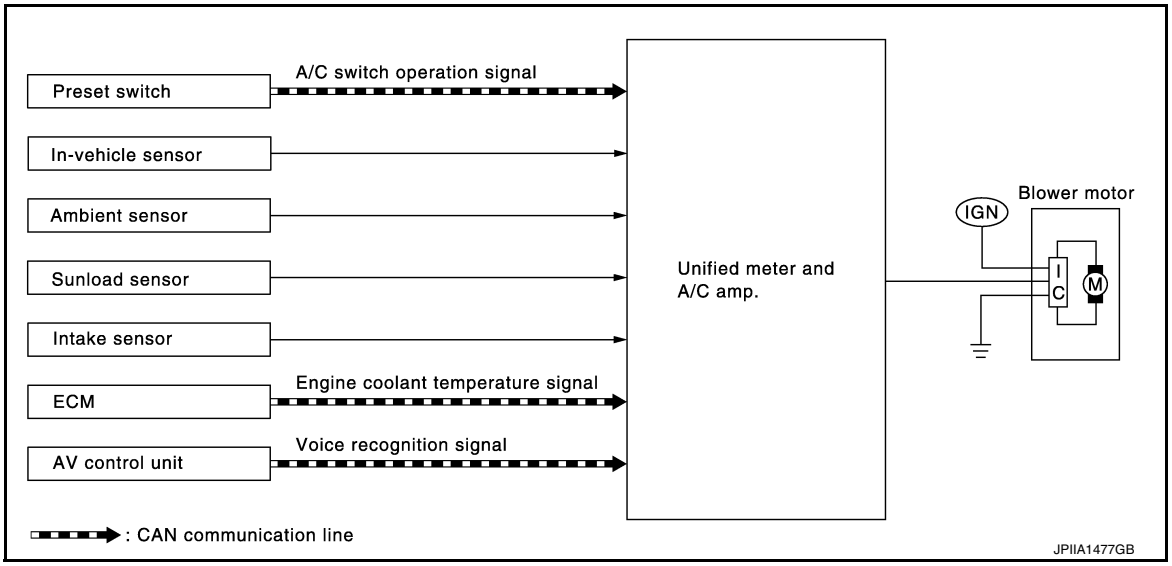

System Description

INFOID:0000000010594558

Blower speed is automatically controlled by the temperature setting, ambient temperature, in-vehicle temperature, intake temperature, amount of sunload and air mix door position.
With pressing AUTO switch, the blower motor starts to gradually increase air flow volume.
When engine coolant temperature is low, the blower motor operation is delayed to prevent cool air from flowing.

SYSTEM OPERATION

Automatic Mode
In the automatic mode, the blower motor speed is calculated by the unified meter and A/C amp. based on the input from the PBR, in-vehicle sensor, sunload sensor, intake sensor and ambient sensor.
When the air flow is increased, the duty ratio of the blower fan motor's drive signal is changed at 8%/sec. to prevent a sudden increase in air flow.
In addition to manual air flow control and the usual automatic air flow control, starting air flow control, low water temperature starting control and high passenger compartment temperature starting control are available.

Starting Fan Speed Control
Start up from COLD SOAK Condition (Automatic mode)
In a cold start up condition where the engine coolant temperature is below 58°C (136°F), the blower does not operate for a short period of time (up to 150 seconds). The exact start delay time varies depending on the ambient and engine coolant temperature.
In the most extreme case (very low ambient) the blower start delay is 150 seconds as described above. After this delay, the blower will operate at low speed until the engine coolant temperature rises above 58°C (136°F), and then the blower speed increases to the objective speed.
Start up from usual or HOT SOAK Condition (Automatic mode)
The blower will begin operation momentarily after the AUTO switch is pressed. The blower speed rises gradually to the objective speed over a time period of 3 seconds or less (actual time depends on the objective blower speed).

Blower Speed Compensation
Sunload
When the in-vehicle temperature and the set temperature are very close, the blower operates at low speed. The low speed varies depending on the sunload. During conditions of low or no sunload, the blower speed is at duty ratio 25%. During high sunload conditions, the unified meter and A/C amp. raise the blower speed (duty ratio 49%).

Fan Speed Control Specification

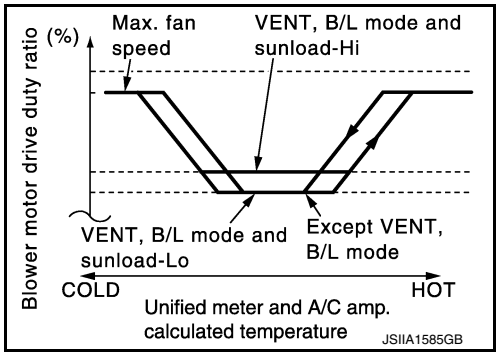

MAGNET CLUTCH CONTROL SYSTEM

System Diagram

INFOID:0000000010594559

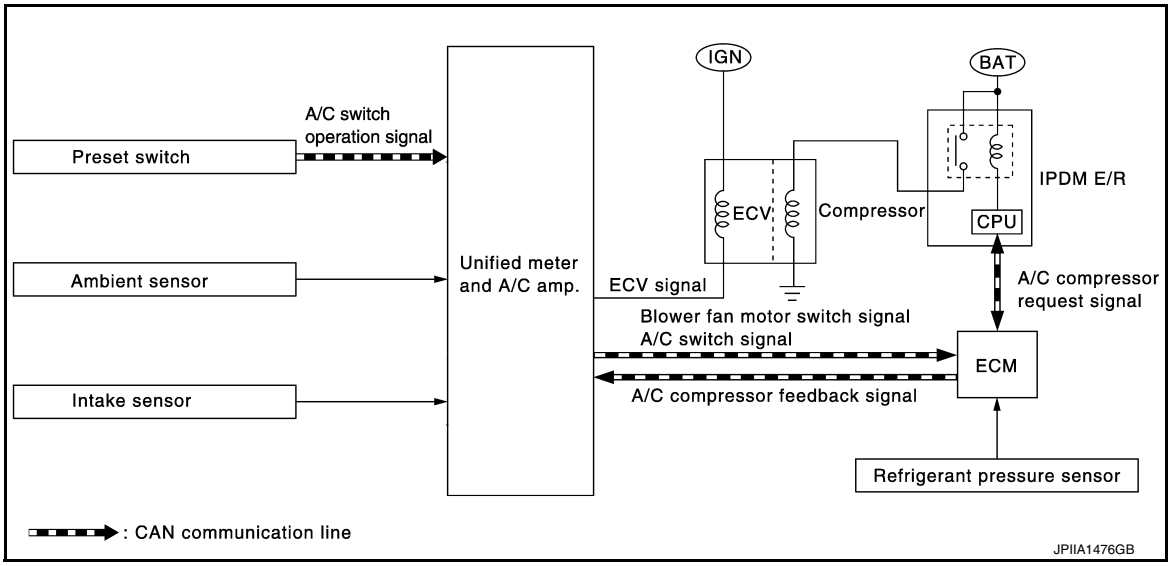

System Description

INFOID:0000000010594560

Unified meter and A/C amp. controls compressor operation by ambient temperature, intake air temperature and signal from ECM.

SYSTEM OPERATION

When A/C switch, AUTO switch, DEF switch is pressed or when shifting mode position D/F, unified meter and A/C amp. transmits A/C switch signal and blower fan motor switch signal to ECM, via CAN communication.
ECM judges whether compressor can be turned ON, based on each sensor status (refrigerant-pressure sensor signal, throttle angle, etc.). If it judges compressor can be turned ON, it sends A/C compressor request signal to IPDM E/R, via CAN communication.
Upon receipt of A/C compressor request signal from ECM, IPDM E/R turns A/C relay ON to operate compressor.
When sending A/C compressor request signal to IPDM E/R via CAN communication line, ECM simultaneously sends A/C compressor feedback signal to ECM via CAN communication line.
ECM sends A/C compressor feedback signal to unified meter and A/C amp., then, uses input A/C compressor feedback signal to control air inlet.

NOTE:
When the following operations are performed, compressor status is changed, but A/C switch indicator lighting status is not changed.
- Air outlet mode is set to D/F or DEF.
- Air outlet mode is set to other mode from D/F or DEF.
- AUTO switch turns ON.

Compressor Protection Control

ECM makes the A/C relay go OFF and stops the compressor when pressure on the high-pressure side detected by refrigerant pressure sensor is over approximately 3,119 kPa (31.8 kg/cm^2, 452 psi), or below approximately 118 kPa (1.2 kg/cm^2, 17 psi).

Low Temperature Protection Control

Unified meter and A/C amp. turns compressor ON or OFF as judged by a signal detected by ambient sensor and intake sensor.

When ambient temperature is higher than –2°C (28°F), the compressor turns ON. The compressor turns OFF when ambient temperature is lower than –5°C (23°F).

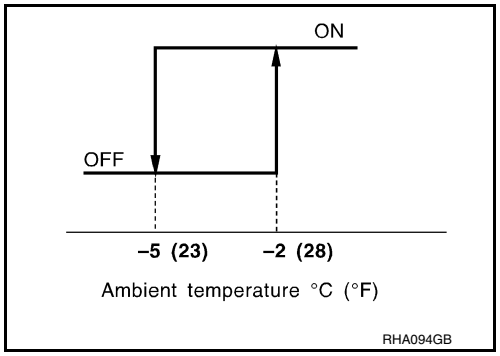

When intake air temperature is higher than 1°C (34°F), the compressor turns ON. The compressor turns OFF when intake air temperature is lower than –5°C (23°F).

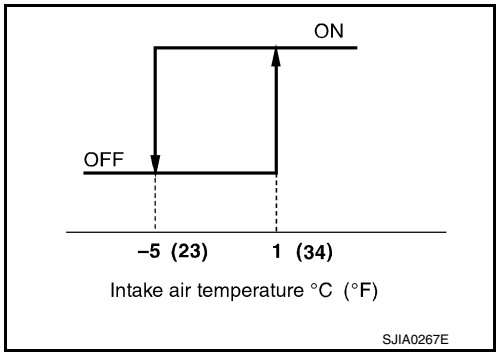

DIAGNOSIS SYSTEM (UNIFIED METER & A/C AMP.)

Diagnosis Description

INFOID:0000000010594561

SELF-DIAGNOSIS SYSTEM

The self-diagnosis system is built into the unified meter and A/C amp. to quickly locate the cause of malfunctions. The self-diagnosis system diagnoses sensors, door motors, blower motor, etc. by system line. Refer to applicable sections (items) for details.

OPERATION PROCEDURE

1. Start the engine (turn ignition switch ON).
   NOTE:
   When checking the procedure except step-4, it is possible to perform in the state of ignition switch ON.
2. Press the OFF switch at 5 seconds or more (within 10 seconds after ignition switch is turned ON).
3. Unified meter and A/C amp. self diagnosis mode starts.
4. “Test item” are changed by the following operation.

Test item		Operation		
STEP-1	Indicator and display screen are checked.	Former STEP-1 does not exist in this self-diagnosis function.		
STEP-2	Input signals from each sensor are checked.	Turn temperature control dial (driver side) clockwise	⇒	STEP-3
STEP-3	Mode and intake door motor positions are checked.	Turn temperature control dial (driver side) clockwise	⇒	STEP-4
		Turn temperature control dial (driver side) counterclockwise	⇒	STEP-2
STEP-4*1	Door motors are checked.	Turn temperature control dial (driver side) clockwise	⇒	STEP-5 (1)
		Turn temperature control dial (driver side) counterclockwise	⇒	STEP-3
STEP-5 (1)	Temperature detected by each sensor is checked.	Turn temperature control dial (driver side) counterclockwise	⇒	STEP-4
		Press intake switch	⇒	STEP-5 (2)
		Press fan (UP: +) switch	⇒	AUXILIARY MECHANISM
STEP-5 (2)	Communication error.	Turn temperature control dial (driver side) counterclockwise	⇒	STEP-4
		Press intake switch	⇒	STEP-5 (1)
		Press fan (UP: +) switch	⇒	AUXILIARY MECHANISM
AUXILIARY MECHANISM	Temperature setting trimmer.	Press fan (DOWN: –) switch	⇒	STEP-5 (1)
	Foot position setting trimmer.			
	Inlet port memory function.			
	Exhaust gas / outside odor detecting sensor sensitivity adjustment function*2			
	Auto intake interlocking movement change function*2			

*1: Engine must be running for compressor to operate.

*2: With ACCS

NOTE:
Shifting from STEP-5 to AUXILIARY MECHANISM is accomplished by means of pressing fan (UP: +) switch.

- Temperature setting trimmer. Refer to HAC-9, "Temperature Setting Trimmer".
- Foot position setting trimmer. Refer to HAC-10, "Foot Position Setting Trimmer".
- Inlet port memory function. Refer to HAC-11, "Inlet Port Memory Function".

- Exhaust gas / outside odor detecting sensor sensitivity adjustment function. Refer to HAC-11, "Exhaust Gas/Outside Odor Detecting Sensor Sensitivity Adjustment Function (With ACCS)".
- Auto intake interlocking movement change function. Refer to HAC-12, "Auto Intake Interlocking Movement Change Function (With ACCS)".

5. Self-diagnosis mode is canceled by either pressing AUTO switch or turning the ignition switch OFF.

CONFORMATION METHOD

1. SET IN SELF-DIAGNOSIS MODE

1. Turn ignition switch ON.
2. Set in self-diagnosis mode as per the following. Press OFF switch for at least 5 seconds Within 10 seconds after starting engine (ignition switch is turned ON).

NOTE:
- If battery voltage drops below 12 V during diagnosis STEP-3, door motor speed becomes slower and as a result, the system may generate an error even when operation is normal. Start engine before performing this diagnosis to avoid this.
- Former STEP-1 (indicators and display screen are checked) does not exist in this self-diagnosis function.
- OFF switch may not be recognized according to the timing of pressing it. Operate OFF switch after turning the intake switch indicators (REC/FRE) ON.

>> GO TO 2.

2. STEP-2: SENSOR AND DOOR MOTOR CIRCUITS ARE CHECKED FOR OPEN OR SHORT CIRCUIT

Does code No. 20 appear on the display?

YES >> GO TO 3.
NO >> GO TO 11.

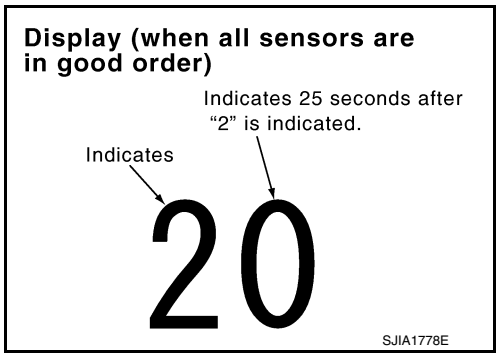

3. STEP-3: MODE DOOR AND INTAKE DOOR POSITIONS ARE CHECKED

Turn temperature control dial (driver side) clockwise.

Does code No. 30 appear on the display?

YES >> GO TO 4.
NO >> GO TO 12.

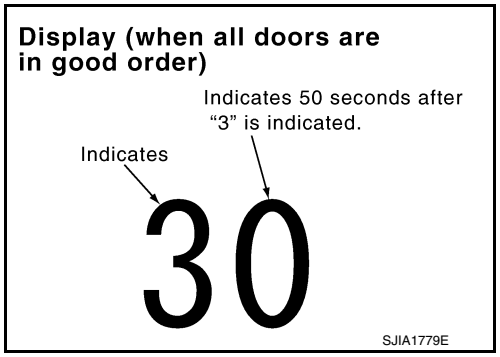

4. STEP-4: OPERATION OF EACH DOOR MOTOR IS CHECKED

1. Turn temperature control dial (driver side) clockwise.
2. Press DEF ( ) switch. Code No. of each door motor test is indicated on the display.

>> GO TO 5.

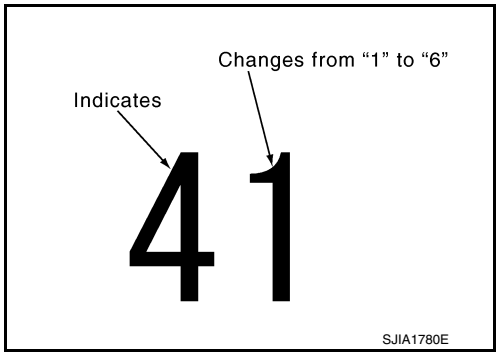

5. CHECK DOOR MOTORS

Refer to the following chart and check discharge air flow, air temperature, blower motor duty ratio and compressor operation.

Code No.	41	42	43	44	45	46
Mode door position	VENT	B/L 1	B/L 2	FOOT	D/F	DEF
Intake door position	REC	REC	20% FRE	FRE	FRE	FRE
Air mix door position	FULL COOL	FULL COOL	FULL HOT	FULL HOT	FULL HOT	FULL HOT
Blower motor duty ratio	37%	91%	65%	65%	65%	91%
Compressor (Magnet clutch)	ON	ON	OFF	OFF	ON	ON
Electronic control valve (ECV) duty ratio	100%	100%	0%	0%	50%	100%
Ionizer*	ON	ON	ON	ON	ON	OFF
Ion mode*	CLEAN	QUICK CLEAN	QUICK CLEAN	QUICK CLEAN	QUICK CLEAN	OFF

*: With ACCS

Checks must be made visually, by listening the sound, or by touching air outlets with hand, etc. for improper operation. Refer to VTL-6, "System Description".

Is this inspection result normal?

YES >> GO TO 6.
NO-1 >> Air outlet does not change. Refer to Mode Door Motor Circuit. Refer to HAC-52, "Diagnosis Procedure".
NO-2 >> Intake door does not change. Refer to Intake Door Motor Circuit. Refer to HAC-57, "Diagnosis Procedure".
NO-3 >> Discharge air temperature does not change. Refer to Air Mix Door Motor Circuit. Refer to HAC-54, "Diagnosis Procedure".
NO-4 >> Blower motor operation is malfunctioning. Refer to Blower Motor Circuit. Refer to HAC-59, "Diagnosis Procedure".
NO-5 >> Magnet clutch does not engage. Refer to Magnet Clutch Circuit. Refer to HAC-63, "Diagnosis Procedure".
NO-6 >> Plasma cluster system does not operate. Refer to HAC-81, "Diagnosis Procedure".

6. STEP-5: TEMPERATURE OF EACH SENSOR IS CHECKED

1. Turn temperature control dial (driver side) clockwise.
2. Code No. 51 appears on the display.

>> GO TO 7.

7. CHECK AMBIENT SENSOR

Press DEF ( ) switch one time. Temperature detected by ambient sensor is indicated on the display.

NOTE:
Check sensor circuit first if the temperature indicated on the display greatly differs from the actual temperature, and then check sensor.

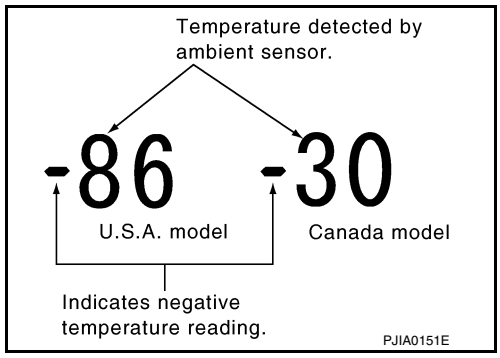

Is this inspection result normal?

YES >> GO TO 8.
NO >> Go to Ambient Sensor Circuit. Refer to HAC-67, "Diagnosis Procedure".

8. CHECK IN-VEHICLE SENSOR

Press DEF ( ) switch for the second time. Temperature detected by in-vehicle sensor is indicated on the display.

NOTE:

Check sensor circuit first if the temperature indicated on the display greatly differs from the actual temperature, and then check sensor.

Is this inspection result normal?

YES >> GO TO 9.

NO >> Go to In-vehicle Sensor Circuit. Refer to HAC-70, "Diagnosis Procedure".

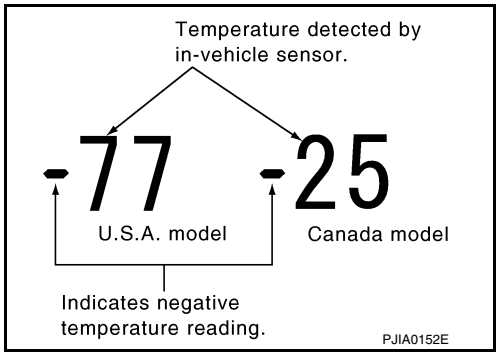

9. CHECK INTAKE SENSOR

Press DEF ( ) switch for the third time. Temperature detected by intake sensor is indicated on the display.

NOTE:

Check sensor circuit first if the temperature indicated on the display greatly differs from the actual temperature, and then check sensor.

Is this inspection result normal?

YES >> GO TO 10.

NO >> Go to Intake Sensor Circuit. Refer to HAC-76, "Diagnosis Procedure".

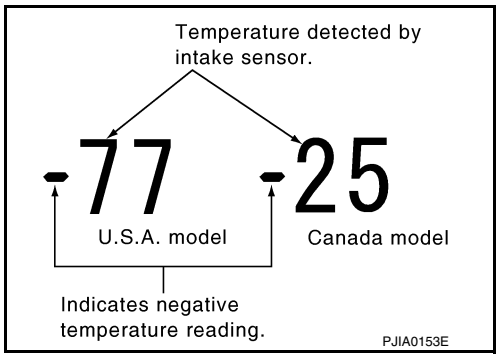

10. CHECK CAN COMMUNICATION ERROR

1. Press intake switch.
2. CAN communication error between each unit that uses the unified meter and A/C amp. can be detected as self-diagnosis results. (The display of each error will blink twice for 0.5 second intervals if plural errors occur.)

Is the inspection result normal?

YES >> INSPECTION END

NO >> Go to CAN communication (Unified meter and A/C amp. - AV control unit). Refer to MWI-46, "Diagnosis Procedure".

Display	CAN communication error
52	In good order
52	AV Control unit ⇨ Unified meter and A/C amp.
52	Unified meter and A/C amp. ⇨ All unit

JPIIA1360GB

11. CHECK MALFUNCTIONING SENSOR AND DOOR MOTOR

Refer to the following chart for malfunctioning code No.
(Corresponding code Nos. indicates 1 second each if two or more sensors and door motors malfunction.)
(Corresponding code Nos. indicates 0.5 second each if two door motors malfunction.)

Code No.	Malfunctioning sensor and door motor (Including circuits)	Reference
21 / –21	Ambient sensor	HAC-67, "Diagnosis Procedure"
22 / –22	In-vehicle sensor	HAC-70, "Diagnosis Procedure"
24 / –24	Intake sensor	HAC-76, "Diagnosis Procedure"
25 / –25	Sunload sensor *	HAC-73, "Diagnosis Procedure"
26 / –26	Air mix door motor PBR (Driver side)	HAC-54, "Diagnosis Procedure"
27 / –27	Air mix door motor PBR (Passenger side)	
28 / –28	Exhaust gas / outside odor detecting sensor*	HAC-78, "Diagnosis Procedure"
29 / –29	Harness of exhaust gas / outside odor detecting sensor *	

*: Perform self-diagnosis STEP-2 under sunshine.

When performing indoors, aim a light (more than 60 W) at sunload sensor, otherwise code No. 25 indicates despite that sunload sensor is functioning normally.

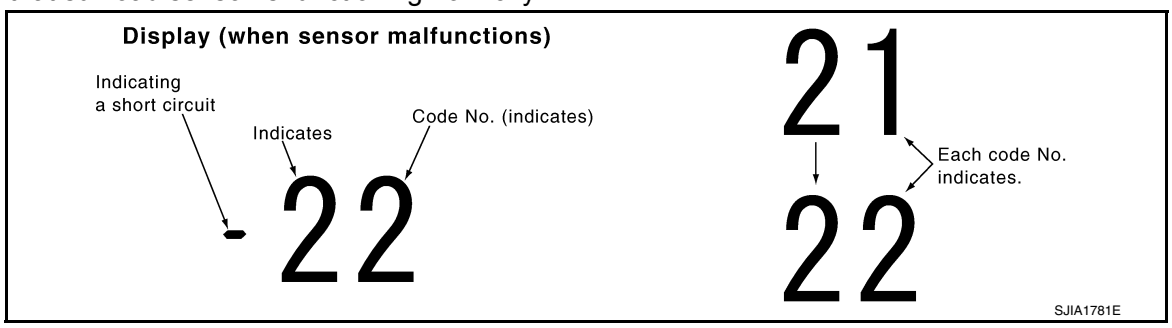

>> INSPECTION END

12. CHECK MALFUNCTIONING DOOR MOTOR POSITION SWITCH

Mode and/or intake door motor PBR(s) is/are malfunctioning.

Code No. *1 *2	Mode or intake door position		Reference
31	VENT	Mode door motor	HAC-52, "Diagnosis Procedure"
32	DEF		
37	FRE	Intake door motor	HAC-57, "Diagnosis Procedure"
38	20% FRE		
39	REC		

(Corresponding code Nos. indicates 1 second each if two or more mode or intake door motors malfunction.)
*1: The following display pattern will appear if mode door motor harness connector is disconnected.
31→32→Return to 31
*2: The following display pattern will appear if intake door motor harness connector is disconnected.
37→38→39→Return to 37

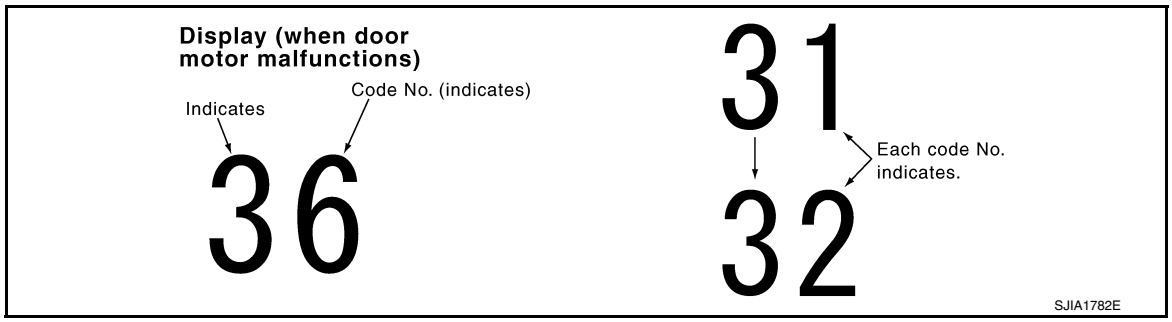

>> INSPECTION END

CONSULT Function

INFOID:0000000010594562

CONSULT APPLICATION ITEMS

CONSULT can display each diagnosis item using the diagnosis test modes shown as per the following.

System part	Check item, diagnosis mode	Description
ECM	Data monitor	Displays ECM input data in real time.

DATA MONITOR

Display Item List

Monitor Item	Condition	Value/Status
IGNITION SW	Ignition switch OFF → ON	Off → On

Monitor Item	Condition		Value/Status
HEATER FAN SW	Ignition switch ON	Blower fan motor switch ON	On
		Blower fan motor switch OFF	Off
AIR COND SIG	Ignition switch ON	Compressor ON	On
		Compressor OFF	Off
REFRIGERANT PRESSURE SENSOR	• Engine is running • Warm-up condition • Both A/C switch and blower fan motor switch: ON (Compressor operates)		1.0 - 4.0 V

DTC/CIRCUIT DIAGNOSIS

POWER SUPPLY AND GROUND CIRCUIT FOR AUTO AMP.

Description

INFOID:0000000010594563

COMPONENT DESCRIPTION

Unified Meter and A/C Amp. (Automatic Amplifier)

The unified meter and A/C amp. (1) has a built-in microcomputer which processes information sent from various sensors needed for air conditioner operation. The air mix door motor(s), mode door motor, intake door motor, blower motor and compressor are then controlled.

When the various switches and temperature control dial are operated, data is input to the unified meter and A/C amp. from the AV control unit using CAN communication.

Self-diagnosis functions are also built into unified meter and A/C amp. to provide quick check of malfunctions in the auto air conditioner system.

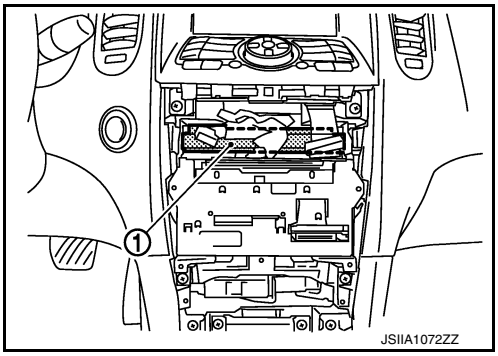

Component Function Check

INFOID:0000000010594564

1. CONFIRM SYMPTOM BY PERFORMING THE FOLLOWING OPERATIONAL CHECK

1. Press AUTO switch.
2. Display should indicate AUTO. Confirm that the compressor clutch engages (sound or visual inspection). (Discharge air and blower speed depend on ambient, in-vehicle and set temperatures.)

Does magnet clutch engaged?

YES >> END.
NO >> Go to Diagnosis Procedure. Refer to HAC-50, "Diagnosis Procedure".

Diagnosis Procedure

INFOID:0000000010594565

1. CHECK POWER SUPPLY CIRCUIT FOR UNIFIED METER AND A/C AMP.

1. Disconnect unified meter and A/C amp. connector.
2. Check voltage between unified meter and A/C amp. harness connector and ground.

(+)		(–)	Voltage		
Unified meter and A/C amp.		—	Ignition switch position		
Connector	Terminal		OFF	ACC	ON
M67	41	Ground	Approx. 0 V	Battery voltage	Battery voltage
	53		Approx. 0 V	Approx. 0 V	Battery voltage
	54		Battery voltage	Battery voltage	Battery voltage

Is the inspection result normal?

YES >> GO TO 3.
NO >> GO TO 2.

2. CHECK FUSE

Check 10A fuses [Nos. 3, 11 and 19, located in the fuse block (J/B)]. Refer to PG-108, "Fuse, Connector and Terminal Arrangement".

Is the inspection result normal?

YES >> Check harness for open circuit. Repair or replace if necessary.
NO >> Check harness for short circuit and replace fuse.

3. CHECK GROUND CIRCUIT FOR UNIFIED METER AND A/C AMP.

1. Turn ignition switch OFF.

2. Check continuity between unified meter and A/C amp. harness connector and ground.

Unified meter and A/C amp.		—	Continuity
Connector	Terminal		
M67	55	Ground	Existed
	71		

Is the inspection result normal?

YES >> GO TO 4.
NO >> Repair harness or connector.

4. CHECK PRESET SWITCH

Check preset switch. Refer to AV-121, "Symptom Table" (BASE AUDIO WITHOUT NAVIGATION), AV-307, "Symptom Table" (BOSE AUDIO WITHOUT NAVIGATION) or AV-507, "Symptom Table" (BOSE AUDIO WITH NAVIGATION).

Is the inspection result normal?

YES >> Replace unified meter and A/C amp.
NO >> Repair or replace malfunctioning part(s).

MODE DOOR MOTOR

Description

INFOID:0000000010594566

COMPONENT DESCRIPTION

Mode Door Motor

The mode door motor (1) are attached to the heater & cooling unit assembly. It rotates so that air is discharged from the outlet set by the unified meter and A/C amp. Motor rotation is conveyed to a link which activates the mode door.

⇦: Vehicle front

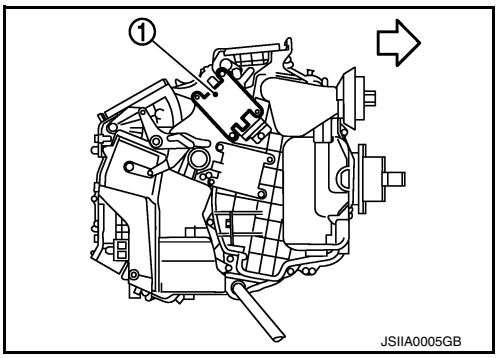

Component Function Check

INFOID:0000000010594567

1. CONFIRM SYMPTOM BY PERFORMING THE FOLLOWING OPERATIONAL CHECK

1. Press MODE switch(es) and DEF switch.
2. Each position indicator should change shape.
3. Confirm that discharge air comes out according to the air distribution table at below. Refer to VTL-6, "System Description".

NOTE:

Confirm that the compressor clutch is engaged (Sound or visual inspection) and intake door position is at FRE when DEF or D/F is selected.

Is the inspection result normal?

YES >> END.
NO >> Go to diagnosis procedure. Refer to HAC-52, "Diagnosis Procedure".

Diagnosis Procedure

INFOID:0000000010594568

1. PERFORM SELF-DIAGNOSIS STEP-2

Perform self-diagnosis STEP-2. Refer to HAC-44, "Diagnosis Description", see Nos. 1 to 2.

Does code No. 20 appear on the display?

YES >> GO TO 2.
NO >> Go to appropriate malfunctioning sensor circuit. Refer to HAC-44, "Diagnosis Description", see No. 11.

2. PERFORM SELF-DIAGNOSIS STEP-3

Perform self-diagnosis STEP-3. Refer to HAC-44, "Diagnosis Description", see Nos. 1 to 3.

Does code No. 30 appear on the display?

YES >> GO TO 6.
NO-1 >> Code No. 31 or 32 appear on the display: GO TO 3.
NO-2 >> Code No. 37, 38 or 39 appear on the display: Refer to Intake Door Motor Circuit. Refer to HAC-57, "Diagnosis Procedure".

3. CHECK POWER SUPPLY FOR MODE DOOR MOTOR

Check voltage between mode door motor harness connector and ground.

(+)		(–)	Voltage (Approx.)
Mode door motor		—	
Connector	Terminal		
M253	1	Ground	12 V

Is the inspection result normal?

YES >> GO TO 4.
NO >> Repair harness or connector.

4. CHECK SIGNAL FOR MODE DOOR MOTOR

Confirm A/C LAN signal between mode door motor harness connector and ground using an oscilloscope.

(+)		(–)	Voltage
Mode door motor		—	
Connector	Terminal		
M253	3	Ground	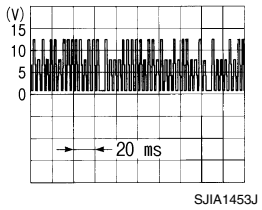

Is the inspection result normal?

YES >> GO TO 5.
NO >> Repair harness or connector.

5. CHECK MODE DOOR MOTOR GROUND CIRCUIT

1. Turn ignition switch OFF.
2. Disconnect mode door motor connector.
3. Check continuity between mode door motor harness connector and ground.

Mode door motor		—	Continuity
Connector	Terminal		
M253	2	Ground	Existed

Is the inspection result normal?

YES >> Replace mode door motor.
NO >> Repair harness or connector.

6. PERFORM SELF-DIAGNOSIS STEP-4

Perform self-diagnosis STEP-4. Refer to HAC-44, "Diagnosis Description", see Nos. 1 to 5.

Is it operated normally?

YES >> END.
NO >> GO TO 7.

7. CHECK MODE DOOR CONTROL LINKAGE

Check mode door control linkage.

Is it installed normally?

YES >> Refer to HAC-132, "Exploded View".
NO >> Repair or adjust control linkage.

AIR MIX DOOR MOTOR

Description

INFOID:0000000010594569

COMPONENT DESCRIPTION

Air Mix Door Motor

The air mix door motors (1) are attached to the heater & cooling unit assembly. It rotates so that the air mix door is opened or closed to a position set by the unified meter and A/C amp. Motor rotation is then conveyed through a shaft and the air mix door position feedback is then sent to the unified meter and A/C amp. by PBR built-in air mix door motor.

⇦: Vehicle front

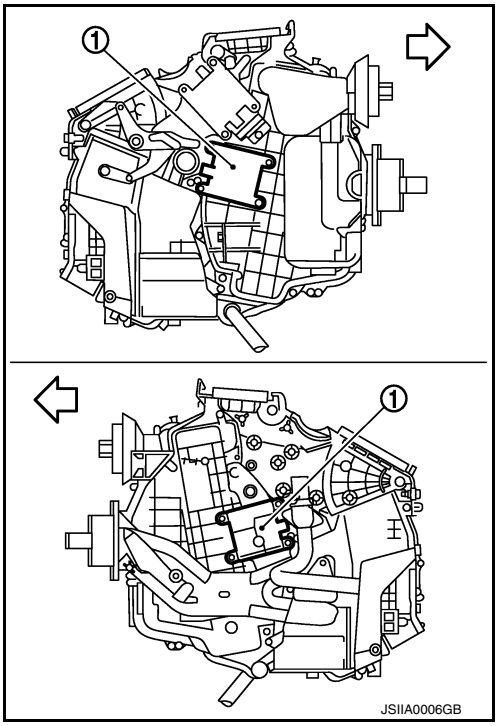

Component Function Check

INFOID:0000000010594570

1. CONFIRM SYMPTOM BY PERFORMING THE FOLLOWING OPERATIONAL CHECK

1. Turn temperature control dial (driver side) clockwise until 32°C (90°F) is displayed.
2. Check for warm air at discharge air outlets.
3. Turn temperature control dial (driver side) counterclockwise until 18°C (64°F) is displayed.
4. Check for cool air at discharge air outlets.

Is the inspection result normal?

YES >> END.
NO >> Go to diagnosis procedure. Refer to HAC-54, "Diagnosis Procedure".

Diagnosis Procedure

INFOID:0000000010594571

1. PERFORM SELF-DIAGNOSIS STEP-2

Perform self-diagnosis STEP-2. Refer to HAC-44, "Diagnosis Description", see Nos. 1 to 2.

Does code No. 20 appear on the display?

YES >> GO TO 2.
NO >> Go to appropriate malfunctioning sensor circuit. Refer to HAC-44, "Diagnosis Description", see No. 11.

2. PERFORM SELF-DIAGNOSIS STEP-4

Perform self-diagnosis STEP-4. Refer to HAC-44, "Diagnosis Description", see Nos. 1 to 5.

Is it operated normally?

YES >> END.
NO-1 >> Malfunction is detected on driver seat side. GO TO 3.
NO-2 >> Malfunction is detected on passenger seat side. GO TO 7.

3. CHECK INSTALLATION OF AIR MIX DOOR MOTOR (DRIVER SIDE)

Check installation of air mix door motor (driver side). Refer to HAC-132, "Exploded View".

Is it installed normally?

YES >> GO TO 4.
NO >> Repair or replace air mix door motor (driver side).

4. CHECK POWER SUPPLY FOR AIR MIX DOOR MOTOR (DRIVER SIDE)

Check voltage between air mix door motor (driver side) harness connector and ground.

(+)		(–)	Voltage (Approx.)
Air mix door motor (driver side)		—	
Connector	Terminal		
M252	1	Ground	12V

Is the inspection result normal?

YES >> GO TO 5.
NO >> Repair harness or connector.

5. CHECK SIGNAL FOR AIR MIX DOOR MOTOR (DRIVER SIDE)

Confirm A/C LAN signal between air mix door motor (driver side) harness connector and ground using an oscilloscope.

(+)		(–)	Voltage
Air mix door motor (driver side)		—	
Connector	Terminal		
M252	3	Ground	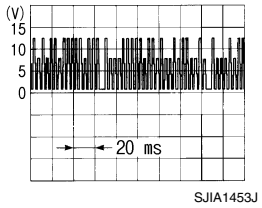

Is the inspection result normal?

YES >> GO TO 6.
NO >> Repair harness or connector.

6. CHECK AIR MIX DOOR MOTOR (DRIVER SIDE) GROUND CIRCUIT

1. Turn ignition switch OFF.
2. Disconnect air mix door motor (driver side) connector.
3. Check continuity between air mix door motor (driver side) harness connector and ground.

Air mix door motor (driver side)		—	Continuity
Connector	Terminal		
M252	2	Ground	Existed

Is the inspection result normal?

YES >> Replace air mix door motor (driver side).
NO >> Repair harness or connector.

7. CHECK INSTALLATION OF AIR MIX DOOR MOTOR (PASSENGER SIDE)

Check installation of air mix door motor (passenger side). Refer to HAC-132, "Exploded View".

Is it installed normally?

YES >> GO TO 8.
NO >> Repair or replace air mix door motor (passenger side).

8. CHECK POWER SUPPLY FOR AIR MIX DOOR MOTOR (PASSENGER SIDE)

Check voltage between air mix door motor (passenger side) harness connector and ground.

(+)		(–)	Voltage (Approx.)
Air mix door motor (passenger side)		—	
Connector	Terminal		
M255	1	Ground	12V

Is the inspection result normal?

YES >> GO TO 9.
NO >> Repair harness or connector.

9. CHECK SIGNAL FOR AIR MIX DOOR MOTOR (PASSENGER SIDE)

Confirm A/C LAN signal between air mix door motor (passenger side) harness connector and ground using an oscilloscope.

(+)		(–)	Voltage
Air mix door motor (passenger side)		—	
Connector	Terminal		
M255	3	Ground	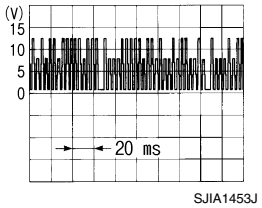

Is the inspection result normal?

YES >> GO TO 10.
NO >> Repair harness or connector.

10. CHECK AIR MIX DOOR MOTOR (PASSENGER SIDE) GROUND CIRCUIT

1. Turn ignition switch OFF.
2. Disconnect air mix door motor (passenger side) connector.
3. Check continuity between air mix door motor (passenger side) harness connector and ground.

Air mix door motor (passenger side)		—	Continuity
Connector	Terminal		
M255	2	Ground	Existed

Is the inspection result normal?

YES >> Replace air mix door motor (passenger side).
NO >> Repair harness or connector.

INTAKE DOOR MOTOR

Description

INFOID:0000000010594572

COMPONENT DESCRIPTION

Intake Door Motor

The intake door motor (1) is attached to the blower unit. It rotates so that air is drawn from inlets set by the unified meter and A/C amp. Motor rotation is conveyed to a lever which activates the intake door.

⇦: Vehicle front

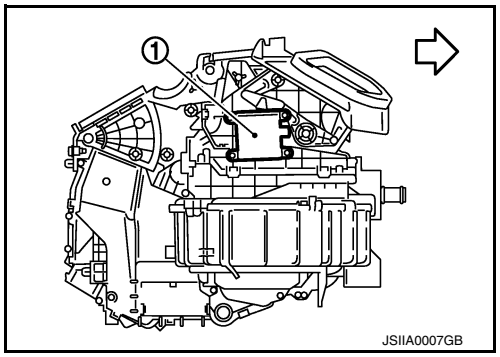

Component Function Check

INFOID:0000000010594573

1. CONFIRM SYMPTOM BY PERFORMING THE FOLLOWING OPERATIONAL CHECK

1. Press intake switch.
2. REC indicator turns ON.
3. Listen for intake door position change (Slight change of blower sound can be heard.).
4. Press intake switch again.
5. FRE indicator turns ON.

Is the inspection result normal?

YES >> END.
NO >> Go to diagnosis procedure. Refer to HAC-57, "Diagnosis Procedure".

Diagnosis Procedure

INFOID:0000000010594574

1. PERFORM SELF-DIAGNOSIS STEP-2

Perform self-diagnosis STEP-2. Refer to HAC-44, "Diagnosis Description", see Nos. 1 to 2.

Does code No. 20 appear on the display?

YES >> GO TO 2.
NO >> Go to appropriate malfunctioning sensor circuit. Refer to HAC-44, "Diagnosis Description", see No. 11.

2. PERFORM SELF-DIAGNOSIS STEP-4

Perform self-diagnosis STEP-4. Refer to HAC-44, "Diagnosis Description", see Nos. 1 to 5.

Is it operated normally?

YES >> END.
NO >> GO TO 3.

3. CHECK INTAKE DOOR CONTROL LINKAGE

Check intake door control linkage.

Is it installed normally?

YES >> GO TO 4.
NO >> Repair or adjust control linkage.

4. CHECK POWER SUPPLY FOR INTAKE DOOR MOTOR

Check voltage between intake door motor harness connector and ground.

(+)		(–)	Voltage (Approx.)
Intake door motor		—	
Connector	Terminal		
M254	1	Ground	12V

Is the inspection result normal?

YES >> GO TO 5.
NO >> Repair harness or connector.

5. CHECK SIGNAL FOR INTAKE DOOR MOTOR

Confirm A/C LAN signal between intake door motor harness connector and ground using an oscilloscope.

(+)		(–)	Voltage
Intake door motor		—	
Connector	Terminal		
M254	3	Ground	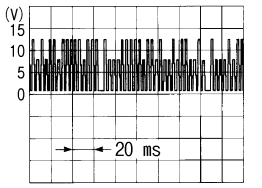 SJIA1453J

Is the inspection result normal?

YES >> GO TO 6.
NO >> Repair harness or connector.

6. CHECK INTAKE DOOR MOTOR GROUND CIRCUIT

1. Turn ignition switch OFF.
2. Disconnect intake door motor connector.
3. Check continuity between intake door motor harness connector and ground.

Intake door motor		—	Continuity
Connector	Terminal		
M254	2	Ground	Existed

Is the inspection result normal?

YES >> Replace intake door motor.
NO >> Repair harness or connector.

BLOWER MOTOR

Description

INFOID:0000000010594575

COMPONENT DESCRIPTION

Brush-less Motor

The blower motor utilizes a brush-less motor with a rotating magnet. Quietness is improved over previous motors where the brush was the point of contact and the coil rotated.

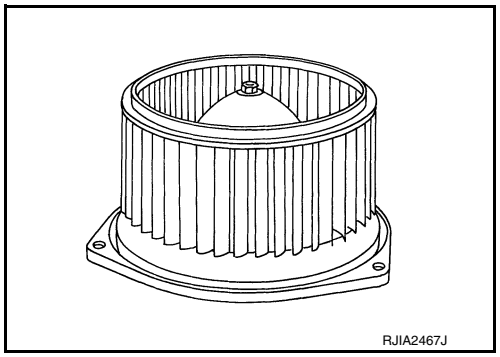

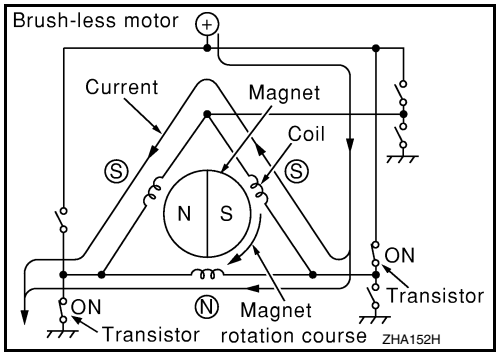

Component Function Check

INFOID:0000000010594576

1. CONFIRM SYMPTOM BY PERFORMING THE FOLLOWING OPERATIONAL CHECK

1. Press fan (UP: +) switch. Blower should operate on low speed.
2. Press fan (UP: +) switch, and continue checking blower speed and fan symbol until all speeds checked.

Is the inspection result normal?

YES >> END.
NO >> Go to diagnosis procedure. Refer to HAC-59, "Diagnosis Procedure".

Diagnosis Procedure

INFOID:0000000010594577

1. PERFORM SELF-DIAGNOSIS STEP-4

Perform self-diagnosis STEP-4. Refer to HAC-44, "Diagnosis Description", see Nos. 1 to 5.

Code No.	41	42	43	44	45	46
Blower motor duty ratio	37%	91%	65%			91%

Does blower motor speed change according to each code No.?

YES >> END.
NO >> GO TO 2.

2. CHECK POWER SUPPLY FOR BLOWER MOTOR

1. Disconnect blower motor connector.
2. Turn ignition switch ON.
3. Check voltage between blower motor harness connector and ground.

(+)		(–)	Voltage
Blower motor		—	
Connector	Terminal		
M109	1	Ground	Battery voltage

Is the inspection result normal?

YES >> GO TO 3.
NO >> GO TO 6.

3. CHECK BLOWER MOTOR GROUND CIRCUIT

1. Turn ignition switch OFF.
2. Check continuity between blower motor harness connector and ground.

blower motor		—	Continuity
Connector	Terminal		
M109	3	Ground	Existed

Is the inspection result normal?

YES >> GO TO 4.
NO >> Repair harness or connector.

4. CHECK CIRCUIT CONTINUITY BETWEEN BLOWER MOTOR AND UNIFIED METER AND A/C AMP.

1. Disconnect unified meter and A/C amp. connector.
2. Check continuity between blower motor harness connector and unified meter and A/C amp. harness connector.

blower motor		Unified meter and A/C amp.		Continuity
Connector	Terminal	Connector	Terminal	
M109	2	M66	38	Existed

3. Check continuity between blower motor harness connector and ground.

blower motor		—	Continuity
Connector	Terminal		
M109	2	ground	Not existed

Is the inspection result normal?

YES >> GO TO 5.
NO >> Repair harness or connector.

5. CHECK UNIFIED METER AND A/C AMP. OUTPUT SIGNAL

1. Reconnect blower motor connector and unified meter and A/C amp. connector.
2. Turn ignition switch ON.
3. Set MODE switch to VENT position.

4. Change fan speed from Lo to Hi, and check duty ratios between blower motor harness connector and ground by using an oscilloscope. Normal terminal 2 drive signal duty ratios are shown in the table below.

Blower fan speed (Manual) Vent mode	1st	2nd	3rd	4th	5th	6th	7th
Blower motor connector M109 terminal No. 2 (Oscilloscope)	T1 Approx. 1.6 ms	T2 Approx. 1.6 ms	T3 Approx. 1.6 ms	T4 Approx. 1.6 ms	T5 Approx. 1.6 ms	T6 Approx. 1.6 ms	T7 Approx. 1.6 ms
Duty ratio	Approx. 25%	Approx. 33%	Approx. 41%	Approx. 51%	Approx. 61%	Approx. 71%	Approx. 83%

NOTE: Duty ratio = $\frac{Tx}{\text{Approx. 1.6 ms}}$ x 100 (%)

JSIIA0068GB

Is the inspection result normal?

YES >> Replace blower motor after confirming the fan air flow does not change.
NO >> Replace unified meter and A/C amp.

6. CHECK POWER VOLTAGE OF BLOWER RELAY

1. Turn ignition switch OFF.
2. Remove blower relay. Refer to PG-108, "Fuse, Connector and Terminal Arrangement".
3. Turn ignition switch ON.
4. Check the voltage between blower relay fuse block terminals and ground. Refer to PG-106, "Description" for relay terminal assignment.

(+)	(–)	Voltage
Blower relay	—	
1	Ground	Battery voltage
3		

Is the inspection result normal?

YES >> GO TO 7.
NO >> Check ignition power supply circuit. Refer to PG-44, "Wiring Diagram - IGNITION POWER SUPPLY -".

7. CHECK BLOWER RELAY

1. Turn ignition switch OFF.
2. Install blower relay. Refer to PG-108, "Fuse, Connector and Terminal Arrangement".
3. Check operation sound of the blower relay after switching ignition switch ON.

Is the inspection result normal?

YES >> GO TO 8.
NO >> Replace blower relay.

8. CHECK FUSE

Check fuse 15A [Nos 21 and 22, located in the fuse block (J/B). Refer to PG-108, "Fuse, Connector and Terminal Arrangement".

Is the inspection result normal?

YES >> Repair harness or connector.
NO >> Be sure to eliminate cause of malfunction before installing new fuse.

Component Inspection

INFOID:0000000010594578

1. CHECK BLOWER MOTOR

1. Remove blower motor (1). Refer to VTL-19, "Exploded View".
2. Confirm smooth rotation of the blower motor.

Is the inspection result normal?

YES >> END.
NO >> Replace blower motor.

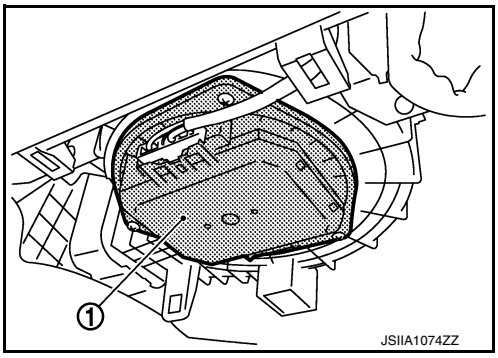

MAGNET CLUTCH

Description

INFOID:0000000010594579

Magnet clutch drives a compressor, by a signal of IPDM E/R.

Component Function Check

INFOID:0000000010594580

1. CONFIRM SYMPTOM BY PERFORMING THE FOLLOWING OPERATIONAL CHECK

1. Press AUTO switch.
2. Display should indicate AUTO. Confirm that the magnet clutch engages (sound or visual inspection). (Discharge air and blower speed depend on ambient, in-vehicle and set temperatures.)

Does the magnet clutch operate?

YES >> END.
NO >> Go to Diagnosis Procedure. Refer to HAC-63, "Diagnosis Procedure".

Diagnosis Procedure

INFOID:0000000010594581

1. PERFORM SELF-DIAGNOSIS STEP-2

Perform self-diagnosis STEP-2. Refer to HAC-44, "Diagnosis Description", see Nos. 1 to 2.

Is there any malfunction displayed?

YES >> Go to appropriate malfunctioning sensor circuit. Refer to HAC-44, "Diagnosis Description", see to No. 11.
NO >> GO TO 2.

2. PERFORM SELF-DIAGNOSIS STEP-4

Perform self-diagnosis STEP-4. Refer to HAC-44, "Diagnosis Description", see Nos. 1 to 5.

Is it operated normally?

YES >> END.
NO >> GO TO 3.

3. PERFORM IPDM E/R AUTO ACTIVE TEST

Perform IPDM E/R auto active test. Refer to PCS-9, "Diagnosis Description".

Does the magnet clutch operate?

YES-1 >> WITH CONSULT: GO TO 6.
YES-2 >> WITHOUT CONSULT: GO TO 7.
NO >> Check 10A fuse (No. 49, located in IPDM E/R), and GO TO 4.

4. CHECK CIRCUIT CONTINUITY BETWEEN IPDM E/R AND COMPRESSOR

1. Turn ignition switch OFF.
2. Disconnect IPDM E/R connector and compressor connector.
3. Check continuity between IPDM E/R harness connector and compressor harness connector.

IPDM E/R		Compressor		Continuity
Connector	Terminal	Connector	Terminal	
E7	48	F43	1	Existed

Is the inspection result normal?

YES >> GO TO 5.
NO >> Repair harness or connector.

5. CHECK MAGNET CLUTCH CIRCUIT

Check for operation sound when applying battery voltage direct current to terminal.

Is the inspection result normal?

YES >> 1. Replace IPDM E/R.
2. Refer to self-diagnosis procedure HAC-44, "Diagnosis Description" and perform self-diagnosis STEP-4. Confirm that magnet clutch operation normal.

NO >> 1. Replace magnet clutch. Refer to HA-39, "MAGNET CLUTCH : Removal and Installation of Compressor Clutch".
2. Refer to self-diagnosis procedure HAC-44, "Diagnosis Description" and perform self-diagnosis STEP-4. Confirm that magnet clutch operation normal.

6. CHECK ECM INPUT SIGNAL-1

Check A/C switch signal in “Data monitor”. Refer to HAC-48, "CONSULT Function".

A/C SWITCH ON : AIR COND SIG On
A/C SWITCH OFF : AIR COND SIG Off

Is the inspection result normal?

YES >> GO TO 9.
NO >> GO TO 7.

7. CHECK REFRIGERANT PRESSURE SENSOR

WITH CONSULT
1. Start the engine.
2. Check voltage of refrigerant pressure sensor in “Data monitor”. Refer to EC-534, "Reference Value".

WITHOUT CONSULT
1. Start the engine.
2. Check voltage between ECM harness connector and ground.

(+)		(–)	Condition	Voltage
ECM		—		
connector	Terminal			
M107	105	Ground	A/C switch: ON (Blower motor operates.)	Approx. 1.0 - 4.0 V

Is the inspection result normal?

YES >> • WITH CONSULT: GO TO 8.
• WITHOUT CONSULT: Repair harness or connector.
NO >> Refer to EC-529, "Diagnosis Procedure".

8. CHECK ECM INPUT SIGNAL-2

Check blower fan motor switch signal in “Data monitor”. Refer to HAC-48, "CONSULT Function".

FAN SWITCH ON : HEATER FAN SW On
FAN SWITCH OFF : HEATER FAN SW Off

Is the inspection result normal?

YES >> GO TO 9.
NO >> Repair harness or connector.

9. CHECK CAN COMMUNICATION

Check CAN communication. Refer to LAN-16, "Trouble Diagnosis Flow Chart".
- ECM – IPDM E/R
- ECM – Unified meter and A/C amp.

Is the inspection result normal?

YES >> Replace ECM.
NO >> Repair or replace malfunctioning part(s).

ECV (ELECTRICAL CONTROL VALVE)

Description

INFOID:0000000010594582

The ECV (electrical control valve) is installed in the compressor and controls it for emitting appropriate amount of refrigerant when necessary.

Diagnosis Procedure

INFOID:0000000010594583

1. CHECK POWER SUPPLY FOR ECV (ELECTRIC CONTROL VALVE)

1. Disconnect compressor (ECV) connector.
2. Turn ignition switch ON.
3. Check voltage between compressor (ECV) harness connector and ground.

(+)		(–)	Voltage
Compressor (ECV)		—	
Connector	Terminal		
F44	2	Ground	Battery voltage

Is the inspection result normal?

YES >> GO TO 3
NO >> GO TO 2

2. CHECK FUSE

Check power supply circuit and 10A fuse [No. 3, located in the fuse block (J/B)]. Refer to PG-108, "Fuse, Connector and Terminal Arrangement".

Is the inspection result normal?

YES >> Check harness for open circuit. Repair or replace if necessary.
NO >> Replace fuse and check harness for short circuit. Repair or replace if necessary.

3. CHECK ECV CONTROL SIGNAL

1. Turn ignition switch OFF.
2. Reconnect compressor (ECV) connector.
3. Perform self-diagnosis. Refer to HAC-44, "Diagnosis Description".
4. Set in self-diagnosis STEP-4 (Code No. 45).
5. Confirm ECV control signal between unified meter and A/C amp harness connector M67 terminal 65 and ground using an oscilloscope.

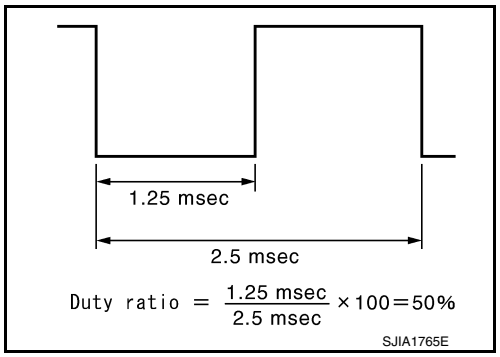

Is the inspection result normal?

YES >> Replace compressor.
NO >> GO TO 4

4. CHECK CIRCUIT CONTINUITY BETWEEN ECV AND UNIFIED METER AND A/C AMP.

1. Turn ignition switch OFF.
2. Disconnect compressor (ECV) connector and unified meter and A/C amp. connector.
3. Check continuity between compressor (ECV) harness connector and unified meter and A/C amp harness connector.

Compressor (ECV)		Unified meter and A/C amp.		Continuity
Connector	Terminal	Connector	Terminal	
F44	3	M67	65	Existed

Is the inspection result normal?

YES >> GO TO 5
NO >> Repair the harnesses or connectors.

5. CHECK ECV

Check continuity between compressor (ECV) connector.

Compressor (ECV)				Continuity
Connector	Terminal	Connector	Terminal	
F44	2	F44	3	Existed

Is the inspection result normal?

YES >> Replace the unified meter and A/C amp.
NO >> Replace the compressor.

AMBIENT SENSOR

Description

INFOID:0000000010594584

COMPONENT DESCRIPTION

Ambient Sensor

The ambient sensor (1) is attached on the radiator core support (left side). It detects ambient temperature and converts it into a resistance value which is then input into the unified meter and A/C amp.

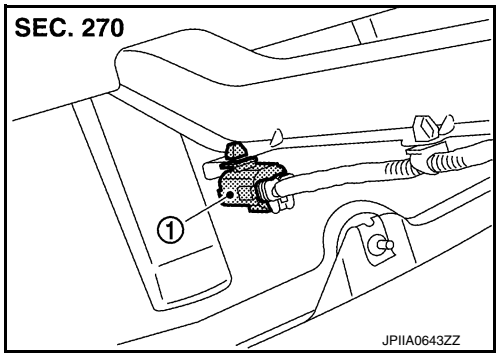

AMBIENT TEMPERATURE INPUT PROCESS

The unified meter and A/C amp. equips a processing circuit for the ambient sensor input. However, when the temperature detected by the ambient sensor increases quickly, the processing circuit retards the unified meter and A/C amp. function. It only allows the unified meter and A/C amp. to recognize an ambient temperature increase of 0.33°C (0.6°F) per 100 seconds.

As an example, consider stopping for a few minutes after high speed driving. Although the actual ambient temperature has not changed, the temperature detected by the ambient sensor increases. This is because the heat from the engine compartment can radiate to the front bumper area, location of the ambient sensor.

Component Function Check

INFOID:0000000010594585

1. PERFORM SELF-DIAGNOSIS STEP-2

Perform self-diagnosis STEP-2. Refer to HAC-44, "Diagnosis Description", see Nos. 1 to 2.

21 or –21 is displayed.

YES >> Go to Diagnosis Procedure. Refer to HAC-67, "Diagnosis Procedure".
NO >> END.

Diagnosis Procedure

INFOID:0000000010594586

1. CHECK VOLTAGE BETWEEN AMBIENT SENSOR AND GROUND

1. Disconnect ambient sensor connector.
2. Turn ignition switch ON.
3. Check voltage between ambient sensor harness connector and ground.

(+)		(–)	Voltage (Approx.)
Ambient sensor		—	
Connector	Terminal		
E76	1	Ground	5 V

Is the inspection result normal?

YES >> GO TO 2.
NO >> GO TO 4.

2. CHECK CIRCUIT CONTINUITY BETWEEN AMBIENT SENSOR AND UNIFIED METER AND A/C AMP.

1. Turn ignition switch OFF.
2. Disconnect unified meter and A/C amp. connector.
3. Check continuity between ambient sensor harness connector and unified meter and A/C amp. harness connector.

Ambient sensor		Unified meter and A/C amp.		Continuity
Connector	Terminal	Connector	Terminal	
E76	2	M67	61	Existed

Is the inspection result normal?

YES >> GO TO 3.
NO >> Repair harness or connector.

3. CHECK AMBIENT SENSOR

Check ambient sensor. Refer to HAC-68, "Component Inspection".

Is the inspection result normal?

YES >> Replace unified meter and A/C amp.
NO >> Replace ambient sensor.

4. CHECK CIRCUIT CONTINUITY BETWEEN AMBIENT SENSOR AND UNIFIED METER AND A/C AMP.

1. Turn ignition switch OFF.
2. Disconnect unified meter and A/C amp. connector.
3. Check continuity between ambient sensor harness connector and unified meter and A/C amp. harness connector.

Ambient sensor		Unified meter and A/C amp.		Continuity
Connector	Terminal	Connector	Terminal	
E76	1	M67	45	Existed

4. Check continuity between ambient sensor harness connector and ground.

Ambient sensor		—	Continuity
Connector	Terminal		
E76	1	Ground	Not existed

Is the inspection result normal?

YES >> Replace unified meter and A/C amp.
NO >> Repair harness or connector.

Component Inspection

INFOID:0000000010594587

1. CHECK AMBIENT SENSOR

1. Turn ignition switch OFF.
2. Disconnect ambient sensor connector. Refer to HAC-124, "Exploded View".
3. Check resistance between ambient sensor terminals.

Terminal		Condition Temperature °C (°F)	Resistance kΩ
1	2	–15 (5)	12.73
		–10 (14)	9.92
		–5 (23)	7.80
		0 (32)	6.19
		5 (41)	4.95
		10 (50)	3.99
		15 (59)	3.24
		20 (68)	2.65
		25 (77)	2.19
		30 (86)	1.81
		35 (95)	1.51
		40 (104)	1.27
		45 (113)	1.07

Is the inspection result normal?

YES >> END.
NO >> Replace ambient sensor.

IN-VEHICLE SENSOR

Description

INFOID:0000000010594588

In-vehicle Sensor
The in-vehicle sensor (1) is located on instrument driver lower panel. It converts variations in compartment air temperature drawn from the aspirator into a resistance value. It is then input into the unified meter and A/C amp.

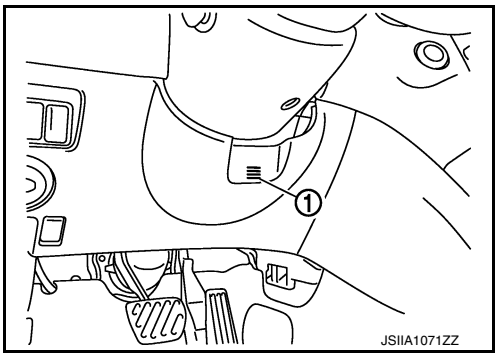

Aspirator
The aspirator (1) is located on driver's side of heater & cooling unit assembly. It produces vacuum pressure due to air discharged from the heater & cooling unit assembly, continuously taking compartment air in the aspirator.

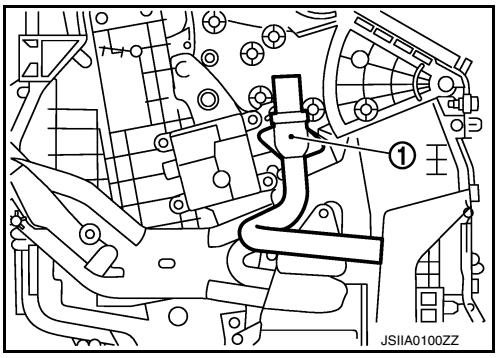

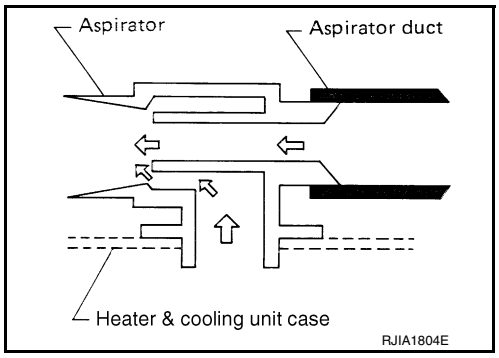

Component Function Check

INFOID:0000000010594589

1. PERFORM SELF-DIAGNOSIS STEP-2

Perform self-diagnosis STEP-2. Refer to HAC-44, "Diagnosis Description", see Nos. 1 to 2.

22 or –22 is displayed.

YES >> Go to Diagnosis Procedure. Refer to HAC-70, "Diagnosis Procedure".
NO >> END.

Diagnosis Procedure

INFOID:0000000010594590

1. CHECK VOLTAGE BETWEEN IN-VEHICLE SENSOR AND GROUND

1. Disconnect in-vehicle sensor connector.
2. Turn ignition switch ON.
3. Check voltage between in-vehicle sensor harness connector and ground.

(+)		(–)	Voltage (Approx.)
In-vehicle sensor		—	
Connector	Terminal		
M61	1	Ground	5 V

Is the inspection result normal?

YES >> GO TO 2.
NO >> GO TO 4.

2. CHECK CIRCUIT CONTINUITY BETWEEN IN-VEHICLE SENSOR AND UNIFIED METER AND A/C AMP.

1. Turn ignition switch OFF.
2. Disconnect unified meter and A/C amp. connector.
3. Check continuity between in-vehicle sensor harness connector and unified meter and A/C amp. harness connector.

In-vehicle sensor		Unified meter and A/C amp.		Continuity
Connector	Terminal	Connector	Terminal	
M61	2	M67	60	Existed

Is the inspection result normal?

YES >> GO TO 3.
NO >> Repair harness or connector.

3. CHECK IN-VEHICLE SENSOR

Check in-vehicle sensor. Refer to HAC-71, "Component Inspection".

Is the inspection result normal?

YES >> Replace unified meter and A/C amp.
NO >> Replace in-vehicle sensor.

4. CHECK CIRCUIT CONTINUITY BETWEEN IN-VEHICLE SENSOR AND UNIFIED METER AND A/C AMP.

1. Turn ignition switch OFF.
2. Disconnect unified meter and A/C amp. connector.
3. Check continuity between in-vehicle sensor harness connector and unified meter and A/C amp. harness connector.

In-vehicle sensor		Unified meter and A/C amp.		Continuity
Connector	Terminal	Connector	Terminal	
M61	1	M67	44	Existed

4. Check continuity between in-vehicle sensor harness connector and ground.

In-vehicle sensor		—	Continuity
Connector	Terminal		
M61	1	Ground	Not existed

Is the inspection result normal?

YES >> Replace unified meter and A/C amp.
NO >> Repair harness or connector.

Component Inspection

INFOID:0000000010594591

1. CHECK IN-VEHICLE SENSOR

1. Turn ignition switch OFF.
2. Disconnect in-vehicle sensor connector. Refer to HAC-125, "Exploded View".
3. Check resistance between in-vehicle sensor terminals.

Terminal		Condition Temperature °C (°F)	Resistance kΩ
1	2	−15 (5)	12.73
		−10 (14)	9.92
		−5 (23)	7.80
		0 (32)	6.19
		5 (41)	4.95
		10 (50)	3.99
		15 (59)	3.24
		20 (68)	2.65
		25 (77)	2.19
		30 (86)	1.81
		35 (95)	1.51
		40 (104)	1.27
		45 (113)	1.07

Is the inspection result normal?

YES >> END.
NO >> Replace in-vehicle sensor.

SUNLOAD SENSOR

Description

INFOID:0000000010594592

COMPONENT DESCRIPTION

Sunload Sensor

The sunload sensor (1) is located on the driver's side front defroster grille. It detects sunload entering through windshield by means of a photo diode. The sensor converts the sunload into a current value which is then input into the unified meter and A/C amp.

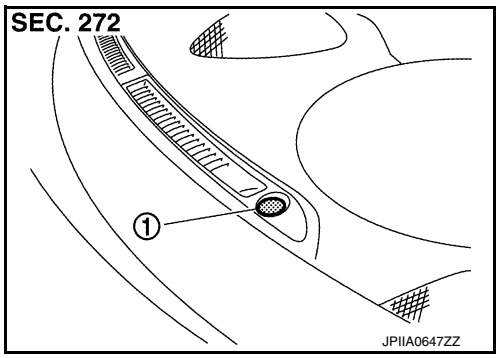

SUNLOAD INPUT PROCESS

The unified meter and A/C amp. also equips a processing circuit which averages the variations in detected sunload over a period of time. This prevents drastic swings in the air temperature control system operation due to small or quick variations in detected sunload.

For example, consider driving along a road bordered by an occasional group of large trees. The sunload detected by the sunload sensor varies whenever the trees obstruct the sunlight. The processing circuit averages the detected sunload over a period of time, so that the (insignificant) effect of the trees momentarily obstructing the sunlight does not cause any change in the air temperature control system operation. On the other hand, shortly after entering a long tunnel, the system recognizes the change in sunload, and the system reacts accordingly.

Component Function Check

INFOID:0000000010594593

1. PERFORM SELF-DIAGNOSIS STEP-2

Perform self-diagnosis STEP-2. Refer to HAC-44, "Diagnosis Description", see Nos. 1 to 2.

25 or –25 is displayed.

YES >> Go to Diagnosis Procedure. Refer to HAC-73, "Diagnosis Procedure".
NO >> END.

Diagnosis Procedure

INFOID:0000000010594594

1. CHECK VOLTAGE BETWEEN SUNLOAD SENSOR AND GROUND

1. Disconnect sunload sensor connector.
2. Turn ignition switch ON.
3. Check voltage between sunload sensor harness connector and ground.

(+)		(–)	Voltage (Approx.)
Sunload sensor		—	
Connector	Terminal		
M46	1	Ground	5 V

Is the inspection result normal?

YES >> GO TO 2.
NO >> GO TO 4.

2. CHECK CIRCUIT CONTINUITY BETWEEN SUNLOAD SENSOR AND UNIFIED METER AND A/C AMP.

1. Turn ignition switch OFF.
2. Disconnect unified meter and A/C amp. connector.

3. Check continuity between sunload sensor harness connector and unified meter and A/C amp. harness connector.

Sunload sensor		Unified meter and A/C amp.		Continuity
Connector	Terminal	Connector	Terminal	
M46	2	M67	62	Existed

Is the inspection result normal?

YES >> GO TO 3.
NO >> Repair harness or connector.

3. CHECK SUNLOAD SENSOR

1. Reconnect sunload sensor connector and unified meter and A/C amp. connector.
2. Check sunload sensor. Refer to HAC-74, "Component Inspection".

Is the inspection result normal?

YES >> Replace unified meter and A/C amp.
NO >> Replace sunload sensor.

4. CHECK CIRCUIT CONTINUITY BETWEEN SUNLOAD SENSOR AND UNIFIED METER AND A/C AMP.

1. Turn ignition switch OFF.
2. Disconnect unified meter and A/C amp. connector.
3. Check continuity between sunload sensor harness connector and unified meter and A/C amp. harness connector.

Sunload sensor		Unified meter and A/C amp.		Continuity
Connector	Terminal	Connector	Terminal	
M46	1	M67	46	Existed

4. Check continuity between sunload sensor harness connector and ground.

Sunload sensor		—	Continuity
Connector	Terminal		
M46	1	Ground	Not existed

Is the inspection result normal?

YES >> Replace unified meter and A/C amp.
NO >> Repair harness or connector.

Component Inspection

INFOID:0000000010594595

1. CHECK SUNLOAD SENSOR

1. Turn ignition switch ON.
2. Check voltage between unified meter and A/C amp. harness connector and ground.

(+)		(–)
Unified meter and A/C amp.		—
Connector	Terminal	
M67	46	Ground

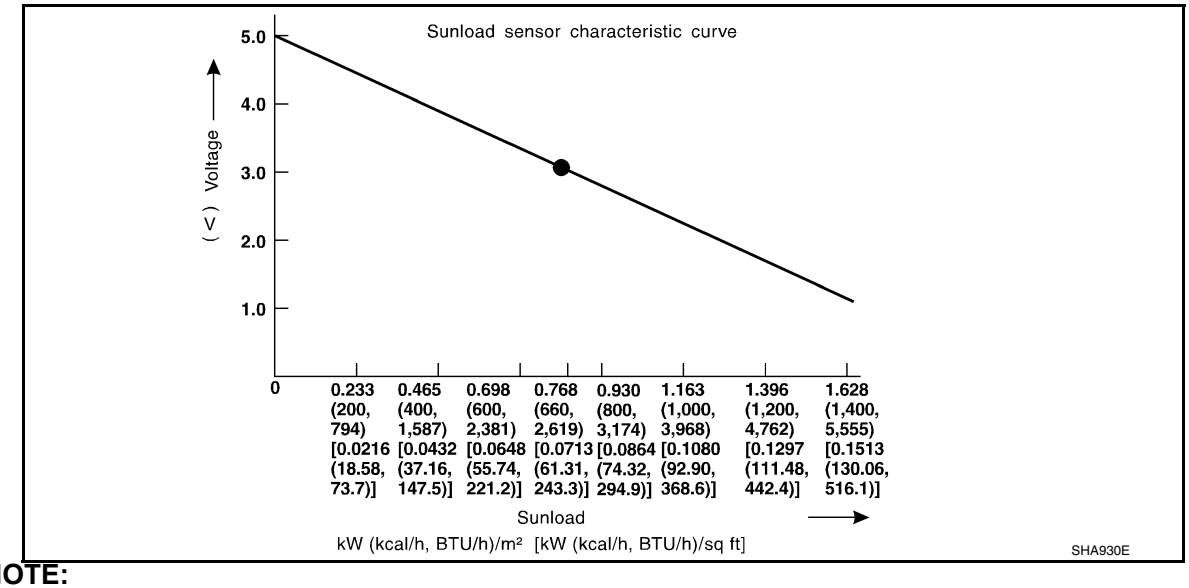

NOTE:

Select a place where sunshine directly on it when checking sunload sensor.

Is the inspection result normal?

YES >> END.

NO >> Replace sunload sensor.

INTAKE SENSOR

Description

INFOID:0000000010594596

Intake Sensor
The intake sensor (2) is located on the evaporator. It converts air temperature after it passes through the evaporator (1) into a resistance value which is then input to the unified meter and A/C amp.

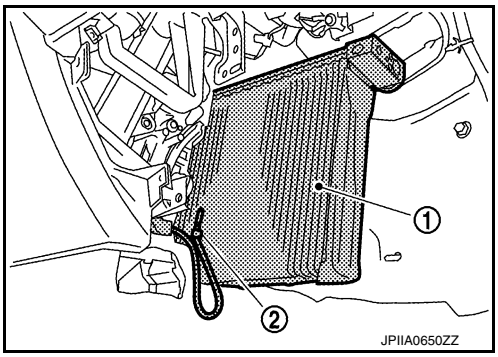

Component Function Check

INFOID:0000000010594597

1. PERFORM SELF-DIAGNOSIS STEP-2

Perform self-diagnosis STEP-2. Refer to HAC-44, "Diagnosis Description", see Nos. 1 to 2.

24 or –24 is displayed.

YES >> Go to Diagnosis Procedure. Refer to HAC-76, "Diagnosis Procedure".
NO >> END.

Diagnosis Procedure

INFOID:0000000010594598

1. CHECK VOLTAGE BETWEEN INTAKE SENSOR AND GROUND

1. Disconnect intake sensor connector.
2. Turn ignition switch ON.
3. Check voltage between intake sensor harness connector and ground.

(+)		(–)	Voltage (Approx.)
Intake sensor		—	
Connector	Terminal		
M77	1	Ground	5 V

Is the inspection result normal?

YES >> GO TO 2.
NO >> GO TO 4.

2. CHECK CIRCUIT CONTINUITY BETWEEN INTAKE SENSOR AND UNIFIED METER AND A/C AMP.

1. Turn ignition switch OFF.
2. Disconnect unified meter and A/C amp. connector.
3. Check continuity between intake sensor harness connector and unified meter and A/C amp. harness connector.

Intake sensor		Unified meter and A/C amp.		Continuity
Connector	Terminal	Connector	Terminal	
M77	2	M67	59	Existed

Is the inspection result normal?

YES >> GO TO 3.
NO >> Repair harness or connector.

3. CHECK INTAKE SENSOR

Check intake sensor. Refer to HAC-77, "Component Inspection".

Is the inspection result normal?

YES >> Replace unified meter and A/C amp.
NO >> Replace intake sensor.

4. CHECK CIRCUIT CONTINUITY BETWEEN INTAKE SENSOR AND UNIFIED METER AND A/C AMP.

1. Turn ignition switch OFF.
2. Disconnect unified meter and A/C amp. connector.
3. Check continuity between intake sensor harness connector and unified meter and A/C amp. harness connector.

Intake sensor		Unified meter and A/C amp.		Continuity
Connector	Terminal	Connector	Terminal	
M77	1	M67	43	Existed

4. Check continuity between intake sensor harness connector and ground.

Intake sensor		—	Continuity
Connector	Terminal		
M77	1	Ground	Not existed

Is the inspection result normal?

YES >> Replace unified meter and A/C amp.
NO >> Repair harness or connector.

Component Inspection

INFOID:0000000010594599

1. CHECK INTAKE SENSOR

1. Turn ignition switch OFF.
2. Disconnect intake sensor connector.
3. Check resistance between intake sensor terminals.

Terminal		Condition	Resistance kΩ
		Temperature °C (°F)	
1	2	−15 (5)	12.34
		−10 (14)	9.62
		−5 (23)	7.56
		0 (32)	6.00
		5 (41)	4.80
		10 (50)	3.87
		15 (59)	3.15
		20 (68)	2.57
		25 (77)	2.12
		30 (86)	1.76
		35 (95)	1.47
		40 (104)	1.23
		45 (113)	1.04

Is the inspection result normal?

YES >> END.
NO >> Replace intake sensor.

EXHAUST GAS/OUTSIDE ODOR DETECTING SENSOR

Description

INFOID:0000000010594600

COMPONENT DESCRIPTION

The exhaust gas/outside odor detecting sensor (1) is attached on the radiator core support. It detects smell of exhaust gas and unpleasant odor, and converts it into a duty ratio which is then input into the unified meter and A/C amp.

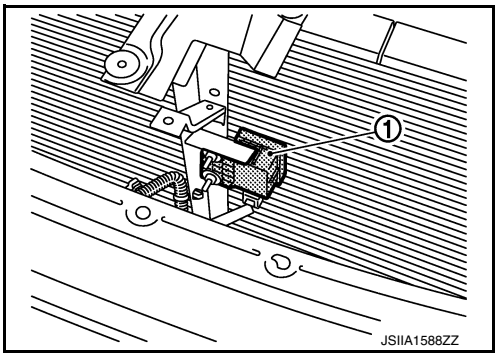

STRUCTURE AND OPERATION

Exhaust gas/outside odor detecting sensor detects ambient atmospheric CO, NO_2 and unpleasant odor, and converts them to values of resistance. The values are converted to signals with the exhaust gas/outside odor detecting sensor internal circuit, then the unified meter and A/C amp. inputs the signals.
Exhaust gas/outside odor detecting sensor has a construction that detects CO, NO_2 and unpleasant odor by exhaust gas/outside odor detecting sensor element from the air intake of the case through a filter (waterproof sheet). It sends output signals to the unified meter and A/C amp. in response to a resistance value conversion by exhaust gas/outside odor detecting sensor elements. Unified meter and A/C amp. prevent a smell of exhaust gas and ambient atmospheric unpleasant odor from getting into vehicle by performing corrections according to various driving conditions.

Component Function Check

INFOID:0000000010594601

1. PERFORM SELF-DIAGNOSIS STEP-2

Perform self-diagnosis STEP-2. Refer to HAC-44, "Diagnosis Description", see Nos. 1 to 2.

28, –28, 29 or –29 is displayed.

YES >> Go to Diagnosis Procedure. Refer to HAC-78, "Diagnosis Procedure".
NO >> INSPECTION END

Diagnosis Procedure

INFOID:0000000010594602

1. ADJUST EXHAUST GAS / OUTSIDE ODOR DETECTING SENSOR SENSITIVITY

1. Turn ignition switch ON.
2. Adjust the exhaust gas / outside odor detecting sensor sensitivity. Refer to HAC-11, "Exhaust Gas/Outside Odor Detecting Sensor Sensitivity Adjustment Function (With ACCS)".

Are the symptoms solved?

YES >> INSPECTION END
NO >> GO TO 2.

2. CHECK POWER SUPPLY FOR EXHAUST GAS / OUTSIDE ODOR DETECTING SENSOR

1. Turn ignition switch OFF.
2. Disconnect exhaust gas / outside odor detecting sensor connector.
3. Turn ignition switch ON.
4. Check voltage between exhaust gas / outside odor detecting sensor harness connector and ground.

(+)		(–)	Voltage
Exhaust gas / outside odor detecting sensor		—	
Connector	Terminal		
E120	1	Ground	Battery voltage

Is the inspection result normal?

YES >> GO TO 3.
NO >> Check power supply circuit and 10A fuse (No. 3, located in the fuse block). Refer to PG-108, "Fuse, Connector and Terminal Arrangement".
- If fuse is OK, check harness for open circuit. Repair or replace if necessary.
- If fuse is NG, check harness for short circuit and replace fuse.

3. CHECK GROUND CIRCUIT FOR EXHAUST GAS / OUTSIDE ODOR DETECTING SENSOR

1. Turn ignition switch OFF.
2. Check continuity between exhaust gas / outside odor detecting sensor harness connector and ground.

Exhaust gas / outside odor detecting sensor		—	Continuity
Connector	Terminal		
E120	2	Ground	Existed

Is the inspection result normal?

YES >> GO TO 4.
NO >> Repair harness or connector.

4. CHECK EXHAUST GAS / OUTSIDE ODOR DETECTING SENSOR SIGNAL

1. Reconnect exhaust gas / outside odor detecting sensor connector.
2. Turn ignition switch ON.
3. Check signal between exhaust gas / outside odor detecting sensor harness connector and ground using an oscilloscope.

(+)		(–)	Voltage
Exhaust gas / outside odor detecting sensor		—	
Connector	Terminal		
E120	3	Ground	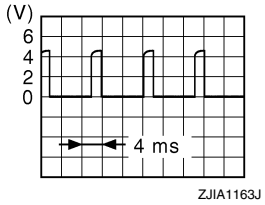

NOTE:
The signal is different by measurement environment of a vehicle.

Is the inspection result normal?

YES >> GO TO 5.
NO >> Replace exhaust gas / outside odor detecting sensor. Refer to HAC-130, "Removal and Installation".

5. CHECK CIRCUIT CONTINUITY BETWEEN UNIFIED METER AND A/C AMP. AND EXHAUST GAS / OUTSIDE ODOR DETECTING SENSOR

1. Turn ignition switch OFF.
2. Disconnect exhaust gas / outside odor detecting sensor connector and unified meter and A/C amp. connector.
3. Check continuity between exhaust gas / outside odor detecting sensor harness connector and unified meter and A/C amp. harness connector.

Exhaust gas / outside odor detecting sensor		Unified meter and A/C amp.		Continuity
Connector	Terminal	Connector	Terminal	
E120	3	M67	47	Existed

Is the inspection result normal?

YES >> Replace unified meter and A/C amp.Refer to HAC-123, "Removal and Installation".
NO >> Repair harnesses or connectors.

IONIZER

Description

INFOID:0000000010594603

Ionizer (1) is attached to the heater & cooling unit assembly (2).

⇦: Vehicle front

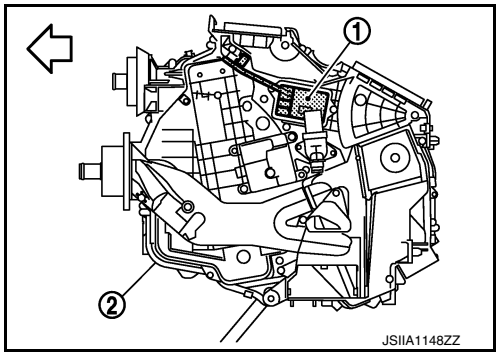

Component Function Check

INFOID:0000000010594604

1. CHECK IONIZER OPERATION SOUND

1. Turn ignition switch ON.
2. Press AUTO switch.
3. Ion indicator is shown on the display.
4. Check the ionizer operation sound (whirring sound) in the duct by putting an ear to the center ventilator grille (LH) outlet.

Is the inspection result normal?

YES >> INSPECTION END
NO >> Go to Diagnosis Procedure. Refer to HAC-81, "Diagnosis Procedure".

Diagnosis Procedure

INFOID:0000000010594605

1. CHECK POWER SUPPLY FOR IONIZER

1. Turn ignition switch OFF.
2. Disconnect ionizer connector.
3. Turn ignition switch ON.
4. Press fan (UP:+) switch.
5. Check voltage between ionizer harness connector and ground.

(+)		(–)	Voltage
Ionizer		—	
Connector	Terminal		
M160	1	Ground	Battery voltage

Is the inspection result normal?

YES >> GO TO 2.
NO >> Check 10A fuse (No. 3, located in the fuse block). Refer to PG-108, "Fuse, Connector and Terminal Arrangement".
- If fuse is OK, check harness for open circuit. Repair or replace if necessary.
- If fuse is NG, replace fuse and check for short circuit. Repair or replace if necessary.

2. CHECK CIRCUIT CONTINUITY BETWEEN IONIZER AND GROUND

1. Turn ignition switch OFF.
2. Check continuity between ionizer harness connector and ground.

Ionizer		—	Continuity
Connector	Terminal		
M160	3	Ground	Existed

Is the inspection result normal?

YES >> GO TO 3.
NO >> Repair harnesses or connectors.

3. CHECK ION ON/OFF SIGNAL

Check voltage between ionizer harness connector and ground.

(+)		(–)	Condition	Voltage
Ionizer				
Connector	Terminal			
M160	4	Ground	Blower motor: OFF	12 V
			Blower motor: ON	0 V

Is the inspection result normal?

YES >> Replace ionizer.
NO >> GO TO 4.

4. CHECK CIRCUIT CONTINUITY BETWEEN UNIFIED METER AND A/C AMP. AND IONIZER

1. Turn ignition switch OFF.
2. Disconnect unified meter and A/C amp. connector.
3. Check continuity between unified meter and A/C amp. harness connector and ionizer harness connector.

Ionizer		Unified meter and A/C amp.		Continuity
Connector	Terminal	Connector	Terminal	
M160	4	M66	20	Existed

4. Check continuity between ionizer harness connector and ground.

Ionizer		—	Continuity
Connector	Terminal		
M160	4	Ground	Not existed

Is the inspection result normal?

YES >> Replace unified meter and A/C amp.
NO >> Repair harnesses or connectors.

ECU DIAGNOSIS INFORMATION

UNIFIED METER AND A/C AMP.

Reference Value

INFOID:0000000010594606

TERMINAL LAYOUT

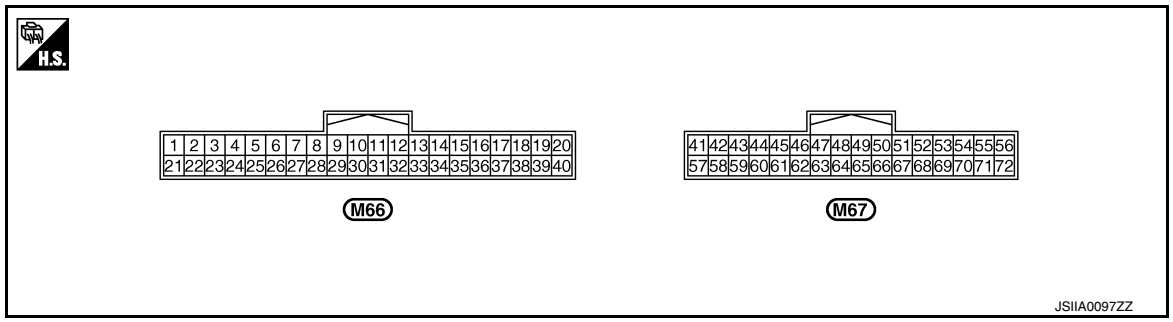

PHYSICAL VALUES

Terminal No. (Wire color)		Description		Condition	Value (Approx.)
+	–	Signal name	Input/ Output		
20*1 (L)	Ground	ION ON/OFF signal	Output	• Ignition switch ON • Blower motor: ON	0 V
				• Ignition switch ON • Blower motor: OFF	12V
38 (P)	Ground	Blower motor control signal	Output	• Ignition switch ON • Fan speed: 1st speed (manual)	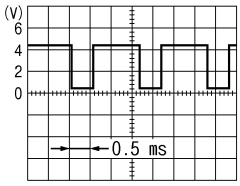 JSIIA0096ZZ
41 (V)	Ground	ACC power supply	—	Ignition switch ACC	Battery voltage
43 (R)	Ground	Intake sensor signal	Input	Ignition switch ON	0 – 4.8 V Output voltage varies with intake temperature.
44 (LG)	Ground	In-vehicle sensor signal	Input	Ignition switch ON	0 – 4.8 V Output voltage varies with intake temperature.
45 (P)	Ground	Ambient sensor signal	Input	Ignition switch ON	0 – 4.8 V Output voltage varies with intake temperature.
46 (BG)	Ground	Sunload sensor signal	Input	Ignition switch ON	0 – 4.8 V Output voltage varies with intake temperature.

Terminal No. (Wire color)		Description		Condition	Value (Approx.)
+	–	Signal name	Input/ Output		
47*1 (G)	Ground	Exhaust gas/outside odor detecting sensor signal	Input	Ignition switch ON **NOTE:** The signal is different by measurement environment of a vehicle	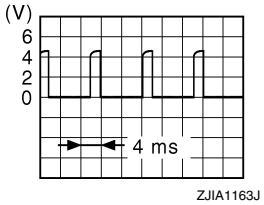
53 (G)	Ground	Ignition power supply	—	Ignition switch ON	Battery voltage
54 (Y)	Ground	Battery power supply	—	Ignition switch OFF	Battery voltage
55 (B)	Ground	Ground	—	Ignition switch ON	0 V
56 (L)	Ground	CAN-H	—	—	—
59 (GR)	Ground	Intake sensor ground	—	—	0 V
60 (L)	Ground	In-vehicle sensor ground	—	Ignition switch ON	0 V
61 (BR)	Ground	Ambient sensor ground	—	Ignition switch ON	0 V
62 (SB)	Ground	Sunload sensor ground	—	Ignition switch ON	0 V
63*1, * (R)	—	—	—	—	—
65 (BG)	Ground	ECV (Electrical Control Valve) signal	Output	• Ignition switch ON • Self-diagnosis. STEP-4 (Code No. 45)	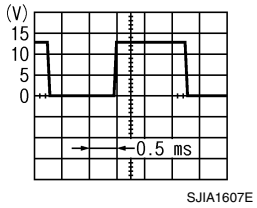
69 (L)	Ground	A/C LAN signal	Input/ Output	Ignition switch ON	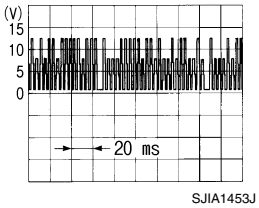
70 (R)	Ground	Each door motor power supply	Output	Ignition switch ON	12 V
71 (B)	Ground	Ground	—	Ignition switch ON	0 V
72 (P)	Ground	CAN-L	—	—	—

*1: With ACCS

*2: Unified meter and A/C amp. does not use this terminal for control.

Wiring Diagram - AIR CONDITIONER CONTROL SYSTEM -

INFOID:0000000010594607

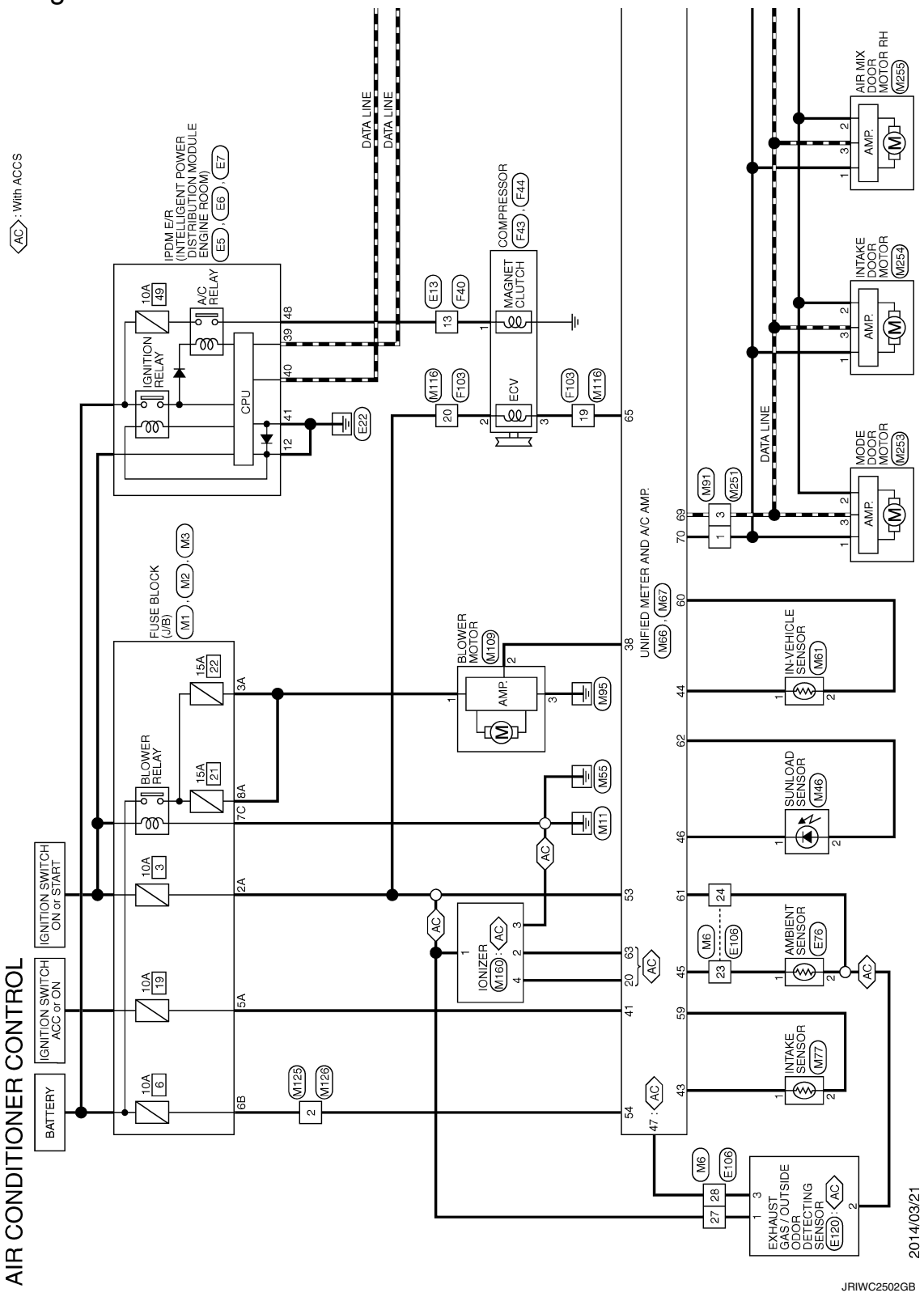

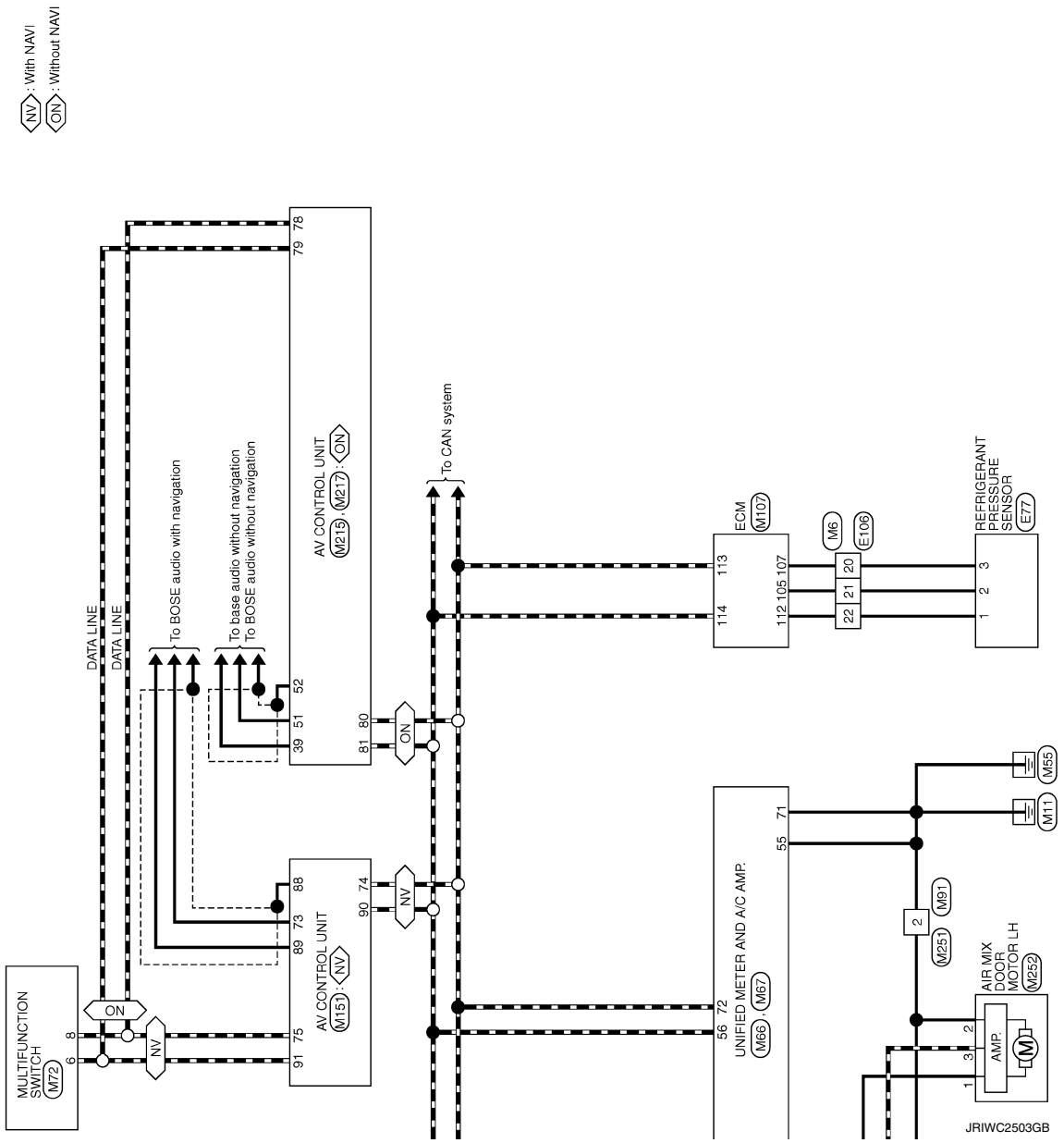
NV : With NAVI
ON : Without NAVI
MULTIFUNCTION SWITCH
M72
6
8
ON
NV
DATA LINE
DATA LINE
To BOSE audio with navigation
To base audio without navigation
To BOSE audio without navigation
AV CONTROL UNIT
M151 : NV
91 75
89 73 88
90 74
AV CONTROL UNIT
M215 : M217 : ON
39 51 52
81 80
79 78
To CAN system
UNIFIED METER AND A/C AMP.
M66 : M67
56 72
55 71
ECM
M107
114 113
112 105 107
M6
E106
22 21 20
REFRIGERANT PRESSURE SENSOR
E77
1 2 3
M55
M11
M91
M251
2
AIR MIX DOOR MOTOR LH
M253
AMP.
M
1 3 2
JRIWC2503GB

AIR CONDITIONER CONTROL

Connector No.	E5
Connector Name	IPDM E/R (INTELLIGENT POWER DISTRIBUTION MODULE ENGINE ROOM)
Connector Type	TH20FW-CS12-M4-1V

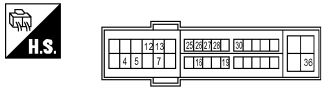

Terminal No.	Color Of Wire	Signal Name [Specification]
4	V	–
5	L	–
7	R	–
12	B/W	–
13	Y	–
16	LG	–
19	W	–
25	G	–
26	R	–
27	BG	–
28	L	–
30	GR	–
36	G	–

Connector No.	E6
Connector Name	IPDM E/R (INTELLIGENT POWER DISTRIBUTION MODULE ENGINE ROOM)
Connector Type	TH08FW-NH

Terminal No.	Color Of Wire	Signal Name [Specification]
39	P	–
40	L	–
41	B/W	–
43	SB	–
44	BR	–
45	G	–
46	R	–

Connector No.	E7
Connector Name	IPDM E/R (INTELLIGENT POWER DISTRIBUTION MODULE ENGINE ROOM)
Connector Type	TH20FW-CS12-M4

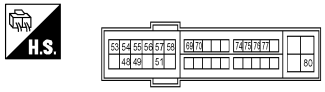

Terminal No.	Color Of Wire	Signal Name [Specification]
48	L	–
49	BG	–
51	Y	–
53	W	–
54	P	–
55	SB	–
56	LG	–
57	G	–
58	V	–
69	BR	–
70	BG	–
74	P	–
75	SB	–
76	Y	–
77	R	–
80	W	–

Connector No.	E13
Connector Name	WIRE TO WIRE
Connector Type	SAA36MB-RS8-SHZ8

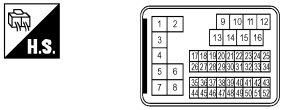

Terminal No.	Color Of Wire	Signal Name [Specification]
1	L/Y	–
2	SHIELD	–
3	L/B	–
4	SHIELD	–
5	BR	–
7	G	–
8	W	–
9	W	–
10	Y	–
11	P	–
12	SB	–
13	L	–
14	G	–
15	R	–
16	LG	–
18	Y	–
19	BG	–
20	B	–
21	SB	–
22	W	–
23	L	–
24	G	–
25	LG	–
27	GR	–
28	V	–
29	P	–
30	R	–
31	BR	–
32	Y	–
33	G	–
34	BG	–
37	SHIELD	–
38	L	–
39	P	–
40	R	–
41	W	–
42	LG	–
43	G	–
45	BG	–
46	SHIELD	–
47	W	–
48	BR	–
49	G	–
50	B	–
51	SB	–
52	R	–

Connector No.	E76
Connector Name	AMBIENT SENSOR
Connector Type	RS02FB

Terminal No.	Color Of Wire	Signal Name [Specification]
1	G	–
2	P	–

Connector No.	E77
Connector Name	REFRIGERANT PRESSURE SENSOR
Connector Type	RK03FB

Terminal No.	Color Of Wire	Signal Name [Specification]
1	V	–
2	L	–
3	BG	–

JRIWC2521GB

AIR CONDITIONER CONTROL

Connector No.	E106
Connector Name	WIRE TO WIRE
Connector Type	TH80FW-CS16-TM4

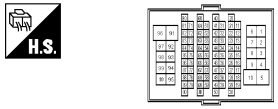

Terminal No.	Color Of Wire	Signal Name [Specification]
1	R	–
2	W	–
3	B	–
4	GR	–
5	GR	–
8	Y	–
9	BR	–
10	BG	–
11	SB	–
12	BG	–
13	L	–
14	R	–
15	P	–
16	V	–
17	SB	–
18	V	–
20	BG	–
21	L	–
22	V	–
23	G	–
24	P	–
25	Y	–
26	V	–
27	W	–
28	G	–
31	BG	–
32	W	–
33	B	–
34	R	–
35	G	–
36	SHIELD	–
37	V	–
38	BR	–
39	BG	–
41	W	–
42	G	–
43	BR	–
45	W	–
49	L	–
50	P	–
51	L	–
54	BG	–
57	BR	–
59	W	–
60	LG	–
61	G	–
62	SB	–
63	W	–
64	B	–
65	G	–
66	R	–
67	SHIELD	–
68	Y	–
69	LG	–
70	W	–
71	R	–
72	Y	–
73	B	–
74	BR	– [With ICC]
74	L	– [Without ICC]
75	G	– [With ICC]
75	W	– [Without ICC]
76	W	– [With ICC]
76	Y	– [Without ICC]
77	P	– [Without ICC]
77	R	– [With ICC]
78	BR	– [Without ICC]
78	L	– [With ICC]
79	L	– [Without ICC]
79	Y	– [With ICC]
80	SB	–
81	R	–
82	SB	–
83	BG	–
84	G	–
85	L	–
86	P	–
87	V	–
89	GR	–
90	SHIELD	–
91	W	–
92	Y	–
93	V	–
94	LG	–
95	BG	–
96	P	–
97	R	–
98	SHIELD	–
99	L	–
100	P	–

Connector No.	E120
Connector Name	EXHAUST GAS / OUTSIDE ODOR DETECTING SENSOR
Connector Type	RH03FB

Terminal No.	Color Of Wire	Signal Name [Specification]
1	W	POWER
2	P	GROUND
3	G	GAS SENSOR SIGNAL

Connector No.	F40
Connector Name	WIRE TO WIRE
Connector Type	SAA36FB-RS8-SHZ8

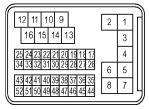

Terminal No.	Color Of Wire	Signal Name [Specification]
1	L/Y	–
2	SHIELD	–
3	L/B	–
4	SHIELD	–
5	BR	–
7	G	–
8	W	–
9	W	–
10	G	–
11	R	–
12	P	–
13	L	–
14	LG	–
15	BR	–
16	Y	–
18	LG	–
19	P	–
20	O	–
21	Y	–
22	G	–
23	Y	–
24	LG	–
25	V	–
27	GR	–
28	BR	–
29	L	–
30	R	–
31	P	–
32	W	–
33	SB	–
34	O	–
37	SHIELD	–
38	W	–
39	Y	–
40	G	–
41	B	–
42	GR	–
43	R	–
45	O	–
46	SHIELD	–
47	W/L	–
48	LG	–
49	O/L	–
50	L/Y	–
51	W	–
52	L/G	–

JRIWC2522GB

AIR CONDITIONER CONTROL

Connector No.	F43
Connector Name	COMPRESSOR
Connector Type	RS01FB

Terminal No.	Color Of Wire	Signal Name [Specification]
1	L	–

Connector No.	F44
Connector Name	COMPRESSOR
Connector Type	RK02FGY

Terminal No.	Color Of Wire	Signal Name [Specification]
2	Y	–
3	BG	– [Without ICC]
3	O	– [With ICC]

Connector No.	F103
Connector Name	WIRE TO WIRE
Connector Type	TK36FW-NS10

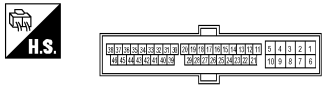

Terminal No.	Color Of Wire	Signal Name [Specification]
2	G	–
3	W	–
4	R	–
5	B	–
9	Y	–
10	GR	–
19	BG	– [Without ICC]
19	O	– [With ICC]
20	Y	–
28	B	–
29	LG	–
31	R	–
33	GR	–
34	B	–
35	L	–
36	P	–
37	Y	–
38	G	–
43	LG	–
44	O	–
45	Y	–
46	V	–

Connector No.	M1
Connector Name	FUSE BLOCK (J/B)
Connector Type	NS06FW-M2

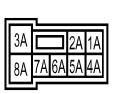

Terminal No.	Color Of Wire	Signal Name [Specification]
1A	Y	–
2A	G	–
3A	L	–
4A	R	–
5A	V	–
6A	Y	–
7A	R	–
8A	L	–

Connector No.	M2
Connector Name	FUSE BLOCK (J/B)
Connector Type	NS10FW-CS

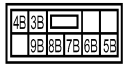

Terminal No.	Color Of Wire	Signal Name [Specification]
3B	P	–
4B	G	–
5B	BG	–
6B	Y	–
7B	P	–
8B	R	–
9B	SB	–

Connector No.	M3
Connector Name	FUSE BLOCK (J/B)
Connector Type	NS12FW-CS

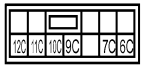

Terminal No.	Color Of Wire	Signal Name [Specification]
10C	L	–
11C	R	–
12C	BG	–
6C	R	–
7C	B	–
9C	BG	–

Connector No.	M6
Connector Name	WIRE TO WIRE
Connector Type	TH80MW-CS16-TM4

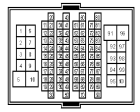

Terminal No.	Color Of Wire	Signal Name [Specification]
1	W	–
2	R	–
3	B	–
4	SHIELD	–
5	G	–
8	Y	–
9	BR	–
10	R	–
11	BR	–
12	BG	–
13	L	–
14	R	–
15	P	–
16	V	–

JRIWC2523GB

AIR CONDITIONER CONTROL

17	SB	–
18	V	–
20	BG	–
21	L	–
22	W	–
23	P	–
24	BR	–
25	Y	–
26	V	–
27	G	–
28	G	–
31	L	–
32	G	–
33	B	–
34	W	–
35	R	–
36	SHIELD	–
37	V	–
38	BG	–
39	BR	–
41	W	–
42	BG	–
43	BG	–
45	W	–
49	L	–
50	P	–
51	BR	–
54	Y	–
57	G	–
59	W	–
60	L	–
61	G	–
62	SB	–
63	G	–
64	B	–
65	W	–
66	R	–
67	SHIELD	–
68	Y	–
69	GR	–
70	LG	–
71	LG	–
72	Y	–
73	SB	–
74	BR	– [With ICC]
74	L	– [Without ICC]
75	G	–
76	GR	– [Without ICC]
76	W	– [With ICC]
77	P	– [Without ICC]
77	R	– [With ICC]
78	L	– [With ICC]
78	R	– [Without ICC]
79	W	– [Without ICC]
79	Y	– [With ICC]
80	SB	–
81	SB	–
82	SB	–
83	V	–
84	G	–
85	L	–
86	P	–
87	W	–
89	GR	–
90	SHIELD	–
91	W	–
92	Y	–
93	BR	–
94	P	–
95	GR	–
96	W	–
97	L	–
98	SHIELD	–
99	V	–
100	SB	–

Connector No.	M46
Connector Name	SUNLOAD SENSOR
Connector Type	K02FB

Terminal No.	Color Of Wire	Signal Name [Specification]
1	BG	–
2	SB	–

Connector No.	M61
Connector Name	IN-VEHICLE SENSOR
Connector Type	A02FW

Terminal No.	Color Of Wire	Signal Name [Specification]
1	LG	–
2	L	–

Connector No.	M66
Connector Name	UNIFIED METER AND A/C AMP.
Connector Type	TH40FW-NH

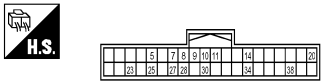

Terminal No.	Color Of Wire	Signal Name [Specification]
5	L	MANUAL MODE SHIFT UP SIGNAL
7	GR	COMMUNICATION SIGNAL (AMP.->METER)
8	L	VEHICLE SPEED SIGNAL (2-PULSE)
9	SB	SEAT BELT BUCKLE SWITCH SIGNAL (DRIVER SIDE)
10	W	MANUAL MODE SIGNAL
11	G	NON-MANUAL MODE SIGNAL
14	BR	COMMUNICATION SIGNAL (LCD->AMP.)
20	L	ION ON/OFF SIGNAL
23	Y	AT SNOW SWITCH SIGNAL
25	V	MANUAL MODE SHIFT DOWN SIGNAL
27	LG	COMMUNICATION SIGNAL (METER->AMP.)
28	R	VEHICLE SPEED SIGNAL (8-PULSE)
30	V	PARKING BRAKE SWITCH SIGNAL
34	Y	COMMUNICATION SIGNAL (AMP->LCD)
38	P	BLOWER MOTOR CONTROL SIGNAL

Connector No.	M67
Connector Name	UNIFIED METER AND A/C AMP.
Connector Type	TH32FW-NH

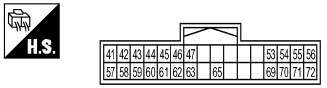

Terminal No.	Color Of Wire	Signal Name [Specification]
41	V	ACC POWER SUPPLY
42	Y	FUEL LEVEL SENSOR SIGNAL
43	R	INTAKE SENSOR SIGNAL
44	LG	IN-VEHICLE SENSOR SIGNAL
45	P	AMBIENT SENSOR SIGNAL
46	BG	SUNLOAD SENSOR SIGNAL
47	G	EXHAUST GAS / OUTSIDE ODOR DETECTING SENSOR SIGNAL
53	G	IGNITION POWER SUPPLY
54	Y	BATTERY POWER SUPPLY
55	B	GROUND
56	L	CAN-H
57	W	BRAKE FLUID LEVEL SWITCH SIGNAL
58	BR	FUEL LEVEL SENSOR GROUND
59	GR	INTAKE SENSOR GROUND
60	L	IN-VEHICLE SENSOR GROUND
61	BR	AMBIENT SENSOR GROUND
62	SB	SUNLOAD SENSOR GROUND
63	R	–
65	BG	ECV SIGNAL
69	L	A/C LAN SIGNAL
70	R	EACH DOOR MOTOR POWER SUPPLY
71	B	GROUND
72	P	CAN-L

JRIWC2524GB

AIR CONDITIONER CONTROL

Connector No.	M72
Connector Name	MULTIFUNCTION SWITCH
Connector Type	TH16FW-NH

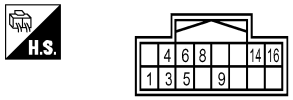

Terminal No.	Color Of Wire	Signal Name [Specification]
1	B	GROUND
3	V	ACC
4	R	ILL
5	Y	ILL CONT
6	SB	AV COMM (H)
8	LG	AV COMM (L)
9	B	SW GND
14	Y	DISK EJECT SIGNAL
16	G	HAZARD ON

Connector No.	M77
Connector Name	INTAKE SENSOR
Connector Type	TK04FW

Terminal No.	Color Of Wire	Signal Name [Specification]
1	R	–
2	GR	–

Connector No.	M91
Connector Name	WIRE TO WIRE
Connector Type	A03MW-P

Terminal No.	Color Of Wire	Signal Name [Specification]
1	R	–
2	B	–
3	L	–

Connector No.	M107
Connector Name	ECM
Connector Type	RH24FGY-RZ8-R-LH-Z

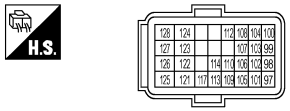

Terminal No.	Color Of Wire	Signal Name [Specification]
97	R	ACCELERATOR PEDAL POSITION SENSOR 1
98	P	ACCELERATOR PEDAL POSITION SENSOR 2 [Without ICC]
98	Y	ACCELERATOR PEDAL POSITION SENSOR 2 [With ICC]
99	G	SENSOR POWER SUPPLY [With ICC]
99	L	SENSOR POWER SUPPLY [Without ICC]
100	W	SENSOR GROUND
101	SB	ASCD/ICC STEERING SWITCH
102	LG	EVAP CONTROL SYSTEM PRESS SENSOR
103	G	SENSOR POWER SUPPLY [Without ICC]
103	L	SENSOR POWER SUPPLY [With ICC]
104	BR	SENSOR GROUND [With ICC]
104	GR	SENSOR GROUND [Without ICC]
105	L	REFRIGERANT PRESS SENSOR
106	W	FUEL TANK TEMPERATURE SENSOR
107	BG	SENSOR POWER SUPPLY
108	Y	SENSOR GROUND
109	G	PNP SIGNAL
110	R	ENGINE SPEED OUTPUT SIGNAL
112	V	SENSOR GROUND
113	P	CAN COMMUNICATION LINE
114	L	CAN COMMUNICATION LINE
117	V	DATA LINK CONNECTOR
121	LG	EVAP CANISTER VENT CONTROL VALVE
122	P	STOP LAMP SWITCH
123	B	ECM GROUND
124	B	ECM GROUND
125	R	POWER SUPPLY FOR ECM
126	BR	ASCD/ICC BRAKE SWITCH
127	B	ECM GROUND
128	B	ECM GROUND

Connector No.	M109
Connector Name	BLOWER MOTOR
Connector Type	NS03FW-M3

Terminal No.	Color Of Wire	Signal Name [Specification]
1	L	–
2	P	–
3	B	–

Connector No.	M116
Connector Name	WIRE TO WIRE
Connector Type	TK36MW-NS10

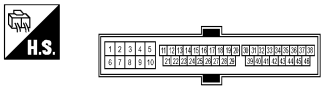

Terminal No.	Color Of Wire	Signal Name [Specification]
2	P	–
3	L	–
4	R	–
5	B	–
9	R	–
10	R	–
19	BG	–
20	Y	–
28	B	–
29	LG	–
31	W	–
33	B	–
34	B	–
35	L	–
36	P	–
37	Y	–
38	G	–
43	P	–
44	L	–
45	BR	–
46	BG	–

Connector No.	M125
Connector Name	WIRE TO WIRE
Connector Type	M03FW-LC

Terminal No.	Color Of Wire	Signal Name [Specification]
1	W	–
2	Y	–
3	R	–

JRIWC2525GB

AIR CONDITIONER CONTROL

Connector No.	M126
Connector Name	WIRE TO WIRE
Connector Type	M03MW-LC

Terminal No.	Color Of Wire	Signal Name [Specification]
1	W	–
2	Y	–
3	R	–

Connector No.	M151
Connector Name	AV CONTROL UNIT
Connector Type	TH32FW-NH

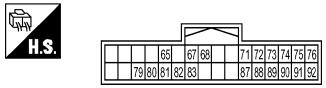

Terminal No.	Color Of Wire	Signal Name [Specification]
65	V	PARKING BRAKE SIGNAL
67	G	COMPOSITE IMAGE SIGNAL GND
68	R	COMPOSITE IMAGE SIGNAL
71	SHIELD	SHIELD
72	R	MICROPHONE VCC
73	R	CAMERA POWER SUPPLY
74	P	CAN-L
75	LG	AV COMM (L)
76	LG	AV COMM (L)
79	R	ILLUMINATION
80	G	IGNITION SIGNAL
81	BG	REVERSE SIGNAL
82	R	VEHICLE SPEED SIGNAL (8-PULSE)
83	SHIELD	SHIELD
87	G	MICROPHONE SIGNAL
88	SHIELD	SHIELD
89	G	COMM (DISP->CONT)
90	L	CAN-H
91	SB	AV COMM (H)
92	SB	AV COMM (H)

Connector No.	M160
Connector Name	IONIZER
Connector Type	TH04FW-NH

Terminal No.	Color Of Wire	Signal Name [Specification]
1	Y	IGN
2	R	–
3	B	GROUND
4	L	ION ON/OFF

Connector No.	M215
Connector Name	AV CONTROL UNIT
Connector Type	TH24FW-NH

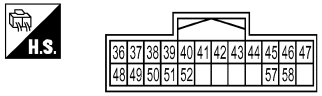

Terminal No.	Color Of Wire	Signal Name [Specification]
36	BG	SIGNAL VCC
37	LG	SIGNAL GND
38	R	HP
39	BR	COMM (DISP->CONT)
40	B	RGB AREA (YS) SIGNAL
41	SHIELD	RGB_SYNC_GND
42	W	RGB SYNC
43	G	RGB (R:RED) SIGNAL
44	L	RGB (G:GREEN) SIGNAL
45	P	RGB (B:BLUE) SIGNAL
46	V	COMPOSITE IMAGE SIGNAL GND
47	SB	COMPOSITE IMAGE SIGNAL
48	Y	INVERTER VCC
49	BR	INVERTER GND
50	G	VP
51	Y	COMM (CONT->DISP)
52	SHIELD	SHIELD
57	SHIELD	SHIELD
58	SHIELD	COMP_OUT_SHIELD

Connector No.	M217
Connector Name	AV CONTROL UNIT
Connector Type	TH32FW-NH

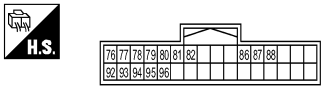

Terminal No.	Color Of Wire	Signal Name [Specification]
76	LG	AV COMM (L)
77	SB	AV COMM (H)
78	LG	AV COMM (L)
79	SB	AV COMM (H)
80	P	CAN-L
81	L	CAN-H
82	B	SW GND
86	SHIELD	SHIELD
87	L	TEL VOICE SIGNAL (+)
88	P	TEL VOICE SIGNAL (-)
92	R	VEHICLE SPEED SIGNAL (8-PULSE)
93	V	PARKING BRAKE SIGNAL
94	BG	REVERSE SIGNAL
95	G	IGNITION SIGNAL
96	Y	DISK EJECT SIGNAL

Connector No.	M251
Connector Name	WIRE TO WIRE
Connector Type	A03FW

Terminal No.	Color Of Wire	Signal Name [Specification]
1	L	–
2	B	–
3	L	–

Connector No.	M252
Connector Name	AIR MIX DOOR MOTOR LH
Connector Type	A03FW

Terminal No.	Color Of Wire	Signal Name [Specification]
1	L	–
2	B	–
3	L	–

JRIWC2526GB

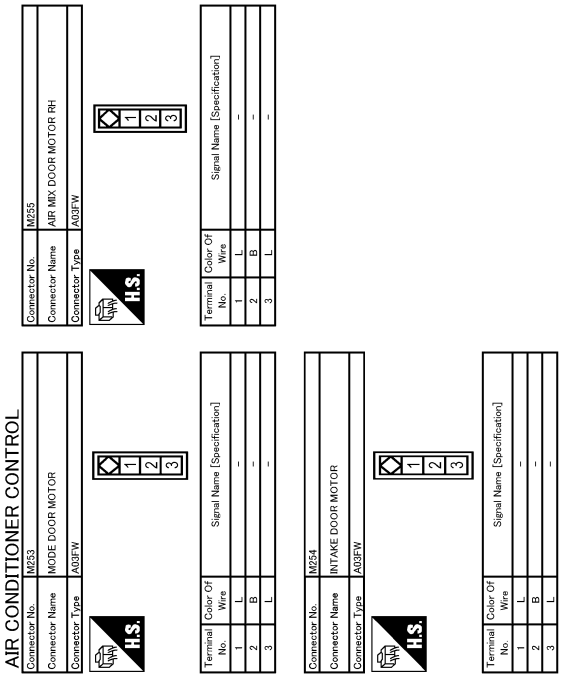

JRIWC2527GB

Fail-Safe

INFOID:0000000010594608

FAIL-SAFE FUNCTION

- If a communication error exists between the unified meter and A/C amp., and the AV control unit and preset switch for 30 seconds or longer, air conditioner is controlled under the following conditions:

Compressor	**: ON**
Air outlet	**: AUTO**
Air inlet	**: FRE (Fresh)**
Blower fan speed	**: AUTO**
Set temperature	**: Setting before communication error occurs**
Display	**: OFF**

ECM

Reference Value

INFOID:0000000011016791

VALUES ON THE DIAGNOSIS TOOL

NOTE:

- The following table includes information (items) inapplicable to this vehicle. For information (items) applicable to this vehicle, refer to CONSULT display items.
- Numerical values in the following table are reference values.
- These values are input/output values that ECM receives/transmits and may differ from actual operations.
  Example:
  The ignition timing shown by the timing light may differ from the ignition timing displayed on the data monitor. This occurs because the timing light shows a value calculated by ECM according to signals received from the cam shaft position sensor and other sensors related to ignition timing.

For outlines of following items, refer to EC-146, "CONSULT Function".

CONSULT MONITOR ITEM

Monitor Item	Condition		Values/Status
ENG SPEED	• Run engine and compare CONSULT value with the tachometer indication.		Almost the same speed as the tachometer indication
MAS A/F SE-B1	See EC-156, "Description".		
MAS A/F SE-B2	See EC-156, "Description".		
B/FUEL SCHDL	See EC-156, "Description".		
A/F ALPHA-B1	See EC-156, "Description".		
A/F ALPHA-B2	See EC-156, "Description".		
COOLAN TEMP/S	• Ignition switch: ON		Indicates engine coolant temperature
A/F SEN1 (B1)	• Engine: After warming up	Maintaining engine speed at 2,000 rpm	Fluctuates around 2.2 V
A/F SEN1 (B2)	• Engine: After warming up	Maintaining engine speed at 2,000 rpm	Fluctuates around 2.2 V
HO2S2 (B1)	• Revving engine from idle up to 3,000 rpm quickly after the following conditions are met. - Engine: After warming up - After keeping engine speed between 3,500 and 4,000 rpm for 1 minute and at idle for 1 minute under no load		0 - 0.3 V ←→ Approx. 0.6 - 1.0 V
HO2S2 (B2)	• Revving engine from idle up to 3,000 rpm quickly after the following conditions are met. - Engine: After warming up - After keeping engine speed between 3,500 and 4,000 rpm for 1 minute and at idle for 1 minute under no load		0 - 0.3 V ←→ Approx. 0.6 - 1.0 V
HO2S2 MNTR (B1)	• Revving engine from idle up to 3,000 rpm quickly after the following conditions are met. - Engine: After warming up - After keeping engine speed between 3,500 and 4,000 rpm for 1 minute and at idle for 1 minute under no load		LEAN ←→ RICH
HO2S2 MNTR (B2)	• Revving engine from idle up to 3,000 rpm quickly after the following conditions are met. - Engine: After warming up - After keeping engine speed between 3,500 and 4,000 rpm for 1 minute and at idle for 1 minute under no load		LEAN ←→ RICH
VHCL SPEED SE	• Turn drive wheels and compare CONSULT value with the speedometer indication.		Almost the same speed as speedometer indication
BATTERY VOLT	• Ignition switch: ON (Engine stopped)		11 - 14 V
ACCEL SEN 1	• Ignition switch: ON (Engine stopped)	Accelerator pedal: Fully released	0.45 - 1.00 V
		Accelerator pedal: Fully depressed	4.4 - 4.8 V
ACCEL SEN 2*1	• Ignition switch: ON (Engine stopped)	Accelerator pedal: Fully released	0.45 - 1.00 V
		Accelerator pedal: Fully depressed	4.3 - 4.8 V

Monitor Item	Condition		Values/Status
TP SEN 1-B1	• Ignition switch: ON (Engine stopped) • Selector lever: D	Accelerator pedal: Fully released	More than 0.36 V
		Accelerator pedal: Fully depressed	Less than 4.75 V
TP SEN 2-B1*1	• Ignition switch: ON (Engine stopped) • Selector lever: D	Accelerator pedal: Fully released	More than 0.36 V
		Accelerator pedal: Fully depressed	Less than 4.75 V
FUEL T/TMP SE	• Ignition switch: ON		Indicates fuel tank temperature
INT/A TEMP SE	• Ignition switch: ON		Indicates intake air temperature
EVAP SYS PRES	• Ignition switch: ON		Approx. 1.8 - 4.8 V
FUEL LEVEL SE	• Ignition switch: ON		Depending on fuel level of fuel tank
START SIGNAL	• Ignition switch: ON → START → ON		OFF → ON → OFF
CLSD THL POS	• Ignition switch: ON (Engine stopped)	Accelerator pedal: Fully released	ON
		Accelerator pedal: Slightly depressed	OFF
AIR COND SIG	• Engine: After warming up, idle the engine	Air conditioner switch: OFF	OFF
		Air conditioner switch: ON (Compressor operates.)	ON
P/N POSI SW	• Ignition switch: ON	Selector lever: P or N	ON
		Selector lever: Except above	OFF
PW/ST SIGNAL	• Engine: After warming up, idle the engine	Steering wheel: Not being turned	OFF
		Steering wheel: Being turned	ON
LOAD SIGNAL	• Ignition switch: ON	Rear window defogger switch: ON and/or Lighting switch: 2nd position	ON
		Rear window defogger switch and lighting switch: OFF	OFF
IGNITION SW	• Ignition switch: ON → OFF → ON		ON → OFF → ON
HEATER FAN SW	• Engine: After warming up, idle the engine	Heater fan switch: ON	ON
		Heater fan switch: OFF	OFF
BRAKE SW	• Ignition switch: ON	Brake pedal: Fully released	OFF
		Brake pedal: Slightly depressed	ON
INJ PULSE-B1	• Engine: After warming up • Selector lever: P or N • Air conditioner switch: OFF • No load	Idle	2.0 - 3.0 msec
		2,000 rpm	1.9 - 2.9 msec
INJ PULSE-B2	• Engine: After warming up • Selector lever: P or N • Air conditioner switch: OFF • No load	Idle	2.0 - 3.0 msec
		2,000 rpm	1.9 - 2.9 msec
IGN TIMING	• Engine: After warming up • Selector lever: P or N • Air conditioner switch: OFF • No load	Idle	7° BTDC
		2,000 rpm	25° - 45° BTDC
CAL/LD VALUE	• Engine: After warming up • Selector lever: P or N • Air conditioner switch: OFF • No load	Idle	5% - 35%
		2,500 rpm	5% - 35%
MASS AIRFLOW	• Engine: After warming up • Selector lever: P or N • Air conditioner switch: OFF • No load	Idle	2.0 - 6.0 g/s
		2,500 rpm	7.0 - 20.0 g/s

Monitor Item	Condition		Values/Status
PURG VOL C/V	• Engine: After warming up • Selector lever: P or N • Air conditioner switch: OFF • No load	Idle (Accelerator pedal: Not depressed even slightly, after engine starting.)	0%
		2,000 rpm	—
INT/V TIM (B1)	• Engine: After warming up • Selector lever: P or N • Air conditioner switch: OFF • No load	Idle	– 5 - 5°CA
		2,000 rpm	Approx. 0 - 30°CA
INT/V TIM (B2)	• Engine: After warming up • Selector lever: P or N • Air conditioner switch: OFF • No load	Idle	– 5 - 5°CA
		2,000 rpm	Approx. 0 - 30°CA
INT/V SOL (B1)	• Engine: After warming up • Selector lever: P or N • Air conditioner switch: OFF • No load	Idle	0 - 2%
		2,000 rpm	Approx. 0 - 50%
INT/V SOL (B2)	• Engine: After warming up • Selector lever: P or N • Air conditioner switch: OFF • No load	Idle	0 - 2%
		2,000 rpm	Approx. 0 - 50%
TP SEN 1-B2	• Ignition switch: ON (Engine stopped) • Selector lever: D	Accelerator pedal: Fully released	More than 0.36 V
		Accelerator pedal: Fully depressed	Less than 4.75 V
TP SEN 2-B2*1	• Ignition switch: ON (Engine stopped) • Selector lever: D	Accelerator pedal: Fully released	More than 0.36 V
		Accelerator pedal: Fully depressed	Less than 4.75 V
AIR COND RLY	• Engine: After warming up, idle the engine	Air conditioner switch: OFF	OFF
		Air conditioner switch: ON (Compressor operates)	ON
FUEL PUMP RLY	• For 1 second after turning ignition switch: ON • Engine running or cranking		ON
	• Except above		OFF
VENT CONT/V	• Ignition switch: ON		OFF
THRTL RELAY	• Ignition switch: ON		ON
HO2S2 HTR (B1)	• Engine speed: Below 3,600 rpm after the following conditions are met. - Engine: After warming up - Keeping the engine speed between 3,500 and 4,000 rpm for 1 minute and at idle for 1 minute under no load		ON
	• Engine speed: Above 3,600 rpm		OFF
HO2S2 HTR (B2)	• Engine speed: Below 3,600 rpm after the following conditions are met. - Engine: After warming up - Keeping the engine speed between 3,500 and 4,000 rpm for 1 minute and at idle for 1 minute under no load		ON
	• Engine speed: Above 3,600 rpm		OFF
I/P PULLY SPD	• Vehicle speed: More than 20 km/h (12 MPH)		Almost the same speed as the tachometer indication
VEHICLE SPEED	• Turn drive wheels and compare CONSULT value with the speedometer indication.		Almost the same speed as the speedometer indication
IDL A/V LEARN	• Engine: Running	Idle air volume learning has not been performed yet.	YET
		Idle air volume learning has already been performed successfully.	CMPLT
SNOW MODE SW	• Ignition switch: ON	Snow mode switch: Pressed	ON
		Snow mode switch: Released	OFF

Monitor Item	Condition		Values/Status
ENG OIL TEMP	• Engine: After warming up		More than 70°C (158°F)
TRVL AFTER MIL	• Ignition switch: ON	Vehicle has traveled after MIL has illuminated.	0 - 65,535 km (0 - 40,723 miles)
A/F S1 HTR (B1)	• Engine: After warming up, idle the engine (More than 140 seconds after starting engine)		4 - 100%
A/F S1 HTR (B2)	• Engine: After warming up, idle the engine (More than 140 seconds after starting engine)		4 - 100%
AC PRESS SEN	• Engine: Idle • Both A/C switch and blower fan switch: ON (Compressor operates)		1.0 - 4.0 V
VHCL SPEED SE	• Turn drive wheels and compare CONSULT value with the speedometer indication.		Almost the same speed as the speedometer indication
SET VHCL SPD	• Engine: Running	ASCD: Operating	The preset vehicle speed is displayed
MAIN SW	• Ignition switch: ON	MAIN switch: Pressed	ON
		MAIN switch: Released	OFF
CANCEL SW	• Ignition switch: ON	CANCEL switch: Pressed	ON
		CANCEL switch: Released	OFF
RESUME/ACC SW	• Ignition switch: ON	RESUME/ACCELERATE switch: Pressed	ON
		RESUME/ACCELERATE switch: Released	OFF
SET SW	• Ignition switch: ON	SET/COAST switch: Pressed	ON
		SET/COAST switch: Released	OFF
BRAKE SW1 (ICC/ASCD brake switch)	• Ignition switch: ON	Brake pedal: Fully released	ON
		Brake pedal: Slightly depressed	OFF
BRAKE SW2 (Stop lamp switch)	• Ignition switch: ON	Brake pedal: Fully released	OFF
		Brake pedal: Slightly depressed	ON
DIST SW	• Ignition switch: ON	DISTANCE switch: Pressed	ON
		DISTANCE switch: Released	OFF
CRUISE LAMP	• Ignition switch: ON	MAIN switch: Pressed at the 1st time → at the 2nd time	ON → OFF
BAT CUR SEN	• Engine speed: Idle • Battery: Fully charged*2 • Selector lever: P or N • Air conditioner switch: OFF • No load		Approx. 2,600 - 3,500 mV
ALT DUTY	• Engine: Idle		0 - 80%
ATOM PRES SEN	• This item is displayed but is not applicable to this model.		
BRAKE BST PRES SE	• This item is displayed but is not applicable to this model.		
VVEL POSITION SEN-B1	• Engine: After warming up • Selector lever: P or N • Air conditioner switch: OFF • No load	Idle	Approx. 0.25 - 1.40 V
		When revving engine up to 2,000 rpm quickly	Approx. 0.25 - 4.75 V
VVEL POSITION SEN-B2	• Engine: After warming up • Selector lever: P or N • Air conditioner switch: OFF • No load	Idle	Approx. 0.25 - 1.40 V
		When revving engine up to 2,000 rpm quickly	Approx. 0.25 - 4.75 V

Monitor Item	Condition		Values/Status
VVEL TIM-B1	• Engine: After warming up • Selector lever: P or N • Air conditioner switch: OFF • No load	Idle	Approx. 0 - 20 deg
		When revving engine up to 2,000 rpm quickly	Approx. 0 - 90 deg
VVEL TIM-B2	• Engine: After warming up • Selector lever: P or N • Air conditioner switch: OFF • No load	Idle	Approx. 0 - 20 deg
		When revving engine up to 2,000 rpm quickly	Approx. 0 - 90 deg
VVEL LEARN	• Ignition switch: OFF → ON (After warming up)	VVEL learning has not been performed yet.	YET
		VVEL learning has already been performed successfully.	DONE
VVEL SEN LEARN-B1	• VVEL learning has already been performed successfully		Approx. 0.30 - 0.80 V
VVEL SEN LEARN-B2	• VVEL learning has already been performed successfully		Approx. 0.30 - 0.80 V
A/F ADJ-B1	• Engine: Running		–0.330 - 0.330
A/F ADJ-B2	• Engine: Running		–0.330 - 0.330
FAN DUTY	• Engine: Running		0 - 100%
ALT DUTY SIG	• Power generation voltage variable control: Operating		ON
	• Power generation voltage variable control: Not operating		OFF
EVAP LEAK DIAG	• Ignition switch: ON		Depending on condition of EVAP leak diagnosis
EVAP DIAG READY	• Ignition switch: ON (READY)		Depending on ready condition of EVAP leak diagnosis
THRTL STK CNT B1	• This item is displayed but is not applicable to this model.		
HO2 S2 DIAG1 (B1)	• DTC P0139 self-diagnosis (delayed response) has not been performed yet.		INCMP
	• DTC P0139 self-diagnosis (delayed response) has already been performed successfully.		CMPLT
HO2 S2 DIAG1 (B2)	• DTC P0159 self-diagnosis (delayed response) has not been performed yet.		INCMP
	• DTC P0159 self-diagnosis (delayed response) has already been performed successfully.		CMPLT
HO2 S2 DIAG2 (B1)	• DTC P0139 self-diagnosis (slow response) has not been performed yet.		INCMP
	• DTC P0139 self-diagnosis (slow response) has already been performed successfully.		CMPLT
HO2 S2 DIAG2 (B2)	• DTC P0159 self-diagnosis (slow response) has not been performed yet.		INCMP
	• DTC P0159 self-diagnosis (slow response) has already been performed successfully.		CMPLT
A/F SEN1 DIAG1 (B1)	DTC P015A and P015B self-diagnosis incomplete.		INCMP
	DTC P015A and P015B self-diagnosis is complete.		CMPLT
A/F SEN1 DIAG1 (B2)	DTC P015C and P015D self-diagnosis incomplete.		INCMP
	DTC P015C and P015D self-diagnosis is complete.		CMPLT
A/F SEN1 DIAG2 (B1)	DTC P014C and P014D self-diagnosis incomplete.		INCMP
	DTC P014C and P014D self-diagnosis is complete.		CMPLT
A/F SEN1 DIAG2 (B2)	DTC P014E and P014F self-diagnosis incomplete.		INCMP
	DTC P014E and P014F self-diagnosis is complete.		CMPLT
A/F SEN1 DIAG3 (B1)	The vehicle condition is not within the diagnosis range of DTC P014C, P014D, P015A or P015B.		ABSNT
	The vehicle condition is within the diagnosis range of DTC P014C, P014D, P015A or P015B.		PRSNT

Monitor Item	Condition	Values/Status
A/F SEN1 DIAG3 (B2)	The vehicle condition is not within the diagnosis range of DTC P014E, P014F, P015C or P015D.	ABSNT
	The vehicle condition is within the diagnosis range of DTC P014E, P014F, P015C or P015D.	PRSNT

*1: Accelerator pedal position sensor 2 signal and throttle position sensor 2 signal are converted by ECM internally. Thus, they differ from ECM terminals voltage signal.
*2: Before measuring the terminal voltage, confirm that the battery is fully charged. Refer to PG-3, "How to Handle Battery".

TERMINAL LAYOUT

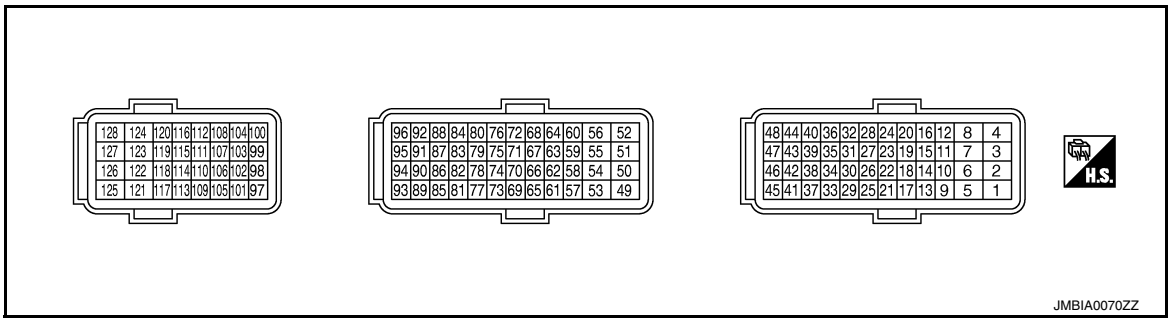

PHYSICAL VALUES

NOTE:
- ECM is located behind the instrument assist lower panel. For this inspection, remove passenger side instrument lower panel.
- Specification data are reference values and are measured between each terminal and ground.
- Pulse signal is measured by CONSULT.

Terminal No. (Wire color)		Description		Condition	Value (Approx.)
+	—	Signal name	Input/ Output		
1 (W)	128 (B)	A/F sensor 1 heater (bank 1)	Output	[Engine is running] • Warm-up condition • Idle speed (More than 140 seconds after starting engine)	2.9 - 8.8 V★ 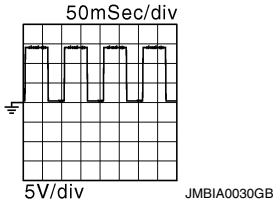
2 (G)	128 (B)	Throttle control motor (Open) (bank 1)	Output	[Ignition switch: ON] • Engine stopped • Selector lever: D • Accelerator pedal: Fully depressed	0 - 14 V★ 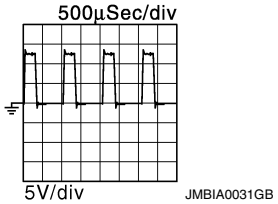
				[Ignition switch: ON] • Engine stopped • Selector lever: D • Accelerator pedal: Fully released	0 - 14 V★ 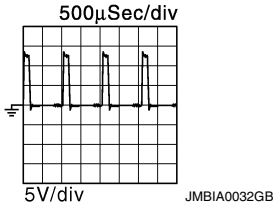

Terminal No. (Wire color)		Description		Condition	Value (Approx.)
+	–	Signal name	Input/ Output		
3 (R)	128 (B)	Throttle control motor power supply (bank 1)	Input	[Ignition switch: ON]	BATTERY VOLTAGE (11 - 14 V)
4 (BR)	128 (B)	Throttle control motor (Close) (bank 1)	Output	[Ignition switch: ON] • Engine stopped • Selector lever: D • Accelerator pedal: In the middle of releasing operation	0 - 14 V★ 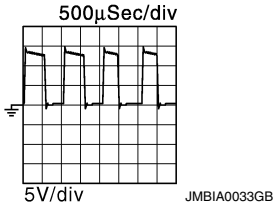
5 (W)	128 (B)	A/F sensor 1 heater (bank 2)	Output	[Engine is running] • Warm-up condition • Idle speed (More than 140 seconds after starting engine)	2.9 - 8.8 V★ 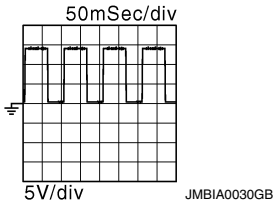
8 (B)	—	ECM ground	—	—	—
11 (GR) 12 (L) 15 (V) 16 (G) 19 (SB) 20 (Y)	128 (B)	Ignition signal No. 4 Ignition signal No. 3 Ignition signal No. 5 Ignition signal No. 2 Ignition signal No. 6 Ignition signal No. 1	Output	[Engine is running] • Warm-up condition • Idle speed **NOTE:** The pulse cycle changes depending on rpm at idle	0 - 0.2 V★ 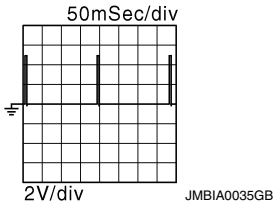
				[Engine is running] • Warm-up condition • Engine speed: 2,000 rpm	0.1 - 0.4 V★ 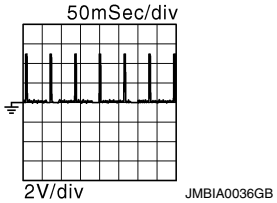
17 (P)	128 (B)	Heated oxygen sensor 2 heater (bank 1)	Output	[Engine is running] • Engine speed: Below 3,600 rpm after the following conditions are met - Engine: after warming up - Keeping the engine speed between 3,500 and 4,000 rpm for 1 minute and at idle for 1 minute under no load	10 V★ 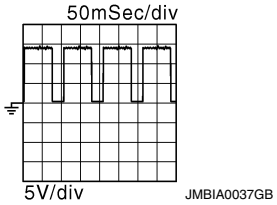
				[Ignition switch: ON] • Engine stopped [Engine is running] • Engine speed: Above 3,600 rpm	BATTERY VOLTAGE (11 - 14 V)

Terminal No. (Wire color)		Description		Condition	Value (Approx.)
+	–	Signal name	Input/ Output		
18 (W)	128 (B)	Intake valve timing control solenoid valve (bank 1)	Output	[Engine is running] • Warm-up condition • Idle speed	BATTERY VOLTAGE (11 - 14 V)
				[Engine is running] • Warm-up condition • Engine speed: 2,000rpm	7 - 12 V★ 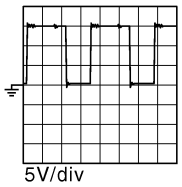
21 (GR)	128 (B)	EVAP canister purge volume control solenoid valve	Output	[Engine is running] • Idle speed • Accelerator pedal: Not depressed even slightly, after engine starting	BATTERY VOLTAGE (11 - 14 V)★ 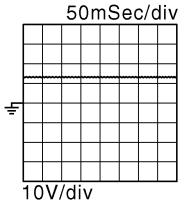
				[Engine is running] • Engine speed: About 2,000 rpm (More than 100 seconds after starting engine)	BATTERY VOLTAGE (11 - 14 V)★ 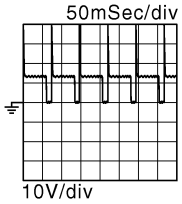
22 (R)	128 (B)	Fuel pump relay	Output	[Ignition switch: ON] • For 1 second after turning ignition switch ON [Engine is running]	0 - 1.5 V
				[Ignition switch: ON] • More than 1 second after turning ignition switch ON	BATTERY VOLTAGE (11 - 14 V)
24 (P)	128 (B)	ECM relay (Self shut-off)	Output	[Engine is running] [Ignition switch: OFF] • A few seconds after turning ignition switch OFF	0 - 1.5 V
				[Ignition switch: OFF] • More than a few seconds after turning ignition switch OFF	BATTERY VOLTAGE (11 - 14 V)
25 (O)	128 (B)	Throttle control motor relay	Output	[Ignition switch: ON → OFF]	0 - 1.0 V ↓ BATTERY VOLTAGE (11 - 14 V) ↓ 0 V
				[Ignition switch: ON]	0 - 1.0 V
28 (BR)	128 (B)	VVEL actuator motor relay abort signal [VVEL control module]	Output	[Engine is running] • Warm-up condition • Idle speed	0 V

Terminal No. (Wire color)		Description		Condition	Value (Approx.)
+	–	Signal name	Input/ Output		
29 (G)	128 (B)	Intake valve timing control solenoid valve (bank 2)	Output	[Engine is running] • Warm-up condition • Idle speed	BATTERY VOLTAGE (11 - 14 V)
				[Engine is running] • Warm-up condition • Engine speed: 2,000rpm	7 - 12 V★ 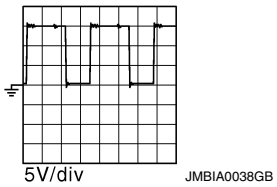
30 (Y)	40 (R)	Throttle position sensor 1 (bank 1)	Input	[Ignition switch: ON] • Engine stopped • Selector lever: D • Accelerator pedal: Fully released	More than 0.36 V
				[Ignition switch: ON] • Engine stopped • Selector lever: D • Accelerator pedal: Fully depressed	Less than 4.75 V
31 (R)	48 (B)	Throttle position sensor 1 (bank 2)	Input	[Ignition switch: ON] • Engine stopped • Selector lever: D • Accelerator pedal: Fully released	More than 0.36 V
				[Ignition switch: ON] • Engine stopped • Selector lever: D • Accelerator pedal: Fully depressed	Less than 4.75 V
33 (SB)	128 (B)	Heated oxygen sensor 2 heater (bank 2)	Output	[Engine is running] • Engine speed: Below 3,600 rpm after the following conditions are met - Engine: after warming up - Keeping the engine speed between 3,500 and 4,000 rpm for 1 minute and at idle for 1 minute under no load	10 V★ 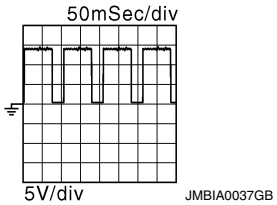
				[Ignition switch: ON] • Engine stopped [Engine is running] • Engine speed: Above 3,600 rpm	BATTERY VOLTAGE (11 - 14 V)
34 (B)	40 (R)	Throttle position sensor 2 (bank 1)	Input	[Ignition switch: ON] • Engine stopped • Selector lever: D • Accelerator pedal: Fully released	Less than 4.75 V
				[Ignition switch: ON] • Engine stopped • Selector lever: D • Accelerator pedal: Fully depressed	More than 0.36 V
35 (W)	48 (B)	Throttle position sensor 2 (bank 2)	Input	[Ignition switch: ON] • Engine stopped • Selector lever: D • Accelerator pedal: Fully released	Less than 4.75 V
				[Ignition switch: ON] • Engine stopped • Selector lever: D • Accelerator pedal: Fully depressed	More than 0.36 V

Terminal No. (Wire color)		Description		Condition	Value (Approx.)
+	—	Signal name	Input/ Output		
36 (O)	—	Sensor ground [Brake booster pressure sensor]	—	—	—
37 (W)	128 (B)	Crankshaft position sensor (POS)	Input	[Engine is running] • Warm-up condition • Idle speed **NOTE:** The pulse cycle changes depending on rpm at idle	4.0 - 5.0 V★ 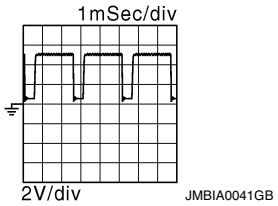
				[Engine is running] • Engine speed: 2,000 rpm	4.0 - 5.0 V★ 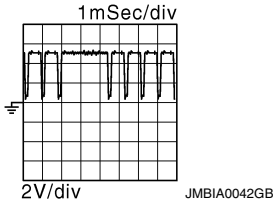
38 (O)	96 (P)	Manifold absolute pressure (MAP) sensor	Input	[Engine is running] • Warm-up condition • Idle speed	1.2 V
				[Engine is running] • Warm-up condition • Engine speed: 2,000 rpm	1.5 V
39 (P)	36 (O)	Brake booster pressure sensor	Input	[Engine is running] • Warm-up condition • Idle speed • Brake pedal: Fully released	1.2 V
				[Engine is running] • Warm-up condition • Idle speed • Brake pedal: Fully depressed	3.0 V
40 (R)	—	Sensor ground [Throttle position sensor (bank 1)]	—	—	—
43 (G)	48 (B)	Sensor power supply [Throttle position sensor (bank 2)]	—	[Ignition switch: ON]	5 V
44 (L)	40 (R)	Sensor power supply [Throttle position sensor (bank 1)]	—	[Ignition switch: ON]	5 V
45 (LG)	36 (O)	Sensor power supply [Brake booster pressure sensor]	—	[Ignition switch: ON]	5 V
46 (R)	128 (B)	Sensor power supply [Crankshaft position sensor (POS)]	—	[Ignition switch: ON]	5 V
47 (Y)	—	Sensor ground [Crankshaft position sensor (POS)]	—	—	—
48 (B)	—	Sensor ground [Throttle position sensor (bank 2)]	—	—	—

Terminal No. (Wire color)		Description		Condition	Value (Approx.)
+	–	Signal name	Input/ Output		
49 (GR)	128 (B)	Throttle control motor (Close) (bank 2)	Output	[Ignition switch: ON] • Engine stopped • Selector lever: D • Accelerator pedal: In the middle of releasing operation	0 - 14 V★ 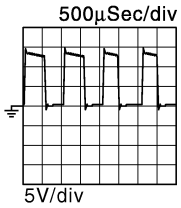
50 (V)	128 (B)	Throttle control motor (Open) (bank 2)	Output	[Ignition switch: ON] • Engine stopped • Selector lever: D • Accelerator pedal: Fully depressed	0 - 14 V★ 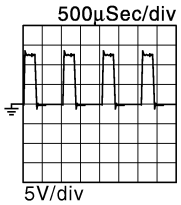
				[Ignition switch: ON] • Engine stopped • Selector lever: D • Accelerator pedal: Fully released	0 - 14 V★ 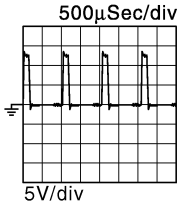
52 (R)	128 (B)	Throttle control motor power supply (bank 2)	Input	[Ignition switch: ON]	BATTERY VOLTAGE (11 - 14 V)
53 (W)	128 (B)	Ignition switch	Input	[Ignition switch: OFF]	0 V
				[Ignition switch: ON]	BATTERY VOLTAGE (11 - 14 V)
54 (Y)	—	CAN communication line [VVEL control module]	Input/ output	—	—
55 (LG)	—	CAN communication line [VVEL control module]	Input/ output	—	—
57 (L)	128 (B)	A/F sensor 1 (bank 1)	Input	[Ignition switch: ON]	2.2 V
59 (O)	128 (B)	Camshaft position sensor (PHASE) (bank 1)	Input	[Engine is running] • Warm-up condition • Idle speed **NOTE:** The pulse cycle changes depending on rpm at idle	3.0 - 5.0 V★ 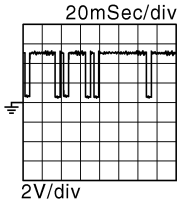
				[Engine is running] • Engine speed: 2,000 rpm	3.0 - 5.0 V★ 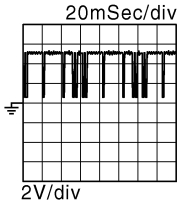

Terminal No. (Wire color)		Description		Condition	Value (Approx.)
+	—	Signal name	Input/ Output		
60 (G)	128 (B)	Sensor power supply [Camshaft position sensor (PHASE) (bank 1), Manifold absolute pressure (MAP) sensor, Power steering pressure sensor]	—	[Ignition switch: ON]	5 V
61 (R)	128 (B)	A/F sensor 1 (bank 1)	Input	[Engine is running] • Warm-up condition • Engine speed: 2,000 rpm	1.8 V Output voltage varies with air fuel ratio.
63 (L)	128 (B)	Camshaft position sensor (PHASE) (bank 2)	Input	[Engine is running] • Warm-up condition • Idle speed **NOTE:** The pulse cycle changes depending on rpm at idle	3.0 - 5.0 V★ 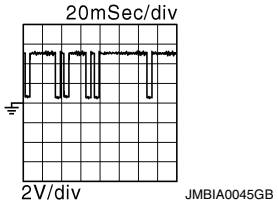
				[Engine is running] • Engine speed: 2,000 rpm	3.0 - 5.0 V★ 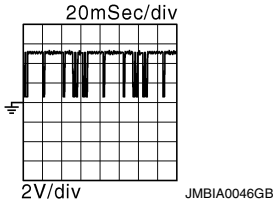
64 (SB)	128 (B)	Sensor power supply [Camshaft position sensor (PHASE) (bank 2), Battery current sensor]	—	[Ignition switch: ON]	5 V
65 (LG)	128 (B)	A/F sensor 1 (bank 2)	Input	[Ignition switch: ON]	2.2 V
66 (V)	128 (B)	A/F sensor 1 (bank 2)	Input	[Engine is running] • Warm-up condition • Engine speed: 2,000 rpm	1.8 V Output voltage varies with air fuel ratio.
67 (P)	128 (B)	Intake air temperature sensor	Input	[Engine is running]	0 - 4.8 V Output voltage varies with intake air temperature.
68 (LG)	—	Sensor ground [Mass air flow sensor (bank 1), Intake air temperature sensor]	—	—	—
69 (W)	128 (B)	Knock sensor (bank 2)	Input	[Engine is running] • Idle speed	2.5 V*1
71 (Y)	128 (B)	Engine coolant temperature sensor	Input	[Engine is running]	0 - 4.8 V Output voltage varies with engine coolant temperature.
72 (—)	—	Sensor ground (Knock sensor)	—	—	—
73 (W)	128 (B)	Knock sensor (bank 1)	Input	[Engine is running] • Idle speed	2.5 V*1

Terminal No. (Wire color)		Description		Condition	Value (Approx.)
+	–	Signal name	Input/ Output		
76 (W)	128 (B)	Heated oxygen sensor 2 (bank 1)	Input	[Engine is running] • Revving engine from idle to 3,000 rpm quickly after the following conditions are met - Engine: after warming up - Keeping the engine speed between 3,500 and 4,000 rpm for 1 minute and at idle for 1 minute under no load	0 - 1.0 V
77 (SB)	68 (LG)	Mass air flow sensor (bank 1)	Input	[Engine is running] • Warm-up condition • Idle speed	0.7 - 1.2 V
				[Engine is running] • Warm-up condition • Engine speed: 2,500 rpm	1.3 - 1.7 V
78 (G)	84 (B)	Engine oil temperature sensor	Input	[Engine is running]	0 - 4.8 V Output voltage varies with engine oil temperature.
79 (BR)	94 (Y)	Mass air flow sensor (bank 2)	Input	[Engine is running] • Warm-up condition • Idle speed	0.7 - 1.2 V
				[Engine is running] • Warm-up condition • Engine speed: 2,500 rpm	1.3 - 1.7 V
80 (O)	128 (B)	Heated oxygen sensor 2 (bank 2)	Input	[Engine is running] • Revving engine from idle to 3,000 rpm quickly after the following conditions are met - Engine: after warming up - Keeping the engine speed between 3,500 and 4,000 rpm for 1 minute and at idle for 1 minute under no load	0 - 1.0 V
81 (R) 82 (V) 85 (BR) 86 (W) 89 (GR) 90 (O)	128 (B)	Fuel injector No. 3 Fuel injector No. 6 Fuel injector No. 2 Fuel injector No. 5 Fuel injector No. 1 Fuel injector No. 4	Output	[Engine is running] • Warm-up condition • Idle speed **NOTE:** The pulse cycle changes depending on rpm at idle	BATTERY VOLTAGE (11 - 14 V)★ 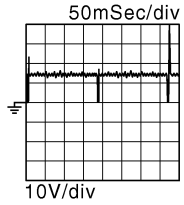
				[Engine is running] • Warm-up condition • Engine speed: 2,000 rpm	BATTERY VOLTAGE (11 - 14 V)★ 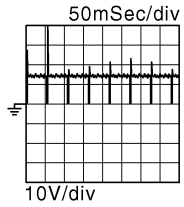
84 (B)	—	Sensor ground (Heated oxygen sensor 2, Engine coolant temperature sensor, Engine oil temperature sensor)	—	—	—

Terminal No. (Wire color)		Description		Condition	Value (Approx.)
+	—	Signal name	Input/ Output		
87 (Y)	96 (P)	Power steering pressure sensor	Output	[Engine is running] • Steering wheel: Being turned	0.5 - 4.5 V
				[Engine is running] • Steering wheel: Not being turned	0.4 - 0.8 V
91 (SB)	95 (G)	Battery current sensor	Input	[Engine is running] • Battery: Fully charged*2 • Idle speed	2.6 - 3.5 V
92 (G)	—	Sensor ground [Camshaft position sensor (PHASE) (bank 2)]	—	—	—
93 (P)	128 (B)	Power supply for ECM (Back-up)	Input	[Ignition switch: OFF]	BATTERY VOLTAGE (11 - 14 V)
94 (Y)	—	Sensor ground [Mass air flow sensor (bank 2)]	—	—	—
95 (G)	—	Sensor ground (Battery current sensor)	—	—	—
96 (P)	—	Sensor ground [Camshaft position sensor (PHASE) (bank 1),Manifold absolute pressure (MAP) sensor, Power steering pressure sensor]	—	—	—
97 (R)	100 (W)	Accelerator pedal position sensor 1	Input	[Ignition switch: ON] • Engine stopped • Accelerator pedal: Fully released	0.45 - 1.00 V
				[Ignition switch: ON] • Engine stopped • Accelerator pedal: Fully depressed	4.2 - 4.8 V
98 (P)*3 (Y)*4	104 (GR)*3 (BR)*4	Accelerator pedal position sensor 2	Input	[Ignition switch: ON] • Engine stopped • Accelerator pedal: Fully released	0.22 - 0.50 V
				[Ignition switch: ON] • Engine stopped • Accelerator pedal: Fully depressed	2.1 - 2.5 V
99 (L)*3 (G)*4	100 (W)	Sensor power supply (Accelerator pedal position sensor 1)	—	[Ignition switch: ON]	5 V
100 (W)	—	Sensor ground (Accelerator pedal position sensor 1)	—	—	—

Terminal No. (Wire color)		Description		Condition	Value (Approx.)
+	–	Signal name	Input/ Output		
101 (SB)	108 (Y)	ICC steering switch (models with ICC system)	Input	[Ignition switch: ON] • ICC steering switch: OFF	4 V
				[Ignition switch: ON] • MAIN switch: Pressed	0 V
				[Ignition switch: ON] • CANCEL switch: Pressed	1.5 V
				[Ignition switch: ON] • RESUME/ACCELERATE switch: Pressed	3.4 V
				[Ignition switch: ON] • SET/COAST switch: Pressed	2.8 V
				[Ignition switch: ON] • DISTANCE switch: Pressed	2.2 V
				[Ignition switch: ON] • LDP/DCA switch: Pressed	0.8 V
101 (SB)	108 (Y)	ASCD steering switch (models with ASCD system)	Input	[Ignition switch: ON] • ASCD steering switch: OFF	4 V
				[Ignition switch: ON] • MAIN switch: Pressed	0 V
				[Ignition switch: ON] • CANCEL switch: Pressed	1 V
				[Ignition switch: ON] • RESUME/ACCELERATE switch: Pressed	3 V
				[Ignition switch: ON] • SET/COAST switch: Pressed	2 V
102 (LG)	112 (V)	EVAP control system pressure sensor	Input	[Ignition switch: ON]	1.8 - 4.8 V
103 (G)*3 (L)*4	104 (GR)*3 (BR)*4	Sensor power supply (Accelerator pedal position sensor 2)	—	[Ignition switch: ON]	5 V
104 (GR)*3 (BR)*4	—	Sensor ground (Accelerator pedal position sensor 2)	—	—	—
105 (L)	112 (V)	Refrigerant pressure sensor	Input	[Engine is running] • Warm-up condition • Both A/C switch and blower fan motor switch: ON (Compressor operates)	1.0 - 4.0 V
106 (W)	128 (B)	Fuel tank temperature sensor	Input	[Engine is running]	0 - 4.8 V Output voltage varies with fuel tank temperature.
107 (BG)	112 (V)	Sensor power supply (EVAP control system pressure sensor, Refrigerant pressure sensor)	—	[Ignition switch: ON]	5 V
108 (Y)	—	Sensor ground (ASCD/ICC steering switch)	—	—	—

Terminal No. (Wire color)		Description		Condition	Value (Approx.)
+	—	Signal name	Input/ Output		
109 (G)	128 (B)	PNP signal	Input	[Ignition switch: ON] • Selector lever: P or N	BATTERY VOLTAGE (11 - 14 V)
				[Ignition switch: ON] • Selector lever: Except above	0 V
110 (R)	128 (B)	Engine speed output signal	Output	[Engine is running] • Warm-up condition • Idle speed **NOTE:** The pulse cycle changes depending on rpm at idle	1 V★ 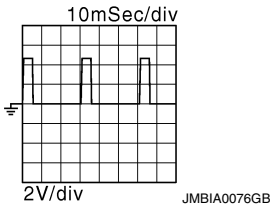
				[Engine is running] • Engine speed is 2,000 rpm	1 V★ 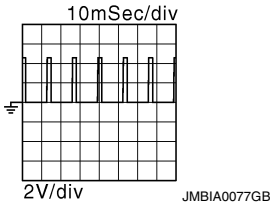
112 (V)	—	Sensor ground (EVAP control system pressure sensor, Refrigerant pressure sensor)	—	—	—
113 (P)	—	CAN communication line	Input/ Output	—	—
114 (L)	—	CAN communication line	Input/ Output	—	—
117 (V)	128 (B)	Data link connector	Input/ Output	—	—
121 (LG)	128 (B)	EVAP canister vent control valve	Output	[Ignition switch: ON]	BATTERY VOLTAGE (11 - 14 V)
122 (P)	128 (B)	Stop lamp switch	Input	[Ignition switch: OFF] • Brake pedal: Fully released	0 V
				[Ignition switch: OFF] • Brake pedal: Slightly depressed	BATTERY VOLTAGE (11 - 14 V)
123 (B) 124 (B)	—	ECM ground	—	—	—
125 (R)	128 (B)	Power supply for ECM	Input	[Ignition switch: ON]	BATTERY VOLTAGE (11 - 14 V)
126 (BR)	128 (B)	ICC brake switch (models with ICC system) ASCD brake switch (models with ASCD system)	Input	[Ignition switch: ON] • Brake pedal: Slightly depressed	0 V
				[Ignition switch: ON] • Brake pedal: Fully released	BATTERY VOLTAGE (11 - 14 V)
127 (B) 128 (B)	—	ECM ground	—	—	—

★: Average voltage for pulse signal (Actual pulse signal can be confirmed by oscilloscope.)
*1: This may vary depending on internal resistance of the tester.

*2: Before measuring the terminal voltage, confirm that the battery is fully charged. Refer to PG-3, "How to Handle Battery".
*3: Without ICC
*4: With ICC

SYMPTOM DIAGNOSIS

AIR CONDITIONER CONTROL

Diagnosis Chart By Symptom

INFOID:0000000010594610

Symptom	Reference	
A/C system does not activate.	Go to Trouble Diagnosis Procedure for A/C System.	HAC-50, "Diagnosis Procedure"
A/C system cannot be controlled.	Go to Preset Switch System.	AV-121, "Symptom Table" (BASE AUDIO WITHOUT NAVIGATION), AV-307, "Symptom Table" (BOSE AUDIO WITHOUT NAVIGATION), AV-507, "Symptom Table" (BOSE AUDIO WITH NAVIGATION)
Air outlet does not change.	Go to Trouble Diagnosis Procedure for Mode Door Motor. (LAN)	HAC-52, "Diagnosis Procedure"
Mode door motor does not operate normally.		
Discharge air temperature does not change.	Go to Trouble Diagnosis Procedure for Air Mix Door Motor. (LAN)	HAC-54, "Diagnosis Procedure"
Air mix door motor does not operate normally.		
Intake door does not change.	Go to Trouble Diagnosis Procedure for Intake Door Motor. (LAN)	HAC-57, "Diagnosis Procedure"
Intake door motor does not operate normally.		
Blower motor operation is malfunctioning.	Go to Trouble Diagnosis Procedure for Blower Motor.	HAC-59, "Diagnosis Procedure"
Magnet clutch does not engage.	Go to Trouble Diagnosis Procedure for Magnet Clutch.	HAC-63, "Diagnosis Procedure"
Insufficient cooling	Go to Trouble Diagnosis Procedure for Insufficient Cooling.	HAC-113, "Inspection procedure"
No cool air comes out. (Air flow volume is normal.)		
Insufficient heating	Go to Trouble Diagnosis Procedure for Insufficient Heating.	HAC-115, "Inspection procedure"
No warm air comes out. (Air flow volume is normal.)		
Noise	Go to Trouble Diagnosis Procedure for Noise.	HAC-117, "Inspection procedure"
Self-diagnosis cannot be performed.	Go to Trouble Diagnosis Procedure for Self-diagnosis.	HAC-119, "Inspection procedure"
Memory function does not operate.	Go to Trouble Diagnosis Procedure for Memory Function.	HAC-120, "Inspection procedure"
Plasmacluster system does not operate.*	Go to Trouble Diagnosis Procedure for Plasmacluster system.	HAC-81, "Diagnosis Procedure"

*: With advanced climate control system (ACCS)

INSUFFICIENT COOLING

Description

INFOID:0000000010594611

Symptom
- Insufficient cooling
- No cool air comes out. (Air flow volume is normal.)

Inspection procedure

INFOID:0000000010594612

1. CHECK WITH A GAUGE OF RECOVERY/RECYCLING RECHARGING EQUIPMENT

Connect the recovery/recycling recharging equipment to the vehicle and perform the pressure inspection with the gauge.

Is there refrigerant?

YES >> GO TO 2.
NO-1 >> Check for refrigerant leakages with the refrigerant leakage detecting fluorescent leak detector. Refer to HA-33, "Inspection".
NO-2 >> GO TO 2 after repairing or replacing the parts according to the inspection results.

2. CHECK CHARGED REFRIGERANT AMOUNT

1. Connect recovery/recycling recharging equipment to the vehicle and discharge the refrigerant.
2. Recharge with the proper amount of refrigerant and perform the inspection with the refrigerant leakage detecting fluorescent leak detector. Refer to HA-33, "Inspection".

Is the inspection result normal?

YES >> GO TO 3.
NO >> Refill the refrigerant and repair or replace the parts according to the inspection results.

3. CHECK REFRIGERANT CYCLE PRESSURE

Connect recovery/recycling recharging equipment to the vehicle and perform the performance test. Refer to HA-31, "Performance Chart".

Is the inspection result normal?

YES >> GO TO 4.
NO >> Perform the diagnosis with the gauge pressure. Refer to HA-7, "Trouble Diagnosis For Unusual Pressure".

4. CHECK SETTING OF TEMPERATURE SETTING TRIMMER

Check the setting of temperature setting trimmer. Refer to HAC-9, "Temperature Setting Trimmer".

1. Check that the temperature setting trimmer is set to “+ direction”.
   NOTE:
   The control temperature can be set with the setting of temperature setting trimmer.
2. Set temperature control dial to “0”.

Are the symptoms solved?

YES >> Perform the setting separately if necessary. END.
NO >> GO TO 5.

5. PERFORM SELF-DIAGNOSIS STEP-2

Perform self-diagnosis STEP-2. Refer to HAC-44, "Diagnosis Description", see Nos. 1 to 2.

Does code No. 20 appear on the display?

YES >> GO TO 6.
NO >> Go to appropriate malfunctioning sensor circuit. Refer to HAC-44, "Diagnosis Description", see No. 11.

6. PERFORM SELF-DIAGNOSIS STEP-4

Perform self-diagnosis STEP-4. Refer to HAC-44, "Diagnosis Description", see Nos.1 to 5.

Is it operated normally?

YES >> GO TO 7.
NO >> Perform the diagnosis applicable to each output device.

7. PERFORM SELF-DIAGNOSIS STEP-5

Perform self-diagnosis STEP-5. Refer to HAC-44, "Diagnosis Description", see Nos.1 to 10.

Is the inspection result normal?

YES >> GO TO 8.
NO >> Go to appropriate malfunctioning sensor circuit. Refer to HAC-44, "Diagnosis Description".

8. CHECK DRIVE BELT

Check tension of the drive belt. Refer to EM-20, "Checking".

Is the inspection result normal?

YES >> GO TO 9.
NO >> Adjust or replace drive belt.

9. CHECK AIR LEAKAGE FROM DUCT

Check duct and nozzle, etc. of A/C system for air leakage.

Is the inspection result normal?

YES >> GO TO 10.
NO >> Repair or replace parts according to the inspection results.

10. CHECK ECV

Perform the ECV diagnosis procedure. Refer to HAC-65, "Diagnosis Procedure".

Is the inspection result normal?

YES >> Replace the unified meter and A/C amp.
NO >> Replace the compressor.

INSUFFICIENT HEATING

Description

INFOID:0000000010594613

Symptom
- Insufficient heating
- No warm air comes out. (Air flow volume is normal.)

Inspection procedure

INFOID:0000000010594614

1. CHECK COOLING SYSTEM

1. Check engine coolant level and check for leakage. Refer to CO-7, "Inspection".
2. Check radiator cap. Refer to CO-11, "RADIATOR CAP : Inspection".
3. Check water flow sounds of engine coolant. Refer to CO-8, "Refilling".

Is the inspection result normal?

YES >> GO TO 2.
NO >> Refill the engine coolant and repair or replace the parts according to the inspection results.

2. CHECK SETTING OF TEMPERATURE SETTING TRIMMER

1. Check the setting of temperature setting trimmer. Refer to HAC-9, "Temperature Setting Trimmer".
2. Check that the temperature setting trimmer is set to “– direction”.
   NOTE:
   The control temperature can be set with the setting of temperature setting trimmer.
3. Set temperature control dial to “0”.

Are the symptoms solved?

YES >> Perform the setting separately if necessary. END.
NO >> GO TO 3.

3. CHECK OPERATION

1. Turn temperature dial (driver side) and raise temperature setting to 32°C (90°F) after warming up the engine.
2. Check that warm air blows from outlets.

Is the inspection result normal?

YES >> END.
NO >> GO TO 4.

4. PERFORM SELF-DIAGNOSIS STEP-2

Perform self-diagnosis STEP-2. Refer to HAC-44, "Diagnosis Description", see Nos. 1 to 2.

Does code No. 20 appear on the display?

YES >> GO TO 5.
NO >> Go to appropriate malfunctioning sensor circuit. Refer to HAC-44, "Diagnosis Description", see No. 11.

5. PERFORM SELF-DIAGNOSIS STEP-4

Perform self-diagnosis STEP-4. Refer to HAC-44, "Diagnosis Description", see Nos. 1 to 5.

Is it installed normally?

YES >> GO TO 6.
NO >> Perform the diagnosis applicable to each output device.

6. PERFORM SELF-DIAGNOSIS STEP-5

Perform self-diagnosis STEP-5. Refer to HAC-44, "Diagnosis Description".

Is the inspection result normal?

YES >> GO TO 7.
NO >> Go to appropriate malfunctioning sensor circuit. Refer to HAC-44, "Diagnosis Description".

7. CHECK AIR LEAKAGE FROM DUCT

Check duct and nozzle, etc. of A/C system for air leakage.

Is the inspection result normal?

YES >> GO TO 8.
NO >> Repair or replace parts according to the inspection results.

8. CHECK HEATER HOSE INSTALLATION CONDITION

Check the heater hose installation condition visually (for twist, crush, etc.).

Is the inspection result normal?

YES >> GO TO 9.
NO >> Repair or replace parts according to the inspection results.

9. CHECK TEMPERATURE OF HEATER HOSE

1. Check the temperature of inlet hose and outlet hose of heater core.
2. Check that the inlet side of heater core is hot and the outlet side is slightly lower than/almost equal to the inlet side.

   CAUTION:
   The temperature inspection should be performed in a short time because the engine coolant temperature is too hot.

Is the inspection result normal?

YES >> GO TO 10.
NO >> Replace the heater core after performing the procedures after the cooling system inspection again. GO TO 1.

10. REPLACE HEATER CORE

Replace the heater core. Refer to heater core. Refer to HA-51, "Exploded View".

Are the symptoms solved?

YES >> END
NO >> Perform the procedures after the cooling system inspection again. GO TO 1.

NOISE

Description

INFOID:0000000010594615

Symptom
- Noise
- Noise is heard when the A/C system operates.

Inspection procedure

INFOID:0000000010594616

1. CHECK OPERATION

1. Operate the A/C system and check the operation. Refer to HAC-7, "Description & Inspection".
2. Check the parts where noise is occurring.

Can the parts where noise is occurring be checked?

YES-1 >> Noise from blower motor: GO TO 2.
YES-2 >> Noise from compressor: GO TO 3.
YES-3 >> Noise from expansion valve: GO TO 4.
YES-4 >> Noise from A/C piping (pipe, flexible hose): GO TO 6.
YES-5 >> Noise from drive belt: GO TO 7.
NO >> END.

2. CHECK BLOWER MOTOR

1. Remove blower motor.
2. Remove in-cabin microfilter.
3. Remove foreign materials that are in the blower unit.
4. Check the noise from blower motor again.

Is the inspection result normal?

YES >> END.
NO >> Replace blower motor.

3. REPLACE COMPRESSOR

1. Correct the refrigerant with recovery/recycling recharging equipment.
2. Recharge with the proper amount of the collected refrigerant after recycling or new refrigerant.
3. Check for the noise from compressor again.

Is the inspection result normal?

YES >> END.
NO >> Replace compressor.

4. CHECK WITH GAUGE PRESSURE

Perform the diagnosis with the gauge pressure. Refer to HA-7, "Trouble Diagnosis For Unusual Pressure".

Is the inspection result normal?

YES >> GO TO 5.
NO >> Repair or replace malfunctioning part(s).

5. REPLACE EXPANSION VALVE

1. Correct the refrigerant with recovery/recycling recharging equipment.
2. Recharge with the proper amount of the collected refrigerant after recycling or new refrigerant.
3. Check for the noise from expansion valve again.

Are the symptoms solved?

YES >> END.
NO >> Replace expansion valve.

6. CHECK A/C PIPING (PIPE, FLEXIBLE HOSE)

1. Check A/C piping (pipe, flexible hose) (for deformation and damage, etc.).
2. Check the installation condition of clips and brackets, etc. of A/C piping (pipe, flexible hose).

Is the inspection result normal?

YES >> Fix the line with rubber or come vibration absorbing material.

NO >> Repair or replace parts according to the inspection results.

7. CHECK DRIVE BELT

Check tension of the drive belt. Refer to EM-20, "Checking".

Is the inspection result normal?

YES >> Check the noise from compressor: GO TO 3.
NO >> Adjust or replace drive belt according to the inspection results.

SELF-DIAGNOSIS CANNOT BE PERFORMED

Description

INFOID:0000000010594617

Symptom: Self-diagnosis function does not operate normally.

Inspection procedure

INFOID:0000000010594618

1. CHECK SELF-DIAGNOSIS FUNCTION

1. Turn ignition switch ON.
2. Set in self-diagnosis mode as per the following. Within 10 seconds after starting engine (ignition switch is turned ON.), press OFF switch for at least 5 seconds.

NOTE:
- If battery voltage drops below 12 V during diagnosis STEP-3, door motor speed becomes slower and as a result, the system may generate an error even when operation is normal. Start engine before performing this diagnosis to avoid this.
- Former STEP-1 (indicators and display screen are checked) does not exist in this self-diagnosis function.
- OFF switch may not be recognized according to the timing of pressing it. Operate OFF switch after turning the intake switch indicators (REC/FRE) ON.

Does self-diagnosis function operate?

YES >> END.
NO >> GO TO 2.

2. CHECK POWER SUPPLY AND GROUND CIRCUIT OF UNIFIED METER AND A/C AMP.

Check power supply and ground circuit of unified meter and A/C amp. Refer to HAC-50, "Diagnosis Procedure".

Is the inspection result normal?

YES >> Replace unified meter and A/C amp.
NO >> Repair or replace malfunctioning part(s).

MEMORY FUNCTION DOES NOT OPERATE

Description

INFOID:0000000010594619

Symptom
- Memory function does not operate normally.
- The setting is not maintained. (It returns to the initial condition.)

Inspection procedure

INFOID:0000000010594620

1. CHECK OPERATION

1. Set temperature control dial to 32°C (90°F).
2. Press OFF switch.
3. Turn ignition switch OFF.
4. Turn ignition switch ON.
5. Press AUTO switch.
6. Check that the set temperature is maintained.

Is the inspection result normal?

YES >> END.
NO >> GO TO 2.

2. CHECK POWER SUPPLY AND GROUND CIRCUIT OF UNIFIED METER AND A/C AMP

Check power supply and ground circuit of unified meter and A/C amp. Refer to HAC-50, "Diagnosis Procedure".

Is the inspection result normal?

YES >> Replace unified meter and A/C amp.
NO >> Repair or replace malfunctioning part(s).

PRECAUTION

PRECAUTIONS

Precautions for Removing Battery Terminal

INFOID:0000000011016643

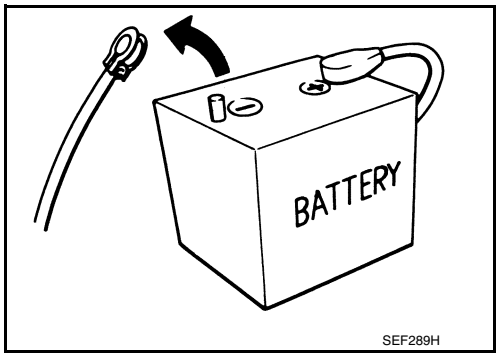

- When removing the 12V battery terminal, turn OFF the ignition switch and wait at least 30 seconds.
  NOTE:
  ECU may be active for several tens of seconds after the ignition switch is turned OFF. If the battery terminal is removed before ECU stops, then a DTC detection error or ECU data corruption may occur.
- For vehicles with the 2-batteries, be sure to connect the main battery and the sub battery before turning ON the ignition switch.
  NOTE:
  If the ignition switch is turned ON with any one of the terminals of main battery and sub battery disconnected, then DTC may be detected.
- After installing the 12V battery, always check "Self Diagnosis Result" of all ECUs and erase DTC.
  NOTE:
  The removal of 12V battery may cause a DTC detection error.

Precaution for Supplemental Restraint System (SRS) "AIR BAG" and "SEAT BELT PRE-TENSIONER"

INFOID:0000000010594621

The Supplemental Restraint System such as “AIR BAG” and “SEAT BELT PRE-TENSIONER”, used along with a front seat belt, helps to reduce the risk or severity of injury to the driver and front passenger for certain types of collision. This system includes seat belt switch inputs and dual stage front air bag modules. The SRS system uses the seat belt switches to determine the front air bag deployment, and may only deploy one front air bag, depending on the severity of a collision and whether the front occupants are belted or unbelted.
Information necessary to service the system safely is included in the “SRS AIR BAG” and “SEAT BELT” of this Service Manual.

WARNING:
Always observe the following items for preventing accidental activation.
- **To avoid rendering the SRS inoperative, which could increase the risk of personal injury or death in the event of a collision that would result in air bag inflation, all maintenance must be performed by an authorized NISSAN/INFINITI dealer.**
- **Improper maintenance, including incorrect removal and installation of the SRS, can lead to personal injury caused by unintentional activation of the system. For removal of Spiral Cable and Air Bag Module, see “SRS AIR BAG”.**
- **Never use electrical test equipment on any circuit related to the SRS unless instructed to in this Service Manual. SRS wiring harnesses can be identified by yellow and/or orange harnesses or harness connectors.**

PRECAUTIONS WHEN USING POWER TOOLS (AIR OR ELECTRIC) AND HAMMERS

WARNING:
Always observe the following items for preventing accidental activation.
- **When working near the Air Bag Diagnosis Sensor Unit or other Air Bag System sensors with the ignition ON or engine running, never use air or electric power tools or strike near the sensor(s) with a hammer. Heavy vibration could activate the sensor(s) and deploy the air bag(s), possibly causing serious injury.**
- **When using air or electric power tools or hammers, always switch the ignition OFF, disconnect the battery, and wait at least 3 minutes before performing any service.**

REMOVAL AND INSTALLATION

PRESET SWITCH

Exploded View

INFOID:0000000010594622

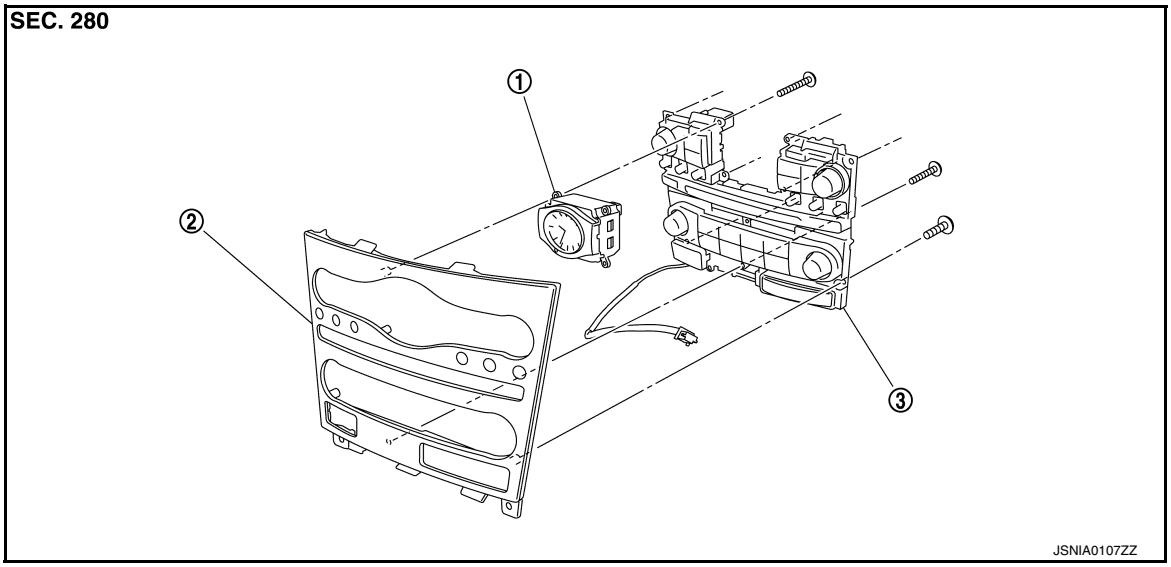

1. Clock
2. Cluster lid C
3. Preset switch

Removal and Installation

INFOID:0000000010594623

REMOVAL

Remove preset switch. Refer to the following.

- Refer to AV-136, "Removal and Installation". (BASE AUDIO WITHOUT NAVIGATION)
- Refer to AV-328, "Removal and Installation". (BOSE AUDIO WITHOUT NAVIGATION)
- Refer to AV-531, "Removal and Installation". (BOSE AUDIO WITH NAVIGATION)

INSTALLATION

Install in the reverse order of removal.

UNIFIED METER AND A/C AMP.

Exploded View

INFOID:0000000010594624

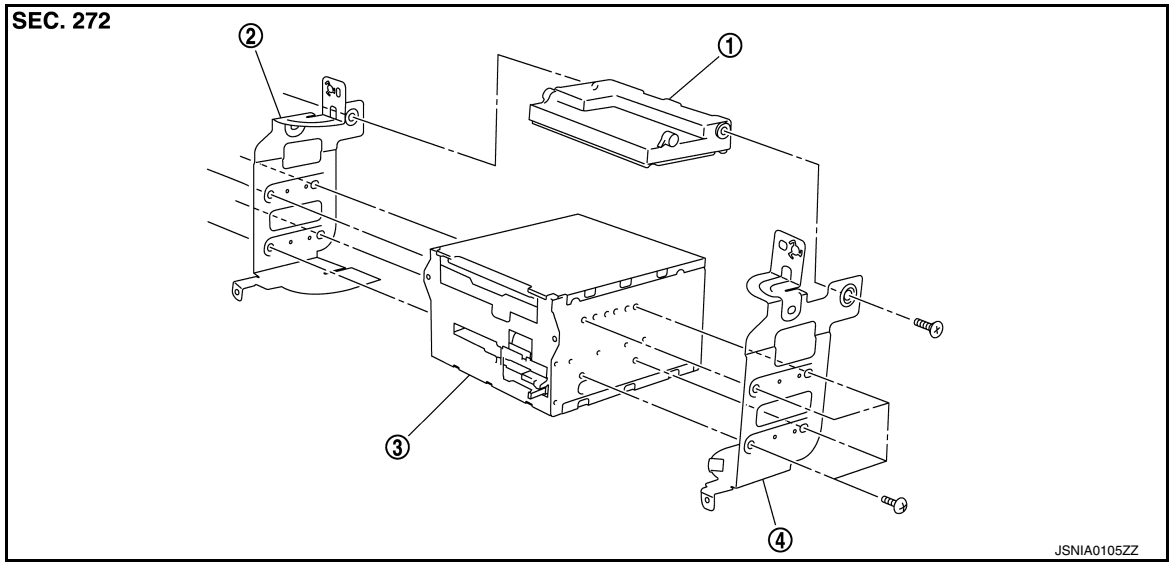

1. Unified meter and A/C amp.
2. Bracket LH
3. AV control unit
4. Bracket RH

Removal and Installation

INFOID:0000000010594625

REMOVAL

1. Remove AV control unit. Refer to the following.
   - Refer to AV-128, "Exploded View". (BASE AUDIO WITHOUT NAVIGATION)
   - Refer to AV-316, "Exploded View". (BOSE AUDIO WITHOUT NAVIGATION)
   - Refer to AV-520, "Exploded View". (BOSE AUDIO WITH NAVIGATION)
2. Remove fixing screws (A), and then remove unified meter and A/C amp. (1).

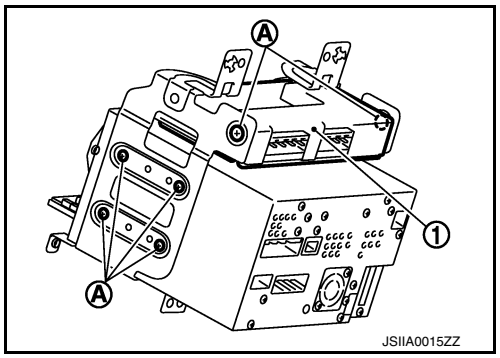

INSTALLATION

Note the following item, and then install in the reverse order of removal.

CAUTION:

Since unified meter and A/C amp. connector and AV control unit connector have the same form, be careful not to insert them wrongly.

AMBIENT SENSOR

Exploded View

INFOID:0000000010594626

1. Ambient sensor

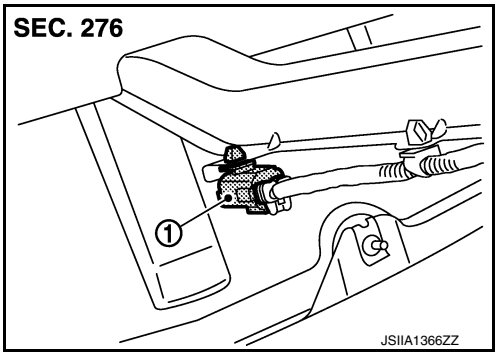

Removal and Installation

INFOID:0000000010594627

REMOVAL

1. Remove hood lock cover. Refer to DLK-231, "Exploded View".
2. Disconnect ambient sensor connector (A), and then remove ambient sensor (1).

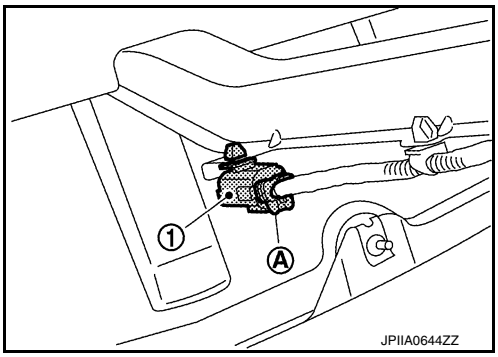

INSTALLATION

Install in the reverse order of removal.

IN-VEHICLE SENSOR

Exploded View

INFOID:0000000010594628

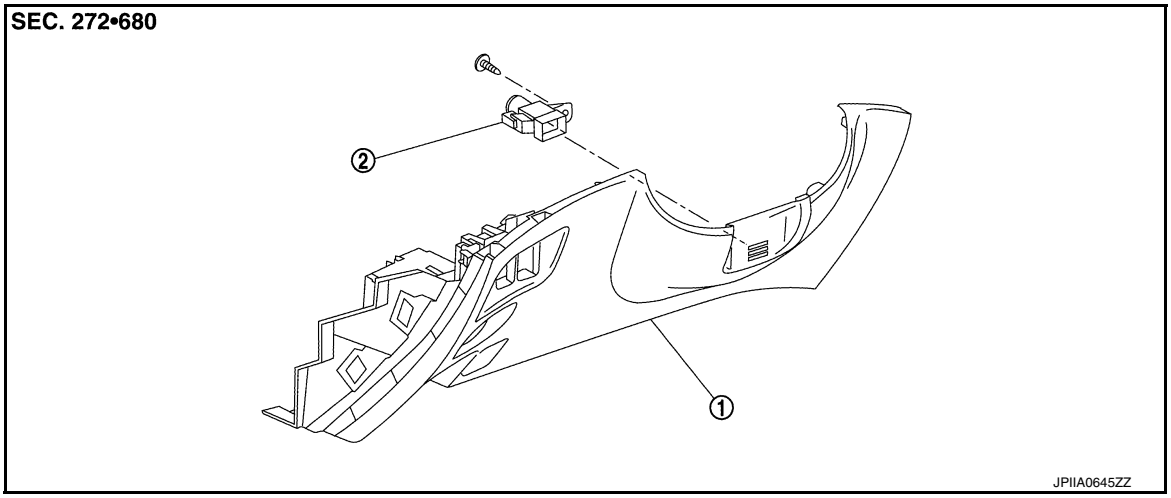

1. Instrument lower panel LH
2. In-vehicle sensor

Removal and Installation

INFOID:0000000010594629

REMOVAL

1. Remove instrument lower panel LH. Refer to IP-12, "Exploded View".
2. Remove fixing screw (A), and then remove in-vehicle sensor (1).

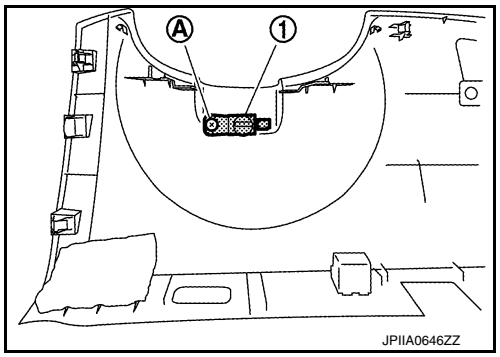

INSTALLATION

Install in the reverse order of removal.

SUNLOAD SENSOR

Exploded View

INFOID:0000000010594630

1. Front defroster grille LH
2. Sunload sensor

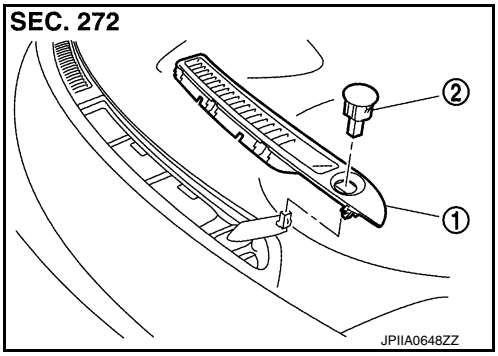

Removal and Installation

INFOID:0000000010594631

REMOVAL

1. Remove front defroster grille LH (1). Refer to VTL-11, "Exploded View".
2. Disconnect sunload sensor connector, and then remove sunload sensor (2).

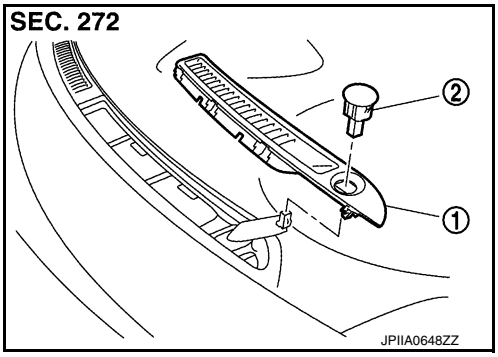

INSTALLATION

Install in the reverse order of removal.

INTAKE SENSOR

Exploded View

INFOID:0000000010594632

REMOVAL

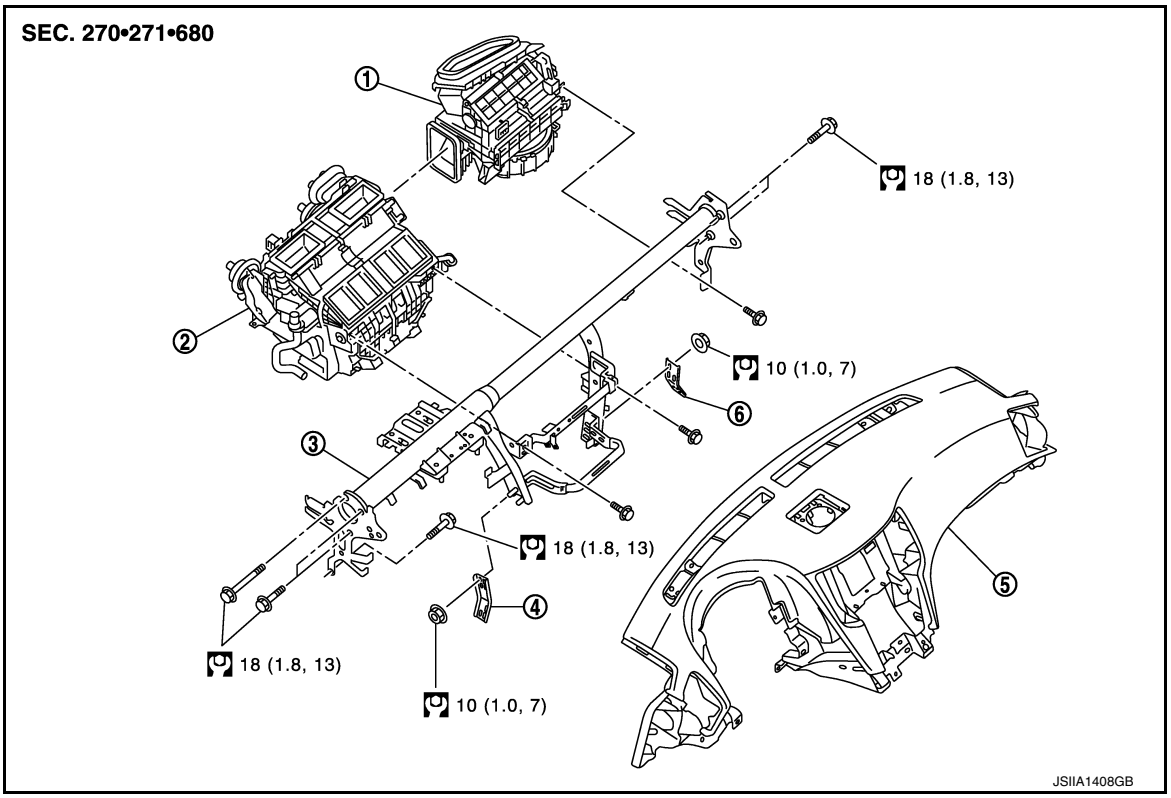

1.	Blower unit	2.	Heater & cooling unit assembly	3.	Steering member
4.	Instrument stay LH	5.	Instrument panel assembly	6.	Instrument stay RH

Refer to GI-4, "Components" for symbols in the figure.

DISASSEMBLY

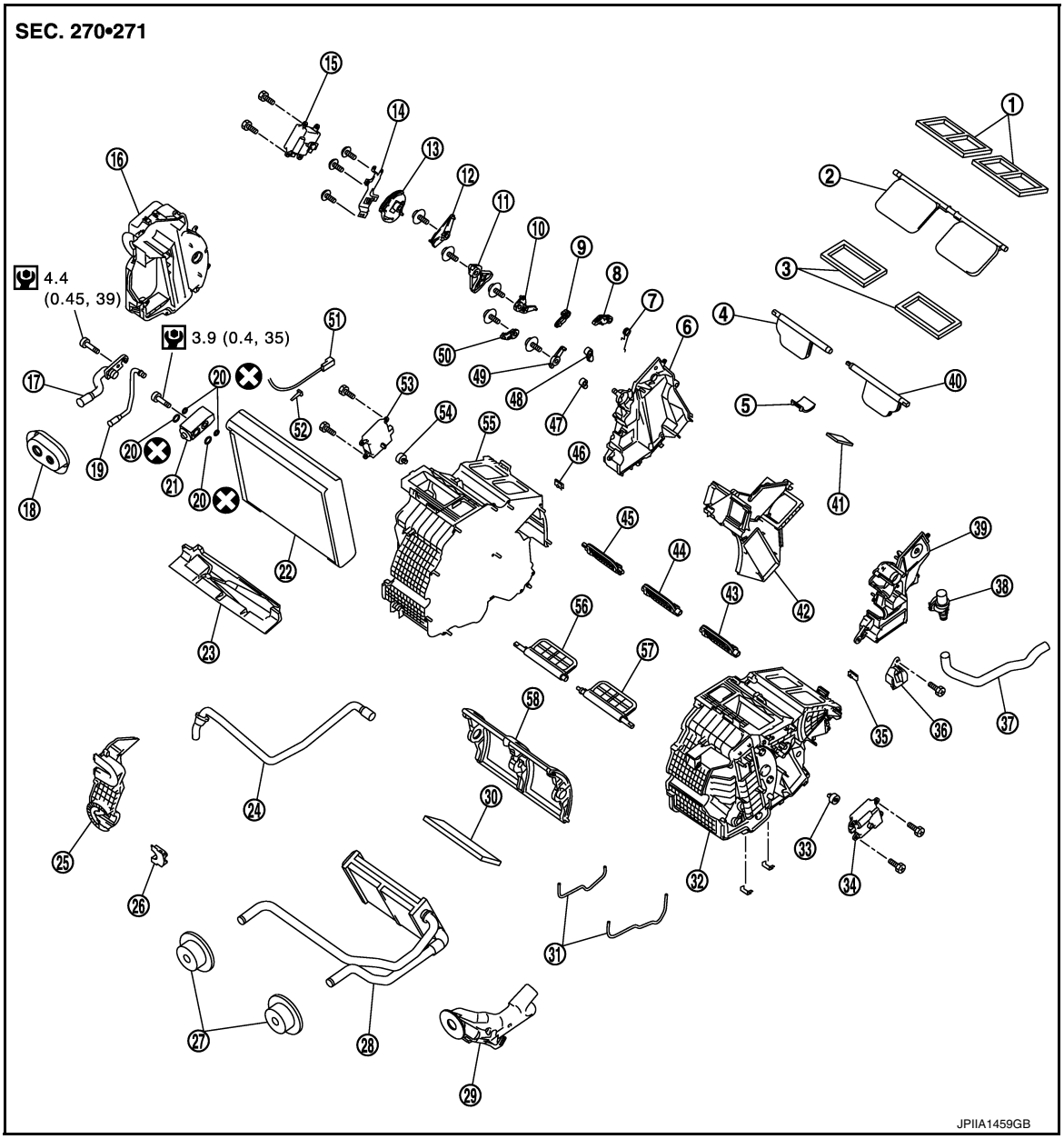

1.	Ventilator seal	2.	Ventilator door	3.	Defroster seal
4.	Defroster door RH	5.	Packing	6.	Foot duct RH
7.	Ventilator door spring	8.	Ventilator door lever	9.	Foot door lever
10.	Foot door link	11.	Main link sub	12.	Ventilator door link
13.	Main link	14.	Mode door motor bracket	15.	Mode door motor
16.	Evaporator cover	17.	Low-pressure pipe 1	18.	Cooler pipe grommet
19.	High-pressure pipe 2	20.	O-ring	21.	Expansion valve
22.	Evaporator	23.	Insulator	24.	Drain hose
25.	Evaporator cover adapter	26.	Heater pipe bracket	27.	Heater pipe grommet
28.	Heater core	29.	Heater pipe cover	30.	Packing
31.	Case packing	32.	Heater & cooling unit case LH	33.	Air mix door adapter
34.	Air mix door motor (Driver side)	35.	J-nut	36.	Heater duct
37.	Aspirator hose	38.	Aspirator	39.	Foot duct LH
40.	Defroster door LH	41.	Packing	42.	Center case
43.	Foot door LH	44.	Rear ventilator door	45.	Foot door RH
46.	J-nut	47.	Max. cool door lever	48.	Defroster door lever

49. Defroster door link
50. Max. cool door link
51. Intake sensor
52. Intake sensor bracket
53. Air mix door motor (Passenger side)
54. Air mix door adapter
55. Heater & cooling unit case RH
56. Max. cool door RH
57. Max. cool door LH
58. Air mix door (Slide door)

Refer to GI-4, "Components" for symbols in the figure.

Removal and Installation

INFOID:0000000010594633

REMOVAL

1. Remove low-pressure pipe 1 and high-pressure pipe 2. Refer to HA-41, "Exploded View".
   CAUTION:
   Cap or wrap the joint of the A/C piping with suitable material such as vinyl tape to avoid the entry of air.
2. Slide evaporator (1) to passenger side, and then remove intake sensor (2).

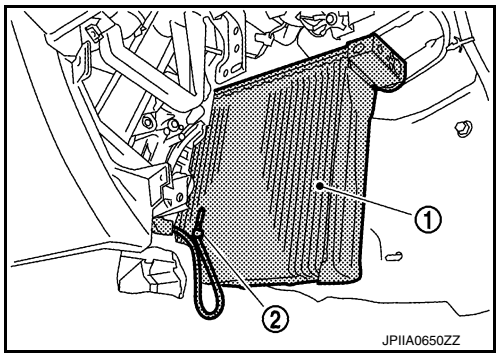

INSTALLATION

Note the following items, and then install in the reverse order of removal.

CAUTION:

- **Replace O-rings with new ones. Then apply compressor oil to them when installing.**
- **Mark the mounting position of intake sensor bracket prior to removal so that the reinstalled sensor can be located in the same position.**
- **Female-side piping connection is thin and easy to deform. Slowly insert the male-side piping straight in axial direction.**
- **Insert piping securely until a click is heard.**
- **After piping connection is completed, pull male-side piping by hand to make sure that connection does not come loose.**
- **Check for leakages when recharging refrigerant.**

EXHAUST GAS/OUTSIDE ODOR DETECTING SENSOR

Exploded View

INFOID:0000000010594634

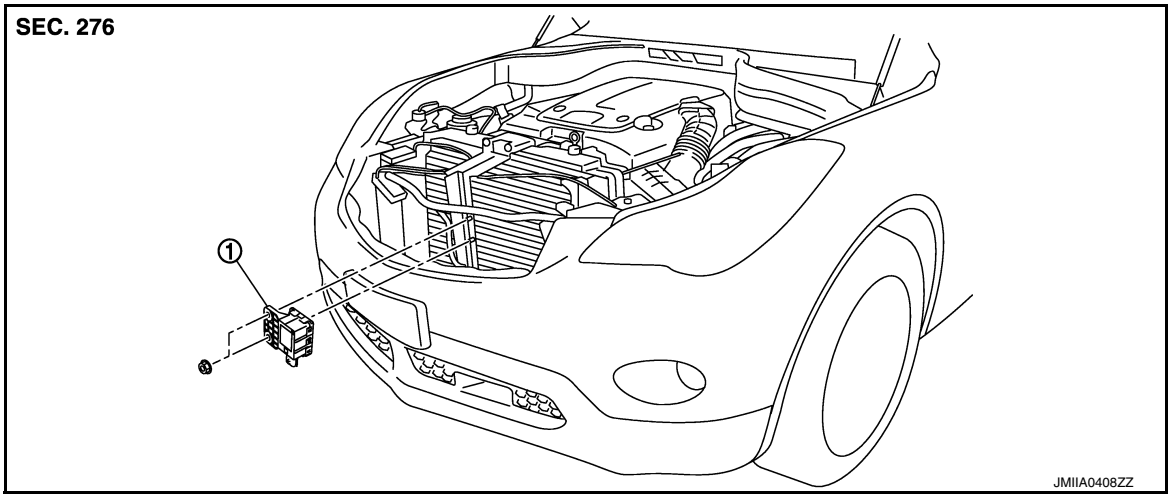

1. Exhaust gas / outside odor detecting sensor

Removal and Installation

INFOID:0000000010594635

REMOVAL

1. Remove food lock cover. Refer to DLK-256, "Exploded View".
2. Remove exhaust gas/outside odor detecting sensor.

INSTALLATION

Install in the reverse order of removal.

REFRIGERANT PRESSURE SENSOR

Exploded View

INFOID:0000000010594636

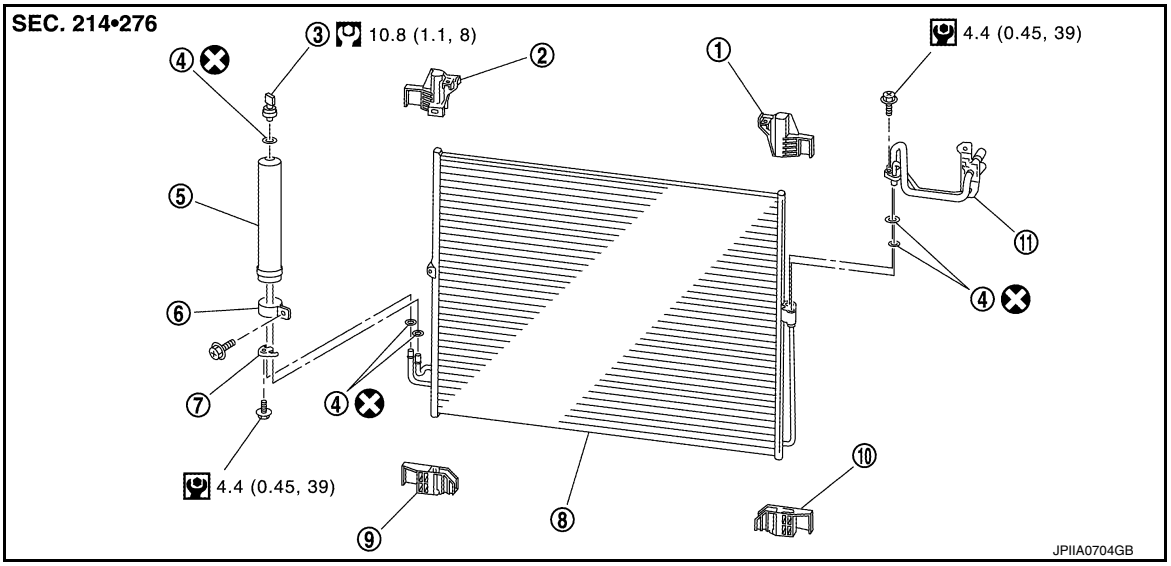

1. Condenser upper bracket LH
2. Condenser upper bracket RH
3. Refrigerant pressure sensor
4. O-ring
5. Liquid tank
6. Liquid tank bracket
7. Bracket
8. Condenser
9. Condenser lower bracket RH
10. Condenser lower bracket LH
11. Condenser pipe assembly

Refer to GI-4, "Components" for symbols in the figure.

Removal and Installation

INFOID:0000000010594637

REMOVAL

1. Remove liquid tank. Refer to HA-48, "Exploded View".
2. Fix the liquid tank (1) using a vise (A). Remove the refrigerant pressure sensor (2) using a wrench (B).
   CAUTION:
   Be careful not to damage liquid tank.

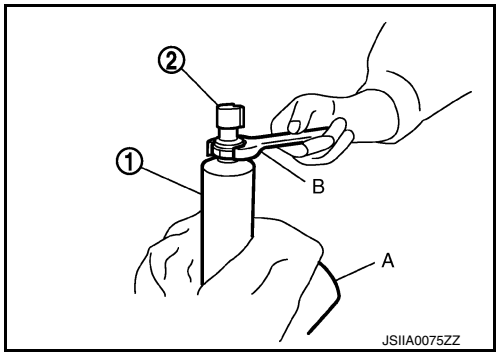

INSTALLATION

Note the following items, and then install in the reverse order of removal.

CAUTION:

- **Apply compressor oil to O-ring of refrigerant pressure sensor when installing.**
- **Check for leakages when recharging refrigerant.**

DOOR MOTOR

Exploded View

INFOID:0000000010594638

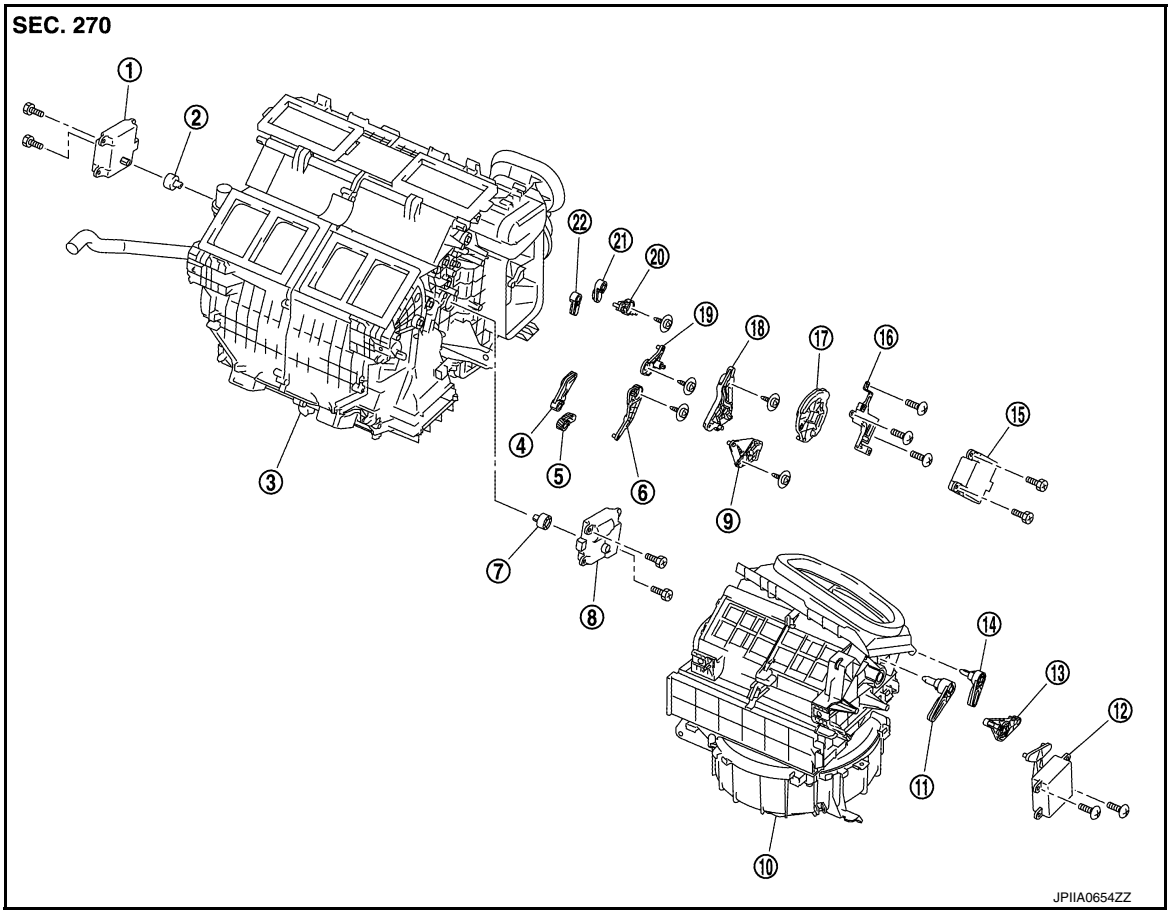

1. Air mix door motor (Driver side)	2. Air mix door motor adapter	3. Heater & cooling unit assembly
4. Ventilator door lever	5. Foot door lever	6. Foot door link
7. Air mix door motor adapter	8. Air mix door motor (Passenger side)	9. Ventilator door link
10. Blower unit	11. Intake door lever 2	12. Intake door motor
13. Intake door link	14. Intake door lever 1	15. Mode door motor
16. Mode door motor bracket	17. Main link	18. Main link sub
19. Max.cool door link	20. Defroster door link	21. Max.cool door lever
22. Defroster door lever		

INTAKE DOOR MOTOR

INTAKE DOOR MOTOR : Removal and Installation

INFOID:0000000010594639

REMOVAL

1. Remove ECM and power steering control unit with bracket attached. Refer to VTL-20, "BLOWER UNIT : Removal and Installation".
2. Disconnect intake door motor connector.

3. Remove fixing screws (A), and then remove intake door motor (1) from blower unit.

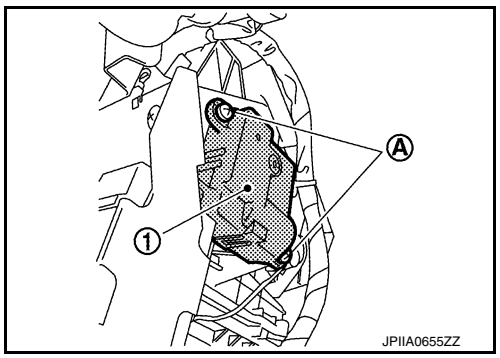

INSTALLATION

Install in the reverse order of removal.

MODE DOOR MOTOR

MODE DOOR MOTOR : Removal and Installation

INFOID:0000000010594640

REMOVAL

1. Remove blower unit. Refer to VTL-19, "Exploded View".
2. Disconnect mode door motor connector.
3. Remove fixing screws (A), and then remove mode door motor (1).

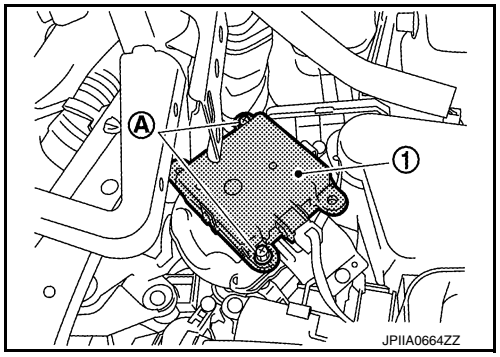

INSTALLATION

Install in the reverse order of removal.

AIR MIX DOOR MOTOR

AIR MIX DOOR MOTOR : Removal and Installation

INFOID:0000000010594641

REMOVAL

Driver Side

1. Set the temperature at 18°C (64°F).
   CAUTION:
   The angle may be out, when installing the air mix door motor to the air mix door, unless above procedure is performed.
2. Disconnect the battery cable from the negative terminal.
3. Remove instrument lower panel LH. Refer to IP-12, "Exploded View".
4. Remove automatic drive positioner control unit. Refer to ADP-220, "Exploded View".
5. Disconnect air mix door motor connector.

6. Remove fixing screws (A), and then remove air mix door motor (1).

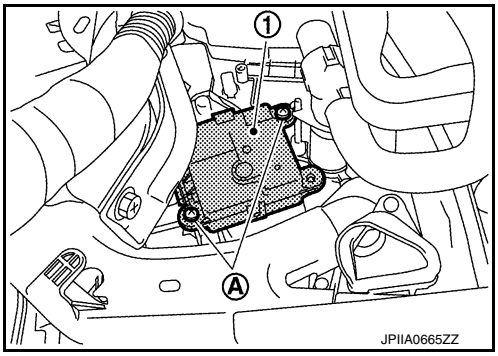

Passenger Side

1. Set the temperature at 18°C (64°F).
   CAUTION:
   The angle may be out, when installing the air mix door motor to the air mix door, unless above procedure is performed.
2. Disconnect the battery cable from the negative terminal.
3. Remove blower unit. Refer to VTL-19, "Exploded View".
4. Disconnect air mix door motor connector.
5. Remove fixing screws (A), and then remove air mix door motor (1).

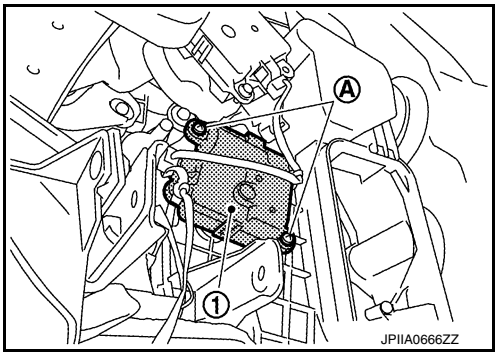

INSTALLATION

Install in the reverse order of removal.

IONIZER

Exploded View

INFOID:0000000010594642

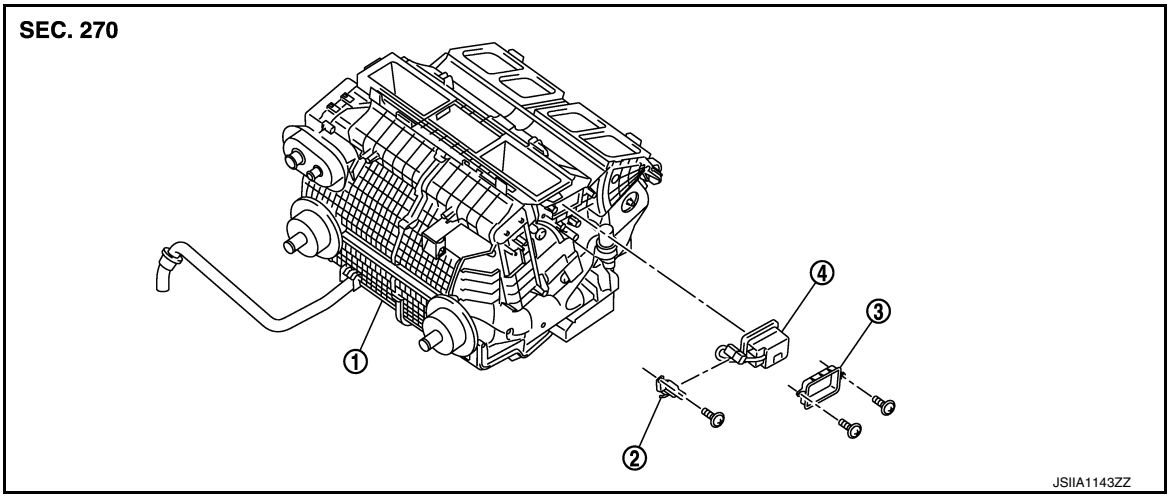

1. Heater & cooling unit assembly
2. Ionizer harness bracket
3. Ionizer bracket
4. Ionizer

Removal and Installation

INFOID:0000000010594643

REMOVAL

1. Remove instrument panel assembly. Refer to IP-12, "Exploded View".
2. Remove fixing screw, and then remove ionizer harness bracket from heater & cooling unit assembly.
3. Remove fixing screws, and then remove ionizer.
   CAUTION:
   Never touch the surface (ceramic part) of the ionizer. It is the discharge electrode.

INSTALLATION

Note the following item, and then install in the reverse order of removal.

CAUTION:

If there is dirt, use a clean cloth and clean the discharge electrode (ceramic part) of the ionizer.