SECTION ST
STEERING SYSTEM

CONTENTS

SYMPTOM DIAGNOSIS

NOISE, VIBRATION AND HARSHNESS (NVH) TROUBLESHOOTING

NVH Troubleshooting Chart

INFOID:0000000012173189

2WD MODELS (WITHOUT ELECTRIC MOTOR)

Use the chart below to find the cause of the symptom. If necessary, repair or replace these parts.

Possible cause and SUSPECTED PARTS			Fluid level	Air in hydraulic system	Outer/inner socket ball joint swinging torque	Outer/inner socket ball joint rotating torque	Outer/inner socket ball joint end play	Steering fluid leakage	Steering wheel play	Steering gear rack sliding force	Drive belt looseness	Improper steering wheel	Improper installation or looseness of tilt lock lever	Mounting looseness	Steering column deformation or damage	Improper installation or looseness of steering column	Steering linkage looseness	PROPELLER SHAFT	DIFFERENTIAL	AXLE and SUSPENSION	TIRE	ROAD WHEEL	DRIVE SHAFT	BRAKE
Reference			ST-11, "Inspection"	ST-11, "Inspection"	ST-34, "2WD : Inspection"	ST-34, "2WD : Inspection"	ST-34, "2WD : Inspection"	ST-11, "Inspection"	ST-13, "Inspection"	ST-13, "Inspection"	EM-20, "Checking"	ST-13, "Inspection"	—	ST-26, "2WD : Exploded View"	ST-19, "WITHOUT ELECTRIC MOTOR : Inspection"	ST-18, "WITHOUT ELECTRIC MOTOR : Exploded View"	ST-26, "2WD : Exploded View"	NVH in DLN section.	NVH in DLN section.	NVH in FAX, RAX, FSU, RSU section.	NVH in WT section.	NVH in WT section.	NVH in RAX section.	NVH in BR section.
Symptom	Steering	Noise	×	×	×	×	×	×	×	×	×				×	×		×	×	×	×	×	×	×
		Shake										×	×	×				×		×	×	×	×	×
		Vibration										×	×	×	×	×		×		×	×		×	
		Shimmy										×		×			×			×	×	×		×
		Judder											×	×			×			×	×	×		×

×: Applicable

2WD MODELS (WITH ELECTRIC MOTOR)

< SYMPTOM DIAGNOSIS >

Use the chart below to find the cause of the symptom. If necessary, repair or replace these parts.

Possible cause and SUSPECTED PARTS			Fluid level	Air in hydraulic system	Outer/inner socket ball joint swinging torque	Outer/inner socket ball joint rotating torque	Outer/inner socket ball joint end play	Steering fluid leakage	Steering wheel play	Steering gear rack sliding force	Drive belt looseness	Improper steering wheel	Improper installation or looseness of tilt lock lever	Mounting looseness	Steering column deformation or damage	Improper installation or looseness of steering column	Steering linkage looseness	PROPELLER SHAFT	DIFFERENTIAL	AXLE and SUSPENSION	TIRE	ROAD WHEEL	DRIVE SHAFT	BRAKE
Reference			ST-11, "Inspection"	ST-11, "Inspection"	ST-34, "2WD : Inspection"	ST-34, "2WD : Inspection"	ST-34, "2WD : Inspection"	ST-11, "Inspection"	ST-13, "Inspection"	ST-13, "Inspection"	EM-20, "Checking"	ST-13, "Inspection"	—	ST-26, "2WD : Exploded View"	ST-22, "WITH ELECTRIC MOTOR : Inspection"	ST-21, "WITH ELECTRIC MOTOR : Exploded View"	ST-26, "2WD : Exploded View"	NVH in DLN section.	NVH in DLN section.	NVH in FAX, RAX, FSU, RSU section.	NVH in WT section.	NVH in WT section.	NVH in RAX section.	NVH in BR section.
Symptom	Steering	Noise	×	×	×	×	×	×	×	×	×				×	×		×	×	×	×	×	×	×
		Shake										×	×	×				×		×	×	×	×	×
		Vibration										×	×	×	×	×		×		×	×		×	
		Shimmy										×		×			×			×	×	×		×
		Judder											×	×			×			×	×	×		×

×: Applicable

AWD MODELS (WITHOUT ELECTRIC MOTOR)

Use the chart below to find the cause of the symptom. If necessary, repair or replace these parts.

		Possible cause and SUSPECTED PARTS	Fluid level	Air in hydraulic system	Outer/inner socket ball joint swinging torque	Outer/inner socket ball joint rotating torque	Outer/inner socket ball joint end play	Steering fluid leakage	Steering wheel play	Steering gear rack sliding force	Drive belt looseness	Improper steering wheel	Improper installation or looseness of tilt lock lever	Mounting looseness	Steering column deformation or damage	Improper installation or looseness of steering column	Steering linkage looseness	PROPELLER SHAFT	DIFFERENTIAL	AXLE and SUSPENSION	TIRE	ROAD WHEEL	DRIVE SHAFT	BRAKE
Reference			ST-11, "Inspection"	ST-11, "Inspection"	ST-44, "AWD : Inspection"	ST-44, "AWD : Inspection"	ST-44, "AWD : Inspection"	ST-11, "Inspection"	ST-13, "Inspection"	ST-13, "Inspection"	EM-20, "Checking"	ST-13, "Inspection"	—	ST-35, "AWD : Exploded View"	ST-19, "WITHOUT ELECTRIC MOTOR : Inspection"	ST-18, "WITHOUT ELECTRIC MOTOR : Exploded View"	ST-35, "AWD : Exploded View"	NVH in DLN section.	NVH in DLN section.	NVH in FAX, RAX, FSU, RSU section.	NVH in WT section.	NVH in WT section.	NVH in FAX, RAX section.	NVH in BR section.
Symptom	Steering	Noise	×	×	×	×	×	×	×	×	×				×	×		×	×	×	×	×	×	×
		Shake										×	×	×				×		×	×	×	×	×
		Vibration										×	×	×	×	×		×		×	×		×	
		Shimmy										×		×			×			×	×	×		×
		Judder											×	×			×			×	×	×		×

×: Applicable

AWD MODELS (WITH ELECTRIC MOTOR)

Use the chart below to find the cause of the symptom. If necessary, repair or replace these parts.

Possible cause and SUSPECTED PARTS			Fluid level	Air in hydraulic system	Outer/inner socket ball joint swinging torque	Outer/inner socket ball joint rotating torque	Outer/inner socket ball joint end play	Steering fluid leakage	Steering wheel play	Steering gear rack sliding force	Drive belt looseness	Improper steering wheel	Improper installation or looseness of tilt lock lever	Mounting looseness	Steering column deformation or damage	Improper installation or looseness of steering column	Steering linkage looseness	PROPELLER SHAFT	DIFFERENTIAL	AXLE and SUSPENSION	TIRE	ROAD WHEEL	DRIVE SHAFT	BRAKE
Reference			ST-11, "Inspection"	ST-11, "Inspection"	ST-44, "AWD : Inspection"	ST-44, "AWD : Inspection"	ST-44, "AWD : Inspection"	ST-11, "Inspection"	ST-13, "Inspection"	ST-13, "Inspection"	EM-20, "Checking"	ST-13, "Inspection"	—	ST-35, "AWD : Exploded View"	ST-22, "WITH ELECTRIC MOTOR : Inspection"	ST-21, "WITH ELECTRIC MOTOR : Exploded View"	ST-35, "AWD : Exploded View"	NVH in DLN section.	NVH in DLN section.	NVH in FAX, RAX, FSU, RSU section.	NVH in WT section.	NVH in WT section.	NVH in FAX, RAX section.	NVH in BR section.
Symptom	Steering	Noise	×	×	×	×	×	×	×	×	×				×	×		×	×	×	×	×	×	×
		Shake										×	×	×				×		×	×	×	×	×
		Vibration										×	×	×	×	×		×		×	×		×	
		Shimmy										×		×			×			×	×	×		×
		Judder											×	×			×			×	×	×		×

×: Applicable

PRECAUTION

PRECAUTIONS

Precaution for Supplemental Restraint System (SRS) "AIR BAG" and "SEAT BELT PRE-TENSIONER"

INFOID:0000000012173190

The Supplemental Restraint System such as “AIR BAG” and “SEAT BELT PRE-TENSIONER”, used along with a front seat belt, helps to reduce the risk or severity of injury to the driver and front passenger for certain types of collision. This system includes seat belt switch inputs and dual stage front air bag modules. The SRS system uses the seat belt switches to determine the front air bag deployment, and may only deploy one front air bag, depending on the severity of a collision and whether the front occupants are belted or unbelted. Information necessary to service the system safely is included in the “SRS AIR BAG” and “SEAT BELT” of this Service Manual.

WARNING:

Always observe the following items for preventing accidental activation.

- **To avoid rendering the SRS inoperative, which could increase the risk of personal injury or death in the event of a collision that would result in air bag inflation, it is recommended that all maintenance and repair be performed by an authorized NISSAN/INFINITI dealer.**
- **Improper repair, including incorrect removal and installation of the SRS, can lead to personal injury caused by unintentional activation of the system. For removal of Spiral Cable and Air Bag Module, see “SRS AIR BAG”.**
- **Never use electrical test equipment on any circuit related to the SRS unless instructed to in this Service Manual. SRS wiring harnesses can be identified by yellow and/or orange harnesses or harness connectors.**

PRECAUTIONS WHEN USING POWER TOOLS (AIR OR ELECTRIC) AND HAMMERS

WARNING:

Always observe the following items for preventing accidental activation.

- **When working near the Air Bag Diagnosis Sensor Unit or other Air Bag System sensors with the ignition ON or engine running, never use air or electric power tools or strike near the sensor(s) with a hammer. Heavy vibration could activate the sensor(s) and deploy the air bag(s), possibly causing serious injury.**
- **When using air or electric power tools or hammers, always switch the ignition OFF, disconnect the battery or batteries, and wait at least 3 minutes before performing any service.**

Precautions for Removing Battery Terminal

INFOID:0000000012723395

When disconnecting the battery terminal, pay attention to the following.

- Always use a 12V battery as power source.
- Never disconnect battery terminal while engine is running.
- When removing the 12V battery terminal, turn OFF the ignition switch and wait at least 30 seconds.
- For vehicles with the engine listed below, remove the battery terminal after a lapse of the specified time:

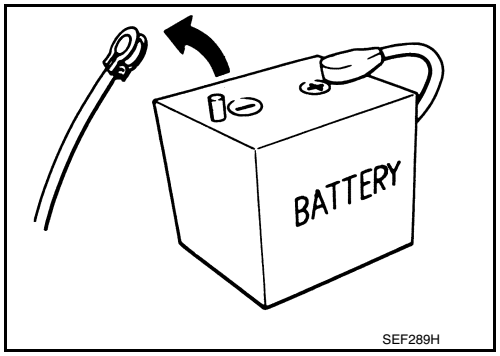

BR08DE	: 4 minutes	YD25DDTi	: 2 minutes
D4D engine	: 20 minutes	YS23DDT	: 4 minutes
HRA2DDT	: 12 minutes	YS23DDTT	: 4 minutes
K9K engine	: 4 minutes	ZD30DDTi	: 60 seconds
M9R engine	: 4 minutes	ZD30DDTT	: 60 seconds
R9M engine	: 4 minutes		
V9X engine	: 4 minutes		

NOTE:

ECU may be active for several tens of seconds after the ignition switch is turned OFF. If the battery terminal is removed before ECU stops, then a DTC detection error or ECU data corruption may occur.

- After high-load driving, if the vehicle is equipped with the V9X engine, turn the ignition switch OFF and wait for at least 15 minutes to remove the battery terminal.

NOTE:

- Turbocharger cooling pump may operate in a few minutes after the ignition switch is turned OFF.
- Example of high-load driving
  - Driving for 30 minutes or more at 140 km/h (86 MPH) or more.
  - Driving for 30 minutes or more on a steep slope.
- For vehicles with the 2-batteries, be sure to connect the main battery and the sub battery before turning ON the ignition switch.
  NOTE:
  If the ignition switch is turned ON with any one of the terminals of main battery and sub battery disconnected, then DTC may be detected.
- After installing the 12V battery, always check "Self Diagnosis Result" of all ECUs and erase DTC.
  NOTE:
  The removal of 12V battery may cause a DTC detection error.

Service Notice or Precautions for Steering System

INFOID:0000000012173191

- In case of removing steering gear assembly, make the final tightening with grounded and unloaded vehicle condition, and then check wheel alignment.
- Observe the following precautions when disassembling.
  - Before disassembly, thoroughly clean the outside of the unit.
  - Disassembly should be done in a clean work area. It is important to prevent the internal parts from becoming contaminated by dirt or other foreign matter.
  - For easier and proper assembly, place disassembled parts in order on a parts rack.
  - Use nylon cloth or paper towels to clean the parts; common shop rags can leave lint that might interfere with their operation.
  - Never reuse non-reusable parts.
  - Before assembling, apply the specified grease to the directed parts.

PREPARATION

PREPARATION

Special Service Tools

INFOID:0000000012173193

The actual shapes of TechMate tools may differ from those of special service tools illustrated here.

Tool number (TechMate No.) Tool name		Description
ST27180001 (J-25726-A) Steering wheel puller	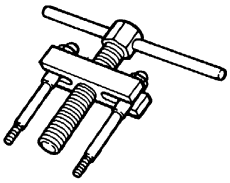 ZZA0819D	Removing steering wheel
ST3127S000 (J-25765-A) Preload gauge	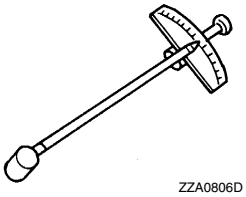 ZZA0806D	• Measuring steering wheel turning torque • Measuring steering column rotating torque • Measuring pinion rotating torque • Measuring ball joint rotating torque
KV48104400 (—) Teflon ring correcting tool a: 50 mm (1.97 in) dia. b: 36 mm (1.42 in) dia. c: 100 mm (3.94 in)	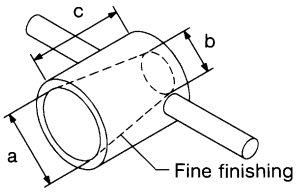 S-NT550	Installing rack Teflon ring
KV48103400 (—) Preload adapter	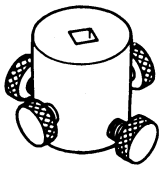 ZZA0824D	Measuring pinion rotating torque
ST35300000 (—) Drift a: 45.1 mm (1.776 in) dia. b: 59.0 mm (2.323 in) dia.	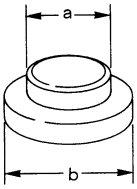 ZZA0881D	Installing oil pump oil seal

Tool number (TechMate No.) Tool name	Description
KV48103500 (J-26357) Oil pressure gauge 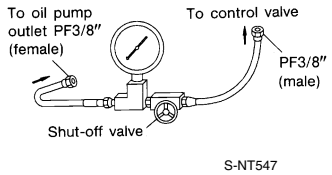	Measuring oil pump relief pressure
KV48102500 (J-33914) Oil pressure gauge adapter 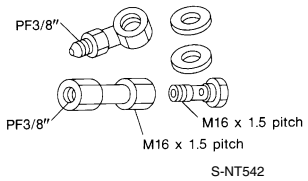	Measuring oil pump relief pressure

Commercial Service Tools

INFOID:0000000012173194

Tool name	Description
Power tool 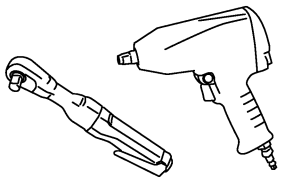	Loosening bolts and nuts
Ball joint remover 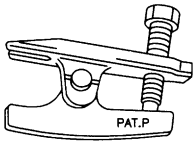	Removing steering outer socket
Open head 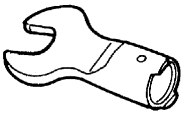	Tightening end cover assembly
Drift a: 15 mm (0.59 in) dia. b: 10 mm (0.39 in) dia. 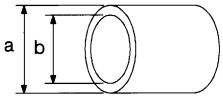	Installing rotor snap ring

PERIODIC MAINTENANCE

POWER STEERING FLUID

Inspection

INFOID:0000000012173195

FLUID LEVEL

1. Check fluid level with engine stopped.
2. Ensure that fluid level is between MIN and MAX.
3. Fluid levels at HOT and COLD are different. Do not confuse them.

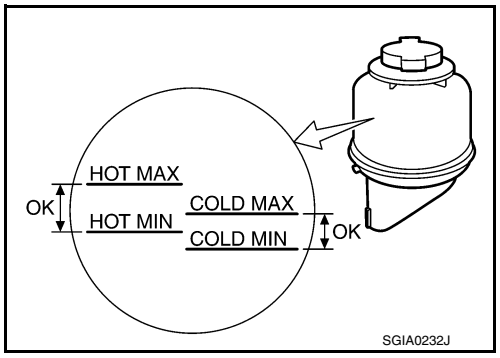

HOT : Fluid temperature 50 – 80°C (122 – 176°F)
COLD : Fluid temperature 0 – 30°C (32 – 86°F)

Recommended fluid : Refer to MA-10, "Fluids and Lubricants".

Fluid capacity : Refer to ST-54, "General Specifications".

CAUTION:
- **The fluid level should not exceed the MAX line. Excessive fluid causes fluid leakage from the cap.**
- **Never reuse drained power steering fluid.**

FLUID LEAKAGE

Check hydraulic connections for fluid leakage, cracks, damage, looseness, or wear.

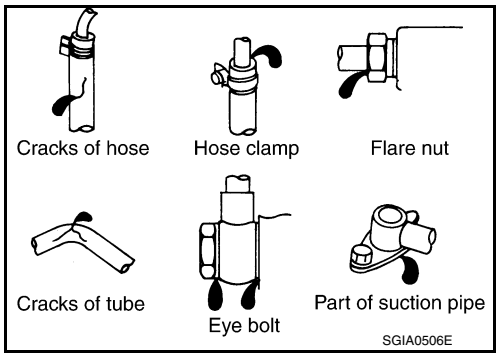

1. Run the engine until the fluid temperature reaches 50 to 80°C (122 to 176°F) in reservoir tank, and keep engine speed idle.
2. Turn steering wheel several times from full left stop to full right stop.
3. Hold steering wheel at each lock position for five seconds and carefully check for fluid leakage.
   CAUTION:
   Never hold the steering wheel in a locked position for more than 10 seconds. (There is the possibility that power steering oil pump assembly may be damaged.)
4. If fluid leakage at connections is noticed, then loosen flare nut and then retighten. Do not overtighten connector as this can damage O-ring, washer and connector.
5. If fluid leakage from oil pump is noticed, check oil pump.
6. Check steering gear boots for accumulation of fluid leaked from steering gear.

AIR BLEEDING HYDRAULIC SYSTEM

If air bleeding is not complete, the following symptoms can be observed.
- Bubbles are created in reservoir tank.
- Clicking noise can be heard from oil pump.
- Excessive buzzing in the oil pump.

NOTE:
Fluid noise may occur in the steering gear or oil pump. This does not affect performance or durability of the system.

1. Turn steering wheel several times from full left stop to full right stop with engine off.
   CAUTION:
   Fill reservoir tank with a sufficient amount of fluid so that fluid level is not below the MIN line while turning steering wheel.
2. Start the engine and hold steering wheel at each lock position for 3 second at idle to check for fluid leakage.

3. Repeat step 2 above several times at approximately 3 second intervals.
   CAUTION:
   Never hold the steering wheel in a locked position for more than 10 seconds. (There is the possibility that oil pump may be damaged.)
4. Check fluid for bubbles and white contamination.
5. Stop the engine if bubbles and white contamination do not drain out. Perform step 2 and 3 above after waiting until bubbles and white contamination drain out.
6. Stop the engine, and then check fluid level.

STEERING WHEEL

Inspection

INFOID:0000000012173196

STEERING WHEEL AXIAL END PLAY

1. Check installation conditions of steering gear assembly, front suspension assembly, axle and steering column assembly.
2. Check if movement exists when steering wheel is moved up and down, to the left and right and to the axial direction.

Steering wheel axial end play	**: Refer to ST-54, "Steering Wheel Axial End Play and Play".**

3. Check the following items when steering wheel axial end play is out of the standard.
   - Check the steering column assembly mounting condition. Refer to ST-18, "WITHOUT ELECTRIC MOTOR : Exploded View" (without electric motor), ST-21, "WITH ELECTRIC MOTOR : Exploded View" (with electric motor).
   - Check steering gear assembly mounting condition for looseness. Refer to ST-26, "2WD : Exploded View" (2WD models), ST-35, "AWD : Exploded View" (AWD models).

STEERING WHEEL PLAY

1. Turn steering wheel so that front wheels come to the straight-ahead position.
2. Start the engine and lightly turn steering wheel to the left and right until front wheels start to move.
3. Measure steering wheel movement on the outer circumference.

Steering wheel play	**: Refer to ST-54, "Steering Wheel Axial End Play and Play".**

4. Check the following items when steering wheel play is out of the standard.
   - Check backlash for each joint of steering column assembly.
   - Check installation condition of steering gear assembly.

NEUTRAL POSITION STEERING WHEEL

1. Check that steering gear assembly, steering column assembly and steering wheel are installed in the correct position.
2. Perform neutral position inspection after wheel alignment. Refer to FSU-8, "Inspection" (2WD models), FSU-28, "Inspection" (AWD models).
3. Set the vehicle to the straight-ahead position and confirm steering wheel is in the neutral position.
4. Loosen outer socket lock nut and turn inner socket to left and right equally to make fine adjustments if steering wheel is not in the neutral position.

STEERING WHEEL TURNING TORQUE

1. Park the vehicle on a level and dry surface, apply parking brake.
2. Tires need to be inflated to the specified pressure. Refer to WT-54, "Tire Air Pressure".
3. Remove driver air bag module. Refer to SR-11, "Exploded View".
4. Start the engine.
5. Check that the power steering fluid is at the operating temperature.

Fluid temperature	**: 50 – 80°C (122 – 176°F)**

6. Make sure that the reading is within the following specified range using preload gauge (A) [SST: ST3127S000 (J-25765-A)].

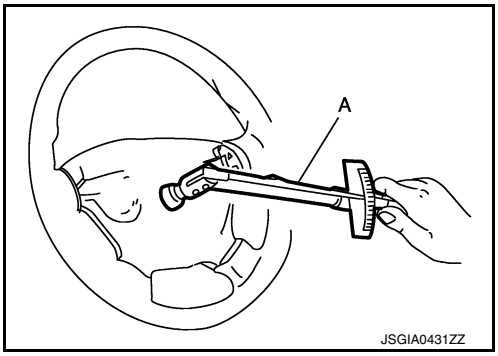

Standard

Steering wheel turning torque	**: Refer to ST-54, "Steering Wheel Turning Torque".**

7. If steering wheel turning force is out of the specification, check rack sliding force and relief hydraulic pressure of oil pump. Regarding relief hydraulic pressure of oil pump, refer to ST-50, "Inspection".

RACK SLIDING FORCE

1. Disconnect lower joint and steering knuckle from steering gear assembly. Refer to ST-26, "2WD : Exploded View" (2WD models), ST-35, "AWD : Exploded View" (AWD models).
2. Start and run the engine at idle to make sure steering fluid has reached normal operating temperature.

Fluid temperature	**: 50 – 80°C (122 – 176°F)**

3. While pulling outer socket slowly in ±11.5 mm (±0.453 in) range from neutral position, make sure rack sliding force is within specification.

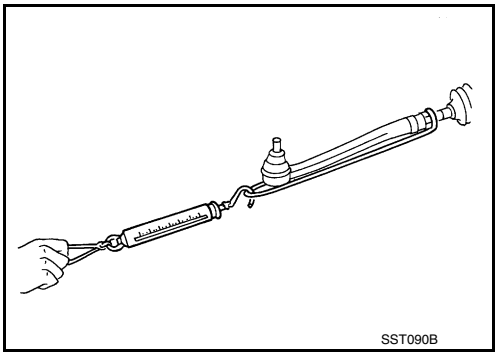

Rack sliding force	**: Refer to ST-55, "Rack Sliding Force".**

4. If rack sliding force is not within specification, overhaul steering gear assembly.

FRONT WHEEL TURNING ANGLE

1. Check front wheel turning angle after toe-in inspection. Refer to FSU-8, "Inspection" (2WD models), FSU-28, "Inspection" (AWD models).
2. Place front wheels on turning radius gauges and rear wheels on stands, so that vehicle can be level.
3. Check the maximum inner and outer wheel turning angles for LH and RH road wheels.

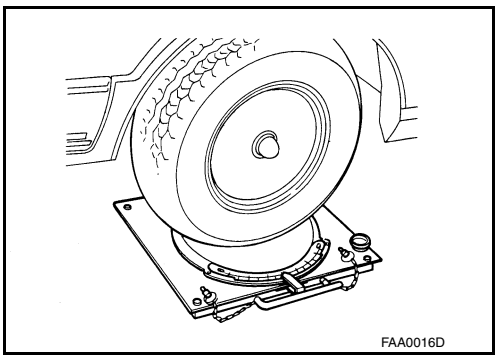

4. With the engine at idle, turn steering wheel from full left stop to full right stop and measure the turning angles.

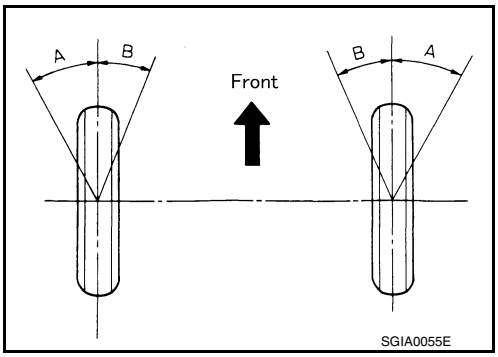

Inner wheel (Angle: A)	**: Refer to ST-54, "Steering Angle".**
Outer wheel (Angle: B)	**: Refer to ST-54, "Steering Angle".**

5. Check the following items when turning angle is out of the standard.

a. Check the neutral position of the rack stroke (L).

Rack stroke neutral position (L) : Refer to ST-55, "Rack Stroke".

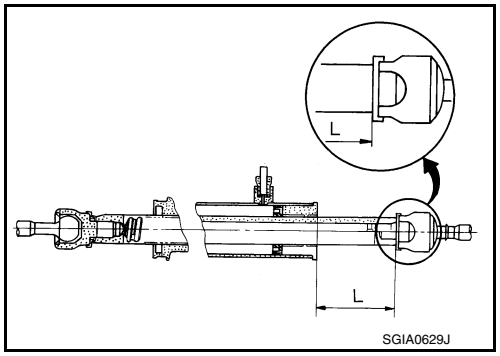

b. Disassemble steering gear assembly to check the cause that rack stroke is outside of the standard.
   - Steering angles are not adjustable. Check steering gear assembly, steering column assembly and front suspension components for wear or damage if any of the turning angles are different from the specified value. Replace any of them, if any non-standard condition exists.

REMOVAL AND INSTALLATION

STEERING WHEEL

Exploded View

INFOID:0000000012173197

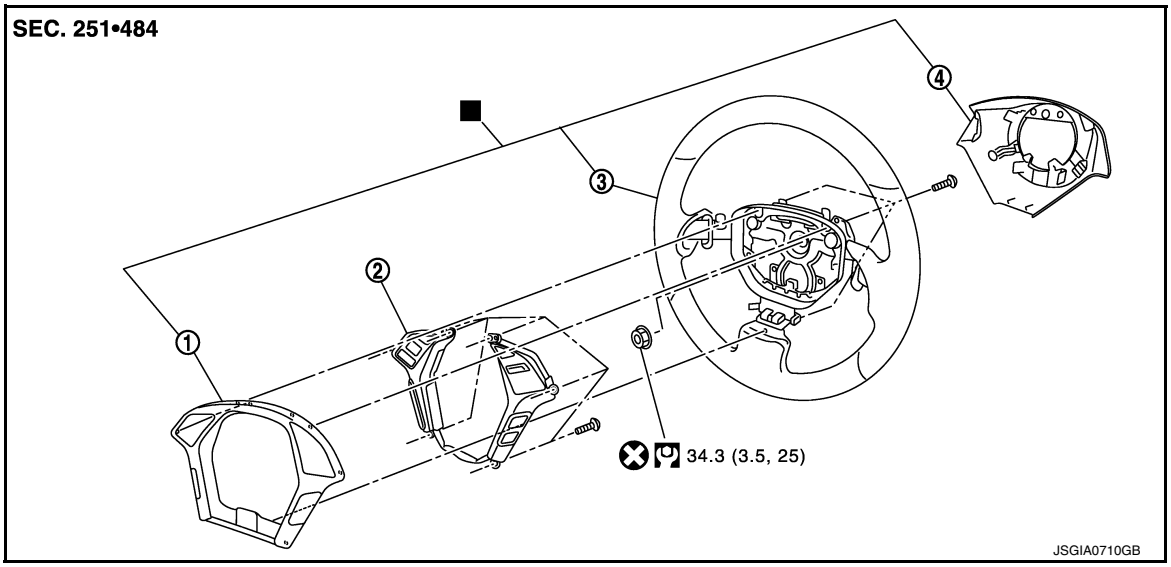

1. Steering switch finisher
2. Steering switch
3. Steering wheel
4. Steering wheel rear cover

■: Replace the parts as a set.

Refer to GI-4, "Components" for symbols in the figure.

Removal and Installation

INFOID:0000000012173198

REMOVAL

NOTE:
When reconnecting spiral cable, fix cable with a tape so that fixing case and rotating part keep aligned. This will omit neutral position alignment procedure during spiral cable installation.

1. Set the vehicle to the straight-ahead position.
2. Remove driver air bag module. Refer to SR-11, "Exploded View".
3. Remove steering wheel lock nut after steering is locked.
4. Remove steering wheel with the steering wheel puller (A) [SST: ST27180001 (J-25726-A)].
   NOTE:
   Put paint marks on the steering wheel and the column shaft head for supporting accurate positioning during the installation procedure.

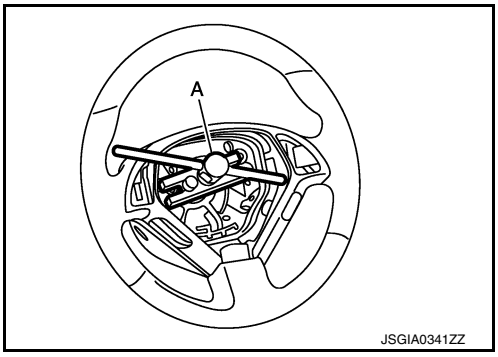

INSTALLATION

Note the following, and install in the reverse order of removal.

- Check the spiral cable neutral position after replacing or rotating spiral cable. Refer to SR-14, "Removal and Installation".
  CAUTION:

Never twist spiral cable freely on excessively after it becomes tight (doing so may cause the cable to tear off).

- Never reuse steering wheel lock nut.

Disassembly and Assembly

INFOID:0000000012173199

DISASSEMBLY

1. Remove steering wheel assembly. Refer to ST-16, "Exploded View".
2. Remove steering wheel rear cover.
3. Remove steering switch finisher.
4. Remove steering switch.

ASSEMBLY

Install in the reverse order of removal.

STEERING COLUMN
WITHOUT ELECTRIC MOTOR

WITHOUT ELECTRIC MOTOR : Exploded View

INFOID:0000000012173200

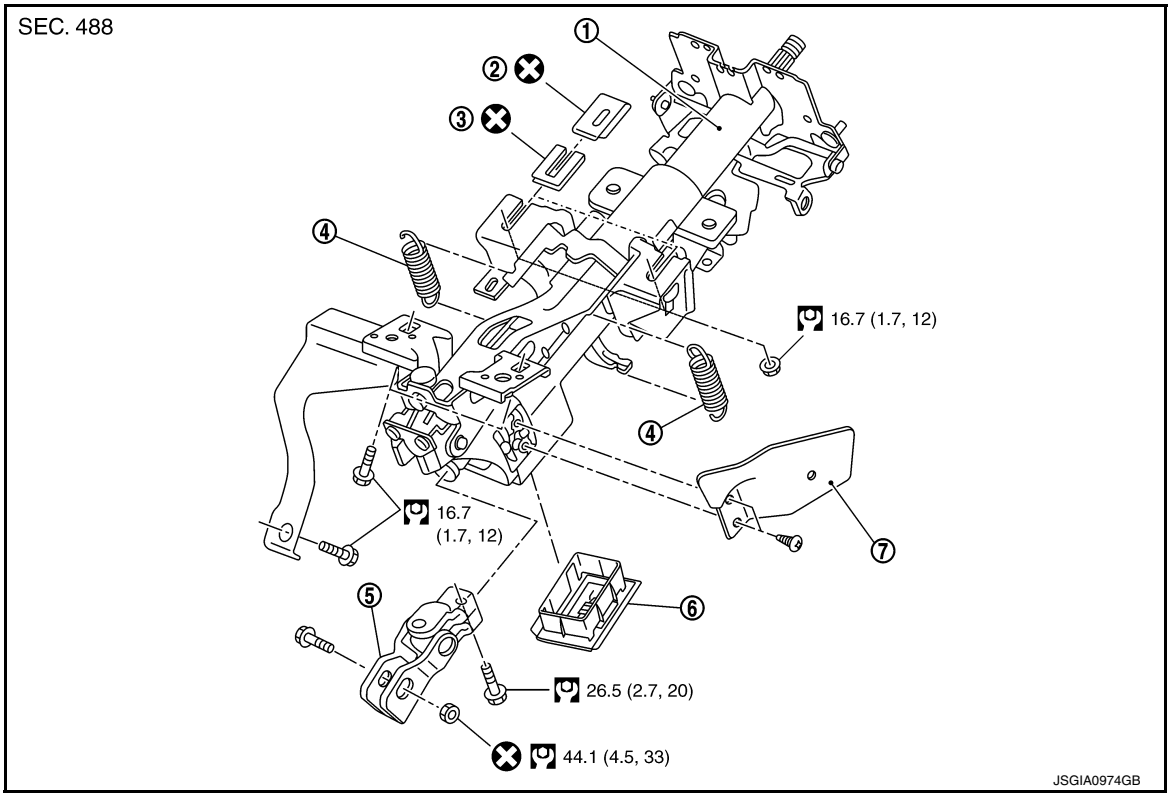

1. Steering column assembly
2. Clip
3. Clip
4. Spring
5. Upper joint
6. Dust cover
7. Bracket

Refer to GI-4, "Components" for symbols in the figure.

WITHOUT ELECTRIC MOTOR : Removal and Installation

INFOID:0000000012173201

REMOVAL

1. Set the vehicle to the straight-ahead position.
2. Place the tilt to the highest level. Place the telescopic to the longest level.
3. Remove driver air bag module. Refer to SR-11, "Exploded View".
4. Remove steering wheel. Refer to ST-16, "Exploded View".
5. Remove instrument driver lower panel. Refer to IP-12, "Exploded View".
6. Remove the steering column cover. Refer to IP-12, "Exploded View".
7. Remove spiral cable. Refer to SR-14, "Exploded View".
8. Remove combination switch. Refer to BCS-98, "Exploded View".
9. Remove knee protector.
10. Remove combination meter. Refer to MWI-136, "Exploded View".
11. Disconnect each switch harness connectors installed to steering column assembly.
12. Remove the upper joint mounting bolt and nut (lower shaft side), and separate the joint from lower shaft.
    CAUTION:
    When removing upper joint, never insert a tool, such as a screwdriver, into the yoke groove to pull out the upper joint. In case of the violation of the above, replace upper joint with a new one.
13. Remove steering column assembly.

CAUTION:
- **Never give axial impact to steering column assembly during removal.**
- **Never move steering gear assembly when removing steering column assembly.**
- **Never rotate the lower shaft.**

14. Remove dust cover from steering column assembly.
    CAUTION:
    Remove dust cover only when necessary.

INSTALLATION

Note the following, and install in the reverse order of removal.

- To install dust cover (1), face the arrow of dust cover toward the hole (A) of steering column assembly (2) as shown in the figure.
  CAUTION:
  Check that there is no clearance between dust cover and steering column assembly.

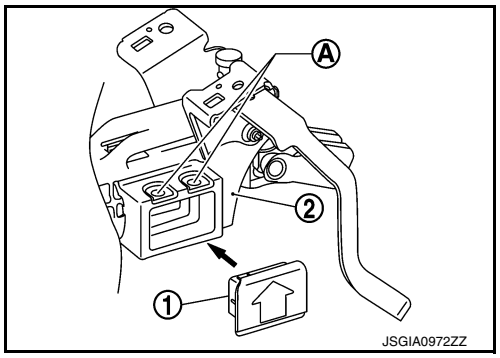

- Make sure there is no space between clip (1) and steering column assembly (2).
  CAUTION:
  Never reuse the clip.

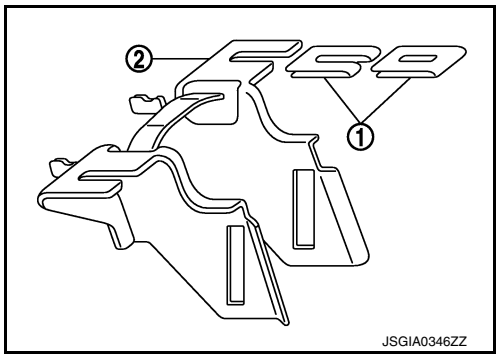

- Tighten the mounting bolts and nuts in the order shown in the figure when installing the steering column assembly.
- Be careful of the following points when installing the steering column assembly.
  CAUTION:
  - **Never give axial impact to steering column assembly during installation.**
  - **Never move steering gear assembly.**
  - **Never reuse the joint mounting nut (lower shaft side).**
- Adjust neutral position of steering angle sensor. Refer to BRC-8, "ADJUSTMENT OF STEERING ANGLE SENSOR NEUTRAL POSITION : Special Repair Requirement".

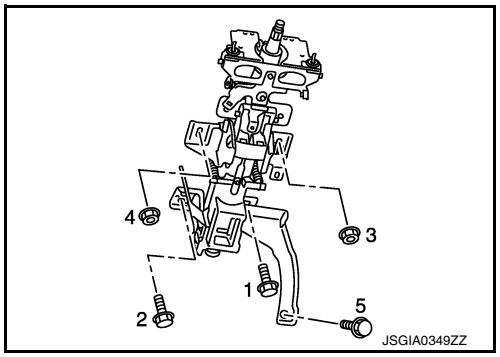

WITHOUT ELECTRIC MOTOR : Inspection

INFOID:0000000012173202

INSPECTION AFTER REMOVAL

- Check each part of steering column assembly for damage or other malfunctions. Replace if necessary.
- Measure steering column assembly rotating torque using a preload gauge [SST: ST3127S000 (J-25765-A)]. Replace steering column assembly if outside the standard.

Rotating torque	**: Refer to ST-54, "Steering Column Operating Range".**

- Measure the length (L) as shown, if vehicle has been involved in a minor collision. Replace steering column assembly if out side the standard.

Steering column length (L) **: Refer to ST-54, "Steering Column Length".**

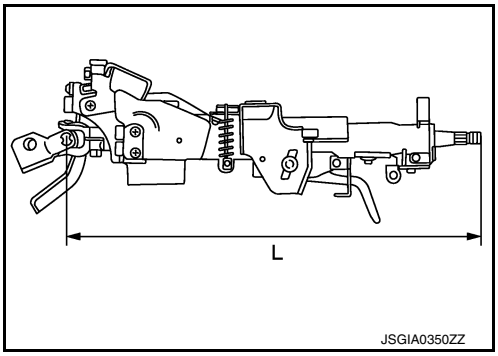

- Install the bracket (1) and steering column housing (2) so that the clearance (A) is within the specified range as described below. Replace steering column assembly if out side the standard.

Mounting dimensions (A) **: Refer to ST-54, "Steering Column Mounting Dimensions".**

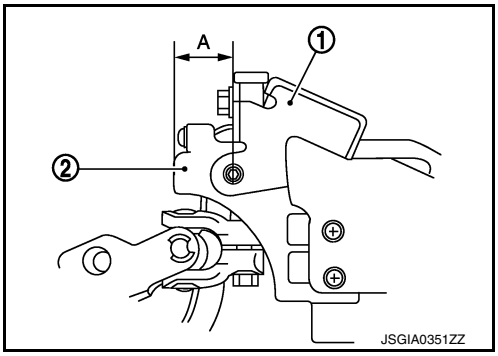

INSPECTION AFTER INSTALLATION

- Check each part of steering column assembly for damage or other malfunctions. Replace if necessary.
- Check the steering wheel play, neutral position steering wheel, steering wheel turning force, and front wheel turning angle. Refer to ST-13, "Inspection".
- Check tilt and telescopic mechanism operating range tilt operating range (L1), telescopic operating range (L2) as shown in the figure.

Tilt operating range (L1) **: Refer to ST-54, "Steering Column Operating Range".**

Telescopic operating range (L2) **: Refer to ST-54, "Steering Column Operating Range".**

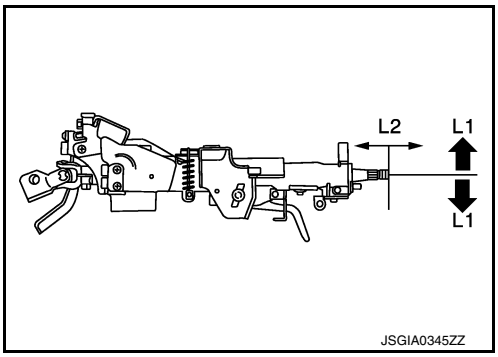

- Adjust neutral position of steering angle sensor. Refer to BRC-8, "ADJUSTMENT OF STEERING ANGLE SENSOR NEUTRAL POSITION : Special Repair Requirement".

WITH ELECTRIC MOTOR

WITH ELECTRIC MOTOR : Exploded View

INFOID:0000000012173203

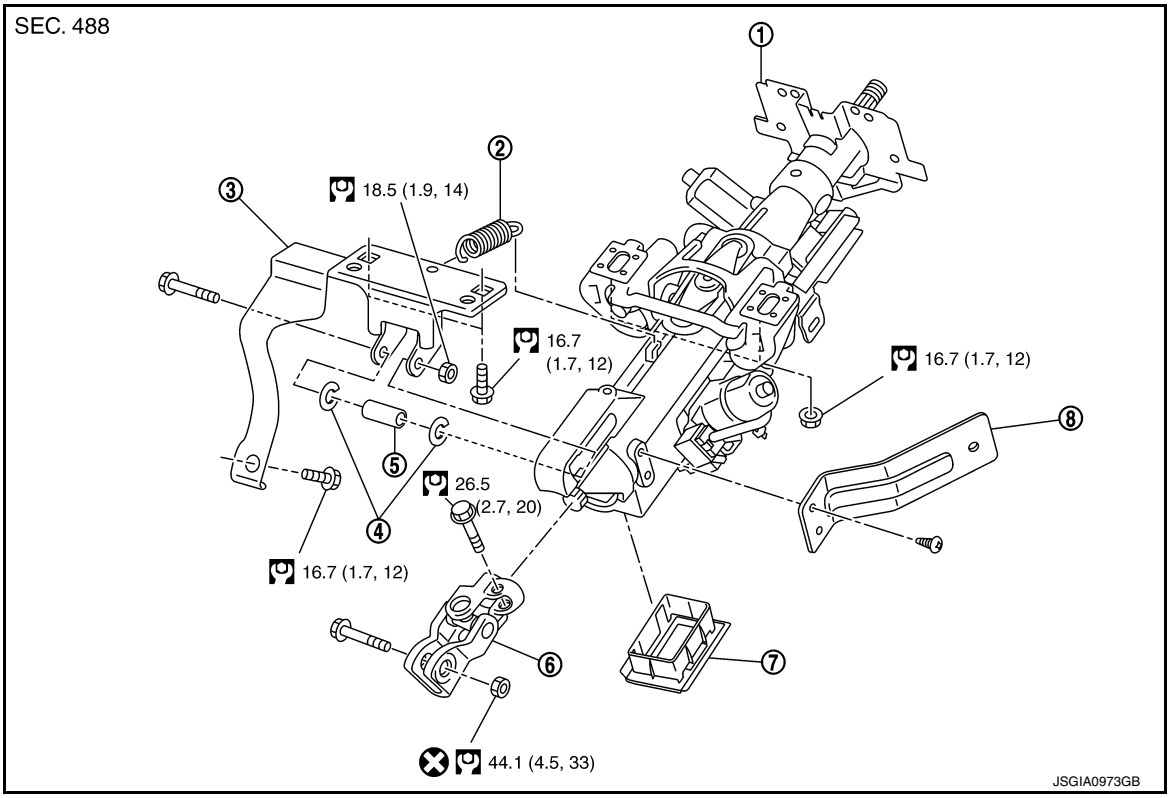

1. Steering column assembly
2. Spring
3. Bracket
4. Spacer
5. Collar
6. Upper joint
7. Dust cover
8. Bracket

Refer to GI-4, "Components" for symbols in the figure.

WITH ELECTRIC MOTOR : Removal and Installation

INFOID:0000000012173204

REMOVAL

1. Set the vehicle to the straight-ahead position.
2. Place the tilt to the highest level. Place the telescopic to the longest level.
3. Remove driver air bag module. Refer to SR-11, "Exploded View".
4. Remove steering wheel. Refer to ST-16, "Exploded View".
5. Remove instrument driver lower panel. Refer to IP-12, "Exploded View".
6. Remove the steering column cover. Refer to IP-12, "Exploded View".
7. Remove spiral cable. Refer to SR-14, "Exploded View".
8. Remove combination switch. Refer to BCS-98, "Exploded View".
9. Remove knee protector.
10. Remove combination meter. Refer to MWI-136, "Exploded View".
11. Disconnect each switch harness connectors installed to steering column assembly.
12. Remove the upper joint mounting bolt and nut (lower shaft side), and separate the joint from lower shaft.
    CAUTION:
    When removing upper joint, never insert a tool, such as a screwdriver, into the yoke groove to pull out the upper joint. In case of the violation of the above, replace upper joint with a new one.
13. Remove steering column assembly.
    CAUTION:
    - **Never give axial impact to steering column assembly during removal.**
    - **Never move steering gear assembly when removing steering column assembly.**

- **Never rotate the lower shaft.**

14. Remove dust cover from steering column assembly.
    CAUTION:
    Remove dust cover only when necessary.

INSTALLATION

Note the following, and install in the reverse order of removal.

- To install dust cover (1), face the arrow of dust cover toward the hole (A) of steering column assembly (2) as shown in the figure.
  CAUTION:
  Check that there is no clearance between dust cover and steering column assembly.

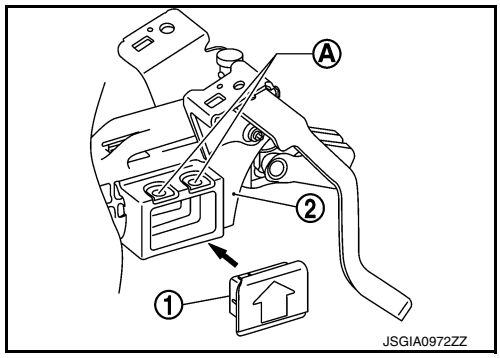

- Make sure there is no space between clip (1) and steering column assembly (2).

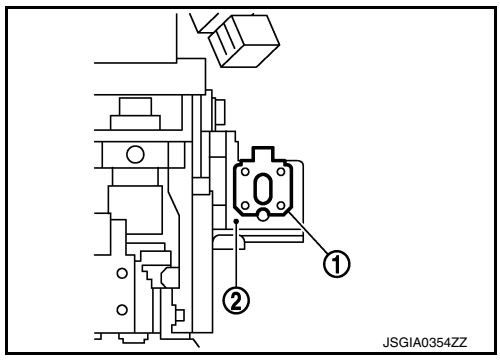

- Tighten the mounting bolts in the order shown in the figure when installing the steering column assembly.
  CAUTION:
  - **Never give axial impact to steering column assembly during installation.**
  - **Never move steering gear assembly.**
  - **Never reuse the joint mounting nut (lower shaft side).**
- Adjust neutral position of steering angle sensor. Refer to BRC-8, "ADJUSTMENT OF STEERING ANGLE SENSOR NEUTRAL POSITION : Special Repair Requirement".

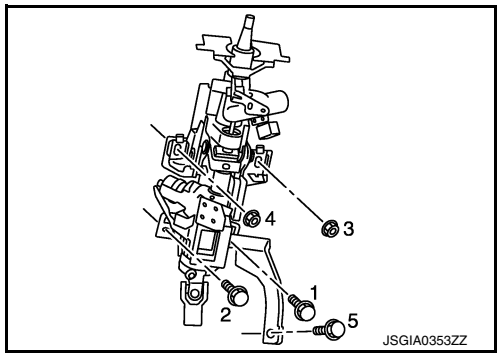

WITH ELECTRIC MOTOR : Inspection

INFOID:0000000012173205

INSPECTION AFTER REMOVAL

- Check each part of steering column assembly for damage or other malfunctions. Replace if necessary.
- Measure steering column assembly rotating torque using a preload gauge [SST: ST3127S000 (J-25765-A)]. Replace steering column assembly if outside the standard.

Rotating torque	**: Refer to ST-54, "Steering Column Operating Range".**

- Measure the length (L) as shown, if vehicle has been involved in a minor collision. Replace steering column assembly if out side the standard.

Steering column length (L) **: Refer to ST-54, "Steering Column Length".**

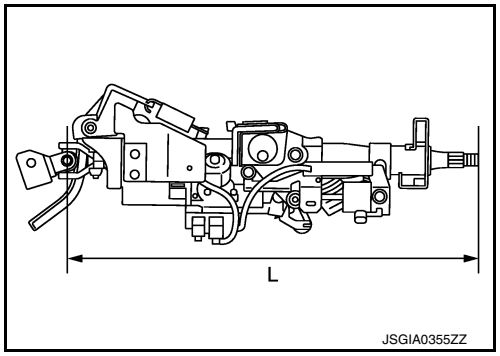

- Install the bracket (1) and steering column housing (2) so that the clearance (A) is within the specified range as described below. Replace steering column assembly if out side the standard.

Mounting dimensions (A) **: Refer to ST-54, "Steering Column Mounting Dimensions".**

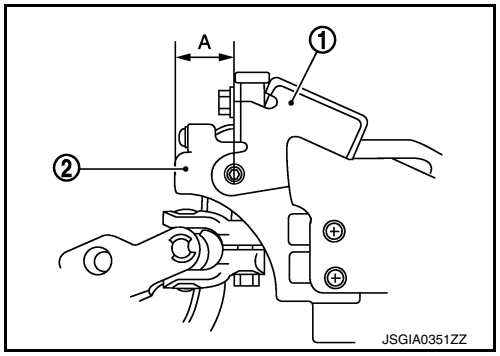

INSPECTION AFTER INSTALLATION

- Check each part of steering column assembly for damage or other malfunctions. Replace if necessary.
- Check the steering wheel play, neutral position steering wheel, steering wheel turning force, and front wheel turning angle. Refer to ST-13, "Inspection".
- Check tilt and telescopic mechanism operating range tilt operating range (L1), telescopic operating range (L2) as shown in the figure.

Tilt operating range (L1) **: Refer to ST-54, "Steering Column Operating Range".**

Telescopic operating range (L2) **: Refer to ST-54, "Steering Column Operating Range".**

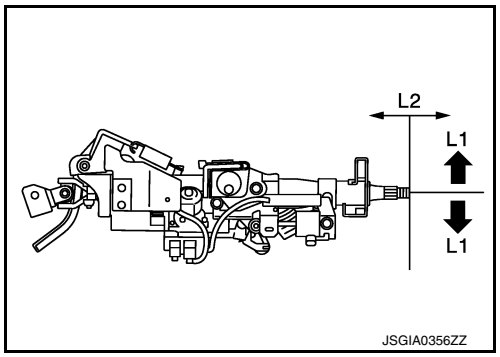

- Adjust neutral position of steering angle sensor. Refer to BRC-8, "ADJUSTMENT OF STEERING ANGLE SENSOR NEUTRAL POSITION : Special Repair Requirement".

LOWER SHAFT

Exploded View

INFOID:0000000012173206

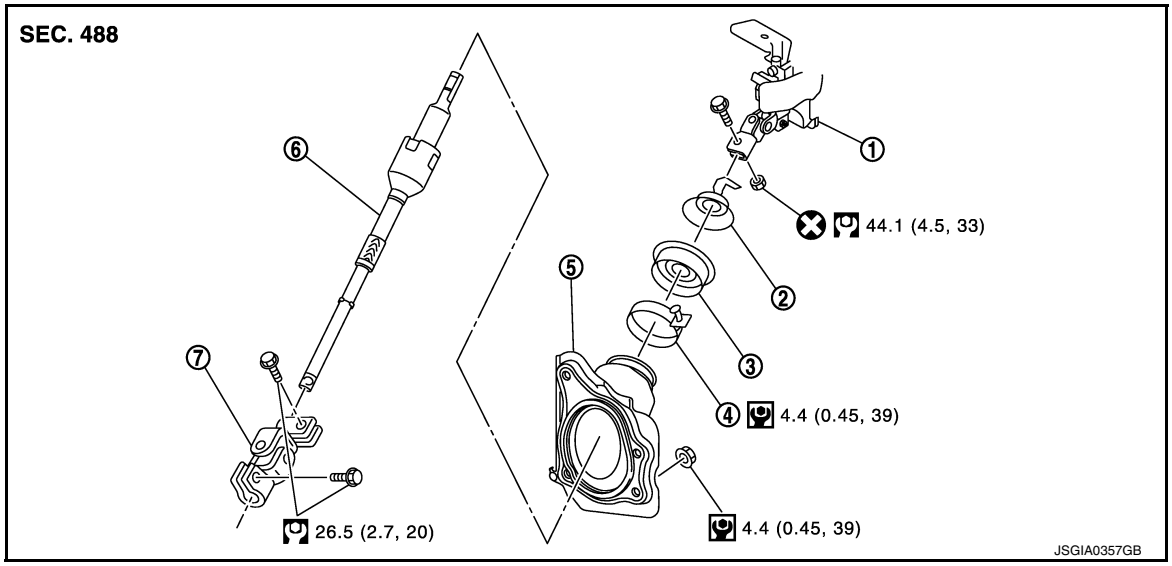

1. Steering column assembly
2. Collar
3. Hole cover seal
4. Clamp
5. Hole cover
6. Lower shaft
7. Lower joint

Refer to GI-4, "Components" for symbols in the figure.

Removal and Installation

INFOID:0000000012173207

REMOVAL

1. Set the vehicle to the straight-ahead position.
2. Fix the steering wheel.
3. Remove lower joint fixing bolt (steering gear side).
4. Separate the lower joint from the steering gear assembly by sliding the slide shaft (A: sliding range).
   CAUTION:
   - **Spiral cable may be cut if steering wheel turns while separating steering column assembly and steering gear assembly. Be sure to secure steering wheel using string to avoid turning.**
   - **When removing lower joint, never insert a tool, such as a screwdriver, into the yoke groove to pull out the lower joint. In case of the violation of the above, replace lower joint with a new one.**

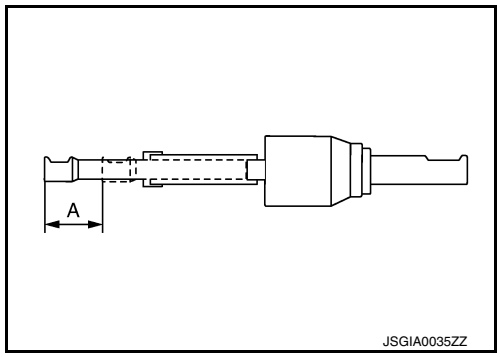

5. Remove the accelerator pedal bracket and lever assembly. Refer to ACC-4, "Exploded View".
6. Remove the parking brake wire clamp stay.
7. Remove the hole cover mounting nuts.
8. Remove the upper joint fixing bolt and nut (lower shaft side).
9. Remove the lower shaft and hole cover.
10. Remove collar, hole cover seal, clamp and hole cover.

INSTALLATION

Note the following, and install in the reverse order of removal.

CAUTION:

Spiral cable may be cut if steering wheel turns while separating steering column assembly and steering gear assembly. Be sure to secure steering wheel using string to avoid turning.

- Tighten the clamp to the specified torque and check the clamp length (A).

A : 14.0 – 18.0 mm (0.551 – 0.709 in)

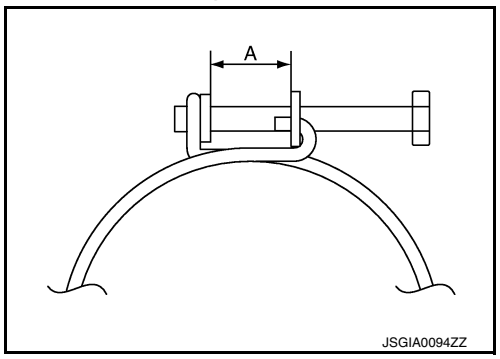

- When installing lower joint to steering gear assembly, follow the procedure listed below.
- Set rack of steering gear in the neutral position.

NOTE:
To get the neutral position of rack, turn gear-sub assembly and measure the distance of inner socket, and then measure the intermediate position of the distance.

- Align rear cover cap projection (A) with the marking position of gear housing assembly (B).

⬅ : Bolt

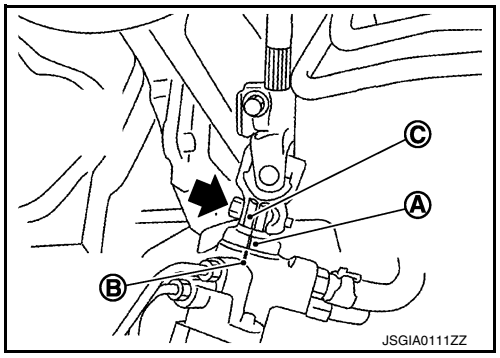

- Install slit part of lower joint (C) aligning with the rear cover cap projection (A). Make sure that the slit part of lower joint is aligned with rear cover cap projection and the marking position of gear housing assembly (B).
- Adjust neutral position of steering angle sensor. Refer to BRC-8, "ADJUSTMENT OF STEERING ANGLE SENSOR NEUTRAL POSITION : Special Repair Requirement".
- Check the following after installation:
- Check if steering wheel turns smoothly when it is turned several times fully to the end of the left and right.
- Check the steering wheel play, neutral position steering wheel, steering wheel turning force, and front wheel turning angle. Refer to ST-13, "Inspection".

Inspection

INFOID:0000000012173208

- Check the length (A) (extended position) of the lower shaft.

Lower shaft length (A) : Refer to ST-55, "Lower Shaft Length".

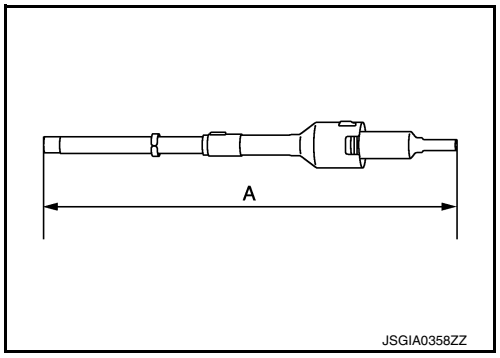

- Check each part of lower shaft for damage or other malfunctions. Replace if there are.

STEERING GEAR AND LINKAGE

2WD

2WD : Exploded View

INFOID:0000000012173209

REMOVAL

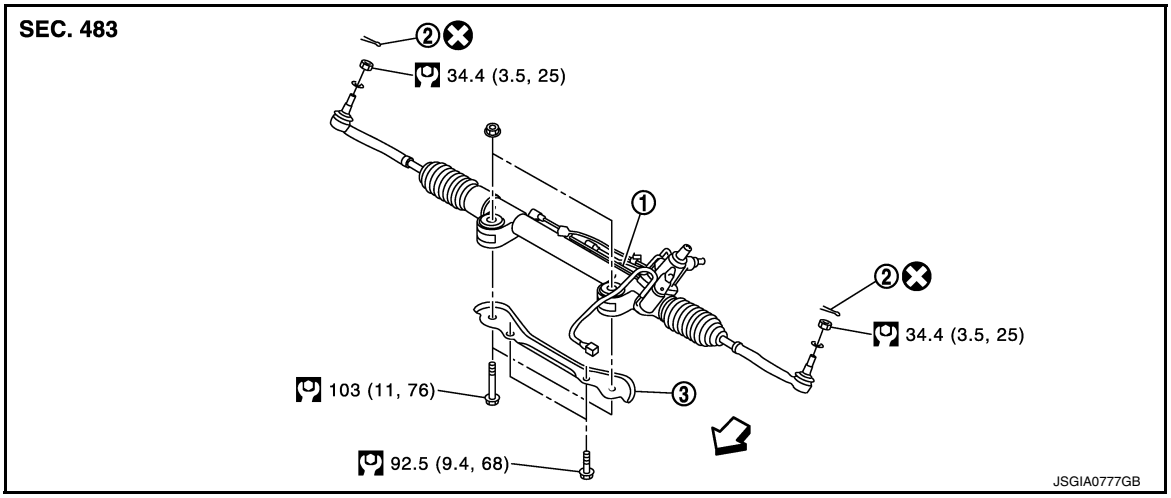

1. Steering gear assembly
2. Cotter pin
3. Rack stay

⇦: Vehicle front

Refer to GI-4, "Components" for symbols in the figure.

DISASSEMBLY

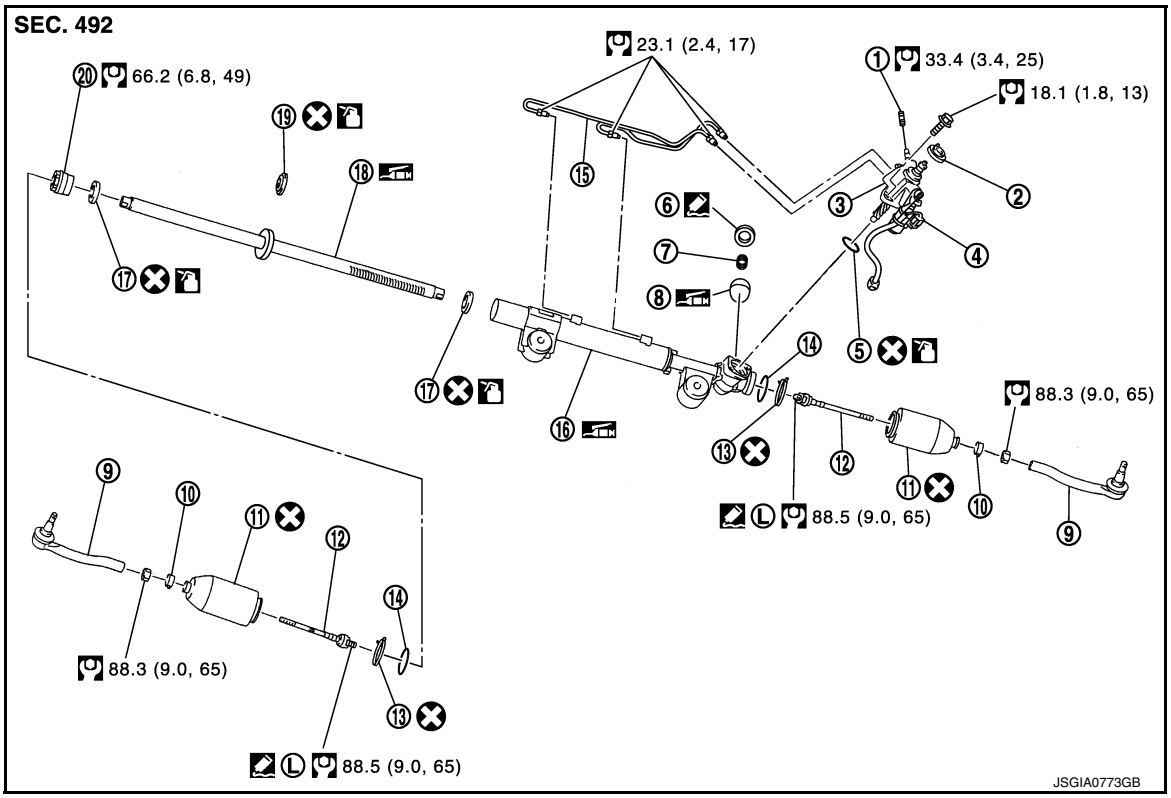

1. Low pressure piping
2. Rear cover cap
3. Gear-sub assembly
4. Power steering solenoid valve
5. O-ring
6. Adjusting screw

7. Spring	8. Retainer	9. Outer socket
10. Boot clamp	11. Boot	12. Inner socket
13. Boot clamp (stainless wire)	14. Spacer	15. Cylinder tubes
16. Gear housing assembly	17. Rack oil seal	18. Rack assembly
19. Rack Teflon ring	20. End cover assembly	

: Apply power steering fluid.

: Apply Genuine High Performance Thread Sealant or equivalent. Refer to GI-22, "Recommended Chemical Products and Sealants".

Ⓛ:Apply Genuine Medium Strength Thread Locking Sealant or equivalent. Refer to GI-22, "Recommended Chemical Products and Sealants".

: Apply multi-purpose grease.

Refer to GI-4, "Components" for symbols not described on the above.

2WD : Removal and Installation

INFOID:0000000012173210

REMOVAL

1. Set the vehicle to the straight-ahead position.
2. Remove tires with a power tool.
3. Remove front suspension member stay. Refer to FSU-19, "Exploded View".
4. Remove engine lower cover. Refer to EXT-31, "Exploded View".
5. Remove cotter pin (1), and then loosen the nut.
6. Remove steering outer socket (2) from steering knuckle (3) so as not to damage ball joint boot (4) using ball joint remover (commercial service tool).
   CAUTION:
   Temporarily tighten the nut to prevent damage to threads and to prevent the ball joint remover from suddenly coming off.
7. Remove high pressure piping and low pressure piping of hydraulic piping, and then drain power steering fluid.

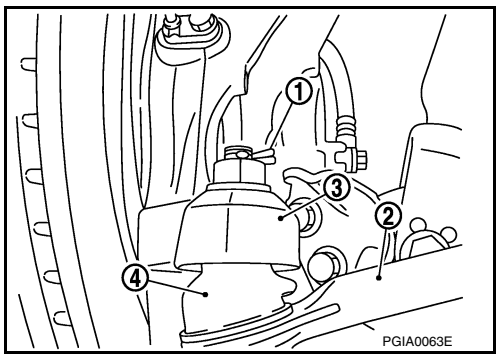

8. Remove power steering solenoid valve harness connector (1).
9. Remove rack stay. Refer to ST-26, "2WD : Exploded View".
10. Remove lower joint fixing bolt (steering gear side).

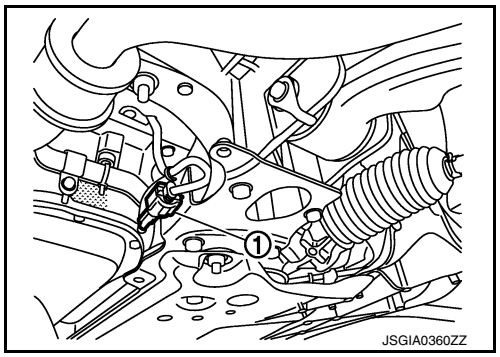

11. Separate the lower joint from the steering gear assembly by sliding the slide shaft (A: sliding range).
    CAUTION:
    - **Spiral cable may be cut if steering wheel turns while separating steering column assembly and steering gear assembly. Be sure to secure steering wheel using string to avoid turning.**
    - **When removing lower joint, never insert a tool, such as a screwdriver, into the yoke groove to pull out the lower joint. In case of the violation of the above, replace lower joint with a new one.**

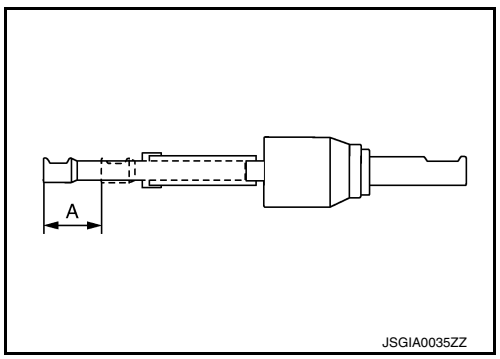

12. Remove steering gear assembly.

INSTALLATION

Note the following, and install in the reverse order of removal.

CAUTION:

Spiral cable may be cut if steering wheel turns while separating steering column assembly and steering gear assembly. Be sure to secure steering wheel using string to avoid turning.

- Tighten the mounting bolts in the order shown in the figure when installing the steering gear assembly.

  Temporary tightening: 1 ⇒ 2 ⇒ 3 ⇒ 4

  Final tightening: 1 ⇒ 2 ⇒ 3 ⇒ 4

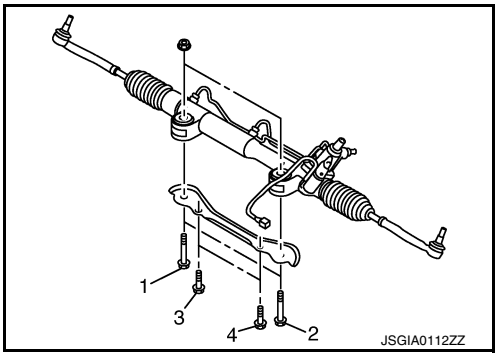

- When installing suction hoses (1), refer to the figure.

  CAUTION:
  - **Never apply fluid to the hose (1) and tube (2).**
  - **Insert hose securely until it contacts spool (A) of tube.**
  - **Leave clearance (L) when installing clamp (3).**

  L : 3 – 8 mm (0.12 – 0.31 in)

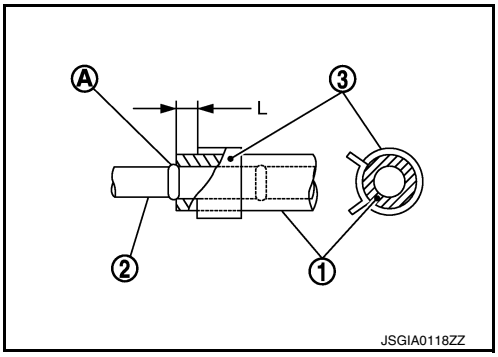

- When installing lower joint to steering gear assembly, follow the procedure listed below.

- Set rack of steering gear in the neutral position.

  NOTE:

  To get the neutral position of rack, turn gear-sub assembly and measure the distance of inner socket, and then measure the intermediate position of the distance.

- Align rear cover cap projection (A) with the marking position of gear housing assembly (B).

  ⬅ : Bolt

- Install slit part of lower joint (C) aligning with the rear cover cap projection (A). Make sure that the slit part of lower joint is aligned with rear cover cap projection and the marking position of gear housing assembly (B).

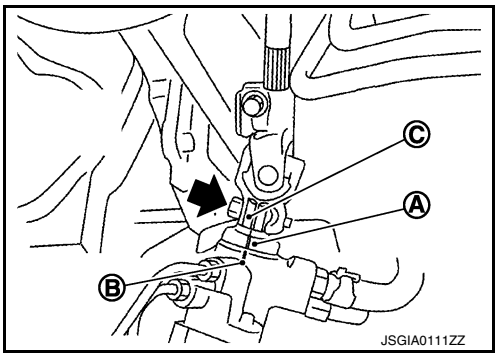

- After installation, bleed air from the steering hydraulic system. Refer to ST-11, "Inspection".
- Perform final tightening of nuts and bolts on each part under unladen conditions with tires on level ground when removing steering gear assembly. Check wheel alignment. Refer to FSU-8, "Inspection".
- Adjust neutral position of steering angle sensor after checking wheel alignment. Refer to BRC-8, "ADJUSTMENT OF STEERING ANGLE SENSOR NEUTRAL POSITION : Special Repair Requirement".

2WD : Disassembly and Assembly

INFOID:0000000012173211

DISASSEMBLY

1. Remove low pressure piping.

   CAUTION:
   - **Disassemble and assemble steering gear assembly by fixing the mounting area with a vise using copper plates.**

- **Clean steering gear assembly with kerosene before disassembling. Be careful to avoid splashing or applying any kerosene over connector of discharge port or return port.**

2. Remove cylinder tubes from gear housing assembly.
3. Remove rear cover cap from gear-sub assembly.
4. Measure adjusting screw height “H”, and loosen adjusting screw.
   CAUTION:
   - **Never loosen adjusting screw 2 turns or more.**
   - **Replace steering gear assembly if adjusting screw is loosened 2 turns or more and it is removed.**
5. Remove gear-sub assembly from gear housing assembly.
6. Remove O-ring from gear housing assembly.
7. Loosen outer socket lock nut, and remove outer socket.
8. Remove boot clamps, and then remove boot from inner socket.
   CAUTION:
   Never damage inner socket and gear housing assembly when removing boot. Inner socket and gear housing assembly must be replaced if inner socket and gear housing assembly are damaged because it may cause foreign material interfusion.

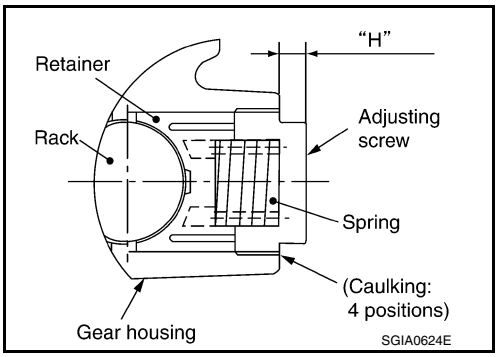

9. Remove inner socket from gear housing assembly.
10. Remove spacer from gear housing assembly.
11. Drill out the clinching part of gear housing assembly (end cover assembly side) outer rim with a 3 mm (0.12 in) drill bit. [Drill for approximately 1.5 mm (0.059 in) depth.]

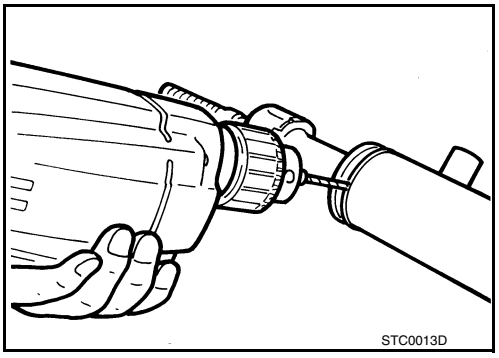

12. Remove end cover assembly with a 36 mm (1.42 in) open head (commercial service tool).
    CAUTION:
    Never damage rack assembly surface when removing. Rack assembly must be replaced if damaged because it may cause fluid leakage.
13. Pull rack assembly together with rack oil seal (outer side) out from gear housing assembly.
    CAUTION:
    Never damage cylinder inner wall when remove rack assembly. Gear housing assembly must be replaced if damaged because it may cause fluid leakage.

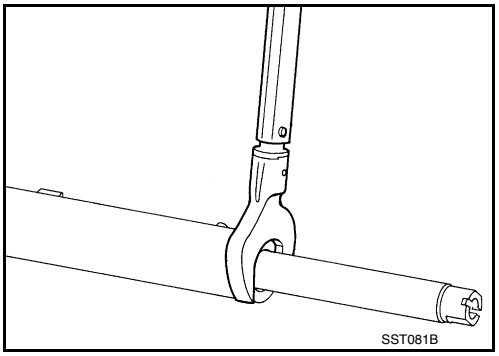

14. Heat rack Teflon ring to approximately 40°C (104°F) with a dryer, and remove rack Teflon ring from rack assembly.
    CAUTION:
    Never damage rack assembly. Rack assembly must be replaced if damaged because it may cause fluid leakage.

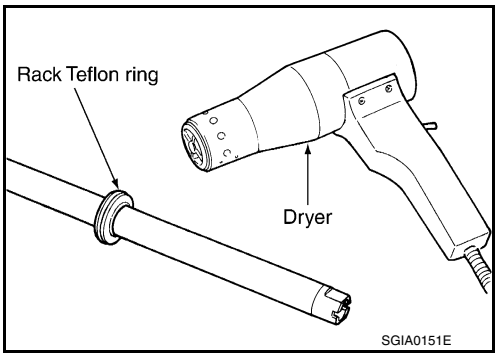

15. Push rack oil seal inside with a 29 mm (1.14 in) socket and an extension bar to push out rack oil seal (inner side) from gear housing assembly.
CAUTION:
Never damage gear housing assembly and cylinder inner wall. Gear housing assembly must be replaced if damaged because it may cause fluid leakage.

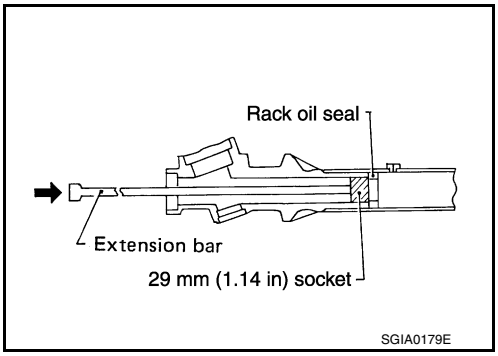

ASSEMBLY

1. Heat rack Teflon ring to approximately 40°C (104°F) with a dryer. Assemble it to mounting groove of rack assembly.
CAUTION:
Never reuse rack Teflon ring.

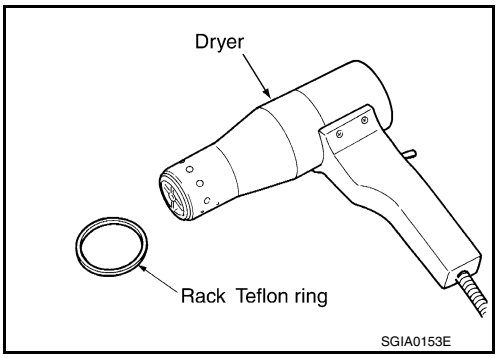

2. Install the Teflon ring correcting tool [SST: KV48104400 (—)] from tooth side of rack to fit rack Teflon ring on rack. Compress the ring with tool.

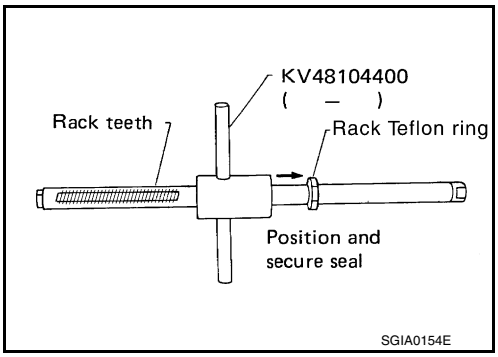

3. Apply recommended grease to rack oil seal, and then install rack oil seal in the following procedure. Then assemble rack assembly to gear housing assembly.
CAUTION:
- **Install rack oil seal in a direction so that the lip of inner oil seal and the lip of outer oil seal face each other.**
- **Never damage retainer sliding surface by rack assembly. Replace gear housing assembly if damaged.**
- **Never damage gear housing assembly inner wall by rack assembly. Gear housing assembly must be replaced if damaged because it may cause fluid leakage.**
- **Never reuse rack oil seal.**

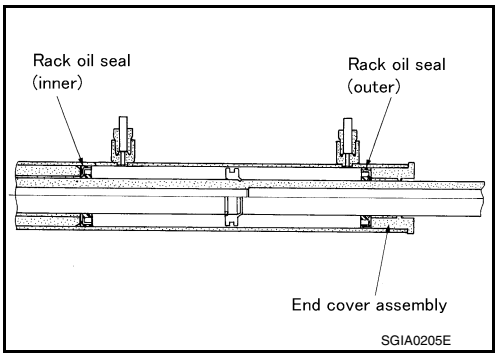

a. Wrap an OHP sheet [approximately 70 mm (2.76 in) × 100 mm (3.94 in)]. Around rack assembly teeth to avoid damaging rack oil seal (inner). Install rack oil seal over sheet. Then, pull OHP sheet along with rack oil seal until they pass rack assembly teeth, and remove OHP sheet.

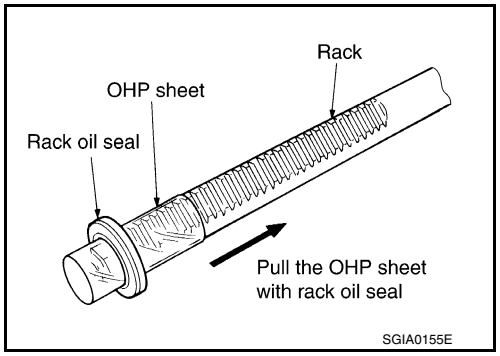

b. Insert rack oil seal (inner) into rack assembly piston (rack Teflon ring).

c. Push retainer to adjusting screw side by hand, and move the rack assembly inside the gear housing assembly so that the rack oil seal (inner) can be pressed against the gear housing assembly.

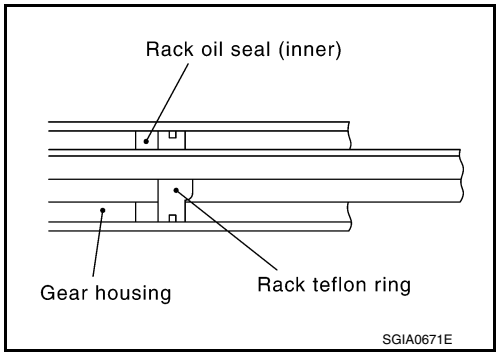

d. Wrap an OHP sheet [approximately 70 mm (2.76 in) × 100 mm (3.94 in)]. Around the edge to avoid damaging rack oil seal (outer). Install rack oil seal over sheet. Then, pull oil seal along with OHP sheet until they pass rack edge, and remove OHP sheet.

e. Install end cover assembly to rack edge, and move rack oil seal (outer) until it contacts with gear housing assembly.

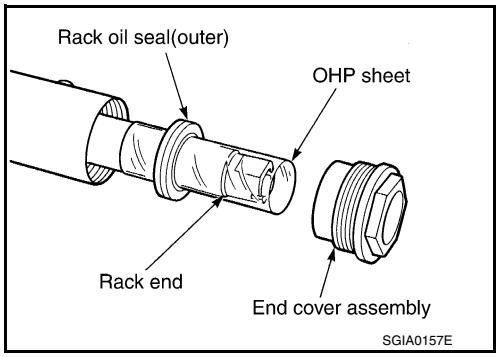

4. Tighten end cover assembly to specified torque using a 36 mm (1.42 in) open head (commercial service tool).
CAUTION:
Never damage rack assembly. Replace it if damaged because it may cause fluid leakage.

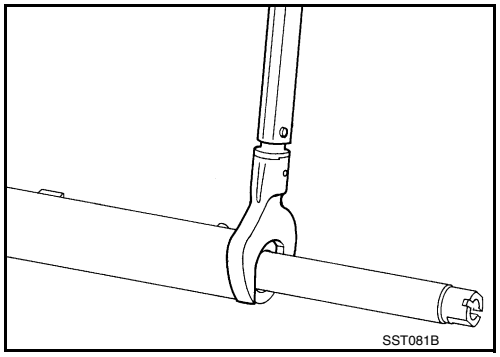

5. Crimp gear housing assembly at one point using a punch as shown in the figure so as to prevent end cover assembly from getting loose after tightening end cover assembly.

6. Apply recommended fluid to O-ring, and then install O-ring to gear housing assembly.

7. Install gear-sub assembly to gear housing assembly.
CAUTION:
In order to protect oil seal from any damage, insert gear-sub assembly straightly.

8. Install inner socket to gear housing assembly with the following procedure.

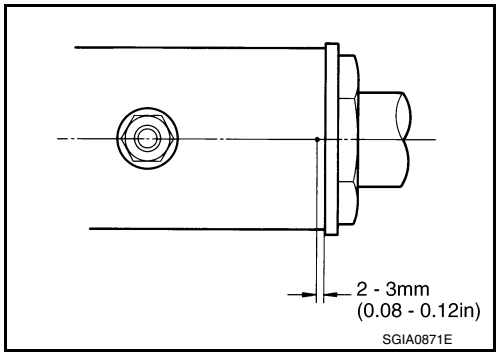

a. Install spacer to gear housing assembly.

b. Apply thread sealant into the thread of inner socket.
Use Genuine Medium Strength Thread Locking Sealant or equivalent. Refer to GI-22, "Recommended Chemical Products and Sealants".

9. Screw inner socket into rack part and tighten at the specified torque.

10. Decide on the neutral position of the rack stroke (L).

Rack stroke neutral position (L) : Refer to ST-55, "Rack Stroke".

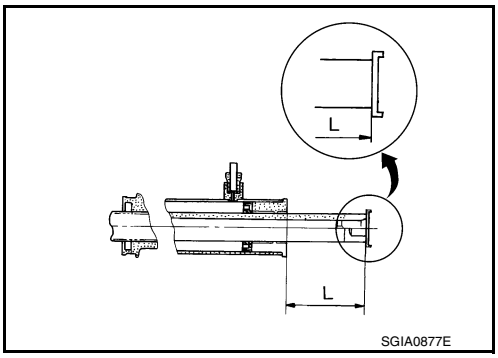

11. Install rear cover cap to gear sub-assembly.
CAUTION:
Make sure that the projection of rear cover cap is aligned with the marking position of gear housing assembly.

12. Apply recommended thread locking sealant to the thread (2 turns thread), and then screw in the adjusting screw until it reaches height "H" from gear housing assembly measured before disassembling.
Use Genuine High Performance Thread Sealant or equivalent. Refer to GI-22, "Recommended Chemical Products and Sealants".

13. Move rack assembly 10 strokes throughout the full stroke so that the parts can fit with each other.

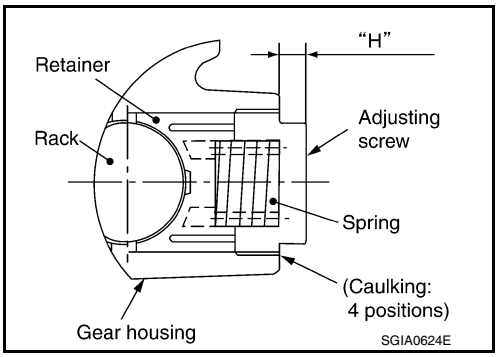

14. Adjust pinion rotating torque with the following procedure.

a. Measure pinion rotating torque within ±180° of neutral position of the rack assembly using Tools. Stop the gear at the point where highest torque is read.

A: Preload gauge [SST: ST3127S000 (J-25765-A)]

B: Preload adapter [SST: KV48103400 (—)]

b. Loosen adjusting screw and retighten to 5.4 N·m (0.55 kg-m, 48 in-lb), and then loosen by 20 to 40°.

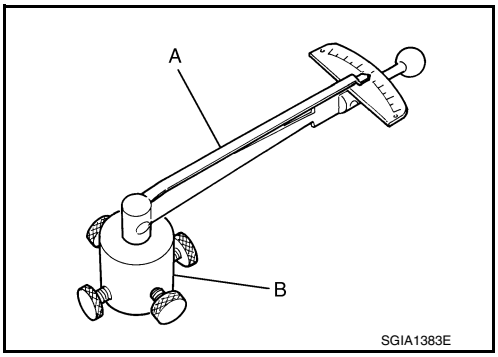

c. Measure pinion rotating torque using tools to make sure that the measured value is within the standard. Readjust if the value is outside the standard. Replace steering gear assembly, if the value is outside the standard after readjusting, or adjusting screw rotating torque is 5 N·m (0.51 kg-m, 44 in-lb) or less.

Pinion rotating torque

Around neutral position (within±100°) average "A"	**: 1.4 – 2.2 N·m (0.15 – 0.22 kg-m, 13 – 19 in-lb)**
Maximum variation "B"	**: 0.39 N·m (0.04 kg-m, 3.0 in-lb)**

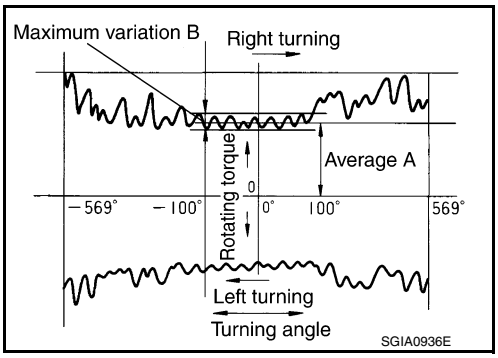

d. Turn pinion fully to left.

e. Install dial gauge at 5 mm (0.20 in) (L) from the edge of gear housing assembly (1), and tooth point.

f. Measure vertical movement of rack assembly when pinion is turned clockwise with torque of 19.6 N·m (2.0 kg-m, 14 ft-lb). Readjust adjusting screw angle if the measured value is outside the standard.

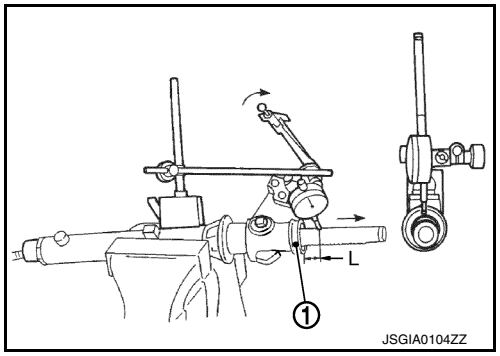

Vertical movement : 0.265 mm (0.0104 in)

- If reading is outside of the specification, readjust screw angle with adjusting screw.

CAUTION:
- **If reading is still outside of specification, or if the rotating torque of adjusting screw is less than 5 N·m (0.51 kg-m, 44 in-lb), replace steering gear assembly.**
- **Never turn adjusting screw more than twice.**
- **Replace steering gear assembly when adjusting screw is removed or turned more than twice.**

15. Install large end of boot to gear housing assembly.
16. Install small end of boot to inner socket boot mounting groove.
17. Install boot clamp to boot small end.

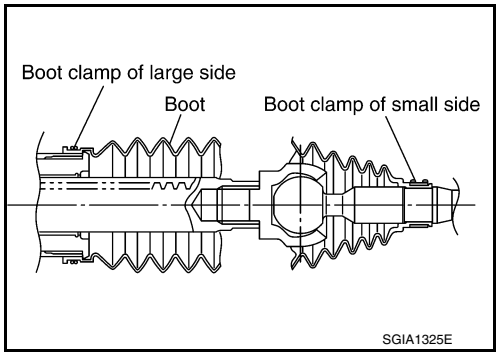

18. Install boot clamp to the large side of boot with the following procedure.

CAUTION:
Never reuse boot clamp.

a. Tighten large side of boot with boot clamp (stainless wire).

Wire length (L) : 370 mm (14.57 in)

b. Wrap clamp around boot groove for two turns. Insert a flat-bladed screwdriver in loops on both ends of wire. Twist 4 to 4.5 turns while pulling them with force of approximately 98 N (10 kg, 22 lb).

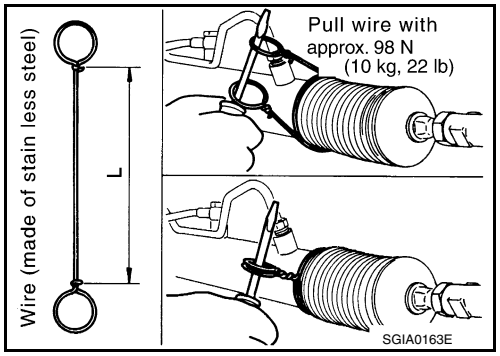

c. Twist boot clamp as shown. Pay attention to relationship between winding and twisting directions.

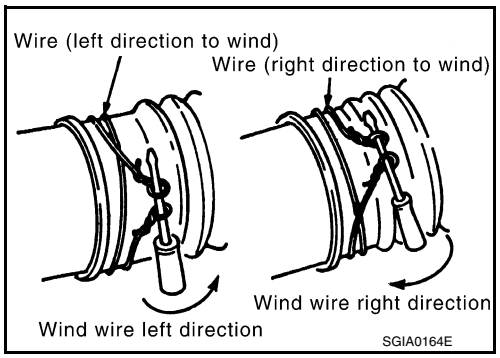

d. Twisted area (A) of clamp is in the adjusting screw side (1) as shown in the figure (to prevent contact with other parts).

A : 90°

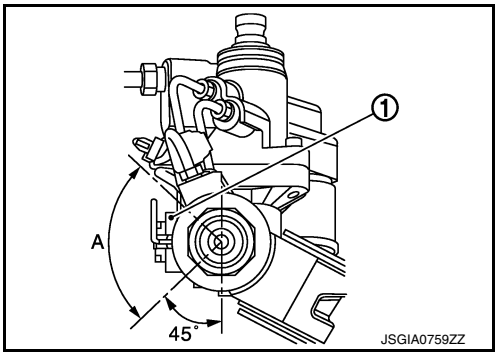

e. Bent cut end of the wire toward rack axial as shown in the figure after twisting the wire 4 to 4.5 turns so that cut end does not contact with boot.

CAUTION:
Keep gap from cylinder tube 5 mm (0.20 in) or more.

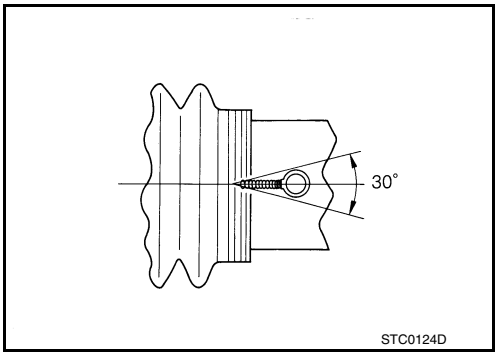

19. Install cylinder tubes to gear housing assembly.
20. Install low pressure piping.
21. Adjust inner socket to standard length (L), and then tighten lock nut (1) to the specified torque. Check length again after tightening lock nut.

Inner socket length (L) : Refer to ST-55, "Inner Socket Length".

CAUTION:
Adjust toe-in after this procedure. The length achieved after toe-in adjustment is not necessary the above value.

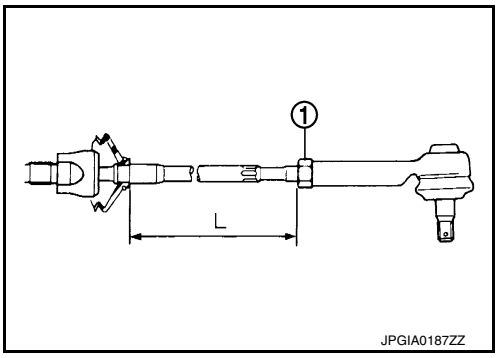

2WD : Inspection

INFOID:0000000012173212

INSPECTION AFTER INSTALLATION

- Check if steering wheel turns smoothly when it is turned several times fully to the end of the left and right.
- Check the steering wheel play, neutral position steering wheel, steering wheel turning force, and front wheel turning angle. Refer to ST-13, "Inspection".
- Check the fluid level, fluid leakage, and air bleeding hydraulic system. Refer to ST-11, "Inspection".
- Adjust neutral position of steering angle sensor. Refer to BRC-8, "ADJUSTMENT OF STEERING ANGLE SENSOR NEUTRAL POSITION : Special Repair Requirement".

INSPECTION AFTER DISASSEMBLY

Boot

Check boot for cracks, and replace it if a malfunction is detected.

Rack Assembly

Check rack for damage or wear, and replace it if a malfunction is detected.

Gear-Sub Assembly

- Check gear-sub assembly for damage or wear, and replace it if a malfunction is detected.
- Rotate gear-sub assembly and check for torque variation or rattle, and replace it if a malfunction is detected.

Gear Housing Assembly

Check gear housing assembly for damage and scratches (inner wall). Replace if there are.

Outer Socket and Inner Socket

Check the following items and replace the component if it does not meet the standard.

BALL JOINT SWINGING TORQUE

Hook a spring balance at the point shown in the figure and pull the spring balance. Make sure that the spring balance reads the specified value when ball stud and inner socket start to move. Replace outer socket and inner socket if they are outside the standard.

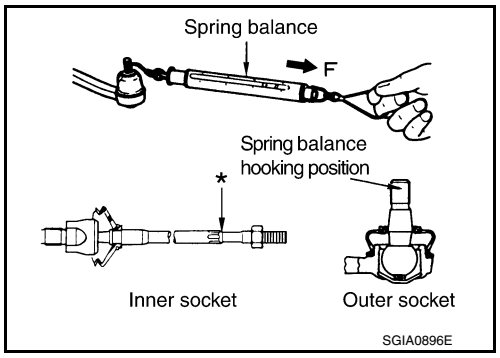

Outer socket

(Measuring point of outer socket: Stud cotter pin mounting hole)

: Refer to ST-55, "Socket Swing Force and Rotating Torque".

Inner socket

(Measuring point of inner socket: "*" mark shown in the figure)

: Refer to ST-55, "Socket Swing Force and Rotating Torque".

BALL JOINT ROTATING TORQUE

Make sure that the reading is within the following specified range using preload gauge (A) [SST: ST3127S000 (J-25765-A)]. Replace outer socket if the reading is outside the specified value.

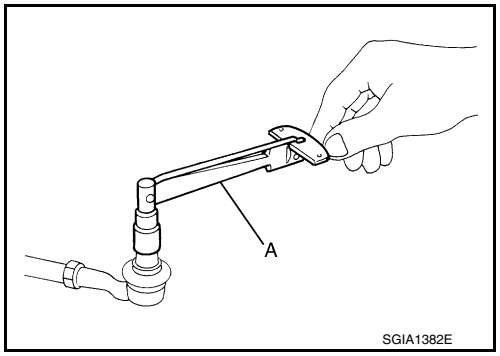

Rotating torque **: Refer to ST-55, "Socket Swing Force and Rotating Torque".**

BALL JOINT AXIAL END PLAY

Apply an axial load of 490 N (50 kg, 110 lb) to ball stud. Using a dial gauge, measure amount of stud movement, and then make sure that the value is within the following specified range. Replace outer socket (1) and inner socket (2) if the measured value is outside the standard.

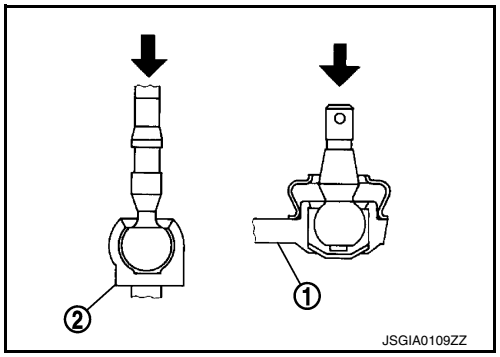

Outer socket **: Refer to ST-55, "Socket Axial End Play".**

Inner socket **: Refer to ST-55, "Socket Axial End Play".**

AWD

AWD : Exploded View

INFOID:0000000012173213

REMOVAL

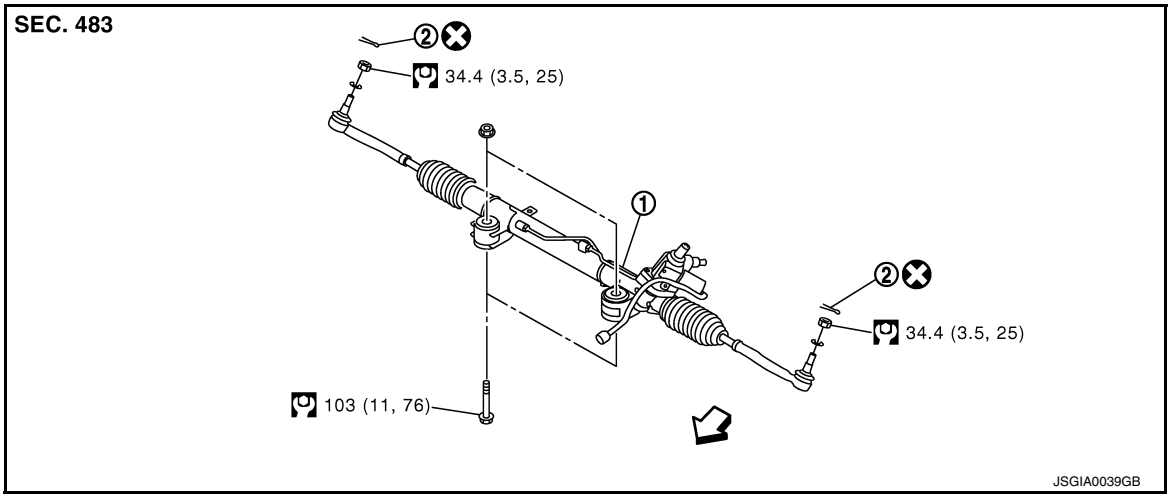

1. Steering gear assembly
2. cotter pin

⇦: Vehicle front

Refer to GI-4, "Components" for symbols in the figure.

DISASSEMBLY

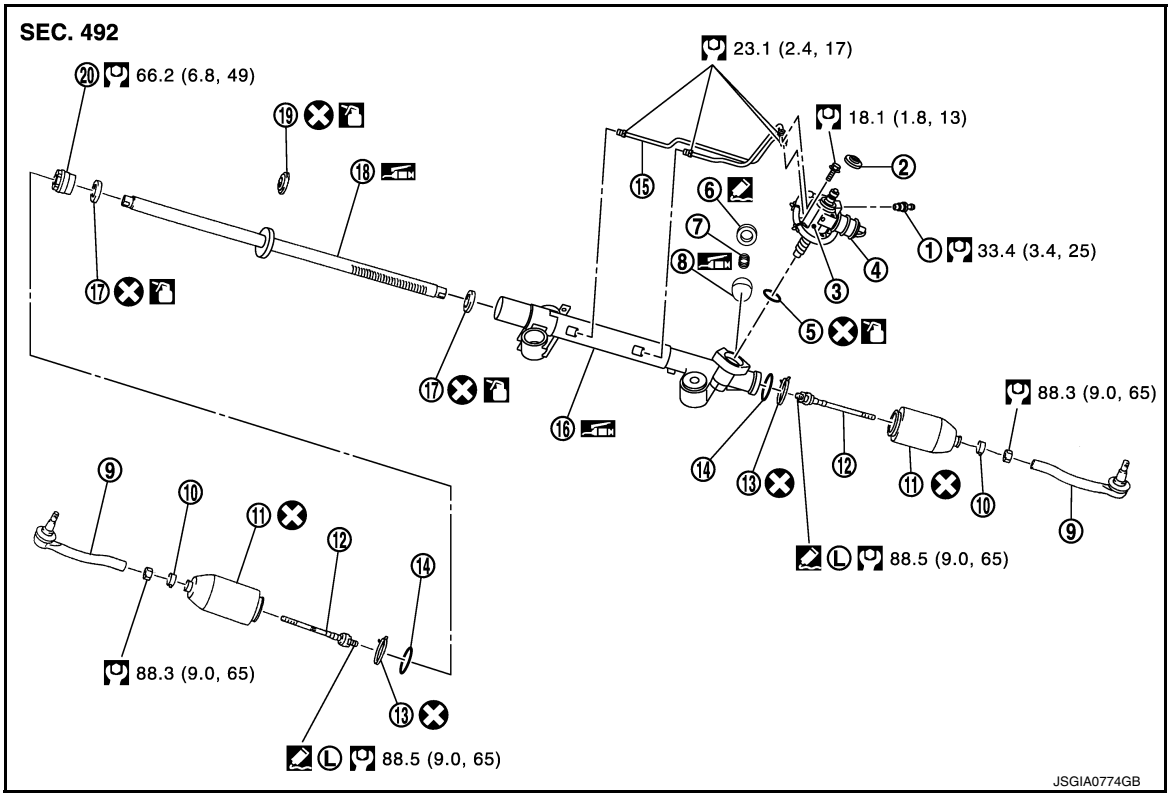

1. Low pressure piping
2. Rear cover cap
3. Gear-sub assembly
4. Power steering solenoid valve
5. O-ring
6. Adjusting screw
7. Spring
8. Retainer
9. Outer socket
10. Boot clamp
11. Boot
12. Inner socket
13. Boot clamp (stainless wire)
14. Spacer
15. Cylinder tubes
16. Gear housing assembly
17. Rack oil seal
18. Rack assembly
19. Rack Teflon ring
20. End cover assembly

: Apply power steering fluid.

: Apply Genuine High Performance Thread Sealant or equivalent. Refer to GI-22, "Recommended Chemical Products and Sealants".

Ⓛ:Apply Genuine Medium Strength Thread Locking Sealant or equivalent. Refer to GI-22, "Recommended Chemical Products and Sealants".

: Apply multi-purpose grease.

Refer to GI-4, "Components" for symbols not described on the above.

AWD : Removal and Installation

INFOID:0000000012173214

REMOVAL

1. Set the vehicle to the straight-ahead position.
2. Remove tires with a power tool.
3. Remove engine lower cover and front under cover. Refer to EXT-31, "Exploded View".
4. Remove front cross bar. Refer to FSU-39, "Exploded View".
5. Remove cotter pin (1), and then loosen the nut.
6. Remove steering outer socket (2) from steering knuckle (3) so as not to damage ball joint boot (4) using ball joint remover (commercial service tool).
   CAUTION:
   Temporarily tighten the nut to prevent damage to threads and to prevent the ball joint remover from suddenly coming off.
7. Remove high pressure piping and low pressure piping of hydraulic piping, and then drain power steering fluid.

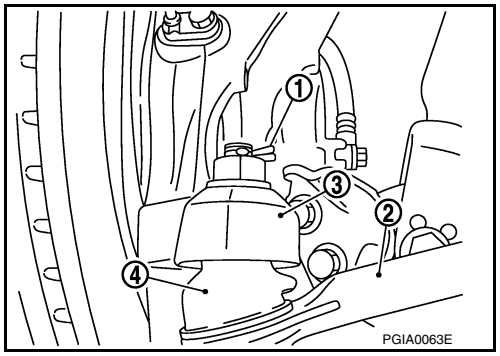

8. Remove steering hydraulic piping bracket from steering gear assembly.

   ⇦ : Vehicle front

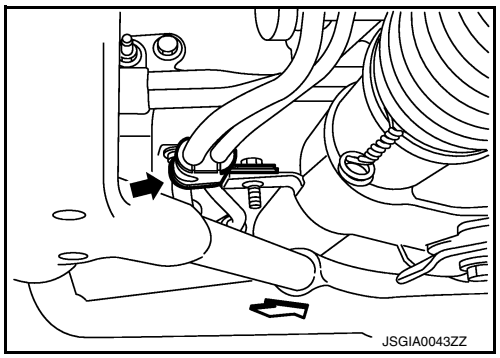

9. Remove power steering solenoid valve harness connector (1).
10. Remove lower joint fixing bolt (steering gear side).

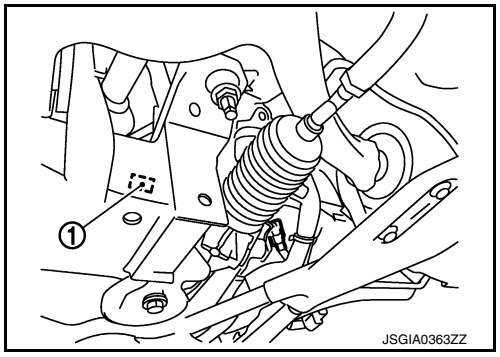

11. Separate the lower joint from the steering gear assembly by sliding the slide shaft (A: sliding range).
    CAUTION:
    - **Spiral cable may be cut if steering wheel turns while separating steering column assembly and steering gear assembly. Be sure to secure steering wheel using string to avoid turning.**
    - **When removing lower joint, never insert a tool, such as a screwdriver, into the yoke groove to pull out the lower joint. In case of the violation of the above, replace lower joint with a new one.**

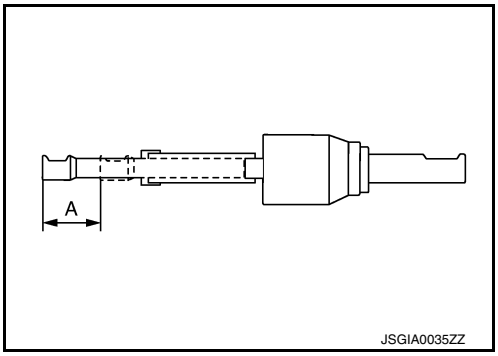

12. Remove the mounting bolts and nuts of steering gear assembly.
13. Remove steering gear assembly.

INSTALLATION

Note the following, and install in the reverse order of removal.

CAUTION:

Spiral cable may be cut if steering wheel turns while separating steering column assembly and steering gear assembly. Be sure to secure steering wheel using string to avoid turning.

- When installing suction hose (1), refer to the figure.
  CAUTION:
  - **Never apply fluid to the hose (1) and tube (2).**
  - **Insert hose securely until it contacts spool (A) of tube.**
  - **Leave clearance (L) when installing clamp (3).**

  L : 3 – 8 mm (0.12 – 0.31 in)

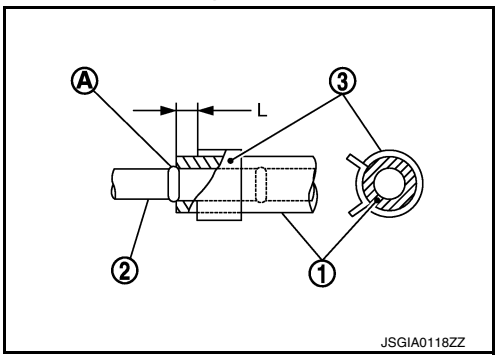

- When installing lower joint to steering gear assembly, follow the procedure listed below.
- Set rack of steering gear in the neutral position.
  NOTE:
  To get the neutral position of rack, turn gear-sub assembly and measure the distance of inner socket, and then measure the intermediate position of the distance.
- Align rear cover cap projection (A) with the marking position of gear housing assembly (B).

  ⬅ : Bolt

- Install slit part of lower joint (C) aligning with the rear cover cap projection (A). Make sure that the slit part of lower joint is aligned with rear cover cap projection and the marking position of gear housing assembly (B).

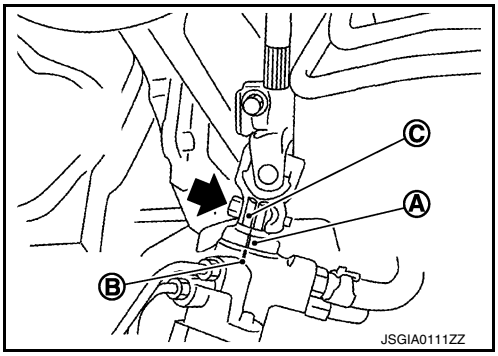

- After installation, bleed air from the steering hydraulic system. Refer to ST-11, "Inspection".
- Perform final tightening of nuts and bolts on each part under unladen conditions with tires on level ground when removing steering gear assembly. Check wheel alignment. Refer to FSU-28, "Inspection".
- Adjust neutral position of steering angle sensor after checking wheel alignment. Refer to BRC-8, "ADJUSTMENT OF STEERING ANGLE SENSOR NEUTRAL POSITION : Special Repair Requirement".

AWD : Disassembly and Assembly

INFOID:0000000012173215

DISASSEMBLY

1. Remove low pressure piping.
   CAUTION:
   - **Disassemble and assemble steering gear assembly by fixing the mounting area with a vise using copper plates.**

- **Clean steering gear assembly with kerosene before disassembling. Be careful to avoid splashing or applying any kerosene over connector of discharge port or return port.**

2. Remove cylinder tubes from gear housing assembly.
3. Remove rear cover cap from gear-sub assembly.
4. Measure adjusting screw height “H”, and loosen adjusting screw.
   CAUTION:
   - **Never loosen adjusting screw 2 turns or more.**
   - **Replace steering gear assembly if adjusting screw is loosened 2 turns or more and it is removed.**
5. Remove gear-sub assembly from gear housing assembly.
6. Remove O-ring from gear housing assembly.
7. Loosen outer socket lock nut, and remove outer socket.
8. Remove boot clamps, and then remove boot from inner socket.
   CAUTION:
   Never damage inner socket and gear housing assembly when removing boot. Inner socket and gear housing assembly must be replaced if inner socket and gear housing assembly are damaged because it may cause foreign material interfusion.
9. Remove inner socket from gear housing assembly.
10. Drill out the clinching part of gear housing assembly (end cover assembly side) outer rim with a 3 mm (0.12 in) drill bit. [Drill for approximately 1.5 mm (0.059 in) depth.]

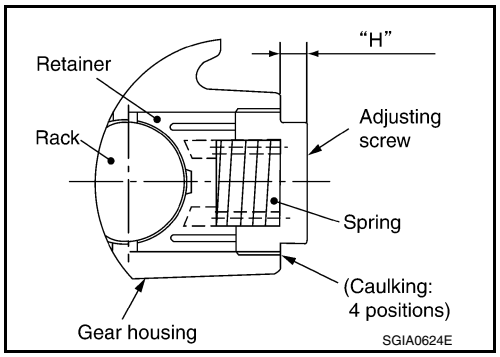

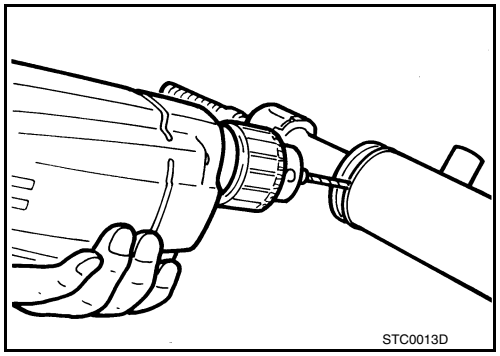

11. Remove end cover assembly with a 36 mm (1.42 in) open head (commercial service tool).
    CAUTION:
    Never damage rack assembly surface when removing. Rack assembly must be replaced if damaged because it may cause fluid leakage.
12. Pull rack assembly together with rack oil seal (outer side) out from gear housing assembly.
    CAUTION:
    Never damage cylinder inner wall when remove rack assembly. Gear housing assembly must be replaced if damaged because it may cause fluid leakage.
13. Heat rack Teflon ring to approximately 40°C (104°F) with a dryer, and remove rack Teflon ring from rack assembly.
    CAUTION:
    Never damage rack assembly. Rack assembly must be replaced if damaged because it may cause fluid leakage.

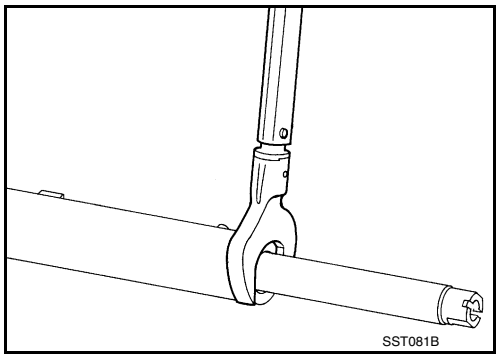

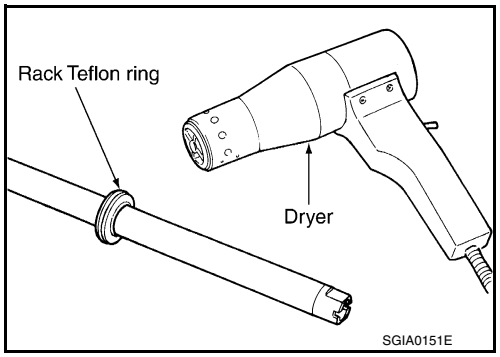

14. Push rack oil seal inside with a 29 mm (1.14 in) socket and an extension bar to push out rack oil seal (inner side) from gear housing assembly.
CAUTION:
Never damage gear housing assembly and cylinder inner wall. Gear housing assembly must be replaced if damaged because it may cause fluid leakage.

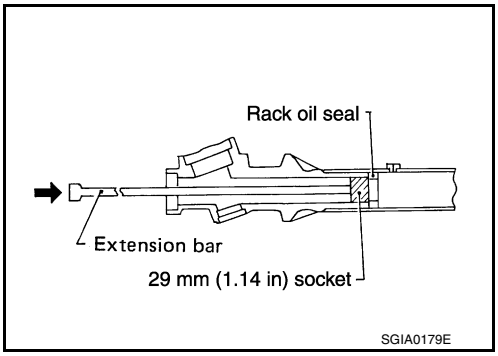

ASSEMBLY

1. Heat rack Teflon ring to approximately 40°C (104°F) with a dryer. Assemble it to mounting groove of rack assembly.
CAUTION:
Never reuse rack Teflon ring.

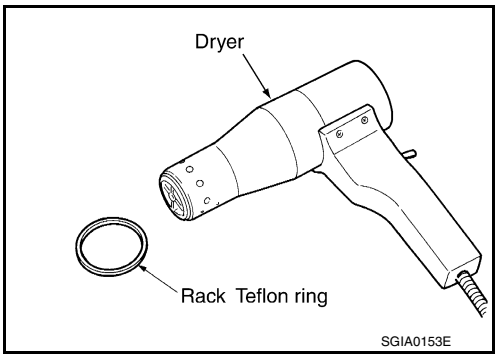

2. Install the Teflon ring correcting tool [SST: KV48104400 (—)] from tooth side of rack to fit rack Teflon ring on rack. Compress the ring with tool.

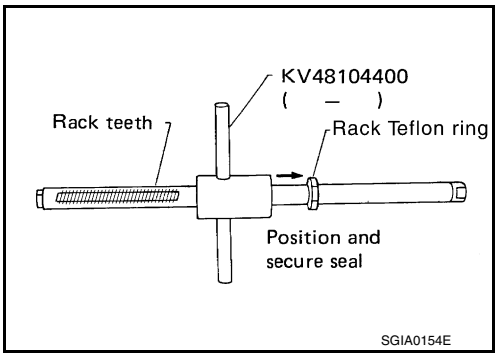

3. Apply recommended grease to rack oil seal, and then install rack oil seal in the following procedure. Then assemble rack assembly to gear housing assembly.
CAUTION:
- **Install rack oil seal in a direction so that the lip of inner oil seal and the lip of outer oil seal face each other.**
- **Never damage retainer sliding surface by rack assembly. Replace gear housing assembly if damaged.**
- **Never damage gear housing assembly inner wall by rack assembly. Gear housing assembly must be replaced if damaged because it may cause fluid leakage.**
- **Never reuse rack oil seal.**

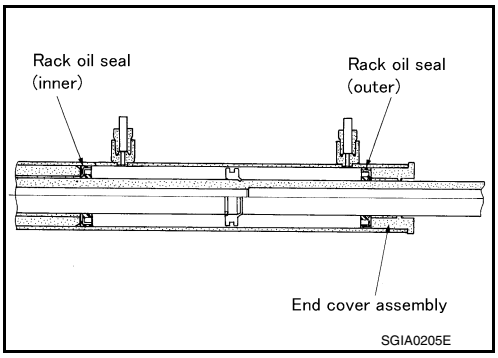

a. Wrap an OHP sheet [approximately 70 mm (2.76 in) × 100 mm (3.94 in)]. Around rack assembly teeth to avoid damaging rack oil seal (inner). Install rack oil seal over sheet. Then, pull OHP sheet along with rack oil seal until they pass rack assembly teeth, and remove OHP sheet.

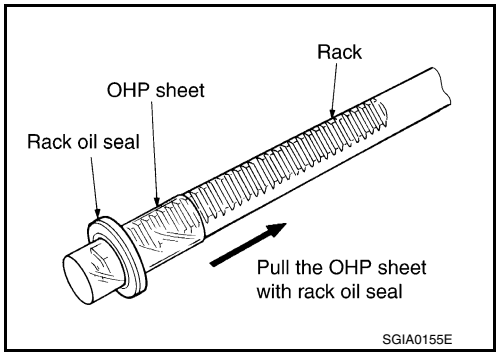

b. Insert rack oil seal (inner) into rack assembly piston (rack Teflon ring).

c. Push retainer to adjusting screw side by hand, and move the rack assembly inside the gear housing assembly so that the rack oil seal (inner) can be pressed against the gear housing assembly.

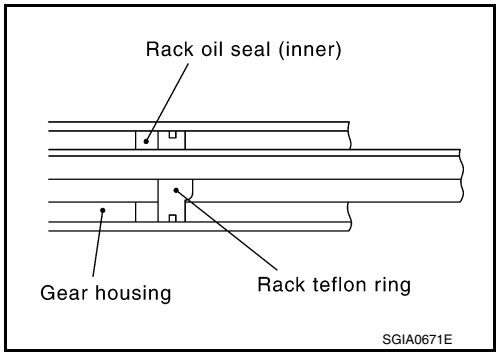

d. Wrap an OHP sheet [approximately 70 mm (2.76 in) × 100 mm (3.94 in)]. Around the edge to avoid damaging rack oil seal (outer). Install rack oil seal over sheet. Then, pull oil seal along with OHP sheet until they pass rack edge, and remove OHP sheet.

e. Install end cover assembly to rack edge, and move rack oil seal (outer) until it contacts with gear housing assembly.

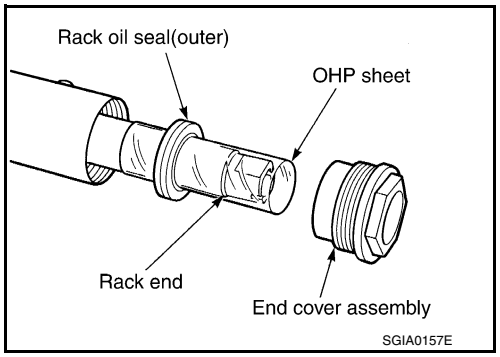

4. Tighten end cover assembly to specified torque using a 36 mm (1.42 in) open head (commercial service tool).
CAUTION:
Never damage rack assembly. Replace it if damaged because it may cause fluid leakage.

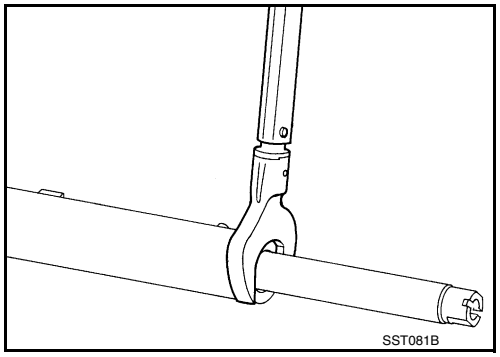

5. Crimp gear housing assembly at one point using a punch as shown in the figure so as to prevent end cover assembly from getting loose after tightening end cover assembly.

6. Apply recommended fluid to O-ring, and then install O-ring to gear housing assembly.

7. Install gear-sub assembly to gear housing assembly.
CAUTION:
In order to protect oil seal from any damage, insert gear-sub assembly straightly.

8. Install inner socket to gear housing assembly with the following procedure.

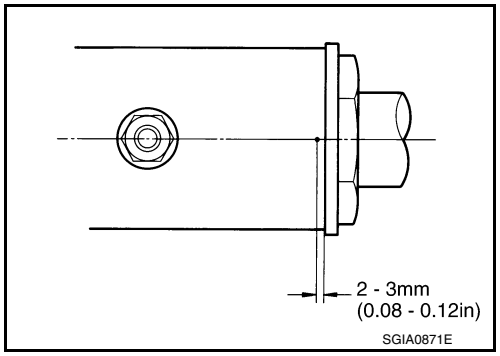

a. Apply thread sealant into the thread of inner socket.
Use Genuine Medium Strength Thread Locking Sealant or equivalent. Refer to GI-22, "Recommended Chemical Products and Sealants".

9. Decide on the neutral position of the rack stroke (L).

Rack stroke neutral position (L) : Refer to ST-55, "Rack Stroke".

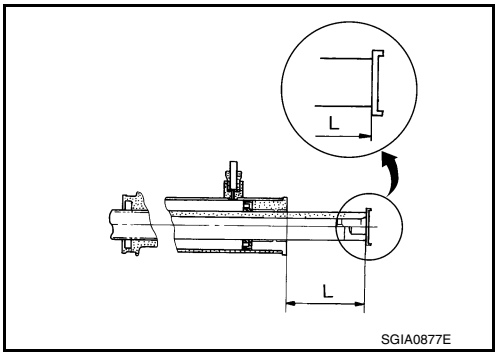

10. Install rear cover cap to gear sub-assembly.
CAUTION:
Make sure that the projection of rear cover cap is aligned with the marking position of gear housing assembly.

11. Apply recommended thread locking sealant to the thread (2 turns thread), and then screw in the adjusting screw until it reaches height "H" from gear housing assembly measured before disassembling.
Use Genuine High Performance Thread Sealant or equivalent. Refer to GI-22, "Recommended Chemical Products and Sealants".

12. Move rack assembly 10 strokes throughout the full stroke so that the parts can fit with each other.

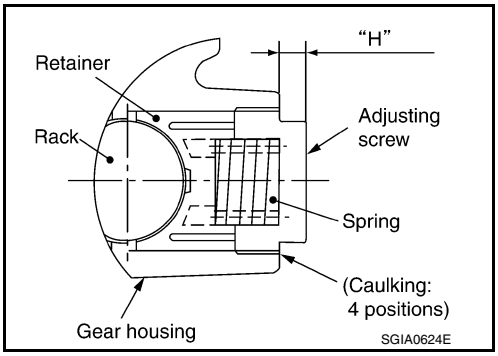

13. Adjust pinion rotating torque with the following procedure.

a. Measure pinion rotating torque within ±180° of neutral position of the rack assembly using tools. Stop the gear at the point where highest torque is read.

A: Preload gauge [SST: ST3127S000 (J-25765-A)]

B: Preload adapter [SST: KV48103400 (—)]

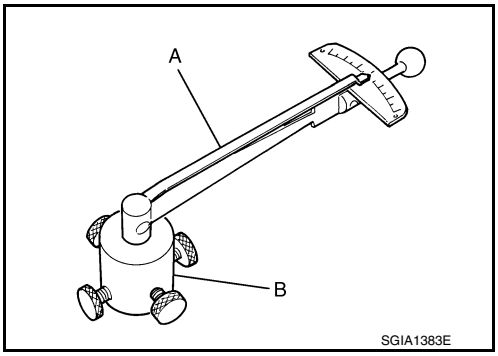

b. Loosen adjusting screw and retighten to 5.4 N·m (0.55 kg-m, 48 in-lb), and then loosen by 20 to 40°.

c. Measure pinion rotating torque using tools to make sure that the measured value is within the standard. Readjust if the value is outside the standard. Replace steering gear assembly, if the value is outside the standard after readjusting, or adjusting screw rotating torque is 5 N·m (0.51 kg-m, 44 in-lb) or less.

Pinion rotating torque

Around neutral position (within±100°) average (A)	**: 1.6 – 2.3 N·m (0.17 – 0.23 kg-m, 15 – 20 in-lb)**
Maximum variation (B)	**: 0.39 N·m (0.04 kg-m, 3.0 in-lb)**

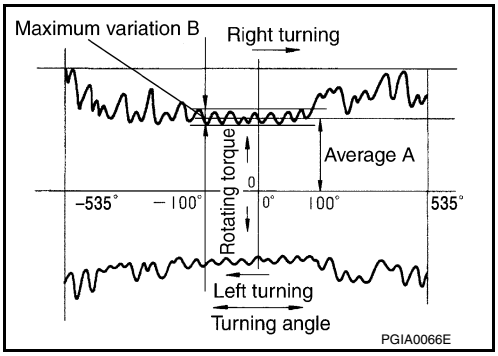

d. Apply recommended liquid gasket to inner socket and turn pinion fully to left with inner socket installed to gear housing assembly.

e. Install dial gauge at 5 mm (0.20 in) (L) from the edge of gear housing assembly (1), and tooth point.

f. Measure vertical movement of rack assembly when pinion is turned clockwise with torque of 19.6 N·m (2.0 kg-m, 14 ft-lb). Readjust adjusting screw angle if the measured value is outside the standard.

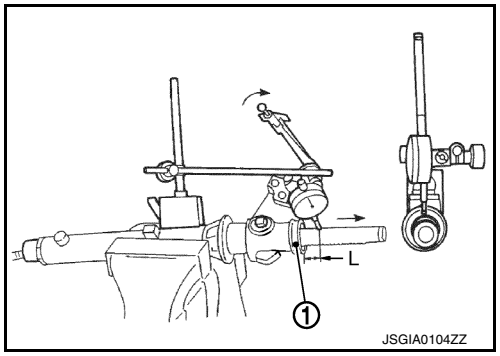

Vertical movement : 0.265 mm (0.0104 in)

- If reading is outside of the specification, readjust screw angle with adjusting screw.

CAUTION:
- **If reading is still outside of specification, or if the rotating torque of adjusting screw is less than 5 N·m (0.51 kg-m, 44 in-lb), replace steering gear assembly.**
- **Never turn adjusting screw more than twice.**
- **Replace steering gear assembly when adjusting screw is removed or turned more than twice.**

14. Install large end of boot to gear housing assembly.
15. Install small end of boot to inner socket boot mounting groove.
16. Install boot clamp to boot small end.

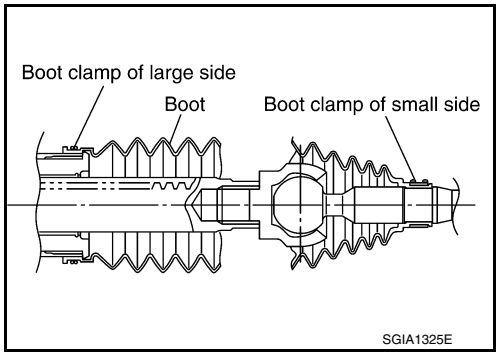

17. Install boot clamp to the large side of boot with the following procedure.

CAUTION:
Never reuse boot clamp.

a. Tighten large side of boot with boot clamp (stainless wire).

Wire length (L) : 370 mm (14.57 in)

b. Wrap clamp around boot groove for two turns. Insert a flat-bladed screwdriver in loops on both ends of wire. Twist 4 to 4.5 turns while pulling them with force of approximately 98 N (10 kg, 22 lb).

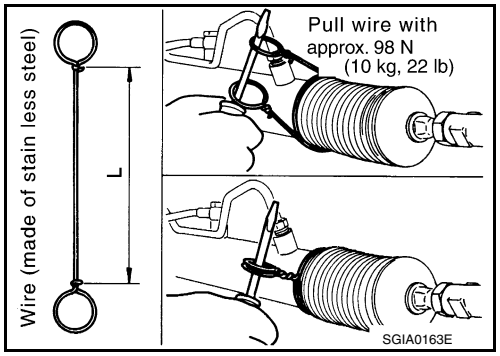

c. Twist boot clamp as shown. Pay attention to relationship between winding and twisting directions.

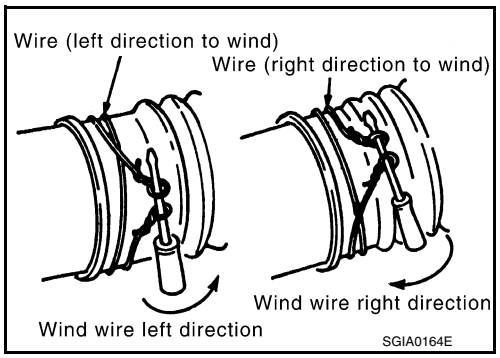

d. Twisted area (A) of clamp is in the adjusting screw side (1) as shown in the figure (to prevent contact with other parts).

A : 90°

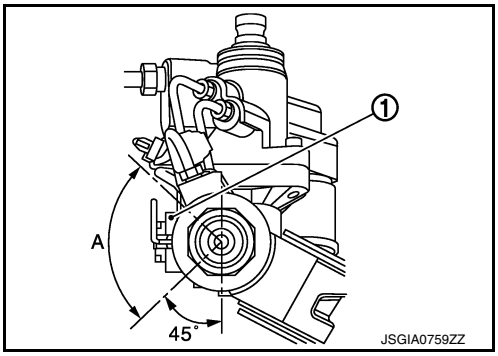

e. Bent cut end of the wire toward rack axial as shown in the figure after twisting the wire 4 to 4.5 turns so that cut end does not contact with boot.

CAUTION:
Keep gap from cylinder tube 5 mm (0.20 in) or more.

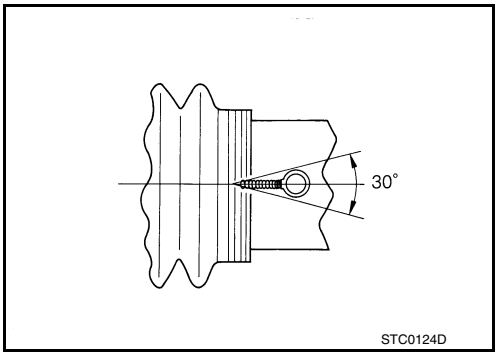

18. Install cylinder tubes to gear housing assembly.
19. Install low pressure piping.
20. Adjust inner socket to standard length (L), and then tighten lock nut (1) to the specified torque. Check length again after tightening lock nut.

Inner socket length (L) : Refer to ST-55, "Inner Socket Length".

CAUTION:
Adjust toe-in after this procedure. The length achieved after toe-in adjustment is not necessary the above value.

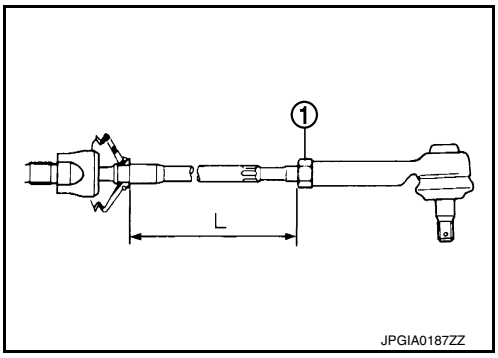

AWD : Inspection

INFOID:0000000012173216

INSPECTION AFTER INSTALLATION

- Check if steering wheel turns smoothly when it is turned several times fully to the end of the left and right.
- Check the steering wheel play, neutral position steering wheel, steering wheel turning force, and front wheel turning angle. Refer to ST-13, "Inspection".
- Check the fluid level, fluid leakage, and air bleeding hydraulic system. Refer to ST-11, "Inspection".
- Adjust neutral position of steering sensor. Refer to BRC-8, "ADJUSTMENT OF STEERING ANGLE SENSOR NEUTRAL POSITION : Special Repair Requirement".

INSPECTION AFTER DISASSEMBLY

Boot

Check boot for cracks, and replace it if a malfunction is detected.

Rack Assembly

Check rack for damage or wear, and replace it if a malfunction is detected.

Gear-Sub Assembly

- Check gear-sub assembly for damage or wear, and replace it if a malfunction is detected.
- Rotate gear-sub assembly and check for torque variation or rattle, and replace it if a malfunction is detected.

Gear Housing Assembly

Check gear housing assembly for damage and scratches (inner wall). Replace if there are.

Outer Socket and Inner Socket

Check the following items and replace the component if it does not meet the standard.

BALL JOINT SWINGING TORQUE

Hook a spring balance at the point shown in the figure and pull the spring balance. Make sure that the spring balance reads the specified value when ball stud and inner socket start to move. Replace outer socket and inner socket if they are outside the standard.

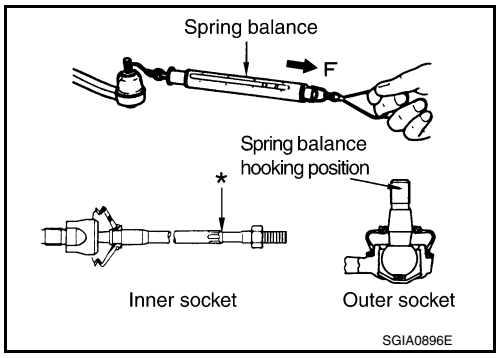

Outer socket

(Measuring point of outer socket: Stud cotter pin mounting hole)

: Refer to ST-55, "Socket Swing Force and Rotating Torque".

Inner socket

(Measuring point of inner socket: "*" mark shown in the figure)

: Refer to ST-55, "Socket Swing Force and Rotating Torque".

BALL JOINT ROTATING TORQUE

Make sure that the reading is within the following specified range using preload gauge (A) [SST: ST3127S000 (J-25765-A)]. Replace outer socket if the reading is outside the specified value.

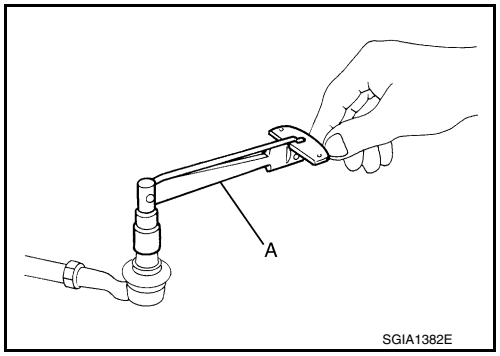

Rotating torque	**: Refer to ST-55, "Socket Swing Force and Rotating Torque".**

BALL JOINT AXIAL END PLAY

Apply an axial load of 490 N (50 kg, 110 lb) to ball stud. Using a dial gauge, measure amount of stud movement, and then make sure that the value is within the following specified range. Replace outer socket (1) and inner socket (2) if the measured value is outside the standard.

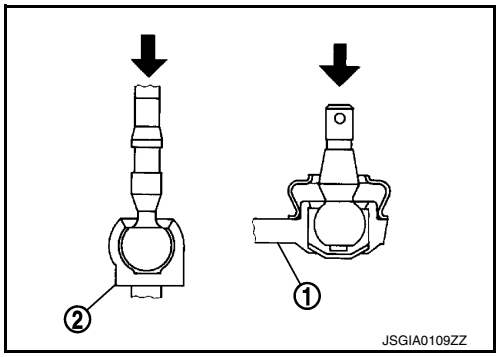

Outer socket	**: Refer to ST-55, "Socket Axial End Play".**
Inner socket	**: Refer to ST-55, "Socket Axial End Play".**

POWER STEERING OIL PUMP

Exploded View

INFOID:0000000012173217

REMOVAL

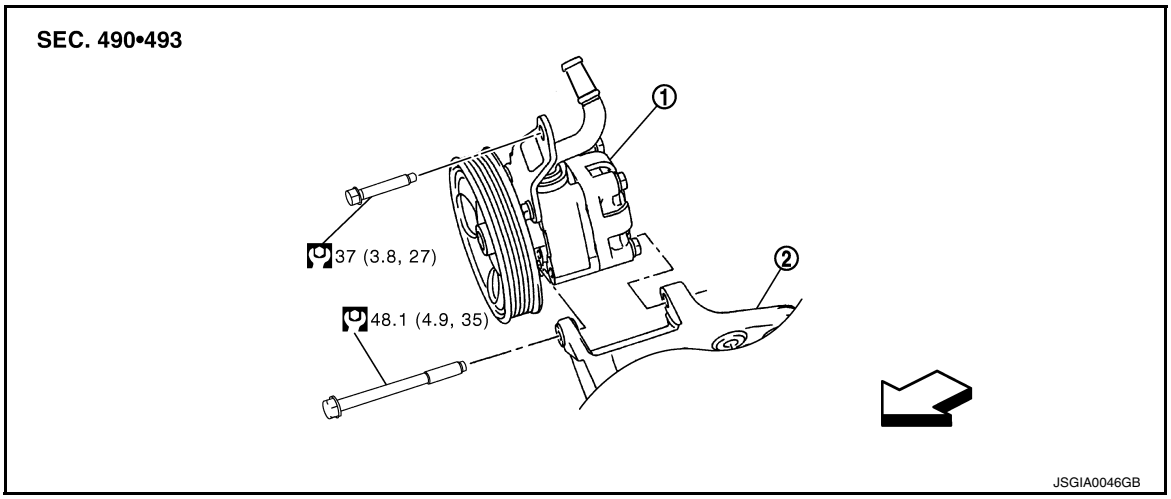

1. Power steering oil pump
2. Bracket

⇦: Vehicle front

Refer to GI-4, "Components" for symbols in the figure.

DISASSEMBLY

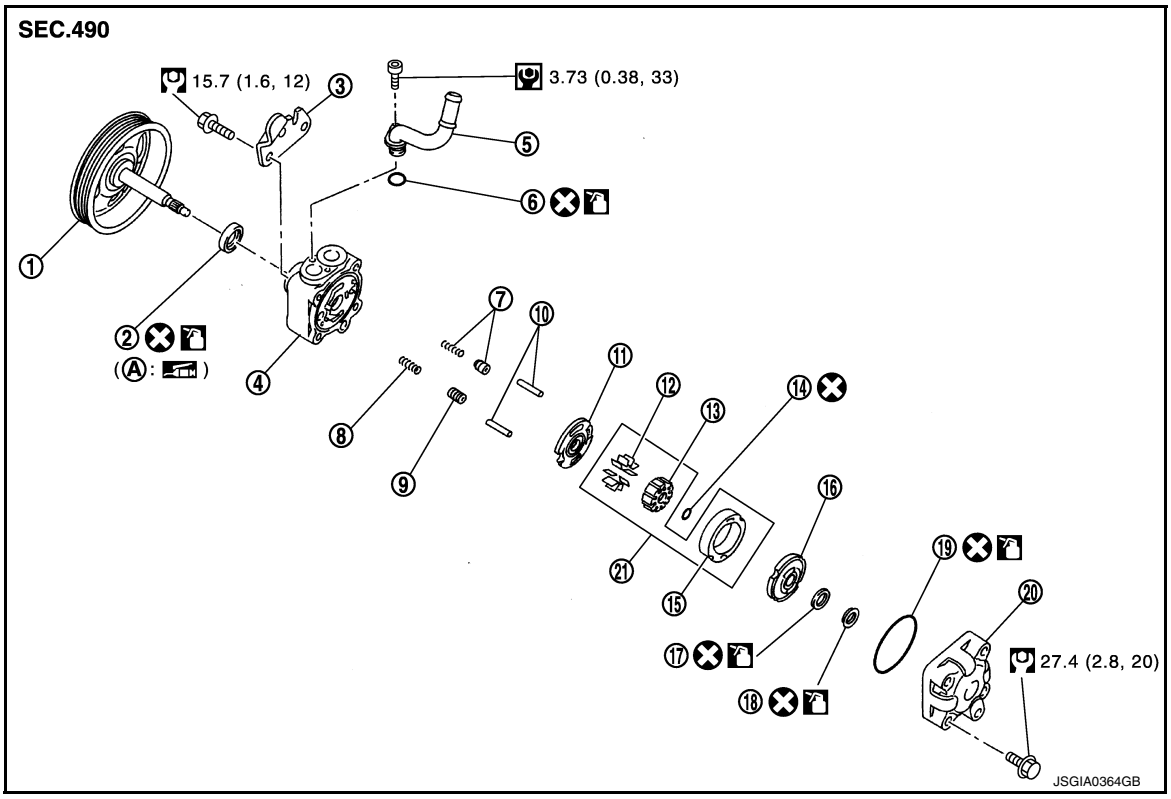

1. Pulley	2. Oil seal	3. Bracket
4. Body assembly	5. Suction pipe	6. O-ring
7. Flow control valve B assembly	8. Flow control valve spring	9. Flow control valve A

10. Dowel pin
11. Front side plate
12. Vane
13. Rotor
14. Rotor snap ring
15. Cam ring
16. Rear side plate
17. O-ring
18. Teflon ring
19. O-ring
20. Rear cover
21. Cartridge

A. Oil seal lip

: Apply power steering fluid.

: Apply multi-purpose grease.

Refer to GI-4, "Components" for symbols not described on the above.

Removal and Installation

INFOID:0000000012173218

REMOVAL

1. Drain power steering fluid from reservoir tank.
2. Remove the right of the air cleaner and the right of the air duct. Refer to EM-27, "Exploded View".
3. Loosen drive belt. Refer to EM-20, "Exploded View".
4. Remove drive belt from oil pump pulley.
5. Remove pressure sensor connector.
6. Remove copper washers and eye bolt (drain fluid from their pipings).
7. Remove suction hose (drain fluid from their pipings).
8. Remove oil pump mounting bolts, and then remove oil pump.

INSTALLATION

Note the following, and install in the reverse order of removal.

- When installing suction hoses (1), refer to the figure.

CAUTION:

- **Never apply fluid to the hose (1) and tube (2).**
- **Insert hose securely until it contacts spool (A) of tube.**
- **Leave clearance (L) when installing clamp (3).**

L : 3 – 8 mm (0.12 – 0.31 in)

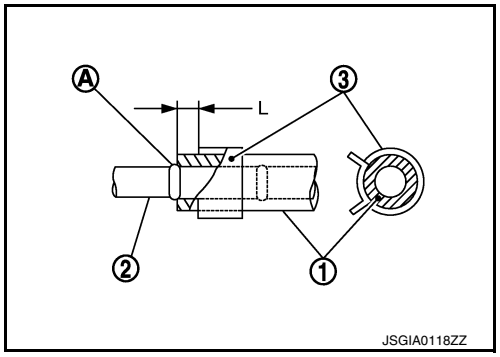

- When installing eye bolt (1) and copper washer (2) to oil pump (3), refer to the figure.

CAUTION:

- **Never reuse copper washer.**
- **Apply power steering fluid to around copper washers, then install eye bolt.**
- **Install eye bolt with eye joint (assembled to high pressure hose) (B) protrusion (A) facing with pump side cutout, and then tighten it to the specified torque after tightening by hand. Refer to ST-52, "2WD : Exploded View" (2WD models), ST-53, "AWD : Exploded View" (AWD models).**
- **Securely insert harness connector to pressure sensor.**

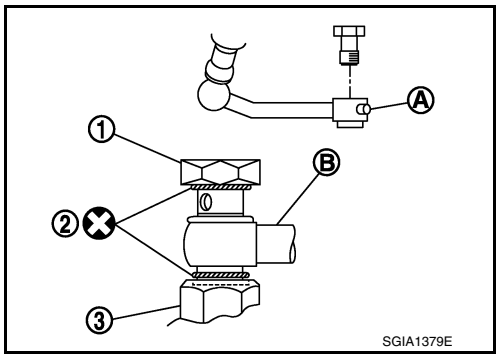

- Adjust belt tension. Refer to EM-20, "Tension Adjustment".
- Check fluid level, fluid leakage and air bleeding hydraulic system after the installation. Refer to ST-11, "Inspection".

Disassembly and Assembly

INFOID:0000000012173219

DISASSEMBLY

1. Remove rear cover mounting bolts, and then remove rear cover from body assembly.

CAUTION:

- **Fix oil pump with a vise if necessary.**
- **Use copper plates when fixing with a vise.**

2. Remove O-ring from body assembly.
3. Remove rear side plate from cartridge, and then remove Teflon ring and O-ring from rear side plate.
4. Remove rotor snap ring using a snap ring pliers, and remove pulley from body assembly.
   CAUTION:
   Remove pulley so as not to be damaged when removing rotor snap ring.

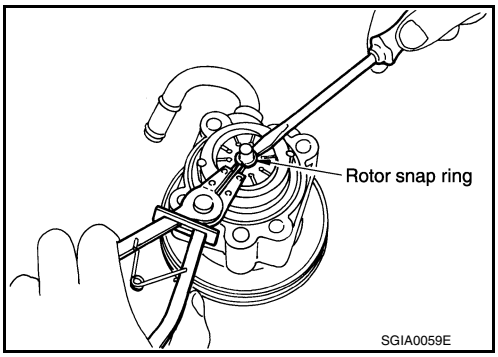

5. Remove cartridge and front side plate.
6. Remove flow control valve A (1), flow control valve spring (2) and flow control valve B assembly (3) from body assembly (4).
   CAUTION:
   Never drop and damage flow control valve A and flow control valve B assembly when removing.
7. Remove oil seal from body assembly.
8. Remove mounting bolt of suction pipe, and then remove suction pipe from body assembly.
9. Remove O-ring from body assembly.
10. Remove bracket mounting bolts, and then remove bracket from body assembly.

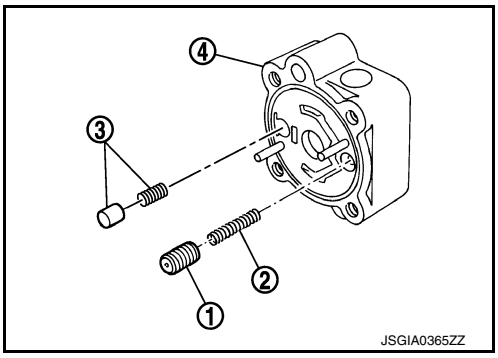

ASSEMBLY

1. Apply recommended grease to oil seal lips. Apply recommended fluid to around oil seal, and then install oil seal to body assembly using a drift [SST: ST35300000 (—)]
   CAUTION:
   - **Fix oil pump with a vise if necessary.**
   - **Use copper plates when fixing with a vise.**
2. Install bracket to body assembly.
3. If dowel pin has been removed, insert it into body assembly by hand. If it cannot be inserted by hand, lightly tap with a hammer.

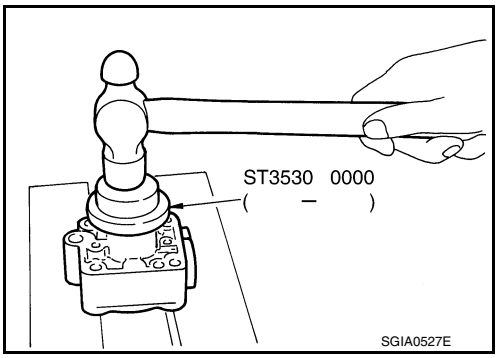

4. Install flow control valve A (1), flow control valve spring (2) and flow control valve B assembly (3) to body assembly (4).

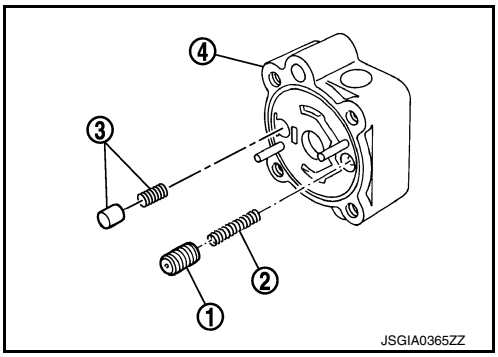

5. Install front side plate (3) with dowel pin (2) on flow control valve A (1) side as shown in the figure aligning with front side plate cutout (A) to body assembly (4).

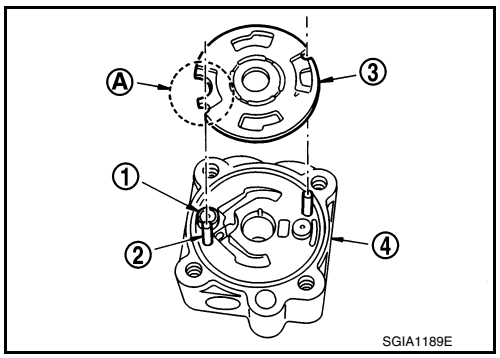

6. Install cam ring as shown in the figure.
7. Install pulley to body assembly.
   CAUTION:
   Never damage oil seal when installing pulley.

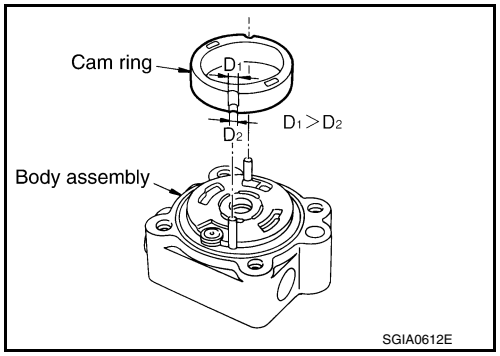

8. Install rotor so that mark faces body assembly, and then install it to pulley shaft.

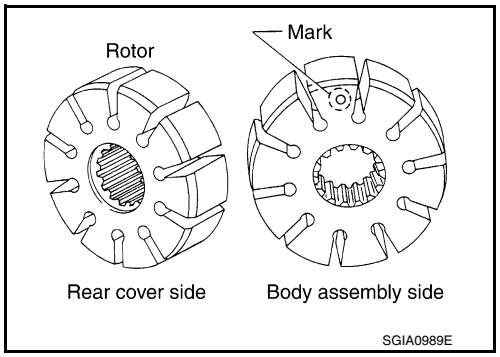

9. Install vane to rotor so that arc of vane faces cam ring side.
10. Install rotor snap ring to slit of pulley shaft using a hammer and drift (commercial service tool).
    CAUTION:
    - **Never damage rotor and pulley shaft.**
    - **Oil pump assembly must be replaced if rotor is damaged.**

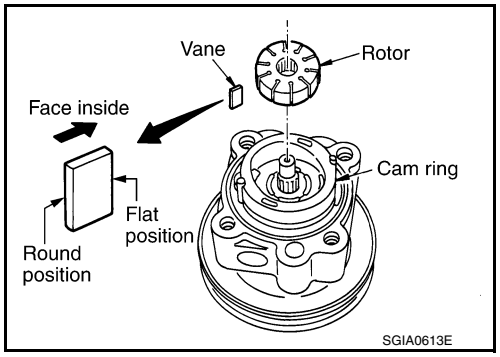

11. Install rear side plate with dowel pin A on flow control valve A side as shown in the figure aligning with rear side plate cutout B to cartridge.
12. Apply recommended fluid to O-ring, and then install O-ring to body assembly.
13. Apply recommended fluid to O-ring, and then install O-ring to rear side plate.
14. Apply recommended fluid to Teflon ring, and then install Teflon ring to rear side plate.
15. Install rear cover to body assembly.

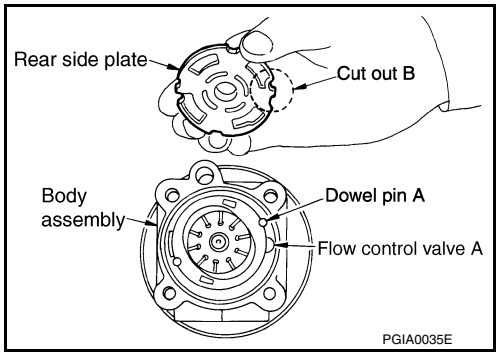

16. Apply recommended fluid to O-ring, and then install O-ring to body assembly.
17. Install suction pipe to body assembly.

Inspection

INFOID:0000000012173220

RELIEF OIL PRESSURE

CAUTION:

Make sure that belt tension is normal before starting the following procedure.

1. Connect the oil pressure gauge [SST: KV48103500 (J-26357)] and the oil pressure gauge adapter [SST: KV48102500 (J-33914)] between oil pump discharge connector and high-pressure hose. Bleed air from the hydraulic circuit while opening valve fully. Refer to ST-11, "Inspection".
2. Start engine. Run engine until oil temperature reaches 50 to 80°C (122 to 176°F).

   CAUTION:
   - **Leave the valve of the oil pressure gauge fully open while starting and running engine. If engine is started with the valve closed, the hydraulic pressure in oil pump goes up to the relief pressure along with unusual increase of oil temperature.**
   - **Be sure to keep hose clear of belts and other parts when engine is started.**
3. Fully close the oil pressure gauge valve with engine at idle and measure the relief oil pressure.

   Relief oil pressure : **Refer to ST-55, "Relief Oil Pressure".**

   CAUTION:
   Never keep valve closed for 10 seconds or longer.

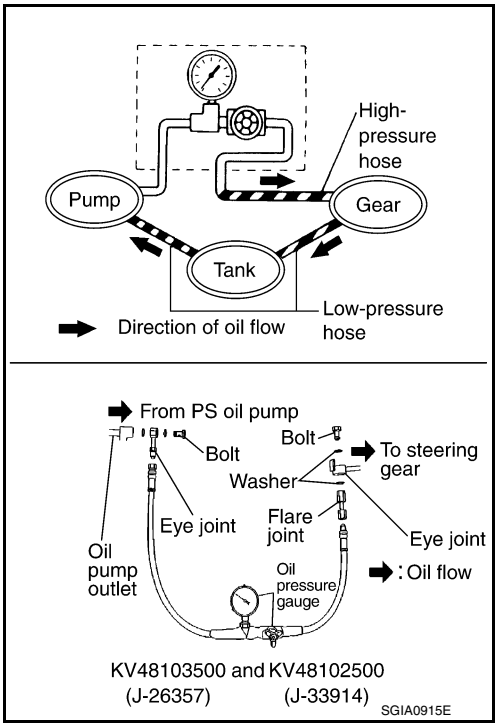

4. Open the valve slowly after measuring. Repair oil pump if the relief oil pressure is outside the standard. Refer to ST-47, "Disassembly and Assembly".
5. Disconnect the oil pressure gauge from hydraulic circuit.
6. When installing eye bolt (1) and copper washer (2) to oil pump (3), refer to the figure.

   CAUTION:
   - **Never reuse copper washers.**
   - **Apply power steering fluid or equivalent to around copper washer, then install eye bolt.**
   - **Install eye bolt with eye joint (assembled to high pressure hose) (B) protrusion (A) facing with pump side cutout, and then tighten it to the specified torque after tightening by hand. Refer to ST-52, "2WD : Exploded View" (2WD models), ST-53, "AWD : Exploded View" (AWD models).**
   - **Securely insert harness connector to pressure sensor.**

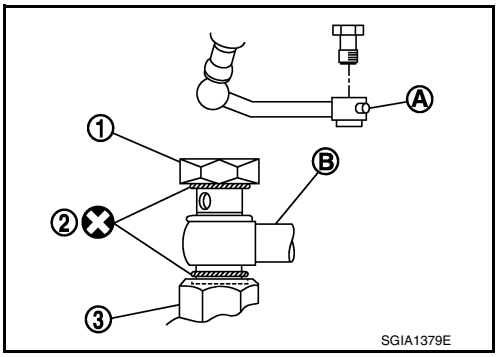

7. Check fluid level, fluid leakage and air bleeding hydraulic system after the installation. Refer to ST-11, "Inspection".

BEFORE DISASSEMBLY

Disassemble oil pump only when the following malfunctions occur.
- If oil leakage is found on oil pump.
- Oil pump pulley is damaged or deformed.
- Performance of oil pump is low.

AFTER DISASSEMBLY

Body Assembly and Rear Cover Inspection

Check body assembly and rear cover for internal damage. Replace rear cover if it is damaged. Replace oil pump assembly if body assembly is damaged.

Cartridge Assembly Inspection

Check cam ring, rotor and vane for damage. Replace cartridge assembly if necessary.

Side Plate Inspection

Check side plate for damage. Replace side plate if there are.

Flow Control Valve Inspection

Check flow control valve and spring for damage. Replace if necessary.

HYDRAULIC LINE

2WD

2WD : Exploded View

INFOID:0000000012173221

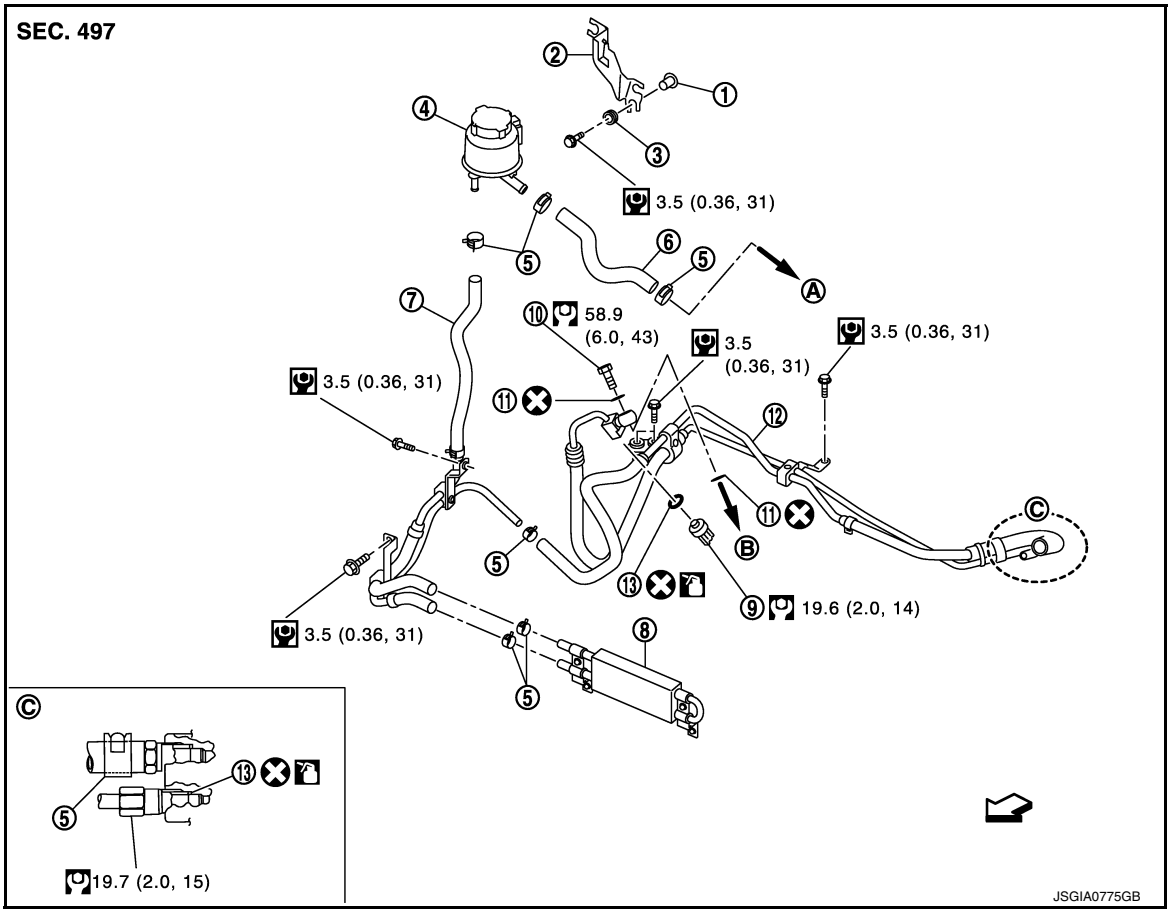

1. Collar	2. Reservoir tank bracket	3. Bushing
4. Reservoir tank	5. Clamp	6. Suction hose
7. Return piping	8. Oil cooler	9. Pressure sensor
10. Eye bolt	11. Copper washer	12. High pressure piping and low pressure piping
13. O-ring		
A. To power steering oil pump suction hose.	B. To power steering oil pump.	

⇦: Vehicle front

: Apply power steering fluid.

Refer to GI-4, "Components" for symbols not described on the above.

AWD

AWD : Exploded View

INFOID:0000000012173222

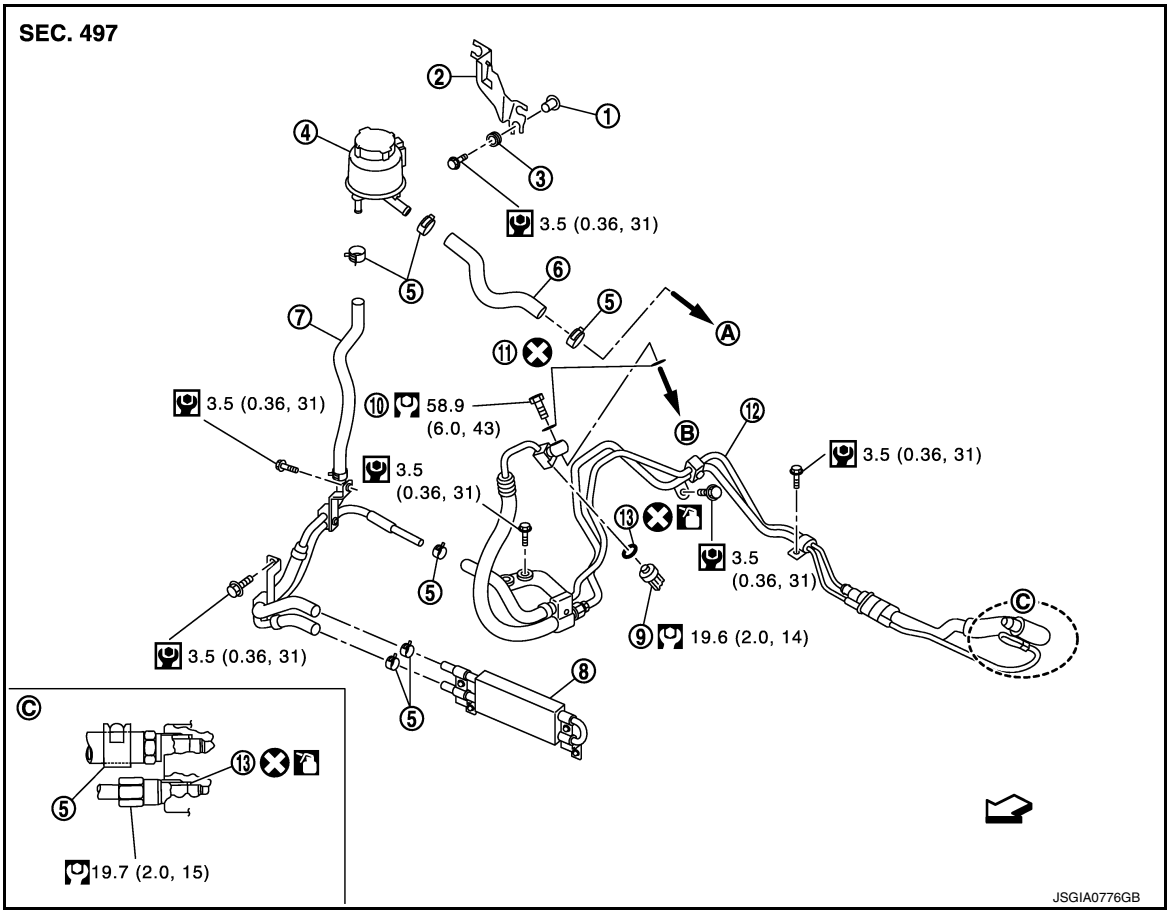

1. Collar	2. Reservoir tank bracket	3. Bushing
4. Reservoir tank	5. Clamp	6. Suction hose
7. Return piping	8. Oil cooler	9. Pressure sensor
10. Eye bolt	11. Copper washer	12. High pressure piping and low pressure piping
13. O-ring		
A. To power steering oil pump suction hose.	B. To power steering oil pump.	

⇦: Vehicle front

: Apply power steering fluid.

Refer to GI-4, "Components" for symbols not described on the above.

SERVICE DATA AND SPECIFICATIONS (SDS)

SERVICE DATA AND SPECIFICATIONS (SDS)

General Specifications

INFOID:0000000012173223

Steering gear model	PR26AF
Fluid capacity (Approx.) ℓ (US qt, Imp qt)	1.0 (1-1/8, 7/8)

Steering Wheel Axial End Play and Play

INFOID:0000000012173224

Unit: mm (in)

Item	Standard
Steering wheel axial end play	0 (0)
Steering wheel play on the outer circumference	0 – 35 (0 – 1.38)

Steering Wheel Turning Torque

INFOID:0000000012173225

Unit: N·m (kg-m, in-lb)

Item	Standard
Steering wheel turning force	7.45 (0.76, 66)

Steering Angle

INFOID:0000000012173226

Unit: Degree minute (Decimal degree)

Item		Standard	
Axle type		2WD	AWD
Inner wheel	Minimum	35°45′ (35.75°)	35°10′ (35.17°)
	Nominal	38°45′ (38.75°)	38°10′ (38.17°)
	Maximum	39°45′ (39.75°)	39°10′ (39.16°)
Outer wheel	Nominal	33°10′ (33.17°)	30°25′ (30.42°)

Steering Column Length

INFOID:0000000012173227

Unit: mm (in)

Item	Standard
Column length	516 – 520 (20.31 – 20.47)

Steering Column Mounting Dimensions

INFOID:0000000012173228

Unit: mm (in)

Item	Standard	
	Without electric motor	With electric motor
Mounting dimension	30 – 32 (1.18 – 1.26)	20 – 22 (0.79 – 0.87)

Steering Column Operating Range

INFOID:0000000012173229

Item	Standard
Tilt operating range	44 mm (1.73 in)
Telescopic operating range	47 mm (1.85 in)
Rotating torque	0.49 N·m (0.05 kg-m, 4 in-lb)

Lower Shaft Length

INFOID:0000000012173230

Unit: mm (in)

Item	Standard
Lower shaft length	505 (19.88) or more

Rack Sliding Force

INFOID:0000000012173231

Unit: N (kg, lb)

Item	Standard	
Axle type	2WD	AWD
Rack sliding force	195 – 310 (19.9 – 31.6, 43.9 – 69.6)	221 – 330 (22.6 – 33.6, 49.7 – 74.1)

Rack Stroke

INFOID:0000000012173232

Unit: mm (in)

Item	Standard	
Axle type	2WD	AWD
Rack stroke neutral position	67.5 (2.657)	63.0 (2.480)

Socket Swing Force and Rotating Torque

INFOID:0000000012173233

SWING FORCE

Unit: N (kg, lb)

Item	Standard
Outer socket	1.5 – 42.7 (0.16 – 4.3, 0.34 – 9.5)
Inner socket	1.4 – 105.4 (0.15 – 10.7, 0.32 – 23.7)

ROTATING TORQUE

Unit: N·m (kg-m, in-lb)

Item	Standard
Outer socket	0.1 – 2.9 (0.01 – 0.29, 1 – 25)

Socket Axial End Play

INFOID:0000000012173234

Unit: mm (in)

Item	Standard
Outer socket	0.5 (0.02) or less
Inner socket	0.2 (0.008) or less

Inner Socket Length

INFOID:0000000012173235

Unit: mm (in)

Item	Standard	
Axle type	2WD	AWD
Inner socket length	63.9 (2.516)	55.2 (2.173)

Relief Oil Pressure

INFOID:0000000012173236

Unit: kPa (kg/cm^2, psi)

Item	Standard
Relief oil pressure	8,430 – 9,430 (86 – 96.1, 1,223 – 1,367)