SECTION ADP
AUTOMATIC DRIVE POSITIONER

CONTENTS

PRECAUTION

PRECAUTIONS

Precaution for Supplemental Restraint System (SRS) "AIR BAG" and "SEAT BELT PRE-TENSIONER"

INFOID:0000000007376149

The Supplemental Restraint System such as “AIR BAG” and “SEAT BELT PRE-TENSIONER”, used along with a front seat belt, helps to reduce the risk or severity of injury to the driver and front passenger for certain types of collision. This system includes seat belt switch inputs and dual stage front air bag modules. The SRS system uses the seat belt switches to determine the front air bag deployment, and may only deploy one front air bag, depending on the severity of a collision and whether the front occupants are belted or unbelted.
Information necessary to service the system safely is included in the “SRS AIR BAG” and “SEAT BELT” of this Service Manual.

WARNING:
Always observe the following items for preventing accidental activation.
- **To avoid rendering the SRS inoperative, which could increase the risk of personal injury or death in the event of a collision that would result in air bag inflation, all maintenance must be performed by an authorized NISSAN/INFINITI dealer.**
- **Improper maintenance, including incorrect removal and installation of the SRS, can lead to personal injury caused by unintentional activation of the system. For removal of Spiral Cable and Air Bag Module, see “SRS AIR BAG”.**
- **Never use electrical test equipment on any circuit related to the SRS unless instructed to in this Service Manual. SRS wiring harnesses can be identified by yellow and/or orange harnesses or harness connectors.**

PRECAUTIONS WHEN USING POWER TOOLS (AIR OR ELECTRIC) AND HAMMERS

WARNING:
Always observe the following items for preventing accidental activation.
- **When working near the Air Bag Diagnosis Sensor Unit or other Air Bag System sensors with the ignition ON or engine running, never use air or electric power tools or strike near the sensor(s) with a hammer. Heavy vibration could activate the sensor(s) and deploy the air bag(s), possibly causing serious injury.**
- **When using air or electric power tools or hammers, always switch the ignition OFF, disconnect the battery, and wait at least 3 minutes before performing any service.**

PREPARATION

PREPARATION

Commercial Service Tools

INFOID:0000000007593419

Tool name		Description
Remover tools	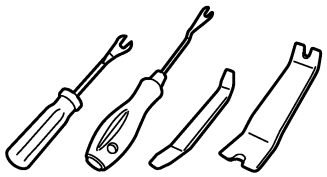 JMKIA3050ZZ	Removes the clips, pawls and metal clips

SYSTEM DESCRIPTION

COMPONENT PARTS

Component Parts Location

INFOID:0000000007376150

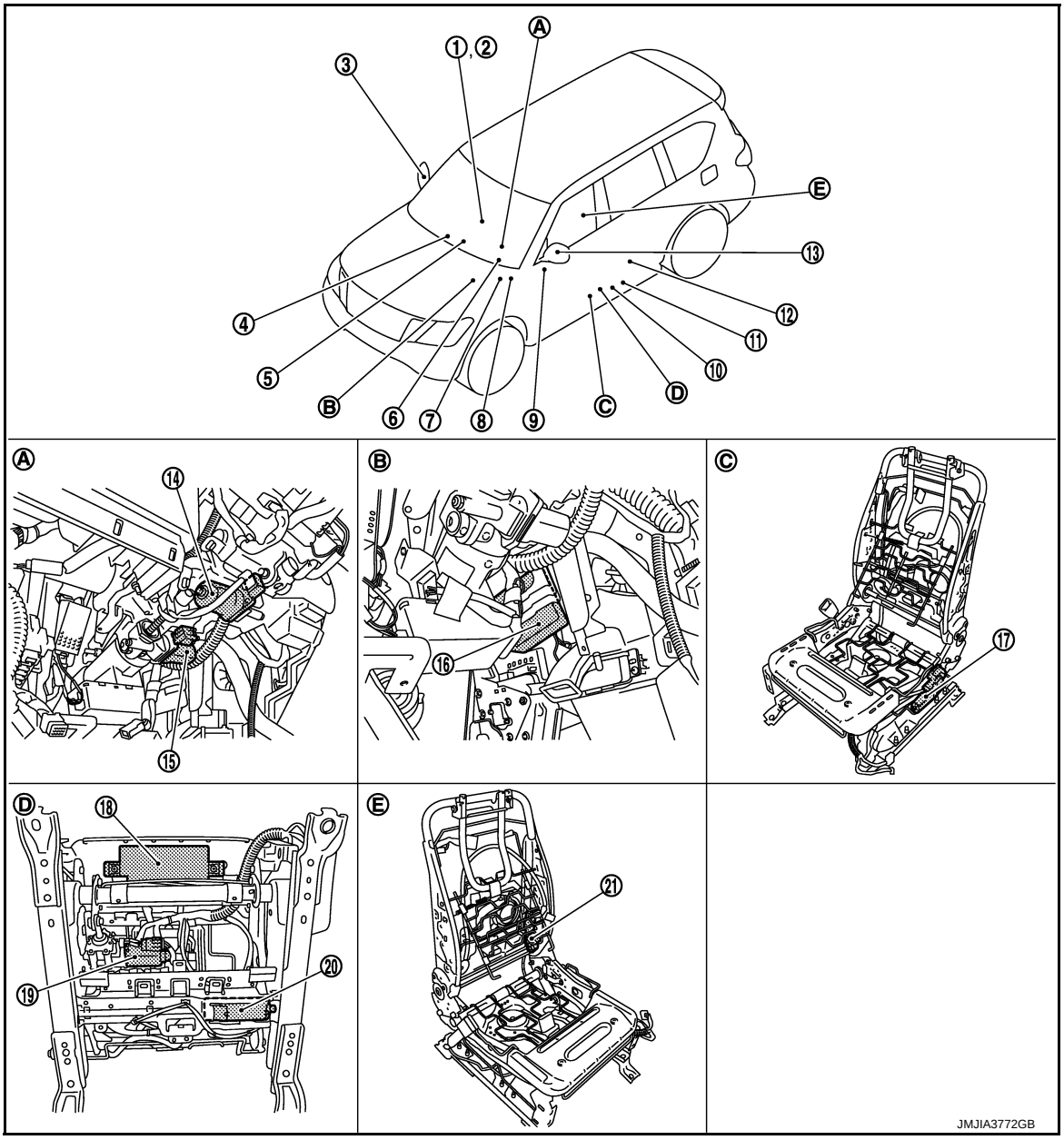

1. A/T shift selector (detention switch)
   Refer to TM-11, "A/T CONTROL SYSTEM : Component Parts Location".
2. TCM
   Refer to TM-11, "A/T CONTROL SYSTEM : Component Parts Location".
3. Door mirror (passenger side)
4. Combination meter
   Refer to MWI-6, "METER SYSTEM : Component Parts Location".
5. BCM
   Refer to BCS-4, "BODY CONTROL SYSTEM : Component Parts Location".
6. Tilt & telescopic switch

7. ABS actuator and electric unit (control unit)
Refer to BRC-9, "Component Parts Location" (With VDC), BRC-147, "Component Parts Location" (With BRAKE ASSIST) or BRC-154, "Component Parts Location" (With INTELLIGENT BRAKE ASSIST).
8. Door mirror remote control switch
9. Seat memory switch
10. Sliding, lifting switch
11. Reclining switch
12. Driver side door switch
13. Door mirror (driver side)
14. Tilt motor
15. Telescopic motor
16. Automatic drive positioner control unit
17. Lifting motor (rear)
18. Diver seat control unit
19. Lifting motor (front)
20. Sliding motor
21. Reclining motor

A. View with steering column cover lower removed
B. View with instrument lower panel LH removed
C. View with seat cushion pad and seat back pad removed
D. Backside of seat cushion
E. View with seat cushion pad and seat back pad removed

Component Description

INFOID:0000000007376151

Component parts	Description
Driver seat control unit	• Main units of automatic drive positioner system. • It is connected to the CAN. • It communicates with automatic drive positioner control unit via UART communication. • It perform memory function after receiving the door unlock signal from BCM. • The address of each part is recorded. • Operates each motor of seat to the registered position. • Requests the operation of steering column and door mirror to automatic drive positioner control unit • Operates the specific seat motor with the signal from power seat switch. • Transmits the ignition switch signal (ACC/ON) via UART communication to automatic driver positioner control unit.
Automatic drive positioner control unit	• It communicates with driver seat control unit via UART communication. • Perform various controls with the instructions of driver seat control unit. • Perform the controls of tilt & telescopic, door mirror and seat memory switch. • Operates steering column and door mirror with the signal from the driver seat control
BCM	Recognizes the following status and transmits it to driver seat control unit via CAN communication. • Handle position: LHD • Driver door: OPEN/CLOSE • Ignition switch position: ACC/ON • Steering lock unit status: LOCK/UNLOCK • Door lock: UNLOCK (with Intelligent key or driver side door request switch operation) • Key ID • Starter: CRANKING/OTHER
IPDM E/R	ON/OFF signal of A/T shift selector (detention switch) is transmitted to driver seat control unit via CAN communication.
TCM	The following signals are transmitted to driver seat control unit via CAN communication. • Shift position signal (P range) • Identification of transmission: A/T
Combination meter	Transmit the vehicle speed signal to driver seat control unit via CAN communication.

Component parts		Description
ABS actuator and electric unit (control unit)		Transmit the vehicle speed signal to driver seat control unit via CAN communication.
A/T sift selector (Detention switch)		• Detention switch is installed on A/T shift selector. It is turned OFF when A/T shift selector is in P position. • Driver seat control unit judges that A/T shift selector is in P position if continuity does not exist in this circuit.
Door mirror remote control switch	Mirror switch	• Mirror switch is integrated in door mirror remote control switch. • It operates angle of door mirror face. • It transmits mirror face adjust operation to automatic drive positioner control unit.
	Changeover switch	• Changeover switch is integrated in door mirror remote control switch. • Changeover switch has three positions (L, N and R). • It changes operating door mirror motor by transmitting control signal to automatic drive positioner control unit.
	Open/close switch	• Open/close switch is integrated in door mirror remote control switch. • Power is supplied to folding mirror from door mirror remote control switch when operating switch.
Tilt & telescopic switch	Tilt switch	• Tilt switch is equipped to steering column. • The operation signal is input to automatic drive positioner control unit when tilt switch is operated.
	Telescopic switch	• Telescopic switch is equipped to steering column. • The operation signal is input to automatic drive positioner control unit when telescopic switch is operated.
Seat memory switch	Set switch	It is used for registration and setting change of driving position and Intelligent Key interlock function.
	Seat memory switch	• The maximum 2 driving positions can be registered by memory switch 1 to 2. • Driving position is set to the registered driving position when memory switch is pressed while operation conditions are satisfied.
	Seat memory indicator	Memory indicator indicates the status of auto driving position system by turning ON or blinking.
Power seat switch	Sliding switch	• Sliding switch is equipped to power seat switch on seat cushion side surface. • The operation signal is input to driver seat control unit when sliding switch is operated.
	Reclining switch	• The operation signal is input to driver seat control unit when reclining switch is operated. • The operation signal is input to driver seat control unit when reclining switch is operated.
	Lifting switch (front)	• Lifting switch (front) is equipped to power seat switch on seat cushion side surface. • The operation signal is input to driver seat control unit when lifting switch (front) is operated.
	Lifting switch (rear)	• Lifting switch (rear) is equipped to power seat switch on seat cushion side surface. • The operation signal is input to driver seat control unit when lifting switch (rear) is operated.

Component parts		Description
Door mirror (driver side/ passenger side)	Door mirror motor	It makes mirror face operate from side to side and up and down with the electric power that automatic drive positioner control unit supplies.
	Mirror sensor	• Mirror sensor is installed to door mirror. • The resistance of 2 sensors (horizontal and vertical) is changed when door mirror is operated. • Automatic drive positioner control unit calculates door mirror position according to the change of the voltage of 2 sensor input terminals.
Tilt motor	Tilt motor	• Tilt motor is installed to steering column assembly. • Tilt motor is activated with automatic drive positioner control unit. • Steering column is tilted upward/downward by changing the rotation direction of tilt motor.
	Tilt sensor	• Tilt sensor is integrated in tilt motor. • The resistance of tilt sensor is changed according to the up/ down position of steering column. • The terminal voltage of automatic drive positioner control unit will be changed according to a change of tilt sensor resistance. • Automatic drive positioner control unit calculates the tilt position from the voltage.
Telescopic motor	Telescopic motor	• Telescopic motor is installed to steering column assembly. • Telescopic motor is activated with automatic drive positioner control unit. • Compresses steering column by changing the rotation direction of telescopic motor.
	Telescopic sensor	• Telescopic sensor is integrated in telescopic motor. • The resistance of telescopic sensor is changed according to the forward/backward position of steering column. • The terminal voltage of automatic drive positioner control unit will be changed according to a change of telescopic sensor resistance. • Automatic drive positioner control unit calculates the telescopic position from the voltage.
Sliding motor	Sliding motor	• Seat sliding motor is installed to the seat cushion frame. • Seat sliding motor is activated with driver seat control unit. • Slides the seat frontward/ rearward by changing the rotation direction of sliding motor.
	Sliding sensor	• Sliding sensor is integrated in sliding motor. • The pulse signal is input to driver seat control unit when sliding is performed. • Driver seat control unit counts the pulse and calculates the sliding amount of the seat.
Reclining motor	Reclining motor	• Seat reclining motor is installed to seat back frame. • Seat reclining motor is activated with driver seat control unit. • Seatback is reclined frontward/rearward by changing the rotation direction of reclining motor.
	Reclining sensor	• Reclining sensor is integrated in reclining motor. • The pulse signal is input to driver seat control unit when the reclining is operated. • Driver seat control unit counts the pulse and calculates the reclining amount of the seat.
Lifting motor (front)	Lifting motor (front)	• Lifting motor (front) is installed to seat side cushion frame. • Lifting motor is activated with driver seat control unit. • Seat lifter (front) is moved upward/downward by changing the rotation direction of lifting motor (front).
	Lifting sensor (front)	• Lifting sensor (front) is installed in lifting motor (rear). • When lifting motor (rear) operates, pulse signal is transmitted to driver seat control unit from lifting sensor. Driver seat control unit counts the pulse and calculates the lift position (rear) of the seat.

Component parts		Description
Lifting motor (rear)	Lifting motor (rear)	• Lifting motor (rear) is installed to seat slide cushion frame. • Lifting motor (rear) is activated with driver seat control unit. • Seat lifter (rear) is moved upward/downward by changing the rotation direction of lifting motor (rear).
	Lifting sensor (rear)	• Lifting sensor (rear) is installed to seat side cushion frame. • The pulse signal is input to driver seat control unit when lifting (rear) is operated. • Driver seat control unit counts the pulse and calculates the lifting (rear) amount of the seat.

SYSTEM

AUTOMATIC DRIVE POSITIONER SYSTEM

AUTOMATIC DRIVE POSITIONER SYSTEM : System Diagram

INFOID:0000000007376152

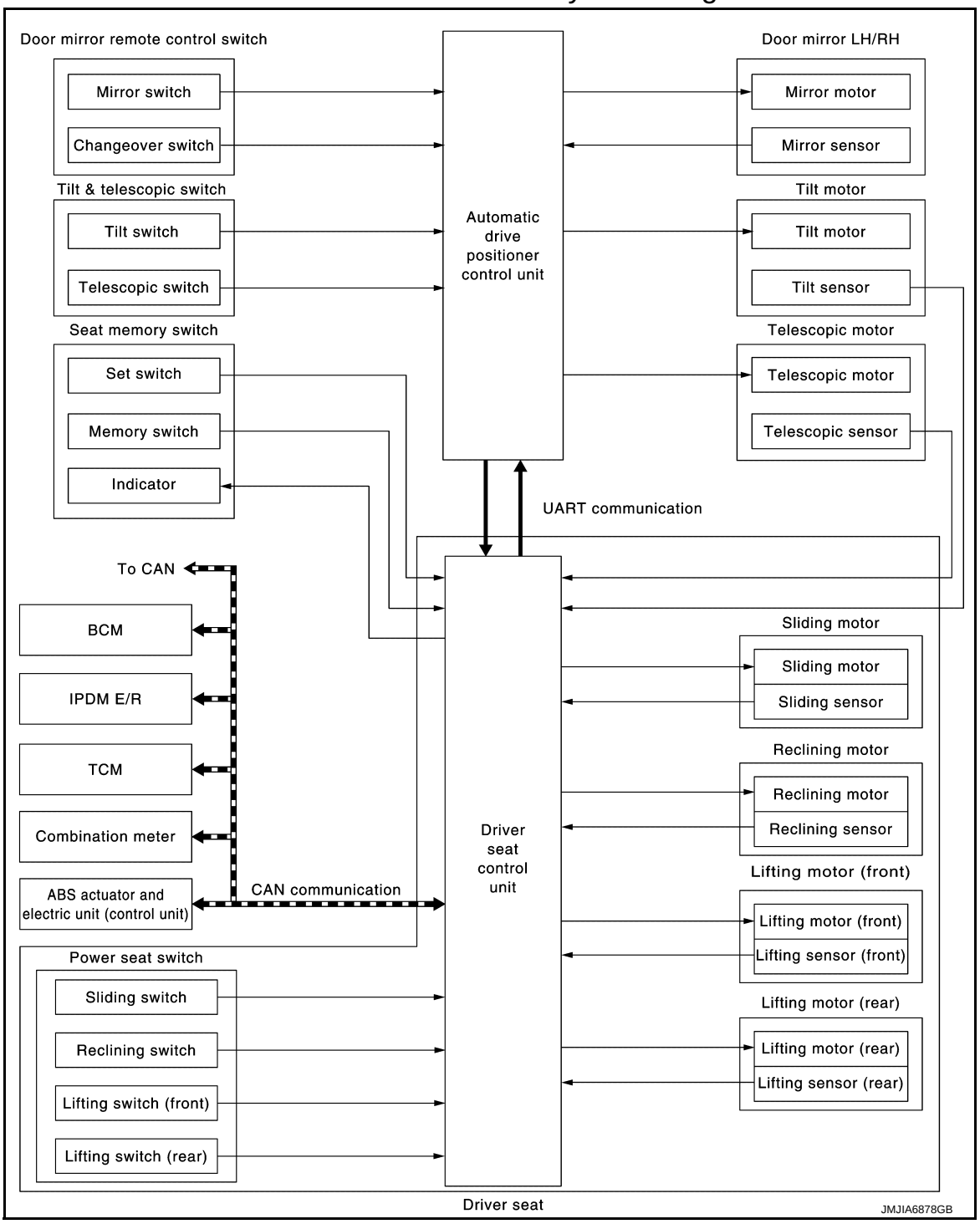

AUTOMATIC DRIVE POSITIONER SYSTEM : System Description

INFOID:0000000007376153

The system automatically moves the driver seat, steering column and door mirror position by the driver seat control unit and the automatic drive positioner control unit. The driver seat control unit corresponds with the automatic drive positioner control unit by UART communication.

Function		Description
Manual function		The driving position (seat, steering column and door mirror position) can be adjusted by using the power seat switch, tilt & telescopic switch or door mirror remote control switch.
Memory function		The seat, steering column and door mirror move to the stored driving position by pressing seat memory switch (1 or 2).
Entry/Exit assist function	Exit	On exit, the seat moves backward and the steering column moves upward.
	Entry	On entry, the seat and steering column returns from exiting position to the previous driving position.
Intelligent Key interlock function		Perform memory operation, exiting operation and entry operation by Intelligent Key unlock operation or driver side door request switch unlock operation.

NOTE:
The lumbar support system are controlled independently with no link to the automatic drive positioner system. Refer to SE-16, "LUMBAR SUPPORT SYSTEM : System Description".

Sleep control

Driver seat control unit equips sleep control for reducing power consumption.
The system switches to sleep control when all of the following conditions are satisfied.
- Ignition switch is OFF (steering lock status).
- All devices of auto driving position system are not operating.
- 45 seconds timer of driver seat control unit is not operating.
- Set switch and memory switch (1 and 2) are OFF.

Wake-up control

Sleep control releases when detecting status change in either of the following item.
- CAN communication
- Power seat switch
- Set switch and seat memory switch (1 and 2)
- Tilt & telescopic switch

MANUAL FUNCTION

MANUAL FUNCTION : System Diagram

INFOID:0000000007376154

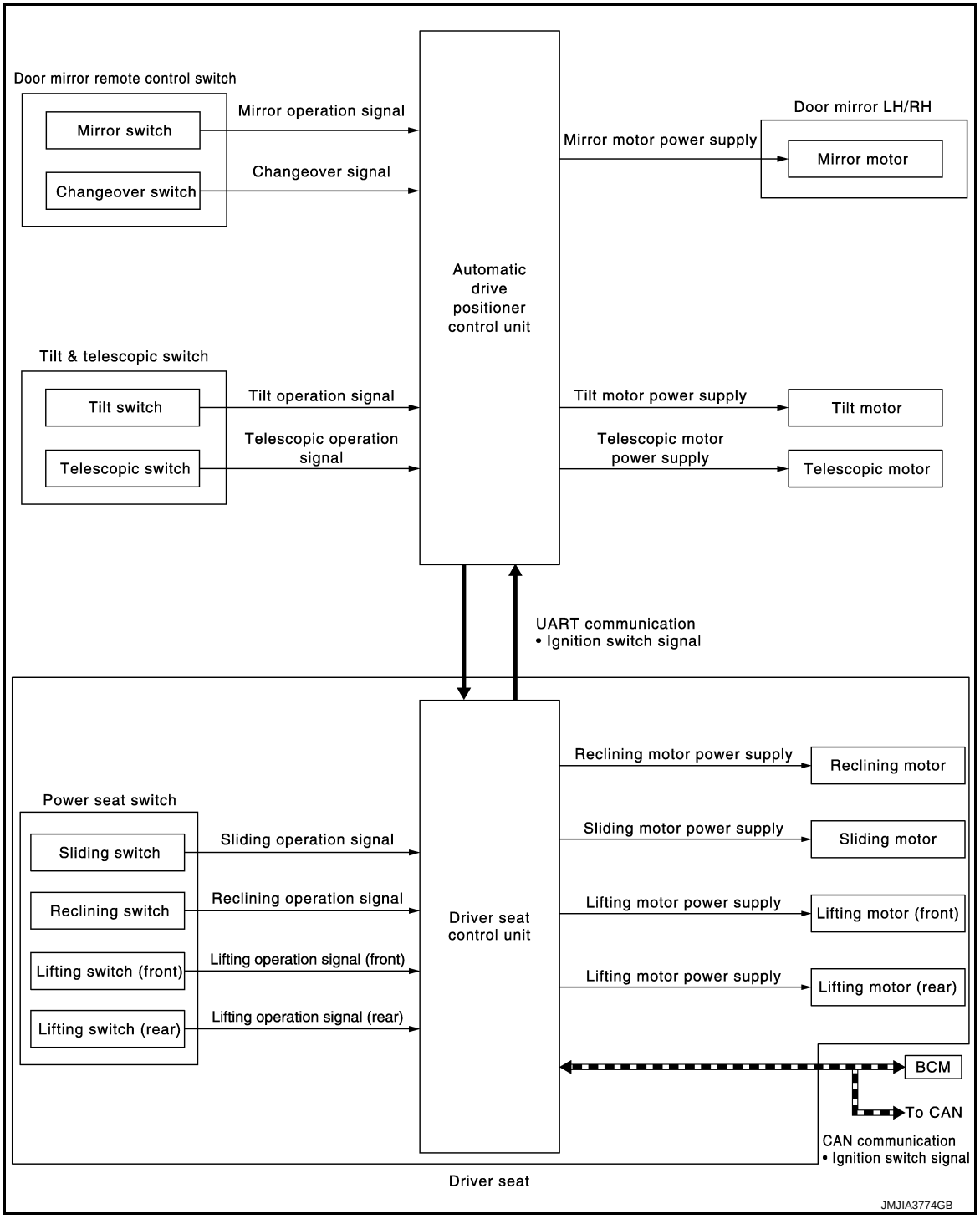

MANUAL FUNCTION : System Description

INFOID:0000000007376155

The driving position (seat, steering column and door mirror position) can be adjusted manually with power seat switch, tilt & telescopic switch and door mirror remote control switch.

OPERATION PROCEDURE

1. Turn ignition switch ON.
2. Operate power seat switch, tilt & telescopic switch or door mirror remote control switch.
3. The driver seat, steering column or door mirror operates according to the operation of each switch.

NOTE:

Seat operates only up to two places at the same time.

DETAIL FLOW

Seat

Order	Input	Output	Control unit condition
1	Power seat switch (sliding, lifting, reclining)	—	The power seat switch signal is inputted to the driver seat control unit when the power seat switch is operated.
2	—	Motors (sliding, lifting, reclining)	The driver seat control unit outputs signals to each motor according to the power seat switch input signal.

NOTE:
The power seat can be operated manually regardless of the ignition switch position.

Tilt & Telescopic

Order	Input	Output	Control unit condition
1	Tilt & telescopic switch	—	The tilt & telescopic switch signal is inputted to the automatic drive positioner control unit when the tilt & telescopic switch is operated.
2	—	Motors (Tilt, telescopic)	The automatic drive positioner control unit actuates each motor according to the operation of the tilt & telescopic switch.

Door Mirror

Order	Input	Output	Control unit condition
1	Door mirror remote control switch	—	The door mirror remote control switch signal is inputted to the automatic drive positioner control unit when the door mirror remote control switch is operated.
2	—	Motors (Door mirror motor)	The automatic drive positioner control unit actuates each motor according to the operation of the door mirror remote control switch.

NOTE:
The door mirrors can be operated manually when ignition switch is in either ACC or ON position.

MEMORY FUNCTION

MEMORY FUNCTION : System Diagram

INFOID:0000000007376156

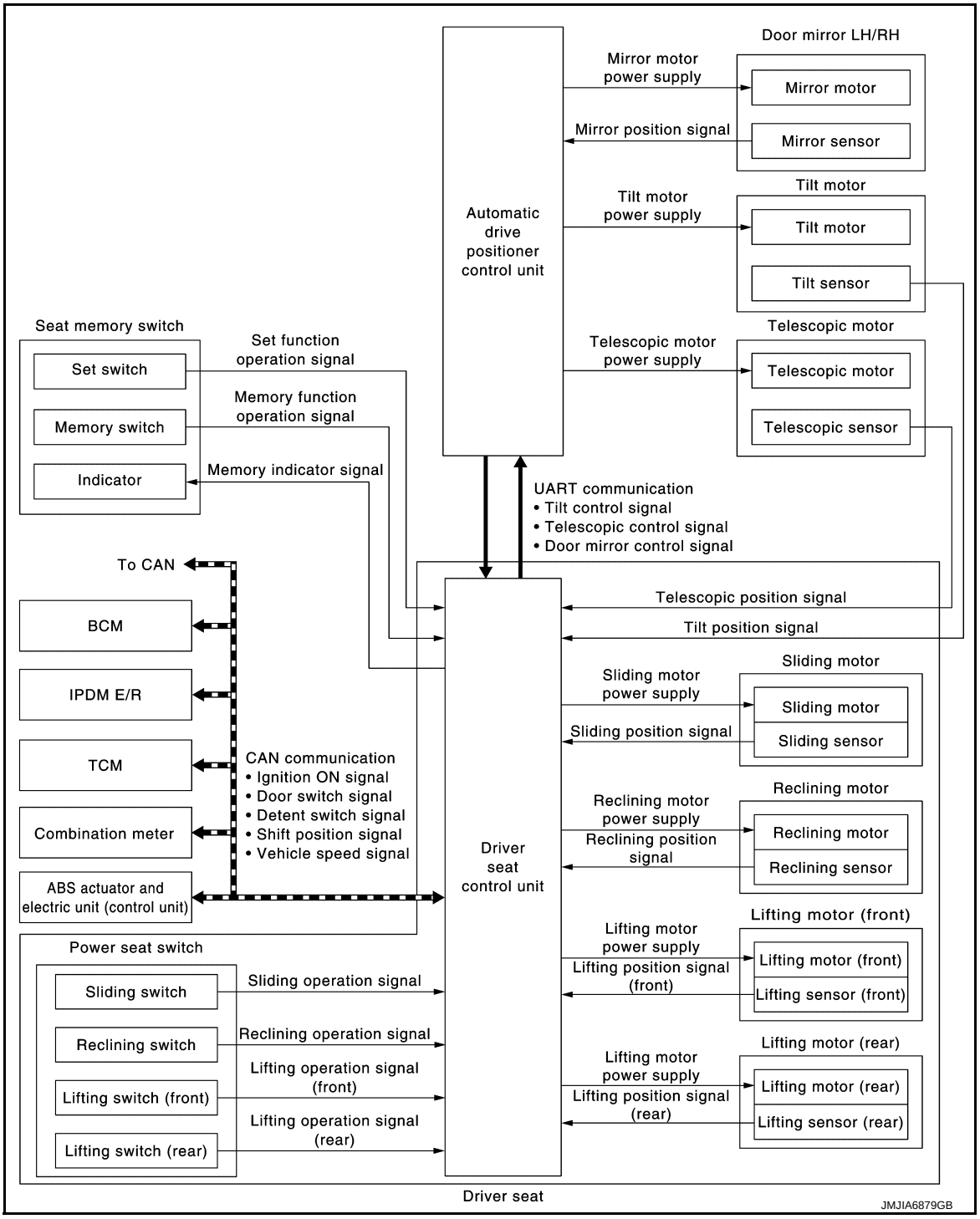

MEMORY FUNCTION : System Description

INFOID:0000000007376157

The driver seat control unit can store the optimum driving positions (seat, steering column and door mirror position) for 2 people. If the front seat position is changed, one-touch (pressing desired memory switch) operation allows changing to the other driving position.

NOTE:

Further information for the memory storage procedure. Refer to ADP-46, "MEMORY STORING : Description".

OPERATION PROCEDURE

1. Turn ignition switch ON.
2. Shift position P position.

3. Push desired memory switch.
4. Driver seat, steering and door mirror will move to the memorized position.

OPERATION CONDITION

Satisfy all of the following items. The memory function is not performed if these items are not satisfied.

Item	Request status
Ignition position	ON*
Switch inputs • Power seat switch • Tilt & telescopic switch • Door mirror control switch • Set switch • Memory switch	OFF (Not operated)
A/T shift selector	P position
Memory function	Registered
Vehicle speed	0 Km/h (0 MPH)
CONSULT	Not connected

* : When timer function does not operate.

DETAIL FLOW

Order	Input	Output	Control unit condition
1	Memory switch	—	The memory switch signal is inputted to the driver seat control unit when memory switch 1 or 2 is operated.
2	—	Motors (Seat, Steering, door mirror)	Driver seat control unit operates each motor of seat when it recognizes the memory switch pressed for 0.5 second or more and requests each motor operation to automatic drive positioner control unit via UART communication. The automatic drive positioner control unit operates each motor.
		Memory switch Indicator	Driver seat control unit requests the flashing of memory indicator while either of the motors is operating. The driver seat control unit illuminates the memory indicator.
3	Sensors (Seat, steering column, door mirror)	—	Driver seat control unit judges the operating seat position with each seat sensor input. The positions of the steering column and outside mirror are monitored with each sensor signal. Driver seat control unit stops the operation of each motor when each part reaches the recorded address.
4	—	Memory switch Indicator	Driver seat control unit requests the illumination of memory indicator after all motors stop. The driver seat control unit illuminates the memory indicator for 5 seconds.

TIMER FUNCTION

- The memory function can be performed for 45 seconds after opening the driver door even if the ignition switch position is in OFF position.
- Satisfy all of the following items. The timer function is not performed if these items are not satisfied.

Item	Request status
Ignition position	OFF
Set switch/memory switch	OFF
Memory function	Registered
A/T shift selector	P position
Steering lock unit status	LOCK
Driver side door switch	OFF
CONSULT	Not connected

EXIT ASSIST FUNCTION

EXIT ASSIST FUNCTION : System Diagram

INFOID:0000000007376158

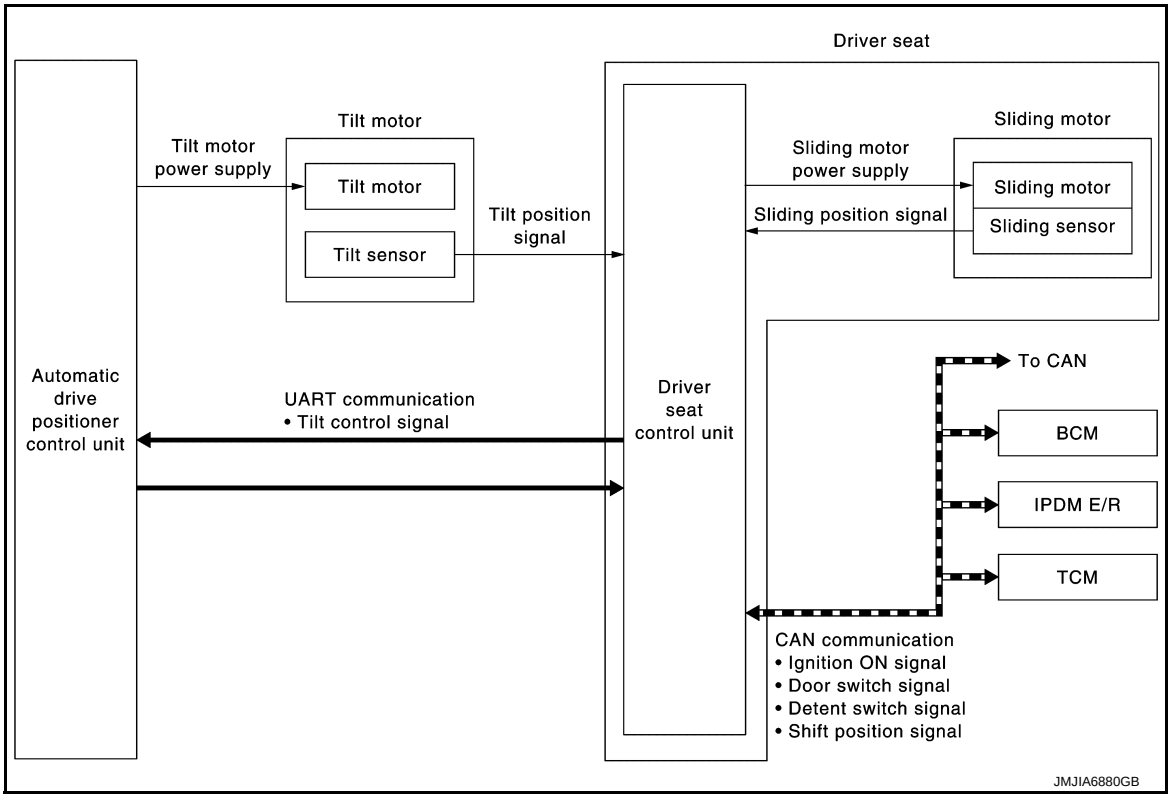

EXIT ASSIST FUNCTION : System Description

INFOID:0000000007376159

- When exiting, the condition is satisfied, the seat is moved backward 40 mm (1.57 in) from normal sitting position and the steering is moved to the most upper position.
- The seat slide amount and the steering operation at entry/exit operation can be changed.

NOTE:
- This function is set to ON before delivery (initial setting).
- Further information for the system setting procedure. Refer to ADP-47, "SYSTEM SETTING : Description".

OPERATION PROCEDURE

1. Shift position P position.
2. Open the driver door with ignition switch in OFF position.
3. Driver seat and steering column will move to the exiting position.

OPERATION CONDITION

Satisfy all of the following items. The exit assist function is not performed if these items are not satisfied.

Item	Request status
Ignition position	OFF
System setting [Entry/exit assist function (seat/steering)]	ON
Initialization	Done
Switch inputs • Power seat switch • Tilt & telescopic switch • Door mirror remote control switch • Set switch • Memory switch	OFF (Not operated)
A/T shift selector	P position
Handle position	LHD

Item	Request status
Transmission	A/T
CONSULT	Not connected

DETAIL FLOW

Order	Input	Output	Control unit condition
1	Door switch (Driver side)	—	Driver seat control unit receives door switch signal (driver side/open) from BCM via CAN communication.
2	—	Motors (Sliding, tilt)	Driver seat control unit operates the seat sliding motor, which recognizes that the driver side door is opened with ignition switch OFF. Driver seat control unit then requests the operations of tilt motor to auto drive positioner control unit via UART communication. The automatic drive positioner control unit operates each motor for a constant amount.
3	Sensor (Sliding, tilt)	—	Each sensor monitors the operating positions of seat and steering, and then stops the operation of each motor when each part reaches the recorded address.

ENTRY ASSIST FUNCTION

ENTRY ASSIST FUNCTION : System Diagram

INFOID:0000000007376160

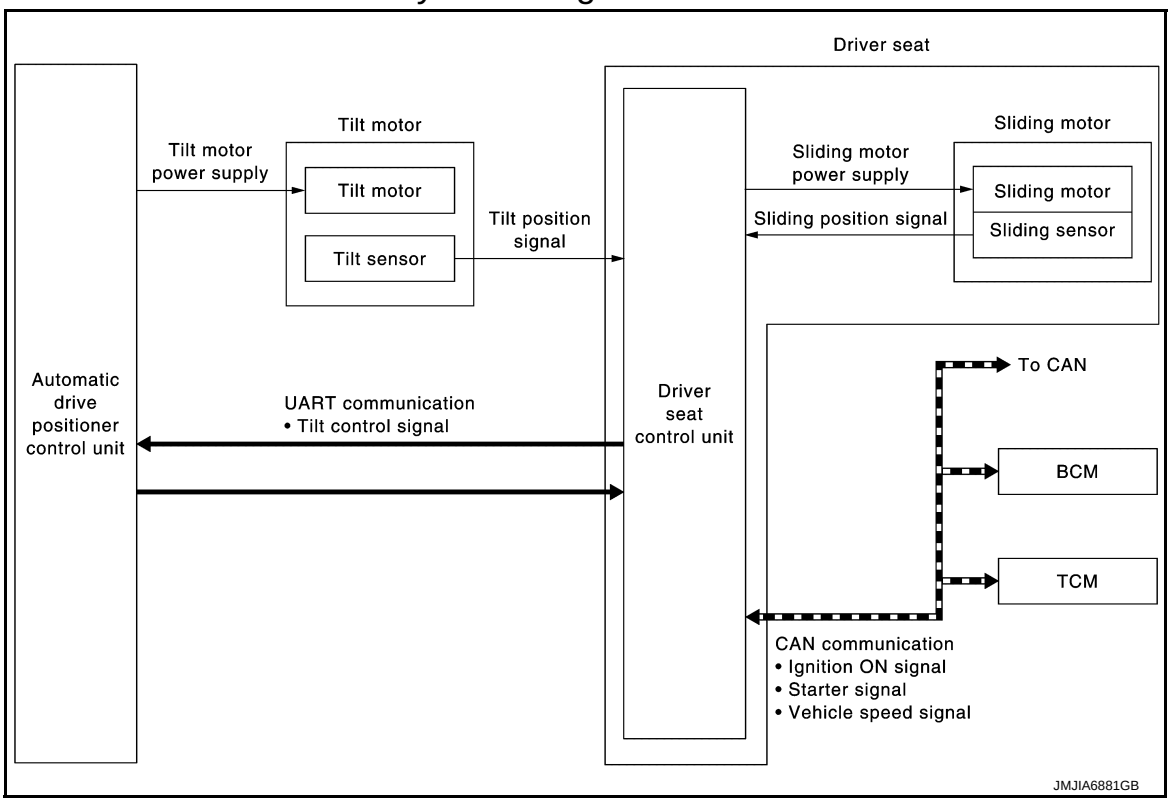

ENTRY ASSIST FUNCTION : System Description

INFOID:0000000007376161

The seat is in the exiting position when following condition is satisfied, the seat returns from exiting position to the previous driving position.

NOTE:

- This function is set to ON before delivery (initial setting).
- Further information for the system setting procedure. Refer to ADP-47, "SYSTEM SETTING : Description".

OPERATION PROCEDURE

1. Turn ignition switch ACC.

2. Driver seat and steering column will return from the exiting position to entry position.

OPERATION CONDITION

Satisfy all of the following items. The entry assist function is not performed if these items are not satisfied.

Item	Request status
Seat, steering column	The vehicle is not moved after performing the exit assist function.
Switch inputs • Power seat switch • Tilt & telescopic switch • Door mirror control switch • Set switch • Memory switch	OFF (Not operated)
Vehicle speed	0 Km/h (0 MPH)
Starter	OFF
Transmission	A/T
CONSULT	Not connected

DETAIL FLOW

Order	Input	Output	Control unit condition
1	Ignition switch	—	Driver seat control unit receives the signals of [ignition switch signal] from BCM via CAN communication.
2	—	Motors (Sliding, tilt)	Driver side control unit operates the sliding motor when the operating conditions are satisfied and requests the operations of tilt motor to automatic drive positioner control unit via UART communication. The automatic drive positioner operates each motor.
3	Sensors (Sliding, tilt)	—	Each sensor monitors the operating positions of seat and steering, and then stops the operation of each motor when each part reaches the recorded address.

INTELLIGENT KEY INTERLOCK FUNCTION

INTELLIGENT KEY INTERLOCK FUNCTION : System Diagram

INFOID:0000000007376162

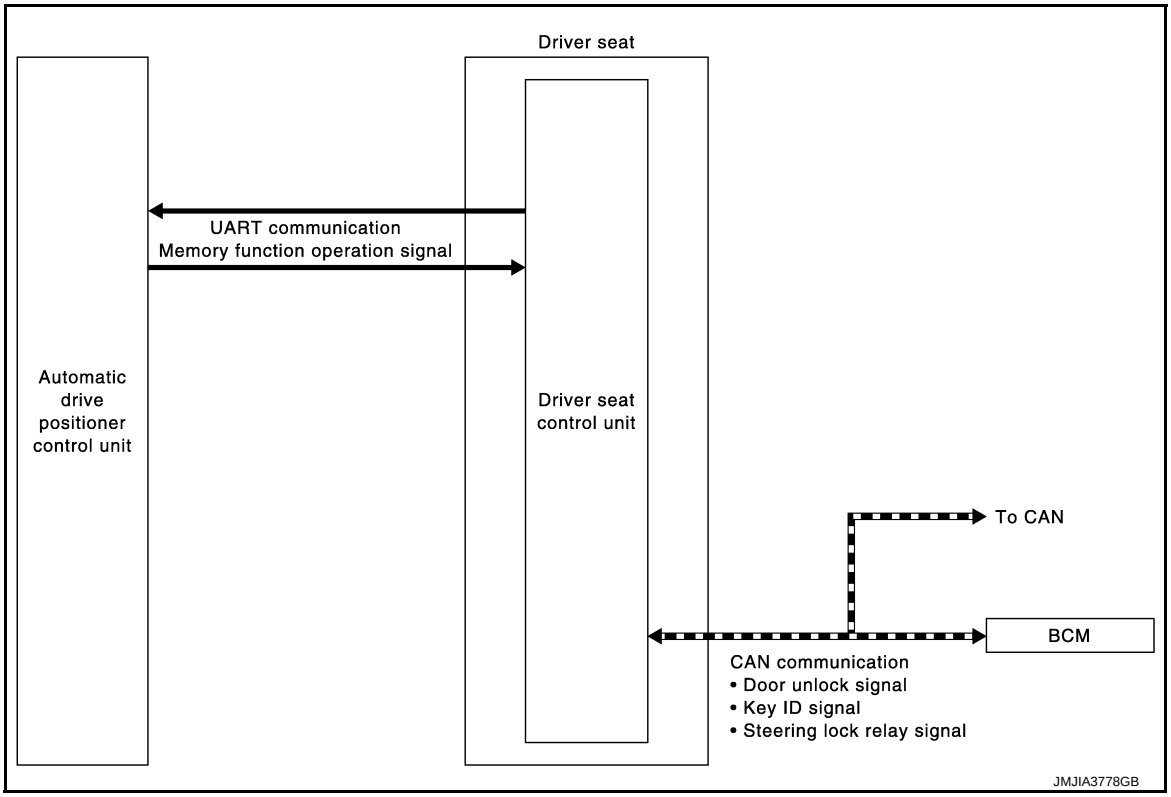

INTELLIGENT KEY INTERLOCK FUNCTION : System Description

INFOID:0000000007376163

- By associating Intelligent Key and automatic drive positioner system, the unlock operation of Intelligent Key or driver side door request switch performs memory function and entry/exit assist function.
- Registration of Intelligent Key interlock function can register a different key ID to the driver seat control unit, one by one, for memory switch 1 and 2. A total of 2 key IDs can be registered.
- When ignition switch is OFF (steering lock unit status), and door unlock operation is performed using Intelligent Key or driver side door request switch, driver seat automatically adjusts to a driving position other than seat sliding. Seat sliding and steering column tilt perform return operation and are set to standby status.
- In standby status, when ignition switch is operated from OFF to ACC, return operation sets seat sliding and steering column tilt to a registered position.

NOTE:

- When another key ID is newly registered to a key switch to which a key ID is already registered, the previously registered key ID is overwritten and becomes unusable.
- When starter signal turns ON during return operation, the operation is interrupted, starter signal turns from ON to OFF, and operation restarts.

OPERATION PROCEDURE

1. Unlock driver door by Intelligent Key or driver side door request switch.
2. Operation other than memory function of seat sliding is performed. Seat sliding and steering column tilt perform exit assist operation.
3. Turn ignition switch ACC.
4. Driver seat and steering column will return from the exiting position to entry position.

NOTE:

Further information for Intelligent Key interlock function. Refer to ADP-47, "INTELLIGENT KEY INTERLOCK STORING : Description".

OPERATION CONDITION

Satisfy all of the following items. The Intelligent Key interlock function is not performed if these items are not satisfied.

Item	Request status
Ignition position	OFF
Intelligent key interlock function	Registered
Steering lock unit status	LOCK
Switch inputs • Power seat switch • Tilt & telescopic switch • Door mirror control switch • Set switch • Memory switch	OFF (Not operated)
A/T shift selector	P position

DETAIL FLOW

Order	Input	Output	Control unit condition
1	• Door unlock signal (CAN) • Key ID signal (CAN)	—	Driver seat control unit receives unlock signal and key ID signal from BCM, when driver seat control unit is unlocked by Intelligent Key or driver side door request switch.
2	—	—	Driver seat control unit performs the seat slide and steering tilt move directly to the exit assist function. Other loads move to the exit assist function after performing memory function.
3	—	—	Driver seat control unit performs the entry assist function.

Fail Safe

INFOID:0000000007376164

The fail-safe mode may be activated if the following symptoms are observed.

Operating in fail-safe mode	Malfunction Item	Related DTC	Diagnosis
Only manual functions operate normally.	CAN communication	U1000	ADP-49
	CONTROL UNIT	U1010	ADP-50
	EEPROM	B2130	ADP-59
Only manual functions, except door mirror, operate normally.	UART communication	B2128	ADP-57
Only manual functions, except seat sliding, operate normally.	Seat sliding output	B2112	ADP-51
Only manual functions, except seat reclining, operate normally.	Seat reclining output	B2113	ADP-53
Only manual functions, except steering tilt, operate normally.	Steering column tilt output	B2116	ADP-55

DIAGNOSIS SYSTEM (DRIVER SEAT CONTROL UNIT)

CONSULT Function

INFOID:0000000007376165

The automatic drive positioner system can be checked and diagnosed for component operation using CONSULT.

APPLICATION ITEMS

Diagnostic mode	Description
Ecu Identification	Displays part numbers of driver seat control unit.
Self Diagnostic Result	Performs self-diagnosis for the auto drive positioner system and displays the results.
Data Monitor	Displays input signals transmitted from various switches and sensors to driver seat control unit in real time.
Active Test	Drives each output unit.
Work support	Changes the setting for each system function.

SELF-DIAGNOSIS RESULTS

Refer to ADP-32, "DTC Index".

DATA MONITOR

Monitor Item	Unit	Main Signals	Selection From Menu	Contents
STARTER SW	“ON/OFF”	×	×	Ignition key switch ON (START, ON) /OFF (ACC, OFF) status judged from the ignition switch signal.
SET SW	“ON/OFF”	×	×	ON/OFF status judged from the setting switch signal.
MEMORY SW 1	“ON/OFF”	×	×	ON/OFF status judged from the seat memory switch 1 signal.
MEMORY SW 2	“ON/OFF”	×	×	ON/OFF status judged from the seat memory switch 2 signal.
DETENT SW	“ON/OFF”	×	×	The A/T shift selector position “OFF (P position) / ON (other than P position)” judged from the detention switch signal.
STEERING STATUS	“LOCK/UNLOCK”	×	×	LOCK/UNLOCK status judged from steering lock unit.
SLIDE SW–FR	“ON/OFF”	×	×	ON/OFF status judged from the sliding switch (forward) signal.
SLIDE SW–RR	“ON/OFF”	×	×	ON/OFF status judged from the sliding switch (backward) signal.
RECLN SW–FR	“ON/OFF”	×	×	ON/OFF status judged from the reclining switch (forward) signal.
RECLN SW–RR	“ON/OFF”	×	×	ON/OFF status judged from the reclining switch (backward) signal.
LIFT FR SW–UP	“ON/OFF”	×	×	ON/OFF status judged from the lifting switch front (up) signal.
LIFT FR SW–DN	“ON/OFF”	×	×	ON/OFF status judged from the lifting switch front (down) signal.
LIFT RR SW–UP	“ON/OFF”	×	×	ON/OFF status judged from the lifting switch rear (up) signal.
LIFT RR SW–DN	“ON/OFF”	×	×	ON/OFF status judged from the lifting switch rear (down) signal.
TILT SW-UP	“ON/OFF”	×	×	ON/OFF status judged from the tilt switch (up) signal.
TILT SW-DOWN	“ON/OFF”	×	×	ON/OFF status judged from the tilt switch (down) signal.

Monitor Item	Unit	Main Signals	Selection From Menu	Contents
TELESCO SW-FR	“ON/OFF”	×	×	ON/OFF status judged from the telescoping switch (forward) signal.
TELESCO SW-RR	“ON/OFF”	×	×	ON/OFF status judged from the telescoping switch (backward) signal.
MIR CON SW–UP	“ON/OFF”	×	×	ON/OFF status judged from the mirror switch (up) signal.
MIR CON SW–DN	“ON/OFF”	×	×	ON/OFF status judged from the mirror switch (down) signal.
MIR CON SW–RH	“ON/OFF”	×	×	ON/OFF status judged from the door mirror remote control switch (passenger side) signal.
MIR CON SW–LH	“ON/OFF”	×	×	ON/OFF status judged from the door mirror remote control switch (driver side) signal.
MIR CHNG SW–R	“ON/OFF”	×	×	ON/OFF status judged from the door mirror remote control switch (switching to right) signal.
MIR CHNG SW–L	“ON/OFF”	×	×	ON/OFF status judged from the door mirror remote control switch (switching to left) signal.
VEHICLE SPEED	—	×	×	Display the vehicle speed signal received from combination meter by numerical value [km/h].
P RANG SW CAN	“ON/OFF”	×	×	ON/OFF status judged from the P range switch signal.
R RANGE (CAN)	“ON/OFF”	×	×	ON/OFF status judged from the R range switch signal.
DOOR SW–FL	“ON/OFF”	×	×	ON/OFF status judged from the door switch (front driver side) signal.
DOOR SW–FR	“ON/OFF”	×	×	ON/OFF status judged from the door switch (front passenger side) signal.
IGN ON SW	“ON/OFF”	×	×	ON/OFF status judged from the ignition switch signal.
ACC ON SW	“ON/OFF”	×	×	ON/OFF status judged from the ACC switch signal.
KEY ON SW	“ON/OFF”	×	×	ON/OFF status judged from the key on switch signal.
KEYLESS ID	—	×	×	Key ID status judged from the key ID signal.
KYLS DR UNLK	“ON/OFF”	×	×	ON/OFF status judged from the driver side door unlock actuator output switch signal.
VHCL SPEED (ABS)	“ON/OFF”	×	×	ON/OFF status judged from vehicle speed signal.
HANDLE	“RHD/LHD”	×	×	RHD/LHD status judged from handle position signal.
TRANSMISSION	“AT or CVT/MT”	×	×	AT or CVT/MT status judged from transmission.
SLIDE PULSE	—	–	×	Value (32768) when battery connections are standard. If it moves backward, the value increases. If it moves forward, the value decreases.
RECLN PULSE	—	–	×	Value (32768) when battery connections are standard. If it moves backward, the value increases. If it moves forward, the value decreases.
LIFT FR PULSE	—	–	×	Value (32768) when battery connections are standard. If it moves DOWN, the value increases. If it moves UP, the value decreases.
LIFT RR PULSE	—	–	×	Value (32768) when battery connections are standard. If it moves DOWN, the value increases. If it moves UP, the value decreases.
MIR/SEN RH U–D	“V”	–	×	Voltage input from door mirror sensor (passenger side) up/down is displayed.
MIR/SEN RH R–L	“V”	–	×	Voltage input from door mirror sensor (passenger side) left/right is displayed.
MIR/SEN LH U–D	“V”	–	×	Voltage input from door mirror sensor (driver side) up/down is displayed.

Monitor Item	Unit	Main Signals	Selection From Menu	Contents
MIR/SEN LH R–L	"V"	–	×	Voltage input from door mirror sensor (driver side) left/right is displayed.
TILT PULSE	—	–	×	Value (32768) when battery connections are standard. If it moves DOWN, the value increases. If it moves UP, the value decreases.
TELESCO PULSE	—	–	×	Value (32768) when battery connections are standard. If it moves backward, the value increases. If it moves forward, the value decreases.

ACTIVE TEST

CAUTION:

When driving vehicle, do not perform active test.

Test item	Description
SEAT SLIDE	Activates/deactivates the sliding motor.
SEAT RECLINING	Activates/deactivates the reclining motor.
SEAT LIFTER FR	Activates/deactivates the lifting motor (front).
SEAT LIFTER RR	Activates/deactivates the lifting motor (rear).
TILT MOTOR	Activates/deactivates the tilt motor.
TELESCO MOTOR	Activates/deactivates the telescopic motor.
MIRROR MOTOR RH	Activates/deactivates the mirror motor (passenger side).
MIRROR MOTOR LH	Activates/deactivates the mirror motor (driver side).
MEMORY SW INDCTR	Turns ON/OFF the memory indicator.

WORK SUPPORT

Work item	Content	Item
SEAT SLIDE VOLUME SET	The amount of seat sliding for entry/exit assist can be selected from 3 items.	40 mm
		80 mm
		150 mm
EXIT TILT SETTING	Entry/exit assist (steering column) can be selected: ON (operated) – OFF (not operated)	ON
		OFF
EXIT SEAT SLIDE SETTING	Entry/exit assist (seat) can be selected: ON (operated) – OFF (not operated)	ON
		OFF

ECU DIAGNOSIS INFORMATION

DRIVER SEAT CONTROL UNIT

Reference Value

INFOID:0000000007376166

VALUES ON THE DIAGNOSIS TOOL

CONSULT MONITOR ITEM

Monitor Item	Condition		Value/Status
SET SW	Set switch	Push	ON
		Release	OFF
MEMORY SW1	Memory switch 1	Push	ON
		Release	OFF
MEMORY SW2	Memory switch 2	Push	ON
		Release	OFF
SLIDE SW–FR	Sliding switch (forward)	Operate	ON
		Release	OFF
SLIDE SW–RR	Sliding switch (backward)	Operate	ON
		Release	OFF
RECLN SW–FR	Reclining switch (forward)	Operate	ON
		Release	OFF
RECLN SW–RR	Reclining switch (backward)	Operate	ON
		Release	OFF
LIFT FR SW–UP	Lifting switch front (up)	Operate	ON
		Release	OFF
LIFT FR SW–DN	Lifting switch front (down)	Operate	ON
		Release	OFF
LIFT RR SW–UP	Lifting switch rear (up)	Operate	ON
		Release	OFF
LIFT RR SW–DN	Lifting switch rear (down)	Operate	ON
		Release	OFF
MIR CON SW–UP	Mirror switch	Up	ON
		Other than the above	OFF
MIR CON SW–DN	Mirror switch	Down	ON
		Other than the above	OFF
MIR CON SW–RH	Mirror switch	Right	ON
		Other than the above	OFF
MIR CON SW–LH	Mirror switch	Left	ON
		Other than the above	OFF
MIR CHNG SW–R	Changeover switch	Right	ON
		Other than the above	OFF
MIR CHNG SW–L	Changeover switch	Left	ON
		Other than the above	OFF
TILT SW-UP	Tilt switch	Upward	ON
		Other than the above	OFF
TILT SW-DOWN	Tilt switch	Downward	ON
		Other than the above	OFF

Monitor Item	Condition		Value/Status
TELESCO SW-FR	Telescopic switch	Forward	ON
		Other than the above	OFF
TELESCO SW-RR	Telescopic switch	Backward	ON
		Other than the above	OFF
DETENT SW	A/T shift selector	P position	OFF
		Other than the above	ON
STARTER SW	Ignition position	Cranking	ON
		Other than the above	OFF
SLIDE PULSE	Seat sliding	Forward	The numeral value decreases *
		Backward	The numeral value increases*
		Other than the above	No change to numeral value*
RECLN PULSE	Seat reclining	Forward	The numeral value decreases*
		Backward	The numeral value increases *
		Other than the above	No change to numeral value*
LIFT FR PULSE	Seat lifter (front)	Up	The numeral value decreases *
		Down	The numeral value increases *
		Other than the above	No change to numeral value*
LIFT RR PULSE	Seat lifter (rear)	Up	The numeral value decreases *
		Down	The numeral value increases *
		Other than the above	No change to numeral value*
MIR/SEN RH U–D	Door mirror (passenger side)		Change between 3.4 (close to peak) 0.6 (close to valley)
MIR/SEN RH R–L	Door mirror (passenger side)		Change between 3.4 (close to left edge) 0.6 (close to right edge)
MIR/SEN LH U–D	Door mirror (driver side)		Change between 3.4 (close to peak) 0.6 (close to valley)
MIR/SEN LH R–L	Door mirror (driver side)		Change between 0.6 (close to left edge) 3.4 (close to right edge)
TILT PULSE	Tilt position	Upward	The numeral value decreases *
		Downward	The numeral value increases *
		Other than the above	No change to numeral value*
TELESCO PULSE	Telescopic position	Forward	The numeral value decreases *
		Backward	The numeral value increases *
		Other than the above	No change to numeral value*
STEERING STATUS	Steering lock unit	LOCK	LOCK
		unlock	UNLOCK
VEHICLE SPEED	The condition of vehicle speed is displayed		km/h
P RANG SW CAN	A/T shift selector	P position	ON
		Other than the above	OFF
R RANGE (CAN)	A/T shift selector	R position	ON
		Other than the above	OFF
DOOR SW-FL	Driver door	Open	ON
		Close	OFF

Monitor Item	Condition		Value/Status
DOOR SW-FR	Passenger door	Open	ON
		Close	OFF
IGN ON SW	Ignition switch	ON position	ON
		Other than the above	OFF
ACC ON SW	Ignition switch	ACC or ON position	ON
		Other than the above	OFF
KEY ON SW	Intelligent Key	Inserted is key slot	ON
		Inserted is not key slot	OFF
KEYLESS ID	UNLOCK button of Intelligent Key is pressed		1, 2, 3, 4 or 5
KYLS DR UNLK	Intelligent Key or driver side door request switch	ON	ON
		OFF	OFF
VHCL SPEED (ABS)	Can signal from ABS	Received	ON
		Not received	OFF
HANDLE	The BCM for handle position is displayed		LHD
			RHD
TRANSMISSION	Transmission type is displayed		AT or CVT
			MT

*: The value at the position attained when the battery is connected is regarded as 32768.

TERMINAL LAYOUT

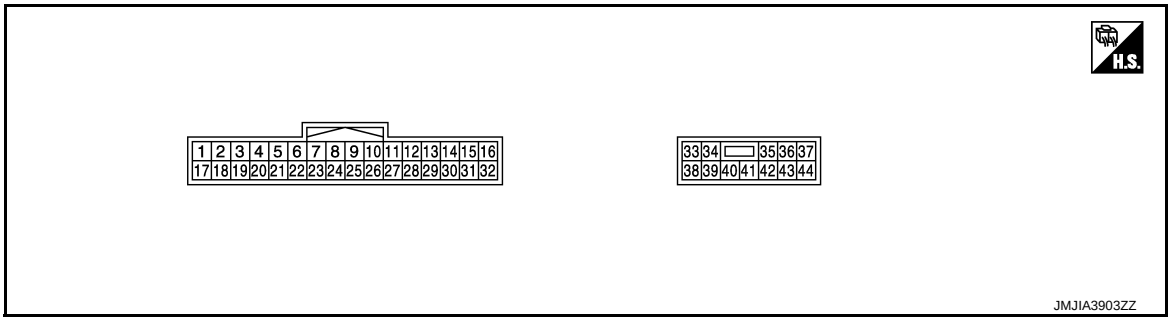

PHYSICAL VALUES

Terminal No. (Wire color)		Description		Condition	Voltage (V) (Approx.)
+	-	Signal name	Input/ output		
1 (R/Y)	—	CAN-H	—	—	—
2 (R)	Ground	UART communication (TX/RX)	Input	Ignition switch ON	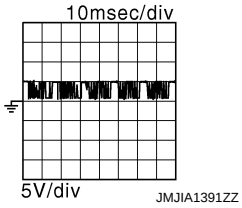

4 (R/L)	Ground	Reclining sensor signal	Input	Seat reclining	Operate	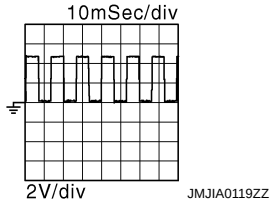
					Other than the above	0 or 5
5 (R/B)	Ground	Telescopic sensor signal	Input	Steering telescopic	Operate	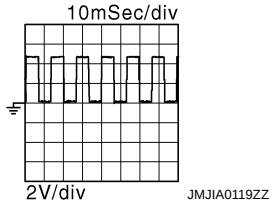
					Other than the above	0 or 5
6 (R/W)	Ground	Memory switch 2 signal	Input	Memory switch 2	Press	0
					Other than the above	5
7 (R/G)	Ground	Memory indicator 2 signal	Output	Memory indicator 2	Illuminate	1
					Other than the above	12
8 (SB)	Ground	Sliding switch backward signal	Input	Sliding switch	Operate (backward)	0
					Other than the above	12
9 (L)	Ground	Reclining switch backward signal	Input	Reclining switch	Operate (backward)	0
					Other than the above	12
10 (L/B)	Ground	Lifting switch (front) down signal	Input	Lifting switch (front)	Operate (down)	0
					Other than the above	12
11 (L/W)	Ground	Lifting switch (rear) down signal	Input	Lifting switch (rear)	Operate (down)	0
					Other than the above	12
12 (L/R)	Ground	Sensor power supply	Output	—		12
17 (V)	—	CAN-L	—	—		—
18 (B/W)	Ground	Sliding sensor signal	Input	Seat sliding	Operate	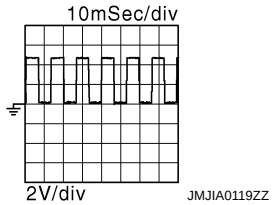
					Other than the above	0 or 5

19 (B/R)	Ground	Lifting sensor (front) signal	Input	Seat lifting (front)	Operate	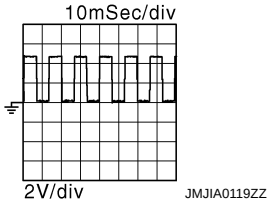
					Other than the above	0 or 5
20 (B/L)	Ground	Lifting sensor (rear) signal	Input	Seat lifting (rear)	Operate	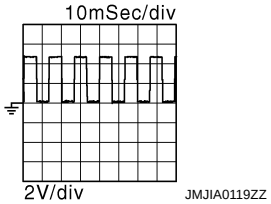
					Other than the above	0 or 5
21 (W/B)	Ground	Tilt sensor signal	Input	Steering tilt	Operate	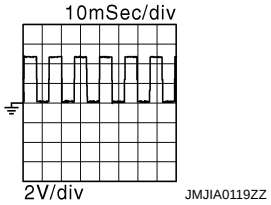
					Other than the above	0 or 5
22 (W/L)	Ground	Memory switch 1 signal	Input	Memory switch 1	Press	0
					Other than the above	5
23 (W/R)	Ground	Memory indicator 1 signal	Output	Memory indicator 1	Illuminate	1
					Other than the above	12
24 (V/W)	Ground	Sliding switch forward signal	Input	Sliding switch	Operate (forward)	0
					Other than the above	12
25 (Y/B)	Ground	Reclining switch forward signal	Input	Reclining switch	Operate (forward)	0
					Other than the above	12
26 (Y/R)	Ground	Lifting switch (front) up signal	Input	Lifting switch (front)	Operate (up)	0
					Other than the above	12
27 (Y/L)	Ground	Lifting switch (rear) up signal	Input	Lifting switch (rear)	Operate (up)	0
					Other than the above	12
28 (G)	Ground	Set switch signal	Input	Set switch	Press	0
					Other than the above	5

33 (R)	Ground	Battery power supply	Input	—		Battery voltage
34 (B)	Ground	Sliding motor backward output signal	Output	Seat sliding	Operate (backward)	12
					Other than the above	0
35 (G)	Ground	Reclining motor forward output signal	Output	Seat reclining	Operate (forward)	12
					Other than the above	0
36 (L)	Ground	Lifting motor (front) down output signal	Output	Seat lifting (front)	Operate (down)	12
					Other than the above	0
38 (GR)	Ground	Sliding motor forward output signal	Output	Seat sliding	Operate (forward)	12
					Other than the above	0
39 (Y)	Ground	Reclining motor backward output signal	Output	Seat reclining	Operate (backward)	12
					Other than the above	0
40 (W)	Ground	Lifting motor (front) up output signal	Output	Seat lifting (front)	Operate (up)	12
					Other than the above	0
41 (V)	Ground	Lifting motor (rear) up output signal	Output	Seat lifting (rear)	Operate (up)	12
					Other than the above	0
42 (P/B)	Ground	Lifting motor (rear) down output signal	Output	Seat lifting (rear)	Operate (down)	12
					Other than the above	0
43 (LG)	Ground	Ground	—	—		0

Fail Safe

INFOID:0000000007376167

The fail-safe mode may be activated if the following symptoms are observed.

Operating in fail-safe mode	Malfunction Item	Related DTC	Diagnosis
Only manual functions operate normally.	CAN communication	U1000	ADP-49
	CONTROL UNIT	U1010	ADP-50
	EEPROM	B2130	ADP-59
Only manual functions, except door mirror, operate normally.	UART communication	B2128	ADP-57
Only manual functions, except seat sliding, operate normally.	Seat sliding output	B2112	ADP-51
Only manual functions, except seat reclining, operate normally.	Seat reclining output	B2113	ADP-53
Only manual functions, except steering tilt, operate normally.	Steering column tilt output	B2116	ADP-55

DTC Index

INFOID:0000000007376168

CONSULT display	Timing*1		Item	Reference page
	Current malfunction	Previous malfunction		
CAN COMM CIRCUIT [U1000]	0	1-39	CAN communication	ADP-49
CONTROL UNIT [U1010]	0	1-39	Control unit	ADP-50
SEAT SLIDE [B2112]	0	1-39	Seat slide motor output	ADP-51
SEAT RECLINING [B2113]	0	1-39	Seat reclining motor output	ADP-53
STEERING TILT [B2116]	0	1-39	Tilt motor output	ADP-55
UART COMM [B2128]	0	1-39	UART communication	ADP-57
EEPROM [B2130]	0	1-39	EEPROM	ADP-59

*1:

- 0: Current malfunction is present
- 1-39: Displayed if any previous malfunction is present when current condition is normal. The numeral value increases by one at each IGN ON to OFF cycle from 1 to 39. The counter remains at 39 even if the number of cycles exceeds it. However, the counter is reset to 1 if any malfunction is detected again, the normal operation is resumed and the ignition switch is turned from OFF to ON.

AUTOMATIC DRIVE POSITIONER CONTROL UNIT

Reference Value

INFOID:0000000007376169

TERMINAL LAYOUT

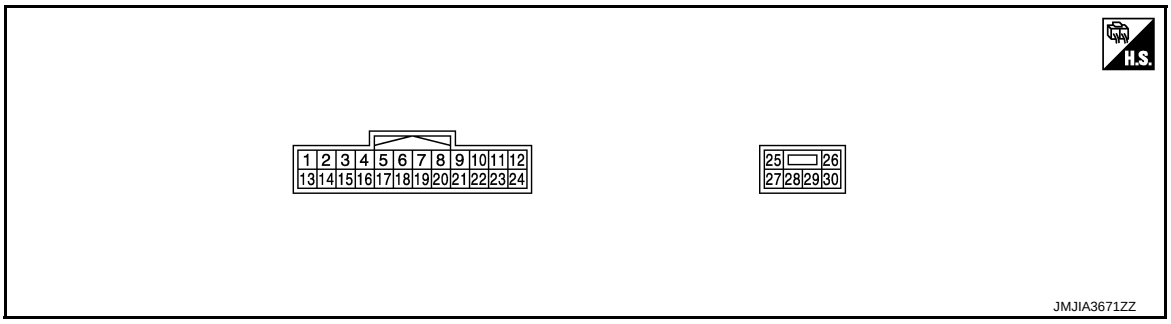

PHYSICAL VALUES

Terminal No. (wire color)		Description		Condition		Voltage (V) (Approx.)
+	-	Signal name	Input/ Output			
1 (Y)	Ground	Tilt switch up signal	Input	Tilt switch	Operate (up)	0
					Other than the above	5
2 (GR/B)	Ground	Changeover switch RH signal	Input	Changeover switch position	RH	0
					Neutral or LH	5
3 (Y/G)	Ground	Mirror switch up signal	Input	Mirror switch	Operated (up)	0
					Other than the above	5
4 (GR/R)	Ground	Mirror switch left signal	Input	Mirror switch	Operated (left)	0
					Other than the above	5
5 (R/B)	Ground	Door mirror sensor (passenger side) up/down signal	Input	Door mirror RH position		Change between 3.4 (close to peak) 0.6 (close to valley)
6 (L/Y)	Ground	Door mirror sensor (driver side) up/down signal	Input	Door mirror LH position		Change between 3.4 (close to peak) 0.6 (close to valley)
7 (P)	Ground	Telescopic switch forward signal	Input	Telescopic switch	Operate (forward)	0
					Other than the above	5
8 (LG/R)	Ground	UART communication (TX/RX)	Output	Ignition switch ON		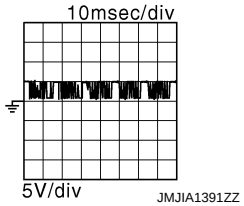

Terminal No. (wire color)		Description		Condition		Voltage (V) (Approx.)
+	-	Signal name	Input/ Output			
10 (L/O)	Ground	Door mirror motor (passenger side) up output signal	Output	Door mirror RH	Operate (up)	12
					Other than the above	0
11 (Y/B)	Ground	Door mirror motor (passenger side) left output signal	Output	Door mirror RH	Operate (left)	12
					Other than the above	0
12 (SB)	Ground	Door mirror motor (driver side) down/right output signal	Output	Door mirror (LH)	Operate (down/right)	12
					Other than the above	0
13 (LG)	Ground	Tilt switch down signal	Input	Tilt switch	Operate (down)	0
					Other than the above	5
14 (BR)	Ground	Changeover switch LH signal	Input	Changeover switch position	LH	0
					Neutral or RH	5
15 (O/L)	Ground	Mirror switch down signal	Input	Mirror switch	Operate (down)	0
					Other than the above	5
16 (V/W)	Ground	Mirror switch right signal	Input	Mirror switch	Operate (right)	0
					Other than the above	5
17 (L/R)	Ground	Door mirror sensor (passenger side) left/right signal	Input	Door mirror RH position		Change between 3.4 (close to left edge) 0.6 (close to right edge)
18 (G/W)	Ground	Door mirror sensor (driver side) left/right signal	Input	Door mirror LH position		Change between 0.6 (close to left edge) 3.4 (close to right edge)
19 (G)	Ground	Telescopic switch backward signal	Input	Telescopic switch	Operate (backward)	0
					Other than the above	5
20 (Y)	Ground	Sensor ground	—	—		0
21 (W/L)	Ground	Door mirror motor sensor power supply	Input	—		5
22 (V)	Ground	Door mirror motor (passenger side) down/right output signal	Output	Door mirror (RH)	Operate (down/right)	12
					Other than the above	0
23 (L/W)	Ground	Door mirror motor (driver side) up output signal	Output	Door mirror (LH)	Operate (up)	12
					Other than the above	0

Terminal No. (wire color)		Description		Condition		Voltage (V) (Approx.)
+	-	Signal name	Input/ Output			
24 (BR/Y)	Ground	Door mirror motor (driver side) left output signal	Output	Door mirror (LH)	Operate (left)	12
					Other than the above	0
25 (W/R)	Ground	Battery power supply	Input	—		Battery voltage
26 (L)	Ground	Telescopic motor backward output signal	Output	Steering telescopic	Operate (backward)	12
					Other than the above	0
27 (P)	Ground	Tilt & telescopic sensor power supply	Output	—		12
28 (G)	Ground	Tilt motor down output signal	Output	Steering tilt	Operate (down)	12
					Other than the above	0
29 (W/B)	Ground	Tilt motor up output signal	Output	Steering tilt	Operate (up)	12
					Other than the above	0
		Telescopic motor forward output signal		Steering telescopic	Operate (forward)	12
					Other than the above	0
30 (B)	Ground	Ground	—	—		0

BCM (BODY CONTROL MODULE)

List of ECU Reference

INFOID:0000000007376170

ECU	Reference
BCM	BCS-35, "Reference Value"
	BCS-56, "Fail-safe"
	BCS-57, "DTC Inspection Priority Chart"
	BCS-57, "DTC Index"

WIRING DIAGRAM

AUTOMATIC DRIVE POSITIONER SYSTEM

Wiring Diagram

INFOID:0000000007376171

For connector terminal arrangements, harness layouts, and alphabets in a ⬡ (option abbreviation; if not described in wiring diagram), refer to GI-12, "Connector Information".

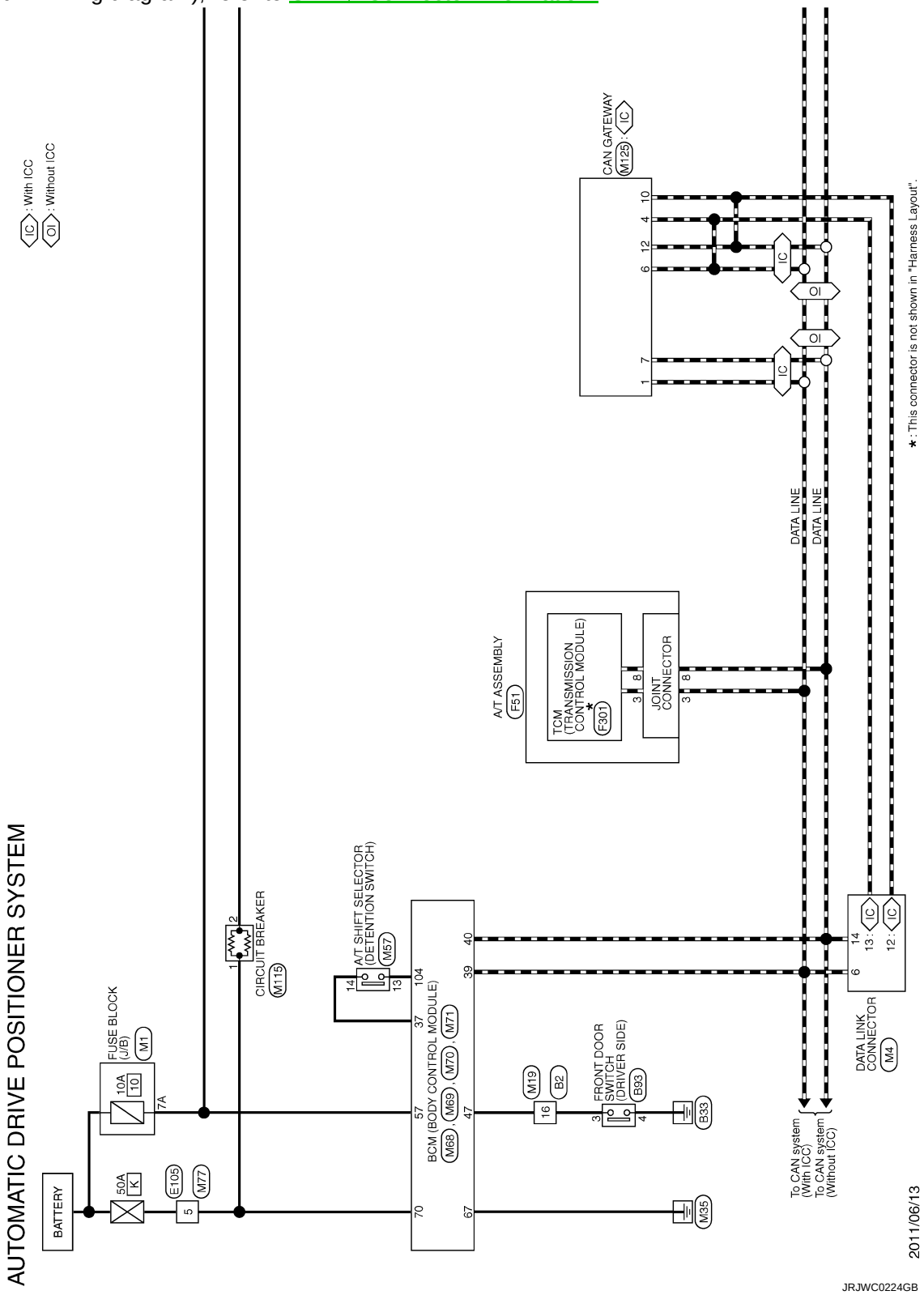

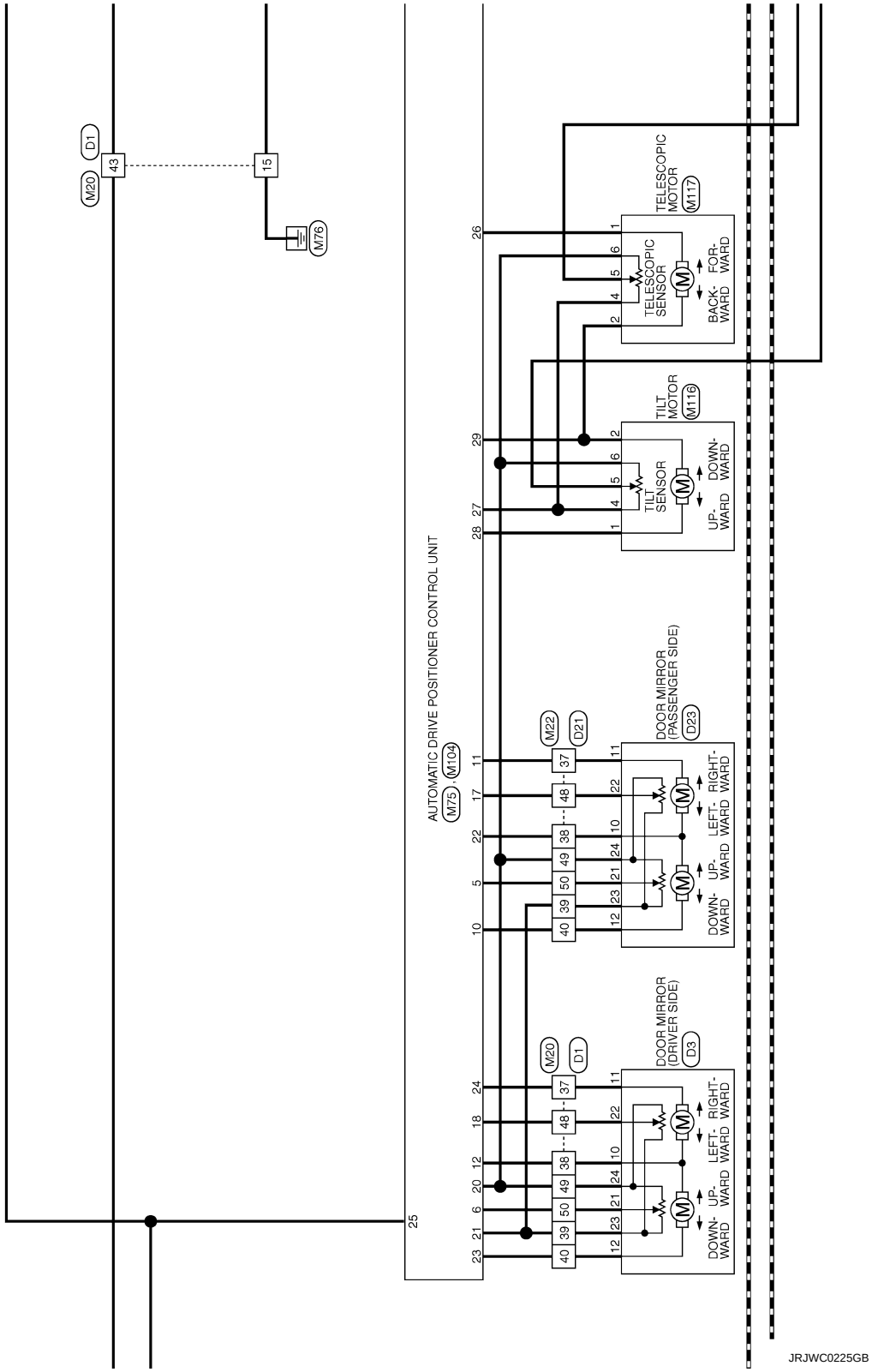
M20
D1
43
15
M76
AUTOMATIC DRIVE POSITIONER CONTROL UNIT
M75
M104
25
TELESCOPIC MOTOR
M117
TELESCOPIC SENSOR
BACK-WARD
FOR-WARD
TILT MOTOR
M116
TILT SENSOR
UP-WARD
DOWN-WARD
DOOR MIRROR (PASSENGER SIDE)
D23
M22
D21
DOWN-WARD
UP-WARD
LEFT-WARD
RIGHT-WARD
DOOR MIRROR (DRIVER SIDE)
D3
M20
D1
DOWN-WARD
UP-WARD
LEFT-WARD
RIGHT-WARD
JRJWC0225GB

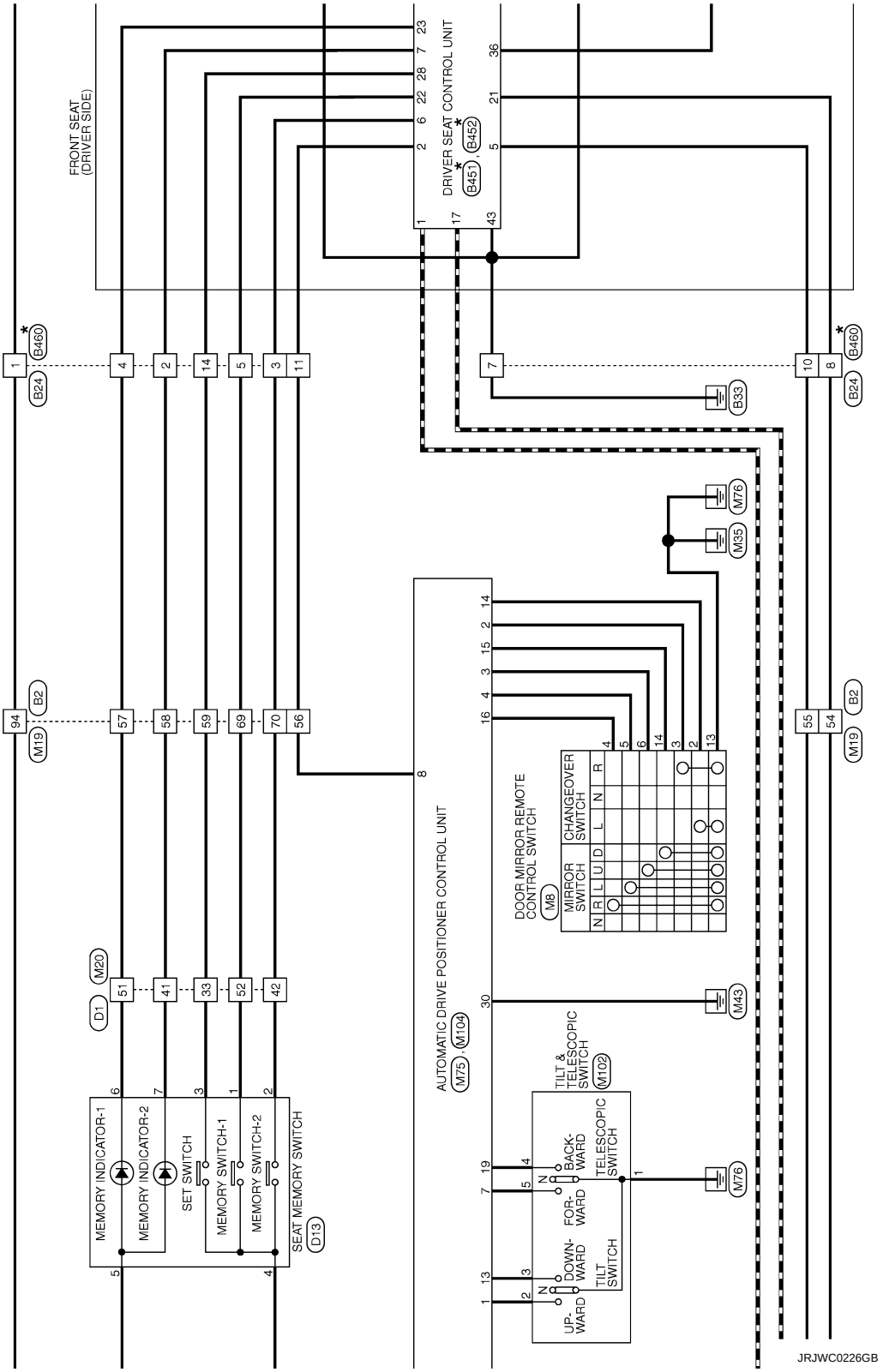
FRONT SEAT (DRIVER SIDE)
DRIVER SEAT CONTROL UNIT
B451
B452
B460
B24
B2
M19
M20
D1
M76
M35
M43
B33
AUTOMATIC DRIVE POSITIONER CONTROL UNIT
M75
M104
DOOR MIRROR REMOTE CONTROL SWITCH
M8
MIRROR SWITCH
CHANGEOVER SWITCH
TILT & TELESCOPIC SWITCH
M102
UP-WARD
DOWN-WARD
TILT SWITCH
FOR-WARD
BACK-WARD
TELESCOPIC SWITCH
MEMORY INDICATOR-1
MEMORY INDICATOR-2
SET SWITCH
MEMORY SWITCH-1
MEMORY SWITCH-2
SEAT MEMORY SWITCH
D13
JRJWC0226GB

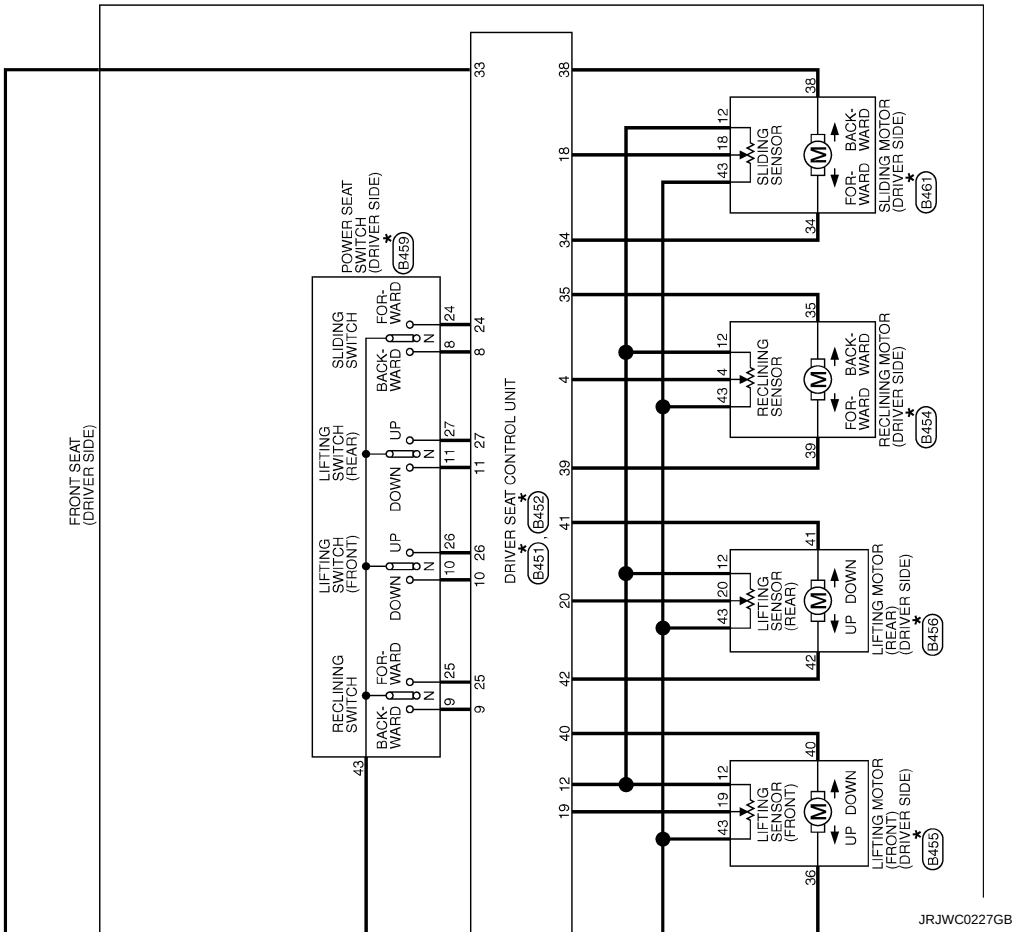
FRONT SEAT (DRIVER SIDE)
POWER SEAT SWITCH (DRIVER SIDE)
B459
RECLINING SWITCH
BACK-WARD
FOR-WARD
LIFTING SWITCH (FRONT)
DOWN
UP
LIFTING SWITCH (REAR)
SLIDING SWITCH
DRIVER SEAT CONTROL UNIT
B451
B452
LIFTING SENSOR (FRONT)
LIFTING MOTOR (FRONT) (DRIVER SIDE)
B455
LIFTING SENSOR (REAR)
LIFTING MOTOR (REAR) (DRIVER SIDE)
B456
RECLINING SENSOR
RECLINING MOTOR (DRIVER SIDE)
B454
SLIDING SENSOR
SLIDING MOTOR (DRIVER SIDE)
B461
JRJWC0227GB

BASIC INSPECTION

DIAGNOSIS AND REPAIR WORK FLOW

Work Flow

INFOID:0000000007376172

OVERALL SEQUENCE

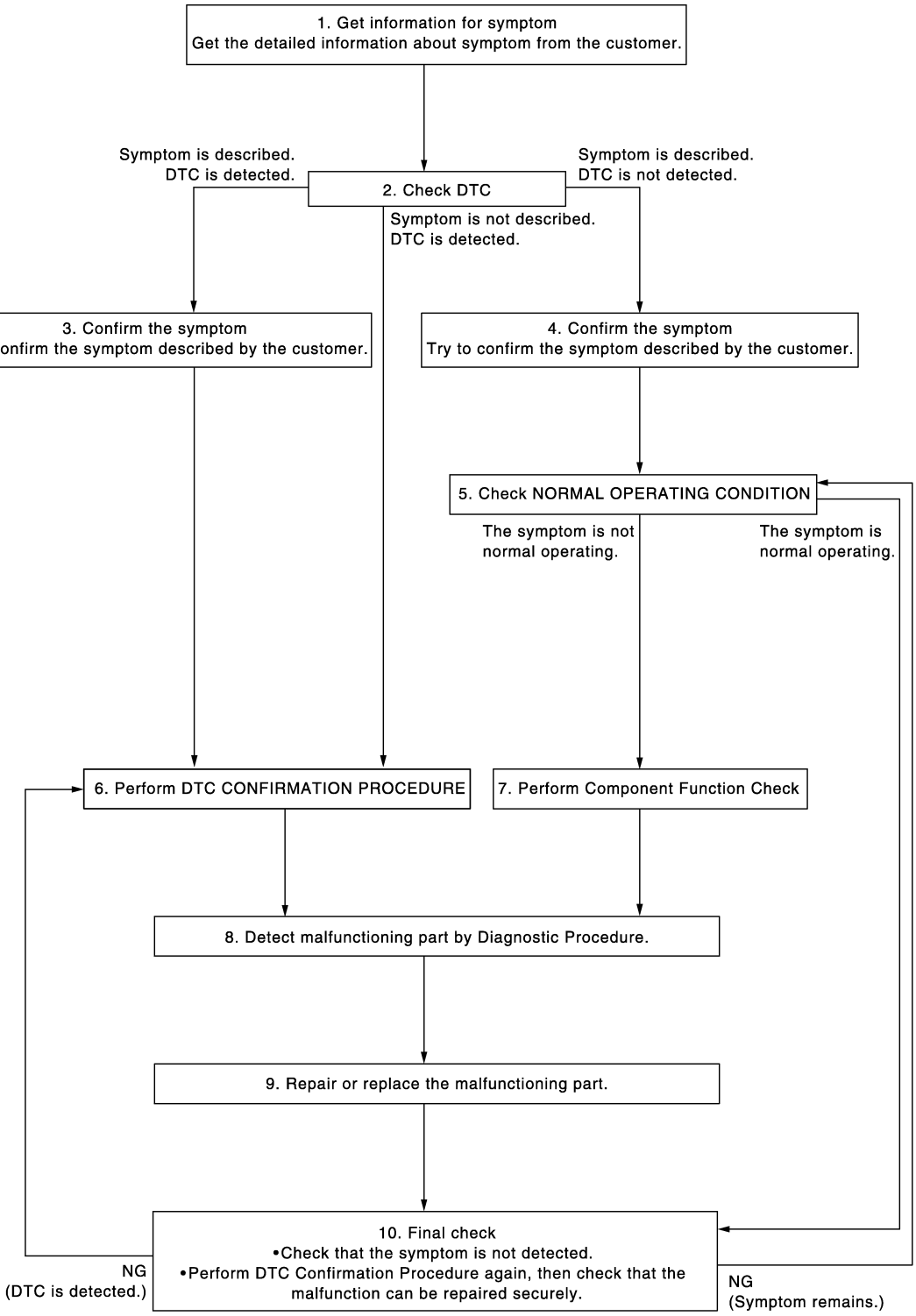

JMJIA1702GB

DETAILED FLOW

1. GET INFORMATION FOR SYMPTOM

Get the detailed information from the customer about the symptom (the condition and the environment when the incident/malfunction occurred).

>> GO TO 2.

2. CHECK DTC WITH AUTOMATIC DRIVE POSITIONER SYSTEM

Check “Self Diagnostic Result” with CONSULT. Refer to ADP-32, "DTC Index"

Is any symptom described and any DTC is displayed?

Symptom is described, DTC is displayed.>>GO TO 3.
Symptom is not described, DTC is displayed.>>GO TO 6.
Symptom is described, DTC is not displayed.>>GO TO 4.

3. CONFIRM THE SYMPTOM

Try to confirm the symptom described by the customer.

>> GO TO 6.

4. CONFIRM THE SYMPTOM

Try to confirm the symptom described by the customer.

>> GO TO 5.

5. CHECK NORMAL OPERATING CONDITION

Check normal operating condition. Refer to ADP-127, "Description".

Is the incident normal operation?

YES >> INSPECTION END
NO >> GO TO 7.

6. PERFORM DTC CONFIRMATION PROCEDURE

Perform the confirmation procedure for the detected DTC.

Is the DTC displayed?

YES >> GO TO 8.
NO >> Check intermittent incident. Refer to GI-43, "Intermittent Incident".

7. PERFORM COMPONENT FUNCTION CHECK

Perform the component function check for the isolated malfunctioning point.

>> GO TO 8.

8. DETECT MALFUNCTIONING PART BY DIAGNOSTIC PROCEDURE

Isolate the malfunctioning point by performing the diagnosis procedure relevant to the symptom during the component diagnosis.

>> GO TO 9.

9. REPARE OR REPLACE THE MALFUNCTIONING PARTS

Repair or replace the malfunctioning part.

>> GO TO 10.

10. FINAL CHECK

Perform the DTC confirmation procedure (if DTC is detected) or component function check (if no DTC is detected) again, and then check that the malfunction can be repaired securely.

Are all malfunctions corrected?

YES >> INSPECTION END
Symptom is detected.>> GO TO 5.
DTC is detected.>> GO TO 6.

INSPECTION AND ADJUSTMENT

ADDITIONAL SERVICE WHEN REMOVING BATTERY NEGATIVE TERMINAL

ADDITIONAL SERVICE WHEN REMOVING BATTERY NEGATIVE TERMINAL : Description

INFOID:0000000007376173

Each function is reset to the following condition when the battery terminal is disconnected.

Function	Condition	Procedure
Memory (Seat, steering, mirror)	Erased	Perform storing
Entry/exit assist	ON	Perform initialization
		Set slide amount*1
Intelligent Key interlock	Erased	Perform initialization
		Perform storing

*1: Default value is 40 mm.

NOTE:
Notice that disconnecting the battery when detected DTC are present will erase the DTC memory.

ADDITIONAL SERVICE WHEN REMOVING BATTERY NEGATIVE TERMINAL : Special Repair Requirement

INFOID:0000000007376174

1. SYSTEM INITIALIZATION

Perform system initialization. Refer to ADP-45, "SYSTEM INITIALIZATION : Special Repair Requirement".

>> GO TO 2.

2. MEMORY STORAGE

Perform memory storage. Refer to ADP-46, "MEMORY STORING : Special Repair Requirement".

>> GO TO 3.

3. INTELLIGENT KEY INTERLOCK STORAGE

Perform Intelligent Key interlock storage. Refer to ADP-47, "INTELLIGENT KEY INTERLOCK STORING : Special Repair Requirement".

>> GO TO 4.

4. SYSTEM SETTING

Perform system setting. Refer to ADP-48, "SYSTEM SETTING : Special Repair Requirement".

>> END

ADDITIONAL SERVICE WHEN REPLACING CONTROL UNIT

ADDITIONAL SERVICE WHEN REPLACING CONTROL UNIT : Description

INFOID:0000000007376175

Each function is reset to the following condition when the driver seat control unit is replaced.

Function	Condition	Procedure
Memory (Seat, steering, mirror)	Erased	Perform storing
Entry/exit assist	ON	Perform initialization
		Set slide amount*1

Function	Condition	Procedure
Intelligent Key interlock	Erased	Perform initialization
		Perform storing

*1: Default value is 40 mm.

NOTE:
Notice that disconnecting the battery when detected DTC are present will erase the DTC memory.

ADDITIONAL SERVICE WHEN REPLACING CONTROL UNIT : Special Repair Requirement

INFOID:0000000007376176

1. SYSTEM INITIALIZATION

Perform system initialization. Refer to ADP-45, "SYSTEM INITIALIZATION : Special Repair Requirement".

>> GO TO 2.

2. MEMORY STORAGE

Perform memory storage. Refer to ADP-46, "MEMORY STORING : Special Repair Requirement".

>> GO TO 3.

3. INTELLIGENT KEY INTERLOCK STORAGE

Perform Intelligent Key interlock storage. Refer to ADP-47, "INTELLIGENT KEY INTERLOCK STORING : Special Repair Requirement".

>> GO TO 4.

4. SYSTEM SETTING

Perform system setting. Refer to ADP-48, "SYSTEM SETTING : Special Repair Requirement".

>> END

SYSTEM INITIALIZATION

SYSTEM INITIALIZATION : Description

INFOID:0000000007376177

Always perform the initialization when the battery terminal is disconnected or the driver seat control unit is replaced.
The entry/exit assist function will not operate normally if no initialization is performed.

SYSTEM INITIALIZATION : Special Repair Requirement

INFOID:0000000007376178

INITIALIZATION PROCEDURE

1. CHOOSE METHOD

There are two initialization methods.

Which method do you use?

With door switch>>GO TO 2.
With vehicle speed>>GO TO 4.

2. STEP A-1

Turn ignition switch from ACC to OFF position.

>> GO TO 3.

3. STEP A-2

Driver door switch is ON (open) → OFF (close) → ON (open).

>> END

4. STEP B-1

Drive the vehicle at more than 25 km/h (16 MPH).

>> END

MEMORY STORING

MEMORY STORING : Description

INFOID:0000000007376179

Always perform the memory storage when the battery terminal is disconnected or the driver seat control unit is replaced. The memory function will not operate normally if no memory storage is performed.

MEMORY STORING : Special Repair Requirement

INFOID:0000000007376180

Memory Storage Procedure

Two positions for the driver seat, steering column and outside mirror can be stored for memory operation by following procedure.

1. STEP 1

Check the following conditions.
- Ignirion switch: ON
- A/T shift selector: P position

>> GO TO 2.

2. STEP 2

Adjust driver seat, steering column and outside mirror position manually.

>> GO TO 3.

3. STEP 3

1. Push set switch.
   NOTE:
   - Memory indicator for which driver seat position is already retained in memory is illuminated for 5 seconds.
   - Memory indicator for which driver seat position is not retained in memory is illuminated for 0.5 second.
2. Push the memory switch (1 or 2) for at least 1 second within 5 seconds after pushing the set switch.
   NOTE:
   - To enter driver seat positions into blank memory, memory indicator will be turned on for 5 seconds.
   - To modify driver seat positions, memory indicator will be turned OFF for 0.5 second, then turned ON for 5 seconds.

   NOTE:
   If memory is stored in the same memory switch, the previous memory will be deleted.

>> GO TO 4.

4. STEP 4

Confirm the operation of each part with memory operation.

>> END

INTELLIGENT KEY INTERLOCK STORING

INTELLIGENT KEY INTERLOCK STORING : Description

INFOID:0000000007376181

Always perform the Intelligent Key interlock function storage when the battery terminal is disconnected or the driver seat control unit is replaced. The Intelligent Key interlock function will not operate normally if no memory storage is performed.

INTELLIGENT KEY INTERLOCK STORING : Special Repair Requirement

INFOID:0000000007376182

Intelligent Key Interlock Storage Procedure

Performing the following operation associates the registered driving position with Intelligent Key. When driver door unlock operation is performed by Intelligent Key or driver door request switch, display of the registered driving position and turnout operation can be performed.

1. STEP 1

Check the following conditions.
- Ignition switch: OFF
- Initialization: done
- Driving position: registered

>> GO TO 2.

2. STEP 2

1. Push set switch.
   NOTE:
   Memory indicator for which driver seat position is already retained in memory is illuminated for 5 seconds.
2. Push the Intelligent Key unlock button within 5 seconds after pushing memory switch (while the memory indicator is turned ON).
   NOTE:
   From the time registration is performed, the applicable memory indicator blinks for 5 seconds.

>> GO TO 3.

3. STEP 3

Confirm the operation of each part with memory operation and Intelligent Key interlock operation.

>> END

SYSTEM SETTING

SYSTEM SETTING : Description

INFOID:0000000007376183

The settings of the automatic driving positioner system can be changed, using CONSULT, the display unit in the center of the instrument panel and the set switch. Always check the settings before and after disconnecting the battery terminal or replacing driver seat control unit.

Setting Change

×: Applicable

Item	Content	CONSULT	Set switch	Factory setting
Amount of seat sliding for entry/exit assist	The amount of seat sliding for entry/exit assist can be selected from 3 items. [40 mm/80 mm/150 mm]	x	—	40 mm
Entry/exit assist (seat)	Entry/exit assist (seat) can be selected: ON (operated) – OFF (not operated)	x	x	ON
Entry/exit assist (steering column)	Entry/exit assist (steering column) can be selected: ON (operated) – OFF (not operated)	x		ON

SYSTEM SETTING : Special Repair Requirement

INFOID:0000000007376184

1. CHOOSE METHOD

There are three way of setting method.

Which method do you choose?

With CONSULT>>GO TO 2.
With set switch>>GO TO 4.

2. WITH CONSULT - STEP 1

Select “Work support”.

>> GO TO 3.

3. WITH CONSULT - STEP 2

1. Select “EXIT SEAT SLIDE SETTING”, or “EXIT TILT SETTING” then touch display to change between ON and OFF.
- EXIT SEAT SLIDE SETTING: Entry/exit assist (seat)
- EXIT TILT SETTING: Entry/exit assist (steering column)
2. Select “SEAT SLIDE VOLUME SET” and touch either of “40 mm”, “80 mm”, or “150 mm”.
3. Then touch “OK”.

>> END

4. WITH SET SWITCH - STEP 1

Turn ignition switch OFF.

>> GO TO 5.

5. WITH SET SWITCH - STEP 2

Push set switch and hold for more than 10 seconds, then confirm blinking of the memory switch indicator.
- Entry/exit assist (seat/steering column) are ON: Memory switch indicator blink two times.
- Entry/exit assist (seat/steering column) are OFF: Memory switch indicator blink once.

>> END

DTC/CIRCUIT DIAGNOSIS

U1000 CAN COMM CIRCUIT

Description

INFOID:0000000007376185

CAN (Controller Area Network) is a serial communication line for real time applications. It is an on-vehicle multiplex communication line with high data communication speed and excellent error detection ability. Modern vehicle is equipped with many electronic control unit, and each control unit shares information and links with other control units during operation (not independent). In CAN communication, control units are connected with 2 communication lines (CAN H-line, CAN L-line) allowing a high rate of information transmission with less wiring. Each control unit transmits/receives data but selectively reads required data only.

DTC Logic

INFOID:0000000007376186

DTC DETECTION LOGIC

DTC No.	CONSULT display description	DTC detecting condition	Possible cause
U1000	CAN COMM CIRCUIT	• Driver seat control unit cannot communicate to other control units. • When driver seat control unit cannot communicate CAN communication signal continuously for 2 seconds or more.	CAN communication system

DTC CONFIRMATION PROCEDURE

1. STEP 1

Turn ignition switch ON and wait at least 3 seconds.

>> GO TO 2.

2. STEP 2

Check “Self diagnostic result” with CONSULT.

Is the DTC detected?

YES >> Perform diagnosis procedure. Refer to ADP-49, "Diagnosis Procedure".
NO >> INSPECTION END

Diagnosis Procedure

INFOID:0000000007376187

Refer to LAN-17, "Trouble Diagnosis Flow Chart".

Special Repair Requirement

INFOID:0000000007376188

Refer to ADP-45, "SYSTEM INITIALIZATION : Description".

U1010 CONTROL UNIT (CAN)

DTC Logic

INFOID:0000000007376189

DTC DETECTION LOGIC

DTC No.	Trouble diagnosis name	DTC detecting condition	Possible cause
U1010	CONTROL UNIT (CAN)	When detecting error during the initial diagnosis of CAN controller of driver seat control unit.	Driver seat control unit

Diagnosis Procedure

INFOID:0000000007376190

1.REPLACE DRIVER SEAT CONTROL UNIT

When DTC [U1010] is detected, replace driver seat control unit.

>> Replace driver seat control unit.

B2112 SLIDING MOTOR

DTC Logic

INFOID:0000000007376191

DTC DETECTION LOGIC

DTC No.	Trouble diagnosis name	DTC detecting condition	Possible cause
B2112	SEAT SLIDE	The driver seat control unit detects the output of sliding motor output terminal for 0.1 second or more even if the sliding switch is not input.	• Driver seat control unit • Slide motor harness is shorted

DTC CONFIRMATION PROCEDURE

1.STEP 1

Turn ignition switch ON.

>> GO TO 2.

2.STEP 2

Check “Self diagnostic result” with CONSULT.

Is the DTC detected?

YES >> Perform diagnosis procedure. Refer to ADP-51, "Diagnosis Procedure".
NO >> INSPECTION END

Diagnosis Procedure

INFOID:0000000007376192

1.PERFORM DTC CONFIRMATION PROCEDURE

1. Turn ignition switch ON.
2. Check “Self diagnostic result” with CONSULT.
3. Erase the DTC.
4. Perform DTC confirmation procedure. Refer to ADP-51, "DTC Logic".

Is the DTC displayed again?

YES >> GO TO 2.
NO >> Check intermittent incident. Refer to GI-43, "Intermittent Incident".

2.CHECK SLIDING MOTOR CIRCUIT (POWER SHORT)

1. Turn ignition switch OFF.
2. Disconnect sliding motor and driver seat control unit connector.
3. Check voltage between sliding motor harness connector and ground.

(+)		(-)	Voltage (V) (Approx.)
Sliding motor			
Connector	Terminals		
B461	34	Ground	0
	38		

Is the inspection result normal?

YES >> GO TO 3.
NO >> Repair or replace harness or connector.

3.CHECK DRIVER SEAT CONTROL UNIT OUTPUT SIGNAL

1. Connect driver seat control unit connector.
2. Check voltage between driver seat control unit harness connector and ground.

(+)		(-)	Voltage (V) (Approx.)
Driver seat control unit			
Connector	Terminals		
B451	34	Ground	0
	38		

Is the inspection result normal?

YES >> GO TO 4.
NO >> Replace driver seat control unit.

4. CHECK INTERMITTENT INCIDENT

Refer to GI-43, "Intermittent Incident".

>> INSPECTION END

B2113 RECLINING MOTOR

DTC Logic

INFOID:0000000007376193

DTC DETECTION LOGIC

DTC No.	Trouble diagnosis name	DTC detecting condition	Possible cause
B2113	SEAT RECLINING	The driver seat control unit detects the output of reclining motor output terminal for 0.1 second or more even if the reclining switch is not input.	• Driver seat control unit • Reclining motor harness is shorted

DTC CONFIRMATION PROCEDURE

1.STEP 1

Turn ignition switch ON.

>> GO TO 2.

2.STEP 2

Check “Self diagnostic result” with CONSULT.

Is the DTC detected?

YES >> Perform diagnosis procedure. Refer to ADP-53, "Diagnosis Procedure".
NO >> INSPECTION END

Diagnosis Procedure

INFOID:0000000007376194

1.PERFORM DTC CONFIRMATION PROCEDURE

1. Turn ignition switch ON.
2. Check “Self diagnostic result” with CONSULT.
3. Erase the DTC.
4. Perform DTC confirmation procedure. Refer to ADP-53, "DTC Logic".

Is the DTC displayed again?

YES >> GO TO 2.
NO >> Check intermittent incident. Refer to GI-43, "Intermittent Incident".

2.CHECK RECLINING MOTOR CIRCUIT (POWER SHORT)

1. Turn ignition switch OFF.
2. Disconnect reclining motor and driver seat control unit connector.
3. Check voltage between reclining motor harness connector and ground.

(+)		(-)	Voltage (V) (Approx.)
Reclining motor			
Connector	Terminals		
B454	35	Ground	0
	39		

Is the inspection result normal?

YES >> GO TO 3.
NO >> Repair or replace harness or connector.

3.CHECK DRIVER SEAT CONTROL UNIT OUTPUT SIGNAL

1. Connect driver seat control unit connector.
2. Check voltage between driver seat control unit harness connector and ground.

(+)		(-)	Voltage (V) (Approx.)
Driver seat control unit			
Connector	Terminals		
B451	35	Ground	0
	39		

Is the inspection result normal?

YES >> GO TO 4.
NO >> Replace driver seat control unit.

4. CHECK INTERMITTENT INCIDENT

Refer to GI-43, "Intermittent Incident".

>> INSPECTION END

B2116 TILT MOTOR

DTC Logic

INFOID:0000000007376195

DTC DETECTION LOGIC

DTC No.	Trouble diagnosis name	DTC detecting condition	Possible cause
B2116	STEERING TILT	The automatic drive positioner control unit detects the output of tilt motor output terminal for 0.1 second or more even if the tilt switch is not input.	• Automatic drive positioner control unit • Tilt motor harness is shorted

DTC CONFIRMATION PROCEDURE

1.STEP 1

Turn ignition switch ON.

>> GO TO 2.

2.STEP 2

Check “Self diagnostic result” with CONSULT.

Is the DTC detected?

YES >> Perform diagnosis procedure. Refer to ADP-55, "Diagnosis Procedure".
NO >> INSPECTION END

Diagnosis Procedure

INFOID:0000000007376196

1.PERFORM DTC CONFIRMATION PROCEDURE

1. Turn ignition switch ON.
2. Check “Self diagnostic result” with CONSULT.
3. Erase the DTC.
4. Perform DTC confirmation procedure. Refer to ADP-55, "DTC Logic".

Is the DTC displayed again?

YES >> GO TO 2.
NO >> Check intermittent incident. Refer to GI-43, "Intermittent Incident".

2.CHECK TILT MOTOR CIRCUIT (POWER SHORT)

1. Turn ignition switch OFF.
2. Disconnect automatic drive positioner control unit and tilt motor connector.
3. Check voltage between tilt motor harness connector and ground.

(+)		(-)	Voltage (V) (Approx.)
Tilt motor			
Connector	Terminals		
M116	1	Ground	0
	2		

Is the inspection result normal?

YES >> GO TO 3.
NO >> Repair or replace harness or connector.

3.CHECK AUTOMATIC DRIVER POSITIONER CONROL UNIT OUTPUT SIGNAL

1. Connect automatic drive positioner control unit connector.
2. Check voltage between automatic drive positioner control unit harness connector and ground.

(+)		(-)	Voltage (V) (Approx.)
Automatic drive positioner control unit			
Connector	Terminals		
M104	28	Ground	0
	29		

Is the inspection result normal?

YES >> GO TO 4.
NO >> Replace automatic drive positioner control unit.

4. CHECK INTERMITTENT INCIDENT

Refer to GI-43, "Intermittent Incident".

>> INSPECTION END

B2128 UART COMMUNICATION LINE

Description

INFOID:0000000007376197

Driver seat control unit performs UART communication with the automatic drive positioner control unit using 1 communication lines. Driver seat control unit receives the operation signals of tilt & telescopic switch, door mirror remote control switch, and the position signals of door mirror sensor from the automatic drive positioner control unit and transmits the operation request signal.

DTC Logic

INFOID:0000000007376198

DTC DETECTION LOGIC

DTC No.	Trouble diagnosis name	DTC detecting condition	Possible cause
B2128	UART COMM	The communication between driver seat control unit and auto drive positioner control unit is interrupted for a period of time.	• UART communication line (UART communication line is open or shorted) • Driver seat control unit • Automatic drive positioner control unit

DTC CONFIRMATION PROCEDURE

1. STEP 1

Turn ignition switch ON.

>> GO TO 2.

2. PROCEDURE

Check “Self diagnostic result” with CONSULT.

Is the DTC detected?

YES >> Perform diagnosis procedure. Refer to ADP-57, "Diagnosis Procedure".
NO >> INSPECTION END

Diagnosis Procedure

INFOID:0000000007376199

1. PERFORM DTC CONFIRMATION PROCEDURE

1. Turn ignition switch ON.
2. Check “Self diagnostic result” with CONSULT.
3. Erase the DTC.
4. Perform DTC confirmation procedure. Refer to ADP-55, "DTC Logic".

Is the DTC displayed again?

YES >> GO TO 2.
NO >> Check intermittent incident. Refer to GI-43, "Intermittent Incident".

2. CHECK UART COMMUNICATION LINE CONTINUITY

1. Turn ignition switch OFF.
2. Disconnect driver seat control unit and automatic drive positioner control unit connector.
3. Check continuity between driver seat control unit harness connector and automatic drive positioner control unit harness connector.

Driver seat control unit		Automatic drive positioner control unit		Continuity
Connector	Terminal	Connector	Terminal	
B452	2	M75	8	Existed

4. Check continuity between driver seat control unit harness connector and ground.

Driver seat control unit		Ground	Continuity
Connector	Terminal		
B452	2		Not existed

Is the inspection result normal?

YES >> Check intermittent incident. Refer to GI-43, "Intermittent Incident".
NO >> Repair or replace harness or connector.

B2130 EEPROM

DTC Logic

INFOID:0000000007376200

DTC DETECTION LOGIC

DTC No.	Trouble diagnosis name	DTC detecting condition	Possible cause
B2130	EEPROM	Driver seat control unit detected CPU malfunction.	Driver seat control unit

DTC CONFIRMATION PROCEDURE

1.STEP 1

Turn ignition switch ON.

>> GO TO 2.

2.STEP 2

Check “Self diagnostic result” with CONSULT.

Is the DTC detected?

YES >> Perform diagnosis procedure. Refer to ADP-59, "Diagnosis Procedure".
NO >> INSPECTION END

Diagnosis Procedure

INFOID:0000000007376201

1.PERFORM DTC CONFIRMATION PROCEDURE

1. Turn ignition switch ON.
2. Check “Self diagnostic result” with CONSULT.
3. Erase the DTC.
4. Perform DTC confirmation procedure. Refer to ADP-59, "DTC Logic".

Is the DTC displayed again?

YES >> GO TO 2.
NO >> Check intermittent incident. Refer to GI-43, "Intermittent Incident".

2.REPLACE DRIVER SEAT CONTROL UNIT

Replace driver seat control unit.

>> INSPECTION END

POWER SUPPLY AND GROUND CIRCUIT

DRIVER SEAT CONTROL UNIT

DRIVER SEAT CONTROL UNIT : Diagnosis Procedure

INFOID:0000000007376202

1.CHECK FUSE

Check that the following fuse and fusible link are not fusing.

Signal name	Fuse No.
Battery power supply	K (50 A)

Is the inspection result normal?

YES >> GO TO 2.
NO >> Replace the blown fuse after repairing the affected circuit.

2.CHECK DRIVER SEAT CONTROL UNIT POWER SUPPLY

1. Turn ignition switch OFF.
2. Disconnect driver seat control unit connector.
3. Check voltage between driver seat control unit harness connector and ground.

(+)		(-)	Voltage (V) (Approx.)
Driver seat control unit			
Connector	Terminals		
B451	33	Ground	Battery voltage

Is the inspection result normal?

YES >> GO TO 3.
NO >> Repair or replace harness.

3.CHECK DRIVER SEAT CONTROL UNIT GROUND CIRCUIT

Check continuity between the driver seat control unit harness connector and ground.

Driver seat control unit		Ground	Continuity
Connector	Terminal		
B451	43		Existed

Is the inspection result normal?

YES >> INSPECTION END
NO >> Repair or replace harness.

DRIVER SEAT CONTROL UNIT : Special Repair Requirement

INFOID:0000000007376203

1.PERFORM ADDITIONAL SERVICE

Perform additional service when removing battery negative terminal.

>> Refer to ADP-44, "ADDITIONAL SERVICE WHEN REMOVING BATTERY NEGATIVE TERMINAL : Description".

AUTOMATIC DRIVE POSITIONER CONTROL UNIT

AUTOMATIC DRIVE POSITIONER CONTROL UNIT : Diagnosis Procedure

INFOID:0000000007376204

NOTE:
Do not disconnect the battery negative terminal and the driver seat control unit connector until DTC is confirmed with CONSULT.

1.CHECK FUSE

Check that the following fuse and fusible link are not fusing.

Signal name	Fuse No.
Battery power supply	K (50 A)

Is the inspection result normal?

YES >> GO TO 2.
NO >> Replace the blown fuse after repairing the affected circuit.

2. CHECK AUTOMATIC DRIVE POSITIONER CONTROL UNIT POWER SUPPLY

1. Turn ignition switch OFF.
2. Disconnect automatic drive positioner control unit connector.
3. Check voltage between automatic drive positioner control unit harness connector and ground.

(+)		(-)	Voltage (V) (Approx.)
Automatic drive positioner control unit			
Connector	Terminals		
M104	25	Ground	Battery voltage

Is the inspection result normal?

YES >> GO TO 3.
NO >> Repair or replace harness.

3. CHECK AUTOMATIC DRIVE POSITIONER CONTROL UNIT GROUND CIRCUIT

Check continuity between the automatic drive positioner control unit harness connector and ground.

Automatic drive positioner control unit		Ground	Continuity
Connector	Terminal		
M104	30		Existed

Is the inspection result normal?

YES >> INSPECTION END
NO >> Repair or replace harness.

AUTOMATIC DRIVE POSITIONER CONTROL UNIT : Special Repair Requirement

INFOID:0000000007376205

1. PERFORM ADDITIONAL SERVICE

Perform additional service when removing battery negative terminal.

>> Refer to ADP-44, "ADDITIONAL SERVICE WHEN REMOVING BATTERY NEGATIVE TERMINAL : Description".

SLIDING SWITCH

Component Function Check

INFOID:0000000007376206

1.CHECK FUNCTION

1. Select “SLIDE SW-FR”, “SLIDE SW-RR” in “Data monitor” mode with CONSULT.
2. Check sliding switch signal under the following conditions.

Monitor item	Condition		Status
SLIDE SW-FR	Sliding switch (forward)	Operate	ON
		Release	OFF
SLIDE SW-RR	Sliding switch (backward)	Operate	ON
		Release	OFF

Is the indication normal?

YES >> INSPECTION END
NO >> Perform diagnosis procedure. Refer to ADP-62, "Diagnosis Procedure".

Diagnosis Procedure

INFOID:0000000007376207

1.CHECK SLIDING SWITCH INPUT SIGNAL

1. Turn ignition switch OFF.
2. Disconnect power seat switch connector.
3. Turn ignition switch ON.
4. Check voltage between power seat switch harness connector and ground.

(+)		(-)	Voltage (V) (Approx.)
Power seat switch			
Connector	Terminals		
B459	8	Ground	12
	24		

Is the inspection result normal?

YES >> GO TO 3.
NO >> GO TO 2.

2.CHECK SLIDING SWITCH CIRCUIT

1. Turn ignition switch OFF.
2. Disconnect driver seat control unit connector.
3. Check continuity between driver seat control unit harness connector and power seat switch harness connector.

Driver seat control unit		Power seat switch		Continuity
Connector	Terminal	Connector	Terminal	
B452	8	B459	8	Existed
	24		24	

4. Check continuity between driver seat control unit harness connector and ground.

Driver seat control unit		Ground	Continuity
Connector	Terminal		
B452	8		Not existed
	24		

Is the inspection result normal?

YES >> Replace driver seat control unit.

NO >> Repair or replace harness or connector.

3. CHECK SLIDING SWITCH

Refer to ADP-63, "Component Inspection".

Is the inspection result normal?

YES >> GO TO 4.
NO >> Replace power seat switch.

4. CHECK INTERMITTENT INCIDENT

Refer to GI-43, "Intermittent Incident".

>> INSPECTION END

Component Inspection

INFOID:0000000007376208

1. CHECK SLIDING SWITCH

1. Turn ignition switch OFF.
2. Disconnect power seat switch (sliding switch) connector.
3. Check continuity between power seat switch (sliding switch) terminals.

Power seat switch (Sliding switch) Terminal		Condition		Continuity
8	43	Sliding switch (backward)	Operate	Existed
			Release	Not existed
24		Sliding switch (forward)	Operate	Existed
			Release	Not existed

Is the inspection result normal?

YES >> INSPECTION END
NO >> Replace power seat switch.

RECLINING SWITCH

Component Function Check

INFOID:0000000007376209

1.CHECK FUNCTION

1. Select “RECLN SW-FR”, “RECLN SW-RR” in “Data monitor” mode with CONSULT.
2. Check reclining switch signal under the following conditions.

Monitor item	Condition		Status
RECLINE SW-FR	Reclining switch (forward)	Operate	ON
		Release	OFF
RECLINE SW-RR	Reclining switch (backward)	Operate	ON
		Release	OFF

Is the indication normal?

YES >> INSPECTION END
NO >> Perform diagnosis procedure. Refer to ADP-64, "Diagnosis Procedure".

Diagnosis Procedure

INFOID:0000000007376210

1.CHECK RECLINING SWITCH INPUT SIGNAL

1. Turn ignition switch OFF.
2. Disconnect power seat switch connector.
3. Turn ignition switch ON.
4. Check voltage between power seat switch harness connector and ground.

(+)		(-)	Voltage (V) (Approx.)
Power seat switch			
Connector	Terminals		
B459	9	Ground	12
	25		

Is the inspection result normal?

YES >> GO TO 3.
NO >> GO TO 2.

2.CHECK RECLINING SWITCH CIRCUIT

1. Turn ignition switch OFF.
2. Disconnect driver seat control unit connector.
3. Check continuity between driver seat control unit harness connector and power seat switch harness connector.

Driver seat control unit		Power seat switch		Continuity
Connector	Terminal	Connector	Terminal	
B452	9	B459	9	Existed
	25		25	

4. Check continuity between driver seat control unit harness connector and ground.

Driver seat control unit		Ground	Continuity
Connector	Terminal		
B452	9		Not existed
	25		

Is the inspection result normal?

YES >> Replace driver seat control unit.

NO >> Repair or replace harness or connector.

3. CHECK RECLINING SWITCH

Refer to ADP-65, "Component Inspection".

Is the inspection result normal?

YES >> GO TO 4.
NO >> Replace power seat switch.

4. CHECK INTERMITTENT INCIDENT

Refer to GI-43, "Intermittent Incident".

>> INSPECTION END

Component Inspection

INFOID:0000000007376211

1. CHECK RECLINING SWITCH

1. Turn ignition switch OFF.
2. Disconnect power seat switch (reclining switch) connector.
3. Check continuity between power seat switch (reclining switch) terminals.

Power seat switch (Reclining switch) Terminal		Condition		Continuity
9	43	Reclining switch (backward)	Operate	Existed
			Release	Not existed
25		Reclining switch (forward)	Operate	Existed
			Release	Not existed

Is the inspection result normal?

YES >> INSPECTION END
NO >> Replace power seat switch.

LIFTING SWITCH (FRONT)

Component Function Check

INFOID:0000000007376212

1.CHECK FUNCTION

1. Select “LIFT FR SW-UP”, “LIFT FR SW-DN” in “Data monitor” mode with CONSULT.
2. Check lifting switch (front) signal under the following conditions.

Monitor item	Condition		Status
LIFT FR SW-UP	Lifting switch front (up)	Operate	ON
		Release	OFF
LIFT FR SW-DN	Lifting switch front (down)	Operate	ON
		Release	OFF

Is the indication normal?

YES >> INSPECTION END
NO >> Perform diagnosis procedure. Refer to ADP-66, "Diagnosis Procedure".

Diagnosis Procedure

INFOID:0000000007376213

1.CHECK LIFTING SWITCH (FRONT) INPUT SIGNAL

1. Turn ignition switch OFF.
2. Disconnect power seat switch connector.
3. Turn ignition switch ON.
4. Check voltage between power seat switch harness connector and ground.

(+)		(-)	Voltage (V) (Approx.)
Power seat switch			
Connector	Terminals		
B459	10	Ground	12
	26		

Is the inspection result normal?

YES >> GO TO 3.
NO >> GO TO 2.

2.CHECK LIFTING SWITCH (FRONT) CIRCUIT

1. Turn ignition switch OFF.
2. Disconnect driver seat control unit connector.
3. Check continuity between driver seat control unit harness connector and power seat switch harness connector.

Driver seat control unit		Power seat switch		Continuity
Connector	Terminal	Connector	Terminal	
B452	10	B459	10	Existed
	26		26	

4. Check continuity between driver seat control unit harness connector and ground.

Driver seat control unit		Ground	Continuity
Connector	Terminal		
B452	10		Not existed
	26		

Is the inspection result normal?

YES >> Replace driver seat control unit.

NO >> Repair or replace harness or connector.

3. CHECK LIFTING SWITCH (FRONT)

Refer to ADP-67, "Component Inspection".

Is the inspection result normal?

YES >> GO TO 4.
NO >> Replace power seat switch.

4. CHECK INTERMITTENT INCIDENT

Refer to GI-43, "Intermittent Incident".

>> INSPECTION END

Component Inspection

INFOID:0000000007376214

1. CHECK LIFTING SWITCH (FRONT)

1. Turn ignition switch OFF.
2. Disconnect power seat switch (lifting switch front) connector.
3. Check continuity between power seat switch (lifting switch front) terminals.

Power seat switch (lifting switch front) Terminal		Condition		Continuity
10	43	Lifting switch front (down)	Operate	Existed
			Release	Not existed
26		Lifting switch front (up)	Operate	Existed
			Release	Not existed

Is the inspection result normal?

YES >> INSPECTION END
NO >> Replace power seat switch.

LIFTING SWITCH (REAR)

Component Function Check

INFOID:0000000007376215

1.CHECK FUNCTION

1. Select “LIFT RR SW-UP”, “LIFT RR SW-DN” in “Data monitor” mode with CONSULT.
2. Check lifting switch (rear) signal under the following conditions.

Monitor item	Condition		Status
LIFT RR SW-UP	Lifting switch rear (up)	Operate	ON
		Release	OFF
LIFT RR SW-DN	Lifting switch rear (down)	Operate	ON
		Release	OFF

Is the indication normal?

YES >> INSPECTION END
NO >> Perform diagnosis procedure. Refer to ADP-68, "Diagnosis Procedure".

Diagnosis Procedure

INFOID:0000000007376216

1.CHECK LIFTING SWITCH (REAR) INPUT SIGNAL

1. Turn ignition switch OFF.
2. Disconnect power seat switch connector.
3. Turn ignition switch ON.
4. Check voltage between power seat switch harness connector and ground.

(+)		(-)	Voltage (V) (Approx.)
Power seat switch			
Connector	Terminals		
B459	11	Ground	12
	27		

Is the inspection result normal?

YES >> GO TO 3.
NO >> GO TO 2.

2.CHECK LIFTING SWITCH (REAR) CIRCUIT

1. Turn ignition switch OFF.
2. Disconnect driver seat control unit connector.
3. Check continuity between driver seat control unit harness connector and power seat switch harness connector.

Driver seat control unit		Power seat switch		Continuity
Connector	Terminal	Connector	Terminal	
B452	11	B459	11	Existed
	27		27	

4. Check continuity between driver seat control unit harness connector and ground.

Driver seat control unit		Ground	Continuity
Connector	Terminal		
B452	11		Not existed
	27		

Is the inspection result normal?

YES >> Replace driver seat control unit.

NO >> Repair or replace harness or connector.

3. CHECK LIFTING SWITCH (REAR)

Refer to ADP-69, "Component Inspection".

Is the inspection result normal?

YES >> GO TO 4.
NO >> Replace power seat switch.

4. CHECK INTERMITTENT INCIDENT

Refer to GI-43, "Intermittent Incident".

>> INSPECTION END

Component Inspection

INFOID:0000000007376217

1. CHECK LIFTING SWITCH (REAR)

1. Turn ignition switch OFF.
2. Disconnect power seat switch (lifting switch rear) connector.
3. Check continuity between power seat switch (lifting switch rear) terminals.

Power seat switch (lifting switch rear) Terminal		Condition		Continuity
11	43	Lifting switch rear (down)	Operate	Existed
			Release	Not existed
27		Lifting switch rear (up)	Operate	Existed
			Release	Not existed

Is the inspection result normal?

YES >> INSPECTION END
NO >> Replace power seat switch.

TILT SWITCH

Component Function Check

INFOID:0000000007376218

1.CHECK FUNCTION

1. Select “TILT SW-UP”, “TILT SW-DOWN” in “Data monitor” mode with CONSULT.
2. Check tilt switch signal under the following conditions.

Monitor item	Condition		Status
TILT SW-UP	Tilt switch (up)	Operate	ON
		Release	OFF
TILT SW-DOWN	Tilt switch (down)	Operate	ON
		Release	OFF

Is the indication normal?

YES >> INSPECTION END
NO >> Perform diagnosis procedure. Refer to ADP-70, "Diagnosis Procedure".

Diagnosis Procedure

INFOID:0000000007376219

1.CHECK TILT SWITCH INPUT SIGNAL

1. Turn ignition switch OFF.
2. Disconnect tilt & telescopic switch connector.
3. Turn ignition switch ON.
4. Check voltage between tilt & telescopic switch harness connector and ground.

(+)		(-)	Voltage (V) (Approx.)
Tilt & telescopic switch			
Connector	Terminals		
M102	2	Ground	5
	3		

Is the inspection result normal?

YES >> GO TO 3.
NO >> GO TO 2.

2.CHECK TILT SWITCH CIRCUIT

1. Turn ignition switch OFF.
2. Disconnect automatic drive positioner control unit connector.
3. Check continuity between automatic drive positioner control unit harness connector and tilt & telescopic switch harness connector.

Automatic drive positioner control unit		Tilt & telescopic switch		Continuity
Connector	Terminal	Connector	Terminal	
M75	1	M102	2	Existed
	13		3	

4. Check continuity between automatic drive positioner control unit harness connector and ground.

Automatic drive positioner control unit		Ground	Continuity
Connector	Terminal		
M75	1		Not existed
	13		

Is the inspection result normal?

YES >> Replace automatic drive positioner control unit.

NO >> Repair or replace harness or connector.

3. CHECK TILT SWITCH

Refer to ADP-71, "Component Inspection".

Is the inspection result normal?

YES >> GO TO 4.
NO >> Replace tilt & telescopic switch.

4. CHECK INTERMITTENT INCIDENT

Refer to GI-43, "Intermittent Incident".

>> INSPECTION END

Component Inspection

INFOID:0000000007376220

1. CHECK TILT SWITCH

1. Turn ignition switch OFF.
2. Disconnect tilt & telescopic switch connector.
3. Check continuity between tilt & telescopic switch terminals.

Tilt switch		Condition		Continuity
Terminal				
2	1	Tilt switch (upward)	Operate	Existed
			Release	Not existed
3		Tilt switch (downward)	Operate	Existed
			Release	Not existed

Is the inspection result normal?

YES >> INSPECTION END
NO >> Replace tilt & telescopic switch.

TELESCOPIC SWITCH

Component Function Check

INFOID:0000000007376221

1.CHECK FUNCTION

1. Select “TELESCO SW-FR”, “TELESCO SW-RR” in “Data monitor” mode with CONSULT.
2. Check telescopic switch signal under the following conditions.

Monitor item	Condition		Status
TELESCO SW-FR	Telescopic switch (forward)	Operate	ON
		Release	OFF
TELESCO SW-RR	Telescopic switch (backward)	Operate	ON
		Release	OFF

Is the indication normal?

YES >> INSPECTION END
NO >> Perform diagnosis procedure. Refer to ADP-72, "Diagnosis Procedure".

Diagnosis Procedure

INFOID:0000000007376222

1.CHECK TELESCOPIC SWITCH INPUT SIGNAL

1. Turn ignition switch OFF.
2. Disconnect tilt & telescopic switch connector.
3. Turn ignition switch ON.
4. Check voltage between tilt & telescopic switch harness connector and ground.

(+)		(-)	Voltage (V) (Approx.)
Tilt & telescopic switch			
Connector	Terminals		
M102	5	Ground	5
	4		

Is the inspection result normal?

YES >> GO TO 3.
NO >> GO TO 2.

2.CHECK TELESCOPIC SWITCH CIRCUIT

1. Turn ignition switch OFF.
2. Disconnect automatic drive positioner control unit connector.
3. Check continuity between automatic drive positioner control unit harness connector and tilt & telescopic switch harness connector.

Automatic drive positioner control unit		Tilt & telescopic switch		Continuity
Connector	Terminal	Connector	Terminal	
M75	7	M102	5	Existed
	19		4	

4. Check continuity between automatic drive positioner control unit harness connector and ground.

Automatic drive positioner control unit		Ground	Continuity
Connector	Terminal		
M75	7		Not existed
	19		

Is the inspection result normal?

YES >> Replace automatic drive positioner control unit.

NO >> Repair or replace harness or connector.

3. CHECK TELESCOPIC SWITCH

Refer to ADP-73, "Component Inspection".

Is the inspection result normal?

YES >> GO TO 4.
NO >> Replace tilt & telescopic switch.

4. CHECK INTERMITTENT INCIDENT

Refer to GI-43, "Intermittent Incident".

>> INSPECTION END

Component Inspection

INFOID:0000000007376223

1. CHECK TELESCOPIC SWITCH

1. Turn ignition switch OFF.
2. Disconnect tilt & telescopic switch connector.
3. Check continuity between tilt & telescopic switch terminals.

Telescopic switch Terminal		Condition		Continuity
5	1	Telescopic switch (forward)	Operate	Existed
			Release	Not existed
4		Telescopic switch (backward)	Operate	Existed
			Release	Not existed

Is the inspection result normal?

YES >> INSPECTION END
NO >> Replace tilt & telescopic switch.

SEAT MEMORY SWITCH

Component Function Check

INFOID:0000000007376224

1. CHECK FUNCTION

1. Select “MEMORY SW 1”, “MEMORY SW 2”, “SET SW” in “Data monitor” mode with CONSULT.
2. Check seat memory switch signal under the following conditions.

Monitor item	Condition		Status
MEMORY SW 1	Memory switch 1	Push	ON
		Release	OFF
MEMORY SW 2	Memory switch 2	Push	ON
		Release	OFF
SET SW	Set switch	Push	ON
		Release	OFF

Is the indication normal?

YES >> INSPECTION END
NO >> Perform diagnosis procedure. Refer to ADP-74, "Diagnosis Procedure".

Diagnosis Procedure

INFOID:0000000007376225

1. CHECK SEAT MEMORY SWITCH INPUT SIGNAL

1. Turn ignition switch OFF.
2. Disconnect seat memory switch connector.
3. Turn ignition switch ON.
4. Check voltage between seat memory switch harness connector and ground.

(+)		(-)	Voltage (V) (Approx.)
Seat memory switch			
Connector	Terminals		
D13	1	Ground	5
	2		
	3		

Is the inspection result normal?

YES >> GO TO 3.
NO >> GO TO 2.

2. CHECK SEAT MEMORY SWITCH CIRCUIT

1. Turn ignition switch OFF.
2. Disconnect driver seat control unit connector.
3. Check continuity between driver seat control unit harness connector and seat memory switch harness connector.

Driver seat control unit		Seat memory switch		Continuity
Connector	Terminal	Connector	Terminal	
B452	6	D13	2	Existed
	22		1	
	28		3	

4. Check continuity between driver seat control unit harness connector and ground.

Driver seat control unit		Ground	Continuity
Connector	Terminal		
B452	6		Not existed
	22		
	28		

Is the inspection result normal?

YES >> Replace driver seat control unit.
NO >> Repair or replace harness or connector.

3. CHECK SEAT MEMORY SWITCH GROUND CIRCUIT

Check continuity between seat memory switch harness connector and ground.

Seat memory switch		Ground	Continuity
Connector	Terminal		
D13	4		Existed

Is the inspection result normal?

YES >> GO TO 4.
NO >> Repair or replace harness or connector.

4. CHECK SEAT MEMORY SWITCH

Refer to ADP-75, "Component Inspection".

Is the inspection result normal?

YES >> GO TO 5.
NO >> Replace seat memory switch.

5. CHECK INTERMITTENT INCIDENT

Refer to GI-43, "Intermittent Incident".

>> INSPECTION END

Component Inspection

INFOID:0000000007376226

1. CHECK SEAT MEMORY SWITCH

1. Turn ignition switch OFF.
2. Disconnect seat memory switch connector.
3. Check continuity between seat memory switch terminals.

Seat memory switch		Condition		Continuity
Terminal				
1	4	Memory switch 1	Push	Existed
			Release	Not existed
2		Memory switch 2	Push	Existed
			Release	Not existed
3		Set switch	Push	Existed
			Release	Not existed

Is the inspection result normal?

YES >> INSPECTION END
NO >> Replace seat memory switch.

DOOR MIRROR REMOTE CONTROL SWITCH
CHANGEOVER SWITCH

CHANGEOVER SWITCH : Component Function Check

INFOID:0000000007376227

1. CHECK CHANGEOVER SWITCH FUNCTION

Check the operation on “MIR CHNG SW-R” or “MIR CHNG SW-L” in “DATA MONITOR” mode with CONSULT.

Monitor item	Condition	
MIR CHNG SW-R/L	When operating the changeover toward the right or left side.	: ON
	Other than the above.	: OFF

Is the inspection result normal?

YES >> INSPECTION END
NO >> Refer to ADP-76, "CHANGEOVER SWITCH : Diagnosis Procedure".

CHANGEOVER SWITCH : Diagnosis Procedure

INFOID:0000000007376228

1. CHECK CHANGEOVER SWITCH INPUT SIGNAL

1. Turn ignition switch OFF.
2. Disconnect door mirror remote control switch connector.
3. Turn ignition switch ON.
4. Check voltage between door mirror remote control switch harness connector and ground.

(+)		(-)	Voltage (V) (Approx.)
Door mirror remote control switch			
Connector	Terminal		
M8	2	Ground	5
	3		

Is the inspection result normal?

YES >> GO TO 3.
NO >> GO TO 2.

2. CHECK CHANGEOVER SWITCH CIRCUIT

1. Turn ignition switch OFF.
2. Disconnect automatic drive positioner control unit connector.
3. Check continuity between automatic drive positioner control unit harness connector and door mirror remote control switch harness connector.

Automatic drive positioner control unit		Door mirror remote control switch		Continuity
Connector	Terminal	Connector	Terminal	
M75	2	M8	3	Existed
	14		2	

4. Check continuity between automatic drive positioner control unit harness connector and ground.

Automatic drive positioner control unit		Ground	Continuity
Connector	Terminal		
M75	2		Not existed
	14		

Is the inspection result normal?

YES >> Replace automatic drive positioner control unit.
NO >> Repair or replace harness.

3. CHECK DOOR MIRROR REMOTE CONTROL SWITCH GROUND CIRCUIT

1. Turn ignition switch OFF.
2. Check continuity between door mirror remote control switch harness connector and ground.

Door mirror remote control switch		Ground	Continuity
Connector	Terminal		
M8	13		Existed

Is the inspection result normal?

YES >> GO TO 4.
NO >> Repair or replace harness.

4. CHECK CHANGEOVER SWITCH

Check door mirror remote control switch (changeover switch).
Refer to ADP-77, "CHANGEOVER SWITCH : Component Inspection".

Is the inspection result normal?

YES >> GO TO 5.
NO >> Replace door mirror remote control switch (changeover switch).

5. CHECK INTERMITTENT INCIDENT

Check intermittent incident.
Refer to GI-43, "Intermittent Incident".

>> INSPECTION END

CHANGEOVER SWITCH : Component Inspection

INFOID:0000000007376229

1. CHECK CHANGEOVER SWITCH

1. Turn ignition switch OFF.
2. Disconnect door mirror remote control switch connector.
3. Check continuity between door mirror remote control switch terminals.

Door mirror remote control switch		Condition		Continuity
Terminal				
2	13	Changeover switch	LEFT	Existed
			Other than the above	Not existed
3			RIGHT	Existed
			Other than the above	Not existed

Is the inspection result normal?

YES >> INSPECTION END
NO >> Replace door mirror remote control switch.

MIRROR SWITCH

MIRROR SWITCH : Component Function Check

INFOID:0000000007376230

1. CHECK MIRROR SWITCH FUNCTION

Check the operation on “MIR CON SW–UP/DN” and “MIR CON SW–RH/LH” in “DATA MONITOR” mode with CONSULT.

Monitor item	Condition	
MIR CON SW-UP/DN	When operating the mirror switch toward the up or down side.	: ON
	Other than the above.	: OFF

Monitor item	Condition	
MIR CON SW-RH/LH	When operating the mirror switch toward the right or left side.	: ON
	Other than the above.	: OFF

Is the inspection result normal?

YES >> INSPECTION END
NO >> Refer to ADP-78, "MIRROR SWITCH : Diagnosis Procedure".

MIRROR SWITCH : Diagnosis Procedure

INFOID:0000000007376231

1. CHECK MIRROR SWITCH INPUT SIGNAL

1. Turn ignition switch OFF.
2. Disconnect door mirror remote control switch connector.
3. Turn ignition switch ON.
4. Check voltage between door mirror remote control switch harness connector and ground.

(+)		(-)	Voltage (V) (Approx.)
Door mirror remote control switch			
Connector	Terminal		
M8	4	Ground	5
	5		
	6		
	14		

Is the inspection result normal?

YES >> GO TO 3.
NO >> GO TO 2.

2. CHECK MIRROR SWITCH CIRCUIT

1. Turn ignition switch OFF.
2. Disconnect automatic drive positioner control unit connector.
3. Check continuity between automatic drive positioner control unit harness connector and door mirror remote control switch harness connector.

Automatic drive positioner control unit		Door mirror remote control switch		Continuity
Connector	Terminal	Connector	Terminal	
M75	3	M8	6	Existed
	4		5	
	15		14	
	16		4	

4. Check continuity between automatic drive positioner control unit harness connector and ground.

Automatic drive positioner control unit			Continuity
Connector	Terminal	Ground	
M75	3		Not existed
	4		
	15		
	16		

Is the inspection result normal?

YES >> Replace automatic drive positioner control unit.
NO >> Repair or replace harness.

3. CHECK DOOR MIRROR REMOTE CONTROL SWITCH GROUND CIRCUIT

1. Turn ignition switch OFF.
2. Check continuity between door mirror remote control switch harness connector and ground.

Door mirror remote control switch		Ground	Continuity
Connector	Terminal		
M8	13		Existed

Is the inspection result normal?

YES >> GO TO 4.
NO >> Repair or replace harness.

4. CHECK MIRROR SWITCH

Check door mirror remote control switch (mirror switch).
Refer to ADP-79, "MIRROR SWITCH : Component Inspection".

Is the inspection result normal?

YES >> GO TO 5.
NO >> Replace door mirror remote control switch (mirror switch).

5. CHECK INTERMITTENT INCIDENT

Check intermittent incident.
Refer to GI-43, "Intermittent Incident".

>> INSPECTION END

MIRROR SWITCH : Component Inspection

INFOID:0000000007376232

1. CHECK MIRROR SWITCH

1. Turn ignition switch OFF.
2. Disconnect door mirror remote control switch connector.
3. Check continuity between door mirror remote control switch terminals.

Door mirror remote control switch		Condition		Continuity
Terminal				
4	13	Mirror switch	RIGHT	Existed
			Other than the above	Not existed
5			LEFT	Existed
			Other than the above	Not existed
6			UP	Existed
			Other than the above	Not existed
14			DOWN	Existed
			Other than the above	Not existed

Is the inspection result normal?

YES >> INSPECTION END
NO >> Replace door mirror remote control switch.

POWER SEAT SWITCH GROUND CIRCUIT

Diagnosis Procedure

INFOID:0000000007376233

1. CHECK POWER SEAT SWITCH GROUND CIRCUIT

1. Turn ignition switch OFF.
2. Disconnect power seat switch connector.
3. Check continuity between power seat switch harness connector and ground.

Power seat switch		Ground	Continuity
Connector	Terminal		
B459	43		Existed

Is the inspection result normal?

YES >> Check intermittent incident. Refer to GI-43, "Intermittent Incident".
NO >> Repair or replace harness or connector.

TILT &TELESCOPIC SWITCH GROUND CIRCUIT

Diagnosis Procedure

INFOID:0000000007376234

1.CHECK TILT & TELESCOPIC SWITCH GROUND CIRCUIT

1. Turn ignition switch OFF.
2. Disconnect tilt & telescopic switch connector.
3. Check continuity between tilt & telescopic switch harness connector and ground.

Tilt & telescopic switch		Ground	Continuity
Connector	Terminal		
M102	1		Existed

Is the inspection result normal?

YES >> Check intermittent incident. Refer to GI-43, "Intermittent Incident".
NO >> Repair or replace harness.

SLIDING SENSOR

Component Function Check

INFOID:0000000007376235

1. CHECK FUNCTION

1. Select “SLIDE PULSE” in “Data monitor” mode with CONSULT.
2. Check sliding sensor signal under the following conditions.

Monitor item	Condition		Value
SLIDE PULSE	Seat sliding	Operate (forward)	Change (increase)*1
		Operate (backward)	Change (decrease)*1
		Release	No change*1

*1 : The value at the seat position attained when the battery is connected is considered to be 32768.

Is the indication normal?

YES >> INSPECTION END
NO >> Perform diagnosis procedure. Refer to ADP-82, "Diagnosis Procedure".

Diagnosis Procedure

INFOID:0000000007376236

1. CHECK SLIDING SENSOR SIGNAL

1. Turn ignition switch ON.
2. Read voltage signal between driver seat control unit harness connector and ground with oscilloscope.

(+) Driver seat control unit		(-)	Condition		Signal (Reference value)
Connector	Terminals				
B452	18	Ground	Seat sliding	Operate	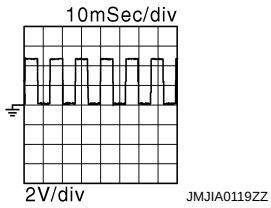
				Other than the above	0 or 5

Is the inspection result normal?

YES >> Replace driver seat control unit.
NO >> GO TO 2.

2. CHECK SLIDING SENSOR CIRCUIT

1. Turn ignition switch OFF.
2. Disconnect driver seat control unit and sliding sensor connector.
3. Check continuity between driver seat control unit harness connector and sliding sensor harness connector.

Driver seat control unit		Sliding motor		Continuity
Connector	Terminal	Connector	Terminal	
B452	18	B461	18	Existed

4. Check continuity between driver seat control unit harness connector and ground.

Driver seat control unit		Ground	Continuity
Connector	Terminal		
B452	18		Not existed

Is the inspection result normal?

YES >> GO TO 3.
NO >> Repair or replace harness or connector.

3. CHECK SLIDING SENSOR POWER SUPPLY

1. Connect driver seat control unit connector.
2. Turn ignition switch ON.
3. Check voltage between sliding motor harness connector and ground.

(+)		(-)	Voltage (V) (Approx.)
Sliding motor			
Connector	Terminals		
B461	12	Ground	12

Is the inspection result normal?

YES >> GO TO 5.
NO >> GO TO 4.

4. CHECK SLIDING SENSOR POWER SUPPLY CIRCUIT

1. Turn ignition switch OFF.
2. Disconnect driver seat control unit connector.
3. Check continuity between driver seat control unit harness connector and sliding motor harness connector.

Driver seat control unit		Sliding motor		Continuity
Connector	Terminal	Connector	Terminal	
B452	12	B461	12	Existed

4. Check continuity between driver seat control unit harness connector and ground.

Driver seat control unit		Ground	Continuity
Connector	Terminal		
B452	12		Not existed

Is the inspection result normal?

YES >> Replace driver seat control unit.
NO >> Repair or replace harness or connector.

5. CHECK SLIDING SENSOR GROUND CIRCUIT

1. Turn ignition switch OFF.
2. Check continuity between sliding sensor harness connector and ground.

Sliding motor		Ground	Continuity
Connector	Terminal		
B461	43		Existed

Is the inspection result normal?

YES >> Replace sliding motor.
NO >> Repair or replace harness or connector.

RECLINING SENSOR

Component Function Check

INFOID:0000000007376237

1. CHECK FUNCTION

1. Select “RECLN PULSE” in “Data monitor” mode with CONSULT.
2. Check reclining sensor signal under the following conditions.

Monitor item	Condition		Value
RECLN PULSE	Seat reclining	Operate (forward)	Change (increase)*1
		Operate (backward)	Change (decrease)*1
		Release	No change*1

*1 : The value at the seat position attained when the battery is connected is considered to be 32768.

Is the indication normal?

YES >> INSPECTION END
NO >> Perform diagnosis procedure. Refer to ADP-84, "Diagnosis Procedure".

Diagnosis Procedure

INFOID:0000000007376238

1. CHECK RECLINING SENSOR SIGNAL

1. Turn ignition switch ON.
2. Read voltage signal between driver seat control unit harness connector and ground with oscilloscope.

(+) Driver seat control unit		(-)	Condition		Signal (Reference value)
Connector	Terminals				
B452	4	Ground	Seat reclining	Operate	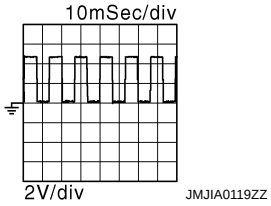
				Other than the above	0 or 5

Is the inspection result normal?

YES >> Replace driver seat control unit.
NO >> GO TO 2.

2. CHECK RECLINING SENSOR CIRCUIT

1. Turn ignition switch OFF.
2. Disconnect driver seat control unit and reclining motor connector.
3. Check continuity between driver seat control unit harness connector and reclining motor harness connector.

Driver seat control unit		Reclining motor		Continuity
Connector	Terminal	Connector	Terminal	
B452	4	B454	4	Existed

4. Check continuity between driver seat control unit harness connector and ground.

Driver seat control unit		Ground	Continuity
Connector	Terminal		
B452	4		Not existed

Is the inspection result normal?

YES >> GO TO 3.
NO >> Repair or replace harness or connector.

3. CHECK RECLINING SENSOR POWER SUPPLY

1. Connect driver seat control unit connector.
2. Turn ignition switch ON.
3. Check voltage between reclining motor harness connector and ground.

(+)		(-)	Voltage (V) (Approx.)
Reclining motor			
Connector	Terminals		
B454	12	Ground	12

Is the inspection result normal?

YES >> GO TO 5.
NO >> GO TO 4.

4. CHECK RECLINING SENSOR POWER SUPPLY CIRCUIT

1. Turn ignition switch OFF.
2. Disconnect driver seat control unit connector.
3. Check continuity between driver seat control unit harness connector and reclining motor harness connector.

Driver seat control unit		Reclining motor		Continuity
Connector	Terminal	Connector	Terminal	
B452	12	B454	12	Existed

4. Check continuity between driver seat control unit harness connector and ground.

Driver seat control unit		Ground	Continuity
Connector	Terminal		
B452	12		Not existed

Is the inspection result normal?

YES >> Replace driver seat control unit.
NO >> Repair or replace harness or connector.

5. CHECK RECLINING SENSOR GROUND CIRCUIT

1. Turn ignition switch OFF.
2. Check continuity between reclining motor harness connector and ground.

Reclining motor		Ground	Continuity
Connector	Terminal		
B454	43		Existed

Is the inspection result normal?

YES >> Replace reclining motor.
NO >> Repair or replace harness or connector.

LIFTING SENSOR (FRONT)

Component Function Check

INFOID:0000000007376239

1. CHECK FUNCTION

1. Select “LIFT FR PULSE” in “Data monitor” mode with CONSULT.
2. Check the lifting sensor (front) signal under the following conditions.

Monitor item	Condition		Value
LIFT FR PULSE	Seat lifting (front)	Operate (up)	Change (increase)*1
		Operate (down)	Change (decrease)*1
		Release	No change*1

*1 : The value at the seat position attained when the battery is connected is considered to be 32768.

Is the indication normal?

YES >> INSPECTION END
NO >> Perform diagnosis procedure. Refer to ADP-86, "Diagnosis Procedure".

Diagnosis Procedure

INFOID:0000000007376240

1. CHECK LIFTING SENSOR (FRONT) SIGNAL

1. Turn ignition switch ON.
2. Read the voltage signal driver seat control unit harness connector and ground with an oscilloscope.

(+) Driver seat control unit		(-)	Condition		Voltage (V) (Approx.)
Connector	Terminals				
B452	19	Ground	Seat Lifting (front)	Operate	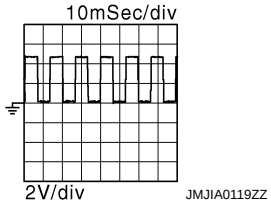
				Other than the above	0 or 5

Is the inspection result normal?

YES >> Replace driver seat control unit.
NO >> GO TO 2.

2. CHECK LIFTING SENSOR (FRONT) CIRCUIT

1. Turn ignition switch OFF.
2. Disconnect driver seat control unit and lifting motor (front) connector.
3. Check continuity between driver seat control unit harness connector and lifting motor (front) harness connector.

Driver seat control unit		Lifting motor (front)		Continuity
Connector	Terminal	Connector	Terminal	
B452	19	B455	19	Existed

4. Check continuity between driver seat control unit harness connector and ground.

Driver seat control unit		Ground	Continuity
Connector	Terminal		
B452	19		Not existed

Is the inspection result normal?

YES >> GO TO 3.
NO >> Repair or replace harness or connector.

3. CHECK LIFTING SENSOR (FRONT) POWER SUPPLY

1. Connect driver seat control unit connector.
2. Turn ignition switch ON.
3. Check voltage between lifting motor (front) harness connector and ground.

(+)		(-)	Voltage (V) (Approx.)
Lifting motor (front)			
Connector	Terminals		
B455	12	Ground	12

Is the inspection result normal?

YES >> GO TO 5.
NO >> GO TO 4.

4. CHECK LIFTING SENSOR (FRONT) POWER SUPPLY CIRCUIT

1. Turn ignition switch OFF.
2. Disconnect driver seat control unit connector.
3. Check continuity between driver seat control unit harness connector and lifting motor (front) harness connector.

Driver seat control unit		Lifting motor (front)		Continuity
Connector	Terminal	Connector	Terminal	
B452	12	B455	12	Existed

4. Check continuity between driver seat control unit harness connector and ground.

Driver seat control unit		Ground	Continuity
Connector	Terminal		
B452	12		Not existed

Is the inspection result normal?

YES >> Replace driver seat control unit.
NO >> Repair or replace harness or connector.

5. CHECK LIFTING SENSOR (FRONT) GROUND CIRCUIT

1. Turn ignition switch OFF.
2. Check continuity between lifting motor (front) harness connector and ground.

Lifting motor (front)		Ground	Continuity
Connector	Terminal		
B455	43		Existed

Is the inspection result normal?

YES >> Replace lifting motor (front).
NO >> Repair or replace harness or connector.

LIFTING SENSOR (REAR)

Component Function Check

INFOID:0000000007376241

1. CHECK FUNCTION

1. Select “LIFT RR PULSE” in “Data monitor” mode with CONSULT.
2. Check lifting sensor (rear) signal under the following conditions.

Monitor item	Condition		Value
LIFT RR PULSE	Seat lifting (rear)	Operate (up)	Change (increase)*1
		Operate (down)	Change (decrease)*1
		Release	No change*1

*1 : The value at the seat position attained when the battery is connected is considered to be 32768.

Is the indication normal?

YES >> INSPECTION END
NO >> Perform diagnosis procedure. Refer to ADP-88, "Diagnosis Procedure".

Diagnosis Procedure

INFOID:0000000007376242

1. CHECK LIFTING SENSOR (REAR) SIGNAL

1. Turn ignition switch ON.
2. Read voltage signal between driver seat control unit harness connector and ground with oscilloscope.

(+) Driver seat control unit		(-)	Condition		Voltage (V) (Approx.)
Connector	Terminals				
B452	20	Ground	Seat Lifting (rear)	Operate	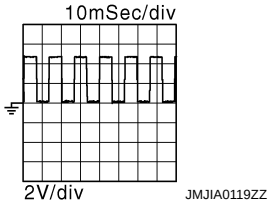
				Other than the above	0 or 5

Is the inspection result normal?

YES >> Replace driver seat control unit.
NO >> GO TO 2.

2. CHECK LIFTING SENSOR (REAR) CIRCUIT

1. Turn ignition switch OFF.
2. Disconnect driver seat control unit and lifting motor (rear) connector.
3. Check the continuity between driver seat control unit harness connector and lifting motor (rear) harness connector.

Driver seat control unit		Lifting motor (rear)		Continuity
Connector	Terminal	Connector	Terminal	
B452	20	B456	20	Existed

4. Check the continuity between driver seat control unit harness connector and ground.

Driver seat control unit		Ground	Continuity
Connector	Terminal		
B452	20		Not existed

Is the inspection result normal?

YES >> GO TO 3.
NO >> Repair or replace harness or connector.

3. CHECK LIFTING SENSOR (REAR) POWER SUPPLY

1. Connect driver seat control unit connector.
2. Turn ignition switch ON.
3. Check the voltage between lifting motor (rear) harness connector and ground.

(+)		(-)	Voltage (V) (Approx.)
Lifting motor (rear)			
Connector	Terminals		
B456	12	Ground	12

Is the inspection result normal?

YES >> GO TO 5.
NO >> GO TO 4.

4. CHECK LIFTING SENSOR (REAR) POWER SUPPLY CIRCUIT

1. Turn ignition switch OFF.
2. Disconnect driver seat control unit connector.
3. Check the continuity between driver seat control unit harness connector and lifting motor (rear) harness connector.

Driver seat control unit		Lifting motor (rear)		Continuity
Connector	Terminal	Connector	Terminal	
B452	12	B456	12	Existed

4. Check the continuity between driver seat control unit harness connector and ground.

Driver seat control unit		Ground	Continuity
Connector	Terminal		
B452	12		Not existed

Is the inspection result normal?

YES >> Replace driver seat control unit.
NO >> Repair or replace harness or connector.

5. CHECK LIFTING SENSOR (REAR) GROUND CIRCUIT

1. Turn ignition switch OFF.
2. Check the continuity between lifting motor (rear) harness connector and ground.

Lifting motor (rear)		Ground	Continuity
Connector	Terminal		
B456	43		Existed

Is the inspection result normal?

YES >> Replace lifting motor (rear).
NO >> Repair or replace harness or connector.

TILT SENSOR

Component Function Check

INFOID:0000000007376243

1. CHECK FUNCTION

1. Select “TILT PULSE” in “Data monitor” mode with CONSULT.
2. Check tilt sensor signal under the following conditions.

Monitor item	Condition		Value
TILT PULSE	Steering column	Operate (up)	Change (increase)*1
		Operate (down)	Change (decrease)*1
		Release	No change*1

*1 : The value at the seat position attained when the battery is connected is considered to be 32768.

Is the indication normal?

YES >> INSPECTION END
NO >> Perform diagnosis procedure. Refer to ADP-90, "Diagnosis Procedure".

Diagnosis Procedure

INFOID:0000000007376244

1. CHECK TILT SENSOR SIGNAL

1. Turn ignition switch ON.
2. Check voltage signal between driver seat control unit connector and ground with oscilloscope.

(+) Driver seat control unit Connector	(+) Driver seat control unit Terminals	(-)	Condition		Voltage (V) (Approx.)
B452	21	Ground	Steering column	Operate	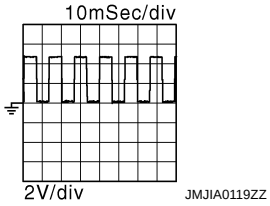
				Other than the above	0 or 5

Is the inspection result normal?

YES >> Replace driver seat control unit.
NO >> GO TO 2.

2. CHECK TILT SENSOR CIRCUIT

1. Turn ignition switch OFF.
2. Disconnect driver seat control unit connector and tilt motor connector.
3. Check continuity between driver seat control unit harness connector and tilt motor harness connector.

Driver seat control unit		Tilt motor		Continuity
Connector	Terminal	Connector	Terminal	
B452	21	M116	5	Existed

4. Check continuity between driver seat control unit harness connector and ground.

Driver seat control unit		Ground	Continuity
Connector	Terminal		
B452	21		Not existed

Is the inspection result normal?

YES >> GO TO 3.
NO >> Repair or replace harness or connector.

3. CHECK TILT SENSOR POWER SUPPLY

1. Turn ignition switch ON.
2. Check voltage between tilt motor harness connector and ground.

(+)		(-)	Voltage (V) (Approx.)
Tilt motor			
Connector	Terminals		
M116	4	Ground	12

Is the inspection result normal?

YES >> GO TO 5.
NO >> GO TO 4.

4. CHECK TILT SENSOR POWER SUPPLY CIRCUIT

1. Turn ignition switch OFF.
2. Disconnect automatic drive positioner control unit connector.
3. Check continuity between automatic drive positioner control unit harness connector and tilt motor harness connector.

Automatic drive positioner control unit		Tilt motor		Continuity
Connector	Terminal	Connector	Terminal	
M104	27	M116	4	Existed

4. Check continuity between automatic drive positioner control unit harness connector and ground.

Automatic drive positioner control unit		Ground	Continuity
Connector	Terminal		
M104	27		Not existed

Is the inspection result normal?

YES >> Replace automatic drive positioner control unit.
NO >> Repair or replace harness or connector.

5. CHECK TILT SENSOR GROUND CIRCUIT

1. Turn ignition switch OFF.
2. Disconnect automatic drive positioner control unit connector.
3. Check continuity between automatic drive positioner control unit harness connector and tilt motor harness connector.

Automatic drive positioner control unit		Tilt motor		Continuity
Connector	Terminal	Connector	Terminal	
M75	20	M116	6	Existed

4. Check continuity between automatic drive positioner control unit harness connector and ground.

Automatic drive positioner control unit		Ground	Continuity
Connector	Terminal		
M75	20		Not existed

Is the inspection result normal?

YES >> Replace tilt motor.
NO >> Repair or replace harness or connector.

TELESCOPIC SENSOR

Component Function Check

INFOID:0000000007376245

1. CHECK FUNCTION

1. Select “TELESCO PULSE” in “Data monitor” mode with CONSULT.
2. Check telescopic sensor signal under the following conditions.

Monitor item	Condition		Value
TELESCO PULSE	Steering column	Operate (forward)	Change (increase)*1
		Operate (backward)	Change (decrease)*1
		Release	No change*1

*1 : The value at the seat position attained when the battery is connected is considered to be 32768.

Is the indication normal?

YES >> INSPECTION END
NO >> Perform diagnosis procedure. Refer to ADP-92, "Diagnosis Procedure".

Diagnosis Procedure

INFOID:0000000007376246

1. CHECK TELESCOPIC SENSOR SIGNAL

1. Turn ignition switch ON.
2. Check voltage signal between driver seat control unit connector and ground with oscilloscope.

(+) Driver seat control unit		(-)	Condition		Voltage (V) (Approx.)
Connector	Terminals				
B452	5	Ground	Steering column	Operate	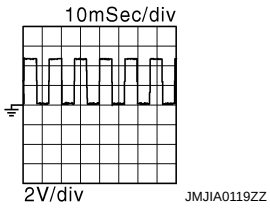
				Other than the above	0 or 5

Is the inspection result normal?

YES >> Replace driver seat control unit.
NO >> GO TO 2.

2. CHECK TELESCOPIC SENSOR CIRCUIT

1. Turn ignition switch OFF.
2. Disconnect driver seat control unit connector and telescopic motor connector.
3. Check continuity between driver seat control unit harness connector and telescopic motor harness connector.

Driver seat control unit		Telescopic motor		Continuity
Connector	Terminal	Connector	Terminal	
B452	5	M117	5	Existed

4. Check continuity between driver seat control unit harness connector and ground.

Driver seat control unit		Ground	Continuity
Connector	Terminal		
B452	5		Not existed

Is the inspection result normal?

YES >> GO TO 3.
NO >> Repair or replace harness or connector.

3. CHECK TELESCOPIC SENSOR POWER SUPPLY

1. Turn ignition switch ON.
2. Check voltage between telescopic motor harness connector and ground.

(+)		(-)	Voltage (V) (Approx.)
Telescopic motor			
Connector	Terminals		
M117	4	Ground	12

Is the inspection result normal?

YES >> GO TO 5.
NO >> GO TO 4.

4. CHECK TELESCOPIC SENSOR POWER SUPPLY CIRCUIT

1. Turn ignition switch OFF.
2. Disconnect automatic drive positioner control unit connector.
3. Check continuity between automatic drive positioner control unit harness connector and telescopic motor harness connector.

Automatic drive positioner control unit		Telescopic motor		Continuity
Connector	Terminal	Connector	Terminal	
M104	27	M117	4	Existed

4. Check continuity between automatic drive positioner control unit harness connector and ground.

Automatic drive positioner control unit		Ground	Continuity
Connector	Terminal		
M104	27		Not existed

Is the inspection result normal?

YES >> Replace automatic drive positioner control unit.
NO >> Repair or replace harness or connector.

5. CHECK TELESCOPIC SENSOR GROUND CIRCUIT

1. Turn ignition switch OFF.
2. Disconnect automatic drive positioner control unit connector.
3. Check continuity between automatic drive positioner control unit harness connector and telescopic motor harness connector.

Automatic drive positioner control unit		Telescopic motor		Continuity
Connector	Terminal	Connector	Terminal	
M75	20	M117	6	Existed

4. Check continuity between automatic drive positioner control unit harness connector and ground.

Automatic drive positioner control unit		Ground	Continuity
Connector	Terminal		
M75	20		Not existed

Is the inspection result normal?

YES >> Replace telescopic motor.
NO >> Repair or replace harness or connector.

MIRROR SENSOR

DRIVER SIDE

DRIVER SIDE : Component Function Check

INFOID:0000000007376247

1. CHECK FUNCTION

1. Select “MIR/SEN LH U-D”, “MIR/SEN LH R-L” in “Data monitor” with CONSULT.
2. Check mirror sensor (driver side) signal under the following condition.

Monitor item	Condition	Value
MIR/SEN LH U-D	Door mirror (driver side)	Change between 3.4 [V] (close to peak) 0.6 [V] (close to valley)
MIR/SEN LH R-L		Change between 0.6 [V] (close to left edge) 3.4 [V] (close to right edge)

Is the indication normal?

YES >> INSPECTION END
NO >> Perform diagnosis procedure. Refer to ADP-95, "DRIVER SIDE : Diagnosis Procedure".

DRIVER SIDE : Diagnosis Procedure

INFOID:0000000007376248

1. CHECK DOOR MIRROR (DRIVER SIDE) SENSOR POWER SUPPLY

1. Turn ignition switch OFF.
2. Disconnect door mirror (driver side) connector.
3. Turn ignition switch ON.
4. Check voltage between door mirror (driver side) harness connector and ground.

(+)		(-)	Voltage (V) (Approx.)
Door mirror (driver side)			
Connector	Terminals		
D3	23	Ground	5

Is the inspection result normal?

YES >> GO TO 3.
NO >> GO TO 2.

2. CHECK DOOR MIRROR (DRIVER SIDE) SENSOR POWER SUPPLY CIRCUIT

1. Turn ignition switch OFF.
2. Disconnect automatic drive positioner control unit connector.
3. Check continuity between automatic drive positioner control unit harness connector and door mirror (driver side) harness connector.

Automatic drive positioner control unit		Door mirror (driver side)		Continuity
Connector	Terminal	Connector	Terminal	
M75	21	D3	23	Existed

4. Check continuity between automatic drive positioner control unit harness connector and ground.

Automatic drive positioner control unit		Ground	Continuity
Connector	Terminal		
M75	21		Not existed

Is the inspection result normal?

YES >> Replace automatic drive positioner control unit.
NO >> Repair or replace harness or connector.

3. CHECK DOOR MIRROR (DRIVER SIDE) SENSOR GROUND CIRCUIT

1. Turn ignition switch OFF.
2. Disconnect automatic drive positioner control unit connector.
3. Check continuity between automatic drive positioner control unit harness connector and door mirror (driver side) harness connector.

Automatic drive positioner control unit		Door mirror (driver side)		Continuity
Connector	Terminal	Connector	Terminal	
M75	20	D3	24	Existed

4. Check continuity between automatic drive positioner control unit harness connector and ground.

Automatic drive positioner control unit		Ground	Continuity
Connector	Terminal		
M75	20		Not existed

Is the inspection result normal?

YES >> GO TO 4.
NO >> Repair or replace harness or connector.

4. CHECK DOOR MIRROR (DRIVER SIDE) SENSOR CIRCUIT

1. Check continuity between automatic drive positioner control unit harness connector and door mirror (driver side) harness connector.

Automatic drive positioner control unit		Door mirror (driver side)		Continuity
Connector	Terminal	Connector	Terminal	
M75	6	D3	21	Existed
	18		22	

2. Check continuity between automatic drive positioner control unit harness connector and ground.

Automatic drive positioner control unit		Ground	Continuity
Connector	Terminal		
M75	6		Not existed
	18		

Is the inspection result normal?

YES >> Replace door mirror sensor (built in driver side door mirror).
NO >> Repair or replace harness or connector.

PASSENGER SIDE

PASSENGER SIDE : Component Function Check

INFOID:0000000007376249

1. CHECK FUNCTION

1. Select “MIR/SEN RH U-D”, “MIR/SEN RH R-L” in “Data monitor” with CONSULT.
2. Check the mirror sensor (passenger side) signal under the following conditions.

Monitor item	Condition	Value
MIR/SEN RH U-D	Door mirror (passenger side)	Change between 3.4 [V] (close to peak) 0.6 [V] (close to valley)
MIR/SEN RH R-L		Change between 3.4 [V] (close to left edge) 0.6 [V] (close to right edge)

Is the indication normal?

YES >> INSPECTION END

NO >> Perform diagnosis procedure. Refer to ADP-97, "PASSENGER SIDE : Diagnosis Procedure".

PASSENGER SIDE : Diagnosis Procedure

INFOID:0000000007376250

1. CHECK DOOR MIRROR SENSOR (PASSENGER SIDE) POWER SUPPLY

1. Turn ignition switch OFF.
2. Disconnect door mirror (passenger side) connector.
3. Turn ignition switch ON.
4. Check voltage between door mirror (passenger side) harness connector and ground.

(+)		(-)	Voltage (V) (Approx.)
Door mirror (passenger side)			
Connector	Terminals		
D23	23	Ground	5

Is the inspection result normal?

YES >> GO TO 3.
NO >> GO TO 2.

2. CHECK DOOR MIRROR (PASSENGER SIDE) SENSOR POWER SUPPLY CIRCUIT

1. Turn ignition switch OFF.
2. Disconnect automatic drive positioner control unit connector.
3. Check continuity between automatic drive positioner control unit harness connector and door mirror (passenger side) harness connector.

Automatic drive positioner control unit		Door mirror (passenger side)		Continuity
Connector	Terminal	Connector	Terminal	
M75	21	D23	23	Existed

4. Check continuity between automatic drive positioner control unit harness connector and ground.

Automatic drive positioner control unit		Ground	Continuity
Connector	Terminal		
M75	21		Not existed

Is the inspection result normal?

YES >> Replace automatic drive positioner control unit.
NO >> Repair or replace harness or connector.

3. CHECK DOOR MIRROR (PASSENGER SIDE) SENSOR GROUND CIRCUIT

1. Turn ignition switch OFF.
2. Disconnect automatic drive positioner control unit connector.
3. Check continuity between automatic drive positioner control unit harness connector and door mirror (passenger side) connector.

Automatic drive positioner control unit		Door mirror (passenger side)		Continuity
Connector	Terminal	Connector	Terminal	
M75	20	D23	24	Existed

4. Check continuity between automatic drive positioner control unit harness connector and ground.

Automatic drive positioner control unit		Ground	Continuity
Connector	Terminal		
M75	20		Not existed

Is the inspection result normal?

YES >> GO TO 4.
NO >> Repair or replace harness or connector.

4. CHECK DOOR MIRROR (PASSENGER SIDE) SENSOR CIRCUIT

1. Check continuity between automatic drive positioner control unit harness connector and door mirror (passenger side) harness connector.

Automatic drive positioner control unit		Door mirror (passenger side)		Continuity
Connector	Terminal	Connector	Terminal	
M75	5	D23	21	Existed
	17		22	

2. Check continuity between automatic drive positioner control unit harness connector and ground.

Automatic drive positioner control unit		Ground	Continuity
Connector	Terminal		
M75	5		Not existed
	17		

Is the inspection result normal?

YES >> Replace door mirror sensor (built in passenger side door mirror).
NO >> Repair or replace harness or connector.

SLIDING MOTOR

Component Function Check

INFOID:0000000007376251

1. CHECK FUNCTION

1. Select “SEAT SLIDE” in “Active test” mode with CONSULT.
2. Check the sliding motor operation.

Test item		Description	
SEAT SLIDE	OFF	Seat sliding	Stop
	FR		Forward
	RR		Backward

Is the operation of relevant parts normal?

YES >> INSPECTION END
NO >> Perform diagnosis procedure. Refer to ADP-99, "Diagnosis Procedure".

Diagnosis Procedure

INFOID:0000000007376252

1. CHECK SLIDING MOTOR INPUT SIGNAL

1. Turn ignition switch OFF.
2. Disconnect sliding motor connector.
3. Turn ignition switch ON.
4. Perform “Active test” (“SEAT SLIDE”) with CONSULT.
5. Check voltage between sliding motor harness connector and ground.

(+)		(-)	Condition		Voltage (V) (Approx.)
Sliding motor					
Connector	Terminals				
B461	38	Ground	SEAT SLIDE	OFF	0
				FR (forward)	12
				RR (backward)	0
	34			OFF	0
				FR (forward)	0
				RR (backward)	12

Is the inspection result normal?

YES >> Replace sliding motor (built in seat slide cushion frame).
NO >> GO TO 2.

2. CHECK SLIDING MOTOR CIRCUIT

1. Turn ignition switch OFF.
2. Disconnect driver seat control unit connector.
3. Check continuity between driver seat control unit harness connector and sliding motor harness connector.

Driver seat control unit		Sliding motor		Continuity
Connector	Terminal	Connector	Terminal	
B451	34	B461	34	Existed
	38		38	

4. Check continuity between driver seat control unit harness connector and ground.

Driver seat control unit		Ground	Continuity
Connector	Terminal		
B451	34		Not existed
	38		

Is the inspection result normal?

YES >> Replace driver seat control unit.
NO >> Repair or replace harness or connector.

RECLINING MOTOR

Component Function Check

INFOID:0000000007376253

1.CHECK FUNCTION

1. Select “SEAT RECLINING” in “Active test” mode with CONSULT.
2. Check the reclining motor operation.

Test item		Description	
SEAT RECLINING	OFF	Seat reclining	Stop
	FR		Forward
	RR		Backward

Is the operation of relevant parts normal?

YES >> INSPECTION END
NO >> Perform diagnosis procedure. Refer to ADP-101, "Diagnosis Procedure".

Diagnosis Procedure

INFOID:0000000007376254

1.CHECK RECLINING MOTOR INPUT SIGNAL

1. Turn ignition switch OFF.
2. Disconnect reclining motor connector.
3. Turn ignition switch ON.
4. Perform “Active test” (“SEAT RECLINING”) with CONSULT-lll
5. Check voltage between reclining motor harness connector and ground.

(+)		(-)	Condition		Voltage (V) (Approx.)
Reclining motor					
Connector	Terminals				
B454	35	Ground	SEAT RECLINING	OFF	0
				FR (forward)	12
				RR (backward)	0
	39			OFF	0
				FR (forward)	0
				RR (backward)	12

Is the inspection result normal?

YES >> Replace reclining motor (built in seat back frame).
NO >> GO TO 2.

2.CHECK RECLINING MOTOR CIRCUIT

1. Turn ignition switch OFF.
2. Disconnect driver seat control unit connector.
3. Check continuity between driver seat control unit harness connector and reclining motor harness connector.

Driver seat control unit		Reclining motor		Continuity
Connector	Terminal	Connector	Terminal	
B451	35	B454	35	Existed
	39		39	

4. Check continuity between driver seat control unit harness connector and ground.

Driver seat control unit		Ground	Continuity
Connector	Terminal		
B451	35		Not existed
	39		

Is the inspection result normal?

YES >> Replace driver seat control unit.
NO >> Repair or replace harness or connector.

LIFTING MOTOR (FRONT)

Component Function Check

INFOID:0000000007376255

1.CHECK FUNCTION

1. Select “SEAT LIFTER FR” in “Active test” mode with CONSULT.
2. Check the lifting motor (front) operation.

Test item		Description	
SEAT LIFTER FR	OFF	Seat lifting (front)	Stop
	UP		Upward
	DWN		Downward

Is the operation of relevant parts normal?

YES >> INSPECTION END
NO >> Perform diagnosis procedure. Refer to ADP-103, "Diagnosis Procedure".

Diagnosis Procedure

INFOID:0000000007376256

1.CHECK LIFTING MOTOR (FRONT) INPUT SIGNAL

1. Turn ignition switch OFF.
2. Disconnect lifting motor (front) connector.
3. Turn ignition switch ON.
4. Perform “Active test” (“SEAT LIFTER FR”) with CONSULT.
5. Check voltage between lifting motor (front) harness connector and ground.

(+)		(-)	Condition		Voltage (V) (Approx.)
Lifting motor (front)					
Connector	Terminals				
B455	36	Ground	SEAT LIFTER FR	OFF	0
				UP	0
				DWN (down)	12
	40			OFF	0
				UP	12
				DWN (down)	0

Is the inspection result normal?

YES >> Replace lifting motor (front) (built in seat cushion frame).
NO >> GO TO 2.

2.CHECK LIFTING MOTOR (FRONT) CIRCUIT

1. Turn ignition switch OFF.
2. Disconnect driver seat control unit connector.
3. Check continuity between driver seat control unit harness connector and lifting motor (front) harness connector.

Driver seat control unit		Lifting motor (front)		Continuity
Connector	Terminal	Connector	Terminal	
B451	36	B455	36	Existed
	40		40	

4. Check continuity between driver seat control unit harness connector and ground.

Driver seat control unit		Ground	Continuity
Connector	Terminal		
B451	36		Not existed
	40		

Is the inspection result normal?

YES >> Replace driver seat control unit.
NO >> Repair or replace harness or connector.

LIFTING MOTOR (REAR)

Component Function Check

INFOID:0000000007376257

1. CHECK FUNCTION

1. Select “SEAT LIFTER RR” in “Active test” mode with CONSULT.
2. Check the lifting motor (rear) operation.

Test item		Description	
SEAT LIFTER RR	OFF	Seat lifting (rear)	Stop
	UP		Upward
	DWN		Downward

Is the operation of relevant parts normal?

YES >> INSPECTION END
NO >> Perform diagnosis procedure. Refer to ADP-105, "Diagnosis Procedure".

Diagnosis Procedure

INFOID:0000000007376258

1. CHECK LIFTING MOTOR (REAR) INPUT SIGNAL

1. Turn ignition switch OFF.
2. Disconnect lifting motor (rear) connector.
3. Turn ignition switch ON.
4. Perform “Active test” (“SEAT LIFTER RR”) with CONSULT.
5. Check voltage between lifting motor (rear) harness connector and ground.

(+)		(-)	Condition		Voltage (V) (Approx.)
Lifting motor (rear)					
Connector	Terminals				
B456	41	Ground	SEAT LIFTER RR	OFF	0
				UP	12
				DWN (DOWN)	0
	42			OFF	0
				UP	0
				DWN (DOWN)	12

Is the inspection result normal?

YES >> Replace lifting motor (rear) (built in seat cushion frame).
NO >> GO TO 2.

2. CHECK LIFTING MOTOR (REAR) CIRCUIT

1. Turn ignition switch OFF.
2. Disconnect driver seat control unit connector.
3. Check continuity between driver seat control unit harness connector and lifting motor (rear) harness connector.

Driver seat control unit		Lifting motor (rear)		Continuity
Connector	Terminal	Connector	Terminal	
B451	41	B456	41	Existed
	42		42	

4. Check continuity between driver seat control unit harness connector and ground.

Driver seat control unit		Ground	Continuity
Connector	Terminal		
B451	41		Not existed
	42		

Is the inspection result normal?

YES >> Replace driver seat control unit.
NO >> Repair or replace harness or connector.

TILT MOTOR

Component Function Check

INFOID:0000000007376259

1.CHECK FUNCTION

1. Select “TILT MOTOR” in “Active test” mode with CONSULT.
2. Check the tilt motor operation.

Test item		Description	
TILT MOTOR	OFF	Steering tilt	Stop
	UP		Upward
	DWN		Downward

Is the operation of relevant parts normal?

YES >> INSPECTION END
NO >> Perform diagnosis procedure. Refer to ADP-107, "Diagnosis Procedure".

Diagnosis Procedure

INFOID:0000000007376260

1.CHECK TILT MOTOR INPUT SIGNAL

1. Turn ignition switch OFF.
2. Disconnect tilt motor connector.
3. Turn ignition switch ON.
4. Perform “Active test” (“TILT MOTOR”) with CONSULT.
5. Check voltage between tilt motor harness connector and ground.

(+)		(-)	Condition		Voltage (V) (Approx.)
Tilt motor					
Connector	Terminals				
M116	1	Ground	TILT MOTOR	OFF	0
				UP	0
				DWN (down)	12
	2			OFF	0
				UP	12
				DWN (down)	0

Is the inspection result normal?

YES >> Replace tilt motor (built in steering column assembly).
NO >> GO TO 2.

2.CHECK TILT MOTOR CIRCUIT

1. Turn ignition switch OFF.
2. Disconnect automatic drive positioner control unit.
3. Check continuity between automatic drive positioner control unit harness connector and tilt motor harness connector.

Automatic drive positioner control unit		Tilt motor		Continuity
Connector	Terminal	Connector	Terminal	
M104	28	M116	1	Existed
	29		2	

4. Check continuity between automatic drive positioner control unit harness connector and ground.

Automatic drive positioner control unit		Ground	Continuity
Connector	Terminal		
M104	28		Not existed
	29		

Is the inspection result normal?

YES >> Replace automatic drive positioner control unit.
NO >> Repair or replace harness or connector.

TELESCOPIC MOTOR

Component Function Check

INFOID:0000000007376261

1.CHECK FUNCTION

1. Select “TELESCO MOTOR” in “Active test” mode with CONSULT.
2. Check the telescopic motor operation.

Test item		Description	
TELESCO MOTOR	OFF	Steering telescopic	Stop
	FR		Forward
	RR		Backward

Is the operation of relevant parts normal?

YES >> INSPECTION END
NO >> Perform diagnosis procedure. Refer to ADP-109, "Diagnosis Procedure".

Diagnosis Procedure

INFOID:0000000007376262

1.CHECK TELESCOPIC MOTOR INPUT SIGNAL

1. Turn ignition switch OFF.
2. Disconnect telescopic motor connector.
3. Turn ignition switch ON.
4. Perform “Active test” (“TELESCO MOTOR”) with CONSULT-lll
5. Check voltage between telescopic motor harness connector and ground.

(+)		(-)	Condition		Voltage (V) (Approx.)
Telescopic motor					
Connector	Terminals				
M117	1	Ground	TELESCOPIC MOTOR	OFF	0
				FR (forward)	0
				RR (backward)	12
	2			OFF	0
				FR (forward)	12
				RR (backward)	0

Is the inspection result normal?

YES >> Replace telescopic motor (built in steering column assembly).
NO >> GO TO 2.

2.CHECK TELESCOPIC MOTOR CIRCUIT

1. Turn ignition switch OFF.
2. Disconnect automatic drive positioner control unit.
3. Check continuity between automatic drive positioner control unit harness connector and telescopic motor harness connector.

Automatic drive positioner control unit		Telescopic motor		Continuity
Connector	Terminal	Connector	Terminal	
M75	26	M117	1	Existed
	29		2	

4. Check continuity between automatic drive positioner control unit harness connector and ground.

Automatic drive positioner control unit		Ground	Continuity
Connector	Terminal		
M75	26		Not existed
	29		

Is the inspection result normal?

YES >> Replace automatic drive positioner control unit.
NO >> Repair or replace harness or connector.

DOOR MIRROR MOTOR

Component Function Check

INFOID:0000000007376263

1. CHECK DOOR MIRROR MOTOR FUNCTION

Check the operation with “MIRROR MOTOR RH” and “MIRROR MOTOR LH” in “ACTIVE TEST” mode with CONSULT.
Refer to ADP-23, "CONSULT Function".

Is the inspection result normal?

YES >> INSPECTION END
NO >> Refer to ADP-111, "Diagnosis Procedure".

Diagnosis Procedure

INFOID:0000000007376264

1. CHECK DOOR MIRROR MOTOR INPUT SIGNAL

1. Turn ignition switch OFF.
2. Disconnect door mirror connector.
3. Turn ignition switch ON.
4. Check voltage between door mirror harness connector and ground.

(+)		(-)	Condition		Voltage (V) (Approx.)
Door mirror					
Connector	Terminals				
D3 (Driver side) D23 (Passenger side)	12	Ground	Door mirror remote control switch	UP	12
				Other than the above	0
	11			LEFT	12
				Other than the above	0
	10			DOWN / RIGHT	12
				Other than the above	0

Is the inspection result normal?

YES >> GO TO 3.
NO >> GO TO 2.

2. CHECK DOOR MIRROR MOTOR CIRCUIT

1. Turn ignition switch OFF.
2. Disconnect automatic drive positioner control unit connector.
3. Check continuity between automatic drive positioner control unit harness connector and door mirror harness connector.

[driver side]

Automatic drive positioner control unit		Door mirror (driver side)		Continuity
Connector	Terminal	Connector	Terminal	
M75	12	D3	10	Existed
	23		12	
	24		11	

[passenger side]

Automatic drive positioner control unit		Door mirror (passenger side)		Continuity
Connector	Terminal	Connector	Terminal	
M75	22	D23	10	Existed
	10		12	
	11		11	

4. Check continuity between automatic drive positioner control unit harness connector and ground.

[driver side]

Automatic drive positioner control unit		Ground	Continuity
Connector	Terminal		
M75	12		Not existed
	23		
	24		

[passenger side]

Automatic drive positioner control unit		Ground	Continuity
Connector	Terminal		
M75	22		Not existed
	10		
	11		

Is the inspection result normal?

YES >> Replace automatic drive positioner control unit.
NO >> Repair or replace harness or connector.

3. CHECK DOOR MIRROR MOTOR

Check door mirror motor.
Refer to ADP-112, "Component Inspection".

Is the inspection result normal?

YES >> Check intermittent incident.Refer to GI-43, "Intermittent Incident".
NO >> Replace door mirror.

Component Inspection

INFOID:0000000007376265

1. CHECK DOOR MIRROR MOTOR 1

Check that door mirror motor does not trap foreign objects and does not have any damage.
Refer to MIR-25, "Exploded View".

Is the inspection result normal?

YES >> GO TO 2.
NO >> Replace door mirror.

2. CHECK DOOR MIRROR MOTOR 2

1. Turn ignition switch OFF.
2. Disconnect door mirror connector.
3. Apply 12 V to each power supply terminal of door mirror motor.

Door mirror			Operational direction
Connector	Terminal		
	(+)	(-)	
D3 (Driver side) D23 (Passenger side)	10	11	RIGHT
	11	10	LEFT
	12	10	UP
	10	12	DOWN

Is the inspection result normal?

YES >> INSPECTION END
NO >> Replace door mirror.

SEAT MEMORY INDICATOR

Component Function Check

INFOID:0000000007376266

1. CHECK FUNCTION

1. Select “MEMORY SW INDCTR” in “Active test” mode with CONSULT.
2. Check the memory indicator operation.

Test item		Description	
MEMORY SW INDCTR	OFF	Memory switch indicator	OFF
	ON-1		Indicator 1: ON
	ON-2		Indicator 2: ON

Is the operation of relevant parts normal?

YES >> INSPECTION END
NO >> Perform diagnosis procedure. Refer to ADP-113, "Diagnosis Procedure".

Diagnosis Procedure

INFOID:0000000007376267

1. CHECK SEAT MEMORY SWITCH INDICATOR OPERATION

Check seat memory switch indicator operation.

Which is the malfunctioning indicator?

All indicators are NG>>GO TO 2.
An indicator is NG>>GO TO 4.

2. CHECK FUSE

1. Turn ignition switch OFF.
2. Check that the blown fuse after repairing the affected circuit if a fuse is blown.

Signal name	Fuse No.
Battery power supply	10 (10 A)

Is the inspection result normal?

YES >> GO TO 3.
NO >> Replace the blown fuse after repairing the affected circuit if a fuse is blown.

3. CHECK SEAT MEMORY SWITCH INDICATOR POWER SUPPLY

Check voltage between seat memory switch harness connector and ground.

(+)		(-)	Voltage (V) (Approx.)
Seat memory switch			
Connector	Terminals		
D13	5	Ground	Battery voltage

Is the inspection result normal?

YES >> Replace seat memory switch.
NO >> Repair or replace harness or connector.

4. CHECK SEAT MEMORY SWITCH INDICATOR CIRCUIT

1. Turn ignition switch OFF.
2. Disconnect driver seat control unit and seat memory switch connector.
3. Check continuity between driver seat control unit harness connector and seat memory switch harness connector.

Driver seat control unit		Seat memory switch		Continuity
Connector	Terminal	Connector	Terminal	
B452	23	D13	6	Existed
	7		7	

4. Check continuity between driver seat control unit harness connector and ground.

Driver seat control unit		Ground	Continuity
Connector	Terminal		
B452	23		Not existed
	7		

Is the inspection result normal?

YES >> Replace driver seat control unit.
NO >> Repair or replace harness or connector.

SYMPTOM DIAGNOSIS

MANUAL FUNCTION DOES NOT OPERATE

ALL COMPONENT

ALL COMPONENT : Diagnosis Procedure

INFOID:0000000007376268

1. CHECK DRIVER SEAT CONTROL UNIT POWER SUPPLY AND GROUND CIRCUIT

Check driver seat control unit power supply and ground circuit.
Refer to ADP-60, "DRIVER SEAT CONTROL UNIT : Diagnosis Procedure".

Is the inspection result normal?

YES >> GO TO 2.
NO >> Repair or replace the malfunction parts.

2. CHECK AUTOMATIC DRIVE POSITIONER CONTROL UNIT POWER SUPPLY AND GROUND CIRCUIT

Check automatic drive positioner control unit power supply and ground circuit.
Refer to ADP-60, "AUTOMATIC DRIVE POSITIONER CONTROL UNIT : Diagnosis Procedure".

Is the inspection result normal?

YES >> GO TO 3.
NO >> Repair or replace the malfunction parts.

3. CONFIRM THE OPERATION

Confirm the operation again.

Is the result normal?

YES >> Check intermittent incident. Refer to GI-43, "Intermittent Incident".
NO >> GO TO 1.

POWER SEAT

POWER SEAT : Diagnosis Procedure

INFOID:0000000007376269

1. CHECK POWER SEAT SWITCH GROUND CIRCUIT

Check power seat switch ground circuit.
Refer to ADP-80, "Diagnosis Procedure".

Is the inspection result normal?

YES >> GO TO 2.
NO >> Repair or replace harness or connector.

2. CONFIRM THE OPERATION

Confirm the operation again.

Is the result normal?

YES >> Check intermittent incident. Refer to GI-43, "Intermittent Incident".
NO >> GO TO 1.

TILT & TELESCOPIC

TILT & TELESCOPIC : Diagnosis Procedure

INFOID:0000000007376270

1. CHECK TILT & TELESCOPIC SWITCH GROUND CIRCUIT

Check tilt & telescopic switch ground circuit.
Refer to ADP-81, "Diagnosis Procedure".

Is the inspection result normal?

YES >> GO TO 2.
NO >> Repair or replace harness or connector.

2. CONFIRM THE OPERATION

Confirm the operation again.

Is the result normal?

YES >> Check intermittent incident. Refer to GI-43, "Intermittent Incident".
NO >> GO TO 1.

SEAT SLIDING

SEAT SLIDING : Diagnosis Procedure

INFOID:0000000007376271

1. CHECK SLIDING MECHANISM

Check for the following.
- Mechanism deformation or pinched foreign materials.
- Interference with other parts because of poor installation.

Is the inspection result normal?

YES >> GO TO 2.
NO >> Repair or replace the malfunction parts.

2. CHECK SLIDING SWITCH

Check sliding switch.
Refer to ADP-62, "Component Function Check".

Is the inspection result normal?

YES >> GO TO 3.
NO >> Repair or replace the malfunction parts.

3. CHECK SLIDING MOTOR

Check sliding motor.
Refer to ADP-99, "Component Function Check".

Is the inspection result normal?

YES >> GO TO 4.
NO >> Repair or replace the malfunction parts.

4. CONFIRM THE OPERATION

Check the operation again.

Is the result normal?

YES >> Check intermittent incident. Refer to GI-43, "Intermittent Incident".
NO >> GO TO 1.

SEAT RECLINING

SEAT RECLINING : Diagnosis Procedure

INFOID:0000000007376272

1. CHECK RECLINING MECHANISM

Check for the following.
- Mechanism deformation or pinched foreign materials.
- Interference with other parts because of poor installation.

Is the inspection result normal?

YES >> GO TO 2.
NO >> Repair or replace the malfunction parts.

2. CHECK RECLINING SWITCH

Check reclining switch.
Refer to ADP-64, "Component Function Check".

Is the inspection result normal?

YES >> GO TO 3.
NO >> Repair or replace the malfunction parts.

3. CHECK RECLINING MOTOR

Check reclining motor.
Refer to ADP-101, "Component Function Check".

Is the inspection result normal?

YES >> GO TO 4.
NO >> Repair or replace the malfunction parts.

4. CONFIRM THE OPERATION

Check the operation again.

Is the result normal?

YES >> Check intermittent incident. Refer to GI-43, "Intermittent Incident".
NO >> GO TO 1.

SEAT LIFTING (FRONT)

SEAT LIFTING (FRONT) : Diagnosis Procedure

INFOID:0000000007376273

1. CHECK LIFTING (FRONT) MECHANISM

Check for the following.
- Mechanism deformation or pinched foreign materials.
- Interference with other parts because of poor installation.

Is the inspection result normal?

YES >> GO TO 2.
NO >> Repair or replace the malfunction parts.

2. CHECK LIFTING SWITCH (FRONT)

Check lifting switch (front).
Refer to ADP-66, "Component Function Check".

Is the inspection result normal?

YES >> GO TO 3.
NO >> Repair or replace the malfunction parts.

3. CHECK LIFTING MOTOR (FRONT)

Check lifting motor (front).
Refer to ADP-103, "Component Function Check".

Is the inspection result normal?

YES >> GO TO 4.
NO >> Repair or replace the malfunction parts.

4. CONFIRM THE OPERATION

Check the operation again.

Is the result normal?

YES >> Check intermittent incident. Refer to GI-43, "Intermittent Incident".
NO >> GO TO 1.

SEAT LIFTING (REAR)

SEAT LIFTING (REAR) : Diagnosis Procedure

INFOID:0000000007376274

1. CHECK LIFTING (REAR) MECHANISM

Check for the following.
- Mechanism deformation or pinched foreign materials.
- Interference with other parts because of poor installation.

Is the inspection result normal?

YES >> GO TO 2.
NO >> Repair or replace the malfunction parts.

2. CHECK LIFTING SWITCH (REAR)

Check lifting switch (rear).
Refer to ADP-68, "Component Function Check".

Is the inspection result normal?

YES >> GO TO 3.
NO >> Repair or replace the malfunction parts.

3. CHECK LIFTING MOTOR (REAR)

Check lifting motor (rear).
Refer to ADP-105, "Component Function Check".

Is the inspection result normal?

YES >> GO TO 4.
NO >> Repair or replace the malfunction parts.

4. CONFIRM THE OPERATION

Check the operation again.

Is the result normal?

YES >> Check intermittent incident. Refer to GI-43, "Intermittent Incident".
NO >> GO TO 1.

STEERING TILT

STEERING TILT : Diagnosis Procedure

INFOID:0000000007376275

1. CHECK STEERING TILT MECHANISM

Check for the following.
- Mechanism deformation or pinched foreign materials.
- Interference with other parts because of poor installation.

Is the inspection result normal?

YES >> GO TO 2.
NO >> Repair or replace the malfunction parts.

2. CHECK TILT SWITCH

Check tilt switch.
Refer to ADP-70, "Component Function Check".

Is the inspection result normal?

YES >> GO TO 3.
NO >> Repair or replace the malfunction parts.

3. CHECK TILT MOTOR

Check tilt motor.
Refer to ADP-107, "Component Function Check".

Is the inspection result normal?

YES >> GO TO 4.
NO >> Repair or replace the malfunction parts.

4. CONFIRM THE OPERATION

Check the operation again.

Is the result normal?

YES >> Check intermittent incident. Refer to GI-43, "Intermittent Incident".
NO >> GO TO 1.

STEERING TELESCOPIC

STEERING TELESCOPIC : Diagnosis Procedure

INFOID:0000000007376276

1. CHECK STEERING TELESCOPIC MECHANISM

Check for the following.
- Mechanism deformation or pinched foreign materials.
- Interference with other parts because of poor installation.

Is the inspection result normal?

YES >> GO TO 2.

NO >> Repair or replace the malfunction parts.

2. CHECK TELESCOPIC SWITCH

Check telescopic switch.
Refer to ADP-72, "Component Function Check".

Is the inspection result normal?

YES >> GO TO 3.
NO >> Repair or replace the malfunction parts.

3. CHECK TELESCOPIC MOTOR

Check telescopic motor.
Refer to ADP-109, "Component Function Check".

Is the inspection result normal?

YES >> GO TO 4.
NO >> Repair or replace the malfunction parts.

4. CONFIRM THE OPERATION

Check the operation again.

Is the result normal?

YES >> Check intermittent incident. Refer to GI-43, "Intermittent Incident".
NO >> GO TO 1.

DOOR MIRROR

DOOR MIRROR : Diagnosis Procedure

INFOID:0000000007376277

1. CHECK DOOR MIRROR MECHANISM

Check for the following.
- Mechanism deformation or pinched foreign materials.
- Interference with other parts because of poor installation.

Is the inspection result normal?

YES >> GO TO 2.
NO >> Repair or replace the malfunction parts.

2. CHECK DOOR MIRROR REMOTE CONTROL SWITCH

Check door mirror remote control switch. Refer to following.
- Mirror switch : Refer to ADP-77, "MIRROR SWITCH : Component Function Check".
- Changeover switch : Refer to ADP-76, "CHANGEOVER SWITCH : Component Function Check".

Is the inspection result normal?

YES >> GO TO 3.
NO >> Repair or replace the malfunction parts.

3. CHECK DOOR MIRROR MOTOR

Check door mirror motor.
Refer to ADP-111, "Component Function Check".

Is the inspection result normal?

YES >> GO TO 4.
NO >> Repair or replace the malfunction parts.

4. CONFIRM THE OPERATION

Check the operation again.

Is the result normal?

YES >> Check intermittent incident. Refer to GI-43, "Intermittent Incident".
NO >> GO TO 1.

MEMORY FUNCTION DOES NOT OPERATE

ALL COMPONENT

ALL COMPONENT : Diagnosis Procedure

INFOID:0000000007376278

1. CHECK MANUAL OPERATION

Check manual operation.

Is the inspection result normal?

YES >> GO TO 2.
NO >> Repair or replace the malfunction parts.

2. PERFORM INITIALIZATION AND MEMORY STORING PROCEDURE

1. Perform initialization procedure.
   Refer to ADP-45, "SYSTEM INITIALIZATION : Special Repair Requirement".
2. Perform memory storing procedure.
   Refer to ADP-46, "MEMORY STORING : Special Repair Requirement".
3. Check memory function.
   Refer to ADP-16, "MEMORY FUNCTION : System Description".

Is the inspection result normal?

YES >> Memory function is normal.
NO >> GO TO 3.

3. CHECK SEAT MEMORY SWITCH

Check seat memory switch.
Refer to ADP-74, "Component Function Check".

Is the inspection result normal?

YES >> GO TO 4.
NO >> Replace seat memory switch.

4. CONFIRM THE OPERATION

Confirm the operation again.

Is the result normal?

YES >> Check intermittent incident. Refer to GI-43, "Intermittent Incident".
NO >> GO TO 1.

SEAT SLIDING

SEAT SLIDING : Diagnosis Procedure

INFOID:0000000007376279

1. CHECK MANUAL OPERATION

Check manual operation.

Is the inspection result normal?

YES >> GO TO 2.
NO >> Refer to ADP-116, "SEAT SLIDING : Diagnosis Procedure"

2. CHECK SLIDING SENSOR

Check sliding sensor.
Refer to ADP-82, "Component Function Check".

Is the inspection result normal?

YES >> GO TO 3.
NO >> Repair or replace the malfunction parts.

3. CONFIRM THE OPERATION

Check the operation again.

Is the result normal?

YES >> Check intermittent incident. Refer to GI-43, "Intermittent Incident".

NO >> GO TO 1.

SEAT RECLINING

SEAT RECLINING : Diagnosis Procedure

INFOID:0000000007376280

1. CHECK MANUAL OPERATION

Check manual operation.

Is the inspection result normal?

YES >> GO TO 2.
NO >> Refer to ADP-116, "SEAT RECLINING : Diagnosis Procedure"

2. CHECK RECLINING SENSOR

Check reclining sensor.
Refer to ADP-84, "Component Function Check".

Is the inspection result normal?

YES >> GO TO 3.
NO >> Repair or replace the malfunction parts.

3. CONFIRM THE OPERATION

Check the operation again.

Is the result normal?

YES >> Check intermittent incident. Refer to GI-43, "Intermittent Incident".
NO >> GO TO 1.

SEAT LIFTING (FRONT)

SEAT LIFTING (FRONT) : Diagnosis Procedure

INFOID:0000000007376281

1. CHECK MANUAL OPERATION

Check manual operation.

Is the inspection result normal?

YES >> GO TO 2.
NO >> Refer to ADP-117, "SEAT LIFTING (FRONT) : Diagnosis Procedure"

2. CHECK LIFTING SENSOR (FRONT)

Check lifting sensor (front).
Refer to ADP-86, "Component Function Check".

Is the inspection result normal?

YES >> GO TO 3.
NO >> Repair or replace the malfunction parts.

3. CONFIRM THE OPERATION

Check the operation again.

Is the result normal?

YES >> Check intermittent incident. Refer to GI-43, "Intermittent Incident".
NO >> GO TO 1.

SEAT LIFTING (REAR)

SEAT LIFTING (REAR) : Diagnosis Procedure

INFOID:0000000007376282

1. CHECK MANUAL OPERATION

Check manual operation.

Is the inspection result normal?

YES >> GO TO 2.
NO >> Refer to ADP-117, "SEAT LIFTING (REAR) : Diagnosis Procedure"

2. CHECK LIFTING SENSOR (REAR)

Check lifting sensor (rear).
Refer to ADP-88, "Component Function Check".

Is the inspection result normal?

YES >> GO TO 3.
NO >> Repair or replace the malfunction parts.

3. CONFIRM THE OPERATION

Check the operation again.

Is the result normal?

YES >> Check intermittent incident. Refer to GI-43, "Intermittent Incident".
NO >> GO TO 1.

STEERING TILT

STEERING TILT : Diagnosis Procedure

INFOID:0000000007376283

1. CHECK MANUAL OPERATION

Check manual operation.

Is the inspection result normal?

YES >> GO TO 2.
NO >> Refer to ADP-118, "STEERING TILT : Diagnosis Procedure"

2. CHECK TILT SENSOR

Check steering tilt sensor.
Refer to ADP-90, "Component Function Check".

Is the inspection result normal?

YES >> GO TO 3.
NO >> Repair or replace the malfunction parts.

3. CONFIRM THE OPERATION

Check the operation again.

Is the result normal?

YES >> Check intermittent incident. Refer to GI-43, "Intermittent Incident".
NO >> GO TO 1.

STEERING TELESCOPIC

STEERING TELESCOPIC : Diagnosis Procedure

INFOID:0000000007376284

1. CHECK MANUAL OPERATION

Check manual operation.

Is the inspection result normal?

YES >> GO TO 2.
NO >> Refer to ADP-118, "STEERING TELESCOPIC : Diagnosis Procedure"

2. CHECK TELESCOPIC SENSOR

Check steering telescopic sensor.
Refer to ADP-92, "Component Function Check".

Is the inspection result normal?

YES >> GO TO 3.
NO >> Repair or replace the malfunction parts.

3. CONFIRM THE OPERATION

Check the operation again.

Is the result normal?

YES >> Check intermittent incident. Refer to GI-43, "Intermittent Incident".
NO >> GO TO 1.

DOOR MIRROR

DOOR MIRROR : Diagnosis Procedure

INFOID:0000000007376285

1. CHECK MANUAL OPERATION

Check manual operation.

Is the inspection result normal?

YES >> GO TO 2.
NO >> Refer to ADP-119, "DOOR MIRROR : Diagnosis Procedure"

2. CHECK MIRROR SENSOR

Check mirror sensor. Refer to following.

- Driver side : ADP-95, "DRIVER SIDE : Component Function Check".
- Passenger side : ADP-96, "PASSENGER SIDE : Component Function Check".

Is the inspection result normal?

YES >> GO TO 3.
NO >> Repair or replace the malfunction parts.

3. CONFIRM THE OPERATION

Check the operation again.

Is the result normal?

YES >> Check intermittent incident. Refer to GI-43, "Intermittent Incident".
NO >> GO TO 1.

ENTRY/EXIT ASSIST FUNCTION DOES NOT OPERATE

Diagnosis Procedure

INFOID:0000000007376286

1. CHECK SYSTEM SETTING

1. Check system setting.
   Refer to ADP-48, "SYSTEM SETTING : Special Repair Requirement".
2. Check the operation.

Is the inspection result normal?

YES >> Entry/Exit function is normal.
NO >> GO TO 2.

2. PERFORM SYSTEM INITIALIZATION

1. Perform system initialization.
   Refer to ADP-45, "SYSTEM INITIALIZATION : Special Repair Requirement".
2. Check the operation.

Is the inspection result normal?

YES >> Entry/Exit function is normal.
NO >> GO TO 3.

3. CHECK FRONT DOOR SWITCH (DRIVER SIDE)

Check front door switch (driver side).
Refer to DLK-99, "Component_Function_Check".

Is the inspection result normal?

YES >> GO TO 4.
NO >> Repair or replace the malfunction parts.

4. CONFIRM THE OPERATION

Confirm the operation again.

Is the result normal?

YES >> Check intermittent incident. Refer to GI-43, "Intermittent Incident".
NO >> GO TO 1.

INTELLIGENT KEY INTERLOCK FUNCTION DOES NOT OPERATE

Diagnosis Procedure

INFOID:0000000007376287

1. PERFORM INTELLIGENT KEY INTERLOCK STORING PROCEDURE

1. Perform Intelligent Key interlock storing procedure.
   Refer to ADP-47, "INTELLIGENT KEY INTERLOCK STORING : Special Repair Requirement".
2. Check the operation.

Is the inspection result normal?

YES >> Intelligent Key interlock function is normal.
NO >> GO TO 2.

2. CHECK DOOR LOCK FUNCTION

Check door lock function.
Refer to DLK-59, "Work Flow".

Is the inspection result normal?

YES >> GO TO 3.
NO >> Repair or replace the malfunction parts.

3. CONFIRM THE OPERATION

Confirm the operation again.

Is the result normal?

YES >> Check the intermittent incident. Refer to GI-43, "Intermittent Incident".
NO >> GO TO 1.

MEMORY INDICATE DOES NOT OPERATE

Diagnosis Procedure

INFOID:0000000007376288

1. CHECK SEAT MEMORY SWITCH INDICATOR

Check seat memory switch indicator.
Refer to ADP-113, "Component Function Check".

Is the inspection result normal?

YES >> GO TO 2.
NO >> Repair or replace the malfunction parts.

2. CONFIRM THE OPERATION

Confirm the operation again.

Is the result normal?

YES >> Check intermittent incident. Refer to GI-43, "Intermittent Incident".
NO >> GO TO 1.

NORMAL OPERATING CONDITION

Description

INFOID:0000000007376289

The following symptoms are normal operations, and they do not indicate a malfunction.

Symptom	Cause	Action to take	Reference page
Entry/exit assist function do not operate.	No initialization has been performed.	Perform initialization.	ADP-45, "SYSTEM INITIALIZATION : Description"
	Entry/exit assist function is disabled. **NOTE:** Entry/exit assist function is set to ON before delivery (initial setting).	Change the settings.	ADP-47, "SYSTEM SETTING : Description"
Entry assist function does not operate.	Manual operation with power seat switch was performed after exit assist function execution.	Perform the entry assist function.	ADP-19, "ENTRY ASSIST FUNCTION : System Description"
Lumbar support does not perform memory operation.	The lumbar support system are controlled independently with no link to the automatic drive positioner system.	—	SE-16, "LUMBAR SUPPORT SYSTEM : System Description"
Memory function, entry/exit assist function, or Intelligent Key interlock function does not operate.	The operating conditions are not fulfilled.	Fulfill the operation conditions.	Memory function : ADP-16, "MEMORY FUNCTION : System Description"
			Entry assist function : ADP-19, "ENTRY ASSIST FUNCTION : System Description"
			Exit assist function : ADP-18, "EXIT ASSIST FUNCTION : System Description"
			Intelligent Key interlock function : ADP-21, "INTELLIGENT KEY INTERLOCK FUNCTION : System Description"

REMOVAL AND INSTALLATION

DRIVER SEAT CONTROL UNIT

Removal and Installation

INFOID:0000000007376290

REMOVAL

CAUTION:

When removing and installing, use shop cloths to protect parts from damage.

1. Remove driver seat (1). Refer to SE-81, "Removal and Installation".
2. Remove screws (A).
3. Remove driver seat control unit (2).

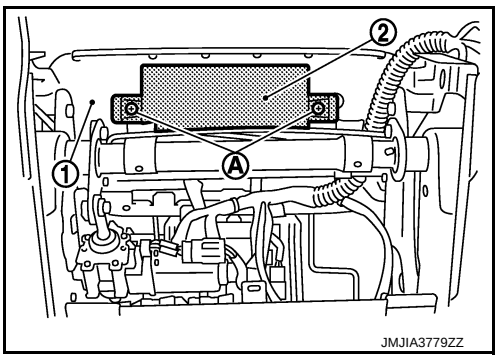

INSTALLATION

Install in the reverse order of removal.

CAUTION:

Be sure to clump the harness to the right place.

NOTE:

After installing the driver seat, perform additional service when replacing control unit. Refer to ADP-44, "ADDITIONAL SERVICE WHEN REPLACING CONTROL UNIT : Description".

AUTOMATIC DRIVE POSITIONER CONTROL UNIT

Removal and Installation

INFOID:0000000007376291

REMOVAL

CAUTION:
When removing and installing, use shop cloths to protect parts from damage.

1. Remove instrument lower panel LH. Refer to IP-14, "Removal and Installation".
2. Remove screws (A).
3. Remove automatic drive positioner control unit (1).

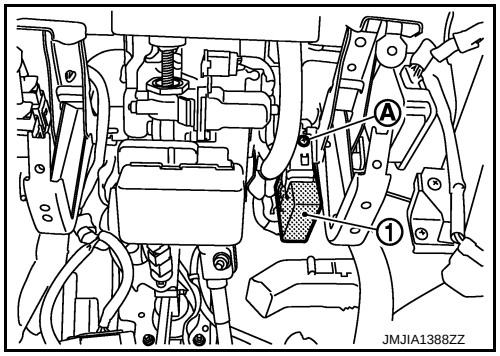

INSTALLATION

Install in the reverse order of removal.

CAUTION:
Be sure to clump the harness to the right place.

NOTE:
After installing the driver seat, perform additional service when replacing control unit. Refer to ADP-44, "ADDITIONAL SERVICE WHEN REPLACING CONTROL UNIT : Description".

SEAT MEMORY SWITCH

Removal and Installation

INFOID:0000000007376292

REMOVAL

CAUTION:

When removing and installing, use shop cloths to protect parts from damage.

1. Remove front door garnish (1). Refer to INT-13, "Removal and Installation".
2. Press pawls and remove seat memory switch (2) from front door garnish (1), with remover tool (A).

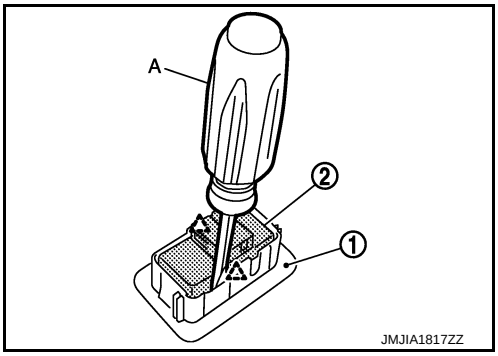

Pawl

INSTALLATION

Install in the reverse order of removal.

CAUTION:

Be sure to clump the harness to the right place.

NOTE:

After installing the driver seat, perform additional service when removing battery negative terminal. Refer to ADP-44, "ADDITIONAL SERVICE WHEN REMOVING BATTERY NEGATIVE TERMINAL : Description".

POWER SEAT SWITCH

Removal and Installation

INFOID:0000000007376293

REMOVAL

CAUTION:
When removing and installing, use shop cloths to protect parts from damage.

1. Remove seat cushion outer finisher (1). Refer to SE-85, "SEAT CUSHION : Disassembly and Assembly".
2. Remove screws (A).
3. Remove power seat switch (2) from seat cushion outer finisher (1).

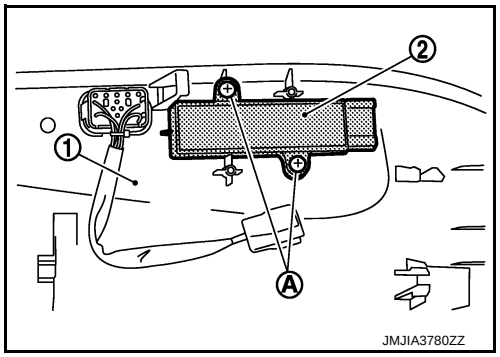

INSTALLATION

Install in the reverse order of removal.

CAUTION:
Be sure to clump the harness to the right place.

NOTE:
After installing the driver seat, perform additional service when removing battery negative terminal. Refer to ADP-44, "ADDITIONAL SERVICE WHEN REMOVING BATTERY NEGATIVE TERMINAL : Description".

TILT&TELESCOPIC SWITCH

Removal and Installation

INFOID:0000000007376294

REMOVAL

CAUTION:

When removing and installing, use shop cloths to protect parts from damage.

1. Remove steering column lower cover (1). Refer to IP-14, "Removal and Installation".
2. Press pawls and remove tilt & telescopic switch (2) from the steering column lower cover (1).

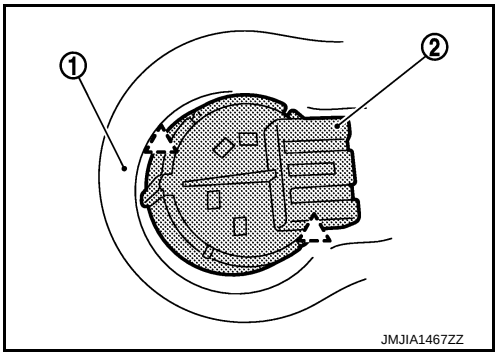

: Pawl

INSTALLATION

Install in the reverse order of removal.

CAUTION:

Be sure to clump the harness to the right place.

NOTE:

After installing the driver seat, perform additional service when removing battery negative terminal. Refer to ADP-44, "ADDITIONAL SERVICE WHEN REMOVING BATTERY NEGATIVE TERMINAL : Description".