SECTION EC
ENGINE CONTROL SYSTEM

CONTENTS

INDEX FOR DTC 8
DTC No. Index 8
Alphabetical Index 12
PRECAUTIONS 16
Precautions for Supplemental Restraint System (SRS) “AIR BAG” and “SEAT BELT PRE-TENSIONER” 16
On Board Diagnostic (OBD) System of Engine and A/T 16
Precaution 16
PREPARATION 20
Special Service Tools 20
Commercial Service Tools 22
ENGINE CONTROL SYSTEM 23
System Diagram 23
Multiport Fuel Injection (MFI) System 24
Electronic Ignition (EI) System 26
Fuel Cut Control (at No Load and High Engine Speed) 27
AIR CONDITIONING CUT CONTROL 28
Input/Output Signal Chart 28
System Description 28
AUTOMATIC SPEED CONTROL DEVICE (ASCD).. 29
System Description 29
Component Description 30
CAN COMMUNICATION 31
System Description 31
EVAPORATIVE EMISSION SYSTEM 32
Description 32
Component Inspection 35
Removal and Installation 36
How to Detect Fuel Vapor Leakage 37
ON BOARD REFUELING VAPOR RECOVERY (ORVR) 39
System Description 39
Diagnostic Procedure 40
Component Inspection 43
POSITIVE CRANKCASE VENTILATION 45
Description 45
Component Inspection 45
IVIS (INFINITI VEHICLE IMMOBILIZER SYSTEM-NATS) 47
Description 47
ON BOARD DIAGNOSTIC (OBD) SYSTEM 48
Introduction 48
Two Trip Detection Logic 48
Emission-related Diagnostic Information 49
Malfunction Indicator Lamp (MIL) 63
OBD System Operation Chart 65
BASIC SERVICE PROCEDURE 71
Basic Inspection 71
Idle Speed and Ignition Timing Check 76
VIN Registration 77
Accelerator Pedal Released Position Learning 78
Throttle Valve Closed Position Learning 78
Idle Air Volume Learning 78
Fuel Pressure Check 80
TROUBLE DIAGNOSIS 83
Trouble Diagnosis Introduction 83
DTC Inspection Priority Chart 89
Fail-safe Chart 91
Symptom Matrix Chart 92
Engine Control Component Parts Location 96
Vacuum Hose Drawing 102
Circuit Diagram 103
ECM Harness Connector Terminal Layout 105
ECM Terminals and Reference Value 105
CONSULT-II Function (ENGINE) 114
Generic Scan Tool (GST) Function 127
CONSULT-II Reference Value in Data Monitor 129
Major Sensor Reference Graph in Data Monitor Mode 132
TROUBLE DIAGNOSIS - SPECIFICATION VALUE 134
Description 134
Testing Condition 134
Inspection Procedure 134
Diagnostic Procedure 135
TROUBLE DIAGNOSIS FOR INTERMITTENT INCIDENT 144

Description 144
Diagnostic Procedure 144
POWER SUPPLY AND GROUND CIRCUIT 145
Wiring Diagram 145
Diagnostic Procedure 146
Ground Inspection 150
DTC U1000, U1001 CAN COMMUNICATION LINE 151
Description 151
On Board Diagnosis Logic 151
DTC Confirmation Procedure 151
Wiring Diagram 152
Diagnostic Procedure 153
DTC U1010 CAN COMMUNICATION 154
Description 154
On Board Diagnosis Logic 154
DTC Confirmation Procedure 154
Diagnostic Procedure 155
DTC P0031, P0032, P0051, P0052 A/F SENSOR 1 HEATER 156
Description 156
CONSULT-II Reference Value in Data Monitor Mode 156
On Board Diagnosis Logic 156
DTC Confirmation Procedure 156
Wiring Diagram 157
Diagnostic Procedure 160
Component Inspection 162
Removal and Installation 162
DTC P0037, P0038, P0057, P0058 HO2S2 HEATER 163
Description 163
CONSULT-II Reference Value in Data Monitor Mode 163
On Board Diagnosis Logic 163
DTC Confirmation Procedure 164
Wiring Diagram 165
Diagnostic Procedure 168
Component Inspection 170
Removal and Installation 170
DTC P0101 MAF SENSOR 171
Component Description 171
CONSULT-II Reference Value in Data Monitor Mode 171
On Board Diagnosis Logic 171
DTC Confirmation Procedure 172
Overall Function Check 173
Wiring Diagram 174
Diagnostic Procedure 175
Component Inspection 178
Removal and Installation 179
DTC P0102, P0103 MAF SENSOR 180
Component Description 180
CONSULT-II Reference Value in Data Monitor Mode 180
On Board Diagnosis Logic 180
DTC Confirmation Procedure 181
Wiring Diagram 182
Diagnostic Procedure 183
Component Inspection 186
Removal and Installation 187
DTC P0112, P0113 IAT SENSOR 188
Component Description 188
On Board Diagnosis Logic 188
DTC Confirmation Procedure 188
Wiring Diagram 189
Diagnostic Procedure 190
Component Inspection 191
Removal and Installation 191
DTC P0117, P0118 ECT SENSOR 192
Component Description 192
On Board Diagnosis Logic 192
DTC Confirmation Procedure 193
Wiring Diagram 194
Diagnostic Procedure 195
Component Inspection 196
Removal and Installation 197
DTC P0122, P0123 TP SENSOR 198
Component Description 198
CONSULT-II Reference Value in Data Monitor Mode 198
On Board Diagnosis Logic 198
DTC Confirmation Procedure 199
Wiring Diagram 200
Diagnostic Procedure 201
Component Inspection 204
Removal and Installation 204
DTC P0125 ECT SENSOR 205
Component Description 205
On Board Diagnosis Logic 205
DTC Confirmation Procedure 206
Diagnostic Procedure 206
Component Inspection 207
Removal and Installation 207
DTC P0127 IAT SENSOR 208
Component Description 208
On Board Diagnosis Logic 208
DTC Confirmation Procedure 208
Diagnostic Procedure 209
Component Inspection 210
Removal and Installation 210
DTC P0128 THERMOSTAT FUNCTION 211
On Board Diagnosis Logic 211
DTC Confirmation Procedure 211
Diagnostic Procedure 211
Component Inspection 212
Removal and Installation 212
DTC P0130, P0150 A/F SENSOR 1 213
Component Description 213
CONSULT-II Reference Value in Data Monitor Mode 213
On Board Diagnosis Logic 213
DTC Confirmation Procedure 213
Overall Function Check 214
Wiring Diagram 216
Diagnostic Procedure 219
Removal and Installation 222
DTC P0131, P0151 A/F SENSOR 1 223
Component Description 223
CONSULT-II Reference Value in Data Monitor Mode

. 223
On Board Diagnosis Logic 223
DTC Confirmation Procedure 223
Wiring Diagram 225
Diagnostic Procedure 228
Removal and Installation 231
DTC P0132, P0152 A/F SENSOR 1 232
Component Description 232
CONSULT-II Reference Value in Data Monitor Mode . 232
On Board Diagnosis Logic 232
DTC Confirmation Procedure 232
Wiring Diagram 234
Diagnostic Procedure 237
Removal and Installation 240
DTC P0133, P0153 A/F SENSOR 1 241
Component Description 241
CONSULT-II Reference Value in Data Monitor Mode . 241
On Board Diagnosis Logic 241
DTC Confirmation Procedure 242
Wiring Diagram 244
Diagnostic Procedure 247
Removal and Installation 252
DTC P0137, P0157 HO2S2 253
Component Description 253
CONSULT-II Reference Value in Data Monitor Mode . 253
On Board Diagnosis Logic 253
DTC Confirmation Procedure 254
Overall Function Check 254
Wiring Diagram 256
Diagnostic Procedure 259
Component Inspection 262
Removal and Installation 263
DTC P0138, P0158 HO2S2 264
Component Description 264
CONSULT-II Reference Value in Data Monitor Mode . 264
On Board Diagnosis Logic 264
DTC Confirmation Procedure 265
Overall Function Check 266
Wiring Diagram 267
Diagnostic Procedure 270
Component Inspection 275
Removal and Installation 276
DTC P0139, P0159 HO2S2 277
Component Description 277
CONSULT-II Reference Value in Data Monitor Mode . 277
On Board Diagnosis Logic 277
DTC Confirmation Procedure 278
Overall Function Check 278
Wiring Diagram 280
Diagnostic Procedure 283
Component Inspection 286
Removal and Installation 287
DTC P0171, P0174 FUEL INJECTION SYSTEM FUNCTION 288
On Board Diagnosis Logic 288
DTC Confirmation Procedure 288
Wiring Diagram 290
Diagnostic Procedure 294
DTC P0172, P0175 FUEL INJECTION SYSTEM FUNCTION 299
On Board Diagnosis Logic 299
DTC Confirmation Procedure 299
Wiring Diagram 301
Diagnostic Procedure 305
DTC P0181 FTT SENSOR 309
Component Description 309
On Board Diagnosis Logic 309
DTC Confirmation Procedure 309
Wiring Diagram 311
Diagnostic Procedure 312
Component Inspection 314
Removal and Installation 314
DTC P0182, P0183 FTT SENSOR 315
Component Description 315
On Board Diagnosis Logic 315
DTC Confirmation Procedure 315
Wiring Diagram 316
Diagnostic Procedure 317
Component Inspection 319
Removal and Installation 319
DTC P0222, P0223 TP SENSOR 320
Component Description 320
CONSULT-II Reference Value in Data Monitor Mode . 320
On Board Diagnosis Logic 320
DTC Confirmation Procedure 321
Wiring Diagram 322
Diagnostic Procedure 323
Component Inspection 326
Removal and Installation 326
DTC P0300 - P0308 MULTIPLE CYLINDER MISFIRE, NO. 1 - 8 CYLINDER MISFIRE 327
On Board Diagnosis Logic 327
DTC Confirmation Procedure 327
Diagnostic Procedure 328
DTC P0327, P0328, P0332, P0333 KS 335
Component Description 335
On Board Diagnosis Logic 335
DTC Confirmation Procedure 335
Wiring Diagram 336
Diagnostic Procedure 337
Component Inspection 339
Removal and Installation 339
DTC P0335 CKP SENSOR (POS) 340
Component Description 340
CONSULT-II Reference Value in Data Monitor Mode . 340
On Board Diagnosis Logic 340
DTC Confirmation Procedure 340
Wiring Diagram 342
Diagnostic Procedure 343
Component Inspection 346
Removal and Installation 346

DTC P0340 CMP SENSOR (PHASE) 347
Component Description 347
On Board Diagnosis Logic 347
DTC Confirmation Procedure 347
Wiring Diagram 349
Diagnostic Procedure 350
Component Inspection 353
Removal and Installation 353
DTC P0420, P0430 THREE WAY CATALYST FUNCTION 354
On Board Diagnosis Logic 354
DTC Confirmation Procedure 354
Overall Function Check 355
Diagnostic Procedure 356
DTC P0441 EVAP CONTROL SYSTEM 360
System Description 360
On Board Diagnosis Logic 360
DTC Confirmation Procedure 360
Overall Function Check 361
Diagnostic Procedure 362
DTC P0442 EVAP CONTROL SYSTEM 365
On Board Diagnosis Logic 365
DTC Confirmation Procedure 366
Diagnostic Procedure 367
DTC P0443 EVAP CANISTER PURGE VOLUME CONTROL SOLENOID VALVE 373
Description 373
CONSULT-II Reference Value in Data Monitor Mode 373
On Board Diagnosis Logic 374
DTC Confirmation Procedure 374
Wiring Diagram 375
Diagnostic Procedure 377
Component Inspection 380
Removal and Installation 380
DTC P0444, P0445 EVAP CANISTER PURGE VOLUME CONTROL SOLENOID VALVE 381
Description 381
CONSULT-II Reference Value in Data Monitor Mode 381
On Board Diagnosis Logic 382
DTC Confirmation Procedure 382
Wiring Diagram 383
Diagnostic Procedure 385
Component Inspection 386
Removal and Installation 387
DTC P0447 EVAP CANISTER VENT CONTROL VALVE 388
Component Description 388
CONSULT-II Reference Value in Data Monitor Mode 388
On Board Diagnosis Logic 388
DTC Confirmation Procedure 389
Wiring Diagram 390
Diagnostic Procedure 391
Component Inspection 393
DTC P0448 EVAP CANISTER VENT CONTROL VALVE 395
Component Description 395
CONSULT-II Reference Value in Data Monitor Mode 395
On Board Diagnosis Logic 395
DTC Confirmation Procedure 396
Wiring Diagram 397
Diagnostic Procedure 398
Component Inspection 400
DTC P0451 EVAP CONTROL SYSTEM PRESSURE SENSOR 402
Component Description 402
CONSULT-II Reference Value in Data Monitor Mode 402
On Board Diagnosis Logic 402
DTC Confirmation Procedure 403
Diagnostic Procedure 403
Component Inspection 404
DTC P0452 EVAP CONTROL SYSTEM PRESSURE SENSOR 405
Component Description 405
CONSULT-II Reference Value in Data Monitor Mode 405
On Board Diagnosis Logic 405
DTC Confirmation Procedure 406
Wiring Diagram 407
Diagnostic Procedure 408
Component Inspection 410
DTC P0453 EVAP CONTROL SYSTEM PRESSURE SENSOR 411
Component Description 411
CONSULT-II Reference Value in Data Monitor Mode 411
On Board Diagnosis Logic 411
DTC Confirmation Procedure 412
Wiring Diagram 413
Diagnostic Procedure 414
Component Inspection 418
DTC P0455 EVAP CONTROL SYSTEM 419
On Board Diagnosis Logic 419
DTC Confirmation Procedure 420
Diagnostic Procedure 421
DTC P0456 EVAP CONTROL SYSTEM 427
On Board Diagnosis Logic 427
DTC Confirmation Procedure 428
Overall Function Check 429
Diagnostic Procedure 430
DTC P0460 FUEL LEVEL SENSOR 436
Component Description 436
On Board Diagnosis Logic 436
DTC Confirmation Procedure 436
Diagnostic Procedure 437
Removal and Installation 437
DTC P0461 FUEL LEVEL SENSOR 438
Component Description 438
On Board Diagnosis Logic 438
Overall Function Check 438
Diagnostic Procedure 439
Removal and Installation 439
DTC P0462, P0463 FUEL LEVEL SENSOR CIRCUIT 440

Component Description 440
On Board Diagnosis Logic 440
DTC Confirmation Procedure 440
Diagnostic Procedure 441
Removal and Installation 441
DTC P0500 VSS 442
Description 442
On Board Diagnosis Logic 442
DTC Confirmation Procedure 442
Overall Function Check 442
Diagnostic Procedure 443
DTC P0506 ISC SYSTEM 444
Description 444
On Board Diagnosis Logic 444
DTC Confirmation Procedure 444
Diagnostic Procedure 445
DTC P0507 ISC SYSTEM 446
Description 446
On Board Diagnosis Logic 446
DTC Confirmation Procedure 446
Diagnostic Procedure 447
DTC P0550 PSP SENSOR 448
Component Description 448
CONSULT-II Reference Value in Data Monitor Mode . 448
On Board Diagnosis Logic 448
DTC Confirmation Procedure 448
Wiring Diagram 449
Diagnostic Procedure 450
Component Inspection 452
Removal and Installation 452
DTC P0603 ECM POWER SUPPLY 453
Component Description 453
On Board Diagnosis Logic 453
DTC Confirmation Procedure 453
Wiring Diagram 454
Diagnostic Procedure 455
DTC P0605 ECM 457
Component Description 457
On Board Diagnosis Logic 457
DTC Confirmation Procedure 457
Diagnostic Procedure 458
DTC P0643 SENSOR POWER SUPPLY 460
On Board Diagnosis Logic 460
DTC Confirmation Procedure 460
Wiring Diagram 461
Diagnostic Procedure 463
DTC P0850 PNP SWITCH 465
Component Description 465
CONSULT-II Reference Value in Data Monitor Mode . 465
On Board Diagnosis Logic 465
DTC Confirmation Procedure 465
Overall Function Check 466
Wiring Diagram 467
Diagnostic Procedure 468
DTC P1148, P1168 CLOSED LOOP CONTROL ... 470
On Board Diagnosis Logic 470
DTC P1211 TCS CONTROL UNIT 471
Description 471
On Board Diagnosis Logic 471
DTC Confirmation Procedure 471
Diagnostic Procedure 471
DTC P1212 TCS COMMUNICATION LINE 472
Description 472
On Board Diagnosis Logic 472
DTC Confirmation Procedure 472
Diagnostic Procedure 472
DTC P1217 ENGINE OVER TEMPERATURE 473
Description 473
CONSULT-II Reference Value in Data Monitor Mode . 473
On Board Diagnosis Logic 474
Overall Function Check 474
Wiring Diagram 476
Diagnostic Procedure 478
Main 12 Causes of Overheating 481
Component Inspection 482
DTC P1225 TP SENSOR 483
Component Description 483
On Board Diagnosis Logic 483
DTC Confirmation Procedure 483
Diagnostic Procedure 484
Removal and Installation 484
DTC P1226 TP SENSOR 485
Component Description 485
On Board Diagnosis Logic 485
DTC Confirmation Procedure 485
Diagnostic Procedure 486
Removal and Installation 486
DTC P1564 ICC STEERING SWITCH 487
Component Description 487
CONSULT-II Reference Value in Data Monitor Mode . 487
On Board Diagnosis Logic 487
DTC Confirmation Procedure 488
Wiring Diagram 489
Diagnostic Procedure 490
Component Inspection 493
DTC P1564 ASCD STEERING SWITCH 494
Component Description 494
CONSULT-II Reference Value in Data Monitor Mode . 494
On Board Diagnosis Logic 494
DTC Confirmation Procedure 495
Wiring Diagram 496
Diagnostic Procedure 497
Component Inspection 500
DTC P1568 ICC FUNCTION 501
On Board Diagnosis Logic 501
DTC Confirmation Procedure 501
Diagnostic Procedure 501
DTC P1572 ICC BRAKE SWITCH 502
Component Description 502
CONSULT-II Reference Value in Data Monitor Mode . 502
On Board Diagnosis Logic 502
DTC Confirmation Procedure 503

Wiring Diagram 504
Diagnostic Procedure 505
Component Inspection 509
DTC P1572 ASCD BRAKE SWITCH 511
Component Description 511
CONSULT-II Reference Value in Data Monitor Mode . 511
On Board Diagnosis Logic 511
DTC confirmation Procedure 512
Wiring Diagram 513
Diagnostic Procedure 514
Component Inspection 518
DTC P1574 ICC VEHICLE SPEED SENSOR 519
Component Description 519
On Board Diagnosis Logic 519
DTC Confirmation Procedure 519
Diagnostic Procedure 520
DTC P1574 ASCD VEHICLE SPEED SENSOR 521
Component Description 521
On Board Diagnosis Logic 521
DTC Confirmation Procedure 521
Diagnostic Procedure 522
DTC P1805 BRAKE SWITCH 523
Description 523
CONSULT-II Reference Value in Data Monitor Mode . 523
On Board Diagnosis Logic 523
DTC Confirmation Procedure 523
Wiring Diagram 524
Diagnostic Procedure 525
Component Inspection 527
DTC P2100, P2103 THROTTLE CONTROL MOTOR RELAY 528
Component Description 528
CONSULT-II Reference Value in Data Monitor Mode . 528
On Board Diagnosis Logic 528
DTC Confirmation Procedure 528
Wiring Diagram 530
Diagnostic Procedure 531
DTC P2101 ELECTRIC THROTTLE CONTROL FUNCTION 534
Description 534
On Board Diagnosis Logic 534
DTC Confirmation Procedure 534
Wiring Diagram 535
Diagnostic Procedure 536
Component Inspection 539
Removal and Installation 539
DTC P2118 THROTTLE CONTROL MOTOR 540
Component Description 540
On Board Diagnosis Logic 540
DTC Confirmation Procedure 540
Wiring Diagram 541
Diagnostic Procedure 542
Component Inspection 543
Removal and Installation 544
DTC P2119 ELECTRIC THROTTLE CONTROL ACTUATOR 545
Component Description 545
On Board Diagnosis Logic 545
DTC Confirmation Procedure 545
Diagnostic Procedure 546
DTC P2122, P2123 APP SENSOR 547
Component Description 547
CONSULT-II Reference Value in Data Monitor Mode . 547
On Board Diagnosis Logic 547
DTC Confirmation Procedure 548
Wiring Diagram 549
Diagnostic Procedure 550
Component Inspection 552
Removal and Installation 552
DTC P2127, P2128 APP SENSOR 553
Component Description 553
CONSULT-II Reference Value in Data Monitor Mode . 553
On Board Diagnosis Logic 553
DTC Confirmation Procedure 554
Wiring Diagram 555
Diagnostic Procedure 556
Component Inspection 559
Removal and Installation 559
DTC P2135 TP SENSOR 560
Component Description 560
CONSULT-II Reference Value in Data Monitor Mode . 560
On Board Diagnosis Logic 560
DTC Confirmation Procedure 561
Wiring Diagram 562
Diagnostic Procedure 563
Component Inspection 566
Removal and Installation 566
DTC P2138 APP SENSOR 567
Component Description 567
CONSULT-II Reference Value in Data Monitor Mode . 567
On Board Diagnosis Logic 567
DTC Confirmation Procedure 568
Wiring Diagram 569
Diagnostic Procedure 570
Component Inspection 574
Removal and Installation 574
DTC P2A00, P2A03 A/F SENSOR 1 575
Component Description 575
CONSULT-II Reference Value in Data Monitor Mode . 575
On Board Diagnosis Logic 575
DTC Confirmation Procedure 575
Wiring Diagram 577
Diagnostic Procedure 580
Removal and Installation 585
ASCD BRAKE SWITCH 586
Component Description 586
CONSULT-II Reference Value in Data Monitor Mode . 586
Wiring Diagram 587

Diagnostic Procedure 588
Component Inspection 592
ASCD INDICATOR 593
Component Description 593
CONSULT-II Reference Value in Data Monitor Mode . 593
Wiring Diagram 594
Diagnostic Procedure 595
ELECTRICAL LOAD SIGNAL 596
Description 596
CONSULT-II Reference Value in Data Monitor Mode . 596
Diagnostic Procedure 596
FUEL INJECTOR 598
Component Description 598
CONSULT-II Reference Value in Data Monitor Mode . 598
Wiring Diagram 599
Diagnostic Procedure 600
Component Inspection 603
Removal and Installation 603
FUEL PUMP 604
Description 604
CONSULT-II Reference Value in Data Monitor Mode . 604
Wiring Diagram 605
Diagnostic Procedure 606
Component Inspection 609
Removal and Installation 609
ICC BRAKE SWITCH 610
Component Description 610
CONSULT-II Reference Value in Data Monitor Mode . 610
Wiring Diagram 611
Diagnostic Procedure 612
Component Inspection 617
IGNITION SIGNAL 618
Component Description 618
Wiring Diagram 619
Diagnostic Procedure 624
Component Inspection 628
Removal and Installation 629
REFRIGERANT PRESSURE SENSOR 630
Component Description 630
Wiring Diagram 631
Diagnostic Procedure 632
Removal and Installation 634
MIL AND DATA LINK CONNECTOR 635
Wiring Diagram 635
SERVICE DATA AND SPECIFICATIONS (SDS) ... 637
Fuel Pressure 637
Idle Speed and Ignition Timing 637
Calculated Load Value 637
Mass Air Flow Sensor 637
Intake Air Temperature Sensor 637
Engine Coolant Temperature Sensor 637
A/F Sensor 1 Heater 637
Heated Oxygen sensor 2 Heater 637
Crankshaft Position Sensor (POS) 637
Camshaft Position Sensor (PHASE) 637
Throttle Control Motor 637
Fuel Injector 638
Fuel Pump 638

INDEX FOR DTC

PFP:00024

DTC No. Index

UBS00KYY

NOTE:

- **If DTC U1000 or U1001 is displayed with other DTC, first perform the trouble diagnosis for DTC U1000, U1001. Refer to EC-151, "DTC U1000, U1001 CAN COMMUNICATION LINE" .**
- **If DTC U1010 is displayed with other DTC, first perform the trouble diagnosis for DTC U1010. Refer to EC-154, "DTC U1010 CAN COMMUNICATION" .**

DTC*1		Items (CONSULT-II screen terms)	Reference page
CONSULT-II GST*2	ECM*3		
U1000	1000*4	CAN COMM CIRCUIT	EC-151
U1001	1001*4	CAN COMM CIRCUIT	EC-151
U1010	1010	CONTROL UNIT(CAN)	EC-154
P0000	**0000**	**NO DTC IS DETECTED. FURTHER TESTING MAY BE REQUIRED.**	**—**
P0031	0031	A/F SEN1 HTR (B1)	EC-156
P0032	0032	A/F SEN1 HTR (B1)	EC-156
P0037	0037	HO2S2 HTR (B1)	EC-163
P0038	0038	HO2S2 HTR (B1)	EC-163
P0051	0051	A/F SEN1 HTR (B2)	EC-156
P0052	0052	A/F SEN1 HTR (B2)	EC-156
P0057	0057	HO2S2 HTR (B2)	EC-163
P0058	0058	HO2S2 HTR (B2)	EC-163
P0101	0101	MAF SEN/CIRCUIT	EC-171
P0102	0102	MAF SEN/CIRCUIT	EC-180
P0103	0103	MAF SEN/CIRCUIT	EC-180
P0112	0112	IAT SEN/CIRCUIT	EC-188
P0113	0113	IAT SEN/CIRCUIT	EC-188
P0117	0117	ECT SEN/CIRC	EC-192
P0118	0118	ECT SEN/CIRC	EC-192
P0122	0122	TP SEN 2/CIRC	EC-198
P0123	0123	TP SEN 2/CIRC	EC-198
P0125	0125	ECT SENSOR	EC-205
P0127	0127	IAT SENSOR	EC-208
P0128	0128	THERMSTAT FNCTN	EC-211
P0130	0130	A/F SENSOR1 (B1)	EC-213
P0131	0131	A/F SEN1 (B1)	EC-223
P0132	0132	A/F SENSOR1 (B1)	EC-232
P0133	0133	A/F SENSOR1 (B1)	EC-241
P0137	0137	HO2S2 (B2)	EC-253
P0138	0138	HO2S2 (B1)	EC-264
P0139	0139	HO2S2 (B1)	EC-277
P0150	0150	A/F SENSOR1 (B2)	EC-213
P0151	0151	A/F SENSOR1 (B2)	EC-223
P0152	0152	A/F SENSOR1 (B2)	EC-232

DTC*1		Items (CONSULT-II screen terms)	Reference page
CONSULT-II GST*2	ECM*3		
P0153	0153	A/F SENSOR1 (B2)	EC-241
P0157	0157	HO2S2 (B2)	EC-253
P0158	0158	HO2S2 (B2)	EC-264
P0159	0159	HO2S2 (B2)	EC-277
P0171	0171	FUEL SYS-LEAN-B1	EC-288
P0172	0172	FUEL SYS-RICH-B1	EC-299
P0174	0174	FUEL SYS-LEAN-B2	EC-288
P0175	0175	FUEL SYS-RICH-B2	EC-299
P0181	0181	FTT SENSOR	EC-309
P0182	0182	FTT SEN/CIRCUIT	EC-315
P0183	0183	FTT SEN/CIRCUIT	EC-315
P0222	0222	TP SEN 1/CIRC	EC-320
P0223	0223	TP SEN 1/CIRC	EC-320
P0300	0300	MULTI CYL MISFIRE	EC-327
P0301	0301	CYL 1 MISFIRE	EC-327
P0302	0302	CYL 2 MISFIRE	EC-327
P0303	0303	CYL 3 MISFIRE	EC-327
P0304	0304	CYL 4 MISFIRE	EC-327
P0305	0305	CYL 5 MISFIRE	EC-327
P0306	0306	CYL 6 MISFIRE	EC-327
P0307	0307	CYL 7 MISFIRE	EC-327
P0308	0308	CYL 8 MISFIRE	EC-327
P0327	0327	KNOCK SEN/CIRC-B1	EC-335
P0328	0328	KNOCK SEN/CIRC-B1	EC-335
P0332	0332	KNOCK SEN/CIRC-B2	EC-335
P0333	0333	KNOCK SEN/CIRC-B2	EC-335
P0335	0335	CKP SEN/CIRCUIT	EC-340
P0340	0340	CMP SEN/CIRC-B1	EC-347
P0420	0420	TW CATALYST SYS-B1	EC-354
P0430	0430	TW CATALYST SYS-B2	EC-354
P0441	0441	EVAP PURG FLOW/MON	EC-360
P0442	0442	EVAP SMALL LEAK	EC-365
P0443	0443	PURG VOLUME CONT/V	EC-373
P0444	0444	PURG VOLUME CONT/V	EC-381
P0445	0445	PURG VOLUME CONT/V	EC-381
P0447	0447	VENT CONTROL VALVE	EC-388
P0448	0448	VENT CONTROL VALVE	EC-395
P0451	0451	EVAP SYS PRES SEN	EC-402
P0452	0452	EVAP SYS PRES SEN	EC-405
P0453	0453	EVAP SYS PRES SEN	EC-411
P0455	0455	EVAP GROSS LEAK	EC-419
P0456	0456	EVAP VERY SML LEAK	EC-427

DTC*1		Items (CONSULT-II screen terms)	Reference page
CONSULT-II GST*2	ECM*3		
P0460	0460	FUEL LEV SEN SLOSH	EC-436
P0461	0461	FUEL LEVEL SENSOR	EC-438
P0462	0462	FUEL LEVL SEN/CIRC	EC-440
P0463	0463	FUEL LEVL SEN/CIRC	EC-440
P0500	0500	VEH SPEED SEN/CIRC*5	EC-442
P0506	0506	ISC SYSTEM	EC-444
P0507	0507	ISC SYSTEM	EC-446
P0550	0550	PW ST P SEN/CIRC	EC-448
P0603	0603	ECM BACK UP/CIRCUIT	EC-453
P0605	0605	ECM	EC-457
P0643	0643	SENSOR POWER/CIRC	EC-460
P0700	0700	TCM	AT-104
P0705	0705	PNP SW/CIRC	AT-105
P0710	0710	ATF TEMP SEN/CIRC	AT-127
P0717	0717	TURBINE REV S/CIRC	AT-109
P0720	0720	VEH SPD SEN/CIR AT*5	AT-111
P0740	0740	TCC SOLENOID/CIRC	AT-118
P0744	0744	A/T TCC S/V FNCTN	AT-120
P0745	0745	L/PRESS SOL/CIRC	AT-122
P0850	0850	P-N POS SW/CIRCUIT	EC-465
P1148	1148	CLOSED LOOP-B1	EC-470
P1168	1168	CLOSED LOOP-B2	EC-470
P1211	1211	TCS C/U FUNCTN	EC-471
P1212	1212	TCS/CIRC	EC-472
P1217	1217	ENG OVER TEMP	EC-473
P1225	1225	CTP LEARNING	EC-483
P1226	1226	CTP LEARNING	EC-485
P1564	1564	ASCD SW	EC-487 (Models with ICC) EC-494 (Models with ASCD)
P1568	1568	ACC COMMAND VALUE*7	EC-501
P1572	1572	ASCD BRAKE SW	EC-502 (Models with ICC) EC-511 (Models with ASCD)
P1574	1574	ASCD VHL SPD SEN*6	EC-519 (Models with ICC) EC-521 (Models with ASCD)
P1610 - P1615	1610 - 1615	NATS MALFUNCTION	BL-137
P1730	1730	A/T INTERLOCK	AT-134
P1752	1752	I/C SOLENOID/CIRC	AT-139
P1754	1754	I/C SOLENOID FNCTN	AT-141
P1757	1757	FR/B SOLENOID/CIRC	AT-143
P1759	1759	FR/B SOLENOID FNCT	AT-145
P1762	1762	D/C SOLENOID/CIRC	AT-147
P1764	1764	D/C SOLENOID FNCTN	AT-149
P1767	1767	HLR/C SOL/CIRC	AT-151

INDEX FOR DTC

DTC*1		Items (CONSULT-II screen terms)	Reference page
CONSULT-II GST*2	ECM*3		
P1769	1769	HLR/C SOL FNCTN	AT-153
P1772	1772	LC/B SOLENOID/CIRC	AT-155
P1774	1774	LC/B SOLENOID FNCT	AT-157
P1805	1805	BRAKE SW/CIRCUIT	EC-523
P2100	2100	ETC MOT PWR	EC-528
P2101	2101	ETC FUNCTION/CIRC	EC-534
P2103	2103	ETC MOT PWR	EC-528
P2118	2118	ETC MOT	EC-540
P2119	2119	ETC ACTR	EC-545
P2122	2122	APP SEN 1/CIRC	EC-547
P2123	2123	APP SEN 1/CIRC	EC-547
P2127	2127	APP SEN 2/CIRC	EC-553
P2128	2128	APP SEN 2/CIRC	EC-553
P2135	2135	TP SENSOR	EC-560
P2138	2138	APP SENSOR	EC-567
P2A00	2A00	A/F SENSOR1 (B1)	EC-575
P2A03	2A03	A/F SENSOR1 (B2)	EC-575

*1: 1st trip DTC No. is the same as DTC No.
*2: This number is prescribed by SAE J2012.
*3: In Diagnostic Test Mode II (Self-diagnostic results), this number is controlled by NISSAN.
*4: The troubleshooting for this DTC needs CONSULT-II.
*5: When the fail-safe operations for both self-diagnoses occur, the MIL illuminates.
*6: 2WD models
*7: Models with ICC

Alphabetical Index

UBS00KYZ

NOTE:

- **If DTC U1000 or U1001 is displayed with other DTC, first perform the trouble diagnosis for DTC U1000, U1001. Refer to EC-151, "DTC U1000, U1001 CAN COMMUNICATION LINE" .**
- **If DTC U1010 is displayed with other DTC, first perform the trouble diagnosis for DTC U1010. Refer to EC-154, "DTC U1010 CAN COMMUNICATION" .**

Items (CONSULT-II screen terms)	DTC*1		Reference page
	CONSULT-II GST*2	ECM*3	
A/F SENSOR1 (B1)	P0130	0130	EC-213
A/F SENSOR1 (B1)	P0131	0131	EC-223
A/F SENSOR1 (B1)	P0132	0132	EC-232
A/F SENSOR1 (B1)	P0133	0133	EC-241
A/F SENSOR1 (B1)	P2A00	2A00	EC-575
A/F SENSOR1 (B2)	P0150	0150	EC-213
A/F SENSOR1 (B2)	P0151	0151	EC-223
A/F SENSOR1 (B2)	P0152	0152	EC-232
A/F SENSOR1 (B2)	P0153	0153	EC-241
A/F SENSOR1 (B2)	P2A03	2A03	EC-575
A/F SEN1 HTR (B1)	P0031	0031	EC-156
A/F SEN1 HTR (B1)	P0032	0032	EC-156
A/F SEN1 HTR (B2)	P0051	0051	EC-156
A/F SEN1 HTR (B2)	P0052	0052	EC-156
A/T INTERLOCK	P1730	1730	AT-134
A/T TCC S/V FNCTN	P0744	0744	AT-120
ACC COMMAND VALUE*7	P1568	1568	EC-501
APP SEN 1/CIRC	P2122	2122	EC-547
APP SEN 1/CIRC	P2123	2123	EC-547
APP SEN 2/CIRC	P2127	2127	EC-553
APP SEN 2/CIRC	P2128	2128	EC-553
APP SENSOR	P2138	2138	EC-567
ASCD BRAKE SW	P1572	1572	EC-502 (Models with ICC) EC-511 (Models with ASCD)
ASCD SW	P1564	1564	EC-487 (Models with ICC) EC-494 (Models with ASCD)
ASCD VHL SPD SEN*6	P1574	1574	EC-519 (Models with ICC) EC-521 (Models with ASCD)
ATF TEMP SEN/CIRC	P0710	0710	AT-127
BRAKE SW/CIRCUIT	P1805	1805	EC-523
CAN COMM CIRCUIT	U1000	1000*4	EC-151
CAN COMM CIRCUIT	U1001	1001*4	EC-151
CKP SEN/CIRCUIT	P0335	0335	EC-340
CLOSED LOOP-B1	P1148	1148	EC-470
CLOSED LOOP-B2	P1168	1168	EC-470
CMP SEN/CIRC-B1	P0340	0340	EC-347
CONTROL UNIT(CAN)	U1010	1010	EC-154

Items (CONSULT-II screen terms)	DTC*1		Reference page
	CONSULT-II GST*2	ECM*3	
CTP LEARNING	P1225	1225	EC-483
CTP LEARNING	P1226	1226	EC-485
CYL 1 MISFIRE	P0301	0301	EC-327
CYL 2 MISFIRE	P0302	0302	EC-327
CYL 3 MISFIRE	P0303	0303	EC-327
CYL 4 MISFIRE	P0304	0304	EC-327
CYL 5 MISFIRE	P0305	0305	EC-327
CYL 6 MISFIRE	P0306	0306	EC-327
CYL 7 MISFIRE	P0307	0307	EC-327
CYL 8 MISFIRE	P0308	0308	EC-327
D/C SOLENOID/CIRC	P1762	1762	AT-147
D/C SOLENOID FNCTN	P1764	1764	AT-149
ECM	P0605	0605	EC-457
ECM BACK UP/CIRCUIT	P0603	0603	EC-453
ECT SEN/CIRC	P0117	0117	EC-192
ECT SEN/CIRC	P0118	0118	EC-192
ECT SENSOR	P0125	0125	EC-205
ENG OVER TEMP	P1217	1217	EC-473
ETC ACTR	P2119	2119	EC-545
ETC FUNCTION/CIRC	P2101	2101	EC-534
ETC MOT	P2118	2118	EC-540
ETC MOT PWR	P2103	2103	EC-528
ETC MOT PWR	P2100	2100	EC-528
EVAP GROSS LEAK	P0455	0455	EC-419
EVAP PURG FLOW/MON	P0441	0441	EC-360
EVAP SMALL LEAK	P0442	0442	EC-365
EVAP SYS PRES SEN	P0451	0451	EC-402
EVAP SYS PRES SEN	P0452	0452	EC-405
EVAP SYS PRES SEN	P0453	0453	EC-411
EVAP VERY SML LEAK	P0456	0456	EC-427
FR/B SOLENOID/CIRC	P1757	1757	AT-143
FR/B SOLENOID FNCT	P1759	1759	AT-145
FTT SEN/CIRCUIT	P0182	0182	EC-315
FTT SEN/CIRCUIT	P0183	0183	EC-315
FTT SENSOR	P0181	0181	EC-309
FUEL LEV SEN SLOSH	P0460	0460	EC-436
FUEL LEVEL SENSOR	P0461	0461	EC-438
FUEL LEVL SEN/CIRC	P0462	0462	EC-440
FUEL LEVL SEN/CIRC	P0463	0463	EC-440
FUEL SYS-LEAN-B1	P0171	0171	EC-288
FUEL SYS-LEAN-B2	P0174	0174	EC-288
FUEL SYS-RICH-B1	P0172	0172	EC-299

Items (CONSULT-II screen terms)	DTC*1		Reference page
	CONSULT-II GST*2	ECM*3	
FUEL SYS-RICH-B2	P0175	0175	EC-299
HLR/C SOL/CIRC	P1767	1767	AT-151
HLR/C SOL FNCTN	P1769	1769	AT-153
HO2S2 (B1)	P0137	0137	EC-253
HO2S2 (B1)	P0138	0138	EC-264
HO2S2 (B1)	P0139	0139	EC-277
HO2S2 (B2)	P0157	0157	EC-253
HO2S2 (B2)	P0158	0158	EC-264
HO2S2 (B2)	P0159	0159	EC-277
HO2S2 HTR (B1)	P0037	0037	EC-163
HO2S2 HTR (B1)	P0038	0038	EC-163
HO2S2 HTR (B2)	P0057	0057	EC-163
HO2S2 HTR (B2)	P0058	0058	EC-163
I/C SOLENOID/CIRC	P1752	1752	AT-139
I/C SOLENOID FNCTN	P1754	1754	AT-141
IAT SEN/CIRCUIT	P0112	0112	EC-188
IAT SEN/CIRCUIT	P0113	0113	EC-188
IAT SENSOR	P0127	0127	EC-208
ISC SYSTEM	P0506	0506	EC-444
ISC SYSTEM	P0507	0507	EC-446
KNOCK SEN/CIRC-B1	P0327	0327	EC-335
KNOCK SEN/CIRC-B1	P0328	0328	EC-335
KNOCK SEN/CIRC-B2	P0332	0332	EC-335
KNOCK SEN/CIRC-B2	P0333	0333	EC-335
L/PRESS SOL/CIRC	P0745	0745	AT-122
LC/B SOLENOID/CIRC	P1772	1772	AT-155
LC/B SOLENOID FNCT	P1774	1774	AT-157
MAF SEN/CIRCUIT	P0101	0101	EC-171
MAF SEN/CIRCUIT	P0102	0102	EC-180
MAF SEN/CIRCUIT	P0103	0103	EC-180
MULTI CYL MISFIRE	P0300	0300	EC-327
NATS MALFUNCTION	P1610 - P1615	1610 - 1615	BL-137
NO DTC IS DETECTED. FURTHER TESTING MAY BE REQUIRED.	**P0000**	**0000**	**—**
P-N POS SW/CIRCUIT	P0850	0850	EC-465
PNP SW/CIRC	P0705	0705	AT-105
PURG VOLUME CONT/V	P0443	0443	EC-373
PURG VOLUME CONT/V	P0444	0444	EC-381
PURG VOLUME CONT/V	P0445	0445	EC-381
PW ST P SEN/CIRC	P0550	0550	EC-448
SENSOR POWER/CIRC	P0643	0643	EC-460
TCC SOLENOID/CIRC	P0740	0740	AT-118

INDEX FOR DTC

Items (CONSULT-II screen terms)	DTC*1		Reference page
	CONSULT-II GST*2	ECM*3	
TCM	P0700	0700	AT-104
TCS C/U FUNCTN	P1211	1211	EC-471
TCS/CIRC	P1212	1212	EC-472
THERMSTAT FNCTN	P0128	0128	EC-211
TP SEN 1/CIRC	P0222	0222	EC-320
TP SEN 1/CIRC	P0223	0223	EC-320
TP SEN 2/CIRC	P0122	0122	EC-198
TP SEN 2/CIRC	P0123	0123	EC-198
TP SENSOR	P2135	2135	EC-560
TURBINE REV S/CIRC	P0717	0717	AT-109
TW CATALYST SYS-B1	P0420	0420	EC-354
TW CATALYST SYS-B2	P0430	0430	EC-354
VEH SPD SEN/CIR AT*5	P0720	0720	AT-111
VEH SPEED SEN/CIRC*5	P0500	0500	EC-442
VENT CONTROL VALVE	P0447	0447	EC-388
VENT CONTROL VALVE	P0448	0448	EC-395

*1: 1st trip DTC No. is the same as DTC No.
*2: This number is prescribed by SAE J2012.
*3: In Diagnostic Test Mode II (Self-diagnostic results), this number is controlled by NISSAN.
*4: The troubleshooting for this DTC needs CONSULT-II.
*5: When the fail-safe operations for both self-diagnoses occur, the MIL illuminates.
*6: 2WD models
*7: Models with ICC

PRECAUTIONS

PFP:00001

Precautions for Supplemental Restraint System (SRS) “AIR BAG” and “SEAT BELT PRE-TENSIONER”

UBS00KZ0

The Supplemental Restraint System such as “AIR BAG” and “SEAT BELT PRE-TENSIONER”, used along with a front seat belt, helps to reduce the risk or severity of injury to the driver and front passenger for certain types of collision. This system includes seat belt switch inputs and dual stage front air bag modules. The SRS system uses the seat belt switches to determine the front air bag deployment, and may only deploy one front air bag, depending on the severity of a collision and whether the front occupants are belted or unbelted.
Information necessary to service the system safely is included in the SRS and SB section of this Service Manual.

WARNING:

- **To avoid rendering the SRS inoperative, which could increase the risk of personal injury or death in the event of a collision which would result in air bag inflation, all maintenance must be performed by an authorized NISSAN/INFINITI dealer.**
- **Improper maintenance, including incorrect removal and installation of the SRS, can lead to personal injury caused by unintentional activation of the system. For removal of Spiral Cable and Air Bag Module, see the SRS section.**
- **Do not use electrical test equipment on any circuit related to the SRS unless instructed to in this Service Manual. SRS wiring harnesses can be identified by yellow and/or orange harnesses or harness connectors.**

On Board Diagnostic (OBD) System of Engine and A/T

UBS00KZ1

The ECM has an on board diagnostic system. It will light up the malfunction indicator lamp (MIL) to warn the driver of a malfunction causing emission deterioration.

CAUTION:

- **Be sure to turn the ignition switch OFF and disconnect the negative battery cable before any repair or inspection work. The open/short circuit of related switches, sensors, solenoid valves, etc. will cause the MIL to light up.**
- **Be sure to connect and lock the connectors securely after work. A loose (unlocked) connector will cause the MIL to light up due to the open circuit. (Be sure the connector is free from water, grease, dirt, bent terminals, etc.)**
- **Certain systems and components, especially those related to OBD, may use a new style slide-locking type harness connector. For description and how to disconnect, refer to PG-68, "HARNESS CONNECTOR" .**
- **Be sure to route and secure the harnesses properly after work. The interference of the harness with a bracket, etc. may cause the MIL to light up due to the short circuit.**
- **Be sure to connect rubber tubes properly after work. A misconnected or disconnected rubber tube may cause the MIL to light up due to the malfunction of the EVAP system or fuel injection system, etc.**
- **Be sure to erase the unnecessary malfunction information (repairs completed) from the ECM and TCM (Transmission control module) before returning the vehicle to the customer.**

Precaution

UBS00KZ2

- **Always use a 12 volt battery as power source.**
- **Do not attempt to disconnect battery cables while engine is running.**
- **Before connecting or disconnecting the ECM harness connector, turn ignition switch OFF and disconnect negative battery cable. Failure to do so may damage the ECM because battery voltage is applied to ECM even if ignition switch is turned OFF.**
- **Before removing parts, turn ignition switch OFF and then disconnect negative battery cable.**

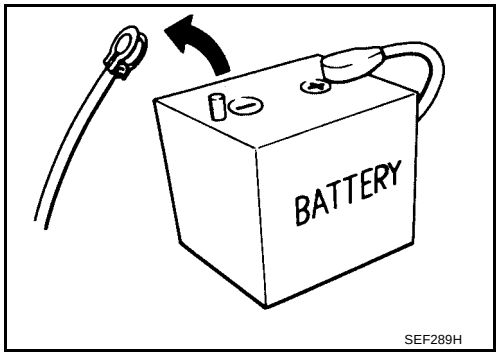

- **Do not disassemble ECM.**
- **If a battery cable is disconnected, the memory will return to the ECM value.**
  The ECM will now start to self-control at its initial value. Engine operation can vary slightly when the terminal is disconnected. However, this is not an indication of a malfunction. Do not replace parts because of a slight variation.
- **If the battery is disconnected, the following emission-related diagnostic information will be lost within 24 hours.**
  - **Diagnostic trouble codes**
  - **1st trip diagnostic trouble codes**
  - **Freeze frame data**
  - **1st trip freeze frame data**
  - **System readiness test (SRT) codes**
  - **Test values**

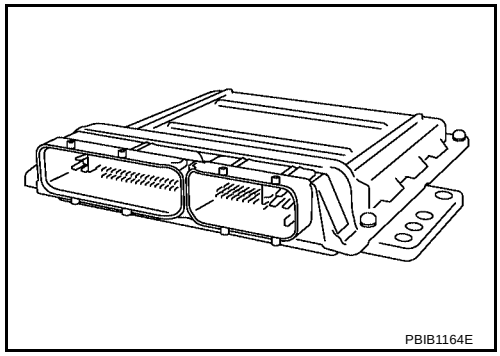
PBIB1164E

- **When connecting ECM harness connector, fasten it securely with a lever as far as it will go as shown in the figure.**

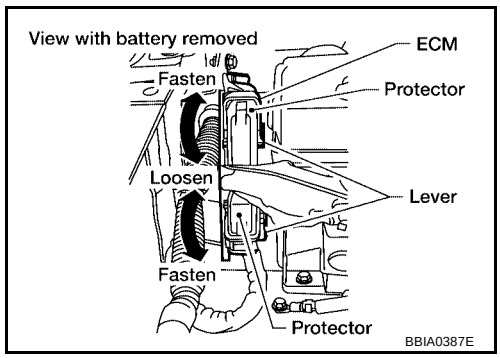

BBIA0387E

- **When connecting or disconnecting pin connectors into or from ECM, take care not to damage pin terminals (bend or break).**
  Make sure that there are not any bends or breaks on ECM pin terminal, when connecting pin connectors.
- **Securely connect ECM harness connectors.**
  A poor connection can cause an extremely high (surge) voltage to develop in coil and condenser, thus resulting in damage to ICs.
- **Keep engine control system harness at least 10 cm (4 in) away from adjacent harness, to prevent engine control system malfunctions due to receiving external noise, degraded operation of ICs, etc.**

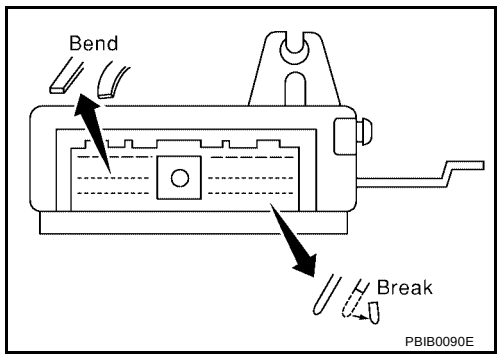

PBIB0090E

- **Keep engine control system parts and harness dry.**
- **Before replacing ECM, perform ECM Terminals and Reference Value inspection and make sure ECM functions properly. Refer to** **EC-105, "ECM Terminals and Reference Value"**
  .
- **Handle mass air flow sensor carefully to avoid damage.**
- **Do not disassemble mass air flow sensor.**
- **Do not clean mass air flow sensor with any type of detergent.**
- **Do not disassemble electric throttle control actuator.**
- **Even a slight leak in the air intake system can cause serious incidents.**

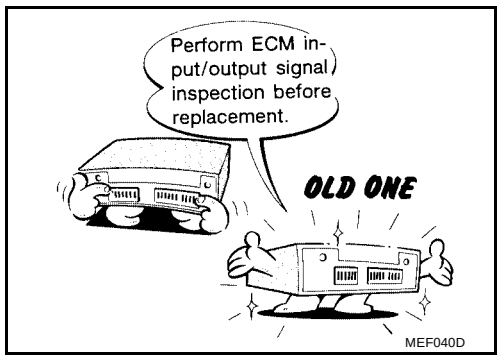

MEF040D

- **Do not shock or jar the camshaft position sensor (PHASE), crankshaft position sensor (POS).**

- **After performing each TROUBLE DIAGNOSIS, perform DTC Confirmation Procedure or Overall Function Check.**
  The DTC should not be displayed in the DTC Confirmation Procedure if the repair is completed. The Overall Function Check should be a good result if the repair is completed.

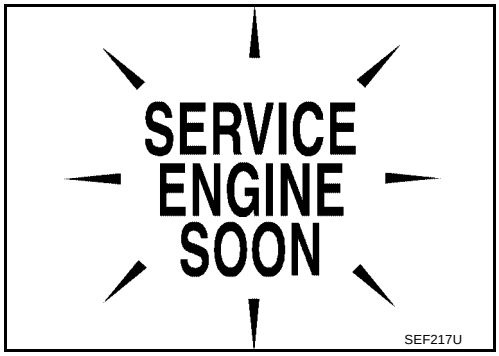

- **When measuring ECM signals with a circuit tester, never allow the two tester probes to contact.**
  Accidental contact of probes will cause a short circuit and damage the ECM power transistor.
- **Do not use ECM ground terminals when measuring input/output voltage. Doing so may result in damage to the ECM's transistor. Use a ground other than ECM terminals, such as the ground.**

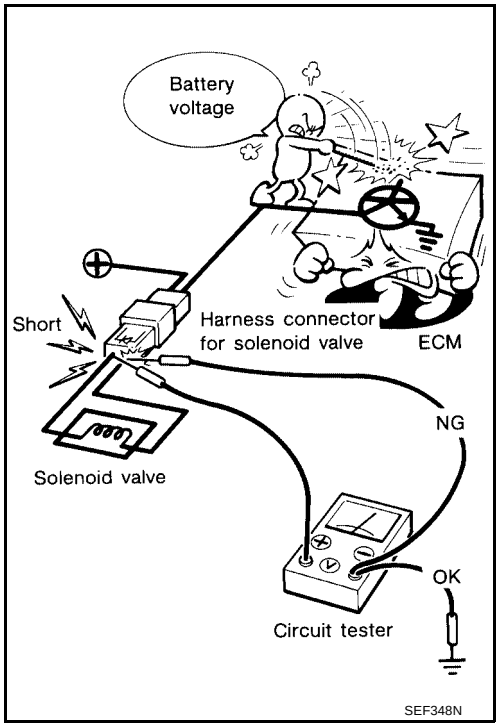

- **B1 indicates the bank 1, B2 indicates the bank 2 as shown in the figure.**

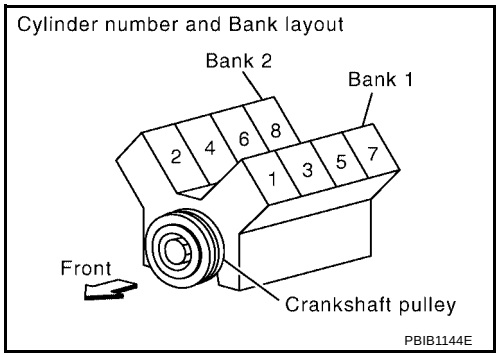

- **Do not operate fuel pump when there is no fuel in lines.**
- **Tighten fuel hose clamps to the specified torque.**

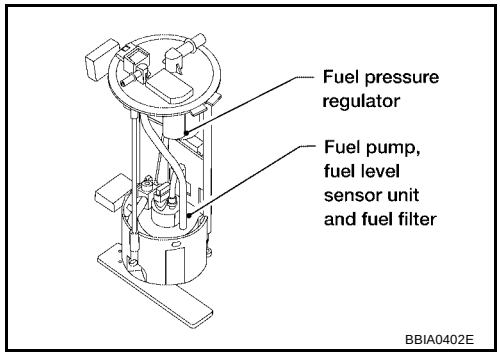

- **Do not depress accelerator pedal when starting.**
- **Immediately after starting, do not rev up engine unnecessarily.**
- **Do not rev up engine just prior to shutdown.**

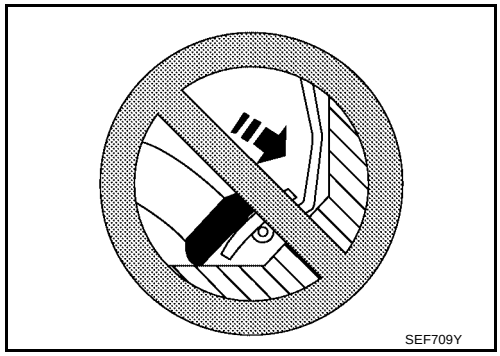

- **When installing C.B. ham radio or a mobile phone, be sure to observe the following as it may adversely affect electronic control systems depending on installation location.**
  - **Keep the antenna as far as possible from the electronic control units.**
  - **Keep the antenna feeder line more than 20 cm (8 in) away from the harness of electronic controls.**
    Do not let them run parallel for a long distance.
  - **Adjust the antenna and feeder line so that the standing-wave radio can be kept smaller.**
  - **Be sure to ground the radio to vehicle body.**

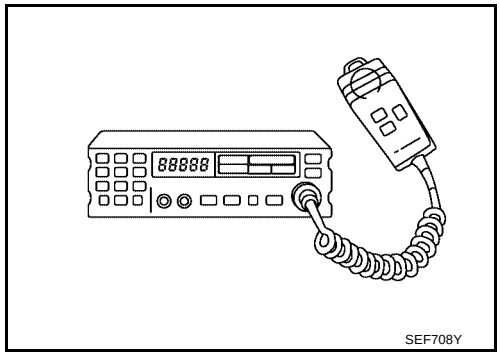

PREPARATION

PFP:00002

Special Service Tools

UBS00KZ4

The actual shapes of Kent-Moore tools may differ from those of special service tools illustrated here.

Tool number (Kent-Moore No.) Tool name	Description	
EG17650301 (J-33984-A) Radiator cap tester adapter	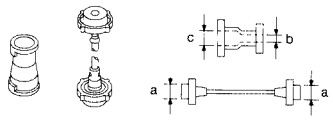 S-NT564	Adapting radiator cap tester to radiator cap and radiator filler neck **a: 28 (1.10) dia.** **b: 31.4 (1.236) dia.** **c: 41.3 (1.626) dia.** Unit: mm (in)
KV10117100 (J-36471-A) Heated oxygen sensor wrench	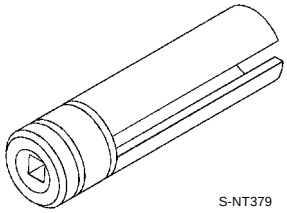 S-NT379	Loosening or tightening heated oxygen sensors with 22 mm (0.87 in) hexagon nut
KV10114400 (J-38365) Heated oxygen sensor wrench	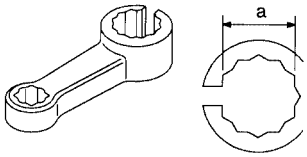 S-NT636	Loosening or tightening heated oxygen sensors **a: 22 mm (0.87 in)**
(J-44626) Air fuel ratio (A/F) sensor wrench	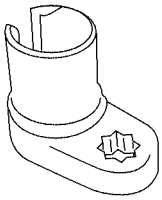 LEM054	Loosening or tightening air fuel ratio (A/F) sensor 1
(J-44321) Fuel pressure gauge kit	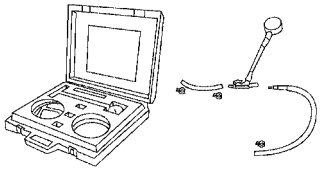 LEC642	Checking fuel pressure
(J-44321-6) Fuel pressure adapter	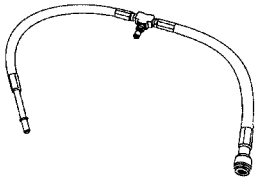 LBIA0376E	Connecting fuel pressure gauge to quick connector type fuel lines.
(J-45488) Quick connector release	 PBIC0198E	Remove fuel tube quick connectors in engine room.

Tool number (Kent-Moore No.) Tool name	Description	
KV109E0010 (J-46209) Break-out box	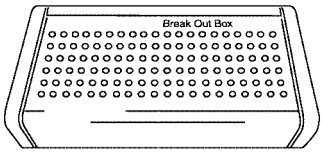 S-NT825	Measuring the ECM signals with a circuit tester
KV109E0080 (J-45819) Y-cable adapter	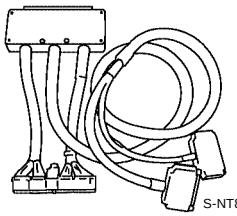 S-NT826	Measuring the ECM signals with a circuit tester
(J-23688) Engine coolant refrac-tometer	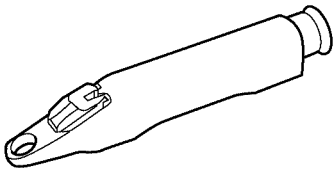 WBIA0539E	Checking concentration of ethylene glycol in en-gine coolant

Commercial Service Tools

UBS00KZ5

Tool name (Kent-Moore No.)	Description	
Leak detector i.e.: (J-41416)	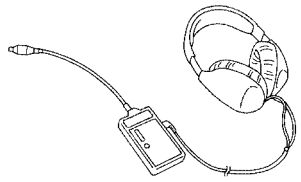 S-NT703	Locating the EVAP leak
EVAP service port adapter i.e.: (J-41413-OBD)	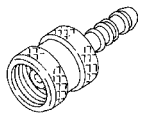 S-NT704	Applying positive pressure through EVAP service port
Fuel filler cap adapter i.e.: (MLR-8382)	S-NT815	Checking fuel tank vacuum relief valve opening pressure
Socket wrench	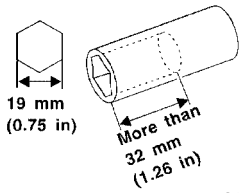 S-NT705	Removing and installing engine coolant temperature sensor
Oxygen sensor thread cleaner i.e.: (J-43897-18) (J-43897-12)	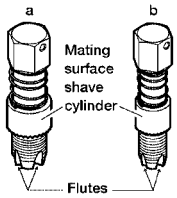 AEM488	Reconditioning the exhaust system threads before installing a new oxygen sensor. Use with anti-seize lubricant shown below. **a: 18 mm diameter with pitch 1.5 mm for Zirconia Oxygen Sensor** **b: 12 mm diameter with pitch 1.25 mm for Titania Oxygen Sensor**
Anti-seize lubricant i.e.: (Permatex™ 133AR or equivalent meeting MIL specification MIL-A-907)	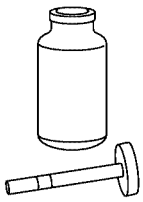 S-NT779	Lubricating oxygen sensor thread cleaning tool when reconditioning exhaust system threads.

ENGINE CONTROL SYSTEM

PFP:23710

System Diagram

UBS00KZ6

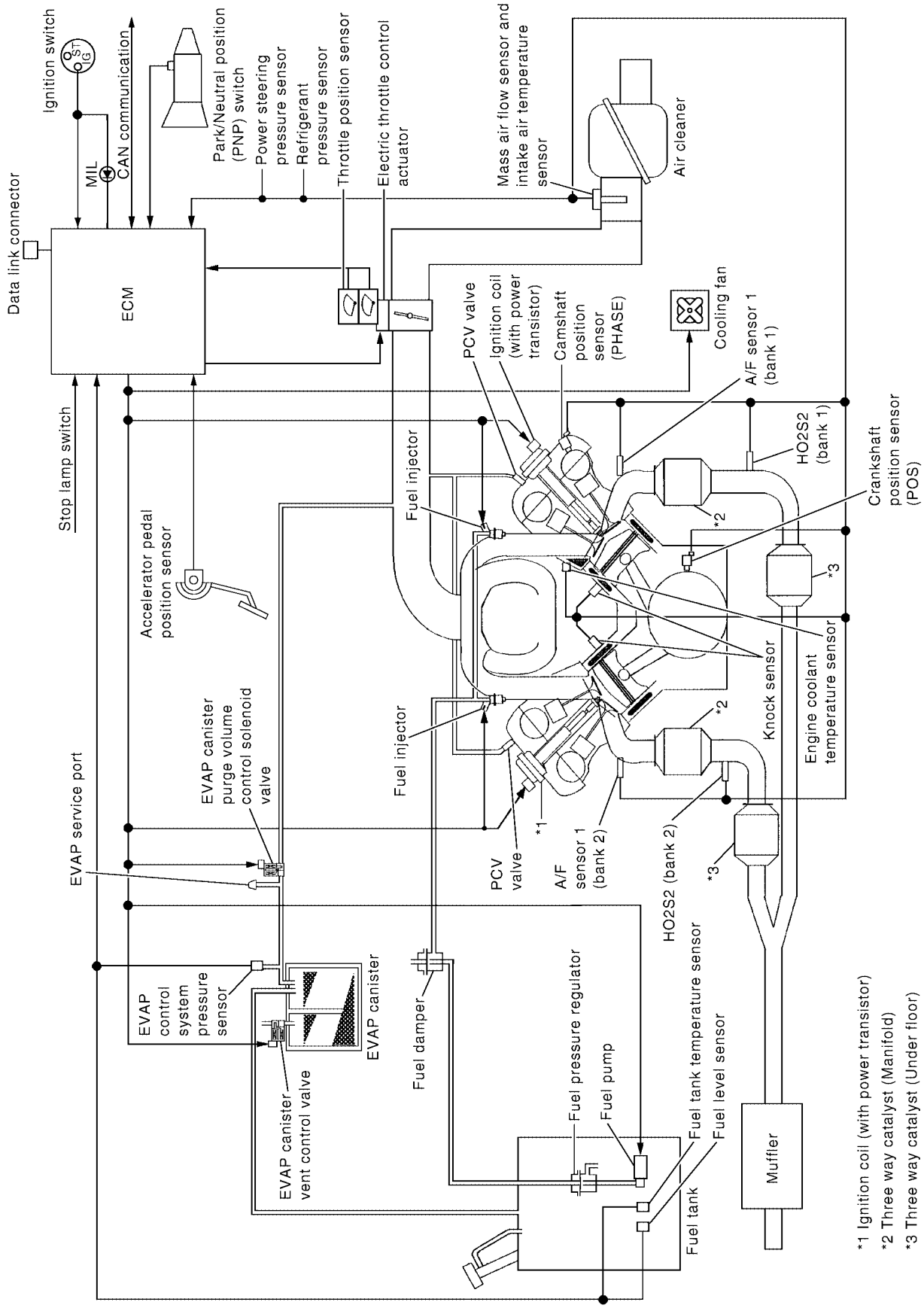

PBIB2051E

Multiport Fuel Injection (MFI) System

UBS00KZ7

INPUT/OUTPUT SIGNAL CHART

Sensor	Input signal to ECM	ECM function	Actuator
Crankshaft position sensor (POS)	Engine speed*3 Piston position	Fuel injection & mixture ratio control	Fuel injector
Camshaft position sensor (PHASE)			
Mass air flow sensor	Amount of intake air		
Engine coolant temperature sensor	Engine coolant temperature		
Air fuel ratio (A/F) sensor 1	Density of oxygen in exhaust gas		
Throttle position sensor	Throttle position		
Accelerator pedal position sensor	Accelerator pedal position		
Park/neutral position (PNP) switch	Gear position		
Knock sensor	Engine knocking condition		
Battery	Battery voltage*3		
Power steering pressure sensor	Power steering operation		
Heated oxygen sensor 2	Density of oxygen in exhaust gas*1		
ABS actuator and electric unit (control unit)	VDC/TCS operation command*2		
Air conditioner switch	Air conditioner operation*2		
Wheel sensor	Vehicle speed*2		

*1: This sensor is not used to control the engine system. This is used only for the on board diagnosis.
*2: This signal is sent to the ECM through CAN communication line.
*3: ECM determines the start signal status by the signals of engine speed and battery voltage.

SYSTEM DESCRIPTION

The amount of fuel injected from the fuel injector is determined by the ECM. The ECM controls the length of time the valve remains open (injection pulse duration). The amount of fuel injected is a program value in the ECM memory. The program value is preset by engine operating conditions. These conditions are determined by input signals (for engine speed and intake air) from both the crankshaft position sensor and the mass air flow sensor.

VARIOUS FUEL INJECTION INCREASE/DECREASE COMPENSATION

In addition, the amount of fuel injected is compensated to improve engine performance under various operating conditions as listed below.

<Fuel increase>

- During warm-up
- When starting the engine
- During acceleration
- Hot-engine operation
- When selector lever is changed from N to D
- High-load, high-speed operation

<Fuel decrease>

- During deceleration
- During high engine speed operation

MIXTURE RATIO FEEDBACK CONTROL (CLOSED LOOP CONTROL)

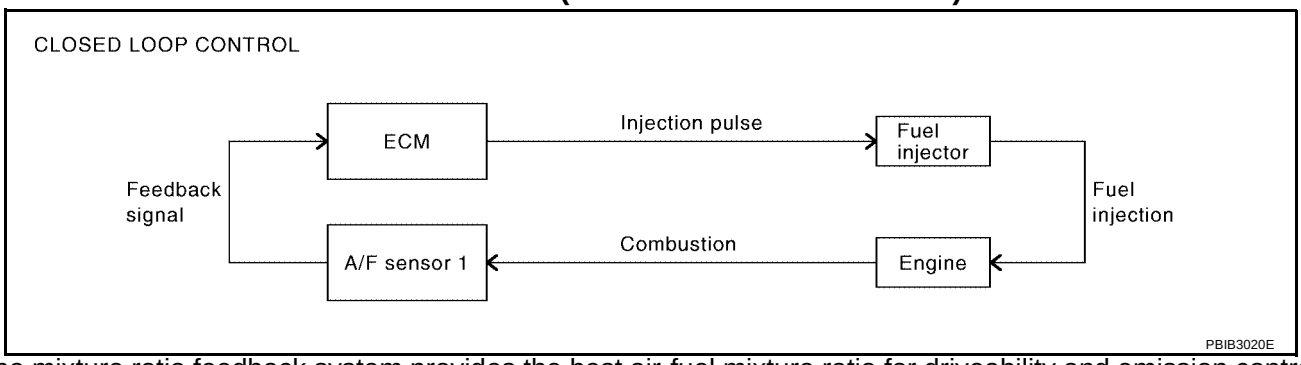

The mixture ratio feedback system provides the best air-fuel mixture ratio for driveability and emission control. The three way catalyst (manifold) can then better reduce CO, HC and NOx emissions. This system uses air fuel ratio (A/F) sensor 1 in the exhaust manifold to monitor whether the engine operation is rich or lean. The ECM adjusts the injection pulse width according to the sensor voltage signal. For more information about air fuel ratio (A/F) sensor 1, refer to EC-213, "DTC P0130, P0150 A/F SENSOR 1" . This maintains the mixture ratio within the range of stoichiometric (ideal air-fuel mixture).
This stage is referred to as the closed loop control condition.
Heated oxygen sensor 2 is located downstream of the three way catalyst (manifold). Even if the switching characteristics of air fuel ratio (A/F) sensor 1 shift, the air-fuel ratio is controlled to stoichiometric by the signal from heated oxygen sensor 2.

Open Loop Control

The open loop system condition refers to when the ECM detects any of the following conditions. Feedback control stops in order to maintain stabilized fuel combustion.

- Deceleration and acceleration
- High-load, high-speed operation
- Malfunction of A/F sensor 1 or its circuit
- Insufficient activation of A/F sensor 1 at low engine coolant temperature
- High engine coolant temperature
- During warm-up
- After shifting from N to D
- When starting the engine

MIXTURE RATIO SELF-LEARNING CONTROL

The mixture ratio feedback control system monitors the mixture ratio signal transmitted from A/F sensor 1. This feedback signal is then sent to the ECM. The ECM controls the basic mixture ratio as close to the theoretical mixture ratio as possible. However, the basic mixture ratio is not necessarily controlled as originally designed. Both manufacturing differences (i.e., mass air flow sensor hot wire) and characteristic changes during operation (i.e., injector clogging) directly affect mixture ratio.
Accordingly, the difference between the basic and theoretical mixture ratios is monitored in this system. This is then computed in terms of “injection pulse duration” to automatically compensate for the difference between the two ratios.
“Fuel trim” refers to the feedback compensation value compared against the basic injection duration. Fuel trim includes short term fuel trim and long term fuel trim.
“Short term fuel trim” is the short-term fuel compensation used to maintain the mixture ratio at its theoretical value. The signal from A/F sensor 1 indicates whether the mixture ratio is RICH or LEAN compared to the theoretical value. The signal then triggers a reduction in fuel volume if the mixture ratio is rich, and an increase in fuel volume if it is lean.
“Long term fuel trim” is overall fuel compensation carried out long-term to compensate for continual deviation of the short term fuel trim from the central value. Such deviation will occur due to individual engine differences, wear over time and changes in the usage environment.

FUEL INJECTION TIMING

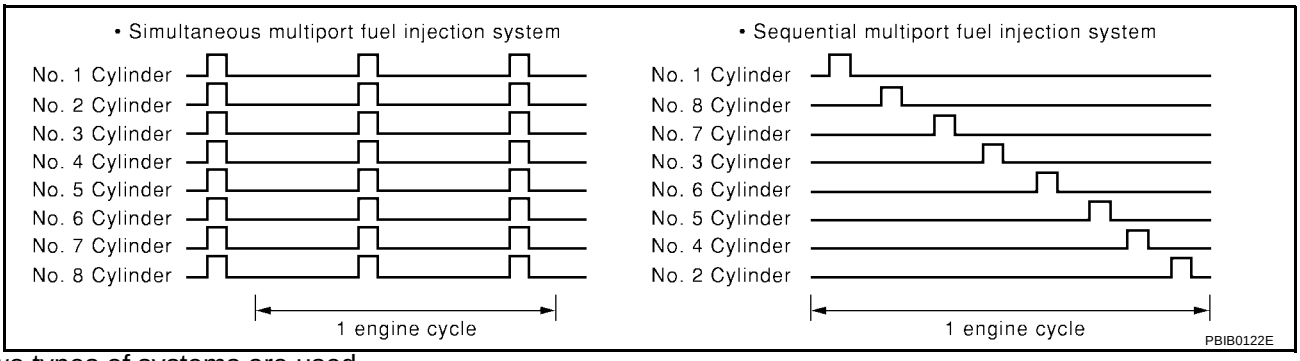

Two types of systems are used.

Sequential Multiport Fuel Injection System

Fuel is injected into each cylinder during each engine cycle according to the firing order. This system is used when the engine is running.

Simultaneous Multiport Fuel Injection System

Fuel is injected simultaneously into all eight cylinders twice each engine cycle. In other words, pulse signals of the same width are simultaneously transmitted from the ECM.
The eight fuel injectors will then receive the signals two times for each engine cycle.
This system is used when the engine is being started and/or if the fail-safe system (CPU) is operating.

FUEL SHUT-OFF

Fuel to each cylinder is cut off during deceleration, operation of the engine at excessively high speeds or operation of the vehicle at excessively high speed.

Electronic Ignition (EI) System

UBS00KZ8

INPUT/OUTPUT SIGNAL CHART

Sensor	Input signal to ECM	ECM function	Actuator
Crankshaft position sensor (POS)	Engine speed*2 Piston position	Ignition timing control	Power transistor
Camshaft position sensor (PHASE)			
Mass air flow sensor	Amount of intake air		
Engine coolant temperature sensor	Engine coolant temperature		
Throttle position sensor	Throttle position		
Accelerator pedal position sensor	Accelerator pedal position		
Knock sensor	Engine knocking		
Park/neutral position (PNP) switch	Gear position		
Battery	Battery voltage*2		
Wheel sensor	Vehicle speed*1		

*1: This signal is sent to the ECM through CAN communication line.
*2: ECM determines the start signal status by the signals of engine speed and battery voltage.

SYSTEM DESCRIPTION

Firing order: 1 - 8 - 7 - 3 - 6 - 5 - 4 -2
The ignition timing is controlled by the ECM to maintain the best air-fuel ratio for every running condition of the engine. The ignition timing data is stored in the ECM.
The ECM receives information such as the injection pulse width and camshaft position sensor signal. Computing this information, ignition signals are transmitted to the power transistor.
During the following conditions, the ignition timing is revised by the ECM according to the other data stored in the ECM.

- At starting
- During warm-up
- At idle
- At low battery voltage

- During acceleration

The knock sensor retard system is designed only for emergencies. The basic ignition timing is programmed within the anti-knocking zone, if recommended fuel is used under dry conditions. The retard system does not operate under normal driving conditions. If engine knocking occurs, the knock sensor monitors the condition. The signal is transmitted to the ECM. The ECM retards the ignition timing to eliminate the knocking condition.

Fuel Cut Control (at No Load and High Engine Speed)

UBS00KZ9

INPUT/OUTPUT SIGNAL CHART

Sensor	Input signal to ECM	ECM function	Actuator
Park/neutral position (PNP) switch	Neutral position	Fuel cut control	Fuel injector
Accelerator pedal position sensor	Accelerator pedal position		
Engine coolant temperature sensor	Engine coolant temperature		
Crankshaft position sensor (POS) Camshaft position sensor (PHASE)	Engine speed		
Wheel sensor	Vehicle speed*		

*: This signal is sent to the ECM through CAN communication line.

SYSTEM DESCRIPTION

If the engine speed is above 1,800 rpm under no load (for example, the shift position is neutral and engine speed over is 1,800 rpm) fuel will be cut off after some time. The exact time when the fuel is cut off varies based on engine speed.
Fuel cut will be operated until the engine speed reaches 1,500 rpm, then fuel cut will be cancelled.

NOTE:
This function is different from deceleration control listed under EC-24, "Multiport Fuel Injection (MFI) System" .

AIR CONDITIONING CUT CONTROL

PFP:23710

Input/Output Signal Chart

UBS00KZA

Sensor	Input Signal to ECM	ECM function	Actuator
Air conditioner switch	Air conditioner ON signal*1	Air conditioner cut control	Air conditioner relay
Accelerator pedal position sensor	Accelerator pedal position		
Crankshaft position sensor (POS) Camshaft position sensor (PHASE)	Engine speed*2		
Engine coolant temperature sensor	Engine coolant temperature		
Battery	Battery voltage*2		
Refrigerant pressure sensor	Refrigerant pressure		
Power steering pressure sensor	Power steering operation		
Wheel sensor	Vehicle speed*1		

*1: This signal is sent to the ECM through CAN communication line.
*2: ECM determines the start signal status by the signals of engine speed and battery voltage.

System Description

UBS00KZB

This system improves engine operation when the air conditioner is used.
Under the following conditions, the air conditioner is turned OFF.

- When the accelerator pedal is fully depressed.
- When cranking the engine.
- At high engine speeds.
- When the engine coolant temperature becomes excessively high.
- When operating power steering during low engine speed or low vehicle speed.
- When engine speed is excessively low.
- When refrigerant pressure is excessively low or high.

AUTOMATIC SPEED CONTROL DEVICE (ASCD)

PFP:18930

System Description

UBS00KZC

INPUT/OUTPUT SIGNAL CHART

Sensor	Input signal to ECM	ECM function	Actuator
ASCD brake switch	Brake pedal operation	ASCD vehicle speed control	Electric throttle control actuator
Stop lamp switch	Brake pedal operation		
ASCD steering switch	ASCD steering switch operation		
Park/Neutral position (PNP) switch	Gear position		
Wheel sensor	Vehicle speed*		
TCM	Powertrain revolution*		

*: This signal is sent to the ECM through CAN communication line

BASIC ASCD SYSTEM

Refer to Owner's Manual for ASCD operating instructions.
Automatic Speed Control Device (ASCD) allows a driver to keep vehicle at predetermined constant speed without depressing accelerator pedal. Driver can set vehicle speed in advance between approximately 40 km/h (25 MPH) and 144 km/h (89 MPH).
ECM controls throttle angle of electric throttle control actuator to regulate engine speed.
Operation status of ASCD is indicated by CRUISE indicator and SET indicator in combination meter. If any malfunction occurs in ASCD system, it automatically deactivates control.

NOTE:
Always drive vehicle in safe manner according to traffic conditions and obey all traffic laws.

SET OPERATION

Press MAIN switch. (The CRUISE indicator in combination meter illuminates.)
When vehicle speed reaches a desired speed between approximately 40 km/h (25 MPH) and 144 km/h (89 MPH), press SET/COAST switch. (Then SET indicator in combination meter illuminates.)

ACCELERATE OPERATION

If the RESUME/ACCELERATE switch is pressed during cruise control driving, increase the vehicle speed until the switch is released or vehicle speed reaches maximum speed controlled by the system.
And then ASCD will keep the new set speed.

CANCEL OPERATION

When any of following conditions exist, cruise operation will be canceled.

- CANCEL switch is pressed
- More than 2 switches at ASCD steering switch are pressed at the same time (Set speed will be cleared)
- Brake pedal is depressed
- Selector lever is changed to N, P, R position
- Vehicle speed decreased to 13 km/h (8 MPH) lower than the set speed
- VDC system is operated

When the ECM detects any of the following conditions, the ECM will cancel the cruise operation and inform the driver by blinking indicator lamp.

- Engine coolant temperature is slightly higher than the normal operating temperature, CRUISE lamp may blink slowly.
  When the engine coolant temperature decreases to the normal operating temperature, CRUISE lamp will stop blinking and the cruise operation will be able to work by pressing SET/COAST switch or RESUME/ACCELERATE switch.
- Malfunction for some self-diagnoses regarding ASCD control: SET lamp will blink quickly.

If MAIN switch is turned to OFF during ASCD is activated, all of ASCD operations will be canceled and vehicle speed memory will be erased.

COAST OPERATION

When the SET/COAST switch is pressed during cruise control driving, decrease vehicle set speed until the switch is released. And then ASCD will keep the new set speed.

RESUME OPERATION

When the RESUME/ACCELERATE switch is pressed after cancel operation other than pressing MAIN switch is performed, vehicle speed will return to last set speed. To resume vehicle set speed, vehicle condition must meet following conditions.

- Brake pedal is released
- A/T selector lever is in other than P and N positions
- Vehicle speed is greater than 40 km/h (25 MPH) and less than 144 km/h (89 MPH)

Component Description

UBS00KZD

ASCD STEERING SWITCH

Refer to EC-494 .

ASCD BRAKE SWITCH

Refer to EC-511 , and EC-586 .

STOP LAMP SWITCH

Refer to EC-511 , EC-523 and EC-586 .

ELECTRIC THROTTLE CONTROL ACTUATOR

Refer to EC-528 , EC-534 , EC-540 and EC-545 .

ASCD INDICATOR

Refer to EC-593 .

CAN COMMUNICATION

PFP:23710

System Description

UBS00KZE

CAN (Controller Area Network) is a serial communication line for real time application. It is an on-vehicle multiplex communication line with high data communication speed and excellent error detection ability. Many electronic control units are equipped onto a vehicle, and each control unit shares information and links with other control units during operation (not independent). In CAN communication, control units are connected with 2 communication lines (CAN H line, CAN L line) allowing a high rate of information transmission with less wiring. Each control unit transmits/receives data but selectively reads required data only.
Refer to LAN-26, "CAN COMMUNICATION" , about CAN communication for detail.

EVAPORATIVE EMISSION SYSTEM

PFP:14950

Description

UBS00KZF

SYSTEM DESCRIPTION

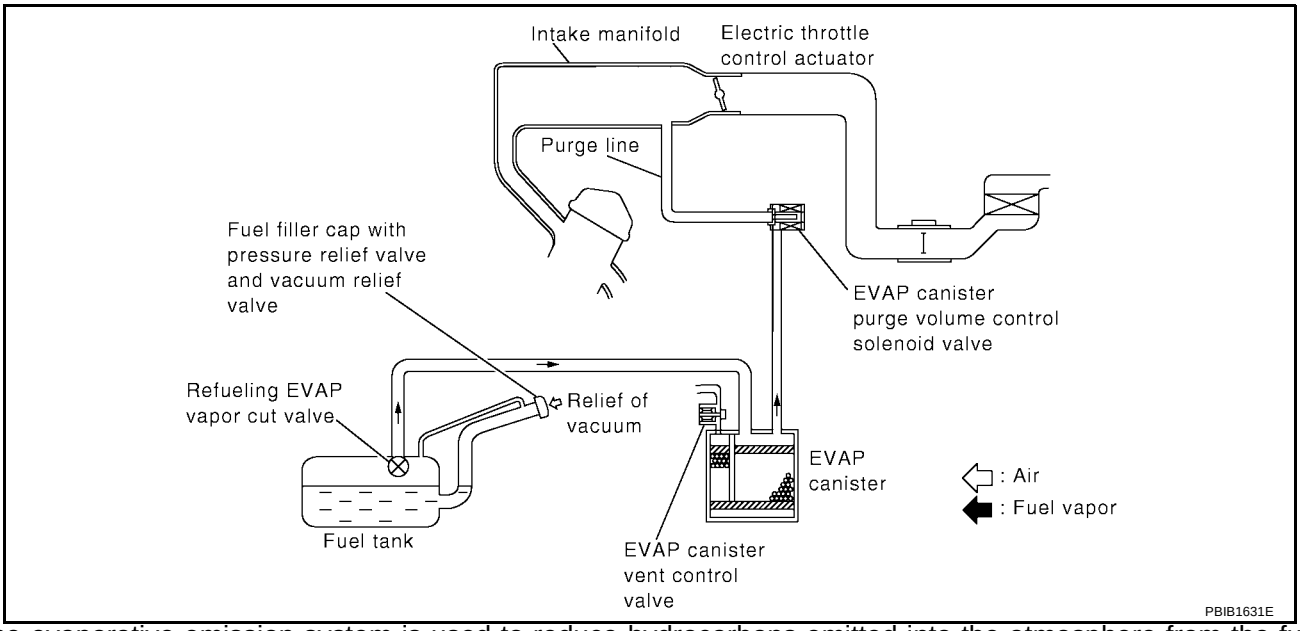

The evaporative emission system is used to reduce hydrocarbons emitted into the atmosphere from the fuel system. This reduction of hydrocarbons is accomplished by activated charcoals in the EVAP canister.

The fuel vapor in the sealed fuel tank is led into the EVAP canister which contains activated carbon and the vapor is stored there when the engine is not operating or when refueling to the fuel tank.

The vapor in the EVAP canister is purged by the air through the purge line to the intake manifold when the engine is operating. EVAP canister purge volume control solenoid valve is controlled by ECM. When the engine operates, the flow rate of vapor controlled by EVAP canister purge volume control solenoid valve is proportionally regulated as the air flow increases.

EVAP canister purge volume control solenoid valve also shuts off the vapor purge line during decelerating and idling.

EVAPORATIVE EMISSION LINE DRAWING

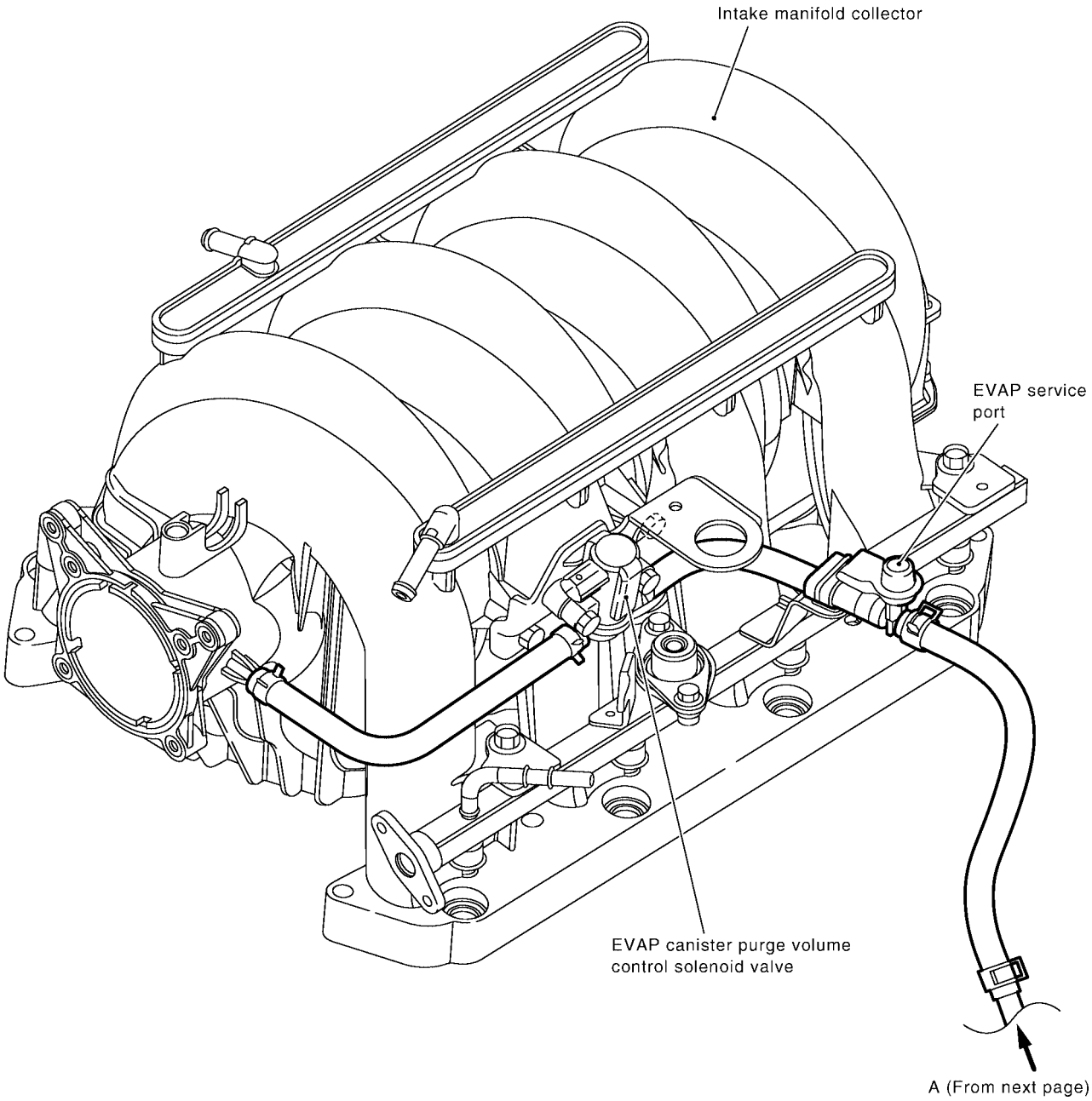

NOTE:
Do not use soapy water or any type of solvent while installing vacuum hoses or purge hoses.

PBIB2053E

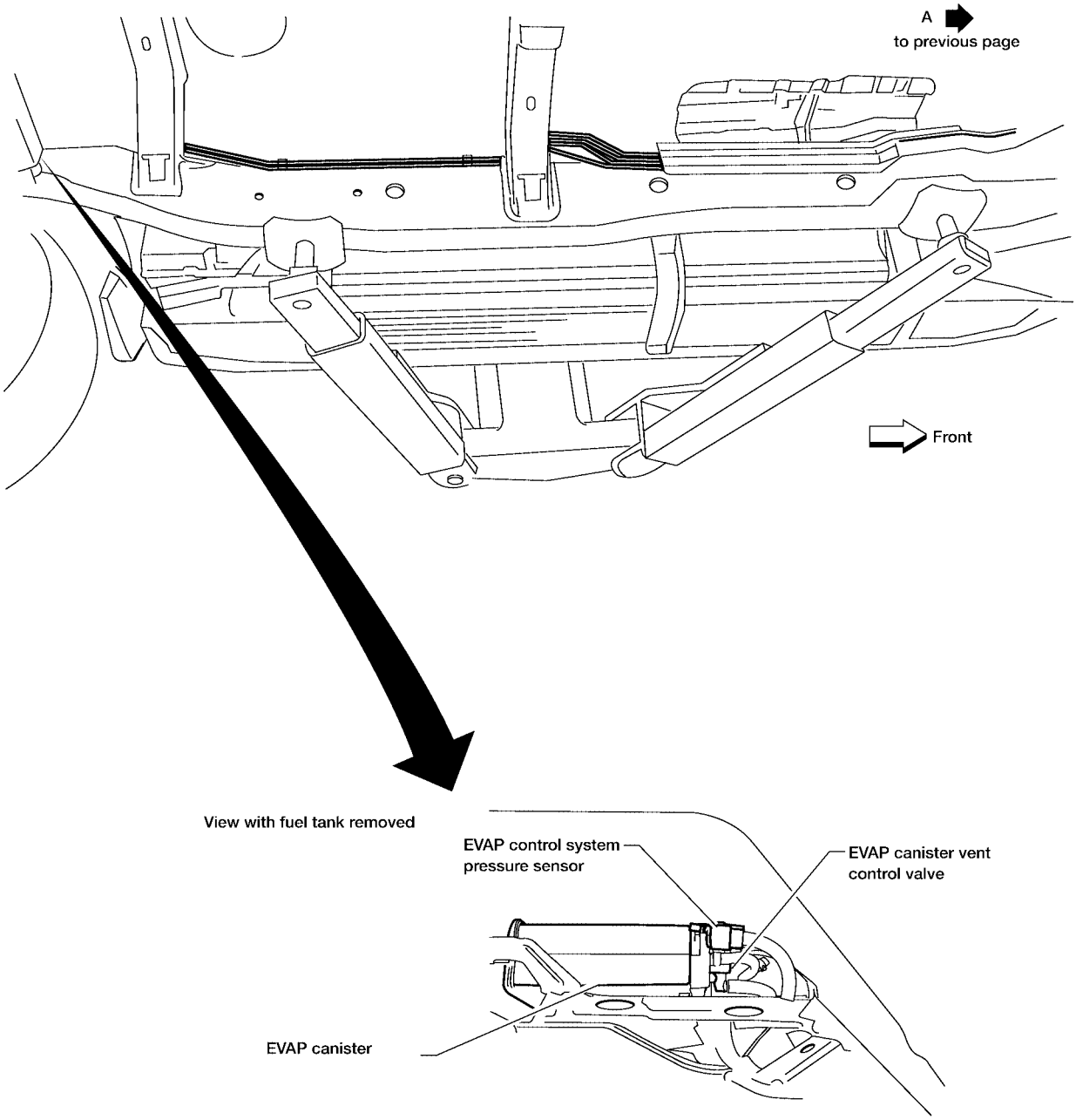
A
to previous page
Front
View with fuel tank removed
EVAP control system pressure sensor
EVAP canister vent control valve
EVAP canister

BBIA0444E

Component Inspection

UBS00KZG

EVAP CANISTER

Check EVAP canister as follows:

1. Block port **B** .
2. Blow air into port **A** and check that it flows freely out of port **C** .
3. Release blocked port **B** .
4. Apply vacuum pressure to port **B** and check that vacuum pressure exists at the ports **A** and **C** .
5. Block port **A** and **B** .
6. Apply pressure to port **C** and check that there is no leakage.

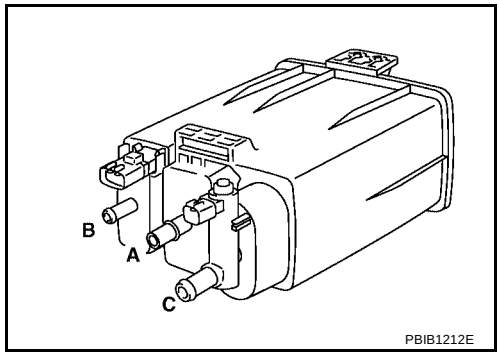

FUEL TANK VACUUM RELIEF VALVE (BUILT INTO FUEL FULLER CAP)

1. Wipe clean valve housing.

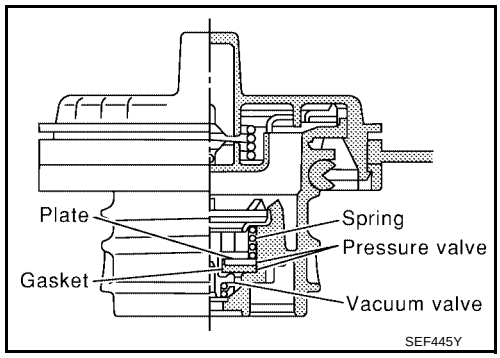

2. Check valve opening pressure and vacuum.

Pressure: **15.3 - 20.0 kPa (0.156 - 0.204 kg/cm^2 , 2.22 - 2.90 psi)**

Vacuum: **–6.0 to –3.3 kPa (–0.061 to –0.034 kg/cm^2 , –0.87 to –0.48 psi)**

3. If out of specification, replace fuel filler cap as an assembly.

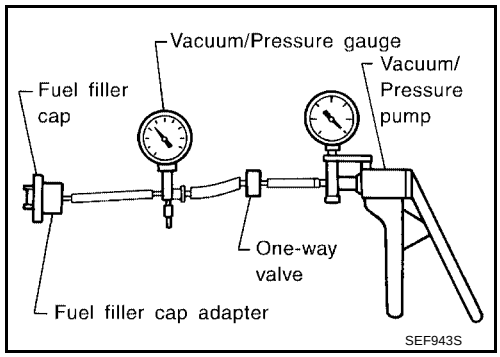

CAUTION:

Use only a genuine fuel filler cap as a replacement. If an incorrect fuel filler cap is used, the MIL may come on.

EVAP CANISTER PURGE VOLUME CONTROL SOLENOID VALVE

Refer to EC-373 and EC-381 .

FUEL TANK TEMPERATURE SENSOR

Refer to EC-309 and EC-315 .

EVAP CANISTER VENT CONTROL VALVE

Refer to EC-388 and EC-395 .

EVAP CONTROL SYSTEM PRESSURE SENSOR

Refer to EC-402 , EC-405 and EC-411 .

EVAP SERVICE PORT

Positive pressure is delivered to the EVAP system through the EVAP service port. If fuel vapor leakage in the EVAP system occurs, use a leak detector to locate the leak.

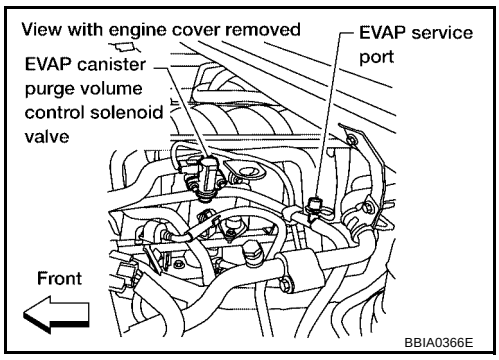

Removal and Installation

UBS00KZH

EVAP CANISTER

Tighten EVAP canister as shown in the figure.

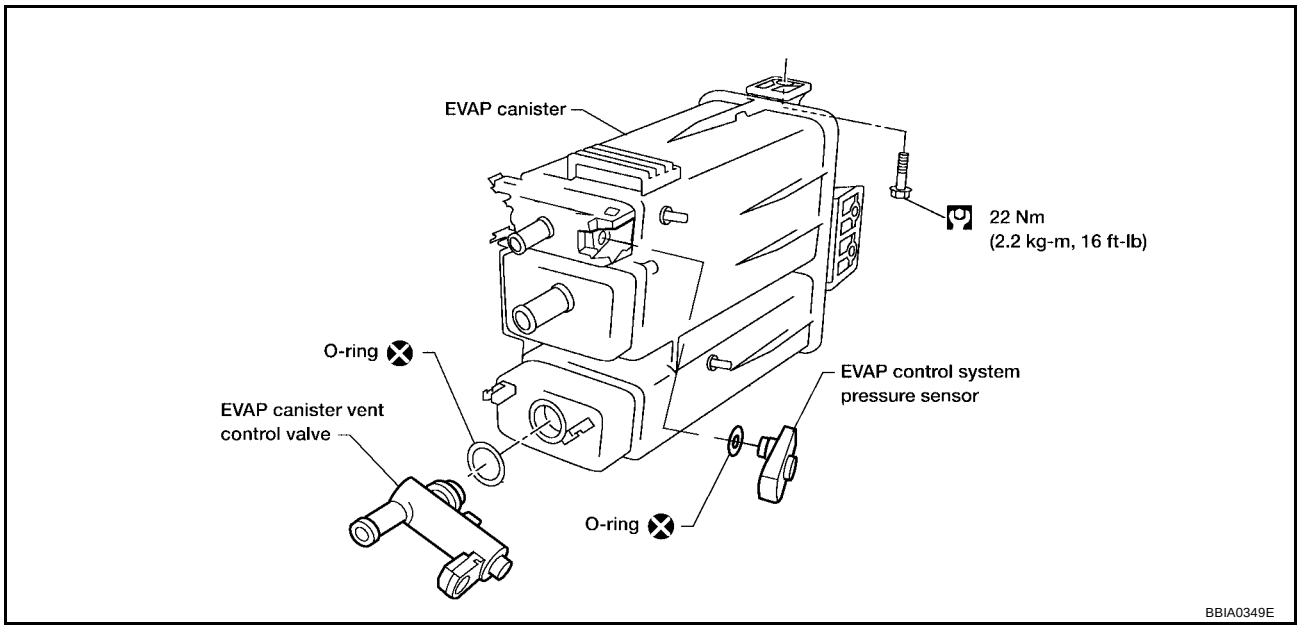

: N-·m (kg-m, in-lb)

EVAP CANISTER VENT CONTROL VALVE

1. Turn EVAP canister vent control valve counterclockwise.
2. Remove the EVAP canister vent control valve.

Always replace O-ring with a new one.

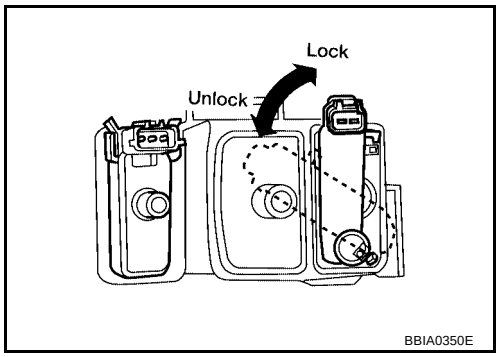

How to Detect Fuel Vapor Leakage

UBS00KZI

CAUTION:

- **Never use compressed air or a high pressure pump.**
- **Do not exceed 4.12 kPa (0.042 kg/cm^2 , 0.6 psi) of pressure in EVAP system.**

NOTE:

- Do not start engine.
- Improper installation of EVAP service port adapter to the EVAP service port may cause a leak.

WITH CONSULT-II

1. Attach the EVAP service port adapter securely to the EVAP service port.
2. Also attach the pressure pump and hose to the EVAP service port adapter.
3. Turn ignition switch ON.
4. Select the “EVAP SYSTEM CLOSE” of “WORK SUPPORT MODE” with CONSULT-II.
5. Touch “START”. A bar graph (Pressure indicating display) will appear on the screen.

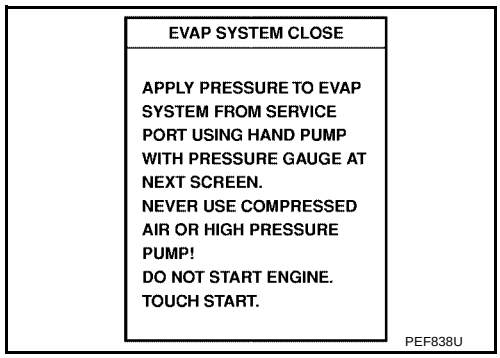

6. Apply positive pressure to the EVAP system until the pressure indicator reaches the middle of the bar graph.
7. Remove EVAP service port adapter and hose with pressure pump.

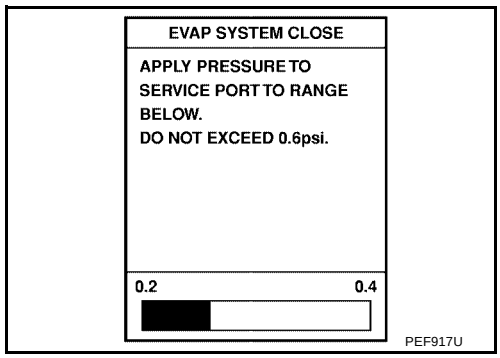

8. Locate the leak using a leak detector. Refer to EC-33, "EVAPORATIVE EMISSION LINE DRAWING" .

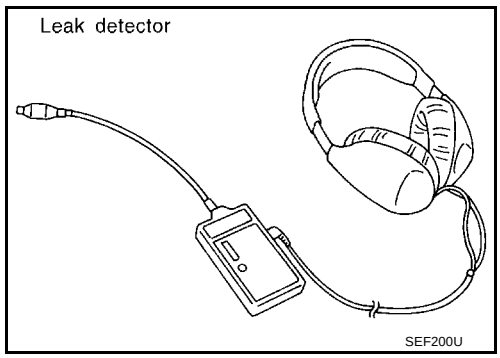

WITHOUT CONSULT-II

1. Attach the EVAP service port adapter securely to the EVAP service port.

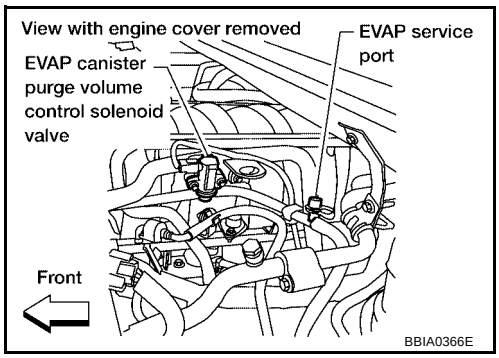

2. Also attach the pressure pump with pressure gauge to the EVAP service port adapter.

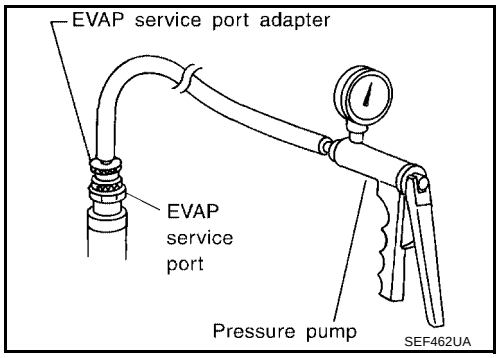

3. Apply battery voltage between the terminals of EVAP canister vent control valve to make a closed EVAP system.

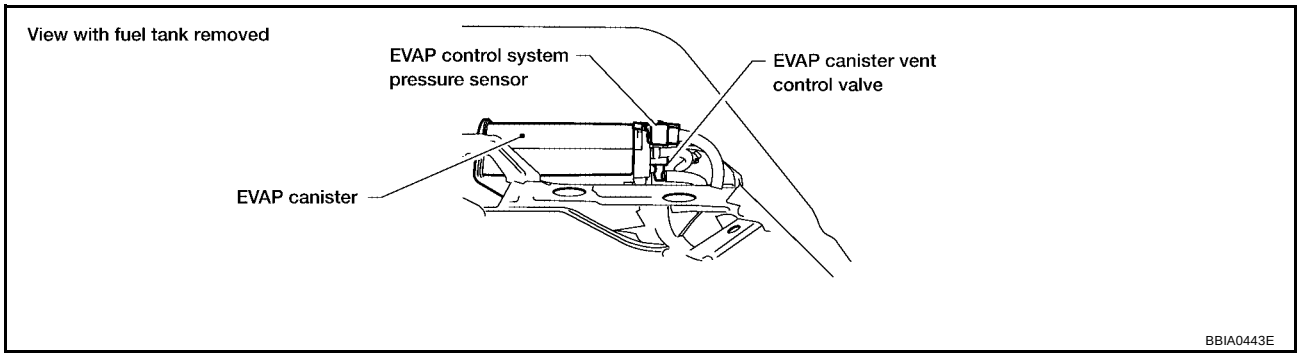

4. To locate the leak, deliver positive pressure to the EVAP system until pressure gauge points reach 1.38 to 2.76 kPa (0.014 to 0.028 kg/cm^2 , 0.2 to 0.4 psi).
5. Remove EVAP service port adapter and hose with pressure pump.
6. Locate the leak using a leak detector. Refer to EC-33, "EVAPORATIVE EMISSION LINE DRAWING" .

ON BOARD REFUELING VAPOR RECOVERY (ORVR)

PFP:00032

System Description

UBS00KZJ

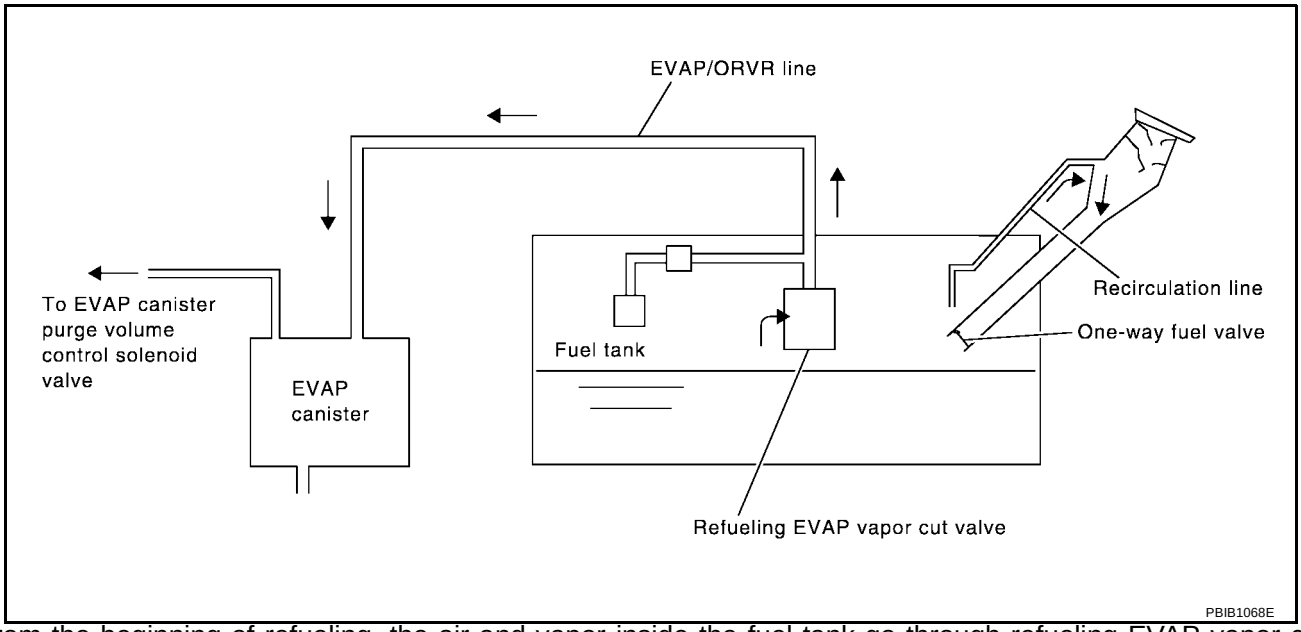

From the beginning of refueling, the air and vapor inside the fuel tank go through refueling EVAP vapor cut valve and EVAP/ORVR line to the EVAP canister. The vapor is absorbed by the EVAP canister and the air is released to the atmosphere.

When the refueling has reached the full level of the fuel tank, the refueling EVAP vapor cut valve is closed and refueling is stopped because of auto shut-off. The vapor which was absorbed by the EVAP canister is purged during driving.

WARNING:

When conducting inspections below, be sure to observe the following:

- **Put a “CAUTION: INFLAMMABLE” sign in workshop.**
- **Do not smoke while servicing fuel system. Keep open flames and sparks away from work area.**
- **Be sure to furnish the workshop with a CO_2 fire extinguisher.**

CAUTION:

- **Before removing fuel line parts, carry out the following procedures:**
  - **Put drained fuel in an explosion-proof container and put lid on securely.**
  - **Release fuel pressure from fuel line. Refer to EC-80, "FUEL PRESSURE RELEASE" .**
  - **Disconnect battery ground cable.**
- **Always replace O-ring when the fuel gauge retainer is removed.**
- **Do not kink or twist hose and tube when they are installed.**
- **Do not tighten hose and clamps excessively to avoid damaging hoses.**
- **After installation, run engine and check for fuel leaks at connection.**
- **Do not attempt to top off the fuel tank after the fuel pump nozzle shuts off automatically. Continued refueling may cause fuel overflow, resulting in fuel spray and possibly a fire.**

Diagnostic Procedure

UBS00KZK

SYMPTOM: FUEL ODOR FROM EVAP CANISTER IS STRONG.

1. CHECK EVAP CANISTER

1. Remove EVAP canister with EVAP canister vent control valve and EVAP control system pressure sensor attached.
2. Weigh the EVAP canister with EVAP canister vent control valve and EVAP control system pressure sensor attached.
   The weight should be less than 2.5 kg (5.5 lb).

OK or NG

OK >> GO TO 2.
NG >> GO TO 3.

2. CHECK IF EVAP CANISTER SATURATED WITH WATER

Does water drain from the EVAP canister?

Yes or No

Yes >> GO TO 3.
No >> GO TO 5.

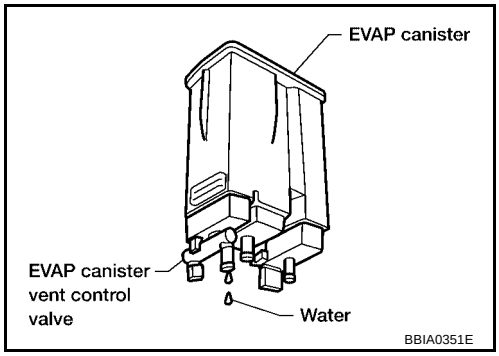

3. REPLACE EVAP CANISTER

Replace EVAP canister with a new one.

>> GO TO 4.

4. DETECT MALFUNCTIONING PART

Check the EVAP hose between EVAP canister and vehicle frame for clogging or poor connection.

>> Repair or replace EVAP hose.

5. CHECK REFUELING EVAP VAPOR CUT VALVE

Refer to EC-43, "Component Inspection" .

OK or NG

OK >> **INSPECTION END**
NG >> Replace refueling EVAP vapor cut valve with fuel tank.

SYMPTOM: CANNOT REFUEL/FUEL ODOR FROM THE FUEL FILLER OPENING IS STRONG WHILE REFUELING.

1. CHECK EVAP CANISTER

1. Remove EVAP canister with EVAP canister vent control valve and EVAP control system pressure sensor attached.
2. Weigh the EVAP canister with EVAP canister vent control valve and EVAP control system pressure sensor attached.
   The weight should be less than 2.5 kg (5.5 lb).

OK or NG

OK >> GO TO 2.
NG >> GO TO 3.

2. CHECK IF EVAP CANISTER SATURATED WITH WATER

Does water drain from the EVAP canister?

Yes or No

Yes >> GO TO 3.
No >> GO TO 5.

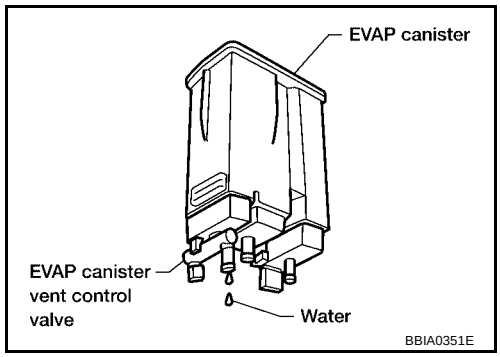

3. REPLACE EVAP CANISTER

Replace EVAP canister with a new one.

>> GO TO 4.

4. DETECT MALFUNCTIONING PART

Check the EVAP hose between EVAP canister and vehicle frame for clogging or poor connection.

>> Repair or replace EVAP hose.

5. CHECK VENT HOSES AND VENT TUBES

Check hoses and tubes between EVAP canister and refueling EVAP vapor cut valve for clogging, kink, looseness and improper connection.

OK or NG

OK >> GO TO 6.
NG >> Repair or replace hoses and tubes.

6. CHECK FILLER NECK TUBE

Check recirculation line for clogging, dents and cracks.

OK or NG

OK >> GO TO 7.
NG >> Replace filler neck tube.

7. CHECK REFUELING EVAP VAPOR CUT VALVE

Refer to EC-43, "Component Inspection" .

OK or NG

OK >> GO TO 8.
NG >> Replace refueling EVAP vapor cut valve with fuel tank.

8. CHECK FUEL FILLER TUBE

Check filler neck tube and hose connected to the fuel tank for clogging, dents and cracks.

OK or NG

OK >> GO TO 9.
NG >> Replace fuel filler tube.

9. CHECK ONE-WAY FUEL VALVE-I

Check one-way valve for clogging.

OK or NG

OK >> GO TO 10.
NG >> Repair or replace one-way fuel valve with fuel tank.

10. CHECK ONE-WAY FUEL VALVE-II

1. Make sure that fuel is drained from the tank.
2. Remove fuel filler tube and hose.
3. Check one-way fuel valve for operation as follows.
   When a stick is inserted, the valve should open, when removing stick it should close.
   Do not drop any material into the tank.

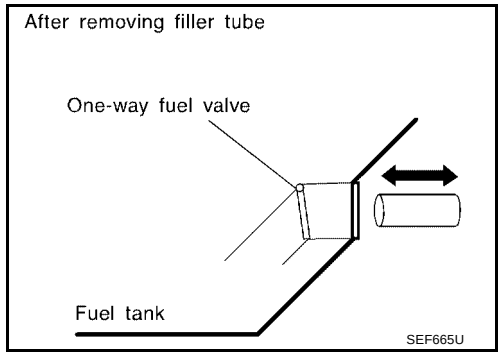

OK or NG

OK >> **INSPECTION END**
NG >> Replace fuel filler tube or replace one-way fuel valve with fuel tank.

Component Inspection

UBS00KZL

REFUELING EVAP VAPOR CUT VALVE

With CONSULT-II

1. Remove fuel tank. Refer to FL-10, "FUEL TANK" .
2. Drain fuel from the tank as follows:

a. Remove fuel feed hose located on the fuel gauge retainer.

b. Connect a spare fuel hose, one side to fuel gauge retainer where the hose was removed and the other side to a fuel container.

c. Drain fuel using “FUEL PUMP RELAY” in “ACTIVE TEST” mode with CONSULT-II.

3. Check refueling EVAP vapor cut valve for being stuck to close as follows.
   Blow air into the refueling EVAP vapor cut valve (from the end of EVAP/ORVR line hose), and check that the air flows freely into the tank.
4. Check refueling EVAP vapor cut valve for being stuck to open as follows.

a. Connect vacuum pump to hose end.

b. Remove fuel gauge retainer with fuel gauge unit.
   Always replace O-ring with new one.

c. Put fuel tank upside down.

d. Apply vacuum pressure to hose end [–13.3 kPa (–100 mmHg, –3.94 inHg)] with fuel gauge retainer remaining open and check that the pressure is applicable.

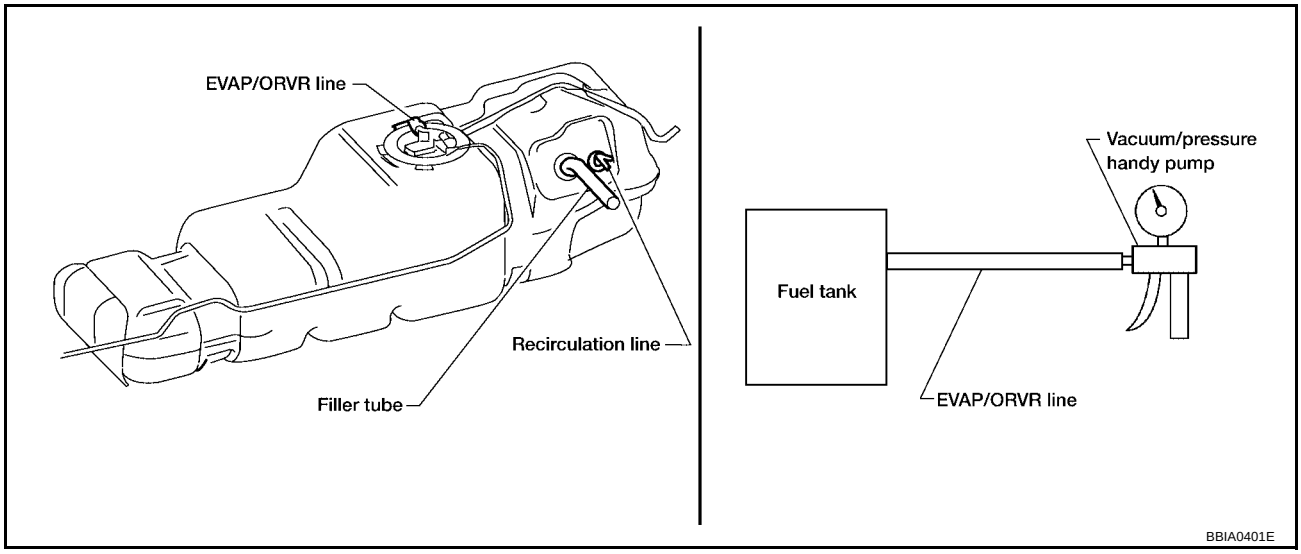

Without CONSULT-II

1. Remove fuel tank. Refer to FL-10, "FUEL TANK" .
2. Drain fuel from the tank as follows:

a. Remove fuel gauge retainer.

b. Drain fuel from the tank using a handy pump into a fuel container.

3. Check refueling EVAP vapor cut valve for being stuck to close as follows.
   Blow air into the refueling EVAP vapor cut valve (from the end of EVAP/ORVR line hose), and check that the air flows freely into the tank.
4. Check refueling EVAP vapor cut valve for being stuck to open as follows.

a. Connect vacuum pump to hose end.

b. Remove fuel gauge retainer with fuel gauge unit.
   Always replace O-ring with new one.

c. Put fuel tank upside down.

d. Apply vacuum pressure to hose end [–13.3 kPa (–100 mmHg, –3.94 inHg)] with fuel gauge retainer remaining open and check that the pressure is applicable.

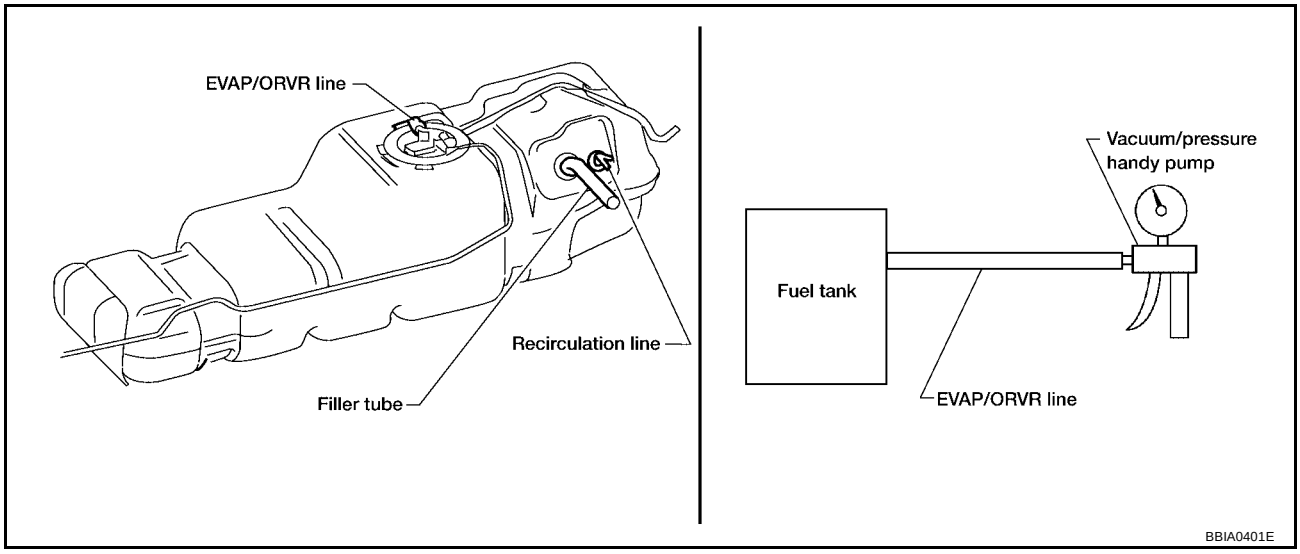

POSITIVE CRANKCASE VENTILATION

PFP:11810

Description

UBS00KZM

SYSTEM DESCRIPTION

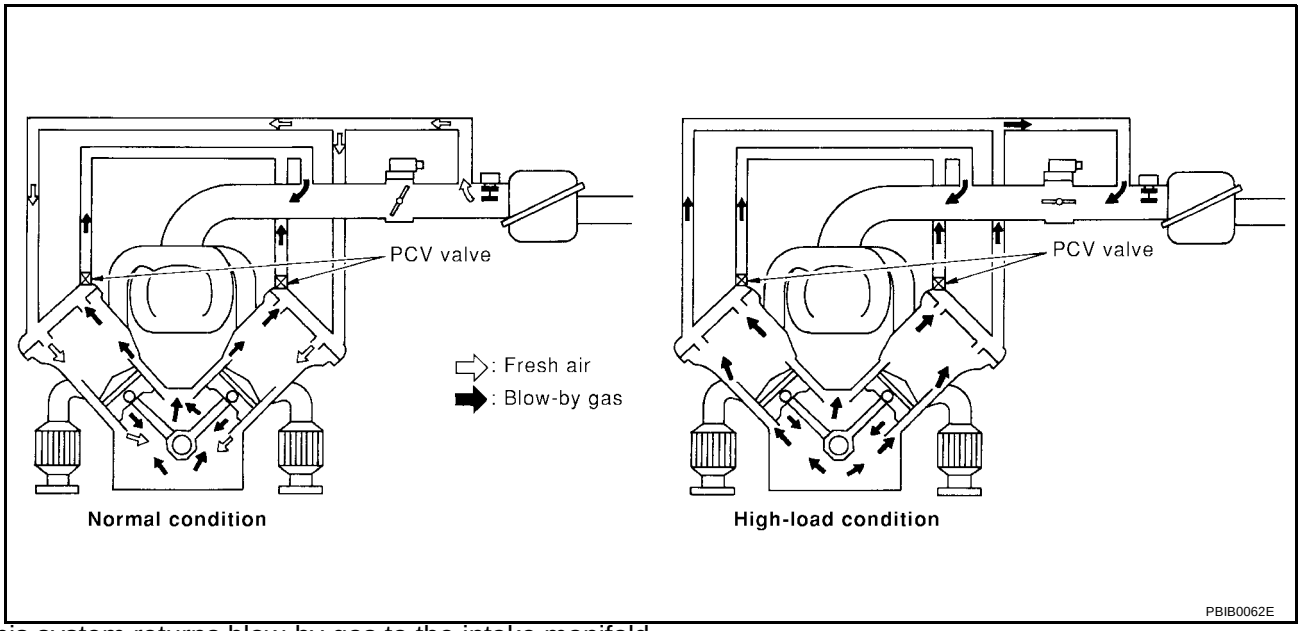

This system returns blow-by gas to the intake manifold.

The positive crankcase ventilation (PCV) valve is provided to conduct crankcase blow-by gas to the intake manifold. During partial throttle operation of the engine, the intake manifold sucks the blow-by gas through the PCV valve. Normally, the capacity of the valve is sufficient to handle any blow-by and a small amount of ventilating air. The ventilating air is then drawn from the air inlet tubes into the crankcase. In this process the air passes through the hose connecting air inlet tubes to rocker cover. Under full-throttle condition, the manifold vacuum is insufficient to draw the blow-by flow through the valve. The flow goes through the hose connection in the reverse direction.

On vehicles with an excessively high blow-by, the valve does not meet the requirement. This is because some of the flow will go through the hose connection to the air inlet tubes under all conditions.

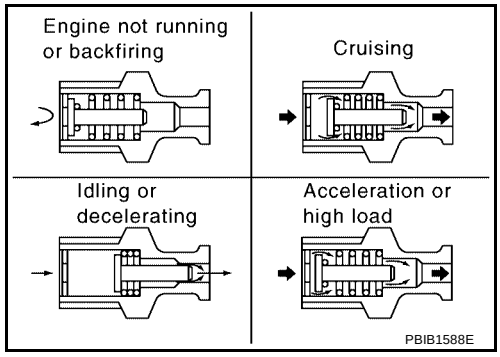

Component Inspection

UBS00KZN

PCV (POSITIVE CRANKCASE VENTILATION) VALVE

With engine running at idle, remove PCV valve from rocker cover. A properly working valve makes a hissing noise as air passes through it. A strong vacuum should be felt immediately when a finger is placed over valve inlet.

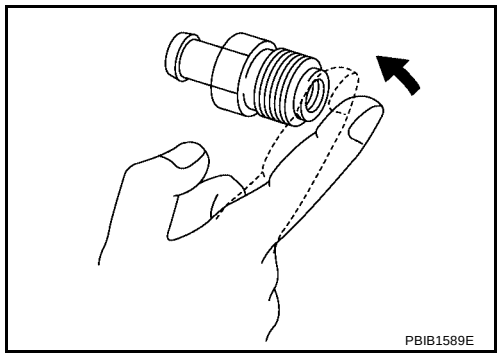

PCV VALVE VENTILATION HOSE

1. Check hoses and hose connections for leaks.
2. Disconnect all hoses and clean with compressed air. If any hose cannot be freed of obstructions, replace.

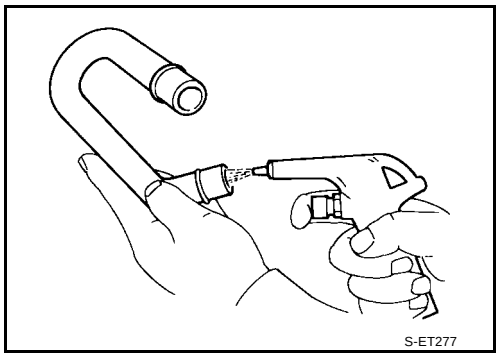

IVIS (INFINITI VEHICLE IMMOBILIZER SYSTEM-NATS)

PFP:28591

Description

UBS00L1L

- **If the security indicator lights up with the ignition switch in the ON position or "NATS MALFUNCTION" is displayed on "SELF-DIAG RESULTS" screen, perform self-diagnostic results mode with CONSULT-II using NATS program card. Refer to BL-137, "IVIS (INFINITI VEHICLE IMMOBILIZER SYSTEM-NATS)" .**
- **Confirm no self-diagnostic results of IVIS (NATS) is displayed before touching "ERASE" in "SELF-DIAG RESULTS" mode with CONSULT-II.**
- **When replacing ECM, initialization of IVIS (NATS) system and registration of all IVIS (NATS) ignition key IDs must be carried out with CONSULT-II using NATS program card.**
  Therefore, be sure to receive all keys from vehicle owner. Regarding the procedures of IVIS (NATS) initialization and all IVIS (NATS) ignition key ID registration, refer to CONSULT-II operation manual, IVIS/NVIS.

SELF DIAG RESULTS	
DTC RESULTS	TIME
NATS MALFUNCTION [P1610]	0

SEF543X

ON BOARD DIAGNOSTIC (OBD) SYSTEM

PFP:00028

Introduction

UBS00KZP

The ECM has an on board diagnostic system, which detects malfunctions related to engine sensors or actuators. The ECM also records various emission-related diagnostic information including:

Emission-related diagnostic information	Diagnostic service
Diagnostic Trouble Code (DTC)	Service $03 of SAE J1979
Freeze Frame data	Service $02 of SAE J1979
System Readiness Test (SRT) code	Service $01 of SAE J1979
1st Trip Diagnostic Trouble Code (1st Trip DTC)	Service $07 of SAE J1979
1st Trip Freeze Frame data	
Test values and Test limits	Service $06 of SAE J1979
Calibration ID	Service $09 of SAE J1979

The above information can be checked using procedures listed in the table below.

×: Applicable —: Not applicable

	DTC	1st trip DTC	Freeze Frame data	1st trip Freeze Frame data	SRT code	SRT status	Test value
CONSULT-II	×	×	×	×	×	×	—
GST	×	×	×	—	×	×	×
ECM	×	×*	—	—	—	×	—

*: When DTC and 1st trip DTC simultaneously appear on the display, they cannot be clearly distinguished from each other.

The malfunction indicator lamp (MIL) on the instrument panel lights up when the same malfunction is detected in two consecutive trips (Two trip detection logic), or when the ECM enters fail-safe mode. (Refer to EC-91, "Fail-safe Chart" .)

Two Trip Detection Logic

UBS00KZQ

When a malfunction is detected for the first time, 1st trip DTC and 1st trip Freeze Frame data are stored in the ECM memory. The MIL will not light up at this stage. <1st trip>
If the same malfunction is detected again during the next drive, the DTC and Freeze Frame data are stored in the ECM memory, and the MIL lights up. The MIL lights up at the same time when the DTC is stored. <2nd trip> The “trip” in the “Two Trip Detection Logic” means a driving mode in which self-diagnosis is performed during vehicle operation. Specific on board diagnostic items will cause the ECM to light up or blink the MIL, and store DTC and Freeze Frame data, even in the 1st trip, as shown below.

×: Applicable —: Not applicable

Items	MIL				DTC		1st trip DTC	
	1st trip		2nd trip		1st trip displaying	2nd trip displaying	1st trip displaying	2nd trip displaying
	Blinking	Lighting up	Blinking	Lighting up				
Misfire (Possible three way catalyst damage) — DTC: P0300 - P0308 is being detected	×	—	—	—	—	—	×	—
Misfire (Possible three way catalyst damage) — DTC: P0300 - P0308 is being detected	—	—	×	—	—	×	—	—
One trip detection diagnoses (Refer to EC-49, "EMISSION-RELATED DIAGNOSTIC INFORMATION ITEMS" .)	—	×	—	—	×	—	—	—
Except above	—	—	—	×	—	×	×	—

When there is an open circuit on MIL circuit, the ECM cannot warn the driver by lighting up MIL when there is malfunction on engine control system.

Therefore, when electrical controlled throttle and part of ECM related diagnoses are continuously detected as NG for 5 trips, ECM warns the driver that engine control system malfunctions and MIL circuit is open by means of operating fail-safe function.
The fail-safe function also operates when above diagnoses except MIL circuit are detected and demands the driver to repair the malfunction.

Engine operating condition in fail-safe mode	Engine speed will not rise more than 2,500 rpm due to the fuel cut

Emission-related Diagnostic Information

UBS00KZR

EMISSION-RELATED DIAGNOSTIC INFORMATION ITEMS

×:Applicable —: Not applicable

Items (CONSULT-II screen terms)	DTC*1		SRT code	Test value/ Test limit (GST only)	Trip	MIL	Reference page
	CONSULT-II GST*2	ECM*3					
CAN COMM CIRCUIT	U1000	1000*5	—	—	1	×	EC-151
CAN COMM CIRCUIT	U1001	1001*5	—	—	2	—	EC-151
CONTROL UNIT(CAN)	U1010	1010	—	—	1	×	EC-154
NO DTC IS DETECTED. FURTHER TESTING MAY BE REQUIRED.	**P0000**	**0000**	—	—	—	**Flashing*7**	EC-64
A/F SEN1 HTR (B1)	P0031	0031	—	×	2	×	EC-156
A/F SEN1 HTR (B1)	P0032	0032	—	×	2	×	EC-156
HO2S2 HTR (B1)	P0037	0037	—	×	2	×	EC-163
HO2S2 HTR (B1)	P0038	0038	—	×	2	×	EC-163
A/F SEN1 HTR (B2)	P0051	0051	—	×	2	×	EC-156
A/F SEN1 HTR (B2)	P0052	0052	—	×	2	×	EC-156
HO2S2 HTR (B2)	P0057	0057	—	×	2	×	EC-163
HO2S2 HTR (B2)	P0058	0058	—	×	2	×	EC-163
MAF SEN/CIRCUIT	P0101	0101	—	—	2	×	EC-171
MAF SEN/CIRCUIT	P0102	0102	—	—	1	×	EC-180
MAF SEN/CIRCUIT	P0103	0103	—	—	1	×	EC-180
IAT SEN/CIRCUIT	P0112	0112	—	—	2	×	EC-188
IAT SEN/CIRCUIT	P0113	0113	—	—	2	×	EC-188
ECT SEN/CIRC	P0117	0117	—	—	1	×	EC-192
ECT SEN/CIRC	P0118	0118	—	—	1	×	EC-192
TP SEN 2/CIRC	P0122	0122	—	—	1	×	EC-198
TP SEN 2/CIRC	P0123	0123	—	—	1	×	EC-198
ECT SENSOR	P0125	0125	—	—	2	×	EC-205
IAT SENSOR	P0127	0127	—	—	2	×	EC-208
THERMSTAT FNCTN	P0128	0128	—	—	2	×	EC-211
A/F SENSOR1 (B1)	P0130	0130	—	×	2	×	EC-213
A/F SENSOR1 (B1)	P0131	0131	—	×	2	×	EC-223
A/F SENSOR1 (B1)	P0132	0132	—	×	2	×	EC-232
A/F SENSOR1 (B1)	P0133	0133	×	×	2	×	EC-241
HO2S2 (B1)	P0137	0137	×	×	2	×	EC-253
HO2S2 (B1)	P0138	0138	×	×	2	×	EC-264
HO2S2 (B1)	P0139	0139	×	×	2	×	EC-277
A/F SENSOR1 (B2)	P0150	0150	—	×	2	×	EC-213
A/F SENSOR1 (B2)	P0151	0151	—	×	2	×	EC-223

Items (CONSULT-II screen terms)	DTC*1		SRT code	Test value/ Test limit (GST only)	Trip	MIL	Refer-ence page
	CONSULT-II GST*2	ECM*3					
A/F SENSOR1 (B2)	P0152	0152	—	×	2	×	EC-232
A/F SENSOR1 (B2)	P0153	0153	×	×	2	×	EC-241
HO2S2 (B2)	P0157	0157	×	×	2	×	EC-253
HO2S2 (B2)	P0158	0158	×	×	2	×	EC-264
HO2S2 (B2)	P0159	0159	×	×	2	×	EC-277
FUEL SYS-LEAN-B1	P0171	0171	—	—	2	×	EC-288
FUEL SYS-RICH-B1	P0172	0172	—	—	2	×	EC-299
FUEL SYS-LEAN-B2	P0174	0174	—	—	2	×	EC-288
FUEL SYS-RICH-B2	P0175	0175	—	—	2	×	EC-299
FTT SENSOR	P0181	0181	—	—	2	×	EC-309
FTT SEN/CIRCUIT	P0182	0182	—	—	2	×	EC-315
FTT SEN/CIRCUIT	P0183	0183	—	—	2	×	EC-315
TP SEN 1/CIRC	P0222	0222	—	—	1	×	EC-320
TP SEN 1/CIRC	P0223	0223	—	—	1	×	EC-320
MULTI CYL MISFIRE	P0300	0300	—	—	2	×	EC-327
CYL 1 MISFIRE	P0301	0301	—	—	2	×	EC-327
CYL 2 MISFIRE	P0302	0302	—	—	2	×	EC-327
CYL 3 MISFIRE	P0303	0303	—	—	2	×	EC-327
CYL 4 MISFIRE	P0304	0304	—	—	2	×	EC-327
CYL 5 MISFIRE	P0305	0305	—	—	2	×	EC-327
CYL 6 MISFIRE	P0306	0306	—	—	2	×	EC-327
CYL 7 MISFIRE	P0307	0307	—	—	2	×	EC-327
CYL 8 MISFIRE	P0308	0308	—	—	2	×	EC-327
KNOCK SEN/CIRC-B1	P0327	0327	—	—	2	—	EC-335
KNOCK SEN/CIRC-B1	P0328	0328	—	—	2	—	EC-335
KNOCK SEN/CIRC-B2	P0332	0332	—	—	2	—	EC-335
KNOCK SEN/CIRC-B2	P0333	0333	—	—	2	—	EC-335
CKP SEN/CIRCUIT	P0335	0335	—	—	2	×	EC-340
CMP SEN/CIRC-B1	P0340	0340	—	—	2	×	EC-347
TW CATALYST SYS-B1	P0420	0420	×	×	2	×	EC-354
TW CATALYST SYS-B2	P0430	0430	×	×	2	×	EC-354
EVAP PURG FLOW/MON	P0441	0441	×	×	2	×	EC-360
EVAP SMALL LEAK	P0442	0442	×	×	2	×	EC-365
PURG VOLUME CONT/V	P0443	0443	—	—	2	×	EC-373
PURG VOLUME CONT/V	P0444	0444	—	—	2	×	EC-381
PURG VOLUME CONT/V	P0445	0445	—	—	2	×	EC-381
VENT CONTROL VALVE	P0447	0447	—	—	2	×	EC-388
VENT CONTROL VALVE	P0448	0448	—	—	2	×	EC-395
EVAP SYS PRES SEN	P0451	0451	—	—	2	×	EC-402
EVAP SYS PRES SEN	P0452	0452	—	—	2	×	EC-405
EVAP SYS PRES SEN	P0453	0453	—	—	2	×	EC-411
EVAP GROSS LEAK	P0455	0455	—	—	2	×	EC-419

Items (CONSULT-II screen terms)	DTC*1		SRT code	Test value/ Test limit (GST only)	Trip	MIL	Refer-ence page
	CONSULT-II GST*2	ECM*3					
EVAP VERY SML LEAK	P0456	0456	×*4	×	2	×	EC-427
FUEL LEV SEN SLOSH	P0460	0460	—	—	2	×	EC-436
FUEL LEVEL SENSOR	P0461	0461	—	—	2	×	EC-438
FUEL LEVL SEN/CIRC	P0462	0462	—	—	2	×	EC-440
FUEL LEVL SEN/CIRC	P0463	0463	—	—	2	×	EC-440
VEH SPEED SEN/CIRC*6	P0500	0500	—	—	2	×	EC-442
ISC SYSTEM	P0506	0506	—	—	2	×	EC-444
ISC SYSTEM	P0507	0507	—	—	2	×	EC-446
PW ST P SEN/CIRC	P0550	0550	—	—	2	—	EC-448
ECM BACK UP/CIRC	P0603	0603	—	—	2	×	EC-453
ECM	P0605	0605	—	—	1 or 2	× or —	EC-457
SENSOR POWER/CIRC	P0643	0643	—	—	1	×	EC-460
TCM	P0700	0700	—	—	1	×	AT-104
PNP SW/CIRC	P0705	0705	—	—	2	×	AT-105
ATF TEMP SEN/CIRC	P0710	0710	—	—	2	×	AT-127
TURBINE REV S/CIRC	P0717	0717	—	—	2	×	AT-109
VHCL SPD SEN/CIR AT*6	P0720	0720	—	—	2	×	AT-118
TCC SOLENOID/CIRC	P0740	0740	—	—	2	×	AT-118
A/T TCC S/U FNCTN	P0744	0744	—	—	2	×	AT-120
L/PRESS SOL/CIRC	P0745	0745	—	—	2	×	AT-122
P-N POS SW/CIRCUIT	P0850	0850	—	—	2	×	EC-465
CLOSED LOOP-B1	P1148	1148	—	—	1	×	EC-470
CLOSED LOOP-B2	P1168	1168	—	—	1	×	EC-470
TCS C/U FUNCTN	P1211	1211	—	—	2	—	EC-471
TCS/CIRC	P1212	1212	—	—	2	—	EC-472
ENG OVER TEMP	P1217	1217	—	—	1	×	EC-473
CTP LEARNING	P1225	1225	—	—	2	—	EC-483
CTP LEARNING	P1226	1226	—	—	2	—	EC-485
ASCD SW	P1564	1564	—	—	1	—	EC-487 (Models with ICC) EC-494 (Models with ASCD)
ACC COMMAND VALUE*9	P1568	1568	—	—	1	—	EC-501
ASCD BRAKE SW	P1572	1572	—	—	1	—	EC-502 (Models with ICC) EC-511 (Models with ASCD)

Items (CONSULT-II screen terms)	DTC*1		SRT code	Test value/ Test limit (GST only)	Trip	MIL	Refer-ence page
	CONSULT-II GST*2	ECM*3					
ASCD VHL SPD SEN*8	P1574	1574	—	—	1	—	EC-519 (Models with ICC) EC-521 (Models with ASCD)
NATS MALFUNCTION	P1610 - P1615	1610 - 1615	—	—	2	—	BL-137
A/T INTERLOCK	P1730	1730	—	—	1	×	AT-134
I/C SOLENOID/CIRC	P1752	1752	—	—	1	×	AT-139
I/C SOLENOID FNCTN	P1754	1754	—	—	1	×	AT-141
FR/B SOLENOID/CIRC	P1757	1757	—	—	1	×	AT-143
FR/B SOLENOID FNCT	P1759	1759	—	—	1	×	AT-145
D/C SOLENOID/CIRC	P1762	1762	—	—	1	×	AT-147
D/C SOLENOID FNCTN	P1764	1764	—	—	1	×	AT-149
HLR/C SOL/CIRC	P1767	1767	—	—	1	×	AT-151
HLR/C SOL FNCTN	P1769	1769	—	—	1	×	AT-153
LC/B SOLENOID/CIRC	P1772	1772	—	—	1	×	AT-155
LC/B SOLENOID FNCT	P1774	1774	—	—	1	×	AT-157
BRAKE SW/CIRCUIT	P1805	1805	—	—	2	—	EC-523
ETC MOT PWR	P2100	2100	—	—	1	×	EC-528
ETC FUNCTION/CIRC	P2101	2101	—	—	1	×	EC-534
ETC MOT PWR	P2103	2103	—	—	1	×	EC-528
ETC MOT	P2118	2118	—	—	1	×	EC-540
ETC ACTR	P2119	2119	—	—	1	×	EC-545
APP SEN 1/CIRC	P2122	2122	—	—	1	×	EC-547
APP SEN 1/CIRC	P2123	2123	—	—	1	×	EC-547
APP SEN 2/CIRC	P2127	2127	—	—	1	×	EC-553
APP SEN 2/CIRC	P2128	2128	—	—	1	×	EC-553
TP SENSOR	P2135	2135	—	—	1	×	EC-560
APP SENSOR	P2138	2138	—	—	1	×	EC-567
A/F SENSOR1 (B1)	P2A00	2A00	—	×	2	×	EC-575
A/F SENSOR1 (B2)	P2A03	2A03	—	×	2	×	EC-575

*1: 1st trip DTC No. is the same as DTC No.
*2: This number is prescribed by SAE J2012.
*3: In Diagnostic Test Mode II (Self-diagnostic results), this number is controlled by NISSAN.
*4: SRT code will not be set if the self-diagnostic result is NG.
*5: The troubleshooting for this DTC needs CONSULT-II.
*6: When the fail-safe operations for both self-diagnoses occur at the same time, the MIL illuminates.
*7: When the ECM is in the mode of displaying SRT status, MIL may flash. For the details, refer to EC-57, "How to Display SRT Status" .
*8: 2WD models
*9: Models with ICC

DTC AND 1ST TRIP DTC

The 1st trip DTC (whose number is the same as the DTC number) is displayed for the latest self-diagnostic result obtained. If the ECM memory was cleared previously, and the 1st trip DTC did not reoccur, the 1st trip DTC will not be displayed.

If a malfunction is detected during the 1st trip, the 1st trip DTC is stored in the ECM memory. The MIL will not light up (two trip detection logic). If the same malfunction is not detected in the 2nd trip (meeting the required driving pattern), the 1st trip DTC is cleared from the ECM memory. If the same malfunction is detected in the 2nd trip, both the 1st trip DTC and DTC are stored in the ECM memory and the MIL lights up. In other words, the DTC is stored in the ECM memory and the MIL lights up when the same malfunction occurs in two consecutive trips. If a 1st trip DTC is stored and a non-diagnostic operation is performed between the 1st and 2nd trips, only the 1st trip DTC will continue to be stored. For malfunctions that blink or light up the MIL during the 1st trip, the DTC and 1st trip DTC are stored in the ECM memory.
Procedures for clearing the DTC and the 1st trip DTC from the ECM memory are described in EC-61, "HOW TO ERASE EMISSION-RELATED DIAGNOSTIC INFORMATION" .
For malfunctions in which 1st trip DTCs are displayed, refer to EC-49, "EMISSION-RELATED DIAGNOSTIC INFORMATION ITEMS" . These items are required by legal regulations to continuously monitor the system/component. In addition, the items monitored non-continuously are also displayed on CONSULT-II.
1st trip DTC is specified in Service $07 of SAE J1979. 1st trip DTC detection occurs without lighting up the MIL and therefore does not warn the driver of a malfunction. However, 1st trip DTC detection will not prevent the vehicle from being tested, for example during Inspection/Maintenance (I/M) tests.
When a 1st trip DTC is detected, check, print out or write down and erase (1st trip) DTC and Freeze Frame data as specified in Work Flow procedure Step 2, refer to EC-84, "WORK FLOW" . Then perform DTC Confirmation Procedure or Overall Function Check to try to duplicate the malfunction. If the malfunction is duplicated, the item requires repair.

How to Read DTC and 1st Trip DTC

DTC and 1st trip DTC can be read by the following methods.

With CONSULT-II

With GST

CONSULT-II or GST (Generic Scan Tool) Examples: P0340, P0850, P1148, etc.
These DTCs are prescribed by SAE J2012.
(CONSULT-II also displays the malfunctioning component or system.)

No Tools

The number of blinks of the MIL in the Diagnostic Test Mode II (Self-Diagnostic Results) indicates the DTC. Example: 0340, 0850, 1148, etc.
These DTCs are controlled by NISSAN.

- **1st trip DTC No. is the same as DTC No.**
- **Output of a DTC indicates a malfunction. However, GST or the Diagnostic Test Mode II do not indicate whether the malfunction is still occurring or has occurred in the past and has returned to normal. CONSULT-II can identify malfunction status as shown below. Therefore, using CONSULT-II (if available) is recommended.**

A sample of CONSULT-II display for DTC and 1st trip DTC is shown below. DTC or 1st trip DTC of a malfunction is displayed in SELF-DIAGNOSTIC RESULTS mode of CONSULT-II. Time data indicates how many times the vehicle was driven after the last detection of a DTC.
If the DTC is being detected currently, the time data will be [0].
If a 1st trip DTC is stored in the ECM, the time data will be [1t].

DTC display

SELF DIAG RESULTS	
DTC RESULTS	TIME
CKP SEN/CIRCUIT [P0335]	0

1st trip DTC display

SELF DIAG RESULTS	
DTC RESULTS	TIME
CKP SEN/CIRCUIT [P0335]	1t

PBIB0911E

FREEZE FRAME DATA AND 1ST TRIP FREEZE FRAME DATA

The ECM records the driving conditions such as fuel system status, calculated load value, engine coolant temperature, short term fuel trim, long term fuel trim, engine speed, vehicle speed, absolute throttle position, base fuel schedule and intake air temperature at the moment a malfunction is detected.
Data which are stored in the ECM memory, along with the 1st trip DTC, are called 1st trip freeze frame data. The data, stored together with the DTC data, are called freeze frame data and displayed on CONSULT-II or

GST. The 1st trip freeze frame data can only be displayed on the CONSULT-II screen, not on the GST. For details, see EC-118, "Freeze Frame Data and 1st Trip Freeze Frame Data" .
Only one set of freeze frame data (either 1st trip freeze frame data or freeze frame data) can be stored in the ECM. 1st trip freeze frame data is stored in the ECM memory along with the 1st trip DTC. There is no priority for 1st trip freeze frame data and it is updated each time a different 1st trip DTC is detected. However, once freeze frame data (2nd trip detection/MIL on) is stored in the ECM memory, 1st trip freeze frame data is no longer stored. Remember, only one set of freeze frame data can be stored in the ECM. The ECM has the following priorities to update the data.

Priority	Items	
1	Freeze frame data	Misfire — DTC: P0300 - P0308 Fuel Injection System Function — DTC: P0171, P0172, P0174, P0175
2		Except the above items (Includes A/T related items)
3	1st trip freeze frame data	

For example, the EGR malfunction (Priority: 2) was detected and the freeze frame data was stored in the 2nd trip. After that when the misfire (Priority: 1) is detected in another trip, the freeze frame data will be updated from the EGR malfunction to the misfire. The 1st trip freeze frame data is updated each time a different malfunction is detected. There is no priority for 1st trip freeze frame data. However, once freeze frame data is stored in the ECM memory, 1st trip freeze data is no longer stored (because only one freeze frame data or 1st trip freeze frame data can be stored in the ECM). If freeze frame data is stored in the ECM memory and freeze frame data with the same priority occurs later, the first (original) freeze frame data remains unchanged in the ECM memory.
Both 1st trip freeze frame data and freeze frame data (along with the DTCs) are cleared when the ECM memory is erased. Procedures for clearing the ECM memory are described in EC-61, "HOW TO ERASE EMISSION-RELATED DIAGNOSTIC INFORMATION" .

SYSTEM READINESS TEST (SRT) CODE

System Readiness Test (SRT) code is specified in Service $01 of SAE J1979.
As part of an enhanced emissions test for Inspection & Maintenance (I/M), certain states require the status of SRT be used to indicate whether the ECM has completed self-diagnosis of major emission systems and components. Completion must be verified in order for the emissions inspection to proceed.
If a vehicle is rejected for a State emissions inspection due to one or more SRT items indicating “INCMP”, use the information in this Service Manual to set the SRT to “CMPLT”.
In most cases the ECM will automatically complete its self-diagnosis cycle during normal usage, and the SRT status will indicate “CMPLT” for each application system. Once set as “CMPLT”, the SRT status remains “CMPLT” until the self-diagnosis memory is erased.
Occasionally, certain portions of the self-diagnostic test may not be completed as a result of the customer's normal driving pattern; the SRT will indicate “INCMP” for these items.

NOTE:
The SRT will also indicate “INCMP” if the self-diagnosis memory is erased for any reason or if the ECM memory power supply is interrupted for several hours.
If, during the state emissions inspection, the SRT indicates “CMPLT” for all test items, the inspector will continue with the emissions test. However, if the SRT indicates “INCMP” for one or more of the SRT items the vehicle is returned to the customer untested.

NOTE:
If MIL is ON during the state emissions inspection, the vehicle is also returned to the customer untested even though the SRT indicates “CMPLT” for all test items. Therefore, it is important to check SRT (“CMPLT”) and DTC (No DTCs) before the inspection.

SRT Item

The table below shows required self-diagnostic items to set the SRT to “CMPLT”.

SRT item (CONSULT-II indication)	Performance Priority*	Required self-diagnostic items to set the SRT to “CMPLT”	Corresponding DTC No.
CATALYST	2	Three way catalyst function	P0420, P0430
EVAP SYSTEM	2	EVAP control system purge flow monitoring	P0441
	1	EVAP control system	P0442
	2	EVAP control system	P0456

SRT item (CONSULT-II indication)	Performance Priority*	Required self-diagnostic items to set the SRT to “CMPLT”	Corresponding DTC No.
HO2S	2	Air fuel ratio (A/F) sensor 1	P0133, P0153
		Heated oxygen sensor 2	P0137, P0157
		Heated oxygen sensor 2	P0138, P0158
		Heated oxygen sensor 2	P0139, P0159

*: If completion of several SRTs is required, perform driving patterns (DTC confirmation procedure), one by one based on the priority for models with CONSULT-II.

SRT Set Timing

SRT is set as “CMPLT” after self-diagnosis has been performed one or more times. Completion of SRT is done regardless of whether the result is OK or NG. The set timing is different between OK and NG results and is shown in the table below.

Self-diagnosis result		Example				
		Diagnosis	Ignition cycle ← ON → OFF	← ON → OFF	← ON → OFF	← ON →
All OK	Case 1	P0400	OK (1)	— (1)	OK (2)	— (2)
		P0402	OK (1)	— (1)	— (1)	OK (2)
		P1402	OK (1)	OK (2)	— (2)	— (2)
		SRT of EGR	“CMPLT”	“CMPLT”	“CMPLT”	“CMPLT”
	Case 2	P0400	OK (1)	— (1)	— (1)	— (1)
		P0402	— (0)	— (0)	OK (1)	— (1)
		P1402	OK (1)	OK (2)	— (2)	— (2)
		SRT of EGR	“INCMP”	“INCMP”	“CMPLT”	“CMPLT”
NG exists	Case 3	P0400	OK	OK	—	—
		P0402	—	—	—	—
		P1402	NG	—	NG	NG (Consecutive NG)
		(1st trip) DTC	1st trip DTC	—	1st trip DTC	DTC (= MIL ON)
		SRT of EGR	“INCMP”	“INCMP”	“INCMP”	“CMPLT”

OK: Self-diagnosis is carried out and the result is OK.
NG: Self-diagnosis is carried out and the result is NG.
—: Self-diagnosis is not carried out.

When all SRT related self-diagnoses showed OK results in a single cycle (Ignition OFF-ON-OFF), the SRT will indicate “CMPLT”. → Case 1 above
When all SRT related self-diagnoses showed OK results through several different cycles, the SRT will indicate “CMPLT” at the time the respective self-diagnoses have at least one OK result. → Case 2 above
If one or more SRT related self-diagnoses showed NG results in 2 consecutive cycles, the SRT will also indicate “CMPLT”. → Case 3 above
The table above shows that the minimum number of cycles for setting SRT as “INCMP” is one (1) for each self-diagnosis (Case 1 & 2) or two (2) for one of self-diagnoses (Case 3). However, in preparation for the state emissions inspection, it is unnecessary for each self-diagnosis to be executed twice (Case 3) for the following reasons:

- The SRT will indicate “CMPLT” at the time the respective self-diagnoses have one (1) OK result.
- The emissions inspection requires “CMPLT” of the SRT only with OK self-diagnosis results.
- When, during SRT driving pattern, 1st trip DTC (NG) is detected prior to “CMPLT” of SRT, the self-diagnosis memory must be erased from ECM after repair.
- If the 1st trip DTC is erased, all the SRT will indicate “INCMP”.

NOTE:
SRT can be set as “CMPLT” together with the DTC(s). Therefore, DTC check must always be carried out prior to the state emission inspection even though the SRT indicates “CMPLT”.

SRT Service Procedure

If a vehicle has failed the state emissions inspection due to one or more SRT items indicating “INCMP”, review the flowchart diagnostic sequence on the next page.

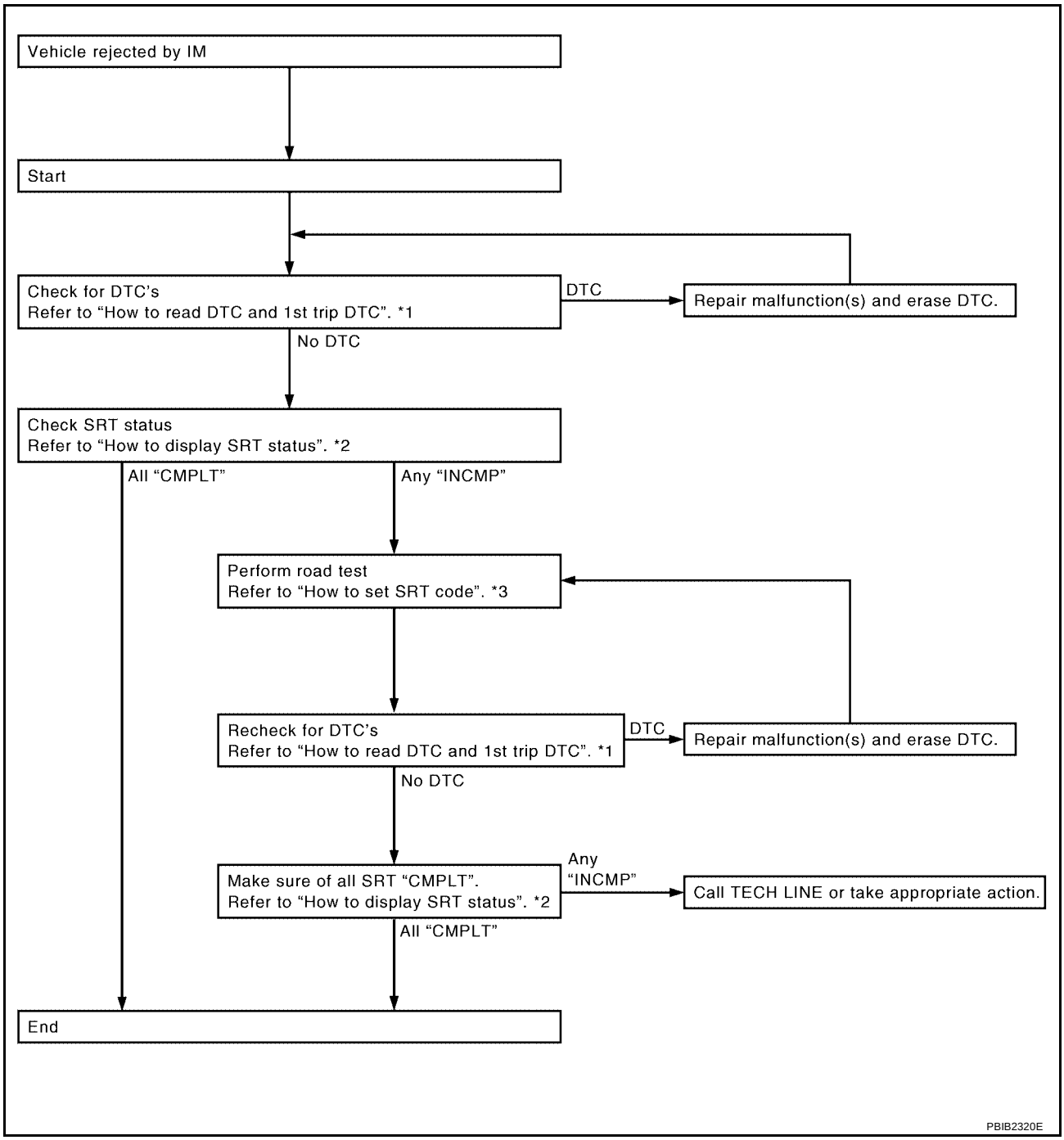

*1 EC-53, "How to Read DTC and 1st Trip DTC" *2 EC-57, "How to Display SRT Status" *3 EC-57, "How to Set SRT Code"

How to Display SRT Status

WITH CONSULT-II

Selecting “SRT STATUS” in “DTC CONFIRMATION” mode with CONSULT-II.

For items whose SRT codes are set, a “CMPLT” is displayed on the CONSULT-II screen; for items whose SRT codes are not set, “INCMP” is displayed.

A sample of CONSULT-II display for SRT code is shown in the figure.

“INCMP” means the self-diagnosis is incomplete and SRT is not set.

“CMPLT” means the self-diagnosis is complete and SRT is set.

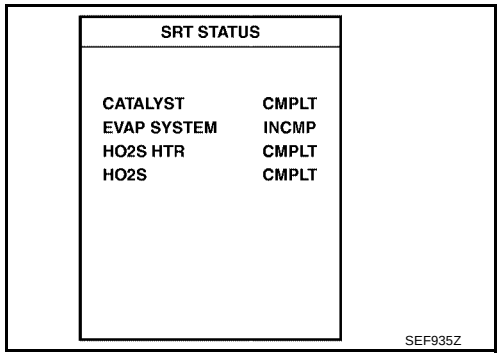

NOTE:

Though displayed on the CONSULT-II screen, “HO2S HTR” is not SRT item.

WITH GST

Selecting Service $01 with GST (Generic Scan Tool)

NO TOOLS

A SRT code itself can not be displayed while only SRT status can be.

1. Turn ignition switch ON and wait 20 seconds.
2. SRT status is indicated as shown below.
   - When all SRT codes are set, MIL lights up continuously.
   - When any SRT codes are not set, MIL will flash periodically for 10 seconds.

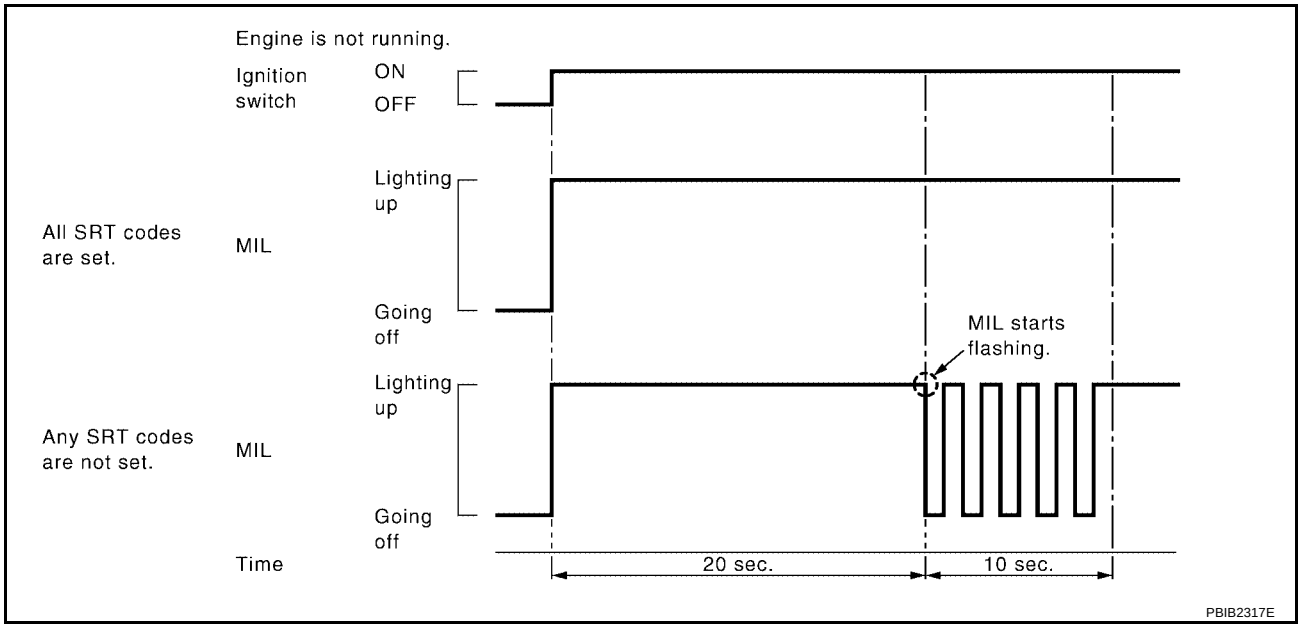

How to Set SRT Code

To set all SRT codes, self-diagnosis for the items indicated above must be performed one or more times. Each diagnosis may require a long period of actual driving under various conditions.

WITH CONSULT-II

Perform corresponding DTC Confirmation Procedure one by one based on Performance Priority in the table on EC-54, "SRT Item" .

WITHOUT CONSULT-II

The most efficient driving pattern in which SRT codes can be properly set is explained on the next page. The driving pattern should be performed one or more times to set all SRT codes.

Driving Pattern

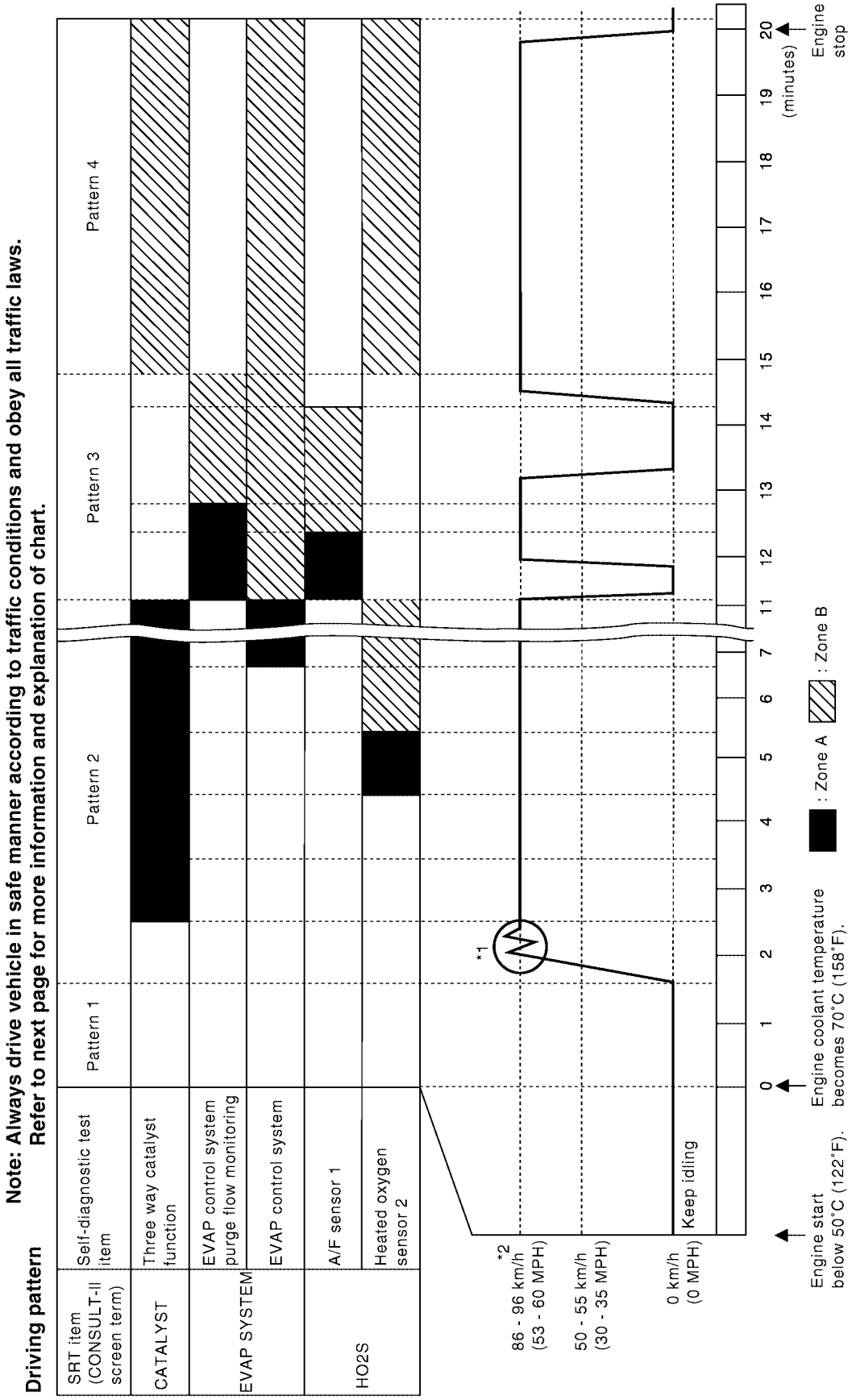

- The time required for each diagnosis varies with road surface conditions, weather, altitude, individual driving habits, etc.
  Zone A refers to the range where the time, required for the diagnosis under normal conditions*, is the shortest.
  Zone B refers to the range where the diagnosis can still be performed if the diagnosis is not completed within zone A.

*: Normal conditions refer to the following:

- Sea level
- Flat road
- Ambient air temperature: 20 - 30°C (68 - 86°F)
- Diagnosis is performed as quickly as possible under normal conditions.
  Under different conditions [For example: ambient air temperature other than 20 - 30°C (68 - 86°F)], diagnosis may also be performed.

Pattern 1:

- **The engine is started at the engine coolant temperature of –10 to 35°C (14 to 95°F) (where the voltage between the ECM terminal 73 and ground is 3.0 - 4.3V).**
- **The engine must be operated at idle speed until the engine coolant temperature is greater than 70°C (158°F) (where the voltage between the ECM terminal 73 and ground is lower than 1.4V).**
- **The engine is started at the fuel tank temperature of warmer than 0°C (32°F) (where the voltage between the ECM terminal 107 and ground is less than 4.1V).**

Pattern 2:

- When steady-state driving is performed again even after it is interrupted, each diagnosis can be conducted. In this case, the time required for diagnosis may be extended.

Pattern 3:

- Operate vehicle following the driving pattern shown in the figure.
- Release the accelerator pedal during decelerating vehicle speed from 90 km/h (56 MPH) to 0 km/h (0 MPH).

Pattern 4:

- The accelerator pedal must be held very steady during steady-state driving.
- If the accelerator pedal is moved, the test must be conducted all over again.

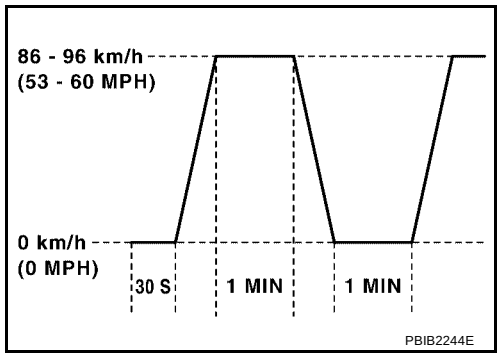

*1: Depress the accelerator pedal until vehicle speed is 90 km/h (56 MPH), then release the accelerator pedal and keep it released for more than 10 seconds. Depress the accelerator pedal until vehicle speed is 90 km/h (56 MPH) again.
*2: Checking the vehicle speed with GST is advised.

Suggested Transmission Gear Position
Set the selector lever in the D position with the overdrive switch turned ON.

TEST VALUE AND TEST LIMIT (GST ONLY — NOT APPLICABLE TO CONSULT-II)

The following is the information specified in Service $06 of SAE J1979.
The test value is a parameter used to determine whether a system/circuit diagnostic test is OK or NG while being monitored by the ECM during self-diagnosis. The test limit is a reference value which is specified as the maximum or minimum value and is compared with the test value being monitored.
These data (test value and test limit) are specified by Test ID (TID) and Component ID (CID) and can be displayed on the GST screen.

Item	Self-diagnostic test item	DTC	Test value (GST display)		Test limit	Conversion
			TID	CID		
CATALYST	Three way catalyst function (Bank 1)	P0420	01H	01H	Max.	1/128
		P0420	02H	81H	Min.	1
	Three way catalyst function (Bank 2)	P0430	03H	02H	Max.	1/128
		P0430	04H	82H	Min.	1
EVAP SYSTEM	EVAP control system (Small leak)	P0442	05H	03H	Max.	1/128 mm^2
	EVAP control system purge flow monitoring	P0441	06H	83H	Min.	20 mV
	EVAP control system (Very small leak)	P0456	07H	03H	Max.	1/128 mm^2
HO2S	Air fuel ratio (A/F) sensor 1 (Bank 1)	P0131	41H	8EH	Min.	5mV
		P0132	42H	0EH	Max.	5mV
		P2A00	43H	0EH	Max.	0.002
		P2A00	44H	8EH	Min.	0.002
		P0133	45H	8EH	Min.	0.002
		P0130	46H	0EH	Max.	5mV
		P0130	47H	8EH	Min.	5mV
		P0133	48H	8EH	Min.	0.002
	Air fuel ratio (A/F) sensor 1 (Bank 2)	P0151	4CH	8FH	Min.	5mV
		P0152	4DH	0FH	Max.	5mV
		P2A03	4EH	0FH	Max.	0.002
		P2A03	4FH	8FH	Min.	0.002
		P0153	50H	8FH	Min.	0.002
		P0150	51H	0FH	Max.	5mV
		P0150	52H	8FH	Min.	5mV
		P0153	53H	8FH	Min.	0.002
	Heated oxygen sensor 2 (Bank 1)	P0139	19H	86H	Min.	10mV/500 ms
		P0137	1AH	86H	Min.	10 mV
		P0138	1BH	06H	Max.	10 mV
		P0138	1CH	06H	Max.	10mV
	Heated oxygen sensor 2 (Bank 2)	P0159	21H	87H	Min.	10 mV/500 ms
		P0157	22H	87H	Min.	10 mV
		P0158	23H	07H	Max.	10 mV
		P0158	24H	07H	Max.	10mV

Item	Self-diagnostic test item	DTC	Test value (GST display)		Test limit	Conversion
			TID	CID		
HO2S HEATER	A/F sensor 1 heater (Bank 1)	P0032	57H	10H	Max.	5 mV
		P0031	58H	90H	Min.	5 mV
	A/F sensor 1 heater (Bank 2)	P0052	59H	11H	Max.	5 mV
		P0051	5AH	91H	Min.	5 mV
	Heated oxygen sensor 2 heater (Bank 1)	P0038	2DH	0AH	Max.	20 mV
		P0037	2EH	8AH	Min.	20 mV
	Heated oxygen sensor 2 heater (Bank 2)	P0058	2FH	0BH	Max.	20 mV
		P0057	30H	8BH	Min.	20 mV

HOW TO ERASE EMISSION-RELATED DIAGNOSTIC INFORMATION

How to Erase DTC

WITH CONSULT-II

The emission related diagnostic information in the ECM can be erased by selecting “ERASE” in the “SELF-DIAG RESULTS” mode with CONSULT-II.

If DTCs are displayed for both ECM and TCM (Transmission control module), they need to be erased individually from the ECM and TCM (Transmission control module).

NOTE:

If the DTC is not for A/T related items (see EC-8, "INDEX FOR DTC"), skip steps 2 through 4.

1. If the ignition switch stays ON after repair work, be sure to turn ignition switch OFF once. Wait at least 10 seconds and then turn it ON (engine stopped) again.
2. Turn CONSULT-II ON and touch “A/T”.
3. Touch “SELF-DIAG RESULTS”.
4. Touch “ERASE”. [The DTC in the TCM (Transmission control module) will be erased.] Then touch “BACK” twice.
5. Touch “ENGINE”.
6. Touch “SELF-DIAG RESULTS”.
7. Touch “ERASE”. (The DTC in the ECM will be erased.)

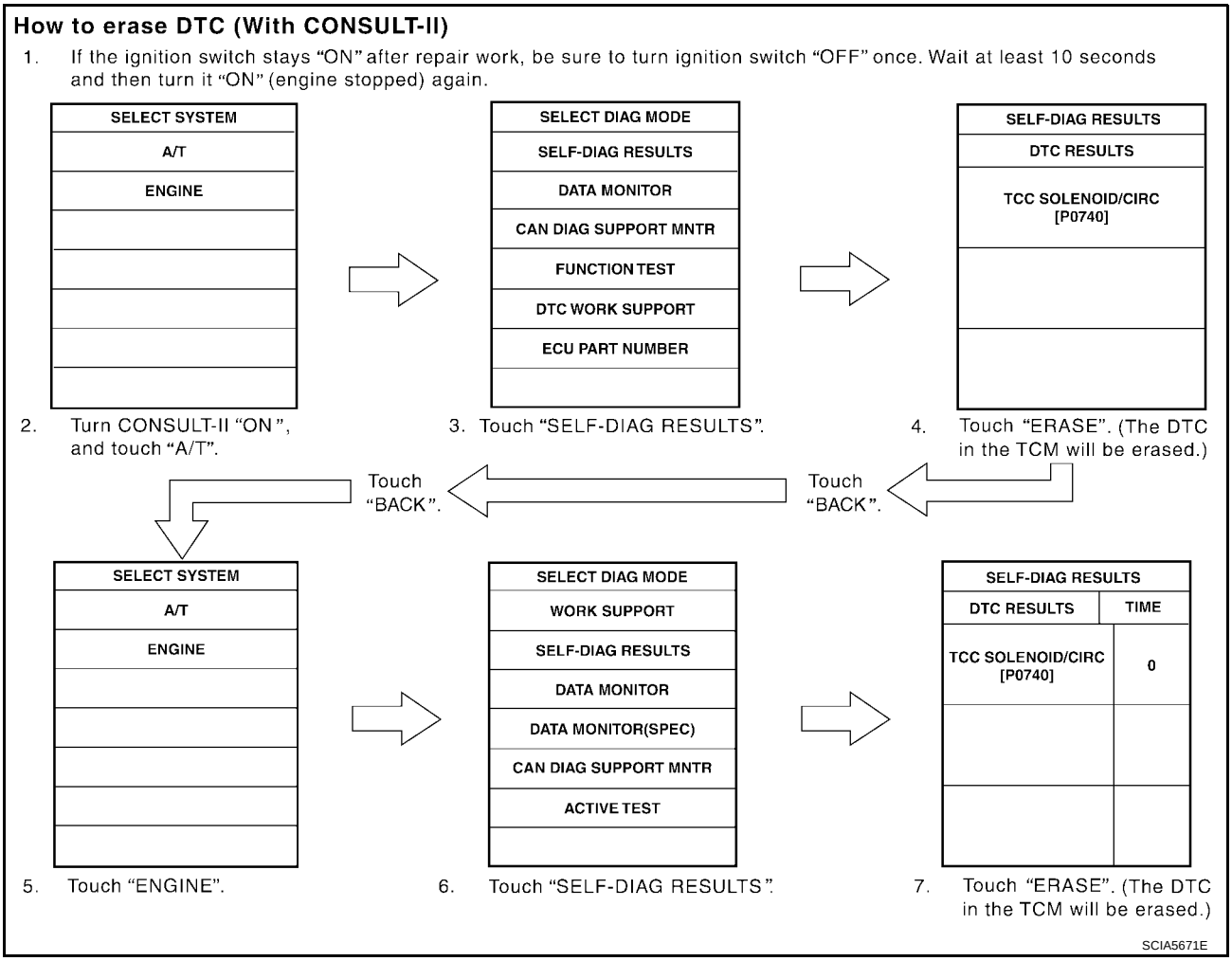

WITH GST

The emission related diagnostic information in the ECM can be erased by selecting Service $04 with GST.

NOTE:

If the DTC is not for A/T related items (see EC-8, "INDEX FOR DTC"), skip step 2.

1. If the ignition switch stays ON after repair work, be sure to turn ignition switch OFF once. Wait at least 10 seconds and then turn it ON (engine stopped) again.
2. Perform AT-38, "OBD-II Diagnostic Trouble Code (DTC)" . (The DTC in TCM will be erased)
3. Select Service $04 with GST (Generic Scan Tool).

No Tools

NOTE:

If the DTC is not for AT related items (see EC-8, "INDEX FOR DTC"), skip step 2.

1. If the ignition switch stays ON after repair work, be sure to turn ignition switch OFF once. Wait at least 10 seconds and then turn it ON (engine stopped) again.
2. Perform AT-38, "OBD-II Diagnostic Trouble Code (DTC)" . (The DTC in the TCM will be erased.)
3. Change the diagnostic test mode from Mode II to Mode I by depressing the accelerator pedal. Refer to EC-64, "HOW TO SWITCH DIAGNOSTIC TEST MODE" .

- **If the battery is disconnected, the emission-related diagnostic information will be lost within 24 hours.**
- **The following data are cleared when the ECM memory is erased.**

– Diagnostic trouble codes
– 1st trip diagnostic trouble codes
– Freeze frame data
– 1st trip freeze frame data
– System readiness test (SRT) codes

– Test values

Actual work procedures are explained using a DTC as an example. Be careful so that not only the DTC, but all of the data listed above, are cleared from the ECM memory during work procedures.

Malfunction Indicator Lamp (MIL)

UBS00KZS

DESCRIPTION

The MIL is located on the instrument panel.

1. The MIL will light up when the ignition switch is turned ON without the engine running. This is a bulb check.
   If the MIL does not light up, refer to DI-31, "WARNING LAMPS" , or see EC-635, "MIL AND DATA LINK CONNECTOR" .
2. When the engine is started, the MIL should go off.
   If the MIL remains on, the on board diagnostic system has detected an engine system malfunction.

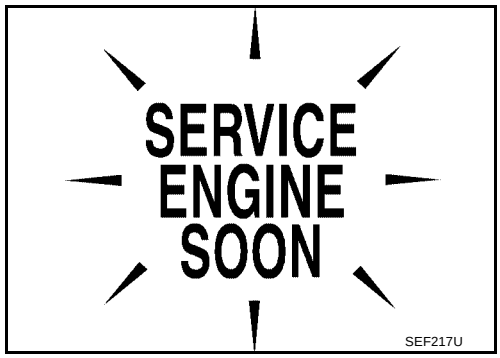

ON BOARD DIAGNOSTIC SYSTEM FUNCTION

The on board diagnostic system has the following three functions.

Diagnostic Test Mode	KEY and ENG. Status	Function	Explanation of Function
Mode I	Ignition switch in ON position Engine stopped	BULB CHECK	This function checks the MIL bulb for damage (blown, open circuit, etc.). If the MIL does not come on, check MIL circuit.
	Engine running	MALFUNCTION WARNING	This is a usual driving condition. When a malfunction is detected twice in two consecutive driving cycles (two trip detection logic), the MIL will light up to inform the driver that a malfunction has been detected. The following malfunctions will light up or blink the MIL in the 1st trip. ● Misfire (Possible three way catalyst damage) ● One trip detection diagnoses
Mode II	Ignition switch in ON position Engine stopped	SELF-DIAGNOSTIC RESULTS	This function allows DTCs and 1st trip DTCs to be read.

When there is an open circuit on MIL circuit, the ECM cannot warn the driver by lighting up MIL when there is malfunction on engine control system.
Therefore, when electrical controlled throttle and part of ECM related diagnoses are continuously detected as NG for 5 trips, ECM warns the driver that engine control system malfunctions and MIL circuit is open by means of operating fail-safe function.
The fail-safe function also operates when above diagnoses except MIL circuit are detected and demands the driver to repair the malfunction.

Engine operating condition in fail-safe mode	Engine speed will not rise more than 2,500 rpm due to the fuel cut

MIL Flashing Without DTC

When any SRT codes are not set, MIL may flash without DTC. For the details, refer to EC-57, "How to Display SRT Status" .

HOW TO SWITCH DIAGNOSTIC TEST MODE

NOTE:

- **It is better to count the time accurately with a clock.**
- **It is impossible to switch the diagnostic mode when an accelerator pedal position sensor circuit has a malfunction.**
- **Always ECM returns to Diagnostic Test Mode I after ignition switch is turned OFF.**

How to Set Diagnostic Test Mode II (Self-diagnostic Results)

1. Confirm that accelerator pedal is fully released, turn ignition switch ON and wait 3 seconds.
2. Repeat the following procedure quickly five times within 5 seconds.

a. Fully depress the accelerator pedal.

b. Fully release the accelerator pedal.

3. Wait 7 seconds, fully depress the accelerator pedal and keep it for approx. 10 seconds until the MIL starts blinking.

   NOTE:
   Do not release the accelerator pedal for 10 seconds if MIL may start blinking on the halfway of this 10 seconds. This blinking is displaying SRT status and is continued for another 10 seconds. For the details, refer to EC-57, "How to Display SRT Status" .

4. Fully release the accelerator pedal.
   ECM has entered to Diagnostic Test Mode II (Self-diagnostic results).

   NOTE:
   Wait until the same DTC (or 1st trip DTC) appears to confirm all DTCs certainly.

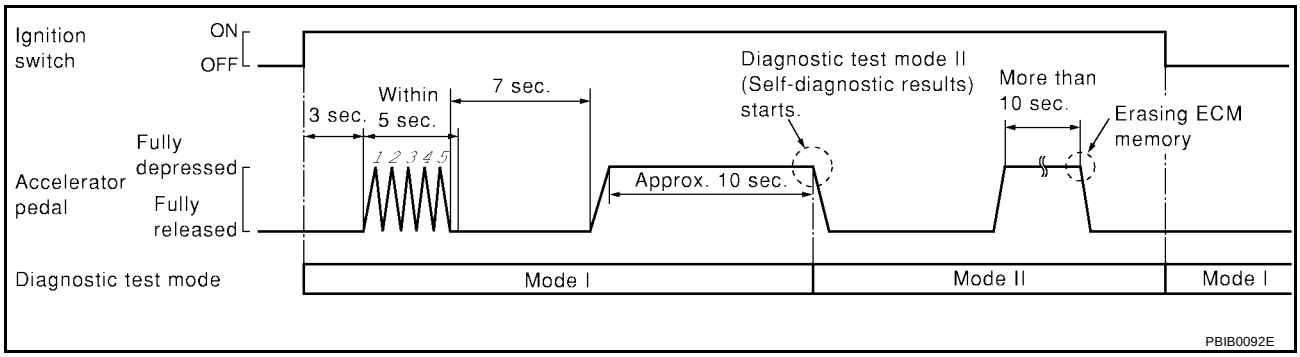

How to Erase Diagnostic Test Mode II (Self-diagnostic Results)

1. Set ECM in Diagnostic Test Mode II (Self-diagnostic results). Refer to EC-64, "How to Set Diagnostic Test Mode II (Self-diagnostic Results)" .
2. Fully depress the accelerator pedal and keep it for more than 10 seconds.
   The emission-related diagnostic information has been erased from the backup memory in the ECM.
3. Fully release the accelerator pedal, and confirm the DTC 0000 is displayed.

DIAGNOSTIC TEST MODE I — BULB CHECK

In this mode, the MIL on the instrument panel should stay ON. If it remains OFF, check the bulb. Refer to DI-31, "WARNING LAMPS" or see EC-635, "MIL AND DATA LINK CONNECTOR" .

DIAGNOSTIC TEST MODE I — MALFUNCTION WARNING

MIL	Condition
ON	When the malfunction is detected.
OFF	No malfunction.

This DTC number is clarified in Diagnostic Test Mode II (SELF-DIAGNOSTIC RESULTS)

DIAGNOSTIC TEST MODE II — SELF-DIAGNOSTIC RESULTS

In this mode, the DTC and 1st trip DTC are indicated by the number of blinks of the MIL as shown below.

The DTC and 1st trip DTC are displayed at the same time. If the MIL does not illuminate in diagnostic test mode I (Malfunction warning), all displayed items are 1st trip DTCs. If only one code is displayed when the MIL illuminates in diagnostic test mode II (SELF-DIAGNOSTIC RESULTS), it is a DTC; if two or more codes are displayed, they may be either DTCs or 1st trip DTCs. DTC No. is same as that of 1st trip DTC. These unidentified codes can be identified by using the CONSULT-II or GST. A DTC will be used as an example for how to read a code.

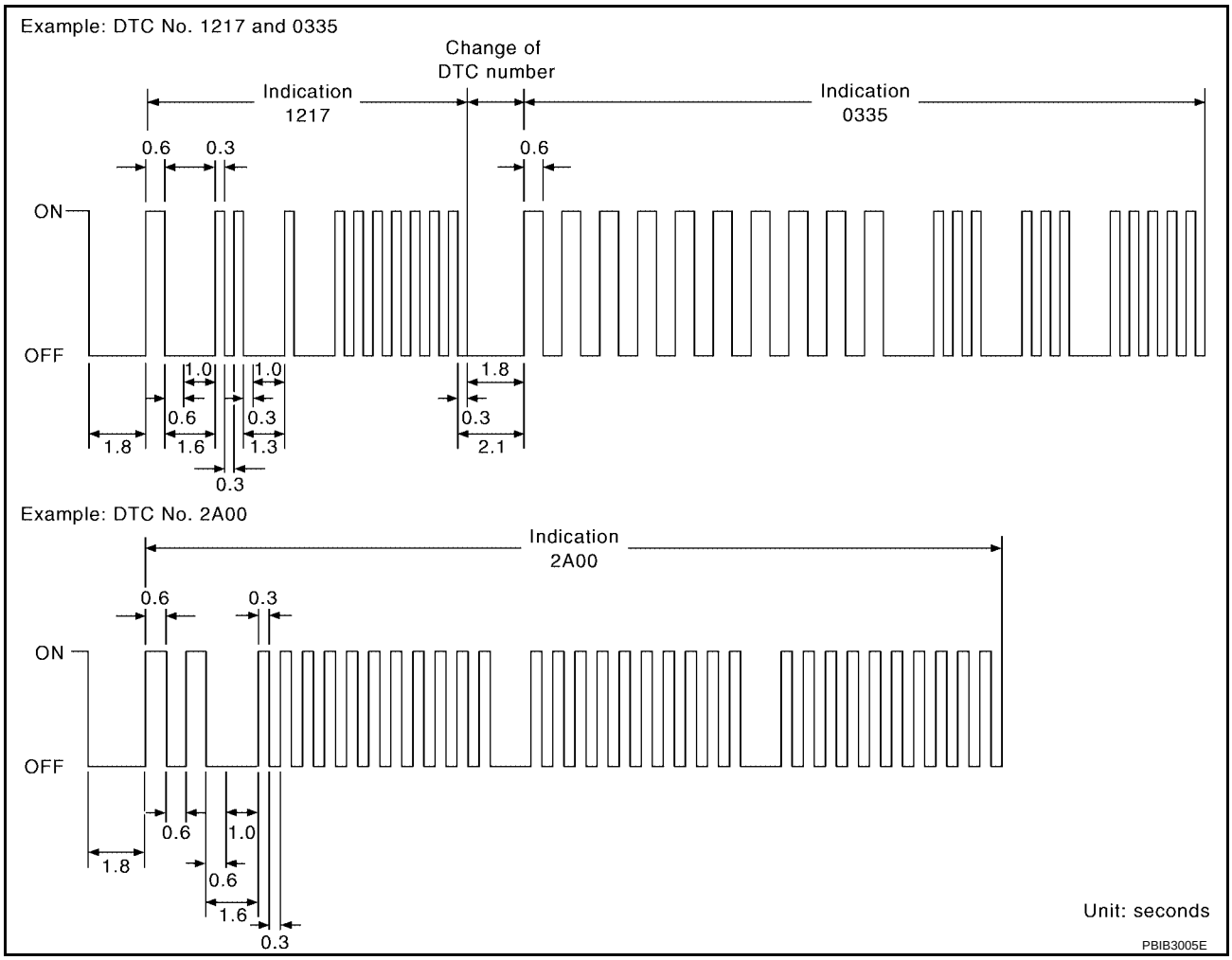

A particular trouble code can be identified by the number of four-digit numeral flashes. The “zero” is indicated by the number of ten flashes. The “A” is indicated by the number of eleven flash.The length of time the 1,000th-digit numeral flashes on and off is 1.2 seconds consisting of an ON (0.6-second) - OFF (0.6-second) cycle.

The 100th-digit numeral and lower digit numerals consist of a 0.3-second ON and 0.3-second OFF cycle.

A change from one digit numeral to another occurs at an interval of 1.0-second OFF. In other words, the later numeral appears on the display 1.3 seconds after the former numeral has disappeared.

A change from one trouble code to another occurs at an interval of 1.8-second OFF.

In this way, all the detected malfunctions are classified by their DTC numbers. The DTC 0000 refers to no malfunction. (See EC-8, "INDEX FOR DTC")

How to Erase Diagnostic Test Mode II (Self-diagnostic Results)

The DTC can be erased from the back up memory in the ECM by depressing accelerator pedal. Refer to EC-64, "How to Erase Diagnostic Test Mode II (Self-diagnostic Results)" .

- **If the battery is disconnected, the DTC will be lost from the backup memory within 24 hours.**
- **Be careful not to erase the stored memory before starting trouble diagnoses.**

OBD System Operation Chart

UBS00KZT

RELATIONSHIP BETWEEN MIL, 1ST TRIP DTC, DTC, AND DETECTABLE ITEMS

- When a malfunction is detected for the first time, the 1st trip DTC and the 1st trip freeze frame data are stored in the ECM memory.

- When the same malfunction is detected in two consecutive trips, the DTC and the freeze frame data are stored in the ECM memory, and the MIL will come on. For details, refer to EC-48, "Two Trip Detection Logic" .
- The MIL will go off after the vehicle is driven 3 times (driving pattern B) with no malfunction. The drive is counted only when the recorded driving pattern is met (as stored in the ECM). If another malfunction occurs while counting, the counter will reset.
- The DTC and the freeze frame data will be stored until the vehicle is driven 40 times (driving pattern A) without the same malfunction recurring (except for Misfire and Fuel Injection System). For Misfire and Fuel Injection System, the DTC and freeze frame data will be stored until the vehicle is driven 80 times (driving pattern C) without the same malfunction recurring. The “TIME” in “SELF-DIAGNOSTIC RESULTS” mode of CONSULT-II will count the number of times the vehicle is driven.
- The 1st trip DTC is not displayed when the self-diagnosis results in OK for the 2nd trip.

SUMMARY CHART

Items	Fuel Injection System	Misfire	Other
MIL (goes off)	3 (pattern B)	3 (pattern B)	3 (pattern B)
DTC, Freeze Frame Data (no display)	80 (pattern C)	80 (pattern C)	40 (pattern A)
1st Trip DTC (clear)	1 (pattern C), *1	1 (pattern C), *1	1 (pattern B)
1st Trip Freeze Frame Data (clear)	*1, *2	*1, *2	1 (pattern B)

For details about patterns B and C under “Fuel Injection System” and “Misfire”, see EC-68, "EXPLANATION FOR DRIVING PATTERNS FOR “MISFIRE <EXHAUST QUALITY DETERIORATION>”, “FUEL INJECTION SYSTEM”" .

For details about patterns A and B under Other, see EC-70, "EXPLANATION FOR DRIVING PATTERNS EXCEPT FOR “MISFIRE <EXHAUST QUALITY DETERIORATION>”, “FUEL INJECTION SYSTEM”" .

*1: Clear timing is at the moment OK is detected.

*2: Clear timing is when the same malfunction is detected in the 2nd trip.

RELATIONSHIP BETWEEN MIL, DTC, 1ST TRIP DTC AND DRIVING PATTERNS FOR “MISFIRE ” <EXHAUST QUALITY DETERIORATION>, “FUEL INJECTION SYSTEM”

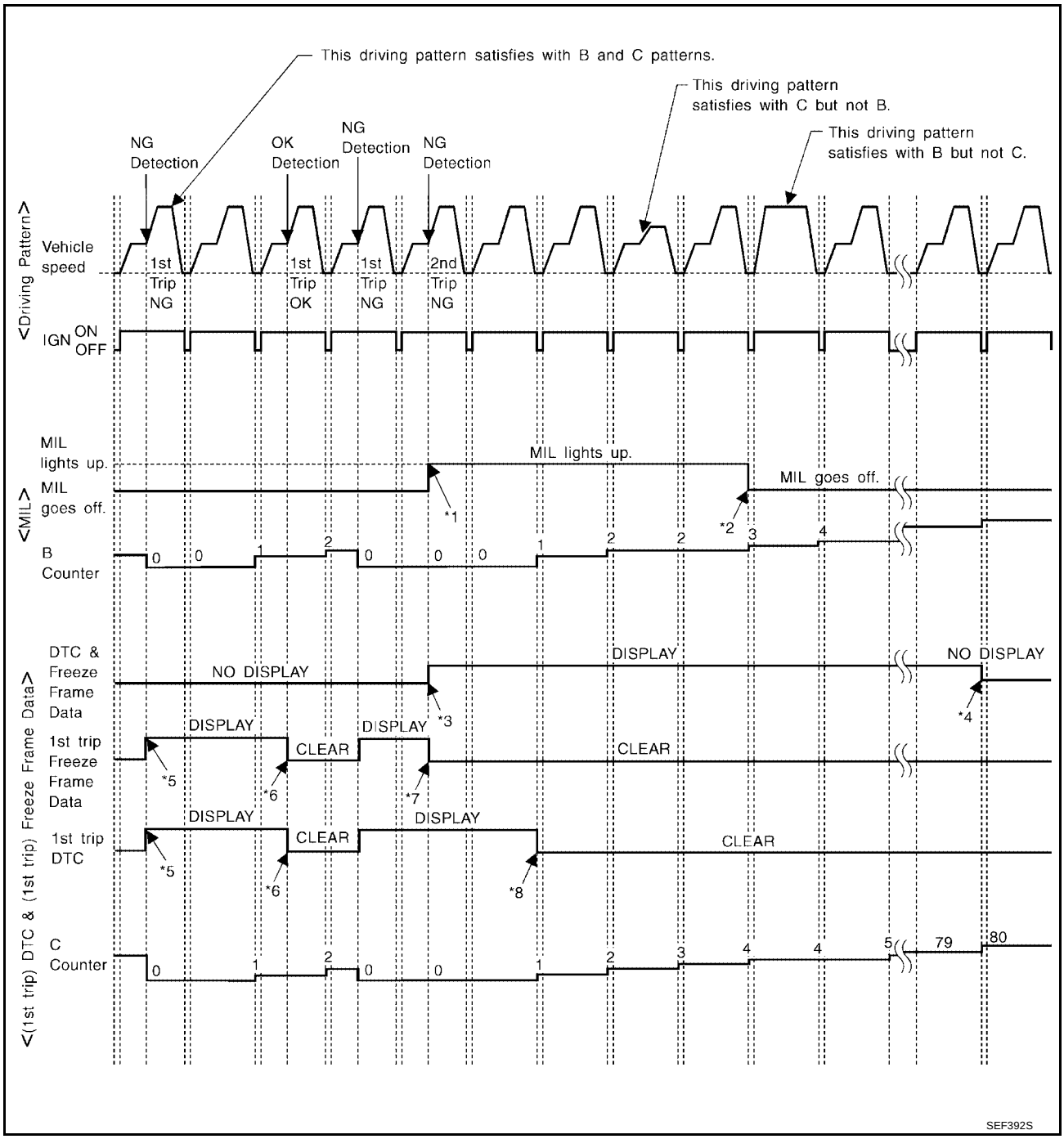

*1: When the same malfunction is detected in two consecutive trips, MIL will light up.

*2: MIL will go off after vehicle is driven 3 times (pattern B) without any malfunctions.

*3: When the same malfunction is detected in two consecutive trips, the DTC and the freeze frame data will be stored in ECM.

*4: The DTC and the freeze frame data will not be displayed any longer after vehicle is driven 80 times (pattern C) without the same malfunction. (The DTC and the freeze frame data still remain in ECM.)

*5: When a malfunction is detected for the first time, the 1st trip DTC and the 1st trip freeze frame data will be stored in ECM.

*6: The 1st trip DTC and the 1st trip freeze frame data will be cleared at the moment OK is detected.

*7: When the same malfunction is detected in the 2nd trip, the 1st trip freeze frame data will be cleared.

*8: 1st trip DTC will be cleared when vehicle is driven once (pattern C) without the same malfunction after DTC is stored in ECM.

EXPLANATION FOR DRIVING PATTERNS FOR “MISFIRE <EXHAUST QUALITY DETERIORATION>”, “FUEL INJECTION SYSTEM”

<Driving Pattern B>

Driving pattern B means the vehicle operation as follows:
All components and systems should be monitored at least once by the OBD system.

- The B counter will be cleared when the malfunction is detected once regardless of the driving pattern.
- The B counter will be counted up when driving pattern B is satisfied without any malfunction.
- The MIL will go off when the B counter reaches 3. (*2 in “OBD SYSTEM OPERATION CHART”)

<Driving Pattern C>

Driving pattern C means the vehicle operation as follows:
The following conditions should be satisfied at the same time:
Engine speed: (Engine speed in the freeze frame data) ±375 rpm
Calculated load value: (Calculated load value in the freeze frame data) x (1±0.1) [%]
Engine coolant temperature (T) condition:

- When the freeze frame data shows lower than 70°C (158°F), T should be lower than 70°C (158°F).
- When the freeze frame data shows higher than or equal to 70°C (158°F), T should be higher than or equal to 70°C (158°F).

Example:
If the stored freeze frame data is as follows:
Engine speed: 850 rpm, Calculated load value: 30%, Engine coolant temperature: 80°C (176°F)
To be satisfied with driving pattern C, the vehicle should run under the following conditions:
Engine speed: 475 - 1,225 rpm, Calculated load value: 27 - 33%, Engine coolant temperature: more than 70°C (158°F)

- The C counter will be cleared when the malfunction is detected regardless of vehicle conditions above.
- The C counter will be counted up when vehicle conditions above is satisfied without the same malfunction.
- The DTC will not be displayed after C counter reaches 80.
- The 1st trip DTC will be cleared when C counter is counted once without the same malfunction after DTC is stored in ECM.

RELATIONSHIP BETWEEN MIL, DTC, 1ST TRIP DTC AND DRIVING PATTERNS EXCEPT FOR "MISFIRE <EXHAUST QUALITY DETERIORATION>", "FUEL INJECTION SYSTEM"

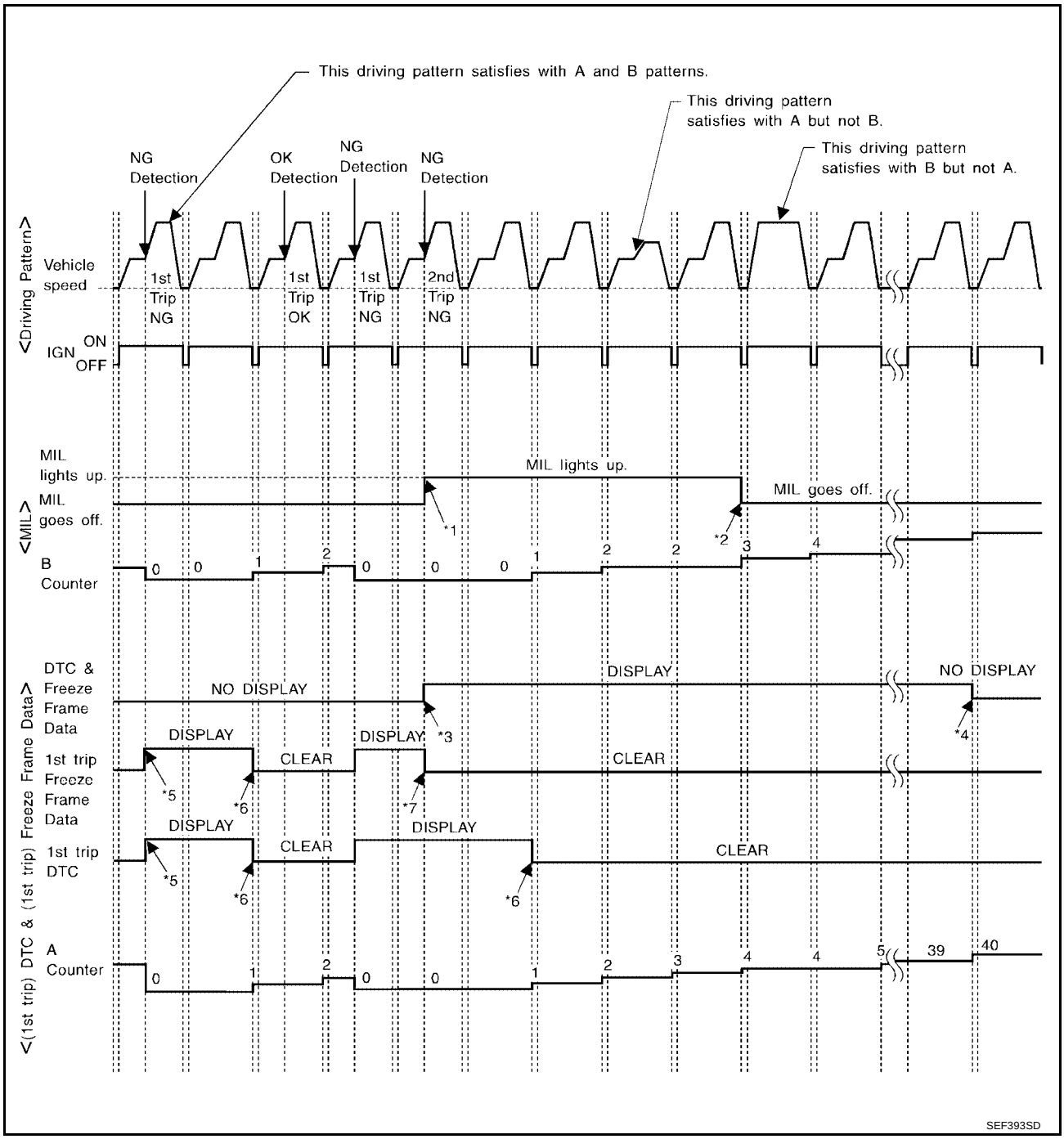

*1: When the same malfunction is detected in two consecutive trips, MIL will light up.

*2: MIL will go off after vehicle is driven 3 times (pattern B) without any malfunctions.

*3: When the same malfunction is detected in two consecutive trips, the DTC and the freeze frame data will be stored in ECM.

*4: The DTC and the freeze frame data will not be displayed any longer after vehicle is driven 40 times (pattern A) without the same malfunction. (The DTC and the freeze frame data still remain in ECM.)

*5: When a malfunction is detected for the first time, the 1st trip DTC and the 1st trip freeze frame data will be stored in ECM.

*6: 1st trip DTC will be cleared after vehicle is driven once (pattern B) without the same malfunction.

*7: When the same malfunction is detected in the 2nd trip, the 1st trip freeze frame data will be cleared.

EXPLANATION FOR DRIVING PATTERNS EXCEPT FOR "MISFIRE <EXHAUST QUALITY DETERIORATION>", "FUEL INJECTION SYSTEM"

<Driving Pattern A>

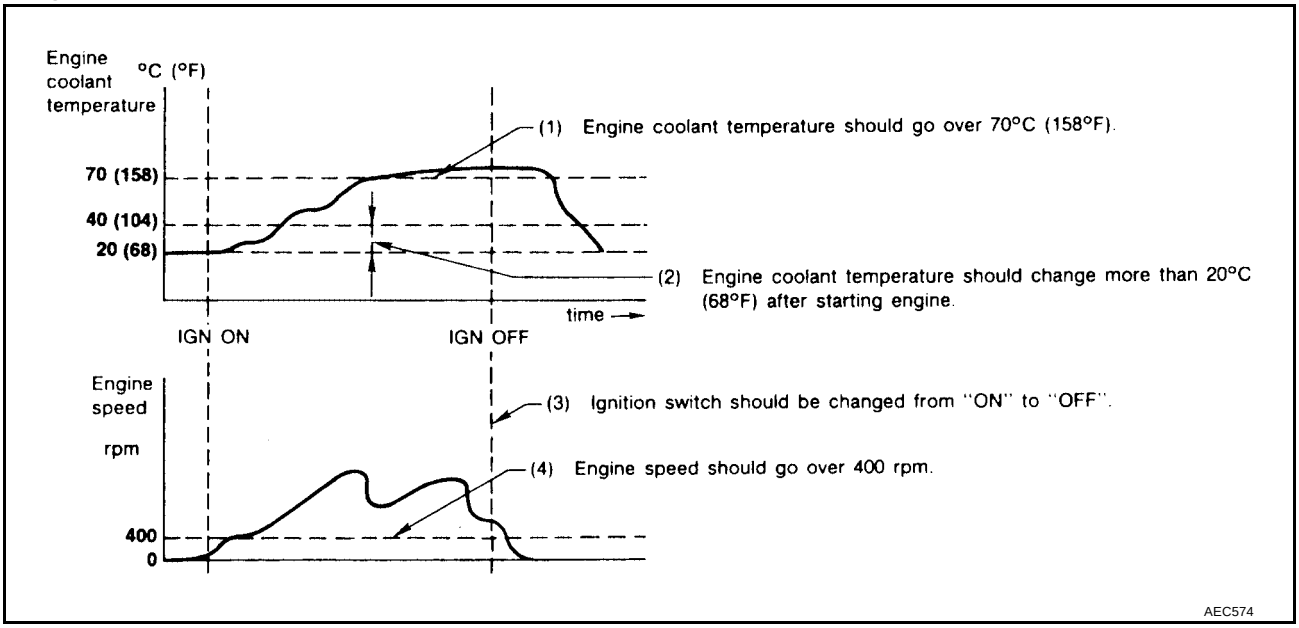

- The A counter will be cleared when the malfunction is detected regardless of (1) - (4).
- The A counter will be counted up when (1) - (4) are satisfied without the same malfunction.
- The DTC will not be displayed after the A counter reaches 40.

<Driving Pattern B>

Driving pattern B means the vehicle operation as follows:
All components and systems should be monitored at least once by the OBD system.

- The B counter will be cleared when the malfunction is detected once regardless of the driving pattern.
- The B counter will be counted up when driving pattern B is satisfied without any malfunctions.
- The MIL will go off when the B counter reaches 3 (*2 in OBD SYSTEM OPERATION CHART).

BASIC SERVICE PROCEDURE

PFP:00018

Basic Inspection

UBS00KZU

1. INSPECTION START

1. Check service records for any recent repairs that may indicate a related malfunction, or a current need for scheduled maintenance.
2. Open engine hood and check the following:
   - Harness connectors for improper connections
   - Wiring harness for improper connections, pinches and cut
   - Vacuum hoses for splits, kinks and improper connections
   - Hoses and ducts for leaks
   - Air cleaner clogging
   - Gasket

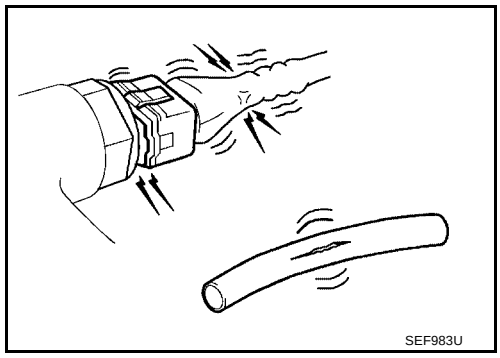

3. Confirm that electrical or mechanical loads are not applied.
   - Headlamp switch is OFF.
   - Air conditioner switch is OFF.
   - Rear window defogger switch is OFF.
   - Steering wheel is in the straight-ahead position, etc.
4. Start engine and warm it up until engine coolant temperature indicator points the middle of gauge.
   Ensure engine stays below 1,000 rpm.

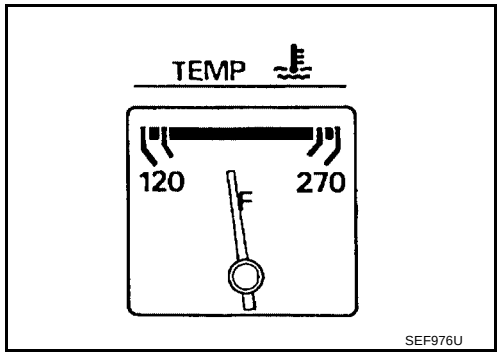

5. Run engine at about 2,000 rpm for about 2 minutes under no load.
6. Make sure that no DTC is displayed with CONSULT-II or GST.

OK or NG

OK >> GO TO 3.
NG >> GO TO 2.

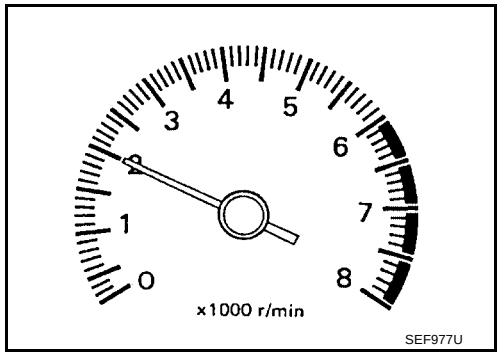

2. REPAIR OR REPLACE

Repair or replace components as necessary according to corresponding Diagnostic Procedure.

>> GO TO 3.

3. CHECK TARGET IDLE SPEED

With CONSULT-II

1. Run engine at about 2,000 rpm for about 2 minutes under no load.
2. Rev engine (2,000 to 3,000 rpm) two or three times under no load, then run engine at idle speed for about 1 minute.

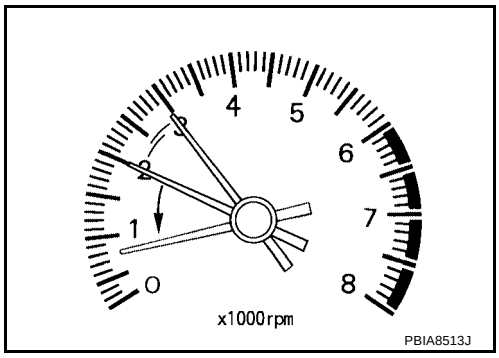

3. Read idle speed in “DATA MONITOR” mode with CONSULT-II. Refer to EC-76, "IDLE SPEED" .

   650 ± 50 rpm (in P or N position)

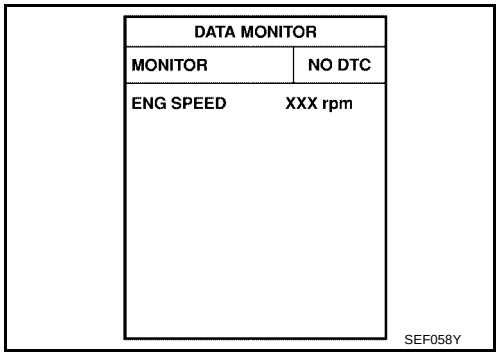

Without CONSULT-II

1. Run engine at about 2,000 rpm for about 2 minutes under no load.
2. Rev engine (2,000 to 3,000 rpm) two or three times under no load, then run engine at idle speed for about 1 minute.
3. Check idle speed.
   Refer to EC-76, "IDLE SPEED" .

   650 ± 50 rpm (in P or N position)

OK or NG

OK >> GO TO 10.
NG >> GO TO 4.

4. PERFORM ACCELERATOR PEDAL RELEASED POSITION LEARNING

1. Stop engine.
2. Perform EC-78, "Accelerator Pedal Released Position Learning" .

>> GO TO 5.

5. PERFORM THROTTLE VALVE CLOSED POSITION LEARNING

Perform EC-78, "Throttle Valve Closed Position Learning" .

>> GO TO 6.

6. PERFORM IDLE AIR VOLUME LEARNING

Refer to EC-78, "Idle Air Volume Learning" .

Is Idle Air Volume Learning carried out successfully?

Yes or No

Yes >> GO TO 7.

No >> 1. Follow the instruction of Idle Air Volume Learning.
2. GO TO 4.

7. CHECK TARGET IDLE SPEED AGAIN

With CONSULT-II

1. Start engine and warm it up to normal operating temperature.
2. Read idle speed in “DATA MONITOR” mode with CONSULT-II.
Refer to EC-76, "IDLE SPEED" .

650 ± 50 rpm (in P or N position)

Without CONSULT-II

1. Start engine and warm it up to normal operating temperature.
2. Check idle speed.
Refer to EC-76, "IDLE SPEED" .

650 ± 50 rpm (in P or N position)

OK or NG

OK >> GO TO 10.

NG >> GO TO 8.

8. DETECT MALFUNCTIONING PART

Check the following.

- Check camshaft position sensor (PHASE) and circuit. Refer to EC-347, "DTC P0340 CMP SENSOR (PHASE)" .
- Check crankshaft position sensor (POS) and circuit. Refer to EC-340, "DTC P0335 CKP SENSOR (POS)" .

OK or NG

OK >> GO TO 9.

NG >> 1. Repair or replace.
2. GO TO 4.

9. CHECK ECM FUNCTION

1. Substitute another known-good ECM to check ECM function. (ECM may be the cause of an incident, but this is a rare case.)
2. Perform initialization of IVIS (NATS) system and registration of all IVIS (NATS) ignition key IDs. Refer to BL-139, "ECM Re-communicating Function" .

>> GO TO 4.

10. CHECK IGNITION TIMING

1. Run engine at idle.
2. Check ignition timing with a timing light.
   Refer to EC-76, "IGNITION TIMING" .

   15 ± 5° BTDC (in P or N position)

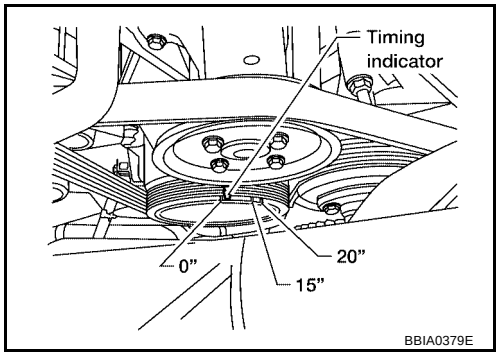

OK or NG

OK >> GO TO 19.
NG >> GO TO 11.

11. PERFORM ACCELERATOR PEDAL RELEASED POSITION LEARNING

1. Stop engine.
2. Perform EC-78, "Accelerator Pedal Released Position Learning" .

>> GO TO 12.

12. PERFORM THROTTLE VALVE CLOSED POSITION LEARNING

Perform EC-78, "Throttle Valve Closed Position Learning" .

>> GO TO 13.

13. PERFORM IDLE AIR VOLUME LEARNING

Refer to EC-78, "Idle Air Volume Learning" .
Is Idle Air Volume Learning carried out successfully?

Yes or No

Yes >> GO TO 14.
No >> 1. Follow the instruction of Idle Air Volume Learning.
2. GO TO 4.

14. CHECK TARGET IDLE SPEED AGAIN

With CONSULT-II

1. Start engine and warm it up to normal operating temperature.
2. Read idle speed in “DATA MONITOR” mode with CONSULT-II.
   Refer to EC-76, "IDLE SPEED" .

   650 ± 50 rpm (in P or N position)

Without CONSULT-II

1. Start engine and warm it up to normal operating temperature.
2. Check idle speed.
   Refer to EC-76, "IDLE SPEED" .

   650 ± 50 rpm (in P or N position)

OK or NG

OK >> GO TO 15.
NG >> GO TO 17.

15. CHECK IGNITION TIMING AGAIN

1. Run engine at idle.
2. Check ignition timing with a timing light.
   Refer to EC-76, "IGNITION TIMING" .

15 ± 5° BTDC (in P or N position)

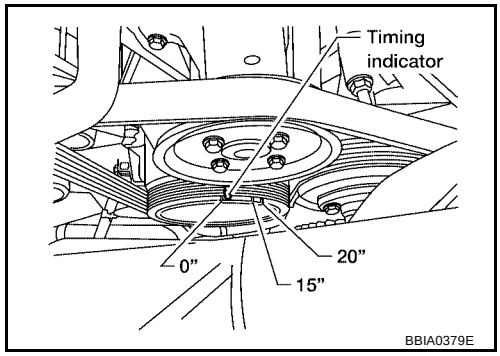

OK or NG

OK >> GO TO 19.
NG >> GO TO 16.

16. CHECK TIMING CHAIN INSTALLATION

Check timing chain installation. Refer to EM-37, "TIMING CHAIN" .

OK or NG

OK >> GO TO 17.
NG >> 1. Repair the timing chain installation.
2. GO TO 4.

17. DETECT MALFUNCTIONING PART

Check the following.

- Check camshaft position sensor (PHASE) and circuit. Refer to EC-347, "DTC P0340 CMP SENSOR (PHASE)" .
- Check crankshaft position sensor (POS) and circuit. Refer to EC-340, "DTC P0335 CKP SENSOR (POS)" .

OK or NG

OK >> GO TO 18.
NG >> 1. Repair or replace.
2. GO TO 4.

18. CHECK ECM FUNCTION

1. Substitute another known-good ECM to check ECM function. (ECM may be the cause of an incident, but this is a rare case.)
2. Perform initialization of IVIS (NATS) system and registration of all IVIS (NATS) ignition key IDs. Refer to BL-139, "ECM Re-communicating Function" .

>> GO TO 4.

19. INSPECTION END

Did you replace ECM, referring this Basic Inspection procedure?

Yes or No

Yes >> 1. Perform EC-77, "VIN Registration" .
2. **INSPECTION END**

No >> **INSPECTION END**

Idle Speed and Ignition Timing Check

UBS00KZV

IDLE SPEED

With CONSULT-II

Check idle speed in “DATA MONITOR” mode with CONSULT-II.

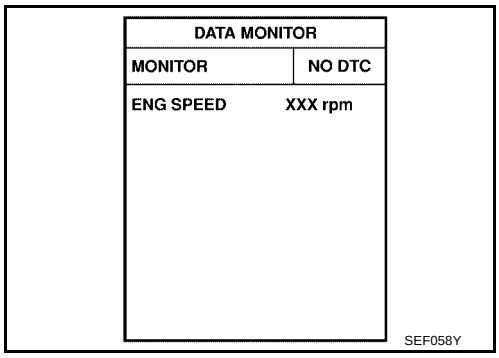

With GST

Check idle speed with GST.

IGNITION TIMING

Any of following two methods may be used.

Method A

1. Attach timing light to loop wire as shown.

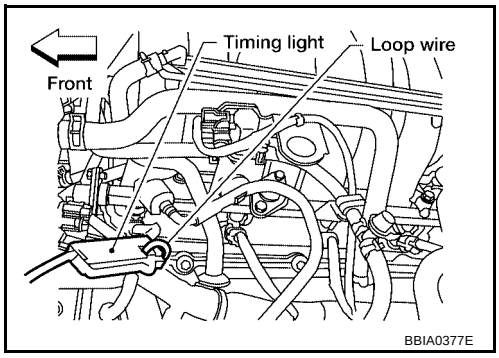

2. Check ignition timing.

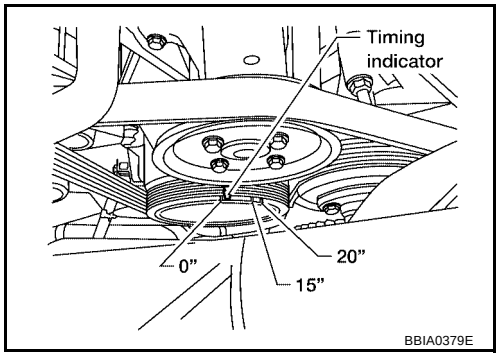

Method B

1. Remove ignition coil No.1.

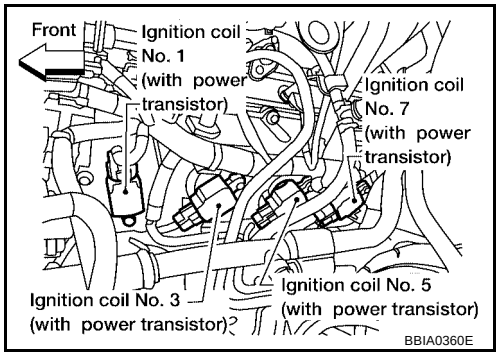

2. Connect ignition coil No.1 and spark plug with suitable high-tension wire as shown, and attach timing light clamp to this wire.

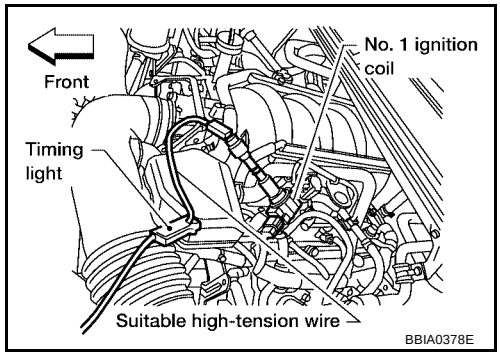

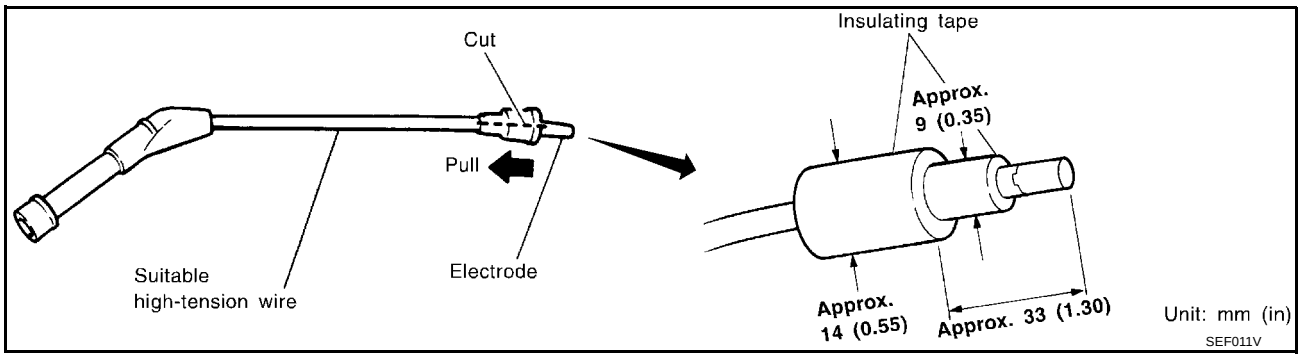

3. Check ignition timing.

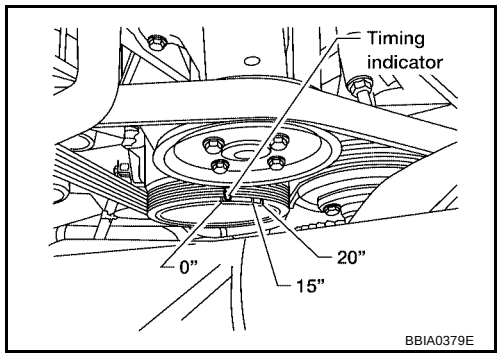

VIN Registration

UBS00KZX

DESCRIPTION

VIN Registration is an operation to registering VIN in ECM. It must be performed each time ECM is replaced.

NOTE:

Accurate VIN which is registered in ECM may be required for Inspection & Maintenance (I/M).

OPERATION PROCEDURE

With CONSULT-II

1. Check the VIN of the vehicle and note it. Refer to GI-47, "IDENTIFICATION INFORMATION" .
2. Turn ignition switch ON and engine stopped.
3. Select “VIN REGISTRATION” in “WORK SUPPORT” mode.
4. Follow the instruction of CONSULT-II display.

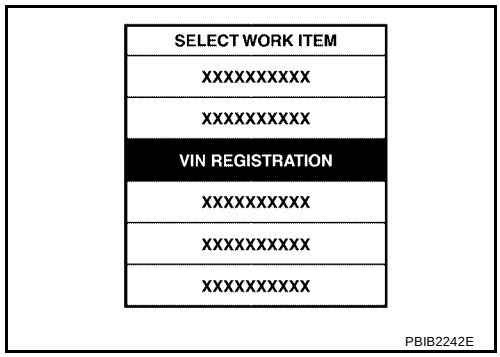

Accelerator Pedal Released Position Learning

UBS00KZY

DESCRIPTION

Accelerator Pedal Released Position Learning is an operation to learn the fully released position of the accelerator pedal by monitoring the accelerator pedal position sensor output signal. It must be performed each time harness connector of accelerator pedal position sensor or ECM is disconnected.

OPERATION PROCEDURE

1. Make sure that accelerator pedal is fully released.
2. Turn ignition switch ON and wait at least 2 seconds.
3. Turn ignition switch OFF and wait at least 10 seconds.
4. Turn ignition switch ON and wait at least 2 seconds.
5. Turn ignition switch OFF and wait at least 10 seconds.

Throttle Valve Closed Position Learning

UBS00KZZ

DESCRIPTION

Throttle Valve Closed Position Learning is an operation to learn the fully closed position of the throttle valve by monitoring the throttle position sensor output signal. It must be performed each time harness connector of electric throttle control actuator or ECM is disconnected.

OPERATION PROCEDURE

1. Make sure that accelerator pedal is fully released.
2. Turn ignition switch ON.
3. Turn ignition switch OFF wait at least 10 seconds.
   Make sure that throttle valve moves during above 10 seconds by confirming the operating sound.

Idle Air Volume Learning

UBS00L00

DESCRIPTION

Idle Air Volume Learning is an operation to learn the idle air volume that keeps each engine within the specific range. It must be performed under any of the following conditions:

- Each time electric throttle control actuator or ECM is replaced.
- Idle speed or ignition timing is out of specification.

PREPARATION

Before performing Idle Air Volume Learning, make sure that all of the following conditions are satisfied.
Learning will be cancelled if any of the following conditions are missed for even a moment.

- Battery voltage: More than 12.9V (At idle)
- Engine coolant temperature: 70 - 100°C (158 - 212°F)
- Park/Neutral position (PNP) switch: ON
- Electric load switch: OFF
  (Air conditioner, headlamp, rear window defogger)
  On vehicles equipped with daytime light systems, if the parking brake is applied before the engine is start the headlamp will not be illuminated.
- Steering wheel: Neutral (Straight-ahead position)
- Vehicle speed: Stopped
- Transmission: Warmed-up
  - With CONSULT-II: Drive vehicle until “ATF TEMP SE 1” in “DATA MONITOR” mode of “A/T” system indicates less than 0.9V.
  - Without CONSULT-II: Drive vehicle for 10 minutes.

OPERATION PROCEDURE

With CONSULT-II

1. Perform EC-78, "Accelerator Pedal Released Position Learning" .
2. Perform EC-78, "Throttle Valve Closed Position Learning" .
3. Start engine and warm it up to normal operating temperature.
4. Check that all items listed under the topic PREPARATION (previously mentioned) are in good order.

5. Select “IDLE AIR VOL LEARN” in “WORK SUPPORT” mode.

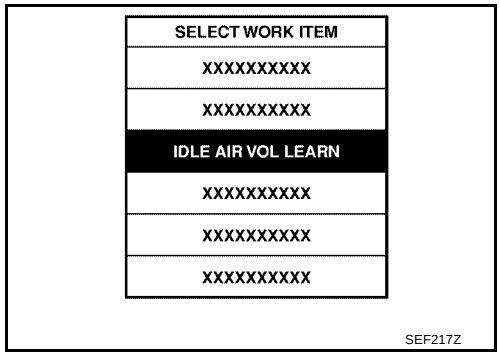

6. Touch “START” and wait 20 seconds.

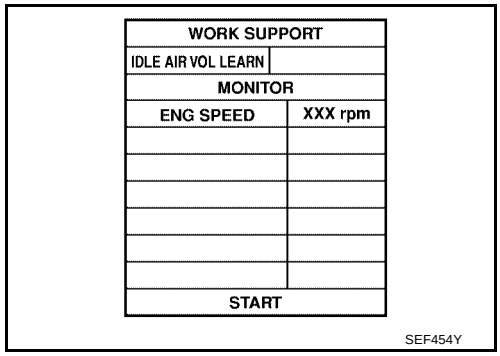

7. Make sure that “CMPLT” is displayed on CONSULT-II screen. If “CMPLT” is not displayed, Idle Air Volume Learning will not be carried out successfully. In this case, find the cause of the incident by referring to the DIAGNOSTIC PROCEDURE below.
8. Rev up the engine two or three times and make sure that idle speed and ignition timing are within the specifications.

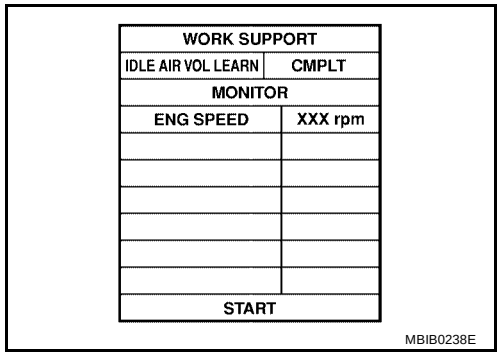

ITEM	SPECIFICATION
Idle speed	650 ± 50 rpm (in P or N position)
Ignition timing	15 ± 5° BTDC (in P or N position)

Without CONSULT-II

NOTE:

- **It is better to count the time accurately with a clock.**
- **It is impossible to switch the diagnostic mode when an accelerator pedal position sensor circuit has a malfunction.**

1. Perform EC-78, "Accelerator Pedal Released Position Learning" .
2. Perform EC-78, "Throttle Valve Closed Position Learning" .
3. Start engine and warm it up to normal operating temperature.
4. Check that all items listed under the topic PREPARATION (previously mentioned) are in good order.
5. Turn ignition switch OFF and wait at least 10 seconds.
6. Confirm that accelerator pedal is fully released, turn ignition switch ON and wait 3 seconds.
7. Repeat the following procedure quickly five times within 5 seconds.

a. Fully depress the accelerator pedal.
b. Fully release the accelerator pedal.

8. Wait 7 seconds, fully depress the accelerator pedal and keep it for approx. 20 seconds until the MIL stops blinking and turned ON.
9. Fully release the accelerator pedal within 3 seconds after the MIL turned ON.
10. Start engine and let it idle.

11. Wait 20 seconds.

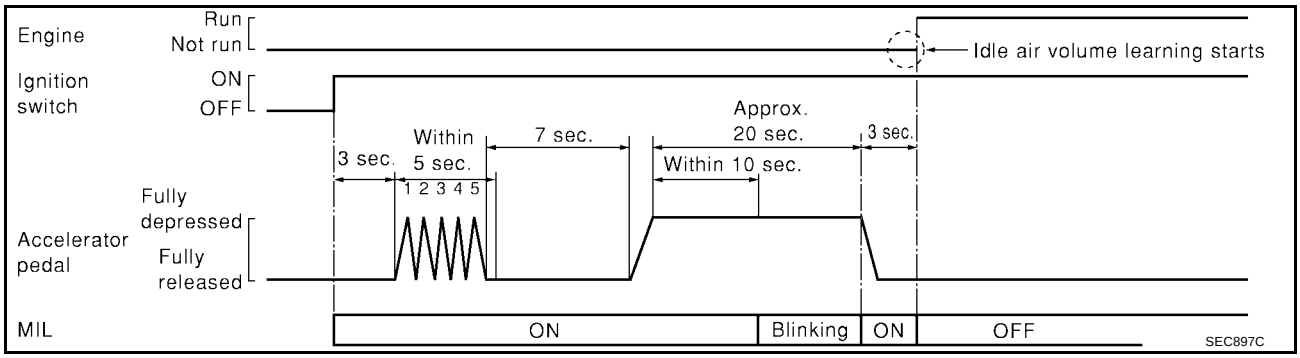

12. Rev up the engine two or three times and make sure that idle speed and ignition timing are within the specifications.

ITEM	SPECIFICATION
Idle speed	650 ± 50 rpm (in P or N position)
Ignition timing	15 ± 5° BTDC (in P or N position)

13. If idle speed and ignition timing are not within the specification, Idle Air Volume Learning will not be carried out successfully. In this case, find the cause of the incident by referring to the DIAGNOSTIC PROCEDURE below.

DIAGNOSTIC PROCEDURE

If idle air volume learning cannot be performed successfully, proceed as follows:

1. **Check that throttle valve is fully closed.**
2. **Check PCV valve operation.**
3. **Check that downstream of throttle valve is free from air leakage.**
4. **When the above three items check out OK, engine component parts and their installation condition are questionable. Check and eliminate the cause of the incident.**
   It is useful to perform **EC-134, "TROUBLE DIAGNOSIS - SPECIFICATION VALUE"** **.**
5. **If any of the following conditions occur after the engine has started, eliminate the cause of the incident and perform Idle Air Volume Learning all over again:**
   - **Engine stalls.**
   - **Erroneous idle.**

Fuel Pressure Check

UBS00L01

FUEL PRESSURE RELEASE

With CONSULT-II

1. Turn ignition switch ON.
2. Perform “FUEL PRESSURE RELEASE” in “WORK SUPPORT” mode with CONSULT-II.
3. Start engine.
4. After engine stalls, crank it two or three times to release all fuel pressure.
5. Turn ignition switch OFF.

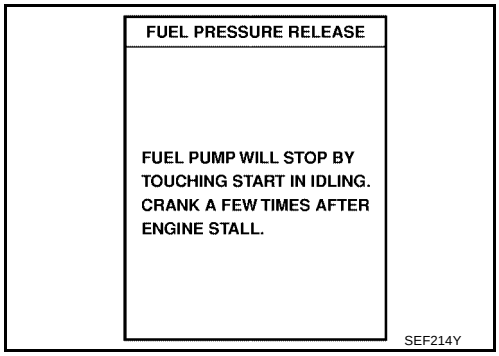

Without CONSULT-II

1. Remove fuel pump fuse located in IPDM E/R.
2. Start engine.
3. After engine stalls, crank it two or three times to release all fuel pressure.
4. Turn ignition switch OFF.
5. Reinstall fuel pump fuse after servicing fuel system.

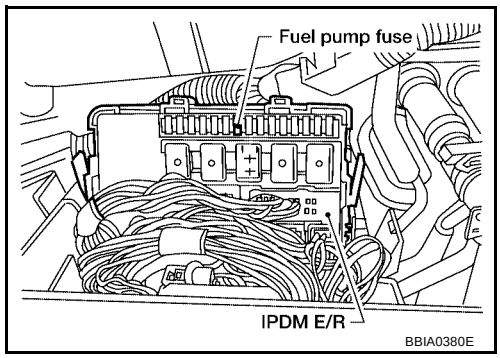

FUEL PRESSURE CHECK

CAUTION:

- **Before disconnecting fuel line, release fuel pressure from fuel line to eliminate danger.**
- **Be careful not to scratch or get the fuel hose connection area dirty when servicing, so that the quick connector o-ring maintains sealability.**
- **Use Fuel Pressure Gauge Kit J-44321 and Fuel Pressure Adapter J-44321-6 to check fuel pressure.**
- **Do not perform fuel pressure check with electrical system operating (i.e. lights, rear defog, A/C, etc.). Fuel pressure gauge may indicate false readings due to varying engine loads and changes in manifold vacuum.**

NOTE:

Prepare pans or saucers under the disconnected fuel line because the fuel may spill out. The fuel pressure cannot be completely released because JA60 models do not have fuel return system.

1. Release fuel pressure to zero. Refer to EC-80, "FUEL PRESSURE RELEASE" .
2. Remove engine cover.
3. Remove fuel hose using Quick Connector Release J-45488. Refer to EM-17, "INTAKE MANIFOLD" .
   - Do not twist or kink fuel hose because it is plastic hose.
   - Do not remove fuel hose from quick connector.
   - Keep fuel hose connections clean.
4. Install Fuel Pressure Adapter J-44321-6 and Fuel Pressure Gauge (from kit J-44321) as shown in figure.
   - Do not distort or bend fuel rail tube when installing fuel pressure gauge adapter.
   - When reconnecting fuel hose, check the original fuel hose for damage and abnormality.
5. Turn ignition switch ON (reactivate fuel pump), and check for fuel leakage.
6. Start engine and check for fuel leakage.
7. Read the indication of fuel pressure gauge.
   - During fuel pressure check, check for fuel leakage from fuel connection every 3 minutes.

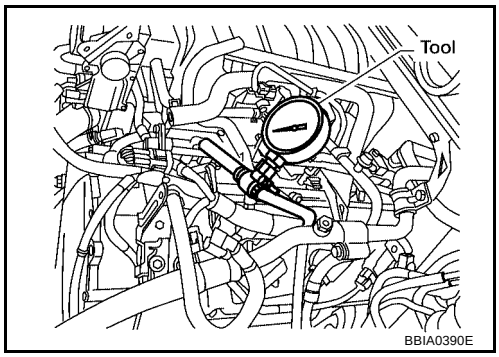

At idling: Approximately 350 kPa (3.57 kg/cm^2 , 51 psi)

8. If result is unsatisfactory, go to next step.
9. Check the following.
   - Fuel hoses and fuel tubes for clogging
   - Fuel filter for clogging
   - Fuel pump
   - Fuel pressure regulator for clogging

   If OK, replace fuel pressure regulator.
   If NG, repair or replace.
10. Before disconnecting Fuel Pressure Gauge and Fuel Pressure Adapter J-44321-6, release fuel pressure to zero. Refer to EC-80, "FUEL PRESSURE RELEASE" .

TROUBLE DIAGNOSIS

PFP:00004

Trouble Diagnosis Introduction

UBS00L02

INTRODUCTION

The engine has an ECM to control major systems such as fuel control, ignition control, idle air control system, etc. The ECM accepts input signals from sensors and instantly drives actuators. It is essential that both input and output signals are proper and stable. At the same time, it is important that there are no malfunctions such as vacuum leaks, fouled spark plugs, or other malfunctions with the engine.

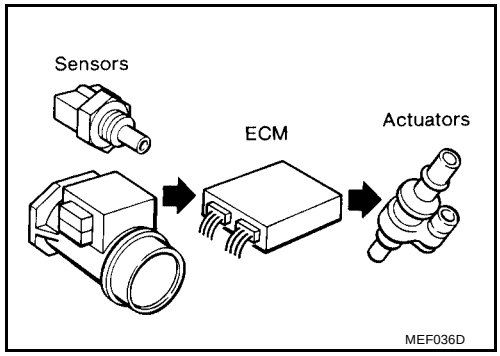

It is much more difficult to diagnose an incident that occurs intermittently rather than continuously. Most intermittent incidents are caused by poor electric connections or improper wiring. In this case, careful checking of suspected circuits may help prevent the replacement of good parts.

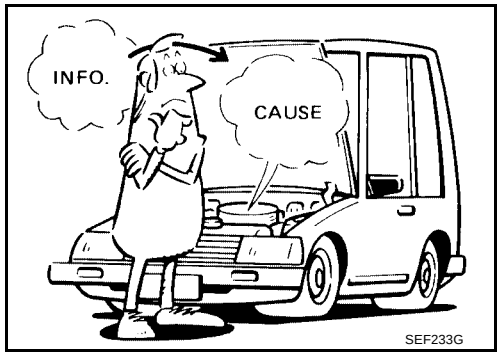

A visual check only may not find the cause of the incidents. A road test with CONSULT-II (or GST) or a circuit tester connected should be performed. Follow the Work Flow on EC-84, "WORK FLOW" .
Before undertaking actual checks, take a few minutes to talk with a customer who approaches with a driveability complaint. The customer can supply good information about such incidents, especially intermittent ones. Find out what symptoms are present and under what conditions they occur. A Diagnostic Worksheet like the example on EC-88, "Worksheet Sample" should be used.
Start your diagnosis by looking for conventional malfunctions first. This will help troubleshoot driveability malfunctions on an electronically controlled engine vehicle.

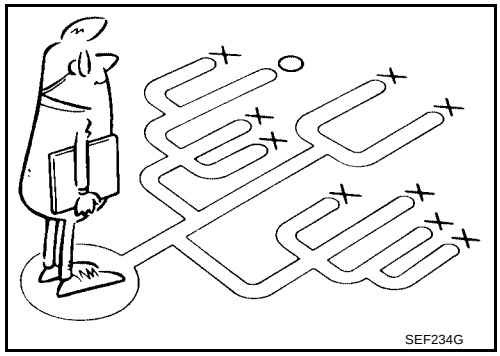

WORK FLOW

Overall Sequence

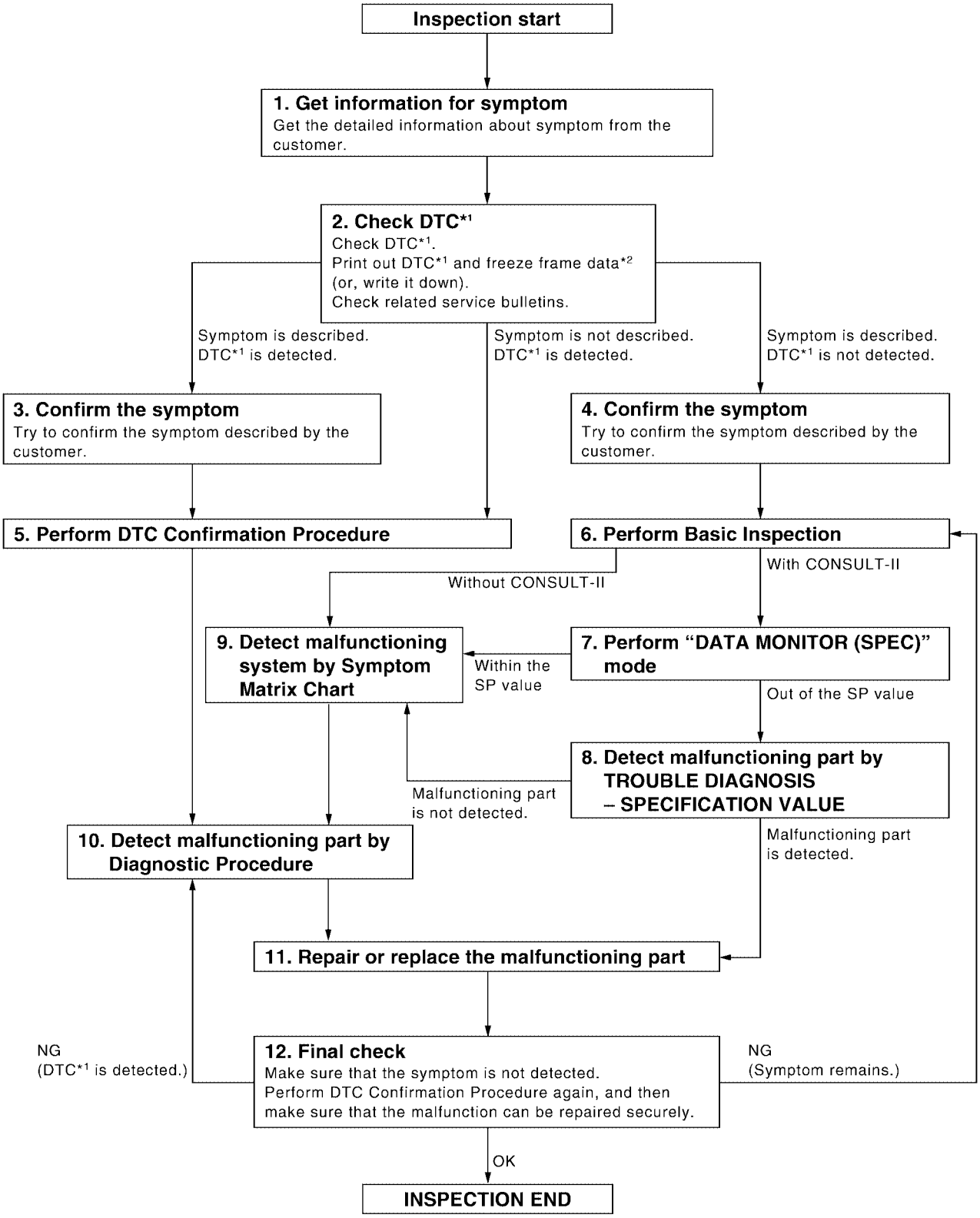

*1: Include 1st trip DTC.
*2: Include 1st trip freeze frame data.

PBIB2267E

Detailed Flow

1. GET INFORMATION FOR SYMPTOM

Get the detailed information from the customer about the symptom (the condition and the environment when the incident/malfunction occurred) using the EC-88, "Worksheet Sample" .

>> GO TO 2.

2. CHECK DTC*1

1. Check DTC*1 .
2. Perform the following procedure if DTC*1 is displayed.

- Record DTC*1 and freeze frame data*2 . (Print them out with CONSULT-II or GST.)
- Erase DTC*1 . (Refer to EC-61, "HOW TO ERASE EMISSION-RELATED DIAGNOSTIC INFORMATION" .)
- Study the relationship between the cause detected by DTC*1 and the symptom described by the customer. (Symptom Matrix Chart is useful. Refer to EC-92, "Symptom Matrix Chart" .)

3. Check related service bulletins for information.

Is any symptom described and any DTC detected?

Symptom is described, DTC*1 is displayed>>GO TO 3.
Symptom is described, DTC*1 is not displayed>>GO TO 4.
Symptom is not described, DTC*1 is displayed>>GO TO 5.

3. CONFIRM THE SYMPTOM

Try to confirm the symptom described by the customer (except MIL ON).
DIAGNOSIS WORK SHEET is useful to verify the incident.
Connect CONSULT-II to the vehicle in “DATA MONITOR (AUTO TRIG)” mode and check real time diagnosis results.
Verify relation between the symptom and the condition when the symptom is detected.

>> GO TO 5.

4. CONFIRM THE SYMPTOM

Try to confirm the symptom described by the customer.
DIAGNOSIS WORK SHEET is useful to verify the incident.
Connect CONSULT-II to the vehicle in “DATA MONITOR (AUTO TRIG)” mode and check real time diagnosis results.
Verify relation between the symptom and the condition when the symptom is detected.

>> GO TO 6.

5. PERFORM DTC CONFIRMATION PROCEDURE

Perform DTC Confirmation Procedure for the displayed DTC* , and then make sure that DTC*1 is detected again.
At this time, always connect CONSULT-II to the vehicle, and check diagnostic results in real time on “DATA MONITOR (AUTO TRIG)”.

If two or more DTCs*1 are detected, refer to EC-89, "DTC Inspection Priority Chart" and determine trouble diagnosis order.

NOTE:

- Freeze frame data*2 is useful if the DTC*1 is not detected.
- Perform Overall Function Check if DTC Confirmation Procedure is not included on Service Manual. This simplified check procedure is an effective alternative though DTC*1 cannot be detected during this check. If the result of Overall Function Check is NG, it is the same as the detection of DTC*1 by DTC Confirmation Procedure.

Is DTC*1 detected?

Yes >> GO TO 10.
No >> Check according to EC-144, "TROUBLE DIAGNOSIS FOR INTERMITTENT INCIDENT" .

6. PERFORM BASIC INSPECTION

Perform EC-71, "Basic Inspection" .

With CONSULT-II>>GO TO 7.
Without CONSULT-II>>GO TO 9.

7. PERFORM DATA MONITOR (SPEC) MODE

With CONSULT-II
Make sure that “MAS A/F SE-B1”, “B/FUEL SCHDL”, and “A/F ALPHA-B1”, “A/F ALPHA-B2” are within the SP value using CONSULT-II “DATA MONITOR (SPEC)” mode. Refer to EC-134, "TROUBLE DIAGNOSIS - SPECIFICATION VALUE" .

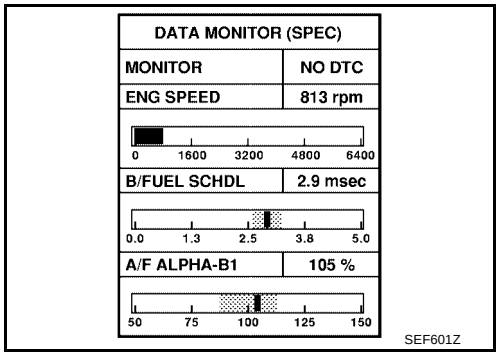

Are they within the SP value?

Yes >> GO TO 9.
No >> GO TO 8.

8. DETECT MALFUNCTIONING PART BY TROUBLE DIAGNOSIS - SPECIFICATION VALUE

Detect malfunctioning part according to EC-135, "Diagnostic Procedure" .

Is malfunctioning part detected?

Yes >> GO TO 11.
No >> GO TO 9.

9. DETECT MALFUNCTIONING SYSTEM BY SYMPTOM MATRIX CHART

Detect malfunctioning system according to EC-92, "Symptom Matrix Chart" based on the confirmed symptom in step 4, and determine the trouble diagnosis order based on possible causes and symptom.

>> GO TO 10.

10. DETECT MALFUNCTIONING PART BY DIAGNOSTIC PROCEDURE

Inspect according to Diagnostic Procedure of the system.

NOTE:
The Diagnostic Procedure in EC section described based on open circuit inspection. A short circuit inspection is also required for the circuit check in the Diagnostic Procedure. For details, refer to Circuit Inspection in GI-28, "How to Perform Efficient Diagnosis for an Electrical Incident" .

Is malfunctioning part detected?

Yes >> GO TO 11.
No >> Monitor input data from related sensors or check voltage of related ECM terminals using CONSULT-II. Refer to EC-105, "ECM Terminals and Reference Value" , EC-129, "CONSULT-II Reference Value in Data Monitor" .

11. REPAIR OR REPLACE THE MALFUNCTIONING PART

1. Repair or replace the malfunctioning part.
2. Reconnect parts or connectors disconnected during Diagnostic Procedure again after repair and replacement.
3. Check DTC. If DTC is displayed, erase it, refer to EC-61, "HOW TO ERASE EMISSION-RELATED DIAGNOSTIC INFORMATION" .

>> GO TO 12.

12. FINAL CHECK

When DTC was detected in step 2, perform DTC Confirmation Procedure or Overall Function Check again, and then make sure that the malfunction have been repaired securely.
When symptom was described from the customer, refer to confirmed symptom in step 3 or 4, and make sure that the symptom is not detected.

OK or NG

NG (DTC*1 is detected)>>GO TO 10.
NG (Symptom remains)>>GO TO 6.
OK >> 1. Before returning the vehicle to the customer, make sure to erase unnecessary DTC*1 in ECM and TCM (Transmission Control Module). (Refer to EC-61, "HOW TO ERASE EMISSION-RELATED DIAGNOSTIC INFORMATION" and AT-38, "OBD-II Diagnostic Trouble Code (DTC)" .)
2. If the completion of SRT is needed, drive vehicle under the specific driving pattern. Refer to EC-58, "Driving Pattern" .
3. **INSPECTION END**

*1: Include 1st trip DTC.
*2: Include 1st trip freeze frame data.

DIAGNOSTIC WORKSHEET

Description

There are many operating conditions that lead to the malfunction of engine components. A good grasp of such conditions can make troubleshooting faster and more accurate.
In general, each customer feels differently about a incident. It is important to fully understand the symptoms or conditions for a customer complaint.
Utilize a diagnostic worksheet like the one on the next page in order to organize all the information for troubleshooting.
Some conditions may cause the MIL to come on steady or blink and DTC to be detected. Examples:

- Vehicle ran out of fuel, which caused the engine to misfire.
- Fuel filler cap was left off or incorrectly screwed on, allowing fuel to evaporate into the atmosphere.

KEY POINTS

WHAT ..... Vehicle & engine model
WHEN ..... Date, Frequencies
WHERE..... Road conditions
HOW ..... Operating conditions, Weather conditions, Symptoms

SEF907L

Worksheet Sample

Customer name MR/MS		Model & Year	VIN
Engine #		Trans.	Mileage
Incident Date		Manuf. Date	In Service Date
Fuel and fuel filler cap		☐ Vehicle ran out of fuel causing misfire ☐ Fuel filler cap was left off or incorrectly screwed on.	
Symptoms	☐ Startability	☐ Impossible to start ☐ No combustion ☐ Partial combustion ☐ Partial combustion affected by throttle position ☐ Partial combustion NOT affected by throttle position ☐ Possible but hard to start ☐ Others [ ]	
	☐ Idling	☐ No fast idle ☐ Unstable ☐ High idle ☐ Low idle ☐ Others [ ]	
	☐ Driveability	☐ Stumble ☐ Surge ☐ Knock ☐ Lack of power ☐ Intake backfire ☐ Exhaust backfire ☐ Others [ ]	
	☐ Engine stall	☐ At the time of start ☐ While idling ☐ While accelerating ☐ While decelerating ☐ Just after stopping ☐ While loading	
Incident occurrence		☐ Just after delivery ☐ Recently ☐ In the morning ☐ At night ☐ In the daytime	
Frequency		☐ All the time ☐ Under certain conditions ☐ Sometimes	
Weather conditions		☐ Not affected	
	Weather	☐ Fine ☐ Raining ☐ Snowing ☐ Others [ ]	
	Temperature	☐ Hot ☐ Warm ☐ Cool ☐ Cold ☐ Humid °F	
Engine conditions		☐ Cold ☐ During warm-up ☐ After warm-up Engine speed 0 2,000 4,000 6,000 8,000 rpm	
Road conditions		☐ In town ☐ In suburbs ☐ Highway ☐ Off road (up/down)	
Driving conditions		☐ Not affected ☐ At starting ☐ While idling ☐ At racing ☐ While accelerating ☐ While cruising ☐ While decelerating ☐ While turning (RH/LH) Vehicle speed 0 10 20 30 40 50 60 MPH	
Malfunction indicator lamp		☐ Turned on ☐ Not turned on	

MTBL0017

DTC Inspection Priority Chart

UBS00L03

If some DTCs are displayed at the same time, perform inspections one by one based on the following priority chart.

NOTE:

- **If DTC U1000 and/or U1001 is displayed with other DTC, first perform the trouble diagnosis for DTC U1000, U1001. Refer to EC-151, "DTC U1000, U1001 CAN COMMUNICATION LINE" .**
- **If DTC U1010 is displayed with other DTC, first perform the trouble diagnosis for DTC U1010. Refer to EC-154, "DTC U1010 CAN COMMUNICATION" .**

Priority	Detected items (DTC)
1	● U1000 U1001 CAN communication line ● U1010 CAN communication ● P0101 P0102 P0103 Mass air flow sensor ● P0112 P0113 P0127 Intake air temperature sensor ● P0117 P0118 P0125 Engine coolant temperature sensor ● P0122 P0123 P0222 P0223 P1225 P1226 P2135 Throttle position sensor ● P0128 Thermostat function ● P0181 P0182 P0183 Fuel tank temperature sensor ● P0327 P0328 P0332 P0333 Knock sensor ● P0335 Crankshaft position sensor (POS) ● P0340 Camshaft position sensor (PHASE) ● P0460 P0461 P0462 P0463 Fuel level sensor ● P0500 Vehicle speed sensor ● P0605 ECM ● P0643 Sensor power supply ● P0705 Park/Neutral position (PNP) switch ● P0850 Park/Neutral position (PNP) switch ● P1610 - P1615 NATS ● P2122 P2123 P2127 P2128 P2138 Accelerator pedal position sensor

Priority	Detected items (DTC)
2	● P0031 P0032 P0051 P0052 Air fuel ratio (A/F) sensor 1 heater ● P0037 P0038 P0057 P0058 Heated oxygen sensor 2 heater ● P0130 P0131 P0132 P0133 P0150 P0151 P0152 P0153 P2A00 P2A03 Air fuel ratio (A/F) sensor 1 ● P0137 P0138 P0139 P0157 P0158 P0159 Heated oxygen sensor 2 ● P0441 EVAP control system purge flow monitoring ● P0443 P0444 P0445 EVAP canister purge volume control solenoid valve ● P0447 P0448 EVAP canister vent control valve ● P0451 P0452 P0453 EVAP control system pressure sensor ● P0550 Power steering pressure sensor ● P0603 ECM power supply ● P0700 P0710 P0717 P0720 P0740 P0744 P0745 P1730 P1752 P1754 P1757 P1759 P1762 P1764 P1767 P1769 P1772 P1774 A/T related sensors and solenoid valves ● P1217 Engine over temperature (OVERHEAT) ● P1805 Brake switch ● P2100 P2103 P2118 Electric throttle control actuator ● P2101 Electric throttle control function
3	● P0171 P0172 P0174 P0175 Fuel injection system function ● P0300 - P0308 Misfire ● P0420 P0430 Three way catalyst function ● P0442 P0455 P0456 EVAP control system ● P0506 P0507 Idle speed control system ● P1148 P1168 Closed loop control ● P1211 TCS control unit ● P1212 TCS communication line ● P1564 ICC/ASCD steering switch ● P1568 ICC command value ● P1572 ICC/ASCD brake switch ● P1574 ICC/ASCD vehicle speed sensor ● P2119 Electric throttle control actuator

Fail-safe Chart

UBS00L04

When the DTC listed below is detected, the ECM enters fail-safe mode and the MIL lights up.

DTC No.	Detected items	Engine operating condition in fail-safe mode
P0102 P0103	Mass air flow sensor circuit	Engine speed will not rise more than 2,400 rpm due to the fuel cut.
P0117 P0118	Engine coolant temperature sensor circuit	Engine coolant temperature will be determined by ECM based on the time after turning ignition switch ON or START. CONSULT-II displays the engine coolant temperature decided by ECM.
		Condition: Just as ignition switch is turned ON or START — Engine coolant temperature decided (CONSULT-II display): 40°C (104°F)
		Condition: More than approx. 4 minutes after ignition ON or START — Engine coolant temperature decided (CONSULT-II display): 80°C (176°F)
		Condition: Except as shown above — Engine coolant temperature decided (CONSULT-II display): 40 - 80°C (104 - 176°F) (Depends on the time)
		When the fail-safe system for engine coolant temperature sensor is activated, the cooling fan operates while engine is running.
P0122 P0123 P0222 P0223 P2135	Throttle position sensor	The ECM controls the electric throttle control actuator in regulating the throttle opening in order for the idle position to be within +10 degrees. The ECM regulates the opening speed of the throttle valve to be slower than the normal condition. So, the acceleration will be poor.
P0643	Sensor power supply	ECM stops the electric throttle control actuator control, throttle valve is maintained at a fixed opening (approx. 5 degrees) by the return spring.
P2100 P2103	Throttle control motor relay	ECM stops the electric throttle control actuator control, throttle valve is maintained at a fixed opening (approx. 5 degrees) by the return spring.
P2101	Electric throttle control function	ECM stops the electric throttle control actuator control, throttle valve is maintained at a fixed opening (approx. 5 degrees) by the return spring.
P2118	Throttle control motor	ECM stops the electric throttle control actuator control, throttle valve is maintained at a fixed opening (approx. 5 degrees) by the return spring.
P2119	Electric throttle control actuator	(When electric throttle control actuator does not function properly due to the return spring malfunction:) ECM controls the electric throttle actuator by regulating the throttle opening around the idle position. The engine speed will not rise more than 2,000 rpm.
		(When throttle valve opening angle in fail-safe mode is not in specified range:) ECM controls the electric throttle control actuator by regulating the throttle opening to 20 degrees or less.
		(When ECM detects the throttle valve is stuck open:) While the vehicle is driving, it slows down gradually by fuel cut. After the vehicle stops, the engine stalls. The engine can restart in N or P position, and engine speed will not exceed 1,000 rpm or more.
P2122 P2123 P2127 P2128 P2138	Accelerator pedal position sensor	The ECM controls the electric throttle control actuator in regulating the throttle opening in order for the idle position to be within +10 degrees. The ECM regulates the opening speed of the throttle valve to be slower than the normal condition. So, the acceleration will be poor.

- When there is an open circuit on MIL circuit, the ECM cannot warn the driver by lighting up MIL when there is malfunction on engine control system.
  Therefore, when electrical controlled throttle and part of ECM related diagnoses are continuously detected as NG for 5 trips, ECM warns the driver that engine control system malfunctions and MIL circuit is open by means of operating fail-safe function.
  The fail-safe function also operates when above diagnoses except MIL circuit are detected and demands the driver to repair the malfunction.

Engine operating condition in fail-safe mode	Engine speed will not rise more than 2,500 rpm due to the fuel cut

Symptom Matrix Chart

UBS00L05

SYSTEM — BASIC ENGINE CONTROL SYSTEM

		SYMPTOM													Refer-ence page
		HARD/NO START/RESTART (EXCP. HA)	ENGINE STALL	HESITATION/SURGING/FLAT SPOT	SPARK KNOCK/DETONATION	LACK OF POWER/POOR ACCELERATION	HIGH IDLE/LOW IDLE	ROUGH IDLE/HUNTING	IDLING VIBRATION	SLOW/NO RETURN TO IDLE	OVERHEATS/WATER TEMPERATURE HIGH	EXCESSIVE FUEL CONSUMPTION	EXCESSIVE OIL CONSUMPTION	BATTERY DEAD (UNDER CHARGE)	
Warranty symptom code		AA	AB	AC	AD	AE	AF	AG	AH	AJ	AK	AL	AM	HA	
Fuel	Fuel pump circuit	1	1	2	3	2		2	2			3		2	EC-604
	Fuel pressure regulator system	3	3	4	4	4	4	4	4	4		4			EC-82
	Injector circuit	1	1	2	3	2		2	2			2			EC-598
	Evaporative emission system	3	3	4	4	4	4	4	4	4		4			EC-32
Air	Positive crankcase ventilation system	3	3	4	4	4	4	4	4	4		4	1		EC-45
	Incorrect idle speed adjustment						1	1	1	1		1			EC-71
	Electric throttle control actuator	1	1	2	3	3	2	2	2	2		2		2	EC-528, EC-534 , EC-540 , EC-545
Ignition	Incorrect ignition timing adjustment	3	3	1	1	1		1	1			1			EC-71
	Ignition circuit	1	1	2	2	2		2	2			2			EC-618
Main power supply and ground circuit		2	2	3	3	3		3	3		2	3			EC-145
Mass air flow sensor circuit		1	1	2	2	2		2	2			2			EC-171, EC-180
Engine coolant temperature sensor circuit					3		3			3					EC-192, EC-205
Air fuel ratio (A/F) sensor 1 circuit															EC-213, EC-223 , EC-232 , EC-241 , EC-575
Throttle position sensor circuit							2			2					EC-198, EC-320 , EC-483 , EC-485 , EC-560
Accelerator pedal position sensor circuit				3	2	1									EC-453, EC-547 , EC-553 , EC-567
Knock sensor circuit				2								3			EC-335
Crankshaft position sensor (POS) circuit		2	2												EC-340
Camshaft position sensor (PHASE) circuit		3	2												EC-347

	SYMPTOM													Refer-ence page
	HARD/NO START/RESTART (EXCP. HA)	ENGINE STALL	HESITATION/SURGING/FLAT SPOT	SPARK KNOCK/DETONATION	LACK OF POWER/POOR ACCELERATION	HIGH IDLE/LOW IDLE	ROUGH IDLE/HUNTING	IDLING VIBRATION	SLOW/NO RETURN TO IDLE	OVERHEATS/WATER TEMPERATURE HIGH	EXCESSIVE FUEL CONSUMPTION	EXCESSIVE OIL CONSUMPTION	BATTERY DEAD (UNDER CHARGE)	
Warranty symptom code	AA	AB	AC	AD	AE	AF	AG	AH	AJ	AK	AL	AM	HA	
Vehicle speed signal circuit		2	3		3						3			EC-442
Power steering pressure sensor circuit		2					3	3						EC-448
ECM	2	2	3	3	3	3	3	3	3	3	3			EC-453, EC-457
Park/Neutral position (PNP) switch circuit			3		3		3	3			3			EC-465
Refrigerant pressure sensor circuit		2				3			3		4			EC-630
Electrical load signal circuit							3							EC-596
Air conditioner circuit	2	2	3	3	3	3	3	3	3		3		2	ATC-34
ABS actuator and electric unit (control unit)			4											EC-471, EC-472 or BRC-11

1 - 6: The numbers refer to the order of inspection.
(continued on next page)

SYSTEM — ENGINE MECHANICAL & OTHER

		SYMPTOM													Reference page
		HARD/NO START/RESTART (EXCP. HA)	ENGINE STALL	HESITATION/SURGING/FLAT SPOT	SPARK KNOCK/DETONATION	LACK OF POWER/POOR ACCELERATION	HIGH IDLE/LOW IDLE	ROUGH IDLE/HUNTING	IDLING VIBRATION	SLOW/NO RETURN TO IDLE	OVERHEATS/WATER TEMPERATURE HIGH	EXCESSIVE FUEL CONSUMPTION	EXCESSIVE OIL CONSUMPTION	BATTERY DEAD (UNDER CHARGE)	
Warranty symptom code		AA	AB	AC	AD	AE	AF	AG	AH	AJ	AK	AL	AM	HA	
Fuel	Fuel tank	5	5												FL-10
	Fuel piping			5	5	5		5	5			5			FL-4
	Vapor lock														—
	Valve deposit	5		5	5	5		5	5			5			—
	Poor fuel (Heavy weight gasoline, Low octane)														—
Air	Air duct		5	5		5		5	5			5			EM-15
	Air cleaner														EM-15
	Air leakage from air duct (Mass air flow sensor — electric throttle control actuator)	5			5		5			5					EM-15
	Electric throttle control actuator														EM-17
	Air leakage from intake manifold/ Collector/Gasket														EM-17
Cranking	Battery	1	1	1		1		1	1			1		1	SC-4
	Generator circuit														SC-17
	Starter circuit	3													SC-10
	Signal plate	6													EM-37
	Park/Neutral position (PNP) switch	4													AT-105
Engine	Cylinder head	5	5	5	5	5		5	5			5			EM-63
	Cylinder head gasket										4		3		
	Cylinder block	6	6	6	6	6		6	6			6	4		EM-78
	Piston														
	Piston ring														
	Connecting rod														
	Bearing														
	Crankshaft														
Valve mechanism	Timing chain	5	5	5	5	5		5	5			5			EM-37
	Camshaft														EM-46
	Intake valve												3		EM-63
	Exhaust valve														

		SYMPTOM													Reference page
		HARD/NO START/RESTART (EXCP. HA)	ENGINE STALL	HESITATION/SURGING/FLAT SPOT	SPARK KNOCK/DETONATION	LACK OF POWER/POOR ACCELERATION	HIGH IDLE/LOW IDLE	ROUGH IDLE/HUNTING	IDLING VIBRATION	SLOW/NO RETURN TO IDLE	OVERHEATS/WATER TEMPERATURE HIGH	EXCESSIVE FUEL CONSUMPTION	EXCESSIVE OIL CONSUMPTION	BATTERY DEAD (UNDER CHARGE)	
Warranty symptom code		AA	AB	AC	AD	AE	AF	AG	AH	AJ	AK	AL	AM	HA	
Exhaust	Exhaust manifold/Tube/Muffler/Gasket	5	5	5	5	5		5	5			5			EM-21, EX-3
	Three way catalyst														
Lubrica-tion	Oil pan/Oil strainer/Oil pump/Oil filter/Oil gallery/Oil cooler	5	5	5	5	5		5	5			5			EM-24, LU-13 , LU-10 , LU-11
	Oil level (Low)/Filthy oil														LU-7
Cooling	Radiator/Hose/Radiator filler cap	5	5	5	5	5		5	5		4	5			CO-14
	Thermostat									5					CO-21
	Water pump														CO-19
	Water gallery														CO-8
	Cooling fan									5					CO-17
	Coolant level (Low)/Contami-nated coolant									5					CO-10
IVIS (INFINITI Vehicle Immobilizer System — NATS)		1	1												BL-137

1 - 6: The numbers refer to the order of inspection.

Engine Control Component Parts Location

UBS00L06

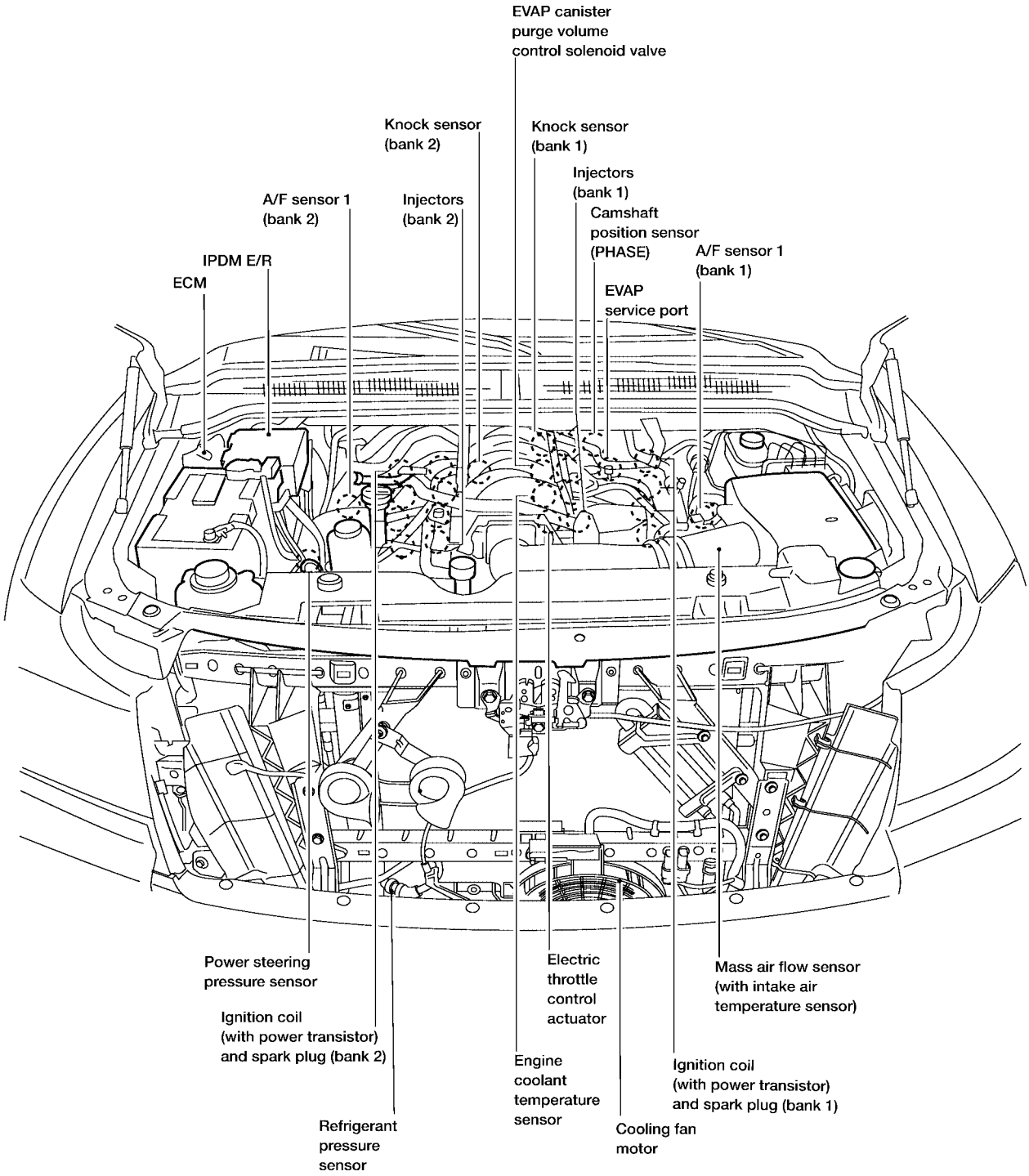

BBIA0449E

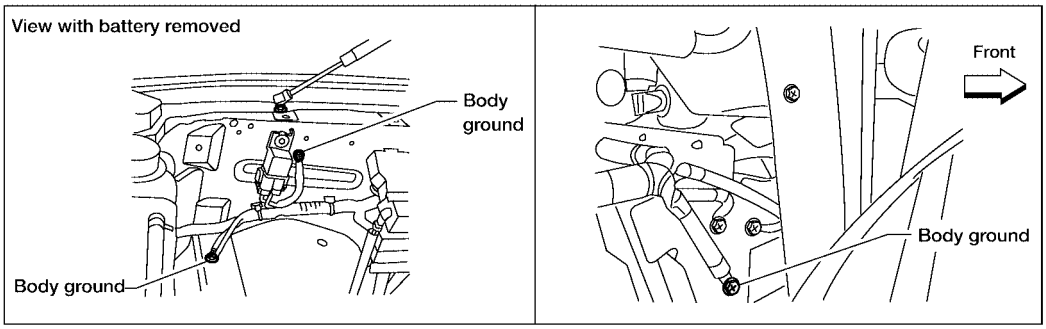
View with battery removed
Body ground
Body ground
Front
Body ground

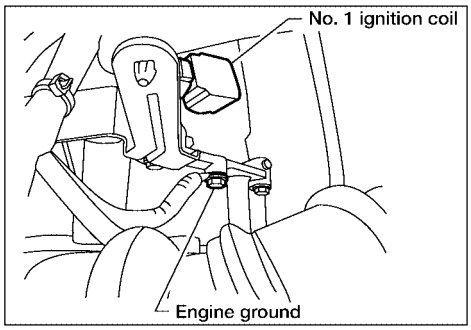
No. 1 ignition coil
Engine ground

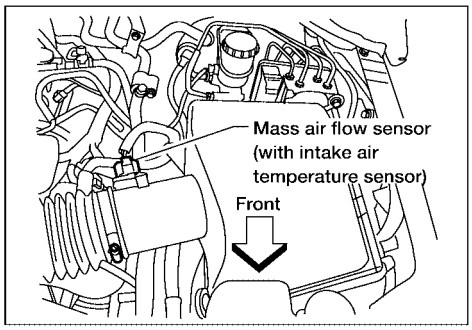
Mass air flow sensor
(with intake air
temperature sensor)
Front

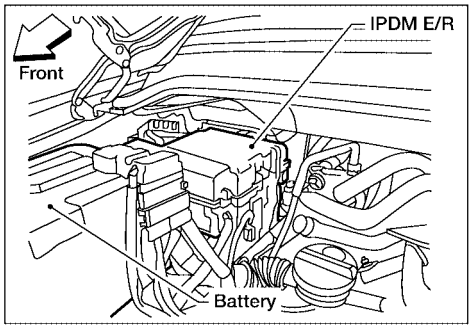
Front
IPDM E/R
Battery

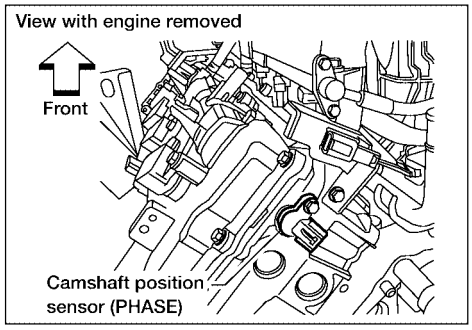
View with engine removed
Front
Camshaft position
sensor (PHASE)

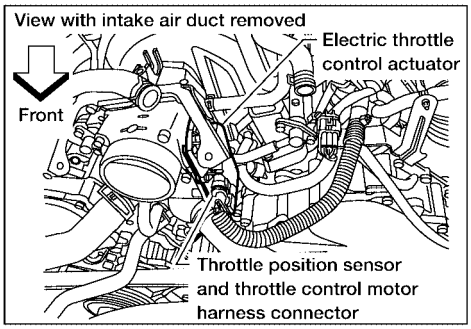
View with intake air duct removed
Electric throttle
control actuator
Front
Throttle position sensor
and throttle control motor
harness connector

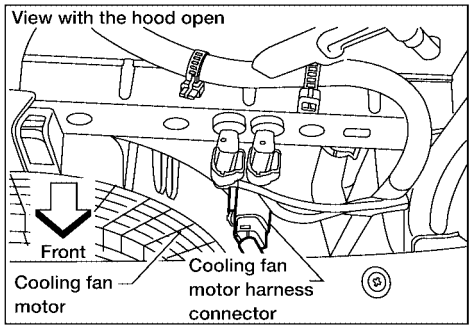
View with the hood open
Front
Cooling fan
motor
Cooling fan
motor harness
connector

BBIA0447E

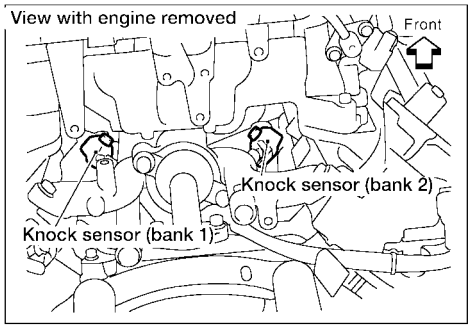
View with engine removed
Front
Knock sensor (bank 2)
Knock sensor (bank 1)

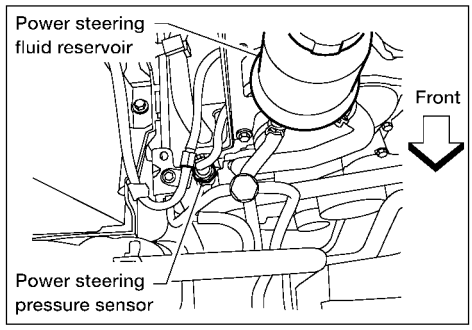
Power steering fluid reservoir
Front
Power steering pressure sensor

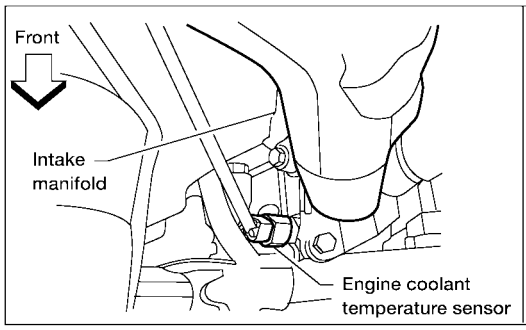
Front
Intake manifold
Engine coolant temperature sensor

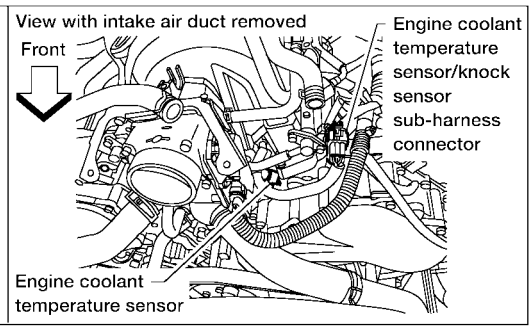
View with intake air duct removed
Front
Engine coolant temperature sensor/knock sensor sub-harness connector
Engine coolant temperature sensor

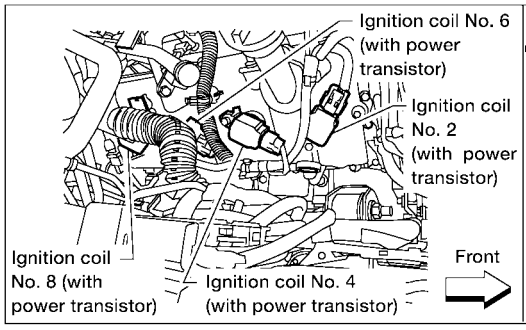
Ignition coil No. 6 (with power transistor)
Ignition coil No. 2 (with power transistor)
Ignition coil No. 8 (with power transistor)
Ignition coil No. 4 (with power transistor)
Front

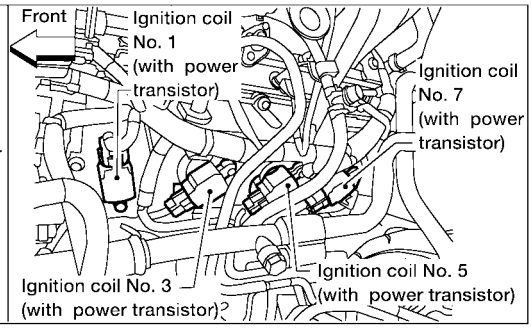
Front
Ignition coil No. 1 (with power transistor)
Ignition coil No. 7 (with power transistor)
Ignition coil No. 3 (with power transistor)
Ignition coil No. 5 (with power transistor)

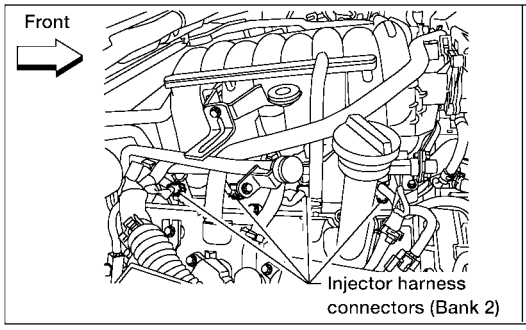
Front
Injector harness connectors (Bank 2)

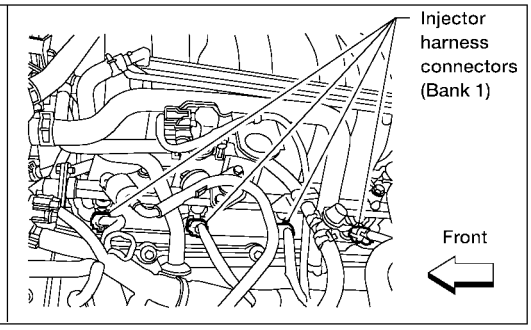
Injector harness connectors (Bank 1)
Front

BBIA0382E

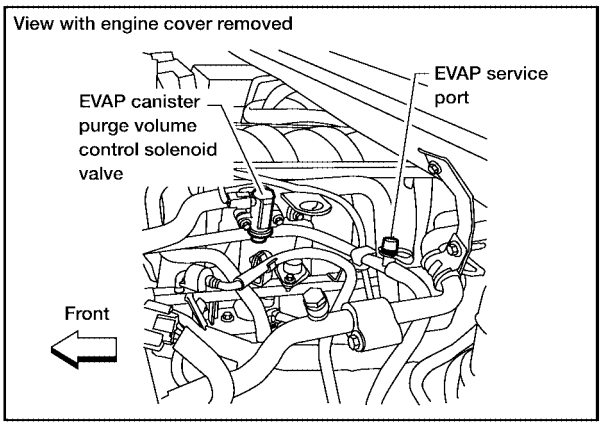
View with engine cover removed
EVAP service port
EVAP canister purge volume control solenoid valve
Front

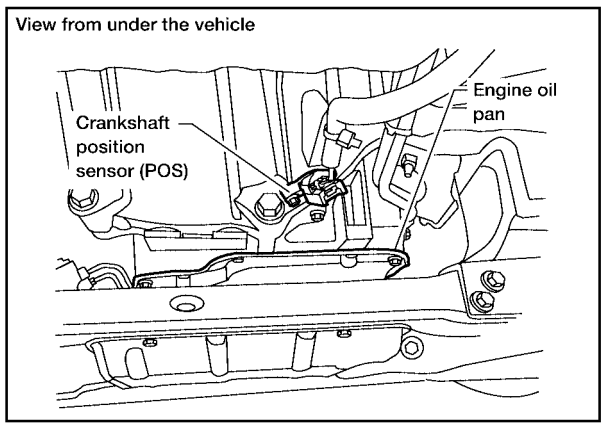
View from under the vehicle
Engine oil pan
Crankshaft position sensor (POS)

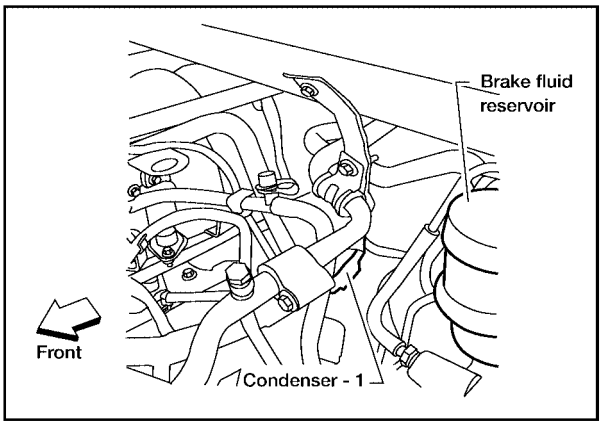
Brake fluid reservoir
Front
Condenser - 1

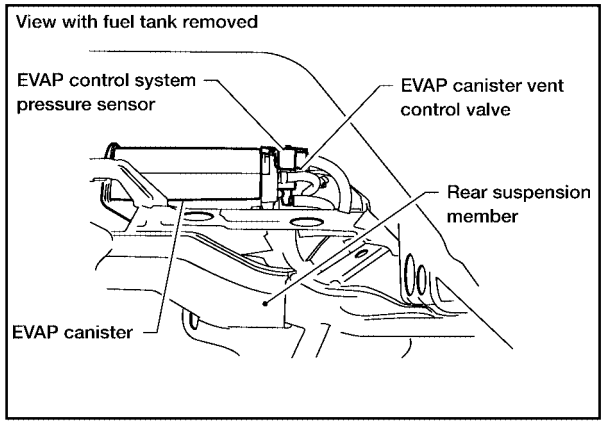
View with fuel tank removed
EVAP control system pressure sensor
EVAP canister vent control valve
Rear suspension member
EVAP canister

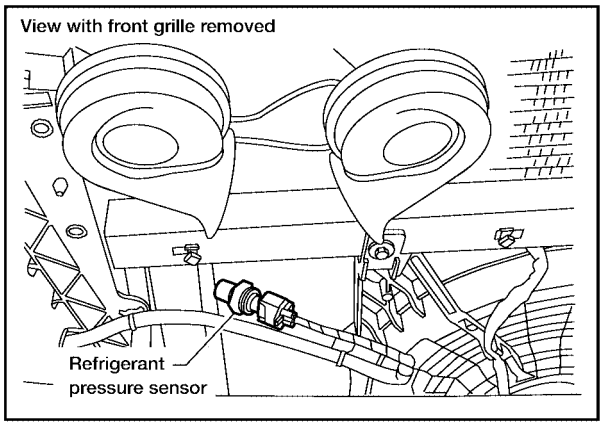
View with front grille removed
Refrigerant pressure sensor

BBIA0448E

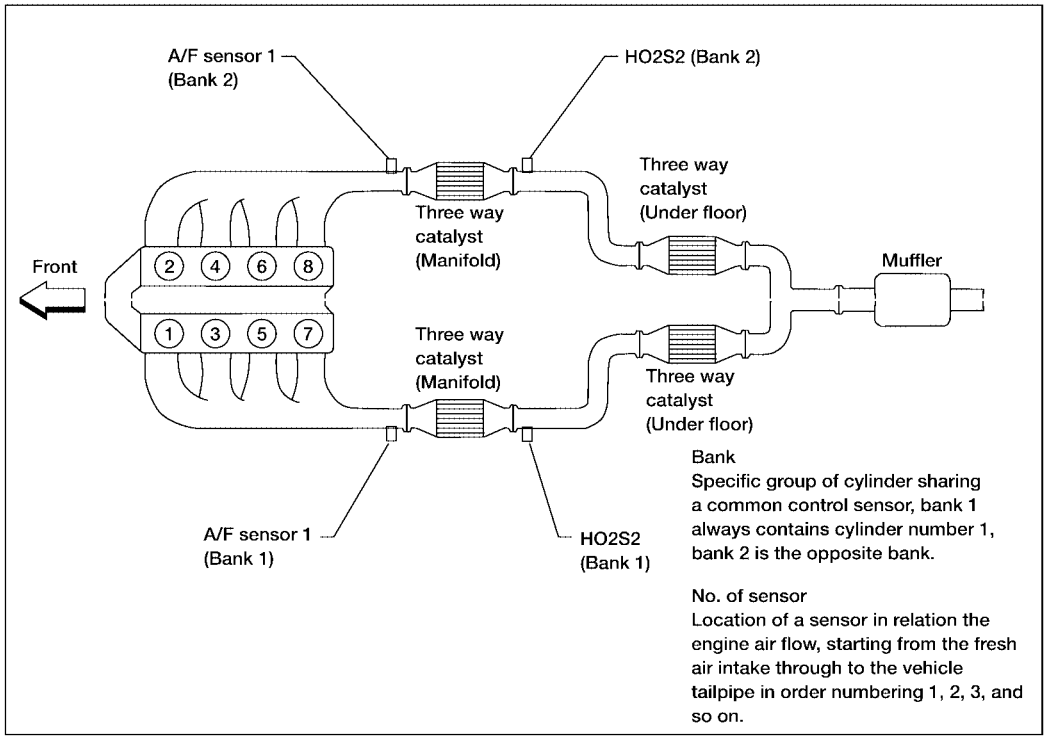
A/F sensor 1
(Bank 2)
HO2S2 (Bank 2)
Three way
catalyst
(Under floor)
Three way
catalyst
(Manifold)
Front
2 4 6 8
1 3 5 7
Muffler
Three way
catalyst
(Manifold)
Three way
catalyst
(Under floor)
A/F sensor 1
(Bank 1)
HO2S2
(Bank 1)
Bank
Specific group of cylinder sharing a common control sensor, bank 1 always contains cylinder number 1, bank 2 is the opposite bank.
No. of sensor
Location of a sensor in relation the engine air flow, starting from the fresh air intake through to the vehicle tailpipe in order numbering 1, 2, 3, and so on.

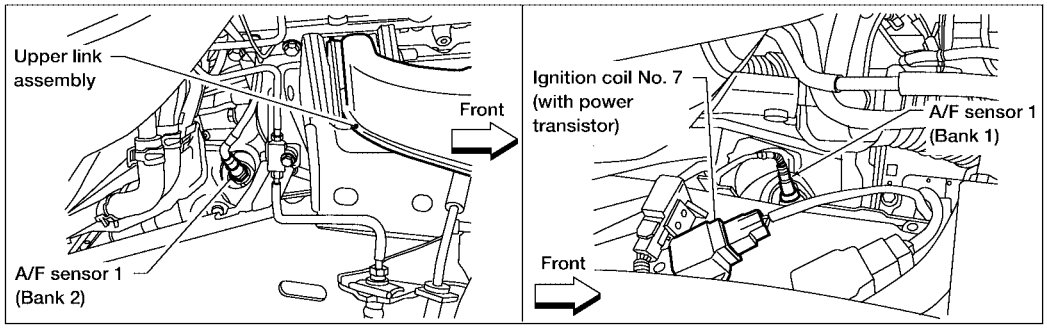
Upper link
assembly
Front
A/F sensor 1
(Bank 2)
Ignition coil No. 7
(with power
transistor)
A/F sensor 1
(Bank 1)
Front

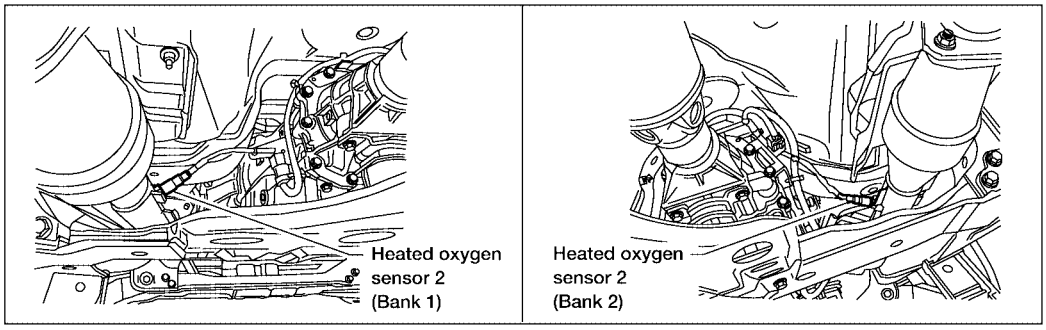
Heated oxygen
sensor 2
(Bank 1)
Heated oxygen
sensor 2
(Bank 2)

BBIA0384E

View with battery removed

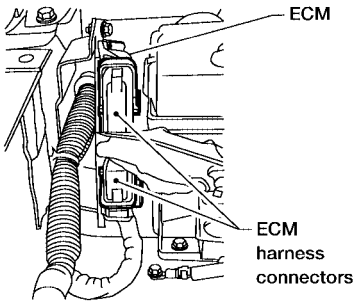

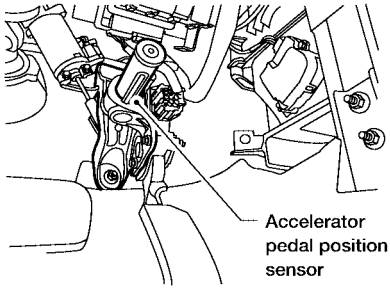

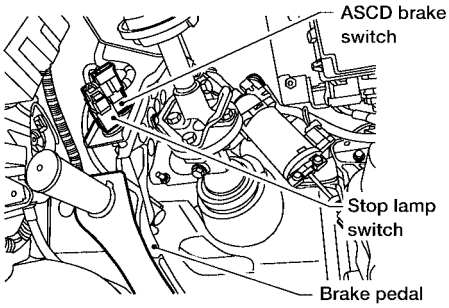

View with cowl top extension removed

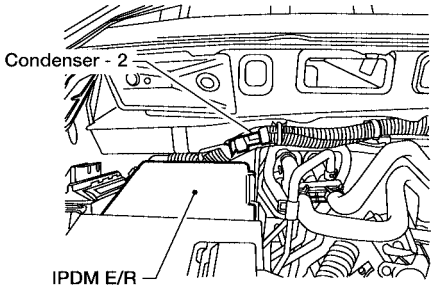

View with inspection hole cover removed

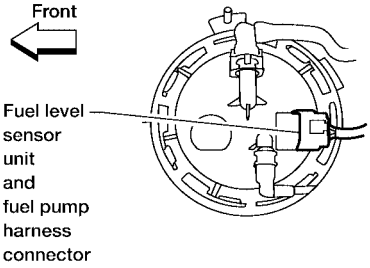

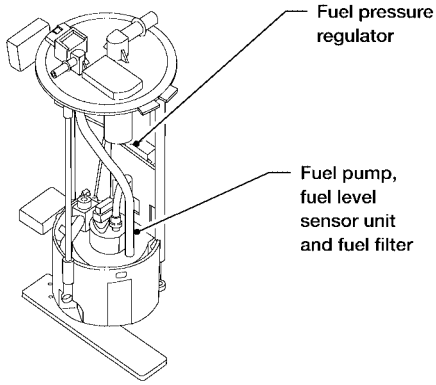

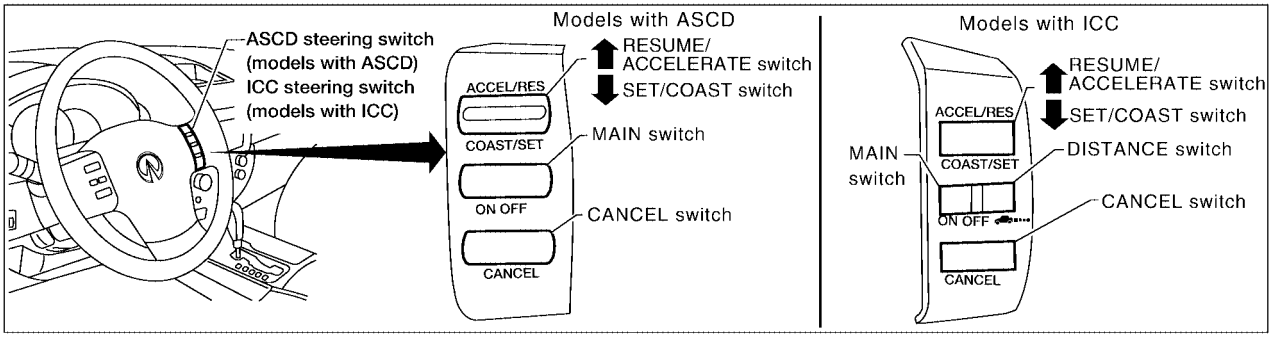

PBIB2639E

Vacuum Hose Drawing

UBS00L07

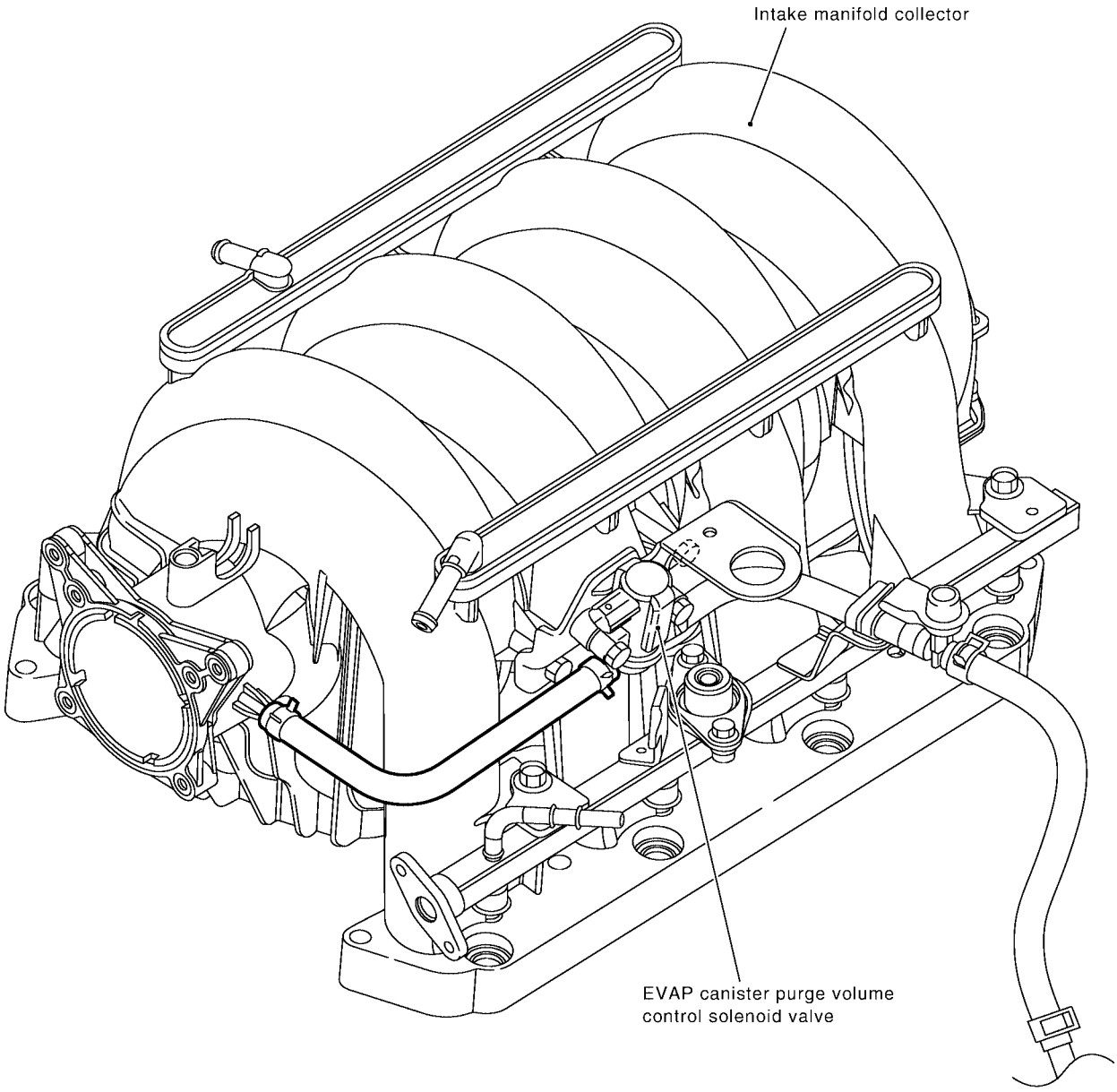

NOTE:
Do not use soapy water or any type of solvent while installing vacuum hoses or purge hoses.

PBIB2052E

Refer to EC-23, "System Diagram" for Vacuum Control System.

Circuit Diagram

UBS00L08

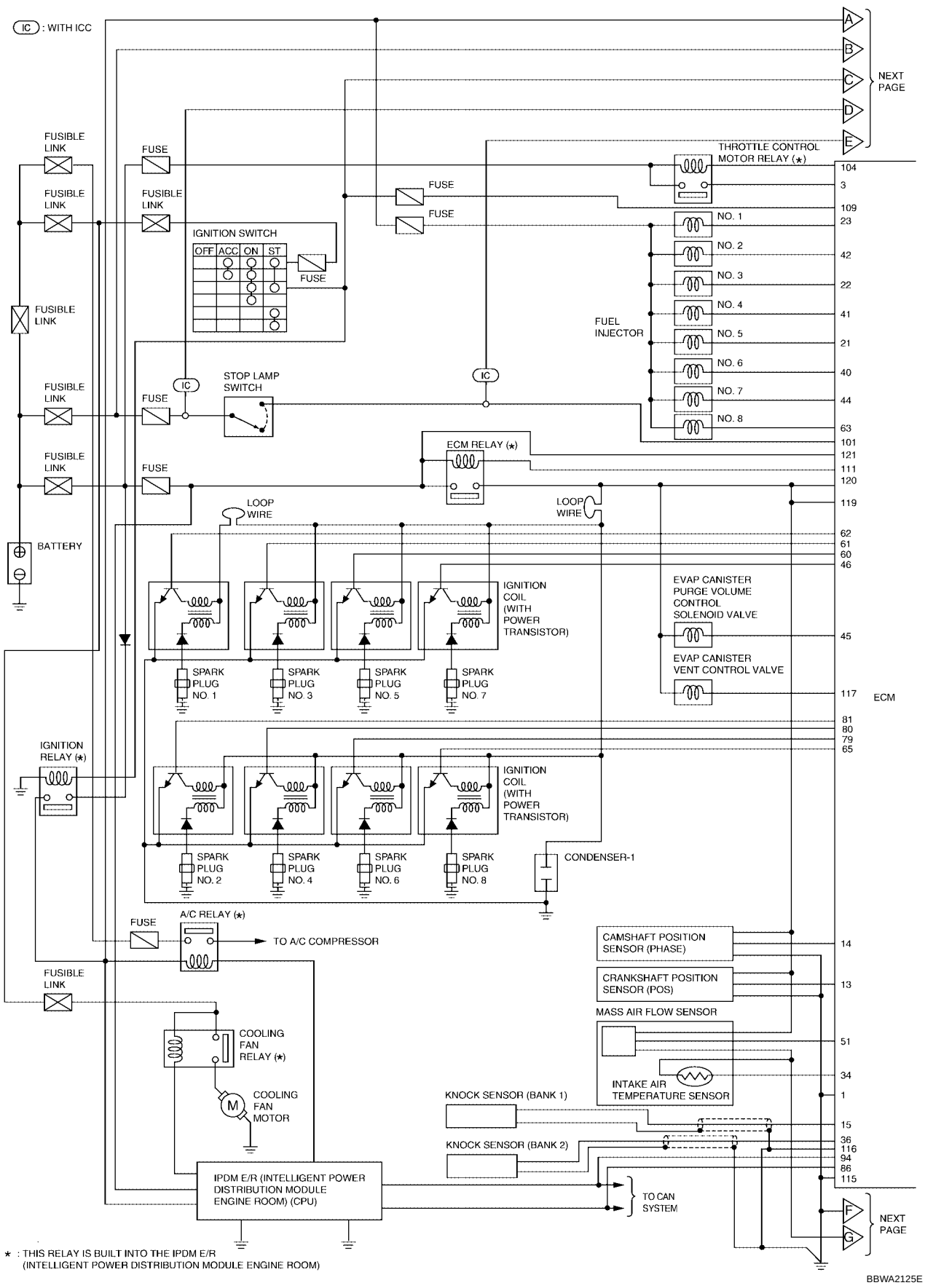

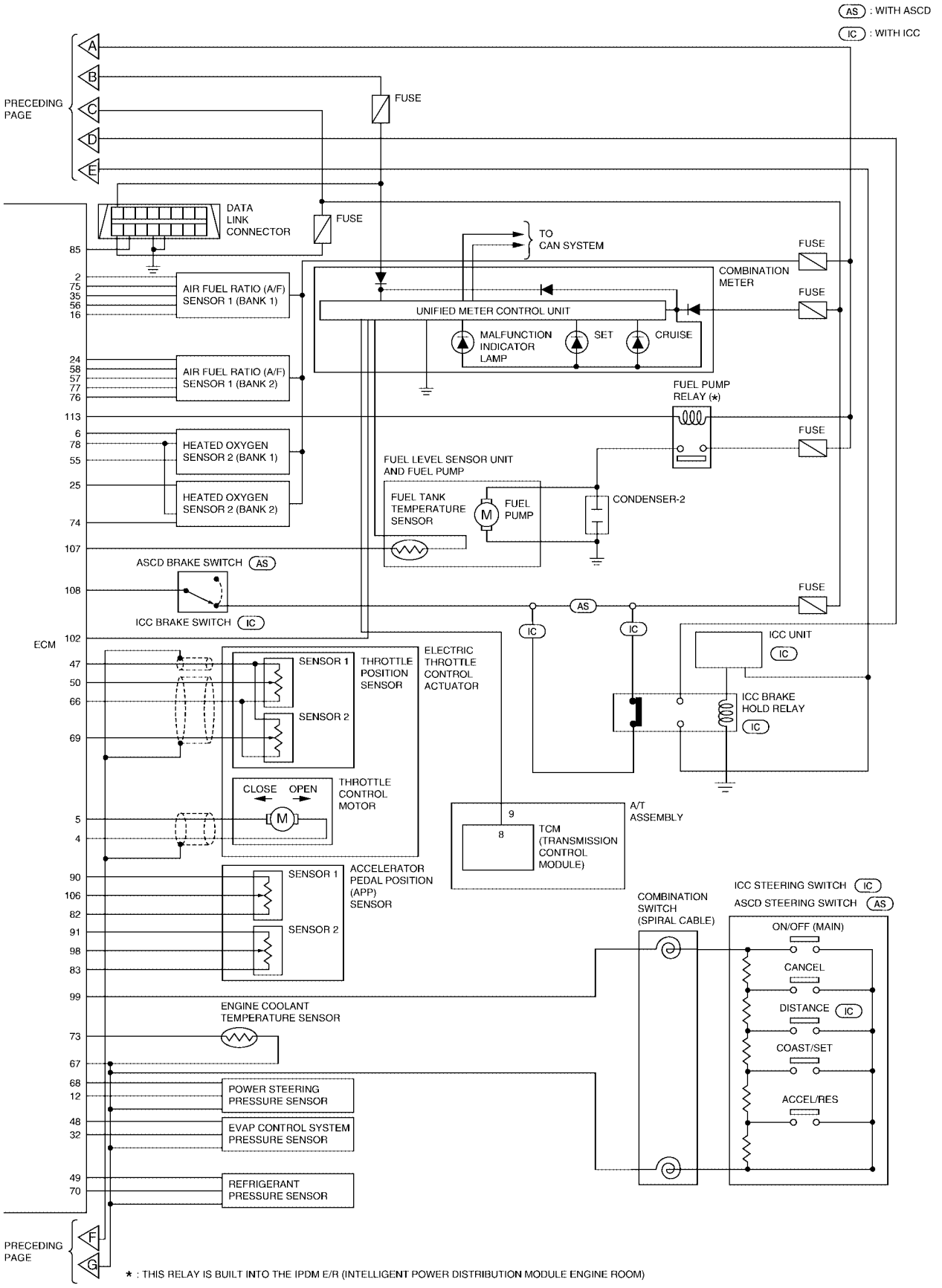
AS : WITH ASCD
IC : WITH ICC
PRECEDING PAGE
A
B
C
D
E
FUSE
DATA LINK CONNECTOR
TO CAN SYSTEM
COMBINATION METER
UNIFIED METER CONTROL UNIT
MALFUNCTION INDICATOR LAMP
SET
CRUISE
AIR FUEL RATIO (A/F) SENSOR 1 (BANK 1)
AIR FUEL RATIO (A/F) SENSOR 1 (BANK 2)
HEATED OXYGEN SENSOR 2 (BANK 1)
HEATED OXYGEN SENSOR 2 (BANK 2)
FUEL PUMP RELAY (*)
FUEL LEVEL SENSOR UNIT AND FUEL PUMP
FUEL TANK TEMPERATURE SENSOR
FUEL PUMP
CONDENSER-2
ASCD BRAKE SWITCH
ICC BRAKE SWITCH
ECM
ICC UNIT
ICC BRAKE HOLD RELAY
SENSOR 1
SENSOR 2
THROTTLE POSITION SENSOR
ELECTRIC THROTTLE CONTROL ACTUATOR
CLOSE
OPEN
THROTTLE CONTROL MOTOR
A/T ASSEMBLY
TCM (TRANSMISSION CONTROL MODULE)
ACCELERATOR PEDAL POSITION (APP) SENSOR
COMBINATION SWITCH (SPIRAL CABLE)
ICC STEERING SWITCH
ASCD STEERING SWITCH
ON/OFF (MAIN)
CANCEL
DISTANCE
COAST/SET
ACCEL/RES
ENGINE COOLANT TEMPERATURE SENSOR
POWER STEERING PRESSURE SENSOR
EVAP CONTROL SYSTEM PRESSURE SENSOR
REFRIGERANT PRESSURE SENSOR
* : THIS RELAY IS BUILT INTO THE IPDM E/R (INTELLIGENT POWER DISTRIBUTION MODULE ENGINE ROOM)
BBWA2126E

ECM Harness Connector Terminal Layout

UBS00L09

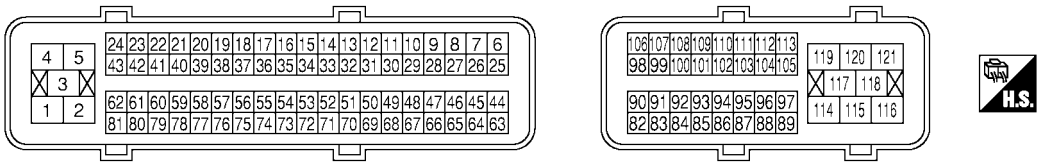

MBIB0045E

ECM Terminals and Reference Value

UBS00L0A

PREPARATION

1. ECM is located in the engine room passenger side behind battery.
2. Remove ECM harness connector.

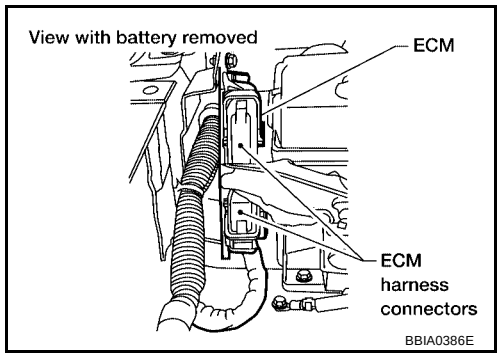

BBIA0386E

3. When disconnecting ECM harness connector, loosen it with levers as far as they will go as shown in the figure.
4. Connect a break-out box (SST) and Y-cable adapter (SST) between the ECM and ECM harness connector.
   - Use extreme care not to touch 2 pins at one time.
   - Data is for comparison and may not be exact.

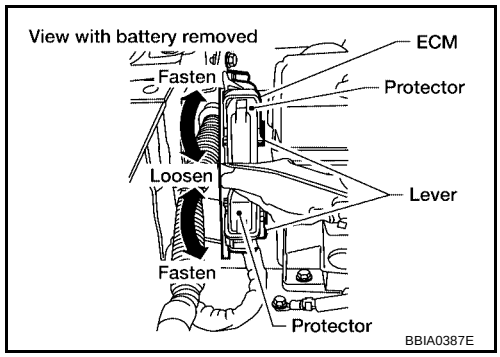

BBIA0387E

ECM INSPECTION TABLE

Specification data are reference values and are measured between each terminal and ground.
Pulse signal is measured by CONSULT-II.

CAUTION:

Do not use ECM ground terminals when measuring input/output voltage. Doing so may result in damage to the ECMs transistor. Use a ground other than ECM terminals, such as the ground.

TERMINAL NO.	WIRE COLOR	ITEM	CONDITION	DATA (DC Voltage)
1	B	ECM ground	**[Engine is running]** ● Idle speed	Body ground
2	O/B	A/F sensor 1 heater (bank 1)	**[Engine is running]** ● **Warm-up condition** ● Idle speed	Approximately 5V★ 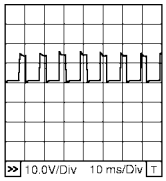 PBIB1584E

TER-MINAL NO.	WIRE COLOR	ITEM	CONDITION	DATA (DC Voltage)
3	L	Throttle control motor relay power supply	**[Ignition switch: ON]**	BATTERY VOLTAGE (11 - 14V)
4	L/W	Throttle control motor (Close)	**[Ignition switch: ON]** ● Engine: Stopped ● Selector lever: D ● Accelerator pedal: Fully released	0 - 14V★ 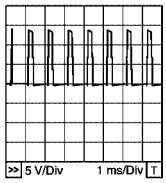 PBIB1104E
5	L/B	Throttle control motor (Open)	**[Ignition switch: ON]** ● Engine: Stopped ● Selector lever: D ● Accelerator pedal: Fully depressed	0 - 14V★ 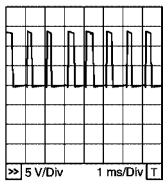 PBIB1105E
6	GR	Heated oxygen sensor 2 heater (bank 1)	**[Engine is running]** ● Engine speed: Below 3,600 rpm after the following conditions are met. – Engine: After warming up – Keeping the engine speed between 3,500 and 4,000 rpm for 1 minute and at idle for 1 minute under no load	0 - 1.0V
			[Ignition switch: ON] ● Engine: Stopped **[Engine is running]** ● Engine speed: Above 3,600 rpm	BATTERY VOLTAGE (11 - 14V)
12	R	Power steering pressure sensor	**[Engine is running]** ● Steering wheel: Being turned	0.5 - 4.5V
			[Engine is running] ● Steering wheel: Not being turned	0.4 - 0.8V
13	O	Crankshaft position sensor (POS)	**[Engine is running]** ● **Warm-up condition** ● Idle speed **NOTE:** The pulse cycle changes depending on rpm at idle	Approximately 10V★ 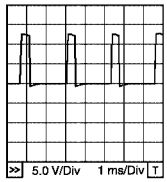 PBIB1041E
			[Engine is running] ● Engine speed: 2,000 rpm	Approximately 10V★ 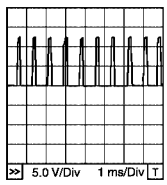 PBIB1042E

TER-MINAL NO.	WIRE COLOR	ITEM	CONDITION	DATA (DC Voltage)
14	Y	Camshaft position sensor (PHASE)	**[Engine is running]** ● **Warm-up condition** ● Idle speed **NOTE:** The pulse cycle changes depending on rpm at idle	1.0 - 4.0V★ 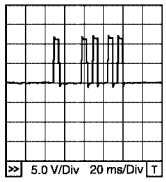 PBIB1039E
			[Engine is running] ● Engine speed: 2,000 rpm	1.0 - 4.0V★ 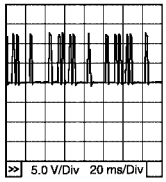 PBIB1040E
15	W	Knock sensor (bank 1)	**[Engine is running]** ● Idle speed	Approximately 2.5V
16	BR/R	A/F sensor 1 (bank 1)	**[Engine is running]** ● **Warm-up condition** ● Idle speed	Approximately 3.1V
35	BR/G			Approximately 2.6V
56	LG/B			Approximately 2.3V
75	P/B			Approximately 2.3V
21 22 23 44	O/L BR GR/W O	Fuel injector No. 5 Fuel injector No. 3 Fuel injector No. 1 Fuel injector No. 7	**[Engine is running]** ● **Warm-up condition** ● Idle speed **NOTE:** The pulse cycle changes depending on rpm at idle	BATTERY VOLTAGE (11 - 14V)★ 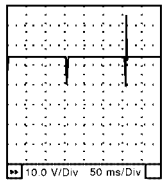 SEC984C
			[Engine is running] ● **Warm-up condition** ● Engine speed: 2,000 rpm	BATTERY VOLTAGE (11 - 14V)★ 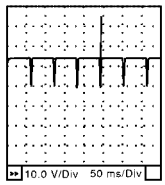 SEC985C
24	BR/W	A/F sensor 1 heater (bank 2)	**[Engine is running]** ● **Warm-up condition** ● Idle speed	Approximately 5V★ 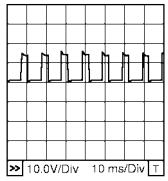 PBIB1584E

TER-MINAL NO.	WIRE COLOR	ITEM	CONDITION	DATA (DC Voltage)
25	O/G	Heated oxygen sensor 2 heater (bank 2)	**[Engine is running]** ● Engine speed: Below 3,600 rpm after the following conditions are met. – Engine: After warming up – Keeping the engine speed between 3,500 and 4,000 rpm for 1 minute and at idle for 1 minute under no load	0 - 1.0V
			[Ignition switch: ON] ● Engine: Stopped **[Engine is running]** ● Engine speed: Above 3,600 rpm	BATTERY VOLTAGE (11 - 14V)
32	L	EVAP control system pressure sensor	**[Ignition switch: ON]**	Approximately 1.8 - 4.8V
34	R/B	Intake air temperature sensor	**[Engine is running]**	Approximately 0 - 4.8V Output voltage varies with intake air temperature.
36	W	Knock sensor (bank 2)	**[Engine is running]** ● Idle speed	Approximately 2.5V
40 41 42 63	Y/G P L G	Fuel injector No. 6 Fuel injector No. 4 Fuel injector No. 2 Fuel injector No. 8	**[Engine is running]** ● **Warm-up condition** ● Idle speed **NOTE:** The pulse cycle changes depending on rpm at idle	BATTERY VOLTAGE (11 - 14V)★ 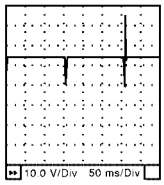 SEC984C
			[Engine is running] ● **Warm-up condition** ● Engine speed: 2,000 rpm	BATTERY VOLTAGE (11 - 14V)★ 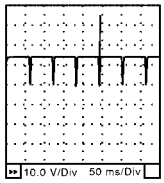 SEC985C
45	L/Y	EVAP canister purge volume control solenoid valve	**[Engine is running]** ● Idle speed ● Accelerator pedal: Not depressed even slightly, after engine starting	BATTERY VOLTAGE (11 - 14V)★ 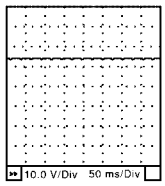 SEC990C
			[Engine is running] ● Engine speed: About 2,000 rpm (More than 100 seconds after starting engine)	BATTERY VOLTAGE (11 - 14V)★ 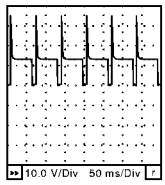 SEC991C

TER-MINAL NO.	WIRE COLOR	ITEM	CONDITION	DATA (DC Voltage)
47	Y	Sensor power supply (Throttle position sensor)	**[Ignition switch: ON]**	Approximately 5V
48	SB	Sensor power supply (EVAP control system pressure sensor)	**[Ignition switch: ON]**	Approximately 5V
49	R/Y	Sensor power supply (Refrigerant pressure sensor)	**[Ignition switch: ON]**	Approximately 5V
50	B	Throttle position sensor 1	**[Ignition switch: ON]** ● Engine: Stopped ● Selector lever: D ● Accelerator pedal: Fully released	More than 0.36V
			[Ignition switch: ON] ● Engine: Stopped ● Selector lever: D ● Accelerator pedal: Fully depressed	Less than 4.75V
51	W	Mass air flow sensor	**[Engine is running]** ● **Warm-up condition** ● Idle speed	1.0 - 1.3V
			[Engine is running] ● **Warm-up condition** ● Engine speed: 2,500 rpm	1.7 - 2.1V
55	R	Heated oxygen sensor 2 (bank 1)	**[Engine is running]** ● Revving engine from idle to 3,000 rpm quickly after the following conditions are met. – Engine: After warming up – Keeping the engine speed between 3,500 and 4,000 rpm for 1 minute and at idle for 1 minute under no load	0 - Approximately 1.0V
57	L/P	A/F sensor 1 (bank 2)	**[Engine is running]** ● **Warm-up condition** ● Idle speed	Approximately 2.6V
58	GR/G			Approximately 2.3V
76	G/L			Approximately 3.1V
77	BR/B			Approximately 2.3V
46 60 61 62	L/R GR/R O/W Y/R	Ignition signal No. 7 Ignition signal No. 5 Ignition signal No. 3 Ignition signal No. 1	**[Engine is running]** ● **Warm-up condition** ● Idle speed **NOTE:** The pulse cycle changes depending on rpm at idle	0 - 0.3V★ 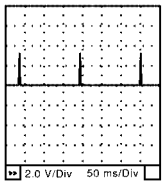 SEC986C
			[Engine is running] ● **Warm-up condition** ● Engine speed: 2,500 rpm	0.1 - 0.6V★ 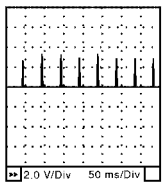 SEC987C

TER-MINAL NO.	WIRE COLOR	ITEM	CONDITION	DATA (DC Voltage)
66	R	Sensor ground (Throttle position sensor)	**[Engine is running]** ● **Warm-up condition** ● Idle speed	Approximately 0V
67	B	Sensor ground	**[Engine is running]** ● **Warm-up condition** ● Idle speed	Approximately 0V
68	W/L	Sensor power supply (PSP sensor)	**[Ignition switch: ON]**	Approximately 5V
69	W	Throttle position sensor 2	**[Ignition switch: ON]** ● Engine: Stopped ● Selector lever: D ● Accelerator pedal: Fully released	Less than 4.75V
			[Ignition switch: ON] ● Engine: Stopped ● Selector lever: D ● Accelerator pedal: Fully depressed	More than 0.36V
70	B/W	Refrigerant pressure sensor	**[Engine is running]** ● **Warm-up condition** ● Both A/C switch and blower switch: ON (Compressor operates.)	1.0 - 4.0V
73	Y/B	Engine coolant temperature sensor	**[Engine is running]**	Approximately 0 - 4.8V Output voltage varies with engine coolant temperature.
74	L	Heated oxygen sensor 2 (bank 2)	**[Engine is running]** ● Revving engine from idle to 3,000 rpm quickly after the following conditions are met. – Engine: After warming up – Keeping the engine speed between 3,500 and 4,000 rpm for 1 minute and at idle for 1 minute under no load	0 - Approximately 1.0V
78	B/W	Sensor ground (Heated oxygen sensor 2)	**[Engine is running]** ● **Warm-up condition** ● Idle speed	Approximately 0V
65 79 80 81	G/R V/W W/R W/G	Ignition signal No. 8 Ignition signal No. 6 Ignition signal No. 4 Ignition signal No. 2	**[Engine is running]** ● **Warm-up condition** ● Idle speed **NOTE:** The pulse cycle changes depending on rpm at idle	0 - 0.3V★ 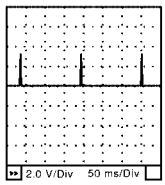 SEC986C
			[Engine is running] ● **Warm-up condition** ● Engine speed: 2,500 rpm	0.1 - 0.6V★ 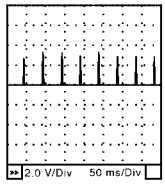 SEC987C

TER-MINAL NO.	WIRE COLOR	ITEM	CONDITION	DATA (DC Voltage)
82	B/R	Sensor ground (APP sensor 1)	**[Engine is running]** ● **Warm-up condition** ● Idle speed	Approximately 0V
83	G/W	Sensor ground (APP sensor 2)	**[Engine is running]** ● **Warm-up condition** ● Idle speed	Approximately 0V
85	G/W	Data link connector	**[Ignition switch: ON]** ● CONSULT-II or GST: Disconnected	Approximately 5V - Battery voltage (11 - 14V)
86	P	CAN communication line	**[Ignition switch: ON]**	Approximately 1.1 - 2.3V Output voltage varies with the communication status
90	L	Sensor power supply (APP sensor 1)	**[Ignition switch: ON]**	Approximately 5V
91	W/R	Sensor power supply (APP sensor 2)	**[Ignition switch: ON]**	Approximately 5V
94	L	CAN communication line	**[Ignition switch: ON]**	Approximately 2.6 - 3.2V Output voltage varies with the communication status.
98	G/R	Accelerator pedal position sensor 2	**[Ignition switch: ON]** ● Engine: Stopped ● Accelerator pedal: Fully released	0.25 - 0.50V
			[Ignition switch: ON] ● Engine: Stopped ● Accelerator pedal: Fully depressed	2.0 - 2.5V
99	G/Y	ASCD steering switch (Models with ICC system)	**[Ignition switch: ON]** ● ICC steering switch: OFF	Approximately 4.3V
			[Ignition switch: ON] ● MAIN switch: Pressed	Approximately 0V
			[Ignition switch: ON] ● CANCEL switch: Pressed	Approximately 1.3V
			[Ignition switch: ON] ● RESUME/ACCELERATE switch: Pressed	Approximately 3.7V
			[Ignition switch: ON] ● SET/COAST switch: Pressed	Approximately 3V
			[Ignition switch: ON] ● DISTANCE switch: Pressed	Approximately 2.2V
99	G/Y	ASCD steering switch (Models with ASCD system)	**[Ignition switch: ON]** ● ASCD steering switch: OFF	Approximately 4V
			[Ignition switch: ON] ● MAIN switch: Pressed	Approximately 0V
			[Ignition switch: ON] ● CANCEL switch: Pressed	Approximately 1V
			[Ignition switch: ON] ● RESUME/ACCELERATE switch: Pressed	Approximately 3V
			[Ignition switch: ON] ● SET/COAST switch: Pressed	Approximately 2V

TER-MINAL NO.	WIRE COLOR	ITEM	CONDITION	DATA (DC Voltage)
101	R/W	Stop lamp switch	**[Ignition switch: OFF]** ● Brake pedal: Fully released	Approximately 0V
			[Ignition switch: OFF] ● Brake pedal: Slightly depressed	BATTERY VOLTAGE (11 - 14V)
102	GR/R	PNP switch	**[Ignition switch: ON]** ● Selector lever: P or N	Approximately 0V
			[Ignition switch: ON] ● Except the above gear position	BATTERY VOLTAGE (11 - 14V)
104	O	Throttle control motor relay	**[Ignition switch: OFF]**	BATTERY VOLTAGE (11 - 14V)
			[Ignition switch: ON]	0 - 1.0V
106	BR/W	Accelerator pedal position sensor 1	**[Ignition switch: ON]** ● Engine: Stopped ● Accelerator pedal: Fully released	0.5 - 1.0V
			[Ignition switch: ON] ● Engine: Stopped ● Accelerator pedal: Fully depressed	4.2 - 4.8V
107	V/R	Fuel tank temperature sensor	**[Engine is running]**	Approximately 0 - 4.8V Output voltage varies with fuel tank temperature.
108	BR/W	ICC brake switch (Models with ICC system) ASCD brake switch (Models with ASCD system)	**[Ignition switch: ON]** ● Brake pedal: Slightly depressed	Approximately 0V
			[Ignition switch: ON] ● Brake pedal: Fully released	BATTERY VOLTAGE (11 - 14V)
109	L/W	Ignition switch	**[Ignition switch: OFF]**	0V
			[Ignition switch: ON]	BATTERY VOLTAGE (11 - 14V)
111	W/B	ECM relay (Self shut-off)	**[Engine is running]** **[Ignition switch: OFF]** ● For a few seconds after turning ignition switch OFF	0 - 1.5V
			[Ignition switch: OFF] ● More than a few seconds after turning ignition switch OFF	BATTERY VOLTAGE (11 - 14V)
113	GR	Fuel pump relay	**[Ignition switch: ON]** ● For 1 second after turning ignition switch ON **[Engine is running]**	0 - 1.5V
			[Ignition switch: ON] ● More than 1 second after turning ignition switch ON	BATTERY VOLTAGE (11 - 14V)
115 116	B B/W	ECM ground	**[Engine is running]** ● Idle speed	Body ground
117	L/Y	EVAP canister vent control valve	**[Ignition switch: ON]**	BATTERY VOLTAGE (11 - 14V)
119 120	BR BR	Power supply for ECM	**[Ignition switch: ON]**	BATTERY VOLTAGE (11 - 14V)
121	W	Power supply for ECM (Back-up)	**[Ignition switch: OFF]**	BATTERY VOLTAGE (11 - 14V)

★: Average voltage for pulse signal (Actual pulse signal can be confirmed by oscilloscope.)

CONSULT-II Function (ENGINE)

UBS00L0B

FUNCTION

Diagnostic test mode	Function
Work support	This mode enables a technician to adjust some devices faster and more accurately by following the indications on the CONSULT-II unit.
Self-diagnostic results	Self-diagnostic results such as 1st trip DTC, DTCs and 1st trip freeze frame data or freeze frame data can be read and erased quickly.*
Data monitor	Input/Output data in the ECM can be read.
Data monitor (SPEC)	Input/Output of the specification for Basic fuel schedule, AFM, A/F feedback control value and the other data monitor items can be read.
CAN diagnostic support monitor	The results of transmit/receive diagnosis of CAN communication can be read.
Active test	Diagnostic Test Mode in which CONSULT-II drives some actuators apart from the ECMs and also shifts some parameters in a specified range.
DTC & SRT confirmation	The status of system monitoring tests and the self-diagnosis status/result can be confirmed.
Function test	This mode is used to inform customers when their vehicle condition requires periodic maintenance.
ECM part number	ECM part number can be read.

*: The following emission-related diagnostic information is cleared when the ECM memory is erased.

- Diagnostic trouble codes
- 1st trip diagnostic trouble codes
- Freeze frame data
- 1st trip freeze frame data
- System readiness test (SRT) codes
- Test values

ENGINE CONTROL COMPONENT PARTS/CONTROL SYSTEMS APPLICATION

Item			DIAGNOSTIC TEST MODE							
			WORK SUP-PORT	SELF-DIAGNOSTIC RESULTS		DATA MONI-TOR	DATA MONI-TOR (SPEC)	ACTIVE TEST	DTC & SRT CONFIRMATION	
				DTC*1	FREEZE FRAME DATA*2				SRT STATUS	DTC WORK SUP-PORT
ENGINE CONTROL COMPONENT PARTS	INPUT	Crankshaft position sensor (POS)		×	×	×	×			
		Camshaft position sensor (PHASE)		×	×	×	×			
		Mass air flow sensor		×		×	×			
		Engine coolant temperature sensor		×	×	×	×	×		
		Air fuel ratio (A/F) sensor 1		×		×	×		×	×
		Heated oxygen sensor 2		×		×	×		×	×
		Wheel sensor		×	×	×	×			
		Accelerator pedal position sensor		×		×	×			
		Throttle position sensor		×	×	×	×			
		Fuel tank temperature sensor		×		×	×	×		
		EVAP control system pressure sensor		×		×	×			
		Intake air temperature sensor		×	×	×	×			
		Knock sensor		×						
		Refrigerant pressure sensor				×	×			
		Closed throttle position switch (accelerator pedal position sensor signal)				×	×			
		Air conditioner switch				×	×			
		Park/neutral position (PNP) switch		×		×	×			
		Stop lamp switch		×		×	×			
		Power steering pressure sensor		×		×	×			
		Battery voltage				×	×			
		Load signal				×	×			
		Fuel level sensor		×		×	×			
		ICC steering switch		×		×	×			
		ASCD steering switch		×		×	×			
		ICC brake switch		×		×	×			
		ASCD brake switch		×		×	×			

Item			DIAGNOSTIC TEST MODE							
			WORK SUP-PORT	SELF-DIAGNOSTIC RESULTS		DATA MONI-TOR	DATA MONI-TOR (SPEC)	ACTIVE TEST	DTC & SRT CONFIRMATION	
				DTC*1	FREEZE FRAME DATA*2				SRT STATUS	DTC WORK SUP-PORT
ENGINE CONTROL COMPONENT PARTS	OUTPUT	Fuel injector				×	×	×		
		Power transistor (Ignition timing)				×	×	×		
		Throttle control motor relay		×		×	×			
		Throttle control motor		×						
		EVAP canister purge volume control solenoid valve		×		×	×	×		×
		Air conditioner relay				×	×			
		Fuel pump relay	×			×	×	×		
		Cooling fan relay		×		×	×	×		
		Air fuel ratio (A/F) sensor 1 heater		×		×	×		×	
		Heated oxygen sensor 2 heater		×		×	×		×	
		EVAP canister vent control valve	×	×		×	×	×		
		Calculated load value			×	×	×			

X: Applicable
*1: This item includes 1st trip DTCs.
*2: This mode includes 1st trip freeze frame data or freeze frame data. The items appear on CONSULT-II screen in freeze frame data mode only if a 1st trip DTC or DTC is detected. For details, refer to EC-118, "Freeze Frame Data and 1st Trip Freeze Frame Data" .

INSPECTION PROCEDURE

CAUTION:

If CONSULT-II is used with no connection of CONSULT-II CONVERTER, malfunctions might be detected in self-diagnosis depending on control unit which carry out CAN communication.

1. Turn ignition switch OFF.
2. Connect CONSULT-II and CONSULT-II CONVERTER to data link connector, which is located under LH dash panel near the hood opener handle.
3. Turn ignition switch ON.

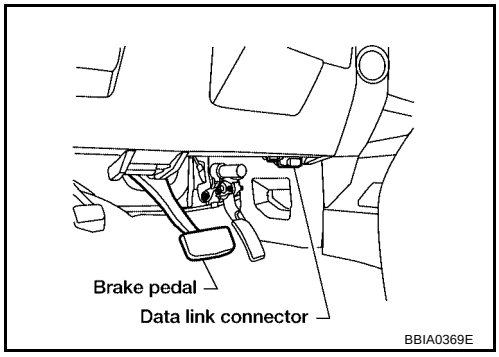

4. Touch “START (NISSAN BASED VHCL)”.

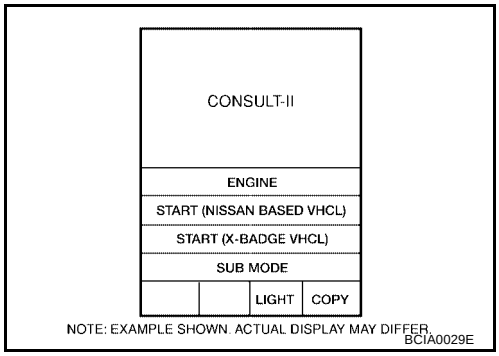

5. Touch “ENGINE”.
   If “ENGINE” is not indicated, go to GI-40, "CONSULT-II Data Link Connector (DLC) Circuit" .

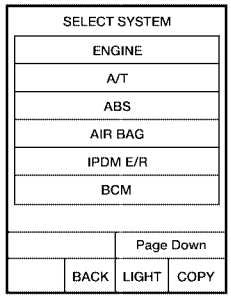

NOTE: EXAMPLE SHOWN. ACTUAL DISPLAY MAY DIFFER
BCIA0030E

6. Perform each diagnostic test mode according to each service procedure.

For further information, see the CONSULT-II Operation Manual.

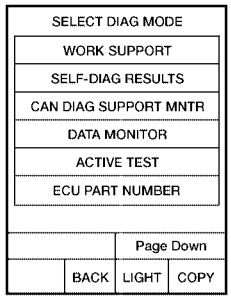

NOTE: EXAMPLE SHOWN. ACTUAL DISPLAY MAY DIFFER
BCIA0031E

WORK SUPPORT MODE

Work Item

WORK ITEM	CONDITION	USAGE
FUEL PRESSURE RELEASE	● FUEL PUMP WILL STOP BY TOUCHING “START” DURING IDLING. CRANK A FEW TIMES AFTER ENGINE STALLS.	When releasing fuel pressure from fuel line
IDLE AIR VOL LEARN	● THE IDLE AIR VOLUME THAT KEEPS THE ENGINE WITHIN THE SPECIFIED RANGE IS MEMORIZED IN ECM.	When learning the idle air volume
SELF-LEARNING CONT	● THE COEFFICIENT OF SELF-LEARNING CONTROL MIXTURE RATIO RETURNS TO THE ORIGINAL COEFFICIENT.	When clearing the coefficient of self-learning control value
EVAP SYSTEM CLOSE	CLOSE THE EVAP CANISTER VENT CONTROL VALVE IN ORDER TO MAKE EVAP SYSTEM CLOSE UNDER THE FOLLOWING CONDITIONS. ● IGN SW ON ● ENGINE NOT RUNNING ● AMBIENT TEMPERATURE IS ABOVE 0°C (32°F). ● NO VACUUM AND NO HIGH PRESSURE IN EVAP SYSTEM ● FUEL TANK TEMP. IS MORE THAN 0°C (32°F). ● WITHIN 10 MINUTES AFTER STARTING “EVAP SYSTEM CLOSE” ● WHEN TRYING TO EXECUTE “EVAP SYSTEM CLOSE” UNDER THE CONDITION EXCEPT ABOVE, CONSULT-II WILL DISCONTINUE IT AND DISPLAY APPROPRIATE INSTRUCTION. **NOTE:** **WHEN STARTING ENGINE, CONSULT-II MAY DISPLAY “BATTERY VOLTAGE IS LOW. CHARGE BATTERY”, EVEN IN USING CHARGED BATTERY.**	When detecting EVAP vapor leak point of EVAP system
VIN REGISTRATION	● IN THIS MODE, VIN IS REGISTERED IN ECM	When registering VIN in ECM

WORK ITEM	CONDITION	USAGE
TARGET IDLE RPM ADJ*	● IDLE CONDITION	When setting target idle speed
TARGET IGN TIM ADJ*	● IDLE CONDITION	When adjusting target ignition timing

*: This function is not necessary in the usual service procedure.

SELF-DIAG RESULTS MODE

Self Diagnostic Item

Regarding items of DTC and 1st trip DTC, refer to EC-49, "EMISSION-RELATED DIAGNOSTIC INFORMATION ITEMS" .

Freeze Frame Data and 1st Trip Freeze Frame Data

Freeze frame data item*	Description
DIAG TROUBLE CODE [PXXXX]	● The engine control component part/control system has a trouble code, it is displayed as PXXXX. (Refer to EC-8, "INDEX FOR DTC" .)
FUEL SYS-B1	● “Fuel injection system status” at the moment a malfunction is detected is displayed. ● One mode in the following is displayed. Mode2: Open loop due to detected system malfunction Mode3: Open loop due to driving conditions (power enrichment, deceleration enleanment) Mode4: Closed loop - using oxygen sensor(s) as feedback for fuel control Mode5: Open loop - has not yet satisfied condition to go to closed loop
FUEL SYS-B2	
CAL/LD VALUE [%]	● The calculated load value at the moment a malfunction is detected is displayed.
COOLANT TEMP [°C] or [°F]	● The engine coolant temperature at the moment a malfunction is detected is displayed.
L-FUEL TRM-B1 [%]	● “Long-term fuel trim” at the moment a malfunction is detected is displayed. ● The long-term fuel trim indicates much more gradual feedback compensation to the base fuel schedule than short-term fuel trim.
L-FUEL TRM-B2 [%]	
S-FUEL TRM-B1 [%]	● “Short-term fuel trim” at the moment a malfunction is detected is displayed. ● The short-term fuel trim indicates dynamic or instantaneous feedback compensation to the base fuel schedule.
S-FUEL TRM-B2 [%]	
ENGINE SPEED [rpm]	● The engine speed at the moment a malfunction is detected is displayed.
VEHICL SPEED [km/h] or [mph]	● The vehicle speed at the moment a malfunction is detected is displayed.
ABSOL TH-P/S [%]	● The throttle valve opening at the moment a malfunction is detected is displayed.
B/FUEL SCHDL [msec]	● The base fuel schedule at the moment a malfunction is detected is displayed.
INT/A TEMP SE [°C] or [°F]	● The intake air temperature at the moment a malfunction is detected is displayed.

*: The item is the same as that of 1st trip freeze frame data.

DATA MONITOR MODE

Monitored Item

×: Applicable

Monitored item [Unit]	ECM INPUT SIGNALS	MAIN SIGNALS	Description	Remarks
ENG SPEED [rpm]	×	×	● Indicates the engine speed computed from the signal of the crankshaft position sensor (POS) and camshaft position sensor (PHASE).	● Accuracy becomes poor if engine speed drops below the idle rpm. ● If the signal is interrupted while the engine is running, an abnormal value may be indicated.
MAS A/F SE-B1 [V]	×	×	● The signal voltage of the mass air flow sensor is displayed.	● When the engine is stopped, a certain value is indicated.
B/FUEL SCHDL [msec]		×	● Base fuel schedule indicates the fuel injection pulse width programmed into ECM, prior to any learned on board correction.	
A/F ALPHA-B1 [%]		×	● The mean value of the air-fuel ratio feedback correction factor per cycle is indicated.	● When the engine is stopped, a certain value is indicated. ● This data also includes the data for the air-fuel ratio learning control.
A/F ALPHA-B2 [%]		×		
COOLAN TEMP/S [°C] or [°F]	×	×	● The engine coolant temperature (determined by the signal voltage of the engine coolant temperature sensor) is displayed.	● When the engine coolant temperature sensor is open or short-circuited, ECM enters fail-safe mode. The engine coolant temperature determined by the ECM is displayed.
A/F SEN1 (B1) [V]	×	×	● The A/F signal computed from the input signal of the A/F sensor 1 is displayed.	
A/F SEN1 (B2) [V]	×			
HO2S2 (B1) [V]	×		● The signal voltage of the heated oxygen sensor 2 is displayed.	
HO2S2 (B2) [V]	×			
HO2S2 MNTR (B1) [RICH/LEAN]	×		● Display of heated oxygen sensor 2 signal: RICH: means the amount of oxygen after three way catalyst is relatively small. LEAN: means the amount of oxygen after three way catalyst is relatively large.	● When the engine is stopped, a certain value is indicated.
HO2S2 MNTR (B2) [RICH/LEAN]	×			
VHCL SPEED SE [km/h] or [mph]	×	×	● The vehicle speed computed from the vehicle speed signal sent from combination meter is displayed.	
BATTERY VOLT [V]	×	×	● The power supply voltage of ECM is displayed.	
ACCEL SEN 1 [V]	×	×	● The accelerator pedal position sensor signal voltage is displayed.	● ACCEL SEN 2 signal is converted by ECM internally. Thus, it differs from ECM terminal voltage signal.
ACCEL SEN 2 [V]	×			
THRTL SEN 1 [V]	×	×	● The throttle position sensor signal voltage is displayed.	● THRTL SEN 2 signal is converted by ECM internally. Thus, it differs from ECM terminal voltage signal.
THRTL SEN 2 [V]	×			
FUEL T/TMP SE [°C] or [°F]	×		● The fuel temperature (determined by the signal voltage of the fuel tank temperature sensor) is displayed.	
INT/A TEMP SE [°C] or [°F]	×	×	● The intake air temperature (determined by the signal voltage of the intake air temperature sensor) is indicated.	
EVAP SYS PRES [V]	×		● The signal voltage of EVAP control system pressure sensor is displayed.	

Monitored item [Unit]	ECM INPUT SIGNALS	MAIN SIGNALS	Description	Remarks
FUEL LEVEL SE [V]	×		● The signal voltage of the fuel level sensor is displayed.	
START SIGNAL [ON/OFF]	×	×	● Indicates start signal status [ON/OFF] computed by the ECM according to the signals of engine speed and battery voltage.	● After starting the engine, [OFF] is displayed regardless of the starter signal.
CLSD THL POS [ON/OFF]	×	×	● Indicates idle position [ON/OFF] computed by ECM according to the accelerator pedal position sensor signal.	
AIR COND SIG [ON/OFF]	×	×	● Indicates [ON/OFF] condition of the air conditioner switch as determined by the air conditioner signal.	
P/N POSI SW [ON/OFF]	×	×	● Indicates [ON/OFF] condition from the park/neutral position (PNP) switch signal.	
PW/ST SIGNAL [ON/OFF]	×	×	● [ON/OFF] condition of the power steering system (determined by the signal voltage of the power steering pressure sensor signal) is indicated.	
LOAD SIGNAL [ON/OFF]	×	×	● Indicates [ON/OFF] condition from the electrical load signal. ON: Rear window defogger switch is ON and/or lighting switch is in 2nd position. OFF: Both rear window defogger switch and lighting switch are OFF.	
IGNITION SW [ON/OFF]	×		● Indicates [ON/OFF] condition from ignition switch signal.	
HEATER FAN SW [ON/OFF]	×		● Indicates [ON/OFF] condition from heater fan switch signal.	
BRAKE SW [ON/OFF]	×		● Indicates [ON/OFF] condition from the stop lamp switch signal.	
INJ PULSE-B1 [msec]		×	● Indicates the actual fuel injection pulse width compensated by ECM according to the input signals.	● When the engine is stopped, a certain computed value is indicated.
INJ PULSE-B2 [msec]				
IGN TIMING [BTDC]		×	● Indicates the ignition timing computed by ECM according to the input signals.	● When the engine is stopped, a certain value is indicated.
CAL/LD VALUE [%]			● “Calculated load value” indicates the value of the current air flow divided by peak air flow.	
MASS AIRFLOW [g·m/s]			● Indicates the mass air flow computed by ECM according to the signal voltage of the mass air flow sensor.	
PURG VOL C/V [%]			● Indicates the EVAP canister purge volume control solenoid valve control value computed by the ECM according to the input signals. ● The opening becomes larger as the value increases.	
AIR COND RLY [ON/OFF]		×	● The air conditioner relay control condition (determined by ECM according to the input signals) is indicated.	
FUEL PUMP RLY [ON/OFF]		×	● Indicates the fuel pump relay control condition determined by ECM according to the input signals.	

Monitored item [Unit]	ECM INPUT SIGNALS	MAIN SIGNALS	Description	Remarks
VENT CONT/V [ON/OFF]			● The control condition of the EVAP canister vent control valve (determined by ECM according to the input signals) is indicated. ON: Closed OFF: Open	
THRTL RELAY [ON/OFF]		×	● Indicates the throttle control motor relay control condition determined by the ECM according to the input signals.	
COOLING FAN [HI/OFF]		×	● The control condition of the cooling fan (determined by ECM according to the input signals) is indicated. HI: High speed operation OFF: Stop	
HO2S2 HTR (B1) [ON/OFF]			● Indicates [ON/OFF] condition of heated oxygen sensor 2 heater determined by ECM according to the input signals.	
HO2S2 HTR (B2) [ON/OFF]				
I/P PULLY SPD [rpm]			● Indicates the engine speed computed from the turbine revolution sensor signal.	
VEHICLE SPEED [km/h] or [MPH]			● Indicates the vehicle speed computed from the revolution sensor signal.	
IDL A/V LEARN [YET/CMPLT]			● Display the condition of idle air volume learning YET: Idle Air Volume Learning has not been performed yet. CMPLT: Idle Air Volume Learning has already been performed successfully.	
TRVL AFTER MIL [km] or [mile]			● Distance traveled while MIL is activated.	
A/F S1 HTR (B1) [%]			● A/F sensor 1 heater control value computed by ECM according to the input signals. ● The current flow to the heater becomes larger as the value increases.	
A/F S1 HTR (B2) [%]				
AC PRESS SEN [V]			● The signal voltage from the refrigerant pressure sensor is displayed.	
VHCL SPEED SE [km/h] or [mph]			● The vehicle speed computed from the vehicle speed signal sent from combination meter is displayed.	
SET VHCL SPD*1 [km/h] or [mph]			● The preset vehicle speed is displayed.	
MAIN SW [ON/OFF]			● Indicates [ON/OFF] condition from MAIN switch signal.	
CANCEL SW [ON/OFF]			● Indicates [ON/OFF] condition from CANCEL switch signal.	
RESUME/ACC SW [ON/OFF]			● Indicates [ON/OFF] condition from RESUME/ACCELERATE switch signal.	
SET SW [ON/OFF]			● Indicates [ON/OFF] condition from SET/COAST switch signal.	
BRAKE SW1 [ON/OFF]			● Indicates [ON/OFF] condition from ASCD brake switch signal.	

Monitored item [Unit]	ECM INPUT SIGNALS	MAIN SIGNALS	Description	Remarks
BRAKE SW2 [ON/OFF]			● Indicates [ON/OFF] condition of stop lamp switch signal.	
DIST SW*2 [ON/OFF]			● Indicates [ON/OFF] condition from DISTANCE switch signal.	
VHCL SPD CUT [NON/CUT]			● Indicates the vehicle cruise condition. NON: Vehicle speed is maintained at the ASCD set speed. CUT: Vehicle speed increased to excessively high compared with the ASCD set speed, and ASCD operation is cut off.	
LO SPEED CUT*1 [NON/CUT]			● Indicates the vehicle cruise condition. NON: Vehicle speed is maintained at the ASCD set speed. CUT: Vehicle speed decreased to excessively low compared with the ASCD set speed, and ASCD operation is cut off.	
AT OD MONITOR*1 [ON/OFF]			● Indicates [ON/OFF] condition of A/T O/D according to the input signal from the TCM.	
AT OD CANCEL*1 [ON/OFF]			● Indicates [ON/OFF] condition of A/T O/D cancel signal sent from the TCM.	
CRUISE LAMP [ON/OFF]			● Indicates [ON/OFF] condition of CRUISE lamp determined by the ECM according to the input signals.	
SET LAMP*1 [ON/OFF]			● Indicates [ON/OFF] condition of SET lamp determined by the ECM according to the input signals.	
Voltage [V]			● Voltage, frequency, duty cycle or pulse width measured by the probe.	● Only # is displayed if item is unable to be measured. ● Figures with #s are temporary ones. They are the same figures as an actual piece of data which was just previously measured.
Frequency [msec], [Hz] or [%]				
DUTY-HI				
DUTY-LOW				
PLS WIDTH-HI				
PLS WIDTH-LOW				

*1: Models with ASCD
*2: Models with ICC

NOTE:
Any monitored item that does not match the vehicle being diagnosed is deleted from the display automatically.

DATA MONITOR (SPEC) MODE

Monitored Item

Monitored item [Unit]	ECM INPUT SIGNALS	MAIN SIGNALS	Description	Remarks
ENG SPEED [rpm]	×	×	● Indicates the engine speed computed from the signal of the crankshaft position sensor (POS) and camshaft position sensor (PHASE).	
MAS A/F SE-B1 [V]	×	×	● The signal voltage of the mass air flow sensor specification is displayed.	● When engine is running specification range is indicated.

Monitored item [Unit]	ECM INPUT SIGNALS	MAIN SIGNALS	Description	Remarks
B/FUEL SCHDL [msec]		×	● Base fuel schedule indicates the fuel injection pulse width programmed into ECM, prior to any learned on board correction.	● When engine is running specification range is indicated.
A/F ALPHA-B1 [%] A/F ALPHA-B2 [%]		×	● The mean value of the air-fuel ratio feedback correction factor per cycle is indicated.	● When engine is running specification range is indicated. ● This data also includes the data for the air-fuel ratio learning control.

NOTE:
Any monitored item that does not match the vehicle being diagnosed is deleted from the display automatically.

ACTIVE TEST MODE

Test Item

TEST ITEM	CONDITION	JUDGEMENT	CHECK ITEM (REMEDY)
FUEL INJECTION	● Engine: Return to the original trouble condition ● Change the amount of fuel injection using CONSULT-II.	If trouble symptom disappears, see CHECK ITEM.	● Harness and connectors ● Fuel injector ● Air fuel ratio (A/F) sensor 1
IGNITION TIMING	● Engine: Return to the original trouble condition ● Timing light: Set ● Retard the ignition timing using CONSULT-II.	If trouble symptom disappears, see CHECK ITEM.	● Perform Idle Air Volume Learning.
POWER BALANCE	● Engine: After warming up, idle the engine. ● A/C switch: OFF ● Selector lever: P or N ● Cut off each injector signal one at a time using CONSULT-II.	Engine runs rough or dies.	● Harness and connectors ● Compression ● Fuel injector ● Power transistor ● Spark plug ● Ignition coil
COOLING FAN*	● Ignition switch: ON ● Turn the cooling fan HI and OFF using CONSULT-II.	Cooling fan moves and stops.	● Harness and connectors ● Cooling fan motor ● IPDM E/R
ENG COOLANT TEMP	● Engine: Return to the original trouble condition ● Change the engine coolant temperature using CONSULT-II.	If trouble symptom disappears, see CHECK ITEM.	● Harness and connectors ● Engine coolant temperature sensor ● Fuel injector
FUEL PUMP RELAY	● Ignition switch: ON (Engine stopped) ● Turn the fuel pump relay ON and OFF using CONSULT-II and listen to operating sound.	Fuel pump relay makes the operating sound.	● Harness and connectors ● Fuel pump relay
PURG VOL CONT/V	● Engine: After warming up, run engine at 1,500 rpm. ● Change the EVAP canister purge volume control solenoid valve opening percent using CONSULT-II.	Engine speed changes according to the opening percent.	● Harness and connectors ● Solenoid valve

TEST ITEM	CONDITION	JUDGEMENT	CHECK ITEM (REMEDY)
FUEL/T TEMP SEN	● Change the fuel tank temperature using CONSULT-II.		
VENT CON-TROL/V	● Ignition switch: ON (Engine stopped) ● Turn solenoid valve ON and OFF with the CONSULT-II and listen to operating sound.	Solenoid valve makes an operating sound.	● Harness and connectors ● Solenoid valve

*: Leaving cooling fan OFF with CONSULT-II while engine is running may cause the engine to overheat.

DTC & SRT CONFIRMATION MODE

SRT STATUS Mode

For details, refer to EC-54, "SYSTEM READINESS TEST (SRT) CODE" .

SRT WORK SUPPORT Mode

This mode enables a technician to drive a vehicle to set the SRT while monitoring the SRT status.

DTC WORK SUPPORT Mode

Test mode	Test item	Corresponding DTC No.	Reference page
EVAPORATIVE SYSTEM	PURG FLOW P0441	P0441	EC-360
	EVP SML LEAK P0442/P1442*	P0442	EC-365
		P0455	EC-419
	EVP V/S LEAK P0456/P1456*	P0456	EC-427
	PURG VOL CN/V P1444	P0443	EC-373
A/F SEN1	A/F SEN1 (B1) P1276	P0130	EC-213
	A/F SEN1 (B1) P1278/P1279	P0133	EC-241
	A/F SEN1 (B2) P1286	P0150	EC-213
	A/F SEN1 (B2) P1288/P1289	P0153	EC-241
HO2S2	HO2S2 (B1) P0139	P0139	EC-277
	HO2S2 (B1) P1146	P0138	EC-264
	HO2S2 (B1) P1147	P0137	EC-253
	HO2S2 (B2) P0159	P0159	EC-277
	HO2S2 (B2) P1166	P0158	EC-264
	HO2S2 (B2) P1167	P0157	EC-253

*: DTC P1442 and P1456 does not apply to JA60 models but appears in DTC Work Support Mode screens.

REAL TIME DIAGNOSIS IN DATA MONITOR MODE (RECORDING VEHICLE DATA)

Description

CONSULT-II has two kinds of triggers and they can be selected by touching “SETTING” in “DATA MONITOR” mode.

1. “AUTO TRIG” (Automatic trigger):
   - The malfunction will be identified on the CONSULT-II screen in real time.
     In other words, DTC/1st trip DTC and malfunction item will be displayed if the malfunction is detected by ECM.
     At the moment a malfunction is detected by ECM, “MONITOR” in “DATA MONITOR” screen is changed to “Recording Data ... xx%” as shown in the figure, and the data after the malfunction detection is recorded. Then when the percentage reached 100%, “REAL-TIME DIAG” screen is displayed. If “STOP” is touched on the screen during “Recording Data ... xx%”, “REAL-TIME DIAG” screen is also displayed.
     The recording time after the malfunction detection and the recording speed can be changed by “TRIGGER POINT” and “Recording Speed”. Refer to CONSULT-II Operation Manual.
2. “MANU TRIG” (Manual trigger):
   - DTC/1st trip DTC and malfunction item will not be displayed automatically on CONSULT-II screen even though a malfunction is detected by ECM.
     DATA MONITOR can be performed continuously even though a malfunction is detected.

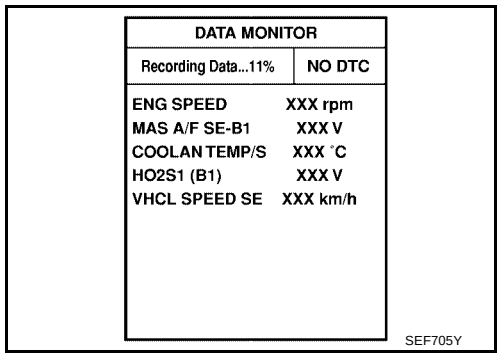

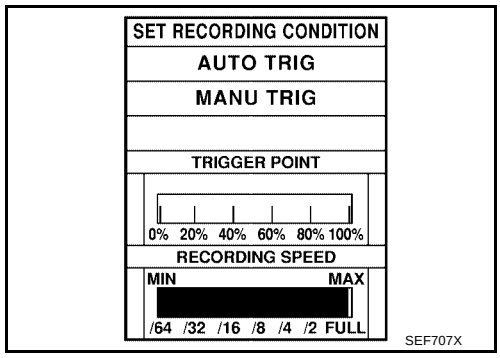

Operation

1. “AUTO TRIG”
   - While trying to detect the DTC/1st trip DTC by performing the DTC Confirmation Procedure, be sure to select to “DATA MONITOR (AUTO TRIG)” mode. You can confirm the malfunction at the moment it is detected.
   - While narrowing down the possible causes, CONSULT-II should be set in “DATA MONITOR (AUTO TRIG)” mode, especially in case the incident is intermittent.
     When you are inspecting the circuit by gently shaking (or twisting) the suspicious connectors, components and harness in the DTC Confirmation Procedure, the moment a malfunction is found the DTC/1st trip DTC will be displayed. (Refer to “INCIDENT SIMULATION TESTS” in GI-28, "How to Perform Efficient Diagnosis for an Electrical Incident" .)
2. “MANU TRIG”
   - If the malfunction is displayed as soon as “DATA MONITOR” is selected, reset CONSULT-II to “MANU TRIG”. By selecting “MANU TRIG” you can monitor and store the data. The data can be utilized for further diagnosis, such as a comparison with the value for the normal operating condition.

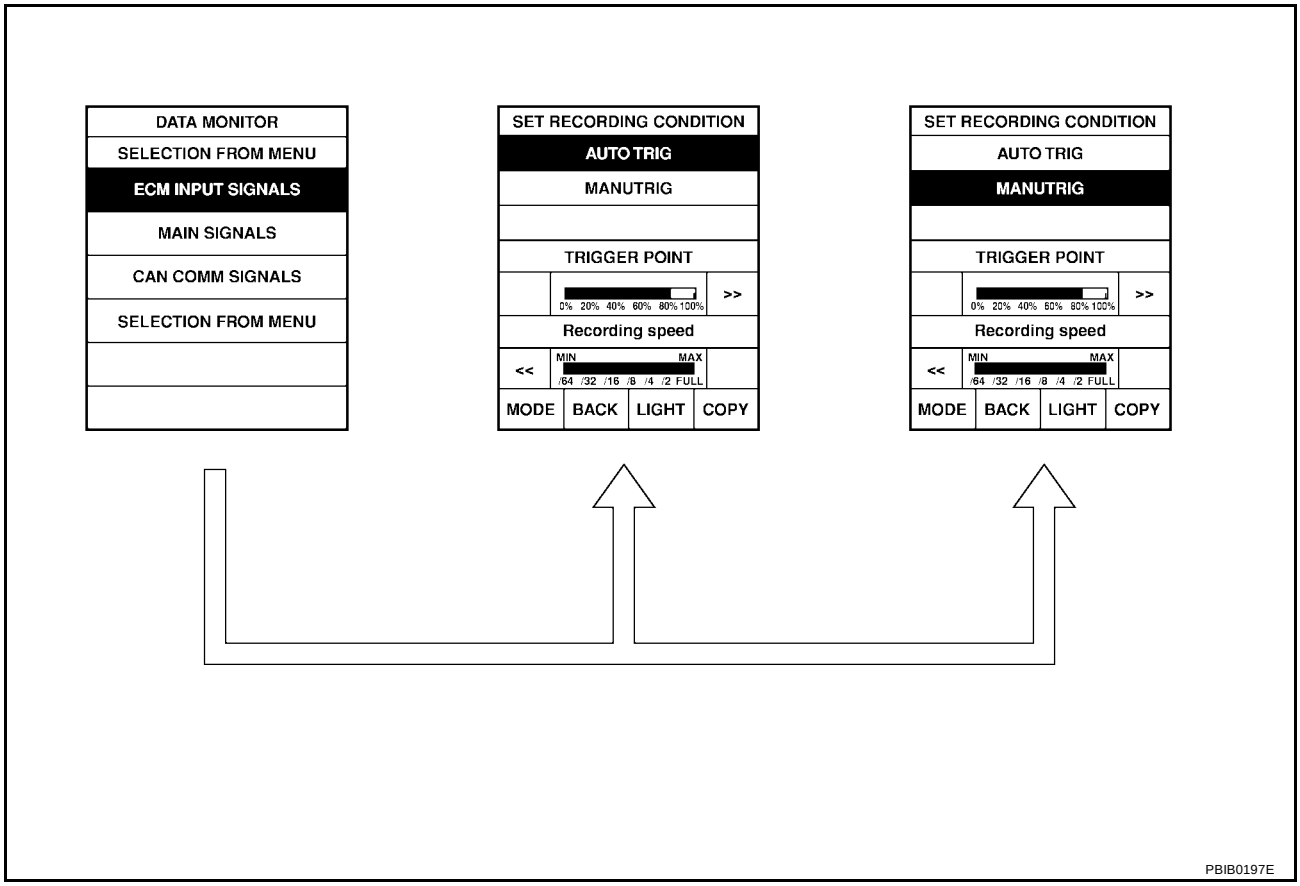

Generic Scan Tool (GST) Function

UBS00L0C

DESCRIPTION

Generic Scan Tool (OBDII scan tool) complying with SAE J1978 has 8 different functions explained below.
ISO9141 is used as the protocol.
The name GST or Generic Scan Tool is used in this service manual.

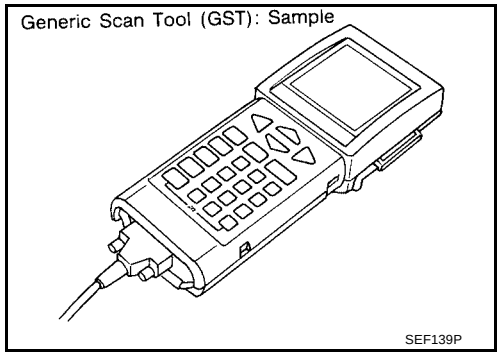

FUNCTION

Diagnostic test mode		Function
Service $01	READINESS TESTS	This diagnostic service gains access to current emission-related data values, including analog inputs and outputs, digital inputs and outputs, and system status information.
Service $02	(FREEZE DATA)	This diagnostic service gains access to emission-related data value which were stored by ECM during the freeze frame. For details, refer to EC-53, "FREEZE FRAME DATA AND 1ST TRIP FREEZE FRAME DATA" .
Service $03	DTCs	This diagnostic service gains access to emission-related power train trouble codes which were stored by ECM.
Service $04	CLEAR DIAG INFO	This diagnostic service can clear all emission-related diagnostic information. This includes: ● Clear number of diagnostic trouble codes (Service $01) ● Clear diagnostic trouble codes (Service $03) ● Clear trouble code for freeze frame data (Service $01) ● Clear freeze frame data (Service $02) ● Reset status of system monitoring test (Service $01) ● Clear on board monitoring test results (Service $06 and $07)
Service $06	(ON BOARD TESTS)	This diagnostic service accesses the results of on board diagnostic monitoring tests of specific components/systems that are not continuously monitored.
Service $07	(ON BOARD TESTS)	This diagnostic service enables the off board test drive to obtain test results for emission-related powertrain components/systems that are continuously monitored during normal driving conditions.
Service $08	—	This diagnostic service can close EVAP system in ignition switch ON position (Engine stopped). When this diagnostic service is performed, the EVAP canister vent control valve can be closed. In the following conditions, this diagnostic service cannot function. ● Low ambient temperature ● Low battery voltage ● Engine running ● Ignition switch OFF ● Low fuel temperature ● Too much pressure is applied to EVAP system
Service $09	(CALIBRATION ID)	This diagnostic service enables the off-board test device to request specific vehicle information such as Vehicle Identification Number (VIN) and Calibration IDs.

INSPECTION PROCEDURE

1. Turn ignition switch OFF.
2. Connect GST to data link connector, which is located under LH dash panel near the hood opener handle.

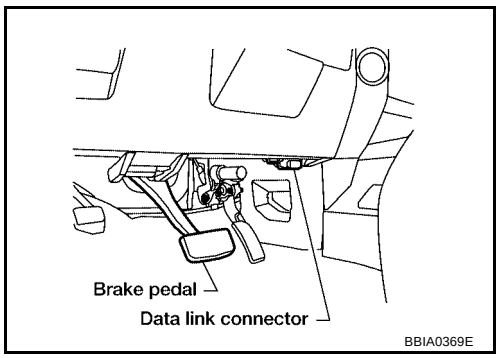

3. Turn ignition switch ON.
4. Enter the program according to instruction on the screen or in the operation manual.
   (*: Regarding GST screens in this section, sample screens are shown.)

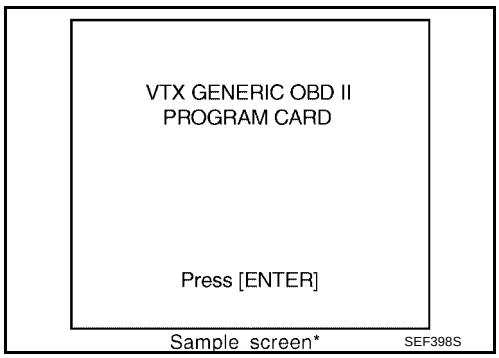

5. Perform each diagnostic service according to each service procedure.
   For further information, see the GST Operation Manual of the tool maker.

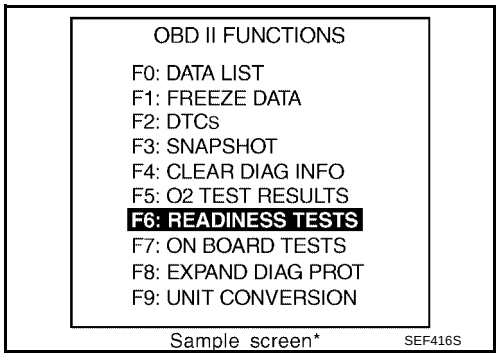

CONSULT-II Reference Value in Data Monitor

UBS00L0D

Remarks:
- Specification data are reference values.
- Specification data are output/input values which are detected or supplied by the ECM at the connector.
  * Specification data may not be directly related to their components signals/values/operations.
  i.e. Adjust ignition timing with a timing light before monitoring IGN TIMING, because the monitor may show the specification data in spite of the ignition timing not being adjusted to the specification data. This IGN TIMING monitors the data calculated by the ECM according to the signals input from the camshaft position sensor and other ignition timing related sensors.

MONITOR ITEM	CONDITION		SPECIFICATION
ENG SPEED	● Run engine and compare CONSULT-II value with the tachometer indication.		Almost the same speed as the tachometer indication.
MAS A/F SE-B1	See EC-134, "TROUBLE DIAGNOSIS - SPECIFICATION VALUE" .		
B/FUEL SCHDL	See EC-134, "TROUBLE DIAGNOSIS - SPECIFICATION VALUE" .		
A/F ALPHA-B1 A/F ALPHA-B2	See EC-134, "TROUBLE DIAGNOSIS - SPECIFICATION VALUE" .		
COOLAN TEMP/S	● Engine: After warming up		More than 70°C (158°F)
A/F SEN1 (B1) A/F SEN1 (B2)	● Engine: After warming up	Maintaining engine speed at 2,000 rpm	Fluctuates around 1.5 V
HO2S2 (B1) HO2S2 (B2)	● Revving engine from idle to 3,000 rpm quickly after the following conditions are met. – Engine: After warming up – Keeping the engine speed between 3,500 and 4,000 rpm for 1 minute and at idle for 1 minute under no load		0 - 0.3V ←→ Approx. 0.6 - 1.0V
HO2S2 MNTR (B1) HO2S2 MNTR (B2)	● Revving engine from idle to 3,000 rpm quickly after the following conditions are met. – Engine: After warming up – Keeping the engine speed between 3,500 and 4,000 rpm for 1 minute and at idle for 1 minute under no load		LEAN ←→ RICH
VHCL SPEED SE	● Turn drive wheels and compare CONSULT-II value with the speedometer indication.		Almost the same speed as the speedometer indication
BATTERY VOLT	● Ignition switch: ON (Engine stopped)		11 - 14V
ACCEL SEN 1	● Ignition switch: ON (Engine stopped)	Accelerator pedal: Fully released	0.5 - 1.0V
		Accelerator pedal: Fully depressed	4.2 - 4.8V
ACCEL SEN 2*	● Ignition switch: ON (Engine stopped)	Accelerator pedal: Fully released	0.5 - 1.0V
		Accelerator pedal: Fully depressed	4.2 - 4.8V
THRTL SEN 1 THRTL SEN 2*	● Ignition switch: ON (Engine stopped) ● Selector lever: D	Accelerator pedal: Fully released	More than 0.36V
		Accelerator pedal: Fully depressed	Less than 4.75V
EVAP SYS PRES	● Ignition switch: ON		Approx. 1.8 - 4.8V
START SIGNAL	● Ignition switch: ON → START → ON		OFF → ON → OFF
CLSD THL POS	● Ignition switch: ON (Engine stopped)	Accelerator pedal: Fully released	ON
		Accelerator pedal: Slightly depressed	OFF
AIR COND SIG	● Engine: After warming up, idle the engine	Air conditioner switch: OFF	OFF
		Air conditioner switch: ON (Compressor operates.)	ON
P/N POSI SW	● Ignition switch: ON	Selector lever: P or N	ON
		Selector lever: Except above	OFF
PW/ST SIGNAL	● Engine: After warming up, idle the engine	Steering wheel: Not being turned (Forward direction)	OFF
		Steering wheel: Being turned	ON

MONITOR ITEM	CONDITION		SPECIFICATION
LOAD SIGNAL	● Ignition switch: ON	Rear window defogger switch is ON and/or lighting switch is in 2nd.	ON
		Rear window defogger switch is OFF and lighting switch is OFF.	OFF
IGNITION SW	● Ignition switch: ON → OFF → ON		ON → OFF → ON
HEATER FAN SW	● Engine: After warming up, idle the engine	Heater fan control switch: ON	ON
		Heater fan control switch: OFF	OFF
BRAKE SW	● Ignition switch: ON	Brake pedal: Fully released	OFF
		Brake pedal: Slightly depressed	ON
INJ PULSE-B1 INJ PULSE-B2	● Engine: After warming up ● Selector lever: P or N ● Air conditioner switch: OFF ● No load	Idle	2.0 - 2.8 msec
		2,000 rpm	1.9 - 2.9 msec
IGN TIMING	● Engine: After warming up ● Selector lever: P or N ● Air conditioner switch: OFF ● No load	Idle	10° - 20° BTDC
		2,000 rpm	25° - 45° BTDC
CAL/LD VALUE	● Engine: After warming up ● Selector lever: P or N ● Air conditioner switch: OFF ● No load	Idle	14% - 33%
		2,500 rpm	12% - 25%
MASS AIRFLOW	● Engine: After warming up ● Selector lever: P or N ● Air conditioner switch: OFF ● No load	Idle	3.0 - 9.0 g·m/s
		2,500 rpm	9.0 - 28.0 g·m/s
PURG VOL C/V	● Engine: After warming up ● Selector lever: P or N ● Air conditioner switch: OFF ● No load	Idle (Accelerator pedal: Not depressed even slightly, after engine starting.)	0%
		2,000 rpm	—
AIR COND RLY	● Engine: After warming up, idle the engine	Air conditioner switch: OFF	OFF
		Air conditioner switch: ON (Compressor: Operates)	ON
FUEL PUMP RLY	● For 1 second after turning ignition switch ON ● Engine running or cranking		ON
	● Except above conditions		OFF
VENT CONT/V	● Ignition switch: ON		OFF
THRTL RELAY	● Ignition switch: ON		ON
COOLING FAN	● Engine: After warming up, idle the engine ● Air conditioner switch: OFF	Engine coolant temperature: 99°C (210°F) or less	OFF
		Engine coolant temperature: 100°C (212°F) or more	HI
HO2S2 HTR (B1) HO2S2 HTR (B2)	● Engine speed: Below 3,600 rpm after the following conditions are met. – Engine: After warming up – Keeping the engine speed between 3,500 and 4,000 rpm for 1 minute and at idle for 1 minute under no load		ON
	● Engine speed: Above 3,600 rpm		OFF
I/P PULLY SPD	● Vehicle speed: More than 20 km/h (12 MPH)		Almost the same speed as the tachometer indication

MONITOR ITEM	CONDITION		SPECIFICATION
VEHICLE SPEED	● Turn drive wheels and compare CONSULT-II value with the speedometer indication.		Almost the same speed as the speedometer indication
TRVL AFTER MIL	● Ignition switch: ON	Vehicle has traveled after MIL has turned ON.	0 - 65,535 km (0 - 40,723 mile)
A/F S1 HTR (B1) A/F S1 HTR (B2)	● Engine: After warming up, idle the engine		0 - 100%
AC PRESS SEN	● Engine: Idle ● Both A/C switch and blower fan switch: ON (Compressor operates.)		1.0 - 4.0V
VHCL SPEED SE	● Turn drive wheels and compare CONSULT-II value with the speedometer indication.		Almost the same speed as the speedometer indication
SET VHCL SPD	● Engine: Running	ASCD: Operating.	The preset vehicle speed is displayed.
MAIN SW	● Ignition switch: ON	MAIN switch: Pressed	ON
		MAIN switch: Released	OFF
CANCEL SW	● Ignition switch: ON	CANCEL switch: Pressed	ON
		CANCEL switch: Released	OFF
RESUME/ACC SW	● Ignition switch: ON	RESUME/ACCELERATE switch: Pressed	ON
		RESUME/ACCELERATE switch: Released	OFF
SET SW	● Ignition switch: ON	SET/COAST switch: Pressed	ON
		SET/COAST switch: Released	OFF
DIST SW	● Ignition switch: ON	DISTANCE switch: Pressed	ON
		DISTANCE switch: Released	OFF
BRAKE SW1	● Ignition switch: ON	Brake pedal: Fully released	ON
		Brake pedal: Slightly depressed	OFF
BRAKE SW2	● Ignition switch: ON	Brake pedal: Fully released	OFF
		Brake pedal: Slightly depressed	ON
CRUISE LAMP	● Ignition switch: ON	MAIN switch: Pressed at the 1st time → at the 2nd time	ON → OFF
SET LAMP	● MAIN switch: ON ● Vehicle speed: Between 40 km/h (25 MPH) and 144 km/h (89 MPH)	ASCD: Operating	ON
		ASCD: Not operating	OFF

*: Accelerator pedal position sensor 2 signal and throttle position sensor 2 signal are converted by ECM internally. Thus, they differ from ECM terminals voltage signal.

Major Sensor Reference Graph in Data Monitor Mode

UBS00L0E

The following are the major sensor reference graphs in “DATA MONITOR” mode.

CLSD THL POS, ACCEL SEN 1, THRTL SEN 1

Below is the data for “CLSD THL POS”, “ACCEL SEN 1” and “THRTL SEN 1” when depressing the accelerator pedal with the ignition switch ON and with selector lever in D position.
The signal of “ACCEL SEN 1” and “THRTL SEN 1” should rise gradually without any intermittent drop or rise after “CLSD THL POS” is changed from ON to OFF.

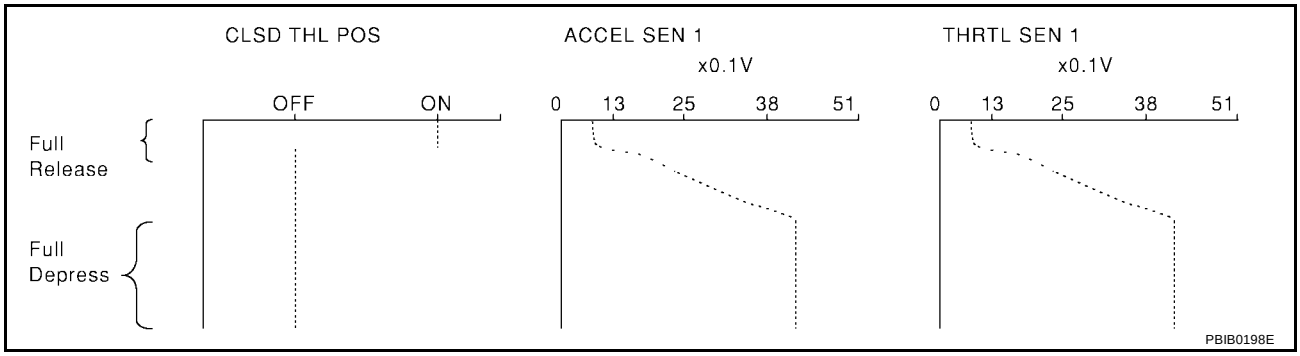

ENG SPEED, MAS A/F SE-B1, THRTL SEN 1, HO2S2 (B1), INJ PULSE-B1

Below is the data for “ENG SPEED”, “MAS A/F SE-B1”, “THRTL SEN 1”, “HO2S2 (B1)” and “INJ PULSE-B1” when revving engine quickly up to 4,800 rpm under no load after warming up engine sufficiently.
Each value is for reference, the exact value may vary.

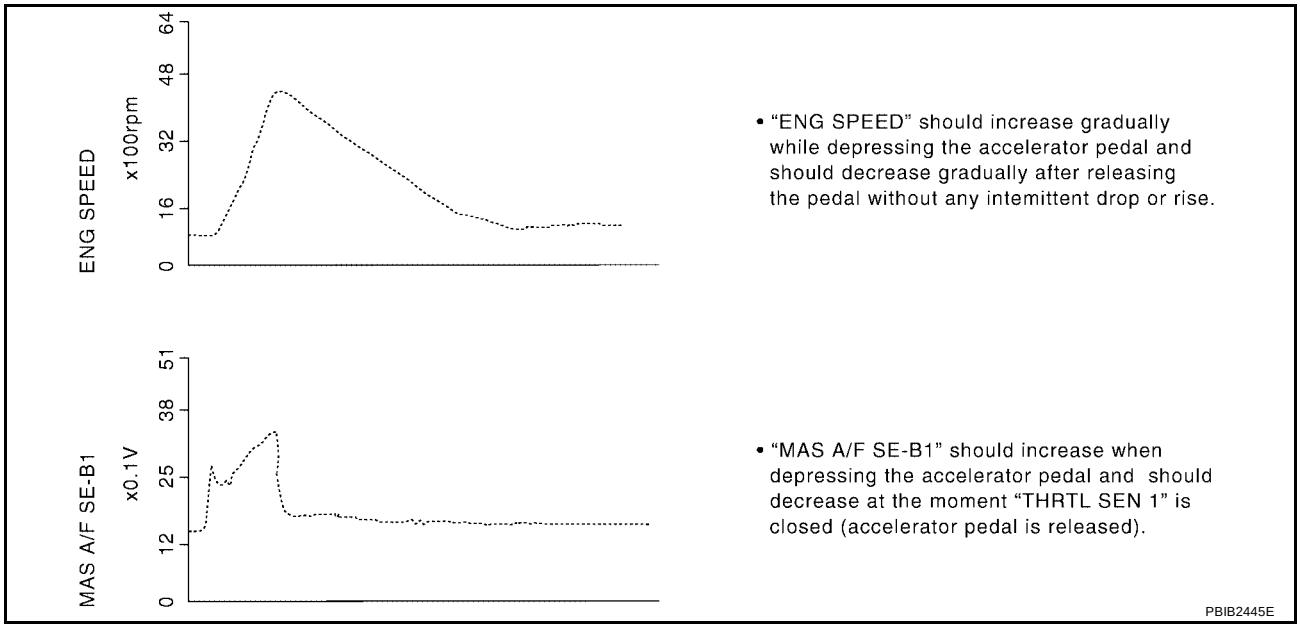

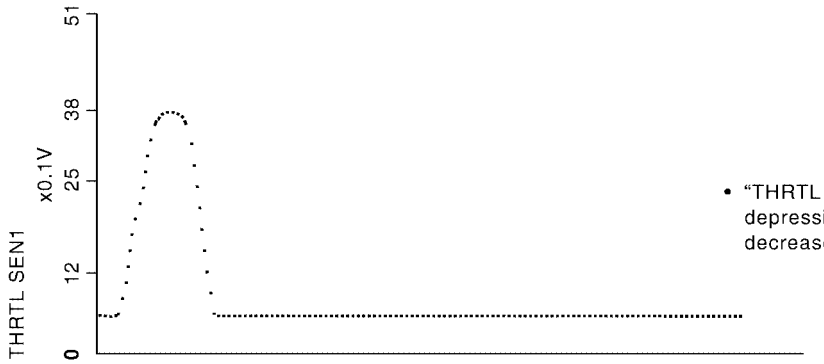

- "THRTL SEN1" should increase while depressing the accelerator pedal and should decrease while releasing it.

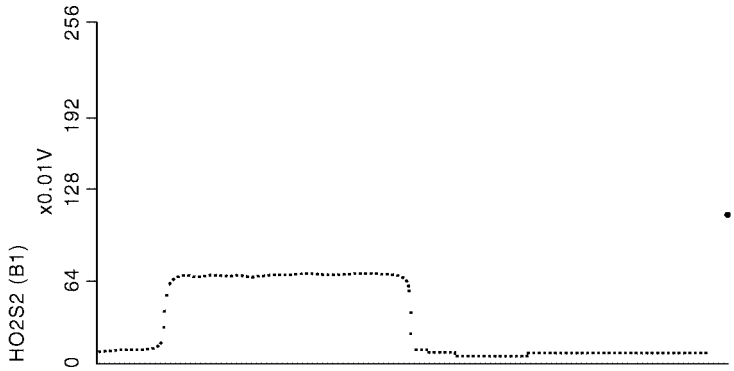

- "HO2S2 (B1)" may increase immediately after depressing the accelerator pedal and may decrease after releasing the pedal.

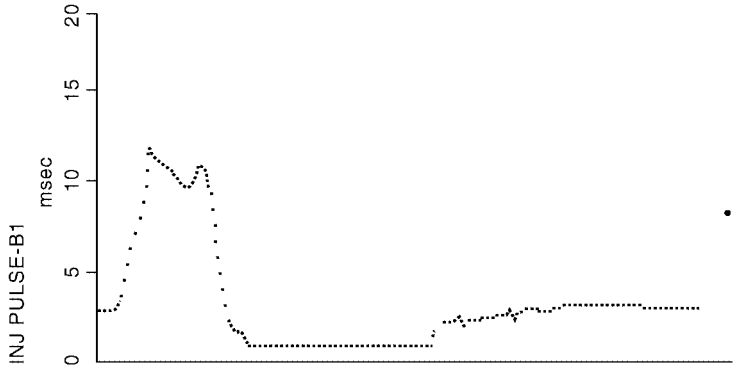

- "INJ PULSE-B1" should increase when depressing the accelerator pedal and should decrease when the pedal is released.

PBIB2099E

TROUBLE DIAGNOSIS - SPECIFICATION VALUE

PFP:00031

Description

UBS00L0F

The specification (SP) value indicates the tolerance of the value that is displayed in “DATA MONITOR (SPEC)” mode of CONSULT-II during normal operation of the Engine Control System. When the value in “DATA MONITOR (SPEC)” mode is within the SP value, the Engine Control System is confirmed OK. When the value in “DATA MONITOR (SPEC)” mode is NOT within the SP value, the Engine Control System may have one or more malfunctions.
The SP value is used to detect malfunctions that may affect the Engine Control System, but will not light the MIL.
The SP value will be displayed for the following three items:

- B/FUEL SCHDL (The fuel injection pulse width programmed into ECM prior to any learned on board correction)
- A/F ALPHA-B1/B2 (The mean value of air-fuel ratio feedback correction factor per cycle)
- MAS A/F SE-B1 (The signal voltage of the mass air flow sensor)

Testing Condition

UBS00L0G

- Vehicle driven distance: More than 5,000 km (3,107 miles)
- Barometric pressure: 98.3 - 104.3 kPa (1.003 - 1.064 kg/cm^2 , 14.25 - 15.12 psi)
- Atmospheric temperature: 20 - 30°C (68 - 86°F)
- Engine coolant temperature: 75 - 95°C (167 - 203°F)
- Engine speed: Idle
- Transmission: Warmed-up
  - After the engine is warmed up to normal operating temperature, drive vehicle until “ATF TEMP SE 1” (A/T fluid temperature sensor signal) indicates more than 60°C (140°F).
- Electrical load: Not applied
  - Rear window defogger switch, air conditioner switch, lighting switch are OFF. Steering wheel is straight ahead.

Inspection Procedure

UBS00L0H

NOTE:
Perform “DATA MONITOR (SPEC)” mode in maximum scale display.

1. Perform EC-71, "Basic Inspection" .
2. Confirm that the testing conditions indicated above are met.
3. Select “B/FUEL SCHDL”, “A/F ALPHA-B1”, “A/F ALPHA-B2” and “MAS A/F SE-B1” in “DATA MONITOR (SPEC)” mode with CONSULT-II.
4. Make sure that monitor items are within the SP value.
5. If NG, go to EC-135, "Diagnostic Procedure" .

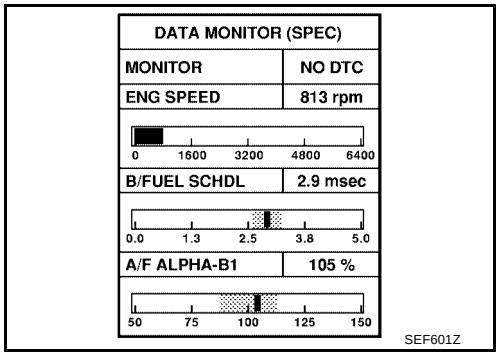

Diagnostic Procedure

UBS00L0I

OVERALL SEQUENCE

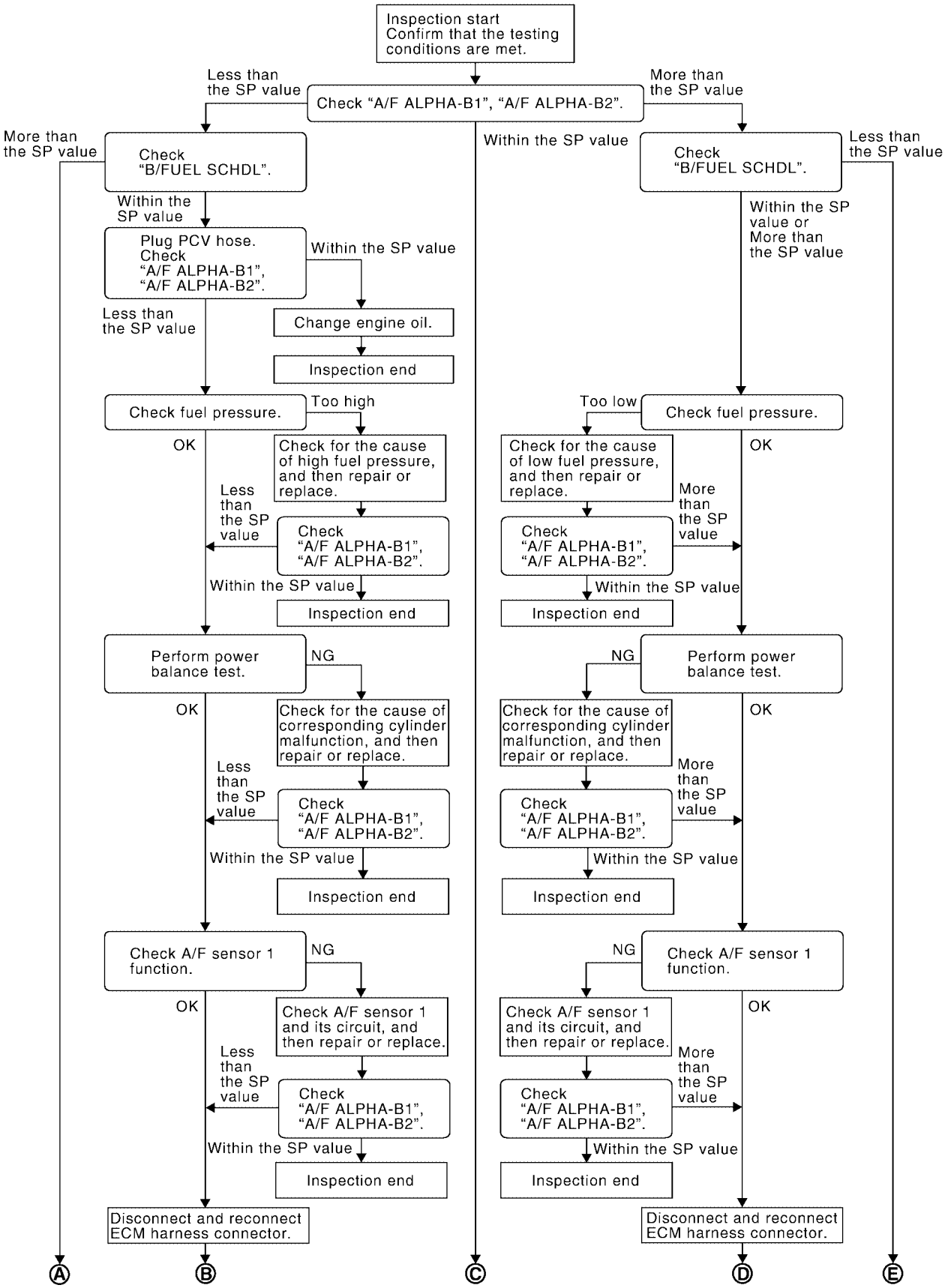

PBIB2268E

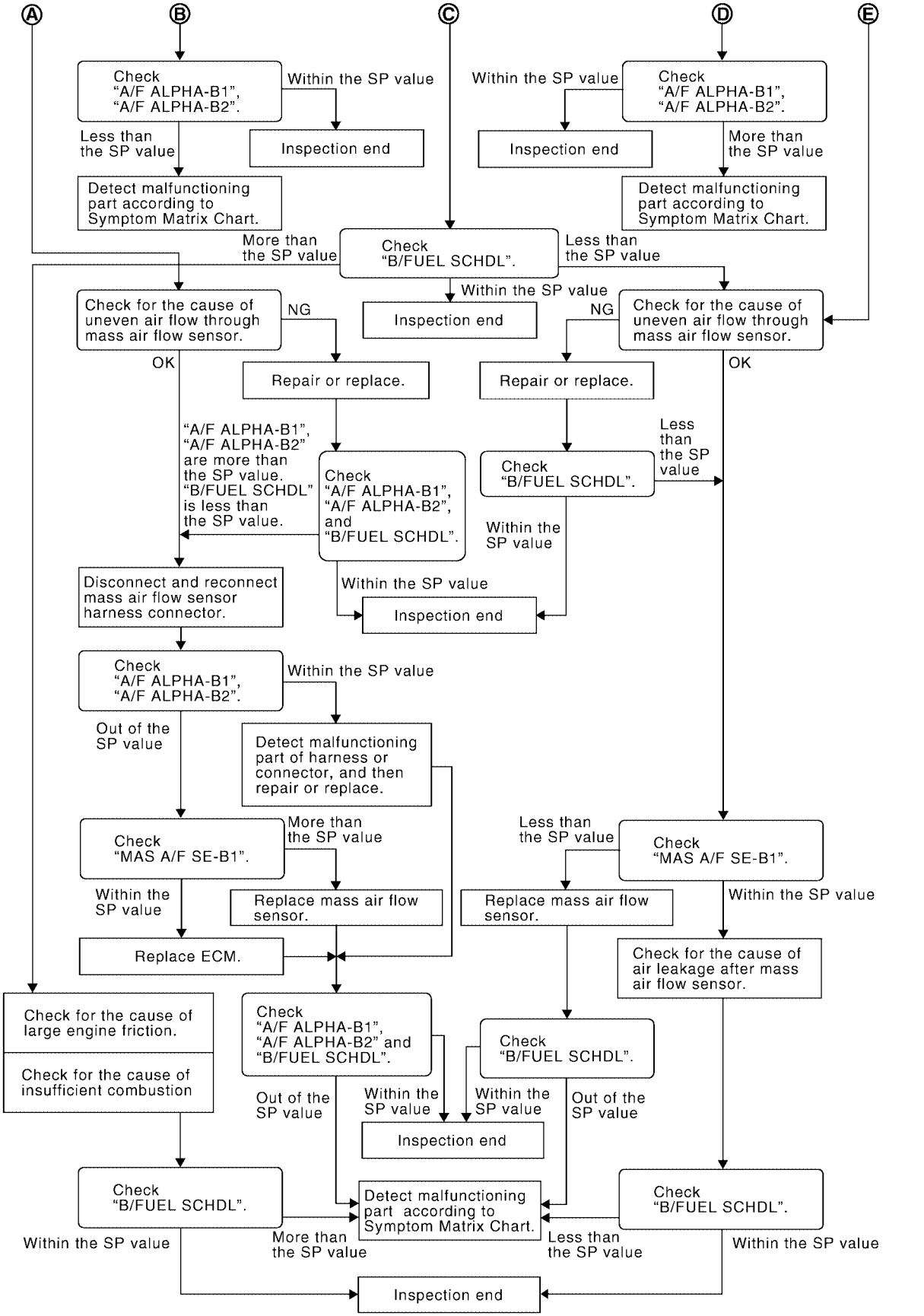
A
B
C
D
E
Check "A/F ALPHA-B1", "A/F ALPHA-B2".
Within the SP value
Inspection end
Less than the SP value
Detect malfunctioning part according to Symptom Matrix Chart.
Check "A/F ALPHA-B1", "A/F ALPHA-B2".
Within the SP value
Inspection end
More than the SP value
Detect malfunctioning part according to Symptom Matrix Chart.
More than the SP value
Check "B/FUEL SCHDL".
Less than the SP value
Within the SP value
Inspection end
Check for the cause of uneven air flow through mass air flow sensor.
NG
OK
Repair or replace.
Check for the cause of uneven air flow through mass air flow sensor.
NG
OK
Repair or replace.
"A/F ALPHA-B1", "A/F ALPHA-B2" are more than the SP value. "B/FUEL SCHDL" is less than the SP value.
Check "A/F ALPHA-B1", "A/F ALPHA-B2", and "B/FUEL SCHDL".
Check "B/FUEL SCHDL".
Less than the SP value
Within the SP value
Within the SP value
Inspection end
Disconnect and reconnect mass air flow sensor harness connector.
Check "A/F ALPHA-B1", "A/F ALPHA-B2".
Within the SP value
Out of the SP value
Detect malfunctioning part of harness or connector, and then repair or replace.
Check "MAS A/F SE-B1".
More than the SP value
Within the SP value
Replace mass air flow sensor.
Replace ECM.
Less than the SP value
Check "MAS A/F SE-B1".
Replace mass air flow sensor.
Within the SP value
Check for the cause of air leakage after mass air flow sensor.
Check for the cause of large engine friction.
Check for the cause of insufficient combustion
Check "A/F ALPHA-B1", "A/F ALPHA-B2" and "B/FUEL SCHDL".
Check "B/FUEL SCHDL".
Out of the SP value
Within the SP value
Within the SP value
Out of the SP value
Inspection end
Check "B/FUEL SCHDL".
Detect malfunctioning part according to Symptom Matrix Chart.
Check "B/FUEL SCHDL".
Within the SP value
More than the SP value
Less than the SP value
Within the SP value
Inspection end
PBIB2548E

DETAILED PROCEDURE

1. CHECK “A/F ALPHA-B1”, “A/F ALPHA-B2”

1. Start engine.
2. Confirm that the testing conditions are met. Refer to EC-134, "Testing Condition" .
3. Select “A/F ALPHA-B1”, “A/F ALPHA-B2” in “DATA MONITOR (SPEC)” mode, and make sure that the each indication is within the SP value.

   NOTE:
   Check “A/F ALPHA-B1”, “A/F ALPHA-B2” for approximately 1 minute because they may fluctuate. It is NG if the indication is out of the SP value even a little.

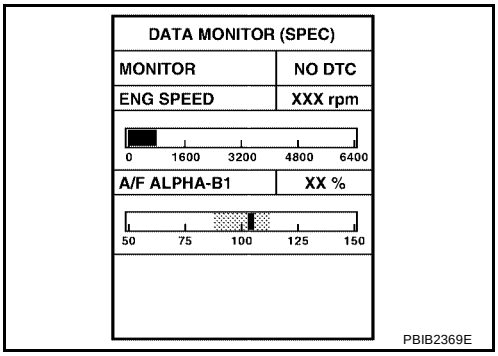

OK or NG

OK >> GO TO 17.
NG (Less than the SP value)>>GO TO 2.
NG (More than the SP value)>>GO TO 3.

2. CHECK “B/FUEL SCHDL”

Select “B/FUEL SCHDL” in “DATA MONITOR (SPEC)” mode, and make sure that the indication is within the SP value.

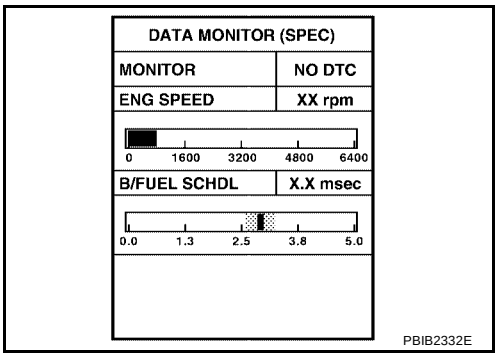

OK or NG

OK >> GO TO 4.
NG (More than the SP value)>>GO TO 19.

3. CHECK “B/FUEL SCHDL”

Select “B/FUEL SCHDL” in “DATA MONITOR (SPEC)” mode, and make sure that the indication is within the SP value.

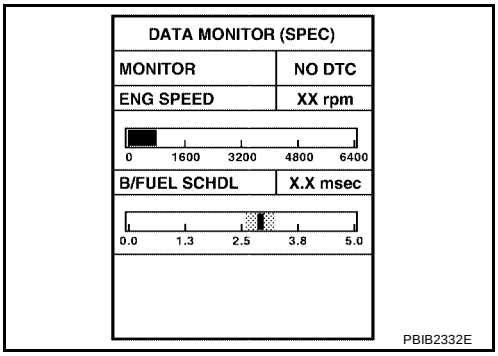

OK or NG

OK >> GO TO 6.
NG (More than the SP value)>>GO TO 6.
NG (Less than the SP value)>>GO TO 25.

4. CHECK “A/F ALPHA-B1”, “A/F ALPHA-B2”

1. Stop the engine.
2. Disconnect PCV hose, and then plug it.
3. Start engine.
4. Select “A/F ALPHA-B1”, “A/F ALPHA-B2” in “DATA MONITOR (SPEC)” mode, and make sure that the each indication is within the SP value.

OK or NG

OK >> GO TO 5.
NG >> GO TO 6.

5. CHANGE ENGINE OIL

1. Stop the engine.
2. Change engine oil.

   NOTE:
   This symptom may occur when a large amount of gasoline is mixed with engine oil because of driving conditions (such as when engine oil temperature does not rise enough since a journey distance is too short during winter). The symptom will not be detected after changing engine oil or changing driving condition.

>> **INSPECTION END**

6. CHECK FUEL PRESSURE

Check fuel pressure. (Refer to EC-82, "FUEL PRESSURE CHECK" .)

OK or NG

OK >> GO TO 9.
NG (Fuel pressure is too high)>>Replace fuel pressure regulator, refer to EC-82, "FUEL PRESSURE CHECK" . GO TO 8.
NG (Fuel pressure is too low)>>GO TO 7.

7. DETECT MALFUNCTIONING PART

1. Check the following.
- Clogged and bent fuel hose and fuel tube
- Clogged fuel filter
- Fuel pump and its circuit (Refer to EC-604, "FUEL PUMP" .)
2. If NG, repair or replace the malfunctioning part. (Refer to EC-82, "FUEL PRESSURE CHECK" .)
   If OK, replace fuel pressure regulator.

>> GO TO 8.

8. CHECK “A/F ALPHA-B1”, “A/F ALPHA-B2”

1. Start engine.
2. Select “A/F ALPHA-B1”, “A/F ALPHA-B2” in “DATA MONITOR (SPEC)” mode, and make sure that the each indication is within the SP value.

OK or NG

OK >> **INSPECTION END**
NG >> GO TO 9.

9. PERFORM POWER BALANCE TEST

1. Perform “POWER BALANCE” in “ACTIVE TEST” mode.
2. Make sure that the each cylinder produces a momentary engine speed drop.

OK or NG

OK >> GO TO 12.
NG >> GO TO 10.

ACTIVE TEST	
POWER BALANCE	
MONITOR	
ENG SPEED	XXX rpm
MAS A/F SE-B1	XXX V

PBIB0133E

10. DETECT MALFUNCTIONING PART

1. Check the following.
- Ignition coil and its circuit (Refer to EC-618, "IGNITION SIGNAL" .)
- Fuel injector and its circuit (Refer to EC-598, "FUEL INJECTOR" .)
- Intake air leakage
- Low compression pressure (Refer to EM-63, "CHECKING COMPRESSION PRESSURE" .)
2. If NG, repair or replace the malfunctioning part.
If OK, replace fuel injector. (It may be caused by leakage from fuel injector or clogging.)

>> GO TO 11.

11. CHECK “A/F ALPHA-B1”, “A/F ALPHA-B2”

1. Start engine.
2. Select “A/F ALPHA-B1”, “A/F ALPHA-B2” in “DATA MONITOR (SPEC)” mode, and make sure that the each indication is within the SP value.

OK or NG

OK >> **INSPECTION END**
NG >> GO TO 12.

12. CHECK A/F SENSOR 1 FUNCTION

Perform all DTC Confirmation Procedure related with A/F sensor 1.
- For DTC P0130, P0150, refer to EC-213, "DTC Confirmation Procedure" .
- For DTC P0131, P0151, refer to EC-223, "DTC Confirmation Procedure" .
- For DTC P0132, P0132, refer to EC-232, "DTC Confirmation Procedure" .
- For DTC P0133, P0153, refer to EC-242, "DTC Confirmation Procedure" .
- For DTC P2A00, P2A03, refer to EC-575, "DTC Confirmation Procedure" .

OK or NG

OK >> GO TO 15.
NG >> GO TO 13.

13. CHECK A/F SENSOR 1 CIRCUIT

Perform Diagnostic Procedure according to corresponding DTC.

>> GO TO 14.

14. CHECK “A/F ALPHA-B1”, “A/F ALPHA-B2”

1. Start engine.
2. Select “A/F ALPHA-B1”, “A/F ALPHA-B2” in “DATA MONITOR (SPEC)” mode, and make sure that the each indication is within the SP value.

OK or NG

OK >> **INSPECTION END**
NG >> GO TO 15.

15. DISCONNECT AND RECONNECT ECM HARNESS CONNECTOR

1. Stop the engine.
2. Disconnect ECM harness connector. Check pin terminal and connector for damage, and then reconnect it.

>> GO TO 16.

16. CHECK “A/F ALPHA-B1”, “A/F ALPHA-B2”

1. Start engine.
2. Select “A/F ALPHA-B1”, “A/F ALPHA-B2” in “DATA MONITOR (SPEC)” mode, and make sure that the each indication is within the SP value.

OK or NG

OK >> **INSPECTION END**
NG >> Detect malfunctioning part according to EC-92, "Symptom Matrix Chart" .

17. CHECK “B/FUEL SCHDL”

Select “B/FUEL SCHDL” in “DATA MONITOR (SPEC)” mode, and make sure that the indication is within the SP value.

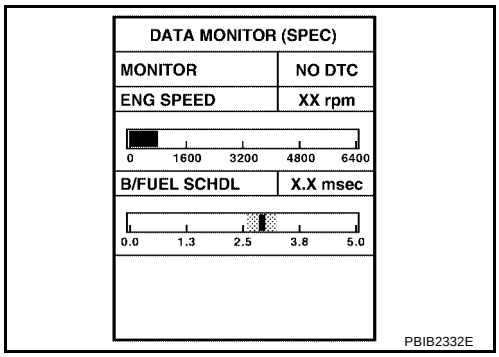

OK or NG

OK >> **INSPECTION END**
NG (More than the SP value)>>GO TO 18.
NG (Less than the SP value)>>GO TO 25.

18. DETECT MALFUNCTIONING PART

1. Check for the cause of large engine friction. Refer to the following.
- Engine oil level is too high
- Engine oil viscosity
- Belt tension of power steering, alternator, A/C compressor, etc. is excessive
- Noise from engine
- Noise from transmission, etc.
2. Check for the cause of insufficient combustion. Refer to the following.
- Valve clearance malfunction
- Intake valve timing control function malfunction
- Camshaft sprocket installation malfunction, etc.

>> Repair or replace malfunctioning part, and then GO TO 30.

19. CHECK INTAKE SYSTEM

Check for the cause of uneven air flow through mass air flow sensor. Refer to the following.

- Crushed air ducts
- Malfunctioning seal of air cleaner element
- Uneven dirt of air cleaner element
- Improper specification of intake air system

OK or NG

OK >> GO TO 21.
NG >> Repair or replace malfunctioning part, and then GO TO 20.

20. CHECK “A/F ALPHA-B1”, “A/F ALPHA-B2”, AND “B/FUEL SCHDL”

Select “A/F ALPHA-B1”, “A/F ALPHA-B2”, and “B/FUEL SCHDL” in “DATA MONITOR (SPEC)” mode, and make sure that the each indication is within the SP value.

OK or NG

OK >> **INSPECTION END**

NG (“B/FUEL SCHDL” is more, “A/F ALPHA-B1”, “A/F ALPHA-B2” are less than the SP value)>>GO TO 21.

21. DISCONNECT AND RECONNECT MASS AIR FLOW SENSOR HARNESS CONNECTOR

1. Stop the engine.
2. Disconnect mass air flow sensor harness connector. Check pin terminal and connector for damage and then reconnect it again.

>> GO TO 22.

22. CHECK “A/F ALPHA-B1”, “A/F ALPHA-B2”

1. Start engine.
2. Select “A/F ALPHA-B1”, “A/F ALPHA-B2” in “DATA MONITOR (SPEC)” mode, and make sure that the each indication is within the SP value.

OK or NG

OK >> 1. Detect malfunctioning part of mass air flow sensor circuit and repair it. Refer to EC-180, "DTC P0102, P0103 MAF SENSOR" .
2. GO TO 29.

NG >> GO TO 23.

23. CHECK “MAS A/F SE-B1”

Select “MAS A/F SE-B1” in “DATA MONITOR (SPEC)” mode, and make sure that the indication is within the SP value.

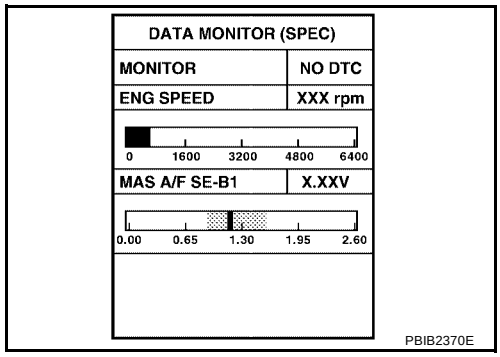

OK or NG

OK >> GO TO 24.

NG (More than the SP value)>>Replace mass air flow sensor, and then GO TO 29.

24. REPLACE ECM

1. Replace ECM.
2. Perform initialization of IVIS(NATS) system and registration of all IVIS(NATS) ignition key IDs. Refer to BL-139, "ECM Re-communicating Function" .
3. Perform EC-77, "VIN Registration" .
4. Perform EC-78, "Accelerator Pedal Released Position Learning" .
5. Perform EC-78, "Throttle Valve Closed Position Learning" .
6. Perform EC-78, "Idle Air Volume Learning" .

>> GO TO 29.

25. CHECK INTAKE SYSTEM

Check for the cause of uneven air flow through mass air flow sensor. Refer to the following.

- Crushed air ducts
- Malfunctioning seal of air cleaner element
- Uneven dirt of air cleaner element
- Improper specification of intake air system

OK or NG

OK >> GO TO 27.
NG >> Repair or replace malfunctioning part, and then GO TO 26.

26. CHECK “B/FUEL SCHDL”

Select “B/FUEL SCHDL” in “DATA MONITOR (SPEC)” mode, and make sure that the indication is within the SP value.

OK or NG

OK >> **INSPECTION END**
NG (Less than the SP value)>>GO TO 27.

27. CHECK “MAS A/F SE-B1”

Select “MAS A/F SE-B1” in “DATA MONITOR (SPEC)” mode, and make sure that the indication is within the SP value.

OK or NG

OK >> GO TO 28.
NG (Less than the SP value)>>Replace mass air flow sensor, and then GO TO 30.

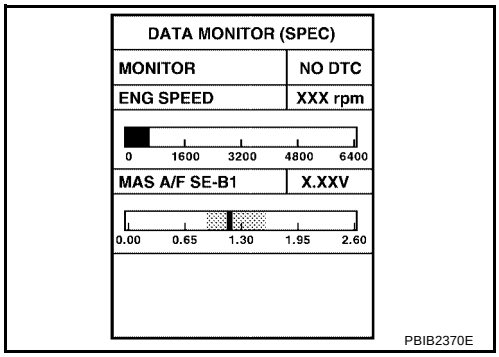

28. CHECK INTAKE SYSTEM

Check for the cause of air leak after the mass air flow sensor. Refer to the following.

- Disconnection, looseness, and cracks in air duct
- Looseness of oil filler cap
- Disconnection of oil level gauge
- Open stuck, breakage, hose disconnection, or cracks of PCV valve
- Disconnection or cracks of EVAP purge hose, open stuck of EVAP canister purge volume control solenoid valve
- Malfunctioning seal of rocker cover gasket
- Disconnection, looseness, or cracks of hoses, such as vacuum hose, connecting to intake air system parts
- Malfunctioning seal of intake air system, etc.

>> GO TO 30.

29. CHECK “A/F ALPHA-B1”, “A/F ALPHA-B2”, AND “B/FUEL SCHDL”

Select “A/F ALPHA-B1”, “A/F ALPHA-B2”, and “B/FUEL SCHDL” in “DATA MONITOR (SPEC)” mode, and make sure that the each indication is within the SP value.

OK or NG

OK >> **INSPECTION END**
NG >> Detect malfunctioning part according to EC-92, "Symptom Matrix Chart" .

30. CHECK “B/FUEL SCHDL”

Select “B/FUEL SCHDL” in “DATA MONITOR (SPEC)” mode, and then make sure that the indication is within the SP value.

OK or NG

OK >> **INSPECTION END**
NG >> Detect malfunctioning part according to EC-92, "Symptom Matrix Chart" .

TROUBLE DIAGNOSIS FOR INTERMITTENT INCIDENT

PFP:00006

Description

UBS00L0J

Intermittent incidents may occur. In many cases, the malfunction resolves itself (the part or circuit function returns to normal without intervention). It is important to realize that the symptoms described in the customer's complaint often do not recur on (1st trip) DTC visits. Realize also that the most frequent cause of intermittent incidents occurrences is poor electrical connections. Because of this, the conditions under which the incident occurred may not be clear. Therefore, circuit checks made as part of the standard diagnostic procedure may not indicate the specific malfunctioning area.

Common Intermittent Incidents Report Situations

STEP in Work Flow	Situation
2	The CONSULT-II is used. The SELF-DIAG RESULTS screen shows time data other than [0] or [1t].
3 or 4	The symptom described by the customer does not recur.
5	(1st trip) DTC does not appear during the DTC Confirmation Procedure.
10	The Diagnostic Procedure for PXXXX does not indicate the malfunctioning area.

Diagnostic Procedure

UBS00L0K

1. INSPECTION START

Erase (1st trip) DTCs. Refer to EC-61, "HOW TO ERASE EMISSION-RELATED DIAGNOSTIC INFORMATION" .

>> GO TO 2.

2. CHECK GROUND TERMINALS

Check ground terminals for corroding or loose connection.
Refer to EC-150, "Ground Inspection" .

OK or NG

OK >> GO TO 3.
NG >> Repair or replace.

3. SEARCH FOR ELECTRICAL INCIDENT

Perform GI-28, "How to Perform Efficient Diagnosis for an Electrical Incident" , “INCIDENT SIMULATION TESTS”.

OK or NG

OK >> GO TO 4.
NG >> Repair or replace.

4. CHECK CONNECTOR TERMINALS

Refer to GI-25, "How to Check Terminal" , “HOW TO PROBE CONNECTORS”, “How to Check Enlarged Contact Spring of Terminal”.

OK or NG

OK >> **INSPECTION END**
NG >> Repair or replace connector.

POWER SUPPLY AND GROUND CIRCUIT

PFP:24110

Wiring Diagram

UBS00H0F

EC-MAIN-01

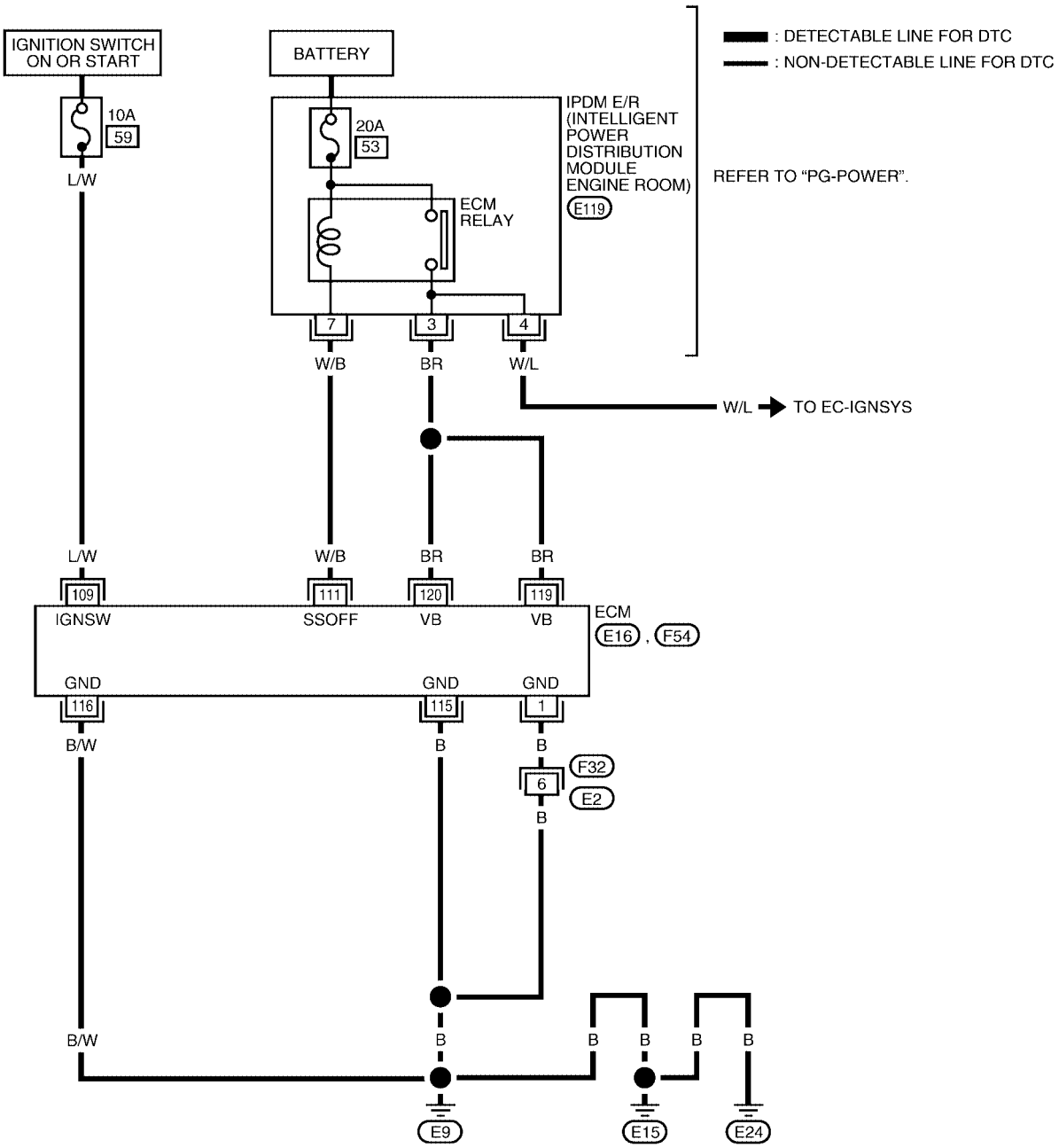

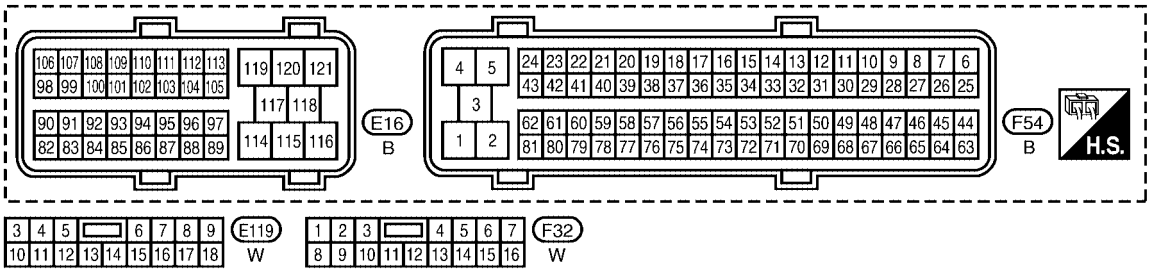

BBWA2088E

Specification data are reference values and are measured between each terminal and ground.

CAUTION:

Do not use ECM ground terminals when measuring input/output voltage. Doing so may result in damage to the ECM's transistor. Use a ground other than ECM terminals, such as the ground.

TERMINAL NO.	WIRE COLOR	ITEM	CONDITION	DATA (DC Voltage)
1	B	ECM ground	**[Engine is running]** ● Idle speed	Body ground
109	L/W	Ignition switch	**[Ignition switch: OFF]**	0V
			[Ignition switch: ON]	BATTERY VOLTAGE (11 - 14V)
111	W/B	ECM relay (Self shut-off)	**[Engine is running]** **[Ignition switch: OFF]** ● For a few seconds after turning ignition switch OFF	0 - 1.5V
			[Ignition switch: OFF] ● More than a few seconds after turning ignition switch OFF	BATTERY VOLTAGE (11 - 14V)
115 116	B B/W	ECM ground	**[Engine is running]** ● Idle speed	Body ground
119 120	BR BR	Power supply for ECM	**[Ignition switch: ON]**	BATTERY VOLTAGE (11 - 14V)

Diagnostic Procedure

UBS00H0G

1. INSPECTION START

Start engine.

Is engine running?

Yes or No

Yes >> GO TO 8.
No >> GO TO 2.

2. CHECK ECM POWER SUPPLY CIRCUIT-I

1. Turn ignition switch OFF and then ON.
2. Check voltage between ECM terminal 109 and ground with CONSULT-II or tester.

Voltage: Battery voltage

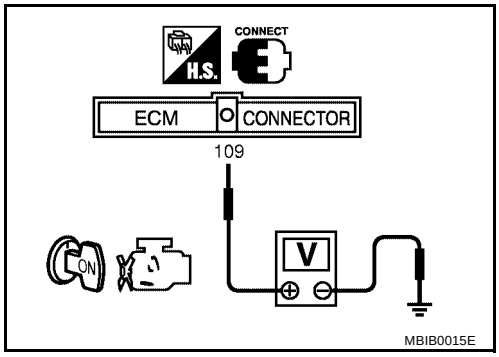

OK or NG

OK >> GO TO 4.
NG >> GO TO 3.

3. DETECT MALFUNCTIONING PART

Check the following.

- 10A fuse
- Harness for open or short between ECM and fuse

>> Repair harness or connectors.

4. CHECK GROUND CONNECTIONS

1. Turn ignition switch OFF.
2. Loosen and retighten three ground screws on the body.
   Refer to EC-150, "Ground Inspection" .

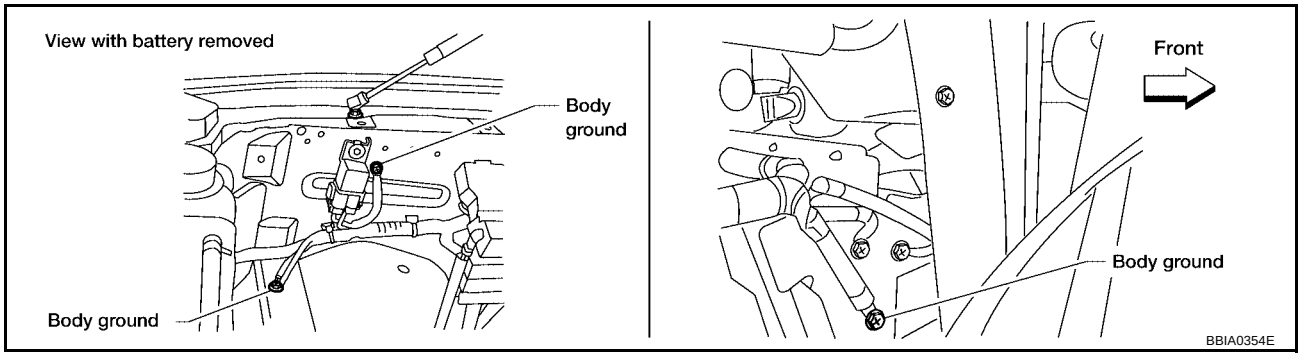

OK or NG

OK >> GO TO 5.
NG >> Repair or replace ground connections.

5. CHECK ECM GROUND CIRCUIT FOR OPEN AND SHORT-I

1. Disconnect ECM harness connector.
2. Check harness continuity between ECM terminals 1, 115, 116 and ground.
   Refer to Wiring Diagram.

   Continuity should exist.

3. Also check harness for short to power.

OK or NG

OK >> GO TO 7.
NG >> GO TO 6.

6. DETECT MALFUNCTIONING PART

Check the following.

- Harness connectors F32, E2
- Harness for open or short between ECM and ground

>> Repair open circuit or short to power in harness or connectors.

7. CHECK ECM POWER SUPPLY CIRCUIT-II

1. Reconnect ECM harness connector.
2. Turn ignition switch ON.
3. Check voltage between IPDM E/R terminal 4 and ground with CONSULT-II or tester.

   Voltage: Battery voltage

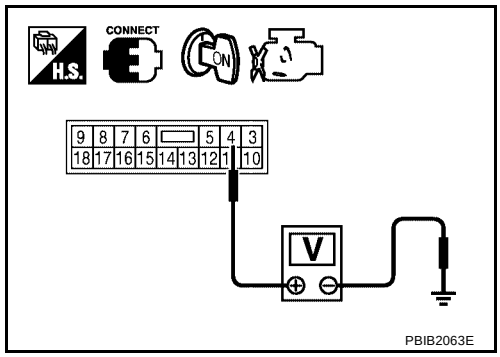

OK or NG

OK >> Go to EC-618, "IGNITION SIGNAL" .
NG >> GO TO 8.

8. CHECK ECM POWER SUPPLY CIRCUIT-III

1. Turn ignition switch OFF and wait at least 10 seconds.
2. Turn ignition switch ON and then OFF.
3. Check voltage between ECM terminals 119, 120 and ground with CONSULT-II or tester.

Voltage: After turning ignition switch OFF, battery voltage will exist for a few seconds, then drop approximately 0V.

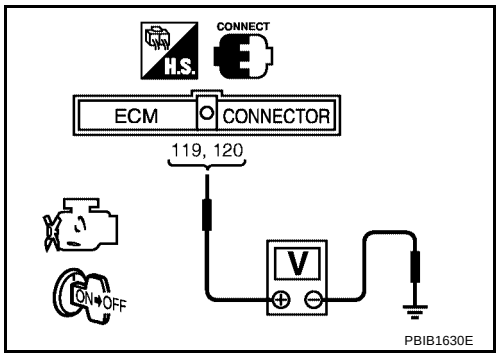

OK or NG

OK >> GO TO 13.
NG (Battery voltage does not exist.)>>GO TO 9.
NG (Battery voltage exists for more than a few seconds.)>>GO TO 11.

9. CHECK ECM POWER SUPPLY CIRCUIT-IV

1. Turn ignition switch OFF and wait at least 10 seconds.
2. Check voltage between ECM terminal 111 and ground with CONSULT-II or tester.

Voltage: Battery voltage

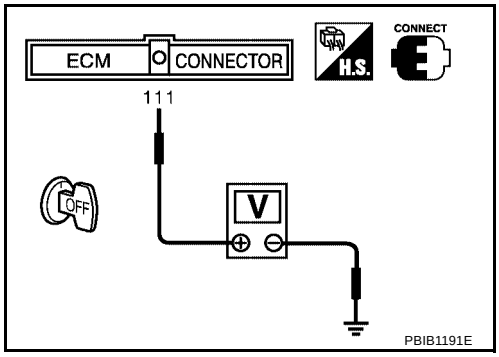

OK or NG

OK >> GO TO 10.
NG >> GO TO 11.

10. CHECK ECM POWER SUPPLY CIRCUIT-V

1. Disconnect ECM harness connector.
2. Disconnect IPDM E/R harness connector E119.
3. Check harness continuity between ECM terminals 119, 120 and IPDM E/R terminal 3. Refer to Wiring Diagram.

Continuity should exist.

4. Also check harness for short to ground and short to power.

OK or NG

OK >> GO TO 13.
NG >> Repair open circuit or short to ground or short to power in harness or connectors.

11. CHECK ECM POWER SUPPLY CIRCUIT-VI

1. Disconnect ECM harness connector.
2. Disconnect IPDM E/R harness connector E119.
3. Check harness continuity between ECM terminal 111 and IPDM E/R terminal 7. Refer to Wiring Diagram.

Continuity should exist.

4. Also check harness for short to ground and short to power.

OK or NG

OK >> GO TO 12.
NG >> Repair open circuit or short to ground or short to power in harness or connectors.

12. CHECK 20A FUSE

1. Disconnect 20A fuse from IPDM E/R.
2. Check 20A fuse.

OK or NG

OK >> GO TO 16.
NG >> Replace 20A fuse.

13. CHECK GROUND CONNECTIONS

1. Turn ignition switch OFF.
2. Loosen and retighten ground three screws on the body.
   Refer to EC-150, "Ground Inspection" .

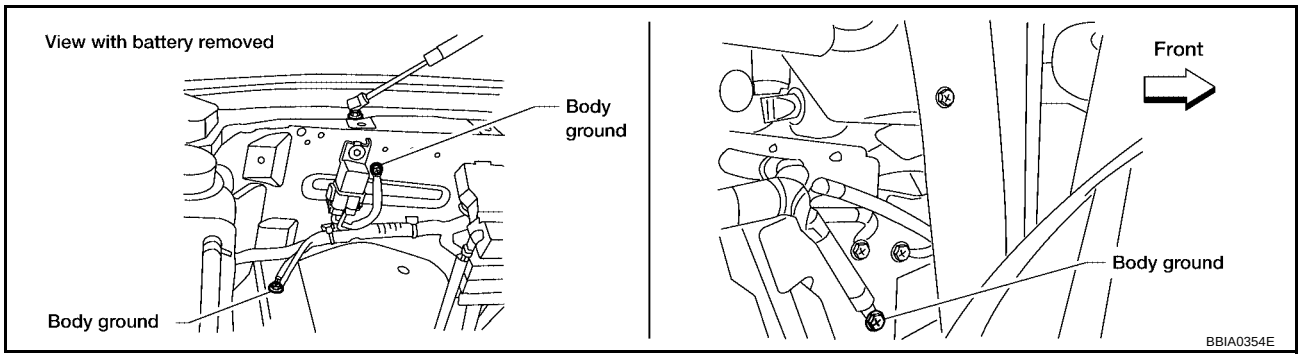

OK or NG

OK >> GO TO 14.
NG >> Repair or replace ground connections.

14. CHECK ECM GROUND CIRCUIT FOR OPEN AND SHORT-II

1. Disconnect ECM harness connector.
2. Check harness continuity between ECM terminals 1, 115, 116 and ground.
   Refer to Wiring Diagram.

   Continuity should exist.

3. Also check harness for short to power.

OK or NG

OK >> GO TO 16.
NG >> GO TO 15.

15. DETECT MALFUNCTIONING PART

Check the following.

- Harness connectors F32, E2
- Harness for open or short between ECM and ground

>> Repair open circuit or short to power in harness or connectors.

16. CHECK INTERMITTENT INCIDENT

Refer to EC-144, "TROUBLE DIAGNOSIS FOR INTERMITTENT INCIDENT" .

OK or NG

OK >> Replace IPDM E/R.
NG >> Repair open circuit or short to power in harness or connectors.

Ground Inspection

UBS00H0H

Ground connections are very important to the proper operation of electrical and electronic circuits. Ground connections are often exposed to moisture, dirt and other corrosive elements. The corrosion (rust) can become an unwanted resistance. This unwanted resistance can change the way a circuit works.
Electronically controlled circuits are very sensitive to proper grounding. A loose or corroded ground can drastically affect an electronically controlled circuit. A poor or corroded ground can easily affect the circuit. Even when the ground connection looks clean, there can be a thin film of rust on the surface.
When inspecting a ground connection follow these rules:

- Remove the ground bolt or screw.
- Inspect all mating surfaces for tarnish, dirt, rust, etc.
- Clean as required to assure good contact.
- Reinstall bolt or screw securely.
- Inspect for “add-on” accessories which may be interfering with the ground circuit.
- If several wires are crimped into one ground eyelet terminal, check for proper crimps. Make sure all of the wires are clean, securely fastened and providing a good ground path. If multiple wires are cased in one eyelet make sure no ground wires have excess wire insulation.

For detailed ground distribution information, refer to PG-31, "Ground Distribution" .

Ground Inspection

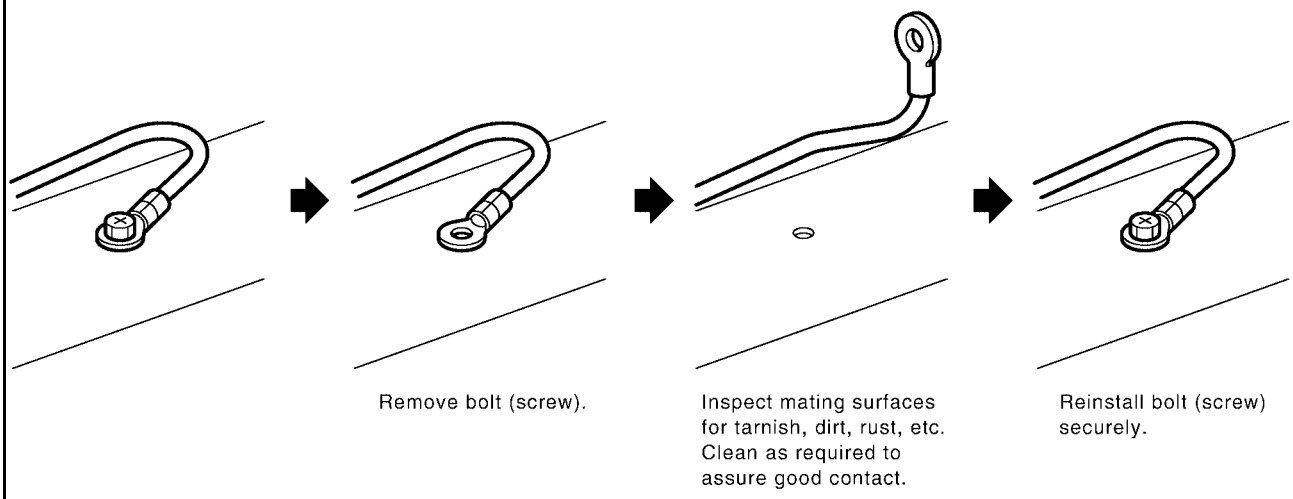

DTC U1000, U1001 CAN COMMUNICATION LINE

PFP:23710

Description

UBS00H0I

CAN (Controller Area Network) is a serial communication line for real time application. It is an on-vehicle multiplex communication line with high data communication speed and excellent error detection ability. Many electronic control units are equipped onto a vehicle, and each control unit shares information and links with other control units during operation (not independent). In CAN communication, control units are connected with 2 communication lines (CAN H line, CAN L line) allowing a high rate of information transmission with less wiring. Each control unit transmits/receives data but selectively reads required data only.

On Board Diagnosis Logic

UBS00H0J

DTC No.	Trouble diagnosis name	DTC detecting condition	Possible cause
U1000*1 1000*1	CAN communication line	● ECM cannot communicate to other control units. ● ECM cannot communicate for more than the specified time.	● Harness or connectors (CAN communication line is open or shorted)
U1001*2 1001*2			

*1: **This self-diagnosis has the one trip detection logic.**
*2: **The MIL will not light up for this diagnosis.**

DTC Confirmation Procedure

UBS00H0K

1. Turn ignition switch ON and wait at least 3 seconds.
2. Select “DATA MONITOR” mode with CONSULT-II.
3. If 1st trip DTC is detected, go to EC-153, "Diagnostic Procedure" .

Wiring Diagram

UBS00H0L

EC-CAN-01

: DATA LINE

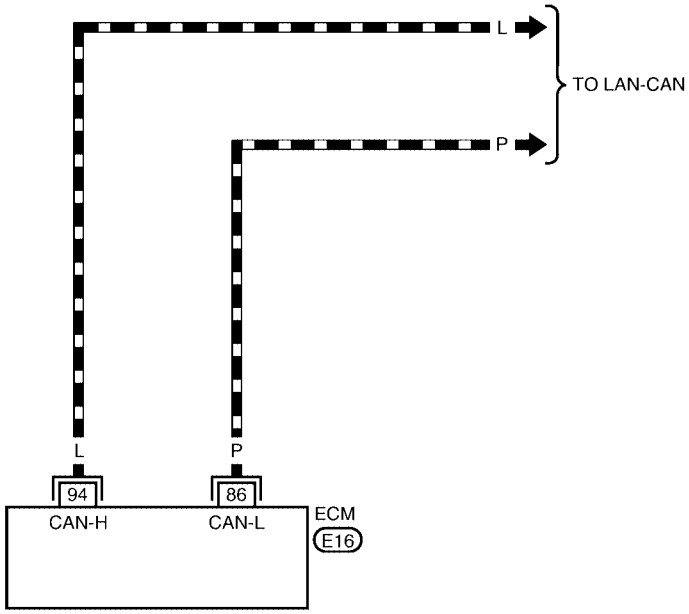

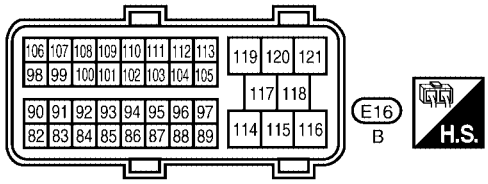

BBWA1671E

Diagnostic Procedure

UBS00H0M

Go to LAN-3, "Precautions When Using CONSULT-II" .

DTC U1010 CAN COMMUNICATION

PFP:23710

Description

UBS00N8U

CAN (Controller Area Network) is a serial communication line for real time application. It is an on-vehicle multiplex communication line with high data communication speed and excellent error detection ability. Many electronic control units are equipped onto a vehicle, and each control unit shares information and links with other control units during operation (not independent). In CAN communication, control units are connected with 2 communication lines (CAN H line, CAN L line) allowing a high rate of information transmission with less wiring. Each control unit transmits/receives data but selectively reads required data only.

On Board Diagnosis Logic

UBS00N8V

This self-diagnosis has the one trip detection logic.

DTC No.	Trouble diagnosis name	DTC detecting condition	Possible cause
U1010 1010	CAN communication bus	Initializing CAN communication bus is malfunctioning.	● ECM

DTC Confirmation Procedure

UBS00N8W

WITH CONSULT-II

1. Turn ignition switch ON.
2. Select “DATA MONITOR” mode with CONSULT-II.
3. If DTC is detected, go to EC-155, "Diagnostic Procedure" .

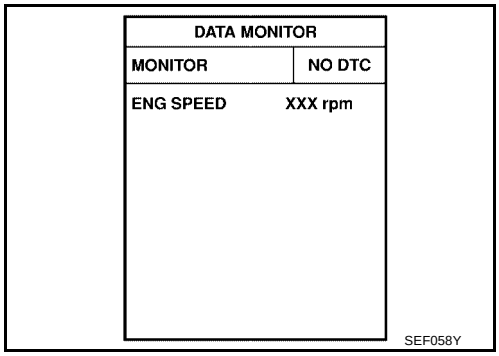

WITH GST

Follow the procedure “WITH CONSULT-II” above.

Diagnostic Procedure

UBS00N8X

1. INSPECTION START

With CONSULT-II

1. Turn ignition switch ON.
2. Select “SELF-DIAG RESULTS” mode with CONSULT-II.
3. Touch “ERASE”.
4. **Perform DTC Confirmation Procedure.**
   See EC-154, "DTC Confirmation Procedure" .
5. Is the DTC U1010 displayed again?

With GST

1. Turn ignition switch ON.
2. Select Service $04 with GST.
3. **Perform DTC Confirmation Procedure.**
   See EC-154, "DTC Confirmation Procedure" .
4. Is the DTC U1010 displayed again?

Yes or No

Yes >> GO TO 2.
No >> **INSPECTION END**

2. REPLACE ECM

1. Replace ECM.
2. Perform initialization of IVIS (NATS) system and registration of all IVIS (NATS) ignition key IDs. Refer to BL-139, "ECM Re-communicating Function" .
3. Perform EC-77, "VIN Registration" .
4. Perform EC-78, "Accelerator Pedal Released Position Learning" .
5. Perform EC-78, "Throttle Valve Closed Position Learning" .
6. Perform EC-78, "Idle Air Volume Learning" .

>> **INSPECTION END**

DTC P0031, P0032, P0051, P0052 A/F SENSOR 1 HEATER

PFP:22693

Description

UBS00H71

SYSTEM DESCRIPTION

Sensor	Input Signal to ECM	ECM function	Actuator
Camshaft position sensor (PHASE) Crankshaft position sensor (POS)	Engine speed	Air fuel ratio (A/F) sensor 1 heater control	Air fuel ratio (A/F) sensor 1 heater
Mass air flow sensor	Amount of intake air		

The ECM performs ON/OFF duty control of the A/F sensor 1 heater corresponding to the engine operating condition to keep the temperature of A/F sensor 1 element at the specified range.

CONSULT-II Reference Value in Data Monitor Mode

UBS00H72

Specification data are reference values.

MONITOR ITEM	CONDITION	SPECIFICATION
A/F S1 HTR (B1) A/F S1 HTR (B2)	● Engine: After warming up, idle the engine	0 - 100%

On Board Diagnosis Logic

UBS00H73

DTC No.	Trouble diagnosis name	DTC detecting condition	Possible cause
P0031 0031 (Bank 1) P0051 0051 (Bank 2)	Air fuel ratio (A/F) sensor 1 heater control circuit low	The current amperage in the air fuel ratio (A/F) sensor 1 heater circuit is out of the normal range. (An excessively low voltage signal is sent to ECM through the air fuel ratio (A/F) sensor 1 heater.)	● Harness or connectors (The A/F sensor 1 heater circuit is open or shorted.) ● A/F sensor 1 heater
P0032 0032 (Bank 1) P0052 0052 (Bank 2)	Air fuel ratio (A/F) sensor 1 heater control circuit high	The current amperage in the air fuel ratio (A/F) sensor 1 heater circuit is out of the normal range. (An excessively high voltage signal is sent to ECM through the air fuel ratio (A/F) sensor 1 heater.)	● Harness or connectors (The A/F sensor 1 heater circuit is shorted.) ● A/F sensor 1 heater

DTC Confirmation Procedure

UBS00H74

NOTE:
If DTC Confirmation Procedure has been previously conducted, always turn ignition switch OFF and wait at least 10 seconds before conducting the next test.

TESTING CONDITION:
Before performing the following procedure, confirm that battery voltage is between 10.5V and 16V at idle.

WITH CONSULT-II

1. Turn ignition switch ON and select “DATA MONITOR” mode with CONSULT-II.
2. Start engine and let it idle for at least 10 seconds.
3. If 1st trip DTC is detected, go to EC-160, "Diagnostic Procedure".

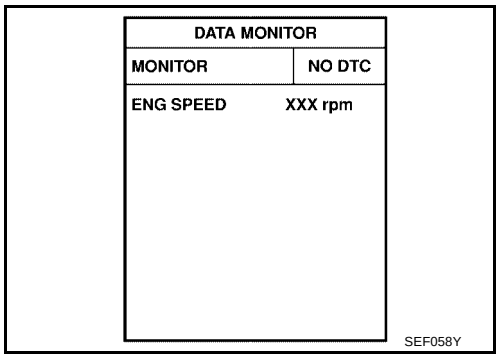

WITH GST

Follow the procedure “WITH CONSULT-II” above.

Wiring Diagram
BANK 1

UBS00H75

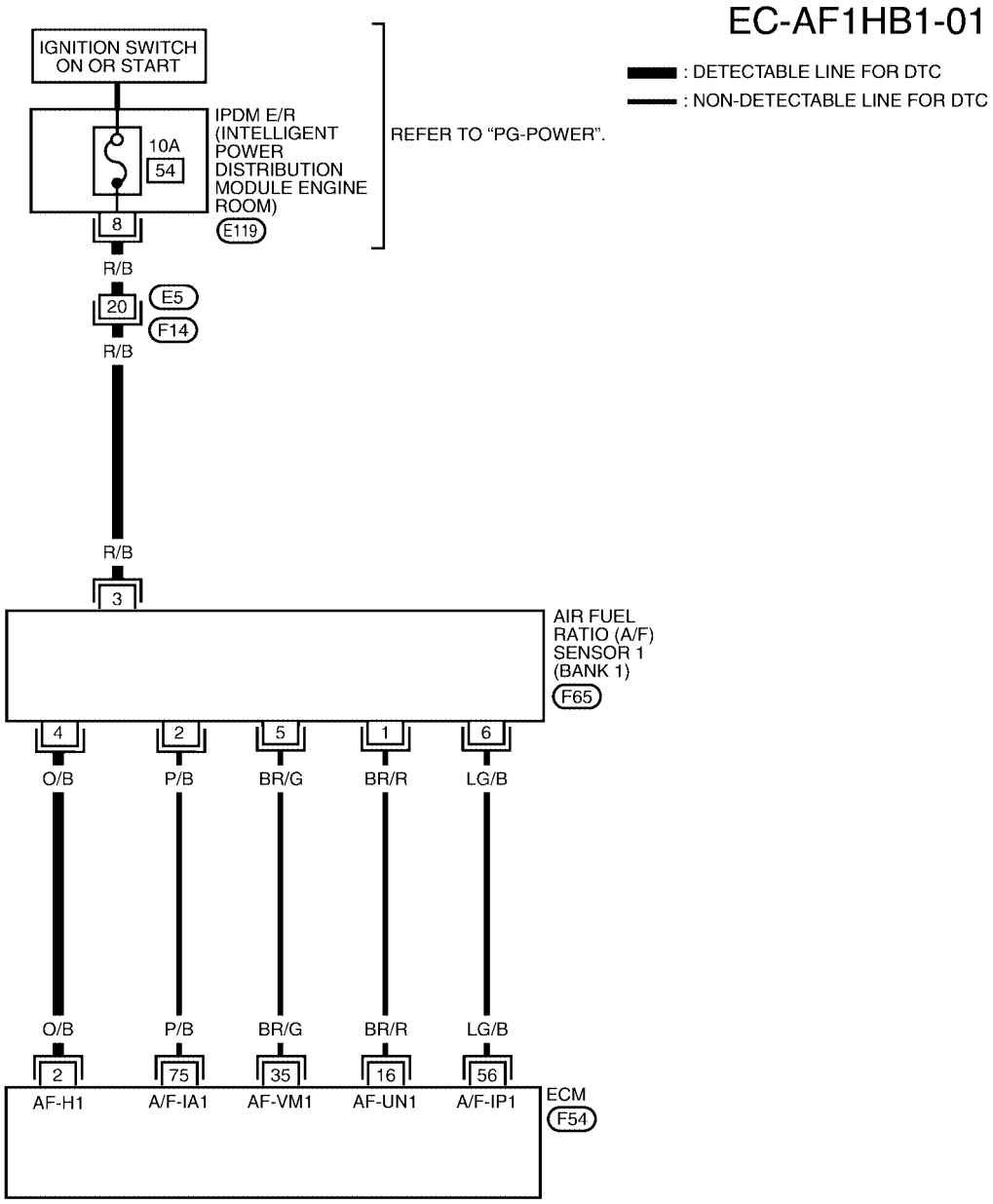

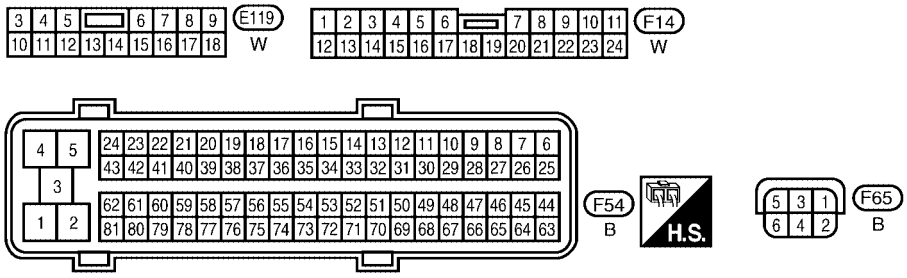

BBWA2113E

Specification data are reference values and are measured between each terminal and ground.
Pulse signal is measured by CONSULT-II.

CAUTION:

Do not use ECM ground terminals when measuring input/output voltage. Doing so may result in damage to the ECM's transistor. Use a ground other than ECM terminals, such as the ground.

TERMINAL NO.	WIRE COLOR	ITEM	CONDITION	DATA (DC Voltage)
2	O/B	A/F sensor 1 heater (bank 1)	**[Engine is running]** ● **Warm-up condition** ● Idle speed	Approximately 5V★ 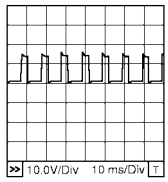 PBIB1584E
16	BR/R	A/F sensor 1 (bank 1)	**[Engine is running]** ● **Warm-up condition** ● Idle speed	Approximately 3.1V
35	BR/G			Approximately 2.6V
56	LG/B			Approximately 2.3V
75	P/B			Approximately 2.3V

★: Average voltage for pulse signal (Actual pulse signal can be confirmed by oscilloscope.)

BANK 2

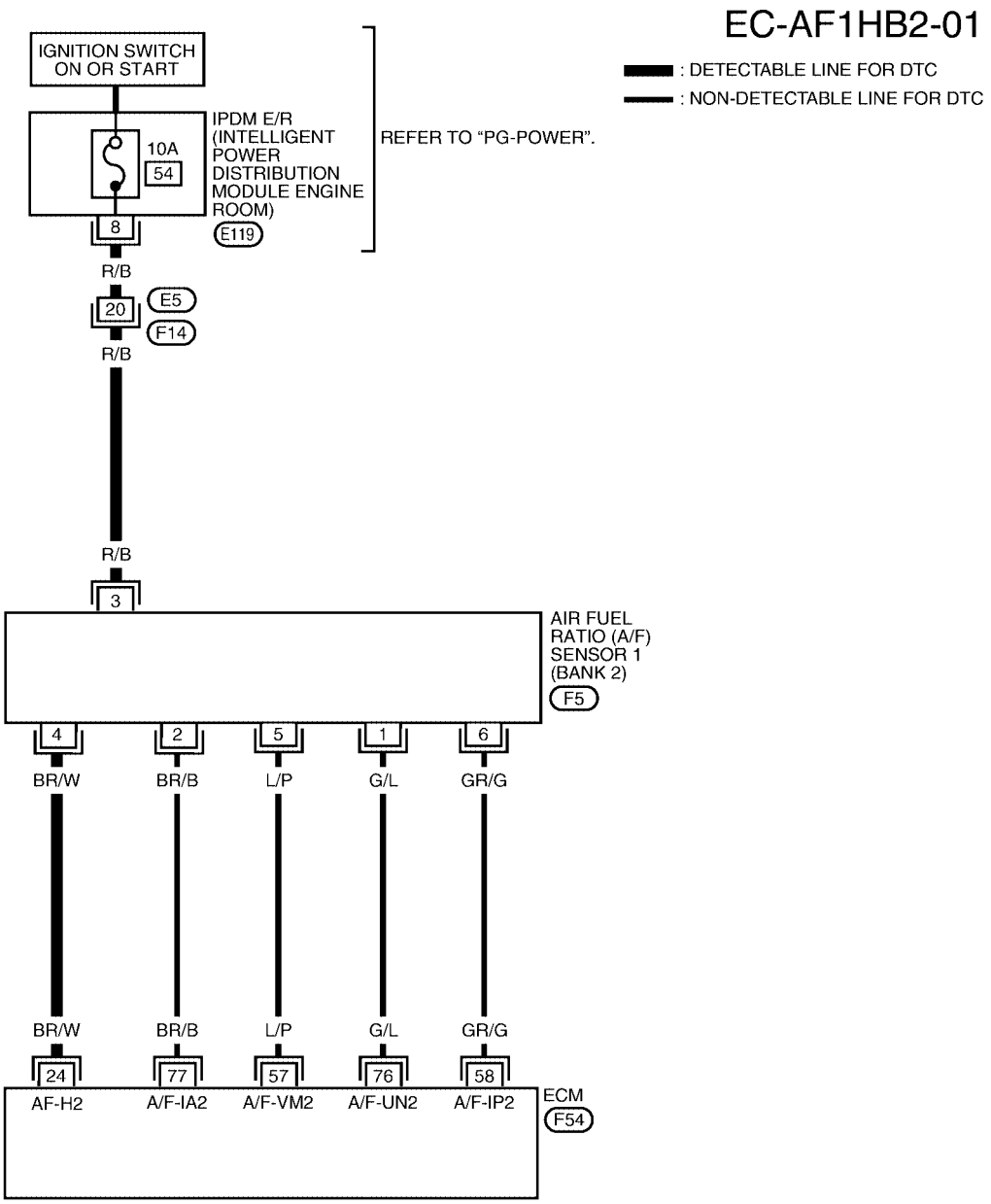

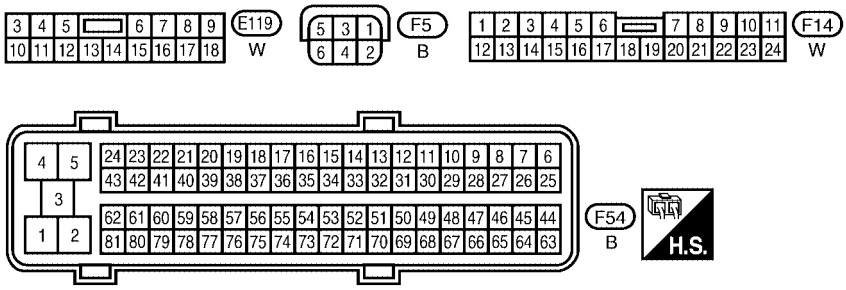

BBWA2114E

Specification data are reference values and are measured between each terminal and ground.
Pulse signal is measured by CONSULT-II.

CAUTION:

Do not use ECM ground terminals when measuring input/output voltage. Doing so may result in damage to the ECM's transistor. Use a ground other than ECM terminals, such as the ground.

TERMINAL NO.	WIRE COLOR	ITEM	CONDITION	DATA (DC Voltage)
24	BR/W	A/F sensor 1 heater (bank 2)	**[Engine is running]** ● **Warm-up condition** ● Idle speed	Approximately 5V★ 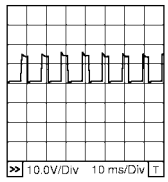 PBIB1584E
57	L/P	A/F sensor 1 (bank 2)	**[Engine is running]** ● **Warm-up condition** ● Idle speed	Approximately 2.6V
58	GR/G			Approximately 2.3V
76	G/L			Approximately 3.1V
77	BR/B			Approximately 2.3V

★: Average voltage for pulse signal (Actual pulse signal can be confirmed by oscilloscope.)

Diagnostic Procedure

UBS00H76

1. CHECK GROUND CONNECTIONS

1. Turn ignition switch OFF.
2. Loosen and retighten three ground screws on the body.
   Refer to EC-150, "Ground Inspection" .

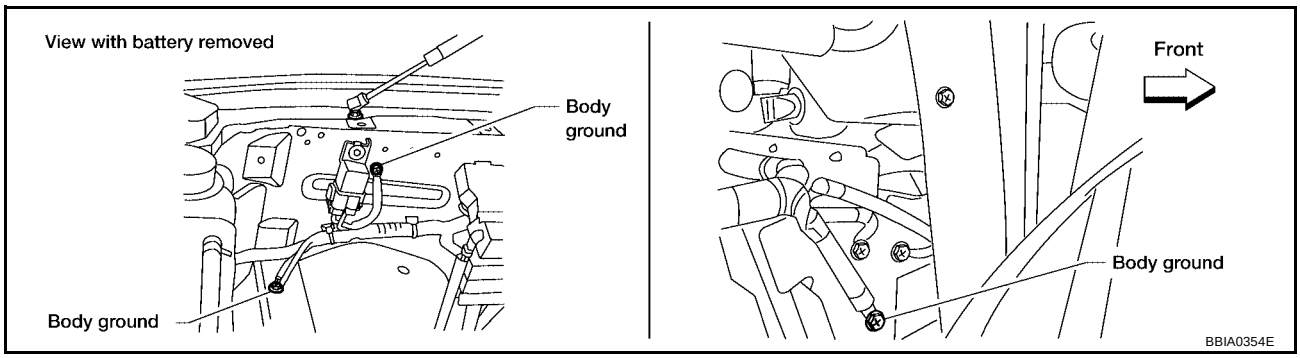

OK or NG

OK >> GO TO 2.
NG >> Repair or replace ground connections.

2. CHECK AIR FUEL RATIO (A/F) SENSOR 1 POWER SUPPLY CIRCUIT

1. Disconnect air fuel ratio (A/F) sensor 1 harness connector.

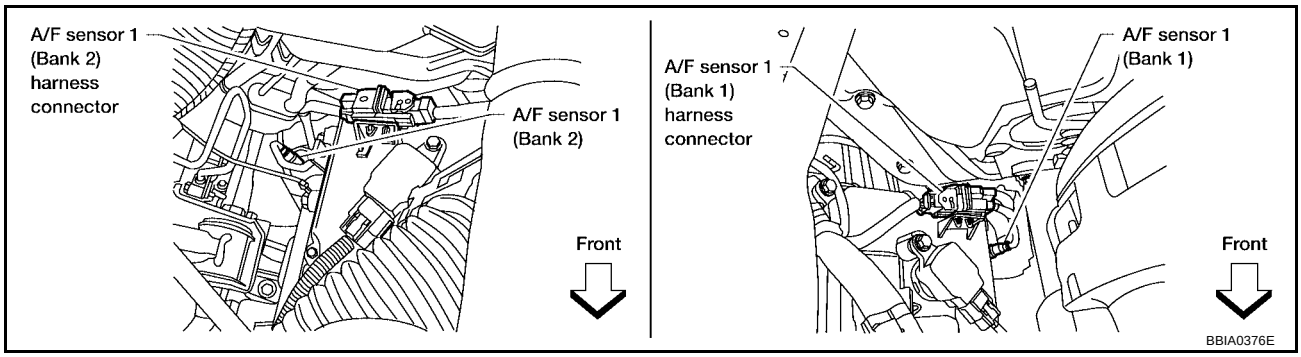

2. Turn ignition switch ON.
3. Check voltage between A/F sensor 1 terminal 3 and ground with CONSULT-II or tester.

Voltage: Battery voltage

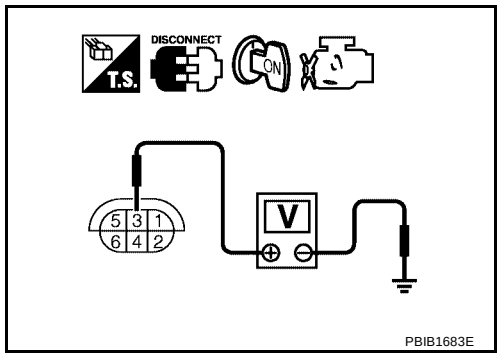

OK or NG

OK >> GO TO 4.
NG >> GO TO 3.

3. DETECT MALFUNCTIONING PART

Check the following.

- Harness connectors E5, F14
- IPDM E/R harness connector E119
- 10A fuse
- Harness for open or short between A/F sensor 1 and fuse

>> Repair or replace harness or connectors.

4. CHECK A/F SENSOR 1 HEATER OUTPUT SIGNAL CIRCUIT

1. Turn ignition switch OFF.
2. Disconnect ECM harness connector.
3. Check harness continuity between ECM terminal 2 (bank 1) or 24 (bank 2) and A/F sensor 1 terminal 4. Refer to Wiring Diagram.

Continuity should exist.

4. Also check harness for short to ground and short to power.

OK or NG

OK >> GO TO 5.
NG >> Repair open circuit or short to ground or short to power in harness or connectors.

5. CHECK A/F SENSOR 1 HEATER

Refer to EC-162, "Component Inspection" .

OK or NG

OK >> GO TO 6.
NG >> GO TO 7.

6. CHECK INTERMITTENT INCIDENT

Perform EC-144, "TROUBLE DIAGNOSIS FOR INTERMITTENT INCIDENT" .

OK or NG

OK >> GO TO 7.
NG >> Repair or replace.

7. REPLACE AIR FUEL RATIO (A/F) SENSOR 1

Replace air fuel ratio (A/F) sensor 1.

CAUTION:

- **Discard any air fuel ratio (A/F) sensor which has been dropped from a height of more than 0.5 m (19.7 in) onto a hard surface such as a concrete floor; use a new one.**
- **Before installing new air fuel ratio (A/F) sensor, clean exhaust system threads (using Oxygen Sensor Thread Cleaner tool J-43897-18 or J-43897-12) and approved anti-seize lubricant.**

>> **INSPECTION END**

Component Inspection

UBS00H77

AIR FUEL RATIO (A/F) SENSOR 1 HEATER

Check resistance between terminals 3 and 4.

Resistance: 2.3 - 4.3Ω at 25°C (77°F)

Check continuity between terminals 3 and 1, 2, 5, 6, terminals 4 and 1, 2, 5, 6.

Continuity should not exist.

If NG, replace the A/F sensor 1.

CAUTION:

- **Discard any A/F sensor which has been dropped from a height of more than 0.5 m (19.7 in) onto a hard surface such as a concrete floor; use a new one.**
- **Before installing new A/F sensor, clean exhaust system threads using Heated Oxygen Sensor Thread Cleaner tool J-43897-18 or J-43897-12 and approved anti-seize lubricant.**

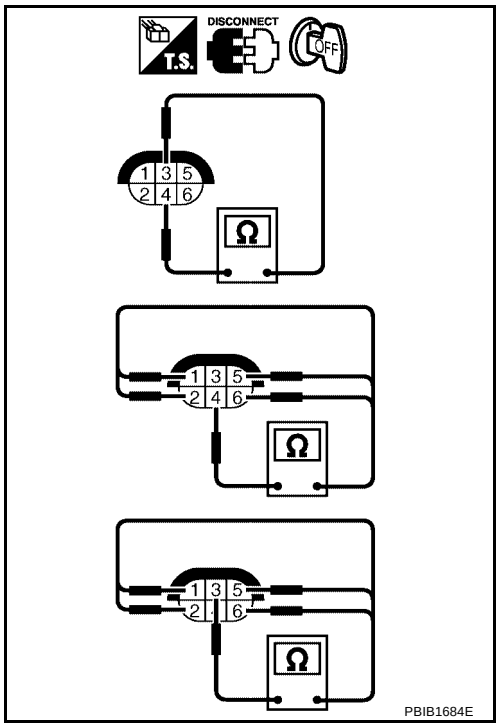

Removal and Installation

UBS00H78

AIR FUEL RATIO (A/F) SENSOR 1

Refer to EM-21, "EXHAUST MANIFOLD AND THREE WAY CATALYST" .

DTC P0037, P0038, P0057, P0058 HO2S2 HEATER

PFP:226A0

Description

UBS00H0N

SYSTEM DESCRIPTION

Sensor	Input signal to ECM	ECM function	Actuator
Camshaft position sensor (PHASE) Crankshaft position sensor (POS)	Engine speed	Heated oxygen sensor 2 heater control	Heated oxygen sensor 2 heater
Engine coolant temperature sensor	Engine coolant temperature		
Mass air flow sensor	Amount of intake air		

The ECM performs ON/OFF control of the heated oxygen sensor 2 heater corresponding to the engine speed, amount of intake air and engine coolant temperature.

OPERATION

Engine speed rpm	Heated oxygen sensor 2 heater
Above 3,600	OFF
Below 3,600 rpm after the following conditions are met. ● Engine: After warming up ● Keeping the engine speed between 3,500 and 4,000 rpm for 1 minute and at idle for 1 minute under no load	ON

CONSULT-II Reference Value in Data Monitor Mode

UBS00ODP

Specification data are reference values.

MONITOR ITEM	CONDITION	SPECIFICATION
HO2S2 HTR (B1) HO2S2 HTR (B2)	● Engine speed: Above 3,600 rpm	OFF
	● Below 3,600 rpm after the following conditions are met. – Engine: After warming up – Keeping the engine speed between 3,500 and 4,000 rpm for 1 minute and at idle for 1 minute under no load	ON

On Board Diagnosis Logic

UBS00H0P

DTC No.	Trouble diagnosis name	DTC detecting condition	Possible cause
P0037 0037 (Bank 1)	Heated oxygen sensor 2 heater control circuit low	The current amperage in the heated oxygen sensor 2 heater circuit is out of the normal range. (An excessively low voltage signal is sent to ECM through the heated oxygen sensor 2 heater.)	● Harness or connectors (The heated oxygen sensor 2 heater circuit is open or shorted.) ● Heater oxygen sensor 2 heater
P0057 0057 (Bank 2)			
P0038 0038 (Bank 1)	Heated oxygen sensor 2 heater control circuit high	The current amperage in the heated oxygen sensor 2 heater circuit is out of the normal range. (An excessively high voltage signal is sent to ECM through the heated oxygen sensor 2 heater.)	● Harness or connectors (The heated oxygen sensor 2 heater circuit is shorted.) ● Heater oxygen sensor 2 heater
P0058 0058 (Bank 2)			

DTC Confirmation Procedure

UBS00H0Q

NOTE:
If DTC Confirmation Procedure has been previously conducted, always turn ignition switch OFF and wait at least 10 seconds before conducting the next test.
TESTING CONDITION:
Before performing the following procedure, confirm that battery voltage is between 10.5V and 16V at idle.

WITH CONSULT-II

1. Turn ignition switch ON and select “DATA MONITOR” mode with CONSULT-II.
2. Start engine and warm it up to the normal operating temperature.
3. Turn ignition switch OFF and wait at least 10 seconds.
4. Start the engine and keep the engine speed between 3,500 rpm and 4,000 rpm for at least 1 minute under no load.
5. Let engine idle for 1 minute.
6. If 1st trip DTC is detected, go to EC-168, "Diagnostic Procedure".

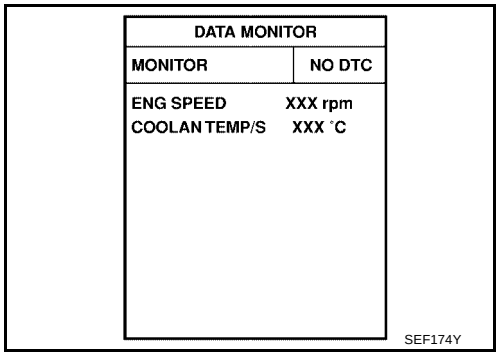

WITH GST

Follow the procedure “WITH CONSULT-II” above.

Wiring Diagram
BANK 1

UBS00H0R

EC-O2H2B1-01

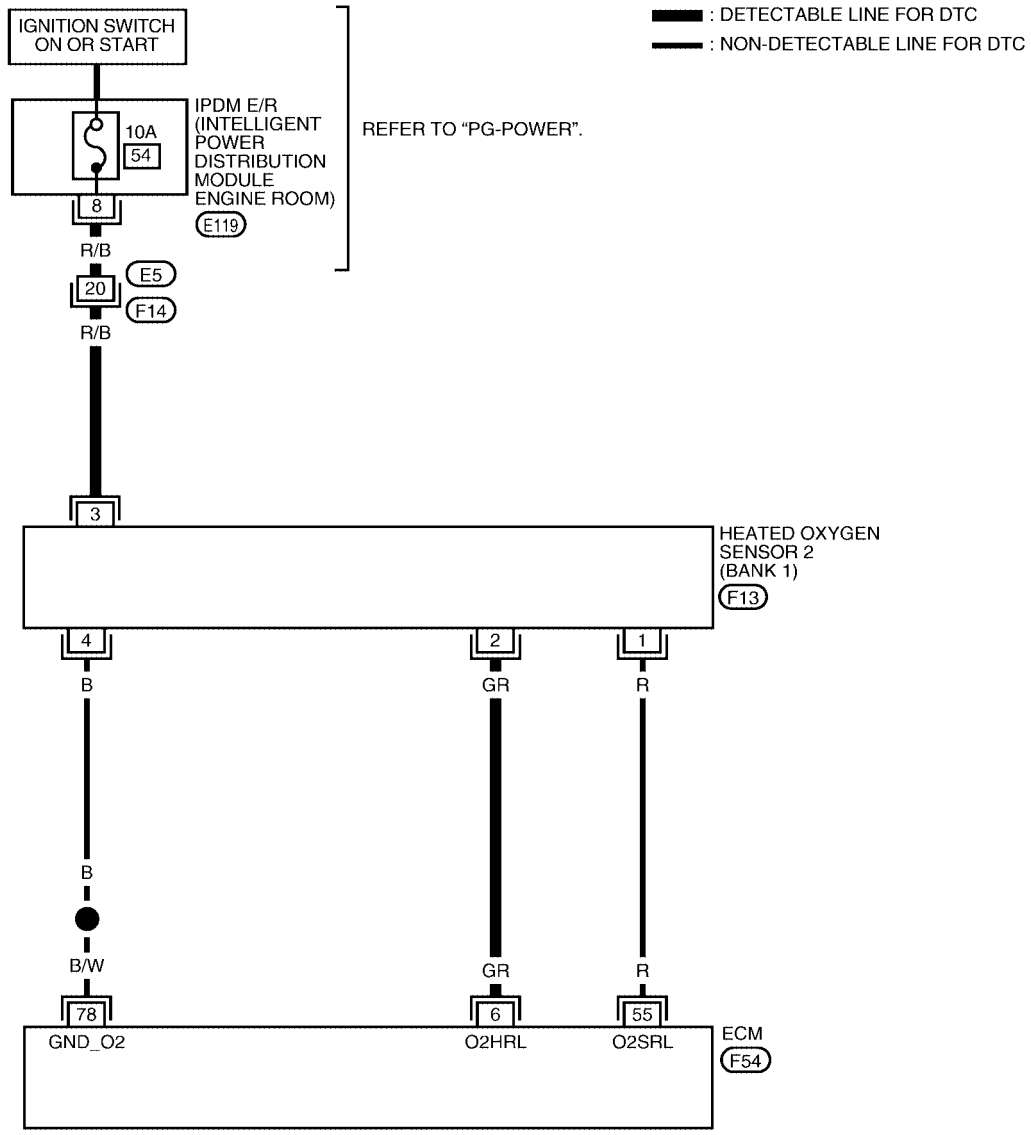

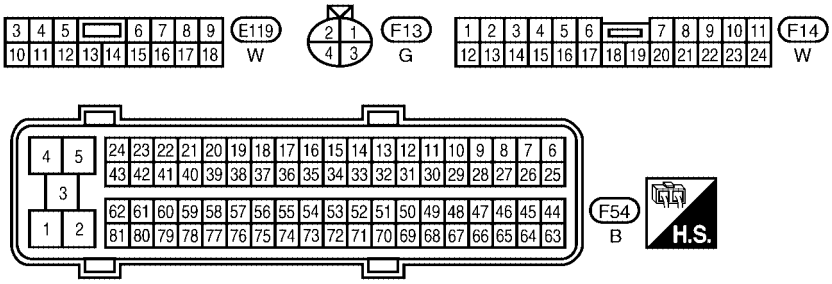

BBWA1672E

Specification data are reference values and are measured between each terminal and ground.

CAUTION:

Do not use ECM ground terminals when measuring input/output voltage. Doing so may result in damage to the ECM's transistor. Use a ground other than ECM terminals, such as the ground.

TERMINAL NO.	WIRE COLOR	ITEM	CONDITION	DATA (DC Voltage)
6	GR	Heated oxygen sensor 2 heater (bank 1)	**[Engine is running]** ● Engine speed: Below 3,600 rpm after the following conditions are met. – Engine: After warming up – Keeping the engine speed between 3,500 and 4,000 rpm for 1 minute and at idle for 1 minute under no load	0 - 1.0V
			[Ignition switch: ON] ● Engine: Stopped **[Engine is running]** ● Engine speed: Above 3,600 rpm.	BATTERY VOLTAGE (11 - 14V)
55	R	Heated oxygen sensor 2 (bank 1)	**[Engine is running]** ● Revving engine from idle to 3,000 rpm quickly after the following conditions are met. – Engine: After warming up – Keeping the engine speed between 3,500 and 4,000 rpm for 1 minute and at idle for 1 minute under no load	0 - Approximately 1.0V
78	B/W	Sensor ground (Heated oxygen sensor 2)	**[Engine is running]** ● **Warm-up condition** ● Idle speed	Approximately 0V

BANK 2

EC-O2H2B2-01

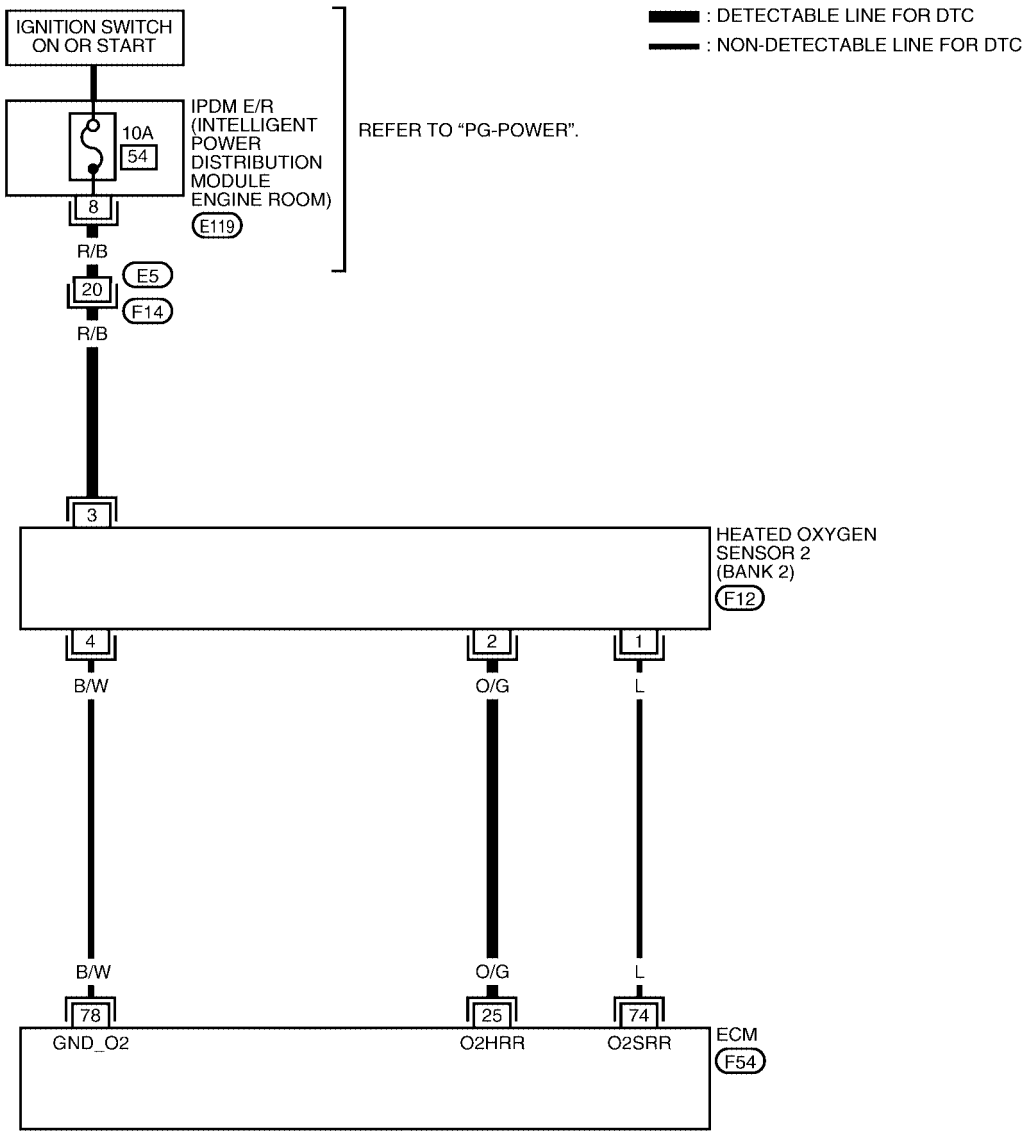

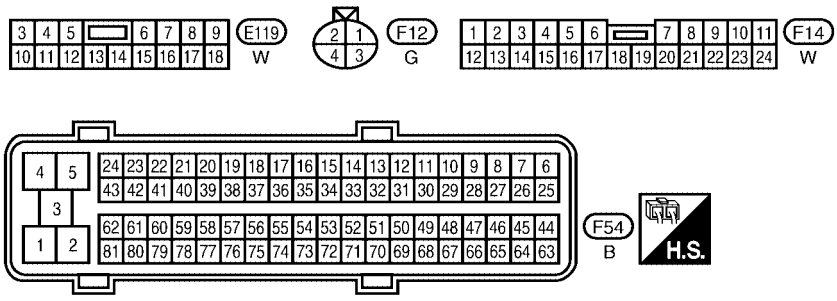

BBWA1673E

Specification data are reference values and are measured between each terminal and ground.

CAUTION:

Do not use ECM ground terminals when measuring input/output voltage. Doing so may result in damage to the ECM's transistor. Use a ground other than ECM terminals, such as the ground.

TERMINAL NO.	WIRE COLOR	ITEM	CONDITION	DATA (DC Voltage)
25	O/G	Heated oxygen sensor 2 heater (bank 2)	**[Engine is running]** ● Engine speed: Below 3,600 rpm after the following conditions are met. – Engine: After warming up – Keeping the engine speed between 3,500 and 4,000 rpm for 1 minute and at idle for 1 minute under no load	0 - 1.0V
			[Ignition switch: ON] ● Engine: Stopped **[Engine is running]** ● Engine speed: Above 3,600 rpm.	BATTERY VOLTAGE (11 - 14V)
74	L	Heated oxygen sensor 2 (bank 2)	**[Engine is running]** ● Revving engine from idle to 3,000 rpm quickly after the following conditions are met. – Engine: After warming up – Keeping the engine speed between 3,500 and 4,000 rpm for 1 minute and at idle for 1 minute under no load	0 - Approximately 1.0V
78	B/W	Sensor ground (Heated oxygen sensor 2)	**[Engine is running]** ● **Warm-up condition** ● Idle speed	Approximately 0V

Diagnostic Procedure

UBS00H0S

1. CHECK GROUND CONNECTIONS

1. Turn ignition switch OFF.
2. Loosen and retighten three ground screws on the body.
   Refer to EC-150, "Ground Inspection" .

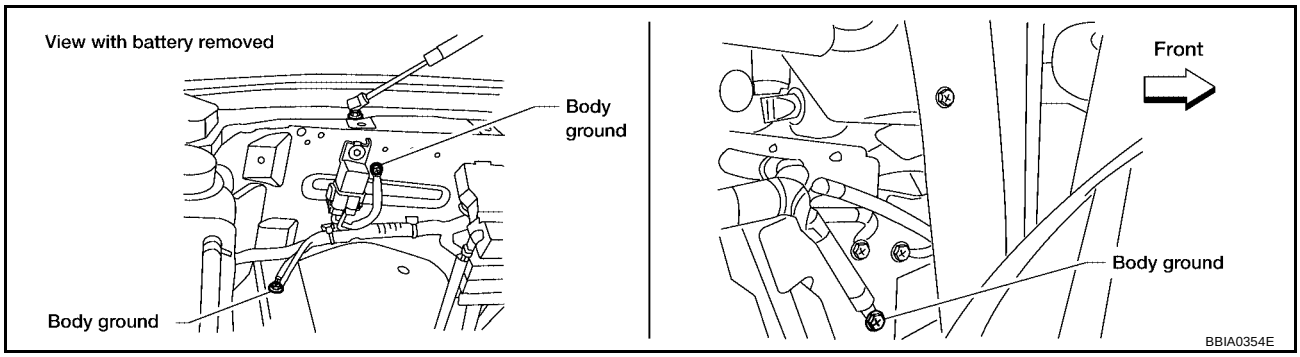

OK or NG

OK >> GO TO 2.
NG >> Repair or replace ground connections.

2. CHECK HO2S2 POWER SUPPLY CIRCUIT

1. Disconnect heated oxygen sensor 2 harness connector.

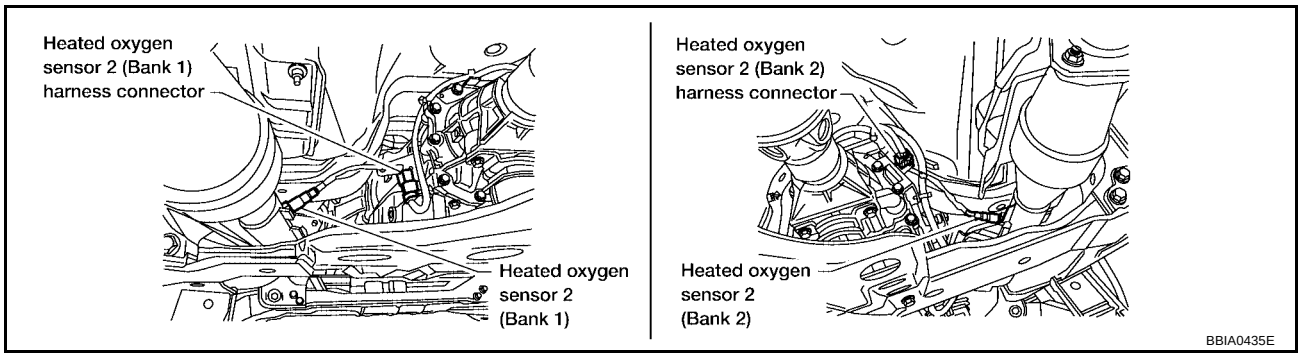

2. Turn ignition switch ON.
3. Check voltage between HO2S2 terminal 3 and ground with CONSULT-II or tester.

Voltage: Battery voltage

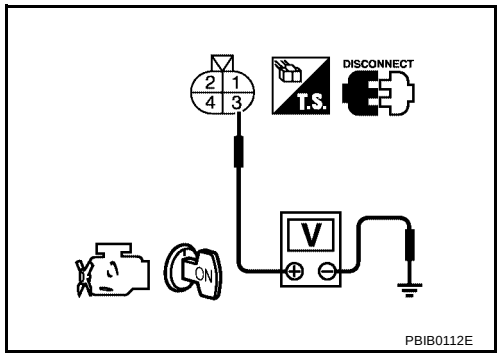

OK or NG

OK >> GO TO 4.
NG >> GO TO 3.

3. DETECT MALFUNCTIONING PART

Check the following.

- Harness connectors E5, F14
- IPDM E/R connector E119
- 10A fuse
- Harness for open or short between heated oxygen sensor 2 and fuse

>> Repair harness or connectors.

4. CHECK HO2S2 OUTPUT SIGNAL CIRCUIT FOR OPEN AND SHORT

1. Turn ignition switch OFF.
2. Disconnect ECM harness connector.
3. Check harness continuity between ECM terminal and HO2S2 terminal as follows. Refer to Wiring Diagram.

DTC	Terminals		Bank
	ECM	Sensor	
P0037, P0038	6	2	1
P0057, P0058	25	2	2

Continuity should exist.

4. Also check harness for short to ground and short to power.

OK or NG

OK >> GO TO 5.
NG >> Repair open circuit or short to ground or short to power in harness or connectors.

5. CHECK HEATED OXYGEN SENSOR 2 HEATER

Refer to EC-170, "Component Inspection" .

OK or NG

OK >> GO TO 6.
NG >> Replace malfunctioning heated oxygen sensor 2.

6. CHECK INTERMITTENT INCIDENT

Refer to EC-144, "TROUBLE DIAGNOSIS FOR INTERMITTENT INCIDENT" .

>> **INSPECTION END**

Component Inspection

UBS00H0T

HEATED OXYGEN SENSOR 2 HEATER

1. Check resistance between HO2S2 terminals as follows.

Terminal No.	Resistance
2 and 3	5.0 - 7.0 Ω at 25°C (77°F)
1 and 2, 3, 4	∞ Ω (Continuity should not exist)
4 and 1, 2, 3	

2. If NG, replace heated oxygen sensor 2.

CAUTION:

- **Discard any heated oxygen sensor which has been dropped from a height of more than 0.5 m (19.7 in) onto a hard surface such as a concrete floor; use a new one.**
- **Before installing new oxygen sensor, clean exhaust system threads using Oxygen Sensor Thread Cleaner tool J-43897-18 or J-43897-12 and approved anti-seize lubricant.**

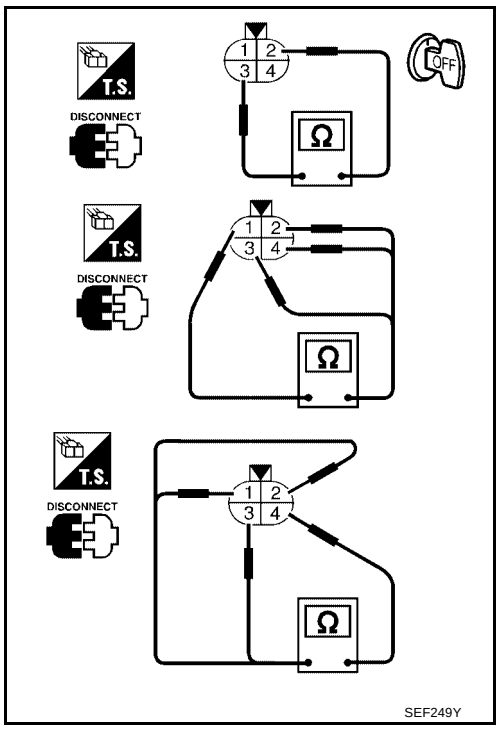

Removal and Installation

UBS00H0U

HEATED OXYGEN SENSOR 2

Refer to EM-21, "EXHAUST MANIFOLD AND THREE WAY CATALYST" .

DTC P0101 MAF SENSOR

PFP:22680

Component Description

UBS00H0V

The mass air flow sensor is placed in the stream of intake air. It measures the intake flow rate by measuring a part of the entire intake flow. The mass air flow sensor controls the temperature of the hot wire to a certain amount. The heat generated by the hot wire is reduced as the intake air flows around it. The more air, the greater the heat loss.
Therefore, the electric current supplied to the hot wire is changed to maintain the temperature of the hot wire as air flow increases. The ECM detects the air flow by means of this current change.

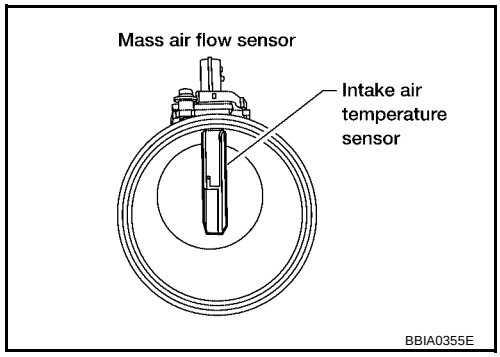

CONSULT-II Reference Value in Data Monitor Mode

UBS00H0W

Specification data are reference values.

MONITOR ITEM	CONDITION		SPECIFICATION
MAS A/F SE-B1	See EC-134, "TROUBLE DIAGNOSIS - SPECIFICATION VALUE" .		
CAL/LD VALUE	● Engine: After warming up ● Air conditioner switch: OFF ● Selector lever: P or N ● No load	Idle	14% - 33%
		2,500 rpm	12% - 25%
MASS AIRFLOW	● Engine: After warming up ● Air conditioner switch: OFF ● Selector lever: P or N ● No load	Idle	3.0 - 9.0 g·m/s
		2,500 rpm	9.0 - 28.0 g·m/s

On Board Diagnosis Logic

UBS00H0X

DTC No.	Trouble diagnosis name	DTC detecting condition		Possible cause
P0101 0101	Mass air flow sensor circuit range/performance	A)	A high voltage from the sensor is sent to ECM under light load driving condition.	● Harness or connectors (The sensor circuit is open or shorted.) ● Mass air flow sensor ● EVAP control system pressure sensor ● Intake air temperature sensor
		B)	A low voltage from the sensor is sent to ECM under heavy load driving condition.	● Harness or connectors (The sensor circuit is open or shorted.) ● Intake air leaks ● Mass air flow sensor ● EVAP control system pressure sensor ● Intake air temperature sensor

DTC Confirmation Procedure

UBS00H0Y

Perform PROCEDURE FOR MALFUNCTION A first.
If the DTC cannot be confirmed, perform PROCEDURE FOR MALFUNCTION B.

NOTE:
If DTC Confirmation Procedure has been previously conducted, always turn ignition switch OFF and wait at least 10 seconds before conducting the next test.

PROCEDURE FOR MALFUNCTION A

NOTE:
If engine will not start or stops soon, wait at least 10 seconds with engine stopped (Ignition switch ON) instead of running engine at idle speed.

With CONSULT-II

1. Turn ignition switch ON.
2. Select “DATA MONITOR” mode with CONSULT-II.
3. Start engine and warm it up to normal operating temperature.
4. Run engine for at least 10 seconds at idle speed.
5. If 1st trip DTC is detected, go to EC-175, "Diagnostic Procedure" .

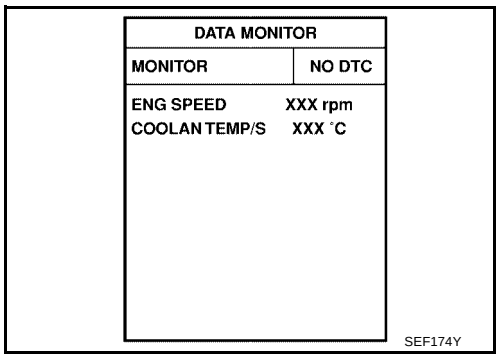

With GST

Follow the procedure “With CONSULT-II” above.

PROCEDURE FOR MALFUNCTION B

CAUTION:
Always drive vehicle at a safe speed.

With CONSULT-II

1. Turn ignition switch ON.
2. Start engine and warm it up to normal operating temperature.
   If engine cannot be started, go to EC-175, "Diagnostic Procedure" .
3. Select “DATA MONITOR” mode with CONSULT-II.
4. Check the voltage of “MAS A/F SE-B1” with “DATA MONITOR”.
5. Increases engine speed to about 4,000 rpm.
6. Monitor the linear voltage rise in response to engine speed increases.
   If NG, go to EC-175, "Diagnostic Procedure" .
   If OK, go to following step.

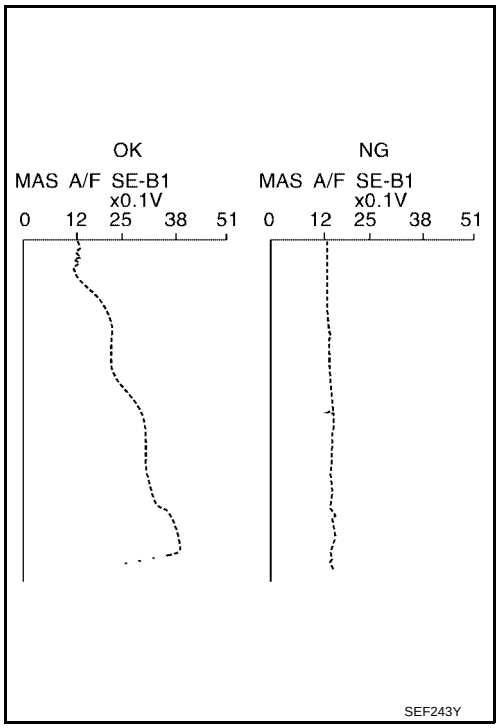

7. Maintain the following conditions for at least 10 consecutive seconds.

ENG SPEED	More than 2,000 rpm
THRTL SEN 1	More than 3V
THRTL SEN 2	More than 3V
Selector lever	Suitable position
Driving location	Driving vehicle uphill (Increased engine load) will help maintain the driving conditions required for this test.

8. If 1st trip DTC is detected, go to EC-175, "Diagnostic Procedure" .

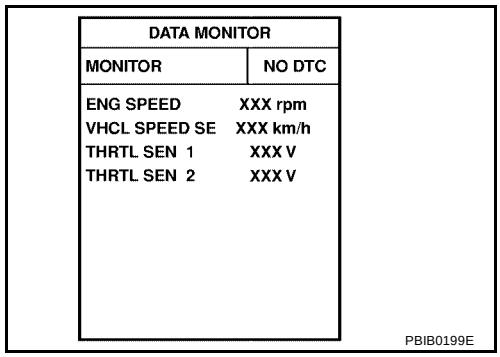

Overall Function Check

UBS00H0Z

PROCEDURE FOR MALFUNCTION B

Use this procedure to check the overall function of the mass air flow sensor circuit. During this check, a 1st trip DTC might not be confirmed.

With GST

1. Start engine and warm it up to normal operating temperature.
2. Select Service $01 with GST.
3. Check the mass air flow sensor signal with Service $01.
4. Check for linear mass air flow sensor signal value rise in response to increases to about 4,000 rpm in engine speed.
5. If NG, go to EC-175, "Diagnostic Procedure" .

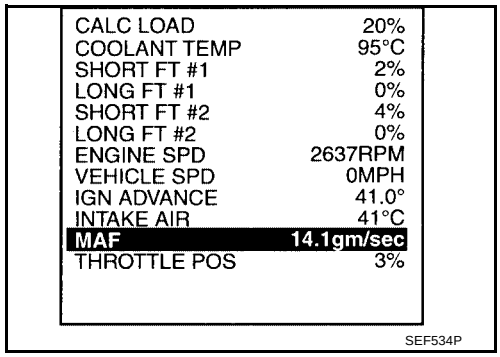

Wiring Diagram

UBS00H10

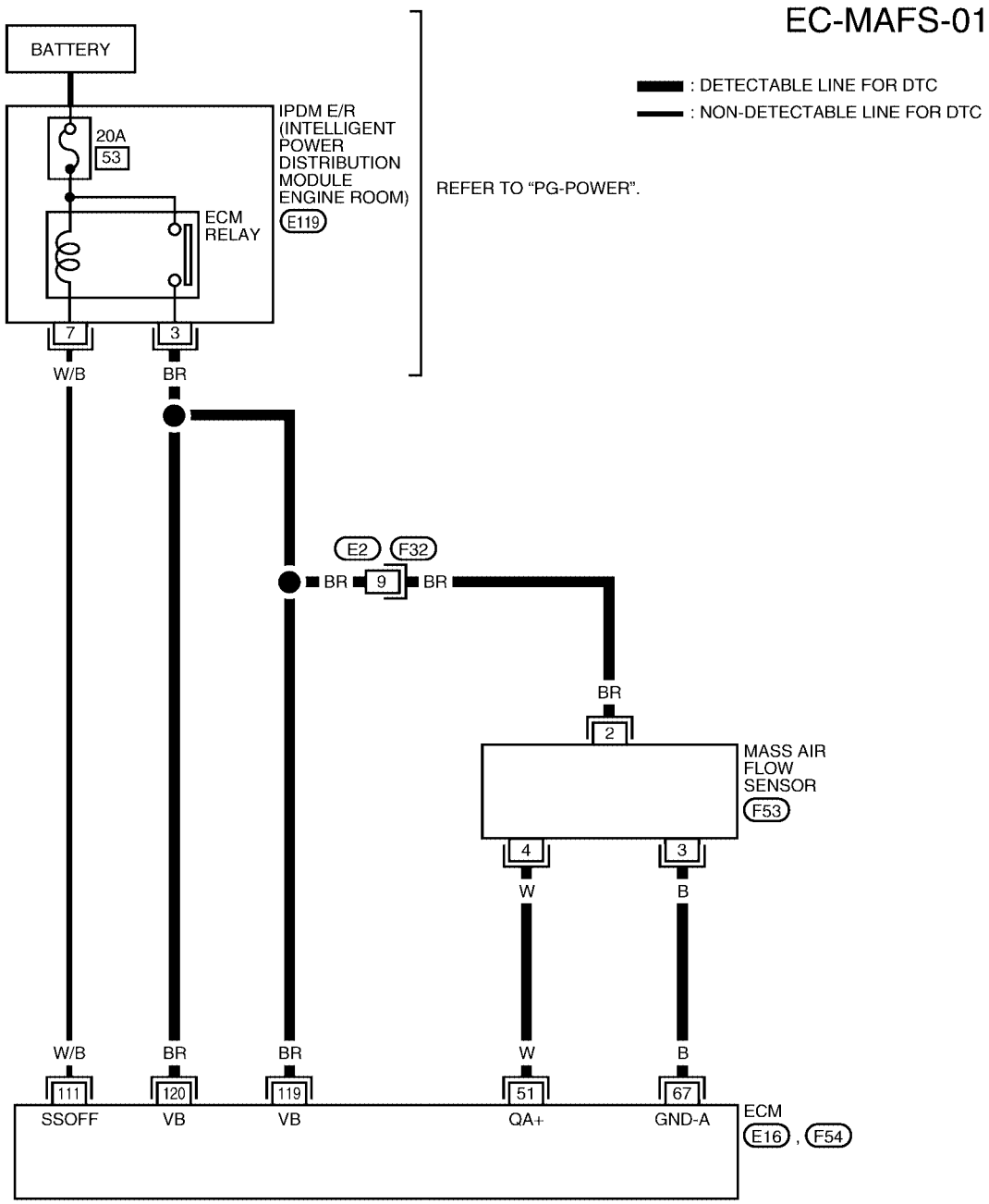

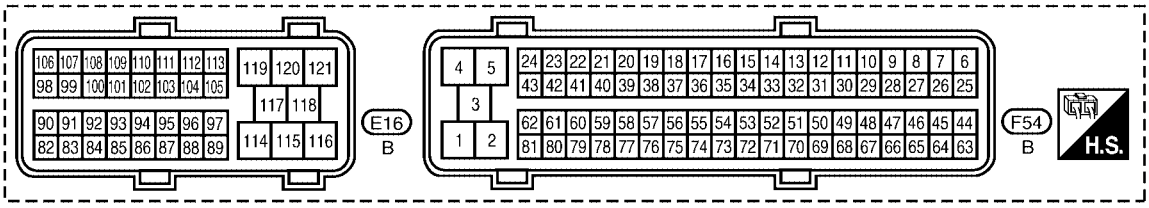

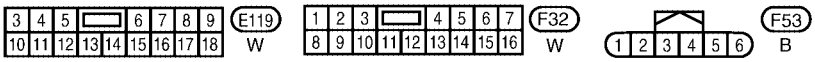

BBWA1674E

Specification data are reference values and are measured between each terminal and ground.

CAUTION:

Do not use ECM ground terminals when measuring input/output voltage. Doing so may result in damage to the ECM's transistor. Use a ground other than ECM terminals, such as the ground.

TERMINAL NO.	WIRE COLOR	ITEM	CONDITION	DATA (DC Voltage)
51	W	Mass air flow sensor	**[Engine is running]** ● **Warm-up condition** ● Idle speed	1.0 - 1.3V
			[Engine is running] ● **Warm-up condition** ● Engine speed: 2,500 rpm.	1.7 - 2.1V
67	B	Sensor ground	**[Engine is running]** ● **Warm-up condition** ● Idle speed	Approximately 0V
111	W/B	ECM relay (Self shut-off)	**[Engine is running]** **[Ignition switch: OFF]** ● For a few seconds after turning ignition switch OFF	0 - 1.5V
			[Ignition switch: OFF] ● More than a few seconds after turning ignition switch OFF	BATTERY VOLTAGE (11 - 14V)
119 120	BR BR	Power supply for ECM	**[Ignition switch: ON]**	BATTERY VOLTAGE (11 - 14V)

Diagnostic Procedure

UBS00H11

1. INSPECTION START

Which malfunction (A or B) is duplicated?

A or B

A >> GO TO 3.
B >> GO TO 2.

2. CHECK INTAKE SYSTEM

Check the following for connection.

- Air duct
- Vacuum hoses
- Intake air passage between air duct to intake manifold

OK or NG

OK >> GO TO 3.
NG >> Reconnect the parts.

3. CHECK GROUND CONNECTIONS

1. Turn ignition switch OFF.
2. Loosen and retighten three ground screws on the body.
   Refer to EC-150, "Ground Inspection" .

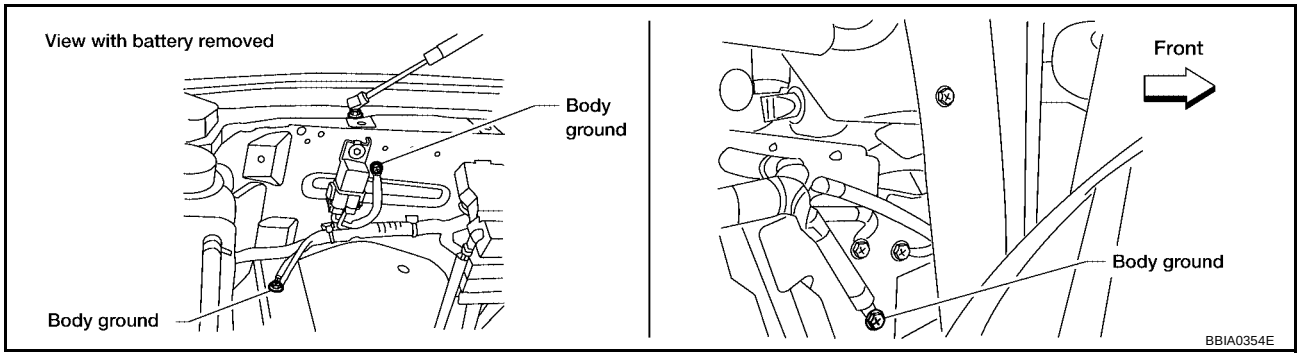

OK or NG

OK >> GO TO 4.
NG >> Repair or replace ground connections.

4. CHECK MAF SENSOR POWER SUPPLY CIRCUIT

1. Disconnect mass air flow (MAF) sensor harness connector.
2. Turn ignition switch ON.

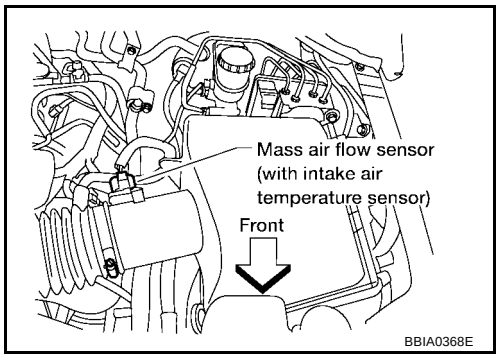

3. Check voltage between MAF sensor terminal 2 and ground with CONSULT-II or tester.

   Voltage: Battery voltage

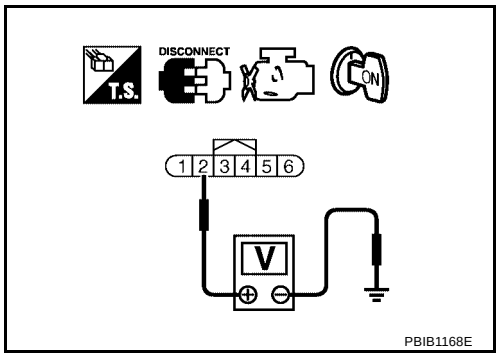

OK or NG

OK >> GO TO 6.
NG >> GO TO 5.

5. DETECT MALFUNCTIONING PART

Check the following.

- Harness connectors E2, F32
- Harness for open or short between IPDM E/R and mass air flow sensor
- Harness for open or short between mass air flow sensor and ECM

>> Repair harness or connectors.

6. CHECK MAF SENSOR GROUND CIRCUIT FOR OPEN AND SHORT

1. Turn ignition switch OFF.
2. Disconnect ECM harness connector.
3. Check harness continuity between MAF sensor terminal 3 and ECM terminal 67.
   Refer to Wiring Diagram.

   Continuity should exist.

4. Also check harness for short to ground and short to power.

OK or NG

OK >> GO TO 7.
NG >> Repair open circuit or short to ground or short to power in harness or connectors.

7. CHECK MAF SENSOR INPUT SIGNAL CIRCUIT FOR OPEN AND SHORT

1. Check harness continuity between MAF sensor terminal 4 and ECM terminal 51.
   Refer to Wiring Diagram.

   Continuity should exist.

2. Also check harness for short to ground and short to power.

OK or NG

OK >> GO TO 8.
NG >> Repair open circuit or short to ground or short to power in harness or connectors.

8. CHECK INTAKE AIR TEMPERATURE SENSOR

Refer to EC-191, "Component Inspection" .

OK or NG

OK >> GO TO 9.
NG >> Replace intake air temperature sensor.

9. CHECK EVAP CONTROL SYSTEM PRESSURE SENSOR

Refer to EC-404, "Component Inspection" .

OK or NG

OK >> GO TO 10.
NG >> Replace EVAP control system pressure sensor.

10. CHECK MASS AIR FLOW SENSOR

Refer to EC-178, "Component Inspection" .

OK or NG

OK >> GO TO 11.
NG >> Replace mass air flow sensor.

11. CHECK INTERMITTENT INCIDENT

Refer to EC-144, "TROUBLE DIAGNOSIS FOR INTERMITTENT INCIDENT" .

>> **INSPECTION END**

Component Inspection

UBS00H12

MASS AIR FLOW SENSOR

With CONSULT-II

1. Reconnect all harness connectors disconnected.
2. Start engine and warm it up to normal operating temperature.
3. Connect CONSULT-II and select “DATA MONITOR” mode.
4. Select “MAS A/F SE-B1” and check indication under the following conditions.

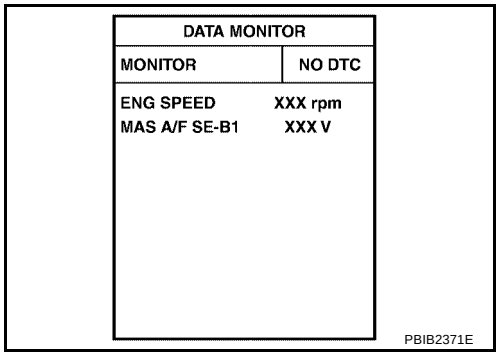

Condition	MAS A/F SE-B1 (V)
Ignition switch ON (Engine stopped.)	Approx. 0.4
Idle (Engine is warmed-up to normal operating temperature.)	1.0 - 1.3
2,500 rpm (Engine is warmed-up to normal operating temperature.)	1.7 - 2.1
Idle to about 4,000 rpm	1.0 - 1.3 to Approx. 2.4*

*: Check for linear voltage rise in response to engine being increased to about 4,000 rpm.

5. If the voltage is out of specification, proceed the following.

a. Check for the cause of uneven air flow through mass air flow sensor. Refer to following.
   - Crushed air ducts
   - Malfunctioning seal of air cleaner element
   - Uneven dirt of air cleaner element
   - Improper specification of intake air system parts

b. If NG, repair or replace malfunctioning part and perform step 2 to 4 again.
   If OK, go to next step.

6. Turn ignition switch OFF.
7. Disconnect mass air flow sensor harness connector and reconnect it again.
8. Perform step 2 to 4 again.
9. If NG, clean or replace mass air flow sensor.

Without CONSULT-II

1. Reconnect all harness connectors disconnected.
2. Start engine and warm it up to normal operating temperature.
3. Check voltage between ECM terminal 51 (Mass air flow sensor signal) and ground.

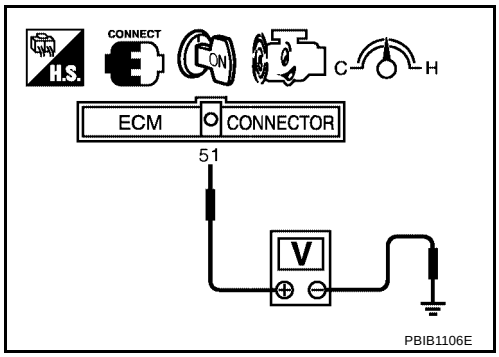

Condition	MAS A/F SE-B1 (V)
Ignition switch ON (Engine stopped.)	Approx. 0.4
Idle (Engine is warmed-up to normal operating temperature.)	1.0 - 1.3
2,500 rpm (Engine is warmed-up to normal operating temperature.)	1.7 - 2.1
Idle to about 4,000 rpm	1.0 - 1.3 to Approx. 2.4*

*: Check for linear voltage rise in response to engine being increased to about 4,000 rpm.

4. If the voltage is out of specification, proceed the following.

a. Check for the cause of uneven air flow through mass air flow sensor. Refer to following.
   - Crushed air ducts
   - Malfunctioning seal of air cleaner element
   - Uneven dirt of air cleaner element
   - Improper specification of intake air system parts

b. If NG, repair or replace malfunctioning part and perform step 2 to 3 again.
If OK, go to next step.

5. Turn ignition switch OFF.
6. Disconnect mass air flow sensor harness connector and reconnect it again.
7. Perform step 2 and 3 again.
8. If NG, clean or replace mass air flow sensor.

Removal and Installation

UBS00H13

MASS AIR FLOW SENSOR

Refer to EM-15, "AIR CLEANER AND AIR DUCT" .

DTC P0102, P0103 MAF SENSOR

PFP:22680

Component Description

UBS00H14

The mass air flow sensor is placed in the stream of intake air. It measures the intake flow rate by measuring a part of the entire intake flow. The mass air flow sensor controls the temperature of the hot wire to a certain amount. The heat generated by the hot wire is reduced as the intake air flows around it. The more air, the greater the heat loss.
Therefore, the electric current supplied to the hot wire is changed to maintain the temperature of the hot wire as air flow increases. The ECM detects the air flow by means of this current change.

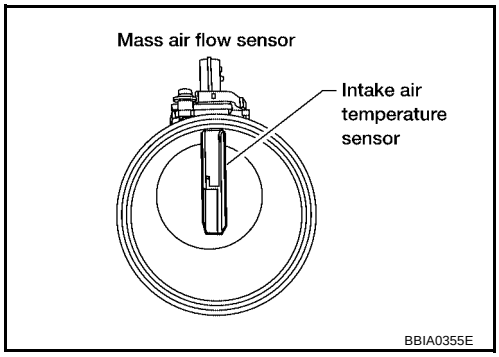

CONSULT-II Reference Value in Data Monitor Mode

UBS00H15

Specification data are reference values.

MONITOR ITEM	CONDITION		SPECIFICATION
MAS A/F SE-B1	See EC-134, "TROUBLE DIAGNOSIS - SPECIFICATION VALUE" .		
CAL/LD VALUE	● Engine: After warming up ● Air conditioner switch: OFF ● Selector lever: P or N ● No load	Idle	14% - 33%
		2,500 rpm	12% - 25%
MASS AIRFLOW	● Engine: After warming up ● Air conditioner switch: OFF ● Selector lever: P or N ● No load	Idle	3.0 - 9.0 g·m/s
		2,500 rpm	9.0 - 28.0 g·m/s

On Board Diagnosis Logic

UBS00H16

These self-diagnoses have the one trip detection logic.

DTC No.	Trouble diagnosis name	DTC detecting condition	Possible cause
P0102 0102	Mass air flow sensor circuit low input	An excessively low voltage from the sensor is sent to ECM.	● Harness or connectors (The sensor circuit is open or shorted.) ● Intake air leaks ● Mass air flow sensor
P0103 0103	Mass air flow sensor circuit high input	An excessively high voltage from the sensor is sent to ECM.	● Harness or connectors (The sensor circuit is open or shorted.) ● Mass air flow sensor

FAIL-SAFE MODE

When the malfunction is detected, the ECM enters fail-safe mode and the MIL lights up.

Detected items	Engine operating condition in fail-safe mode
Mass air flow sensor circuit	Engine speed will not rise more than 2,400 rpm due to the fuel cut.

DTC Confirmation Procedure

UBS00H17

NOTE:
If DTC Confirmation Procedure has been previously conducted, always turn ignition switch OFF and wait at least 10 seconds before conducting the next test.

PROCEDURE FOR DTC P0102

With CONSULT-II

1. Turn ignition switch ON.
2. Select “DATA MONITOR” mode with CONSULT-II.
3. Start engine and wait at least 5 seconds.
4. If DTC is detected, go to EC-183, "Diagnostic Procedure" .

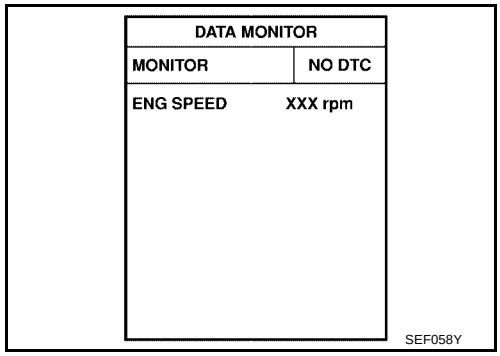

With GST

Follow the procedure “With CONSULT-II” above.

PROCEDURE FOR DTC P0103

With CONSULT-II

1. Turn ignition switch ON.
2. Select “DATA MONITOR” mode with CONSULT-II.
3. Wait at least 5 seconds.
4. If DTC is detected, go to EC-183, "Diagnostic Procedure" .
   If DTC is not detected, go to next step.
5. Start engine and wait at least 5 seconds.
6. If DTC is detected, go to EC-183, "Diagnostic Procedure" .

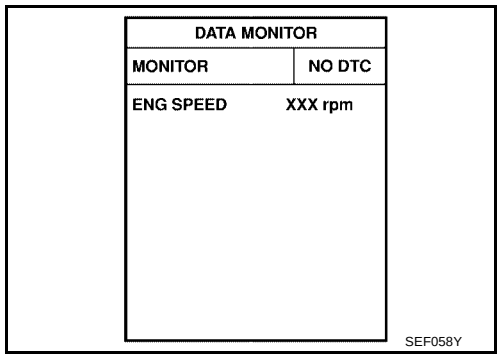

With GST

Follow the procedure “With CONSULT-II” above.

Wiring Diagram

UBS00H18

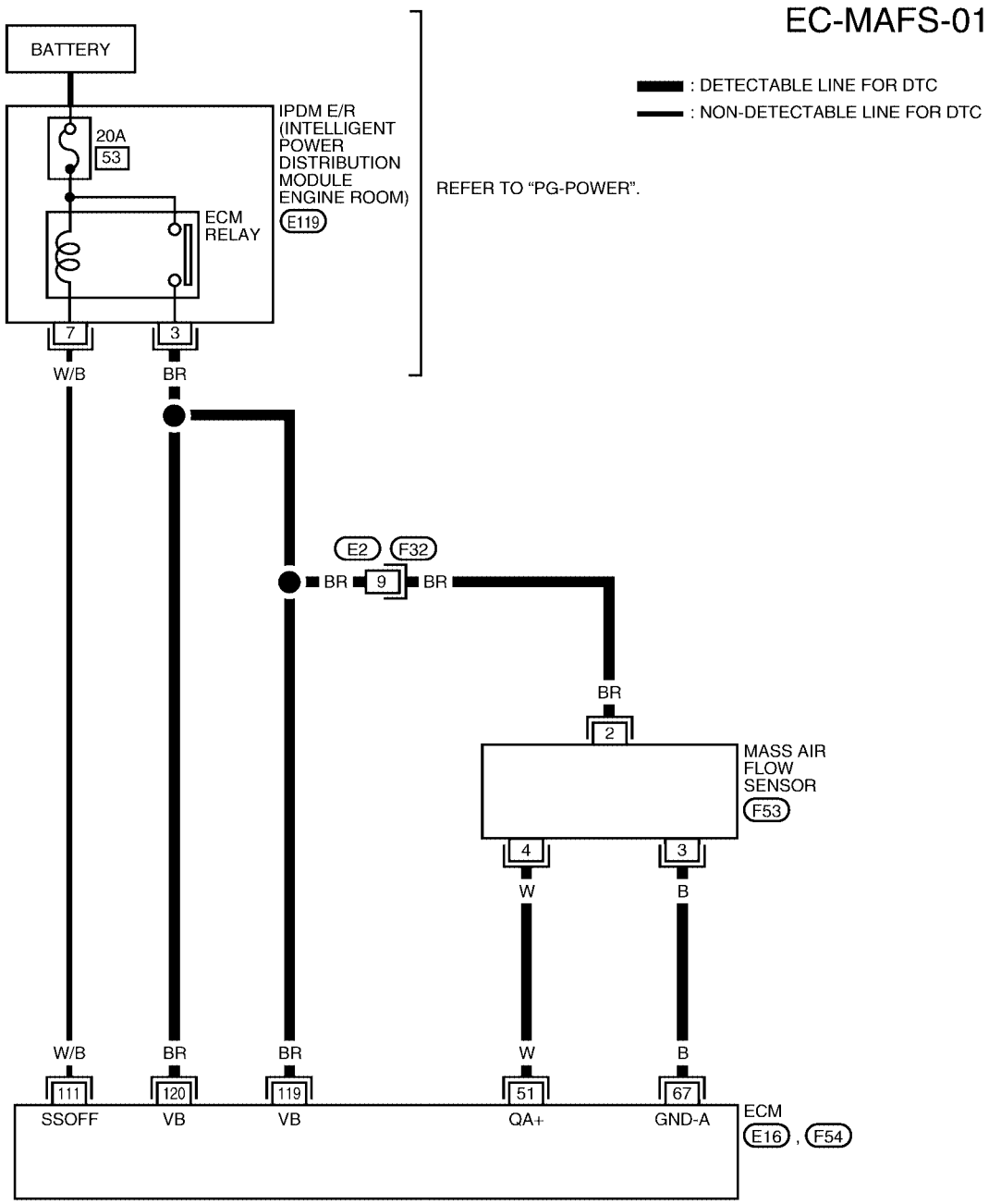

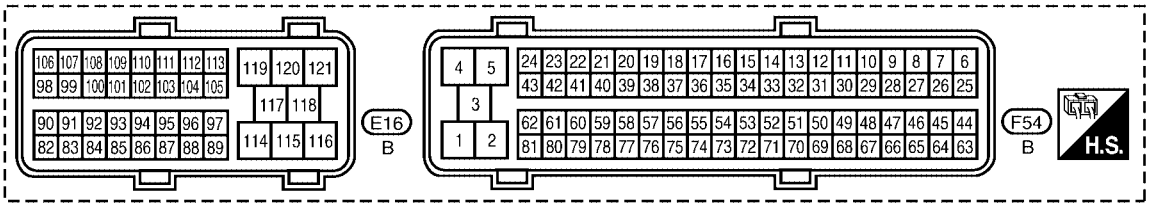

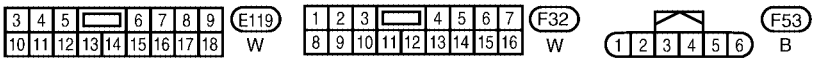

BBWA1674E

Specification data are reference values and are measured between each terminal and ground.

CAUTION:

Do not use ECM ground terminals when measuring input/output voltage. Doing so may result in damage to the ECM's transistor. Use a ground other than ECM terminals, such as the ground.

TERMINAL NO.	WIRE COLOR	ITEM	CONDITION	DATA (DC Voltage)
51	W	Mass air flow sensor	**[Engine is running]** ● **Warm-up condition** ● Idle speed	1.0 - 1.3V
			[Engine is running] ● **Warm-up condition** ● Engine speed: 2,500 rpm.	1.7 - 2.1V
67	B	Sensor ground	**[Engine is running]** ● **Warm-up condition** ● Idle speed	Approximately 0V
111	W/B	ECM relay (Self shut-off)	**[Engine is running]** **[Ignition switch: OFF]** ● For a few seconds after turning ignition switch OFF	0 - 1.5V
			[Ignition switch: OFF] ● More than a few seconds after turning ignition switch OFF	BATTERY VOLTAGE (11 - 14V)
119 120	BR BR	Power supply for ECM	**[Ignition switch: ON]**	BATTERY VOLTAGE (11 - 14V)

Diagnostic Procedure

UBS00H19

1. INSPECTION START

Which malfunction (P0102 or P0103) is duplicated?

P0102 or P0103

P0102 >> GO TO 2.
P0103 >> GO TO 3.

2. CHECK INTAKE SYSTEM

Check the following for connection.

- Air duct
- Vacuum hoses
- Intake air passage between air duct to intake manifold

OK or NG

OK >> GO TO 3.
NG >> Reconnect the parts.

3. CHECK GROUND CONNECTIONS

1. Turn ignition switch OFF.
2. Loosen and retighten three ground screws on the body.
   Refer to EC-150, "Ground Inspection" .

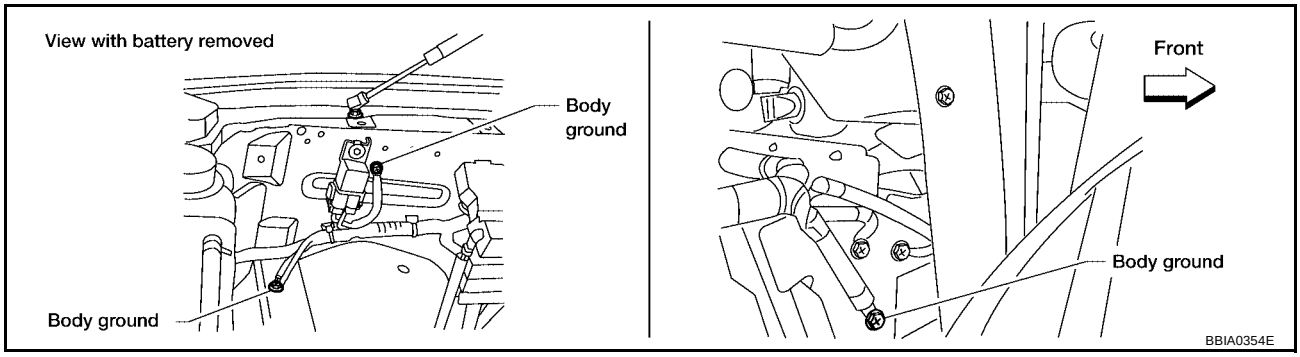

OK or NG

OK >> GO TO 4.
NG >> Repair or replace ground connections.

4. CHECK MAF SENSOR POWER SUPPLY CIRCUIT

1. Disconnect mass air flow (MAF) sensor harness connector.
2. Turn ignition switch ON.

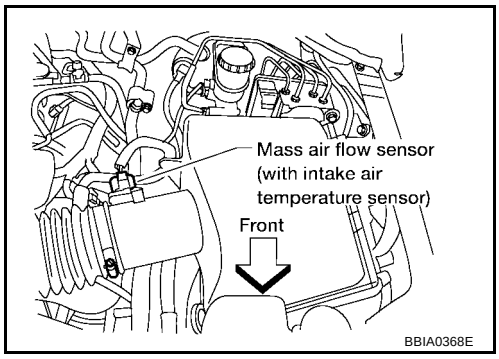

3. Check voltage between MAF sensor terminal 2 and ground with CONSULT-II or tester.

   Voltage: Battery voltage

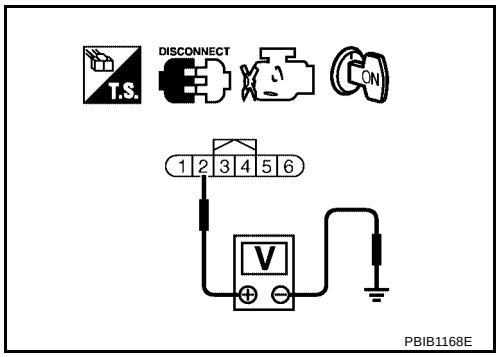

OK or NG

OK >> GO TO 6.
NG >> GO TO 5.

5. DETECT MALFUNCTIONING PART

Check the following.

- Harness connectors E2, F32
- Harness for open or short between IPDM E/R and mass air flow sensor
- Harness for open or short between mass air flow sensor and ECM

>> Repair harness or connectors.

6. CHECK MAF SENSOR GROUND CIRCUIT FOR OPEN AND SHORT

1. Turn ignition switch OFF.
2. Disconnect ECM harness connector.
3. Check harness continuity between MAF sensor terminal 3 and ECM terminal 67.
   Refer to Wiring Diagram.

   Continuity should exist.

4. Also check harness for short to ground and short to power.

OK or NG

OK >> GO TO 7.
NG >> Repair open circuit or short to ground or short to power in harness or connectors.

7. CHECK MAF SENSOR INPUT SIGNAL CIRCUIT FOR OPEN AND SHORT

1. Check harness continuity between MAF sensor terminal 4 and ECM terminal 51.
   Refer to Wiring Diagram.

   Continuity should exist.

2. Also check harness for short to ground and short to power.

OK or NG

OK >> GO TO 8.
NG >> Repair open circuit or short to ground or short to power in harness or connectors.

8. CHECK MASS AIR FLOW SENSOR

Refer to EC-186, "Component Inspection" .

OK or NG

OK >> GO TO 9.
NG >> Replace mass air flow sensor.

9. CHECK INTERMITTENT INCIDENT

Refer to EC-144, "TROUBLE DIAGNOSIS FOR INTERMITTENT INCIDENT" .

>> **INSPECTION END**

Component Inspection

UBS00H1A

MASS AIR FLOW SENSOR

With CONSULT-II

1. Reconnect all harness connectors disconnected.
2. Start engine and warm it up to normal operating temperature.
3. Connect CONSULT-II and select “DATA MONITOR” mode.
4. Select “MAS A/F SE-B1” and check indication under the following conditions.

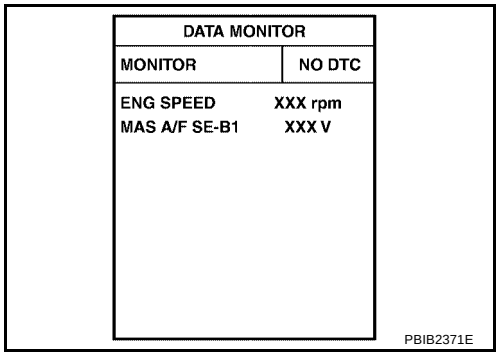

Condition	MAS A/F SE-B1 (V)
Ignition switch ON (Engine stopped.)	Approx. 0.4
Idle (Engine is warmed-up to normal operating temperature.)	1.0 - 1.3
2,500 rpm (Engine is warmed-up to normal operating temperature.)	1.7 - 2.1
Idle to about 4,000 rpm	1.0 - 1.3 to Approx. 2.4*

*: Check for linear voltage rise in response to engine being increased to about 4,000 rpm.

5. If the voltage is out of specification, proceed the following.

a. Check for the cause of uneven air flow through mass air flow sensor. Refer to following.
   - Crushed air ducts
   - Malfunctioning seal of air cleaner element
   - Uneven dirt of air cleaner element
   - Improper specification of intake air system parts

b. If NG, repair or replace malfunctioning part and perform step 2 to 4 again.
   If OK, go to next step.

6. Turn ignition switch OFF.
7. Disconnect mass air flow sensor harness connector and reconnect it again.
8. Perform step 2 to 4 again.
9. If NG, clean or replace mass air flow sensor.

Without CONSULT-II

1. Reconnect all harness connectors disconnected.
2. Start engine and warm it up to normal operating temperature.
3. Check voltage between ECM terminal 51 (Mass air flow sensor signal) and ground.

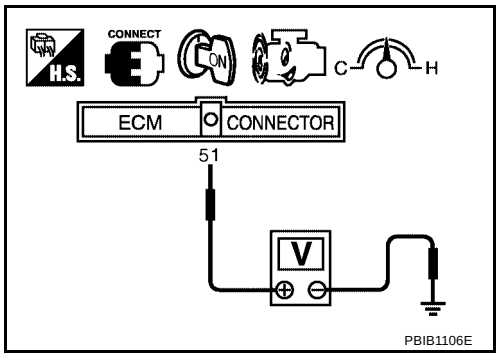

Condition	MAS A/F SE-B1 (V)
Ignition switch ON (Engine stopped.)	Approx. 0.4
Idle (Engine is warmed-up to normal operating temperature.)	1.0 - 1.3
2,500 rpm (Engine is warmed-up to normal operating temperature.)	1.7 - 2.1
Idle to about 4,000 rpm	1.0 - 1.3 to Approx. 2.4*

*: Check for linear voltage rise in response to engine being increased to about 4,000 rpm.

4. If the voltage is out of specification, proceed the following.

a. Check for the cause of uneven air flow through mass air flow sensor. Refer to following.
   - Crushed air ducts
   - Malfunctioning seal of air cleaner element
   - Uneven dirt of air cleaner element
   - Improper specification of intake air system parts

b. If NG, repair or replace malfunctioning part and perform step 2 to 3 again.
If OK, go to next step.

5. Turn ignition switch OFF.
6. Disconnect mass air flow sensor harness connector and reconnect it again.
7. Perform step 2 and 3 again.
8. If NG, clean or replace mass air flow sensor.

Removal and Installation

UBS00H1B

MASS AIR FLOW SENSOR

Refer to EM-15, "AIR CLEANER AND AIR DUCT" .

DTC P0112, P0113 IAT SENSOR

PFP:22630

Component Description

UBS00H1C

The intake air temperature sensor is built-into mass air flow sensor. The sensor detects intake air temperature and transmits a signal to the ECM.
The temperature sensing unit uses a thermistor which is sensitive to the change in temperature. Electrical resistance of the thermistor decreases in response to the temperature rise.

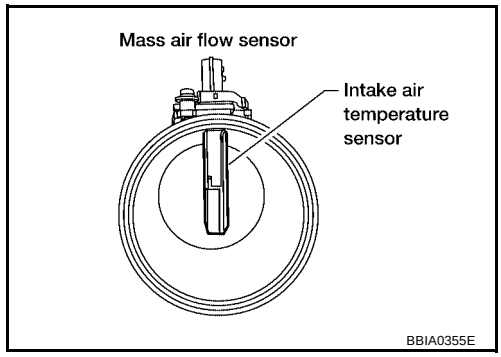

<Reference data>

Intake air temperature °C (°F)	Voltage* V	Resistance kΩ
25 (77)	3.3	1.800 - 2.200
80 (176)	1.2	0.283 - 0.359

*: This data is reference value and is measured between ECM terminal 34 (Intake air temperature sensor) and ground.

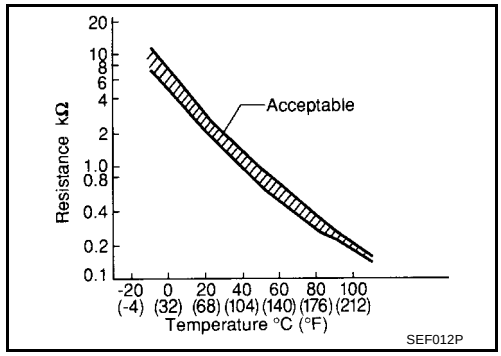

CAUTION:
Do not use ECM ground terminals when measuring input/output voltage. Doing so may result in damage to the ECM's transistor. Use a ground other than ECM terminals, such as the ground.

On Board Diagnosis Logic

UBS00H1D

DTC No.	Trouble diagnosis name	DTC detecting condition	Possible cause
P0112 0112	Intake air temperature sensor circuit low input	An excessively low voltage from the sensor is sent to ECM.	● Harness or connectors (The sensor circuit is open or shorted.) ● Intake air temperature sensor
P0113 0113	Intake air temperature sensor circuit high input	An excessively high voltage from the sensor is sent to ECM.	

DTC Confirmation Procedure

UBS00H1E

NOTE:
If DTC Confirmation Procedure has been previously conducted, always turn ignition switch OFF and wait at least 10 seconds before conducting the next test.

WITH CONSULT-II

1. Turn ignition switch ON.
2. Select “DATA MONITOR” mode with CONSULT-II.
3. Wait at least 5 seconds.
4. If 1st trip DTC is detected, go to EC-190, "Diagnostic Procedure"
.

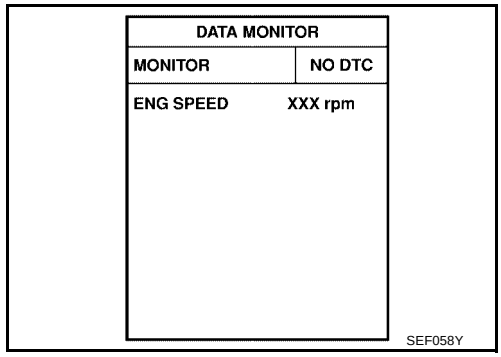

WITH GST

Follow the procedure “WITH CONSULT-II” above.

Wiring Diagram

UBS00H1F

EC-IATS-01

: DETECTABLE LINE FOR DTC
: NON-DETECTABLE LINE FOR DTC

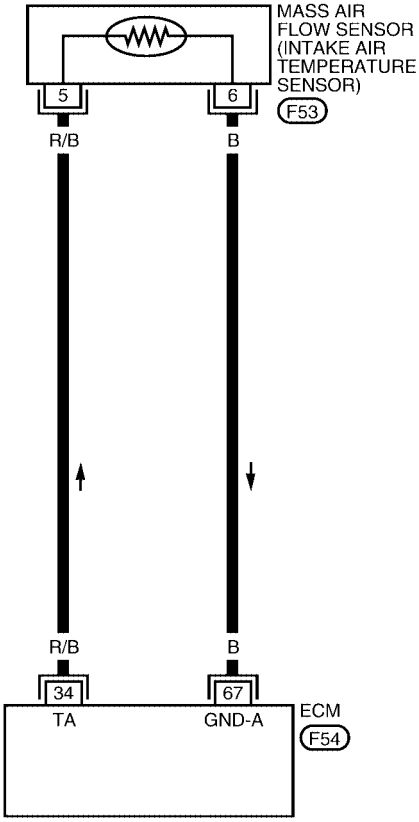

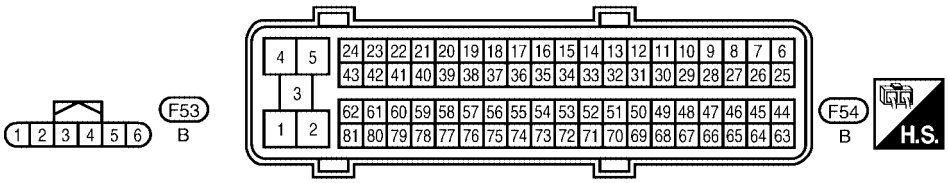

BBWA0879E

Diagnostic Procedure

UBS00H1G

1. CHECK GROUND CONNECTIONS

1. Turn ignition switch OFF.
2. Loosen and retighten three ground screws on the body.
   Refer to EC-150, "Ground Inspection" .

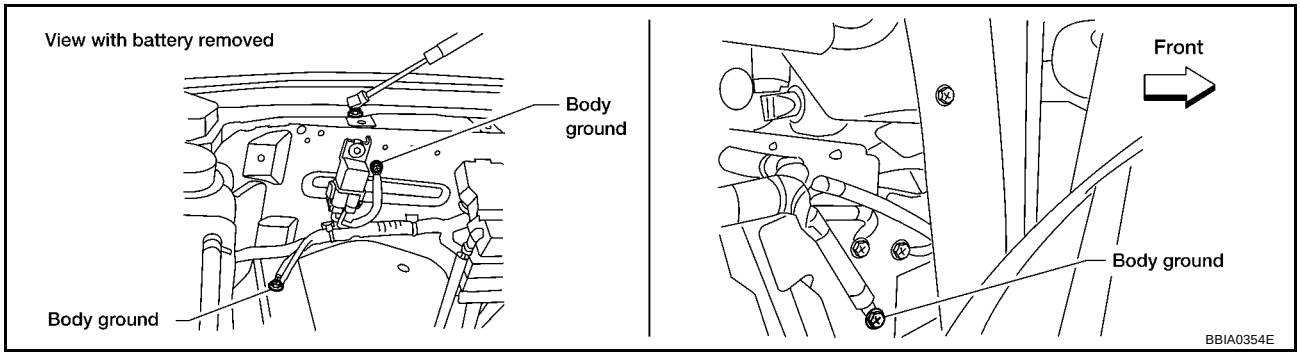

OK or NG

OK >> GO TO 2.
NG >> Repair or replace ground connections.

2. CHECK INTAKE AIR TEMPERATURE SENSOR POWER SUPPLY CIRCUIT

1. Disconnect mass air flow sensor (intake air temperature sensor is built-into) harness connector.
2. Turn ignition switch ON.

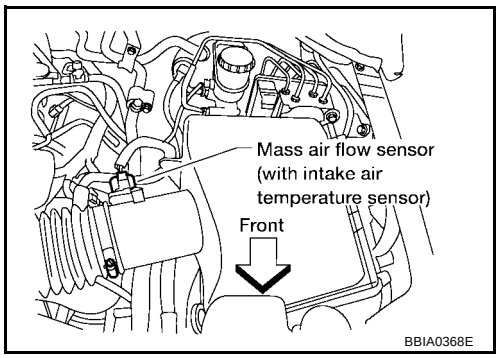

3. Check voltage between mass air flow sensor terminal 5 and ground.

   Voltage: Approximately 5V

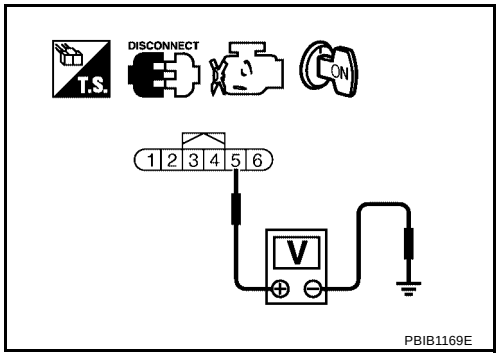

OK or NG

OK >> GO TO 3.
NG >> Repair harness or connectors.

3. CHECK INTAKE AIR TEMPERATURE SENSOR GROUND CIRCUIT FOR OPEN AND SHORT

1. Turn ignition switch OFF.
2. Disconnect ECM harness connector.
3. Check harness continuity between mass air flow sensor terminal 6 and ECM terminal 67. Refer to Wiring Diagram.

Continuity should exist.

4. Also check harness for short to ground and short to power.

OK or NG

OK >> GO TO 4.
NG >> Repair open circuit or short to ground or short to power in harness or connectors.

4. CHECK INTAKE AIR TEMPERATURE SENSOR

Refer to EC-191, "Component Inspection" .

OK or NG

OK >> GO TO 5.
NG >> Replace mass air flow sensor (with intake air temperature sensor).

5. CHECK INTERMITTENT INCIDENT

Refer to EC-144, "TROUBLE DIAGNOSIS FOR INTERMITTENT INCIDENT" .

>> **INSPECTION END**

Component Inspection

UBS00H1H

INTAKE AIR TEMPERATURE SENSOR

1. Check resistance between mass air flow sensor terminals 5 and 6 under the following conditions.

Intake air temperature °C (°F)	Resistance kΩ
25 (77)	1.800 - 2.200

2. If NG, replace mass air flow sensor (with intake air temperature sensor).

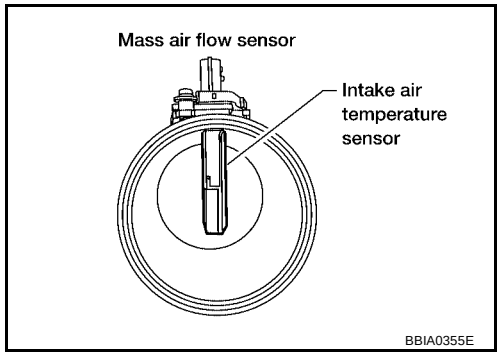

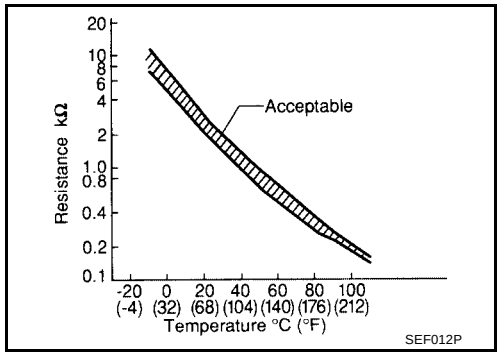

Removal and Installation

UBS00H1I

MASS AIR FLOW SENSOR

Refer to EM-15, "AIR CLEANER AND AIR DUCT" .

DTC P0117, P0118 ECT SENSOR

PFP:22630

Component Description

UBS00H1J

The engine coolant temperature sensor is used to detect the engine coolant temperature. The sensor modifies a voltage signal from the ECM. The modified signal returns to the ECM as the engine coolant temperature input. The sensor uses a thermistor which is sensitive to the change in temperature. The electrical resistance of the thermistor decreases as temperature increases.

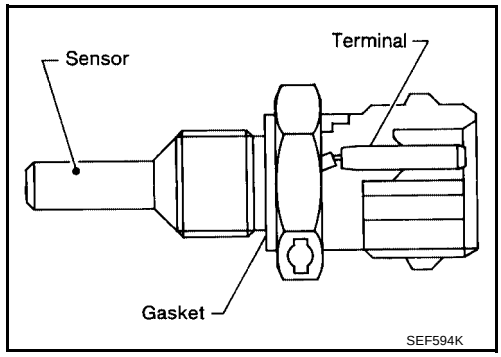

<Reference data>

Engine coolant temperature °C (°F)	Voltage* V	Resistance kΩ
–10 (14)	4.4	7.0 - 11.4
20 (68)	3.5	2.1 - 2.9
50 (122)	2.2	0.68 - 1.00
90 (194)	0.9	0.236 - 0.260

*: This data is reference value and is measured between ECM terminal 73 (Engine coolant temperature sensor) and ground.

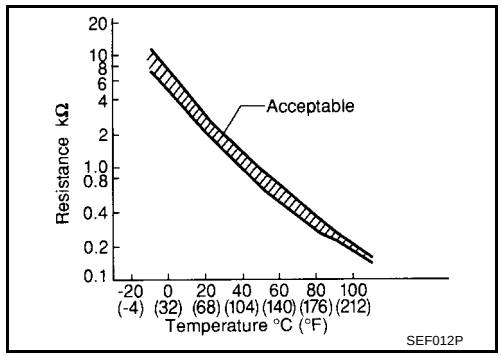

CAUTION:

Do not use ECM ground terminals when measuring input/output voltage. Doing so may result in damage to the ECM's transistor. Use a ground other than ECM terminals, such as the ground.

On Board Diagnosis Logic

UBS00H1K

These self-diagnoses have the one trip detection logic.

DTC No.	Trouble Diagnosis Name	DTC Detecting Condition	Possible Cause
P0117 0117	Engine coolant temperature sensor circuit low input	An excessively low voltage from the sensor is sent to ECM.	● Harness or connectors (The sensor circuit is open or shorted.) ● Engine coolant temperature sensor
P0118 0118	Engine coolant temperature sensor circuit high input	An excessively high voltage from the sensor is sent to ECM.	

FAIL-SAFE MODE

When the malfunction is detected, the ECM enters fail-safe mode and the MIL lights up.

Detected items	Engine operating condition in fail-safe mode	
Engine coolant temperature sensor circuit	Engine coolant temperature will be determined by ECM based on the time after turning ignition switch ON or START. CONSULT-II displays the engine coolant temperature decided by ECM.	
	Condition	Engine coolant temperature decided (CONSULT-II display)
	Just as ignition switch is turned ON or START	40°C (104°F)
	More than approx. 4 minutes after ignition ON or START	80°C (176°F)
	Except as shown above	40 - 80°C (104 - 176°F) (Depends on the time)
	When the fail-safe system for engine coolant temperature sensor is activated, the cooling fan operates while engine is running.	

DTC Confirmation Procedure

UBS00H1L

NOTE:
If DTC Confirmation Procedure has been previously conducted, always turn ignition switch OFF and wait at least 10 seconds before conducting the next test.

WITH CONSULT-II

1. Turn ignition switch ON.
2. Select “DATA MONITOR” mode with CONSULT-II.
3. Wait at least 5 seconds.
4. If DTC is detected, go to EC-195, "Diagnostic Procedure" .

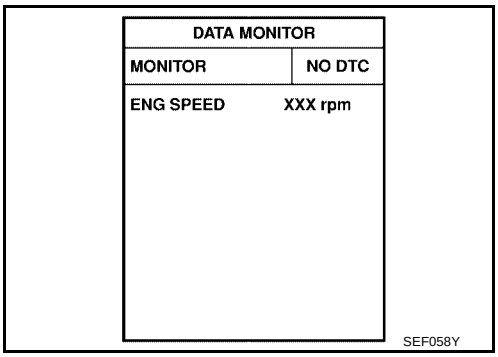

WITH GST

Follow the procedure “WITH CONSULT-II” above.

Wiring Diagram

UBS00H1M

EC-ECTS-01

: DETECTABLE LINE FOR DTC
: NON-DETECTABLE LINE FOR DTC

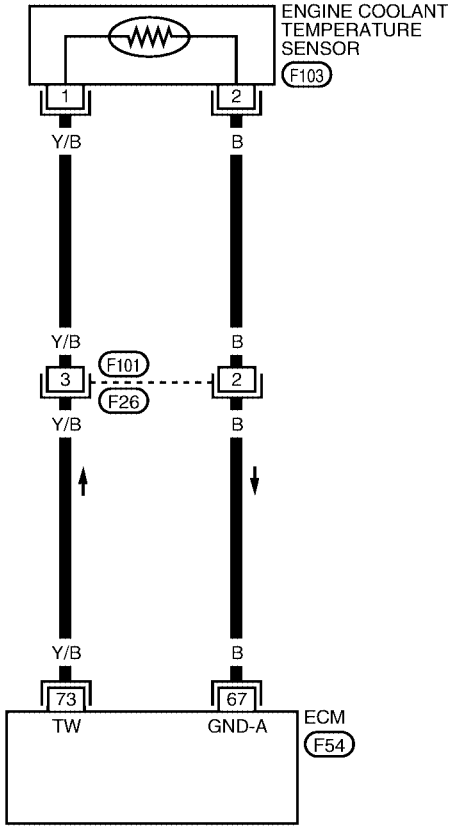

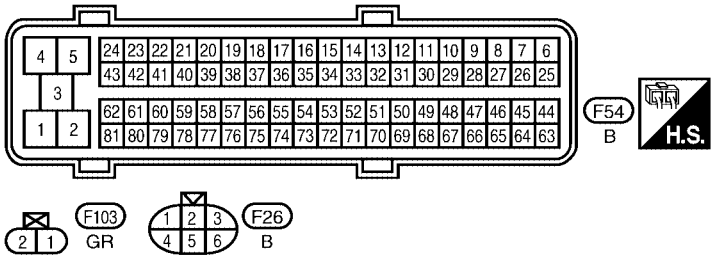

BBWA1676E

Diagnostic Procedure

UBS00H1N

1. CHECK GROUND CONNECTIONS

1. Turn ignition switch OFF.
2. Loosen and retighten three ground screws on the body.
   Refer to EC-150, "Ground Inspection" .

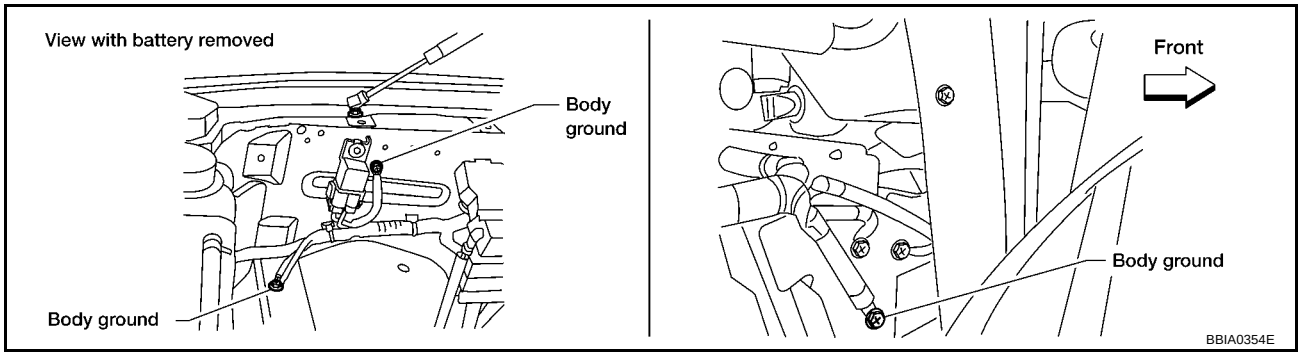

OK or NG

OK >> GO TO 2.
NG >> Repair or replace ground connections.

2. CHECK ECT SENSOR POWER SUPPLY CIRCUIT

1. Disconnect engine coolant temperature (ECT) sensor harness connector.

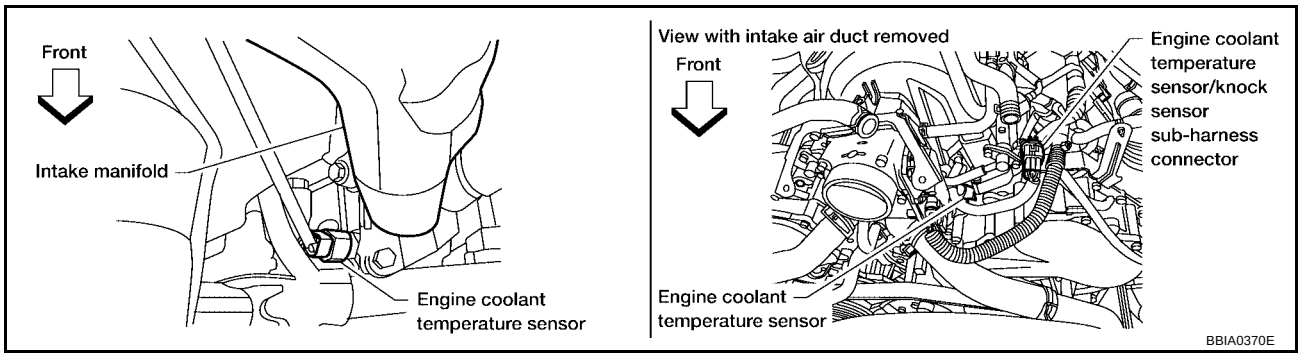

2. Turn ignition switch ON.
3. Check voltage between ECT sensor terminal 1 and ground with CONSULT-II or tester.

Voltage: Approximately 5V

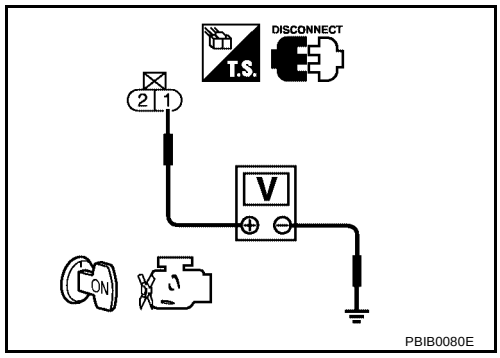

OK or NG

OK >> GO TO 4.
NG >> GO TO 3.

3. DETECT MALFUNCTIONING RART

Check the following.

- Harness connector F26, F101
- Harness for open or short between ECM and engine coolant temperature sensor

>> Repair open circuit or short to ground or short to power in harness or connectors.

4. CHECK ECT SENSOR GROUND CIRCUIT FOR OPEN AND SHORT

1. Turn ignition switch OFF.
2. Disconnect ECM harness connector.
3. Check harness continuity between ECT sensor terminal 2 and ECM terminal 67.
   Refer to Wiring Diagram.

   Continuity should exist.

4. Also check harness for short to ground and short to power.

OK or NG

OK >> GO TO 6.
NG >> GO TO 5.

5. DETECT MALFUNCTIONING PART

Check the following.

- Harness connector F26, F101
- Harness for open and short between ECT sensor and ECM

>> Repair open circuit or short to ground or short to power in harness or connectors.

6. CHECK ENGINE COOLANT TEMPERATURE SENSOR

Refer to EC-196, "Component Inspection" .

OK or NG

OK >> GO TO 7.
NG >> Replace engine coolant temperature sensor.

7. CHECK INTERMITTENT INCIDENT

Refer to EC-144, "TROUBLE DIAGNOSIS FOR INTERMITTENT INCIDENT" .

>> **INSPECTION END**

Component Inspection

UBS00H1O

ENGINE COOLANT TEMPERATURE SENSOR

1. Check resistance between engine coolant temperature sensor terminals 1 and 2 as shown in the figure.

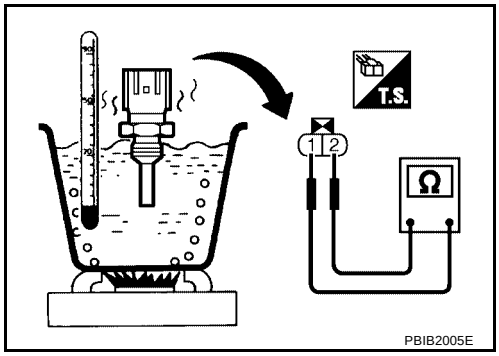

<Reference data>

Engine coolant temperature °C (°F)	Resistance kΩ
20 (68)	2.1 - 2.9
50 (122)	0.68 - 1.00
90 (194)	0.236 - 0.260

2. If NG, replace engine coolant temperature sensor.

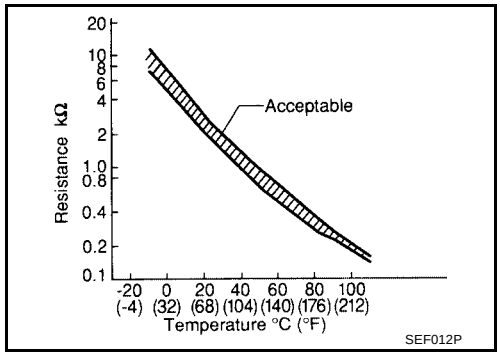

UBS00H1P

Removal and Installation

ENGINE COOLANT TEMPERATURE SENSOR

Refer to EM-63, "CYLINDER HEAD" .

DTC P0122, P0123 TP SENSOR

PFP:16119

Component Description

UBS00H1Q

Electric throttle control actuator consists of throttle control motor, throttle position sensor, etc. The throttle position sensor responds to the throttle valve movement.
The throttle position sensor has the two sensors. These sensors are a kind of potentiometers which transform the throttle valve position into output voltage, and emit the voltage signal to the ECM. In addition, these sensors detect the opening and closing speed of the throttle valve and feed the voltage signals to the ECM. The ECM judges the current opening angle of the throttle valve from these signals and the ECM controls the throttle control motor to make the throttle valve opening angle properly in response to driving condition.

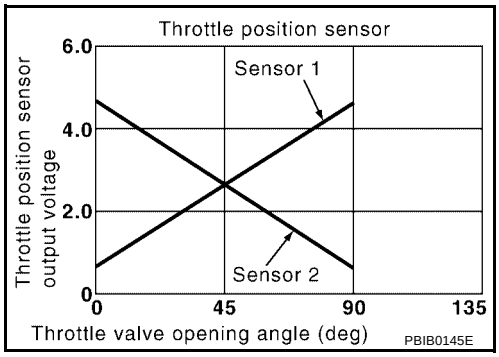

CONSULT-II Reference Value in Data Monitor Mode

UBS00H1R

Specification data are reference values.

MONITOR ITEM	CONDITION		SPECIFICATION
THRTL SEN 1 THRTL SEN 2*	● Ignition switch: ON (Engine stopped) ● Selector lever: D	Accelerator pedal: Fully released	More than 0.36V
		Accelerator pedal: Fully depressed	Less than 4.75V

*: Throttle position sensor 2 signal is converted by ECM internally. Thus, it differs from ECM terminal voltage signal.

On Board Diagnosis Logic

UBS00H1S

These self-diagnoses have the one trip detection logic.

DTC No.	Trouble diagnosis name	DTC detecting condition	Possible cause
P0122 0122	Throttle position sensor 2 circuit low input	An excessively low voltage from the TP sensor 2 is sent to ECM.	● Harness or connectors (TP sensor 2 circuit is open or shorted.) (APP sensor 2 circuit is shorted.) ● Electric throttle control actuator (TP sensor 2) ● Accelerator pedal position sensor (APP sensor 2)
P0123 0123	Throttle position sensor 2 circuit high input	An excessively high voltage from the TP sensor 2 is sent to ECM.	

FAIL-SAFE MODE

When the malfunction is detected, ECM enters fail-safe mode and the MIL lights up.

Engine operation condition in fail-safe mode
The ECM controls the electric throttle control actuator in regulating the throttle opening in order for the idle position to be within +10 degrees. The ECM regulates the opening speed of the throttle valve to be slower than the normal condition. So, the acceleration will be poor.

DTC Confirmation Procedure

UBS00H1T

NOTE:
If DTC Confirmation Procedure has been previously conducted, always turn ignition switch OFF and wait at least 10 seconds before conducting the next test.
TESTING CONDITION:
Before performing the following procedure, confirm that battery voltage is more than 8V at idle.

WITH CONSULT-II

1. Turn ignition switch ON.
2. Select “DATA MONITOR” mode with CONSULT-II.
3. Start engine and let it idle for 1 second.
4. If DTC is detected, go to EC-201, "Diagnostic Procedure" .

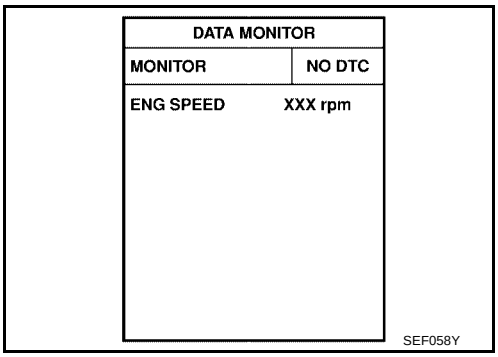

WITH GST

Follow the procedure “WITH CONSULT-II” above.

Wiring Diagram

UBS00H1U

EC-TPS2-01

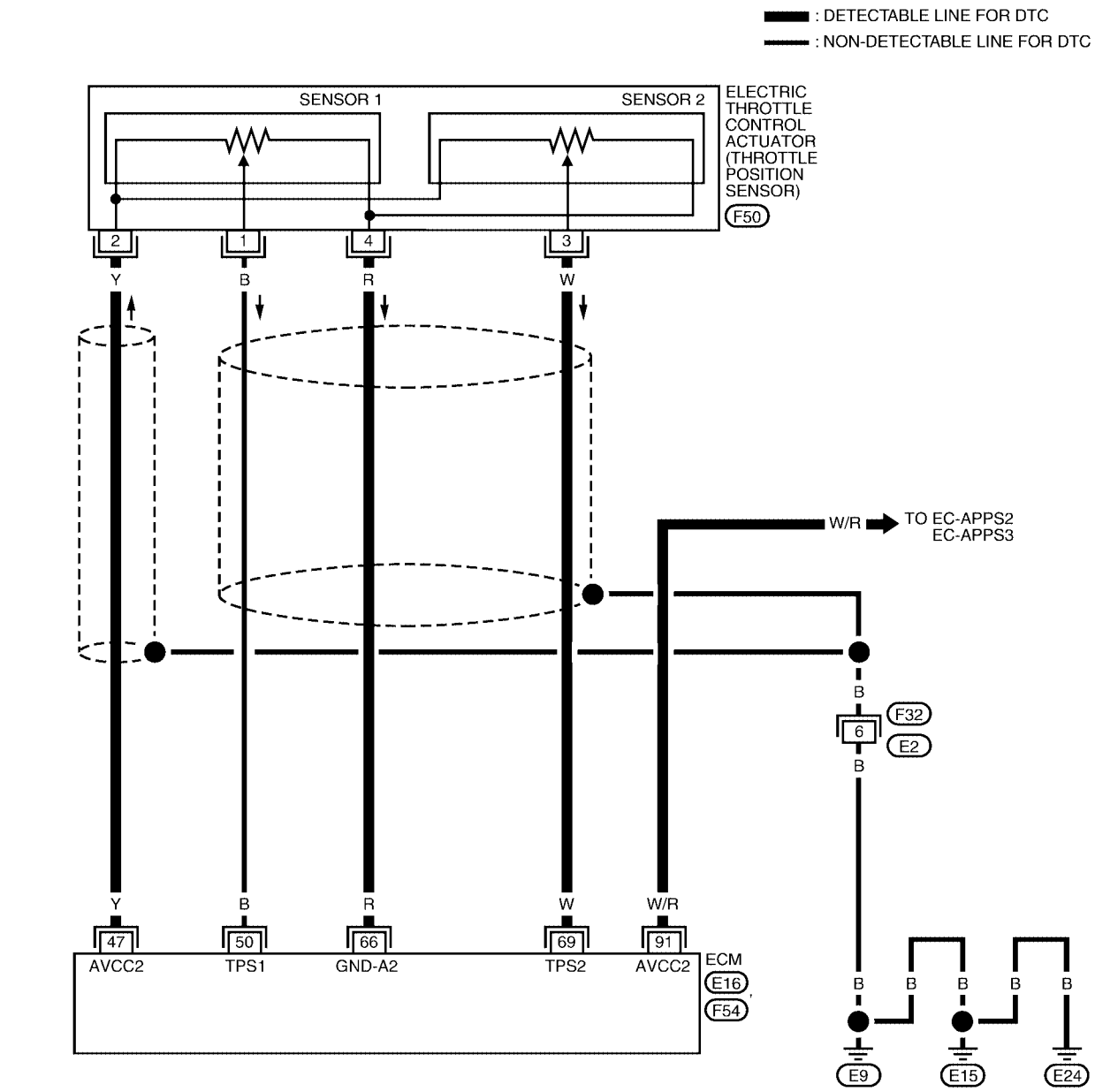

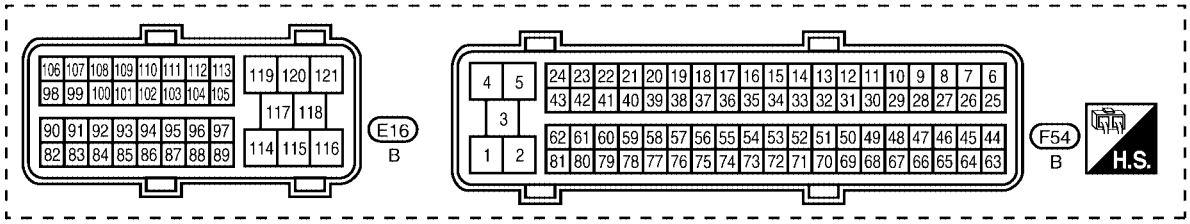

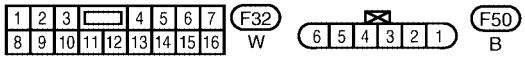

BBWA1677E

Specification data are reference values and are measured between each terminal and ground.

CAUTION:

Do not use ECM ground terminals when measuring input/output voltage. Doing so may result in damage to the ECM's transistor. Use a ground other than ECM terminals, such as the ground.

TERMINAL NO.	WIRE COLOR	ITEM	CONDITION	DATA (DC Voltage)
47	Y	Sensor power supply (Throttle position sensor)	**[Ignition switch: ON]**	Approximately 5V
50	B	Throttle position sensor 1	**[Ignition switch: ON]** ● Engine: Stopped ● Selector lever: D ● Accelerator pedal: Fully released	More than 0.36V
			[Ignition switch: ON] ● Engine: Stopped ● Selector lever: D ● Accelerator pedal: Fully depressed	Less than 4.75V
66	R	Sensor ground (Throttle position sensor)	**[Engine is running]** ● **Warm-up condition** ● Idle speed	Approximately 0V
69	W	Throttle position sensor 2	**[Ignition switch: ON]** ● Engine: Stopped ● Selector lever: D ● Accelerator pedal: Fully released	Less than 4.75V
			[Ignition switch: ON] ● Engine: Stopped ● Selector ever: D ● Accelerator pedal: Fully depressed	More than 0.36V
91	W/R	Sensor power supply (APP sensor 2)	**[Ignition switch: ON]**	Approximately 5V

Diagnostic Procedure

UBS00H1V

1. CHECK GROUND CONNECTIONS

1. Turn ignition switch OFF.
2. Loosen and retighten three ground screws on the body.
   Refer to EC-150, "Ground Inspection" .

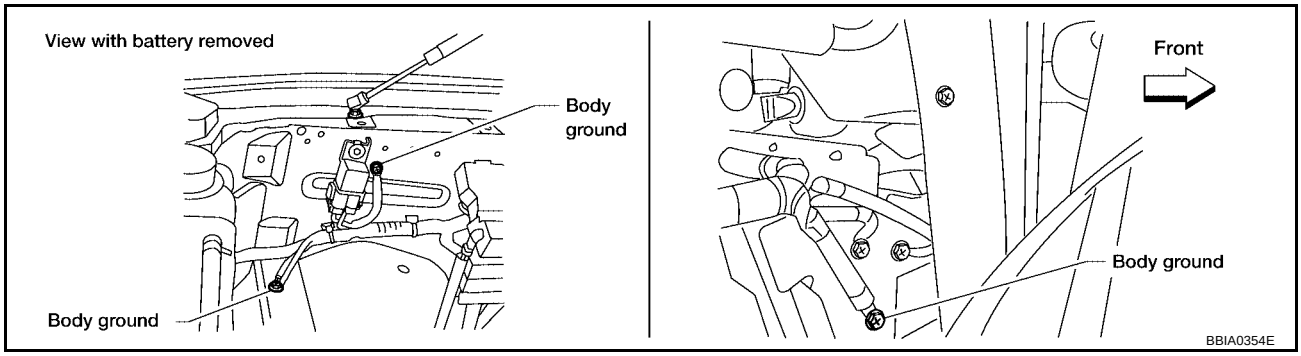

OK or NG

OK >> GO TO 2.
NG >> Repair or replace ground connections.

2. CHECK THROTTLE POSITION SENSOR 2 POWER SUPPLY CIRCUIT-I

1. Disconnect electric throttle control actuator harness connector.
2. Turn ignition switch ON.

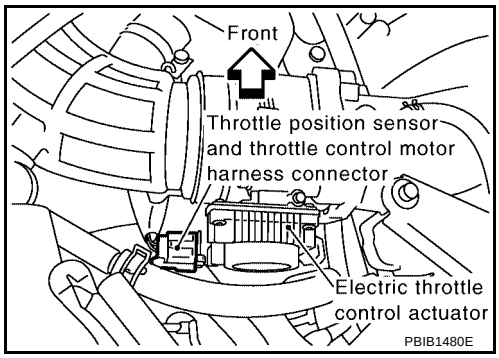

3. Check voltage between electric throttle control actuator terminal 2 and ground with CONSULT-II or tester.

Voltage: Approximately 5V

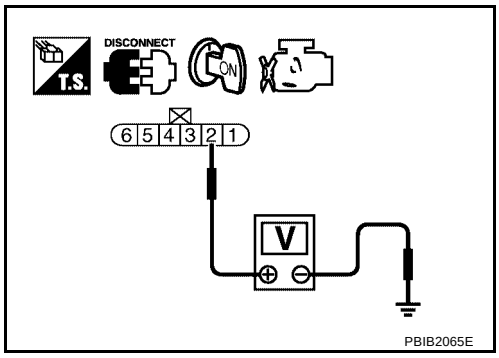

OK or NG

OK >> GO TO 7.
NG >> GO TO 3.

3. CHECK THROTTLE POSITION SENSOR 2 POWER SUPPLY CIRCUIT-II

1. Turn ignition switch OFF.
2. Disconnect ECM harness connector.
3. Check harness continuity between electric throttle control actuator terminal 2 and ECM terminal 47. Refer to Wiring Diagram.

Continuity should exist.

OK or NG

OK >> GO TO 4.
NG >> Repair or replace open circuit.

4. CHECK THROTTLE POSITION SENSOR 2 POWER SUPPLY CIRCUIT-III

Check harness for short to power and short to ground, between the following terminals.

ECM terminal	Sensor terminal	Reference Wiring Diagram
47	Electric throttle control actuator terminal 2	EC-200
91	APP sensor terminal 6	EC-569

OK or NG

OK >> GO TO 5.
NG >> Repair short to ground or short to power in harness or connectors.

5. CHECK ACCELERATOR PEDAL POSITION SENSOR

Refer to EC-574, "Component Inspection" .

OK or NG

OK >> GO TO 11.
NG >> GO TO 6.

6. REPLACE ACCELERATOR PEDAL ASSEMBLY

1. Replace the accelerator pedal assembly.
2. Perform EC-78, "Accelerator Pedal Released Position Learning" .
3. Perform EC-78, "Throttle Valve Closed Position Learning" .
4. Perform EC-78, "Idle Air Volume Learning" .

>> **INSPECTION END**

7. CHECK THROTTLE POSITION SENSOR 2 GROUND CIRCUIT FOR OPEN AND SHORT

1. Turn ignition switch OFF.
2. Disconnect ECM harness connector.
3. Check harness continuity between electric throttle control actuator terminal 4 and ECM terminal 66. Refer to Wiring Diagram.

Continuity should exist.

4. Also check harness for short to ground and short to power.

OK or NG

OK >> GO TO 8.
NG >> Repair open circuit or short to ground or short to power in harness or connectors.

8. CHECK THROTTLE POSITION SENSOR 2 INPUT SIGNAL CIRCUIT FOR OPEN AND SHORT

1. Check harness continuity between ECM terminal 69 and electric throttle control actuator terminal 3. Refer to Wiring Diagram.

Continuity should exist.

2. Also check harness for short to ground and short to power.

OK or NG

OK >> GO TO 9.
NG >> Repair open circuit or short to ground or short to power in harness or connectors.

9. CHECK THROTTLE POSITION SENSOR

Refer to EC-204, "Component Inspection" .

OK or NG

OK >> GO TO 11.
NG >> GO TO 10.

10. REPLACE ELECTRIC THROTTLE CONTROL ACTUATOR

1. Replace the electric throttle control actuator.
2. Perform EC-78, "Throttle Valve Closed Position Learning" .
3. Perform EC-78, "Idle Air Volume Learning" .

>> **INSPECTION END**

11. CHECK INTERMITTENT INCIDENT

Refer to EC-144, "TROUBLE DIAGNOSIS FOR INTERMITTENT INCIDENT" .

>> **INSPECTION END**

Component Inspection

UBS00H1W

THROTTLE POSITION SENSOR

1. Reconnect all harness connectors disconnected.
2. Perform EC-78, "Throttle Valve Closed Position Learning" .
3. Turn ignition switch ON.
4. Set selector lever to D position.
5. Check voltage between ECM terminals 50 (TP sensor 1 signal), 69 (TP sensor 2 signal) and ground under the following conditions.

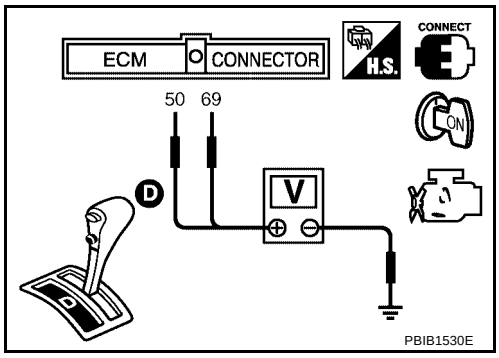

Terminal	Accelerator pedal	Voltage
50 (Throttle position sensor 1)	Fully released	More than 0.36V
	Fully depressed	Less than 4.75V
69 (Throttle position sensor 2)	Fully released	Less than 4.75V
	Fully depressed	More than 0.36V

6. If NG, replace electric throttle control actuator and go to the next step.
7. Perform EC-78, "Throttle Valve Closed Position Learning" .
8. Perform EC-78, "Idle Air Volume Learning" .

Removal and Installation

UBS00H1X

ELECTRIC THROTTLE CONTROL ACTUATOR

Refer to EM-17, "INTAKE MANIFOLD" .

DTC P0125 ECT SENSOR

PFP:22630

Component Description

UBS00H1Y

NOTE:
If DTC P0125 is displayed with P0117 or P0118, first perform the trouble diagnosis for DTC P0117 or P0118. Refer to EC-192, "DTC P0117, P0118 ECT SENSOR" .

The engine coolant temperature sensor is used to detect the engine coolant temperature. The sensor modifies a voltage signal from the ECM. The modified signal returns to the ECM as the engine coolant temperature input. The sensor uses a thermistor which is sensitive to the change in temperature. The electrical resistance of the thermistor decreases as temperature increases.

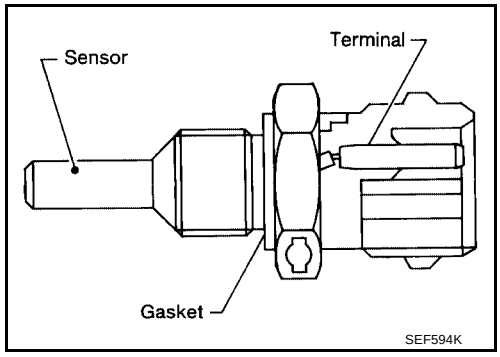

<Reference data>

Engine coolant temperature °C (°F)	Voltage* V	Resistance kΩ
–10 (14)	4.4	7.0 - 11.4
20 (68)	3.5	2.1 - 2.9
50 (122)	2.2	0.68 - 1.00
90 (194)	0.9	0.236 - 0.260

*: This data is reference value and is measured between ECM terminal 73 (Engine coolant temperature sensor) and ground.

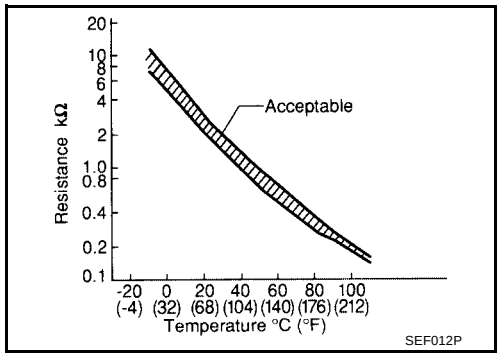

CAUTION:
Do not use ECM ground terminals when measuring input/output voltage. Doing so may result in damage to the ECM's transistor. Use a ground other than ECM terminals, such as the ground.

On Board Diagnosis Logic

UBS00H1Z

DTC No.	Trouble diagnosis name	DTC detecting condition	Possible cause
P0125 0125	Insufficient engine coolant temperature for closed loop fuel control	● Voltage sent to ECM from the sensor is not practical, even when some time has passed after starting the engine. ● Engine coolant temperature is insufficient for closed loop fuel control.	● Harness or connectors (High resistance in the circuit) ● Engine coolant temperature sensor ● Thermostat

DTC Confirmation Procedure

UBS00H20

CAUTION:
Be careful not to overheat engine.

NOTE:
If DTC Confirmation Procedure has been previously conducted, always turn ignition switch OFF and wait at least 10 seconds before conducting the next test.

WITH CONSULT-II

1. Turn ignition switch ON.
2. Select “DATA MONITOR” mode with CONSULT-II.
3. Check that “COOLAN TEMP/S” is above 10°C (50°F).
   If it is above 10°C (50°F), the test result will be OK.
   If it is below 10°C (50°F), go to following step.
4. Start engine and run it for 65 minutes at idle speed.
   If “COOLAN TEMP/S” increases to more than 10°C (50°F) within 65 minutes, stop engine because the test result will be OK.
5. If 1st trip DTC is detected, go to EC-206, "Diagnostic Procedure"
   .

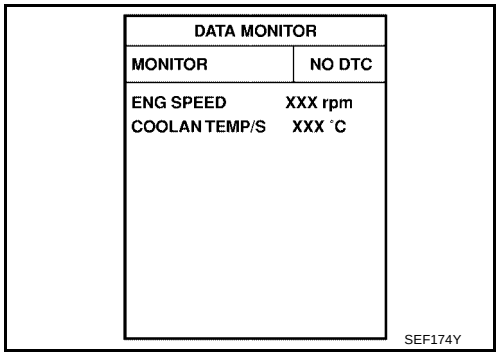

WITH GST

Follow the procedure “WITH CONSULT-II” above.

Diagnostic Procedure

UBS00H21

1. CHECK GROUND CONNECTIONS

1. Turn ignition switch OFF.
2. Loosen and retighten three ground screws on the body.
   Refer to EC-150, "Ground Inspection" .

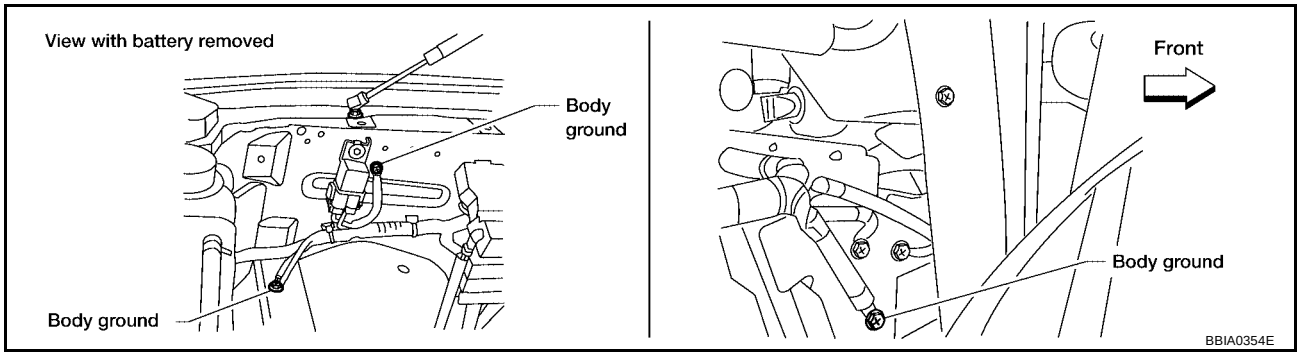

OK or NG

OK >> GO TO 2.
NG >> Repair or replace ground connections.

2. CHECK ENGINE COOLANT TEMPERATURE SENSOR

Refer to EC-207, "Component Inspection" .

OK or NG

OK >> GO TO 3.
NG >> Replace engine coolant temperature sensor.

3. CHECK THERMOSTAT OPERATION

When the engine is cold [lower than 70°C (158°F)] condition, grasp lower radiator hose and confirm the engine coolant does not flow.

OK or NG

OK >> GO TO 4.
NG >> Repair or replace thermostat. Refer to CO-21, "THERMOSTAT AND WATER PIPING" .

4. CHECK INTERMITTENT INCIDENT

Refer to EC-144, "TROUBLE DIAGNOSIS FOR INTERMITTENT INCIDENT" .
Refer to EC-194, "Wiring Diagram" .

>> **INSPECTION END**

Component Inspection

UBS00H22

ENGINE COOLANT TEMPERATURE SENSOR

1. Check resistance between engine coolant temperature sensor terminals 1 and 2 as shown in the figure.

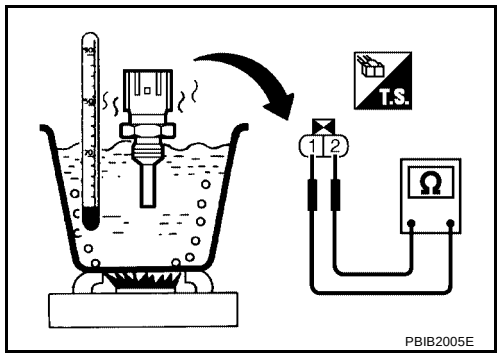

<Reference data>

Engine coolant temperature °C (°F)	Resistance kΩ
20 (68)	2.1 - 2.9
50 (122)	0.68 - 1.00
90 (194)	0.236 - 0.260

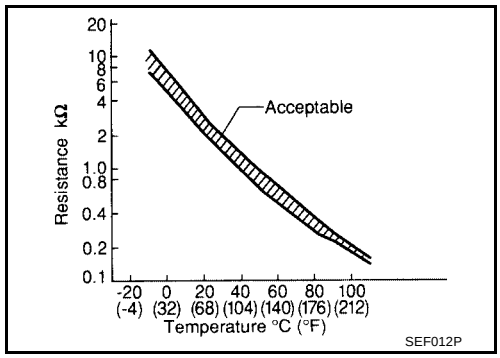

2. If NG, replace engine coolant temperature sensor.

Removal and Installation

UBS00H23

ENGINE COOLANT TEMPERATURE SENSOR

Refer to CO-21, "THERMOSTAT AND WATER PIPING" .

DTC P0127 IAT SENSOR

PFP:22630

Component Description

UBS00H24

The intake air temperature sensor is built into mass air flow sensor. The sensor detects intake air temperature and transmits a signal to the ECM.
The temperature sensing unit uses a thermistor which is sensitive to the change in temperature. Electrical resistance of the thermistor decreases in response to the temperature rise.

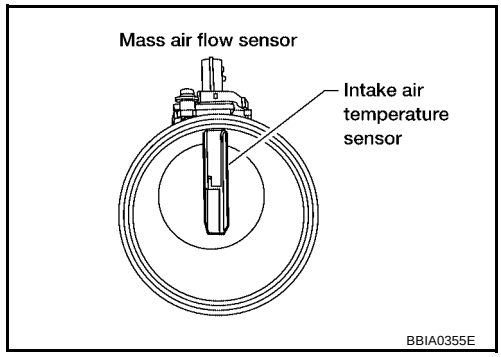

<Reference data>

Intake air temperature °C (°F)	Voltage* V	Resistance kΩ
25 (77)	3.3	1.800 - 2.200
80 (176)	1.2	0.283 - 0.359

*: This data is reference value and is measured between ECM terminal 34 (Intake air temperature sensor) and ground.

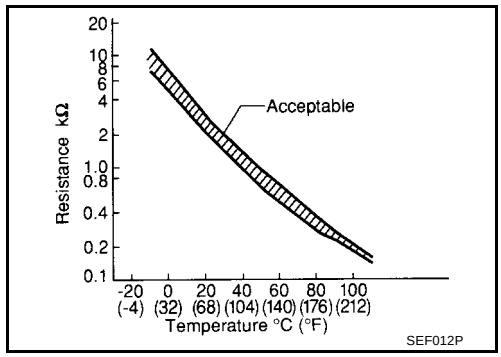

CAUTION:
Do not use ECM ground terminals when measuring input/output voltage. Doing so may result in damage to the ECM's transistor. Use a ground other than ECM terminals, such as the ground.

On Board Diagnosis Logic

UBS00H25

DTC No.	Trouble diagnosis name	DTC detecting condition	Possible cause
P0127 0127	Intake air temperature too high	Rationally incorrect voltage from the sensor is sent to ECM, compared with the voltage signal from engine coolant temperature sensor.	● Harness or connectors (The sensor circuit is open or shorted) ● Intake air temperature sensor

DTC Confirmation Procedure

UBS00H26

NOTE:
If DTC Confirmation Procedure has been previously conducted, always turn ignition switch OFF and wait at least 10 seconds before conducting the next test.

CAUTION:
Always drive vehicle at a safe speed.
TESTING CONDITION:
This test may be conducted with the drive wheels lifted in the shop or by driving the vehicle. If a road test is expected to be easier, it is unnecessary to lift the vehicle.

WITH CONSULT-II

1. Wait until engine coolant temperature is less than 90°C (194°F)

a. Turn ignition switch ON.

b. Select “DATA MONITOR” mode with CONSULT-II.
c. Check the engine coolant temperature.
d. If the engine coolant temperature is not less than 90°C (194°F), turn ignition switch OFF and cool down engine.
   - Perform the following steps before engine coolant temperature is above 90°C (194°F).
2. Turn ignition switch ON.
3. Select “DATA MONITOR” mode with CONSULT-II.
4. Start engine.
5. Hold vehicle speed at more than 70 km/h (43 MPH) for 100 consecutive seconds.
6. If 1st trip DTC is detected, go to EC-209, "Diagnostic Procedure" .

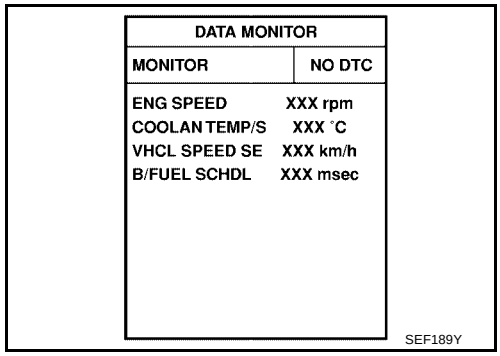

WITH GST

Follow the procedure “WITH CONSULT-II” above.

Diagnostic Procedure

UBS00H27

1. CHECK GROUND CONNECTIONS

1. Turn ignition switch OFF.
2. Loosen and retighten three ground screws on the body.
   Refer to EC-150, "Ground Inspection" .

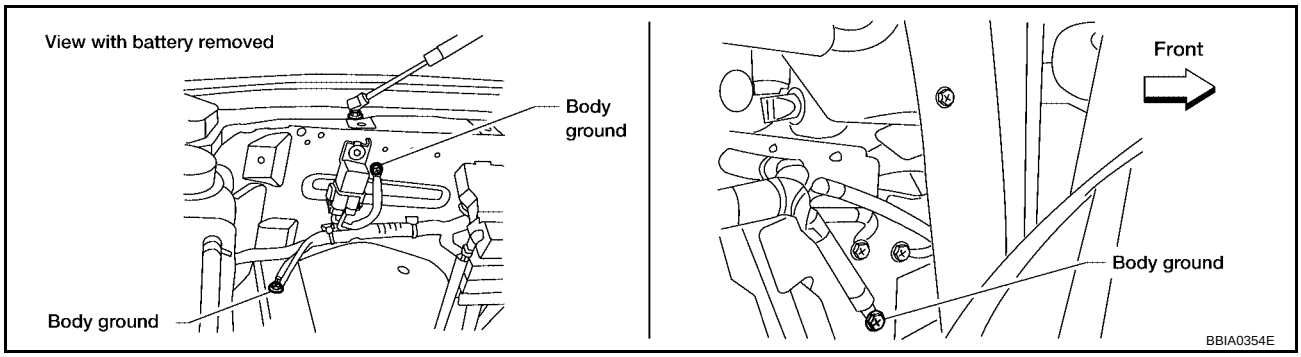

OK or NG

OK >> GO TO 2.
NG >> Repair or replace ground connections.

2. CHECK INTAKE AIR TEMPERATURE SENSOR

Refer to EC-210, "Component Inspection" .

OK or NG

OK >> GO TO 3.
NG >> Replace mass air flow sensor (with intake air temperature sensor).

3. CHECK INTERMITTENT INCIDENT

Refer to EC-144, "TROUBLE DIAGNOSIS FOR INTERMITTENT INCIDENT" .
Refer to EC-189, "Wiring Diagram" .

>> **INSPECTION END**

Component Inspection

UBS00H28

INTAKE AIR TEMPERATURE SENSOR

1. Check resistance between intake air temperature sensor terminals 5 and 6 under the following conditions.

Intake air temperature °C (°F)	Resistance kΩ
25 (77)	1.800 - 2.200

2. If NG, replace mass air flow sensor (with intake air temperature sensor).

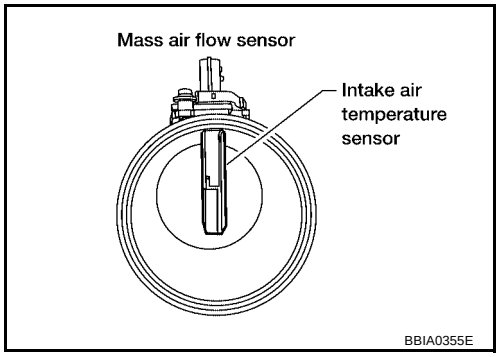

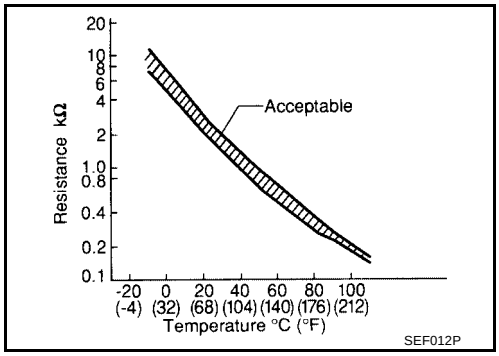

Removal and Installation

UBS00H29

MASS AIR FLOW SENSOR

Refer to EM-15, "AIR CLEANER AND AIR DUCT" .

DTC P0128 THERMOSTAT FUNCTION

PFP:21200

On Board Diagnosis Logic

UBS00H2A

Engine coolant temperature has not risen enough to open the thermostat even though the engine has run long enough.
This is due to a leak in the seal or the thermostat stuck open.

DTC No.	Trouble diagnosis name	DTC detecting condition	Possible cause
P0128 0128	Thermostat function	The engine coolant temperature does not reach to specified temperature even though the engine has run long enough.	● Thermostat ● Leakage from sealing portion of thermostat ● Engine coolant temperature sensor

DTC Confirmation Procedure

UBS00H2B

NOTE:
If DTC Confirmation Procedure has been previously conducted, always turn ignition switch OFF and wait at least 10 seconds before conducting the next test.
TESTING CONDITION:

- **For best results, perform at ambient temperature of –10°C (14°F) or higher.**
- **For best results, perform at engine coolant temperature of –10°C (14°F) to 60°C (140°F).**

WITH CONSULT-II

1. Replace thermostat with new one. Refer to CO-21, "THERMOSTAT AND WATER PIPING" . Use only a genuine NISSAN thermostat as a replacement. If an incorrect thermostat is used, the MIL may come on.
2. Turn ignition switch ON.
3. Select “COOLAN TEMP/S” in “DATA MONITOR” mode with CONSULT-II.
4. Check that the “COOLAN TEMP/S” is above 60°C (140°F).
   If it is below 60°C (140°F), go to following step.
   If it is above 60°C (140°F), cool down the engine to less than 60°C (140°F), then retry from step 1.
5. Drive vehicle for 10 consecutive minutes under the following conditions.

VHCL SPEED SE	80 - 120 km/h (50 - 75 MPH)

If 1st trip DTC is detected, go to EC-211, "Diagnostic Procedure" .

WITH GST

1. Follow the procedure “WITH CONSULT-II” above.

Diagnostic Procedure

UBS00H2C

1. CHECK ENGINE COOLANT TEMPERATURE SENSOR

Refer to EC-212, "Component Inspection" .

OK or NG

OK >> **INSPECTION END**
NG >> Replace engine coolant temperature sensor.

Component Inspection

UBS00H2D

ENGINE COOLANT TEMPERATURE SENSOR

1. Check resistance between engine coolant temperature sensor terminals as shown in the figure.

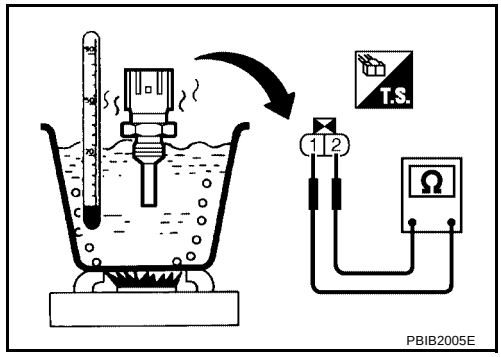

<Reference data>

Temperature °C (°F)	Resistance kΩ
20 (68)	2.1 - 2.9
50 (122)	0.68 - 1.0
90 (194)	0.236 - 0.260

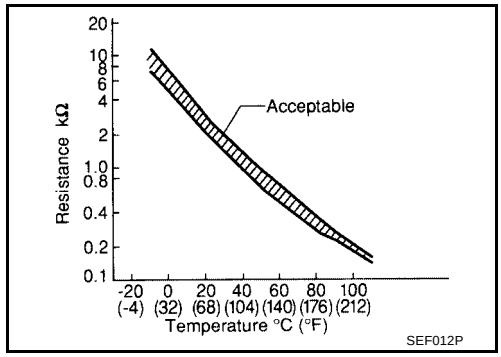

2. If NG, replace engine coolant temperature sensor.

Removal and Installation

UBS00H2E

ENGINE COOLANT TEMPERATURE SENSOR

Refer to CO-21, "THERMOSTAT AND WATER PIPING" .

DTC P0130, P0150 A/F SENSOR 1

PFP:22693

Component Description

UBS00HA7

The air fuel ratio (A/F) sensor 1 is a planar dual-cell limit current sensor. The sensor element of the A/F sensor 1 is the combination of a Nernst concentration cell (sensor cell) with an oxygen-pump cell, which transports ions. It has a heater in the element.

The sensor is capable of precise measurement $\lambda = 1$, but also in the lean and rich range. Together with its control electronics, the sensor outputs a clear, continuous signal throughout a wide λ range ($0.7 < \lambda <$ air).

The exhaust gas components diffuse through the diffusion gap at the electrode of the oxygen pump and Nernst concentration cell, where they are brought to thermodynamic balance.

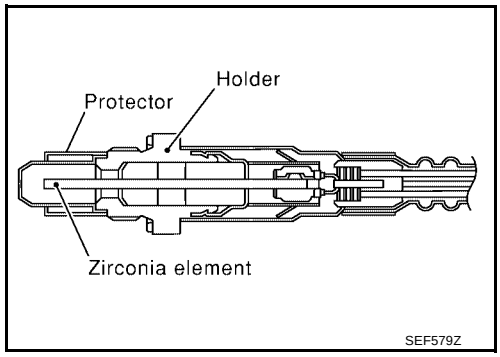

An electronic circuit controls the pump current through the oxygen-pump cell so that the composition of the exhaust gas in the diffusion gap remains constant at $\lambda = 1$. Therefore, the A/F sensor 1 is able to indicate air/fuel ratio by this pumping of current. In addition, a heater is integrated in the sensor to ensure the required operating temperature of 700 - 800°C (1,292 - 1,472°F).

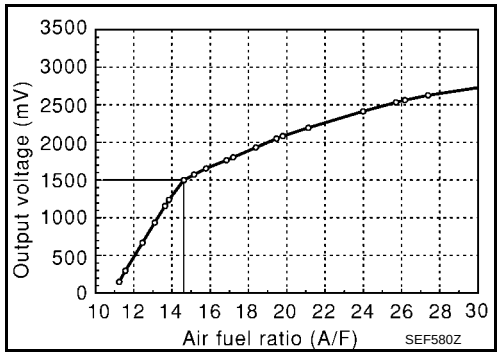

CONSULT-II Reference Value in Data Monitor Mode

UBS00HA8

Specification data are reference values.

MONITOR ITEM	CONDITION		SPECIFICATION
A/F SEN1 (B1) A/F SEN1 (B2)	● Engine: After warming up	Maintaining engine speed at 2,000 rpm	Fluctuates around 1.5V

On Board Diagnosis Logic

UBS00HA9

To judge the malfunction, the diagnosis checks that the A/F signal computed by ECM from the A/F sensor 1 signal fluctuates according to fuel feedback control.

DTC No.	Trouble diagnosis name	DTC detecting condition	Possible Cause
P0130 0130 (Bank 1)	Air fuel ratio (A/F) sensor 1 circuit	● The A/F signal computed by ECM from the A/F sensor 1 signal is constantly approx. 1.5V.	● Harness or connectors (The A/F sensor 1 circuit is open or shorted.) ● Air fuel ratio (A/F) sensor 1
P0150 0150 (Bank 2)			

DTC Confirmation Procedure

UBS00HAA

CAUTION:

Always drive vehicle at a safe speed.

NOTE:

If DTC Confirmation Procedure has been previously conducted, always turn ignition switch OFF and wait at least 10 seconds before conducting the next test.

TESTING CONDITION:

Before performing the following procedure, confirm that battery voltage is more than 11V at idle.

WITH CONSULT-II

1. Start engine and warm it up to normal operating temperature.
2. Select “A/F SEN1 (B1)” or “A/F SEN1 (B2)” in “DATA MONITOR” mode with CONSULT-II.
3. Check “A/F SEN1 (B1)” or “A/F SEN1 (B2)” indication.

If the indication is constantly approx. 1.5V and does not fluctuates, go to EC-219, "Diagnostic Procedure" .
If the indication fluctuates around 1.5V, go to next step.

4. Select “A/F SEN1 (B1) P1276” (for DTC P0130) or “A/F SEN1 (B2) P1286” (for DTC P0150) of “A/F SEN1” in “DTC WORK SUPPORT” mode with CONSULT-II.
5. Touch “START”.
6. When the following conditions are met, “TESTING” will be displayed on the CONSULT-II screen.

ENG SPEED	850 - 3,200 rpm
Vehicle speed	More than 64 km/h (40 MPH)
B/FUEL SCHDL	1.0 - 8.0 msec
Selector lever	D position

If “TESTING” is not displayed after 20 seconds, retry from step 2.

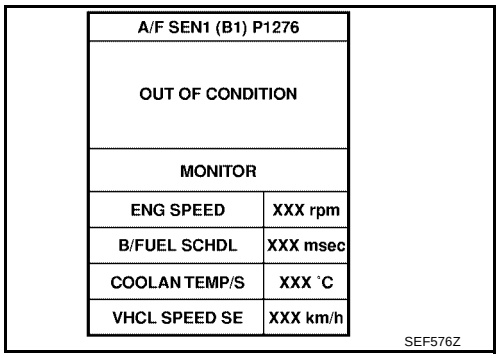

7. Release accelerator pedal fully.
   NOTE:
   Never apply brake during releasing the accelerator pedal.

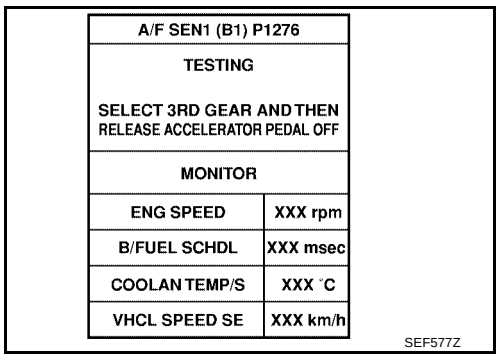

8. Make sure that “TESTING” changes to “COMPLETED”.
   If “TESTING” changed to “OUT OF CONDITION”, retry from step 6.
9. Make sure that “OK” is displayed after touching “SELF-DIAG RESULT”.
   If “NG” is displayed, go to EC-219, "Diagnostic Procedure" .

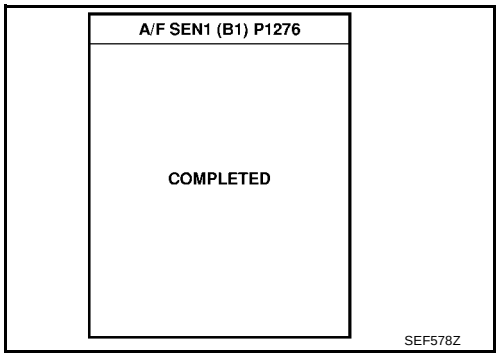

Overall Function Check

UBS00HAB

Use this procedure to check the overall function of the A/F sensor 1 circuit. During this check, a 1st trip DTC might not be confirmed.

WITH GST

1. Start engine and warm it up to normal operating temperature.
2. Drive the vehicle at a speed of 80 km/h (50 MPH) for a few minutes in the suitable gear position.
3. Set D position, then release the accelerator pedal fully until the vehicle speed decreases to 50 km/h (30 MPH).
   NOTE:
   Never apply brake during releasing the accelerator pedal.
4. Repeat steps 2 to 3 for five times.
5. Stop the vehicle and turn ignition switch OFF.
6. Wait at least 10 seconds and restart engine.
7. Repeat steps 2 to 3 for five times.

8. Stop the vehicle and connect GST to the vehicle.
9. Make sure that no DTC is displayed.
   If the DTC is displayed, go to EC-219, "Diagnostic Procedure" .

Wiring Diagram
BANK 1

UBS00HAC

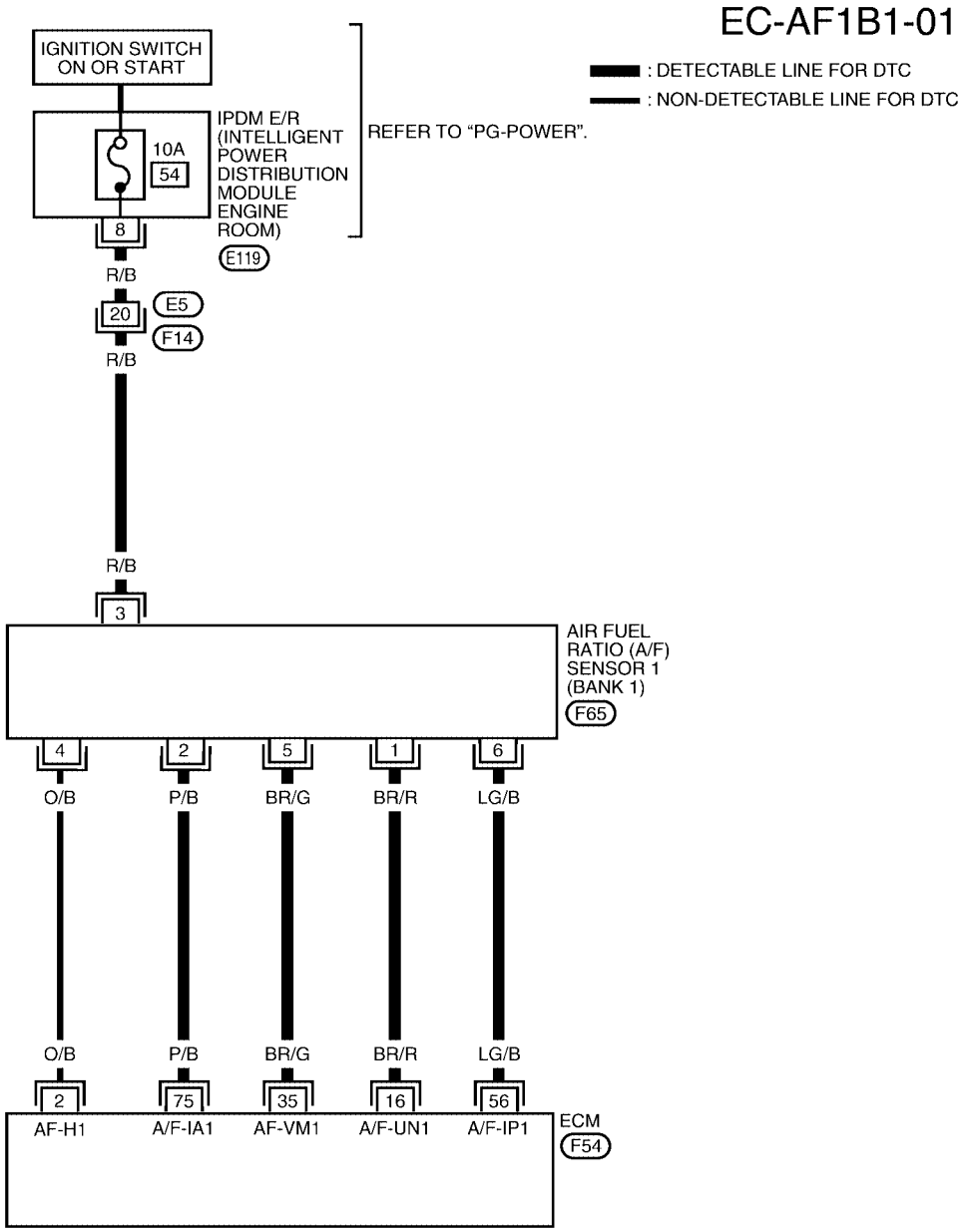

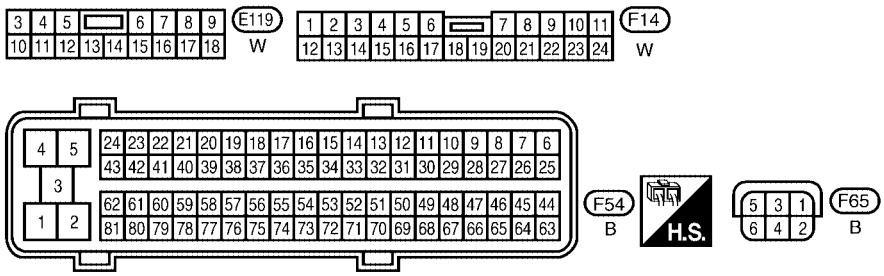

BBWA2111E

Specification data are reference values and are measured between each terminal and ground.
Pulse signal is measured by CONSULT-II.

CAUTION:

Do not use ECM ground terminals when measuring input/output voltage. Doing so may result in damage to the ECM's transistor. Use a ground other than ECM terminals, such as the ground.

TERMINAL NO.	WIRE COLOR	ITEM	CONDITION	DATA (DC Voltage)
2	O/B	A/F sensor 1 heater (bank 1)	**[Engine is running]** ● **Warm-up condition** ● Idle speed	Approximately 5V★ 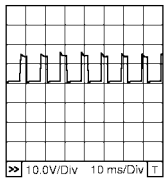 PBIB1584E
16	BR/R	A/F sensor 1 (bank 1)	**[Engine is running]** ● **Warm-up condition** ● Idle speed	Approximately 3.1V
35	BR/G			Approximately 2.6V
56	LG/B			Approximately 2.3V
75	P/B			Approximately 2.3V

★: Average voltage for pulse signal (Actual pulse signal can be confirmed by oscilloscope.)

BANK 2

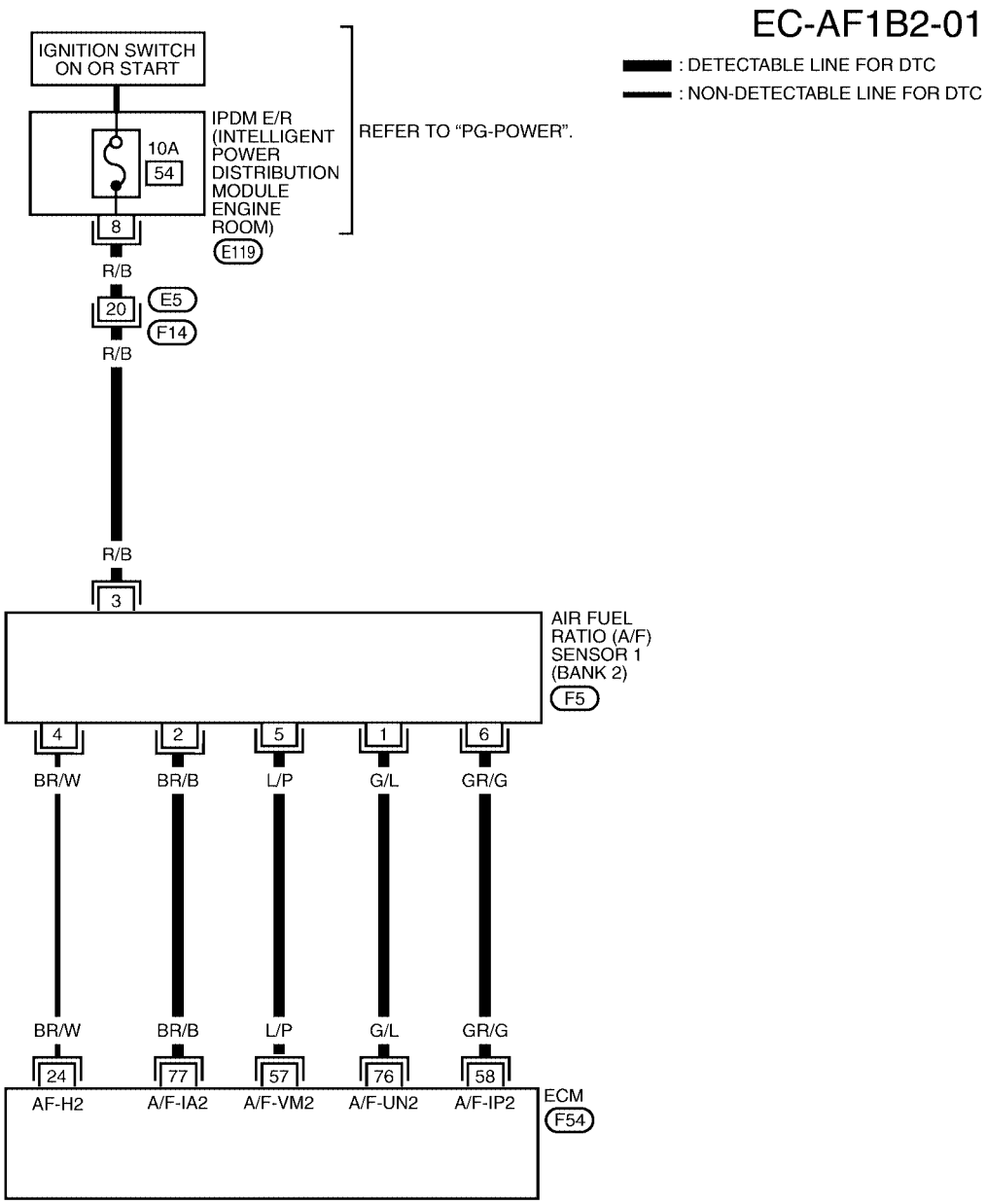

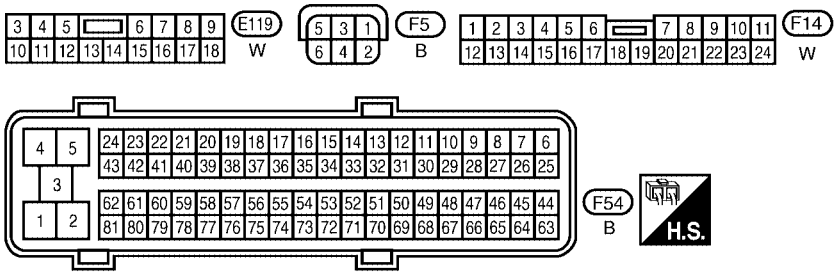

BBWA2112E

Specification data are reference values and are measured between each terminal and ground.
Pulse signal is measured by CONSULT-II.

CAUTION:
Do not use ECM ground terminals when measuring input/output voltage. Doing so may result in damage to the ECM's transistor. Use a ground other than ECM terminals, such as the ground.

TERMINAL NO.	WIRE COLOR	ITEM	CONDITION	DATA (DC Voltage)
24	BR/W	A/F sensor 1 heater (bank 2)	**[Engine is running]** ● **Warm-up condition** ● Idle speed	Approximately 5V★ 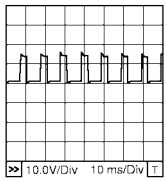 PBIB1584E
57	L/P	A/F sensor 1 (bank 2)	**[Engine is running]** ● **Warm-up condition** ● Idle speed	Approximately 2.6V
58	GR/G			Approximately 2.3V
76	G/L			Approximately 3.1V
77	BR/B			Approximately 2.3V

★: Average voltage for pulse signal (Actual pulse signal can be confirmed by oscilloscope.)

Diagnostic Procedure

UBS00HAD

1. CHECK GROUND CONNECTIONS

1. Turn ignition switch OFF.
2. Loosen and retighten three ground screws on the body.
   Refer to EC-150, "Ground Inspection" .

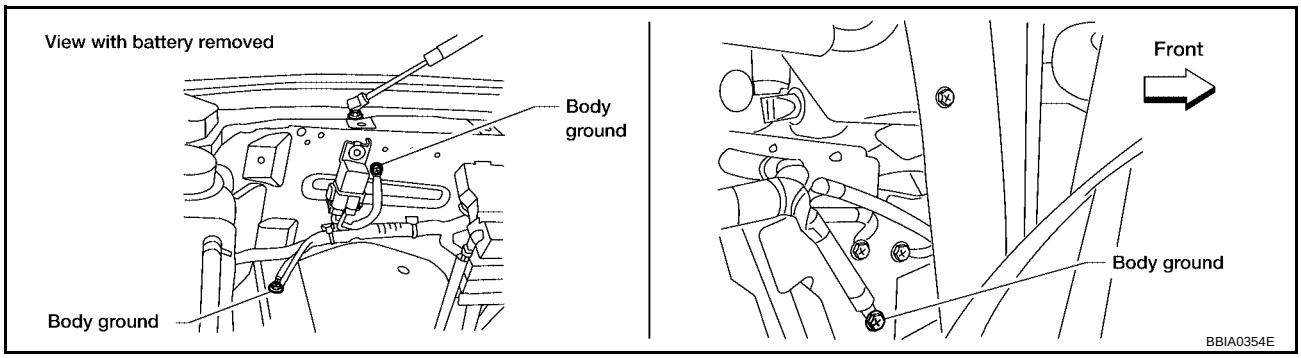

OK or NG

OK >> GO TO 2.
NG >> Repair or replace ground connections.

2. CHECK AIR FUEL RATIO (A/F) SENSOR 1 POWER SUPPLY CIRCUIT

1. Disconnect A/F sensor 1 harness connector.

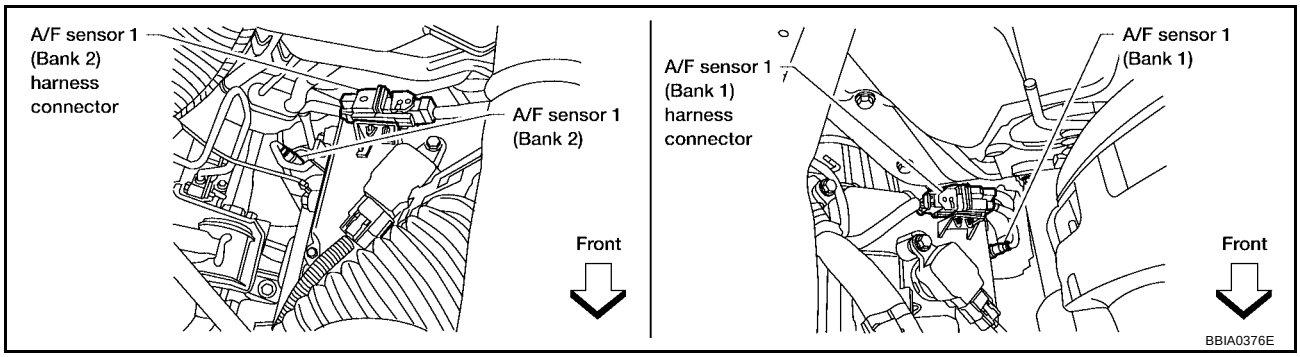

2. Turn ignition switch ON.
3. Check voltage between A/F sensor 1 terminal 3 and ground with CONSULT-II or tester.

Voltage: Battery voltage

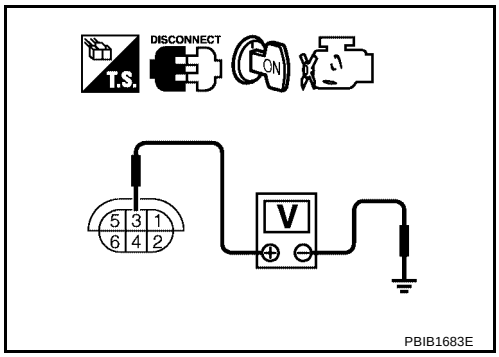

OK or NG

OK >> GO TO 4.
NG >> GO TO 3.

3. DETECT MALFUNCTIONING PART

Check the following.

- Harness connectors E5, F14
- IPDM E/R harness connector E119
- 10A fuse
- Harness for open or short between A/F sensor 1 and fuse

>> Repair or replace harness or connectors.

4. CHECK A/F SENSOR 1 INPUT SIGNAL CIRCUIT FOR OPEN AND SHORT

1. Turn ignition switch OFF.
2. Disconnect ECM harness connector.
3. Check harness continuity between A/F sensor 1 terminal and ECM terminal as follows. Refer to Wiring Diagram.

	A/F sensor 1 terminal	ECM terminal
Bank1	1	16
	2	75
	5	35
	6	56
Bank 2	1	76
	2	77
	5	57
	6	58

Continuity should exist.

4. Check harness continuity between the following terminals and ground. Refer to Wiring Diagram.

Bank 1		Bank 2	
A/F sensor 1 terminal	ECM terminal	A/F sensor 1 terminal	ECM terminal
1	16	1	76
2	75	2	77
5	35	5	57
6	56	6	58

Continuity should not exist.

5. Also check harness for short to power.

OK or NG

OK >> GO TO 5.
NG >> Repair open circuit or short to ground or short to power in harness or connectors.

5. CHECK INTERMITTENT INCIDENT

Perform EC-144, "TROUBLE DIAGNOSIS FOR INTERMITTENT INCIDENT" .

OK or NG

OK >> GO TO 6.
NG >> Repair or replace.

6. REPLACE AIR FUEL RATIO (A/F) SENSOR 1

Replace air fuel ratio (A/F) sensor 1.

CAUTION:

- **Discard any air fuel ratio (A/F) sensor which has been dropped from a height of more than 0.5 m (19.7 in) onto a hard surface such as a concrete floor; use a new one.**
- **Before installing new air fuel ratio (A/F) sensor, clean exhaust system threads (using Oxygen Sensor Thread Cleaner tool J-43897-18 or J-43897-12) and approved anti-seize lubricant.**

>> **INSPECTION END**

Removal and Installation

UBS00HAE

AIR FUEL RATIO (A/F) SENSOR 1

Refer to EM-21, "EXHAUST MANIFOLD AND THREE WAY CATALYST"

DTC P0131, P0151 A/F SENSOR 1

PFP:22693

Component Description

UBS00H9F

The air fuel ratio (A/F) sensor 1 is a planar dual-cell limit current sensor. The sensor element of the A/F sensor 1 is the combination of a Nernst concentration cell (sensor cell) with an oxygen-pump cell, which transports ions. It has a heater in the element.

The sensor is capable of precise measurement λ = 1, but also in the lean and rich range. Together with its control electronics, the sensor outputs a clear, continuous signal throughout a wide λ range (0.7 < λ < air).

The exhaust gas components diffuse through the diffusion gap at the electrode of the oxygen pump and Nernst concentration cell, where they are brought to thermodynamic balance.

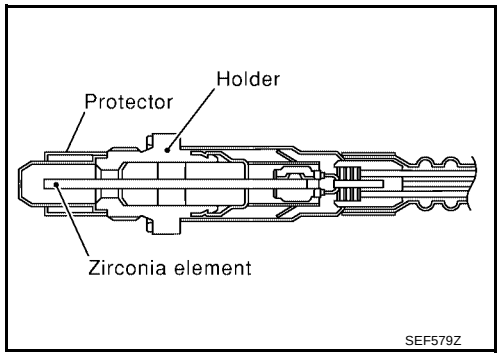

An electronic circuit controls the pump current through the oxygen-pump cell so that the composition of the exhaust gas in the diffusion gap remains constant at λ = 1. Therefore, the A/F sensor 1 is able to indicate air/fuel ratio by this pumping of current. In addition, a heater is integrated in the sensor to ensure the required operating temperature of 700 - 800°C (1,292 - 1,472°F).

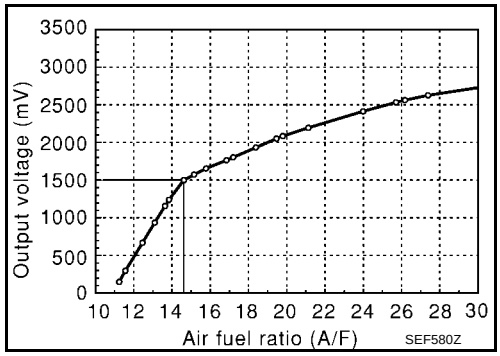

CONSULT-II Reference Value in Data Monitor Mode

UBS00H9G

Specification data are reference values.

MONITOR ITEM	CONDITION		SPECIFICATION
A/F SEN1 (B1) A/F SEN1 (B2)	● Engine: After warming up	Maintaining engine speed at 2,000 rpm	Fluctuates around 1.5V

On Board Diagnosis Logic

UBS00H9H

To judge the malfunction, the diagnosis checks that the A/F signal computed by ECM from the A/F sensor 1 signal is not inordinately low.

DTC No.	Trouble diagnosis name	DTC detecting condition	Possible Cause
P0131 0131 (Bank 1)	Air fuel ratio (A/F) sensor 1 circuit low voltage	● The A/F signal computed by ECM from the A/F sensor 1 signal is constantly approx. 0V.	● Harness or connectors (The A/F sensor 1 circuit is open or shorted.) ● Air fuel ratio (A/F) sensor 1
P0151 0151 (Bank 2)			

DTC Confirmation Procedure

UBS00H9I

NOTE:
If DTC Confirmation Procedure has been previously conducted, always turn ignition switch OFF and wait at least 10 seconds before conducting the next test.

TESTING CONDITION:
Before performing the following procedure, confirm that battery voltage is more than 10.5V at idle.

WITH CONSULT-II

1. Start engine and warm it up to normal operating temperature.
2. Select “A/F SEN1 (B1)” or “A/F SEN1 (B2)” in “DATA MONITOR” mode with CONSULT-II.

3. Check “A/F SEN1 (B1)” or “A/F SEN1 (B2)” indication.
   If the indication is constantly approx. 0V, go to EC-228, "Diagnostic Procedure" .
   If the indication is not constantly approx. 0V, go to next step.
4. Turn ignition switch OFF, wait at least 10 seconds and then restart engine.
5. Drive and accelerate vehicle to more than 40 km/h (25 MPH) within 20 seconds after restarting engine.
6. Maintain the following conditions for about 20 consecutive seconds.

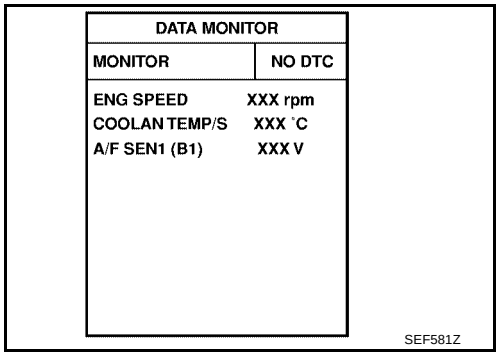

ENG SPEED	1,000 - 3,200 rpm
VHCL SPEED SE	More than 40 km/h (25 MPH)
B/FUEL SCHDL	1.5 - 9.0 msec
Gear position	Suitable position

NOTE:
- **Keep the accelerator pedal as steady as possible during the cruising.**
- **If this procedure is not completed within 1 minute after restarting engine at step 4, return to step 4.**

7. If 1st trip DTC is displayed, go to EC-228, "Diagnostic Procedure" .

WITH GST

Follow the procedure “WITH CONSULT-II” above.

Wiring Diagram
BANK 1

UBS00H9J

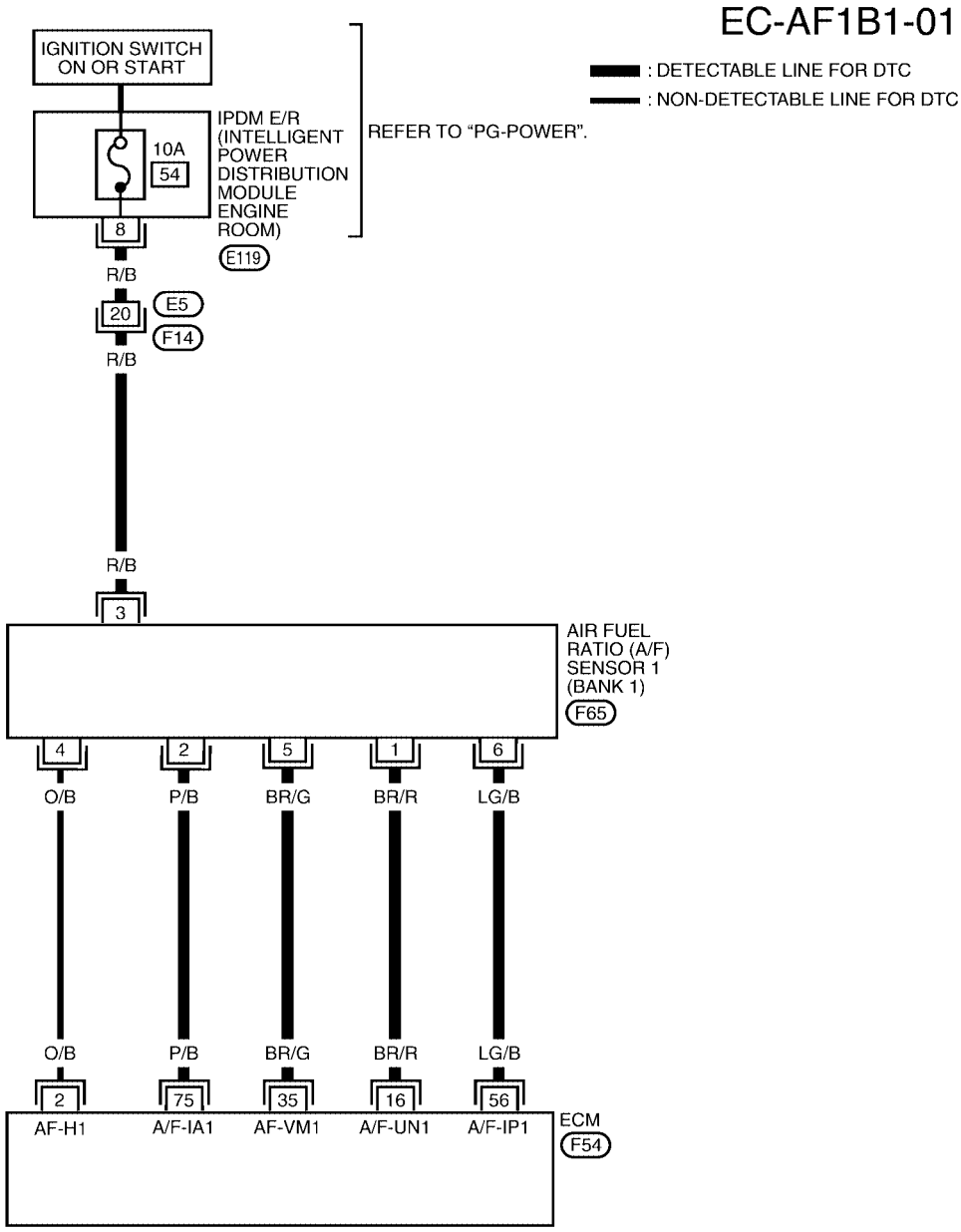

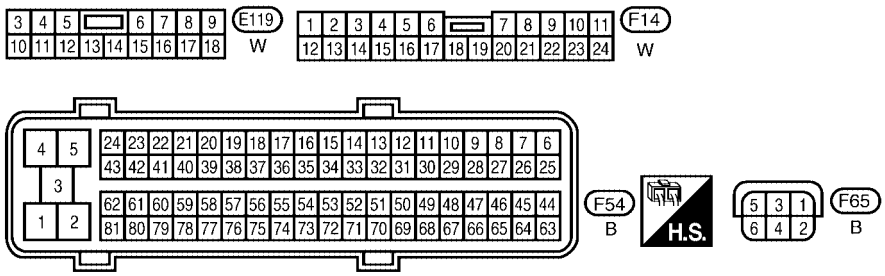

BBWA2111E

Specification data are reference values and are measured between each terminal and ground.
Pulse signal is measured by CONSULT-II.

CAUTION:

Do not use ECM ground terminals when measuring input/output voltage. Doing so may result in damage to the ECM's transistor. Use a ground other than ECM terminals, such as the ground.

TERMINAL NO.	WIRE COLOR	ITEM	CONDITION	DATA (DC Voltage)
2	O/B	A/F sensor 1 heater (bank 1)	**[Engine is running]** ● **Warm-up condition** ● Idle speed	Approximately 5V★ 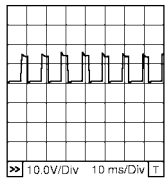 PBIB1584E
16	BR/R	A/F sensor 1 (bank 1)	**[Engine is running]** ● **Warm-up condition** ● Idle speed	Approximately 3.1V
35	BR/G			Approximately 2.6V
56	LG/B			Approximately 2.3V
75	P/B			Approximately 2.3V

★: Average voltage for pulse signal (Actual pulse signal can be confirmed by oscilloscope.)

BANK 2

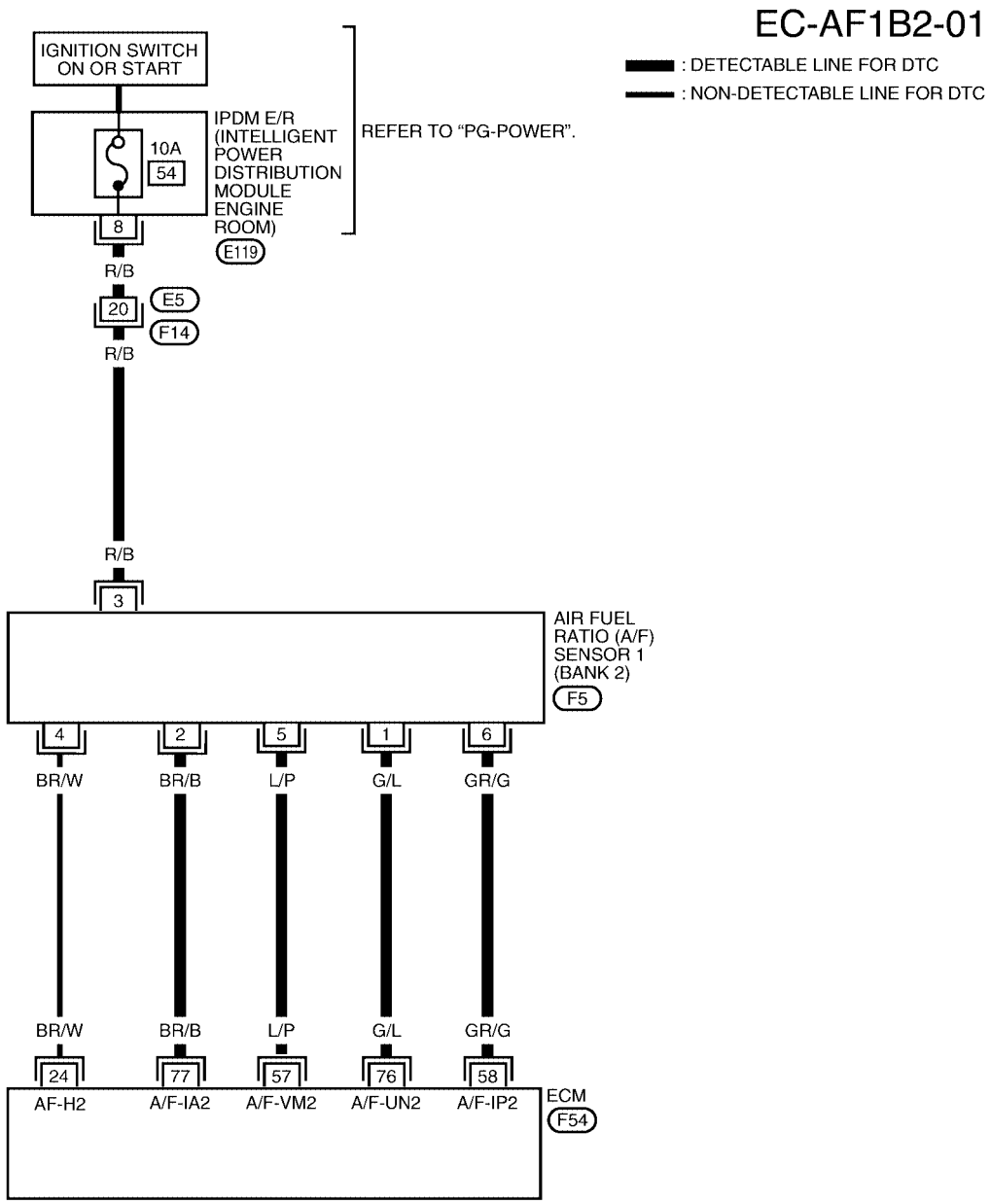

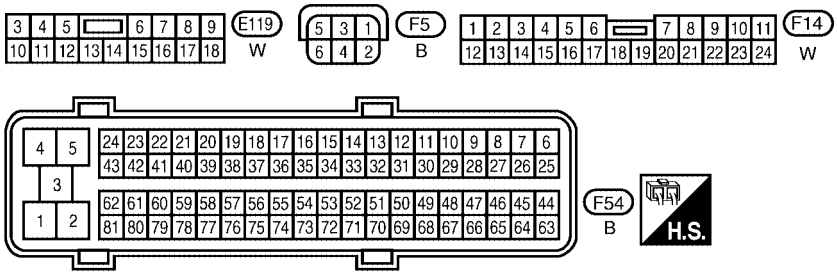

BBWA2112E

Specification data are reference values and are measured between each terminal and ground.
Pulse signal is measured by CONSULT-II.

CAUTION:

Do not use ECM ground terminals when measuring input/output voltage. Doing so may result in damage to the ECM's transistor. Use a ground other than ECM terminals, such as the ground.

TERMINAL NO.	WIRE COLOR	ITEM	CONDITION	DATA (DC Voltage)
24	BR/W	A/F sensor 1 heater (bank 2)	**[Engine is running]** ● **Warm-up condition** ● Idle speed	Approximately 5V★ 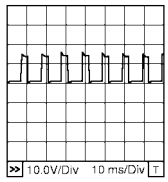 PBIB1584E
57	L/P	A/F sensor 1 (bank 2)	**[Engine is running]** ● **Warm-up condition** ● Idle speed	Approximately 2.6V
58	GR/G			Approximately 2.3V
76	G/L			Approximately 3.1V
77	BR/B			Approximately 2.3V

★: Average voltage for pulse signal (Actual pulse signal can be confirmed by oscilloscope.)

Diagnostic Procedure

UBS00H9K

1. CHECK GROUND CONNECTIONS

1. Turn ignition switch OFF.
2. Loosen and retighten three ground screws on the body.
   Refer to EC-150, "Ground Inspection" .

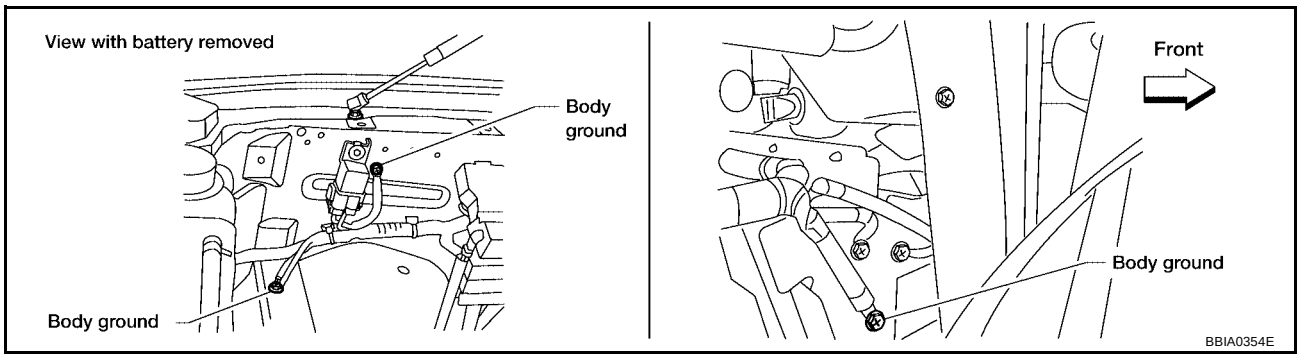

OK or NG

OK >> GO TO 2.
NG >> Repair or replace ground connections.

2. CHECK AIR FUEL RATIO (A/F) SENSOR 1 POWER SUPPLY CIRCUIT

1. Disconnect A/F sensor 1 harness connector.

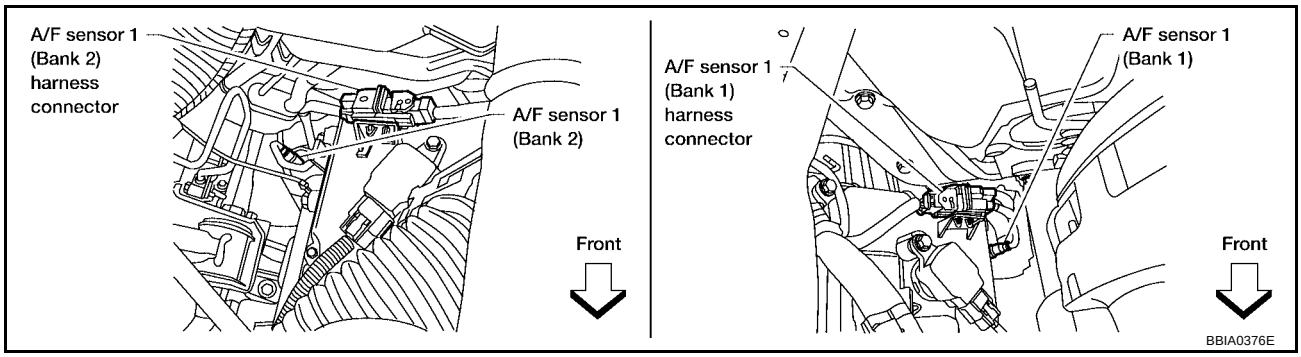

2. Turn ignition switch ON.
3. Check voltage between A/F sensor 1 terminal 3 and ground with CONSULT-II or tester.

Voltage: Battery voltage

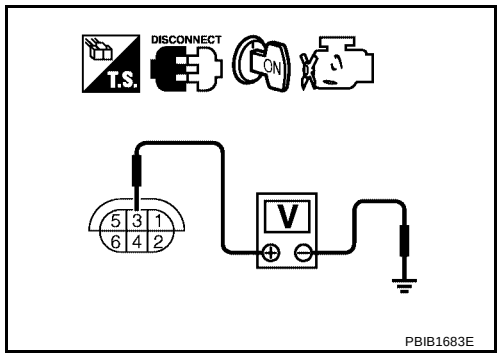

OK or NG

OK >> GO TO 4.
NG >> GO TO 3.

3. DETECT MALFUNCTIONING PART

Check the following.

- Harness connectors E5, F14
- IPDM E/R harness connector E119
- 10A fuse
- Harness for open or short between A/F sensor 1 and fuse

>> Repair or replace harness or connectors.

4. CHECK A/F SENSOR 1 INPUT SIGNAL CIRCUIT FOR OPEN AND SHORT

1. Turn ignition switch OFF.
2. Disconnect ECM harness connector.
3. Check harness continuity between A/F sensor 1 terminal and ECM terminal as follows. Refer to Wiring Diagram.

	A/F sensor 1 terminal	ECM terminal
Bank1	1	16
	2	75
	5	35
	6	56
Bank 2	1	76
	2	77
	5	57
	6	58

Continuity should exist.

4. Check harness continuity between the following terminals and ground. Refer to Wiring Diagram.

Bank 1		Bank 2	
A/F sensor 1 terminal	ECM terminal	A/F sensor 1 terminal	ECM terminal
1	16	1	76
2	75	2	77
5	35	5	57
6	56	6	58

Continuity should not exist.

5. Also check harness for short to power.

OK or NG

OK >> GO TO 5.
NG >> Repair open circuit or short to ground or short to power in harness or connectors.

5. CHECK INTERMITTENT INCIDENT

Refer to EC-144, "TROUBLE DIAGNOSIS FOR INTERMITTENT INCIDENT" .

OK or NG

OK >> GO TO 6.
NG >> Repair or replace.

6. REPLACE AIR FUEL RATIO (A/F) SENSOR 1

Replace air fuel ratio (A/F) sensor 1.

CAUTION:

- **Discard any air fuel ratio (A/F) sensor which has been dropped from a height of more than 0.5 m (19.7 in) onto a hard surface such as a concrete floor; use a new one.**
- **Before installing new air fuel ratio (A/F) sensor, clean exhaust system threads (using Oxygen Sensor Thread Cleaner tool J-43897-18 or J-43897-12) and approved anti-seize lubricant.**

>> **INSPECTION END**

Removal and Installation

UBS00H9L

AIR FUEL RATIO (A/F) SENSOR 1

Refer to EM-21, "EXHAUST MANIFOLD AND THREE WAY CATALYST" .

DTC P0132, P0152 A/F SENSOR 1

PFP:22693

Component Description

UBS00H9M

The air fuel ratio (A/F) sensor 1 is a planar dual-cell limit current sensor. The sensor element of the A/F sensor 1 is the combination of a Nernst concentration cell (sensor cell) with an oxygen-pump cell, which transports ions. It has a heater in the element.

The sensor is capable of precise measurement λ = 1, but also in the lean and rich range. Together with its control electronics, the sensor outputs a clear, continuous signal throughout a wide λ range (0.7 < λ < air).

The exhaust gas components diffuse through the diffusion gap at the electrode of the oxygen pump and Nernst concentration cell, where they are brought to thermodynamic balance.

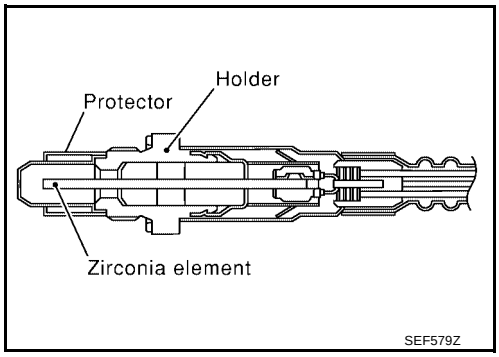

An electronic circuit controls the pump current through the oxygen-pump cell so that the composition of the exhaust gas in the diffusion gap remains constant at λ = 1. Therefore, the A/F sensor 1 is able to indicate air/fuel ratio by this pumping of current. In addition, a heater is integrated in the sensor to ensure the required operating temperature of 700 - 800°C (1,292 - 1,472°F).

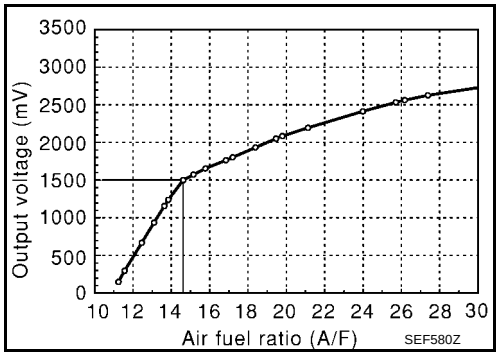

CONSULT-II Reference Value in Data Monitor Mode

UBS00H9N

Specification data are reference values.

MONITOR ITEM	CONDITION		SPECIFICATION
A/F SEN1 (B1) A/F SEN1 (B2)	● Engine: After warming up	Maintaining engine speed at 2,000 rpm	Fluctuates around 1.5V

On Board Diagnosis Logic

UBS00H9O

To judge the malfunction, the diagnosis checks that the A/F signal computed by ECM from the A/F sensor 1 signal is not inordinately high.

DTC No.	Trouble diagnosis name	DTC detecting condition	Possible Cause
P0132 0132 (Bank 1)	Air fuel ratio (A/F) sensor 1 circuit high voltage	● The A/F signal computed by ECM from the A/F sensor 1 signal is constantly approx. 5V.	● Harness or connectors (The A/F sensor 1 circuit is open or shorted.) ● Air fuel ratio (A/F) sensor 1
P0132 0132 (Bank 2)			

DTC Confirmation Procedure

UBS00H9P

NOTE:

If DTC Confirmation Procedure has been previously conducted, always turn ignition switch OFF and wait at least 10 seconds before conducting the next test.

TESTING CONDITION:

Before performing the following procedure, confirm that battery voltage is more than 10.5V at idle.

WITH CONSULT-II

1. Start engine and warm it up to normal operating temperature.
2. Select “A/F SEN1 (B1)” or “A/F SEN1 (B2)” in “DATA MONITOR” mode with CONSULT-II.

3. Check “A/F SEN1 (B1)” or “A/F SEN1 (B2)” indication.
   If the indication is constantly approx. 5V, go to EC-237, "Diagnostic Procedure" .
   If the indication is not constantly approx. 5V, go to next step.
4. Turn ignition switch OFF, wait at least 10 seconds and then restart engine.
5. Drive and accelerate vehicle to more than 40 km/h (25 MPH) within 20 seconds after restarting engine.
6. Maintain the following conditions for about 20 consecutive seconds.

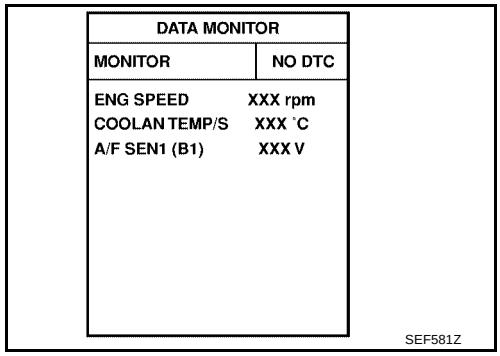

ENG SPEED	1,000 - 3,200 rpm
VHCL SPEED SE	More than 40 km/h (25 MPH)
B/FUEL SCHDL	1.5 - 9.0 msec
Gear position	Suitable position

NOTE:
- **Keep the accelerator pedal as steady as possible during the cruising.**
- **If this procedure is not completed within 1 minute after restarting engine at step 4, return to step 4.**

7. If 1st trip DTC is displayed, go to EC-237, "Diagnostic Procedure" .

WITH GST

Follow the procedure “WITH CONSULT-II” above.

Wiring Diagram
BANK 1

UBS00H9Q

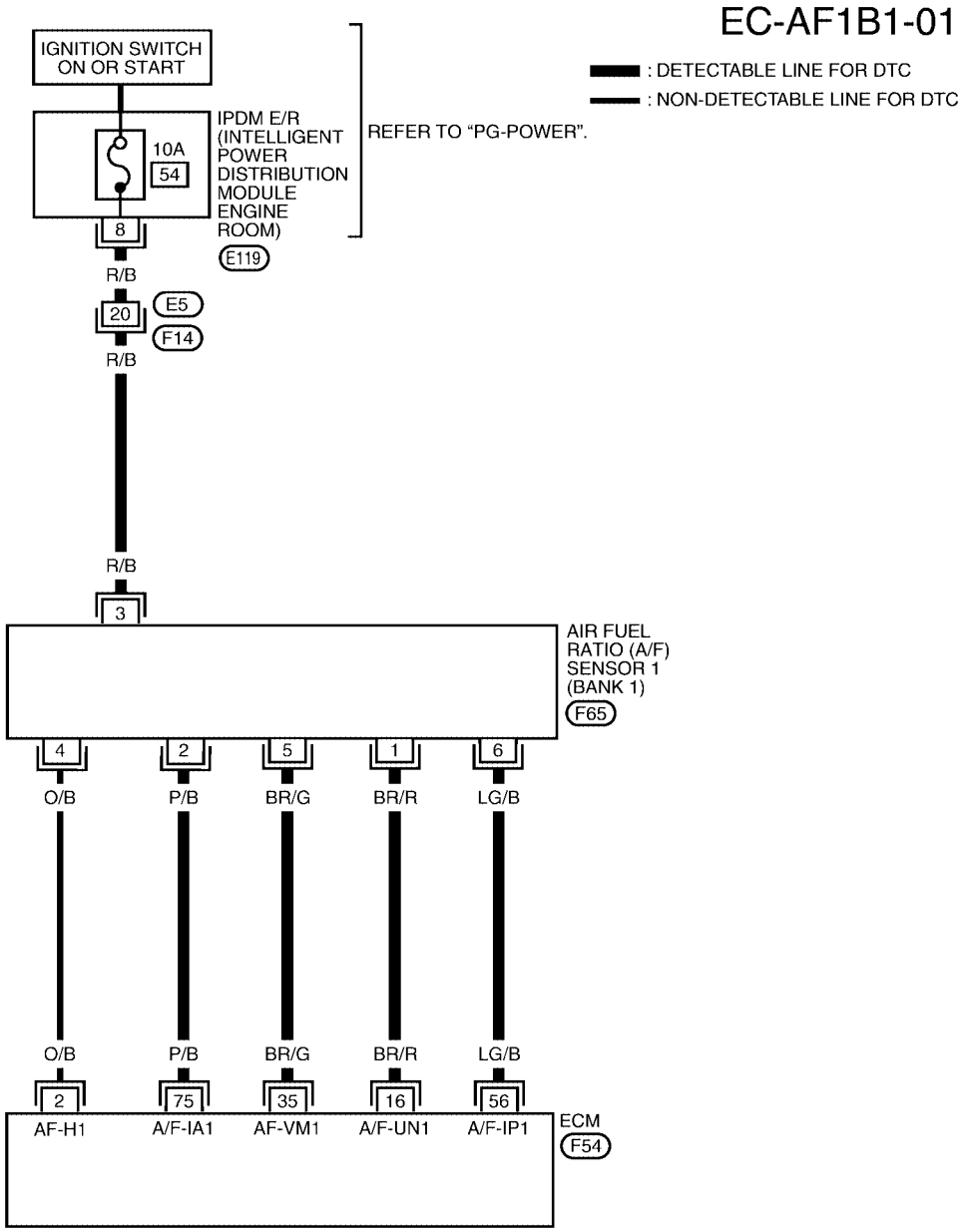

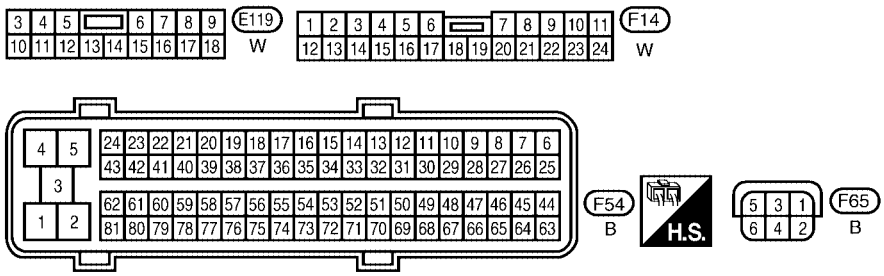

BBWA2111E

Specification data are reference values and are measured between each terminal and ground.
Pulse signal is measured by CONSULT-II.

CAUTION:

Do not use ECM ground terminals when measuring input/output voltage. Doing so may result in damage to the ECM's transistor. Use a ground other than ECM terminals, such as the ground.

TERMINAL NO.	WIRE COLOR	ITEM	CONDITION	DATA (DC Voltage)
2	O/B	A/F sensor 1 heater (bank 1)	**[Engine is running]** ● **Warm-up condition** ● Idle speed	Approximately 5V★ 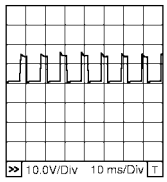 PBIB1584E
16	BR/R	A/F sensor 1 (bank 1)	**[Engine is running]** ● **Warm-up condition** ● Idle speed	Approximately 3.1V
35	BR/G			Approximately 2.6V
56	LG/B			Approximately 2.3V
75	P/B			Approximately 2.3V

★: Average voltage for pulse signal (Actual pulse signal can be confirmed by oscilloscope.)

BANK 2

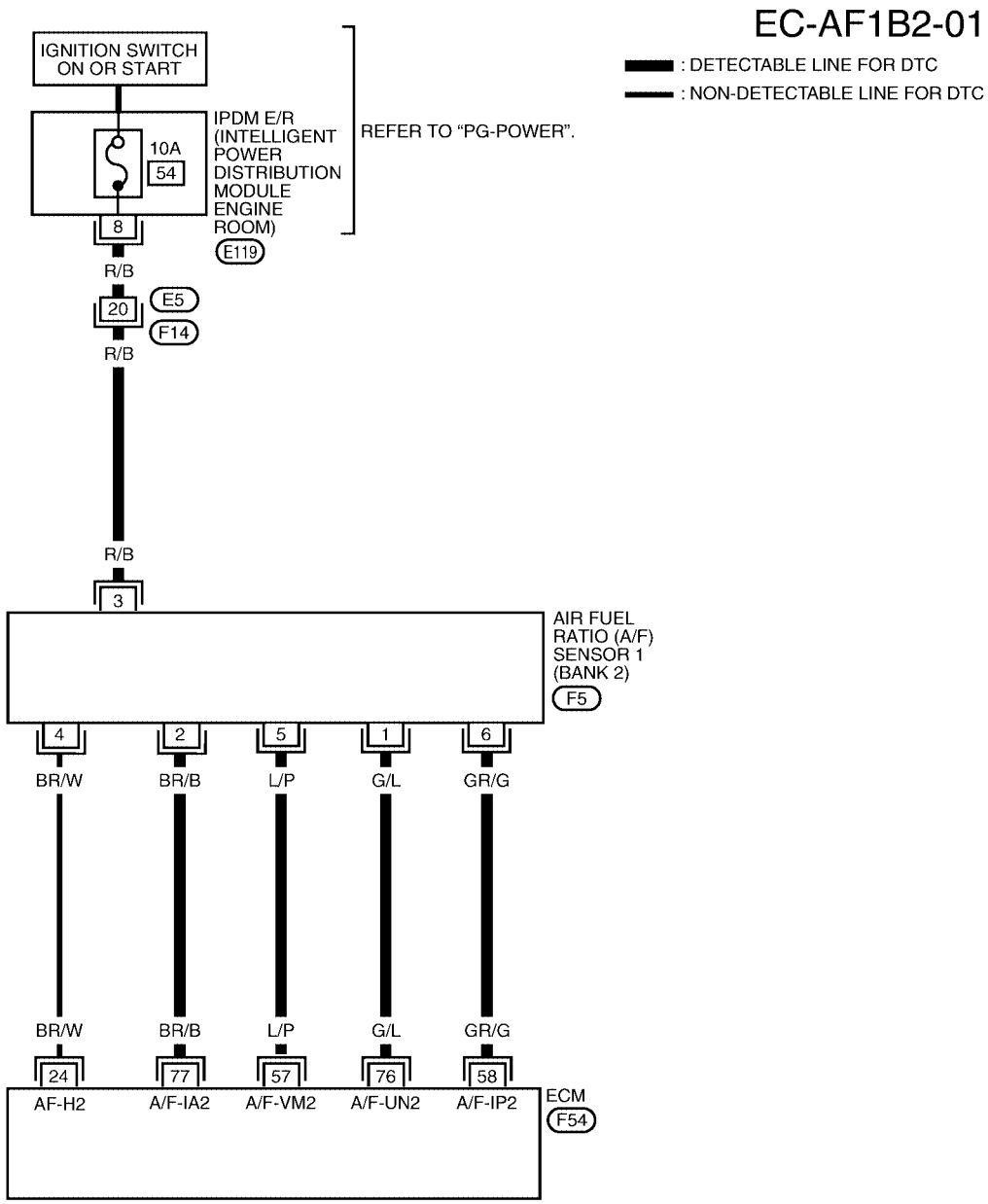

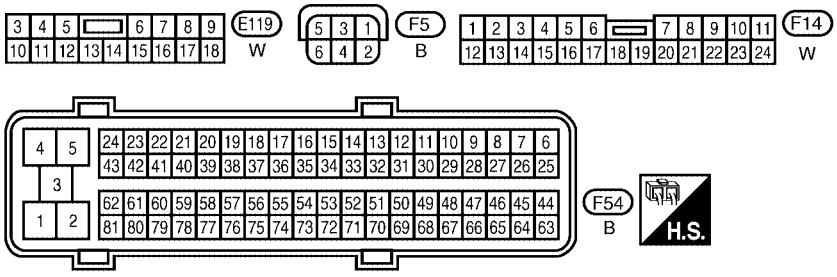

BBWA2112E

Specification data are reference values and are measured between each terminal and ground.
Pulse signal is measured by CONSULT-II.

CAUTION:
Do not use ECM ground terminals when measuring input/output voltage. Doing so may result in damage to the ECM's transistor. Use a ground other than ECM terminals, such as the ground.

TERMINAL NO.	WIRE COLOR	ITEM	CONDITION	DATA (DC Voltage)
24	BR/W	A/F sensor 1 heater (bank 2)	**[Engine is running]** ● **Warm-up condition** ● Idle speed	Approximately 5V★ 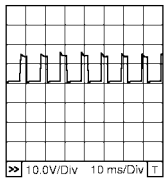 PBIB1584E
57	L/P	A/F sensor 1 (bank 2)	**[Engine is running]** ● **Warm-up condition** ● Idle speed	Approximately 2.6V
58	GR/G			Approximately 2.3V
76	G/L			Approximately 3.1V
77	BR/B			Approximately 2.3V

★: Average voltage for pulse signal (Actual pulse signal can be confirmed by oscilloscope.)

Diagnostic Procedure

UBS00H9R

1. CHECK GROUND CONNECTIONS

1. Turn ignition switch OFF.
2. Loosen and retighten three ground screws on the body.
   Refer to EC-150, "Ground Inspection" .

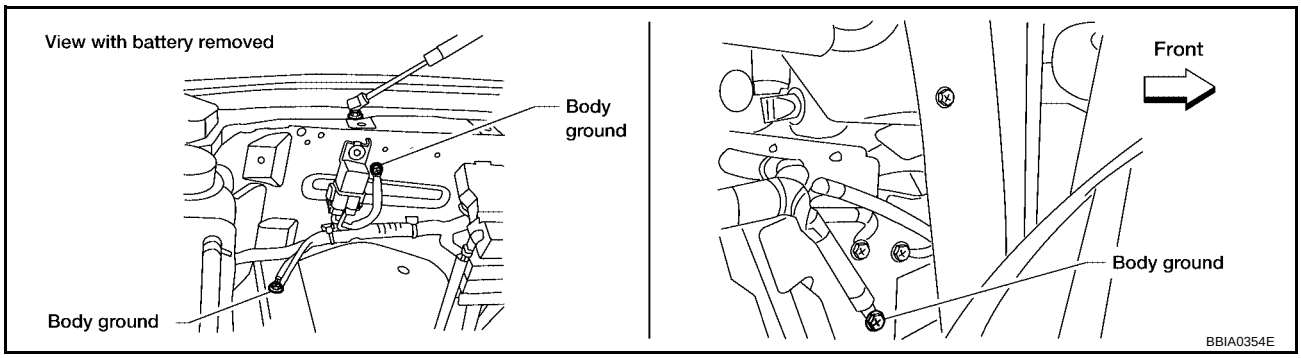

OK or NG

OK >> GO TO 2.
NG >> Repair or replace ground connections.

2. CHECK AIR FUEL RATIO (A/F) SENSOR 1 POWER SUPPLY CIRCUIT

1. Disconnect A/F sensor 1 harness connector.

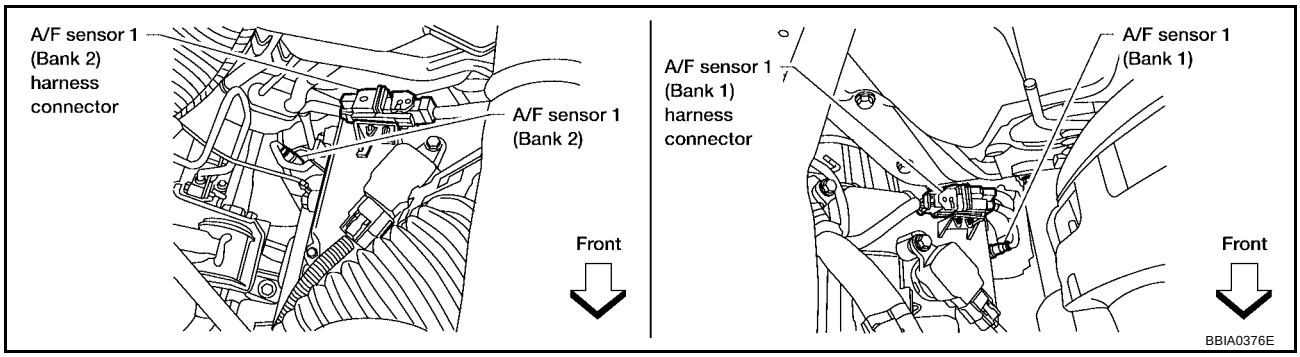

2. Turn ignition switch ON.
3. Check voltage between A/F sensor 1 terminal 3 and ground with CONSULT-II or tester.

Voltage: Battery voltage

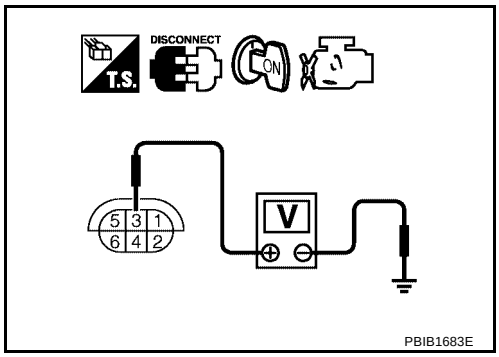

OK or NG

OK >> GO TO 4.
NG >> GO TO 3.

3. DETECT MALFUNCTIONING PART

Check the following.

- Harness connectors E5, F14
- IPDM E/R harness connector E119
- 10A fuse
- Harness for open or short between A/F sensor 1 and fuse

>> Repair or replace harness or connectors.

4. CHECK A/F SENSOR 1 INPUT SIGNAL CIRCUIT FOR OPEN AND SHORT

1. Turn ignition switch OFF.
2. Disconnect ECM harness connector.
3. Check harness continuity between A/F sensor 1 terminal and ECM terminal as follows. Refer to Wiring Diagram.

	A/F sensor 1 terminal	ECM terminal
Bank1	1	16
	2	75
	5	35
	6	56
Bank 2	1	76
	2	77
	5	57
	6	58

Continuity should exist.

4. Check harness continuity between the following terminals and ground. Refer to Wiring Diagram.

Bank 1		Bank 2	
A/F sensor 1 terminal	ECM terminal	A/F sensor 1 terminal	ECM terminal
1	16	1	76
2	75	2	77
5	35	5	57
6	56	6	58

Continuity should not exist.

5. Also check harness for short to power.

OK or NG

OK >> GO TO 5.
NG >> Repair open circuit or short to ground or short to power in harness or connectors.

5. CHECK INTERMITTENT INCIDENT

Perform EC-144, "TROUBLE DIAGNOSIS FOR INTERMITTENT INCIDENT" .

OK or NG

OK >> GO TO 6.
NG >> Repair or replace.

6. REPLACE AIR FUEL RATIO (A/F) SENSOR 1

Replace air fuel ratio (A/F) sensor 1.

CAUTION:

- **Discard any air fuel ratio (A/F) sensor which has been dropped from a height of more than 0.5 m (19.7 in) onto a hard surface such as a concrete floor; use a new one.**
- **Before installing new air fuel ratio (A/F) sensor, clean exhaust system threads (using Oxygen Sensor Thread Cleaner tool J-43897-18 or J-43897-12) and approved anti-seize lubricant.**

>> **INSPECTION END**

Removal and Installation

UBS00H9S

AIR FUEL RATIO (A/F) SENSOR 1

Refer to EM-21, "EXHAUST MANIFOLD AND THREE WAY CATALYST" .

DTC P0133, P0153 A/F SENSOR 1

PFP:22693

Component Description

UBS00N6R

The air fuel ratio (A/F) sensor 1 is a planar dual-cell limit current sensor. The sensor element of the A/F sensor 1 is the combination of a Nernst concentration cell (sensor cell) with an oxygen-pump cell, which transports ions. It has a heater in the element.

The sensor is capable of precise measurement $\lambda = 1$, but also in the lean and rich range. Together with its control electronics, the sensor outputs a clear, continuous signal throughout a wide λ range ($0.7 < \lambda <$ air).

The exhaust gas components diffuse through the diffusion gap at the electrode of the oxygen pump and Nernst concentration cell, where they are brought to thermodynamic balance.

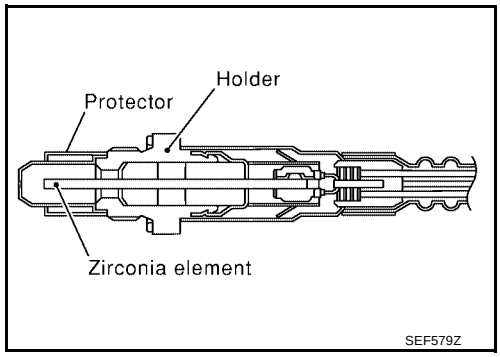

An electronic circuit controls the pump current through the oxygen-pump cell so that the composition of the exhaust gas in the diffusion gap remains constant at $\lambda = 1$. Therefore, the A/F sensor 1 is able to indicate air/fuel ratio by this pumping of current. In addition, a heater is integrated in the sensor to ensure the required operating temperature of 700 - 800°C (1,292 - 1,472°F).

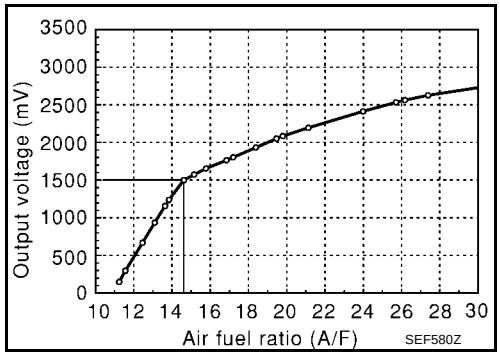

CONSULT-II Reference Value in Data Monitor Mode

UBS00N6S

Specification data are reference values.

MONITOR ITEM	CONDITION		SPECIFICATION
A/F SEN1 (B1) A/F SEN1 (B2)	● Engine: After warming up	Maintaining engine speed at 2,000 rpm	Fluctuates around 1.5 V

On Board Diagnosis Logic

UBS00N6T

To judge the malfunction of A/F sensor 1, this diagnosis measures response time of the A/F signal computed by ECM from the A/F sensor 1 signal. The time is compensated by engine operating (speed and load), fuel feedback control constant, and the A/F sensor 1 temperature index. Judgment is based on whether the compensated time (the A/F signal cycling time index) is inordinately long or not.

DTC No.	Trouble diagnosis name	DTC detecting condition	Possible Cause
P0133 0133 (Bank 1)	Air fuel ratio (A/F) sensor 1 circuit slow response	● The response of the A/F signal computed by ECM from A/F sensor 1 signal takes more than the specified time.	● Harness or connectors (The A/F sensor 1 circuit is open or shorted.) ● A/F sensor 1 ● A/F sensor 1 heater ● Fuel pressure ● Fuel injector ● Intake air leaks ● Exhaust gas leaks ● PCV ● Mass air flow sensor
P0153 0153 (Bank 2)			

DTC Confirmation Procedure

UBS00N6U

NOTE:
If DTC Confirmation Procedure has been previously conducted, always turn ignition switch OFF and wait at least 10 seconds before conducting the next test.
TESTING CONDITION:
Before performing the following procedure, confirm that battery voltage is more than 11V at idle.

WITH CONSULT-II

1. Start engine and warm it up to normal operating temperature.
2. Turn ignition switch OFF and wait at least 10 seconds.
3. Start engine and keep the engine speed between 3,500 and 4,000 rpm for at least 1minute under no load.
4. Let engine idle for 1 minute.
5. Select “A/F SEN1(B1) P1278/P1279” (for DTC P0133) or “A/F SEN1(B1) P1288/P1289” (for DTC P0153) of “A/F SEN1” in “DTC WORK SUPPORT” mode with CONSULT-II.
6. Touch “START”.
   If “COMPLETED” appears on CONSULT-II screen, go to step 10.
   If “COMPLETED” does not appear on CONSULT-II screen, go to the following step.

A/F SEN1 (B1) P1278/P1279	
OUT OF CONDITION	
MONITOR	
ENG SPEED	XXX rpm
B/FUEL SCHDL	XXX msec
COOLAN TEMP/S	XXX °C
VHCL SPEED SE	XXX km/h

PBIB0756E

7. After perform the following procedure, “TESTING” will be displayed on the CONSULT-II screen.
   a. Increase the engine speed up to 4,000 to 5,000 rpm and keep it for 10 seconds.
   b. Fully release accelerator pedal and then let engine idle for about 10 seconds.
   If “TESTING” is not displayed after 10 seconds, refer to EC-134, "TROUBLE DIAGNOSIS - SPECIFICATION VALUE" .
8. Wait for about 20 seconds at idle at under the condition that “TESTING” is displayed on the CONSULT-II screen.

A/F SEN1 (B1) P1278/P1279	
TESTING	
MONITOR	
ENG SPEED	XXX rpm
B/FUEL SCHDL	XXX msec
COOLAN TEMP/S	XXX °C
VHCL SPEED SE	XXX km/h

PBIB1925E

9. Make sure that “TESTING” changes to “COMPLETED”.
   If “TESTING” changed to “OUT OF CONDITION”, refer to EC-134, "TROUBLE DIAGNOSIS - SPECIFICATION VALUE" .
10. Make sure that “OK” is displayed after touching “SELF-DIAG RESULT”.
    If “NG” is displayed, go to EC-247, "Diagnostic Procedure" .

A/F SEN1 (B1) P1278/P1279
COMPLETED

PBIB0758E

WITH GST

1. Start engine and warm it up to normal operating temperature.
2. Select Service $01 with GST.
3. Calculate the total value of “Short term fuel trim” and “Long term fuel trim” indications.
   Make sure that the total percentage should be within ±15%.
   If OK, go to the following step.
   If NG, check the following.

- Intake air leaks
- Exhaust gas leaks
- Incorrect fuel pressure
- Lack of fuel
- Fuel injector
- Incorrect PCV hose connection
- PCV valve
- Mass air flow sensor

4. Turn ignition switch OFF and wait at least 10 seconds.
5. Start engine and keep the engine speed between 3,500 and 4,000 rpm for at least 1minute under no load.
6. Let engine idle for 1 minute.
7. Increase the engine speed up to 4,000 to 5,000 rpm and keep it for 10 seconds.
8. Fully release accelerator pedal and then let engine idle for about 1 minute.
9. Select Service $07 with GST.
   If the 1st trip DTC is displayed, go to EC-247, "Diagnostic Procedure" .

Wiring Diagram
BANK 1

UBS00N6V

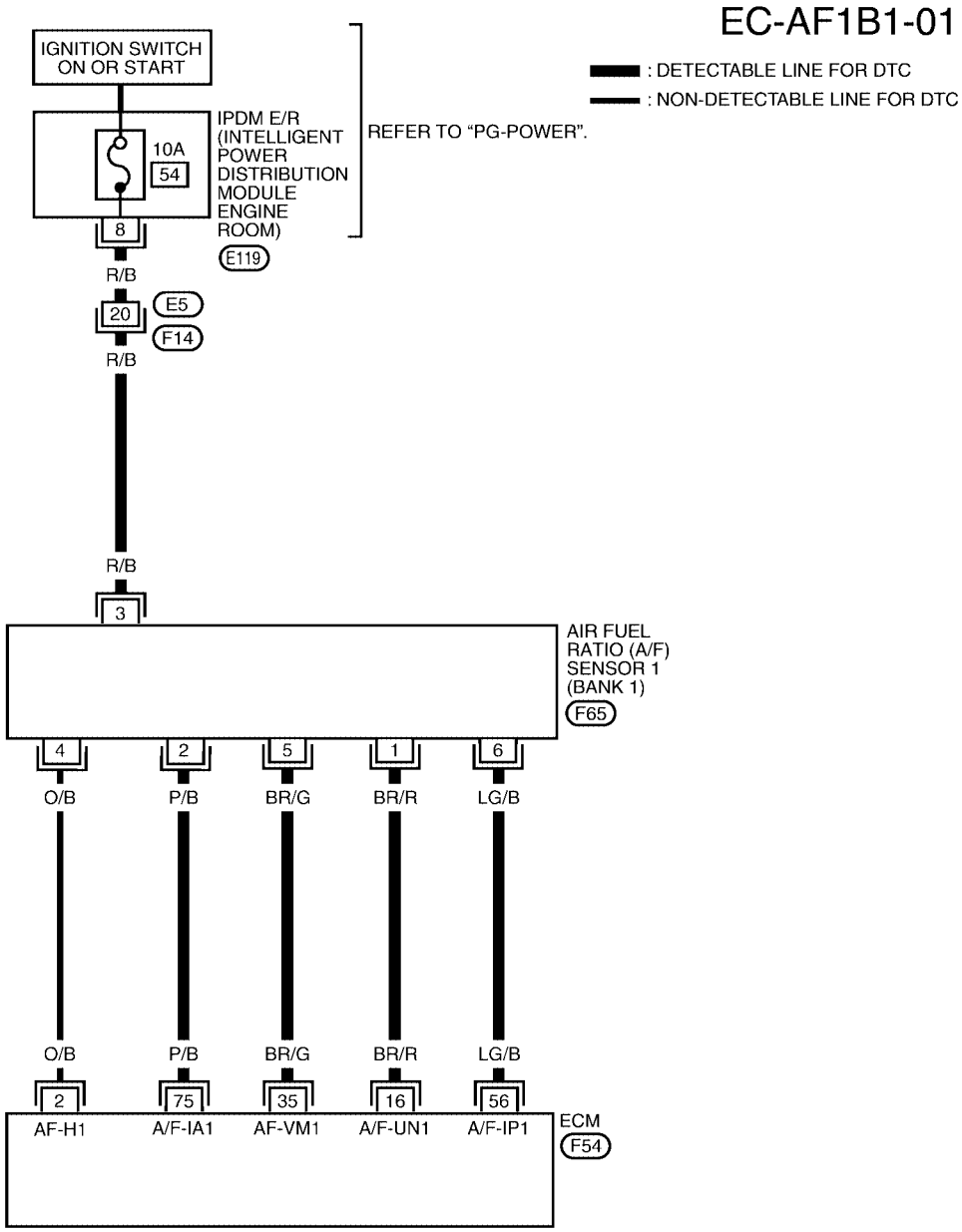

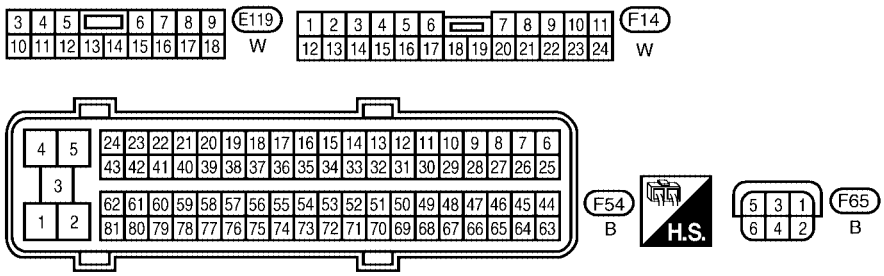

BBWA2111E

Specification data are reference values and are measured between each terminal and ground.
Pulse signal is measured by CONSULT-II.

CAUTION:

Do not use ECM ground terminals when measuring input/output voltage. Doing so may result in damage to the ECM's transistor. Use a ground other than ECM terminals, such as the ground.

TERMINAL NO.	WIRE COLOR	ITEM	CONDITION	DATA (DC Voltage)
2	O/B	A/F sensor 1 heater (bank 1)	**[Engine is running]** ● **Warm-up condition** ● Idle speed	Approximately 5V★ 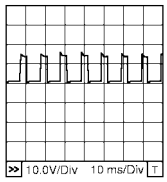 PBIB1584E
16	BR/R	A/F sensor 1 (bank 1)	**[Engine is running]** ● **Warm-up condition** ● Idle speed	Approximately 3.1V
35	BR/G			Approximately 2.6V
56	LG/B			Approximately 2.3V
75	P/B			Approximately 2.3V

★: Average voltage for pulse signal (Actual pulse signal can be confirmed by oscilloscope.)

BANK 2

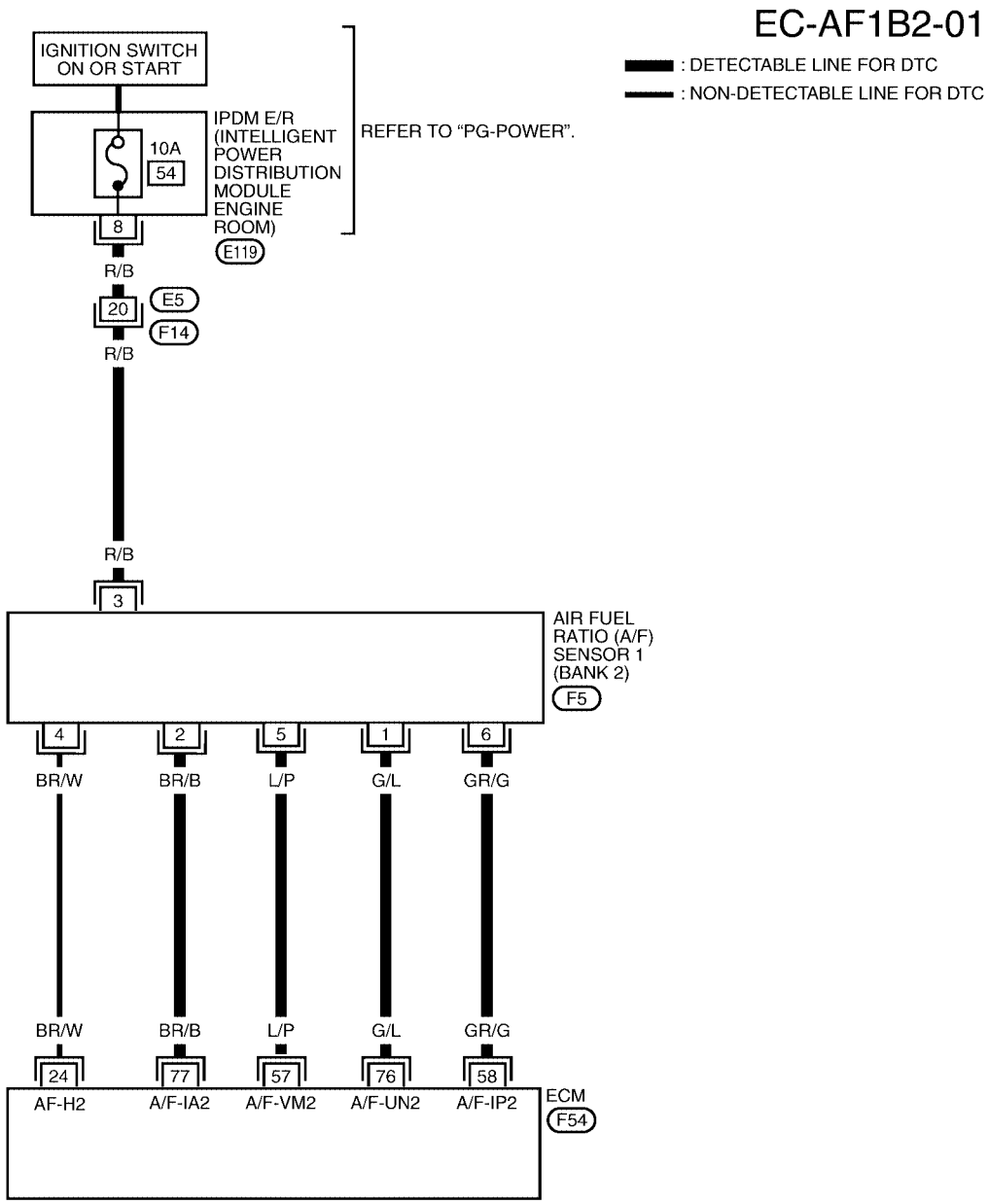

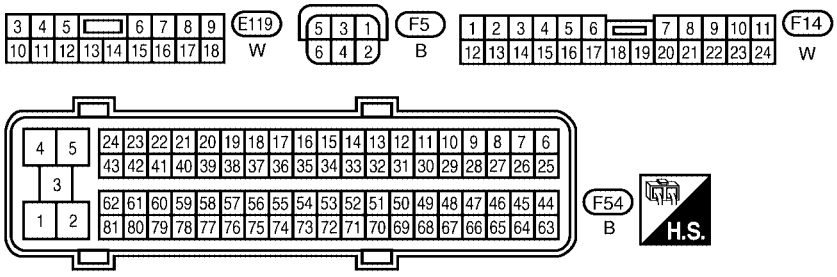

BBWA2112E

Specification data are reference values and are measured between each terminal and ground.
Pulse signal is measured by CONSULT-II.

CAUTION:
Do not use ECM ground terminals when measuring input/output voltage. Doing so may result in damage to the ECM's transistor. Use a ground other than ECM terminals, such as the ground.

TERMINAL NO.	WIRE COLOR	ITEM	CONDITION	DATA (DC Voltage)
24	BR/W	A/F sensor 1 heater (bank 2)	**[Engine is running]** ● **Warm-up condition** ● Idle speed	Approximately 5V★ 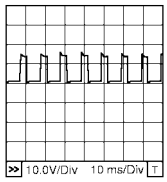 PBIB1584E
57	L/P	A/F sensor 1 (bank 2)	**[Engine is running]** ● **Warm-up condition** ● Idle speed	Approximately 2.6V
58	GR/G			Approximately 2.3V
76	G/L			Approximately 3.1V
77	BR/B			Approximately 2.3V

★: Average voltage for pulse signal (Actual pulse signal can be confirmed by oscilloscope.)

Diagnostic Procedure

UBS00N6W

1. CHECK GROUND CONNECTIONS

1. Turn ignition switch OFF.
2. Loosen and retighten three ground screws on the body.
   Refer to EC-150, "Ground Inspection" .

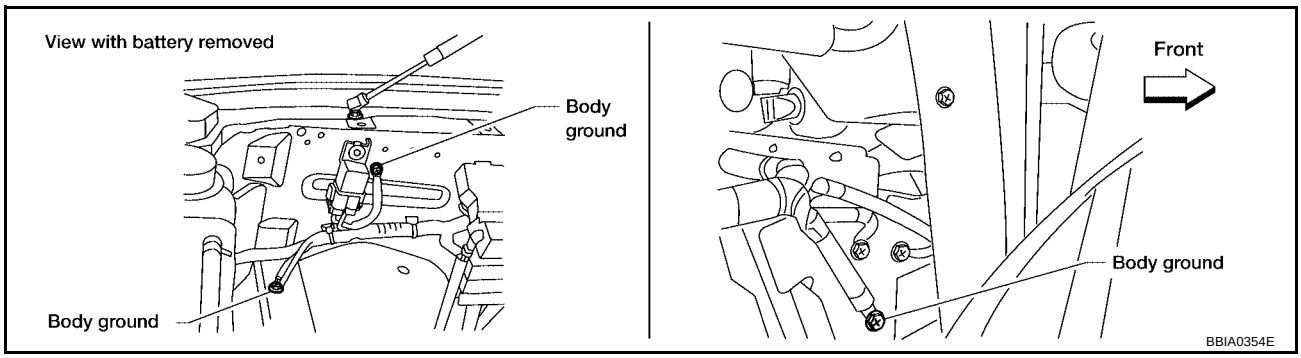

OK or NG

OK >> GO TO 2.
NG >> Repair or replace ground connections.

2. RETIGHTEN A/F SENSOR 1

Loosen and retighten the A/F sensor 1.

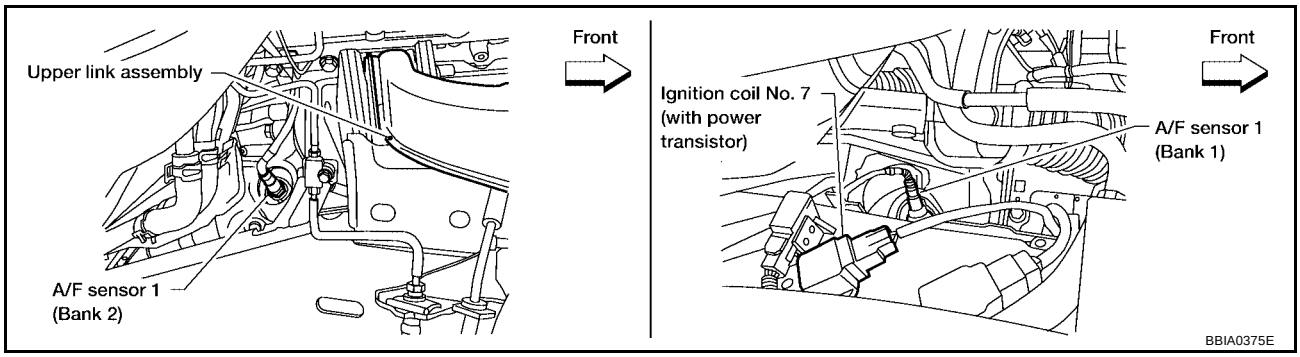

Tightening torque: 50 N-m (5.1 kg-m, 37 ft-lb)

>> GO TO 3.

3. CHECK EXHAUST GAS LEAK

1. Start engine and run it at idle.
2. Listen for an exhaust gas leak before three way catalyst (manifold).

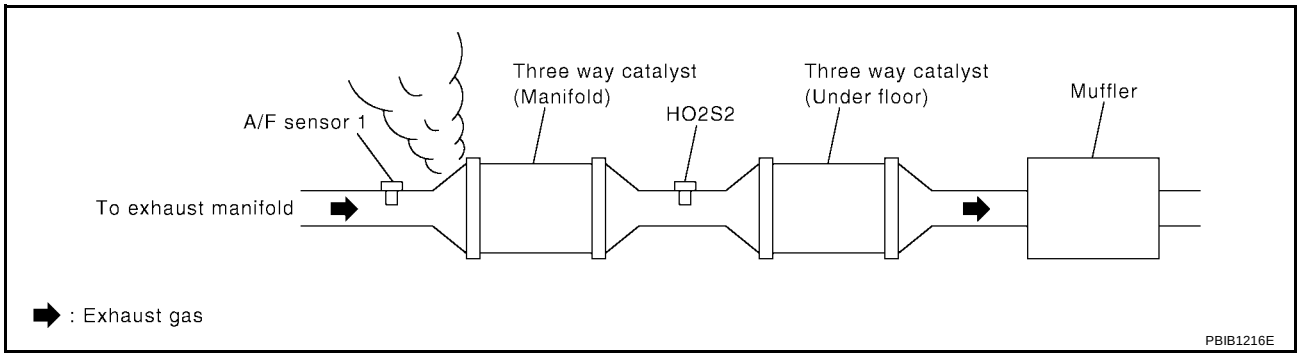

OK or NG

OK >> GO TO 4.
NG >> Repair or replace.

4. CHECK FOR INTAKE AIR LEAK

Listen for an intake air leak after the mass air flow sensor.

OK or NG

OK >> GO TO 5.
NG >> Repair or replace.

5. CLEAR THE SELF-LEARNING DATA

With CONSULT-II

1. Start engine and warm it up to normal operating temperature.
2. Select “SELF-LEARNING CONT” in “WORK SUPPORT” mode with CONSULT-II.
3. Clear the self-learning control coefficient by touching “CLEAR” or “START”.
4. Run engine for at least 10 minutes at idle speed.
   Is the 1st trip DTC P0171, P172, P0174 or P0175 detected?
   Is it difficult to start engine?

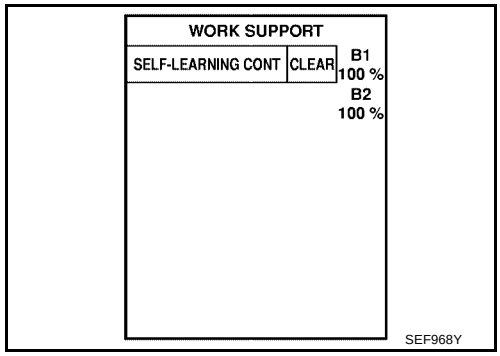

Without CONSULT-II

1. Start engine and warm it up to normal operating temperature.
2. Turn ignition switch OFF.
3. Disconnect mass air flow sensor harness connector.
4. Restart engine and let it idle for at least 5 seconds.
5. Stop engine and reconnect mass air flow sensor harness connector.
6. Make sure DTC P0102 is displayed.
7. Erase the DTC memory. Refer to EC-61, "HOW TO ERASE EMISSION-RELATED DIAGNOSTIC INFORMATION" .
8. Make sure DTC P0000 is displayed.
9. Run engine for at least 10 minutes at idle speed.
   Is the 1st trip DTC P0171, P0172, P0174 or P0175 detected?
   Is it difficult to start engine?

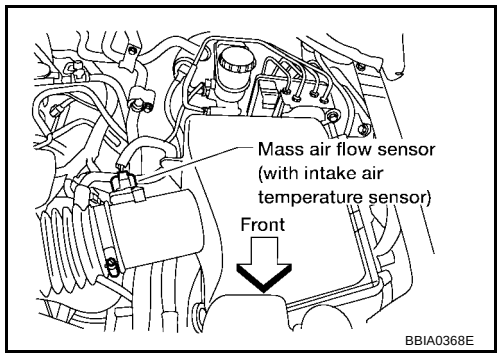

Yes or No

Yes >> Perform trouble diagnosis for DTC P0171, P0174 or P0172, P0175. Refer to EC-288, "DTC P0171, P0174 FUEL INJECTION SYSTEM FUNCTION" or EC-299, "DTC P0172, P0175 FUEL INJECTION SYSTEM FUNCTION" .

No >> GO TO 6.

6. CHECK A/F SENSOR 1 POWER SUPPLY CIRCUIT

1. Turn ignition switch OFF.
2. Disconnect A/F sensor 1 harness connector.

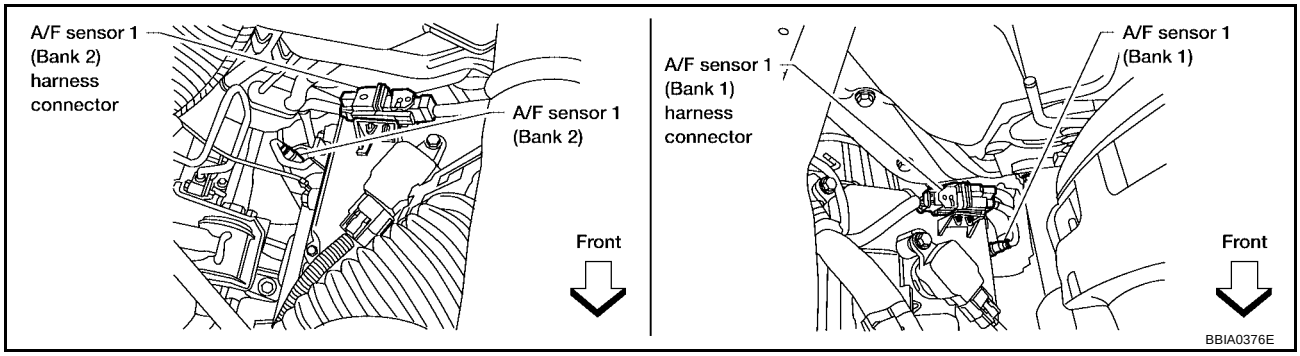

3. Turn ignition switch ON.
4. Check voltage between A/F sensor 1 terminal 3 and ground with CONSULT-II or tester.

Voltage: Battery voltage

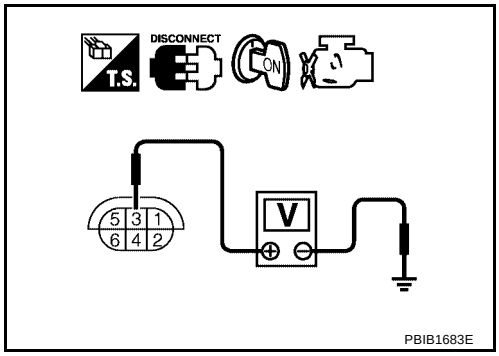

OK or NG

OK >> GO TO 8.
NG >> GO TO 7.

7. DETECT MALFUNCTIONING PART

Check the following.

- Harness connectors E5, F14
- IPDM E/R harness connector E119
- 10A fuse
- Harness for open or short between A/F sensor 1 and fuse

>> Repair or replace harness or connectors.

8. CHECK A/F SENSOR 1 INPUT SIGNAL CIRCUIT FOR OPEN AND SHORT

1. Turn ignition switch OFF.
2. Disconnect ECM harness connector.
3. Check harness continuity between A/F sensor 1 terminal and ECM terminal as follows. Refer to Wiring Diagram.

	A/F sensor 1 terminal	ECM terminal
Bank1	1	16
	2	75
	5	35
	6	56
Bank 2	1	76
	2	77
	5	57
	6	58

Continuity should exist.

4. Check harness continuity between the following terminals and ground. Refer to Wiring Diagram.

Bank 1		Bank 2	
A/F sensor 1 terminal	ECM terminal	A/F sensor 1 terminal	ECM terminal
1	16	1	76
2	75	2	77
5	35	5	57
6	56	6	58

Continuity should not exist.

5. Also check harness for short to power.

OK or NG

OK >> GO TO 9.
NG >> Repair open circuit or short to ground or short to power in harness or connectors.

9. CHECK AIR FUEL RATIO (A/F) SENSOR 1 HEATER

Refer to EC-162, "Component Inspection" .

OK or NG

OK >> GO TO 10.
NG >> GO TO 13.

10. CHECK MASS AIR FLOW SENSOR

Refer to EC-178, "Component Inspection" .

OK or NG

OK >> GO TO 11.
NG >> Replace mass air flow sensor.

11. CHECK PCV VALVE

Refer to EC-45, "Component Inspection" .

OK or NG

OK >> GO TO 12.
NG >> Repair or replace PCV valve.

12. CHECK INTERMITTENT INCIDENT

Perform EC-144, "TROUBLE DIAGNOSIS FOR INTERMITTENT INCIDENT" .

OK or NG

OK >> GO TO 13.
NG >> Repair or replace.

13. REPLACE AIR FUEL RATIO (A/F) SENSOR 1

Replace air fuel ratio (A/F) sensor 1.

CAUTION:

- **Discard any air fuel ratio (A/F) sensor which has been dropped from a height of more than 0.5 m (19.7 in) onto a hard surface such as a concrete floor; use a new one.**
- **Before installing new air fuel ratio (A/F) sensor, clean exhaust system threads (using Oxygen Sensor Thread Cleaner tool J-43897-18 or J-43897-12) and approved anti-seize lubricant.**

>> **INSPECTION END**

Removal and Installation

UBS00N6X

AIR FUEL RATIO (A/F) SENSOR 1

Refer to EM-21, "EXHAUST MANIFOLD AND THREE WAY CATALYST" .

DTC P0137, P0157 HO2S2

PFP:226A0

Component Description

UBS00H8B

The heated oxygen sensor 2, after three way catalyst (manifold), monitors the oxygen level in the exhaust gas on each bank.
Even if switching characteristics of the air fuel ratio (A/F) sensor 1 are shifted, the air-fuel ratio is controlled to stoichiometric, by the signal from the heated oxygen sensor 2.
This sensor is made of ceramic zirconia. The zirconia generates voltage from approximately 1V in richer conditions to 0V in leaner conditions.
Under normal conditions the heated oxygen sensor 2 is not used for engine control operation.

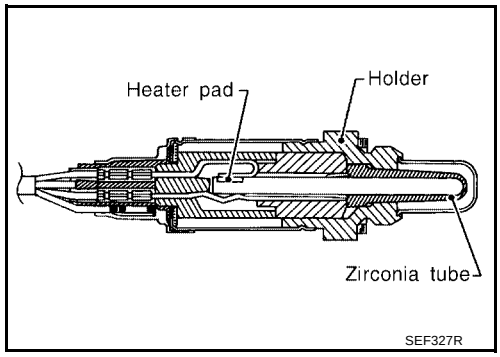

CONSULT-II Reference Value in Data Monitor Mode

UBS00ODQ

Specification data are reference values.

MONITOR ITEM	CONDITION	SPECIFICATION
HO2S2 (B1) HO2S2 (B2)	● Revving engine from idle to 3,000 rpm quickly after the following conditions are met. – Engine: After warming up – Keeping the engine speed between 3,500 and 4,000 rpm for 1 minute and at idle for 1 minute under no load	0 - 0.3V ←→ Approx. 0.6 - 1.0V
HO2S2 MNTR (B1) HO2S2 MNTR (B2)		LEAN ←→ RICH

On Board Diagnosis Logic

UBS00H8D

The heated oxygen sensor 2 has a much longer switching time between rich and lean than the air fuel ratio (A/F) sensor 1. The oxygen storage capacity of the three way catalyst (manifold) causes the longer switching time. To judge the malfunctions of heated oxygen sensor 2, ECM monitors whether the maximum voltage of the sensor is sufficiently high during the various driving condition such as fuel-cut.

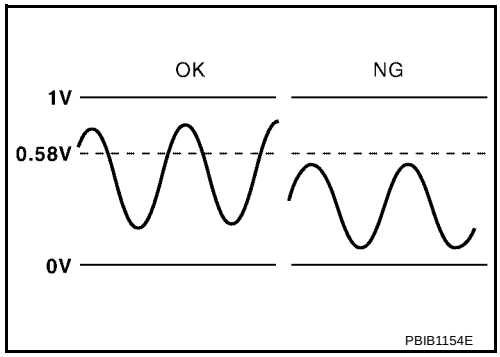

DTC No.	Trouble diagnosis name	DTC detecting condition	Possible cause
P0137 0137 (Bank 1)	Heated oxygen sensor 2 circuit low voltage	The maximum voltage from the sensor is not reached to the specified voltage.	● Harness or connectors (The sensor circuit is open or shorted) ● Heated oxygen sensor 2 ● Fuel pressure ● Fuel injector ● Intake air leaks
P0157 0157 (Bank 2)			

DTC Confirmation Procedure

UBS00H8E

NOTE:
If DTC confirmation Procedure has been previously conducted, always turn ignition switch OFF and wait at least 10 seconds before conducting the next test.

WITH CONSULT-II

TESTING CONDITION:
For better results, perform "DTC WORK SUPPORT" at a temperature of 0 to 30 °C (32 to 86 °F).

1. Turn ignition switch ON and select "DATA MONITOR" mode with CONSULT-II.
2. Start engine and warm it up to the normal operating temperature.
3. Turn ignition switch OFF and wait at least 10 seconds.
4. Start engine and keep the engine speed between 3,500 and 4,000 rpm for at least 1 minute under no load.
5. Let engine idle for 1 minute.
6. Make sure that "COOLAN TEMP/S" indicates more than 70°C (158°F).
   If not, warm up engine and go to next step when "COOLAN TEMP/S" indication reaches to 70°C (158°F).

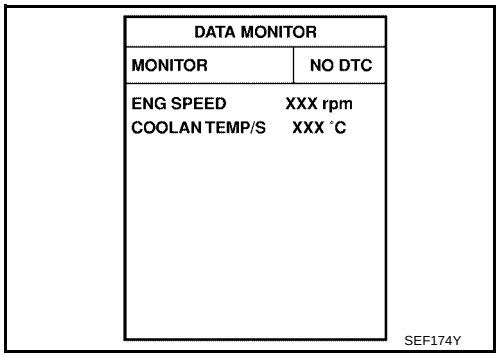

7. Open engine hood.
8. Select "HO2S2 (B1) P1147" (for DTC P0137) or "HO2S2 (B2) P1167" (for DTC P0157) of "HO2S2" in "DTC WORK SUPPORT" mode with CONSULT-II.
9. Start engine and following the instruction of CONSULT-II.

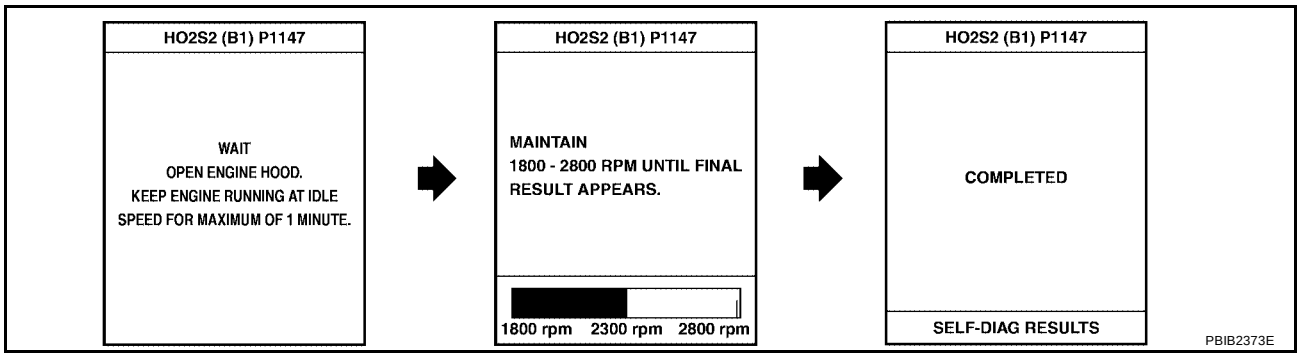

NOTE:
It will take at most 10 minutes until "COMPLETED" is displayed.

10. Make sure that "OK" is displayed after touching "SELF-DIAG RESULTS".
    If "NG" is displayed, refer to EC-259, "Diagnostic Procedure" .
    If "CAN NOT BE DIAGNOSED" is displayed, perform the following.

a. Turn ignition switch OFF and leave the vehicle in a cool place (soak the vehicle).
b. Return to step 1.

Overall Function Check

UBS00H8F

Use this procedure to check the overall function of the heated oxygen sensor 2 circuit. During this check, a 1st trip DTC might not be confirmed.

WITH GST

1. Start engine and warm it up to the normal operating temperature.
2. Turn ignition switch OFF and wait at least 10 seconds.
3. Start engine and keep the engine speed between 3,500 and 4,000 rpm for at least 1 minute under no load.
4. Let engine idle for 1 minute.
5. Set voltmeter probes between ECM terminal 55 [HO2S2 (B1) signal] or 74 [HO2S2 (B2) signal] and ground.

6. Check the voltage when revving up to 4,000 rpm under no load at least 10 times.
   (Depress and release accelerator pedal as soon as possible.)
   The voltage should be above 0.58V at least once during this procedure.
   If the voltage can be confirmed in step 6, step 7 is not necessary.
7. Keep vehicle at idling for 10 minutes, then check the voltage. Or check the voltage when coasting from 80 km/h (50 MPH) in D position.
   The voltage should be above 0.58V at least once during this procedure.
8. If NG, go to EC-259, "Diagnostic Procedure" .

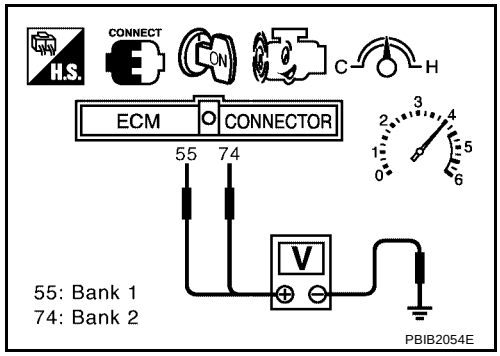

Wiring Diagram
BANK 1

UBS00H8G

EC-O2S2B1-01

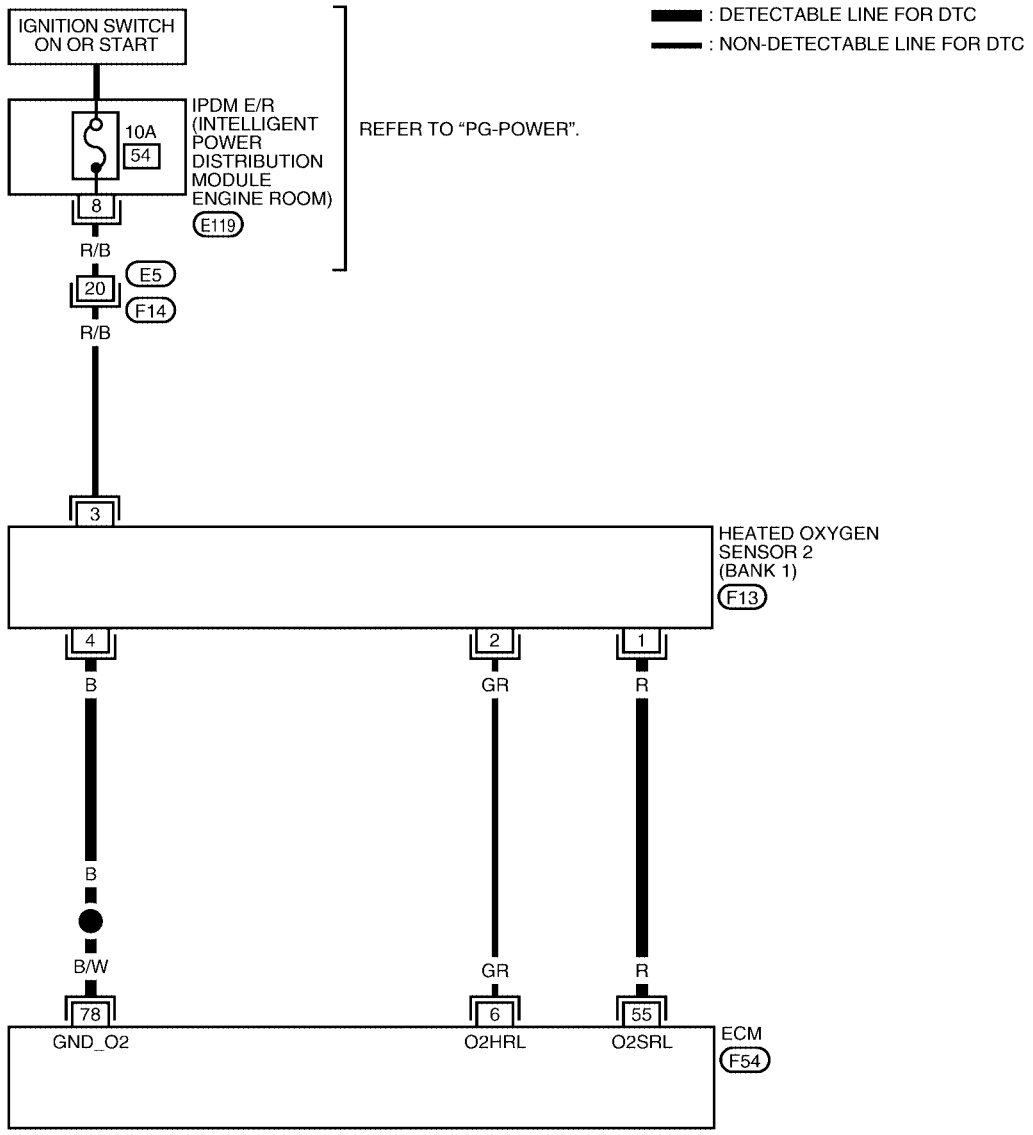

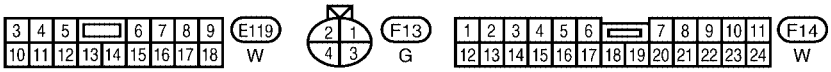

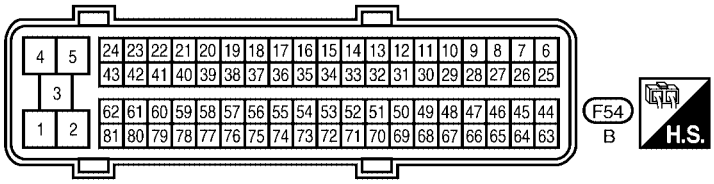

BBWA1678E

Specification data are reference values and are measured between each terminal and ground.

CAUTION:

Do not use ECM ground terminals when measuring input/output voltage. Doing so may result in damage to the ECM's transistor. Use a ground other than ECM terminals, such as the ground.

TERMINAL NO.	WIRE COLOR	ITEM	CONDITION	DATA (DC Voltage)
6	GR	Heated oxygen sensor 2 heater (bank 1)	**[Engine is running]** ● Engine speed: Below 3,600 rpm after the following conditions are met. – Engine: After warming up – Keeping the engine speed between 3,500 and 4,000 rpm for 1 minute and at idle for 1 minute under no load	0 - 1.0V
			[Ignition switch: ON] ● Engine: Stopped **[Engine is running]** ● Engine speed: Above 3,600 rpm.	BATTERY VOLTAGE (11 - 14V)
55	R	Heated oxygen sensor 2 (bank 1)	**[Engine is running]** ● Revving engine from idle to 3,000 rpm quickly after the following conditions are met. – Engine: After warming up – Keeping the engine speed between 3,500 and 4,000 rpm for 1 minute and at idle for 1 minute under no load	0 - Approximately 1.0V
78	B/W	Sensor ground (Heated oxygen sensor 2)	**[Engine is running]** ● **Warm-up condition** ● Idle speed	Approximately 0V

BANK 2

EC-O2S2B2-01

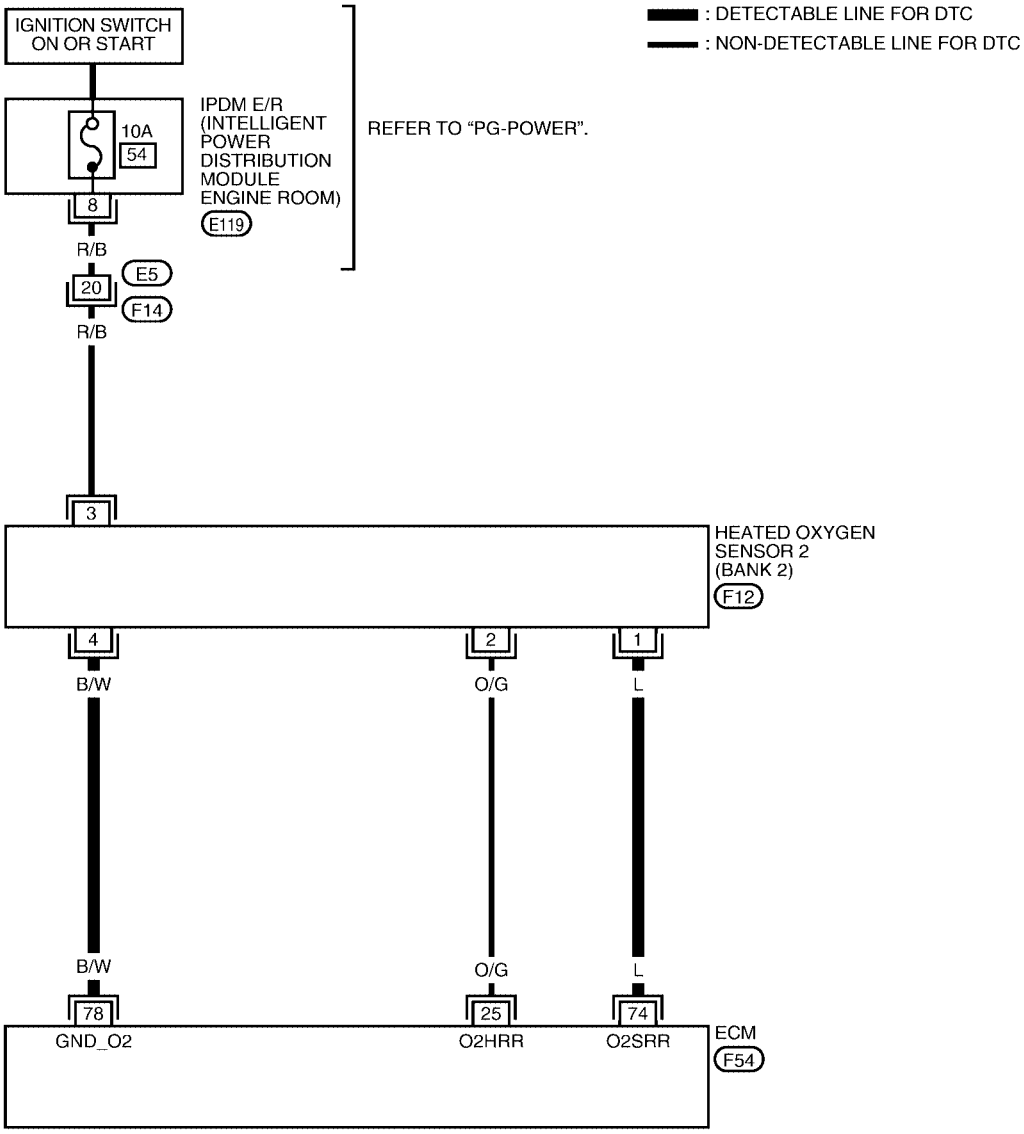

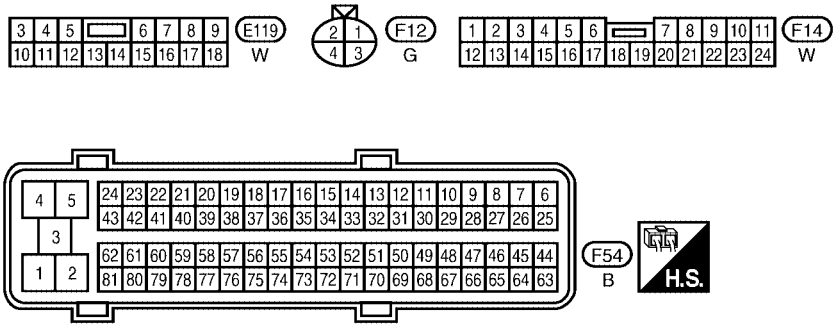

BBWA1679E

Specification data are reference values and are measured between each terminal and ground.

CAUTION:

Do not use ECM ground terminals when measuring input/output voltage. Doing so may result in damage to the ECM's transistor. Use a ground other than ECM terminals, such as the ground.

TERMINAL NO.	WIRE COLOR	ITEM	CONDITION	DATA (DC Voltage)
25	O/G	Heated oxygen sensor 2 heater (bank 2)	**[Engine is running]** ● Engine speed: Below 3,600 rpm after the following conditions are met. – Engine: After warming up – Keeping the engine speed between 3,500 and 4,000 rpm for 1 minute and at idle for 1 minute under no load	0 - 1.0V
			[Ignition switch: ON] ● Engine: Stopped **[Engine is running]** ● Engine speed: Above 3,600 rpm.	BATTERY VOLTAGE (11 - 14V)
74	L	Heated oxygen sensor 2 (bank 2)	**[Engine is running]** ● Revving engine from idle to 3,000 rpm quickly after the following conditions are met. – Engine: After warming up – Keeping the engine speed between 3,500 and 4,000 rpm for 1 minute and at idle for 1 minute under no load	0 - Approximately 1.0V
78	B/W	Sensor ground (Heated oxygen sensor 2)	**[Engine is running]** ● **Warm-up condition** ● Idle speed	Approximately 0V

Diagnostic Procedure

UBS00H8H

1. CHECK GROUND CONNECTIONS

1. Turn ignition switch OFF.
2. Loosen and retighten three ground screws on the body.
   Refer to EC-150, "Ground Inspection" .

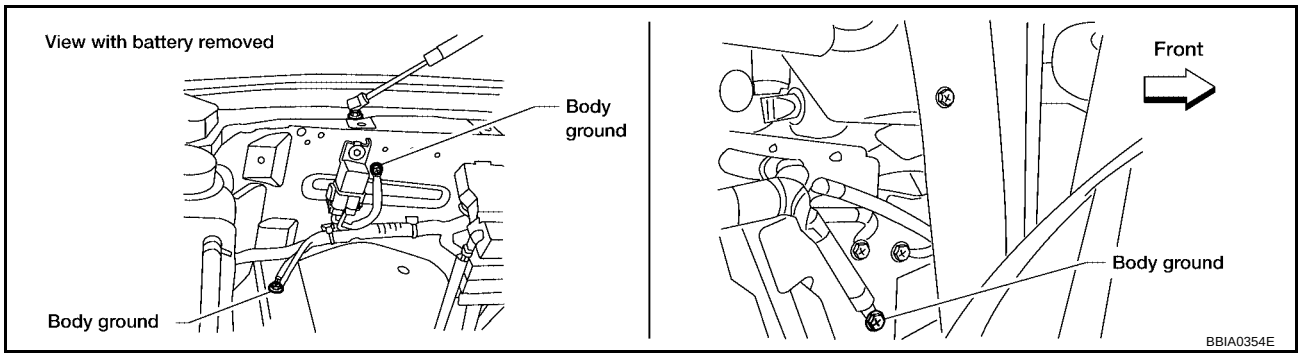

OK or NG

OK >> GO TO 2.
NG >> Repair or replace ground connections.

2. CLEAR THE SELF-LEARNING DATA

With CONSULT-II

1. Start engine and warm it up to normal operating temperature.
2. Select “SELF-LEARNING CONT” in “WORK SUPPORT” mode with CONSULT-II.
3. Clear the self-learning control coefficient by touching “CLEAR”.
4. Run engine for at least 10 minutes at idle speed.
   Is the 1st trip DTC P0171 or P0174 detected?
   Is it difficult to start engine?

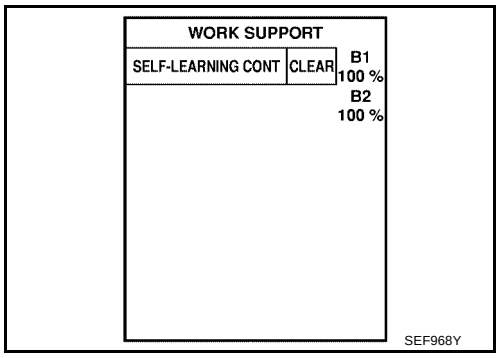

Without CONSULT-II

1. Start engine and warm it up to normal operating temperature.
2. Turn ignition switch OFF.
3. Disconnect mass air flow sensor harness connector, and restart and run engine for at least 5 seconds at idle speed.
4. Stop engine and reconnect mass air flow sensor harness connector.
5. Make sure DTC P0102 is displayed.
6. Erase the DTC memory. Refer to EC-61, "HOW TO ERASE EMISSION-RELATED DIAGNOSTIC INFORMATION" .
7. Make sure DTC P0000 is displayed.
8. Run engine for at least 10 minutes at idle speed.
   Is the 1st trip DTC P0171 or P0174 detected?
   Is it difficult to start engine?

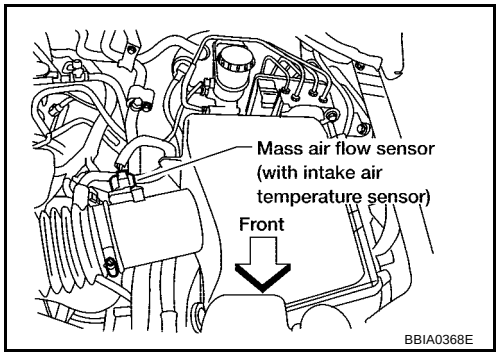

Yes or No

Yes >> Perform trouble diagnosis for DTC P0171 or P0174. Refer to EC-288, "DTC P0171, P0174 FUEL INJECTION SYSTEM FUNCTION" .

No >> GO TO 3.

3. CHECK HO2S2 GROUND CIRCUIT FOR OPEN AND SHORT

1. Turn ignition switch OFF.
2. Disconnect heated oxygen sensor 2 harness connector.

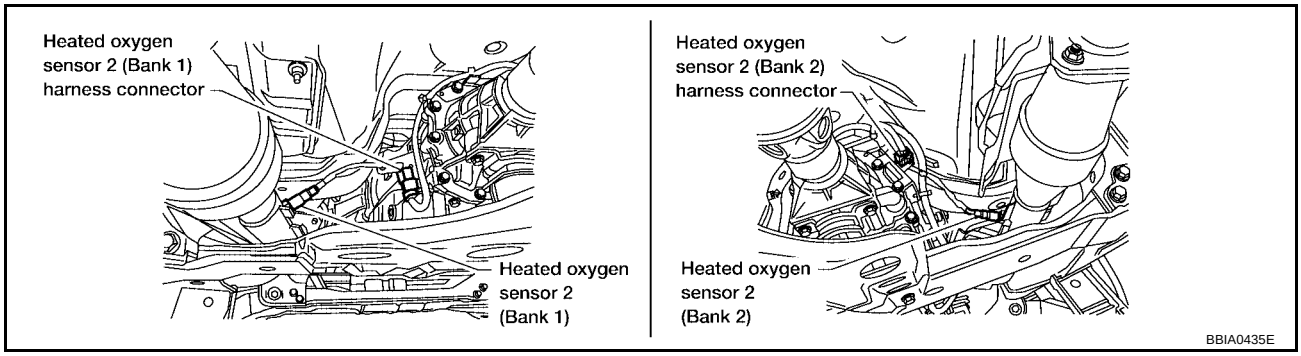

3. Disconnect ECM harness connector.
4. Check harness continuity between ECM terminal 78 and HO2S2 terminal 4.
   Refer to Wiring Diagram.

   Continuity should exist.

5. Also check harness for short to ground and short to power.

OK or NG

OK >> GO TO 4.
NG >> Repair open circuit or short to ground or short to power in harness or connectors.

4. CHECK HO2S2 INPUT SIGNAL CIRCUIT FOR OPEN AND SHORT

1. Check harness continuity between ECM terminal and HO2S2 terminal as follows.
   Refer to Wiring Diagram.

DTC	Terminals		Bank
	ECM	Sensor	
P0137	55	1	1
P0157	74	1	2

   Continuity should exist.

2. Check harness continuity between the following terminals and ground.
   Refer to Wiring Diagram.

DTC	Terminals		Bank
	ECM	Sensor	
P0137	55	1	1
P0157	74	1	2

   Continuity should not exist.

3. Also check harness for short to power.

OK or NG

OK >> GO TO 5.
NG >> Repair open circuit or short to ground or short to power in harness or connectors.

5. CHECK HEATED OXYGEN SENSOR 2

Refer to EC-262, "Component Inspection" .

OK or NG

OK >> GO TO 6.
NG >> Replace malfunctioning heated oxygen sensor 2.

6. CHECK INTERMITTENT INCIDENT

Refer to EC-144, "TROUBLE DIAGNOSIS FOR INTERMITTENT INCIDENT" .

>> **INSPECTION END**

Component Inspection

UBS00H8I

HEATED OXYGEN SENSOR 2

With CONSULT-II

1. Turn ignition switch ON and select “DATA MONITOR” mode with CONSULT-II.
2. Start engine and warm it up to the normal operating temperature.
3. Turn ignition switch OFF and wait at least 10 seconds.
4. Start engine and keep the engine speed between 3,500 and 4,000 rpm for at least 1 minute under no load.
5. Let engine idle for 1 minute.

DATA MONITOR	
MONITOR	NO DTC
ENG SPEED	XXX rpm
COOLAN TEMP/S	XXX °C

SEF174Y

6. Select “FUEL INJECTION” in “ACTIVE TEST” mode, and select “HO2S2 (B1)/(B2)” as the monitor item with CONSULT-II.

ACTIVE TEST	
FUEL INJECTION	25 %
MONITOR	
ENG SPEED	XXX rpm
HO2S2 (B1)	XXX V
HO2S2 (B2)	XXX V

PBIB1672E

7. Check “HO2S2 (B1)/(B2)” at idle speed when adjusting “FUEL INJECTION” to ±25%.

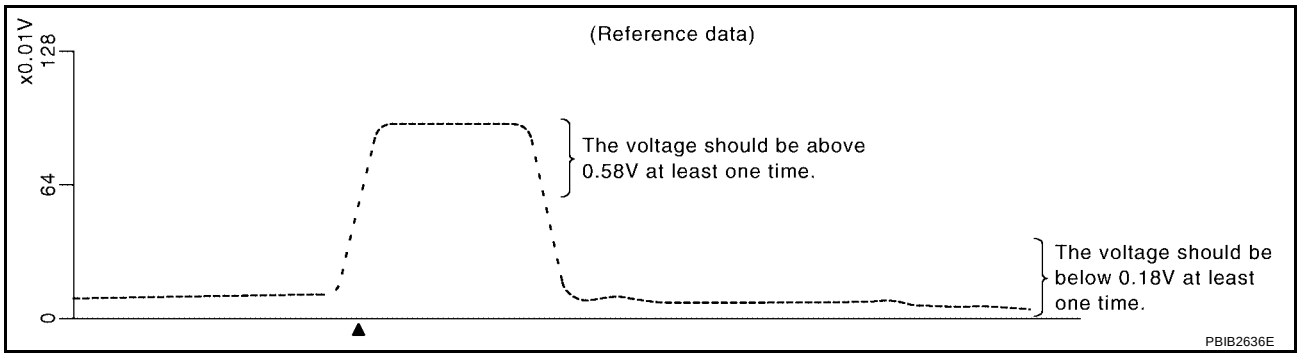

“HO2S2 (B1)/(B2)” should be above 0.58V at least once when the “FUEL INJECTION” is +25%.
“HO2S2 (B1)/(B2)” should be below 0.18V at least once when the “FUEL INJECTION” is –25%.

CAUTION:

- **Discard any heated oxygen sensor which has been dropped from a height of more than 0.5 m (19.7 in) onto a hard surface such as a concrete floor; use a new one.**

- **Before installing new oxygen sensor, clean exhaust system threads using Oxygen Sensor Thread Cleaner tool J-43897-18 or J-43897-12 and approved anti-seize lubricant.**

Without CONSULT-II

1. Start engine and warm it up to the normal operating temperature.
2. Turn ignition switch OFF and wait at least 10 seconds.
3. Start engine and keep the engine speed between 3,500 and 4,000 rpm for at least 1 minute under no load.
4. Let engine idle for 1 minute.
5. Set voltmeter probes between ECM terminal 55 [HO2S2 (B1) signal] or 74 [HO2S2 (B2) signal] and ground.
6. Check the voltage when revving up to 4,000 rpm under no load at least 10 times.
   (Depress and release accelerator pedal as soon as possible.)
   The voltage should be above 0.58V at least once during this procedure.
   If the voltage is above 0.58V at step 6, step 7 is not necessary.
7. Keep vehicle at idling for 10 minutes, then check voltage. Or check the voltage when coasting from 80 km/h (50 MPH) in D position.
   The voltage should be below 0.18V at least once during this procedure.

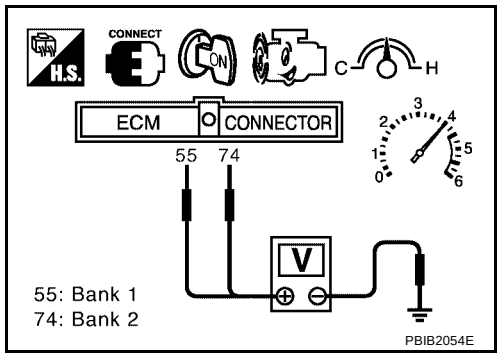

8. If NG, replace heated oxygen sensor 2.

CAUTION:

- **Discard any heated oxygen sensor which has been dropped from a height of more than 0.5 m (19.7 in) onto a hard surface such as a concrete floor; use a new one.**
- **Before installing new oxygen sensor, clean exhaust system threads using Oxygen Sensor Thread Cleaner tool J-43897-18 or J-43897-12 and approved anti-seize lubricant.**

Removal and Installation

UBS00H8J

HEATED OXYGEN SENSOR 2

Refer to EM-21, "EXHAUST MANIFOLD AND THREE WAY CATALYST" .

DTC P0138, P0158 HO2S2

PFP:226A0

Component Description

UBS00N6Y

The heated oxygen sensor 2, after three way catalyst (manifold), monitors the oxygen level in the exhaust gas on each bank.
Even if switching characteristics of the air fuel ratio (A/F) sensor 1 are shifted, the air-fuel ratio is controlled to stoichiometric, by the signal from the heated oxygen sensor 2.
This sensor is made of ceramic zirconia. The zirconia generates voltage from approximately 1V in richer conditions to 0V in leaner conditions.
Under normal conditions the heated oxygen sensor 2 is not used for engine control operation.

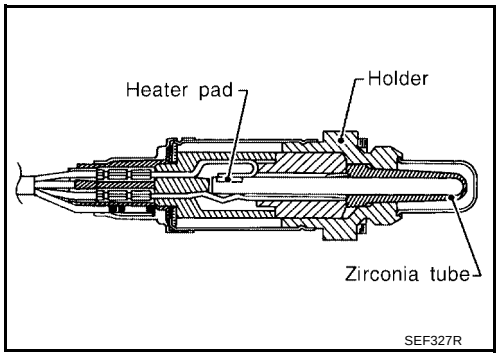

CONSULT-II Reference Value in Data Monitor Mode

UBS00N6Z

Specification data are reference values.

MONITOR ITEM	CONDITION	SPECIFICATION
HO2S2 (B1) HO2S2 (B2)	● Revving engine from idle to 3,000 rpm quickly after the following conditions are met. – Engine: After warming up – Keeping the engine speed between 3,500 and 4,000 rpm for 1 minute and at idle for 1 minute under no load	0 - 0.3V ←→ Approx. 0.6 - 1.0V
HO2S2 MNTR (B1) HO2S2 MNTR (B2)		LEAN ←→ RICH

On Board Diagnosis Logic

UBS00N70

The heated oxygen sensor 2 has a much longer switching time between rich and lean than the air fuel ratio (A/F) sensor 1. The oxygen storage capacity of the three way catalyst (manifold) causes the longer switching time.

MALFUNCTION A

To judge the malfunctions of heated oxygen sensor 2, ECM monitors whether the voltage is unusually high during the various driving condition such as fuel-cut.

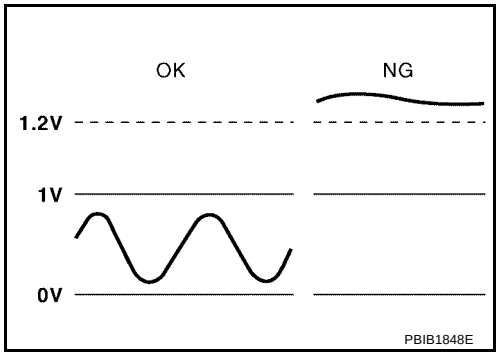

MALFUNCTION B

To judge the malfunctions of heated oxygen sensor 2, ECM monitors whether the minimum voltage of sensor is sufficiently low during the various driving condition such as fuel-cut.

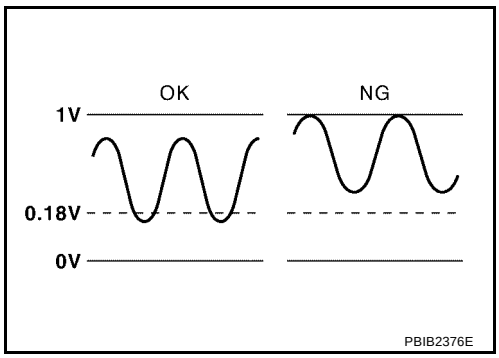

DTC No.	Trouble diagnosis name	DTC detecting condition		Possible cause
P0138 0138 (Bank 1)	Heated oxygen sensor 2 circuit high voltage	A)	An excessively high voltage from the sensor is sent to ECM.	● Harness or connectors (The sensor circuit is open or shorted) ● Heated oxygen sensor 2
P0158 0158 (Bank 2)		B)	The minimum voltage from the sensor is not reached to the specified voltage.	● Harness or connectors (The sensor circuit is open or shorted) ● Heated oxygen sensor 2 ● Fuel pressure ● Fuel injector

DTC Confirmation Procedure

UBS00N71

Perform PROCEDURE FOR MALFUNCTION A first.
If DTC cannot be confirmed, perform PROCEDURE FOR MALFUNCTION B.

NOTE:
If DTC Confirmation Procedure has been previously conducted, always turn ignition switch OFF and wait at least 10 seconds before conducting the next test.

PROCEDURE FOR MALFUNCTION A

With CONSULT-II

1. Turn ignition switch ON and select “DATA MONITOR” mode with CONSULT-II.
2. Start engine and warm it up to the normal operating temperature.
3. Turn ignition switch OFF and wait at least 10 seconds.
4. Start engine and keep the engine speed between 3,500 and 4,000 rpm for at least 1 minute under no load.
5. Let engine idle for 2 minutes.
6. If 1st trip DTC is detected, go to EC-270, "PROCEDURE FOR MALFUNCTION A" .

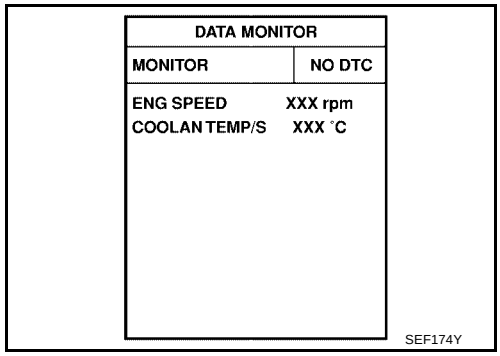

With GST

Follow the procedure “With CONSULT-II” above.

PROCEDURE FOR MALFUNCTION B

With CONSULT-II

TESTING CONDITION:
For better results, perform “DTC WORK SUPPORT” at a temperature of 0 to 30 °C (32 to 86 °F).

1. Turn ignition switch ON and select “DATA MONITOR” mode with CONSULT-II.
2. Start engine and warm it up to the normal operating temperature.
3. Turn ignition switch OFF and wait at least 10 seconds.
4. Start engine and keep the engine speed between 3,500 and 4,000 rpm for at least 1 minute under no load.
5. Let engine idle for 1 minute.
6. Make sure that “COOLAN TEMP/S” indicates more than 70°C (158°F).
   If not, warm up engine and go to next step when “COOLAN TEMP/S” indication reaches to 70°C (158°F).

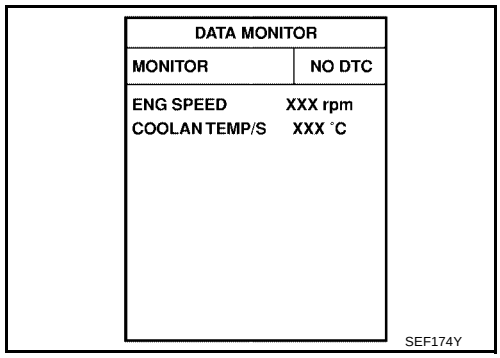

7. Open engine hood.
8. Select “HO2S2 (B1) P1146” (for DTC P0138) or “HO2S2 (B2) P1166” (for DTC P0158) of “HO2S2” in “DTC WORK SUPPORT” mode with CONSULT-II.

9. Start engine and following the instruction of CONSULT-II.

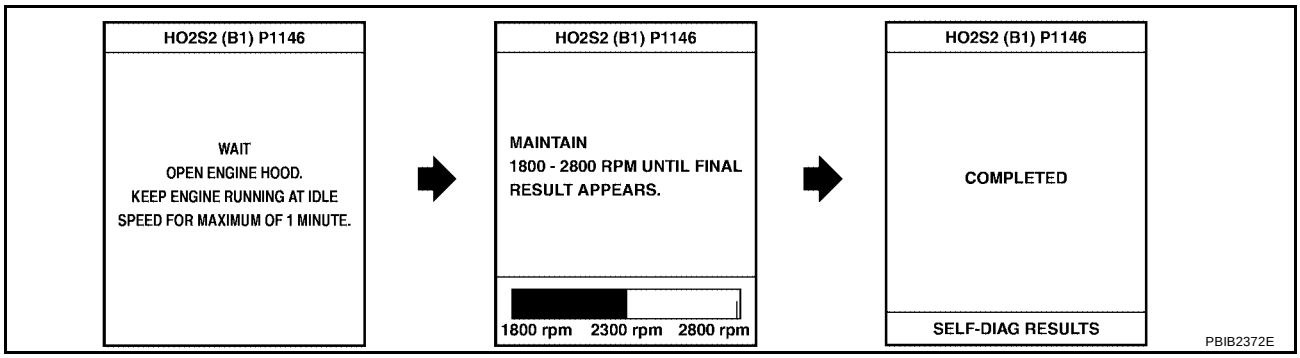

NOTE:
It will take at most 10 minutes until “COMPLETED” is displayed.

10. Make sure that “OK” is displayed after touching “SELF-DIAG RESULTS”.
If “NG” is displayed, refer to EC-272, "PROCEDURE FOR MALFUNCTION B" .
If “CAN NOT BE DIAGNOSED” is displayed, perform the following.

a. Turn ignition switch OFF and leave the vehicle in a cool place (soak the vehicle).

b. Return to step 1.

Overall Function Check

UBS00N72

PROCEDURE FOR MALFUNCTION B

Use this procedure to check the overall function of the heated oxygen sensor 2 circuit. During this check, a 1st trip DTC might not be confirmed.

With GST

1. Start engine and warm it up to the normal operating temperature.
2. Turn ignition switch OFF and wait at least 10 seconds.
3. Start engine and keep the engine speed between 3,500 and 4,000 rpm for at least 1 minute under no load.
4. Let engine idle for 1 minute.
5. Set voltmeter probes between ECM terminal 55 [HO2S2 (B2) signal] or 74 [HO2S2 (B1) signal] and ground.
6. Check the voltage when revving up to 4,000 rpm under no load at least 10 times.
(Depress and release accelerator pedal as soon as possible.)
The voltage should be below 0.18V at least once during this procedure.
If the voltage can be confirmed in step 6, step 7 is not necessary.
7. Keep vehicle at idling for 10 minutes, then check the voltage. Or check the voltage when coasting from 80 km/h (50 MPH) in D position.
The voltage should be below 0.18V at least once during this procedure.

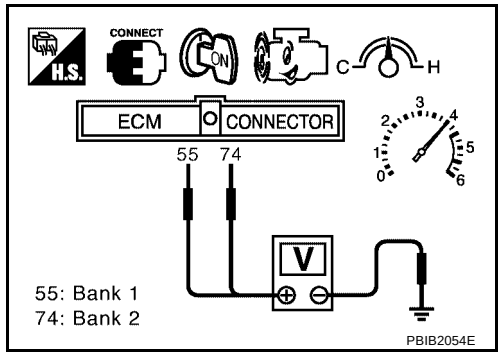

8. If NG, go to EC-272, "PROCEDURE FOR MALFUNCTION B" .

Wiring Diagram
BANK 1

UBS00N73

EC-O2S2B1-01

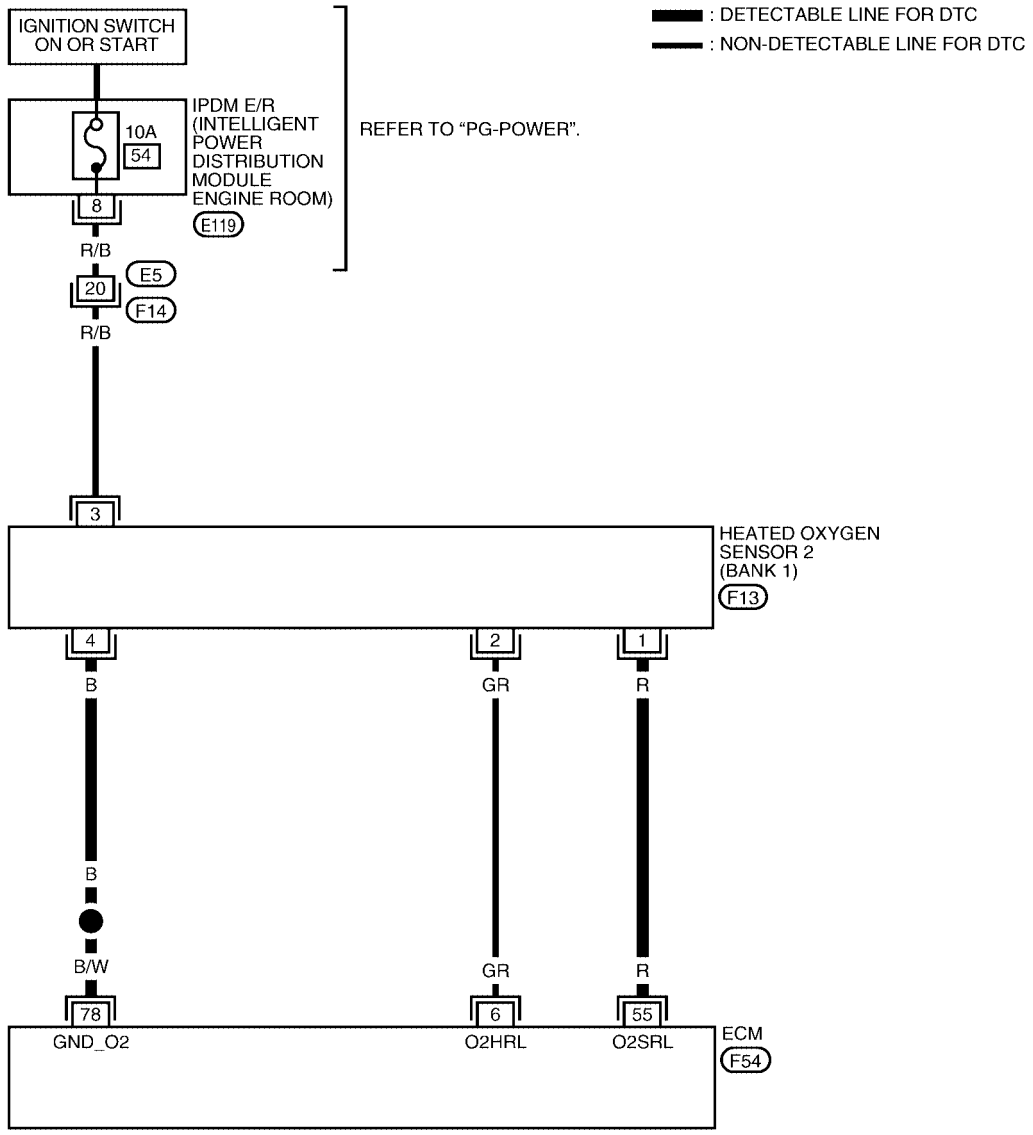

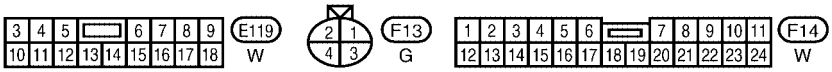

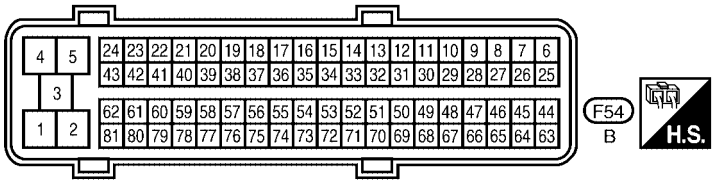

BBWA1678E

Specification data are reference values and are measured between each terminal and ground.

CAUTION:

Do not use ECM ground terminals when measuring input/output voltage. Doing so may result in damage to the ECM's transistor. Use a ground other than ECM terminals, such as the ground.

TERMINAL NO.	WIRE COLOR	ITEM	CONDITION	DATA (DC Voltage)
6	GR	Heated oxygen sensor 2 heater (bank 1)	**[Engine is running]** ● Engine speed: Below 3,600 rpm after the following conditions are met. – Engine: After warming up – Keeping the engine speed between 3,500 and 4,000 rpm for 1 minute and at idle for 1 minute under no load	0 - 1.0V
			[Ignition switch: ON] ● Engine: Stopped **[Engine is running]** ● Engine speed: Above 3,600 rpm.	BATTERY VOLTAGE (11 - 14V)
55	R	Heated oxygen sensor 2 (bank 1)	**[Engine is running]** ● Revving engine from idle to 3,000 rpm quickly after the following conditions are met. – Engine: After warming up – Keeping the engine speed between 3,500 and 4,000 rpm for 1 minute and at idle for 1 minute under no load	0 - Approximately 1.0V
78	B/W	Sensor ground (Heated oxygen sensor 2)	**[Engine is running]** ● **Warm-up condition** ● Idle speed	Approximately 0V

BANK 2

EC-O2S2B2-01

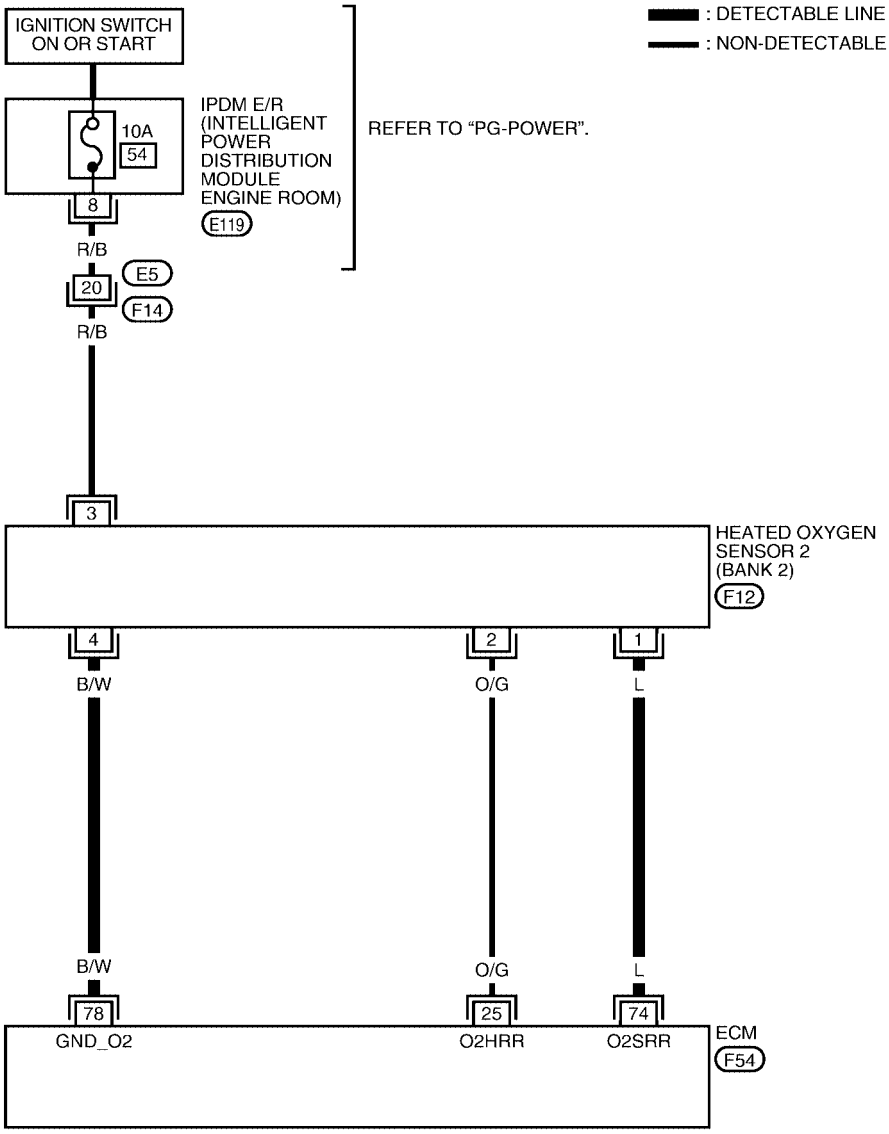

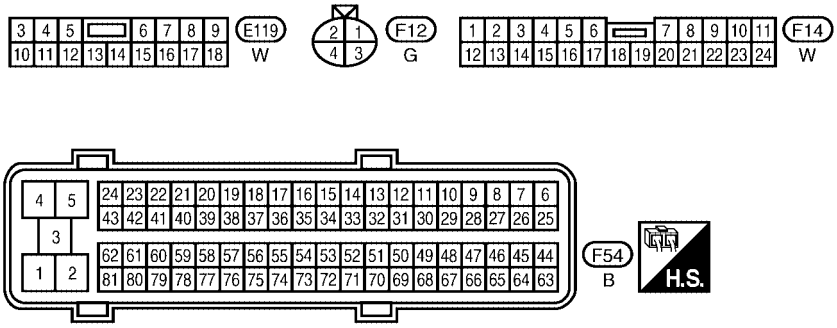

BBWA1679E

Specification data are reference values and are measured between each terminal and ground.

CAUTION:

Do not use ECM ground terminals when measuring input/output voltage. Doing so may result in damage to the ECM's transistor. Use a ground other than ECM terminals, such as the ground.

TERMINAL NO.	WIRE COLOR	ITEM	CONDITION	DATA (DC Voltage)
25	O/G	Heated oxygen sensor 2 heater (bank 2)	**[Engine is running]** ● Engine speed: Below 3,600 rpm after the following conditions are met. – Engine: After warming up – Keeping the engine speed between 3,500 and 4,000 rpm for 1 minute and at idle for 1 minute under no load	0 - 1.0V
			[Ignition switch: ON] ● Engine: Stopped **[Engine is running]** ● Engine speed: Above 3,600 rpm.	BATTERY VOLTAGE (11 - 14V)
74	L	Heated oxygen sensor 2 (bank 2)	**[Engine is running]** ● Revving engine from idle to 3,000 rpm quickly after the following conditions are met. – Engine: After warming up – Keeping the engine speed between 3,500 and 4,000 rpm for 1 minute and at idle for 1 minute under no load	0 - Approximately 1.0V
78	B/W	Sensor ground (Heated oxygen sensor 2)	**[Engine is running]** ● **Warm-up condition** ● Idle speed	Approximately 0V

Diagnostic Procedure

UBS00N74

PROCEDURE FOR MALFUNCTION A

1. CHECK GROUND CONNECTIONS

1. Turn ignition switch OFF.
2. Loosen and retighten two ground screws on the body.
   Refer to EC-150, "Ground Inspection" .

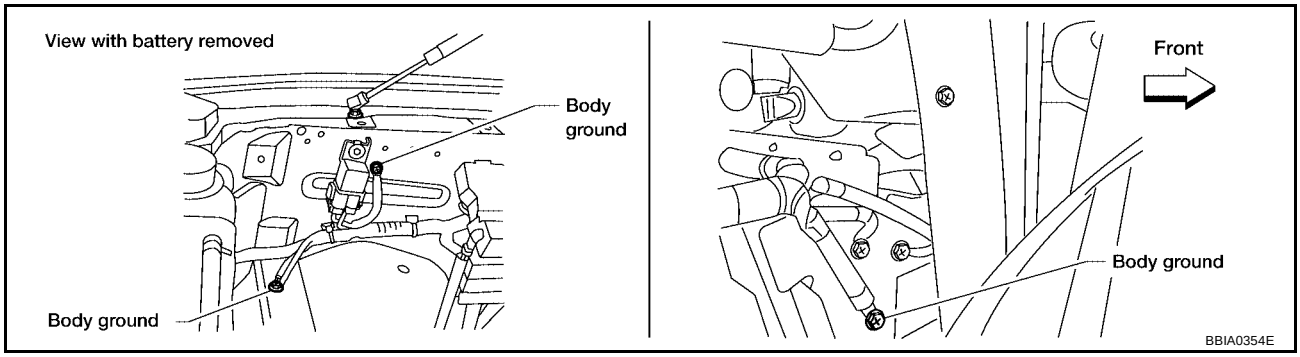

OK or NG

OK >> GO TO 2.
NG >> Repair or replace ground connections.

2. CHECK HO2S2 GROUND CIRCUIT FOR OPEN AND SHORT

1. Disconnect heated oxygen sensor 2 harness connector.

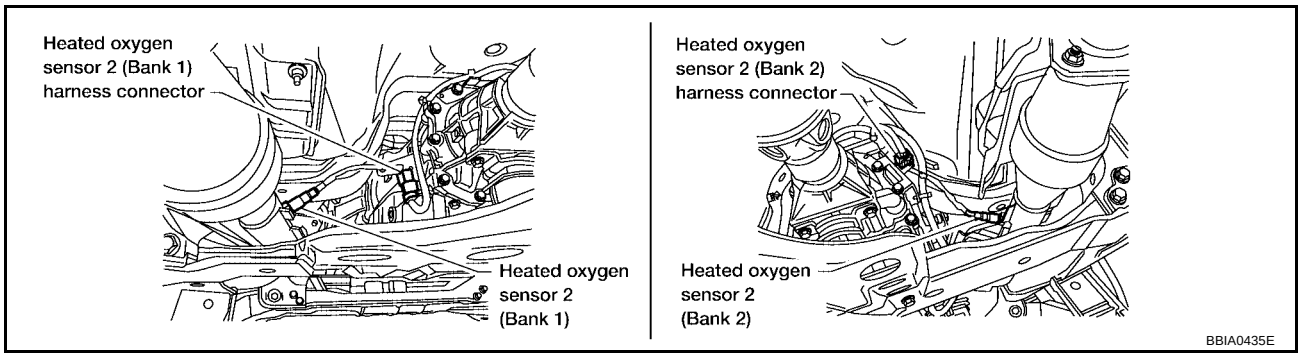

2. Disconnect ECM harness connector.
3. Check harness continuity between ECM terminal 78 and HO2S2 terminal 4.
   Refer to Wiring Diagram.

   Continuity should exist.

4. Also check harness for short to ground and short to power.

OK or NG

OK >> GO TO 3.
NG >> Repair open circuit or short to ground or short to power in harness or connectors.

3. CHECK HO2S2 INPUT SIGNAL CIRCUIT FOR OPEN AND SHORT

1. Check harness continuity between ECM terminal and HO2S2 terminal as follows.
   Refer to Wiring Diagram.

DTC	Terminals		Bank
	ECM	Sensor	
P0138	55	1	1
P0158	74	1	2

   Continuity should exist.

2. Check harness continuity between the following terminals and ground.
   Refer to Wiring Diagram.

DTC	Terminals		Bank
	ECM	Sensor	
P0138	55	1	1
P0158	74	1	2

   Continuity should not exist.

3. Also check harness for short to power.

OK or NG

OK >> GO TO 4.
NG >> Repair open circuit or short to ground or short to power in harness or connectors.

4. CHECK HO2S2 CONNECTOR FOR WATER

Check connectors for water.

Water should not exist.

OK or NG

OK >> GO TO 5.
NG >> Repair or replace harness or connectors.

5. CHECK HEATED OXYGEN SENSOR 2

Refer to EC-275, "Component Inspection" .

OK or NG

OK >> GO TO 6.
NG >> Replace malfunctioning heated oxygen sensor 2.

6. CHECK INTERMITTENT INCIDENT

Refer to EC-144, "TROUBLE DIAGNOSIS FOR INTERMITTENT INCIDENT" .

>> **INSPECTION END**

PROCEDURE FOR MALFUNCTION B

1. CHECK GROUND CONNECTIONS

1. Turn ignition switch OFF.
2. Loosen and retighten two ground screws on the body.
   Refer to EC-150, "Ground Inspection" .

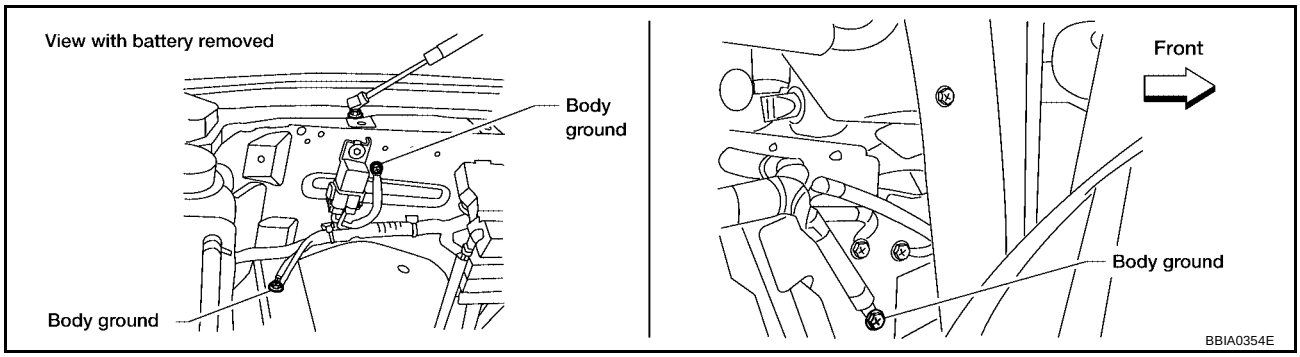

OK or NG

OK >> GO TO 2.
NG >> Repair or replace ground connections.

2. CLEAR THE SELF-LEARNING DATA

With CONSULT-II

1. Start engine and warm it up to normal operating temperature.
2. Select “SELF-LEARNING CONT” in “WORK SUPPORT” mode with CONSULT-II.
3. Clear the self-learning control coefficient by touching “CLEAR”.
4. Run engine for at least 10 minutes at idle speed.
   Is the 1st trip DTC P0172 or P0175 detected?
   Is it difficult to start engine?

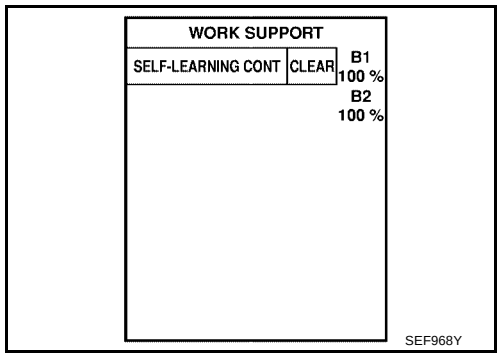

Without CONSULT-II

1. Start engine and warm it up to normal operating temperature.
2. Turn ignition switch OFF.
3. Disconnect mass air flow sensor harness connector, and restart and run engine for at least 5 seconds at idle speed.
4. Stop engine and reconnect mass air flow sensor harness connector.
5. Make sure DTC P0102 is displayed.
6. Erase the DTC memory. Refer to EC-61, "HOW TO ERASE EMISSION-RELATED DIAGNOSTIC INFORMATION" .
7. Make sure DTC P0000 is displayed.
8. Run engine for at least 10 minutes at idle speed.
   Is the 1st trip DTC P0172 or P0175 detected?
   Is it difficult to start engine?

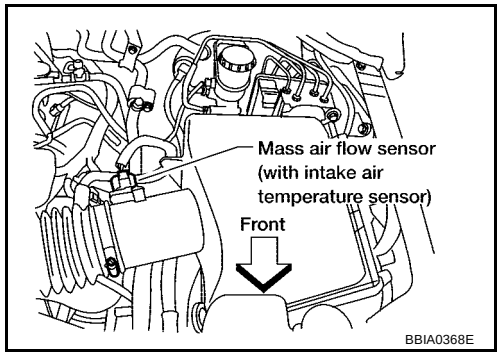

Yes or No

Yes >> Perform trouble diagnosis for DTC P0172, P0175. Refer to EC-299, "DTC P0172, P0175 FUEL INJECTION SYSTEM FUNCTION" .

No >> GO TO 3.

3. CHECK HO2S2 GROUND CIRCUIT FOR OPEN AND SHORT

1. Turn ignition switch OFF.
2. Disconnect heated oxygen sensor 2 harness connector.

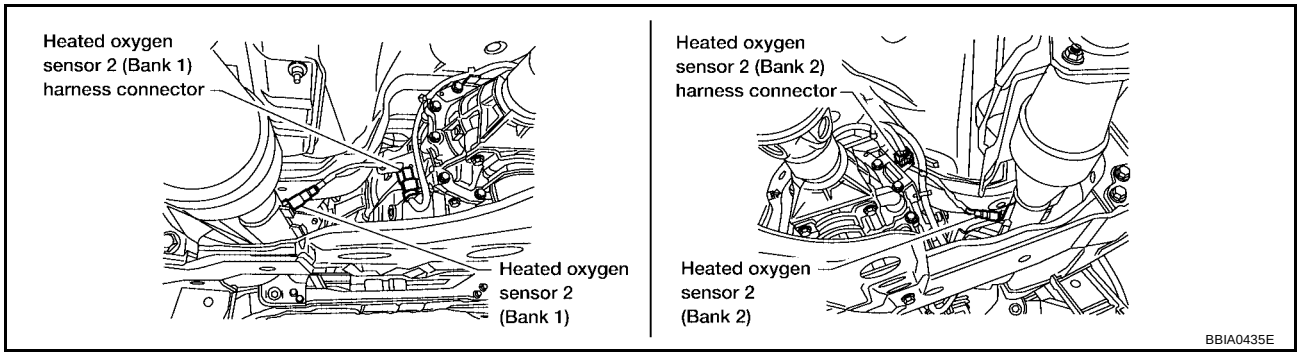

3. Disconnect ECM harness connector.
4. Check harness continuity between ECM terminal 78 and HO2S2 terminal 4.
   Refer to Wiring Diagram.

   Continuity should exist.

5. Also check harness for short to ground and short to power.

OK or NG

OK >> GO TO 4.
NG >> Repair open circuit or short to ground or short to power in harness or connectors.

4. CHECK HO2S2 INPUT SIGNAL CIRCUIT FOR OPEN AND SHORT

1. Check harness continuity between ECM terminal and HO2S2 terminal as follows.
   Refer to Wiring Diagram.

DTC	Terminals		Bank
	ECM	Sensor	
P0138	55	1	1
P0158	74	1	2

   Continuity should exist.

2. Check harness continuity between the following terminals and ground.
   Refer to Wiring Diagram.

DTC	Terminals		Bank
	ECM	Sensor	
P0138	55	1	1
P0158	74	1	2

   Continuity should not exist.

3. Also check harness for short to power.

OK or NG

OK >> GO TO 5.
NG >> Repair open circuit or short to ground or short to power in harness or connectors.

5. CHECK HEATED OXYGEN SENSOR 2

Refer to EC-275, "Component Inspection" .

OK or NG

OK >> GO TO 6.
NG >> Replace malfunctioning heated oxygen sensor 2.

6. CHECK INTERMITTENT INCIDENT

Refer to EC-144, "TROUBLE DIAGNOSIS FOR INTERMITTENT INCIDENT" .

>> **INSPECTION END**

Component Inspection

UBS00N75

HEATED OXYGEN SENSOR 2

With CONSULT-II

1. Turn ignition switch ON and select “DATA MONITOR” mode with CONSULT-II.
2. Start engine and warm it up to the normal operating temperature.
3. Turn ignition switch OFF and wait at least 10 seconds.
4. Start engine and keep the engine speed between 3,500 and 4,000 rpm for at least 1 minute under no load.
5. Let engine idle for 1 minute.

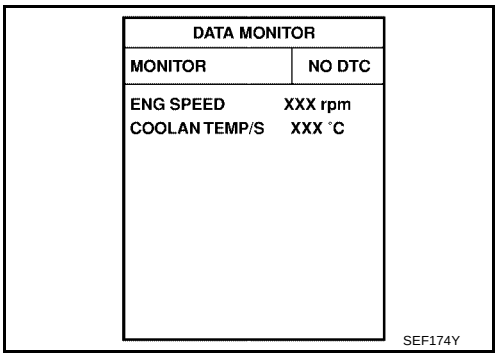

6. Select “FUEL INJECTION” in “ACTIVE TEST” mode, and select “HO2S2 (B1)/(B2)” as the monitor item with CONSULT-II.

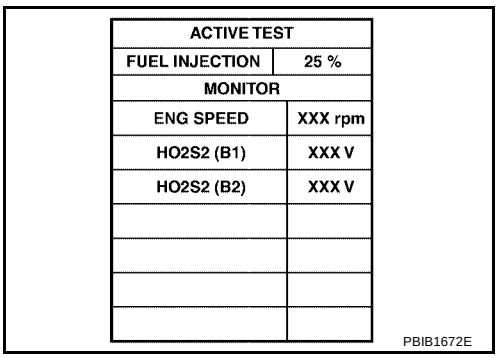

7. Check “HO2S2 (B1)/(B2)” at idle speed when adjusting “FUEL INJECTION” to ±25%.

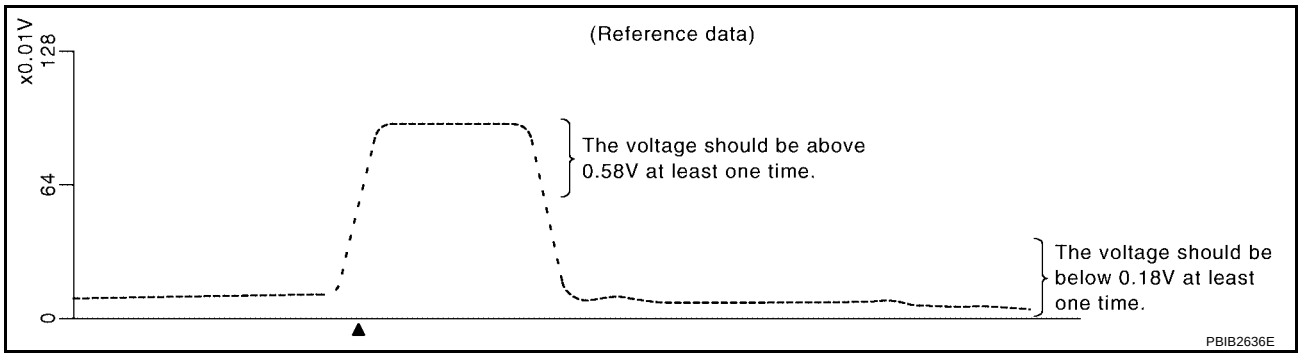

“HO2S2 (B1)/(B2)” should be above 0.58V at least once when the “FUEL INJECTION” is +25%.
“HO2S2 (B1)/(B2)” should be below 0.18V at least once when the “FUEL INJECTION” is –25%.

CAUTION:

- **Discard any heated oxygen sensor which has been dropped from a height of more than 0.5 m (19.7 in) onto a hard surface such as a concrete floor; use a new one.**

- **Before installing new oxygen sensor, clean exhaust system threads using Oxygen Sensor Thread Cleaner tool J-43897-18 or J-43897-12 and approved anti-seize lubricant.**

Without CONSULT-II

1. Start engine and warm it up to the normal operating temperature.
2. Turn ignition switch OFF and wait at least 10 seconds.
3. Start engine and keep the engine speed between 3,500 and 4,000 rpm for at least 1 minute under no load.
4. Let engine idle for 1 minute.
5. Set voltmeter probes between ECM terminal 55 [HO2S2 (B2) signal] or 74 [HO2S2 (B1) signal] and ground.
6. Check the voltage when revving up to 4,000 rpm under no load at least 10 times.
   (Depress and release accelerator pedal as soon as possible.)
   The voltage should be above 0.58V at least once during this procedure.
   If the voltage is above 0.58V at step 6, step 7 is not necessary.
7. Keep vehicle at idling for 10 minutes, then check voltage. Or check the voltage when coasting from 80 km/h (50 MPH) in D position.
   The voltage should be below 0.18V at least once during this procedure.
8. If NG, replace heated oxygen sensor 2.

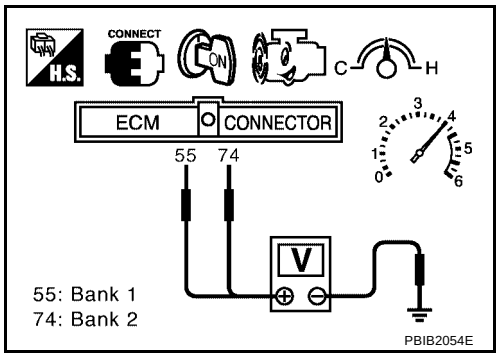

CAUTION:

- **Discard any heated oxygen sensor which has been dropped from a height of more than 0.5 m (19.7 in) onto a hard surface such as a concrete floor; use a new one.**
- **Before installing new oxygen sensor, clean exhaust system threads (using Oxygen Sensor Thread Cleaner tool J-43897-18 or J-43897-12) and approved anti-seize lubricant.**

Removal and Installation

UBS00N76

HEATED OXYGEN SENSOR 2

Refer to EM-21, "EXHAUST MANIFOLD AND THREE WAY CATALYST" .

DTC P0139, P0159 HO2S2

PFP:226A0

Component Description

UBS00H2N

The heated oxygen sensor 2, after three way catalyst (manifold), monitors the oxygen level in the exhaust gas on each bank.
Even if switching characteristics of the air fuel ratio (A/F) sensor 1 are shifted, the air-fuel ratio is controlled to stoichiometric, by the signal from the heated oxygen sensor 2.
This sensor is made of ceramic zirconia. The zirconia generates voltage from approximately 1V in richer conditions to 0V in leaner conditions.
Under normal conditions the heated oxygen sensor 2 is not used for engine control operation.

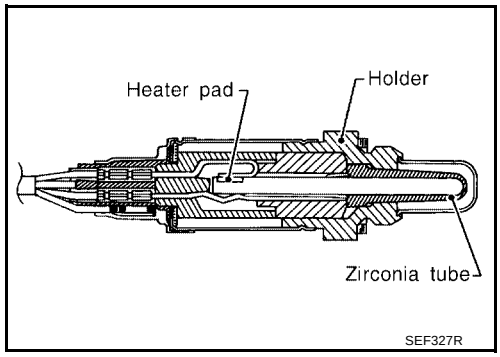

CONSULT-II Reference Value in Data Monitor Mode

UBS00H2O

Specification data are reference values.

MONITOR ITEM	CONDITION	SPECIFICATION
HO2S2 (B1) HO2S2 (B2)	● Revving engine from idle to 3,000 rpm quickly after the following conditions are met. – Engine: After warming up – Keeping the engine speed between 3,500 and 4,000 rpm for 1 minute and at idle for 1 minute under no load	0 - 0.3V ←→ Approx. 0.6 - 1.0V
HO2S2 MNTR (B1) HO2S2 MNTR (B2)		LEAN ←→ RICH

On Board Diagnosis Logic

UBS00H2P

The heated oxygen sensor 2 has a much longer switching time between rich and lean than the air fuel ratio (A/F) sensor 1. The oxygen storage capacity of the three way catalyst (manifold) causes the longer switching time. To judge the malfunctions of heated oxygen sensor 2, ECM monitors whether the switching response of the sensor's voltage is faster than specified during the various driving condition such as fuel-cut.

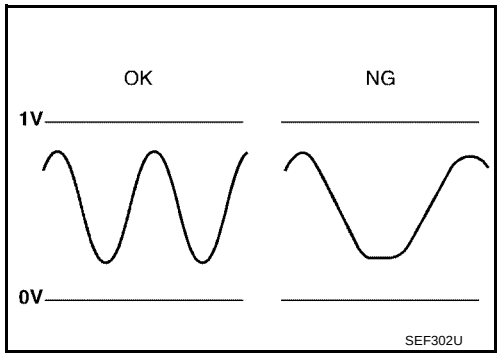

DTC No.	Trouble diagnosis name	DTC detecting condition	Possible cause
P0139 0139 (Bank 1)	Heated oxygen sensor 2 circuit slow response	It takes more time for the sensor to respond between rich and lean than the specified time.	● Harness or connectors (The sensor circuit is open or shorted) ● Heated oxygen sensor 2 ● Fuel pressure ● Fuel injector ● Intake air leaks
P0159 0159 (Bank 2)			

DTC Confirmation Procedure

UBS00H2Q

NOTE:
If DTC Confirmation Procedure has been previously conducted, always turn ignition switch OFF and wait at least 10 seconds before conducting the next test.

WITH CONSULT-II

TESTING CONDITION:
For better results, perform "DTC WORK SUPPORT" at a temperature of 0 to 30 °C (32 to 86 °F).

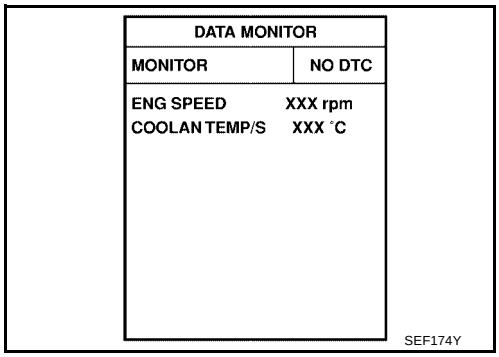

1. Turn ignition switch ON and select "DATA MONITOR" mode with CONSULT-II.
2. Start engine and warm it up to the normal operating temperature.
3. Turn ignition switch OFF and wait at least 10 seconds.
4. Start engine and keep the engine speed between 3,500 and 4,000 rpm for at least 1 minute under no load.
5. Let engine idle for 1 minute.
6. Make sure that "COOLAN TEMP/S" indicates more than 70°C (158°F).
   If not, warm up engine and go to next step when "COOLAN TEMP/S" indication reaches to 70°C (158°F).
7. Open engine hood.
8. Select "HO2S2 (B1) P0139" or "HO2S2 (B2) P0159" of "HO2S2" in "DTC WORK SUPPORT" mode with CONSULT-II.
9. Start engine and following the instruction of CONSULT-II.

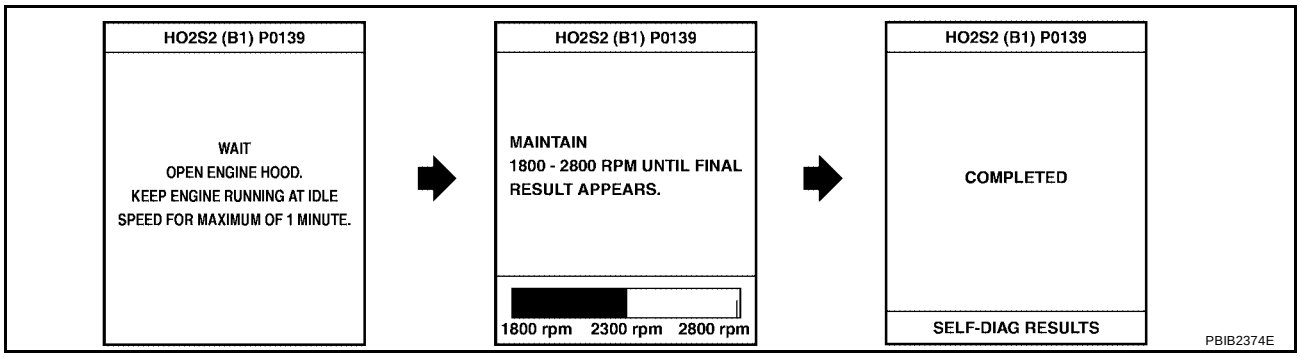

NOTE:
It will take at most 10 minutes until "COMPLETED" is displayed.

10. Make sure that "OK" is displayed after touching "SELF-DIAG RESULTS".
    If "NG" is displayed, refer to EC-283, "Diagnostic Procedure" .
    If "CAN NOT BE DIAGNOSED" is displayed, perform the following.

a. Turn ignition switch OFF and leave the vehicle in a cool place (soak the vehicle).
b. Return to step 1.

Overall Function Check

UBS00H2R

Use this procedure to check the overall function of the heated oxygen sensor 2 circuit. During this check, a 1st trip DTC might not be confirmed.

WITH GST

1. Start engine and warm it up to the normal operating temperature.
2. Turn ignition switch OFF and wait at least 10 seconds.
3. Start engine and keep the engine speed between 3,500 and 4,000 rpm for at least 1 minute under no load.
4. Let engine idle for 1 minute.
5. Set voltmeter probes between ECM terminal 55 [HO2S2 (B1) signal] or 74 [HO2S2 (B2) signal] and ground.

6. Check the voltage when revving up to 4,000 rpm under no load at least 10 times.
   (Depress and release accelerator pedal as soon as possible.)
   A change of voltage should be more than 0.06V for 1 second during this procedure.
   If the voltage can be confirmed in step 6, step 7 is not necessary.
7. Keep vehicle at idling for 10 minutes, then check the voltage. Or check the voltage when coasting from 80 km/h (50 MPH) in D position.
   A change of voltage should be more than 0.06V for 1 second during this procedure.
8. If NG, go to EC-283, "Diagnostic Procedure" .

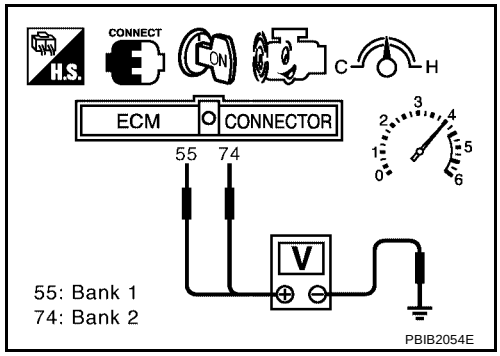

Wiring Diagram
BANK 1

UBS00H2S

EC-O2S2B1-01

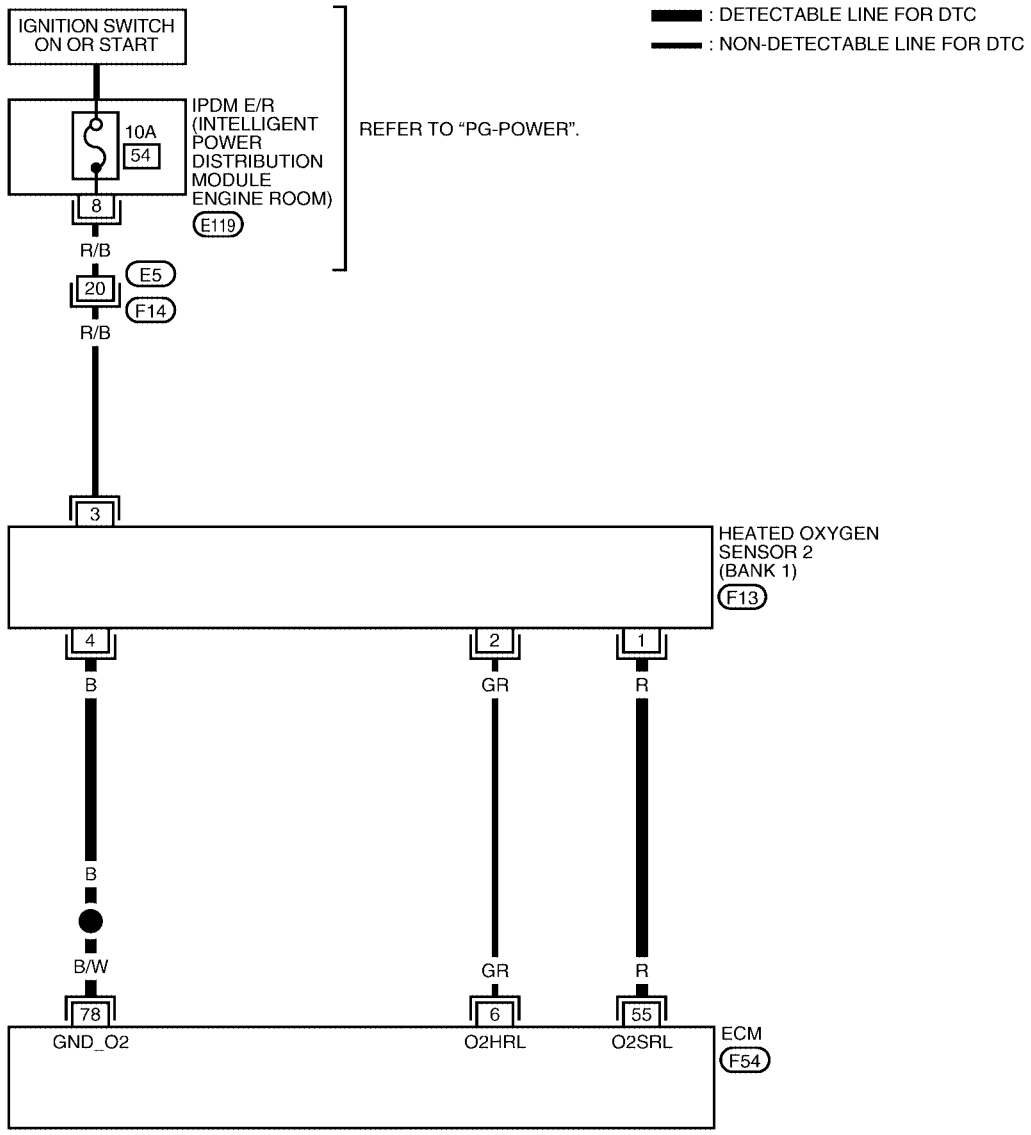

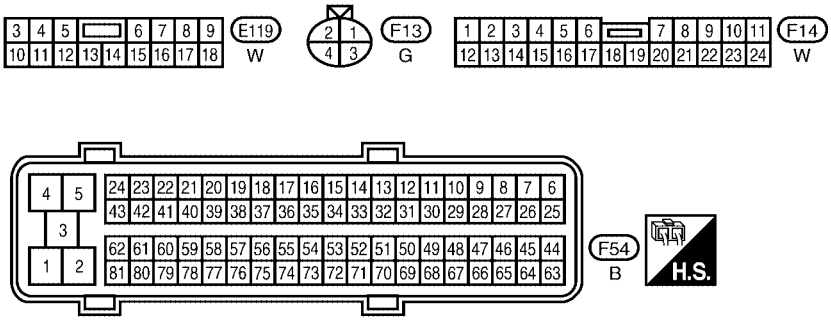

BBWA1678E

Specification data are reference values and are measured between each terminal and ground.

CAUTION:

Do not use ECM ground terminals when measuring input/output voltage. Doing so may result in damage to the ECM's transistor. Use a ground other than ECM terminals, such as the ground.

TERMINAL NO.	WIRE COLOR	ITEM	CONDITION	DATA (DC Voltage)
6	GR	Heated oxygen sensor 2 heater (bank 1)	**[Engine is running]** ● Engine speed: Below 3,600 rpm after the following conditions are met. – Engine: After warming up – Keeping the engine speed between 3,500 and 4,000 rpm for 1 minute and at idle for 1 minute under no load	0 - 1.0V
			[Ignition switch: ON] ● Engine: Stopped **[Engine is running]** ● Engine speed: Above 3,600 rpm.	BATTERY VOLTAGE (11 - 14V)
55	R	Heated oxygen sensor 2 (bank 1)	**[Engine is running]** ● Revving engine from idle to 3,000 rpm quickly after the following conditions are met. – Engine: After warming up – Keeping the engine speed between 3,500 and 4,000 rpm for 1 minute and at idle for 1 minute under no load	0 - Approximately 1.0V
78	B/W	Sensor ground (Heated oxygen sensor 2)	**[Engine is running]** ● **Warm-up condition** ● Idle speed	Approximately 0V

BANK 2

EC-O2S2B2-01

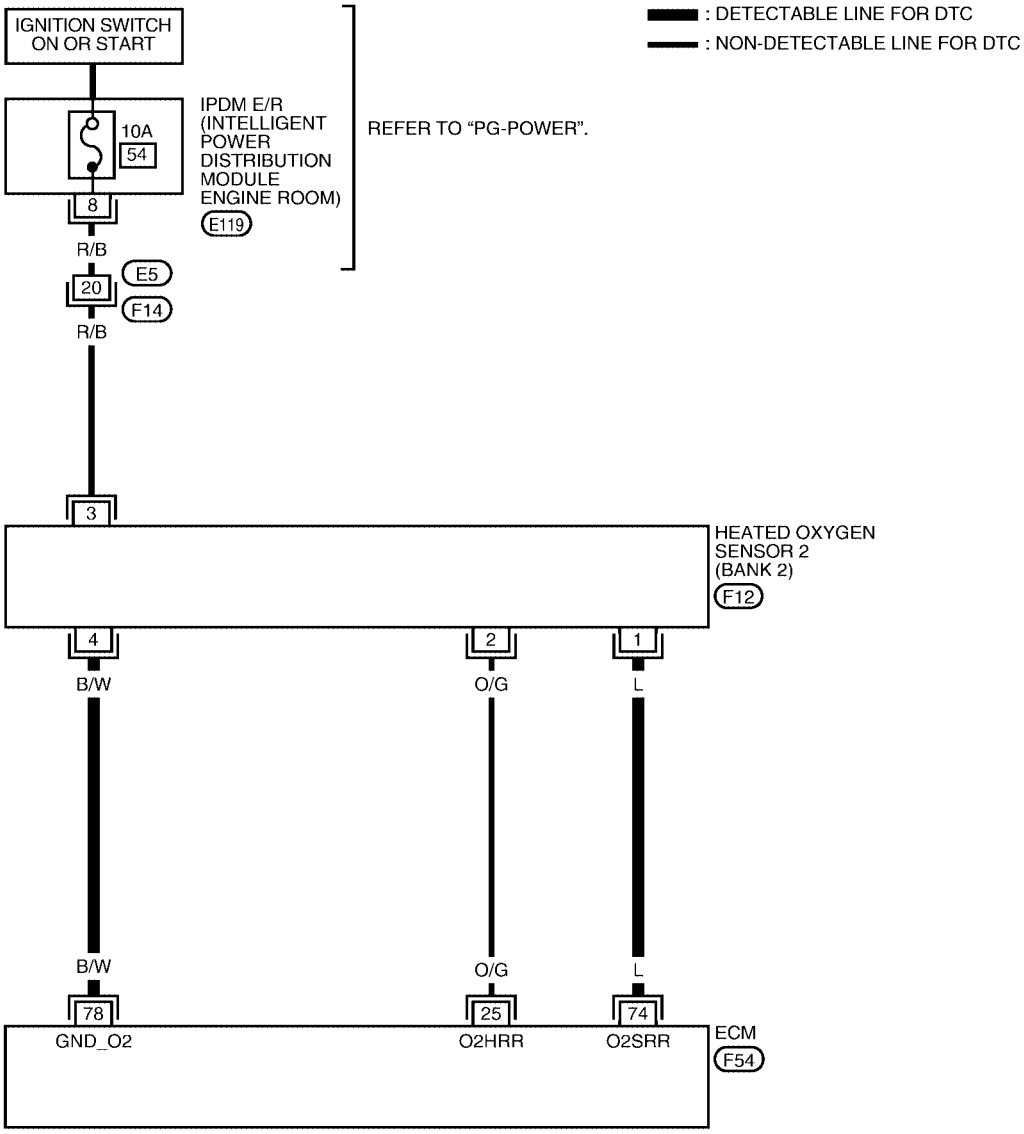

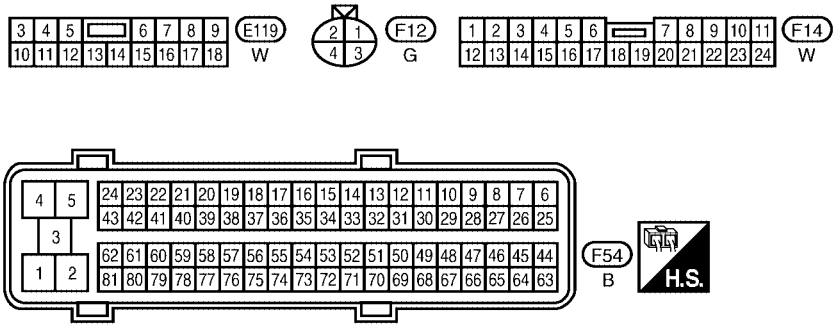

BBWA1679E

Specification data are reference values and are measured between each terminal and ground.

CAUTION:

Do not use ECM ground terminals when measuring input/output voltage. Doing so may result in damage to the ECM's transistor. Use a ground other than ECM terminals, such as the ground.

TERMINAL NO.	WIRE COLOR	ITEM	CONDITION	DATA (DC Voltage)
25	O/G	Heated oxygen sensor 2 heater (bank 2)	**[Engine is running]** ● Engine speed: Below 3,600 rpm after the following conditions are met. – Engine: After warming up – Keeping the engine speed between 3,500 and 4,000 rpm for 1 minute and at idle for 1 minute under no load	0 - 1.0V
			[Ignition switch: ON] ● Engine: Stopped **[Engine is running]** ● Engine speed: Above 3,600 rpm.	BATTERY VOLTAGE (11 - 14V)
74	L	Heated oxygen sensor 2 (bank 2)	**[Engine is running]** ● Revving engine from idle to 3,000 rpm quickly after the following conditions are met. – Engine: After warming up – Keeping the engine speed between 3,500 and 4,000 rpm for 1 minute and at idle for 1 minute under no load	0 - Approximately 1.0V
78	B/W	Sensor ground (Heated oxygen sensor 2)	**[Engine is running]** ● **Warm-up condition** ● Idle speed	Approximately 0V

Diagnostic Procedure

UBS00H2T

1. CHECK GROUND CONNECTIONS

1. Turn ignition switch OFF.
2. Loosen and retighten three ground screws on the body.
   Refer to EC-150, "Ground Inspection" .

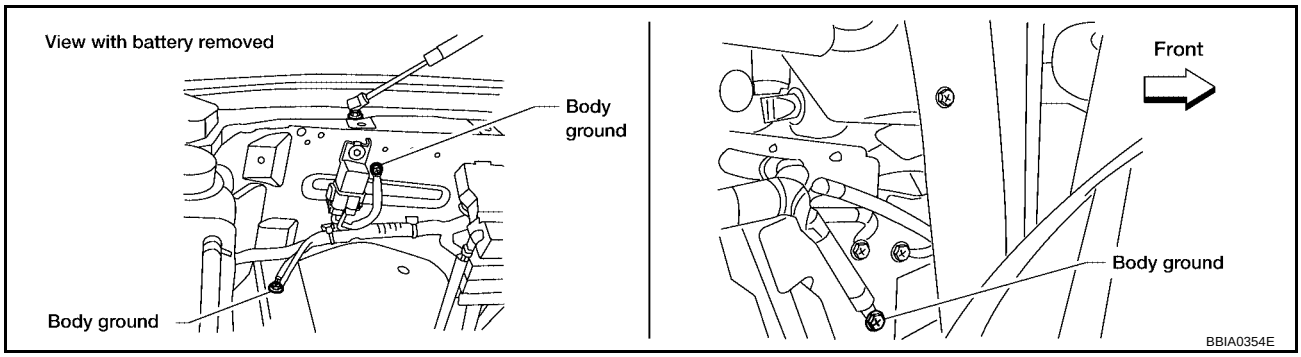

OK or NG

OK >> GO TO 2.
NG >> Repair or replace ground connections.

2. CLEAR THE SELF-LEARNING DATA

With CONSULT-II

1. Start engine and warm it up to normal operating temperature.
2. Select “SELF-LEARNING CONT” in “WORK SUPPORT” mode with CONSULT-II.
3. Clear the self-learning control coefficient by touching “CLEAR”.
4. Run engine for at least 10 minutes at idle speed.
   Is the 1st trip DTC P0171, P0172, P0174 or P0175 detected? Is it difficult to start engine?

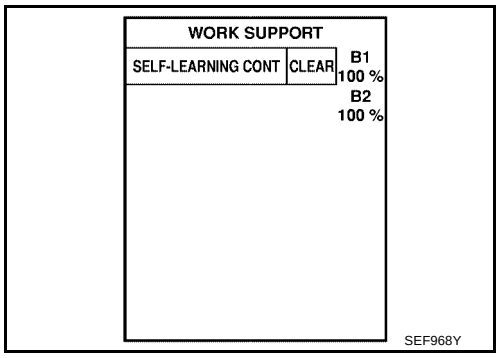

Without CONSULT-II

1. Start engine and warm it up to normal operating temperature.
2. Turn ignition switch OFF.
3. Disconnect mass air flow sensor harness connector, and restart and run engine for at least 5 seconds at idle speed.
4. Stop engine and reconnect mass air flow sensor harness connector.
5. Make sure DTC P0102 is displayed.
6. Erase the DTC memory. Refer to EC-61, "HOW TO ERASE EMISSION-RELATED DIAGNOSTIC INFORMATION" .
7. Make sure DTC P0000 is displayed.
8. Run engine for at least 10 minutes at idle speed.
   Is the 1st trip DTC P0171, P0172, P0174 or P0175 detected? Is it difficult to start engine?

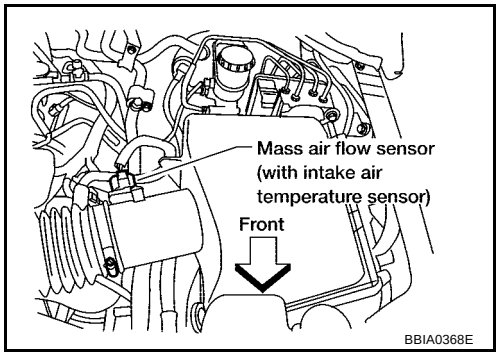

Yes or No

Yes >> Perform trouble diagnosis for DTC P0171, P0174 or P0172, P0175. Refer to EC-288, "DTC P0171, P0174 FUEL INJECTION SYSTEM FUNCTION" or EC-299, "DTC P0172, P0175 FUEL INJECTION SYSTEM FUNCTION" .

No >> GO TO 3.

3. CHECK HO2S2 GROUND CIRCUIT FOR OPEN AND SHORT

1. Turn ignition switch OFF.
2. Disconnect heated oxygen sensor 2 harness connector.

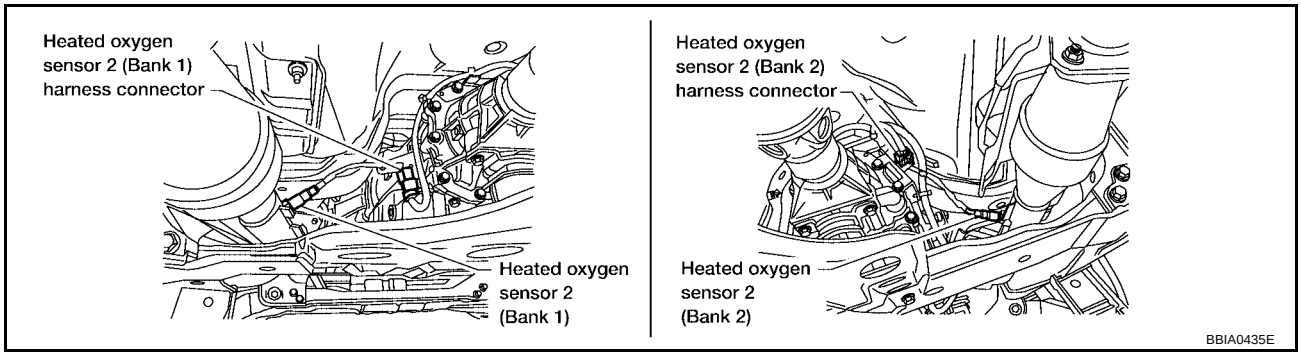

3. Disconnect ECM harness connector.
4. Check harness continuity between ECM terminal 78 and HO2S2 terminal 4.
   Refer to Wiring Diagram.

   Continuity should exist.

5. Also check harness for short to ground and short to power.

OK or NG

OK >> GO TO 4.
NG >> Repair open circuit or short to ground or short to power in harness or connectors.

4. CHECK HO2S2 INPUT SIGNAL CIRCUIT FOR OPEN AND SHORT

1. Check harness continuity between ECM terminal and HO2S2 terminal as follows.
   Refer to Wiring Diagram.

DTC	Terminals		Bank
	ECM	Sensor	
P0139	55	1	1
P0159	74	1	2

   Continuity should exist.

2. Check harness continuity between the following terminals and ground.
   Refer to Wiring Diagram.

DTC	Terminals		Bank
	ECM	Sensor	
P0139	55	1	1
P0159	74	1	2

   Continuity should not exist.

3. Also check harness for short to power.

OK or NG

OK >> GO TO 5.
NG >> Repair open circuit or short to ground or short to power in harness or connectors.

5. CHECK HEATED OXYGEN SENSOR 2

Refer to EC-286, "Component Inspection" .

OK or NG

OK >> GO TO 6.
NG >> Replace malfunctioning heated oxygen sensor 2.

6. CHECK INTERMITTENT INCIDENT

Refer to EC-144, "TROUBLE DIAGNOSIS FOR INTERMITTENT INCIDENT" .

>> **INSPECTION END**

Component Inspection

UBS00H2U

HEATED OXYGEN SENSOR 2

With CONSULT-II

1. Turn ignition switch ON and select “DATA MONITOR” mode with CONSULT-II.
2. Start engine and warm it up to the normal operating temperature.
3. Turn ignition switch OFF and wait at least 10 seconds.
4. Start engine and keep the engine speed between 3,500 and 4,000 rpm for at least 1 minute under no load.
5. Let engine idle for 1 minute.

DATA MONITOR	
MONITOR	NO DTC
ENG SPEED	XXX rpm
COOLAN TEMP/S	XXX °C

SEF174Y

6. Select “FUEL INJECTION” in “ACTIVE TEST” mode, and select “HO2S2 (B1)/(B2)” as the monitor item with CONSULT-II.

ACTIVE TEST	
FUEL INJECTION	25 %
MONITOR	
ENG SPEED	XXX rpm
HO2S2 (B1)	XXX V
HO2S2 (B2)	XXX V

PBIB1672E

7. Check “HO2S2 (B1)/(B2)” at idle speed when adjusting “FUEL INJECTION” to ±25%.

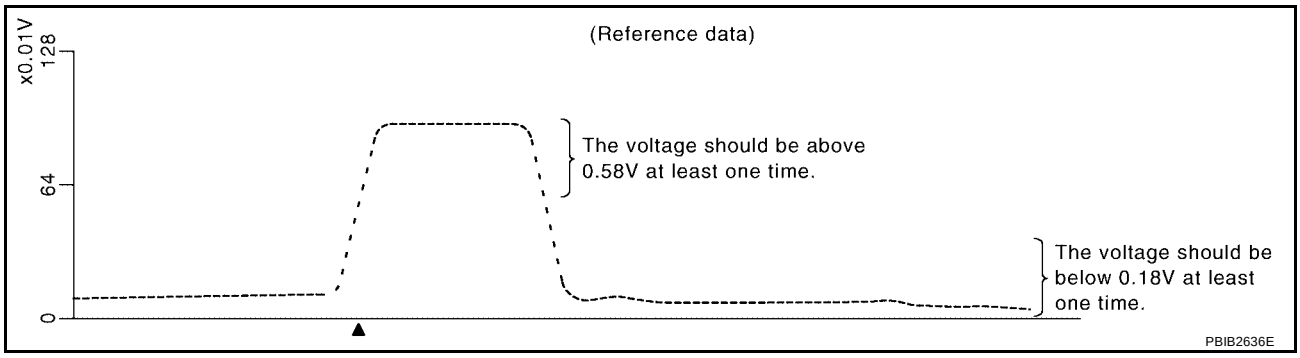

“HO2S2 (B1)/(B2)” should be above 0.58V at least once when the “FUEL INJECTION” is +25%.
“HO2S2 (B1)/(B2)” should be below 0.18V at least once when the “FUEL INJECTION” is –25%.

CAUTION:

- **Discard any heated oxygen sensor which has been dropped from a height of more than 0.5 m (19.7 in) onto a hard surface such as a concrete floor; use a new one.**

- **Before installing new oxygen sensor, clean exhaust system threads using Oxygen Sensor Thread Cleaner tool J-43897-18 or J-43897-12 and approved anti-seize lubricant.**

Without CONSULT-II

1. Start engine and warm it up to the normal operating temperature.
2. Turn ignition switch OFF and wait at least 10 seconds.
3. Start engine and keep the engine speed between 3,500 and 4,000 rpm for at least 1 minute under no load.
4. Let engine idle for 1 minute.
5. Set voltmeter probes between ECM terminal 55 [HO2S2 (B1) signal] or 74 [HO2S2 (B2) signal] and ground.
6. Check the voltage when revving up to 4,000 rpm under no load at least 10 times.
   (Depress and release accelerator pedal as soon as possible.)
   The voltage should be above 0.58V at least once during this procedure.
   If the voltage is above 0.58V at step 6, step 7 is not necessary.
7. Keep vehicle at idling for 10 minutes, then check voltage. Or check the voltage when coasting from 80 km/h (50 MPH) in D position.
   The voltage should be below 0.18V at least once during this procedure.

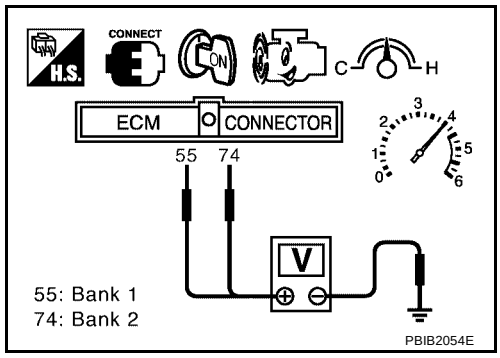

8. If NG, replace heated oxygen sensor 2.

CAUTION:

- **Discard any heated oxygen sensor which has been dropped from a height of more than 0.5 m (19.7 in) onto a hard surface such as a concrete floor; use a new one.**
- **Before installing new oxygen sensor, clean exhaust system threads using Oxygen Sensor Thread Cleaner tool J-43897-18 or J-43897-12 and approved anti-seize lubricant.**

Removal and Installation

UBS00H2V

HEATED OXYGEN SENSOR 2

Refer to EM-21, "EXHAUST MANIFOLD AND THREE WAY CATALYST" .

DTC P0171, P0174 FUEL INJECTION SYSTEM FUNCTION

PFP:16600

On Board Diagnosis Logic

UBS00L0L

With the Air/Fuel Mixture Ratio Self-Learning Control, the actual mixture ratio can be brought closely to the theoretical mixture ratio based on the mixture ratio feedback signal from the A/F sensors 1. The ECM calculates the necessary compensation to correct the offset between the actual and the theoretical ratios.
In case the amount of the compensation value is extremely large (The actual mixture ratio is too lean.), the ECM judges the condition as the fuel injection system malfunction and lights up the MIL (2 trip detection logic).

Sensor	Input signal to ECM	ECM function	Actuator
A/F sensor 1	Density of oxygen in exhaust gas (Mixture ratio feedback signal)	Fuel injection control	Fuel injector

DTC No.	Trouble diagnosis name	DTC detecting condition	Possible cause
P0171 0171 (Bank 1)	Fuel injection system too lean	● Fuel injection system does not operate properly. ● The amount of mixture ratio compensation is too large. (The mixture ratio is too lean.)	● Intake air leaks ● A/F sensor 1 ● Fuel injector ● Exhaust gas leaks ● Incorrect fuel pressure ● Lack of fuel ● Mass air flow sensor ● Incorrect PCV hose connection
P0174 0174 (Bank 2)			

DTC Confirmation Procedure

UBS00L0M

NOTE:
If DTC Confirmation Procedure has been previously conducted, always turn ignition switch OFF and wait at least 10 seconds before conducting the next test.

WITH CONSULT-II

1. Start engine and warm it up to normal operating temperature.
2. Turn ignition switch OFF and wait at least 10 seconds.
3. Turn ignition switch ON and select “SELF-LEARNING CONT” in “WORK SUPPORT” mode with CONSULT-II.
4. Clear the self-learning control coefficient by touching “CLEAR”.
5. Select “DATA MONITOR” mode with CONSULT-II.
6. Start engine again and let it idle for at least 10 minutes.
   The 1st trip DTC P0171 or P0174 should be detected at this stage, if a malfunction exists. If so, go to EC-294, "Diagnostic Procedure" .

   NOTE:
   If 1st trip DTC is not detected during above procedure, performing the following procedure is advised.

a. Turn ignition switch OFF and wait at least 10 seconds.
b. Start engine and drive the vehicle under the similar conditions to (1st trip) Freeze Frame Data for 10 minutes. Refer to the table below.
   Hold the accelerator pedal as steady as possible.

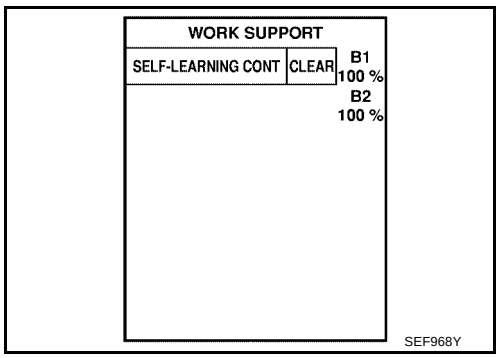

The similar conditions to (1st trip) Freeze Frame Data means the vehicle operation that the following conditions should be satisfied at the same time.

Engine speed	Engine speed in the freeze frame data ± 400 rpm
Vehicle speed	Vehicle speed in the freeze frame data ± 10 km/h (6 MPH)
Engine coolant temperature (T) condition	When the freeze frame data shows lower than 70 °C (158 °F), T should be lower than 70 °C (158 °F).
	When the freeze frame data shows higher than or equal to 70 °C (158 °F), T should be higher than or equal to 70 °C (158 °F).

7. If it is difficult to start engine at step 6, the fuel injection system has a malfunction, too.
8. Crank engine while depressing accelerator pedal. If engine starts, go to EC-294, "Diagnostic Procedure" . If engine does not start, check exhaust and intake air leak visually.

WITH GST

1. Start engine and warm it up to normal operating temperature.
2. Turn ignition switch OFF and wait at least 10 seconds.
3. Disconnect mass air flow sensor harness connector.
4. Restart engine and let it idle for at least 5 seconds.
5. Stop engine and reconnect mass air flow sensor harness connector.
6. Select Service $03 with GST. Make sure DTC P0102 is detected.
7. Select Service $04 with GST and erase the DTC P0102.
8. Start engine again and let it idle for at least 10 minutes.
9. Select Service $07 with GST. The 1st trip DTC P0171 or P0174 should be detected at this stage, if a malfunction exists. If so, go to EC-294, "Diagnostic Procedure" .

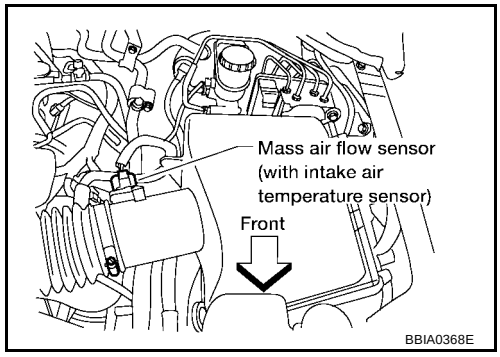

NOTE:
If 1st trip DTC is not detected during above procedure, performing the following procedure is advised.

a. Turn ignition switch OFF and wait at least 10 seconds.
b. Start engine and drive the vehicle under the similar conditions to (1st trip) Freeze Frame Data for 10 minutes. Refer to the table below.
Hold the accelerator pedal as steady as possible.

The similar conditions to (1st trip) Freeze Frame Data means the vehicle operation that the following conditions should be satisfied at the same time.

Engine speed	Engine speed in the freeze frame data ± 400 rpm
Vehicle speed	Vehicle speed in the freeze frame data ± 10 km/h (6 MPH)
Engine coolant temperature (T) condition	When the freeze frame data shows lower than 70 °C (158 °F), T should be lower than 70 °C (158 °F).
	When the freeze frame data shows higher than or equal to 70 °C (158 °F), T should be higher than or equal to 70 °C (158 °F).

10. If it is difficult to start engine at step 8, the fuel injection system has a malfunction.
11. Crank engine while depressing accelerator pedal. If engine starts, go to EC-294, "Diagnostic Procedure" . If engine does not start, check exhaust and intake air leak visually.

Wiring Diagram
BANK 1

UBS00L0N

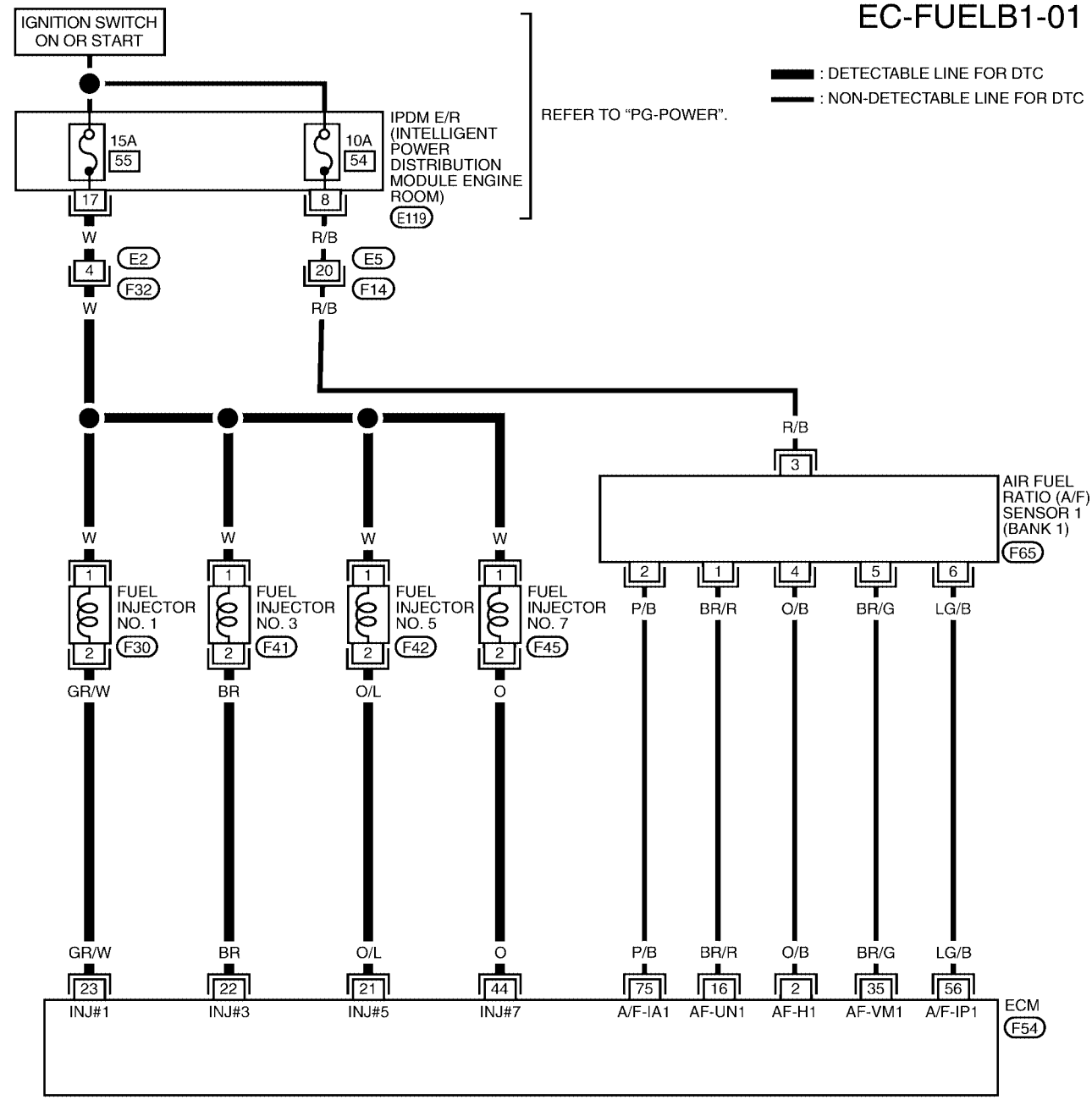

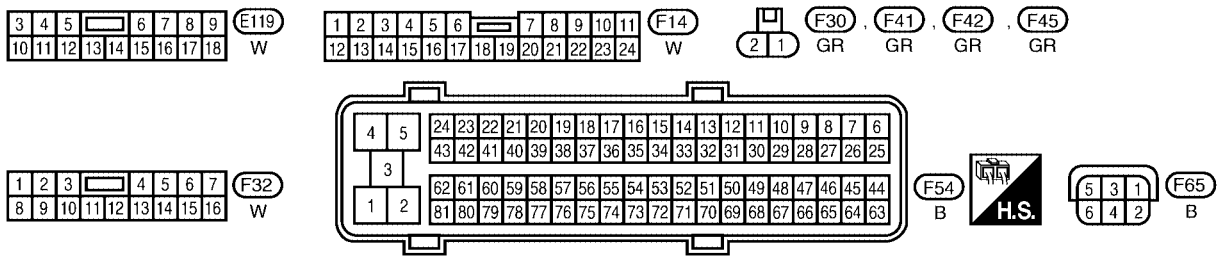

BBWA2090E

Specification data are reference values and are measured between each terminal and ground.
Pulse signal is measured by CONSULT-II.

CAUTION:
Do not use ECM ground terminals when measuring input/output voltage. Doing so may result in damage to the ECM's transistor. Use a ground other than ECM terminals, such as the ground.

TERMINAL NO.	WIRE COLOR	ITEM	CONDITION	DATA (DC Voltage)
2	O/B	A/F sensor 1 heater (bank 1)	**[Engine is running]** ● **Warm-up condition** ● Idle speed	Approximately 5V★ 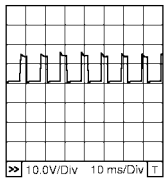 PBIB1584E
16	BR/R	A/F sensor 1 (bank 1)	**[Engine is running]** ● **Warm-up condition** ● Idle speed	Approximately 3.1V
35	BR/G			Approximately 2.6V
56	LG/B			Approximately 2.3V
75	P/B			Approximately 2.3V
21 22 23 44	O/L BR GR/W O	Fuel injector No. 5 Fuel injector No. 3 Fuel injector No. 1 Fuel injector No. 7	**[Engine is running]** ● **Warm-up condition** ● Idle speed **NOTE:** The pulse cycle changes depending on rpm at idle.	BATTERY VOLTAGE (11 - 14V)★ 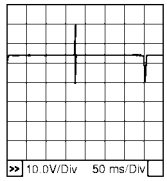 PBIB0042E
			[Engine is running] ● **Warm-up condition** ● Engine speed: 2,000 rpm	BATTERY VOLTAGE (11 - 14V)★ 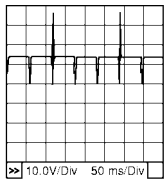 PBIB0043E

★: Average voltage for pulse signal (Actual pulse signal can be confirmed by oscilloscope.)

BANK 2

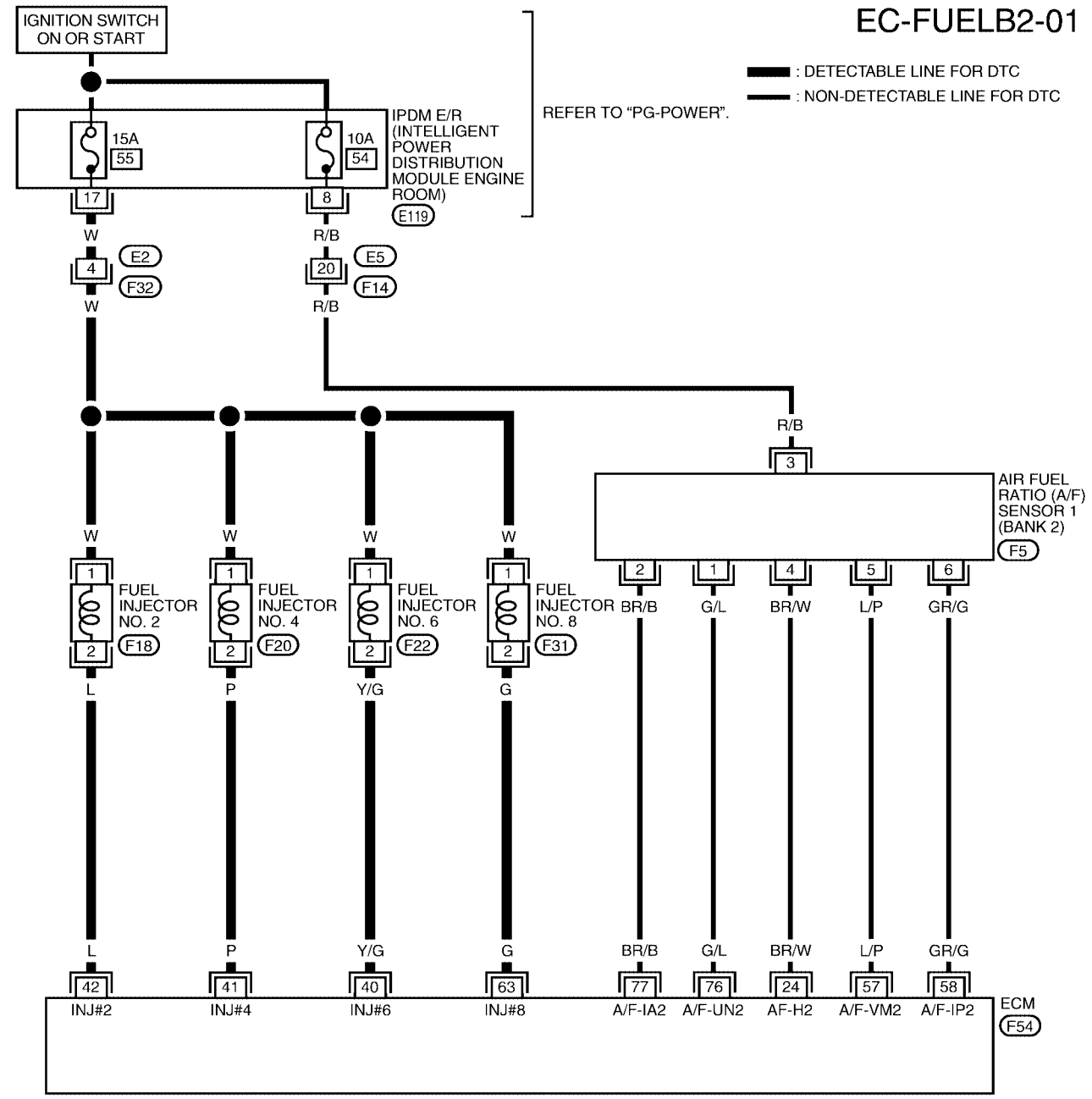
EC-FUELB2-01
: DETECTABLE LINE FOR DTC
: NON-DETECTABLE LINE FOR DTC
IGNITION SWITCH ON OR START
15A 55
10A 54
IPDM E/R (INTELLIGENT POWER DISTRIBUTION MODULE ENGINE ROOM) E119
REFER TO "PG-POWER".
17
8
W
R/B
4 E2 F32
20 E5 F14
FUEL INJECTOR NO. 2 F18
FUEL INJECTOR NO. 4 F20
FUEL INJECTOR NO. 6 F22
FUEL INJECTOR NO. 8 F31
AIR FUEL RATIO (A/F) SENSOR 1 (BANK 2) F5
BR/B
G/L
BR/W
L/P
GR/G
L
P
Y/G
G
42 INJ#2
41 INJ#4
40 INJ#6
63 INJ#8
77 A/F-IA2
76 A/F-UN2
24 AF-H2
57 A/F-VM2
58 A/F-IP2
ECM F54
E119 W
F5 B
F14 W
F18 GR
F20 GR
F22 GR
F31 GR
F32 W
F54 B
H.S.
BBWA2091E

Specification data are reference values and are measured between each terminal and ground.
Pulse signal is measured by CONSULT-II.

CAUTION:
Do not use ECM ground terminals when measuring input/output voltage. Doing so may result in damage to the ECM's transistor. Use a ground other than ECM terminals, such as the ground.

TERMINAL NO.	WIRE COLOR	ITEM	CONDITION	DATA (DC Voltage)
40 41 42 63	Y/G P L G	Fuel injector No. 6 Fuel injector No. 4 Fuel injector No. 2 Fuel injector No. 8	**[Engine is running]** ● **Warm-up condition** ● Idle speed **NOTE:** The pulse cycle changes depending on rpm at idle.	BATTERY VOLTAGE (11 - 14V)★ 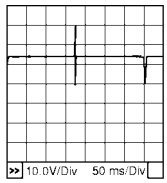 PBIB0042E
			[Engine is running] ● **Warm-up condition** ● Engine speed: 2,000 rpm	BATTERY VOLTAGE (11 - 14V)★ 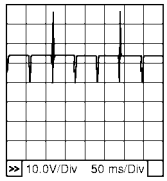 PBIB0043E
24	BR/W	A/F sensor 1 heater (bank 2)	**[Engine is running]** ● **Warm-up condition** ● Idle speed	Approximately 5V★ 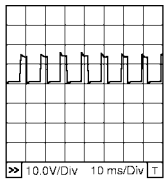 PBIB1584E
57	L/P	A/F sensor 1 (bank 2)	**[Engine is running]** ● **Warm-up condition** ● Idle speed	Approximately 2.6V
58	GR/G			Approximately 2.3V
76	G/L			Approximately 3.1V
77	BR/B			Approximately 2.3V

★: Average voltage for pulse signal (Actual pulse signal can be confirmed by oscilloscope.)

Diagnostic Procedure

UBS00L0O

1. CHECK EXHAUST GAS LEAK

1. Start engine and run it at idle.
2. Listen for an exhaust gas leak before three way catalyst (manifold).

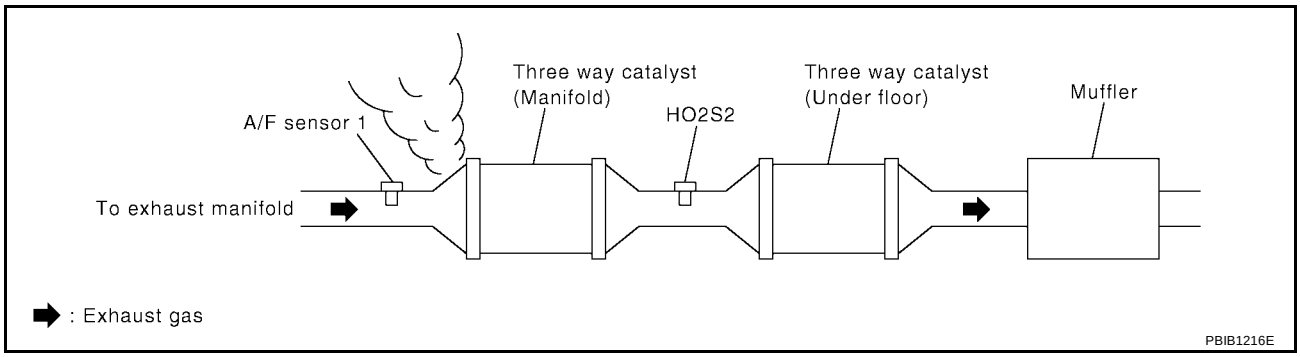

OK or NG

OK >> GO TO 2.
NG >> Repair or replace.

2. CHECK FOR INTAKE AIR LEAK

1. Listen for an intake air leak after the mass air flow sensor.
2. Check PCV hose connection.

OK or NG

OK >> GO TO 3.
NG >> Repair or replace.

3. CHECK A/F SENSOR 1 INPUT SIGNAL CIRCUIT

1. Turn ignition switch OFF.
2. Disconnect corresponding A/F sensor 1 harness connector.

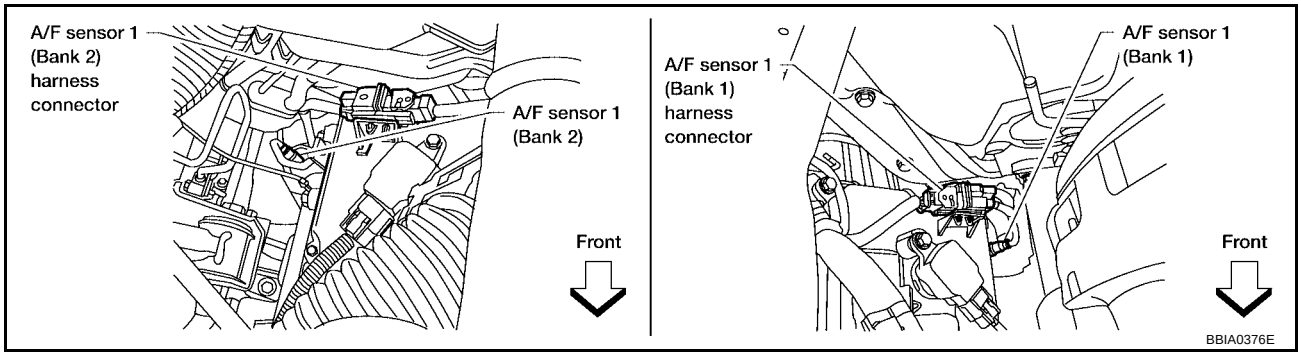

3. Disconnect ECM harness connector.
4. Check harness continuity between the following terminals.
   Refer to Wiring Diagram.

	A/F sensor 1 terminal	ECM terminal
Bank 1	1	16
	2	75
	5	35
	6	56
Bank 2	1	76
	2	77
	5	57
	6	58

Continuity should exist.

5. Check harness continuity between the following terminals and ground.
   Refer to Wiring Diagram.

Bank 1		Bank 2	
A/F sensor 1 terminal	ECM terminal	A/F sensor 1 terminal	ECM terminal
1	16	1	76
2	75	2	77
5	35	5	57
6	56	6	58

Continuity should not exist.

6. Also check harness for short to power.

OK or NG

OK >> GO TO 4.
NG >> Repair open circuit or short to ground or short to power in harness or connectors.

4. CHECK FUEL PRESSURE

1. Release fuel pressure to zero. Refer to EC-80, "FUEL PRESSURE RELEASE" .
2. Install fuel pressure gauge and check fuel pressure. Refer to EC-82, "FUEL PRESSURE CHECK" .

At idling: Approximately 350 kPa (3.57 kg/cm^2 , 51 psi)

OK or NG

OK >> GO TO 6.
NG >> GO TO 5.

5. DETECT MALFUNCTIONING PART

Check the following.

- Fuel pump and circuit (Refer to EC-604, "FUEL PUMP" .)
- Fuel pressure regulator (Refer to EC-82, "FUEL PRESSURE CHECK" .)
- Fuel lines
- Fuel filter for clogging

>> Repair or replace.

6. CHECK MASS AIR FLOW SENSOR

With CONSULT-II

1. Install all removed parts.
2. Check “MASS AIR FLOW” in “DATA MONITOR” mode with CONSULT-II.

3.0 - 9.0 g·m/sec: at idling
9.0 - 28.0 g·m/sec: at 2,500 rpm

With GST

1. Install all removed parts.
2. Check mass air flow sensor signal in Service $01 with GST.

3.0 - 9.0 g·m/sec: at idling
9.0 - 28.0 g·m/sec: at 2,500 rpm

OK or NG

OK >> GO TO 7.
NG >> Check connectors for rusted terminals or loose connections in the mass air flow sensor circuit or grounds. Refer to EC-171, "DTC P0101 MAF SENSOR" .

7. CHECK FUNCTION OF FUEL INJECTOR

With CONSULT-II

1. Start engine.
2. Perform “POWER BALANCE” in “ACTIVE TEST” mode with CONSULT-II.
3. Make sure that each circuit produces a momentary engine speed drop.

ACTIVE TEST	
POWER BALANCE	
MONITOR	
ENG SPEED	XXX rpm
MAS A/F SE-B1	XXX V

PBIB0133E

Without CONSULT-II

1. Start engine.
2. Listen to each fuel injector operating sound.

Clicking noise should be heard.

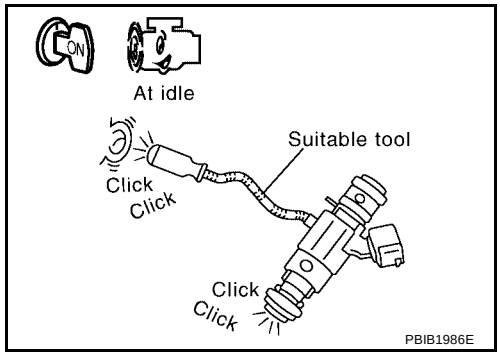

PBIB1986E

OK or NG

OK >> GO TO 8.
NG >> Perform trouble diagnosis for FUEL INJECTOR, refer to EC-598, "FUEL INJECTOR" .

8. CHECK FUEL INJECTOR

1. Confirm that the engine is cooled down and there are no fire hazards near the vehicle.
2. Turn ignition switch OFF.
3. Disconnect all fuel injector harness connectors.
4. Remove fuel injector gallery assembly. Refer to EM-31, "FUEL INJECTOR AND FUEL TUBE" .
   Keep fuel hose and all fuel injectors connected to fuel injector gallery.
5. For DTC P0171, reconnect fuel injector harness connectors on bank 1.
   For DTC P0174, reconnect fuel injector harness connectors on bank 2.
6. Disconnect all ignition coil harness connectors.
7. Prepare pans or saucers under each fuel injector.
8. Crank engine for about 3 seconds.
   For DTC P0171, make sure that fuel sprays out from fuel injectors on bank 1.
   For DTC P0174, make sure that fuel sprays out from fuel injectors on bank 2.

Fuel should be sprayed evenly for each fuel injector.

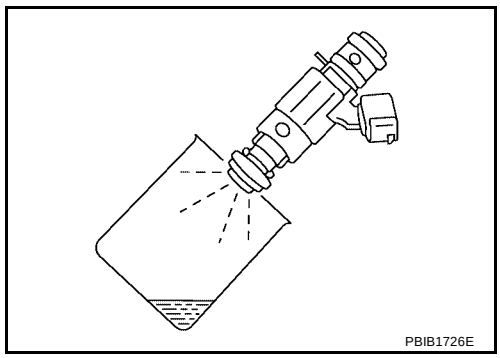
PBIB1726E

OK or NG

OK >> GO TO 9.
NG >> Replace fuel injectors from which fuel does not spray out. Always replace O-ring with new ones.

9. CHECK INTERMITTENT INCIDENT

Refer to EC-144, "TROUBLE DIAGNOSIS FOR INTERMITTENT INCIDENT" .

>> **INSPECTION END**

DTC P0172, P0175 FUEL INJECTION SYSTEM FUNCTION

PFP:16600

On Board Diagnosis Logic

UBS00L0P

With the Air/Fuel Mixture Ratio Self-Learning Control, the actual mixture ratio can be brought closely to the theoretical mixture ratio based on the mixture ratio feedback signal from the A/F sensors 1. The ECM calculates the necessary compensation to correct the offset between the actual and the theoretical ratios.
In case the amount of the compensation value is extremely large (The actual mixture ratio is too rich.), the ECM judges the condition as the fuel injection system malfunction and lights up the MIL (2 trip detection logic).

Sensor	Input signal to ECM	ECM function	Actuator
A/F sensor 1	Density of oxygen in exhaust gas (Mixture ratio feedback signal)	Fuel injection control	Fuel injector

DTC No.	Trouble diagnosis name	DTC detecting condition	Possible cause
P0172 0172 (Bank 1) P0175 0175 (Bank 2)	Fuel injection system too rich	● Fuel injection system does not operate properly. ● The amount of mixture ratio compensation is too large. (The mixture ratio is too rich.)	● A/F sensor 1 ● Fuel injector ● Exhaust gas leaks ● Incorrect fuel pressure ● Mass air flow sensor

DTC Confirmation Procedure

UBS00L0Q

NOTE:
If DTC Confirmation Procedure has been previously conducted, always turn ignition switch OFF and wait at least 10 seconds before conducting the next test.

WITH CONSULT-II

1. Start engine and warm it up to normal operating temperature.
2. Turn ignition switch OFF and wait at least 10 seconds.
3. Turn ignition switch ON and select “SELF-LEARNING CONT” in “WORK SUPPORT” mode with CONSULT-II.
4. Clear the self-learning control coefficient by touching “CLEAR”.
5. Select “DATA MONITOR” mode with CONSULT-II.
6. Start engine again and let it idle for at least 10 minutes.
   The 1st trip DTC P0172, P0175 should be detected at this stage, if a malfunction exists. If so, go to EC-305, "Diagnostic Procedure" .

   NOTE:
   If 1st trip DTC is not detected during above procedure, performing the following procedure is advised.

a. Turn ignition switch OFF and wait at least 10 seconds.
b. Start engine and drive the vehicle under the similar conditions to (1st trip) Freeze Frame Data for 10 minutes. Refer to the table below.
   Hold the accelerator pedal as steady as possible.

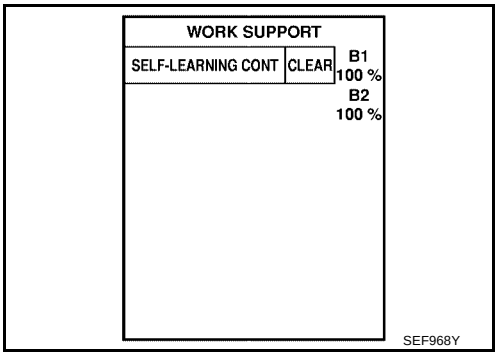

The similar conditions to (1st trip) Freeze Frame Data means the vehicle operation that the following conditions should be satisfied at the same time.

Engine speed	Engine speed in the freeze frame data ± 400 rpm
Vehicle speed	Vehicle speed in the freeze frame data ± 10 km/h (6 MPH)
Engine coolant temperature (T) condition	When the freeze frame data shows lower than 70 °C (158 °F), T should be lower than 70 °C (158 °F).
	When the freeze frame data shows higher than or equal to 70 °C (158 °F), T should be higher than or equal to 70 °C (158 °F).

7. If it is difficult to start engine at step 6, the fuel injection system has a malfunction, too.
8. Crank engine while depressing accelerator pedal.

If engine starts, go to EC-305, "Diagnostic Procedure" . If engine does not start, remove spark plugs and check for fouling, etc.

WITH GST

1. Start engine and warm it up to normal operating temperature.
2. Turn ignition switch OFF and wait at least 10 seconds.
3. Disconnect mass air flow sensor harness connector. Then restart and run engine for at least 5 seconds at idle speed.
4. Stop engine and reconnect mass air flow sensor harness connector.
5. Select Service $03 with GST. Make sure DTC P0102 is detected.
6. Select Service $04 with GST and erase the DTC P0102.
7. Start engine again and let it idle for at least 10 minutes.
8. Select Service $07 with GST. The 1st trip DTC P0172 or P0175 should be detected at this stage, if a malfunction exists. If so, go to EC-305, "Diagnostic Procedure" .

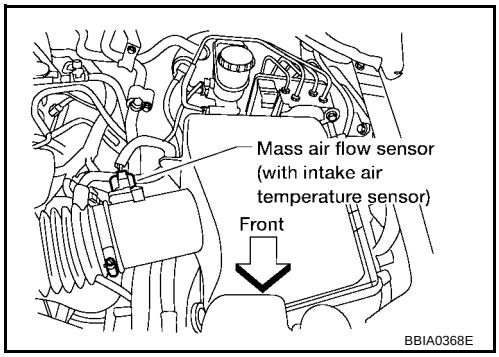

NOTE:
If 1st trip DTC is not detected during above procedure, performing the following procedure is advised.

a. Turn ignition switch OFF and wait at least 10 seconds.
b. Start engine and drive the vehicle under the similar conditions to (1st trip) Freeze Frame Data for 10 minutes. Refer to the table below.
Hold the accelerator pedal as steady as possible.

The similar conditions to (1st trip) Freeze Frame Data means the vehicle operation that the following conditions should be satisfied at the same time.

Engine speed	Engine speed in the freeze frame data ± 400 rpm
Vehicle speed	Vehicle speed in the freeze frame data ± 10 km/h (6 MPH)
Engine coolant temperature (T) condition	When the freeze frame data shows lower than 70 °C (158 °F), T should be lower than 70 °C (158 °F).
	When the freeze frame data shows higher than or equal to 70 °C (158 °F), T should be higher than or equal to 70 °C (158 °F).

9. If it is difficult to start engine at step 7, the fuel injection system has a malfunction.
10. Crank engine while depressing accelerator pedal.
If engine starts, go to EC-305, "Diagnostic Procedure" . If engine does not start, remove spark plugs and check for fouling, etc.

Wiring Diagram
BANK 1

UBS00L0R

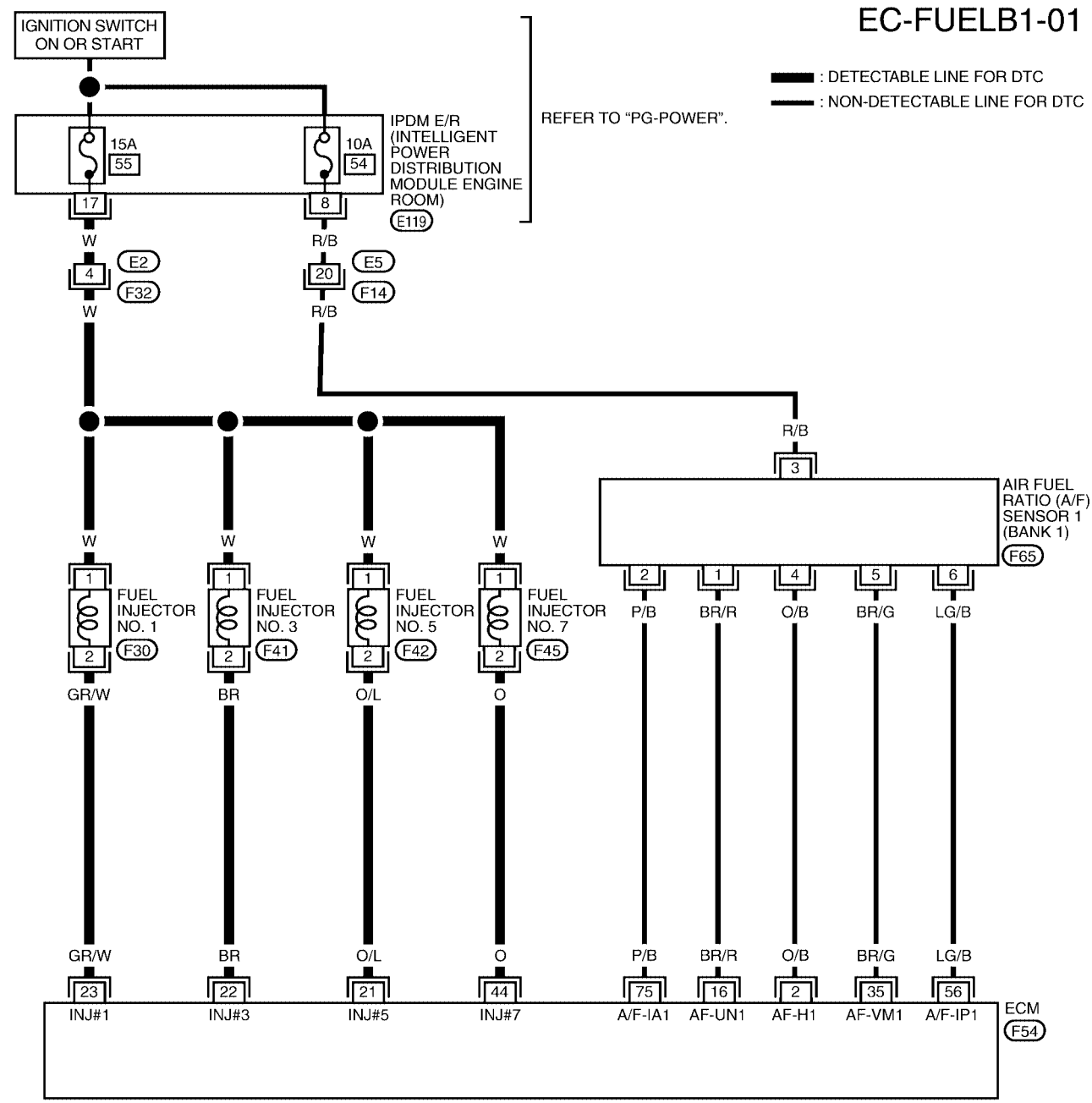

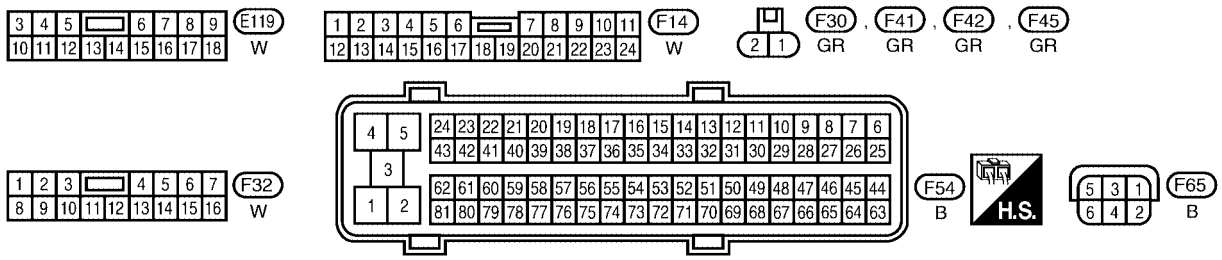

BBWA2090E

Specification data are reference values and are measured between each terminal and ground.
Pulse signal is measured by CONSULT-II.

CAUTION:

Do not use ECM ground terminals when measuring input/output voltage. Doing so may result in damage to the ECM's transistor. Use a ground other than ECM terminals, such as the ground.

TERMINAL NO.	WIRE COLOR	ITEM	CONDITION	DATA (DC Voltage)
2	O/B	A/F sensor 1 heater (bank 1)	**[Engine is running]** ● **Warm-up condition** ● Idle speed	Approximately 5V★ 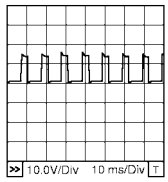 PBIB1584E
16	BR/R	A/F sensor 1 (bank 1)	**[Engine is running]** ● **Warm-up condition** ● Idle speed	Approximately 3.1V
35	BR/G			Approximately 2.6V
56	LG/B			Approximately 2.3V
75	P/B			Approximately 2.3V
21 22 23 44	O/L BR GR/W O	Fuel injector No. 5 Fuel injector No. 3 Fuel injector No. 1 Fuel injector No. 7	**[Engine is running]** ● **Warm-up condition** ● Idle speed **NOTE:** The pulse cycle changes depending on rpm at idle.	BATTERY VOLTAGE (11 - 14V)★ 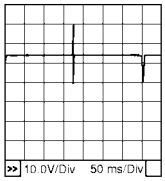 PBIB0042E
			[Engine is running] ● **Warm-up condition** ● Engine speed: 2,000 rpm	BATTERY VOLTAGE (11 - 14V)★ 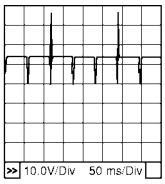 PBIB0043E

★: Average voltage for pulse signal (Actual pulse signal can be confirmed by oscilloscope.)

BANK 2

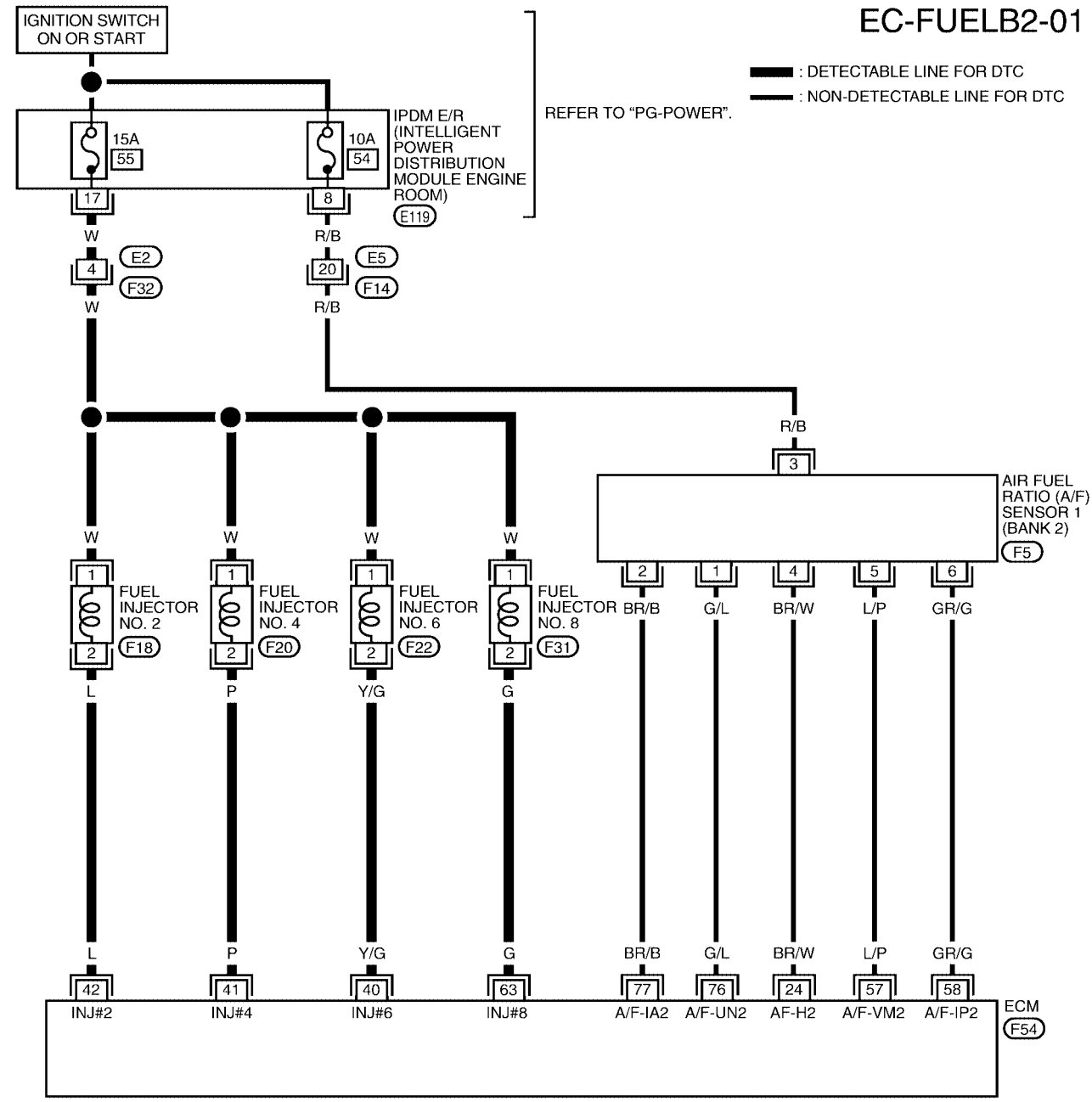

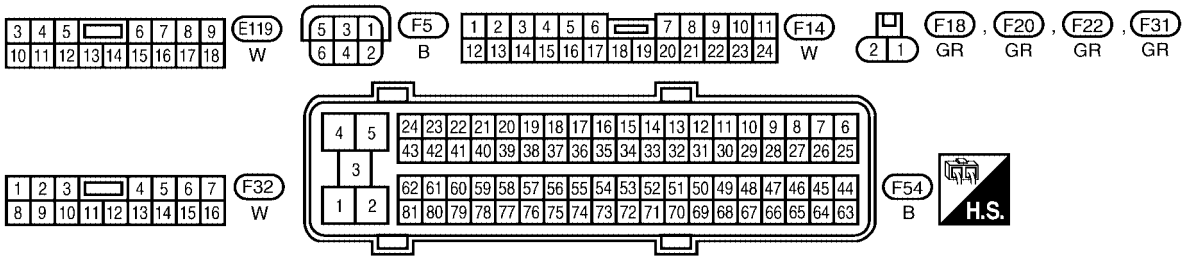

BBWA2091E

Specification data are reference values and are measured between each terminal and ground.
Pulse signal is measured by CONSULT-II.

CAUTION:

Do not use ECM ground terminals when measuring input/output voltage. Doing so may result in damage to the ECM's transistor. Use a ground other than ECM terminals, such as the ground.

TERMINAL NO.	WIRE COLOR	ITEM	CONDITION	DATA (DC Voltage)
40 41 42 63	Y/G P L G	Fuel injector No. 6 Fuel injector No. 4 Fuel injector No. 2 Fuel injector No. 8	**[Engine is running]** ● **Warm-up condition** ● Idle speed **NOTE:** The pulse cycle changes depending on rpm at idle.	BATTERY VOLTAGE (11 - 14V)★ 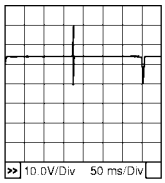 PBIB0042E
			[Engine is running] ● **Warm-up condition** ● Engine speed: 2,000 rpm	BATTERY VOLTAGE (11 - 14V)★ 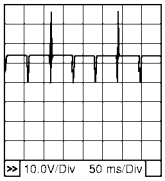 PBIB0043E
24	BR/W	A/F sensor 1 heater (bank 2)	**[Engine is running]** ● **Warm-up condition** ● Idle speed	Approximately 5V★ 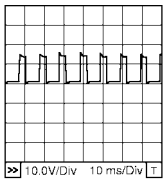 PBIB1584E
57	L/P	A/F sensor 1 (bank 2)	**[Engine is running]** ● **Warm-up condition** ● Idle speed	Approximately 2.6V
58	GR/G			Approximately 2.3V
76	G/L			Approximately 3.1V
77	BR/B			Approximately 2.3V

★: Average voltage for pulse signal (Actual pulse signal can be confirmed by oscilloscope.)

Diagnostic Procedure

UBS00L0S

1. CHECK EXHAUST GAS LEAK

1. Start engine and run it at idle.
2. Listen for an exhaust gas leak before three way catalyst (manifold).

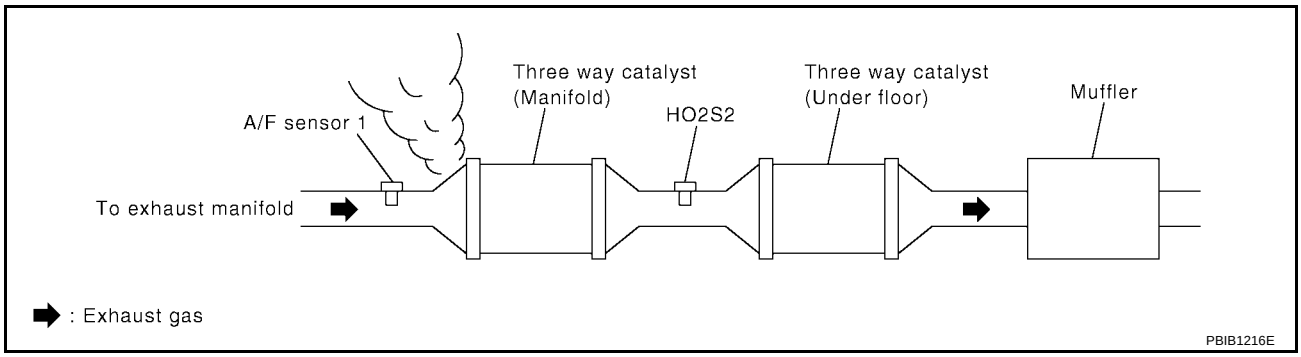

OK or NG

OK >> GO TO 2.
NG >> Repair or replace.

2. CHECK FOR INTAKE AIR LEAK

Listen for an intake air leak after the mass air flow sensor.

OK or NG

OK >> GO TO 3.
NG >> Repair or replace.

3. CHECK A/F SENSOR 1 INPUT SIGNAL CIRCUIT

1. Turn ignition switch OFF.
2. Disconnect corresponding A/F sensor 1 harness connector.

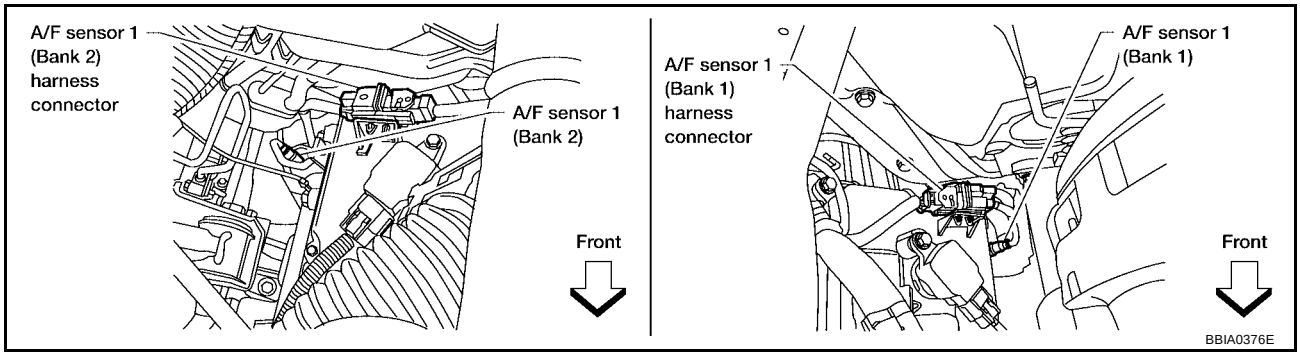

3. Disconnect ECM harness connector.
4. Check harness continuity between the following terminals.
   Refer to Wiring Diagram.

	A/F sensor 1 terminal	ECM terminal
Bank 1	1	16
	2	75
	5	35
	6	56
Bank 2	1	76
	2	77
	5	57
	6	58

Continuity should exist.

5. Check harness continuity between the following terminals and ground.
   Refer to Wiring Diagram.

Bank 1		Bank 2	
A/F sensor 1 terminal	ECM terminal	A/F sensor 1 terminal	ECM terminal
1	16	1	76
2	75	2	77
5	35	5	57
6	56	6	58

Continuity should not exist.

6. Also check harness for short to power.

OK or NG

OK >> GO TO 4.
NG >> Repair open circuit or short to ground or short to power in harness or connectors.

4. CHECK FUEL PRESSURE

1. Release fuel pressure to zero. Refer to EC-80, "FUEL PRESSURE RELEASE" .
2. Install fuel pressure gauge and check fuel pressure. Refer to EC-82, "FUEL PRESSURE CHECK" .

At idling: Approximately 350 kPa (3.57 kg/cm^2 , 51 psi)

OK or NG

OK >> GO TO 6.
NG >> GO TO 5.

5. DETECT MALFUNCTIONING PART

Check the following.

- Fuel pump and circuit (Refer to EC-604, "FUEL PUMP" .)
- Fuel pressure regulator (Refer to EC-82, "FUEL PRESSURE CHECK" .)

>> Repair or replace.

6. CHECK MASS AIR FLOW SENSOR

With CONSULT-II

1. Install all removed parts.
2. Check “MASS AIR FLOW” in “DATA MONITOR” mode with CONSULT-II.

3.0 - 9.0 g·m/sec: at idling
9.0 - 28.0 g·m/sec: at 2,500 rpm

With GST

1. Install all removed parts.
2. Check mass air flow sensor signal in Service $01 with GST.

3.0 - 9.0 g·m/sec: at idling
9.0 - 28.0 g·m/sec: at 2,500 rpm

OK or NG

OK >> GO TO 7.
NG >> Check connectors for rusted terminals or loose connections in the mass air flow sensor circuit or grounds. Refer to EC-171, "DTC P0101 MAF SENSOR" .

7. CHECK FUNCTION OF FUEL INJECTOR

With CONSULT-II

1. Start engine.
2. Perform “POWER BALANCE” in “ACTIVE TEST” mode with CONSULT-II.
3. Make sure that each circuit produces a momentary engine speed drop.

ACTIVE TEST	
POWER BALANCE	
MONITOR	
ENG SPEED	XXX rpm
MAS A/F SE-B1	XXX V

PBIB0133E

Without CONSULT-II

1. Start engine.
2. Listen to each fuel injector operating sound.

Clicking noise should be heard.

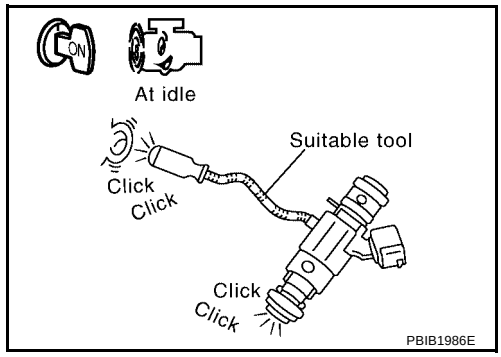

OK or NG

OK >> GO TO 8.
NG >> Perform trouble diagnosis for FUEL INJECTOR, refer to EC-598, "FUEL INJECTOR" .

8. CHECK FUEL INJECTOR

1. Remove fuel injector assembly. Refer to EM-31, "FUEL INJECTOR AND FUEL TUBE" .
   Keep fuel hose and all fuel injectors connected to fuel injector gallery.
2. Confirm that the engine is cooled down and there are no fire hazards near the vehicle.
3. Disconnect all fuel injector harness connectors.
4. Disconnect all ignition coil harness connectors.
5. Prepare pans or saucers under each fuel injectors.
6. Crank engine for about 3 seconds.
   Make sure fuel does not drip from fuel injector.

OK or NG

OK (Does not drip.)>>GO TO 9.
NG (Drips.)>>Replace the fuel injectors from which fuel is dripping. Always replace O-ring with new one.

9. CHECK INTERMITTENT INCIDENT

Refer to EC-144, "TROUBLE DIAGNOSIS FOR INTERMITTENT INCIDENT" .

>> **INSPECTION END**

DTC P0181 FTT SENSOR

PFP:22630

Component Description

UBS00H34

The fuel tank temperature sensor is used to detect the fuel temperature inside the fuel tank. The sensor modifies a voltage signal from the ECM. The modified signal returns to the ECM as the fuel temperature input. The sensor uses a thermistor which is sensitive to the change in temperature. The electrical resistance of the thermistor decreases as temperature increases.

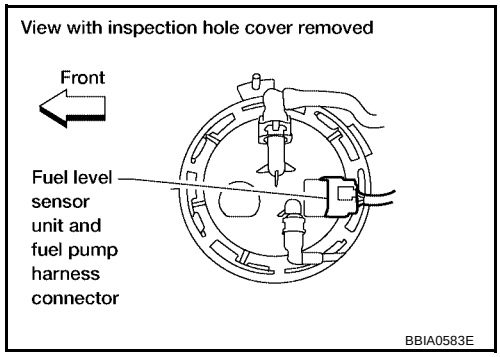

<Reference data>

Fluid temperature °C (°F)	Voltage* V	Resistance kΩ
20 (68)	3.5	2.3 - 2.7
50 (122)	2.2	0.79 - 0.90

*: This data is reference value and is measured between ECM terminal 107 (Fuel tank temperature sensor) and ground.

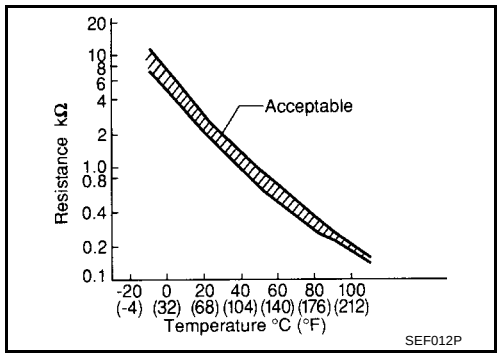

CAUTION:
Do not use ECM ground terminals when measuring input/output voltage. Doing so may result in damage to the ECM's transistor. Use a ground other than ECM terminals, such as the ground.

On Board Diagnosis Logic

UBS00H35

DTC No.	Trouble diagnosis name	DTC detecting condition	Possible cause
P0181 0181	Fuel tank temperature sensor circuit range/ performance	Rationally incorrect voltage from the sensor is sent to ECM, compared with the voltage signals from engine coolant temperature sensor and intake air temperature sensor.	● Harness or connectors (The sensor circuit is open or shorted) ● Fuel tank temperature sensor

DTC Confirmation Procedure

UBS00H36

NOTE:
If DTC Confirmation Procedure has been previously conducted, always turn ignition switch OFF and wait at least 10 seconds before conducting the next test.

WITH CONSULT-II

1. Turn ignition switch ON.
2. Select “DATA MONITOR” mode with CONSULT-II.
3. Wait at least 10 seconds.
   If the result is NG, go to EC-312, "Diagnostic Procedure" .
   If the result is OK, go to following step.
4. Check “COOLAN TEMP/S” value.
   If “COOLAN TEMP/S” is less than 60°C (140°F), the result will be OK.
   If “COOLAN TEMP/S” is above 60°C (140°F), go to the following step.
5. Cool engine down until “COOLAN TEMP/S” is less than 60°C (140°F).
6. Wait at least 10 seconds.
7. If 1st trip DTC is detected, go to EC-312, "Diagnostic Procedure" .

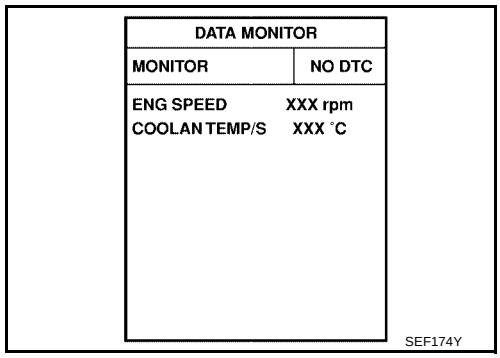

WITH GST

Follow the procedure “WITH CONSULT-II” above.

Wiring Diagram

UBS00H37

EC-FTTS-01

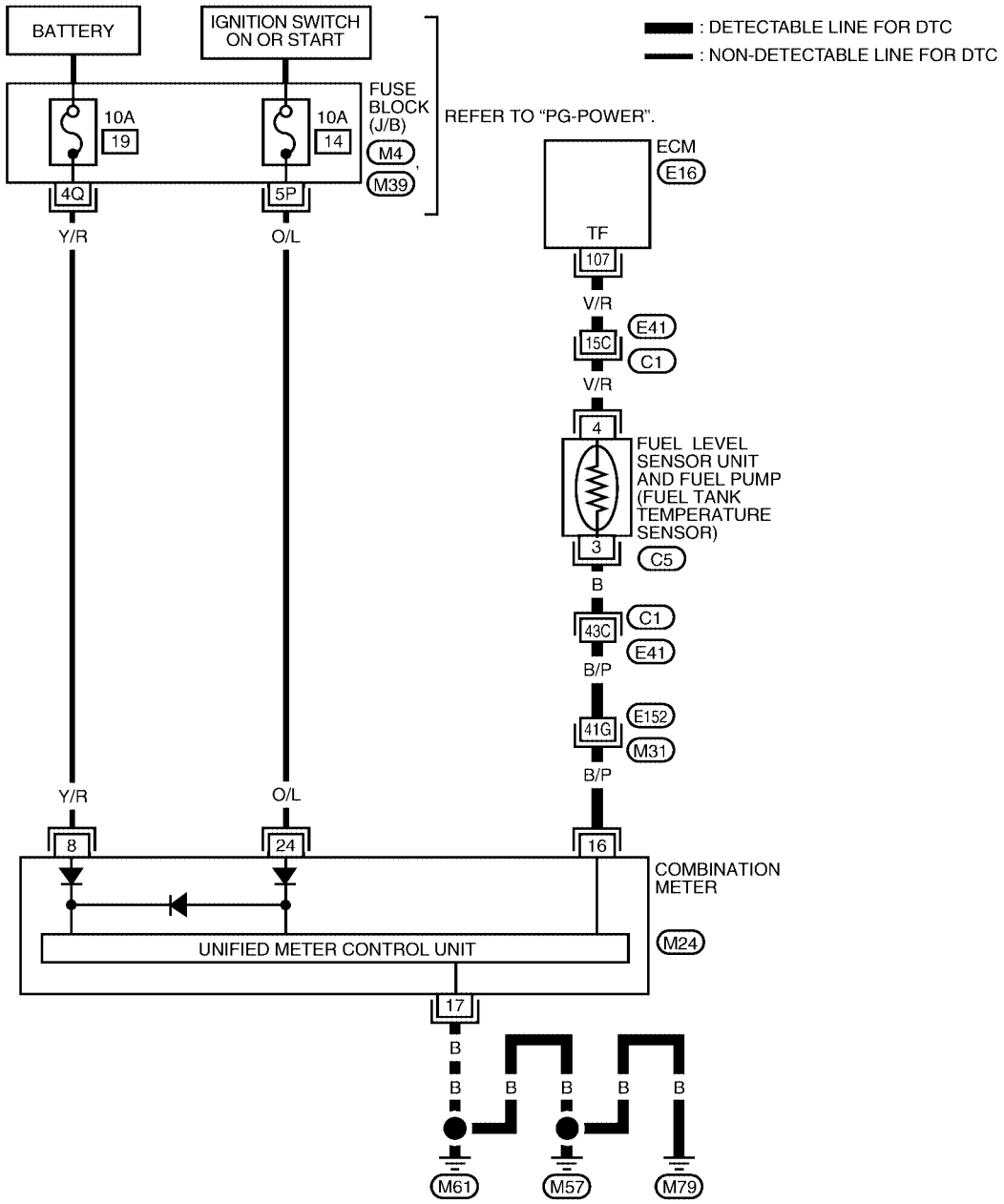

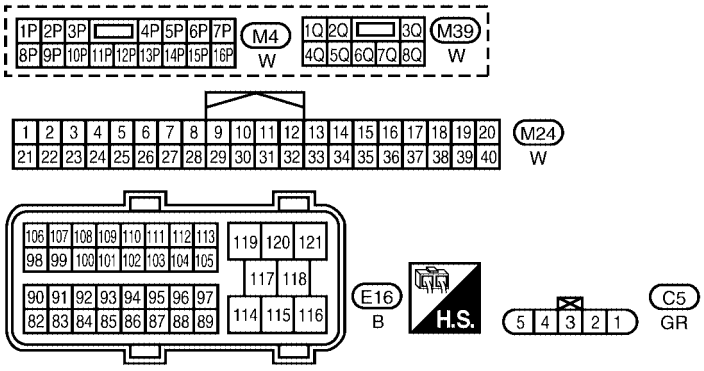

REFER TO THE FOLLOWING.
M31, C1 - SUPER MULITIPLE JUNCTION (SMJ)

BBWA2092E

Diagnostic Procedure

UBS00H38

1. CHECK COMBINATION METER FUNCTION

Refer to DI-5, "COMBINATION METERS" .

OK or NG

OK >> GO TO 2.
NG >> Go to DI-22, "Fuel Level Sensor Unit Inspection" .

2. CHECK GROUND CONNECTIONS

1. Turn ignition switch OFF.
2. Loosen and retighten three ground screws on the body.
   Refer to EC-150, "Ground Inspection" .

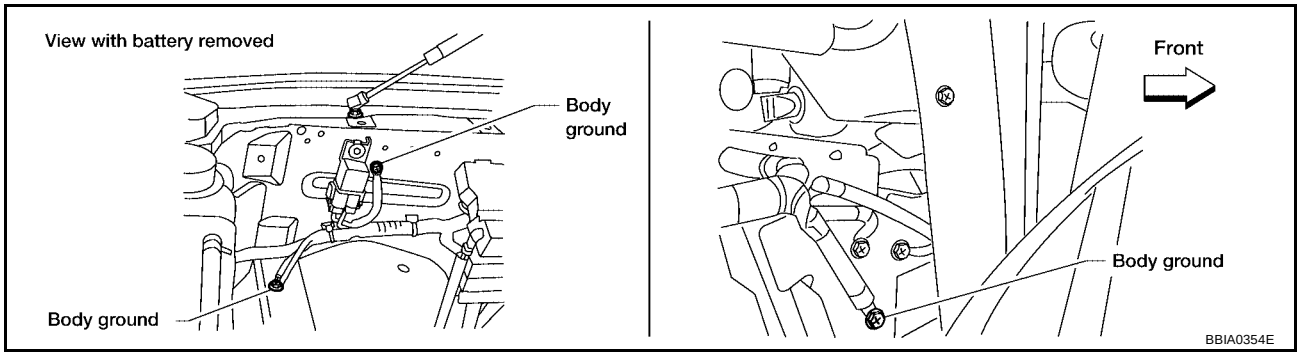

OK or NG

OK >> GO TO 3.
NG >> Repair or replace ground connections.

3. CHECK FUEL TANK TEMPERATURE SENSOR POWER SUPPLY CIRCUIT

1. Disconnect “fuel level sensor unit and fuel pump” harness connector.
2. Turn ignition switch ON.

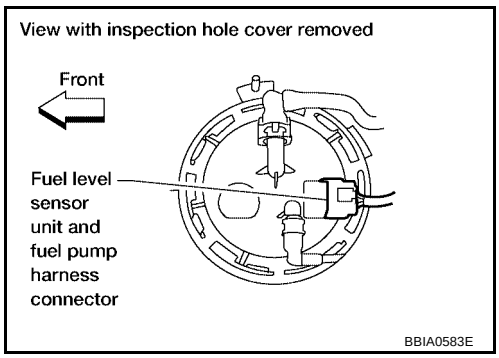

3. Check voltage between “fuel level sensor unit and fuel pump” terminal 4 and ground with CONSULT-II or tester.

   Voltage: Approximately 5V

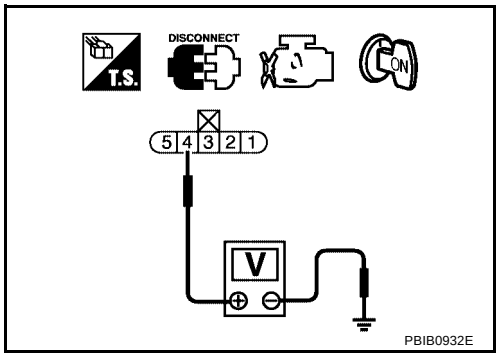

OK or NG

OK >> GO TO 5.
NG >> GO TO 4.

4. DETECT MALFUNCTIONING PART

Check the following.

- Harness connectors C1, E41
- Harness for open or short between ECM and “fuel level sensor unit and fuel pump”

>> Repair harness or connector.

5. CHECK FUEL TANK TEMPERATURE SENSOR GROUND CIRCUIT FOR OPEN AND SHORT

1. Turn ignition switch OFF.
2. Disconnect combination meter harness connector.
3. Check harness continuity between “fuel level sensor unit and fuel pump” terminal 3 and combination meter terminal 16. Refer to Wiring Diagram.

Continuity should exist.

4. Also check harness for short to ground and short to power.

OK or NG

OK >> GO TO 7.
NG >> GO TO 6.

6. DETECT MALFUNCTIONING PART

Check the following.

- Harness connectors C1, E41
- Harness connectors E152, M31
- Harness for open or short between “fuel level sensor unit and fuel pump” and combination meter

>> Repair open circuit or short to ground or short to power in harness or connector.

7. CHECK FUEL TANK TEMPERATURE SENSOR

Refer to EC-314, "Component Inspection" .

OK or NG

OK >> GO TO 8.
NG >> Replace “fuel level sensor unit and fuel pump”.

8. CHECK INTERMITTENT INCIDENT

Refer to EC-144, "TROUBLE DIAGNOSIS FOR INTERMITTENT INCIDENT" .

>> **INSPECTION END**

Component Inspection

UBS00H39

FUEL TANK TEMPERATURE SENSOR

1. Remove fuel level sensor unit.
2. Check resistance between “fuel level sensor unit and fuel pump” terminals 3 and 4 by heating with hot water or heat gun as shown in the figure.

Temperature °C (°F)	Resistance kΩ
20 (68)	2.3 - 2.7
50 (122)	0.79 - 0.90

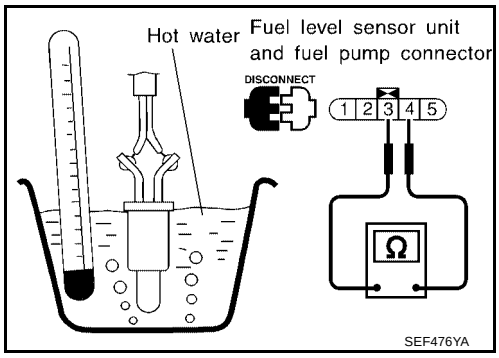

Removal and Installation

UBS00H3A

FUEL TANK TEMPERATURE SENSOR

Refer to FL-6, "FUEL LEVEL SENSOR UNIT, FUEL FILTER AND FUEL PUMP ASSEMBLY" .

DTC P0182, P0183 FTT SENSOR

PFP:22630

Component Description

UBS00H3B

The fuel tank temperature sensor is used to detect the fuel temperature inside the fuel tank. The sensor modifies a voltage signal from the ECM. The modified signal returns to the ECM as the fuel temperature input. The sensor uses a thermistor which is sensitive to the change in temperature. The electrical resistance of the thermistor decreases as temperature increases.

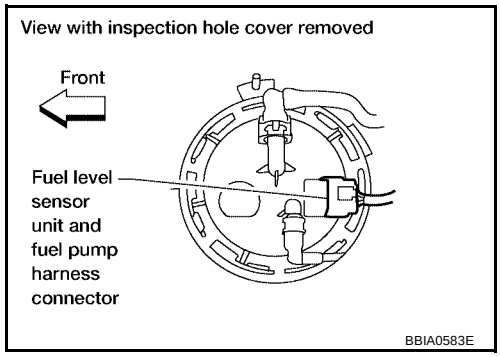

<Reference data>

Fluid temperature °C (°F)	Voltage* V	Resistance kΩ
20 (68)	3.5	2.3 - 2.7
50 (122)	2.2	0.79 - 0.90

*: This data is reference value and is measured between ECM terminal 107 (Fuel tank temperature sensor) and ground.

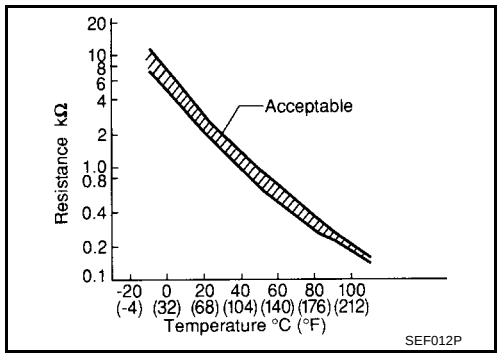

CAUTION:
Do not use ECM ground terminals when measuring input/output voltage. Doing so may result in damage to the ECM's transistor. Use a ground other than ECM terminals, such as the ground.

On Board Diagnosis Logic

UBS00H3C

DTC No.	Trouble diagnosis name	DTC detecting condition	Possible cause
P0182 0182	Fuel tank temperature sensor circuit low input	An excessively low voltage from the sensor is sent to ECM.	● Harness or connectors (The sensor circuit is open or shorted.) ● Fuel tank temperature sensor
P0183 0183	Fuel tank temperature sensor circuit high input	An excessively high voltage from the sensor is sent to ECM.	

DTC Confirmation Procedure

UBS00H3D

NOTE:
If DTC Confirmation Procedure has been previously conducted, always turn ignition switch OFF and wait at least 10 seconds before conducting the next test.

WITH CONSULT-II

1. Turn ignition switch ON.
2. Select “DATA MONITOR” mode with CONSULT-II.
3. Wait at least 5 seconds.
4. If 1st trip DTC is detected, go to EC-317, "Diagnostic Procedure"
.

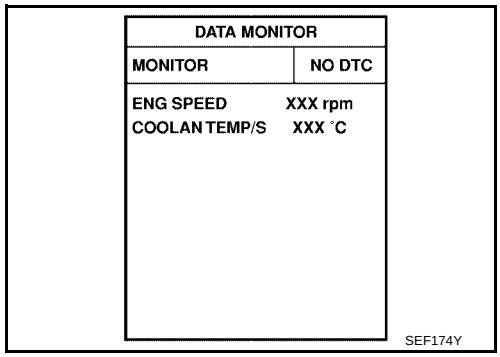

WITH GST

Follow the procedure “WITH CONSULT-II” above.

Wiring Diagram

UBS00H3E

EC-FTTS-01

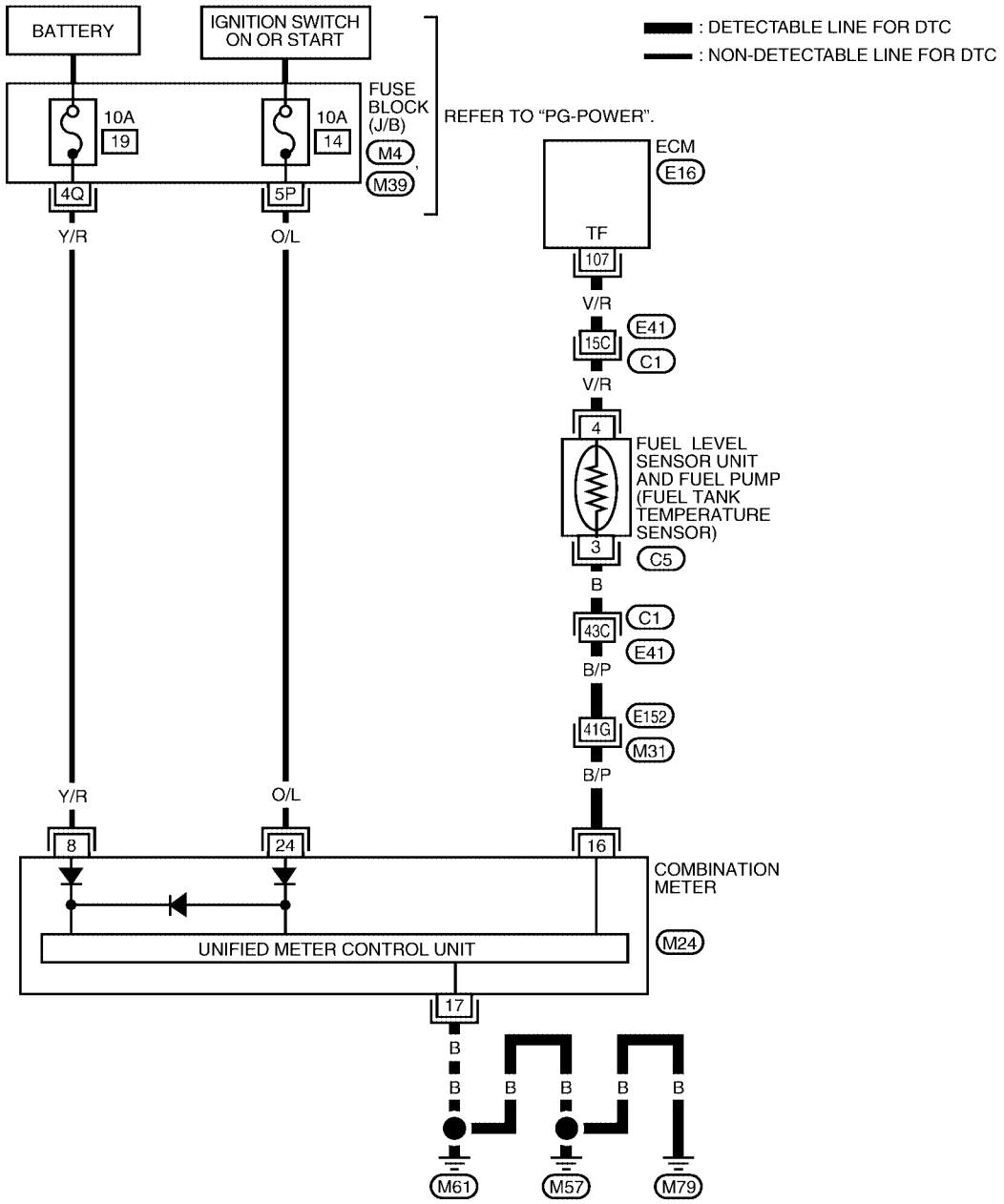

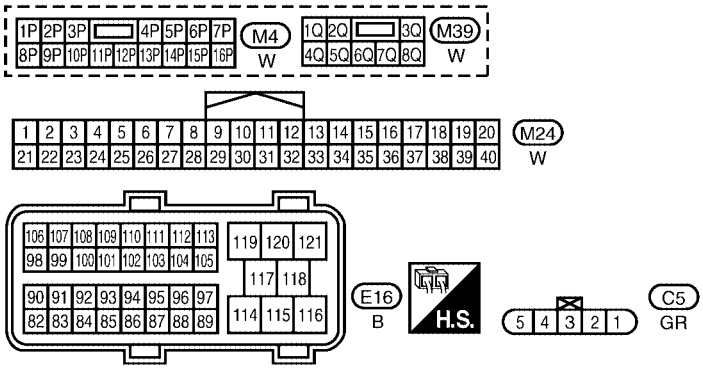

REFER TO THE FOLLOWING.
M31, C1 - SUPER MULITIPLE JUNCTION (SMJ)

BBWA2092E

Diagnostic Procedure

UBS00H3F

1. CHECK COMBINATION METER FUNCTION

Refer to DI-5, "COMBINATION METERS" .

OK or NG

OK >> GO TO 2.
NG >> Go to DI-22, "Fuel Level Sensor Unit Inspection" .

2. CHECK GROUND CONNECTIONS

1. Turn ignition switch OFF.
2. Loosen and retighten three ground screws on the body.
   Refer to EC-150, "Ground Inspection" .

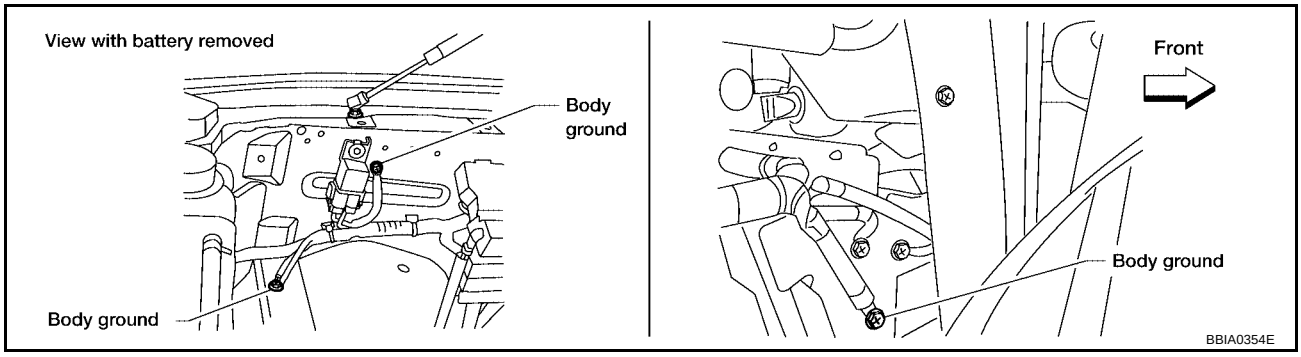

OK or NG

OK >> GO TO 3.
NG >> Repair or replace ground connections.

3. CHECK FUEL TANK TEMPERATURE SENSOR POWER SUPPLY CIRCUIT

1. Disconnect “fuel level sensor unit and fuel pump” harness connector.
2. Turn ignition switch ON.

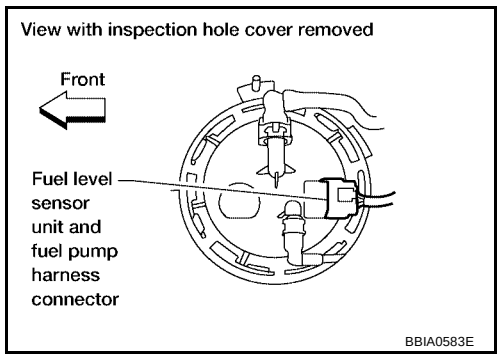

3. Check voltage between “fuel level sensor unit and fuel pump” terminal 4 and ground with CONSULT-II or tester.

   Voltage: Approximately 5V

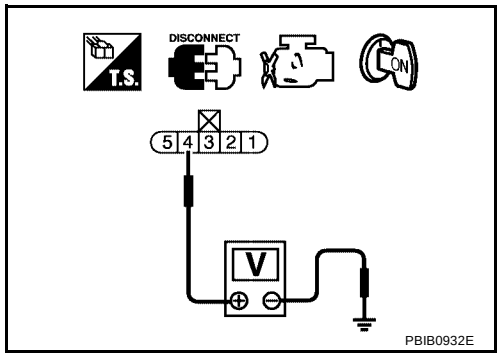

OK or NG

OK >> GO TO 5.
NG >> GO TO 4.

4. DETECT MALFUNCTIONING PART

Check the following.

- Harness connectors C1, E41
- Harness for open or short between ECM and “fuel level sensor unit and fuel pump”

>> Repair harness or connector.

5. CHECK FUEL TANK TEMPERATURE SENSOR GROUND CIRCUIT FOR OPEN AND SHORT

1. Turn ignition switch OFF.
2. Disconnect combination meter harness connector.
3. Check harness continuity between “fuel level sensor unit and fuel pump” terminal 3 and combination meter terminal 16. Refer to Wiring Diagram.

Continuity should exist.

4. Also check harness for short to ground and short to power.

OK or NG

OK >> GO TO 7.
NG >> GO TO 6.

6. DETECT MALFUNCTIONING PART

Check the following.

- Harness connectors C1, E41
- Harness connectors E152, M31
- Harness for open or short between “fuel level sensor unit and fuel pump” and combination meter

>> Repair open circuit or short to ground or short to power in harness or connector.

7. CHECK FUEL TANK TEMPERATURE SENSOR

Refer to EC-319, "Component Inspection" .

OK or NG

OK >> GO TO 8.
NG >> Replace “fuel level sensor unit and fuel pump”.

8. CHECK INTERMITTENT INCIDENT

Refer to EC-144, "TROUBLE DIAGNOSIS FOR INTERMITTENT INCIDENT" .

>> **INSPECTION END**

Component Inspection

UBS00H3G

FUEL TANK TEMPERATURE SENSOR

1. Remove fuel level sensor unit.
2. Check resistance between “fuel level sensor unit and fuel pump” terminals 3 and 4 by heating with hot water or heat gun as shown in the figure.

Temperature °C (°F)	Resistance kΩ
20 (68)	2.3 - 2.7
50 (122)	0.79 - 0.90

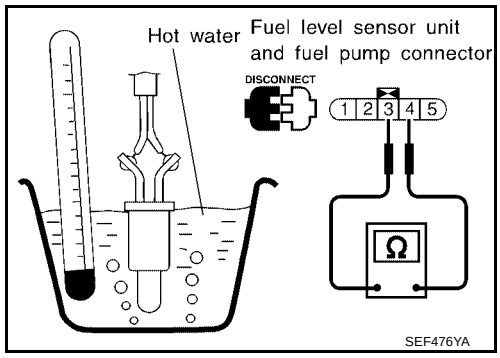

Removal and Installation

UBS00H3H

FUEL TANK TEMPERATURE SENSOR

Refer to FL-6, "FUEL LEVEL SENSOR UNIT, FUEL FILTER AND FUEL PUMP ASSEMBLY" .

DTC P0222, P0223 TP SENSOR

PFP:16119

Component Description

UBS00H3I

Electric throttle control actuator consists of throttle control motor, throttle position sensor, etc. The throttle position sensor responds to the throttle valve movement.
The throttle position sensor has the two sensors. These sensors are a kind of potentiometers which transform the throttle valve position into output voltage, and emit the voltage signal to the ECM. In addition, these sensors detect the opening and closing speed of the throttle valve and feed the voltage signals to the ECM. The ECM judges the current opening angle of the throttle valve from these signals and the ECM controls the throttle control motor to make the throttle valve opening angle properly in response to driving condition.

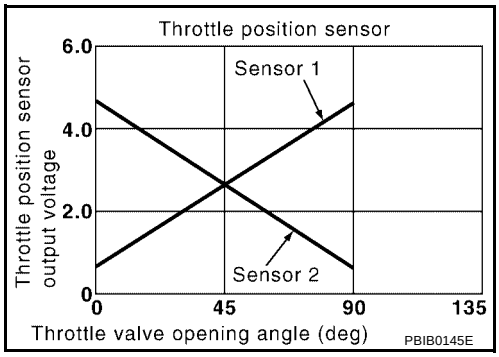

CONSULT-II Reference Value in Data Monitor Mode

UBS00H3J

Specification data are reference values.

MONITOR ITEM	CONDITION		SPECIFICATION
THRTL SEN 1 THRTL SEN 2*	● Ignition switch: ON (Engine stopped) ● Selector lever: D	Accelerator pedal: Fully released	More than 0.36V
		Accelerator pedal: Fully depressed	Less than 4.75V

*: Throttle position sensor 2 signal is converted by ECM internally. Thus, it differs from ECM terminal voltage signal.

On Board Diagnosis Logic

UBS00H3K

These self-diagnoses have the one trip detection logic.

DTC No.	Trouble diagnosis name	DTC detecting condition	Possible cause
P0222 0222	Throttle position sensor 1 circuit low input	An excessively low voltage from the TP sensor 1 is sent to ECM.	● Harness or connectors (TP sensor 1 circuit is open or shorted.) (APP sensor 2 circuit is shorted.) ● Electric throttle control actuator (TP sensor 1) ● Accelerator pedal position sensor (APP sensor 2)
P0223 0223	Throttle position sensor 1 circuit high input	An excessively high voltage from the TP sensor 1 is sent to ECM.	

FAIL-SAFE MODE

When the malfunction is detected, ECM enters fail-safe mode and the MIL lights up.

Engine operation condition in fail-safe mode
The ECM controls the electric throttle control actuator in regulating the throttle opening in order for the idle position to be within +10 degrees. The ECM regulates the opening speed of the throttle valve to be slower than the normal condition. So, the acceleration will be poor.

DTC Confirmation Procedure

UBS00H3L

NOTE:
If DTC Confirmation Procedure has been previously conducted, always turn ignition switch OFF and wait at least 10 seconds before conducting the next test.
TESTING CONDITION:
Before performing the following procedure, confirm that battery voltage is more than 8V at idle.

WITH CONSULT-II

1. Turn ignition switch ON.
2. Select “DATA MONITOR” mode with CONSULT-II.
3. Start engine and let it idle for 1 second.
4. If DTC is detected, go to EC-323, "Diagnostic Procedure" .

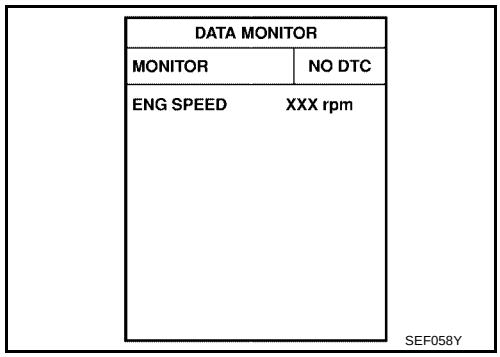

WITH GST

Follow the procedure “WITH CONSULT-II” above.

Wiring Diagram

UBS00H3M

EC-TPS1-01

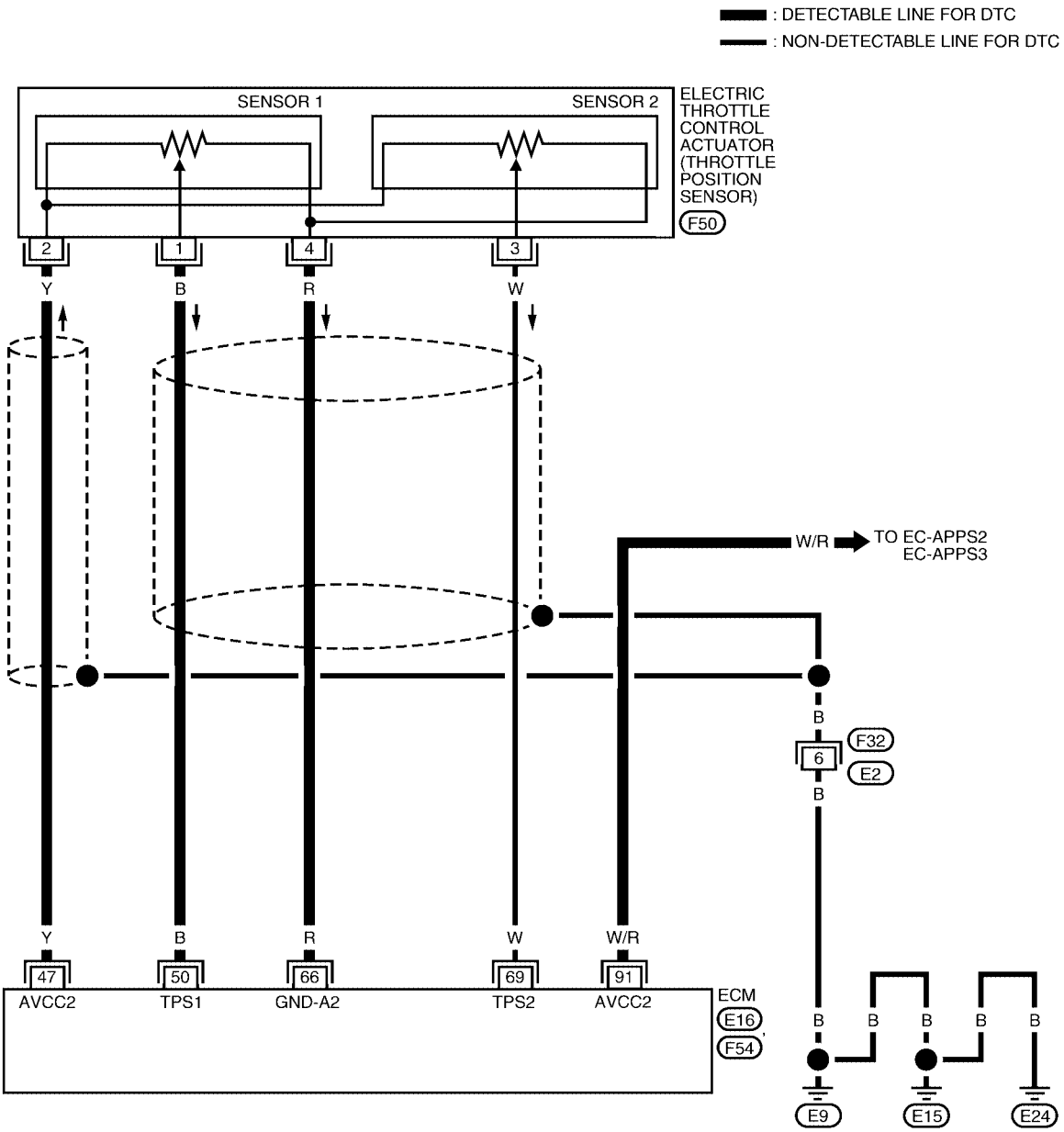

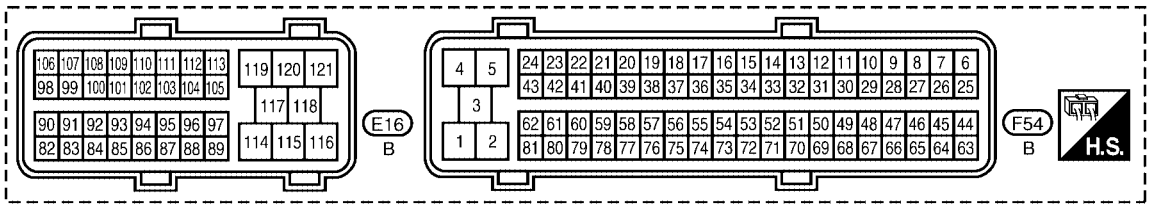

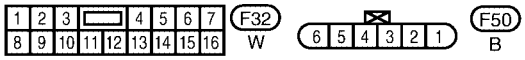

BBWA1683E

Specification data are reference values and are measured between each terminal and ground.

CAUTION:

Do not use ECM ground terminals when measuring input/output voltage. Doing so may result in damage to the ECM's transistor. Use a ground other than ECM terminals, such as the ground.

TERMINAL NO.	WIRE COLOR	ITEM	CONDITION	DATA (DC Voltage)
47	Y	Sensor power supply (Throttle position sensor)	**[Ignition switch: ON]**	Approximately 5V
50	B	Throttle position sensor 1	**[Ignition switch: ON]** ● Engine: Stopped ● Selector lever: D ● Accelerator pedal: Fully released	More than 0.36V
			[Ignition switch: ON] ● Engine: Stopped ● Selector lever: D ● Accelerator pedal: Fully depressed	Less than 4.75V
66	R	Sensor ground (Throttle position sensor)	**[Engine is running]** ● **Warm-up condition** ● Idle speed	Approximately 0V
69	W	Throttle position sensor 2	**[Ignition switch: ON]** ● Engine: Stopped ● Selector lever: D ● Accelerator pedal: Fully released	Less than 4.75V
			[Ignition switch: ON] ● Engine: Stopped ● Selector lever: D ● Accelerator pedal: Fully depressed	More than 0.36V
91	W/R	Sensor power supply (APP sensor 2)	**[Ignition switch: ON]**	Approximately 5V

Diagnostic Procedure

UBS00H3N

1. CHECK GROUND CONNECTIONS

1. Turn ignition switch OFF.
2. Loosen and retighten three ground screws on the body.
   Refer to EC-150, "Ground Inspection" .

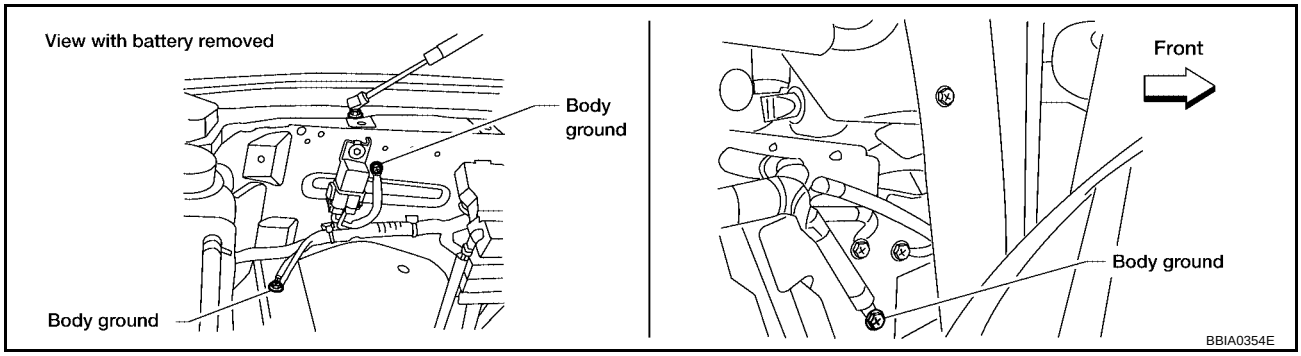

OK or NG

OK >> GO TO 2.
NG >> Repair or replace ground connections.

2. CHECK THROTTLE POSITION SENSOR 1 POWER SUPPLY CIRCUIT-I

1. Disconnect electric throttle control actuator harness connector.
2. Turn ignition switch ON.

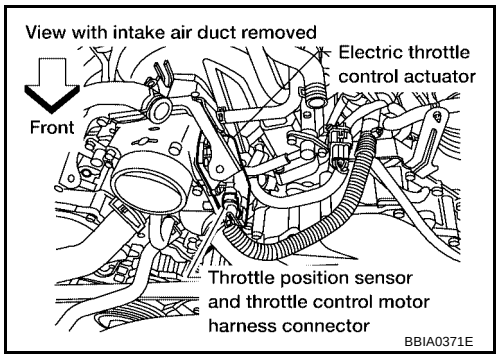

3. Check voltage between electric throttle control actuator terminal 2 and ground with CONSULT-II or tester.

Voltage: Approximately 5V

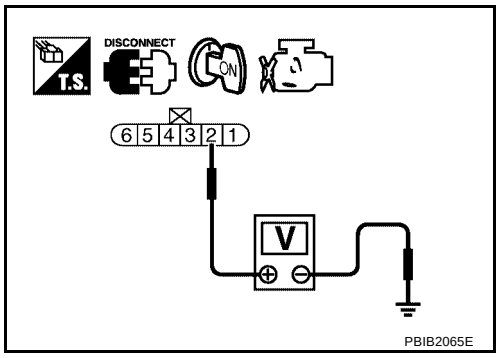

OK or NG

OK >> GO TO 7.
NG >> GO TO 3.

3. CHECK THROTTLE POSITION SENSOR 1 POWER SUPPLY CIRCUIT-II

1. Turn ignition switch OFF.
2. Disconnect ECM harness connector.
3. Check harness continuity between electric throttle control actuator terminal 2 and ECM terminal 47. Refer to Wiring Diagram.

Continuity should exist.

OK or NG

OK >> GO TO 4.
NG >> Repair open circuit.

4. CHECK THROTTLE POSITION SENSOR 1 POWER SUPPLY CIRCUIT-III

Check harness for short to power and short to ground, between the following terminals.

ECM terminal	Sensor terminal	Reference Wiring Diagram
47	Electric throttle control actuator terminal 2	EC-322
91	APP sensor terminal 6	EC-569

OK or NG

OK >> GO TO 5.
NG >> Repair short to ground or short to power in harness or connectors.

5. CHECK ACCELERATOR PEDAL POSITION SENSOR

Refer to EC-574, "Component Inspection" .

OK or NG

OK >> GO TO 11.
NG >> GO TO 6.

6. REPLACE ACCELERATOR PEDAL ASSEMBLY

1. Replace the accelerator pedal assembly.
2. Perform EC-78, "Accelerator Pedal Released Position Learning" .
3. Perform EC-78, "Throttle Valve Closed Position Learning" .
4. Perform EC-78, "Idle Air Volume Learning" .

>> **INSPECTION END**

7. CHECK THROTTLE POSITION SENSOR 1 GROUND CIRCUIT FOR OPEN AND SHORT

1. Turn ignition switch OFF.
2. Disconnect ECM harness connector.
3. Check harness continuity between electric throttle control actuator terminal 4 and ECM terminal 66. Refer to Wiring Diagram.

Continuity should exist.

4. Also check harness for short to ground and short to power.

OK or NG

OK >> GO TO 8.
NG >> Repair open circuit or short to ground or short to power in harness or connectors.

8. CHECK THROTTLE POSITION SENSOR 1 INPUT SIGNAL CIRCUIT FOR OPEN AND SHORT

1. Check harness continuity between ECM terminal 50 and electric throttle control actuator terminal 1. Refer to Wiring Diagram.

Continuity should exist.

2. Also check harness for short to ground and short to power.

OK or NG

OK >> GO TO 9.
NG >> Repair open circuit or short to ground or short to power in harness or connectors.

9. CHECK THROTTLE POSITION SENSOR

Refer to EC-326, "Component Inspection" .

OK or NG

OK >> GO TO 11.
NG >> GO TO 10.

10. REPLACE ELECTRIC THROTTLE CONTROL ACTUATOR

1. Replace the electric throttle control actuator.
2. Perform EC-78, "Throttle Valve Closed Position Learning" .
3. Perform EC-78, "Idle Air Volume Learning" .

>> **INSPECTION END**

11. CHECK INTERMITTENT INCIDENT

Refer to EC-144, "TROUBLE DIAGNOSIS FOR INTERMITTENT INCIDENT" .

>> **INSPECTION END**

Component Inspection

UBS00H3O

THROTTLE POSITION SENSOR

1. Reconnect all harness connectors disconnected.
2. Perform EC-78, "Throttle Valve Closed Position Learning" .
3. Turn ignition switch ON.
4. Set selector lever to D position.
5. Check voltage between ECM terminals 50 (TP sensor 1 signal), 69 (TP sensor 2 signal) and ground under the following conditions.

Terminal	Accelerator pedal	Voltage
50 (Throttle position sensor 1)	Fully released	More than 0.36V
	Fully depressed	Less than 4.75V
69 (Throttle position sensor 2)	Fully released	Less than 4.75V
	Fully depressed	More than 0.36V

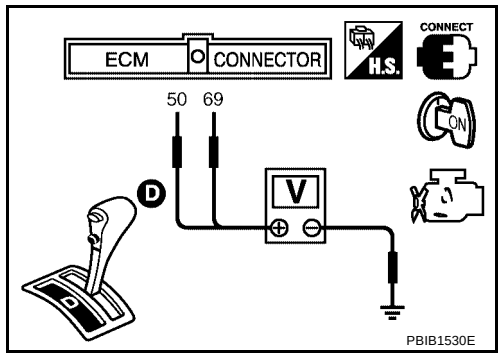

6. If NG, replace electric throttle control actuator and go to the next step.
7. Perform EC-78, "Throttle Valve Closed Position Learning" .
8. Perform EC-78, "Idle Air Volume Learning" .

Removal and Installation

UBS00H3P

ELECTRIC THROTTLE CONTROL ACTUATOR

Refer to EM-17, "INTAKE MANIFOLD" .

DTC P0300 - P0308 MULTIPLE CYLINDER MISFIRE, NO. 1 - 8 CYLINDER MISFIRE

PFP:00000

On Board Diagnosis Logic

UBS00L0T

When a misfire occurs, engine speed will fluctuate. If the engine speed fluctuates enough to cause the crankshaft position (CKP) sensor (POS) signal to vary, ECM can determine that a misfire is occurring.

Sensor	Input signal to ECM	ECM function
Crankshaft position sensor (POS)	Engine speed	On board diagnosis of misfire

The misfire detection logic consists of the following two conditions.

1. One Trip Detection Logic (Three Way Catalyst Damage)
   On the 1st trip that a misfire condition occurs that can damage the three way catalyst (TWC) due to overheating, the MIL will blink.
   When a misfire condition occurs, the ECM monitors the CKP sensor signal every 200 engine revolutions for a change.
   When the misfire condition decreases to a level that will not damage the TWC, the MIL will turn off.
   If another misfire condition occurs that can damage the TWC on a second trip, the MIL will blink.
   When the misfire condition decreases to a level that will not damage the TWC, the MIL will remain on.
   If another misfire condition occurs that can damage the TWC, the MIL will begin to blink again.
2. Two Trip Detection Logic (Exhaust quality deterioration)
   For misfire conditions that will not damage the TWC (but will affect vehicle emissions), the MIL will only light when the misfire is detected on a second trip. During this condition, the ECM monitors the CKP sensor signal every 1,000 engine revolutions.
   A misfire malfunction can be detected on any one cylinder or on multiple cylinders.

DTC No.	Trouble diagnosis name	DTC detecting condition	Possible cause
P0300 0300	Multiple cylinder misfire detected	Multiple cylinder misfire.	● Improper spark plug ● Insufficient compression ● Incorrect fuel pressure ● The injector circuit is open or shorted ● Fuel injector ● Intake air leak ● The ignition signal circuit is open or shorted ● Lack of fuel ● Signal plate ● Air fuel ratio (A/F) sensor 1 ● Incorrect PCV hose connection
P0301 0301	No.1 cylinder misfire detected	No. 1 cylinder misfires.	
P0302 0302	No. 2 cylinder misfire detected	No. 2 cylinder misfires.	
P0303 0303	No. 3 cylinder misfire detected	No. 3 cylinder misfires.	
P0304 0304	No. 4 cylinder misfire detected	No. 4 cylinder misfires.	
P0305 0305	No. 5 cylinder misfire detected	No. 5 cylinder misfires.	
P0306 0306	No. 6 cylinder misfire detected	No. 6 cylinder misfires.	
P0307 0307	No. 7 cylinder misfire detected	No. 7 cylinder misfires.	
P0308 0308	No. 8 cylinder misfire detected	No. 8 cylinder misfires.	

DTC Confirmation Procedure

UBS00L0U

CAUTION:
Always drive vehicle in safe manner according to traffic conditions and obey all traffic laws when driving.

NOTE:
If DTC Confirmation Procedure has been previously conducted, always turn ignition switch OFF and wait at least 10 seconds before conducting the next test.

WITH CONSULT-II

1. Turn ignition switch ON, and select “DATA MONITOR” mode with CONSULT-II.
2. Start engine and warm it up to normal operating temperature.
3. Turn ignition switch OFF and wait at least 10 seconds.
4. Restart engine and let it idle for about 15 minutes.
5. If 1st trip DTC is detected, go to EC-328, "Diagnostic Procedure".

   NOTE:
   If 1st trip DTC is not detected during above procedure, performing the following procedure is advised.

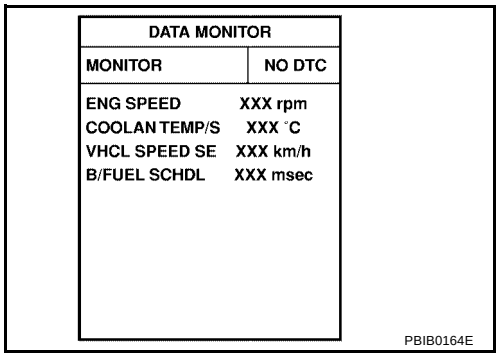

a. Turn ignition switch OFF and wait at least 10 seconds.
b. Start engine and drive the vehicle under the similar conditions to (1st trip) Freeze Frame Data for a certain time. Refer to the table below.
   Hold the accelerator pedal as steady as possible.

   The similar conditions to (1st trip) Freeze Frame Data means the vehicle operation that the following conditions should be satisfied at the same time.

Engine speed	Engine speed in the freeze frame data ± 400 rpm
Vehicle speed	Vehicle speed in the freeze frame data ± 10 km/h (6 MPH)
Engine coolant temperature (T) condition	When the freeze frame data shows lower than 70 °C (158 °F), T should be lower than 70 °C (158 °F).
	When the freeze frame data shows higher than or equal to 70 °C (158 °F), T should be higher than or equal to 70 °C (158 °F).

The time to driving varies according to the engine speed in the freeze frame data.

Engine speed	Time
Around 1,000 rpm	Approximately 10 minutes
Around 2,000 rpm	Approximately 5 minutes
More than 3,000 rpm	Approximately 3.5 minutes

WITH GST

Follow the procedure “WITH CONSULT-II” above.

Diagnostic Procedure

UBS00L0V

1. CHECK FOR INTAKE AIR LEAK AND PCV HOSE

1. Start engine and run it at idle speed.
2. Listen for the sound of the intake air leak.
3. Check PCV hose connection.

OK or NG

OK >> GO TO 2.
NG >> Discover air leak location and repair.

2. CHECK FOR EXHAUST SYSTEM CLOGGING

Stop engine and visually check exhaust tube, three way catalyst and muffler for dents.

OK or NG

OK >> GO TO 3.
NG >> Repair or replace it.

3. PERFORM POWER BALANCE TEST

With CONSULT-II

1. Perform “POWER BALANCE” in “ACTIVE TEST” mode.
2. Is there any cylinder which does not produce a momentary engine speed drop?

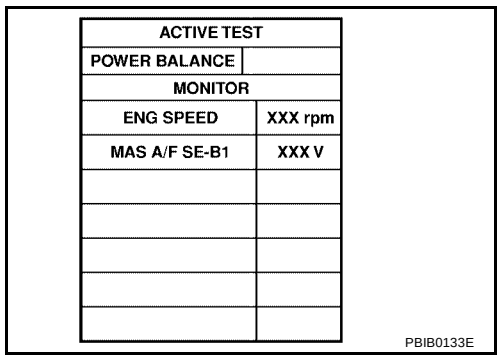

ACTIVE TEST	
POWER BALANCE	
MONITOR	
ENG SPEED	XXX rpm
MAS A/F SE-B1	XXX V

PBIB0133E

Without CONSULT-II

When disconnecting each fuel injector harness connector one at a time, is there any cylinder which does not produce a momentary engine speed drop?

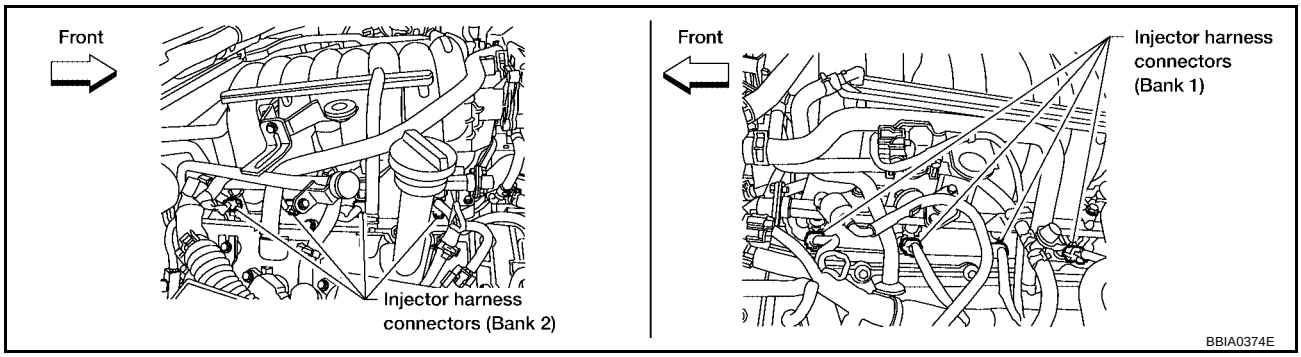

Yes or No

Yes >> GO TO 4.
No >> GO TO 7.

4. CHECK FUEL INJECTOR

Does each fuel injector make an operating sound at idle?

Yes or No

Yes >> GO TO 5.
No >> Check fuel injector(s) and circuit(s). Refer to EC-598, "FUEL INJECTOR" .

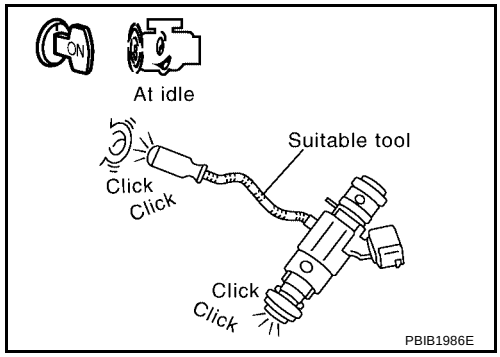

5. CHECK FUNCTION OF IGNITION COIL-I

CAUTION:
Do the following procedure in the place where ventilation is good without the combustible.

1. Turn ignition switch OFF.
2. Remove fuel pump fuse in IPDM E/R to release fuel pressure.

   NOTE:
   Do not use CONSULT-II to release fuel pressure, or fuel pressure applies again during the following procedure.
3. Start engine.
4. After engine stalls, crank it two or three times to release all fuel pressure.
5. Turn ignition switch OFF.
6. Remove all ignition coil harness connectors to avoid the electrical discharge from the ignition coils.
7. Remove ignition coil and spark plug of the cylinder to be checked.

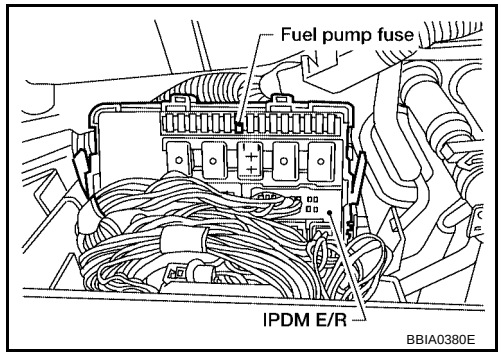

8. Crank engine for 5 seconds or more to remove combustion gas in the cylinder.
9. Connect spark plug and harness connector to ignition coil.
10. Fix ignition coil using a rope etc. with gap of 13 - 17 mm between the edge of the spark plug and grounded metal portion as shown in the figure.
11. Crank engine for about 3 seconds, and check whether spark is generated between the spark plug and the grounded metal portion.

    Spark should be generated.

    CAUTION:
    - **Do not approach to the spark plug and the ignition coil within 50cm. Be careful not to get an electrical shock while checking, because the electrical discharge voltage becomes 20kV or more.**
    - **It might cause to damage the ignition coil if the gap of more than 17 mm is taken.**

    NOTE:
    When the gap is less than 13 mm, the spark might be generated even if the coil is malfunctioning.

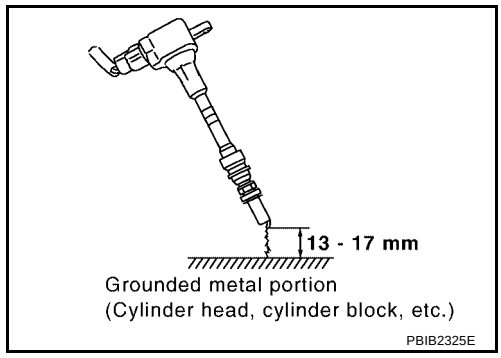

OK or NG

OK >> GO TO 9.
NG >> GO TO 6.

6. CHECK FUNCTION OF IGNITION COIL-II

1. Turn ignition switch OFF.
2. Disconnect spark plug and connect a known-good spark plug.
3. Crank engine for about 3 seconds, and recheck whether spark is generated between the spark plug and the grounded metal portion.

   Spark should be generated.

OK or NG

OK >> GO TO 7.
NG >> Check ignition coil, power transistor and their circuits. Refer to EC-618, "IGNITION SIGNAL" .

7. CHECK SPARK PLUG

Check the initial spark plug for fouling, etc.

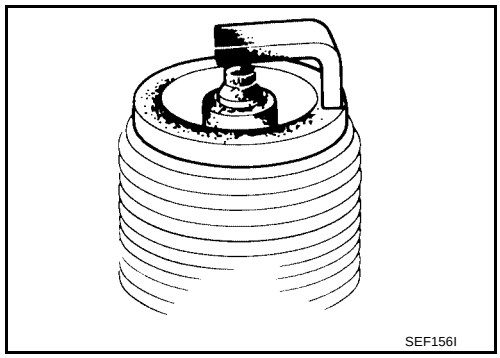

OK or NG

OK >> Replace spark plug(s) with standard type one(s). For spark plug type, refer to EM-29, "SPARK PLUG (PLATINUM-TIPPED TYPE)" .

NG >> 1. Repair or clean spark plug.
2. GO TO 8.

8. CHECK FUNCTION OF IGNITION COIL-III

1. Reconnect the initial spark plugs.
2. Crank engine for about 3 seconds, and recheck whether spark is generated between the spark plug and the grounded portion.

Spark should be generated.

OK or NG

OK >> **INSPECTION END**

NG >> Replace spark plug(s) with standard type one(s). For spark plug type, refer to MA-18, "Changing Spark Plugs" .

9. CHECK COMPRESSION PRESSURE

Check compression pressure. Refer to EM-63, "CHECKING COMPRESSION PRESSURE" .

OK or NG

OK >> GO TO 10.

NG >> Check pistons, piston rings, valves, valve seats and cylinder head gaskets.

10. CHECK FUEL PRESSURE

1. Install all removed parts.
2. Release fuel pressure to zero. Refer to EC-80, "FUEL PRESSURE RELEASE" .
3. Install fuel pressure gauge and check fuel pressure. Refer to EC-82, "FUEL PRESSURE CHECK" .

At idle: Approximately 350 kPa (3.57 kg/cm^2 , 51 psi)

OK or NG

OK >> GO TO 12.

NG >> GO TO 11.

11. DETECT MALFUNCTIONING PART

Check the following.

- Fuel pump and circuit (Refer to EC-604, "FUEL PUMP" .)
- Fuel pressure regulator (Refer to EC-82, "FUEL PRESSURE CHECK" .)
- Fuel lines
- Fuel filter for clogging

>> Repair or replace.

12. CHECK IGNITION TIMING

Check the following items. Refer to EC-71, "Basic Inspection" .

Items	Specifications
Target idle speed	650 ± 50 rpm (in P or N position)
Ignition timing	15 ± 5° BTDC (in P or N position)

OK or NG

OK >> GO TO 13.
NG >> Follow the EC-71, "Basic Inspection" .

13. CHECK A/F SENSOR 1 INPUT SIGNAL

1. Turn ignition switch OFF.
2. Disconnect A/F sensor 1 harness connector.

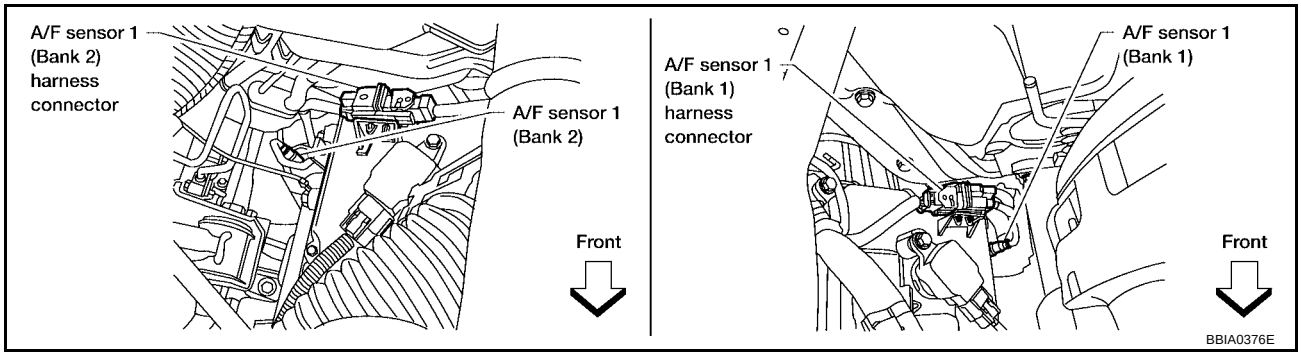

3. Disconnect ECM harness connector.
4. Check harness continuity between the following terminals.
   Refer to Wiring Diagram.

	A/F sensor 1 terminal	ECM terminal
Bank 1	1	16
	2	75
	5	35
	6	56
Bank 2	1	76
	2	77
	5	57
	6	58

Continuity should exist.

5. Check harness continuity between the following terminals and ground.
   Refer to Wiring Diagram.

Bank 1		Bank 2	
A/F sensor 1 terminal	ECM terminal	A/F sensor 1 terminal	ECM terminal
1	16	1	76
2	75	2	77
5	35	5	57
6	56	6	58

Continuity should not exist.

6. Also check harness for short to power.

OK or NG

OK >> GO TO 14.
NG >> Repair open circuit or short to ground or short to power in harness or connectors.

14. CHECK A/F SENSOR 1 HEATER

Refer to EC-162, "Component Inspection" .

OK or NG

OK >> GO TO 16.
NG >> GO TO 15.

15. REPLACE AIR FUEL RATIO (A/F) SENSOR 1

Replace air fuel ratio (A/F) sensor 1.

CAUTION:

- **Discard any air fuel ratio (A/F) sensor which has been dropped from a height of more than 0.5 m (19.7 in) onto a hard surface such as a concrete floor; use a new one.**
- **Before installing new air fuel ratio (A/F) sensor, clean exhaust system threads (using Oxygen Sensor Thread Cleaner tool J-43897-18 or J-43897-12) and approved anti-seize lubricant.**

>> **INSPECTION END**

16. CHECK MASS AIR FLOW SENSOR

Check mass air flow sensor signal in “DATA MONITOR” mode with CONSULT-II.

3.0 - 9.0 g·m/sec:	**at idling**
9.0 - 28.0 g·m/sec:	**at 2,500 rpm**

With GST

Check mass air flow sensor signal in Service $01 with GST.

3.0 - 9.0 g·m/sec:	**at idling**
9.0 - 28.0 g·m/sec:	**at 2,500 rpm**

OK or NG

OK >> GO TO 17.

NG >> Check connectors for rusted terminals or loose connections in the mass air flow sensor circuit or ground. Refer to EC-171, "DTC P0101 MAF SENSOR" .

17. CHECK SYMPTOM MATRIX CHART

Check items on the rough idle symptom in EC-92, "Symptom Matrix Chart" .

OK or NG

OK >> GO TO 18.

NG >> Repair or replace.

18. ERASE THE 1ST TRIP DTC

Some tests may cause a 1st trip DTC to be set.

Erase the 1st trip DTC from the ECM memory after performing the tests. Refer to EC-61, "HOW TO ERASE EMISSION-RELATED DIAGNOSTIC INFORMATION" .

>> GO TO 19.

19. CHECK INTERMITTENT INCIDENT

Refer to EC-144, "TROUBLE DIAGNOSIS FOR INTERMITTENT INCIDENT" .

>> **INSPECTION END**

DTC P0327, P0328, P0332, P0333 KS

PFP:22060

Component Description

UBS00H3T

The knock sensor is attached to the cylinder block. It senses engine knocking using a piezoelectric element. A knocking vibration from the cylinder block is sensed as vibrational pressure. This pressure is converted into a voltage signal and sent to the ECM.

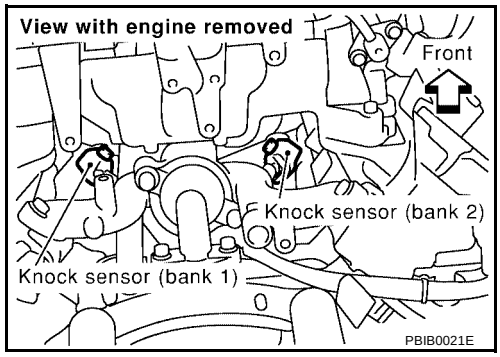

On Board Diagnosis Logic

UBS00H3U

The MIL will not light up for these diagnoses.

DTC No.	Trouble diagnosis name	DTC detecting condition	Possible cause
P0327 0327 (bank 1)	Knock sensor circuit low input	An excessively low voltage from the sensor is sent to ECM.	● Harness or connectors (The sensor circuit is open or shorted.) ● Knock sensor
P0332 0332 (bank 2)			
P0328 0328 (bank 1)	Knock sensor circuit high input	An excessively high voltage from the sensor is sent to ECM.	
P0333 0333 (bank 2)			

DTC Confirmation Procedure

UBS00H3V

NOTE:
If DTC Confirmation Procedure has been previously conducted, always turn ignition switch OFF and wait at least 10 seconds before conducting the next test.
TESTING CONDITION:
Before performing the following procedure, confirm that battery voltage is more than 10V at idle.

WITH CONSULT-II

1. Turn ignition switch ON and select “DATA MONITOR” mode with CONSULT-II.
2. Start engine and run it for at least 5 seconds at idle speed.
3. If 1st trip DTC is detected, go to EC-337, "Diagnostic Procedure"

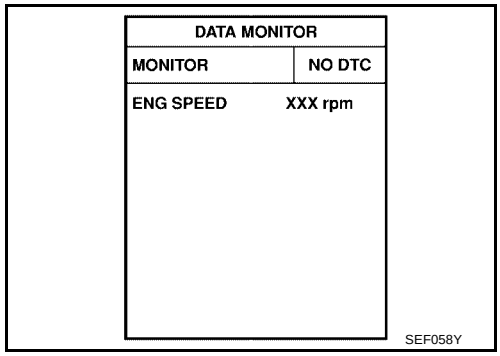

WITH GST

Follow the procedure “WITH CONSULT-II” above.

Wiring Diagram

UBS00H3W

EC-KS-01

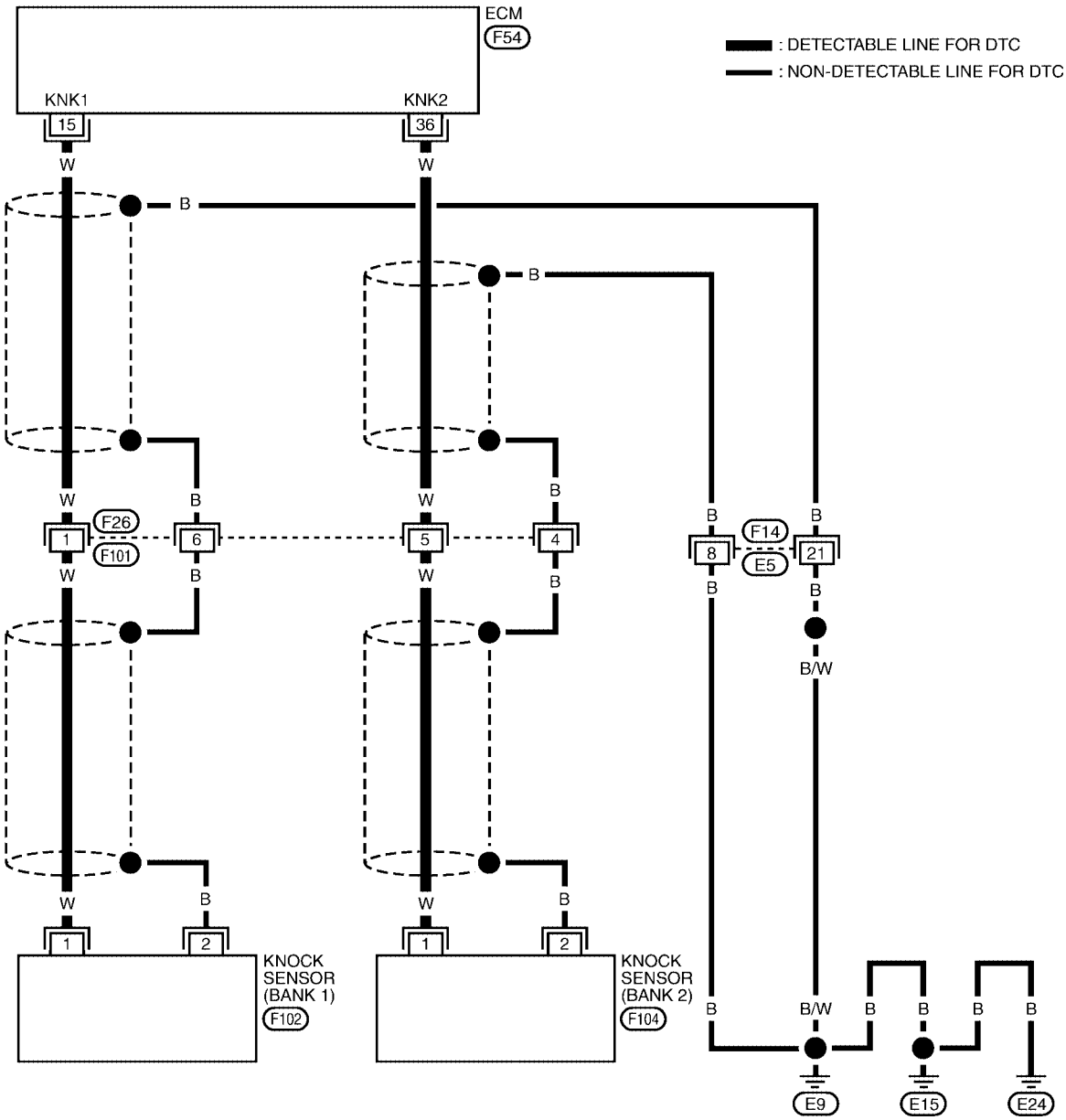

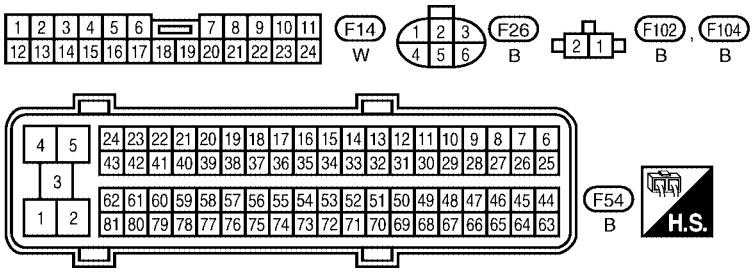

BBWA2094E

Specification data are reference values and are measured between each terminal and ground.

CAUTION:

Do not use ECM ground terminals when measuring input/output voltage. Doing so may result in damage to the ECM's transistor. Use a ground other than ECM terminals, such as the ground.

TERMINAL NO.	WIRE COLOR	ITEM	CONDITION	DATA (DC Voltage)
15 36	W W	Knock sensor (bank 1) Knock sensor (bank 2)	**[Engine is running]** ● Idle speed	Approximately 2.5V

Diagnostic Procedure

UBS00H3X

1. CHECK KNOCK SENSOR INPUT SIGNAL CIRCUIT FOR OPEN AND SHORT-I

1. Turn ignition switch OFF.
2. Disconnect ECM harness connector.
3. Check resistance between ECM terminals 15, 36 and ground. Refer to Wiring Diagram.

   NOTE:
   It is necessary to use an ohmmeter which can measure more than 10 MΩ.

   Resistance: Approximately 532 - 588 kΩ [at 20°C (68°F)]

4. Also check harness for short to ground and short to power.

OK or NG

OK >> GO TO 5.
NG >> GO TO 2.

2. CHECK KNOCK SENSOR INPUT SIGNAL CIRCUIT FOR OPEN AND SHORT-II

1. Disconnect knock sensor harness connector.
2. Check harness continuity between ECM terminal 15 and knock sensor (bank1) terminal 1, ECM terminal 36 and knock sensor (bank 2) terminal 1.
   Refer to Wiring Diagram.

   Continuity should exist.

3. Also check harness for short to ground and short to power.

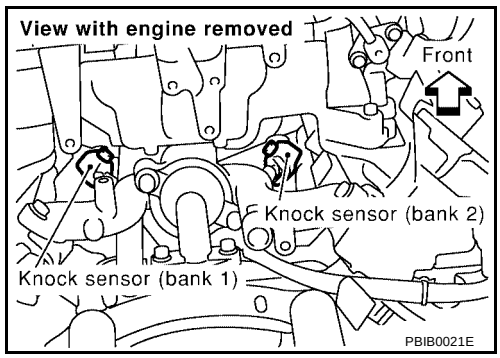

OK or NG

OK >> GO TO 4.
NG >> GO TO 3.

3. DETECT MALFUNCTIONING PART

Check the following.

- Harness connectors F26, F101
- Harness for open or short between ECM and knock sensor

>> Repair open circuit or short to ground or short to power in harness or connectors.

4. CHECK KNOCK SENSOR

Refer to EC-339, "Component Inspection" .

OK or NG

OK >> GO TO 5.
NG >> Replace knock sensor.

5. CHECK GROUND CONNECTIONS

Loosen and retighten three ground screws on the body.
Refer to EC-150, "Ground Inspection" .

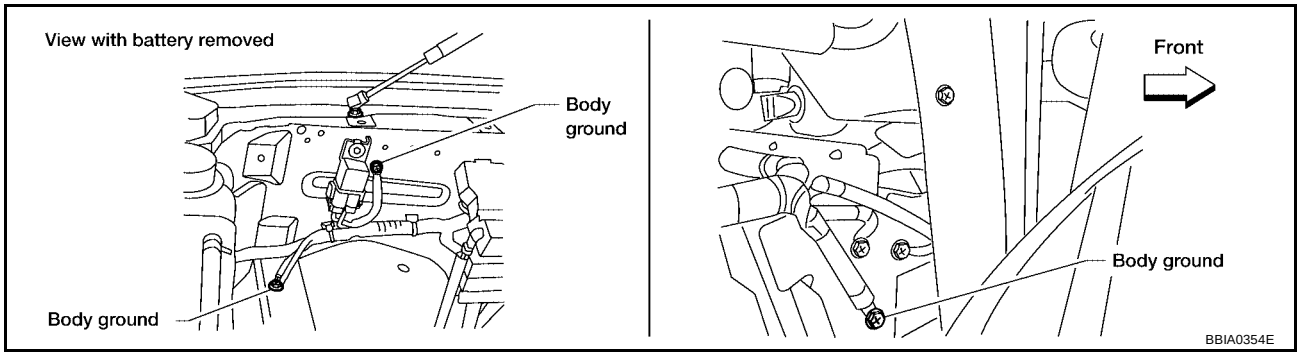

OK or NG

OK >> GO TO 6.
NG >> Repair or replace ground connections.

6. CHECK KNOCK SENSOR SHIELD CIRCUIT FOR OPEN AND SHORT

1. Disconnect knock sensor harness connector.
2. Check harness continuity between knock sensor terminal 2 and ground. Refer to Wiring Diagram.

Continuity should exist.

3. Also check harness for short to power.

OK or NG

OK >> GO TO 8.
NG >> GO TO 7.

7. DETECT MALFUNCTIONING PART

Check the following.

- Harness connectors F26, F101
- Harness connectors F14, E5
- Harness for open or short between knock sensor terminal 2 and ground

>> Repair open circuit or short power in harness or connectors.

8. CHECK INTERMITTENT INCIDENT

Refer to EC-144, "TROUBLE DIAGNOSIS FOR INTERMITTENT INCIDENT" .

>> **INSPECTION END**

Component Inspection

UBS00H3Y

KNOCK SENSOR

Check resistance between knock sensor terminal 1 and ground.

NOTE:
It is necessary to use an ohmmeter which can measure more than 10 MΩ.

Resistance: Approximately 532 - 588 kΩ [at 20°C (68°F)]

CAUTION:
Do not use any knock sensors that have been dropped or physically damaged. Use only new ones.

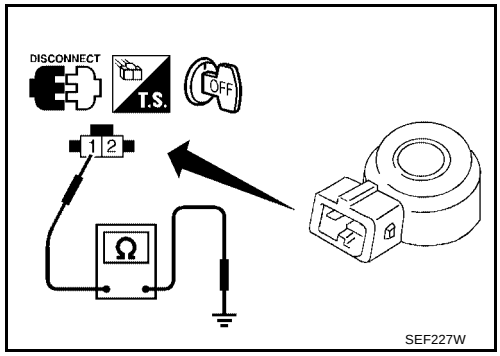

Removal and Installation

UBS00H3Z

KNOCK SENSOR

Refer to EM-78, "CYLINDER BLOCK" .

DTC P0335 CKP SENSOR (POS)

PFP:23731

Component Description

UBS00H40

The crankshaft position sensor (POS) is located on the A/T assembly facing the gear teeth (cogs) of the signal plate. It detects the fluctuation of the engine revolution.
The sensor consists of a permanent magnet and Hall IC.
When the engine is running, the high and low parts of the teeth cause the gap with the sensor to change.
The changing gap causes the magnetic field near the sensor to change.
Due to the changing magnetic field, the voltage from the sensor changes.
The ECM receives the voltage signal and detects the fluctuation of the engine revolution.
ECM receives the signals as shown in the figure.

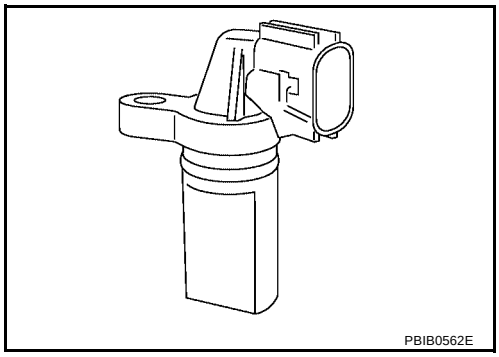

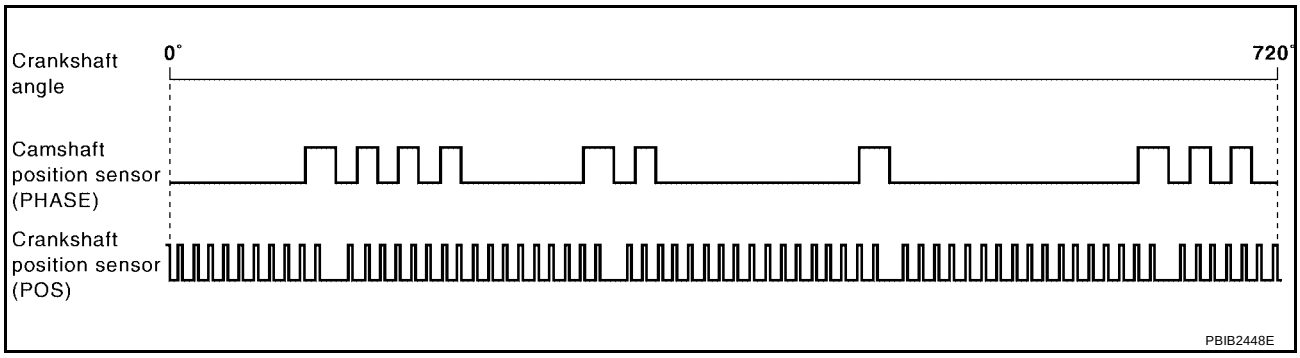

CONSULT-II Reference Value in Data Monitor Mode

UBS00H41

Specification data are reference values.

MONITOR ITEM	CONDITION	SPECIFICATION
ENG SPEED	● Run engine and compare CONSULT-II value with the tachometer indication.	Almost the same speed as the tachometer indication.

On Board Diagnosis Logic

UBS00H42

DTC No.	Trouble diagnosis name	DTC detecting condition	Possible cause
P0335 0335	Crankshaft position sensor (POS) circuit	● The crankshaft position sensor (POS) signal is not detected by the ECM during the first few seconds of engine cranking. ● The proper pulse signal from the crankshaft position sensor (POS) is not sent to ECM while the engine is running. ● The crankshaft position sensor (POS) signal is not in the normal pattern during engine running.	● Harness or connectors (The sensor circuit is open or shorted) ● Crankshaft position sensor (POS) ● Signal plate

DTC Confirmation Procedure

UBS00H43

NOTE:
If DTC Confirmation Procedure has been previously conducted, always turn ignition switch OFF and wait at least 10 seconds before conducting the next test.
TESTING CONDITION:
Before performing the following procedure, confirm that battery voltage is more than 10.5V with ignition switch ON.

WITH CONSULT-II

1. Turn ignition switch ON and select “DATA MONITOR” mode with CONSULT-II.
2. Crank engine for at least 2 seconds and run it for at least 5 seconds at idle speed.
3. If 1st trip DTC is detected, go to EC-343, "Diagnostic Procedure".

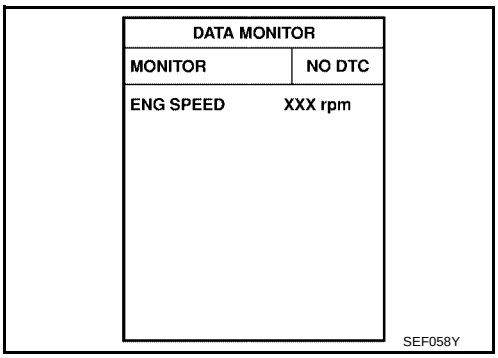

WITH GST

Follow the procedure “WITH CONSULT-II” above.

Wiring Diagram

UBS00H44

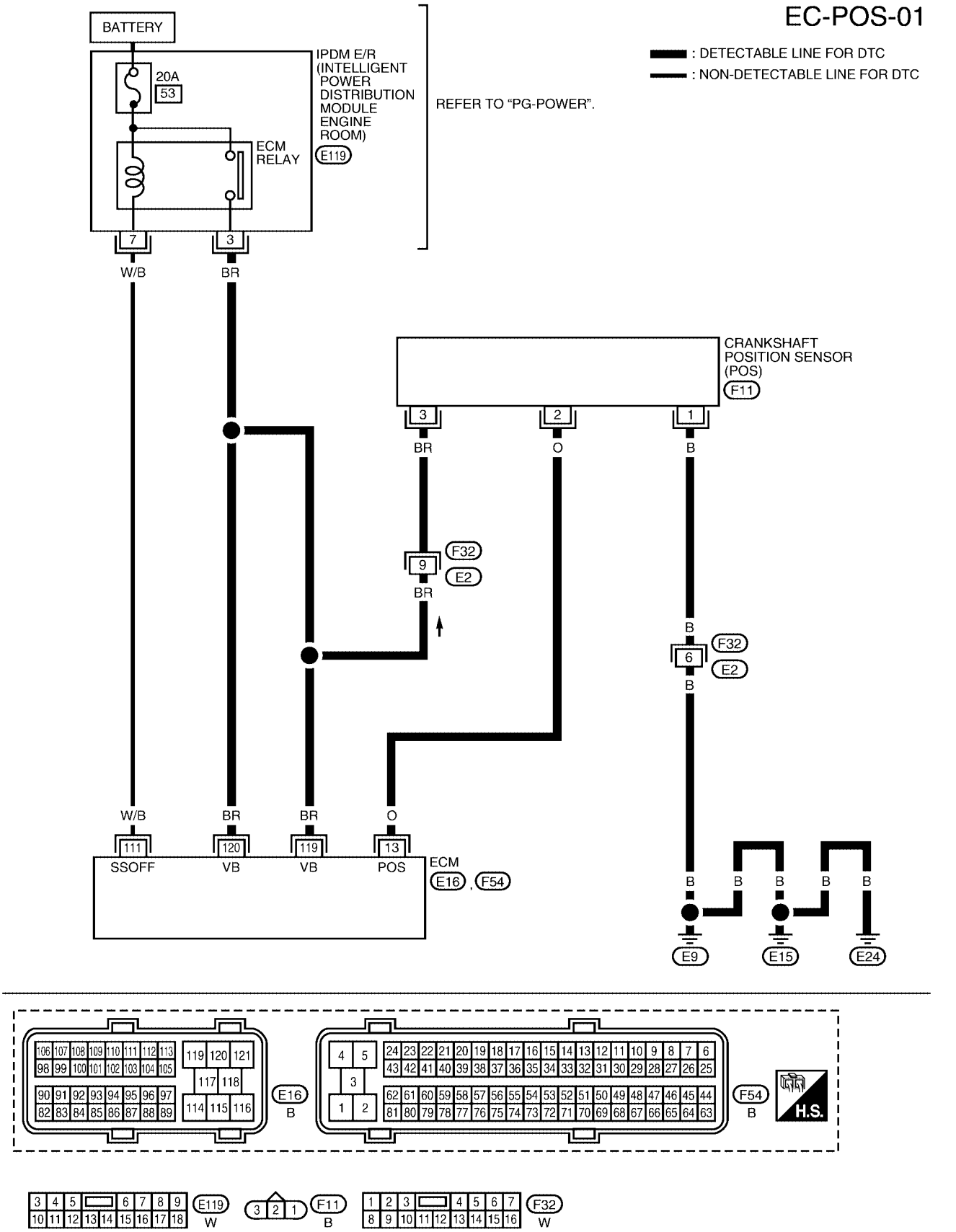

Specification data are reference values and are measured between each terminal and ground.
Pulse signal is measured by CONSULT-II.

CAUTION:
Do not use ECM ground terminals when measuring input/output voltage. Doing so may result in damage to the ECM's transistor. Use a ground other than ECM terminals, such as the ground.

TERMINAL NO.	WIRE COLOR	ITEM	CONDITION	DATA (DC Voltage)
13	O	Crankshaft position sensor (POS)	**[Engine is running]** ● **Warm-up condition** ● Idle speed **NOTE:** The pulse cycle changes depending on rpm at idle.	1.0 - 2.0V ★ 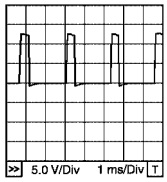 PBIB1041E
			[Engine is running] ● Engine speed: 2,000 rpm.	1.0 - 2.0V ★ 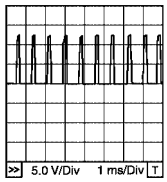 PBIB1042E
111	W/B	ECM relay (Self shut-off)	**[Engine is running]** **[Ignition switch: OFF]** ● For a few seconds after turning ignition switch OFF	0 - 1.5V
			[Ignition switch: OFF] ● More than a few seconds after turning ignition switch OFF	BATTERY VOLTAGE (11 - 14V)
119 120	BR BR	Power supply for ECM	**[Ignition switch: ON]**	BATTERY VOLTAGE (11 - 14V)

★: Average voltage for pulse signal (Actual pulse signal can be confirmed by oscilloscope.)

Diagnostic Procedure

UBS00H45

1. CHECK GROUND CONNECTIONS

1. Turn ignition switch OFF.
2. Loosen and retighten three ground screws on the body.
   Refer to EC-150, "Ground Inspection" .

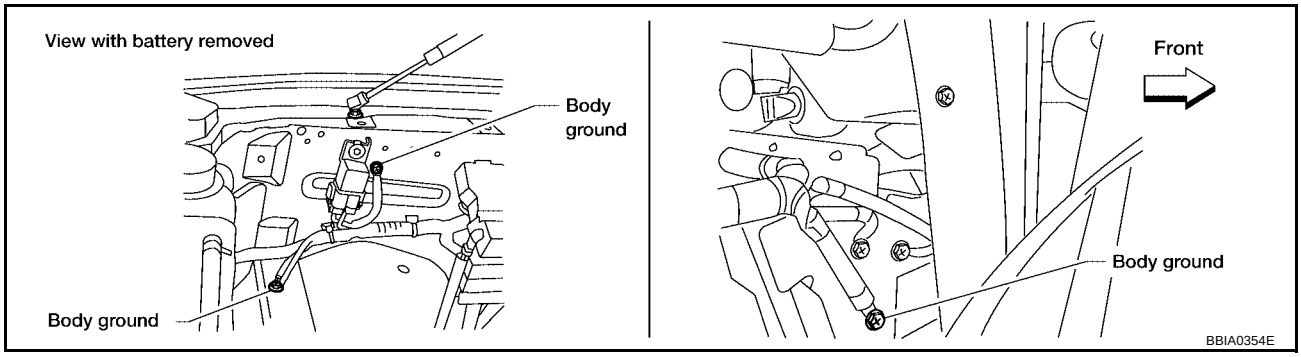

OK or NG

OK >> GO TO 2.
NG >> Repair or replace ground connections.

2. CHECK CRANKSHAFT POSITION (CKP) SENSOR (POS) POWER SUPPLY CIRCUIT

1. Disconnect crankshaft position (CKP) sensor (POS) harness connector.
2. Turn ignition switch ON.

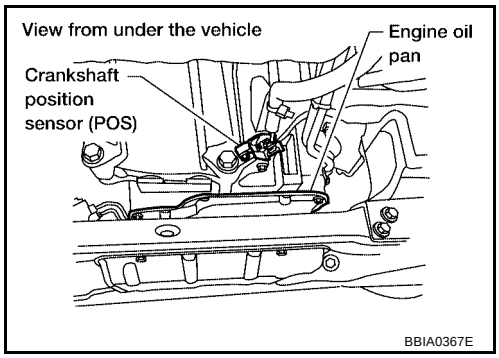

3. Check voltage between CKP sensor (POS) terminal 3 and ground with CONSULT-II or tester.

Voltage: Battery voltage

OK or NG

OK >> GO TO 4.
NG >> GO TO 3.

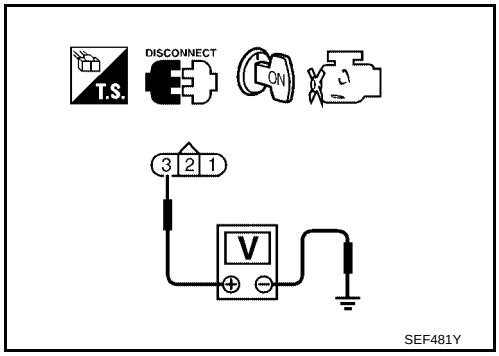

3. DETECT MALFUNCTIONING PART

Check the following.

- Harness connectors F32, E2
- Harness for open or short between crankshaft position sensor (POS) and ECM
- Harness for open or short between crankshaft position sensor (POS) and IPDM E/R

>> Repair open circuit or short to ground or short to power in harness or connectors.

4. CHECK CKP SENSOR (POS) GROUND CIRCUIT FOR OPEN AND SHORT

1. Turn ignition switch OFF.
2. Check harness continuity between CKP sensor (POS) terminal 1 and ground.
   Refer to Wiring Diagram.

Continuity should exist.

3. Also check harness for short to power.

OK or NG

OK >> GO TO 6.
NG >> GO TO 5.

5. DETECT MALFUNCTIONING PART

Check the following.

- Harness connectors F32, E2
- Harness for open or short between crankshaft position sensor (POS) and ground

>> Repair open circuit or short to power in harness or connectors.

6. CHECK CKP SENSOR (POS) INPUT SIGNAL CIRCUIT FOR OPEN AND SHORT

1. Disconnect ECM harness connector.
2. Check harness continuity between ECM terminal 13 and CKP sensor (POS) terminal 2.
   Refer to Wiring Diagram.

   Continuity should exist.

3. Also check harness for short to ground and short to power.

OK or NG

OK >> GO TO 7.
NG >> Repair open circuit or short to ground or short to power in harness or connectors.

7. CHECK CRANKSHAFT POSITION SENSOR (POS)

Refer to EC-346, "Component Inspection" .

OK or NG

OK >> GO TO 8.
NG >> Replace crankshaft position sensor (POS).

8. CHECK GEAR TOOTH

Visually check for chipping signal plate gear tooth.

OK or NG

OK >> GO TO 9.
NG >> Replace the signal plate.

9. CHECK INTERMITTENT INCIDENT

Refer to EC-144, "TROUBLE DIAGNOSIS FOR INTERMITTENT INCIDENT" .

>> **INSPECTION END**

Component Inspection

UBS00H46

CRANKSHAFT POSITION SENSOR (POS)

1. Loosen the fixing bolt of the sensor.
2. Disconnect crankshaft position sensor (POS) harness connector.
3. Remove the sensor.
4. Visually check the sensor for chipping.

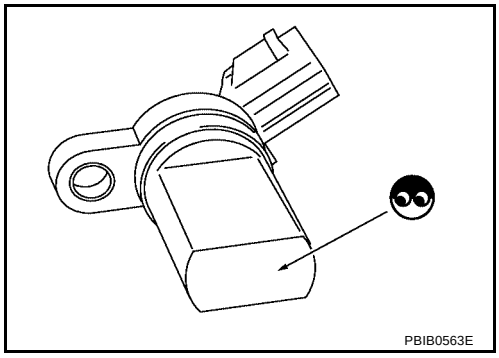

5. Check resistance as shown in the figure.

Terminal No. (Polarity)	Resistance Ω [at 25°C (77°F)]
1 (+) - 2 (-)	Except 0 or ∞
1 (+) - 3 (-)	
2 (+) - 3 (-)	

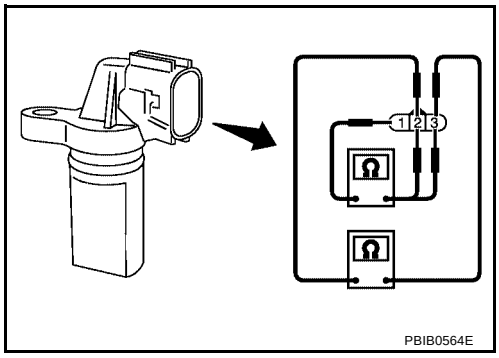

Removal and Installation

UBS00H47

CRANKSHAFT POSITION SENSOR (POS)

Refer to AT-243, "TRANSMISSION ASSEMBLY" .

DTC P0340 CMP SENSOR (PHASE)

PFP:23731

Component Description

UBS00H48

The camshaft position sensor (PHASE) senses the protrusion of exhaust valve cam sprocket to identify a particular cylinder. The camshaft position sensor (PHASE) senses the piston position.
When the crankshaft position sensor (POS) system becomes inoperative, the camshaft position sensor (PHASE) provides various controls of engine parts instead, utilizing timing of cylinder identification signals.
The sensor consists of a permanent magnet and Hall IC.
When engine is running, the high and low parts of the teeth cause the gap with the sensor to change.
The changing gap causes the magnetic field near the sensor to change.
Due to the changing magnetic field, the voltage from the sensor changes.
ECM receives the signals as shown in the figure.

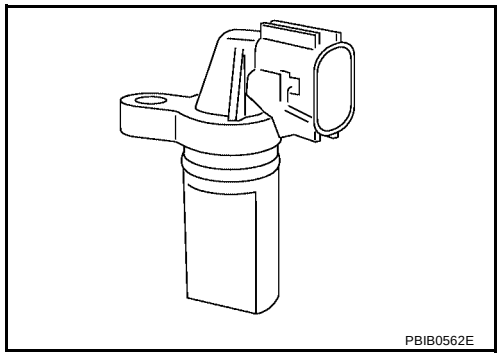

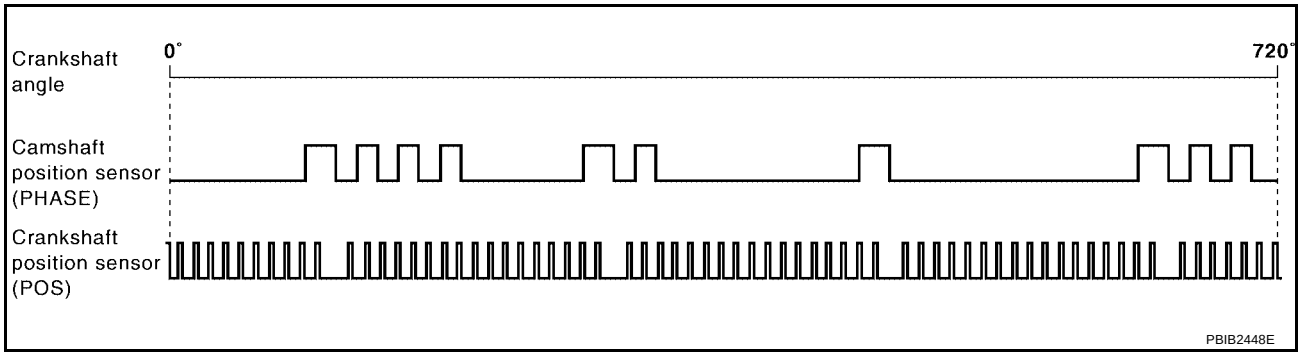

On Board Diagnosis Logic

UBS00H49

DTC No.	Trouble diagnosis name	DTC detecting condition	Possible cause
P0340 0340	Camshaft position sensor (PHASE) circuit	● The cylinder No. signal is not sent to ECM for the first few seconds during engine cranking. ● The cylinder No. signal is not sent to ECM during engine running. ● The cylinder No. signal is not in the normal pattern during engine running.	● Harness or connectors (The sensor circuit is open or shorted) ● Camshaft position sensor (PHASE) ● Camshaft (Exhaust) ● Starter motor (Refer to SC-10, "STARTING SYSTEM" .) ● Starting system circuit (Refer to SC-10, "STARTING SYSTEM" .) ● Dead (Weak) battery

DTC Confirmation Procedure

UBS00H4A

NOTE:
If DTC Confirmation Procedure has been previously conducted, always turn ignition switch OFF and wait at least 10 seconds before conducting the next test.
TESTING CONDITION:
Before performing the following procedure, confirm that battery voltage is more than 10.5V with ignition switch ON.

WITH CONSULT-II

1. Turn ignition switch ON.

2. Select “DATA MONITOR” mode with CONSULT-II.
3. Crank engine for at least 2 seconds and run it for at least 5 seconds at idle speed.
4. If 1st trip DTC is detected, go to EC-350, "Diagnostic Procedure".
   If 1st trip DTC is not detected, go to next step.
5. Maintaining engine speed at more than 800 rpm for at least 5 seconds.
6. If 1st trip DTC is detected, go to EC-350, "Diagnostic Procedure".

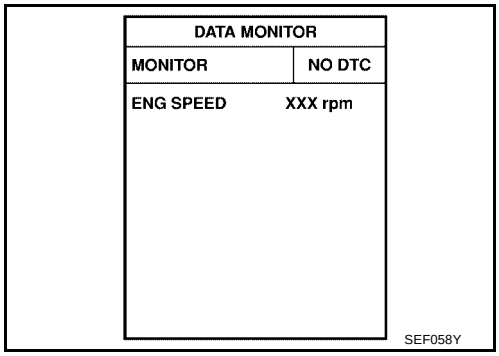

WITH GST

Follow the procedure “WITH CONSULT-II” above.

Wiring Diagram

UBS00H4B

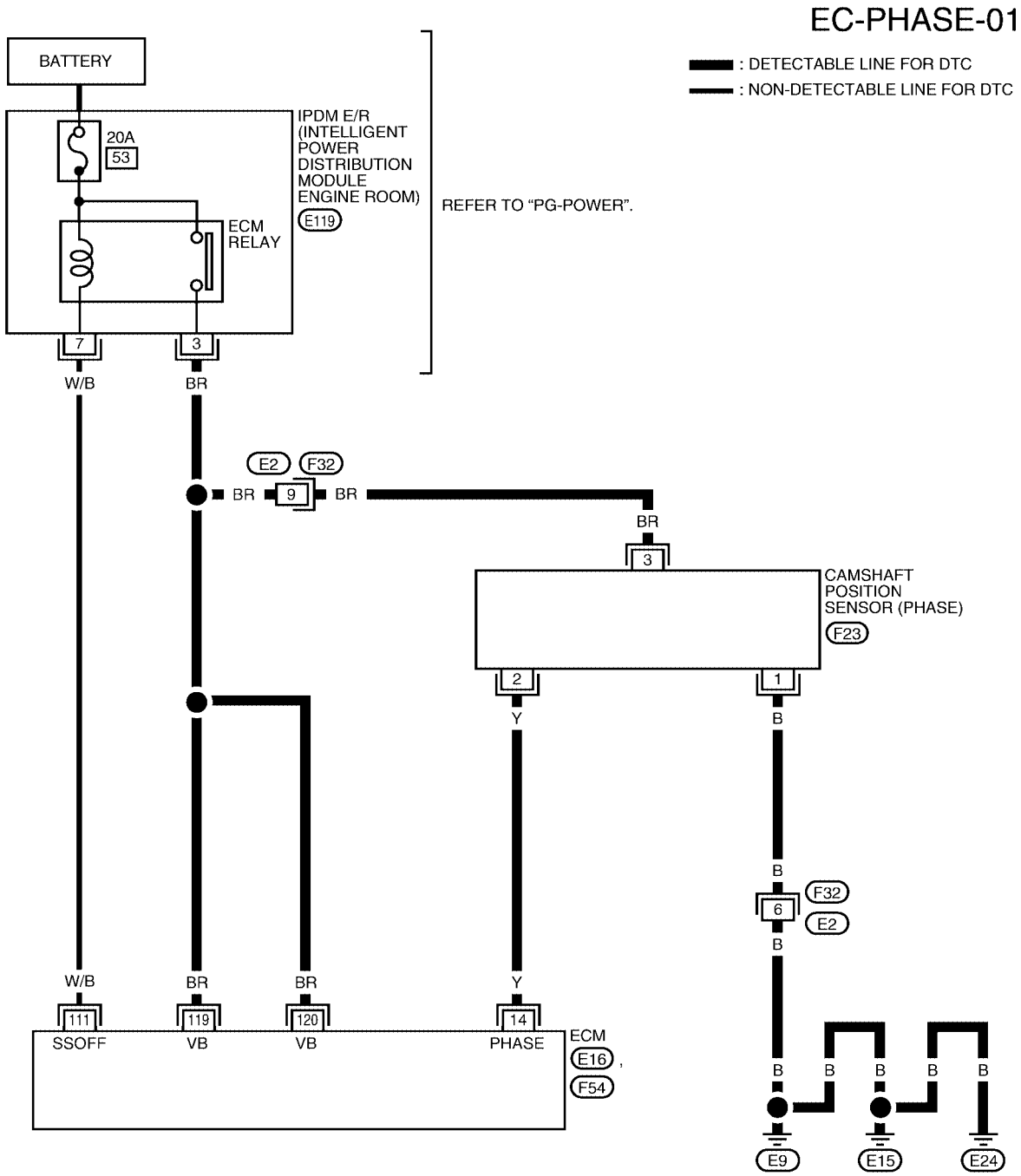

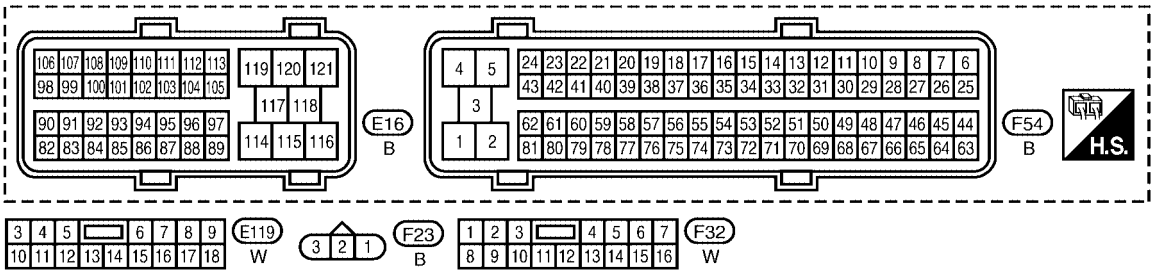

BBWA1686E

Specification data are reference values and are measured between each terminal and ground.
Pulse signal is measured by CONSULT-II.

CAUTION:

Do not use ECM ground terminals when measuring input/output voltage. Doing so may result in damage to the ECM's transistor. Use a ground other than ECM terminals, such as the ground.

TERMINAL NO.	WIRE COLOR	ITEM	CONDITION	DATA (DC Voltage)
14	Y	Camshaft position sensor (PHASE)	**[Engine is running]** ● **Warm-up condition** ● Idle speed **NOTE:** The pulse cycle changes depending on rpm at idle.	1.0 - 4.0V ★ 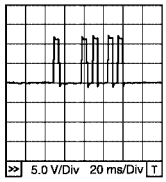 PBIB1039E
			[Engine is running] ● Engine speed: 2,000 rpm.	1.0 - 4.0V ★ 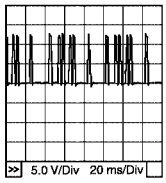 PBIB1040E
111	W/B	ECM relay (Self shut-off)	**[Engine is running]** **[Ignition switch: OFF]** ● For a few seconds after turning ignition switch OFF	0 - 1.5V
			[Ignition switch: OFF] ● More than a few seconds after turning ignition switch OFF	BATTERY VOLTAGE (11 - 14V)
119 120	BR BR	Power supply for ECM	**[Ignition switch: ON]**	BATTERY VOLTAGE (11 - 14V)

★: Average voltage for pulse signal (Actual pulse signal can be confirmed by oscilloscope.)

Diagnostic Procedure

UBS00H4C

1. CHECK STARTING SYSTEM

Turn ignition switch to START position.

Does the engine turn over?

Does the starter motor operate?

Yes or No

Yes >> GO TO 2.
No >> Check starting system. (Refer to SC-10, "STARTING SYSTEM" .)

2. CHECK GROUND CONNECTIONS

1. Turn ignition switch OFF.
2. Loosen and retighten three ground screws on the body.
   Refer to EC-150, "Ground Inspection" .

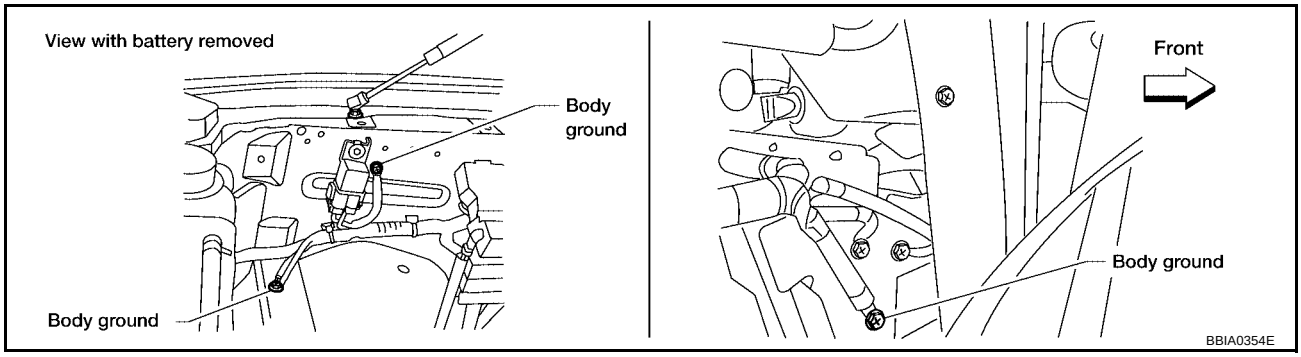

OK or NG

OK >> GO TO 3.
NG >> Repair or replace ground connections.

3. CHECK CAMSHAFT POSITION (CMP) SENSOR (PHASE) POWER SUPPLY CIRCUIT

1. Disconnect camshaft position (CMP) sensor (PHASE) harness connector.
2. Turn ignition switch ON.

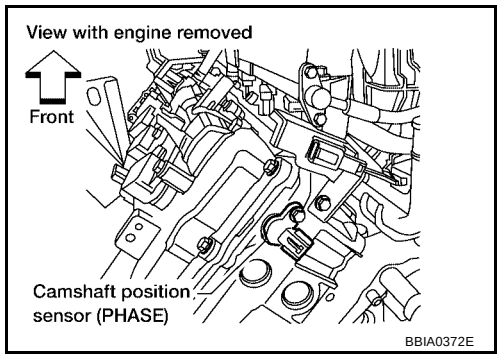

3. Check voltage between CMP sensor (PHASE) terminal 3 and ground with CONSULT-II or tester.

   Voltage: Battery voltage

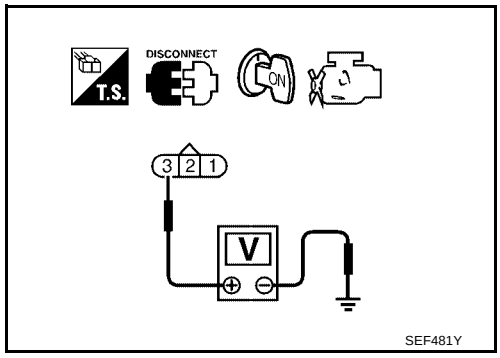

OK or NG

OK >> GO TO 5.
NG >> GO TO 4.

4. DETECT MALFUNCTIONING PART

Check the following.

- Harness connectors F32, E2
- Harness for open or short between camshaft position sensor (PHASE) and ECM
- Harness for open or short between camshaft position sensor (PHASE) and IPDM E/R

>> Repair open circuit or short to ground or short to power in harness or connectors.

5. CHECK CMP SENSOR (PHASE) GROUND CIRCUIT FOR OPEN AND SHORT

1. Turn ignition switch OFF.
2. Check harness continuity between CMP sensor (PHASE) terminal 1 and ground.
   Refer to wiring Diagram.

   Continuity should exist.

3. Also check harness for short to power.

OK or NG

OK >> GO TO 7.
NG >> GO TO 6.

6. DETECT MALFUNCTIONING PART

Check the following.

- Harness connectors F32, E2
- Harness for open or short between CMP sensor (PHASE) and ground

>> Repair open circuit or short to power in harness or connectors.

7. CHECK CMP SENSOR (PHASE) INPUT SIGNAL CIRCUIT FOR OPEN AND SHORT

1. Disconnect ECM harness connector.
2. Check harness continuity between ECM terminal 14 and CMP sensor (PHASE) terminal 2.
   Refer to Wiring Diagram.

   Continuity should exist.

3. Also check harness for short to ground and short to power.

OK or NG

OK >> GO TO 8.
NG >> Repair open circuit or short to ground or short to power in harness or connectors.

8. CHECK CAMSHAFT POSITION SENSOR (PHASE)

Refer to EC-353, "Component Inspection" .

OK or NG

OK >> GO TO 9.
NG >> Replace camshaft position sensor (PHASE).

9. CHECK INTERMITTENT INCIDENT

Refer to EC-144, "TROUBLE DIAGNOSIS FOR INTERMITTENT INCIDENT" .

>> **INSPECTION END**

Component Inspection

UBS00H4D

CAMSHAFT POSITION SENSOR (PHASE)

1. Loosen the fixing bolt of the sensor.
2. Disconnect camshaft position sensor (PHASE) harness connector.
3. Remove the sensor.
4. Visually check the sensor for chipping.

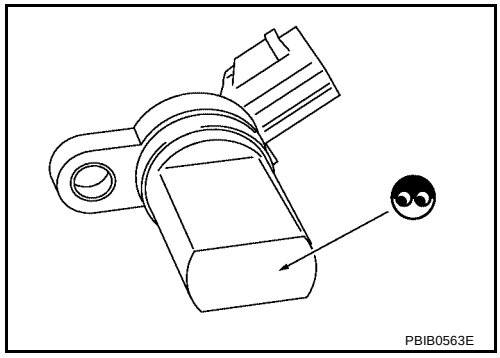

5. Check resistance as shown in the figure.

Terminal No. (Polarity)	Resistance Ω [at 25°C (77°F)]
3(+) - 1 (-)	Except 0 or ∞
2 (+) - 1 (-)	
3 (+) - 2 (-)	

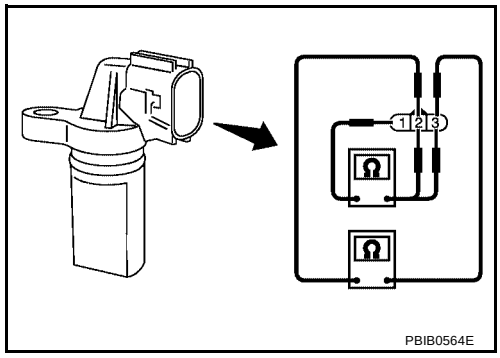

Removal and Installation

UBS00H4E

CAMSHAFT POSITION SENSOR (PHASE)

Refer to EM-46, "CAMSHAFT" .

DTC P0420, P0430 THREE WAY CATALYST FUNCTION

PFP:20905

On Board Diagnosis Logic

UBS00H4F

The ECM monitors the switching frequency ratio of air fuel sensor (A/F) sensor 1 and heated oxygen sensor 2.
A three way catalyst (manifold) with high oxygen storage capacity will indicate a low switching frequency of heated oxygen sensor 2. As oxygen storage capacity decreases, the heated oxygen sensor 2 switching frequency will increase.
When the frequency ratio of air fuel ratio (A/F) sensor 1 and heated oxygen sensor 2 approaches a specified limit value, the three way catalyst (manifold) malfunction is diagnosed.

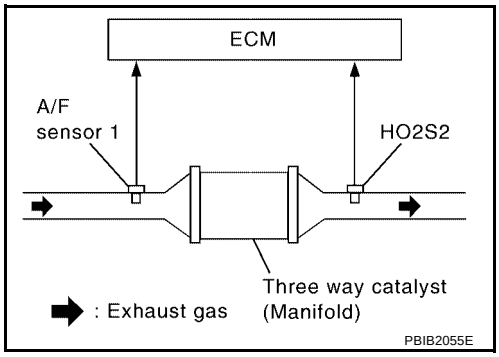

DTC No.	Trouble diagnosis name	DTC detecting condition	Possible cause
P0420 0420 (Bank 1)	Catalyst system efficiency below threshold	● Three way catalyst (manifold) does not operate properly. ● Three way catalyst (manifold) does not have enough oxygen storage capacity.	● Three way catalyst (manifold) ● Exhaust tube ● Intake air leaks ● Fuel injector ● Fuel injector leaks ● Spark plug ● Improper ignition timing
P0430 0430 (Bank 2)			

DTC Confirmation Procedure

UBS00H4G

NOTE:
If DTC Confirmation Procedure has been previously conducted, always turn ignition switch OFF and wait at least 10 seconds before conducting the next test.

WITH CONSULT-II

TESTING CONDITION:
Do not hold engine speed for more than the specified minutes below.

1. Turn ignition switch ON and select “DATA MONITOR” mode with CONSULT-II.
2. Start engine and warm it up to the normal operating temperature.
3. Turn ignition switch OFF and wait at least 10 seconds.
4. Start engine and keep the engine speed between 3,500 and 4,000 rpm for at least 1 minute under no load.
5. Let engine idle for 1 minute.
6. Make sure that “COOLAN TEMP/S” indicates more than 70°C (158°F).
   If not, warm up engine and go to next step when “COOLAN TEMP/S” indication reaches to 70°C (158°F).
7. Open engine hood.

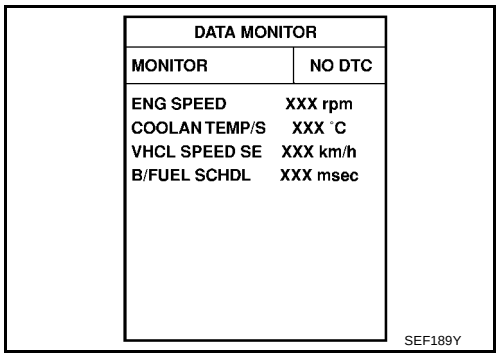

8. Select “DTC & SRT CONFIRMATION” then “SRT WORK SUPPORT” mode with CONSULT-II.
9. Rev engine up to 2,000 to 3,000 rpm and hold it for 3 consecutive minutes then release the accelerator pedal completely.
   If “INCMP” of “CATALYST” changed to “CMPLT”, go to step 12.
10. Wait 5 seconds at idle.

SRT WORK SUPPORT	
CATALYST	INCMP
EVAP SYSTEM	INCMP
HO2S HTR	CMPLT
HO2S	INCMP
MONITOR	
ENG SPEED	XXX rpm
MAS A/F SE-B1	XXX V
B/FUEL SCHDL	XXX msec
A/F ALPHA-B1	XXX V
COOLAN TEMP/S	XX ˚C
A/F SEN1 (B1)	XXX V

PBIB1784E

11. Rev engine up to 2,000 to 3,000 rpm and maintain it until “INCMP” of “CATALYST” changes to “CMPLT” (It will take approximately 5 minutes).
    If not “CMPLT”, stop engine and cool it down to less than 70°C (158°F) and then retest from step 1.

SRT WORK SUPPORT	
CATALYST	CMPLT
EVAP SYSTEM	INCMP
HO2S HTR	CMPLT
HO2S	INCMP
MONITOR	
ENG SPEED	XXX rpm
MAS A/F SE-B1	XXX V
B/FUEL SCHDL	XXX msec
A/F ALPHA-B1	XXX V
COOLAN TEMP/S	XX ˚C
A/F SEN1 (B1)	XXX V

PBIB1785E

12. Select “SELF-DIAG RESULTS” mode with CONSULT-II.
13. Confirm that the 1st trip DTC is not detected.
    If the 1st trip DTC is detected, go to EC-356, "Diagnostic Procedure" .

SELF DIAG RESULTS	
DTC RESULTS	TIME
NO DTC IS DETECTED. FURTHER TESTING MAY BE REQUIRED.	

SEF535Z

Overall Function Check

UBS00H4H

Use this procedure to check the overall function of the three way catalyst (manifold). During this check, a 1st trip DTC might not be confirmed.

WITH GST

1. Start engine and warm it up to the normal operating temperature.
2. Turn ignition switch OFF and wait at least 10 seconds.
3. Start engine and keep the engine speed between 3,500 and 4,000 rpm for at least 1 minute under no load.
4. Let engine idle for 1 minute.
5. Open engine hood.
6. Set voltmeter probe between ECM terminals ECM terminals 55 [HO2S2 (bank 1) signal], 74 [HO2S2 (bank 2) signal] and ground.
7. Keep engine speed at 2,500 rpm constant under no load.
8. Make sure that the voltage does not vary for more than 5 seconds.
   If the voltage fluctuation cycle takes less than 5 seconds, go to EC-356, "Diagnostic Procedure" .
   - 1 cycle: 0.6 - 1.0 → 0 - 0.3 → 0.6 - 1.0

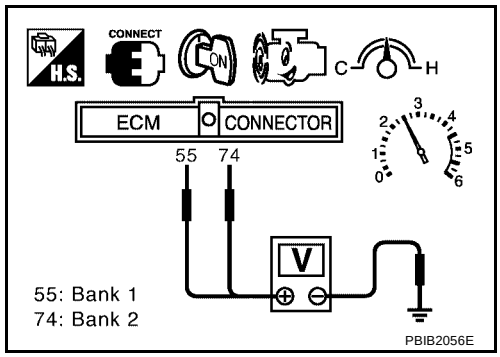

Diagnostic Procedure

UBS00H4I

1. CHECK EXHAUST SYSTEM

Visually check exhaust tubes and muffler for dent.

OK or NG

OK >> GO TO 2.
NG >> Repair or replace.

2. CHECK EXHAUST GAS LEAK

1. Start engine and run it at idle.
2. Listen for an exhaust gas leak before the three way catalyst (manifold).

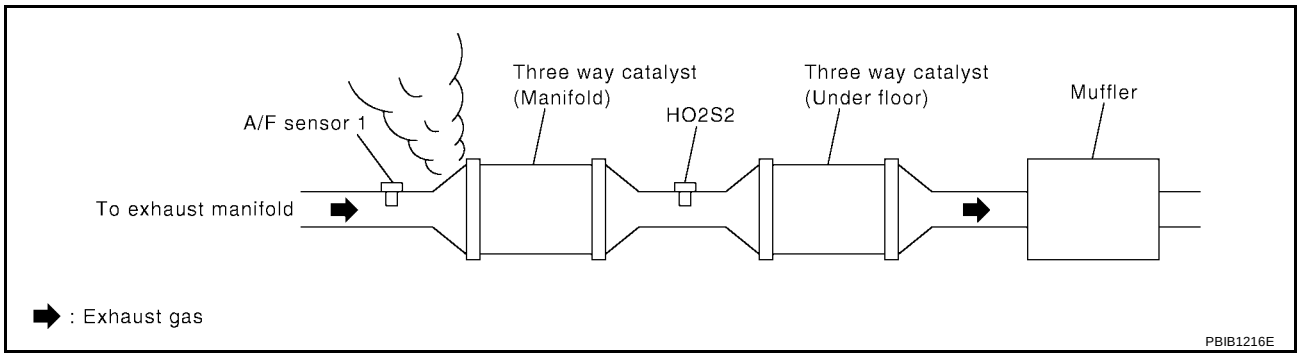

OK or NG

OK >> GO TO 3.
NG >> Repair or replace.

3. CHECK INTAKE AIR LEAK

Listen for an intake air leak after the mass air flow sensor.

OK or NG

OK >> GO TO 4.
NG >> Repair or replace.

4. CHECK IGNITION TIMING

Check the following items. Refer to EC-71, "Basic Inspection" .

Items	Specifications
Target idle speed	650 ± 50 rpm (in P or N position)
Ignition timing	15 ± 5° BTDC (in P or N position)

OK or NG

OK >> GO TO 5.
NG >> Follow the EC-71, "Basic Inspection" .

5. CHECK FUEL INJECTOR

1. Stop engine and then turn ignition switch ON.
2. Check voltage between ECM terminals 21, 22, 23, 40, 41, 42, 44, 63 and ground with CONSULT-II or tester.
   Refer to Wiring Diagram for fuel injector, EC-599, "Wiring Diagram" .

   Battery voltage should exist.

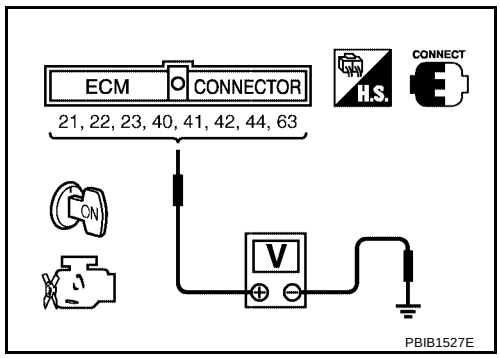

OK or NG

OK >> GO TO 6.
NG >> Perform EC-600, "Diagnostic Procedure" .

6. CHECK FUNCTION OF IGNITION COIL-I

CAUTION:
Do the following procedure in the place where ventilation is good without the combustible.

1. Turn ignition switch OFF.
2. Remove fuel pump fuse in IPDM E/R to release fuel pressure.

   NOTE:
   Do not use CONSULT-II to release fuel pressure, or fuel pressure applies again during the following procedure.

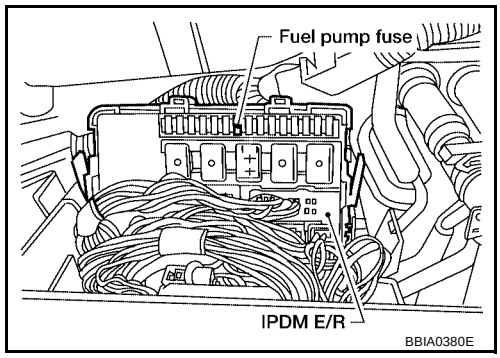

3. Start engine.
4. After engine stalls, crank it two or three times to release all fuel pressure.
5. Turn ignition switch OFF.
6. Remove all ignition coil harness connectors to avoid the electrical discharge from the ignition coils.
7. Remove ignition coil and spark plug of the cylinder to be checked.
8. Crank engine for 5 seconds or more to remove combustion gas in the cylinder.
9. Connect spark plug and harness connector to ignition coil.
10. Fix ignition coil using a rope etc. with gap of 13 - 17 mm between the edge of the spark plug and grounded metal portion as shown in the figure.
11. Crank engine for about 3 seconds, and check whether spark is generated between the spark plug and the grounded metal portion.

    Spark should be generated.

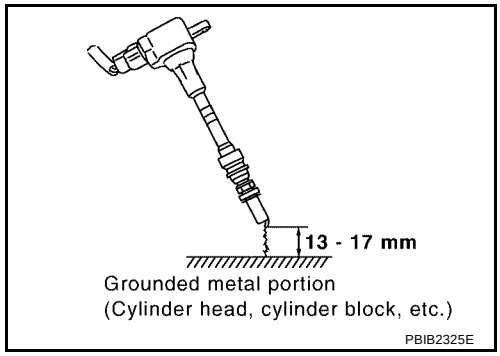

    CAUTION:
    - **Do not approach to the spark plug and the ignition coil within 50cm. Be careful not to get an electrical shock while checking, because the electrical discharge voltage becomes 20kV or more.**
    - **It might cause to damage the ignition coil if the gap of more than 17 mm is taken.**

    NOTE:
    When the gap is less than 13 mm, the spark might be generated even if the coil is malfunctioning.

OK or NG

OK >> GO TO 10.
NG >> GO TO 7.

7. CHECK FUNCTION OF IGNITION COIL-II

1. Turn ignition switch OFF.
2. Disconnect spark plug and connect a known-good spark plug.
3. Crank engine for about 3 seconds, and recheck whether spark is generated between the spark plug and the grounded metal portion.

Spark should be generated.

OK or NG

OK >> GO TO 8.
NG >> Check ignition coil, power transistor and their circuits. Refer to EC-618, "IGNITION SIGNAL" .

8. CHECK SPARK PLUG

Check the initial spark plug for fouling, etc.

OK or NG

OK >> Replace spark plug(s) with standard type one(s). For spark plug type, refer to MA-18, "Changing Spark Plugs" .
NG >> 1. Repair or clean spark plug.
2. GO TO 9.

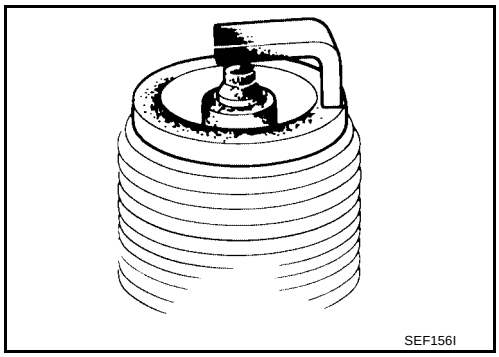

9. CHECK FUNCTION OF IGNITION COIL-III

1. Reconnect the initial spark plugs.
2. Crank engine for about three seconds, and recheck whether spark is generated between the spark plug and the grounded portion.

Spark should be generated.

OK or NG

OK >> **INSPECTION END**
NG >> Replace spark plug(s) with standard type one(s). For spark plug type, refer to MA-18, "Changing Spark Plugs" .

10. CHECK FUEL INJECTOR

1. Turn ignition switch OFF.
2. Remove fuel injector assembly.
   Refer to EM-31, "FUEL INJECTOR AND FUEL TUBE" .
   Keep fuel hose and all fuel injectors connected to fuel injector gallery.
3. Disconnect all ignition coil harness connectors.
4. Reconnect all fuel injector harness connectors disconnected.
5. Turn ignition switch ON.
   Make sure fuel does not drip from fuel injector.

OK or NG

OK (Does not drip.)>>GO TO 11.
NG (Drips.)>>Replace the fuel injector(s) from which fuel is dripping.

11. CHECK INTERMITTENT INCIDENT

Refer to EC-144, "TROUBLE DIAGNOSIS FOR INTERMITTENT INCIDENT" .

Trouble is fixed.>>**INSPECTION END**
Trouble is not fixed.>>Replace three way catalyst assembly.

DTC P0441 EVAP CONTROL SYSTEM

PFP:14950

System Description

UBS00H4J

NOTE:
If DTC P0441 is displayed with other DTC such as P2122, P2123, P2127, P2128 or P2138, first perform trouble diagnosis for other DTC.

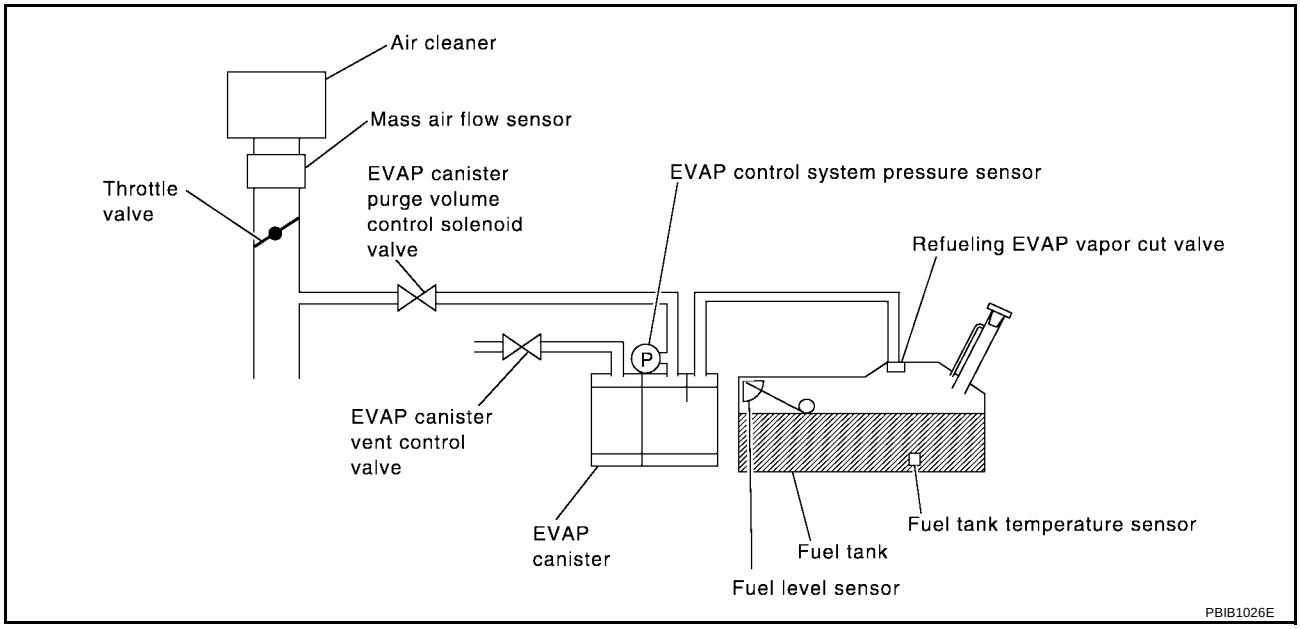

In this evaporative emission (EVAP) control system, purge flow occurs during non-closed throttle conditions. Purge volume is related to air intake volume. Under normal purge conditions (non-closed throttle), the EVAP canister purge volume control solenoid valve is open to admit purge flow. Purge flow exposes the EVAP control system pressure sensor to intake manifold vacuum.

On Board Diagnosis Logic

UBS00H4K

Under normal conditions (non-closed throttle), sensor output voltage indicates if pressure drop and purge flow are adequate. If not, a malfunction is determined.

DTC No.	Trouble diagnosis name	DTC detecting condition	Possible cause
P0441 0441	EVAP control system incorrect purge flow	EVAP control system does not operate properly, EVAP control system has a leak between intake manifold and EVAP control system pressure sensor.	● EVAP canister purge volume control solenoid valve stuck closed ● EVAP control system pressure sensor and the circuit ● Loose, disconnected or improper connection of rubber tube ● Blocked rubber tube ● Cracked EVAP canister ● EVAP canister purge volume control solenoid valve circuit ● Accelerator pedal position sensor ● Blocked purge port ● EVAP canister vent control valve

DTC Confirmation Procedure

UBS00H4L

CAUTION:
Always drive vehicle at a safe speed.

NOTE:
If DTC Confirmation Procedure has been previously conducted, always turn ignition switch OFF and wait at least 10 seconds before conducting the next test.

TESTING CONDITION:
Always perform test at a temperature of 5°C (41°F) or more.

WITH CONSULT-II

1. Start engine and warm it up to normal operating temperature.
2. Turn ignition switch OFF and wait at least 10 seconds.
3. Start engine and let it idle for at least 70 seconds.
4. Select “PURG FLOW P0441” of “EVAPORATIVE SYSTEM” in “DTC CONFIRMATION” mode with CONSULT-II.
5. Touch “START”.
   If “COMPLETED” is displayed, go to step 7.
6. When the following conditions are met, “TESTING” will be displayed on the CONSULT-II screen. Maintain the conditions continuously until “TESTING” changes to “COMPLETED”. (It will take at least 35 seconds.)

Selector lever	Suitable position
VHCL SPEED SE	32 - 120 km/h (20 - 75 MPH)
ENG SPEED	500 - 3,000 rpm
B/FUEL SCHDL	1.0 - 12.0 msec
COOLAN TEMP/S	70 - 100°C (158 - 212°F)

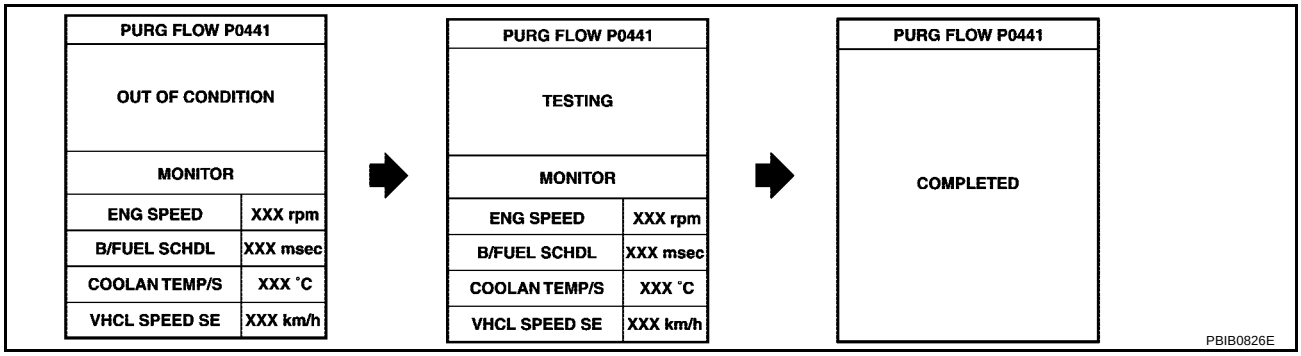

If “TESTING” is not changed for a long time, retry from step 2.

7. Make sure that “OK” is displayed after touching “SELF-DIAG RESULTS”. If “NG” is displayed, refer to EC-362, "Diagnostic Procedure" .

Overall Function Check

UBS00H4M

Use this procedure to check the overall monitoring function of the EVAP control system purge flow monitoring. During this check, a 1st trip DTC might not be confirmed.

WITH GST

1. Lift up drive wheels.
2. Start engine (VDC switch OFF) and warm it up to normal operating temperature.
3. Turn ignition switch OFF, wait at least 10 seconds.
4. Start engine and wait at least 70 seconds.
5. Set voltmeter probes to ECM terminals 32 (EVAP control system pressure sensor signal) and ground.
6. Check EVAP control system pressure sensor value at idle speed and note it.
7. Establish and maintain the following conditions for at least 1 minute.

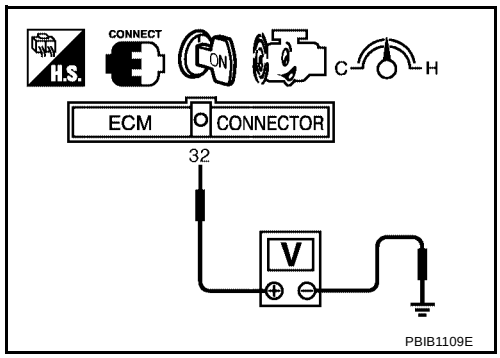

Air conditioner switch	ON
Headlamp switch	ON
Rear window defogger switch	ON
Engine speed	Approx. 3,000 rpm
Gear position	Any position other than P, N or R

8. Verify that EVAP control system pressure sensor value stays 0.1V less than the value at idle speed (measured at step 6) for at least 1 second.

9. If NG, go to EC-362, "Diagnostic Procedure" .

Diagnostic Procedure

UBS00H4N

1. CHECK EVAP CANISTER

1. Turn ignition switch OFF.
2. Check EVAP canister for cracks.

OK or NG

OK (With CONSULT-II)>>GO TO 2.
OK (Without CONSULT-II)>>GO TO 3.
NG >> Replace EVAP canister.

2. CHECK PURGE FLOW

With CONSULT-II

1. Disconnect vacuum hose connected to EVAP canister purge volume control solenoid valve at EVAP service port and install vacuum gauge. For the location of EVAP service port, refer to EC-33, "EVAPORATIVE EMISSION LINE DRAWING" .
2. Start engine and let it idle.
3. Select “PURG VOL CONT/V” in “ACTIVE TEST” mode with CONSULT-II.
4. Rev engine up to 2,000 rpm.
5. Touch “Qd” and “Qu” on CONSULT-II screen to adjust “PURG VOL CONT/V” opening and check vacuum existence.

PURG VOL CONT/V	Vacuum
100%	Should exist.
0%	Should not exist.

OK or NG

OK >> GO TO 7.
NG >> GO TO 4.

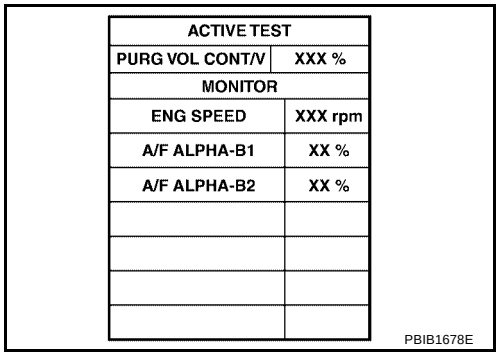

ACTIVE TEST	
PURG VOL CONT/V	XXX %
MONITOR	
ENG SPEED	XXX rpm
A/F ALPHA-B1	XX %
A/F ALPHA-B2	XX %

PBIB1678E

3. CHECK PURGE FLOW

Without CONSULT-II

1. Start engine and warm it up to normal operating temperature.
2. Stop engine.
3. Disconnect vacuum hose connected to EVAP canister purge volume control solenoid valve at EVAP service port and install vacuum gauge. For the location of EVAP service port, refer to EC-33, "EVAPORATIVE EMISSION LINE DRAWING" .
4. Start engine and let it idle.
   Do not depress accelerator pedal even slightly.
5. Check vacuum gauge indication before 60 seconds passed after starting engine.

   Vacuum should not exist.

6. Revving engine up to 2,000 rpm after 100 seconds passed after starting engine.

   Vacuum should exist.

OK or NG

OK >> GO TO 7.
NG >> GO TO 4.

4. CHECK EVAP PURGE LINE

1. Turn ignition switch OFF.
2. Check EVAP purge line for improper connection or disconnection.
   Refer to EC-33, "EVAPORATIVE EMISSION LINE DRAWING" .

OK or NG

OK >> GO TO 5.
NG >> Repair it.

5. CHECK EVAP PURGE HOSE AND PURGE PORT

1. Disconnect purge hoses connected to EVAP service port **A** and EVAP canister purge volume control solenoid valve **B** .
2. Blow air into each hose and EVAP purge port **C** .

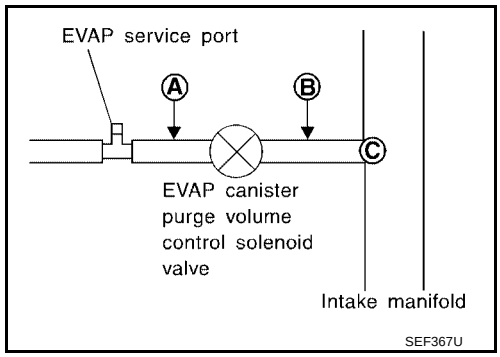

3. Check that air flows freely.

OK or NG

OK (With CONSULT-II)>>GO TO 6.
OK (Without CONSULT-II)>>GO TO 7.
NG >> Repair or clean hoses and/or purge port.

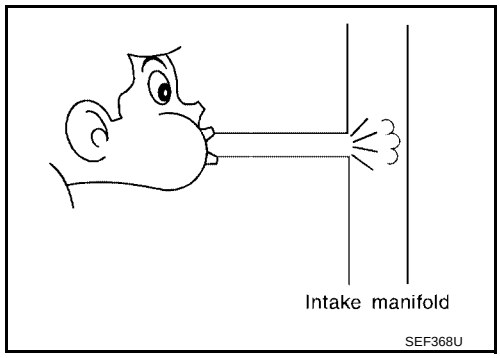

6. CHECK EVAP CANISTER PURGE VOLUME CONTROL SOLENOID VALVE

With CONSULT-II

1. Start engine.
2. Perform “PURG VOL CONT/V” in “ACTIVE TEST” mode with CONSULT-II. Check that engine speed varies according to the valve opening.

OK or NG

OK >> GO TO 8.
NG >> GO TO 7.

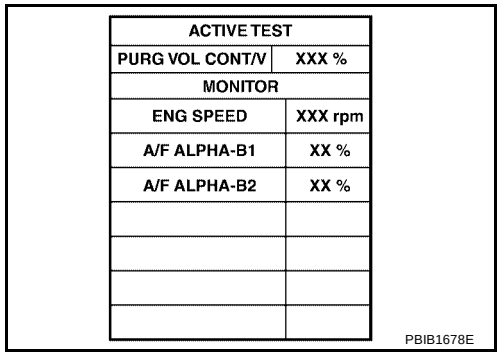

ACTIVE TEST	
PURG VOL CONT/V	XXX %
MONITOR	
ENG SPEED	XXX rpm
A/F ALPHA-B1	XX %
A/F ALPHA-B2	XX %

PBIB1678E

7. CHECK EVAP CANISTER PURGE VOLUME CONTROL SOLENOID VALVE

Refer to EC-386, "Component Inspection" .

OK or NG

OK >> GO TO 8.
NG >> Replace EVAP canister purge volume control solenoid valve.

8. CHECK EVAP CONTROL SYSTEM PRESSURE SENSOR CONNECTOR

1. Disconnect EVAP control system pressure sensor harness connector.
2. Check connectors for water.

Water should not exist.

OK or NG

OK >> GO TO 9.
NG >> Replace EVAP control system pressure sensor.

9. CHECK EVAP CONTROL SYSTEM PRESSURE SENSOR FUNCTION

Refer to DTC Confirmation Procedure for DTC P0452, EC-406, "DTC Confirmation Procedure" and P0453, EC-412, "DTC Confirmation Procedure" .

OK or NG

OK >> GO TO 10.
NG >> Replace EVAP control system pressure sensor.

10. CHECK RUBBER TUBE FOR CLOGGING

1. Disconnect rubber tube connected to EVAP canister vent control valve.
2. Check the rubber tube for clogging.

OK or NG

OK >> GO TO 11.
NG >> Clean the rubber tube using an air blower.

11. CHECK EVAP CANISTER VENT CONTROL VALVE

Refer to EC-393, "Component Inspection" .

OK or NG

OK >> GO TO 12.
NG >> Replace EVAP canister vent control valve.

12. CHECK EVAP PURGE LINE

Inspect EVAP purge line (pipe and rubber tube). Check for evidence of leaks.
Refer to EC-33, "EVAPORATIVE EMISSION LINE DRAWING" .

OK or NG

OK >> GO TO 13.
NG >> Replace it.

13. CLEAN EVAP PURGE LINE

Clean EVAP purge line (pipe and rubber tube) using air blower.

>> GO TO 14.

14. CHECK INTERMITTENT INCIDENT

Refer to EC-144, "TROUBLE DIAGNOSIS FOR INTERMITTENT INCIDENT" .

>> **INSPECTION END**

DTC P0442 EVAP CONTROL SYSTEM

PFP:14950

On Board Diagnosis Logic

UBS00H4O

This diagnosis detects leaks in the EVAP purge line using engine intake manifold vacuum.
If pressure does not increase, the ECM will check for leaks in the line between the fuel tank and EVAP canister purge volume control solenoid valve, under the following “Vacuum test” conditions.
The EVAP canister vent control valve is closed to shut the EVAP purge line off. The EVAP canister purge volume control solenoid valve will then be opened to depressurize the EVAP purge line using intake manifold vacuum. After this occurs, the EVAP canister purge volume control solenoid valve will be closed.

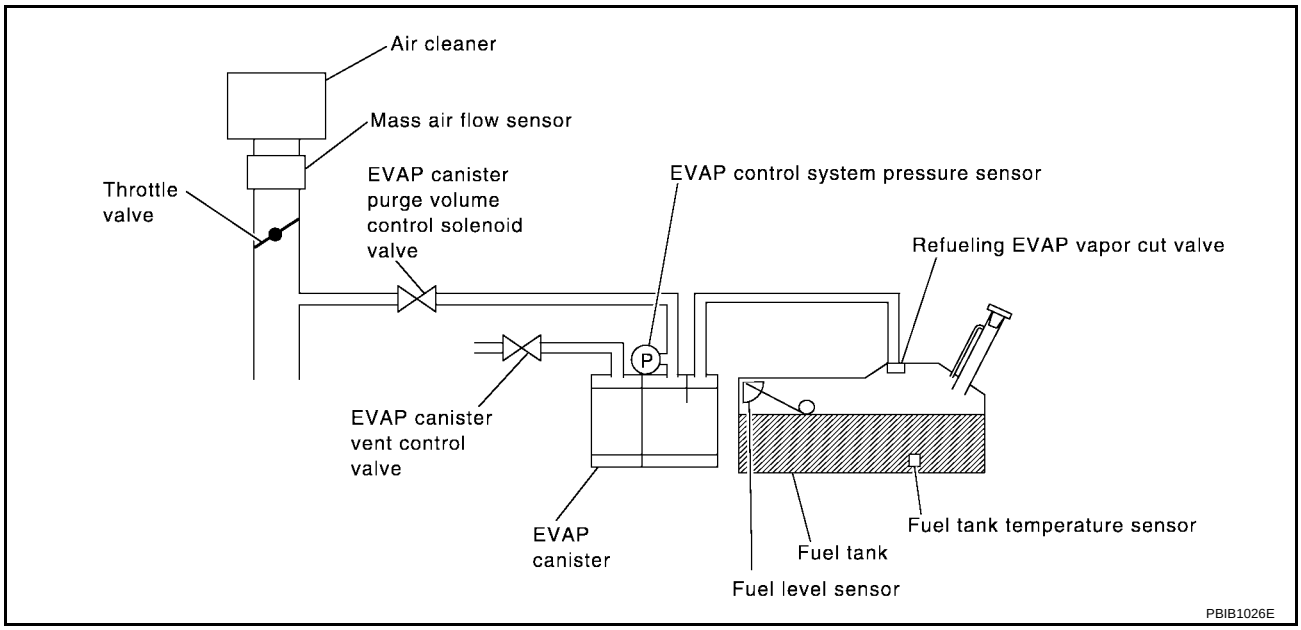

DTC No.	Trouble diagnosis name	DTC detecting condition	Possible cause
P0442 0442	EVAP control system small leak detected (negative pressure)	EVAP control system has a leak, EVAP control system does not operate properly.	● Incorrect fuel tank vacuum relief valve ● Incorrect fuel filler cap used ● Fuel filler cap remains open or fails to close. ● Foreign matter caught in fuel filler cap. ● Leak is in line between intake manifold and EVAP canister purge volume control solenoid valve. ● Foreign matter caught in EVAP canister vent control valve. ● EVAP canister or fuel tank leaks ● EVAP purge line (pipe and rubber tube) leaks ● EVAP purge line rubber tube bent ● Loose or disconnected rubber tube ● EVAP canister vent control valve and the circuit ● EVAP canister purge volume control solenoid valve and the circuit ● Fuel tank temperature sensor ● O-ring of EVAP canister vent control valve is missing or damaged ● EVAP canister is saturated with water ● EVAP control system pressure sensor ● Fuel level sensor and the circuit ● Refueling EVAP vapor cut valve ● ORVR system leaks

CAUTION:

- **Use only a genuine NISSAN fuel filler cap as a replacement. If an incorrect fuel filler cap is used, the MIL may come on.**
- **If the fuel filler cap is not tightened properly, the MIL may come on.**
- **Use only a genuine NISSAN rubber tube as a replacement.**

DTC Confirmation Procedure

UBS00H4P

NOTE:

- If DTC Confirmation Procedure has been previously conducted, always turn ignition switch OFF and wait at least 10 seconds before conducting the next test.

TESTING CONDITION:

- **Perform "DTC WORK SUPPORT" when the fuel level is between 1/4 and 3/4 full, and vehicle is placed on flat level surface.**
- **Always perform test at a temperature of 0 to 30°C (32 to 86°F).**

WITH CONSULT-II

1. Turn ignition switch ON.
2. Turn ignition switch OFF and wait at least 10 seconds.
3. Turn ignition switch ON and select "DATA MONITOR" mode with CONSULT-II.
4. Make sure that the following conditions are met.
   COOLAN TEMP/S: 0 - 70°C (32 - 158°F)
   INT/A TEMP SE: 0 - 30°C (32 - 86°F)
5. Select "EVP SML LEAK P0442/P1442" of "EVAPORATIVE SYSTEM" in "DTC WORK SUPPORT" mode with CONSULT-II.
   Follow the instruction displayed.

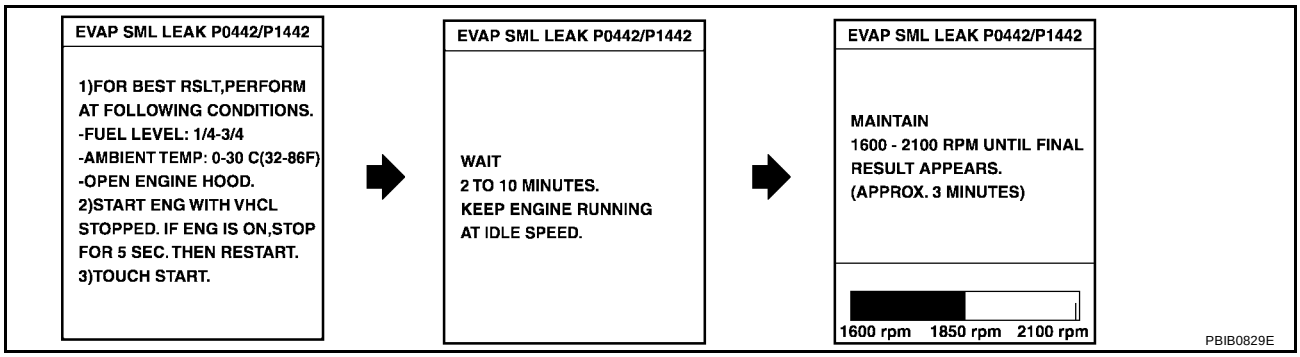

NOTE:
If the engine speed cannot be maintained within the range displayed on the CONSULT-II screen, go to EC-71, "Basic Inspection" .

6. Make sure that "OK" is displayed.
   If "NG" is displayed, refer to EC-367, "Diagnostic Procedure" .

   NOTE:
   Make sure that EVAP hoses are connected to EVAP canister purge volume control solenoid valve properly.

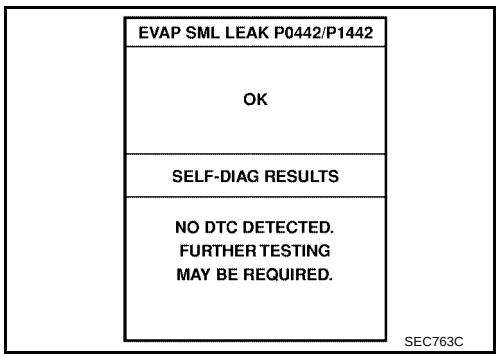

WITH GST

NOTE:
Be sure to read the explanation of EC-58, "Driving Pattern" before driving vehicle.

1. Start engine.
2. Drive vehicle according to EC-58, "Driving Pattern" .

3. Stop vehicle.
4. Turn ignition switch OFF, wait at least 10 seconds and then turn ON.
5. Select Service $07 with GST.

– If P0442 is displayed on the screen, go to EC-367, "Diagnostic Procedure" .
– If P0441 is displayed on the screen, go to EC-362, "Diagnostic Procedure" .

Diagnostic Procedure

UBS00H4Q

1. CHECK FUEL FILLER CAP DESIGN

1. Turn ignition switch OFF.
2. Check for genuine NISSAN fuel filler cap design.

OK or NG

OK >> GO TO 2.
NG >> Replace with genuine NISSAN fuel filler cap.

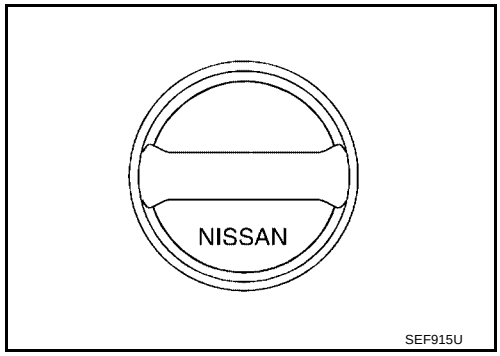

2. CHECK FUEL FILLER CAP INSTALLATION

Check that the cap is tightened properly by rotating the cap clockwise.

OK or NG

OK >> GO TO 3.
NG >> 1. Open fuel filler cap, then clean cap and fuel filler neck threads using air blower.
2. Retighten until ratcheting sound is heard.

3. CHECK FUEL FILLER CAP FUNCTION

Check for air releasing sound while opening the fuel filler cap.

OK or NG

OK >> GO TO 5.
NG >> GO TO 4.

4. CHECK FUEL TANK VACUUM RELIEF VALVE

Refer to EC-35, "FUEL TANK VACUUM RELIEF VALVE (BUILT INTO FUEL FULLER CAP)" .

OK or NG

OK >> GO TO 5.
NG >> Replace fuel filler cap with a genuine one.

5. INSTALL THE PRESSURE PUMP

To locate the EVAP leak, install EVAP service port adapter and pressure pump to EVAP service port securely.

NOTE:
Improper installation of the EVAP service port adapter to the EVAP service port may cause leaking.

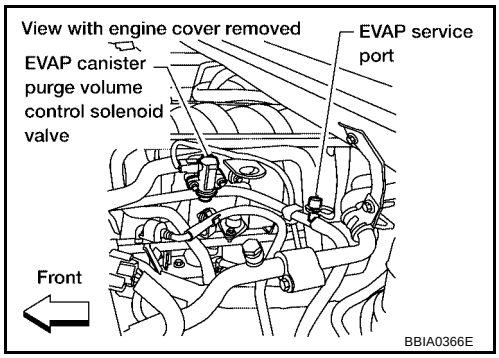

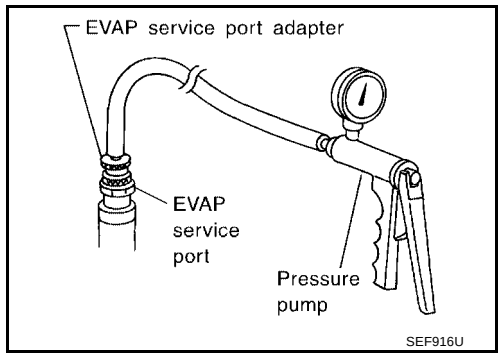

With CONSULT-II>>GO TO 6.
Without CONSULT-II>>GO TO 7.

6. CHECK FOR EVAP LEAK

With CONSULT-II

1. Turn ignition switch ON.
2. Select “EVAP SYSTEM CLOSE” of “WORK SUPPORT” mode with CONSULT-II.
3. Touch “START” and apply pressure into the EVAP line until the pressure indicator reaches the middle of the bar graph.

   CAUTION:
   - **Never use compressed air or a high pressure pump.**
   - **Do not exceed 4.12 kPa (0.042 kg/cm^2 , 0.6 psi) of pressure in the system.**

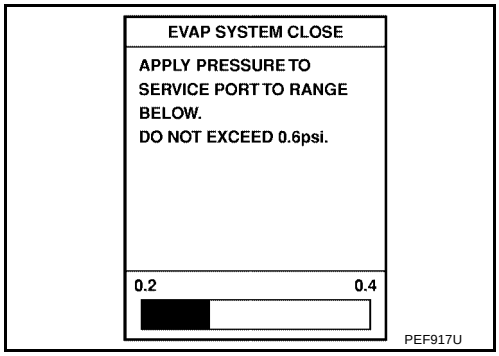

4. Using EVAP leak detector, locate the EVAP leak. For the leak detector, refer to the instruction manual for more details.
   Refer to EC-33, "EVAPORATIVE EMISSION LINE DRAWING" .

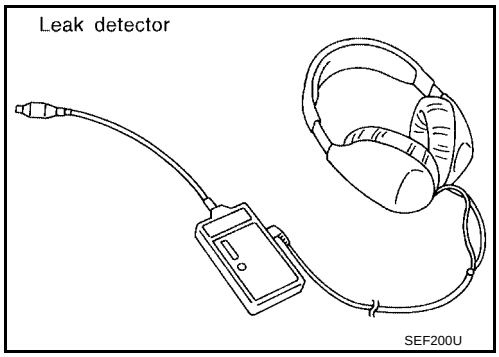

OK or NG

OK >> GO TO 8.
NG >> Repair or replace.

7. CHECK FOR EVAP LEAK

Without CONSULT-II

1. Turn ignition switch OFF.
2. Apply 12 volts DC to EVAP canister vent control valve. The valve will close. (Continue to apply 12 volts until the end of test.)

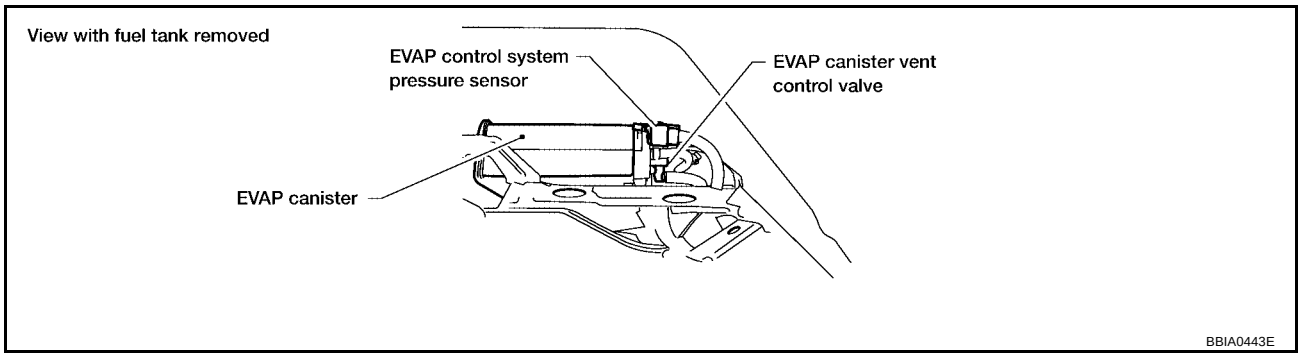

3. Pressurize the EVAP line using pressure pump with 1.3 to 2.7 kPa (10 to 20 mmHg, 0.39 to 0.79 inHg), then remove pump and EVAP service port adapter.

   CAUTION:
   - **Never use compressed air or a high pressure pump.**
   - **Do not exceed 4.12 kPa (0.042 kg/cm^2 , 0.6 psi) of pressure in the system.**
4. Using EVAP leak detector, locate the EVAP leak. For the leak detector, refer to the instruction manual for more details. Refer to EC-33, "EVAPORATIVE EMISSION LINE DRAWING" .

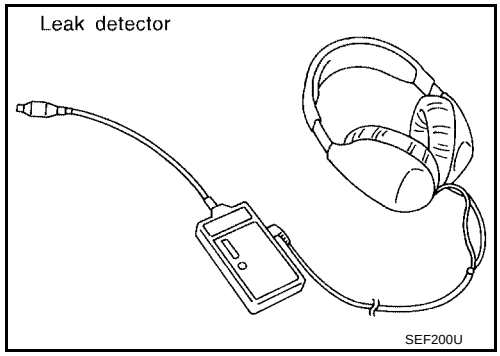

OK or NG

OK >> GO TO 8.
NG >> Repair or replace.

8. CHECK EVAP CANISTER VENT CONTROL VALVE

Check the following.

- EVAP canister vent control valve is installed properly.
  Refer to EC-36, "Removal and Installation" .
- EVAP canister vent control valve.
  Refer to EC-393, "Component Inspection" .

OK or NG

OK >> GO TO 9.
NG >> Repair or replace EVAP canister vent control valve and O-ring.

9. CHECK IF EVAP CANISTER SATURATED WITH WATER

1. Remove EVAP canister with EVAP canister vent control valve and EVAP control system pressure sensor attached.
2. Does water drain from the EVAP canister?

Yes or No

Yes >> GO TO 10.
No (With CONSULT-II)>>GO TO 12.
No (Without CONSULT-II)>>GO TO 13.

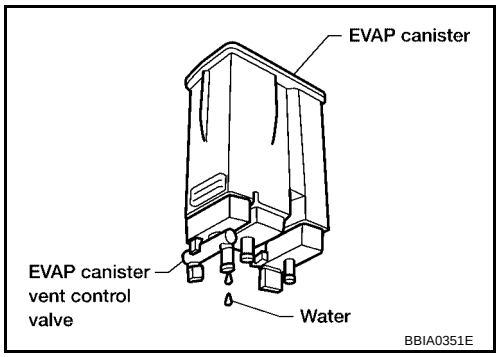

10. CHECK EVAP CANISTER

Weigh the EVAP canister with the EVAP canister vent control valve and EVAP control system pressure sensor attached.

The weight should be less than 2.5 kg (5.5 lb).

OK or NG

OK (With CONSULT-II)>>GO TO 12.
OK (Without CONSULT-II)>>GO TO 13.
NG >> GO TO 11.

11. DETECT MALFUNCTIONING PART

Check the following.

- EVAP canister for damage
- EVAP hose between EVAP canister and vehicle frame for clogging or poor connection

>> Repair hose or replace EVAP canister.

12. CHECK EVAP CANISTER PURGE VOLUME CONTROL SOLENOID VALVE OPERATION

With CONSULT-II

1. Disconnect vacuum hose to EVAP canister purge volume control solenoid valve at EVAP service port.
2. Start engine.
3. Perform “PURG VOL CONT/V” in “ACTIVE TEST” mode.
4. Touch “Qu” on CONSULT-II screen to increase “PURG VOL CONT/V” opening to 100%.
5. Check vacuum hose for vacuum when revving engine up to 2,000 rpm.

OK or NG

OK >> GO TO 15.
NG >> GO TO 14.

ACTIVE TEST	
PURG VOL CONT/V	XXX %
MONITOR	
ENG SPEED	XXX rpm
A/F ALPHA-B1	XX %
A/F ALPHA-B2	XX %

PBIB1678E

13. CHECK EVAP CANISTER PURGE VOLUME CONTROL SOLENOID VALVE OPERATION

Without CONSULT-II

1. Start engine and warm it up to normal operating temperature.
2. Stop engine.
3. Disconnect vacuum hose to EVAP canister purge volume control solenoid valve at EVAP service port.
4. Start engine and let it idle for at least 80 seconds.
5. Check vacuum hose for vacuum when revving engine up to 2,000 rpm.

Vacuum should exist.

OK or NG

OK >> GO TO 16.
NG >> GO TO 14.

14. CHECK VACUUM HOSE

Check vacuum hoses for clogging or disconnection. Refer to EC-102, "Vacuum Hose Drawing" .

OK or NG

OK >> GO TO 15.
NG >> Repair or reconnect the hose.

15. CHECK EVAP CANISTER PURGE VOLUME CONTROL SOLENOID VALVE

Refer to EC-386, "Component Inspection" .

OK or NG

OK >> GO TO 16.
NG >> Replace EVAP canister purge volume control solenoid valve.

16. CHECK FUEL TANK TEMPERATURE SENSOR

Refer to EC-314, "Component Inspection" .

OK or NG

OK >> GO TO 17.
NG >> Replace fuel level sensor unit.

17. CHECK EVAP CONTROL SYSTEM PRESSURE SENSOR

Refer to EC-404, "Component Inspection" .

OK or NG

OK >> GO TO 18.
NG >> Replace EVAP control system pressure sensor.

18. CHECK EVAP PURGE LINE

Check EVAP purge line (pipe, rubber tube, fuel tank and EVAP canister) for cracks or improper connection. Refer to EC-33, "EVAPORATIVE EMISSION LINE DRAWING" .

OK or NG

OK >> GO TO 19.
NG >> Repair or reconnect the hose.

19. CLEAN EVAP PURGE LINE

Clean EVAP purge line (pipe and rubber tube) using air blower.

>> GO TO 20.

20. CHECK EVAP/ORVR LINE

Check EVAP/ORVR line between EVAP canister and fuel tank for clogging, kink, looseness and improper connection. For location, refer to EC-39, "ON BOARD REFUELING VAPOR RECOVERY (ORVR)" .

OK or NG

OK >> GO TO 21.
NG >> Repair or replace hoses and tubes.

21. CHECK RECIRCULATION LINE

Check recirculation line between filler neck tube and fuel tank for clogging, kink, cracks, looseness and improper connection.

OK or NG

OK >> GO TO 22.
NG >> Repair or replace hose, tube or filler neck tube.

22. CHECK REFUELING EVAP VAPOR CUT VALVE

Refer to EC-43, "Component Inspection" .

OK or NG

OK >> GO TO 23.
NG >> Replace refueling EVAP vapor cut valve with fuel tank.

23. CHECK FUEL LEVEL SENSOR

Refer to DI-22, "Fuel Level Sensor Unit Inspection" .

OK or NG

OK >> GO TO 24.
NG >> Replace fuel level sensor unit.

24. CHECK INTERMITTENT INCIDENT

Refer to EC-144, "TROUBLE DIAGNOSIS FOR INTERMITTENT INCIDENT" .

>> **INSPECTION END**

DTC P0443 EVAP CANISTER PURGE VOLUME CONTROL SOLENOID VALVE

PFP:14920

Description

UBS00HAT

SYSTEM DESCRIPTION

Sensor	Input signal to ECM	ECM function	Actuator
Crankshaft position sensor (POS) Camshaft position sensor (PHASE)	Engine speed*1	EVAP canister purge flow control	EVAP canister purge volume control solenoid valve
Mass air flow sensor	Amount of intake air		
Engine coolant temperature sensor	Engine coolant temperature		
Battery	Battery voltage*1		
Throttle position sensor	Throttle position		
Accelerator pedal position sensor	Accelerator pedal position		
Air fuel ratio (A/F) sensor 1	Density of oxygen in exhaust gas (Mixture ratio feedback signal)		
Fuel tank temperature sensor	Fuel temperature in fuel tank		
Wheel sensor	Vehicle speed*2		

*1: ECM determines the start signal status by the signals of engine speed and battery voltage.
*2: This signal is sent to the ECM through CAN communication line.

This system controls flow rate of fuel vapor from the EVAP canister. The opening of the vapor by-pass passage in the EVAP canister purge volume control solenoid valve changes to control the flow rate. The EVAP canister purge volume control solenoid valve repeats ON/OFF operation according to the signal sent from the ECM. The opening of the valve varies for optimum engine control. The optimum value stored in the ECM is determined by considering various engine conditions. When the engine is operating, the flow rate of fuel vapor from the EVAP canister is regulated as the air flow changes.

COMPONENT DESCRIPTION

The EVAP canister purge volume control solenoid valve uses a ON/OFF duty to control the flow rate of fuel vapor from the EVAP canister. The EVAP canister purge volume control solenoid valve is moved by ON/OFF pulses from the ECM. The longer the ON pulse, the greater the amount of fuel vapor that will flow through the valve.

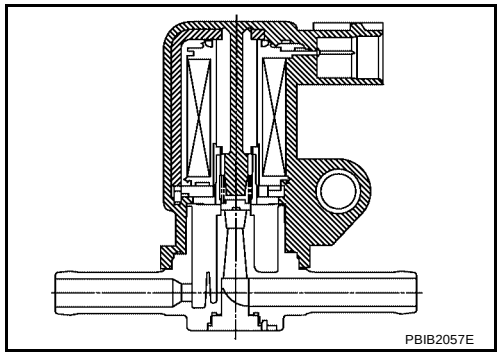

CONSULT-II Reference Value in Data Monitor Mode

UBS00HAU

Specification data are reference values.

MONITOR ITEM	CONDITION		SPECIFICATION
PURG VOL C/V	● Engine: After warming up ● Air conditioner switch: OFF ● Selector lever: P or N ● No load	Idle (Accelerator pedal: Not depressed even slightly, after starting engine)	0%
		2,000 rpm	—

On Board Diagnosis Logic

UBS00HAV

DTC No.	Trouble diagnosis name	DTC detecting condition	Possible cause
P0443 0443	EVAP canister purge volume control solenoid valve	The canister purge flow is detected during the specified driving conditions, even when EVAP canister purge volume control solenoid valve is completely closed.	● EVAP control system pressure sensor ● EVAP canister purge volume control solenoid valve (The valve is stuck open.) ● EVAP canister vent control valve ● EVAP canister ● Hoses (Hoses are connected incorrectly or clogged.)

DTC Confirmation Procedure

UBS00HAW

NOTE:
If DTC Confirmation Procedure has been previously conducted, always turn ignition switch OFF and wait at least 10 seconds before conducting the next test.
TESTING CONDITION:
Always perform test at a temperature of 5°C (41°F) or more.

WITH CONSULT-II

1. Start engine and warm it up to normal operating temperature.
2. Turn ignition switch OFF and wait at least 10 seconds.
3. Turn ignition switch ON.
4. Select “PURG VOL CN/V P1444” of “EVAPORATIVE SYSTEM” in “DTC WORK SUPPORT” mode with CONSULT-II.
5. Touch “START”.

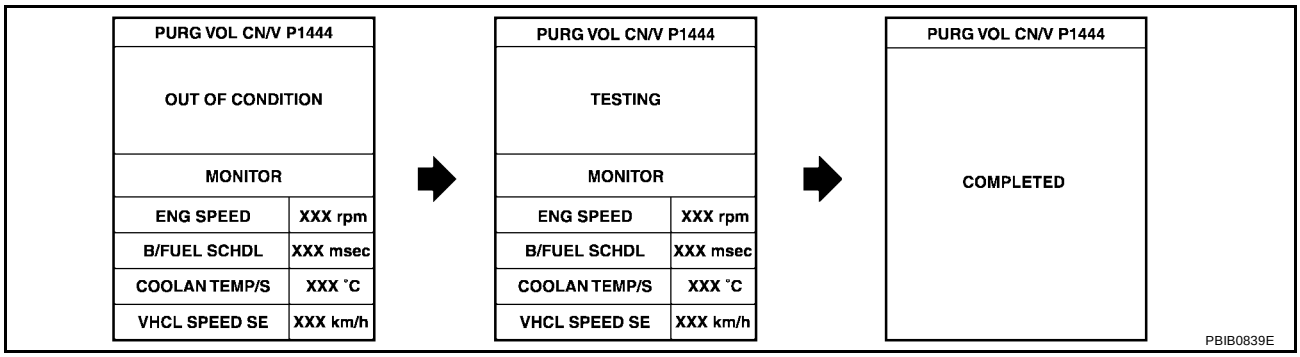

6. Start engine and let it idle until “TESTING” on CONSULT-II changes to “COMPLETED”. (It will take approximately 10 seconds.)
   If “TESTING” is not displayed after 5 minutes, retry from step 2.
7. Make sure that “OK” is displayed after touching “SELF-DIAG RESULTS”. If “NG” is displayed, refer to EC-377, "Diagnostic Procedure" .

WITH GST

1. Start engine and warm it up to normal operating temperature.
2. Turn ignition switch OFF and wait at least 10 seconds.
3. Start engine and let it idle for at least 20 seconds.
4. Select Service $07 with GST.
5. If 1st trip DTC is detected, go to EC-377, "Diagnostic Procedure" .

Wiring Diagram

UBS00HAX

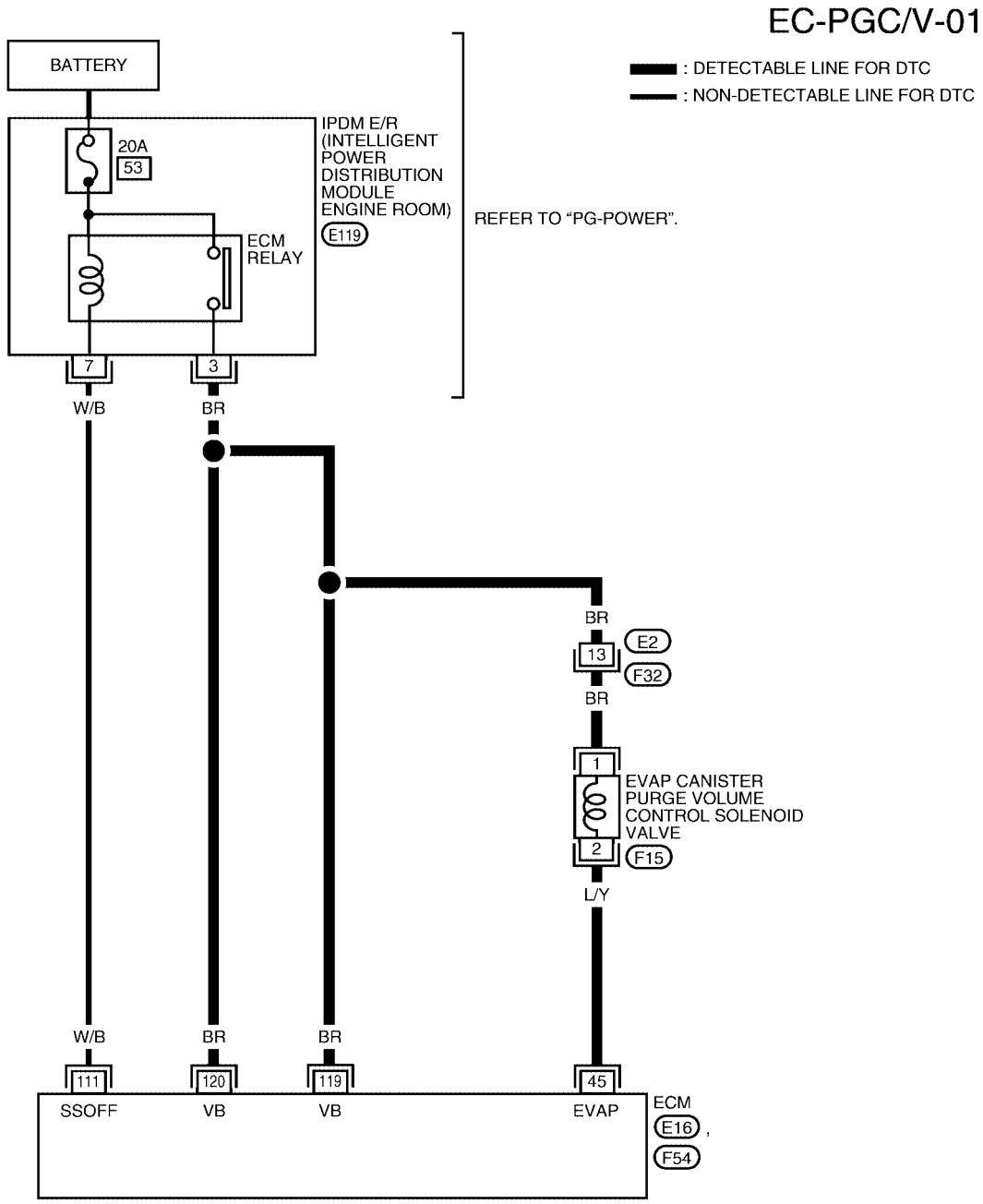

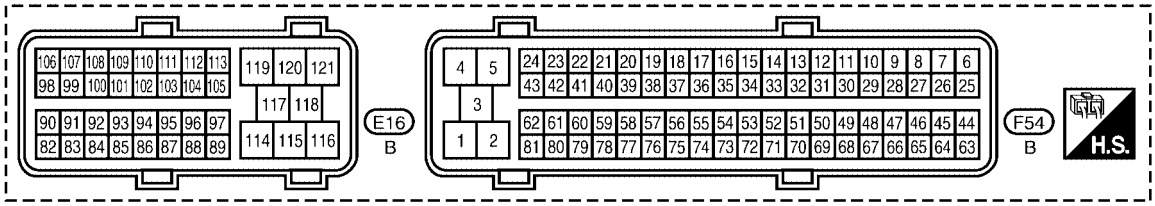

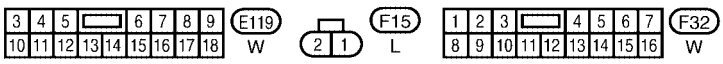

BBWA1687E

Specification data are reference values and are measured between each terminal and ground.
Pulse signal is measured by CONSULT-II.

CAUTION:

Do not use ECM ground terminals when measuring input/output voltage. Doing so may result in damage to the ECM's transistor. Use a ground other than ECM terminals, such as the ground.

TERMINAL NO.	WIRE COLOR	ITEM	CONDITION	DATA (DC Voltage)
45	L/Y	EVAP canister purge volume control solenoid valve	**[Engine is running]** ● Idle speed ● Accelerator pedal: Not depressed even slightly, after starting engine	BATTERY VOLTAGE (11 - 14V)★ 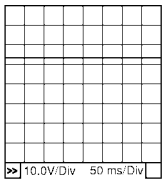 PBIB0050E
			[Engine is running] ● Engine speed: About 2,000 rpm (More than 100 seconds after starting engine)	11 - 14V★ 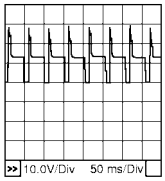 PBIB0051E
111	W/B	ECM relay (Self shut-off)	**[Engine is running]** **[Ignition switch: OFF]** ● For a few seconds after turning ignition switch OFF	0 - 1.5V
			[Ignition switch: OFF] ● More than a few seconds after turning ignition switch OFF	BATTERY VOLTAGE (11 - 14V)
119 120	BR BR	Power supply for ECM	**[Ignition switch: ON]**	BATTERY VOLTAGE (11 - 14V)

★: Average voltage for pulse signal (Actual pulse signal can be confirmed by oscilloscope.)

Diagnostic Procedure

UBS00HAY

1. CHECK EVAP CANISTER PURGE VOLUME CONTROL SOLENOID VALVE POWER SUPPLY CIRCUIT

1. Turn ignition switch OFF.
2. Disconnect EVAP canister purge volume control solenoid valve harness connector.
3. Turn ignition switch ON.

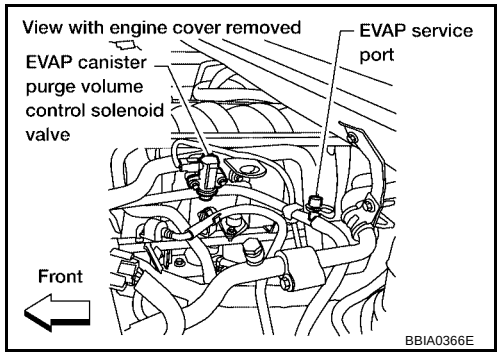

4. Check voltage between EVAP canister purge volume control solenoid valve terminal 1 and ground with CONSULT-II or tester.

Voltage: Battery voltage

OK or NG

OK >> GO TO 3.
NG >> GO TO 2.

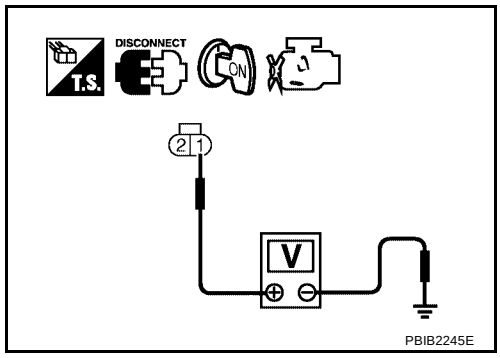

2. DETECT MALFUNCTIONING PART

Check the following.

- Harness connectors E2, F32
- Harness for open or short between EVAP canister purge volume control solenoid valve and IPDM E/R
- Harness for open or short between EVAP canister purge volume control solenoid valve and ECM

>> Repair harness or connectors.

3. CHECK EVAP CANISTER PURGE VOLUME CONTROL SOLENOID VALVE OUTPUT SIGNAL CIRCUIT FOR OPEN AND SHORT

1. Turn ignition switch OFF.
2. Disconnect ECM harness connector.
3. Check harness continuity between ECM terminal 45 and EVAP canister purge volume control solenoid valve terminal 2. Refer to Wiring Diagram.

Continuity should exist.

4. Also check harness for short to ground and short to power.

OK or NG

OK >> GO TO 4.
NG >> Repair open circuit or short to ground or short to power in harness or connectors.

4. CHECK EVAP CONTROL SYSTEM PRESSURE SENSOR CONNECTOR

1. Disconnect EVAP control system pressure sensor harness connector.
2. Check connectors for water.

Water should not exist.

OK or NG

OK >> GO TO 5.
NG >> Replace EVAP control system pressure sensor.

5. CHECK EVAP CONTROL SYSTEM PRESSURE SENSOR

Refer to EC-404, "Component Inspection" .

OK or NG

OK (With CONSULT-II)>>GO TO 6.
OK (Without CONSULT-II)>>GO TO 7.
NG >> Replace EVAP control system pressure sensor.

6. CHECK EVAP CANISTER PURGE VOLUME CONTROL SOLENOID VALVE

With CONSULT-II

1. Turn ignition switch OFF.
2. Reconnect all harness connectors disconnected.
3. Start engine.
4. Perform “PURG VOL CONT/V” in “ACTIVE TEST” mode with CONSULT-II. Check that engine speed varies according to the valve opening.

ACTIVE TEST	
PURG VOL CONT/V	XXX %
MONITOR	
ENG SPEED	XXX rpm
A/F ALPHA-B1	XX %
A/F ALPHA-B2	XX %

PBIB1678E

OK or NG

OK >> GO TO 8.
NG >> GO TO 7.

7. CHECK EVAP CANISTER PURGE VOLUME CONTROL SOLENOID VALVE

Refer to EC-380, "Component Inspection" .

OK or NG

OK >> GO TO 8.
NG >> Replace EVAP canister purge volume control solenoid valve.

8. CHECK RUBBER TUBE FOR CLOGGING

1. Disconnect rubber tube connected to EVAP canister vent control valve.
2. Check the rubber tube for clogging.

OK or NG

OK >> GO TO 9.
NG >> Clean the rubber tube using an air blower.

9. CHECK EVAP CANISTER VENT CONTROL VALVE

Refer to EC-393, "Component Inspection" .

OK or NG

OK >> GO TO 10.
NG >> Replace EVAP canister vent control valve.

10. CHECK IF EVAP CANISTER SATURATED WITH WATER

1. Remove EVAP canister with EVAP canister vent control valve and EVAP control system pressure sensor attached.
2. Check if water will drain from the EVAP canister.

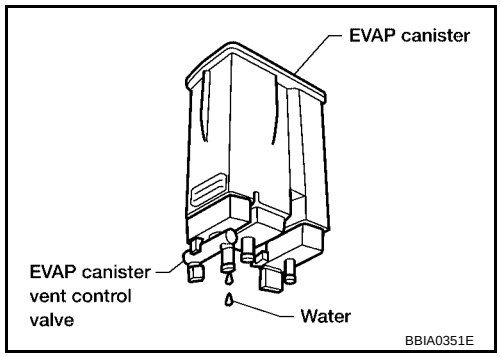

Yes or No

Yes >> GO TO 11.
No >> GO TO 13.

11. CHECK EVAP CANISTER

Weigh the EVAP canister with the EVAP canister vent control valve and EVAP control system pressure sensor attached.
The weight should be less than 2.5 kg (5.5 lb).

OK or NG

OK >> GO TO 13.
NG >> GO TO 12.

12. DETECT MALFUNCTIONING PART

Check the following.

- EVAP canister for damage
- EVAP hose between EVAP canister and vehicle frame for clogging or poor connection

>> Repair hose or replace EVAP canister.

13. CHECK INTERMITTENT INCIDENT

Refer to EC-144, "TROUBLE DIAGNOSIS FOR INTERMITTENT INCIDENT" .

>> **INSPECTION END**

Component Inspection

UBS00HAZ

EVAP CANISTER PURGE VOLUME CONTROL SOLENOID VALVE

With CONSULT-II

Check air passage continuity of EVAP canister purge volume control solenoid valve under the following conditions.

Condition (PURG VOL CONT/V value)	Air passage continuity between A and B
100%	Yes
0%	No

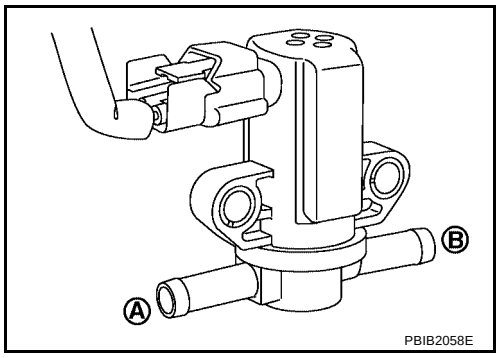

Without CONSULT-II

Check air passage continuity of EVAP canister purge volume control solenoid valve under the following conditions.

Condition	Air passage continuity between A and B
12V direct current supply between terminals 1 and 2	Yes
No supply	No

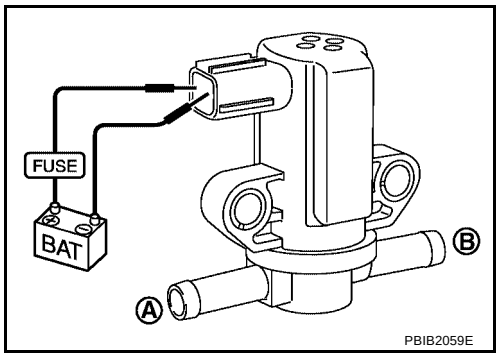

Removal and Installation

UBS00HB0

EVAP CANISTER PURGE VOLUME CONTROL SOLENOID VALVE

Refer to EM-17, "INTAKE MANIFOLD" .

DTC P0444, P0445 EVAP CANISTER PURGE VOLUME CONTROL SOLENOID VALVE

PFP:14920

Description

UBS00H4R

SYSTEM DESCRIPTION

Sensor	Input signal to ECM	ECM function	Actuator
Crankshaft position sensor (POS) Camshaft position sensor (PHASE)	Engine speed*1	EVAP canister purge flow control	EVAP canister purge volume control solenoid valve
Mass air flow sensor	Amount of intake air		
Engine coolant temperature sensor	Engine coolant temperature		
Battery	Battery voltage*1		
Throttle position sensor	Throttle position		
Accelerator pedal position sensor	Accelerator pedal position		
Air fuel ratio (A/F) sensor 1	Density of oxygen in exhaust gas (Mixture ratio feedback signal)		
Fuel tank temperature sensor	Fuel temperature in fuel tank		
Wheel sensor	Vehicle speed*2		

*1: ECM determines the start signal status by the signals of engine speed and battery voltage.
*2: This signal is sent to the ECM through CAN communication line.

This system controls flow rate of fuel vapor from the EVAP canister. The opening of the vapor by-pass passage in the EVAP canister purge volume control solenoid valve changes to control the flow rate. The EVAP canister purge volume control solenoid valve repeats ON/OFF operation according to the signal sent from the ECM. The opening of the valve varies for optimum engine control. The optimum value stored in the ECM is determined by considering various engine conditions. When the engine is operating, the flow rate of fuel vapor from the EVAP canister is regulated as the air flow changes.

COMPONENT DESCRIPTION

The EVAP canister purge volume control solenoid valve uses a ON/OFF duty to control the flow rate of fuel vapor from the EVAP canister. The EVAP canister purge volume control solenoid valve is moved by ON/OFF pulses from the ECM. The longer the ON pulse, the greater the amount of fuel vapor that will flow through the valve.

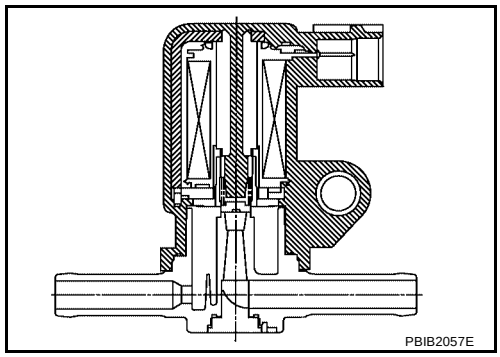

CONSULT-II Reference Value in Data Monitor Mode

UBS00H4S

Specification data are reference values.

MONITOR ITEM	CONDITION		SPECIFICATION
PURG VOL C/V	● Engine: After warming up ● Air conditioner switch: OFF ● Selector lever: P or N ● No load	Idle (Accelerator pedal: Not depressed even slightly, after starting engine)	0%
		2,000 rpm	—

On Board Diagnosis Logic

UBS00H4T

DTC No.	Trouble diagnosis name	DTC detecting condition	Possible cause
P0444 0444	EVAP canister purge volume control solenoid valve circuit open	An excessively low voltage signal is sent to ECM through the valve	● Harness or connectors (The solenoid valve circuit is open or shorted.) ● EVAP canister purge volume control solenoid valve
P0445 0445	EVAP canister purge volume control solenoid valve circuit shorted	An excessively high voltage signal is sent to ECM through the valve	● Harness or connectors (The solenoid valve circuit is shorted.) ● EVAP canister purge volume control solenoid valve

DTC Confirmation Procedure

UBS00H4U

NOTE:
If DTC Confirmation Procedure has been previously conducted, always turn ignition switch OFF and wait at least 10 seconds before conducting the next test.
TESTING CONDITION:
Before performing the following procedure, confirm battery voltage is more than 11V at idle.

WITH CONSULT-II

1. Turn ignition switch ON.
2. Select “DATA MONITOR” mode with CONSULT-II.
3. Start engine and let it idle for at least 13 seconds.
4. If 1st trip DTC is detected, go to EC-385, "Diagnostic Procedure"
.

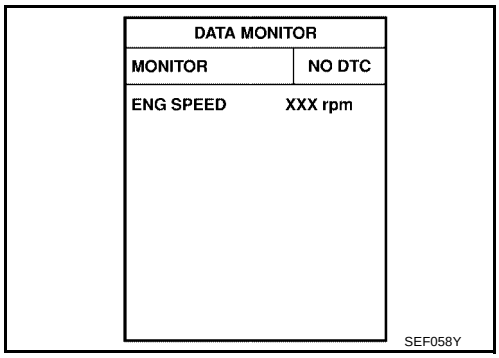

WITH GST

Follow the procedure “WITH CONSULT-II” above.

Wiring Diagram

UBS00H4V

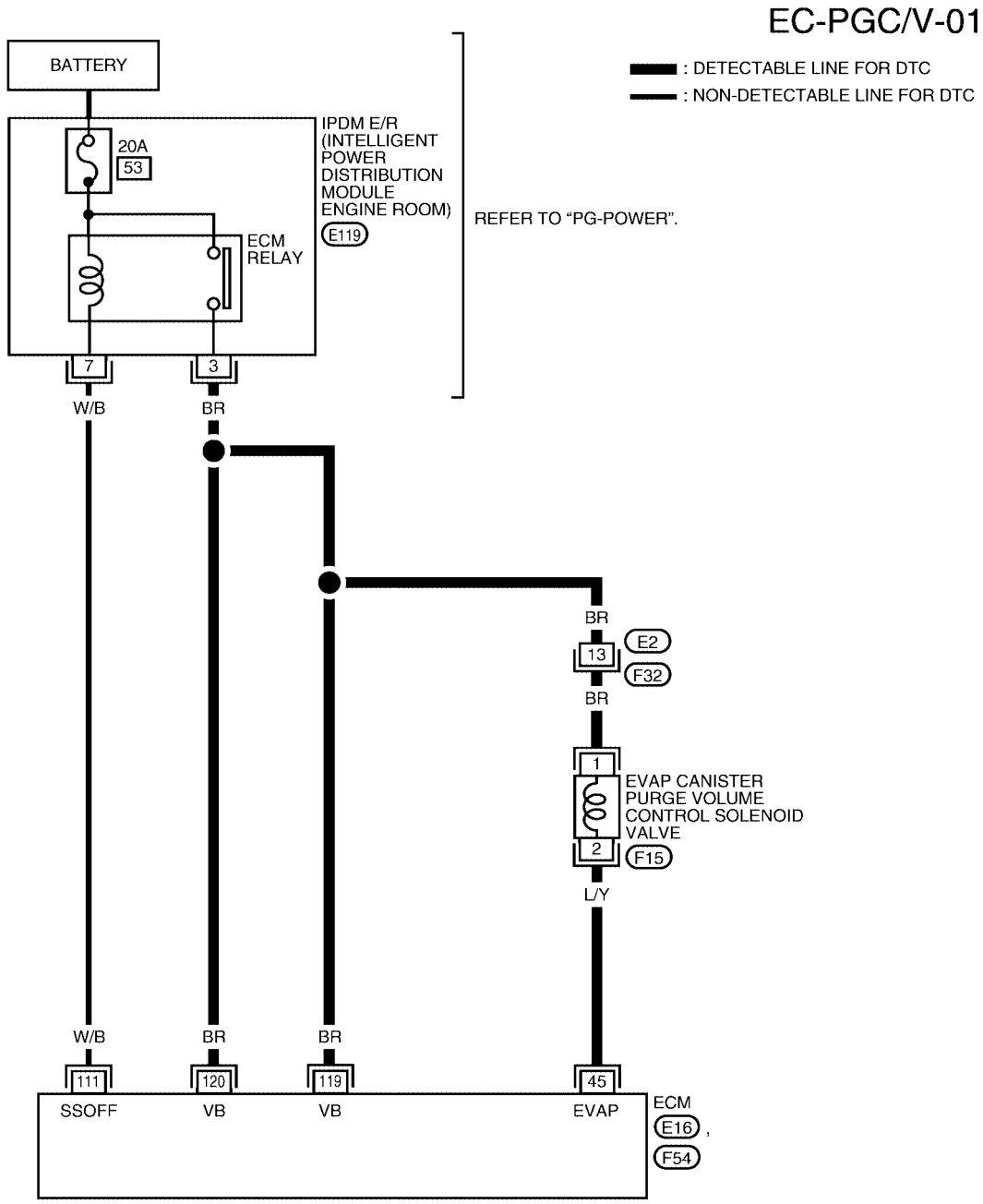

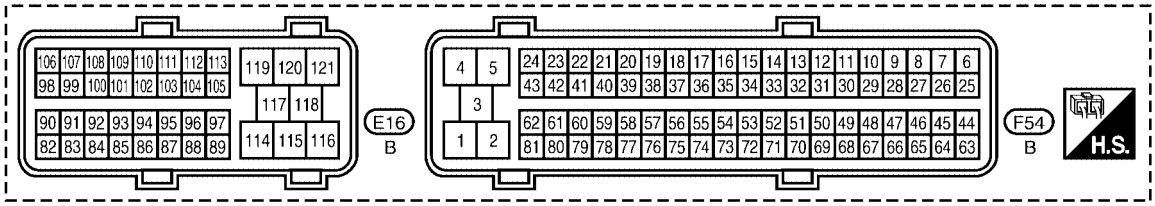

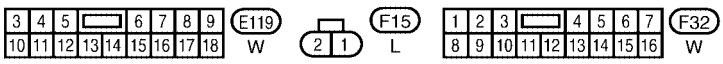

BBWA1687E

Specification data are reference values and are measured between each terminal and ground.
Pulse signal is measured by CONSULT-II.

CAUTION:

Do not use ECM ground terminals when measuring input/output voltage. Doing so may result in damage to the ECM's transistor. Use a ground other than ECM terminals, such as the ground.

TERMINAL NO.	WIRE COLOR	ITEM	CONDITION	DATA (DC Voltage)
45	L/Y	EVAP canister purge volume control solenoid valve	**[Engine is running]** ● Idle speed ● Accelerator pedal: Not depressed even slightly, after starting engine.	BATTERY VOLTAGE (11 - 14V) ★ 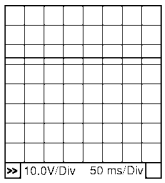 PBIB0050E
			[Engine is running] ● Engine speed: About 2,000 rpm (More than 100 seconds after starting engine).	11 - 14V ★ 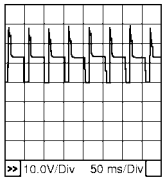 PBIB0051E
111	W/B	ECM relay (Self shut-off)	**[Engine is running]** **[Ignition switch: OFF]** ● For a few seconds after turning ignition switch OFF	0 - 1.5V
			[Ignition switch: OFF] ● More than a few seconds after turning ignition switch OFF	BATTERY VOLTAGE (11 - 14V)
119 120	BR BR	Power supply for ECM	**[Ignition switch: ON]**	BATTERY VOLTAGE (11 - 14V)

★: Average voltage for pulse signal (Actual pulse signal can be confirmed by oscilloscope.)

Diagnostic Procedure

UBS00H4W

1. CHECK EVAP CANISTER PURGE VOLUME CONTROL SOLENOID VALVE POWER SUPPLY CIRCUIT

1. Turn ignition switch OFF.
2. Disconnect EVAP canister purge volume control solenoid valve harness connector.
3. Turn ignition switch ON.

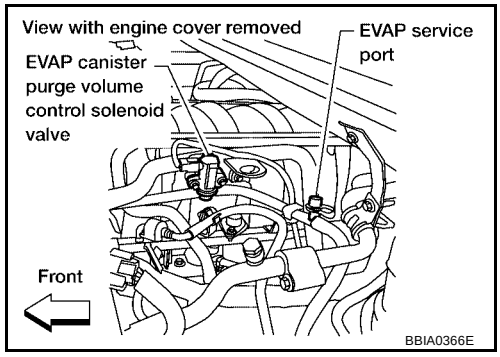

4. Check voltage between EVAP canister purge volume control solenoid valve terminal 1 and ground with CONSULT-II or tester.

Voltage: Battery voltage

OK or NG

OK >> GO TO 3.
NG >> GO TO 2.

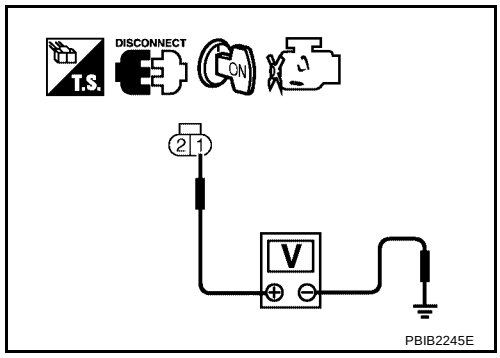

2. DETECT MALFUNCTIONING PART

Check the following.

- Harness connectors E2, F32
- Harness for open or short between EVAP canister purge volume control solenoid valve and IPDM E/R
- Harness for open or short between EVAP canister purge volume control solenoid valve and ECM

>> Repair harness or connectors.

3. CHECK EVAP CANISTER PURGE VOLUME CONTROL SOLENOID VALVE OUTPUT SIGNAL CIRCUIT FOR OPEN AND SHORT

1. Turn ignition switch OFF.
2. Disconnect ECM harness connector.
3. Check harness continuity between ECM terminal 45 and EVAP canister purge volume control solenoid valve terminal 2. Refer to Wiring Diagram.

Continuity should exist.

4. Also check harness for short to ground and short to power.

OK or NG

OK (With CONSULT-II)>>GO TO 4.
OK (Without CONSULT-II)>>GO TO 5.
NG >> Repair open circuit or short to ground or short to power in harness or connectors.

4. CHECK EVAP CANISTER PURGE VOLUME CONTROL SOLENOID VALVE OPERATION

With CONSULT-II

1. Reconnect all harness connectors disconnected.
2. Start engine.
3. Perform “PURG VOL CONT/V” in “ACTIVE TEST” mode with CONSULT-II. Check that engine speed varies according to the valve opening.

OK or NG

OK >> GO TO 6.
NG >> GO TO 5.

ACTIVE TEST	
PURG VOL CONT/V	XXX %
MONITOR	
ENG SPEED	XXX rpm
A/F ALPHA-B1	XX %
A/F ALPHA-B2	XX %

PBIB1678E

5. CHECK EVAP CANISTER PURGE VOLUME CONTROL SOLENOID VALVE

Refer to EC-386, "Component Inspection" .

OK or NG

OK >> GO TO 6.
NG >> Replace EVAP canister purge volume control solenoid valve.

6. CHECK INTERMITTENT INCIDENT

Refer to EC-144, "TROUBLE DIAGNOSIS FOR INTERMITTENT INCIDENT" .

>> **INSPECTION END**

Component Inspection

UBS00H4X

EVAP CANISTER PURGE VOLUME CONTROL SOLENOID VALVE

With CONSULT-II

Check air passage continuity of EVAP canister purge volume control solenoid valve under the following conditions.

Condition (PURG VOL CONT/V value)	Air passage continuity between A and B
100%	Yes
0%	No

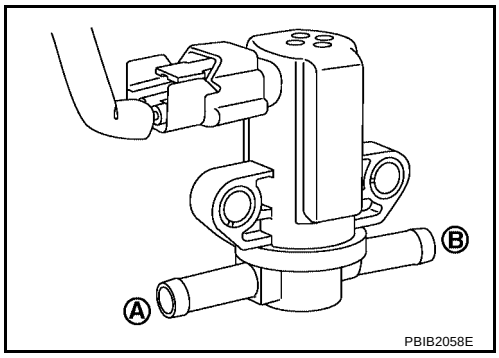

PBIB2058E

Without CONSULT-II

Check air passage continuity of EVAP canister purge volume control solenoid valve under the following conditions.

Condition	Air passage continuity between A and B
12V direct current supply between terminals 1 and 2	Yes
No supply	No

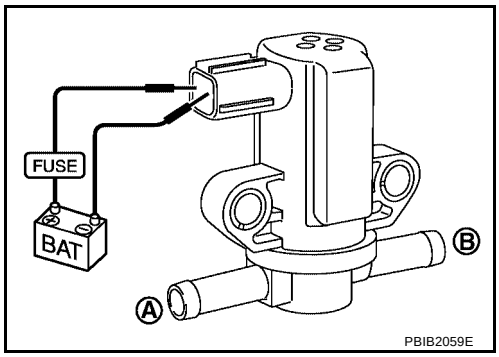

PBIB2059E

Removal and Installation

UBS00H4Y

EVAP CANISTER PURGE VOLUME CONTROL SOLENOID VALVE

Refer to EM-17, "INTAKE MANIFOLD" .

DTC P0447 EVAP CANISTER VENT CONTROL VALVE

PFP:14935

Component Description

UBS00H4Z

The EVAP canister vent control valve is located on the EVAP canister and is used to seal the canister vent.
This solenoid valve responds to signals from the ECM. When the ECM sends an ON signal, the coil in the solenoid valve is energized. A plunger will then move to seal the canister vent. The ability to seal the vent is necessary for the on board diagnosis of other evaporative emission control system components.
This solenoid valve is used only for diagnosis, and usually remains opened.
When the vent is closed, under normal purge conditions, the evaporative emission control system is depressurized and allows EVAP Control System diagnosis.

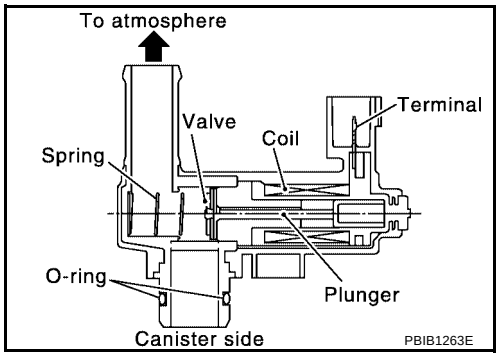

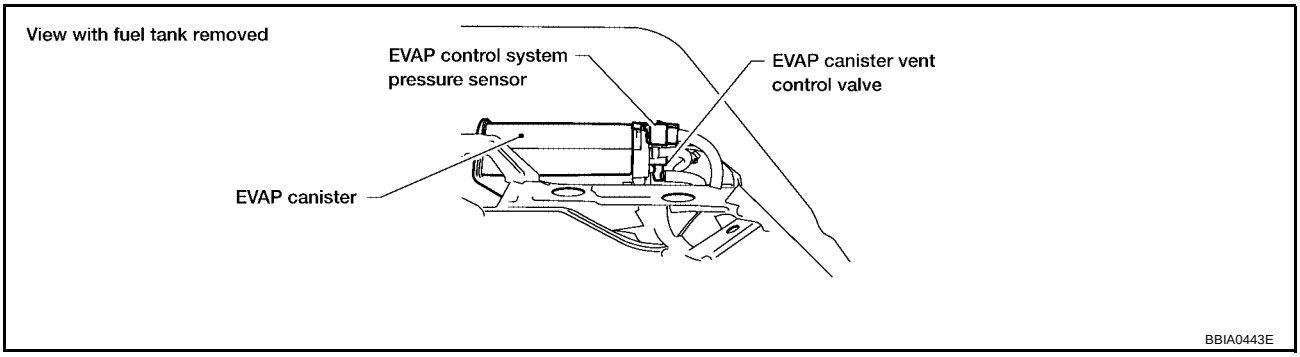

CONSULT-II Reference Value in Data Monitor Mode

UBS00H50

Specification data are reference values.

MONITOR ITEM	CONDITION	SPECIFICATION
VENT CONT/V	● Ignition switch: ON	OFF

On Board Diagnosis Logic

UBS00H51

DTC No.	Trouble diagnosis name	DTC detecting condition	Possible cause
P0447 0447	EVAP canister vent control valve circuit open	An improper voltage signal is sent to ECM through EVAP canister vent control valve.	● Harness or connectors (The valve circuit is open or shorted.) ● EVAP canister vent control valve

DTC Confirmation Procedure

UBS00H52

NOTE:
If DTC Confirmation Procedure has been previously conducted, always turn ignition switch OFF and wait at least 10 seconds before conducting the next test.
TESTING CONDITION:
Before performing the following procedure, confirm battery voltage is more than 11V at idle.

WITH CONSULT-II

1. Turn ignition switch ON.
2. Select “DATA MONITOR” mode with CONSULT-II.
3. Start engine and wait at least 8 seconds.
4. If 1st trip DTC is detected, go to EC-391, "Diagnostic Procedure"
.

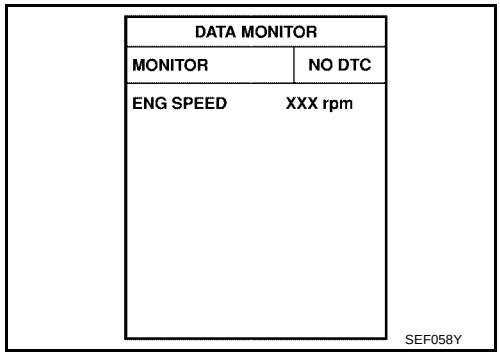

WITH GST

Follow the procedure “WITH CONSULT-II” above.

Wiring Diagram

UBS00H53

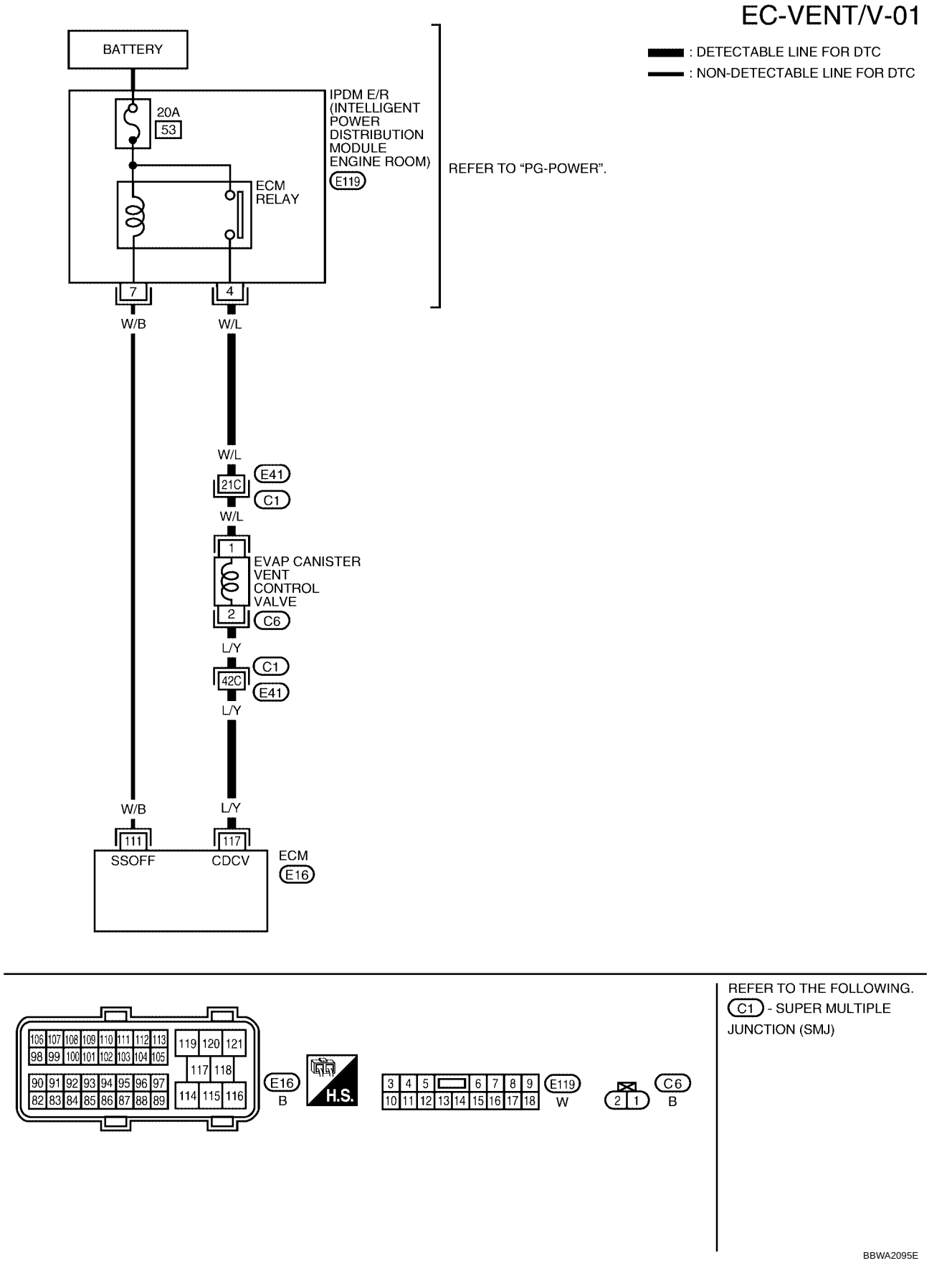

Specification data are reference values and are measured between each terminal and ground.

CAUTION:

Do not use ECM ground terminals when measuring input/output voltage. Doing so may result in damage to the ECM's transistor. Use a ground other than ECM terminals, such as the ground.

TERMINAL NO.	WIRE COLOR	ITEM	CONDITION	DATA (DC Voltage)
111	W/B	ECM relay (Self shut-off)	**[Engine is running]** **[Ignition switch: OFF]** ● For a few seconds after turning ignition switch OFF	0 - 1.5V
			[Ignition switch: OFF] ● More than a few seconds after turning ignition switch OFF	BATTERY VOLTAGE (11 - 14V)
117	L/Y	EVAP canister vent control valve	**[Ignition switch: ON]**	BATTERY VOLTAGE (11 - 14V)

Diagnostic Procedure

UBS00H54

1. INSPECTION START

Do you have CONSULT-II?

Yes or No

Yes >> GO TO 2.
No >> GO TO 3.

2. CHECK EVAP CANISTER VENT CONTROL VALVE CIRCUIT

With CONSULT-II

1. Turn ignition switch OFF and then turn ON.
2. Select “VENT CONTROL/V” in “ACTIVE TEST” mode with CONSULT-II.
3. Touch “ON/OFF” on CONSULT-II screen.
4. Check for operating sound of the valve.
   Clicking noise should be heard.

OK or NG

OK >> GO TO 7.
NG >> GO TO 3.

ACTIVE TEST	
VENT CONTROL/V	OFF
MONITOR	
ENG SPEED	XXX rpm
A/F ALPHA-B1	XXX %
A/F ALPHA-B2	XXX %

PBIB1679E

3. CHECK EVAP CANISTER VENT CONTROL VALVE POWER SUPPLY CIRCUIT

1. Turn ignition switch OFF.
2. Disconnect EVAP canister vent control valve harness connector.

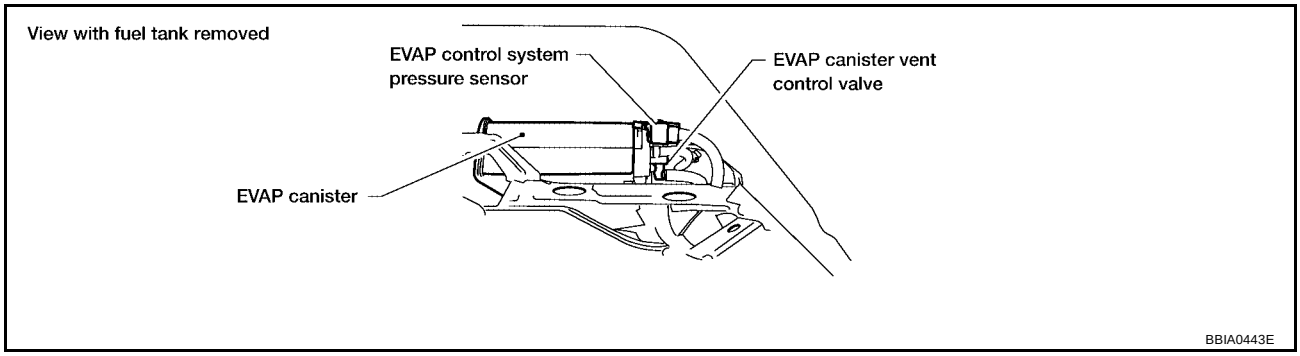

3. Turn ignition switch ON.
4. Check voltage between EVAP canister vent control valve terminal 1 and ground with CONSULT-II or tester.

Voltage: Battery voltage

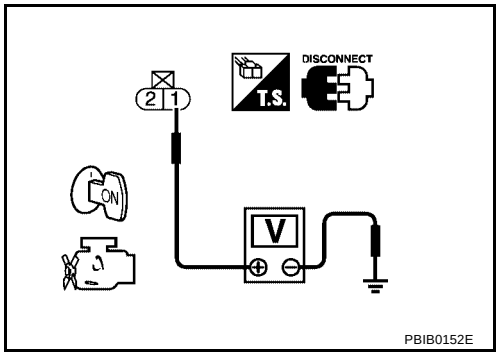

OK or NG

OK >> GO TO 5.
NG >> GO TO 4.

4. DETECT MALFUNCTIONING PART

Check the following.

- Harness connectors E41, C1
- Harness for open or short between EVAP canister vent control valve and IPDM E/R

>> Repair harness or connectors.

5. CHECK EVAP CANISTER VENT CONTROL VALVE OUTPUT SIGNAL CIRCUIT FOR OPEN AND SHORT

1. Turn ignition switch OFF.
2. Disconnect ECM harness connector.
3. Check harness continuity between ECM terminal 117 and EVAP canister vent control valve terminal 2. Refer to Wiring Diagram.

Continuity should exist.

4. Also check harness for short to ground and short to power.

OK or NG

OK >> GO TO 7.
NG >> GO TO 6.

6. DETECT MALFUNCTIONING PART

Check the following.

- Harness connectors E41, C1
- Harness for open or short between EVAP canister vent control valve and ECM

>> Repair open circuit or short to ground or short to power in harness or connectors.

7. CHECK RUBBER TUBE FOR CLOGGING

1. Disconnect rubber tube connected to EVAP canister vent control valve.
2. Check the rubber tube for clogging.

OK or NG

OK >> GO TO 8.
NG >> Clean the rubber tube using an air blower.

8. CHECK EVAP CANISTER VENT CONTROL VALVE

Refer to EC-393, "Component Inspection" .

OK or NG

OK >> GO TO 9.
NG >> Replace EVAP canister vent control valve.

9. CHECK INTERMITTENT INCIDENT

Refer to EC-144, "TROUBLE DIAGNOSIS FOR INTERMITTENT INCIDENT" .

>> **INSPECTION END**

Component Inspection

UBS00H55

EVAP CANISTER VENT CONTROL VALVE

With CONSULT-II

1. Remove EVAP canister vent control valve from EVAP canister.
2. Check portion **B** of EVAP canister vent control valve for being rusted.
   If NG, replace EVAP canister vent control valve.
   If OK, go to next step.
3. Reconnect harness connectors disconnected.
4. Turn ignition switch ON.

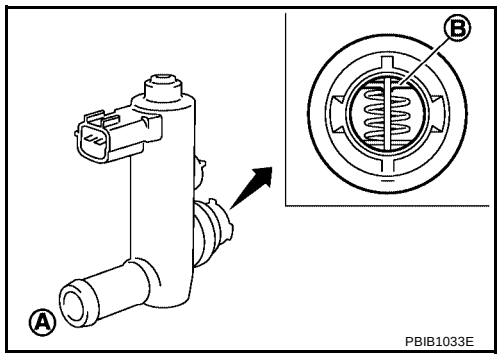

5. Perform “VENT CONTROL/V” in “ACTIVE TEST” mode.
6. Check air passage continuity and operation delay time.
   Make sure new O-ring is installed properly.

Condition VENT CONTROL/V	Air passage continuity between A and B
ON	No
OFF	Yes

Operation takes less than 1 second.

If NG, replace EVAP canister vent control valve.
If OK, go to next step.

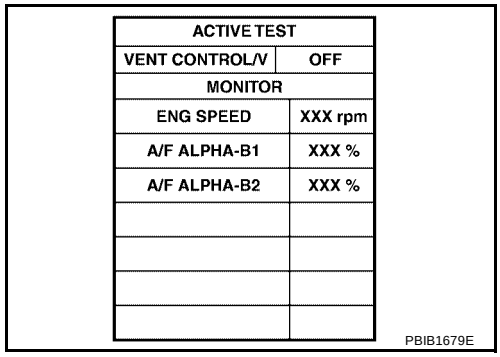

ACTIVE TEST	
VENT CONTROL/V	OFF
MONITOR	
ENG SPEED	XXX rpm
A/F ALPHA-B1	XXX %
A/F ALPHA-B2	XXX %

7. Clean the air passage (portion **A** to **B**) of EVAP canister vent control valve using an air blower.
8. Perform step 6 again.

Without CONSULT-II

1. Remove EVAP canister vent control valve from EVAP canister.
2. Check portion **B** of EVAP canister vent control valve for being rusted.

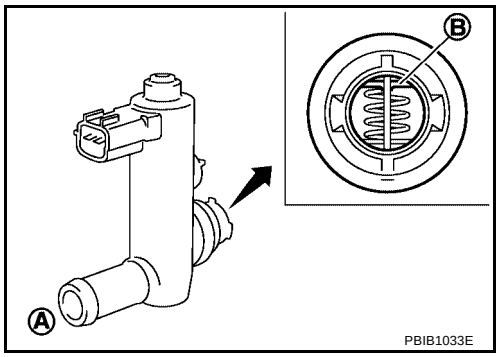

3. Check air passage continuity and operation delay time under the following conditions.
   Make sure new O-ring is installed properly.

Condition	Air passage continuity between A and B
12V direct current supply between terminals 1 and 2	No
OFF	Yes

Operation takes less than 1 second.

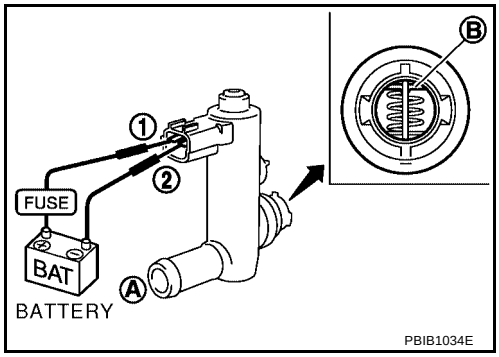

If NG, replace EVAP canister vent control valve.
If OK, go to next step.

4. Clean the air passage (portion **A** to **B**) of EVAP canister vent control valve using an air blower.
5. Perform step 3 again.

DTC P0448 EVAP CANISTER VENT CONTROL VALVE

PFP:16935

Component Description

UBS00HB1

The EVAP canister vent control valve is located on the EVAP canister and is used to seal the canister vent.
This solenoid valve responds to signals from the ECM. When the ECM sends an ON signal, the coil in the solenoid valve is energized. A plunger will then move to seal the canister vent. The ability to seal the vent is necessary for the on board diagnosis of other evaporative emission control system components.
This solenoid valve is used only for diagnosis, and usually remains opened.
When the vent is closed, under normal purge conditions, the evaporative emission control system is depressurized and allows EVAP Control System diagnosis.

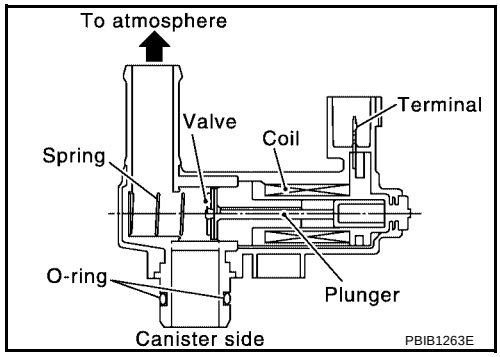

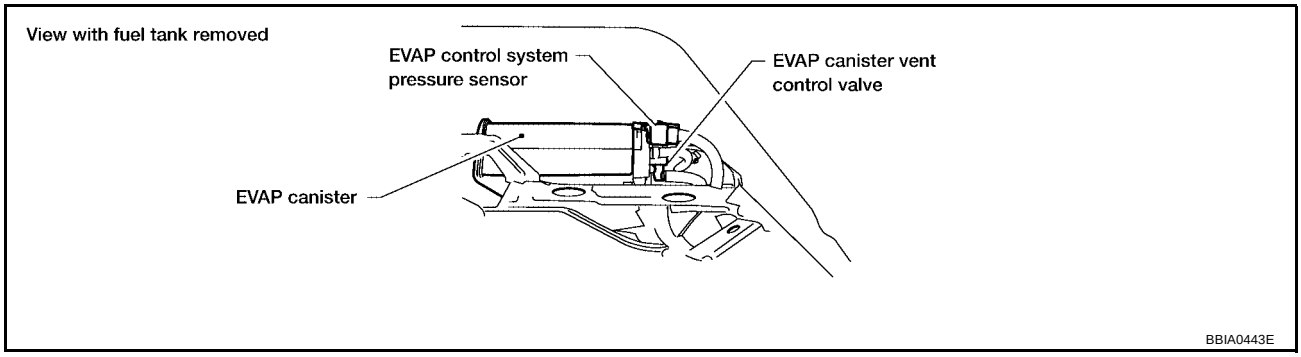

CONSULT-II Reference Value in Data Monitor Mode

UBS00HB2

Specification data are reference values.

MONITOR ITEM	CONDITION	SPECIFICATION
VENT CONT/V	● Ignition switch: ON	OFF

On Board Diagnosis Logic

UBS00HB3

DTC No.	Trouble diagnosis name	DTC detecting condition	Possible cause
P0448 0448	EVAP canister vent control valve close	EVAP canister vent control valve remains closed under specified driving conditions.	● EVAP canister vent control valve ● EVAP control system pressure sensor and the circuit ● Blocked rubber tube to EVAP canister vent control valve ● EVAP canister is saturated with water

DTC Confirmation Procedure

UBS00HB4

NOTE:
If DTC Confirmation Procedure has been previously conducted, always turn ignition switch OFF and wait at least 10 seconds before conducting the next test.

WITH CONSULT-II

1. Turn ignition switch ON and wait at least 5 seconds.
2. Turn ignition switch OFF and wait at least 10 seconds.
3. Turn ignition switch ON and select “DATA MONITOR” mode with CONSULT-II.
4. Start engine and let it idle for at least 1 minute.
5. Repeat next procedures 3 times.

a. Increase the engine speed up to 3,000 to 3,500 rpm and keep it for 2 minutes and 50 seconds to 3 minutes.
Never exceed 3 minutes.

b. Fully released accelerator pedal and keep engine idle for about 5 seconds.

6. If 1st trip DTC is detected, go to EC-398, "Diagnostic Procedure".
If 1st trip DTC is not detected, go to the next step.
7. Repeat next procedure 20 times.

a. Quickly increase the engine speed up to 4,000 to 4,500 rpm or more and keep it for 25 to 30 seconds.

b. Fully released accelerator pedal and keep engine idle for at least 35 seconds.

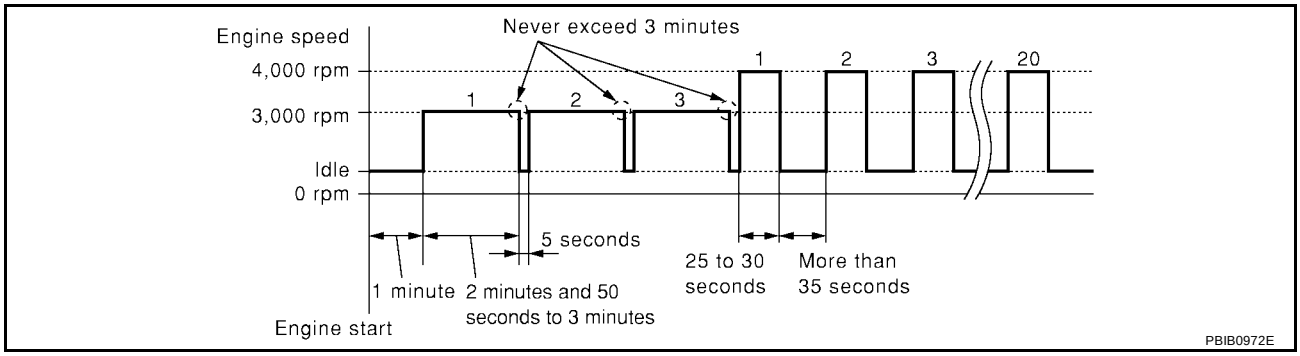

8. If 1st trip DTC is detected, go to EC-398, "Diagnostic Procedure".

WITH GST

Follow the procedure “WITH CONSULT-II” above.

Wiring Diagram

UBS00HB5

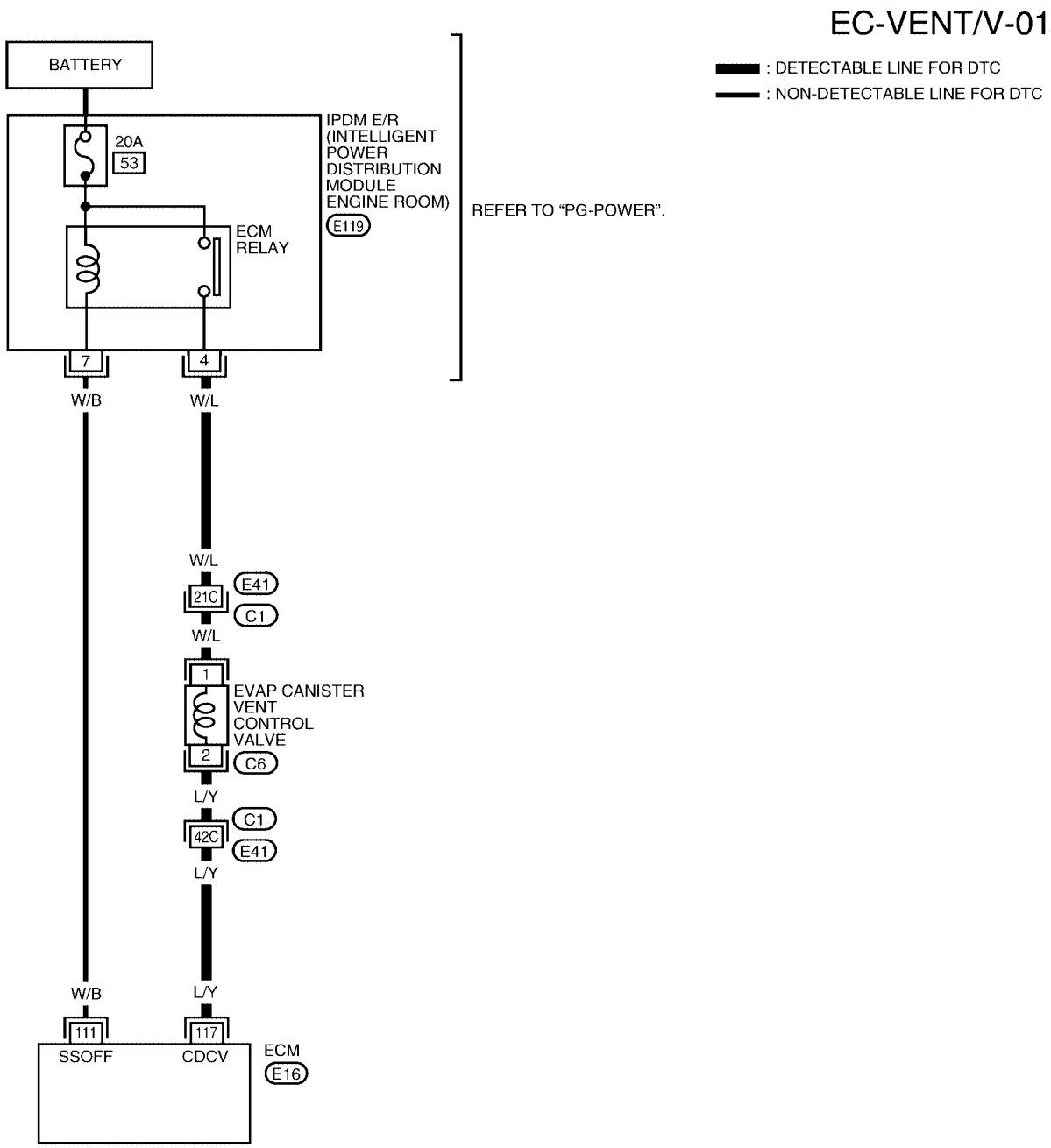

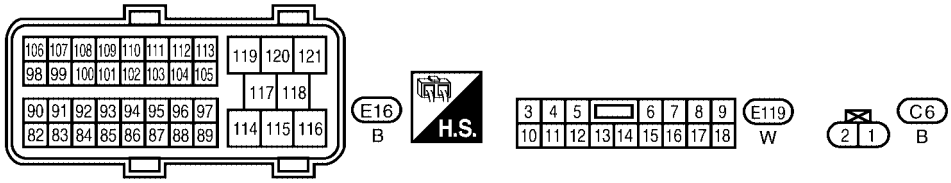

REFER TO THE FOLLOWING.
C1 - SUPER MULTIPLE JUNCTION (SMJ)

BBWA2095E

Specification data are reference values and are measured between each terminal and ground.

CAUTION:

Do not use ECM ground terminals when measuring input/output voltage. Doing so may result in damage to the ECM's transistor. Use a ground other than ECM terminals, such as the ground.

TERMINAL NO.	WIRE COLOR	ITEM	CONDITION	DATA (DC Voltage)
111	W/B	ECM relay (Self shut-off)	**[Engine is running]** **[Ignition switch: OFF]** ● For a few seconds after turning ignition switch OFF	0 - 1.5V
			[Ignition switch: OFF] ● More than a few seconds after turning ignition switch OFF	BATTERY VOLTAGE (11 - 14V)
117	L/Y	EVAP canister vent control valve	**[Ignition switch: ON]**	BATTERY VOLTAGE (11 - 14V)

Diagnostic Procedure

UBS00HB6

1. CHECK RUBBER TUBE

1. Turn ignition switch OFF.
2. Disconnect rubber tube connected to EVAP canister vent control valve.

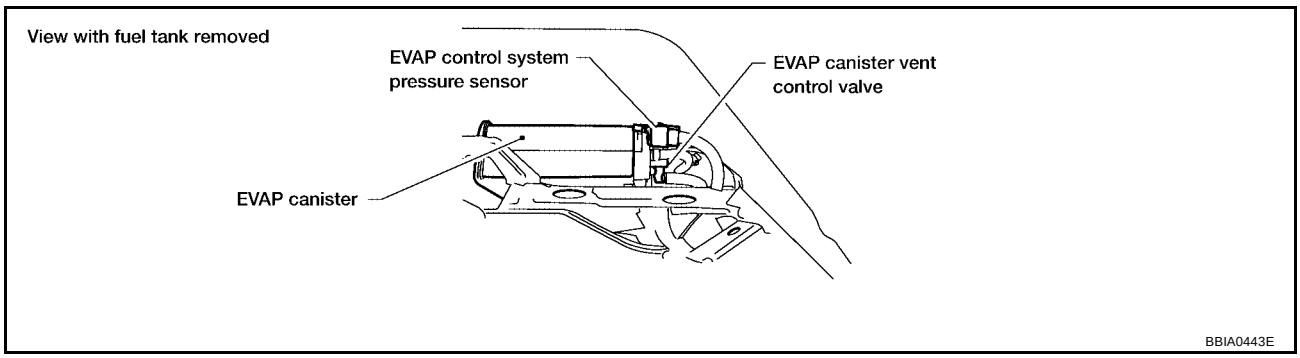

3. Check the rubber tube for clogging.

OK or NG

OK >> GO TO 2.
NG >> Clean rubber tube using an air blower.

2. CHECK EVAP CANISTER VENT CONTROL VALVE

Refer to EC-400, "Component Inspection" .

OK or NG

OK >> GO TO 3.
NG >> Replace EVAP canister vent control valve.

3. CHECK IF EVAP CANISTER SATURATED WITH WATER

1. Remove EVAP canister with EVAP canister vent control valve and EVAP control system pressure sensor attached.
2. Check if water will drain from the EVAP canister.

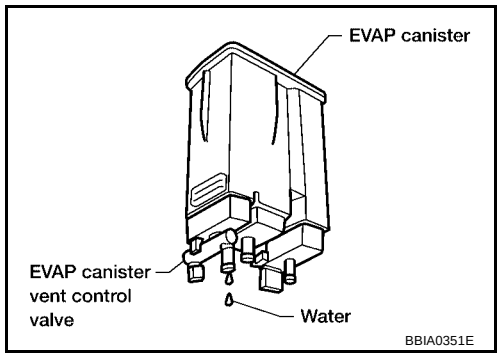

Yes or No

Yes >> GO TO 4.
No >> GO TO 6.

4. CHECK EVAP CANISTER

Weigh the EVAP canister with the EVAP canister vent control valve and EVAP control system pressure sensor attached.

The weight should be less than 2.5 kg (5.5 lb).

OK or NG

OK >> GO TO 6.
NG >> GO TO 5.

5. DETECT MALFUNCTIONING PART

Check the following.

- EVAP canister for damage
- EVAP hose between EVAP canister and vehicle frame for clogging or poor connection

>> Repair hose or replace EVAP canister.

6. CHECK EVAP CONTROL SYSTEM PRESSURE SENSOR CONNECTOR

1. Disconnect EVAP control system pressure sensor harness connector.
2. Check connectors for water.

Water should not exist.

OK or NG

OK >> GO TO 7.
NG >> Replace EVAP control system pressure sensor.

7. CHECK EVAP CONTROL SYSTEM PRESSURE SENSOR

Refer to EC-404, "Component Inspection" .

OK or NG

OK >> GO TO 8.
NG >> Replace EVAP control system pressure sensor.

8. CHECK INTERMITTENT INCIDENT

Refer to EC-144, "TROUBLE DIAGNOSIS FOR INTERMITTENT INCIDENT" .

>> **INSPECTION END**

Component Inspection

UBS00HB7

EVAP CANISTER VENT CONTROL VALVE

With CONSULT-II

1. Remove EVAP canister vent control valve from EVAP canister.
2. Check portion **B** of EVAP canister vent control valve for being rusted.
   If NG, replace EVAP canister vent control valve.
   If OK, go to next step.
3. Reconnect harness connectors disconnected.
4. Turn ignition switch ON.

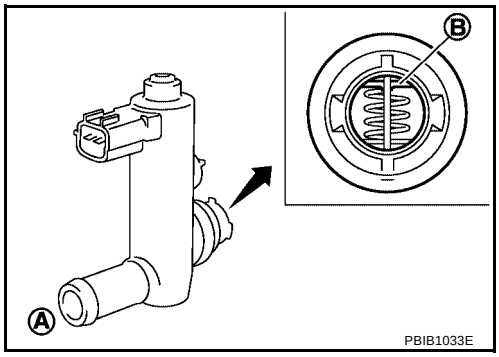

5. Perform “VENT CONTROL/V” in “ACTIVE TEST” mode.
6. Check air passage continuity and operation delay time.
   Make sure that new O-ring is installed properly.

Condition VENT CONTROL/V	Air passage continuity between A and B
ON	No
OFF	Yes

Operation takes less than 1 second.

If NG, replace EVAP canister vent control valve.
If OK, go to next step.

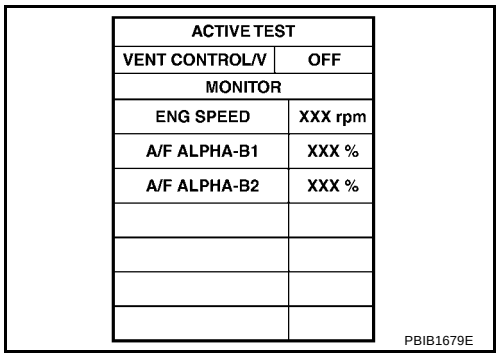

7. Clean the air passage (Portion **A** to **B**) of EVAP canister vent control valve using an air blower.
8. Perform step 6 again.

Without CONSULT-II

1. Remove EVAP canister vent control valve from EVAP canister.
2. Check portion **B** of EVAP canister vent control valve for being rusted.

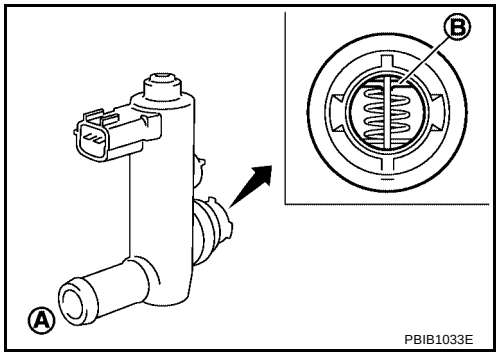

3. Check air passage continuity and operation delay time under the following conditions.
   Make sure that new O-ring is installed properly.

Condition	Air passage continuity between A and B
12V direct current supply between terminals 1 and 2	No
OFF	Yes

Operation takes less than 1 second.

If NG, replace EVAP canister vent control valve.
If OK, go to next step.

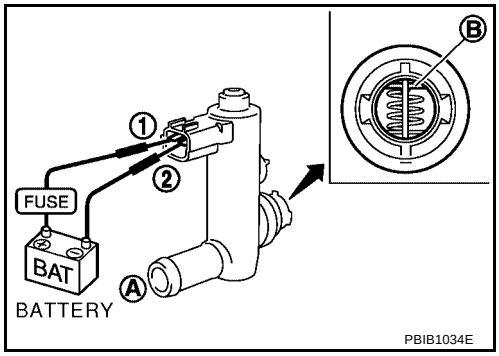

4. Clean the air passage (Portion **A** to **B**) of EVAP canister vent control valve using an air blower.

5. Perform step 3 again.

DTC P0451 EVAP CONTROL SYSTEM PRESSURE SENSOR

PFP:22365

Component Description

UBS00H56

The EVAP control system pressure sensor detects pressure in the purge line. The sensor output voltage to the ECM increases as pressure increases.

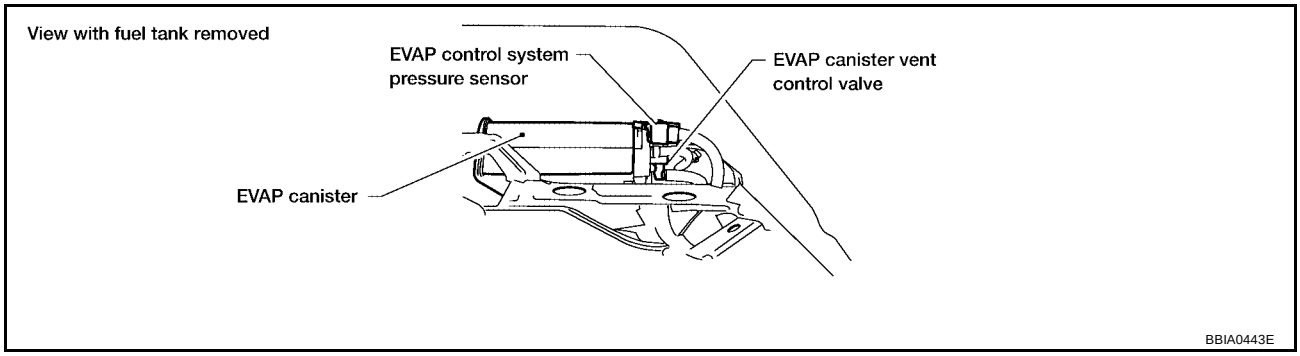

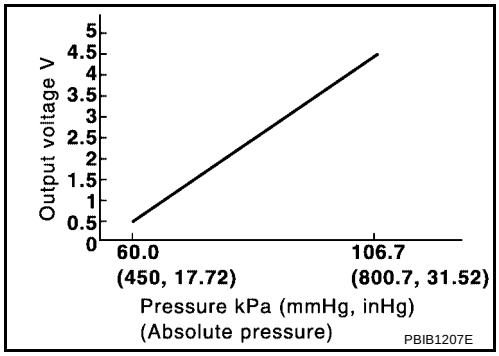

CONSULT-II Reference Value in Data Monitor Mode

UBS00H57

Specification data are reference values.

MONITOR ITEM	CONDITION	SPECIFICATION
EVAP SYS PRES	● Ignition switch: ON	Approx. 1.8 - 4.8V

On Board Diagnosis Logic

UBS00H58

NOTE:
If DTC P0451 is displayed with DTC P0643, first perform the trouble diagnosis for DTC P0643. Refer to **EC-460, "DTC P0643 SENSOR POWER SUPPLY"** **.**

DTC No.	Trouble diagnosis name	DTC detecting condition	Possible cause
P0451 0451	EVAP control system pressure sensor performance	ECM detects a sloshing signal from the EVAP control system pressure sensor	● Harness or connectors ● EVAP control system pressure sensor

DTC Confirmation Procedure

UBS00H59

NOTE:
If DTC Confirmation Procedure has been previously conducted, always turn ignition switch OFF and wait at least 10 seconds before conducting the next test.

WITH CONSULT-II

1. Turn ignition switch OFF and wait at least 10 seconds.
2. Turn ignition switch ON and select “DATA MONITOR” mode with CONSULT-II.
3. Start engine and wait at least 40 seconds.

   NOTE:
   Do not depress accelerator pedal even slightly.
   If 1st trip DTC is detected, go to EC-403, "Diagnostic Procedure"
   .

DATA MONITOR	
MONITOR	NO DTC
ENG SPEED	XXX rpm
COOLAN TEMP/S	XXX °C
FUEL T/TMP SE	XXX °C

SEF194Y

WITH GST

Follow the procedure “WITH CONSULT-II” above.

Diagnostic Procedure

UBS00H5A

1. CHECK GROUND CONNECTIONS

1. Turn ignition switch OFF.
2. Loosen and retighten three ground screws on the body.
   Refer to EC-150, "Ground Inspection" .

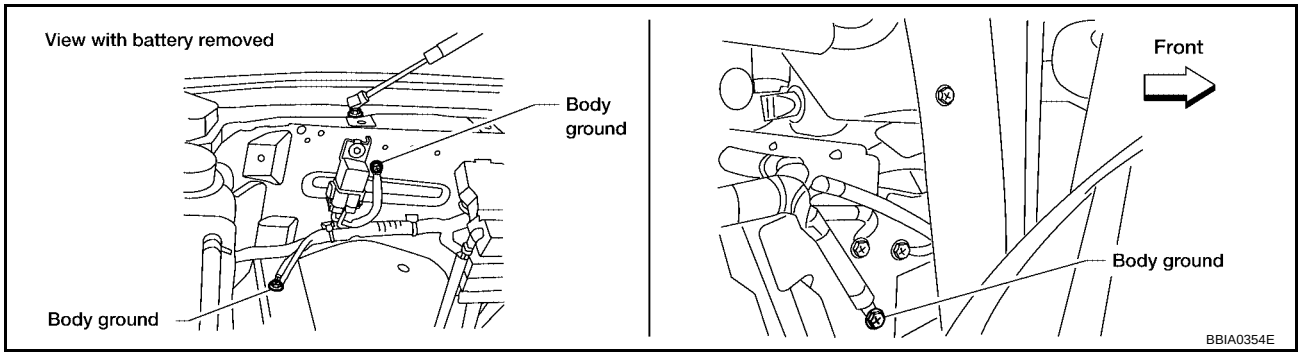

OK or NG

OK >> GO TO 2.
NG >> Repair or replace ground connections.

2. CHECK EVAP CONTROL SYSTEM PRESSURE SENSOR CONNECTOR FOR WATER

1. Disconnect EVAP control system pressure sensor harness connector.

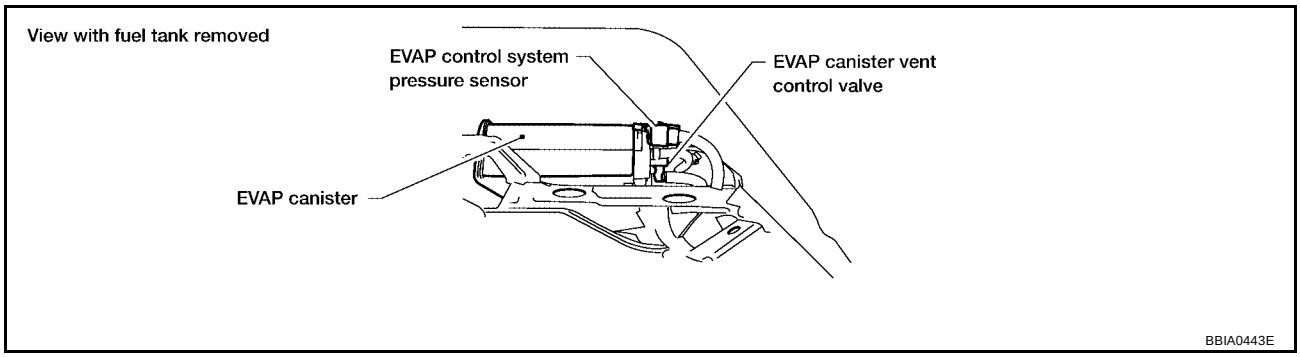

2. Check sensor harness connector for water.

Water should not exist.

OK or NG

OK >> GO TO 3.
NG >> Repair or replace harness connector.

3. CHECK EVAP CONTROL SYSTEM PRESSURE SENSOR

Refer to EC-404, "Component Inspection" .

OK or NG

OK >> GO TO 4.
NG >> Replace EVAP control system pressure sensor.

4. CHECK INTERMITTENT INCIDENT

Refer to EC-144, "TROUBLE DIAGNOSIS FOR INTERMITTENT INCIDENT" .
For wiring diagram, refer to EC-407, "Wiring Diagram" .

>> **INSPECTION END**

Component Inspection

UBS00H5B

EVAP CONTROL SYSTEM PRESSURE SENSOR

1. Remove EVAP control system pressure sensor with its harness connector connected from EVAP canister. **Always replace O-ring with a new one.**
2. Install a vacuum pump to EVAP control system pressure sensor.
3. Turn ignition switch ON and check output voltage between ECM terminal 32 and ground under the following conditions.

Applied vacuum kPa (mmHg, inHg)	Voltage V
Not applied	1.8 - 4.8
-26.7 (-200, -7.87)	2.1 to 2.5V lower than above value

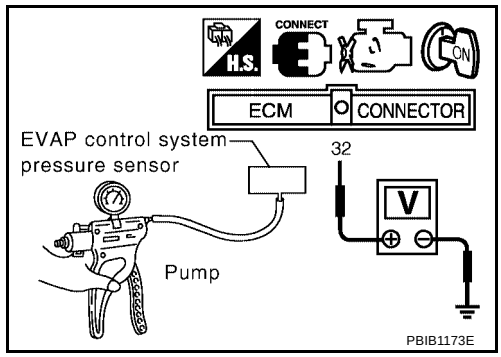

CAUTION:

- **Always calibrate the vacuum pump gauge when using it.**
- **Do not apply below -93.3 kPa (-700 mmHg, -27.56 inHg) or pressure over 101.3 kPa (760 mmHg, 29.92 inHg).**

4. If NG, replace EVAP control system pressure sensor.

DTC P0452 EVAP CONTROL SYSTEM PRESSURE SENSOR

PFP:25085

Component Description

UBS00H5C

The EVAP control system pressure sensor detects pressure in the purge line. The sensor output voltage to the ECM increases as pressure increases.

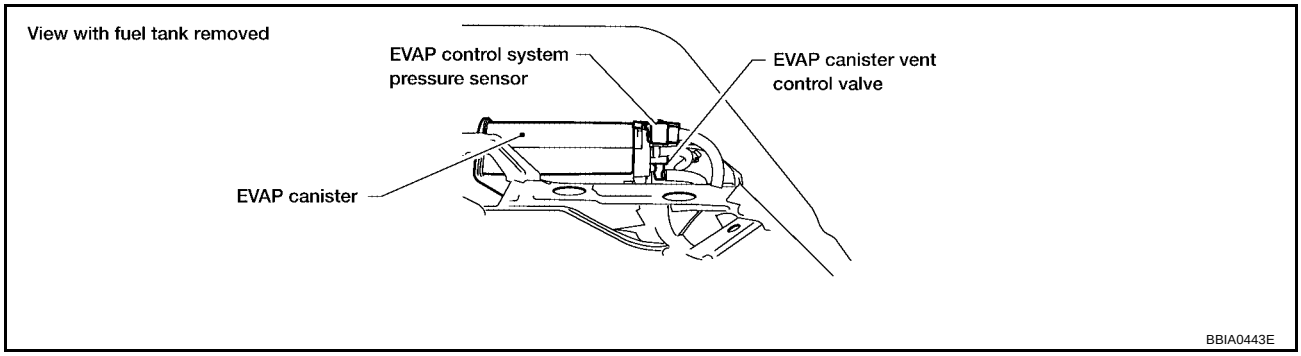

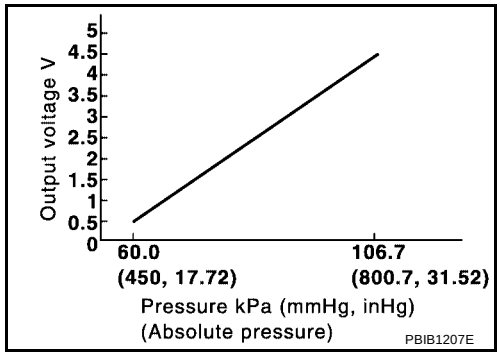

CONSULT-II Reference Value in Data Monitor Mode

UBS00H5D

Specification data are reference values.

MONITOR ITEM	CONDITION	SPECIFICATION
EVAP SYS PRES	● Ignition switch: ON	Approx. 1.8 - 4.8V

On Board Diagnosis Logic

UBS00H5E

NOTE:
If DTC P0452 is displayed with DTC P0643, first perform the trouble diagnosis for DTC P0643. Refer to **EC-460, "DTC P0643 SENSOR POWER SUPPLY"** **.**

DTC No.	Trouble diagnosis name	DTC detecting condition	Possible cause
P0452 0452	EVAP control system pressure sensor low input	An excessively low voltage from the sensor is sent to ECM.	● Harness or connectors (The sensor circuit is open or shorted.) ● EVAP control system pressure sensor

DTC Confirmation Procedure

UBS00H5F

NOTE:
If DTC Confirmation Procedure has been previously conducted, always turn ignition switch OFF and wait at least 10 seconds before conducting the next test.
TESTING CONDITION:
Always perform test at a temperature of 5°C (41°F) or more.

WITH CONSULT-II

1. Start engine and warm it up to normal operating temperature.
2. Turn ignition switch OFF and wait at least 10 seconds.
3. Turn ignition switch ON.
4. Select “DATA MONITOR” mode with CONSULT-II.
5. Make sure that “FUEL T/TMP SE” is more than 0°C (32°F).
6. Start engine and wait at least 20 seconds.
   If 1st trip DTC is detected, go to EC-408, "Diagnostic Procedure"
   .

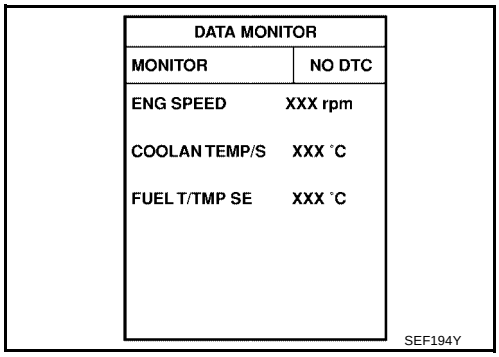

WITH GST

1. Start engine and warm it up to normal operating temperature.
2. Check that voltage between ECM terminal 107 (Fuel tank temperature sensor signal) and ground is less than 4.2V.
3. Turn ignition switch OFF and wait at least 10 seconds.
4. Start engine and wait at least 20 seconds.
5. Select Service $07 with GST.
   If 1st trip DTC is detected, go to EC-408, "Diagnostic Procedure"
   .

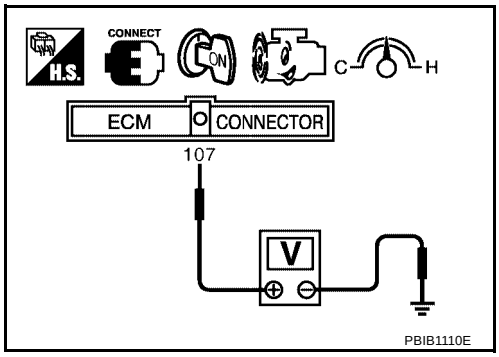

Wiring Diagram

UBS00H5G

EC-PRE/SE-01

: DETECTABLE LINE FOR DTC
: NON-DETECTABLE LINE FOR DTC

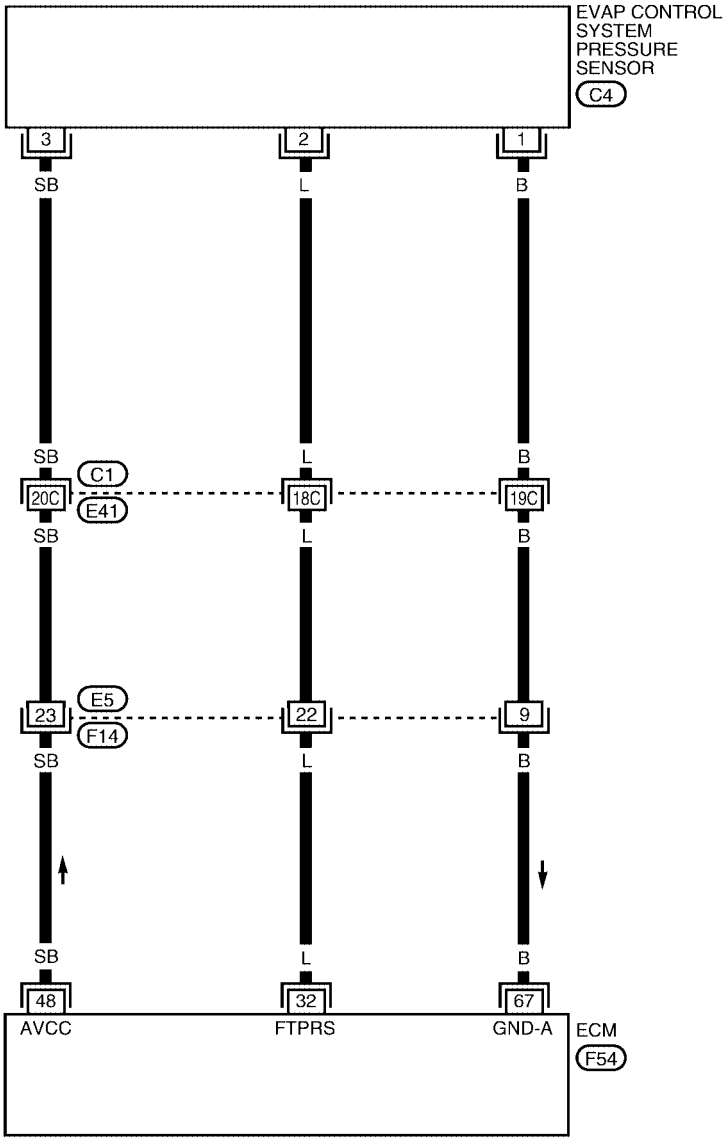

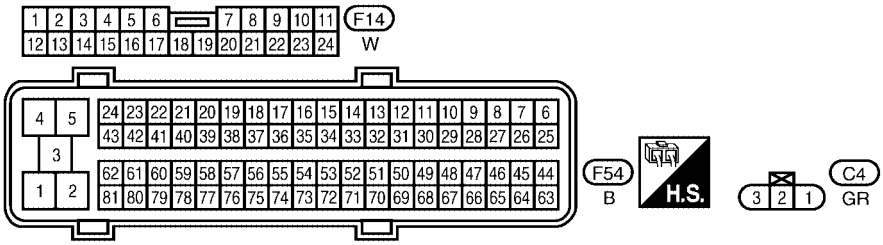

REFER TO THE FOLLOWING.
C1 - SUPER MULTIPLE JUNCTION (SMJ)

BBWA2096E

Specification data are reference values and are measured between each terminal and ground.

CAUTION:

Do not use ECM ground terminals when measuring input/output voltage. Doing so may result in damage to the ECM's transistor. Use a ground other than ECM terminals, such as the ground.

TERMINAL NO.	WIRE COLOR	ITEM	CONDITION	DATA (DC Voltage)
32	L	EVAP control system pressure sensor	**[Ignition switch: ON]**	Approximately 1.8 - 4.8V
48	SB	Sensor power supply (EVAP control system pressure sensor)	**[Ignition switch: ON]**	Approximately 5V
67	B	Sensor ground	**[Engine is running]** ● **Warm-up condition** ● Idle speed	Approximately 0V

Diagnostic Procedure

UBS00H5H

1. CHECK GROUND CONNECTIONS

1. Turn ignition switch OFF.
2. Loosen and retighten three ground screws on the body.
   Refer to EC-150, "Ground Inspection" .

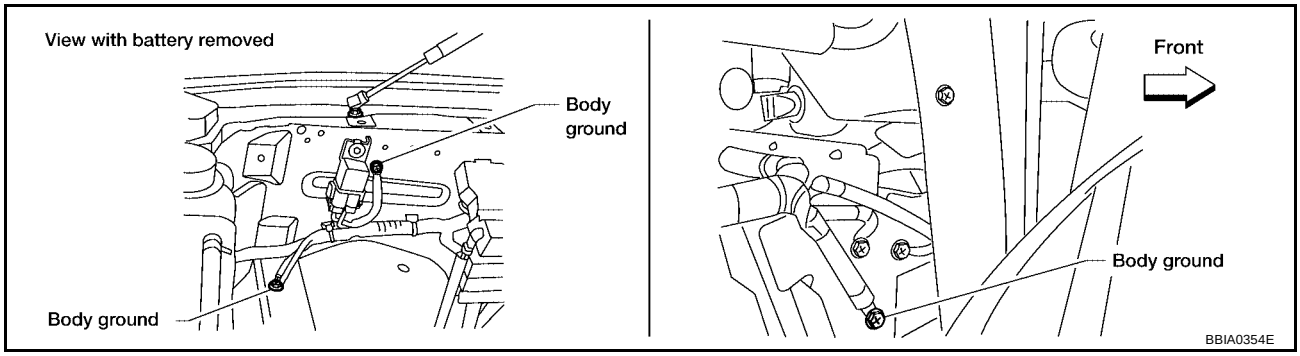

OK or NG

OK >> GO TO 2.
NG >> Repair or replace ground connections.

2. CHECK CONNECTOR

1. Disconnect EVAP control system pressure sensor harness connector.

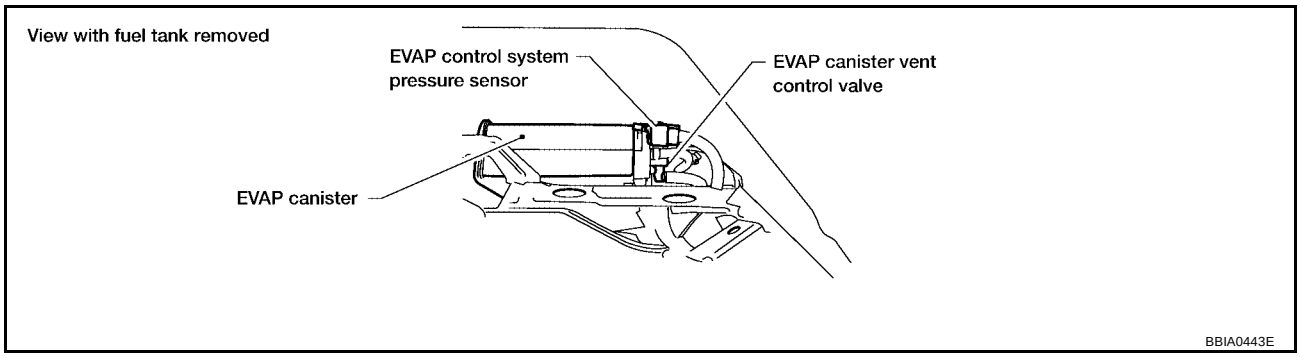

2. Check sensor harness connector for water.

Water should not exist.

OK or NG

OK >> GO TO 3.
NG >> Repair or replace harness connector.

3. CHECK EVAP CONTROL SYSTEM PRESSURE SENSOR POWER SUPPLY CIRCUIT

1. Turn ignition switch ON.
2. Check voltage between EVAP control system pressure sensor terminal 3 and ground with CONSULT-II or tester.

   Voltage: Approximately 5V

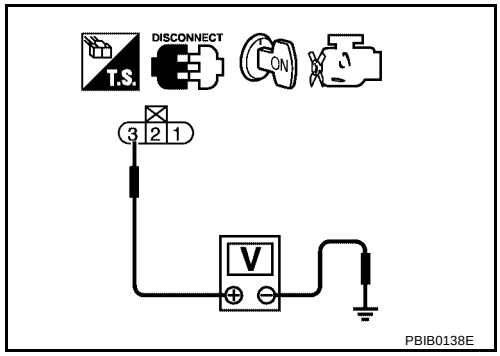

OK or NG

OK >> GO TO 5.
NG >> GO TO 4.

4. DETECT MALFUNCTIONING PART

Check the following.

- Harness connectors C1, E41
- Harness connectors E5, F14
- Harness for open or short between EVAP control system pressure sensor and ECM

>> Repair open circuit or short to ground or short to power in harness or connectors.

5. CHECK EVAP CONTROL SYSTEM PRESSURE SENSOR GROUND CIRCUIT FOR OPEN AND SHORT

1. Turn ignition switch OFF.
2. Disconnect ECM harness connector.
3. Check harness continuity between EVAP control system pressure sensor terminal 1 and ECM terminal 67.
   Refer to Wiring Diagram.

   Continuity should exist.

4. Also check harness for short to ground and short to power.

OK or NG

OK >> GO TO 7.
NG >> GO TO 6.

6. DETECT MALFUNCTIONING PART

Check the following.

- Harness connectors C1, E41
- Harness connectors E5, F14
- Harness for open or short between EVAP control system pressure sensor and ECM

>> Repair open circuit or short to ground or short to power in harness or connectors.

7. CHECK EVAP CONTROL SYSTEM PRESSURE SENSOR INPUT SIGNAL CIRCUIT FOR OPEN AND SHORT

1. Check harness continuity between ECM terminal 32 and EVAP control system pressure sensor terminal 2.
   Refer to Wiring Diagram.

   Continuity should exist.

2. Also check harness for short to ground and short to power.

OK or NG

OK >> GO TO 9.
NG >> GO TO 8.

8. DETECT MALFUNCTIONING PART

Check the following.

- Harness connectors C1, E41
- Harness connectors E5, F14
- Harness for open or short between EVAP control system pressure sensor and ECM

>> Repair open circuit or short to ground or short to power in harness or connectors.

9. CHECK EVAP CONTROL SYSTEM PRESSURE SENSOR

Refer to EC-410, "Component Inspection" .

OK or NG

OK >> GO TO 10.
NG >> Replace EVAP control system pressure sensor.

10. CHECK INTERMITTENT INCIDENT

Refer to EC-144, "TROUBLE DIAGNOSIS FOR INTERMITTENT INCIDENT" .

>> **INSPECTION END**

Component Inspection

UBS00H5I

EVAP CONTROL SYSTEM PRESSURE SENSOR

1. Remove EVAP control system pressure sensor with its harness connector connected from EVAP canister.
   Always replace O-ring with a new one.
2. Install a vacuum pump to EVAP control system pressure sensor.
3. Turn ignition switch ON and check output voltage between ECM terminal 32 and ground under the following conditions.

Applied vacuum kPa (mmHg, inHg)	Voltage V
Not applied	1.8 - 4.8
-26.7 (-200, -7.87)	2.1 to 2.5V lower than above value

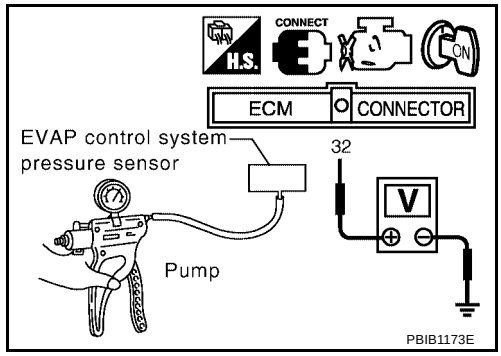

CAUTION:

- **Always calibrate the vacuum pump gauge when using it.**
- **Do not apply below -93.3 kPa (-700 mmHg, -27.56 inHg) or pressure over 101.3 kPa (760 mmHg, 29.92 inHg).**

4. If NG, replace EVAP control system pressure sensor.

DTC P0453 EVAP CONTROL SYSTEM PRESSURE SENSOR

PFP:25085

Component Description

UBS00H5J

The EVAP control system pressure sensor detects pressure in the purge line. The sensor output voltage to the ECM increases as pressure increases.

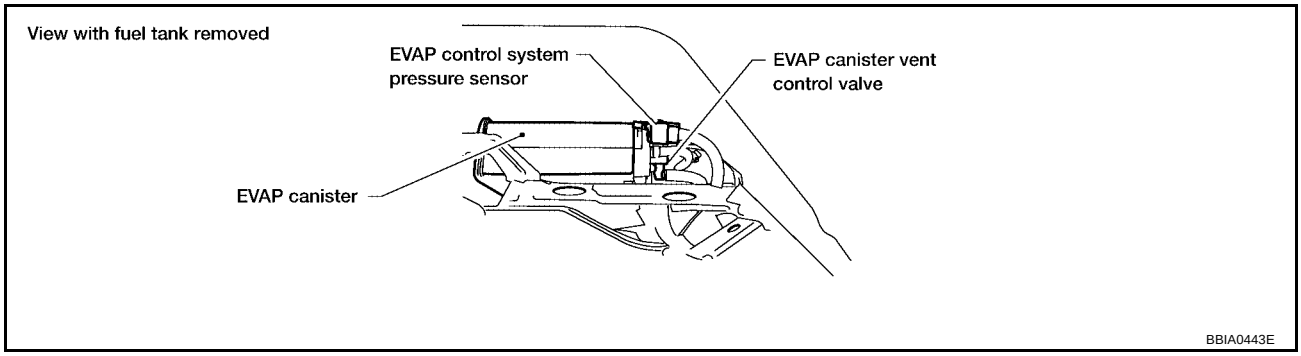

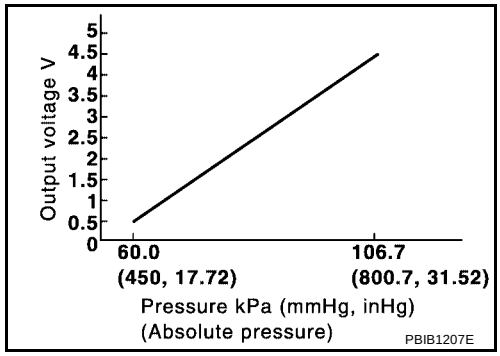

CONSULT-II Reference Value in Data Monitor Mode

UBS00H5K

Specification data are reference values.

MONITOR ITEM	CONDITION	SPECIFICATION
EVAP SYS PRES	● Ignition switch: ON	Approx. 1.8 - 4.8V

On Board Diagnosis Logic

UBS00H5L

NOTE:
If DTC P0453 is displayed with DTC P0643, first perform the trouble diagnosis for DTC P0643. Refer to **EC-460, "DTC P0643 SENSOR POWER SUPPLY"** **.**

DTC No.	Trouble diagnosis name	DTC detecting condition	Possible cause
P0453 0453	EVAP control system pressure sensor high input	An excessively high voltage from the sensor is sent to ECM.	● Harness or connectors (The sensor circuit is open or shorted.) ● EVAP control system pressure sensor ● EVAP canister vent control valve ● EVAP canister ● Rubber hose from EVAP canister vent control valve to vehicle frame

DTC Confirmation Procedure

UBS00H5M

NOTE:
If DTC Confirmation Procedure has been previously conducted, always turn ignition switch OFF and wait at least 10 seconds before conducting the next test.
TESTING CONDITION:
Always perform test at a temperature of 5°C (41°F) or more.

WITH CONSULT-II

1. Start engine and warm it up to normal operating temperature.
2. Turn ignition switch OFF and wait at least 10 seconds.
3. Turn ignition switch ON.
4. Select “DATA MONITOR” mode with CONSULT-II.
5. Make sure that “FUEL T/TMP SE” is more than 0°C (32°F).
6. Start engine and wait at least 20 seconds.
7. If 1st trip DTC is detected, go to EC-414, "Diagnostic Procedure"
.

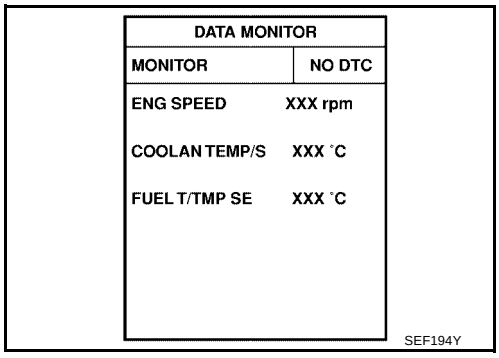

WITH GST

1. Start engine and warm it up to normal operating temperature.
2. Check that voltage between ECM terminal 107 (Fuel tank temperature sensor signal) and ground is less than 4.2V.
3. Turn ignition switch OFF and wait at least 10 seconds.
4. Start engine and wait at least 20 seconds.
5. Select Service $07 with GST.
   If 1st trip DTC is detected, go to EC-414, "Diagnostic Procedure"
.

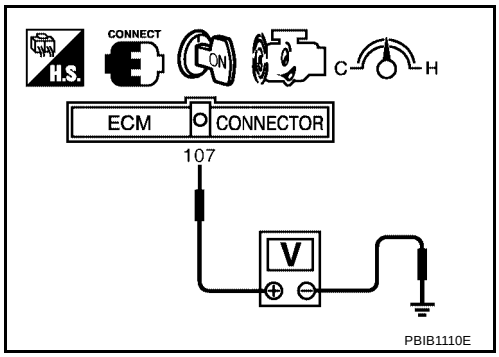

Wiring Diagram

UBS00H5N

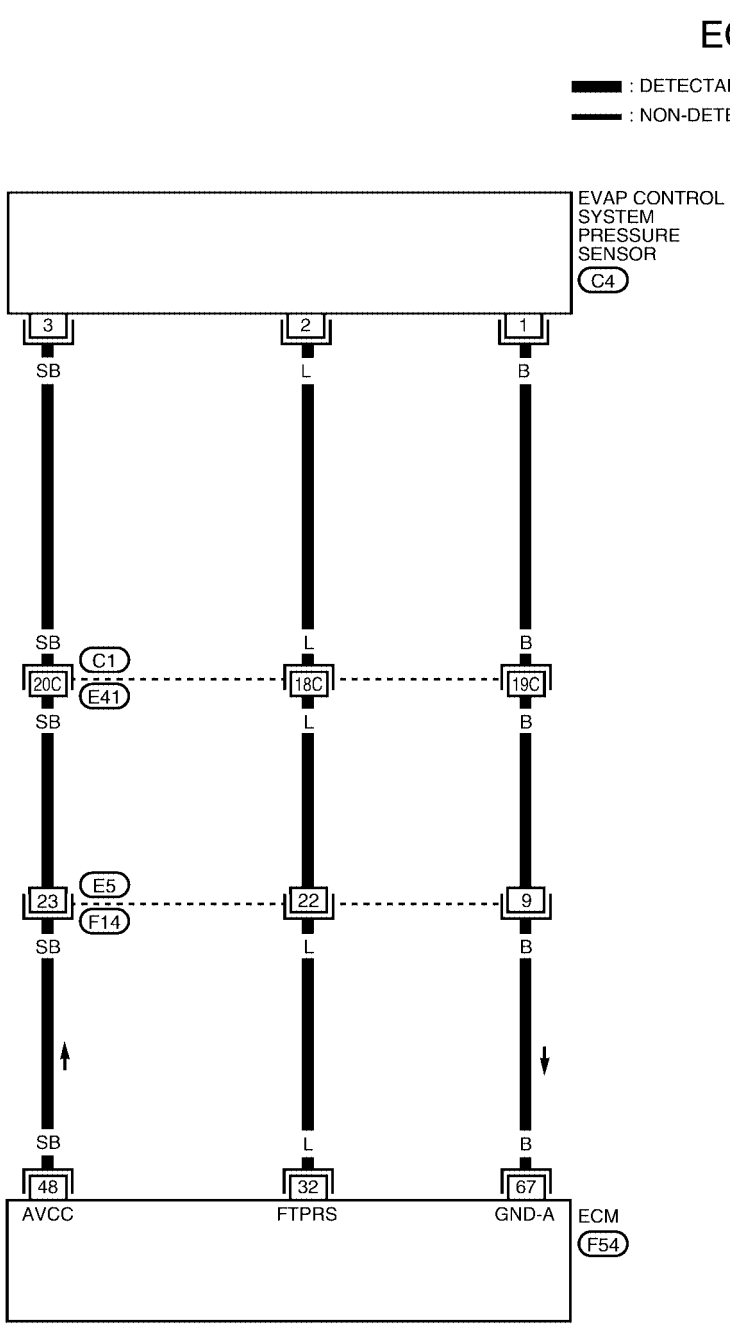

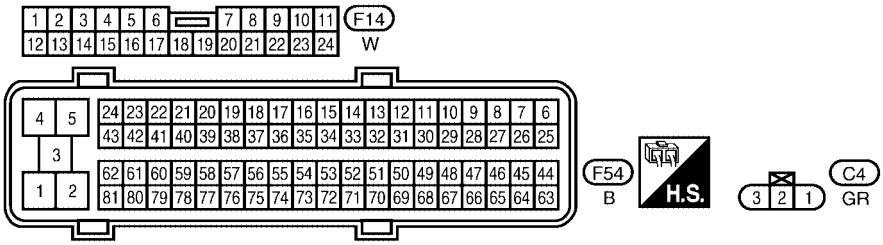

REFER TO THE FOLLOWING.
C1 - SUPER MULTIPLE JUNCTION (SMJ)

BBWA2096E

Specification data are reference values and are measured between each terminal and ground.

CAUTION:

Do not use ECM ground terminals when measuring input/output voltage. Doing so may result in damage to the ECM's transistor. Use a ground other than ECM terminals, such as the ground.

TERMINAL NO.	WIRE COLOR	ITEM	CONDITION	DATA (DC Voltage)
32	L	EVAP control system pressure sensor	**[Ignition switch: ON]**	Approximately 1.8 - 4.8V
48	SB	Sensor power supply (EVAP control system pressure sensor)	**[Ignition switch: ON]**	Approximately 5V
67	B	Sensor ground	**[Engine is running]** ● **Warm-up condition** ● Idle speed	Approximately 0V

Diagnostic Procedure

UBS00H5O

1. CHECK GROUND CONNECTIONS

1. Turn ignition switch OFF.
2. Loosen and retighten three ground screws on the body.
   Refer to EC-150, "Ground Inspection" .

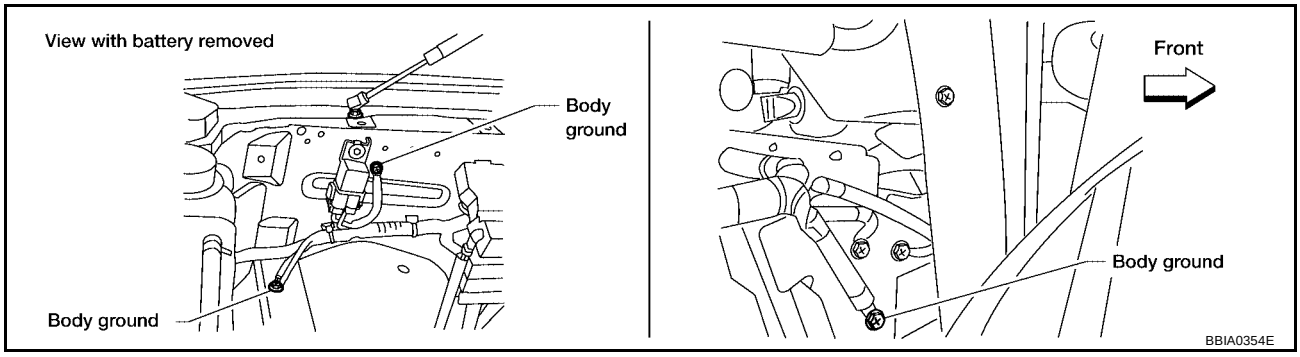

OK or NG

OK >> GO TO 2.
NG >> Repair or replace ground connections.

2. CHECK CONNECTOR

1. Disconnect EVAP control system pressure sensor harness connector.

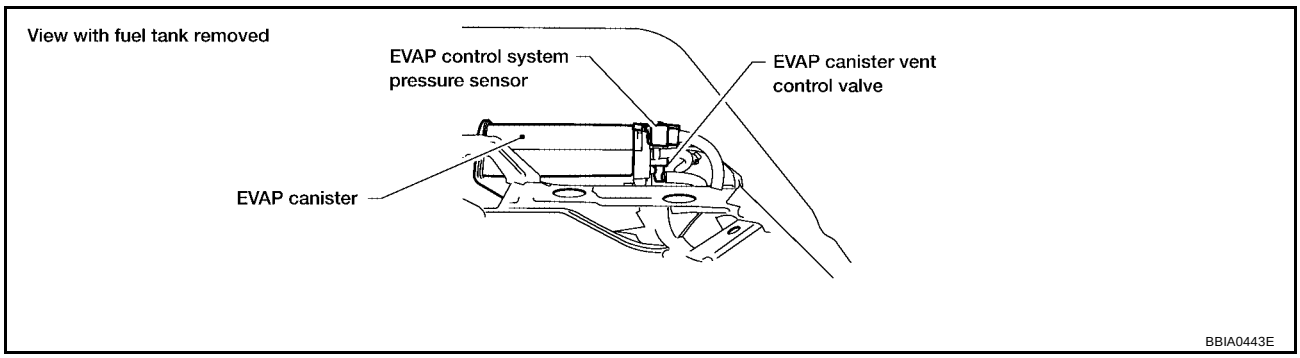

2. Check sensor harness connector for water.

   Water should not exist.

OK or NG

OK >> GO TO 3.
NG >> Repair or replace harness connector.

3. CHECK EVAP CONTROL SYSTEM PRESSURE SENSOR POWER SUPPLY CIRCUIT

1. Turn ignition switch ON.
2. Check voltage between EVAP control system pressure sensor terminal 3 and ground with CONSULT-II or tester.

   Voltage: Approximately 5V

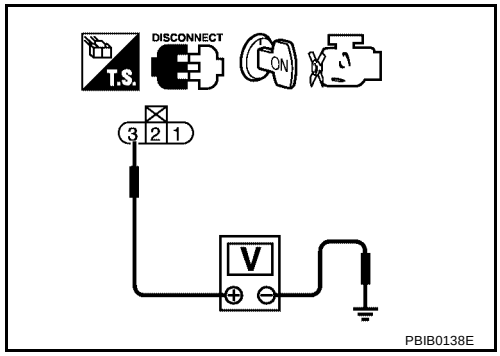

OK or NG

OK >> GO TO 5.
NG >> GO TO 4.

4. DETECT MALFUNCTIONING PART

Check the following.

- Harness connectors C1, E41
- Harness connectors E5, F14
- Harness for open or short between EVAP control system pressure sensor and ECM

>> Repair open circuit or short to ground or short to power in harness or connectors.

5. CHECK EVAP CONTROL SYSTEM PRESSURE SENSOR GROUND CIRCUIT FOR OPEN AND SHORT

1. Turn ignition switch OFF.
2. Disconnect ECM harness connector.
3. Check harness continuity between EVAP control system pressure sensor terminal 1 and ECM terminal 67.
   Refer to Wiring Diagram.

   Continuity should exist.

4. Also check harness for short to ground and short to power.

OK or NG

OK >> GO TO 7.
NG >> GO TO 6.

6. DETECT MALFUNCTIONING PART

Check the following.

- Harness connectors C1, E41
- Harness connectors E5, F14
- Harness for open or short between EVAP control system pressure sensor and ECM

>> Repair open circuit or short to ground or short to power in harness or connectors.

7. CHECK EVAP CONTROL SYSTEM PRESSURE SENSOR INPUT SIGNAL CIRCUIT FOR OPEN AND SHORT

1. Check harness continuity between ECM terminal 32 and EVAP control system pressure sensor terminal 2.
   Refer to Wiring Diagram.

   Continuity should exist.

2. Also check harness for short to ground and short to power.

OK or NG

OK >> GO TO 9.
NG >> GO TO 8.

8. DETECT MALFUNCTIONING PART

Check the following.

- Harness connectors C1, E41
- Harness connectors E5, F14
- Harness for open or short between EVAP control system pressure sensor and ECM

>> Repair open circuit or short to ground or short to power in harness or connectors.

9. CHECK RUBBER TUBE

1. Disconnect rubber tube connected to EVAP canister vent control valve.
2. Check the rubber tube for clogging, vent or kinked.

OK or NG

OK >> GO TO 10.
NG >> Clean the rubber tube using an air blower, repair or replace rubber tube.

10. CHECK EVAP CANISTER VENT CONTROL VALVE

Refer to EC-393, "Component Inspection" .

OK or NG

OK >> GO TO 11.
NG >> Replace EVAP canister vent control valve.

11. CHECK EVAP CONTROL SYSTEM PRESSURE SENSOR

Refer to EC-418, "Component Inspection" .

OK or NG

OK >> GO TO 12.
NG >> Replace EVAP control system pressure sensor.

12. CHECK IF EVAP CANISTER SATURATED WITH WATER

1. Remove EVAP canister with EVAP canister vent control valve and EVAP control system pressure sensor attached.
2. Check if water will drain from the EVAP canister.

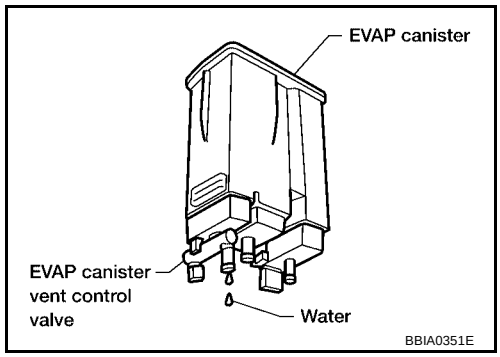

Yes or No

Yes >> GO TO 13.
No >> GO TO 15.

13. CHECK EVAP CANISTER

Weigh the EVAP canister with the EVAP canister vent control valve and EVAP control system pressure sensor attached.
The weight should be less than 2.5 kg (5.5 lb).

OK or NG

OK >> GO TO 15.
NG >> GO TO 14.

14. DETECT MALFUNCTIONING PART

Check the following.

- EVAP canister for damage
- EVAP hose between EVAP canister and vehicle frame for clogging or poor connection

>> Repair hose or replace EVAP canister.

15. CHECK INTERMITTENT INCIDENT

Refer to EC-144, "TROUBLE DIAGNOSIS FOR INTERMITTENT INCIDENT" .

>> **INSPECTION END**

Component Inspection

UBS00H5P

EVAP CONTROL SYSTEM PRESSURE SENSOR

1. Remove EVAP control system pressure sensor with its harness connector connected from EVAP canister. **Always replace O-ring with a new one.**
2. Install a vacuum pump to EVAP control system pressure sensor.
3. Turn ignition switch ON and check output voltage between ECM terminal 32 and ground under the following conditions.

Applied vacuum kPa (mmHg, inHg)	Voltage V
Not applied	1.8 - 4.8
-26.7 (-200, -7.87)	2.1 to 2.5V lower than above value

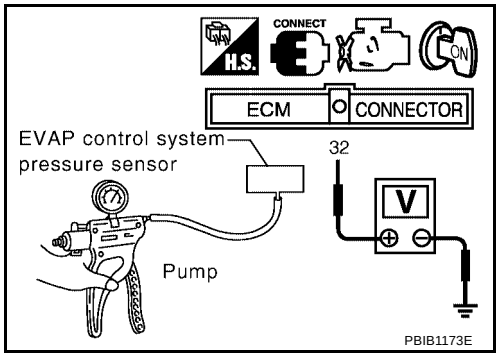

CAUTION:

- **Always calibrate the vacuum pump gauge when using it.**
- **Do not apply below -93.3 kPa (-700 mmHg, -27.56 inHg) or pressure over 101.3 kPa (760 mmHg, 29.92 inHg).**

4. If NG, replace EVAP control system pressure sensor.

DTC P0455 EVAP CONTROL SYSTEM

PFP:14950

On Board Diagnosis Logic

UBS00H5Q

This diagnosis detects a very large leak (fuel filler cap fell off etc.) in EVAP system between the fuel tank and EVAP canister purge volume control solenoid valve.

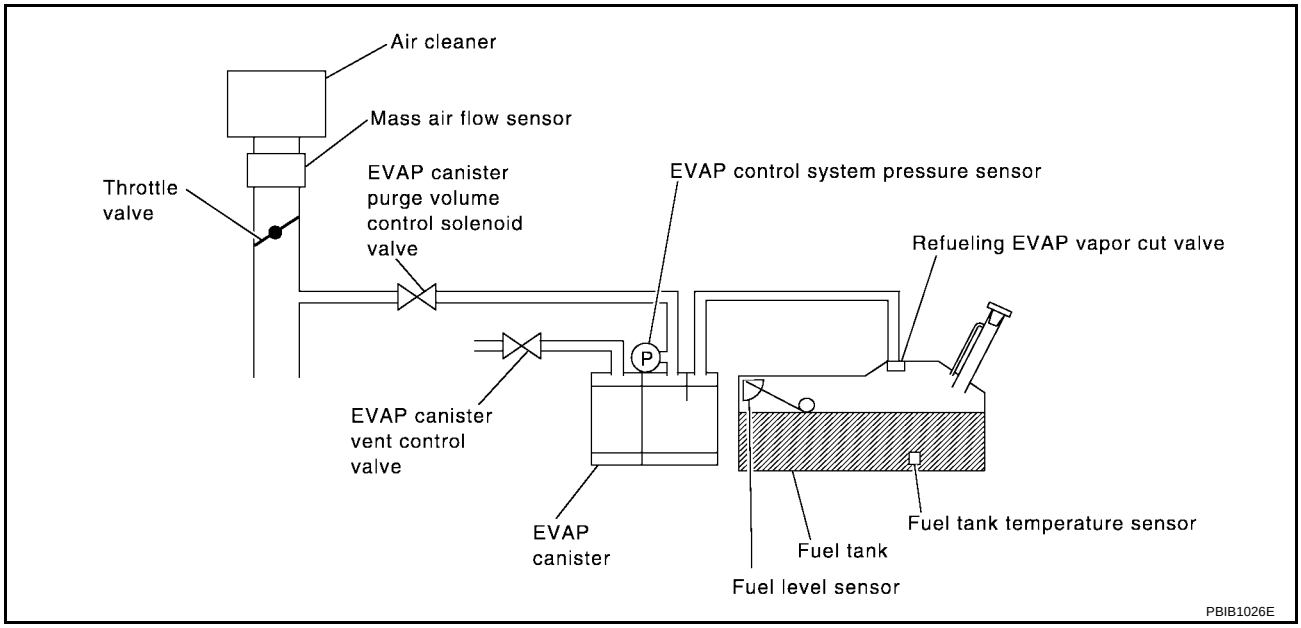

DTC No.	Trouble diagnosis name	DTC detecting condition	Possible cause
P0455 0455	EVAP control system gross leak detected	EVAP control system has a very large leak such as fuel filler cap fell off, EVAP control system does not operate properly.	● Fuel filler cap remains open or fails to close. ● Incorrect fuel tank vacuum relief valve ● Incorrect fuel filler cap used ● Foreign matter caught in fuel filler cap. ● Leak is in line between intake manifold and EVAP canister purge volume control solenoid valve. ● Foreign matter caught in EVAP canister vent control valve. ● EVAP canister or fuel tank leaks ● EVAP purge line (pipe and rubber tube) leaks ● EVAP purge line rubber tube bent. ● Loose or disconnected rubber tube ● EVAP canister vent control valve and the circuit ● EVAP canister purge volume control solenoid valve and the circuit ● Fuel tank temperature sensor ● O-ring of EVAP canister vent control valve is missing or damaged. ● EVAP control system pressure sensor ● Refueling EVAP vapor cut valve ● ORVR system leaks

CAUTION:

- **Use only a genuine NISSAN fuel filler cap as a replacement. If an incorrect fuel filler cap is used, the MIL may come on.**
- **If the fuel filler cap is not tightened properly, the MIL may come on.**
- **Use only a genuine NISSAN rubber tube as a replacement.**

DTC Confirmation Procedure

UBS00H5R

CAUTION:

Never remove fuel filler cap during the DTC Confirmation Procedure.

NOTE:

- **Make sure that EVAP hoses are connected to EVAP canister purge volume control solenoid valve properly.**
- If DTC Confirmation Procedure has been previously conducted, always turn ignition switch OFF and wait at least 10 seconds before conducting the next test.

TESTING CONDITION:

- **Perform "DTC WORK SUPPORT" when the fuel level is between 1/4 and 3/4 full, and vehicle is placed on flat level surface.**
- **Open engine hood before conducting the following procedures.**

WITH CONSULT-II

1. Tighten fuel filler cap securely until ratcheting sound is heard.
2. Turn ignition switch ON.
3. Turn ignition switch OFF and wait at least 10 seconds.
4. Turn ignition switch ON and select "DATA MONITOR" mode with CONSULT-II.
5. Make sure that the following conditions are met.
   COOLAN TEMP/S: 0 - 70°C (32 - 158°F)
   INT/A TEMP SE: 0 - 60°C (32 - 140°F)
6. Select "EVP SML LEAK P0442/P1442" of "EVAPORATIVE SYSTEM" in "DTC WORK SUPPORT" mode with CONSULT-II.
   Follow the instruction displayed.

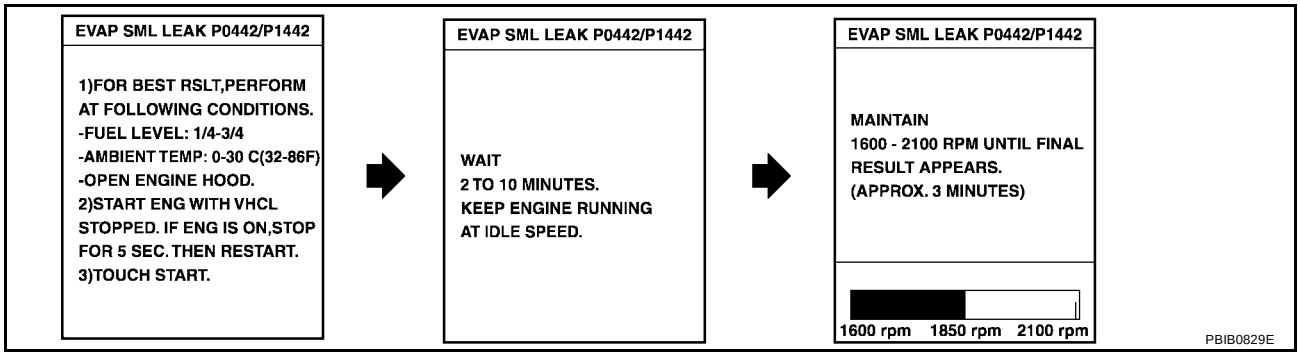

NOTE:

If the engine speed cannot be maintained within the range displayed on the CONSULT-II screen, go to EC-71, "Basic Inspection" .

7. Make sure that "OK" is displayed.
   If "NG" is displayed, select "SELF-DIAG RESULTS" mode and make sure that "EVAP GROSS LEAK [P0455]" is displayed. If it is displayed, refer to EC-421, "Diagnostic Procedure" .
   If P0442 is displayed, perform Diagnostic Procedure for DTC P0442, EC-367, "Diagnostic Procedure" .

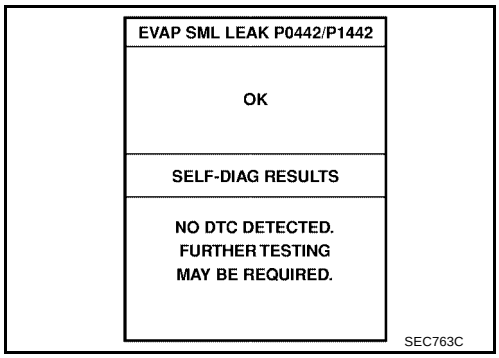

WITH GST

NOTE:
Be sure to read the explanation of EC-58, "Driving Pattern" before driving vehicle.

1. Start engine.
2. Drive vehicle according to EC-58, "Driving Pattern" .
3. Stop vehicle.
4. Turn ignition switch OFF, wait at least 10 seconds and then turn ON.
5. Select Service $07 with GST.
   - If P0455 is displayed on the screen, go to EC-421, "Diagnostic Procedure" .
   - If P0442 is displayed on the screen, go to EC-367, "Diagnostic Procedure" .
   - If P0441 is displayed on the screen, go to EC-362, "Diagnostic Procedure" .

Diagnostic Procedure

UBS00H5S

1. CHECK FUEL FILLER CAP DESIGN

1. Turn ignition switch OFF.
2. Check for genuine NISSAN fuel filler cap design.

OK or NG

OK >> GO TO 2.
NG >> Replace with genuine NISSAN fuel filler cap.

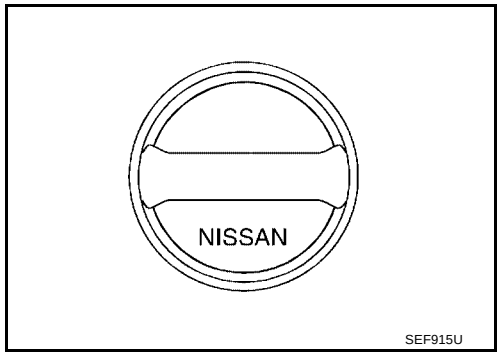

2. CHECK FUEL FILLER CAP INSTALLATION

Check that the cap is tightened properly by rotating the cap clockwise.

OK or NG

OK >> GO TO 3.
NG >> 1. Open fuel filler cap, then clean cap and fuel filler neck threads using air blower.
2. Retighten until ratcheting sound is heard.

3. CHECK FUEL FILLER CAP FUNCTION

Check for air releasing sound while opening the fuel filler cap.

OK or NG

OK >> GO TO 5.
NG >> GO TO 4.

4. CHECK FUEL TANK VACUUM RELIEF VALVE

Refer to EC-35, "FUEL TANK VACUUM RELIEF VALVE (BUILT INTO FUEL FULLER CAP)" .

OK or NG

OK >> GO TO 5.
NG >> Replace fuel filler cap with a genuine one.

5. CHECK EVAP PURGE LINE

Check EVAP purge line (pipe, rubber tube, fuel tank and EVAP canister) for cracks, improper connection or disconnection.
Refer to EC-33, "EVAPORATIVE EMISSION LINE DRAWING" .

OK or NG

OK >> GO TO 6.
NG >> Repair or reconnect the hose.

6. CLEAN EVAP PURGE LINE

Clean EVAP purge line (pipe and rubber tube) using air blower.

>> GO TO 7.

7. CHECK EVAP CANISTER VENT CONTROL VALVE

Check the following.

- EVAP canister vent control valve is installed properly.
  Refer to EC-36, "Removal and Installation" .
- EVAP canister vent control valve.
  Refer to EC-393, "Component Inspection" .

OK or NG

OK >> GO TO 8.
NG >> Repair or replace EVAP canister vent control valve and O-ring.

8. INSTALL THE PRESSURE PUMP

To locate the EVAP leak, install EVAP service port adapter and pressure pump to EVAP service port securely.

NOTE:
Improper installation of the EVAP service port adapter to the EVAP service port may cause leaking.

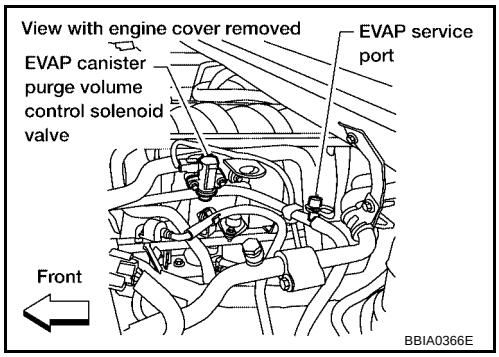

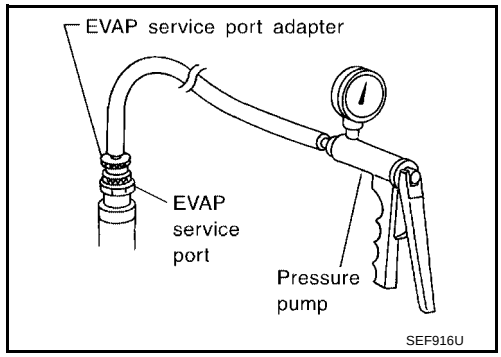

With CONSULT-II>>GO TO 9.
Without CONSULT-II>>GO TO 10.

9. CHECK FOR EVAP LEAK

With CONSULT-II

1. Turn ignition switch ON.
2. Select “EVAP SYSTEM CLOSE” of “WORK SUPPORT” mode with CONSULT-II.
3. Touch “START” and apply pressure into the EVAP line until the pressure indicator reaches the middle of the bar graph.

   CAUTION:
   - **Do not use compressed air or a high pressure pump.**
   - **Do not exceed 4.12 kPa (0.042 kg/cm^2 , 0.6 psi) of pressure in the system.**

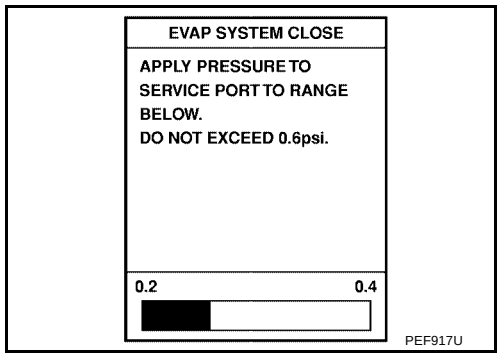

4. Using EVAP leak detector, locate the EVAP leak. For the leak detector, refer to the instruction manual for more details.
   Refer to EC-33, "EVAPORATIVE EMISSION LINE DRAWING" .

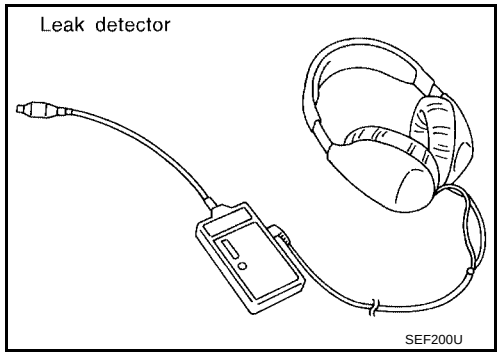

OK or NG

OK >> GO TO 11.
NG >> Repair or replace.

10. CHECK FOR EVAP LEAK

Without CONSULT-II

1. Turn ignition switch OFF.
2. Apply 12 volts DC to EVAP canister vent control valve. The valve will close. (Continue to apply 12 volts until the end of test.)

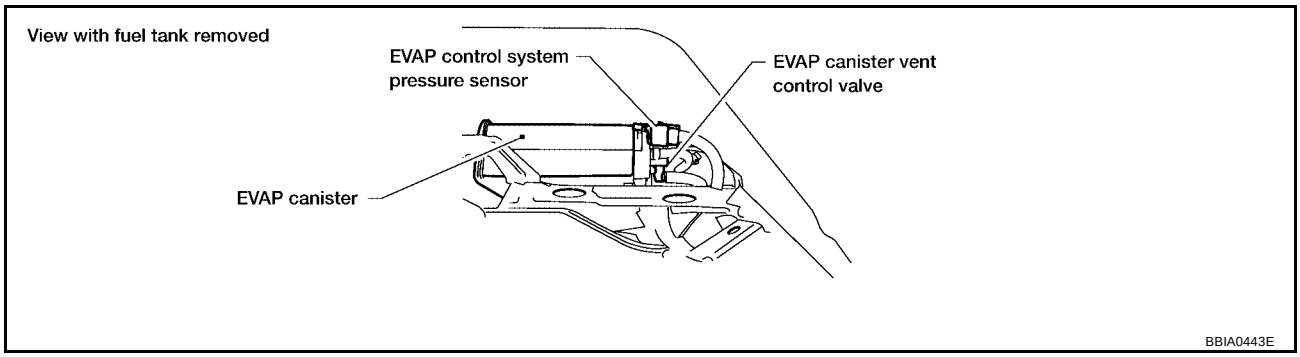

3. Pressurize the EVAP line using pressure pump with 1.3 to 2.7 kPa (10 to 20 mmHg, 0.39 to 0.79 inHg), then remove pump and EVAP service port adapter.

   CAUTION:
   - **Do not use compressed air or a high pressure pump.**
   - **Do not exceed 4.12 kPa (0.042 kg/cm^2 , 0.6 psi) of pressure in the system.**
4. Using EVAP leak detector, locate the EVAP leak. For the leak detector, refer to the instruction manual for more details. Refer to EC-33, "EVAPORATIVE EMISSION LINE DRAWING" .

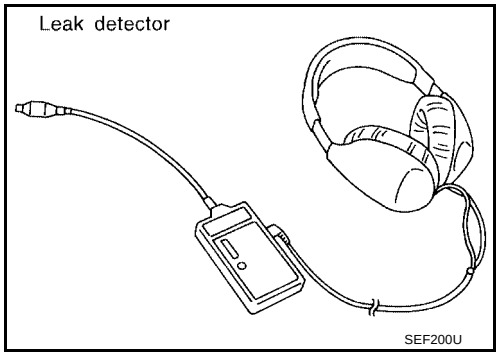

OK or NG

OK >> GO TO 12.
NG >> Repair or replace.

11. CHECK EVAP CANISTER PURGE VOLUME CONTROL SOLENOID VALVE OPERATION

With CONSULT-II

1. Disconnect vacuum hose to EVAP canister purge volume control solenoid valve at EVAP service port.
2. Start engine.
3. Perform “PURG VOL CONT/V” in “ACTIVE TEST” mode.
4. Touch “Qu” on CONSULT-II screen to increase “PURG VOL CONT/V” opening to 100%.
5. Check vacuum hose for vacuum when revving engine up to 2,000 rpm.

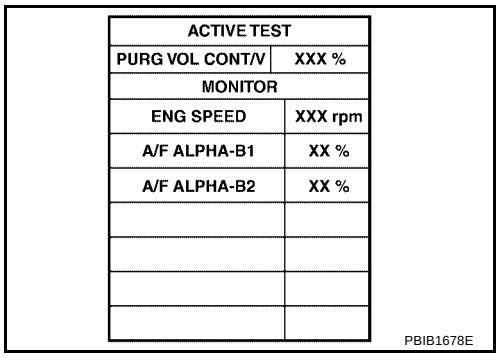

ACTIVE TEST	
PURG VOL CONT/V	XXX %
MONITOR	
ENG SPEED	XXX rpm
A/F ALPHA-B1	XX %
A/F ALPHA-B2	XX %

PBIB1678E

OK or NG

OK >> GO TO 14.
NG >> GO TO 13.

12. CHECK EVAP CANISTER PURGE VOLUME CONTROL SOLENOID VALVE OPERATION

Without CONSULT-II

1. Start engine and warm it up to normal operating temperature.
2. Stop engine.
3. Disconnect vacuum hose to EVAP canister purge volume control solenoid valve at EVAP service port.
4. Start engine and let it idle for at least 80 seconds.
5. Check vacuum hose for vacuum when revving engine up to 2,000 rpm.

Vacuum should exist.

OK or NG

OK >> GO TO 15.
NG >> GO TO 13.

13. CHECK VACUUM HOSE

Check vacuum hoses for clogging or disconnection. Refer to EC-102, "Vacuum Hose Drawing" .

OK or NG

OK (With CONSULT-II)>>GO TO 14.
OK (Without CONSULT-II)>>GO TO 15.
NG >> Repair or reconnect the hose.

14. CHECK EVAP CANISTER PURGE VOLUME CONTROL SOLENOID VALVE

With CONSULT-II

1. Start engine.
2. Perform “PURG VOL CONT/V” in “ACTIVE TEST” mode with CONSULT-II. Check that engine speed varies according to the valve opening.

OK or NG

OK >> GO TO 16.
NG >> GO TO 15.

ACTIVE TEST	
PURG VOL CONT/V	XXX %
MONITOR	
ENG SPEED	XXX rpm
A/F ALPHA-B1	XX %
A/F ALPHA-B2	XX %

PBIB1678E

15. CHECK EVAP CANISTER PURGE VOLUME CONTROL SOLENOID VALVE

Refer to EC-386, "Component Inspection" .

OK or NG

OK >> GO TO 16.
NG >> Replace EVAP canister purge volume control solenoid valve.

16. CHECK FUEL TANK TEMPERATURE SENSOR

Refer to EC-314, "Component Inspection" .

OK or NG

OK >> GO TO 17.
NG >> Replace fuel level sensor unit.

17. CHECK EVAP CONTROL SYSTEM PRESSURE SENSOR

Refer to EC-404, "Component Inspection" .

OK or NG

OK >> GO TO 18.
NG >> Replace EVAP control system pressure sensor.

18. CHECK EVAP/ORVR LINE

Check EVAP/ORVR line between EVAP canister and fuel tank for clogging, kink, looseness and improper connection. For location, refer to EC-39, "ON BOARD REFUELING VAPOR RECOVERY (ORVR)" .

OK or NG

OK >> GO TO 19.
NG >> Repair or replace hoses and tubes.

19. CHECK RECIRCULATION LINE

Check recirculation line between filler neck tube and fuel tank for clogging, kink, cracks, looseness and improper connection.

OK or NG

OK >> GO TO 20.
NG >> Repair or replace hose, tube or filler neck tube.

20. CHECK REFUELING EVAP VAPOR CUT VALVE

Refer to EC-43, "Component Inspection" .

OK or NG

OK >> GO TO 21.
NG >> Replace refueling EVAP vapor cut valve with fuel tank.

21. CHECK INTERMITTENT INCIDENT

Refer to EC-144, "TROUBLE DIAGNOSIS FOR INTERMITTENT INCIDENT" .

>> **INSPECTION END**

DTC P0456 EVAP CONTROL SYSTEM

PFP:14950

On Board Diagnosis Logic

UBS00H5T

This diagnosis detects very small leaks in the EVAP line between fuel tank and EVAP canister purge volume control solenoid valve, using the intake manifold vacuum in the same way as conventional EVAP small leak diagnosis.
If ECM judges a leak which corresponds to a very small leak, the very small leak P0456 will be detected.
If ECM judges a leak equivalent to a small leak, EVAP small leak P0442 will be detected.
If ECM judges there are no leaks, the diagnosis will be OK.

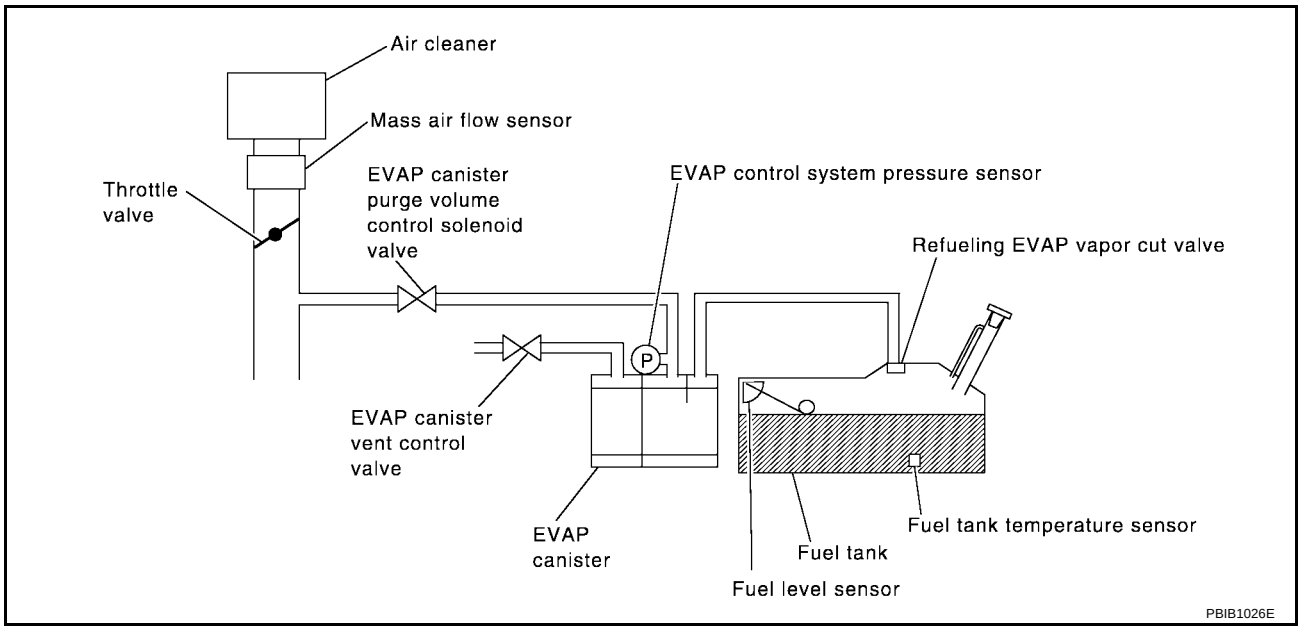

DTC No.	Trouble diagnosis name	DTC detecting condition	Possible cause
P0456 0456	Evaporative emission control system very small leak (negative pressure check)	● EVAP system has a very small leak. ● EVAP system does not operate properly.	● Incorrect fuel tank vacuum relief valve ● Incorrect fuel filler cap used ● Fuel filler cap remains open or fails to close. ● Foreign matter caught in fuel filler cap. ● Leak is in line between intake manifold and EVAP canister purge volume control solenoid valve. ● Foreign matter caught in EVAP canister vent control valve. ● EVAP canister or fuel tank leaks ● EVAP purge line (pipe and rubber tube) leaks ● EVAP purge line rubber tube bent ● Loose or disconnected rubber tube ● EVAP canister vent control valve and the circuit ● EVAP canister purge volume control solenoid valve and the circuit ● Fuel tank temperature sensor ● O-ring of EVAP canister vent control valve is missing or damaged ● EVAP canister is saturated with water ● EVAP control system pressure sensor ● Refueling EVAP vapor cut valve ● ORVR system leaks ● Fuel level sensor and the circuit ● Foreign matter caught in EVAP canister purge volume control solenoid valve

CAUTION:

- **Use only a genuine NISSAN fuel filler cap as a replacement. If an incorrect fuel filler cap is used, the MIL may come on.**
- **If the fuel filler cap is not tightened properly, the MIL may come on.**
- **Use only a genuine NISSAN rubber tube as a replacement.**

DTC Confirmation Procedure

UBS00H5U

NOTE:

- **If DTC P0456 is displayed with P0442, first perform trouble diagnosis for DTC P0456.**
- **After repair, make sure that the hoses and clips are installed properly.**
- If DTC Confirmation Procedure has been previously conducted, always turn ignition switch OFF and wait at least 10 seconds before conducting the next test.

TESTING CONDITION:

- **Open engine hood before conducting following procedure.**
- **If any of following conditions are met just before the DTC confirmation procedure, leave the vehicle for more than 1 hour.**
  - **Fuel filler cap is removed.**
  - **Fuel is refilled or drained.**
  - **EVAP component parts is/are removed.**
- **Before performing the following procedure, confirm that battery voltage is more than 11V at idle.**

WITH CONSULT-II

1. Turn ignition switch ON and select “DATA MONITOR” mode with CONSULT-II.
2. Make sure the following conditions are met.
   FUEL LEVEL SE: 0.25 - 1.4V
   COOLAN TEMP/S: 0 - 32°C (32 - 90°F)
   FUEL T/TMP SE: 0 - 35°C (32 - 95°F)
   INT/A TEMP SE: More than 0°C (32°F)
   If NG, turn ignition switch OFF and leave the vehicle in a cool place (soak the vehicle) or refilling/draining fuel until the output voltage condition of the “FUEL LEVEL SE” meets within the range above and leave the vehicle for more than 1 hour. Then start from step 1).
3. Turn ignition switch OFF, wait at least 10 seconds and then turn ON.
4. Select “EVP V/S LEAK P0456/P1456” of “EVAPORATIVE SYSTEM” in “DTC WORK SUPPORT” mode with CONSULT-II.
   Follow the instruction displayed.

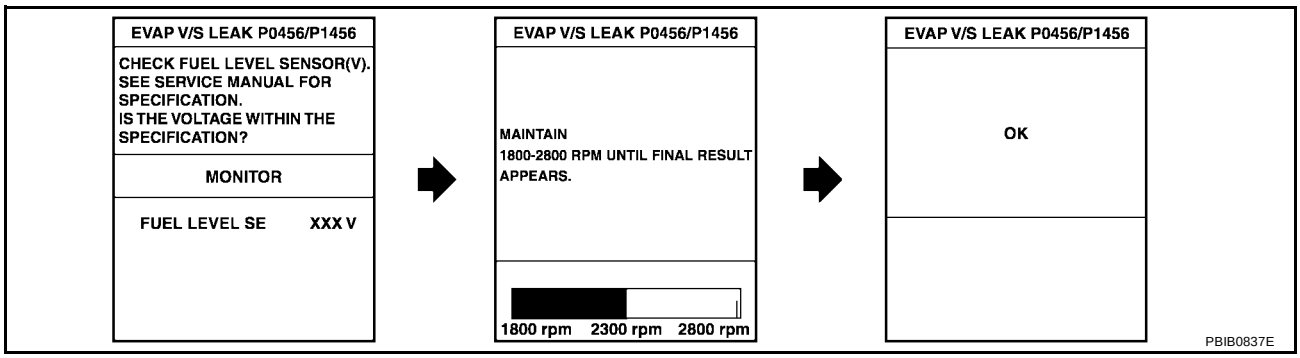

5. Make sure that “OK” is displayed.
   If “NG” is displayed, refer to EC-430, "Diagnostic Procedure" .

   NOTE:
   - **If the engine speed cannot be maintained within the range displayed on CONSULT-II screen, go to EC-71, "Basic Inspection" .**
   - **Make sure that EVAP hoses are connected to EVAP canister purge volume control solenoid valve properly.**

Overall Function Check

UBS00H5V

WITH GST

Use this procedure to check the overall function of the EVAP very small leak function. During this check, a 1st trip DTC might not be confirmed.

CAUTION:

- **Do not use compressed air, doing so may damage the EVAP system.**
- **Do not start engine.**
- **Do not exceeded 4.12 kPa (0.042 kg/cm^2 , 0.6 psi).**

1. Attach the EVAP service port adapter securely to the EVAP service port.

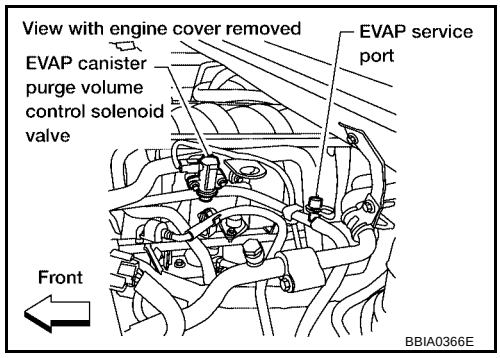

2. Set the pressure pump and a hose.
3. Also set a vacuum gauge via 3-way connector and a hose.
4. Turn ignition switch ON.
5. Connect GST and select Service $08.
6. Using Service $08, control the EVAP canister vent control valve (close).
7. Apply pressure and make sure the following conditions are satisfied.
   Pressure to be applied: 2.7 kPa (20 mmHg, 0.79 inHg)
   Time to be waited after the pressure drawn in to the EVAP system and the pressure to be dropped: 60 seconds and the pressure should not be dropped more than 0.4 kPa (3 mmHg, 0.12 inHg).
   If NG, go to EC-430, "Diagnostic Procedure" .
   If OK, go to next step.

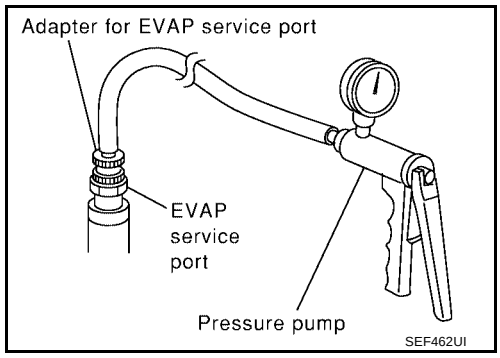

8. Disconnect GST.
9. Start engine and warm it up to normal operating temperature.
10. Turn ignition switch OFF and wait at least 10 seconds.
11. Restart engine and let it idle for 90 seconds.
12. Keep engine speed at 2,000 rpm for 30 seconds.
13. Turn ignition switch OFF.

    NOTE:
    For more information, refer to GST Instruction Manual.

Diagnostic Procedure

UBS00H5W

1. CHECK FUEL FILLER CAP DESIGN

1. Turn ignition switch OFF.
2. Check for genuine NISSAN fuel filler cap design.

OK or NG

OK >> GO TO 2.
NG >> Replace with genuine NISSAN fuel filler cap.

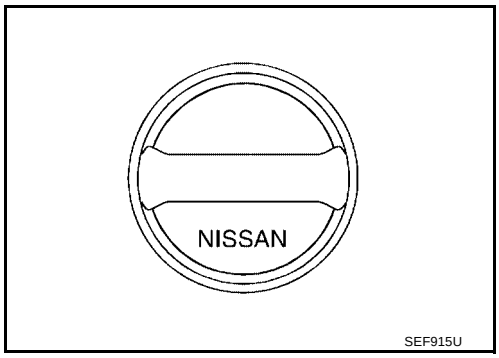

2. CHECK FUEL FILLER CAP INSTALLATION

Check that the cap is tightened properly by rotating the cap clockwise.

OK or NG

OK >> GO TO 3.
NG >> 1. Open fuel filler cap, then clean cap and fuel filler neck threads using air blower.
2. Retighten until ratcheting sound is heard.

3. CHECK FUEL FILLER CAP FUNCTION

Check for air releasing sound while opening the fuel filler cap.

OK or NG

OK >> GO TO 5.
NG >> GO TO 4.

4. CHECK FUEL TANK VACUUM RELIEF VALVE

Refer to EC-35, "FUEL TANK VACUUM RELIEF VALVE (BUILT INTO FUEL FULLER CAP)" .

OK or NG

OK >> GO TO 5.
NG >> Replace fuel filler cap with a genuine one.

5. INSTALL THE PRESSURE PUMP

To locate the EVAP leak, install EVAP service port adapter and pressure pump to EVAP service port securely.

NOTE:
Improper installation of the EVAP service port adapter to the EVAP service port may cause leaking.

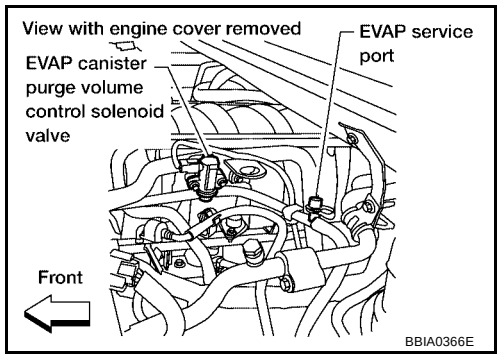

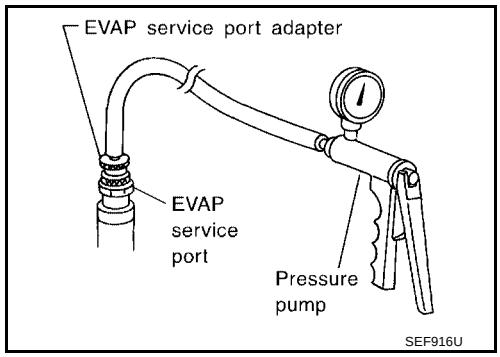

With CONSULT-II>>GO TO 6.
Without CONSULT-II>>GO TO 7.

6. CHECK FOR EVAP LEAK

With CONSULT-II

1. Turn ignition switch ON.
2. Select “EVAP SYSTEM CLOSE” of “WORK SUPPORT” mode with CONSULT-II.
3. Touch “START” and apply pressure into the EVAP line until the pressure indicator reaches the middle of the bar graph.

   CAUTION:
   - **Do not use compressed air or a high pressure pump.**
   - **Do not exceed 4.12 kPa (0.042 kg/cm^2 , 0.6 psi) of pressure in the system.**

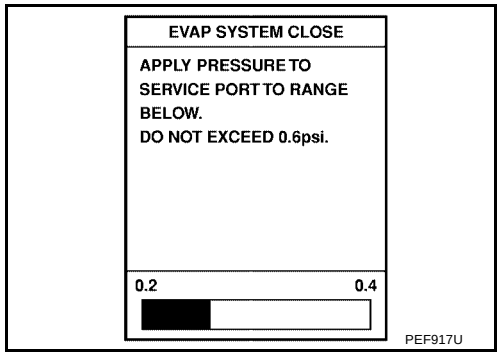

4. Using EVAP leak detector, locate the EVAP leak. For the leak detector, refer to the instruction manual for more details.
   Refer to EC-33, "EVAPORATIVE EMISSION LINE DRAWING" .

OK or NG

OK >> GO TO 8.
NG >> Repair or replace.

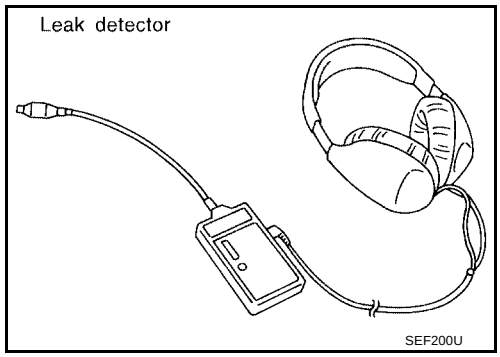

7. CHECK FOR EVAP LEAK

Without CONSULT-II

1. Turn ignition switch OFF.
2. Apply 12 volts DC to EVAP canister vent control valve. The valve will close. (Continue to apply 12 volts until the end of test.)

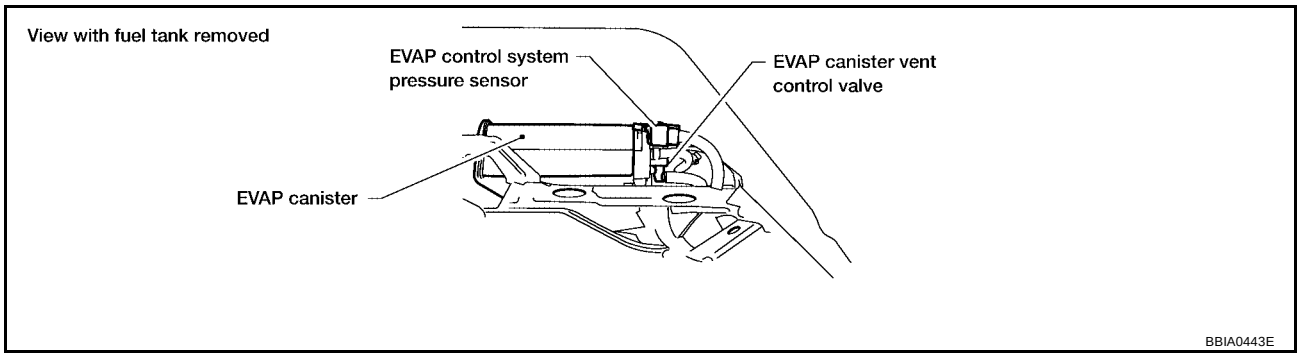

3. Pressurize the EVAP line using pressure pump with 1.3 to 2.7 kPa (10 to 20 mmHg, 0.39 to 0.79 inHg), then remove pump and EVAP service port adapter.

   CAUTION:
   - **Do not use compressed air or a high pressure pump.**
   - **Do not exceed 4.12 kPa (0.042 kg/cm^2 , 0.6 psi) of pressure in the system.**
4. Using EVAP leak detector, locate the EVAP leak. For the leak detector, refer to the instruction manual for more details. Refer to EC-33, "EVAPORATIVE EMISSION LINE DRAWING" .

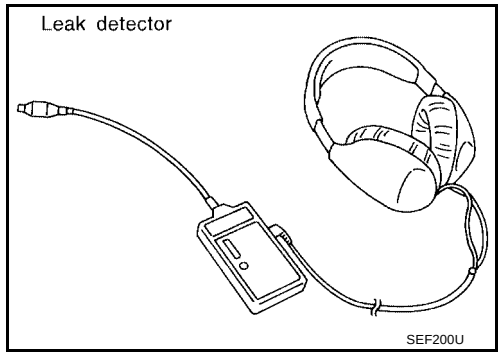

OK or NG

OK >> GO TO 8.
NG >> Repair or replace.

8. CHECK EVAP CANISTER VENT CONTROL VALVE

Check the following.

- EVAP canister vent control valve is installed properly.
  Refer to EC-36, "Removal and Installation" .
- EVAP canister vent control valve.
  Refer to EC-393, "Component Inspection" .

OK or NG

OK >> GO TO 9.
NG >> Repair or replace EVAP canister vent control valve and O-ring.

9. CHECK IF EVAP CANISTER SATURATED WITH WATER

1. Remove EVAP canister with EVAP canister vent control valve and EVAP control system pressure sensor attached.
2. Does water drain from the EVAP canister?

Yes or No

Yes >> GO TO 10.
No (With CONSULT-II)>>GO TO 12.
No (Without CONSULT-II)>>GO TO 13.

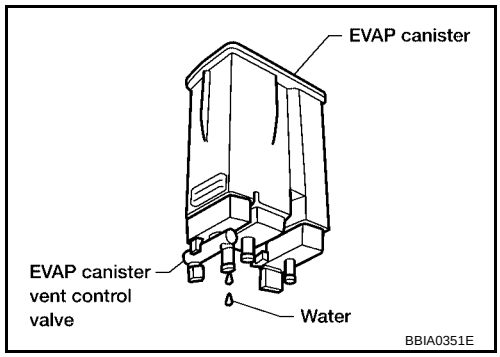

10. CHECK EVAP CANISTER

Weigh the EVAP canister with the EVAP canister vent control valve and EVAP control system pressure sensor attached.

The weight should be less than 2.5 kg (5.5 lb).

OK or NG

OK (With CONSULT-II)>>GO TO 12.
OK (Without CONSULT-II)>>GO TO 13.
NG >> GO TO 11.

11. DETECT MALFUNCTIONING PART

Check the following.

- EVAP canister for damage
- EVAP hose between EVAP canister and vehicle frame for clogging or poor connection

>> Repair hose or replace EVAP canister.

12. CHECK EVAP CANISTER PURGE VOLUME CONTROL SOLENOID VALVE OPERATION

With CONSULT-II

1. Disconnect vacuum hose to EVAP canister purge volume control solenoid valve at EVAP service port.
2. Start engine.
3. Perform “PURG VOL CONT/V” in “ACTIVE TEST” mode.
4. Touch “Qu” on CONSULT-II screen to increase “PURG VOL CONT/V” opening to 100%.
5. Check vacuum hose for vacuum when revving engine up to 2,000 rpm.

OK or NG

OK >> GO TO 15.
NG >> GO TO 14.

ACTIVE TEST	
PURG VOL CONT/V	XXX %
MONITOR	
ENG SPEED	XXX rpm
A/F ALPHA-B1	XX %
A/F ALPHA-B2	XX %

PBIB1678E

13. CHECK EVAP CANISTER PURGE VOLUME CONTROL SOLENOID VALVE OPERATION

Without CONSULT-II

1. Start engine and warm it up to normal operating temperature.
2. Stop engine.
3. Disconnect vacuum hose to EVAP canister purge volume control solenoid valve at EVAP service port.
4. Start engine and let it idle for at least 80 seconds.
5. Check vacuum hose for vacuum when revving engine up to 2,000 rpm.

Vacuum should exist.

OK or NG

OK >> GO TO 16.
NG >> GO TO 14.

14. CHECK VACUUM HOSE

Check vacuum hoses for clogging or disconnection. Refer to EC-102, "Vacuum Hose Drawing" .

OK or NG

OK >> GO TO 15.
NG >> Repair or reconnect the hose.

15. CHECK EVAP CANISTER PURGE VOLUME CONTROL SOLENOID VALVE

Refer to EC-386, "Component Inspection" .

OK or NG

OK >> GO TO 16.
NG >> Replace EVAP canister purge volume control solenoid valve.

16. CHECK FUEL TANK TEMPERATURE SENSOR

Refer to EC-314, "Component Inspection" .

OK or NG

OK >> GO TO 17.
NG >> Replace fuel level sensor unit.

17. CHECK EVAP CONTROL SYSTEM PRESSURE SENSOR

Refer to EC-404, "Component Inspection" .

OK or NG

OK >> GO TO 18.
NG >> Replace EVAP control system pressure sensor.

18. CHECK EVAP PURGE LINE

Check EVAP purge line (pipe, rubber tube, fuel tank and EVAP canister) for cracks or improper connection. Refer to EC-33, "EVAPORATIVE EMISSION LINE DRAWING" .

OK or NG

OK >> GO TO 19.
NG >> Repair or reconnect the hose.

19. CLEAN EVAP PURGE LINE

Clean EVAP purge line (pipe and rubber tube) using air blower.

>> GO TO 20.

20. CHECK EVAP/ORVR LINE

Check EVAP/ORVR line between EVAP canister and fuel tank for clogging, kink, looseness and improper connection. For location, refer to EC-39, "ON BOARD REFUELING VAPOR RECOVERY (ORVR)" .

OK or NG

OK >> GO TO 21.
NG >> Repair or replace hoses and tubes.

21. CHECK RECIRCULATION LINE

Check recirculation line between filler neck tube and fuel tank for clogging, kink, cracks, looseness and improper connection.

OK or NG

OK >> GO TO 22.
NG >> Repair or replace hose, tube or filler neck tube.

22. CHECK REFUELING EVAP VAPOR CUT VALVE

Refer to EC-43, "Component Inspection" .

OK or NG

OK >> GO TO 23.
NG >> Replace refueling EVAP vapor cut valve with fuel tank.

23. CHECK FUEL LEVEL SENSOR

Refer to DI-22, "Fuel Level Sensor Unit Inspection" .

OK or NG

OK >> GO TO 24.
NG >> Replace fuel level sensor unit.

24. CHECK INTERMITTENT INCIDENT

Refer to EC-144, "TROUBLE DIAGNOSIS FOR INTERMITTENT INCIDENT" .

>> **INSPECTION END**

DTC P0460 FUEL LEVEL SENSOR

PFP:25060

Component Description

UBS00H5X

The fuel level sensor is mounted in the fuel level sensor unit. The sensor detects a fuel level in the fuel tank and transmits a signal to the combination meter. The combination meter sends the fuel level sensor signal to the ECM through CAN communication line.
It consists of two parts, one is mechanical float and the other is variable resistor. Fuel level sensor output voltage changes depending on the movement of the fuel mechanical float.

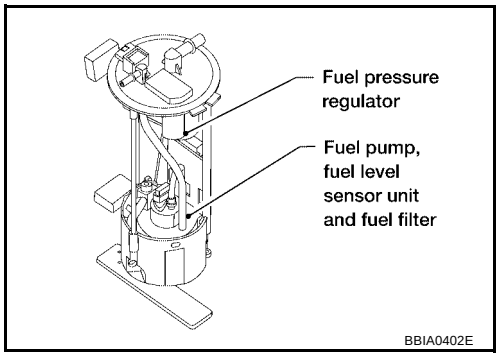

On Board Diagnosis Logic

UBS00H5Y

NOTE:

- **If DTC P0460 is displayed with DTC U1000 or U1001, first perform the trouble diagnosis for DTC U1000, U1001. Refer to EC-151, "DTC U1000, U1001 CAN COMMUNICATION LINE" .**
- **If DTC P0460 is displayed with DTC U1010, first perform the trouble diagnosis for DTC U1010. Refer to EC-154, "DTC U1010 CAN COMMUNICATION" .**

When the vehicle is parked, naturally the fuel level in the fuel tank is stable. It means that output signal of the fuel level sensor does not change. If ECM senses sloshing signal from the sensor, fuel level sensor malfunction is detected.

DTC No.	Trouble diagnosis name	DTC detecting condition	Possible cause
P0460 0460	Fuel level sensor circuit noise	Even though the vehicle is parked, a signal being varied is sent from the fuel level sensor to ECM.	● Harness or connectors (The CAN communication line is open or shorted) ● Harness or connectors (The sensor circuit is open or shorted) ● Combination meter ● Fuel level sensor

DTC Confirmation Procedure

UBS00H5Z

NOTE:
If DTC Confirmation Procedure has been previously conducted, always turn ignition switch OFF and wait at least 10 seconds before conducting the next test.

WITH CONSULT-II

1. Turn ignition switch ON.
2. Select “DATA MONITOR” mode with CONSULT-II.
3. Start engine and wait maximum of 2 consecutive minutes.
4. If 1st trip DTC is detected, go to EC-437, "Diagnostic Procedure" .

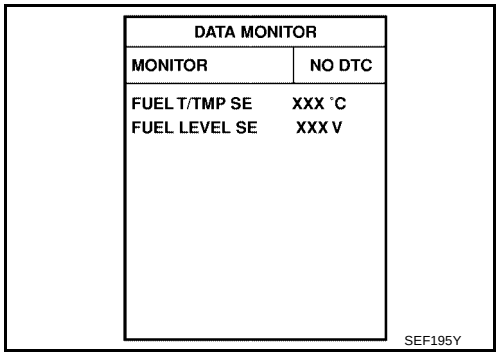

WITH GST

Follow the procedure “WITH CONSULT-II” above.

Diagnostic Procedure

UBS00H60

1. CHECK COMBINATION METER FUNCTION

Refer to DI-5, "COMBINATION METERS" .

OK or NG

OK >> GO TO 2.
NG >> Go to DI-22, "Fuel Level Sensor Unit Inspection" .

2. CHECK INTERMITTENT INCIDENT

Refer to EC-144, "TROUBLE DIAGNOSIS FOR INTERMITTENT INCIDENT" .

>> **INSPECTION END**

Removal and Installation

UBS00H61

FUEL LEVEL SENSOR

Refer to FL-6, "FUEL LEVEL SENSOR UNIT, FUEL FILTER AND FUEL PUMP ASSEMBLY" .

DTC P0461 FUEL LEVEL SENSOR

PFP:25060

Component Description

UBS00H62

The fuel level sensor is mounted in the fuel level sensor unit. The sensor detects a fuel level in the fuel tank and transmits a signal to the combination meter. The combination meter sends the fuel level sensor signal to the ECM through CAN communication line.
It consists of two parts, one is mechanical float and the other is variable resistor. Fuel level sensor output voltage changes depending on the movement of the fuel mechanical float.

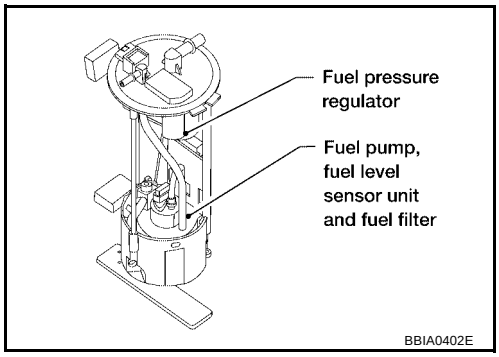

On Board Diagnosis Logic

UBS00H63

NOTE:

- **If DTC P0461 is displayed with DTC U1000 or U1001, first perform the trouble diagnosis for DTC U1000, U1001. Refer to EC-151, "DTC U1000, U1001 CAN COMMUNICATION LINE" .**
- **If DTC P0461 is displayed with DTC U1010, first perform the trouble diagnosis for DTC U1010. Refer to EC-154, "DTC U1010 CAN COMMUNICATION" .**

Driving long distances naturally affect fuel gauge level.
This diagnosis detects the fuel gauge malfunction of the gauge not moving even after a long distance has been driven.

DTC No.	Trouble diagnosis name	DTC detecting condition	Possible cause
P0461 0461	Fuel level sensor circuit range/performance	The output signal of the fuel level sensor does not change within the specified range even though the vehicle has been driven a long distance.	● Harness or connectors (The CAN communication line is open or shorted) ● Harness or connectors (The sensor circuit is open or shorted) ● Combination meter ● Fuel level sensor

Overall Function Check

UBS00H64

Use this procedure to check the overall function of the fuel level sensor function. During this check, a 1st trip DTC might not be confirmed.

WARNING:
When performing following procedure, be sure to observe the handling of the fuel. Refer to FL-10, "FUEL TANK" .
TESTING CONDITION:
Before starting overall function check, preparation of draining fuel and refilling fuel is required.

WITH CONSULT-II

NOTE:
Start from step 10, if it is possible to confirm that the fuel cannot be drained by 30 ℓ (7-7/8 US gal, 6-5/8 Imp gal) in advance.

1. Prepare a fuel container and a spare hose.
2. Release fuel pressure from fuel line, refer to EC-80, "FUEL PRESSURE RELEASE" .
3. Remove the fuel feed hose on the fuel level sensor unit.
4. Connect a spare fuel hose where the fuel feed hose was removed.
5. Turn ignition switch OFF and wait at least 10 seconds then turn ON.

6. Select “FUEL LEVEL SE” in “DATA MONITOR” mode with CONSULT-II.
7. Check “FUEL LEVEL SE” output voltage and note it.
8. Select “FUEL PUMP” in “ACTIVE TEST” mode with CONSULT-II.
9. Touch “ON” and drain fuel approximately 30 ℓ (7-7/8 US gal, 6-5/8 Imp gal) and stop it.
10. Check “FUEL LEVEL SE” output voltage and note it.
11. Fill fuel into the fuel tank for 30 ℓ (7-7/8 US gal, 6-5/8 Imp gal).
12. Check “FUEL LEVEL SE” output voltage and note it.
13. Confirm whether the voltage changes more than 0.03V during step 7 to 10 and 10 to 12.
    If NG, go to EC-439, "Diagnostic Procedure" .

DATA MONITOR	
MONITOR	NO DTC
FUEL T/TMP SE	XXX °C
FUEL LEVEL SE	XXX V

SEF195Y

WITH GST

NOTE:
Start from step 8, if it is possible to confirm that the fuel cannot be drained by 30 ℓ (7-7/8 US gal, 6-5/8 Imp gal) in advance.

1. Prepare a fuel container and a spare hose.
2. Release fuel pressure from fuel line. Refer to EC-80, "FUEL PRESSURE RELEASE" .
3. Remove the fuel feed hose on the fuel level sensor unit.
4. Connect a spare fuel hose where the fuel feed hose was removed.
5. Turn ignition switch ON.
6. Drain fuel by 30 ℓ (7-7/8 US gal, 6-5/8 Imp gal) from the fuel tank using proper equipment.
7. Confirm that the fuel gauge indication varies.
8. Fill fuel into the fuel tank for 30 ℓ (7-7/8 US gal, 6-5/8 Imp gal).
9. Confirm that the fuel gauge indication varies.
10. If NG, go to EC-439, "Diagnostic Procedure" .

Diagnostic Procedure

UBS00H65

1. CHECK COMBINATION METER FUNCTION

Refer to DI-5, "COMBINATION METERS" .

OK or NG

OK >> GO TO 2.
NG >> Go to DI-22, "Fuel Level Sensor Unit Inspection" .

2. CHECK INTERMITTENT INCIDENT

Refer to EC-144, "TROUBLE DIAGNOSIS FOR INTERMITTENT INCIDENT" .

>> **INSPECTION END**

Removal and Installation

UBS00H66

FUEL LEVEL SENSOR

Refer to FL-6, "FUEL LEVEL SENSOR UNIT, FUEL FILTER AND FUEL PUMP ASSEMBLY" .

DTC P0462, P0463 FUEL LEVEL SENSOR CIRCUIT

PFP:25060

Component Description

UBS00H67

The fuel level sensor is mounted in the fuel level sensor unit. The sensor detects a fuel level in the fuel tank and transmits a signal to the combination meter. The combination meter sends the fuel level sensor signal to the ECM through CAN communication line.
It consists of two parts, one is mechanical float and the other is variable resistor. Fuel level sensor output voltage changes depending on the movement of the fuel mechanical float.

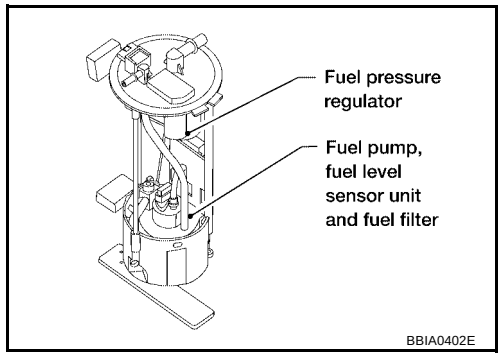

On Board Diagnosis Logic

UBS00H68

NOTE:

- **If DTC P0462 or P0463 is displayed with DTC U1000 or U1001, first perform the trouble diagnosis for DTC U1000, U1001. Refer to EC-151, "DTC U1000, U1001 CAN COMMUNICATION LINE" .**
- **If DTC P0462 or P0463 is displayed with DTC U1010, first perform the trouble diagnosis for DTC U1010. Refer to EC-154, "DTC U1010 CAN COMMUNICATION" .**

This diagnosis indicates the former, to detect open or short circuit malfunction.

DTC No.	Trouble diagnosis name	DTC detecting condition	Possible cause
P0462 0462	Fuel level sensor circuit low input	An excessively low voltage from the sensor is sent to ECM.	● Harness or connectors (The CAN communication line is open or shorted) ● Harness or connectors (The sensor circuit is open or shorted) ● Combination meter ● Fuel level sensor
P0463 0463	Fuel level sensor circuit high input	An excessively high voltage from the sensor is sent to ECM.	

DTC Confirmation Procedure

UBS00H69

NOTE:
If DTC Confirmation Procedure has been previously conducted, always turn ignition switch OFF and wait at least 10 seconds before conducting the next test.
TESTING CONDITION:
Before performing the following procedure, confirm that battery voltage is more than 11V at ignition switch ON.

WITH CONSULT-II

1. Turn ignition switch ON.
2. Select “DATA MONITOR” mode with CONSULT-II.
3. Wait at least 5 seconds.
4. If 1st trip DTC is detected, go to EC-441, "Diagnostic Procedure" .

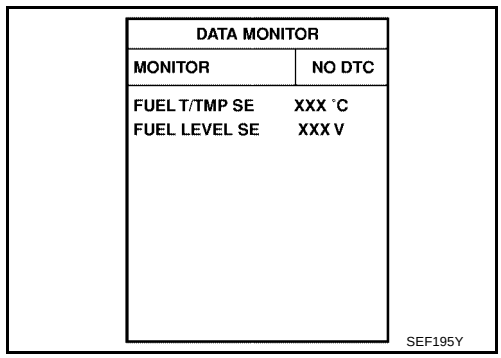

WITH GST

Follow the procedure “WITH CONSULT-II” above.

Diagnostic Procedure

UBS00H6A

1. CHECK COMBINATION METER FUNCTION

Refer to DI-5, "COMBINATION METERS" .

OK or NG

OK >> GO TO 2.
NG >> Go to DI-22, "Fuel Level Sensor Unit Inspection" .

2. CHECK INTERMITTENT INCIDENT

Refer to EC-144, "TROUBLE DIAGNOSIS FOR INTERMITTENT INCIDENT" .

>> **INSPECTION END**

Removal and Installation

UBS00H6B

FUEL LEVEL SENSOR

Refer to FL-6, "FUEL LEVEL SENSOR UNIT, FUEL FILTER AND FUEL PUMP ASSEMBLY" .

DTC P0500 VSS

PFP:32702

Description

UBS00H6C

NOTE:

- **If DTC P0500 is displayed with DTC U1000 or U1001, first perform the trouble diagnosis for DTC U1000, U1001. Refer to EC-151, "DTC U1000, U1001 CAN COMMUNICATION LINE" .**
- **If DTC P0500 is displayed with DTC U1010, first perform the trouble diagnosis for DTC U1010. Refer to EC-154, "DTC U1010 CAN COMMUNICATION" .**

The vehicle speed signal is sent to the combination meter from the “ABS actuator and electric unit (control unit)” by CAN communication line. The c combination meter then sends a signal to the ECM by CAN communication line.

On Board Diagnosis Logic

UBS00H6D

DTC No.	Trouble diagnosis name	DTC detecting condition	Possible cause
P0500 0500	Vehicle speed sensor	The almost 0 km/h (0 MPH) signal from vehicle speed sensor is sent to ECM even when vehicle is being driven.	● Harness or connectors (The CAN communication line is open or shorted) ● Harness or connectors (The vehicle speed signal circuit is open or shorted) ● Wheel sensor ● Combination meter ● ABS actuator and electric unit (control unit)

DTC Confirmation Procedure

UBS00H6E

CAUTION:

Always drive vehicle at a safe speed.

NOTE:

If DTC Confirmation Procedure has been previously conducted, always turn ignition switch OFF and wait at least 10 seconds before conducting the next test.

TESTING CONDITION:

Steps 1 and 2 may be conducted with the drive wheels lifted in the shop or by driving the vehicle. If a road test is expected to be easier, it is unnecessary to lift the vehicle.

WITH CONSULT-II

1. Start engine (VDC switch OFF).
2. Read “VHCL SPEED SE” in “DATA MONITOR” mode with CONSULT-II. The vehicle speed on CONSULT-II should exceed 10 km/h (6 MPH) when rotating wheels with suitable gear position.
   If NG, go to EC-443, "Diagnostic Procedure" .
   If OK, go to following step.
3. Select “DATA MONITOR” mode with CONSULT-II.
4. Warm engine up to normal operating temperature.
5. Maintain the following conditions for at least 60 consecutive seconds.

ENG SPEED	More than 1,600 rpm
COOLAN TEMP/S	More than 70°C (158°F)
B/FUEL SCHDL	More than 6.9 msec
Selector lever	Except P or N position
PW/ST SIGNAL	OFF

6. If 1st trip DTC is detected, go to EC-443, "Diagnostic Procedure" .

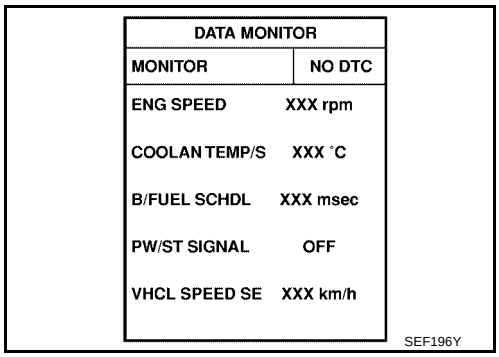

Overall Function Check

UBS00H6F

Use this procedure to check the overall function of the vehicle speed sensor circuit. During this check, a 1st trip DTC might not be confirmed.

WITH GST

1. Lift up drive wheels.
2. Start engine.
3. Read vehicle speed sensor signal in Service $01 with GST.
   The vehicle speed sensor on GST should be able to exceed 10 km/h (6 MPH) when rotating wheels with suitable gear position.
4. If NG, go to EC-443, "Diagnostic Procedure" .

Diagnostic Procedure

UBS00H6G

1. CHECK DTC WITH ABS ACTUATOR AND ELECTRIC UNIT (CONTROL UNIT)

Refer to BRC-11, "TROUBLE DIAGNOSIS" .

OK or NG

OK >> GO TO 2.
NG >> Repair or replace.

2. CHECK COMBINATION METER FUNCTION

Refer to DI-5, "COMBINATION METERS" .

>> **INSPECTION END**

DTC P0506 ISC SYSTEM

PFP:23781

Description

UBS00H6H

NOTE:

If DTC P0506 is displayed with other DTC, first perform the trouble diagnosis for the other DTC.

The ECM controls the engine idle speed to a specified level through the fine adjustment of the air, which is let into the intake manifold, by operating the electric throttle control actuator. The operating of the throttle valve is varied to allow for optimum control of the engine idling speed. The crankshaft position sensor (POS) detects the actual engine speed and sends a signal to the ECM.

The ECM controls the electric throttle control actuator so that the engine speed coincides with the target value memorized in the ECM. The target engine speed is the lowest speed at which the engine can operate steadily. The optimum value stored in the ECM is determined by taking into consideration various engine conditions, such as during warming up, deceleration, and engine load (air conditioner, power steering and cooling fan operation, etc.).

On Board Diagnosis Logic

UBS00H6I

DTC No.	Trouble diagnosis name	DTC detecting condition	Possible cause
P0506 0506	Idle speed control system RPM lower than expected	The idle speed is less than the target idle speed by 100 rpm or more.	● Electric throttle control actuator ● Intake air leak

DTC Confirmation Procedure

UBS00H6J

NOTE:

- If DTC Confirmation Procedure has been previously conducted, always turn ignition switch OFF and wait at least 10 seconds before conducting the next test.
- **If the target idle speed is out of the specified value, perform EC-78, "Idle Air Volume Learning" , before conducting DTC Confirmation Procedure. For the target idle speed, refer to the EC-637, "SERVICE DATA AND SPECIFICATIONS (SDS)" .**

TESTING CONDITION:

- **Before performing the following procedure, confirm that battery voltage is more than 11V at idle.**
- **Always perform the test at a temperature above –10°C (14°F).**

WITH CONSULT-II

1. Open engine hood.
2. Start engine and warm it up to normal operating temperature.
3. Turn ignition switch OFF and wait at least 10 seconds.
4. Turn ignition switch ON again and select “DATA MONITOR” mode with CONSULT-II.
5. Start engine and run it for at least 1 minute at idle speed.
6. If 1st trip DTC is detected, go to EC-445, "Diagnostic Procedure" .

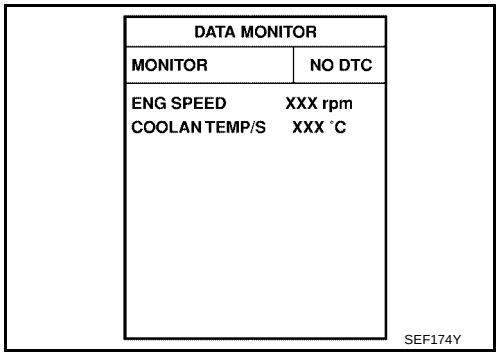

WITH GST

Follow the procedure “WITH CONSULT-II” above.

Diagnostic Procedure

UBS00H6K

1. CHECK INTAKE AIR LEAK

1. Start engine and let it idle.
2. Listen for an intake air leak after the mass air flow sensor.

OK or NG

OK >> GO TO 2.
NG >> Discover air leak location and repair.

2. REPLACE ECM

1. Stop engine.
2. Replace ECM.
3. Perform initialization of IVIS(NATS) system and registration of all IVIS(NATS) ignition key IDs. Refer to BL-139, "ECM Re-communicating Function" .
4. Perform EC-77, "VIN Registration" .
5. Perform EC-78, "Accelerator Pedal Released Position Learning" .
6. Perform EC-78, "Throttle Valve Closed Position Learning" .
7. Perform EC-78, "Idle Air Volume Learning" .

>> **INSPECTION END**

DTC P0507 ISC SYSTEM

PFP:23781

Description

UBS00H6L

NOTE:

If DTC P0507 is displayed with other DTC, first perform the trouble diagnosis for the other DTC.

The ECM controls the engine idle speed to a specified level through the fine adjustment of the air, which is let into the intake manifold, by operating the electric throttle control actuator. The operating of the throttle valve is varied to allow for optimum control of the engine idling speed. The crankshaft position sensor (POS) detects the actual engine speed and sends a signal to the ECM.

The ECM controls the electric throttle control actuator so that the engine speed coincides with the target value memorized in the ECM. The target engine speed is the lowest speed at which the engine can operate steadily. The optimum value stored in the ECM is determined by taking into consideration various engine conditions, such as during warming up, deceleration, and engine load (air conditioner, power steering and cooling fan operation, etc.).

On Board Diagnosis Logic

UBS00H6M

DTC No.	Trouble diagnosis name	DTC detecting condition	Possible cause
P0507 0507	Idle speed control system RPM higher than expected	The idle speed is more than the target idle speed by 200 rpm or more.	● Electric throttle control actuator ● Intake air leak ● PCV system

DTC Confirmation Procedure

UBS00H6N

NOTE:

- If DTC Confirmation Procedure has been previously conducted, always turn ignition switch OFF and wait at least 10 seconds before conducting the next test.
- **If the target idle speed is out of the specified value, perform EC-78, "Idle Air Volume Learning" , before conducting DTC Confirmation Procedure. For the target idle speed, refer to the EC-637, "SERVICE DATA AND SPECIFICATIONS (SDS)" .**

TESTING CONDITION:

- **Before performing the following procedure, confirm that battery voltage is more than 11V at idle.**
- **Always perform the test at a temperature above –10°C (14°F).**

WITH CONSULT-II

1. Open engine hood.
2. Start engine and warm it up to normal operating temperature.
3. Turn ignition switch OFF and wait at least 10 seconds.
4. Turn ignition switch ON again and select “DATA MONITOR” mode with CONSULT-II.
5. Start engine and run it for at least 1 minute at idle speed.
6. If 1st trip DTC is detected, go to EC-447, "Diagnostic Procedure" .

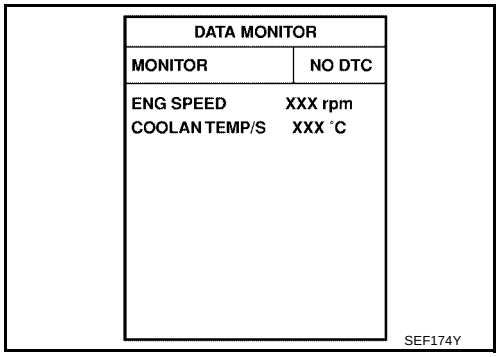

WITH GST

Follow the procedure “WITH CONSULT-II” above.

Diagnostic Procedure

UBS00H6O

1. CHECK PCV HOSE CONNECTION

Confirm that PCV hose is connected correctly.

OK or NG

OK >> GO TO 2.
NG >> Repair or replace.

2. CHECK INTAKE AIR LEAK

1. Start engine and let it idle.
2. Listen for an intake air leak after the mass air flow sensor.

OK or NG

OK >> GO TO 3.
NG >> Discover air leak location and repair.

3. REPLACE ECM

1. Stop engine.
2. Replace ECM.
3. Perform initialization of IVIS(NATS) system and registration of all IVIS(NATS) ignition key IDs. Refer to BL-139, "ECM Re-communicating Function" .
4. Perform EC-77, "VIN Registration" .
5. Perform EC-78, "Accelerator Pedal Released Position Learning" .
6. Perform EC-78, "Throttle Valve Closed Position Learning" .
7. Perform EC-78, "Idle Air Volume Learning" .

>> **INSPECTION END**

DTC P0550 PSP SENSOR

PFP:49763

Component Description

UBS00H6P

Power steering pressure (PSP) sensor is installed to the power steering high-pressure tube and detects a power steering load. This sensor is a potentiometer which transforms the power steering load into output voltage, and emits the voltage signal to the ECM. The ECM controls the electric throttle control actuator and adjusts the throttle valve opening angle to increase the engine speed and adjusts the idle speed for the increased load.

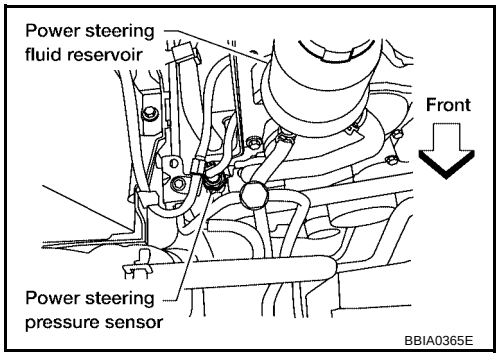

CONSULT-II Reference Value in Data Monitor Mode

UBS00H6Q

Specification data are reference values.

MONITOR ITEM	CONDITION		SPECIFICATION
PW/ST SIGNAL	● Engine: After warming up, idle the engine	Steering wheel: Not being turned (Forward direction)	OFF
		Steering wheel: Being turned	ON

On Board Diagnosis Logic

UBS00H6R

The MIL will not light up for this diagnosis.

NOTE:
If DTC P0550 is displayed with DTC P0643, first perform the trouble diagnosis for DTC P0643. Refer to EC-460, "DTC P0643 SENSOR POWER SUPPLY" .

DTC No.	Trouble diagnosis name	DTC detecting condition	Possible cause
P0550 0550	Power steering pressure sensor circuit	An excessively low or high voltage from the sensor is sent to ECM.	● Harness or connectors (The sensor circuit is open or shorted) ● Power steering pressure sensor

DTC Confirmation Procedure

UBS00H6S

NOTE:
If DTC Confirmation Procedure has been previously conducted, always turn ignition switch OFF and wait at least 10 seconds before conducting the next test.

WITH CONSULT-II

1. Turn ignition switch ON.
2. Select “DATA MONITOR” mode with CONSULT-II.
3. Start engine and let it idle for at least 5 seconds.
4. If 1st trip DTC is detected, go to EC-450, "Diagnostic Procedure" .

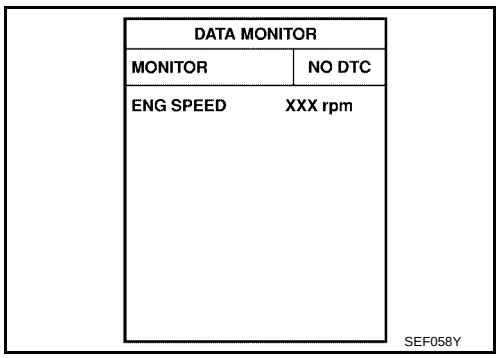

WITH GST

Follow the procedure “WITH CONSULT-II” above.

Wiring Diagram

UBS00H6T

EC-PS/SEN-01

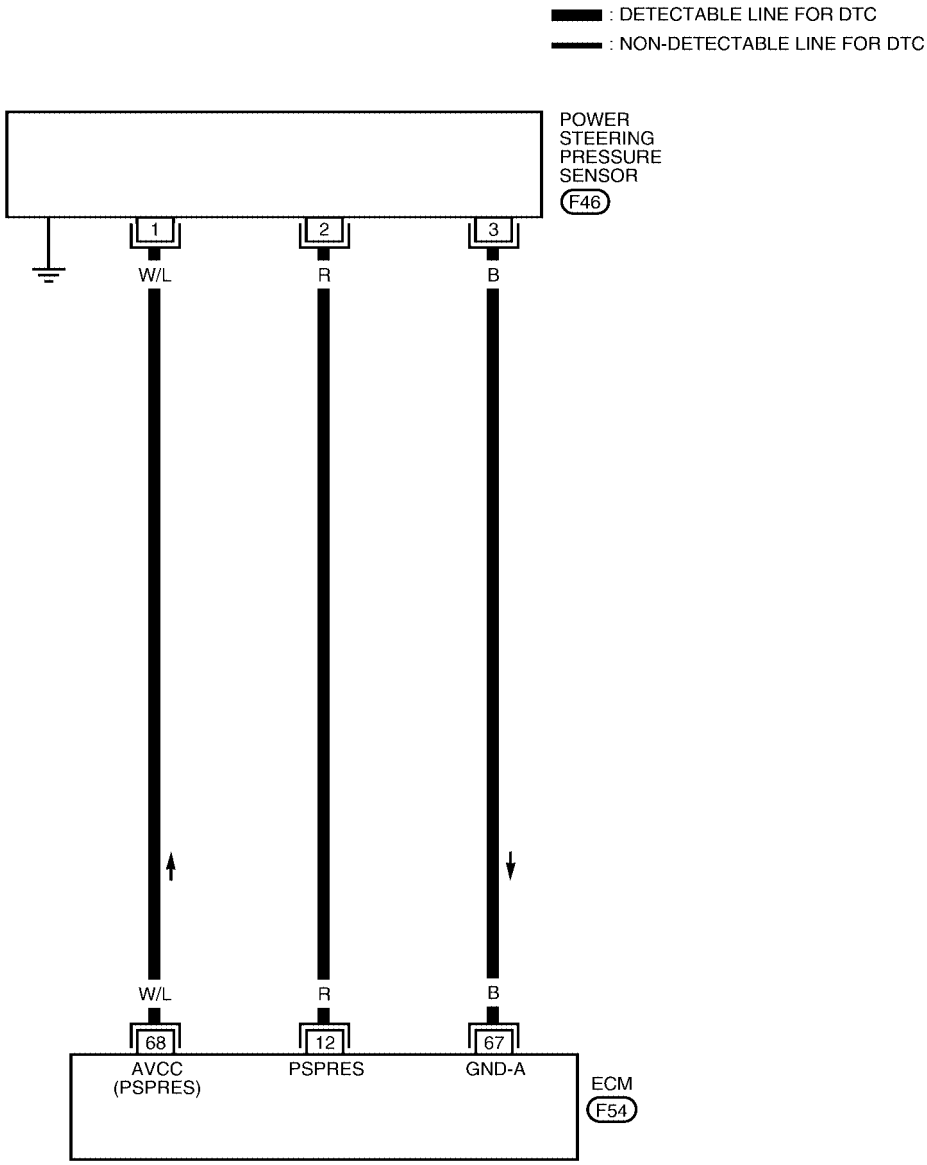

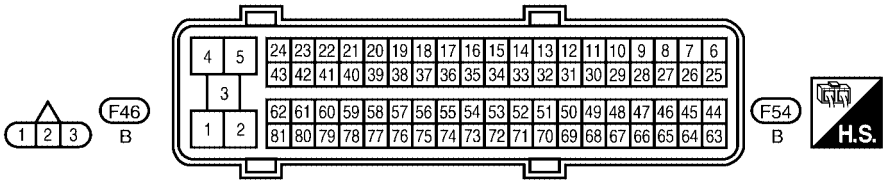

BBWA2097E

Specification data are reference values and are measured between each terminal and ground.

CAUTION:

Do not use ECM ground terminals when measuring input/output voltage. Doing so may result in damage to the ECM's transistor. Use a ground other than ECM terminals, such as the ground.

TERMINAL NO.	WIRE COLOR	ITEM	CONDITION	DATA (DC Voltage)
12	R	Power steering pressure sensor	**[Engine is running]** ● Steering wheel: Being turned.	0.5 - 4.5V
			[Engine is running] ● Steering wheel: Not being turned.	0.4 - 0.8V
67	B	Sensor ground	**[Engine is running]** ● **Warm-up condition** ● Idle speed	Approximately 0V
68	W/L	Sensor power supply (Power steering pressure sensor)	**[Ignition switch: ON]**	Approximately 5V

Diagnostic Procedure

UBS00H6U

1. CHECK GROUND CONNECTIONS

1. Turn ignition switch OFF.
2. Loosen and retighten three ground screws on the body.
   Refer to EC-150, "Ground Inspection" .

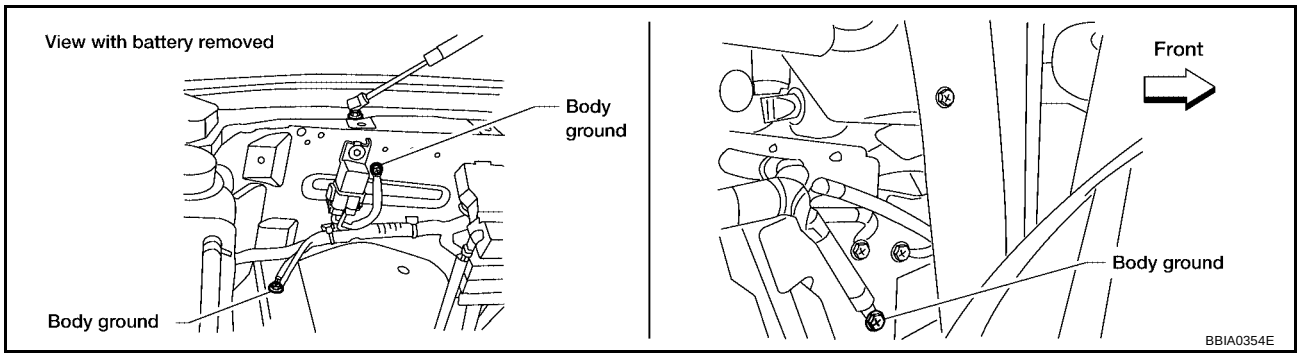

OK or NG

OK >> GO TO 2.
NG >> Repair or replace ground connections.

2. CHECK PSP SENSOR POWER SUPPLY CIRCUIT

1. Disconnect power steering pressure (PSP) sensor harness connector.
2. Turn ignition switch ON.

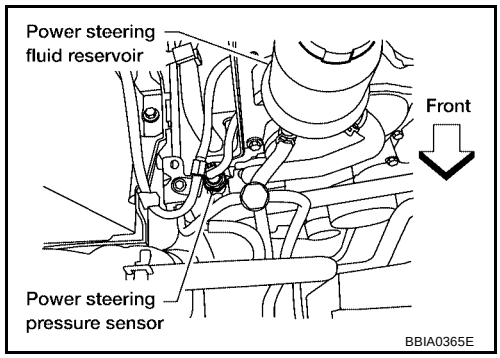

3. Check voltage between PSP sensor terminal 1 and ground with CONSULT-II or tester.

Voltage: Approximately 5V

OK or NG

OK >> GO TO 3.
NG >> Repair harness or connectors.

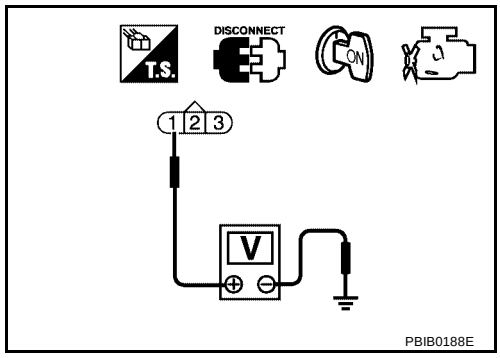

3. CHECK PSP SENSOR GROUND CIRCUIT FOR OPEN AND SHORT

1. Turn ignition switch OFF.
2. Disconnect ECM harness connector.
3. Check harness continuity between PSP sensor terminal 3 and ECM terminal 67.
   Refer to Wiring Diagram.

Continuity should exist.

4. Also check harness for short to ground and short to power.

OK or NG

OK >> GO TO 4.
NG >> Repair open circuit or short to ground or short to power in harness or connectors.

4. CHECK PSP SENSOR INPUT SIGNAL CIRCUIT FOR OPEN AND SHORT

1. Check harness continuity between ECM terminal 12 and PSP sensor terminal 2.

Continuity should exist.

2. Also check harness for short to ground and short to power.

OK or NG

OK >> GO TO 5.
NG >> Repair open circuit or short to ground or short to power in harness or connectors.

5. CHECK PSP SENSOR

Refer to EC-452, "Component Inspection" .

OK or NG

OK >> GO TO 6.
NG >> Replace PSP sensor.

6. CHECK INTERMITTENT INCIDENT

Refer to EC-144, "TROUBLE DIAGNOSIS FOR INTERMITTENT INCIDENT" .

>> **INSPECTION END**

Component Inspection

UBS00H6V

POWER STEERING PRESSURE SENSOR

1. Reconnect all harness connectors disconnected.
2. Start engine and let it idle.
3. Check voltage between ECM terminal 12 and ground under the following conditions.

Condition	Voltage
Steering wheel: Being turned.	0.5 - 4.5V
Steering wheel: Not being turned.	0.4 - 0.8V

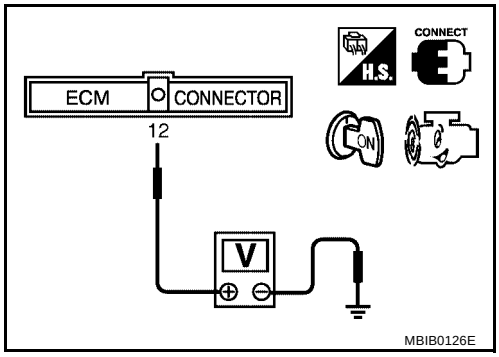

Removal and Installation

UBS00H6W

POWER STEERING PRESSURE SENSOR

Refer to PS-23, "HYDRAULIC LINE" .

DTC P0603 ECM POWER SUPPLY

PFP:23710

Component Description

UBS00H79

Battery voltage is supplied to the ECM even when the ignition switch is turned OFF for the ECM memory function of the DTC memory, the air-fuel ratio feedback compensation value memory, the idle air volume learning value memory, etc.

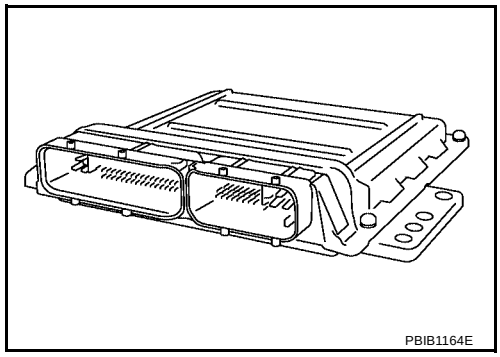

On Board Diagnosis Logic

UBS00H7A

DTC No.	Trouble diagnosis name	DTC detecting condition	Possible cause
P0603 0603	ECM power supply circuit	ECM back-up RAM system does not function properly.	● Harness or connectors [ECM power supply (back-up) circuit is open or shorted.] ● ECM

DTC Confirmation Procedure

UBS00H7B

NOTE:
If DTC Confirmation Procedure has been previously conducted, always turn ignition switch OFF and wait at least 10 seconds before conducting the next test.

WITH CONSULT-II

1. Turn ignition switch ON and wait at least 1 second.
2. Select “DATA MONITOR” mode with CONSULT-II.
3. Start engine and let it idle for 1 second.
4. Turn ignition switch OFF, wait at least 10 seconds and then turn ON.
5. Repeat steps 3 and 4 for 4 times.
6. If 1st trip DTC is detected, go to EC-455, "Diagnostic Procedure".

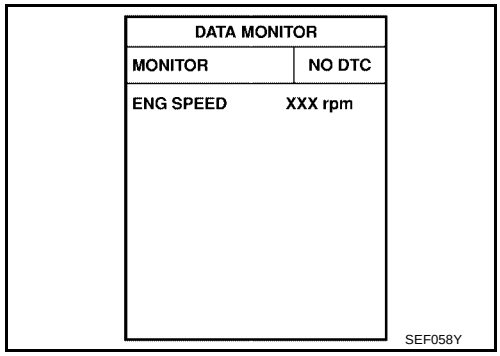

WITH GST

Follow the procedure “WITH CONSULT-II” above.

Wiring Diagram

UBS00H7C

EC-ECM/PW-01

: DETECTABLE LINE FOR DTC
: NON-DETECTABLE LINE FOR DTC

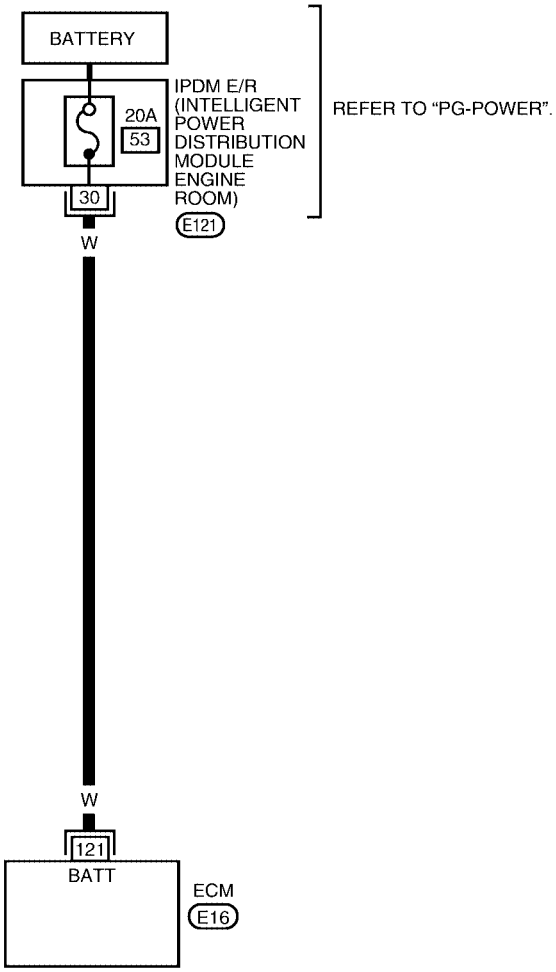

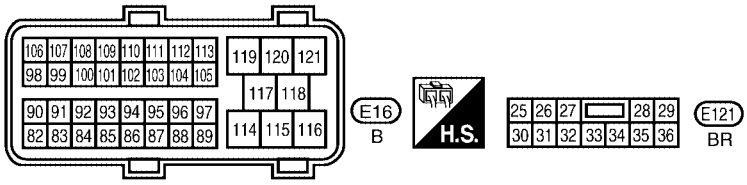

BBWA2098E

Specification data are reference values and are measured between each terminal and ground.

CAUTION:

Do not use ECM ground terminals when measuring input/output voltage. Doing so may result in damage to the ECM's transistor. Use a ground other than ECM terminals, such as the ground.

TERMINAL NO.	WIRE COLOR	ITEM	CONDITION	DATA (DC Voltage)
121	W	Power supply for ECM (Back-up)	**[Ignition switch: OFF]**	BATTERY VOLTAGE (11 - 14V)

Diagnostic Procedure

UBS00H7D

1. CHECK ECM POWER SUPPLY

1. Turn ignition switch OFF.
2. Disconnect ECM harness connector.
3. Check voltage between ECM terminal 121 and ground with CONSULT-II or tester.

Voltage: Battery voltage

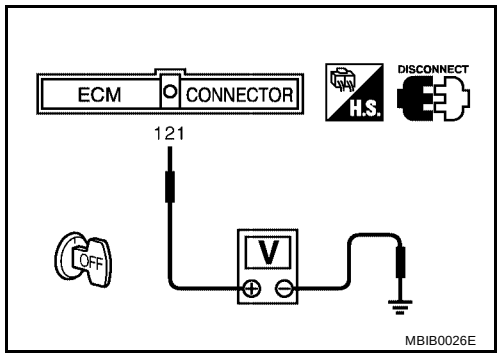

OK or NG

OK >> GO TO 3.
NG >> GO TO 2.

2. DETECT MALFUNCTIONING PART

Check the following.

- IPDM E/R connector E121
- 20A fuse
- Harness for open or short between ECM and battery

>> Repair or replace harness or connectors.

3. CHECK INTERMITTENT INCIDENT

Refer to EC-144, "TROUBLE DIAGNOSIS FOR INTERMITTENT INCIDENT" .

OK or NG

OK >> GO TO 4.
NG >> Repair or replace harness or connectors.

4. PERFORM DTC CONFIRMATION PROCEDURE

With CONSULT-II

1. Turn ignition switch ON.
2. Select “SELF DIAG RESULTS” mode with CONSULT-II.
3. Touch “ERASE”.
4. **Perform DTC Confirmation Procedure.**
   See EC-453, "DTC Confirmation Procedure" .
5. Is the 1st trip DTC P0603 displayed again?

With GST

1. Turn ignition switch ON.
2. Select Service $04 with GST.
3. **Perform DTC Confirmation Procedure.**
   See EC-453, "DTC Confirmation Procedure" .
4. Is the 1st trip DTC P0603 displayed again?

Yes or No

Yes >> GO TO 5.
No >> **INSPECTION END**

5. REPLACE ECM

1. Replace ECM.
2. Perform initialization of IVIS(NATS) system and registration of all IVIS(NATS) ignition key IDs. Refer to BL-139, "ECM Re-communicating Function" .
3. Perform EC-77, "VIN Registration" .
4. Perform EC-78, "Accelerator Pedal Released Position Learning" .
5. Perform EC-78, "Throttle Valve Closed Position Learning" .
6. Perform EC-78, "Idle Air Volume Learning" .

>> **INSPECTION END**

DTC P0605 ECM

PFP:23710

Component Description

UBS00H6X

The ECM consists of a microcomputer and connectors for signal input and output and for power supply. The ECM controls the engine.

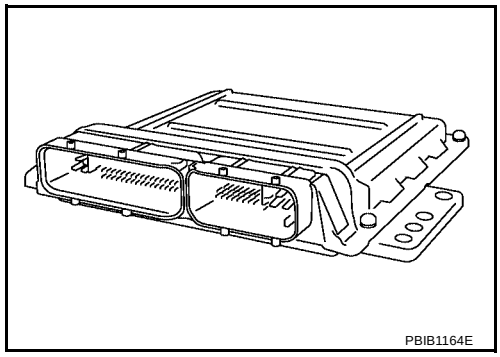

On Board Diagnosis Logic

UBS00H6Y

This self-diagnosis has one or two trip detection logic.

DTC No.	Trouble diagnosis name	DTC detecting condition		Possible cause
P0605 0605	Engine control module	A)	ECM calculation function is malfunctioning.	● ECM
		B)	ECM EEP-ROM system is malfunctioning.	
		C)	ECM self shut-off function is malfunctioning.	

FAIL-SAFE MODE

ECM enters fail-safe mode when the malfunction A is detected.

Detected items	Engine operation condition in fail-safe mode
Malfunction A	● ECM stops the electric throttle control actuator control, throttle valve is maintained at a fixed opening (approx. 5 degrees) by the return spring. ● ECM deactivates ASCD operation.

DTC Confirmation Procedure

UBS00H6Z

Perform PROCEDURE FOR MALFUNCTION A first. If the 1st trip DTC cannot be confirmed, perform PROCEDURE FOR MALFUNCTION B. If there is no malfunction on PROCEDURE FOR MALFUNCTION B, perform PROCEDURE FOR MALFUNCTION C.

NOTE:

If DTC Confirmation Procedure has been previously conducted, always turn ignition switch OFF and wait at least 10 seconds before conducting the next test.

PROCEDURE FOR MALFUNCTION A

With CONSULT-II

1. Turn ignition switch ON.
2. Select “DATA MONITOR” mode with CONSULT-II.
3. If 1st trip DTC is detected, go to EC-458, "Diagnostic Procedure"

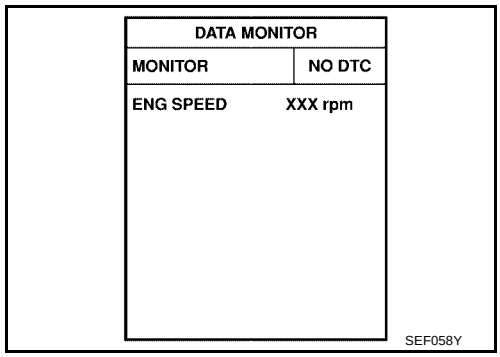

With GST

Follow the procedure “With CONSULT-II” above.

PROCEDURE FOR MALFUNCTION B

With CONSULT-II

1. Turn ignition switch ON and wait at least 1 second.
2. Select “DATA MONITOR” mode with CONSULT-II.
3. Turn ignition switch OFF, wait at least 10 seconds and then turn ON.
4. If 1st trip DTC is detected, go to EC-458, "Diagnostic Procedure" .

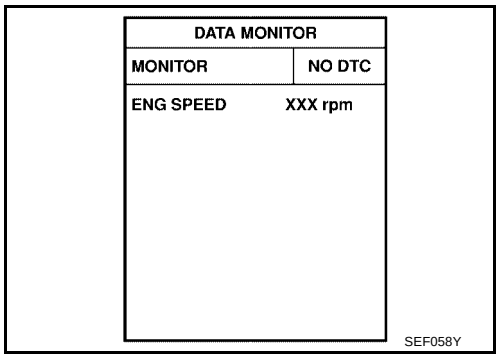

With GST

Follow the procedure “With CONSULT-II” above.

PROCEDURE FOR MALFUNCTION C

With CONSULT-II

1. Turn ignition switch ON and wait at least 1 second.
2. Select “DATA MONITOR” mode with CONSULT-II.
3. Turn ignition switch OFF, wait at least 10 seconds and then turn ON.
4. Repeat step 3 for 32 times.
5. If 1st trip DTC is detected, go to EC-458, "Diagnostic Procedure" .

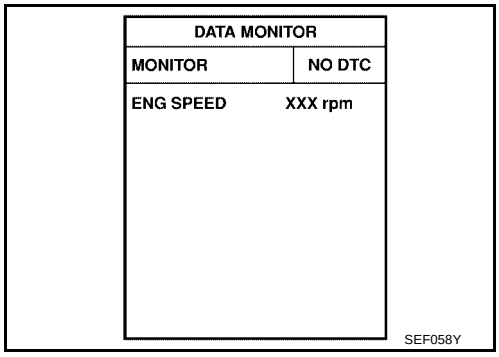

With GST

Follow the procedure “With CONSULT-II” above.

Diagnostic Procedure

UBS00H70

1. INSPECTION START

With CONSULT-II

1. Turn ignition switch ON.
2. Select “SELF DIAG RESULTS” mode with CONSULT-II.
3. Touch “ERASE”.
4. **Perform DTC Confirmation Procedure.**
   See EC-457, "DTC Confirmation Procedure" .
5. Is the 1st trip DTC P0605 displayed again?

With GST

1. Turn ignition switch ON.
2. Select Service $04 with GST.
3. **Perform DTC Confirmation Procedure.**
   See EC-457, "DTC Confirmation Procedure" .
4. Is the 1st trip DTC P0605 displayed again?

Yes or No

Yes >> GO TO 2.
No >> **INSPECTION END**

2. REPLACE ECM

1. Replace ECM.
2. Perform initialization of IVIS(NATS) system and registration of all IVIS(NATS) ignition key IDs. Refer to BL-139, "ECM Re-communicating Function" .
3. Perform EC-77, "VIN Registration" .
4. Perform EC-78, "Accelerator Pedal Released Position Learning" .
5. Perform EC-78, "Throttle Valve Closed Position Learning" .
6. Perform EC-78, "Idle Air Volume Learning" .

>> **INSPECTION END**

DTC P0643 SENSOR POWER SUPPLY

PFP:18919

On Board Diagnosis Logic

UBS00H9B

This self-diagnosis has the one trip detection logic.

DTC No.	Trouble diagnosis name	DTC detecting condition	Possible cause
P0643 0643	Sensor power supply circuit short	ECM detects a voltage of power source for sensor is excessively low or high.	● Harness or connectors (APP sensor 1 circuit is shorted.) (PSP sensor circuit is shorted.) (Refrigerant pressure sensor circuit is shorted.) (EVAP control system pressure sensor circuit is shorted.) ● Accelerator pedal position sensor ● Power steering pressure sensor ● Refrigerant pressure sensor ● EVAP control system pressure sensor

FAIL-SAFE MODE

When the malfunction is detected, ECM enters fail-safe mode and the MIL lights up.

Engine operation condition in fail-safe mode
ECM stops the electric throttle control actuator control, throttle valve is maintained at a fixed opening (approx. 5 degrees) by the return spring.

DTC Confirmation Procedure

UBS00H9C

NOTE:
If DTC Confirmation Procedure has been previously conducted, always turn ignition switch OFF and wait at least 10 seconds before conducting the next test.
TESTING CONDITION:
Before performing the following procedure, confirm that battery voltage is more than 10V at idle.

WITH CONSULT-II

1. Turn ignition switch ON.
2. Select “DATA MONITOR” mode with CONSULT-II.
3. Start engine and let it idle for 1 second.
4. If DTC is detected, go to EC-463, "Diagnostic Procedure" .

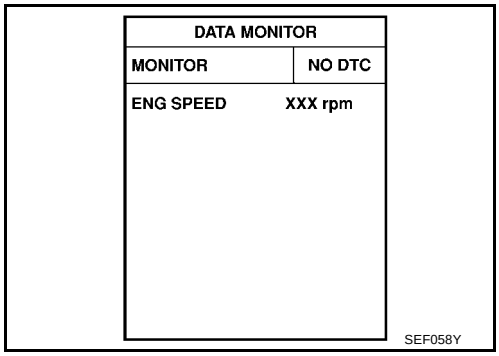

WITH GST

Follow the procedure “WITH CONSULT-II” above.

Wiring Diagram

UBS00H9D

EC-SEN/PW-01

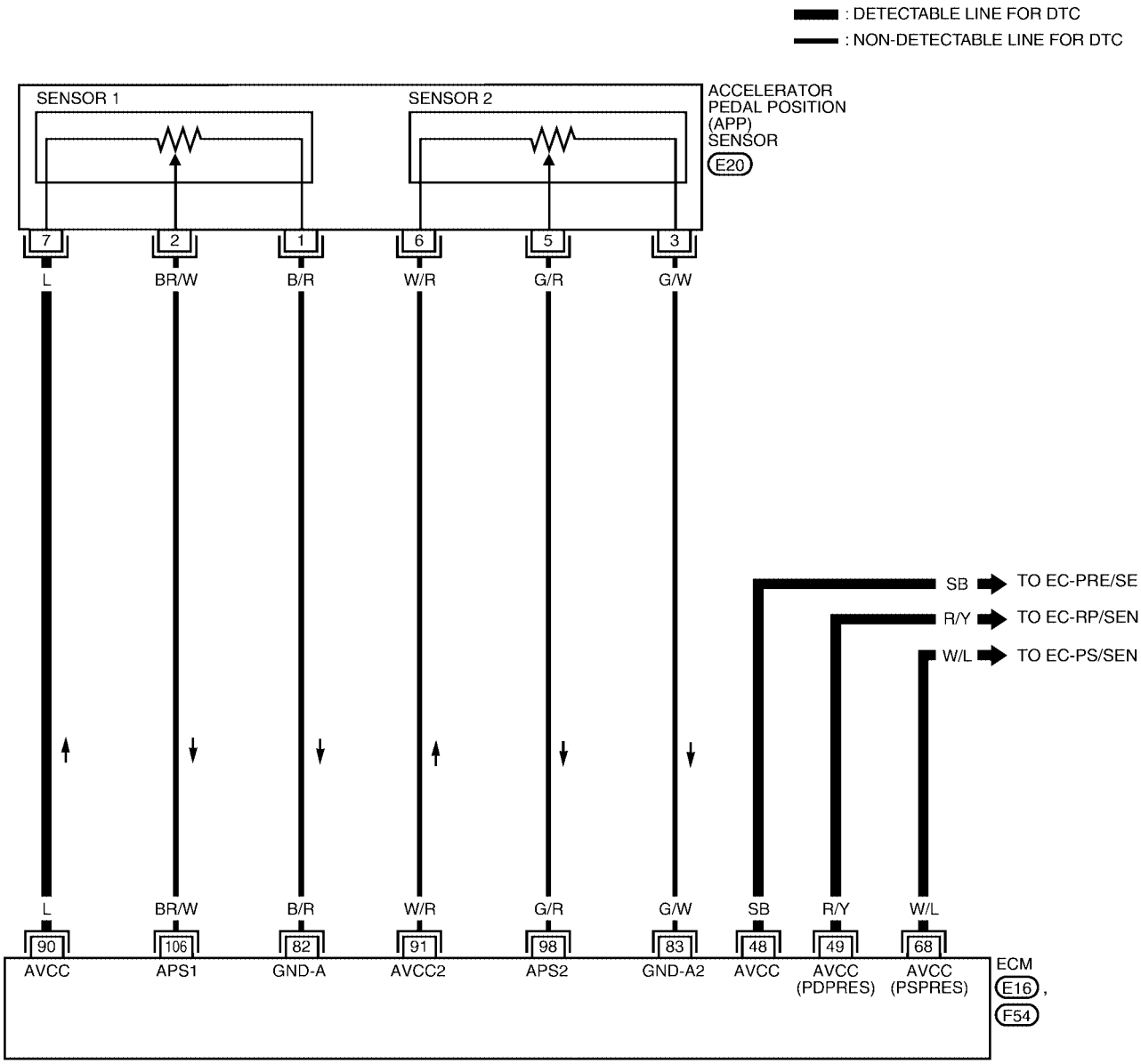

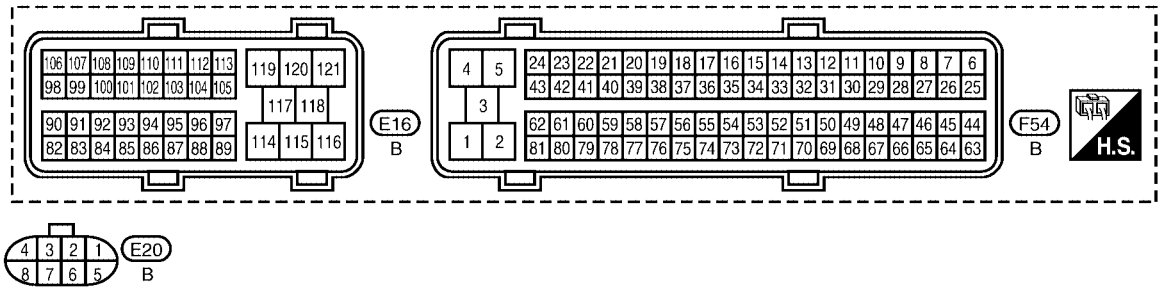

BBWA2123E

Specification data are reference values and are measured between each terminal and ground.

CAUTION:

Do not use ECM ground terminals when measuring input/output voltage. Doing so may result in damage to the ECM's transistor. Use a ground other than ECM terminals, such as the ground.

TERMINAL NO.	WIRE COLOR	ITEM	CONDITION	DATA (DC Voltage)
48	SB	Sensor power supply (EVAP control system pressure sensor)	**[Ignition switch: ON]**	Approximately 5V
49	R/Y	Sensor power supply (Refrigerant pressure sensor)	**[Ignition switch: ON]**	Approximately 5V
68	W/L	Sensor power supply (Power steering pressure sensor)	**[Ignition switch: ON]**	Approximately 5V
82	B/R	Sensor ground (APP sensor 1)	**[Engine is running]** ● **Warm-up condition** ● Idle speed	Approximately 0V
83	G/W	Sensor ground (APP sensor 2)	**[Engine is running]** ● **Warm-up condition** ● Idle speed	Approximately 0V
90	L	Sensor power supply (APP sensor 1)	**[Ignition switch: ON]**	Approximately 5V
91	W/R	Sensor power supply (APP sensor 2)	**[Ignition switch: ON]**	Approximately 5V
98	G/R	Accelerator pedal position sensor 2	**[Ignition switch: ON]** ● Engine: Stopped ● Accelerator pedal: Fully released	0.25 - 0.50V
			[Ignition switch: ON] ● Engine: Stopped ● Accelerator pedal: Fully depressed	2.0 - 2.5V
106	BR/W	Accelerator pedal position sensor 1	**[Ignition switch: ON]** ● Engine: Stopped ● Accelerator pedal: Fully released	0.5 - 1.0V
			[Ignition switch: ON] ● Engine: Stopped ● Accelerator pedal: Fully depressed	4.2 - 4.8V

Diagnostic Procedure

UBS00H9E

1. CHECK GROUND CONNECTIONS

1. Turn ignition switch OFF.
2. Loosen and retighten three ground screws on the body.
   Refer to EC-150, "Ground Inspection" .

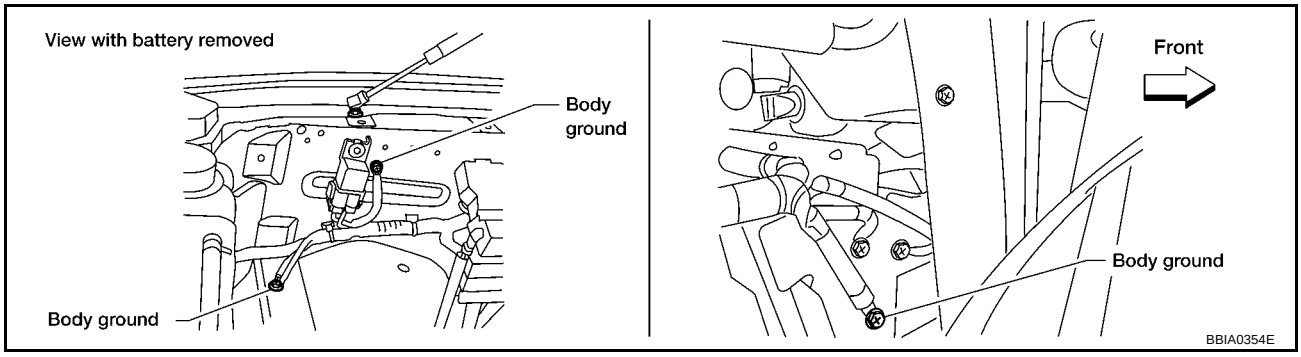

OK or NG

OK >> GO TO 2.
NG >> Repair or replace ground connections.

2. CHECK APP SENSOR 1 POWER SUPPLY CIRCUIT

1. Disconnect accelerator pedal position (APP) sensor harness connector.
2. Turn ignition switch ON.

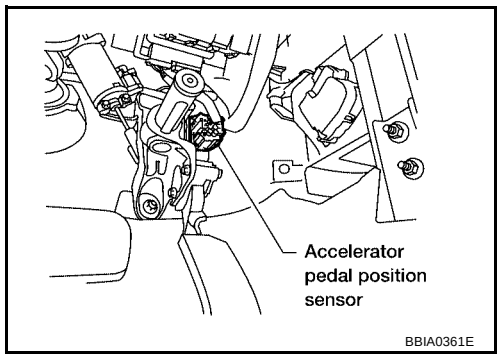

3. Check voltage between APP sensor terminal 7 and ground with CONSULT-II or tester.

   Voltage: Approximately 5V

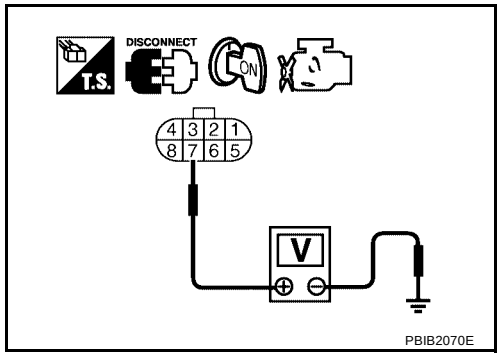

OK or NG

OK >> GO TO 5.
NG >> GO TO 3.

3. CHECK SENSOR POWER SUPPLY CIRCUITS

Check harness for short to power and short to ground, between the following terminals

ECM terminal	Sensor terminal	Reference Wiring Diagram
48	EVAP control system pressure sensor terminal 3	EC-407
49	Refrigerant pressure sensor terminal 1	EC-631
68	Power steering pressure sensor terminal 1	EC-449
90	APP sensor terminal 7	EC-461

OK or NG

OK >> GO TO 4.
NG >> Repair short to ground or short to power in harness or connectors.

4. CHECK COMPONENTS

Check the following.

- EVAP control system pressure sensor (Refer to EC-410, "Component Inspection" .)
- Power steering pressure sensor (Refer to EC-452, "Component Inspection" .)
- Refrigerant pressure sensor (Refer to EC-630, "REFRIGERANT PRESSURE SENSOR" .)

OK or NG

OK >> GO TO 7.
NG >> Replace malfunctioning components.

5. CHECK ACCELERATOR PEEDAL POSITION SENSOR

Refer to EC-574, "Component Inspection" .

OK or NG

OK >> GO TO 7.
NG >> GO TO 6.

6. REPLACE ACCELERATOR PEDAL ASSEMBLY

1. Replace accelerator pedal position assembly.
2. Perform EC-78, "Accelerator Pedal Released Position Learning" .
3. Perform EC-78, "Throttle Valve Closed Position Learning" .
4. Perform EC-78, "Idle Air Volume Learning" .

>> **INSPECTION END**

7. CHECK INTERMITTENT INCIDENT

Refer to EC-144, "TROUBLE DIAGNOSIS FOR INTERMITTENT INCIDENT" .

>> **INSPECTION END**

DTC P0850 PNP SWITCH

PFP:23006

Component Description

UBS00HBQ

When the gear position is P or N, park/neutral position (PNP) switch is ON.
TCM detects the position because the continuity of the line (the ON signal) exists.
Then the TCM sends the PNP switch signal to the ECM via combination meter.

CONSULT-II Reference Value in Data Monitor Mode

UBS00HBR

Specification data are reference values.

MONITOR ITEM	CONDITION		SPECIFICATION
P/N POSI SW	● Ignition switch: ON	Selector lever: P or N	ON
		Selector lever: Except above	OFF

On Board Diagnosis Logic

UBS00HBS

DTC No.	Trouble diagnosis name	DTC detecting condition	Possible cause
P0850 0850	Park/neutral position switch	The signal of the park/neutral position (PNP) switch is not changed in the process of engine starting and driving.	● Harness or connectors [The park/neutral position (PNP) switch circuit is open or shorted.] ● Park/neutral position (PNP) switch ● Combination meter ● TCM

DTC Confirmation Procedure

UBS00HBT

CAUTION:
Always drive vehicle at a safe speed.

NOTE:
If DTC Confirmation Procedure has been previously conducted, always turn ignition switch OFF and wait at least 10 seconds before conducting the next test.

WITH CONSULT-II

1. Turn ignition switch ON.
2. Select “P/N POSI SW” in “DATA MONITOR” mode with CONSULT-II. Then check the “P/N POSI SW” signal under the following conditions.

Position (Selector lever)	Known-good signal
N or P position	ON
Except the above position	OFF

If NG, go to EC-468, "Diagnostic Procedure" .
If OK, go to following step.

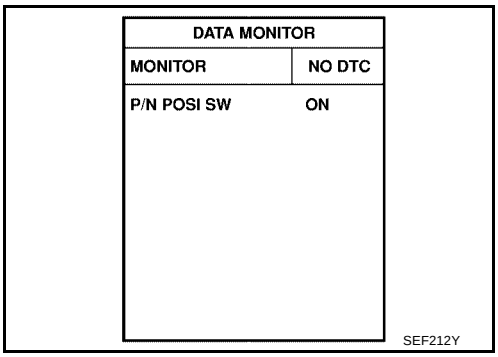

3. Select “DATA MONITOR” mode with CONSULT-II.
4. Start engine and warm it up to normal operating temperature.
5. Maintain the following conditions for at least 60 consecutive seconds.

ENG SPEED	More than 1,000 rpm
COOLAN TEMP/S	More than 70°C (158°F)
B/FUEL SCHDL	More than 2.0 msec
VHCL SPEED SE	More than 64 km/h (40 MPH)
Selector lever	Suitable position

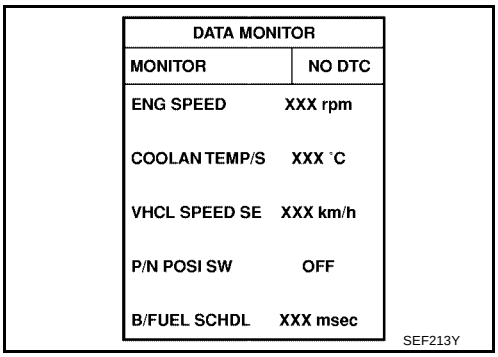

6. If 1st trip DTC is detected, go to EC-468, "Diagnostic Procedure" .

Overall Function Check

UBS00HBU

Use this procedure to check the overall function of the park/neutral position (PNP) switch circuit. During this check, a 1st trip DTC might not be confirmed.

WITH GST

1. Turn ignition switch ON.
2. Check voltage between ECM terminal 102 (PNP switch signal) and ground under the following conditions.

Condition (Gear position)	Voltage V (Known-good data)
P or N position	Approx. 0
Except the above position	BATTERY VOLTAGE (11 - 14V)

3. If NG, go to EC-468, "Diagnostic Procedure" .

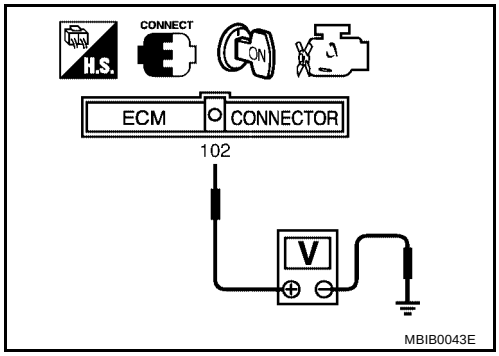

Wiring Diagram

UBS00HBV

EC-PNP/SW-01

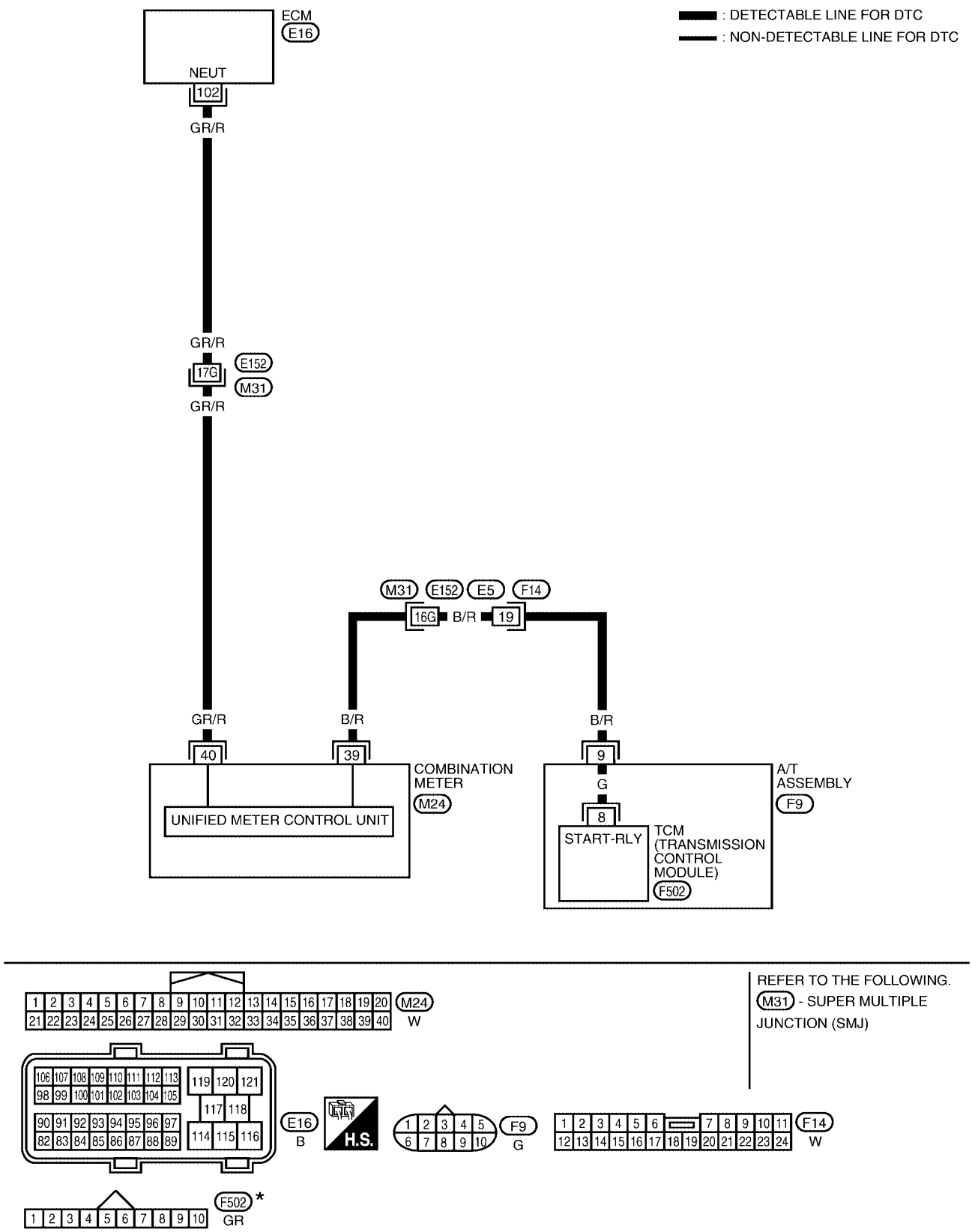

Specification data are reference values and are measured between each terminal and ground.

CAUTION:

Do not use ECM ground terminals when measuring input/output voltage. Doing so may result in damage to the ECM's transistor. Use a ground other than ECM terminals, such as the ground.

TERMINAL NO.	WIRE COLOR	ITEM	CONDITION	DATA (DC Voltage)
102	GR/R	PNP switch	**[Ignition switch: ON]** ● Selector lever: P or N	Approximately 0V
			[Ignition switch: ON] ● Except the above gear position	BATTERY VOLTAGE (11 - 14V)

Diagnostic Procedure

UBS00HBW

1. CHECK DTC WITH TCM

Refer to AT-38, "OBD-II Diagnostic Trouble Code (DTC)" .

OK or NG

OK >> GO TO 2.
NG >> Repair or replace.

2. CHECK STARTING SYSTEM

Turn ignition switch OFF, then turn it to START.

Does starter motor operate?

Yes or No

Yes >> GO TO 3.
No >> Refer to SC-10, "STARTING SYSTEM" .

3. CHECK PNP SWITCH INPUT SIGNAL CIRCUIT FOR OPEN AND SHORT-I

1. Turn ignition switch OFF.
2. Disconnect A/T assembly harness connector.
3. Disconnect combination meter harness connector.
4. Check harness continuity between A/T assembly terminal 9 and combination meter terminal 39.
   Refer to Wiring Diagram.

   Continuity should exist.

5. Also check harness for short to ground and short to power.

OK or NG

OK >> GO TO 5.
NG >> GO TO 4.

4. DETECT MALFUNCTIONING PART

Check the following.

- Harness connectors F14, E5
- Harness connectors E152, M31
- Harness for open or short between A/T assembly and combination meter

>> Repair open circuit or short to ground or short to power in harness or connectors.

5. CHECK PNP SWITCH INPUT SIGNAL CIRCUIT FOR OPEN AND SHORT-II

1. Disconnect ECM harness connector.
2. Check harness continuity between ECM terminal 102 and combination meter terminal 40.
   Refer to Wiring Diagram.

   Continuity should exist.

3. Also check harness for short to ground and short to power.

OK or NG

OK >> GO TO 7.
NG >> GO TO 6.

6. DETECT MALFUNCTIONING PART

Check the following.

- Harness connectors M31, E152
- Harness for open or short between ECM and combination meter

>> Repair open circuit or short to ground or short to power in harness or connectors.

7. CHECK PNP SWITCH INPUT SIGNAL CIRCUIT FOR OPEN AND SHORT-III

1. Disconnect TCM harness connector.
2. Check harness continuity between TCM terminal 8 and A/T assembly terminal 9.
   Refer to Wiring Diagram.

   Continuity should exist.

3. Also check harness for short to ground and short to power.

OK or NG

OK >> GO TO 8.
NG >> Repair open circuit or short to ground or short to power in harness or connectors.

8. CHECK INTERMITTENT INCIDENT

Refer to EC-144, "TROUBLE DIAGNOSIS FOR INTERMITTENT INCIDENT" .

OK or NG

OK >> GO TO 9.
NG >> Repair or replace.

9. REPLACE COMBINATION METER

Refer to DI-5, "COMBINATION METERS" .

>> **INSPECTION END**

DTC P1148, P1168 CLOSED LOOP CONTROL

PFP:22690

On Board Diagnosis Logic

UBS00H8K

These self-diagnoses have the one trip detection logic.

DTC No.	Trouble diagnosis name	DTC detecting condition	Possible cause
P1148 1148 (Bank 1)	Closed loop control function	The closed loop control function for bank 1 does not operate even when vehicle is driving in the specified condition.	● Harness or connectors [The air fuel ratio (A/F) sensor 1 circuit is open or shorted.] ● Air fuel ratio (A/F) sensor 1 ● Air fuel ratio (A/F) sensor 1 heater
P1168 1168 (Bank 2)		The closed loop control function for bank 2 does not operate even when vehicle is driving in the specified condition.	

DTC P1148 or P1168 is displayed with another DTC for air fuel ratio (A/F) sensor 1.
Perform the trouble diagnosis for the corresponding DTC.

DTC P1211 TCS CONTROL UNIT

PFP:47850

Description

UBS00H8L

The malfunction information related to TCS is transferred through the CAN communication line from “ABS actuator and electric unit (control unit)” to ECM.
Be sure to erase the malfunction information such as DTC not only for “ABS actuator and electric unit (control unit)” but also for ECM after TCS related repair.

On Board Diagnosis Logic

UBS00H8M

Freeze frame data is not stored in the ECM for this self-diagnosis.
The MIL will not light up for this self-diagnosis.

DTC No.	Trouble diagnosis name	DTC detecting condition	Possible cause
P1211 1211	TCS control unit	ECM receives a malfunction information from “ABS actuator electric unit (control unit)”	● ABS actuator and electric unit (control unit) ● TCS related parts

DTC Confirmation Procedure

UBS00H8N

TESTING CONDITION:
Before performing the following procedure, confirm that battery voltage is more than 10.5V at idle.

WITH CONSULT-II

1. Turn ignition switch ON.
2. Select “DATA MONITOR” mode with CONSULT-II.
3. Start engine and let it idle for at least 60 seconds.
4. If 1st trip DTC is detected, go to EC-471, "Diagnostic Procedure"
.

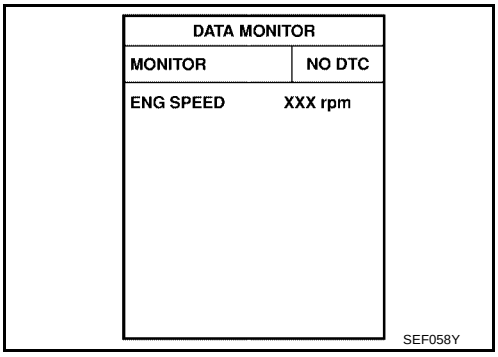

WITH GST

Follow the procedure “WITH CONSULT-II” above.

Diagnostic Procedure

UBS00H8O

Go to BRC-11, "TROUBLE DIAGNOSIS" .

DTC P1212 TCS COMMUNICATION LINE

PFP:47850

Description

UBS00H8P

NOTE:

- **If DTC P1212 is displayed with DTC U1000 or U1001, first perform the trouble diagnosis for DTC U1000, U1001. Refer to EC-151, "DTC U1000, U1001 CAN COMMUNICATION LINE" .**
- **If DTC P1212 is displayed with DTC U1010, first perform the trouble diagnosis for DTC U1010. Refer to EC-154, "DTC U1010 CAN COMMUNICATION" .**

This CAN communication line is used to control the smooth engine operation during the TCS operation. Pulse signals are exchanged between ECM and “ABS actuator and electric unit (control unit)”.
Be sure to erase the malfunction information such as DTC not only for “ABS actuator and electric unit (control unit)” but also for ECM after TCS related repair.

On Board Diagnosis Logic

UBS00H8Q

Freeze frame data is not stored in the ECM for this self-diagnosis.
The MIL will not light up for this self-diagnosis.

DTC No.	Trouble diagnosis name	DTC detecting condition	Possible cause
P1212 1212	TCS communication line	ECM can not receive the information from “ABS actuator and electric unit (control unit)” continuously.	● Harness or connectors (The CAN communication line is open or shorted.) ● ABS actuator and electric unit (control unit) ● Dead (Weak) battery

DTC Confirmation Procedure

UBS00H8R

TESTING CONDITION:
Before performing the following procedure, confirm that battery voltage is more than 10.5V at idle.

WITH CONSULT-II

1. Turn ignition switch ON.
2. Select “DATA MONITOR” mode with CONSULT-II.
3. Start engine and let it idle for at least 10 seconds.
4. If 1st trip DTC is detected, go to EC-472, "Diagnostic Procedure" .

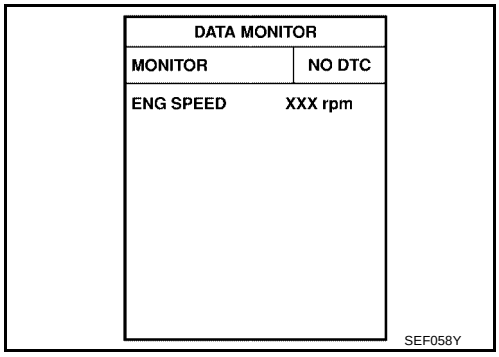

WITH GST

Follow the procedure “WITH CONSULT-II” above.

Diagnostic Procedure

UBS00H8S

Go to BRC-11, "TROUBLE DIAGNOSIS" .

DTC P1217 ENGINE OVER TEMPERATURE

PFP:00000

Description

UBS00H8T

SYSTEM DESCRIPTION

NOTE:

- **If DTC P1217 is displayed with DTC U1000 or U1001, first perform the trouble diagnosis for DTC U1000, U1001. Refer to EC-151, "DTC U1000, U1001 CAN COMMUNICATION LINE" .**
- **If DTC P1217 is displayed with DTC U1010, first perform the trouble diagnosis for DTC U1010. Refer to EC-154, "DTC U1010 CAN COMMUNICATION" .**

Cooling Fan Control

Sensor	Input signal to ECM	ECM function	Actuator
Crankshaft position sensor (POS) Camshaft position sensor (PHASE)	Engine speed*1	Cooling fan control	IPDM E/R (Cooling fan relay)
Battery	Battery voltage*1		
Wheel sensor*2	Vehicle speed		
Engine coolant temperature sensor	Engine coolant temperature		
Air conditioner switch	Air conditioner ON signal*2		
Refrigerant pressure sensor	Refrigerant pressure		

*1: The ECM determines the start signal status by the signals of engine speed and battery voltage.
*2: This signal is sent to ECM through CAN communication line.

The ECM controls the cooling fan corresponding to the vehicle speed, engine coolant temperature, refrigerant pressure, and air conditioner ON signal. The control system has 2-step control [HI/OFF].

Cooling Fan Operation

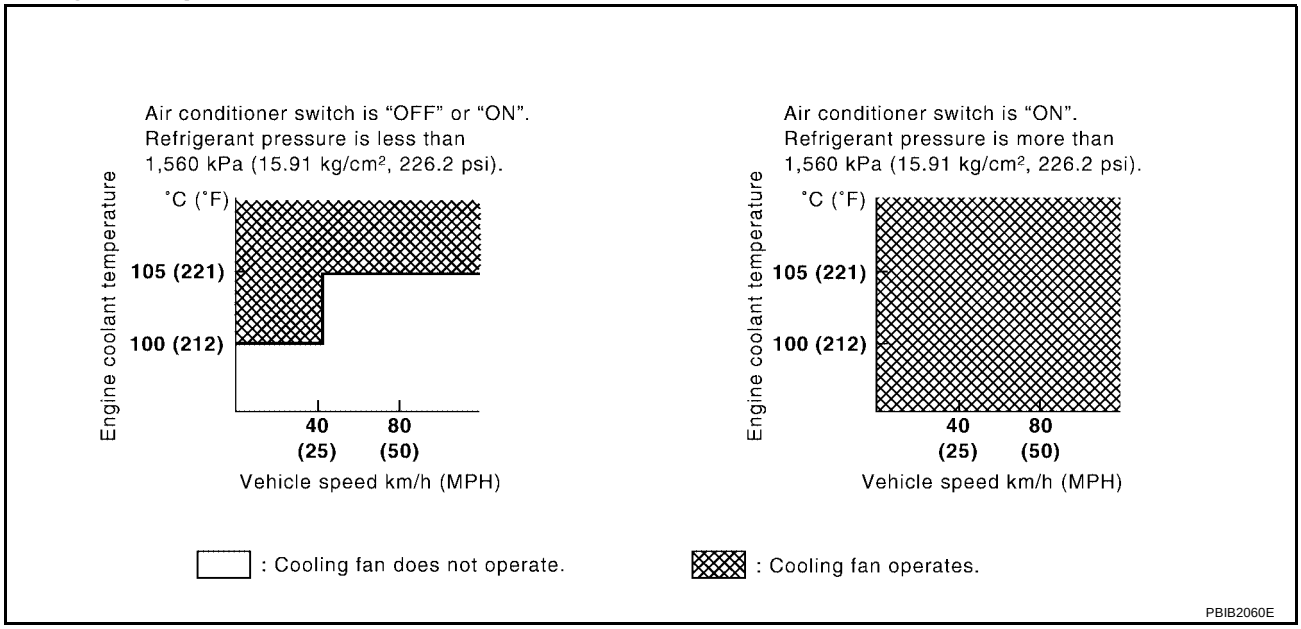

CONSULT-II Reference Value in Data Monitor Mode

UBS00H8U

Specification data are reference values.

MONITOR ITEM	CONDITION		SPECIFICATION
COOLING FAN	● Engine: After warming up, idle the engine	Engine coolant temperature: 99°C (210°F) or less	OFF
		Engine coolant temperature: 100°C (212°F) or more	HI

On Board Diagnosis Logic

UBS00H8V

If the cooling fan or another component in the cooling system malfunctions, engine coolant temperature will rise.
When the engine coolant temperature reaches an abnormally high temperature condition, a malfunction is indicated.
This self-diagnosis has the one trip detection logic.

DTC No.	Trouble diagnosis name	DTC detecting condition	Possible cause
P1217 1217	Engine over temperature (Overheat)	● Cooling fan does not operate properly (Overheat). ● Cooling fan system does not operate properly (Overheat). ● Engine coolant was not added to the system using the proper filling method. ● Engine coolant is not within the specified range.	● Harness or connectors (The cooling fan circuit is open or shorted.) ● Cooling fan ● IPDM E/R (Cooling fan relay) ● Radiator hose ● Radiator ● Radiator cap ● Reservoir tank ● Reservoir tank cap ● Water pump ● Thermostat For more information, refer to EC-481, "Main 12 Causes of Overheating" .

CAUTION:
When a malfunction is indicated, be sure to replace the coolant. Refer to MA-13, "Changing Engine Coolant" . Also, replace the engine oil. Refer to LU-8, "Changing Engine Oil" .

1. **Fill radiator with coolant up to specified level with a filling speed of 2 liters per minute. Be sure to use coolant with the proper mixture ratio. Refer to MA-12, "ANTI-FREEZE COOLANT MIXTURE RATIO" .**
2. **After refilling coolant, run engine to ensure that no water-flow noise is emitted.**

Overall Function Check

UBS00H8W

Use this procedure to check the overall function of the cooling fan. During this check, a DTC might not be confirmed.

WARNING:
Never remove the radiator cap and/or reservoir tank cap when the engine is hot. Serious burns could be caused by high pressure fluid escaping from the radiator and/or reservoir tank.
Wrap a thick cloth around cap. Carefully remove the cap by turning it a quarter turn to allow built-up pressure to escape. Then turn the cap all the way off.

WITH CONSULT-II

1. Check the coolant level in the reservoir tank and radiator.
   Allow engine to cool before checking coolant level.
   If the coolant level in the reservoir tank and/or radiator is below the proper range, skip the following steps and go to EC-478, "Diagnostic Procedure" .
2. Confirm whether customer filled the coolant or not. If customer filled the coolant, skip the following steps and go to EC-478, "Diagnostic Procedure" .
3. Turn ignition switch ON.

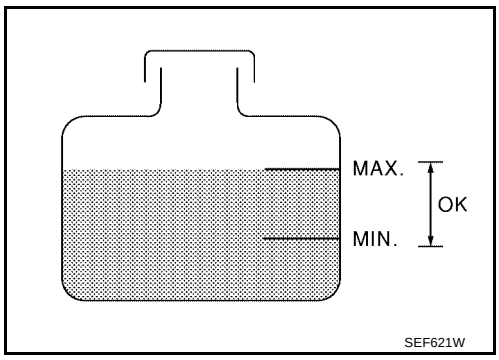

4. Perform “COOLING FAN” in “ACTIVE TEST” mode with CONSULT-II.
5. If the results are NG, go to EC-478, "Diagnostic Procedure" .

ACTIVE TEST	
COOLING FAN	OFF
MONITOR	
COOLAN TEMP/S	XXX °C

SEF646X

WITH GST

1. Check the coolant level in the reservoir tank and radiator.
   Allow engine to cool before checking coolant level.
   If the coolant level in the reservoir tank and/or radiator is below the proper range, skip the following steps and go to EC-478, "Diagnostic Procedure" .
2. Confirm whether customer filled the coolant or not. If customer filled the coolant, skip the following steps and go to EC-478, "Diagnostic Procedure" .
3. Disconnect engine coolant temperature sensor harness connector.
4. Connect 150Ω resistor to engine coolant temperature sensor harness connector.

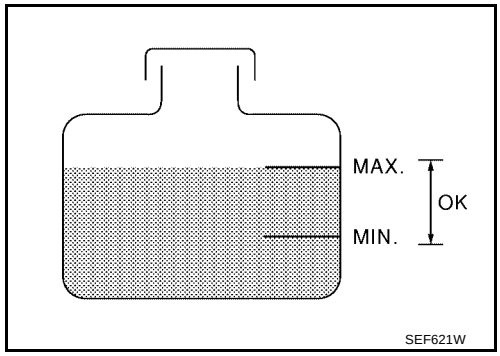

5. Start engine and make sure that cooling fan operates.
   CAUTION:
   Be careful not to overheat engine.
6. If NG, go to EC-478, "Diagnostic Procedure" .

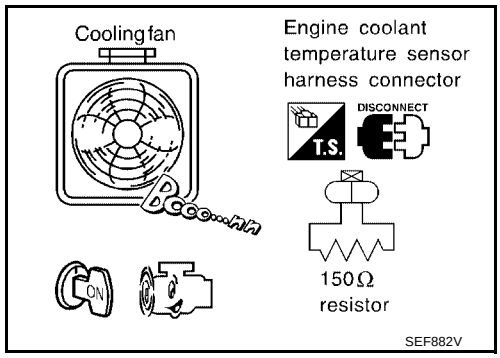

Wiring Diagram

UBS00H8X

EC-COOL/F-01

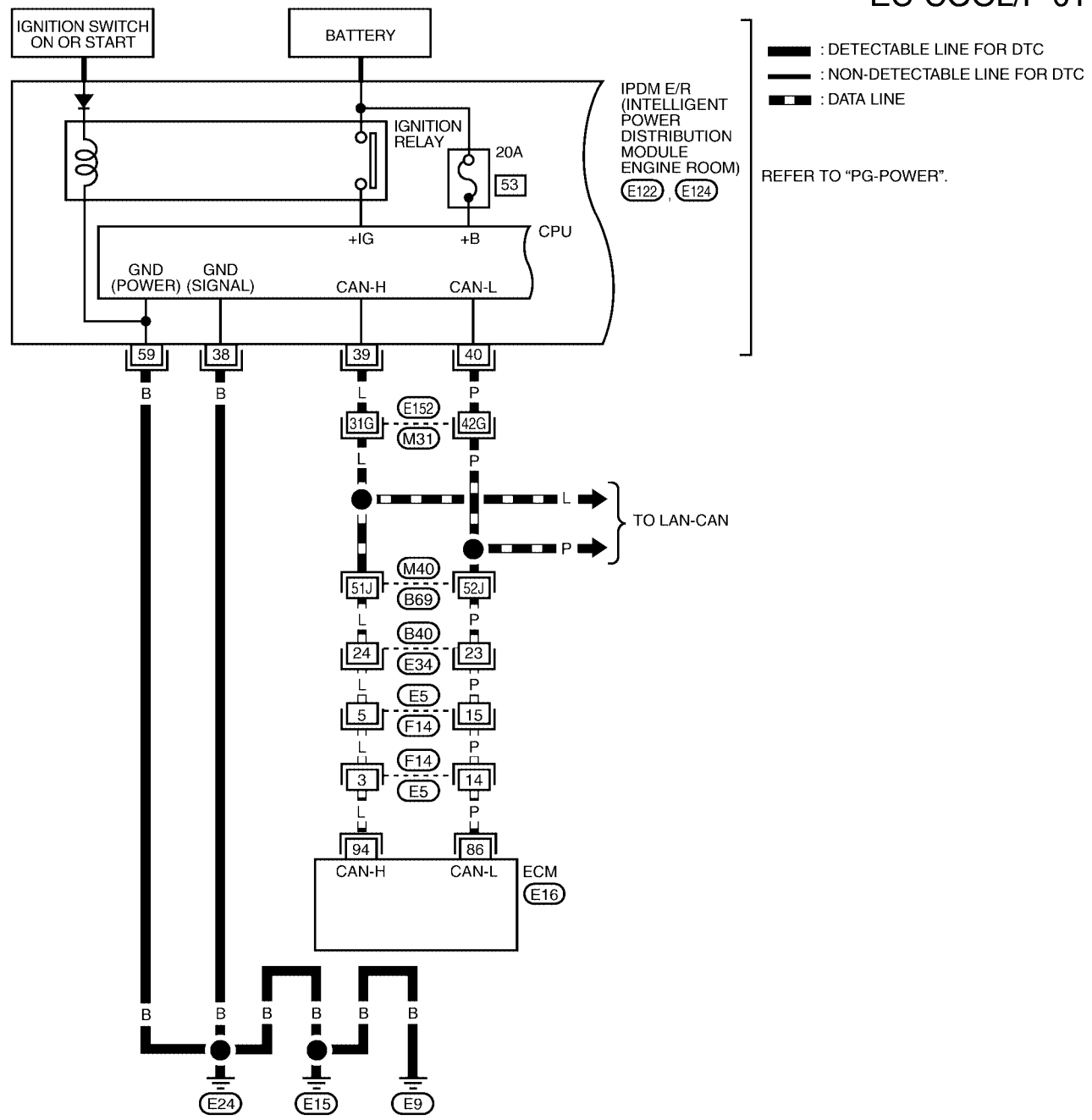

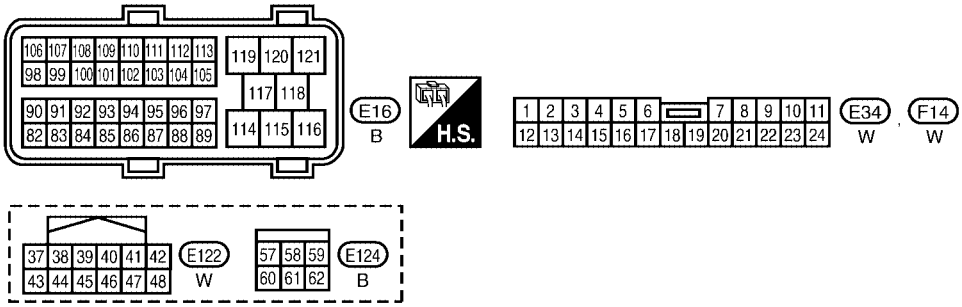

REFER TO THE FOLLOWING.
M31, M40 - SUPER MULTIPLE JUNCTION (SMJ)

BBWA2102E

EC-COOL/F-02

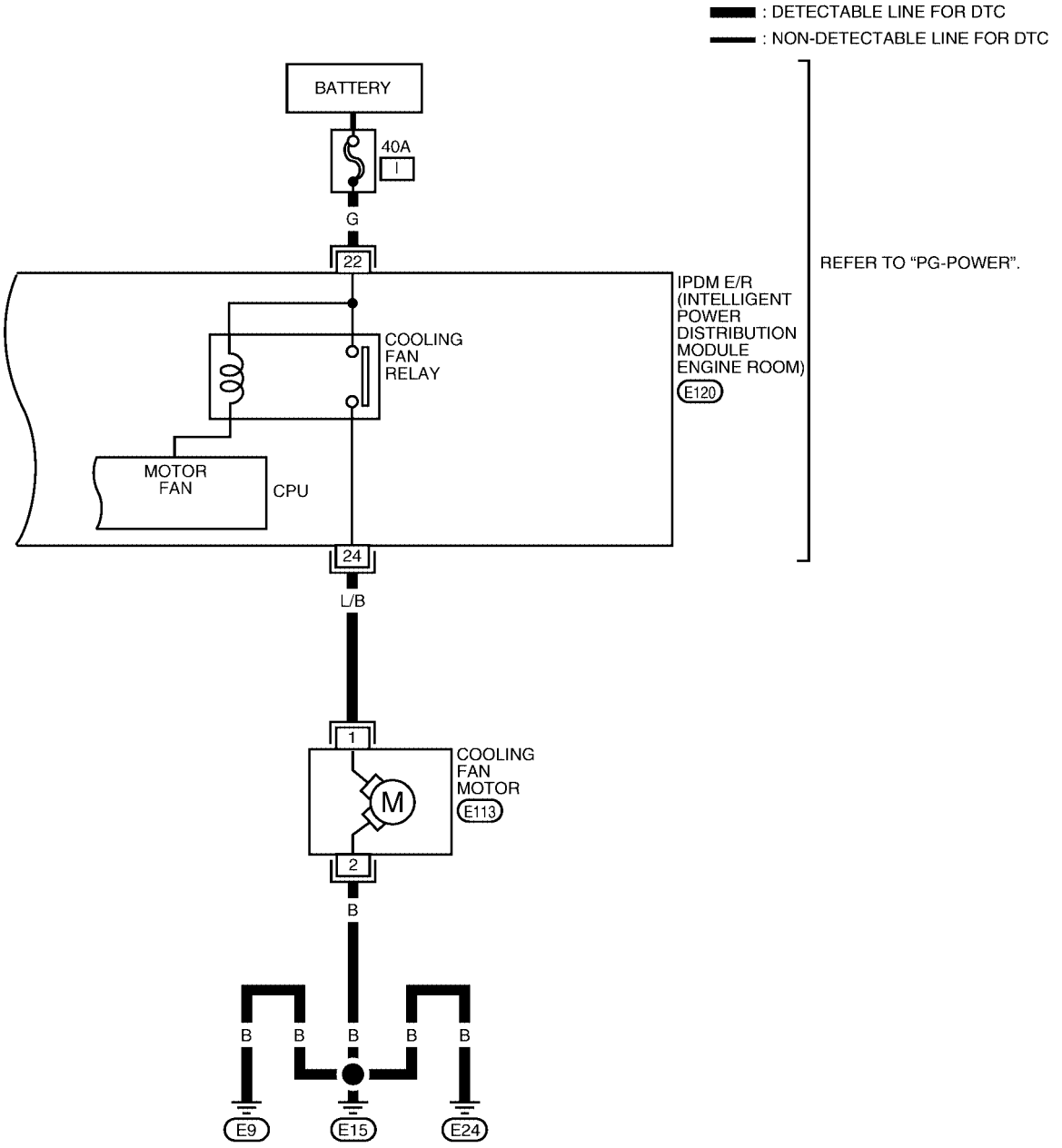

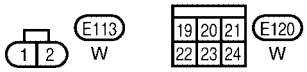

BBWA2103E

Diagnostic Procedure

UBS00H8Y

1. INSPECTION START

Do you have CONSULT-II?

Yes or No

Yes >> GO TO 2.
No >> GO TO 3.

2. CHECK COOLING FAN MOTOR OPERATION

With CONSULT-II

1. Start engine and let it idle.
2. Select “COOLING FAN” in “ACTIVE TEST” mode with CONSULT-II.
3. Make sure that cooling fan operates.

OK or NG

OK >> GO TO 4.
NG >> Check cooling fan control circuit. (Go to EC-480, "PROCEDURE A" .)

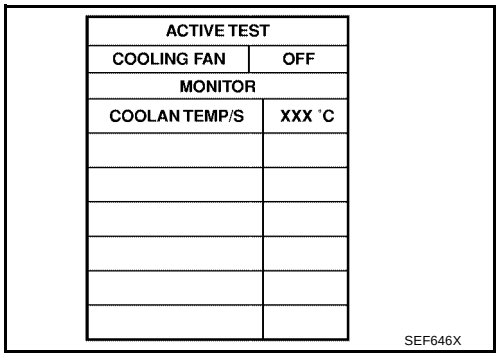

ACTIVE TEST	
COOLING FAN	OFF
MONITOR	
COOLAN TEMP/S	XXX °C

SEF646X

3. CHECK COOLING FAN MOTOR OPERATION

Without CONSULT-II

1. Disconnect engine coolant temperature sensor harness connector.
2. Connect 150Ω resistor to engine coolant temperature sensor harness connector.
3. Start engine and let it idle.
4. Make sure that cooling fan operates.

OK or NG

OK >> GO TO 4.
NG >> Check cooling fan control circuit. (Go to EC-480, "PROCEDURE A" .)

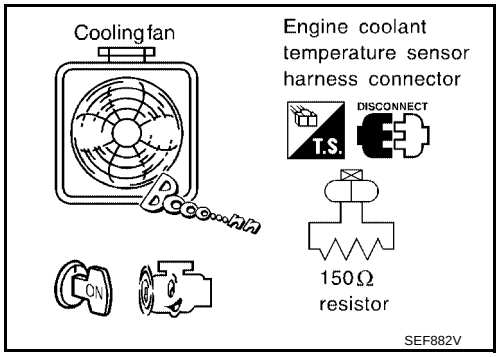

4. CHECK COOLING SYSTEM FOR LEAK

Apply pressure to the cooling system with a tester, and check if the pressure drops.

Testing pressure: 157 kPa (1.6 kg/cm^2 , 23 psi)

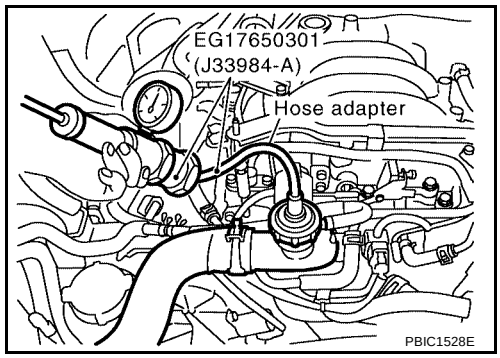

CAUTION:
Higher than the specified pressure may cause radiator damage. Pressure should not drop.

OK or NG

OK >> GO TO 5.
NG >> Check the following for leak. Refer to CO-10, "CHECKING COOLING SYSTEM FOR LEAKS" .

- Hose
- Radiator
- Radiator cap
- Water pump
- Reservoir tank

5. CHECK RESERVOIR TANK CAP

Apply pressure to cap with a tester.

Reservoir tank cap relief pressure:	**95 - 125 kPa (0.97 - 1.28 kg/cm^2 , 14 - 18 psi)**

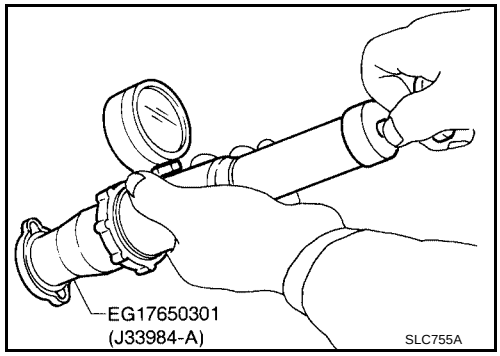

OK or NG

OK >> GO TO 6.
NG >> Replace reservoir tank cap.

6. CHECK THERMOSTAT

1. Check valve seating condition at normal room temperatures.
   It should seat tightly.
2. Check valve opening temperature and valve lift.

Valve opening temperature:	**82°C (180°F) [standard]**
Valve lift:	**More than 10.0 mm/95°C (0.394 in/203°F)**

3. Check if valve is closed at 5°C (9°F) below valve opening temperature.
   For details, refer to CO-21, "THERMOSTAT AND WATER PIPING" .

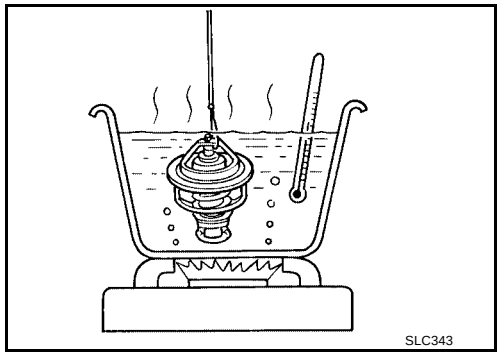

OK or NG

OK >> GO TO 7.
NG >> Replace thermostat

7. CHECK ENGINE COOLANT TEMPERATURE SENSOR

Refer to EC-196, "Component Inspection" .

OK or NG

OK >> GO TO 8.
NG >> Replace engine coolant temperature sensor.

8. CHECK MAIN 12 CAUSES

If the cause cannot be isolated, go to EC-481, "Main 12 Causes of Overheating" .

>> **INSPECTION END**

PROCEDURE A

1. CHECK POWER SUPPLY CIRCUIT

1. Turn ignition switch OFF.
2. Disconnect IPDM E/R harness connector E120.
3. Check voltage between IPDM E/R terminal 22 and ground with CONSULT-II or tester.

Voltage: Battery voltage

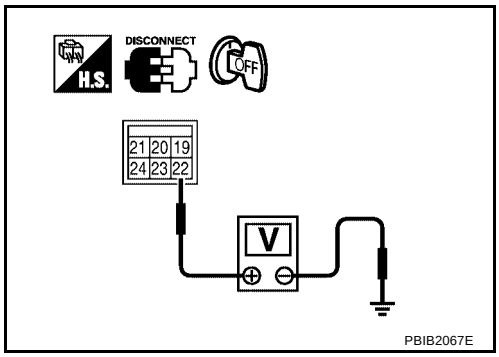

OK or NG

OK >> GO TO 3.
NG >> GO TO 2.

2. DETECT MALFUNCTIONING PART

Check the following.

- 40A fusible link
- Harness for open or short between IPDM E/R and battery

>> Repair open circuit or short to ground or short to power in harness or connectors.

3. CHECK COOLING FAN MOTOR CIRCUIT FOR OPEN OR SHORT

1. Disconnect cooling fan motor harness connector.
2. Check harness continuity between cooling fan motor terminal 1 and IPDM E/R terminal 24, cooling fan motor terminal 2 and ground.
   Refer to wiring diagram.

Continuity should exist.

3. Also check harness for short to ground and short to power.

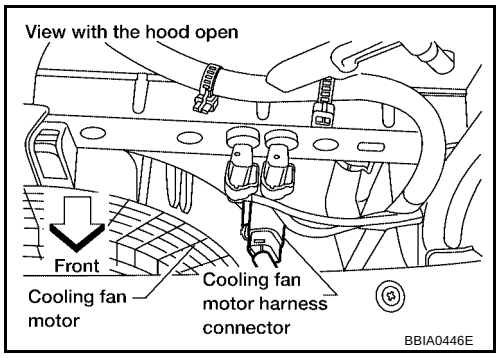

OK or NG

OK >> GO TO 4.
NG >> Repair open circuit or short to ground or short to power in harness or connectors.

4. CHECK COOLING FAN MOTOR

Refer to EC-482, "Component Inspection" .

OK or NG

OK >> GO TO 5.
NG >> Replace cooling fan motor.

5. CHECK INTERMITTENT INCIDENT

Perform EC-144, "TROUBLE DIAGNOSIS FOR INTERMITTENT INCIDENT" .

OK or NG

OK >> Replace IPDM E/R. Refer to PG-18, "IPDM E/R (INTELLIGENT POWER DISTRIBUTION MODULE ENGINE ROOM)" .

NG >> Repair or replace harness connectors.

Main 12 Causes of Overheating

UBS00H8Z

Engine	Step	Inspection item	Equipment	Standard	Reference page
OFF	1	● Blocked radiator ● Blocked condenser ● Blocked radiator grille ● Blocked bumper	● Visual	No blocking	—
	2	● Coolant mixture	● Coolant tester	50 - 50% coolant mixture	MA-11, "RECOMMENDED FLUIDS AND LUBRICANTS"
	3	● Coolant level	● Visual	Coolant up to MAX level in reservoir tank and radiator filler neck	MA-13, "Changing Engine Coolant"
	4	● Reservoir tank cap	● Pressure tester	95 - 125 kPa (0.97 - 1.28 kg/cm^2 , 14 - 18 psi) (Limit)	CO-10, "CHECKING RESERVOIR CAP"
ON*2	5	● Coolant leaks	● Visual	No leaks	CO-10, "CHECKING COOLING SYSTEM FOR LEAKS"
ON*2	6	● Thermostat	● Touch the upper and lower radiator hoses	Both hoses should be hot	CO-21, "THERMOSTAT AND WATER PIPING"
ON*1	7	● Cooling fan	● CONSULT-II	Operating	See trouble diagnosis for DTC P1217 (EC-473, "DTC P1217 ENGINE OVER TEMPERATURE").
OFF	8	● Combustion gas leak	● Color checker chemical tester 4 Gas analyzer	Negative	—
ON*3	9	● Coolant temperature gauge	● Visual	Gauge less than 3/4 when driving	—
		● Coolant overflow to reservoir tank	● Visual	No overflow during driving and idling	MA-13, "Changing Engine Coolant"
OFF*4	10	● Coolant return from reservoir tank to radiator	● Visual	Should be initial level in reservoir tank	MA-13, "Changing Engine Coolant"
OFF	11	● Cylinder head	● Straight gauge feeler gauge	0.1 mm (0.004 in) Maximum distortion (warping)	EM-68, "Inspection After Disassembly"
	12	● Cylinder block and pistons	● Visual	No scuffing on cylinder walls or piston	EM-94, "Inspection After Disassembly"

*1: Turn the ignition switch ON.
*2: Engine running at 3,000 rpm for 10 minutes.
*3: Drive at 90 km/h (55 MPH) for 30 minutes and then let idle for 10 minutes.
*4: After 60 minutes of cool down time.
For more information, refer to CO-6, "OVERHEATING CAUSE ANALYSIS" .

Component Inspection

UBS00H90

COOLING FAN MOTOR

1. Disconnect cooling fan motor harness connector.
2. Supply cooling fan motor terminals with battery voltage and check operation.
   Cooling fan motor should operate.
   If NG, replace cooling fan motor.

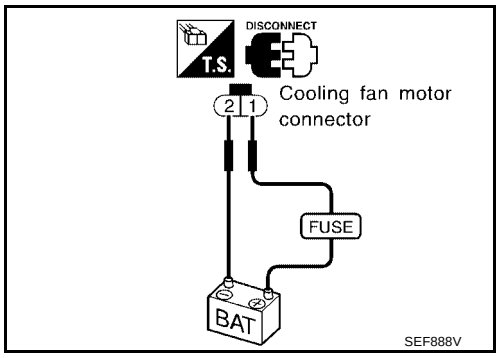

DTC P1225 TP SENSOR

PFP:16119

Component Description

UBS00H91

Electric throttle control actuator consists of throttle control motor, throttle position sensor, etc. The throttle position sensor responds to the throttle valve movement.
The throttle position sensor has the two sensors. These sensors are a kind of potentiometers which transform the throttle valve position into output voltage, and emit the voltage signal to the ECM. In addition, these sensors detect the opening and closing speed of the throttle valve and feed the voltage signals to the ECM. The ECM judges the current opening angle of the throttle valve from these signals and the ECM controls the throttle control motor to make the throttle valve opening angle properly in response to driving condition.

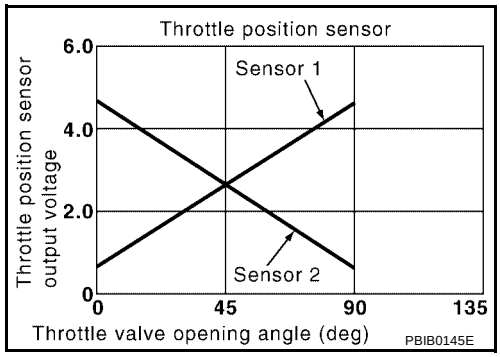

On Board Diagnosis Logic

UBS00H92

The MIL will not light up for this diagnosis.

DTC No.	Trouble diagnosis name	DTC detecting condition	Possible cause
P1225 1225	Closed throttle position learning performance	Closed throttle position learning value is excessively low.	● Electric throttle control actuator (TP sensor 1 and 2)

DTC Confirmation Procedure

UBS00H93

NOTE:
If DTC Confirmation Procedure has been previously conducted, always turn ignition switch OFF and wait at least 10 seconds before conducting the next test.
TESTING CONDITION:
Before performing the following procedure, confirm that battery voltage is more than 10V at idle.

WITH CONSULT-II

1. Turn ignition switch ON.
2. Select “DATA MONITOR” mode with CONSULT-II.
3. Turn ignition switch OFF and wait at least 10 seconds.
4. Turn ignition switch ON.
5. If 1st trip DTC is detected, go to EC-484, "Diagnostic Procedure"
.

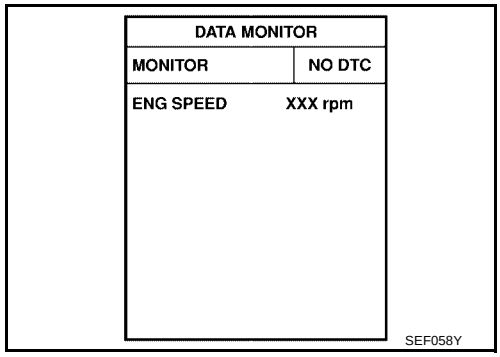

WITH GST

Follow the procedure “WITH CONSULT-II” above.

Diagnostic Procedure

UBS00H94

1. CHECK ELECTRIC THROTTLE CONTROL ACTUATOR VISUALLY

1. Turn ignition switch OFF.
2. Remove the intake air duct.
3. Check if foreign matter is caught between the throttle valve and the housing.

OK or NG

OK >> GO TO 2.
NG >> Remove the foreign matter and clean the electric throttle control actuator inside.

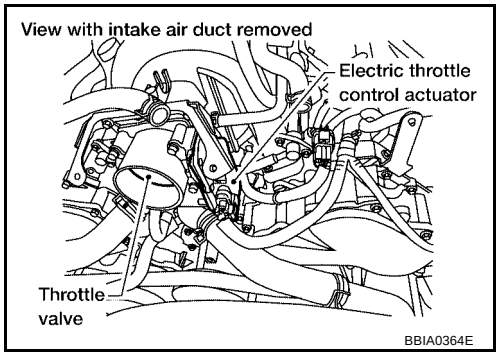

2. REPLACE ELECTRIC THROTTLE CONTROL ACTUATOR

1. Replace the electric throttle control actuator.
2. Perform EC-78, "Throttle Valve Closed Position Learning" .
3. Perform EC-78, "Idle Air Volume Learning" .

>> **INSPECTION END**

Removal and Installation

UBS00H95

ELECTRIC THROTTLE CONTROL ACTUATOR

Refer to EM-17, "INTAKE MANIFOLD" .

DTC P1226 TP SENSOR

PFP:16119

Component Description

UBS00H96

Electric throttle control actuator consists of throttle control motor, throttle position sensor, etc. The throttle position sensor responds to the throttle valve movement.
The throttle position sensor has the two sensors. These sensors are a kind of potentiometers which transform the throttle valve position into output voltage, and emit the voltage signal to the ECM. In addition, these sensors detect the opening and closing speed of the throttle valve and feed the voltage signals to the ECM. The ECM judges the current opening angle of the throttle valve from these signals and the ECM controls the throttle control motor to make the throttle valve opening angle properly in response to driving condition.

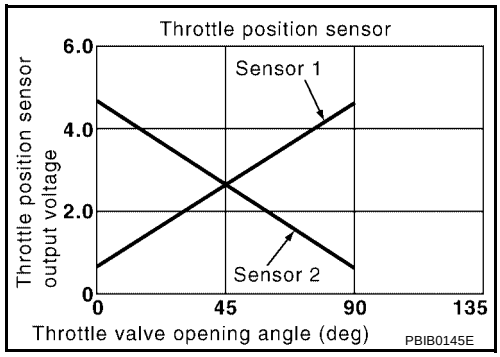

On Board Diagnosis Logic

UBS00H97

The MIL will not light up for this diagnosis.

DTC No.	Trouble diagnosis name	DTC detecting condition	Possible cause
P1226 1226	Closed throttle position learning performance	Closed throttle position learning is not performed successfully, repeatedly.	● Electric throttle control actuator (TP sensor 1 and 2)

DTC Confirmation Procedure

UBS00H98

NOTE:
If DTC Confirmation Procedure has been previously conducted, always turn ignition switch OFF and wait at least 10 seconds before conducting the next test.
TESTING CONDITION:
Before performing the following procedure, confirm that battery voltage is more than 10V at idle.

WITH CONSULT-II

1. Turn ignition switch ON.
2. Select “DATA MONITOR” mode with CONSULT-II.
3. Turn ignition switch OFF and wait at least 10 seconds.
4. Turn ignition switch ON.
5. Repeat steps 3 and 4 for 32 times.
6. If 1st trip DTC is detected, go to EC-486, "Diagnostic Procedure"
.

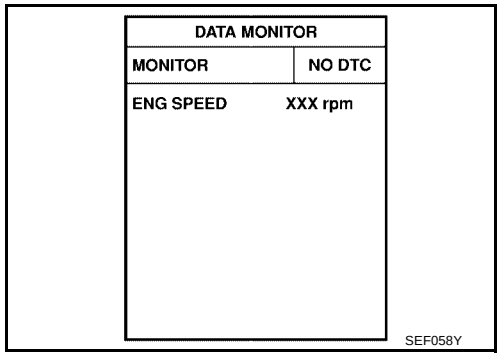

WITH GST

Follow the procedure “WITH CONSULT-II” above.

Diagnostic Procedure

UBS00H99

1. CHECK ELECTRIC THROTTLE CONTROL ACTUATOR VISUALLY

1. Turn ignition switch OFF.
2. Remove the intake air duct.
3. Check if foreign matter is caught between the throttle valve and the housing.

OK or NG

OK >> GO TO 2.
NG >> Remove the foreign matter and clean the electric throttle control actuator inside.

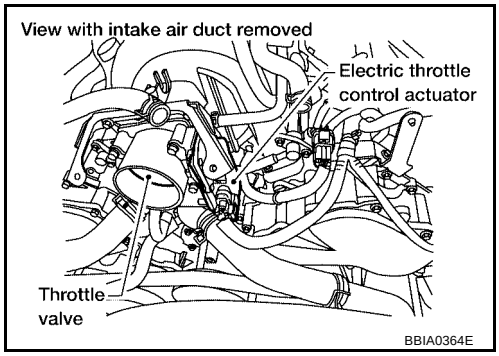

2. REPLACE ELECTRIC THROTTLE CONTROL ACTUATOR

1. Replace the electric throttle control actuator.
2. Perform EC-78, "Throttle Valve Closed Position Learning" .
3. Perform EC-78, "Idle Air Volume Learning" .

>> **INSPECTION END**

Removal and Installation

UBS00H9A

ELECTRIC THROTTLE CONTROL ACTUATOR

Refer to EM-17, "INTAKE MANIFOLD" .

DTC P1564 ICC STEERING SWITCH

PFP:25551

Component Description

UBS00L1M

ICC steering switch has variant values of electrical resistance for each button. ECM reads voltage variation of switch, and determines which button is operated.

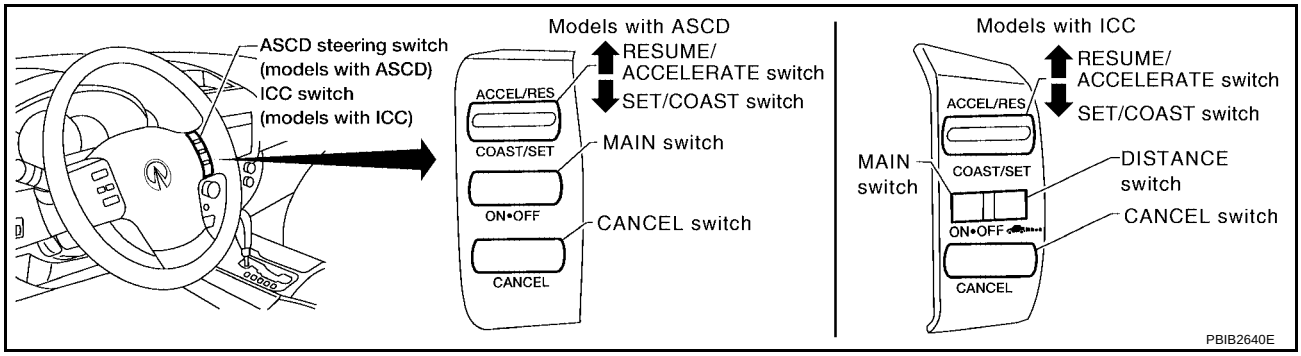

Refer to ACS-6, "DESCRIPTION" for the ICC function.

CONSULT-II Reference Value in Data Monitor Mode

UBS00L1N

Specification data are reference values.

MONITOR ITEM	CONDITION		SPECIFICATION
MAIN SW	● Ignition switch: ON	MAIN switch: Pressed	ON
		MAIN switch: Released	OFF
CANCEL SW	● Ignition switch: ON	CANCEL switch: Pressed	ON
		CANCEL switch: Released	OFF
RESUME/ACC SW	● Ignition switch: ON	RESUME/ACCELERATE switch: Pressed	ON
		RESUME/ACCELERATE switch: Released	OFF
SET SW	● Ignition switch: ON	SET/COAST switch: Pressed	ON
		SET/COAST switch: Released	OFF
DIST SW	● Ignition switch: ON	DISTANCE switch: Pressed	ON
		DISTANCE switch: Released	OFF

On Board Diagnosis Logic

UBS00L1O

This self-diagnosis has the one trip detection logic.
The MIL will not light up for this diagnosis.

NOTE:
If DTC P1564 is displayed with DTC P0605, first perform the trouble diagnosis for DTC P0605. Refer to EC-457, "DTC P0605 ECM" .

DTC No.	Trouble diagnosis name	DTC detecting condition	Possible cause
P1564 1564	ICC steering switch	● An excessively high voltage signal from the ICC steering switch is sent to ECM. ● ECM detects that input signal from the ICC steering switch is out of the specified range. ● ECM detects that the ICC steering switch is stuck ON.	● Harness or connectors (The switch circuit is open or shorted.) ● ICC steering switch ● Combination switch (spiral cable) ● ECM

DTC Confirmation Procedure

UBS00L1P

NOTE:
If DTC Confirmation Procedure has been previously conducted, always turn ignition switch OFF and wait at least 10 seconds before conducting the next test.

WITH CONSULT-II

1. Turn ignition switch ON.
2. Select “DATA MONITOR” mode with CONSULT-II.
3. Wait at least 10 seconds.
4. Press MAIN switch for at least 10 seconds, then release it and wait at least 10 seconds.
5. Press CANCEL switch for at least 10 seconds, then release it and wait at least 10 seconds.
6. Press RESUME/ACCELERATE switch for at least 10 seconds, then release it and wait at least 10 seconds.
7. Press SET/COAST switch for at least 10 seconds, then release it and wait at least 10 seconds.
8. Press DISTANCE switch for at least 10 seconds, then release it and wait at least 10 seconds.
9. If DTC is detected, go to EC-490, "Diagnostic Procedure" .

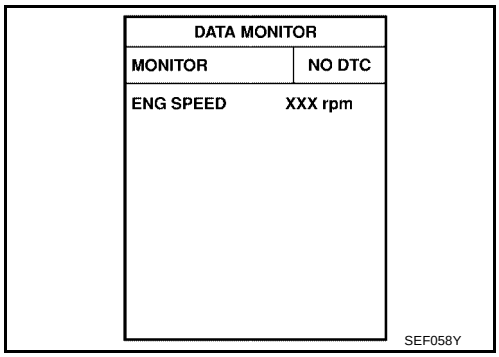

WITH GST

Follow the procedure “WITH CONSULT-II” above.

Wiring Diagram

UBS00L1Q

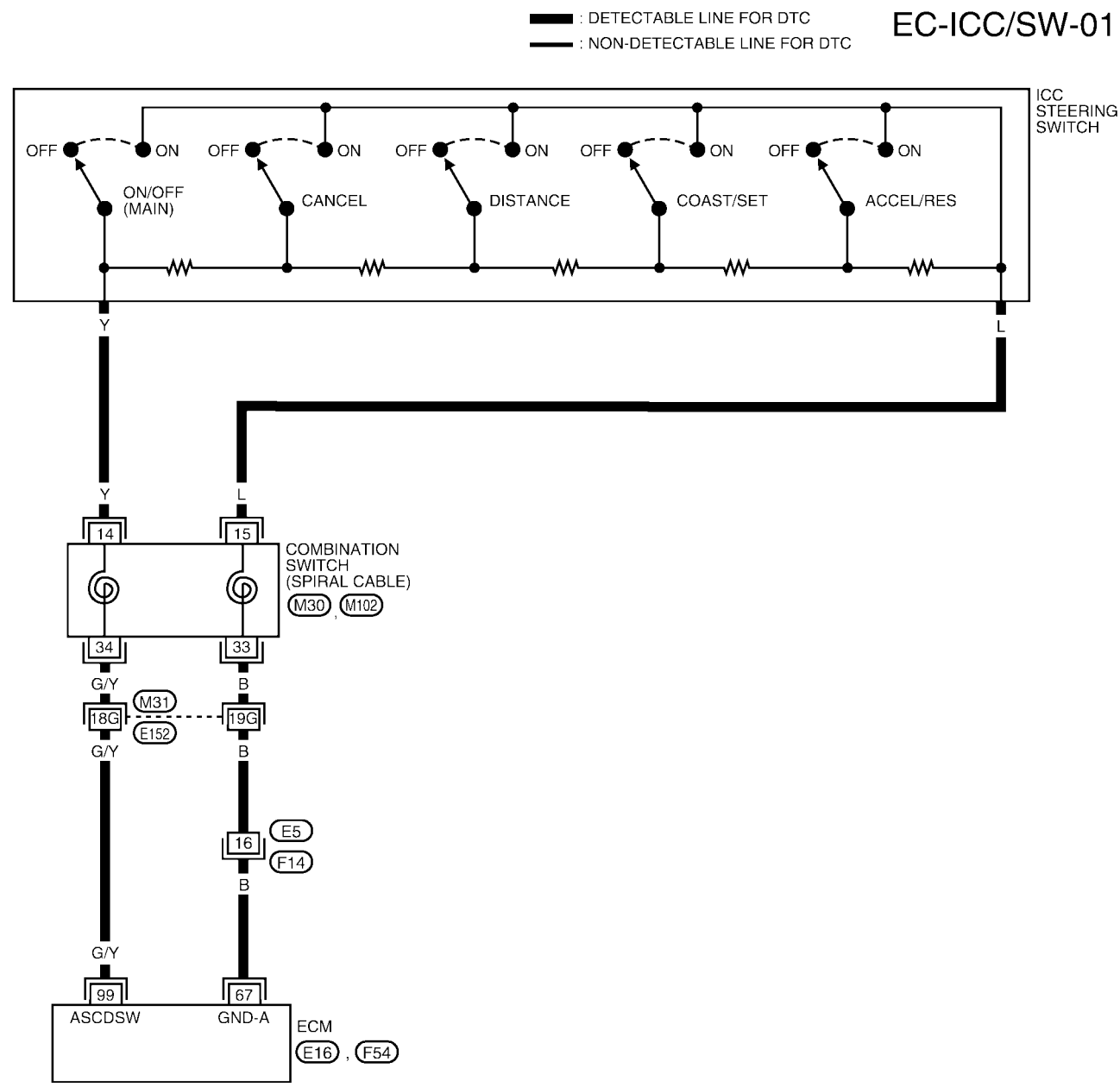

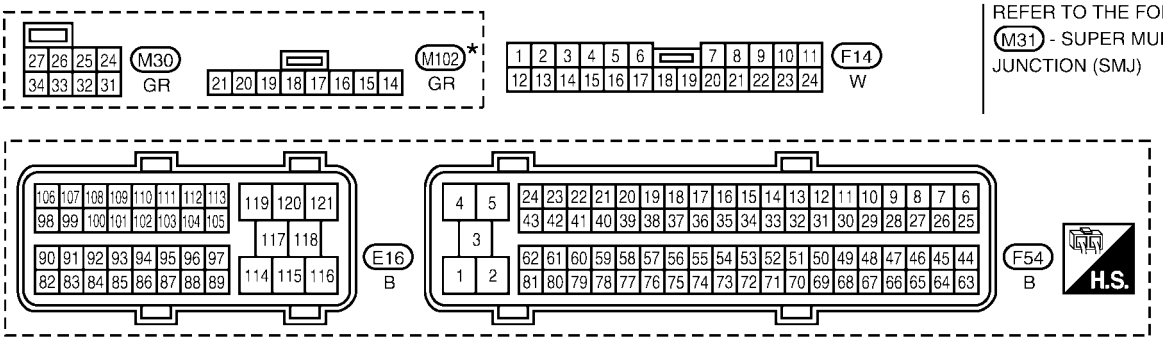

*: THIS CONNECTOR IS NOT SHOWN IN "HARNESS LAYOUT" OF PG SECTION.

BBWA2127E

Specification data are reference values and are measured between each terminal and ground.

CAUTION:

Do not use ECM ground terminals when measuring input/output voltage. Doing so may result in damage to the ECM's transistor. Use a ground other than ECM terminals, such as the ground.

TERMINAL NO.	WIRE COLOR	ITEM	CONDITION	DATA (DC Voltage)
67	B	Sensor ground	**[Engine is running]** ● **Warm-up condition** ● Idle speed	Approximately 0V
99	G/Y	ICC steering switch	**[Ignition switch: ON]** ● ICC steering switch: OFF	Approximately 4.3V
			[Ignition switch: ON] ● MAIN switch: Pressed	Approximately 0V
			[Ignition switch: ON] ● CANCEL switch: Pressed	Approximately 1.3V
			[Ignition switch: ON] ● RESUME/ACCELERATE switch: Pressed	Approximately 3.7V
			[Ignition switch: ON] ● SET/COAST switch: Pressed	Approximately 3V
			[Ignition switch: ON] ● DISTANCE switch: Pressed	Approximately 2.2V

Diagnostic Procedure

UBS00L1R

1. CHECK GROUND CONNECTIONS

1. Turn ignition switch OFF.
2. Loosen and retighten three ground screws on the body.
   Refer to EC-150, "Ground Inspection" .

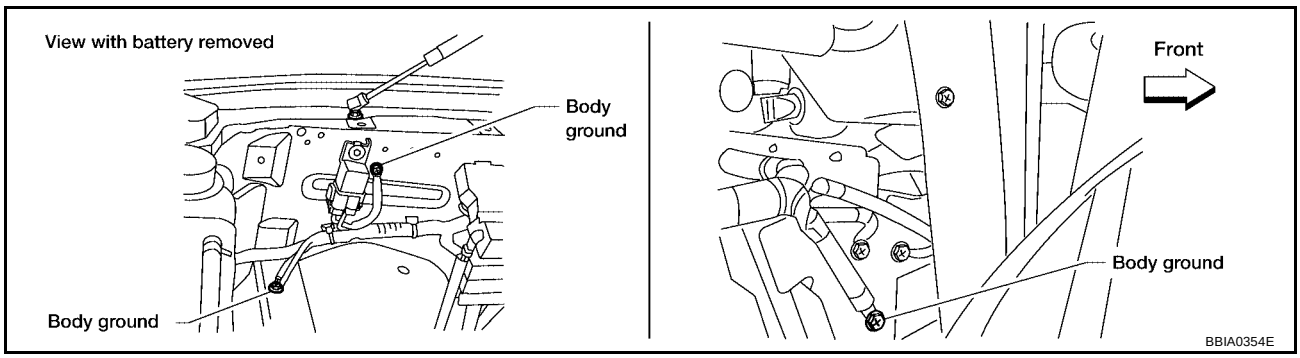

OK or NG

OK >> GO TO 2.
NG >> Repair or replace ground connections.

2. CHECK ICC STEERING SWITCH CIRCUIT

With CONSULT-II

1. Turn ignition switch ON.
2. Select “MAIN SW”, “CANCEL SW”, “RESUME/ACC SW”, “SET SW” and “DIST SW” in “DATA MONITOR” mode with CONSULT-II.
3. Check each item indication under the following conditions.

Switch	Monitor item	Condition	Indication
MAIN switch	MAIN SW	Pressed	ON
		Released	OFF
CANCEL switch	CANCEL SW	Pressed	ON
		Released	OFF
RESUME/ACCELERATE switch	RESUME/ACC SW	Pressed	ON
		Released	OFF
SET/COAST switch	SET SW	Pressed	ON
		Released	OFF
DISTANCE switch	DIST SW	Pressed	ON
		Released	OFF

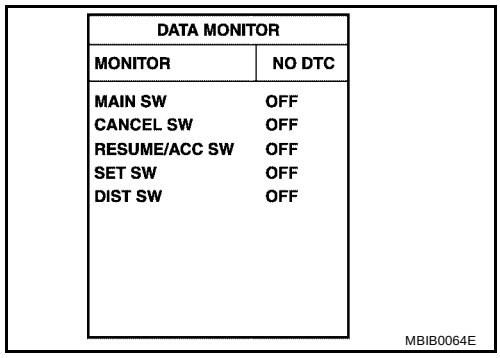

Without CONSULT-II

1. Turn ignition switch ON.
2. Check voltage between ECM terminal 99 and ground with pressing each button.

Switch	Condition	Voltage [V]
MAIN switch	Pressed	Approx. 0
	Released	Approx. 4.3
CANCEL switch	Pressed	Approx. 1.3
	Released	Approx. 4.3
RESUME/ACCELERATE switch	Pressed	Approx. 3.7
	Released	Approx. 4.3
SET/COAST switch	Pressed	Approx. 3.0
	Released	Approx. 4.3
DISTANCE switch	Pressed	Approx. 2.2
	Released	Approx. 4.3

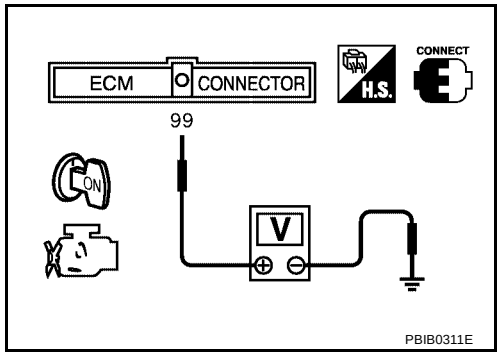

OK or NG

OK >> GO TO 8.
NG >> GO TO 3.

3. CHECK ICC STEERING SWITCH GROUND CIRCUIT FOR OPEN AND SHORT

1. Turn ignition switch OFF.
2. Disconnect ECM harness connector.
3. Disconnect combination switch harness connector.
4. Check harness continuity between combination switch terminal 15 and ECM terminal 67.
   Refer to Wiring Diagram.

   Continuity should exist.

5. Also check harness for short to ground and short to power.

OK or NG

OK >> GO TO 5.
NG >> GO TO 4.

4. DETECT MALFUNCTIONING PART

Check the following.

- Harness connectors M31, E152
- Harness connectors E5, F14
- Combination switch (spiral cable)
- Harness for open and short between ECM and combination switch

>> Repair open circuit or short to ground or short to power in harness or connectors.

5. CHECK ICC STEERING SWITCH INPUT SIGNAL CIRCUIT FOR OPEN AND SHORT

1. Check harness continuity between ECM terminal 99 and combination switch terminal 14.
   Refer to Wiring Diagram.

   Continuity should exist.

2. Also check harness for short to ground and short to power.

OK or NG

OK >> GO TO 7.
NG >> GO TO 6.

6. DETECT MALFUNCTIONING PART

Check the following.

- Harness connectors M31, E152
- Combination switch (spiral cable)
- Harness for open and short between ECM and combination switch

>> Repair open circuit or short to ground or short to power in harness or connectors.

7. CHECK ICC STEERING SWITCH

Refer to EC-493, "Component Inspection" .

OK or NG

OK >> GO TO 8.
NG >> Replace ICC steering switch.

8. CHECK INTERMITTENT INCIDENT

Refer to EC-144, "TROUBLE DIAGNOSIS FOR INTERMITTENT INCIDENT" .

>> **INSPECTION END**

Component Inspection

UBS00L1S

ICC STEERING SWITCH

1. Disconnect combination switch (spiral cable) harness connector M102.
2. Check continuity between combination switch terminals 1 and 2 with pushing each switch.

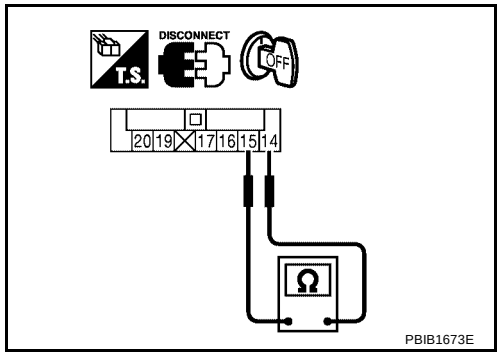

Switch	Condition	Resistance [Ω]
MAIN switch	Pressed	Approx. 0
	Released	Approx. 5,500
CANCEL switch	Pressed	Approx. 310
	Released	Approx. 5,500
RESUME/ACCELERATE switch	Pressed	Approx. 2,600
	Released	Approx. 5,500
SET/COAST switch	Pressed	Approx. 1,400
	Released	Approx. 5,500
DISTANCE switch	Pressed	Approx. 740
	Released	Approx. 5,500

If NG, replace ICC steering switch.

DTC P1564 ASCD STEERING SWITCH

PFP:25551

Component Description

UBS00L0W

ASCD steering switch has variant values of electrical resistance for each button. ECM reads voltage variation of switch, and determines which button is operated.

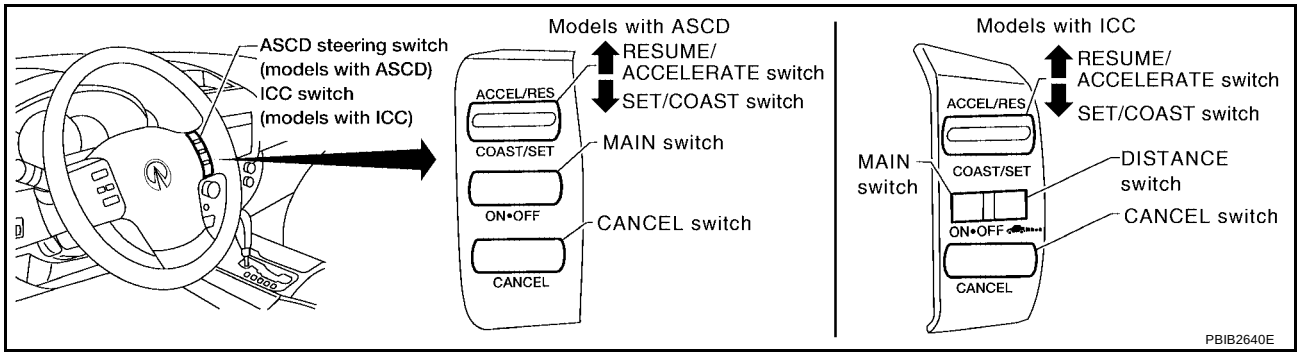

Refer to EC-29, "AUTOMATIC SPEED CONTROL DEVICE (ASCD)" for the ASCD function.

CONSULT-II Reference Value in Data Monitor Mode

UBS00L0X

Specification data are reference values.

MONITOR ITEM	CONDITION		SPECIFICATION
MAIN SW	● Ignition switch: ON	MAIN switch: Pressed	ON
		MAIN switch: Released	OFF
CANCEL SW	● Ignition switch: ON	CANCEL switch: Pressed	ON
		CANCEL switch: Released	OFF
RESUME/ACC SW	● Ignition switch: ON	RESUME/ACCELERATE switch: Pressed	ON
		RESUME/ACCELERATE switch: Released	OFF
SET SW	● Ignition switch: ON	SET/COAST switch: Pressed	ON
		SET/COAST switch: Released	OFF

On Board Diagnosis Logic

UBS00L0Y

This self-diagnosis has the one trip detection logic.
The MIL will not light up for this diagnosis.

NOTE:
If DTC P1564 is displayed with DTC P0605, first perform the trouble diagnosis for DTC P0605. Refer to EC-457, "DTC P0605 ECM".

DTC No.	Trouble Diagnosis Name	DTC Detecting Condition	Possible Cause
P1564 1564	ASCD steering switch	● An excessively high voltage signal from the ASCD steering switch is sent to ECM. ● ECM detects that input signal from the ASCD steering switch is out of the specified range. ● ECM detects that the ASCD steering switch is stuck ON.	● Harness or connectors (The switch circuit is open or shorted.) ● ASCD steering switch ● Combination meter (spiral cable) ● ECM

DTC Confirmation Procedure

UBS00L0Z

NOTE:
If DTC Confirmation Procedure has been previously conducted, always turn ignition switch OFF and wait at least 10 seconds before conducting the next test.

WITH CONSULT-II

1. Turn ignition switch ON.
2. Select “DATA MONITOR” mode with CONSULT-II.
3. Wait at least 10 seconds.
4. Press MAIN switch for at least 10 seconds, then release it and wait at least 10 seconds.
5. Press CANCEL switch for at least 10 seconds, then release it and wait at least 10 seconds.
6. Press RESUME/ACCELERATE switch for at least 10 seconds, then release it and wait at least 10 seconds.
7. Press SET/COAST switch for at least 10 seconds, then release it and wait at least 10 seconds.
8. If DTC is detected, go to EC-497, "Diagnostic Procedure" .

WITH GST

Follow the procedure “WITH CONSULT-II” above.

Wiring Diagram

UBS00L10

EC-ASC/SW-01

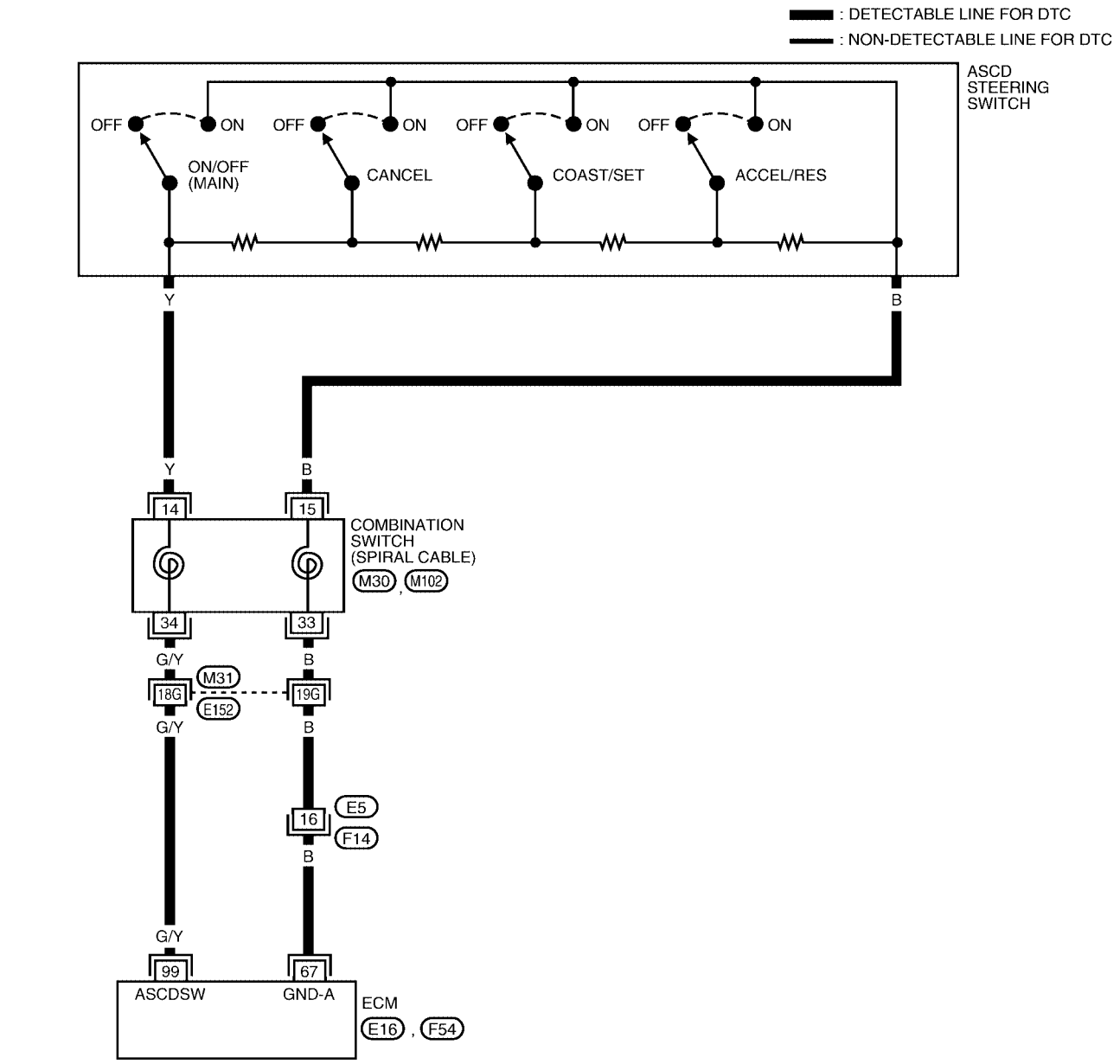

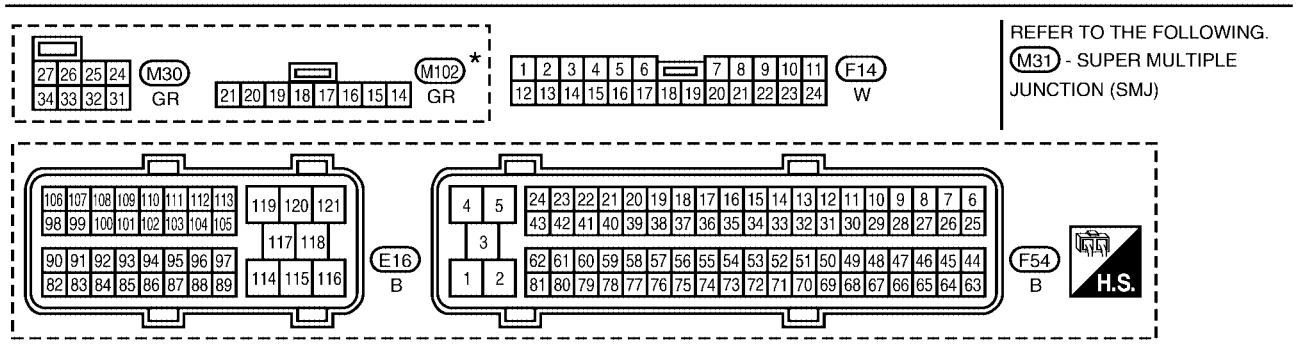

★: THIS CONNECTOR IS NOT SHOWN IN "HARNESS LAYOUT" OF PG SECTION.

BBWA2104E

Specification data are reference values and are measured between each terminal and ground.

CAUTION:

Do not use ECM ground terminals when measuring input/output voltage. Doing so may result in damage to the ECM's transistor. Use a ground other than ECM terminals, such as the ground.

TERMINAL NO.	WIRE COLOR	ITEM	CONDITION	DATA (DC Voltage)
67	B	Sensor ground	**[Engine is running]** ● **Warm-up condition** ● Idle speed	Approximately 0V
99	G/Y	ASCD steering switch	**[Ignition switch: ON]** ● ASCD steering switch: OFF	Approximately 4V
			[Ignition switch: ON] ● MAIN switch: ON	Approximately 0V
			[Ignition switch: ON] ● CANCEL switch: ON	Approximately 1V
			[Ignition switch: ON] ● RESUME/ACCELERATTTE switch: ON	Approximately 3V
			[Ignition switch: ON] ● SET/COAST switch: ON	Approximately 2V

Diagnostic Procedure

UBS00L11

1. CHECK GROUND CONNECTIONS

1. Turn ignition switch OFF.
2. Loosen and retighten three ground screws on the body.
   Refer to EC-150, "Ground Inspection" .

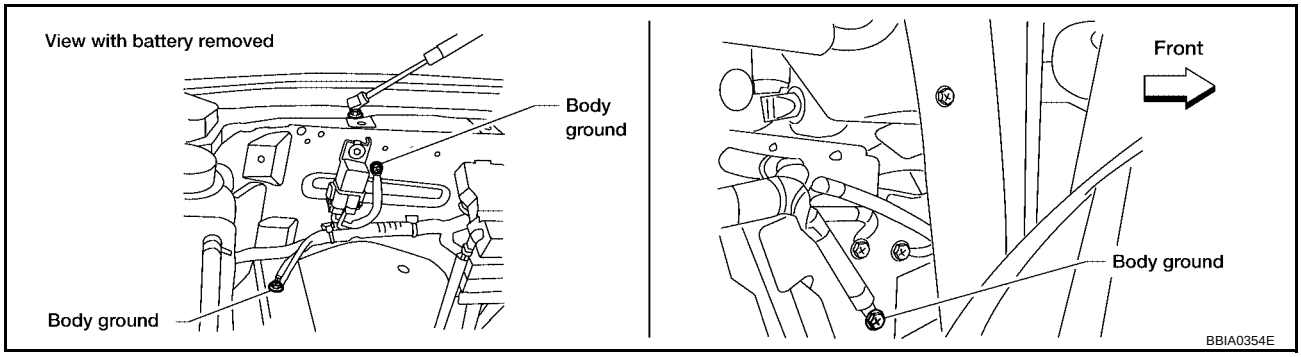

OK or NG

OK >> GO TO 2.
NG >> Repair or replace ground connections.

2. CHECK ASCD STEERING SWITCH CIRCUIT

With CONSULT-II

1. Turn ignition switch ON.
2. Select “MAIN SW”, “CANCEL SW”, RESUME/ACC SW” and “SET SW” in “DATA MONITOR” mode with CONSULT-II.
3. Check each item indication under the following conditions.

Switch	Monitor item	Condition	Indication
MAIN switch	MAIN SW	Pressed	ON
		Released	OFF
CANCEL switch	CANCEL SW	Pressed	ON
		Released	OFF
RESUME/ACCELERATE switch	RESUME/ACC SW	Pressed	ON
		Released	OFF
SET/COAST switch	SET SW	Pressed	ON
		Released	OFF

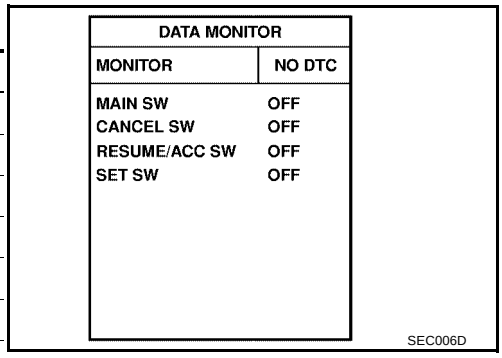

Without CONSULT-II

1. Turn ignition switch ON.
2. Check voltage between ECM terminal 99 and ground with pressing each button.

Switch	Condition	Voltage [V]
MAIN switch	Pressed	Approx. 0
	Released	Approx. 4
CANCEL switch	Pressed	Approx. 1
	Released	Approx. 4
RESUME/ACCELERATE switch	Pressed	Approx. 3
	Released	Approx. 4
SET/COAST switch	Pressed	Approx. 2
	Released	Approx. 4

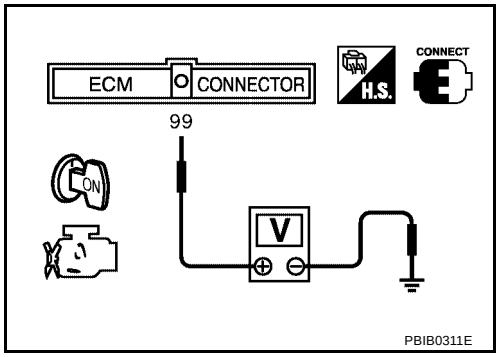

OK or NG

OK >> GO TO 8.
NG >> GO TO 3.

3. CHECK ASCD STEERING SWITCH GROUND CIRCUIT FOR OPEN AND SHORT

1. Turn ignition switch OFF.
2. Disconnect combination switch harness connector M102.
3. Disconnect ECM harness connector.
4. Check harness continuity between combination switch terminal 15 and ECM terminal 67.
   Refer to Wiring Diagram.

   Continuity should exist.

5. Also check harness for short to ground and short to power.

OK or NG

OK >> GO TO 5.
NG >> GO TO 4.

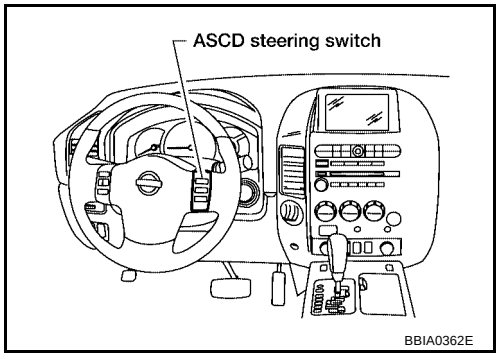

4. DETECT MALFUNCTIONING PART

Check the following.

- Harness connectors M31, E152
- Harness connectors E5, F14
- Combination switch (spiral cable)
- Harness for open and short between ECM and combination switch

>> Repair open circuit or short to ground or short to power in harness or connectors.

5. CHECK ASCD STEERING SWITCH INPUT SIGNAL CIRCUIT FOR OPEN AND SHORT

1. Check harness continuity between ECM terminal 99 and combination switch terminal 14.
   Refer to Wiring Diagram.

   Continuity should exist.

2. Also check harness for short to ground and short to power.

OK or NG

OK >> GO TO 7.
NG >> GO TO 6.

6. DETECT MALFUNCTIONING PART

Check the following.

- Harness connectors M31, E152
- Combination switch (spiral cable)
- Harness for open and short between ECM and combination switch

>> Repair open circuit or short to ground or short to power in harness or connectors.

7. CHECK ASCD STEERING SWITCH

Refer to EC-500, "Component Inspection" .

OK or NG

OK >> GO TO 8.
NG >> Replace ASCD steering switch. Refer to AV-59, "STEERING WHEEL AUDIO CONTROL SWITCHES" .

8. CHECK INTERMITTENT INCIDENT

Refer to EC-144, "TROUBLE DIAGNOSIS FOR INTERMITTENT INCIDENT" .

>> **INSPECTION END**

Component Inspection

UBS00L12

ASCD STEERING SWITCH

1. Disconnect combination switch (spiral cable) harness connector M102.
2. Check continuity between combination switch (spiral cable) terminals 14 and 15 with pushing each switch.

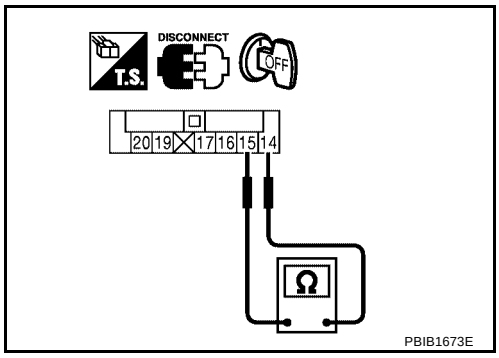

Switch	Condition	Resistance [Ω]
MAIN switch	Pressed	Approx. 0
	Released	Approx. 4,000
CANCEL switch	Pressed	Approx. 250
	Released	Approx. 4,000
RESUME/ACCELERATE switch	Pressed	Approx. 1,480
	Released	Approx. 4,000
SET/COAST switch	Pressed	Approx. 660
	Released	Approx. 4,000

DTC P1568 ICC FUNCTION

PFP:18995

On Board Diagnosis Logic

UBS00L1T

This self-diagnosis has the one trip detection logic.
The MIL will not light up for this diagnosis.

NOTE:

- **If DTC P1568 is displayed with DTC U1000, U1001, first perform the trouble diagnosis for DTC U1000, U1001. Refer to EC-151, "DTC U1000, U1001 CAN COMMUNICATION LINE" .**
- **If DTC P1568 is displayed with DTC U1010, first perform the trouble diagnosis for DTC U1010. Refer to EC-154, "DTC U1010 CAN COMMUNICATION" .**
- **If DTC P1568 is displayed with DTC P0605, first perform the trouble diagnosis for DTC P0605. Refer to EC-457, "DTC P0605 ECM".**

DTC No.	Trouble Diagnosis Name	DTC Detecting Condition	Possible Cause
P1568 1568	ICC function	ECM detects a difference between signals from ICC unit is out of specified range.	● Harness or connectors (The CAN communication line is open or shorted.) ● ICC unit ● ECM

DTC Confirmation Procedure

UBS00L1U

CAUTION:
Always drive vehicle at a safe speed.

NOTE:
If DTC Confirmation Procedure has been previously conducted, always turn ignition switch OFF and wait at least 10 seconds before conducting the next test.

TESTING CONDITION:
Step 4 may be conducted with the drive wheels lifted in the shop or by driving the vehicle. If a road test is expected to be easier, it is unnecessary to lift the vehicle.

WITH CONSULT-II

1. Turn ignition switch ON.
2. Select “DATA MONITOR” mode with CONSULT-II.
3. Press MAIN switch on ICC steering switch.
4. Drive the vehicle at more than 40 km/h (25 MPH).
5. Press SET/COAST switch.
6. If DTC is detected, go to EC-501, "Diagnostic Procedure" .

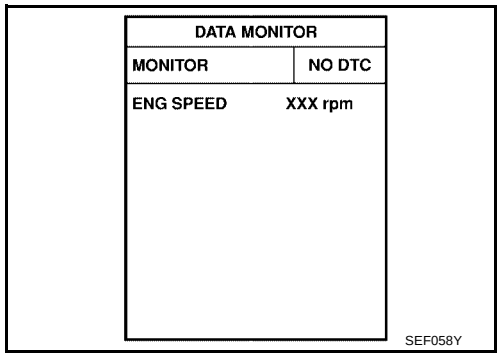

WITH GST

Follow the procedure “WITH CONSULT-II” above.

Diagnostic Procedure

UBS00L1V

1. REPLACE ICC UNIT

1. Replace ICC unit.
2. Perform ACS-9, "ACTION TEST" .
3. Check DTC of ICC unit. Refer to ACS-36, "TROUBLE DIAGNOSIS FOR SELF-DIAGNOSTIC ITEMS" .

>> **INSPECTION END**

DTC P1572 ICC BRAKE SWITCH

PFP:25320

Component Description

UBS00L1W

When the brake pedal is depressed, ICC brake switch is turned OFF and stop lamp switch is turned ON. ECM detects the state of the brake pedal by this input of two kinds (ON/OFF signal).
Refer to ACS-6, "DESCRIPTION" for the ICC function.

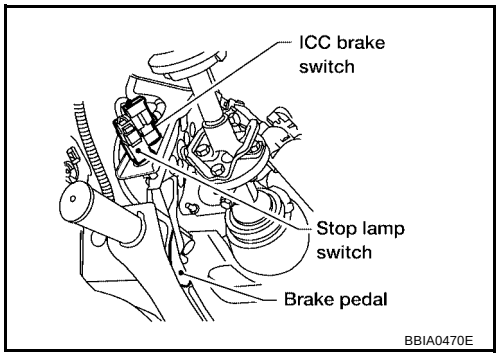

CONSULT-II Reference Value in Data Monitor Mode

UBS00L1X

Specification data are reference values.

MONITOR ITEM	CONDITION		SPECIFICATION
BRAKE SW1 (ICC brake switch)	● Ignition switch: ON	Brake pedal: Fully released	ON
		Brake pedal: Slightly depressed	OFF
BRAKE SW2 (stop lamp switch)	● Ignition switch: ON	Brake pedal: Fully released	OFF
		Brake pedal: Slightly depressed	ON

On Board Diagnosis Logic

UBS00L1Y

This diagnosis has the one trip detection logic.
The MIL will not light up for this diagnosis.

NOTE:

- **If DTC P1572 is displayed with DTC P0605, first perform the trouble diagnosis for DTC P0605. Refer to EC-457, "DTC P0605 ECM" .**
- **This self-diagnosis has the one trip detection logic. When malfunction A is detected, DTC is not stored in ECM memory. And in that case, 1st trip DTC and 1st trip freeze frame data are displayed. 1st trip DTC is erased when ignition switch OFF. And even when malfunction A is detected in two consecutive trips, DTC is not stored in ECM memory.**

DTC No.	Trouble diagnosis name	DTC detecting condition		Possible cause
P1572 1572	ICC brake switch	A)	When vehicle speed is above 30 km/h (19 MPH), ON signals from the stop lamp switch and the ICC brake switch are sent to ECM at the same time.	● Harness or connectors (The stop lamp switch circuit is shorted.) ● Harness or connectors (The ICC brake switch circuit is shorted.) ● Stop lamp switch ● ICC brake switch ● ICC brake hold relay ● Incorrect stop lamp switch installation ● Incorrect ICC brake switch installation ● ECM
		B)	ICC brake switch signal is not sent to ECM for extremely long time while the vehicle is driving	

DTC Confirmation Procedure

UBS00L1Z

CAUTION:
Always drive vehicle at a safe speed.

NOTE:
- If DTC Confirmation Procedure has been previously conducted, always turn ignition switch OFF and wait at least 10 seconds before conducting the next test.
- Procedure for malfunction B is not described here. It takes extremely long time to complete procedure for malfunction B. By performing procedure for malfunction A, the incident that causes malfunction B can be detected.

TESTING CONDITION:
Steps 4 and 5 may be conducted with the drive wheels lifted in the shop or by driving the vehicle. If a road test is expected to be easier, it is unnecessary to lift the vehicle.

WITH CONSULT-II

1. Start engine (VDC switch OFF).
2. Select “DATA MONITOR” mode with CONSULT-II.
3. Press MAIN switch and make sure that CRUISE lamp lights up.
4. Drive the vehicle for at least 5 consecutive seconds under the following conditions.

VHCL SPEED SE	More than 30 km/h (19 MPH)
Selector lever	Suitable position

If 1st trip DTC is detected, go to EC-505, "Diagnostic Procedure".
If 1st trip DTC is not detected, go to the following step.

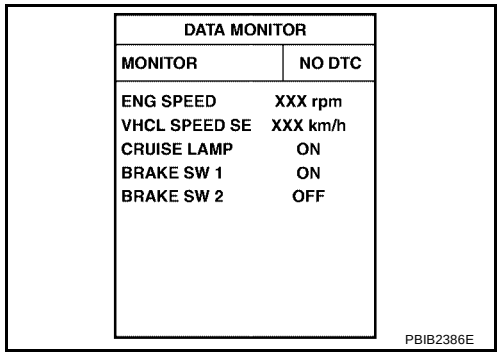

5. Drive the vehicle for at least 5 consecutive seconds under the following conditions.

VHCL SPEED SE	More than 30 km/h (19 MPH)
Selector lever	Suitable position
Driving location	Depress the brake pedal for more than five seconds so as not to come off from the above-mentioned vehicle speed.

6. If 1st trip DTC is detected, go to EC-505, "Diagnostic Procedure" .

WITH GST

Follow the procedure “WITH CONSULT-II” above.

Wiring Diagram

UBS00L20

EC-ICC/BS-01

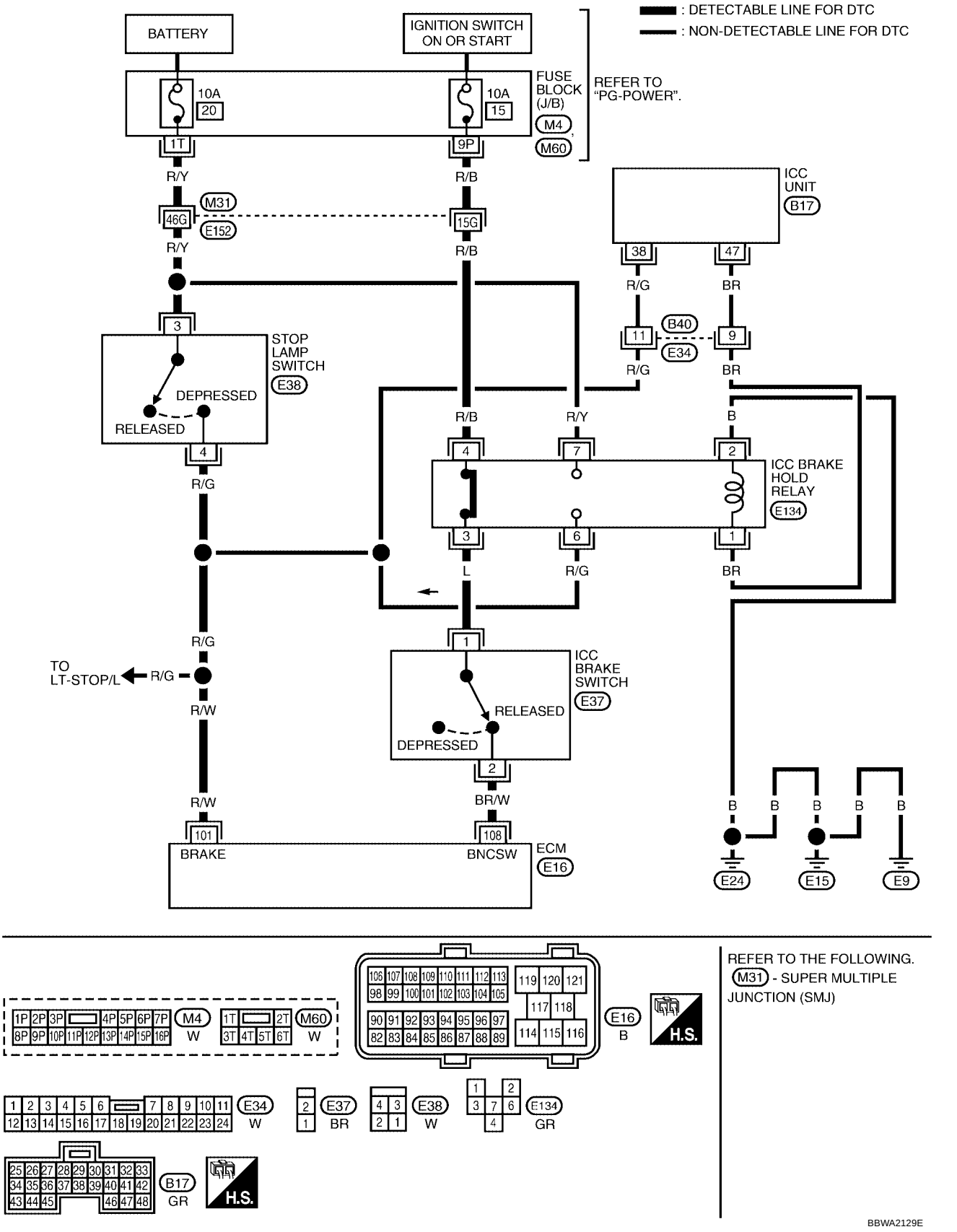

Specification data are reference values and are measured between each terminal and ground.

CAUTION:

Do not use ECM ground terminals when measuring input/output voltage. Doing so may result in damage to the ECM's transistor. Use a ground other than ECM terminals, such as the ground.

TERMINAL NO.	WIRE COLOR	ITEM	CONDITION	DATA (DC Voltage)
101	R/W	Stop lamp switch	**[Ignition switch: OFF]** ● Brake pedal: Fully released	Approximately 0V
			[Ignition switch: OFF] ● Brake pedal: Slightly depressed	BATTERY VOLTAGE (11 - 14V)
108	BR/W	ICC brake switch	**[Ignition switch: ON]** ● Brake pedal: Slightly depressed	Approximately 0V
			[Ignition switch: ON] ● Brake pedal: Fully released	BATTERY VOLTAGE (11 - 14V)

Diagnostic Procedure

UBS00L21

1. CHECK OVERALL FUNCTION-I

With CONSULT-II

1. Turn ignition switch ON.
2. Select “BRAKE SW1” in “DATA MONITOR” mode with CONSULT-II.
3. Check “BRAKE SW1” indication under the following conditions.

CONDITION	INDICATION
Brake pedal: Slightly depressed	OFF
Brake pedal: Fully released	ON

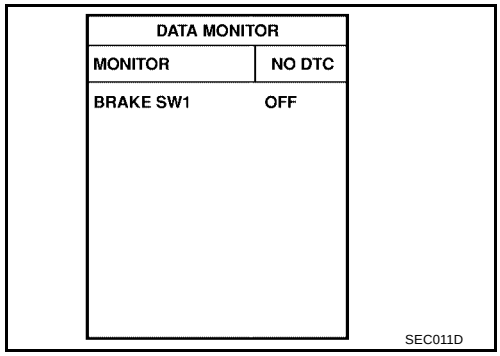

Without CONSULT-II

1. Turn ignition switch ON.
2. Check voltage between ECM terminal 108 and ground under the following conditions.

CONDITION	VOLTAGE
Brake pedal: Slightly depressed	Approximately 0V
Brake pedal: Fully released	Battery voltage

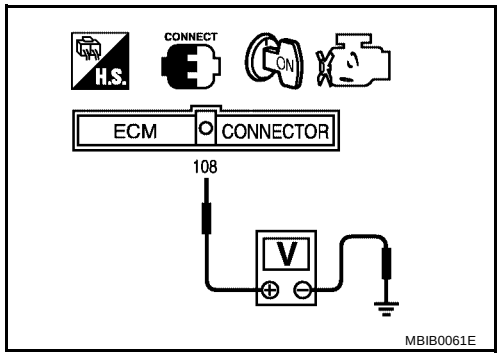

OK or NG

OK >> GO TO 2.
NG >> GO TO 3.

2. CHECK OVERALL FUNCTION-II

With CONSULT-II

Check “BRAKE SW2” indication in “DATA MONITOR” mode.

CONDITION	INDICATION
Brake pedal: Fully released	OFF
Brake pedal: Slightly depressed	ON

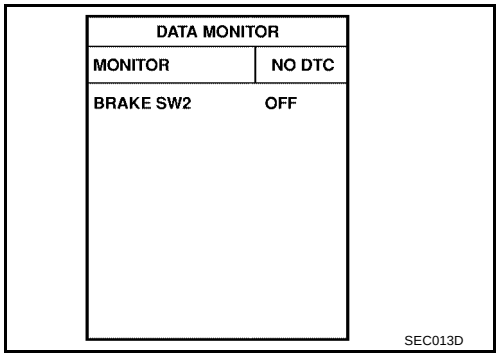

Without CONSULT-II

Check voltage between ECM terminal 101 and ground under the following conditions.

CONDITION	VOLTAGE
Brake pedal: Fully released	Approximately 0V
Brake pedal: Slightly depressed	Battery voltage

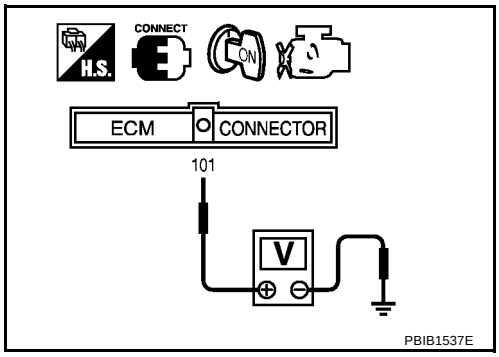

OK or NG

OK >> GO TO 14.
NG >> GO TO 10.

3. CHECK DTC WITH ICC UNIT

Refer to .

OK or NG

OK >> GO TO 4.
NG >> Repair or replace.

4. CHECK ICC BRAKE HOLD RELAY POWER SUPPLY CIRCUIT

1. Turn ignition switch OFF.
2. Disconnect ICC brake hold relay.
3. Turn ignition switch ON.

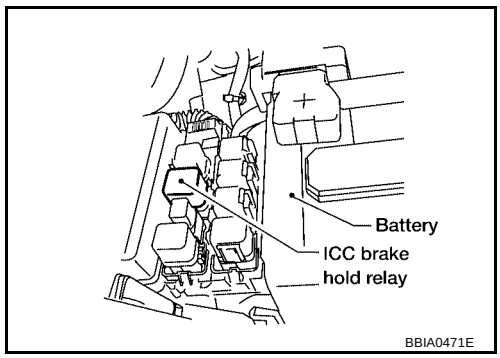

4. Check voltage between ICC brake hold relay terminal 4 and ground with CONSULT-II or tester.

Voltage: Battery voltage

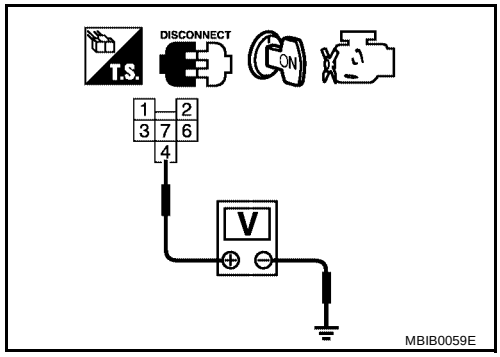

OK or NG

OK >> GO TO 6.
NG >> GO TO 5.

5. DETECT MALFUNCTIONING PART

Check the following.

- Harness connectors M31, E152
- Fuse block (J/B) connector M4
- 10A fuse
- Harness for open or short between ICC brake hold relay and fuse

>> Repair open circuit or short to ground or short to power in harness or connectors.

6. CHECK ICC BRAKE SWITCH POWER SUPPLY CIRCUIT

1. Turn ignition switch OFF.
2. Disconnect ICC brake switch harness connector.
3. Check harness continuity between ICC brake hold relay terminal 3 and ICC brake switch terminal 1.
   Refer to Wiring Diagram.

Continuity should exist.

4. Also check harness for short to ground and short to power.

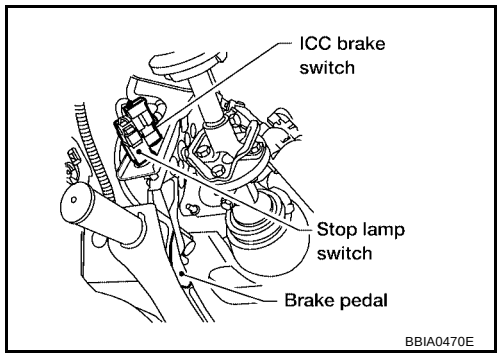

OK or NG

OK >> GO TO 7.
NG >> Repair open circuit or short to ground or short to power in harness or connectors.

7. CHECK ICC BRAKE SWITCH INPUT SIGNAL CIRCUIT FOR OPEN AND SHORT

1. Disconnect ECM harness connector.
2. Check harness continuity between ICC brake switch terminal 2 and ECM terminal 108.
   Refer Wiring Diagram.

   Continuity should exist.

3. Also check harness for short to ground and short to power.

OK or NG

OK >> GO TO 8.
NG >> Repair open circuit or short to ground or short to power in harness or connectors.

8. CHECK ICC BRAKE HOLD RELAY

Refer to EC-509, "Component Inspection" .

OK >> GO TO 9.
NG >> Replace ICC brake hold relay.

9. CHECK ICC BRAKE SWITCH

Refer to EC-509, "Component Inspection" .

OK or NG

OK >> GO TO 14.
NG >> Replace ICC brake switch.

10. CHECK STOP LAMP SWITCH POWER SUPPLY CIRCUIT

1. Turn ignition switch OFF.
2. Disconnect stop lamp switch harness connector.

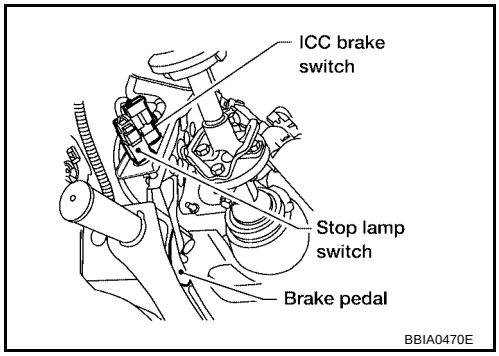

3. Check voltage between stop lamp switch terminal 3 and ground with CONSULT -II or tester.

   Voltage: Battery voltage

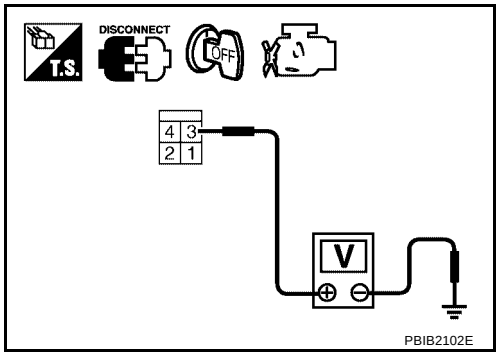

OK or NG

OK >> GO TO 12.
NG >> GO TO 11.

11. DETECT MALFUNCTIONING PART

Check the following.

- Harness connectors M31, E152
- Fuse block (J/B) No. 1 connector M60
- 10A fuse
- Harness for open or short between stop lamp switch and battery

>> Repair open circuit or short to ground or short to power in harness or connectors.

12. CHECK STOP LAMP SWITCH INPUT SIGNAL CIRCUIT FOR OPEN AND SHORT

1. Disconnect ECM harness connector.
2. Check harness continuity between ECM terminal 101 and stop lamp switch terminal 4. Refer to Wiring Diagram.

Continuity should exist.

3. Also check harness for short to ground and short to power.

OK or NG

OK >> GO TO 13.
NG >> Repair open circuit or short to ground or short to power in harness or connectors.

13. CHECK STOP LAMP SWITCH

Refer to EC-509, "Component Inspection" .

OK or NG

OK >> GO TO 14.
NG >> Replace stop lamp switch.

14. CHECK INTERMITTENT INCIDENT

Refer to EC-144, "TROUBLE DIAGNOSIS FOR INTERMITTENT INCIDENT" .

>> **INSPECTION END**

Component Inspection

UBS00L22

ICC BRAKE SWITCH

1. Turn ignition switch OFF.
2. Disconnect ICC brake switch harness connector.
3. Check continuity between ICC brake switch terminals 1 and 2 under the following conditions.

Condition	Continuity
Brake pedal: Fully released.	Should exist.
Brake pedal: Slightly depressed.	Should not exist.

If NG, adjust ICC brake switch installation, refer to BR-6, "BRAKE PEDAL" , and perform step 3 again.

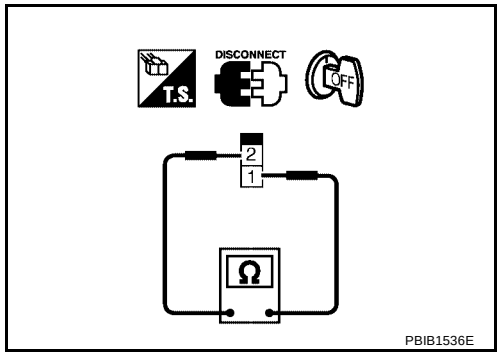

STOP LAMP SWITCH

1. Turn ignition switch OFF.
2. Disconnect stop lamp switch harness connector.
3. Check continuity between stop lamp switch terminals 3 and 4 under the following conditions.

Condition	Continuity
Brake pedal: Fully released.	Should not exist.
Brake pedal: Slightly depressed.	Should exist.

If NG, adjust stop lamp switch installation, refer to BR-6, "BRAKE PEDAL" , and perform step 3 again.

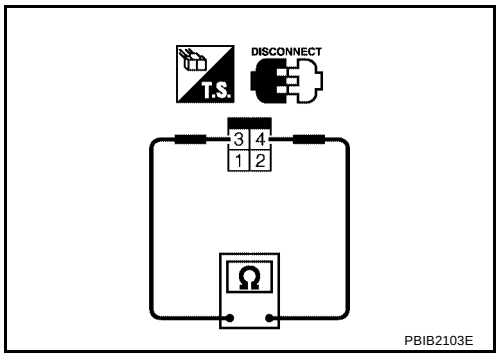

ICC BRAKE HOLD RELAY

1. Apply 12V direct current between ICC brake hold relay terminals 1 and 2.
2. Check continuity between relay terminals 3 and 4, 6 and 7 under the following conditions.

Condition	Between terminals	Continuity
12V direct current supply between terminals 1 and 2	3 and 4	Should not exist
	6 and 7	Should exist
No current supply	3 and 4	Should exist
	6 and 7	Should not exist

3. If NG, replace ICC brake hold relay.

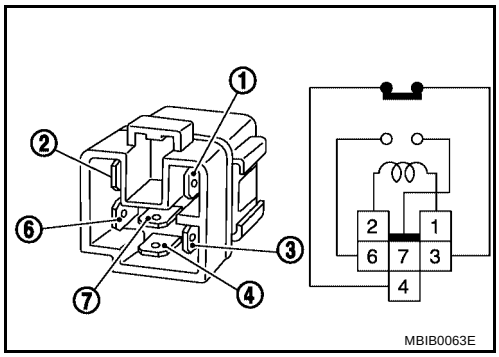

DTC P1572 ASCD BRAKE SWITCH

PFP:25320

Component Description

UBS00L13

When the brake pedal is depressed, ASCD brake switch is turned OFF and stop lamp switch is turned ON. ECM detects the state of the brake pedal by this input of two kinds (ON/OFF signal).
Refer to EC-29, "AUTOMATIC SPEED CONTROL DEVICE (ASCD)" for the ASCD function.

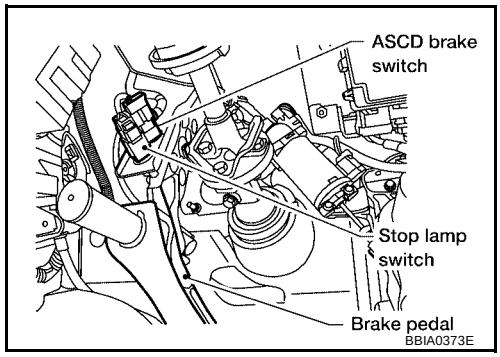

CONSULT-II Reference Value in Data Monitor Mode

UBS00L14

Specification data are reference values.

MONITOR ITEM	CONDITION		SPECIFICATION
BRAKE SW 1 (ASCD brake switch)	● Ignition switch: ON	Brake pedal: Fully released	ON
		Brake pedal: Slightly depressed	OFF
BRAKE SW 2 (Stop lamp switch)	● Ignition switch: ON	Brake pedal: Fully released	OFF
		Brake pedal: Slightly depressed	ON

On Board Diagnosis Logic

UBS00L15

This self-diagnosis has the one trip detection logic.
The MIL will not light up for this diagnosis.

NOTE:

- **If DTC P 1572 is displayed with DTC P0605, first perform the trouble diagnosis for DTC P0605. Refer to EC-457, "DTC P0605 ECM" .**
- **This self-diagnosis has the one trip detection logic. When malfunction A is detected, DTC is not stored in ECM memory. And in that case, 1st trip DTC and 1st trip freeze frame data are displayed. 1st trip DTC is erased when ignition switch OFF. And even when malfunction A is detected in two consecutive trips, DTC is not stored in ECM memory.**

DTC No.	Trouble Diagnosis Name	DTC Detecting Condition		Possible Cause
P1572 1572	ASCD brake switch	A)	When the vehicle speed is above 30km/h (19 MPH), ON signals from the stop lamp switch and the ASCD brake switch are sent to ECM at the same time.	● Harness or connectors (The stop lamp switch circuit is shorted.) ● Harness or connectors (The ASCD brake switch circuit is shorted.) ● Stop lamp switch ● ASCD brake switch ● Incorrect stop lamp switch installation ● Incorrect ASCD brake switch installation ● ECM
		B)	ASCD brake switch signal is not sent to ECM for extremely long time while the vehicle is driving	

DTC confirmation Procedure

UBS00L16

CAUTION:
Always drive vehicle at a safe speed.

NOTE:
- If DTC Confirmation Procedure has been previously conducted, always turn ignition switch OFF and wait at least 10 seconds before conducting the next test.
- Procedure for malfunction B is not described here. It takes extremely long time to complete procedure for malfunction B. By performing procedure for malfunction A, the incident that causes malfunction B can be detected.

TESTING CONDITION:
Steps 4 and 5 may be conducted with the drive wheels lifted in the shop or by driving the vehicle. If a road test is expected to be easier, it is unnecessary to lift the vehicle.

WITH CONSULT-II

1. Start engine (VDC switch OFF).
2. Select “DATA MONITOR” mode with CONSULT-II.
3. Press MAIN switch and make sure that CRUISE indicator lights up.
4. Drive the vehicle for at least 5 consecutive seconds under the following condition.

VHCL SPEED SE	More than 30 km/h (19 MPH)
Selector lever	Suitable position

If DTC is detected, go to EC-514, "Diagnostic Procedure" .
If DTC is not detected, go to the following step.

5. Drive the vehicle for at least 5 consecutive seconds under the following condition.

VHCL SPEED SE	More than 30 km/h (19 MPH)
Selector lever	Suitable position
Driving location	Depress the brake pedal for more than five seconds so as not to come off from the above-mentioned condition.

6. If DTC is detected, go to EC-514, "Diagnostic Procedure" .

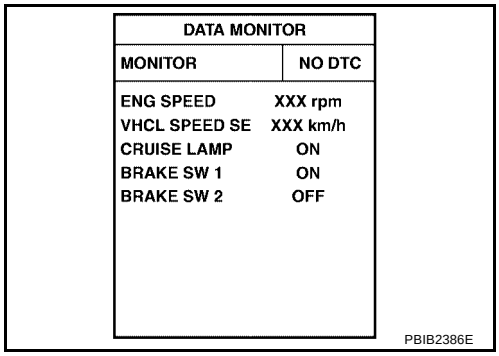

DATA MONITOR	
MONITOR	NO DTC
ENG SPEED	XXX rpm
VHCL SPEED SE	XXX km/h
CRUISE LAMP	ON
BRAKE SW 1	ON
BRAKE SW 2	OFF

PBIB2386E

WITH GST

Follow the procedure “WITH CONSULT-II” above.

Wiring Diagram

UBS00L17

EC-ASC/BS-01

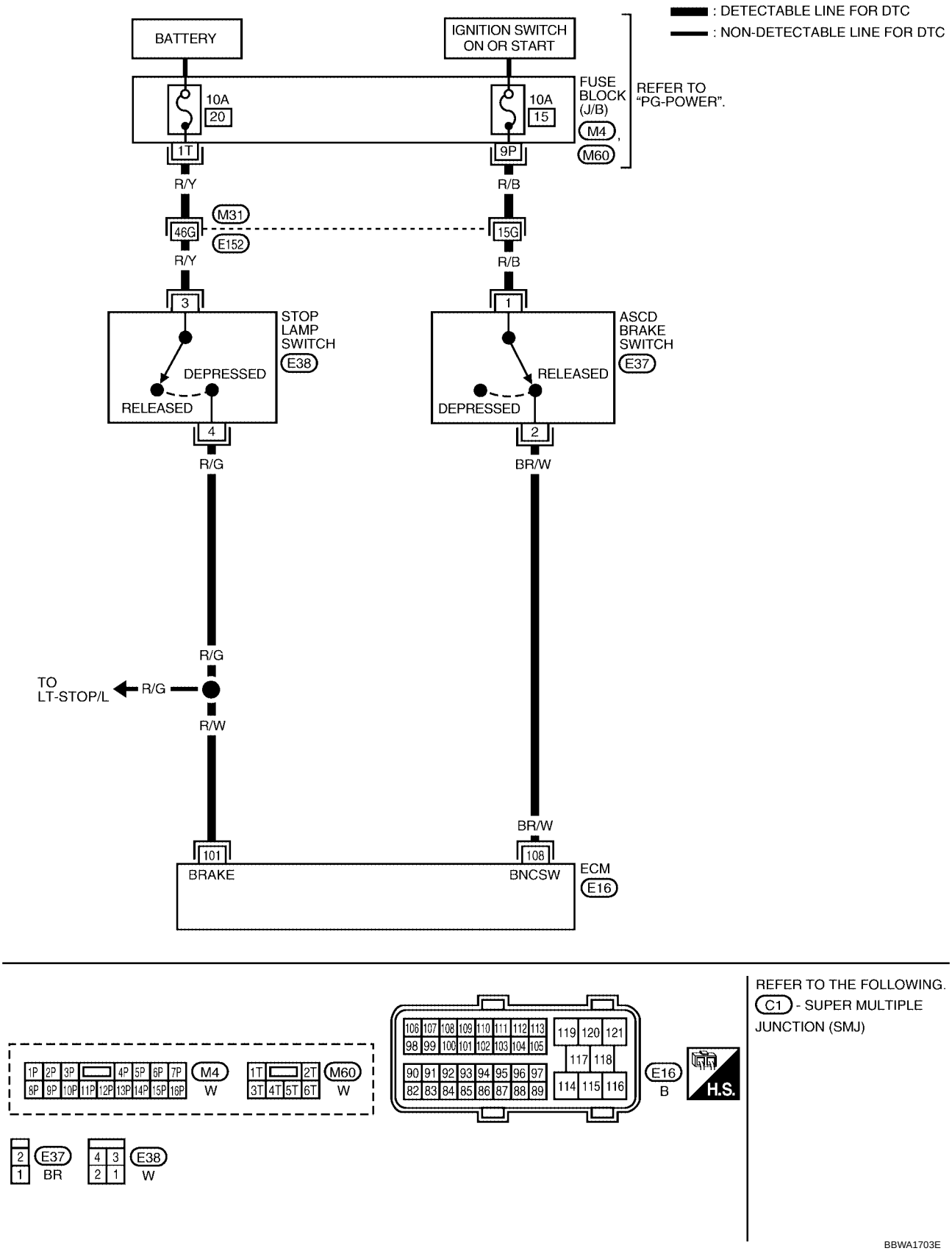

Specification data are reference values and are measured between each terminal and ground.

CAUTION:

Do not use ECM ground terminals when measuring input/output voltage. Doing so may result in damage to the ECM's transistor. Use a ground other than ECM terminals, such as the ground.

TERMINAL NO.	WIRE COLOR	ITEM	CONDITION	DATA (DC Voltage)
101	R/W	Stop lamp switch	**[Ignition switch: OFF]** ● Brake pedal: Fully released	Approximately 0V
			[Ignition switch: OFF] ● Brake pedal: Slightly depressed	BATTERY VOLTAGE (11 - 14V)
108	BR/W	ASCD brake switch	**[Ignition switch: ON]** ● Brake pedal: Fully released	BATTERY VOLTAGE (11 - 14V)
			[Ignition switch: ON] ● Brake pedal: Slightly depressed	Approximately 0V

Diagnostic Procedure

UBS00L18

1. CHECK OVERALL FUNCTION-I

With CONSULT-II

1. Turn ignition switch ON.
2. Select “BRAKE SW1” in “DATA MONITOR” mode with CONSULT-II.
3. Check “BRAKE SW1” indication under the following conditions.

CONDITION	INDICATION
Brake pedal: Slightly depressed	OFF
Brake pedal: Fully released	ON

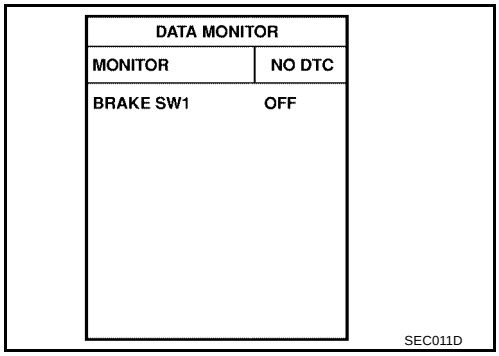

Without CONSULT-II

1. Turn ignition switch ON.
2. Check voltage between ECM terminal 108 and ground under the following conditions.

CONDITION	VOLTAGE
Brake pedal: Slightly depressed	Approximately 0V
Brake pedal: Fully released	Battery voltage

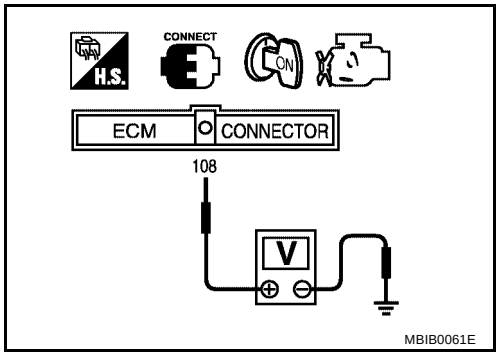

OK or NG

OK >> GO TO 2.
NG >> GO TO 3.

2. CHECK OVERALL FUNCTION-II

With CONSULT-II

Check “BRAKE SW2” indication in “DATA MONITOR” mode.

CONDITION	INDICATION
Brake pedal: Fully released	OFF
Brake pedal: Slightly depressed	ON

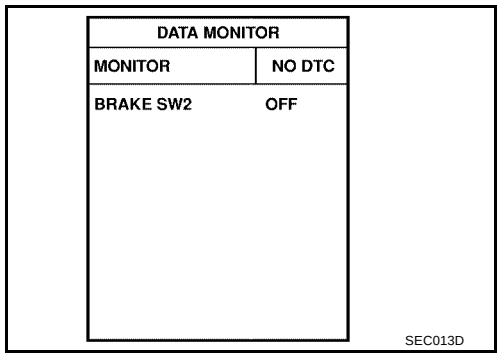

Without CONSULT-II

Check voltage between ECM terminal 101 and ground under the following conditions.

CONDITION	VOLTAGE
Brake pedal: Fully released	Approximately 0V
Brake pedal: Slightly depressed	Battery voltage

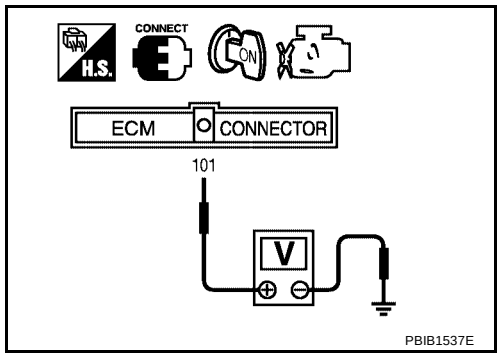

OK or NG

OK >> GO TO 11.
NG >> GO TO 7.

3. CHECK ASCD BRAKE SWITCH POWER SUPPLY CIRCUIT

1. Turn ignition switch OFF.
2. Disconnect ASCD brake switch harness connector.
3. Turn ignition switch ON.

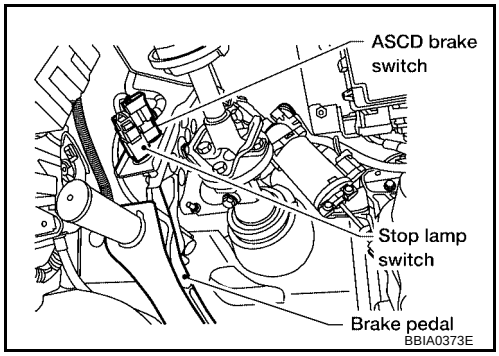

4. Check voltage between ASCD brake switch terminal 1 and ground with CONSULT-II or tester.

Voltage: Battery voltage

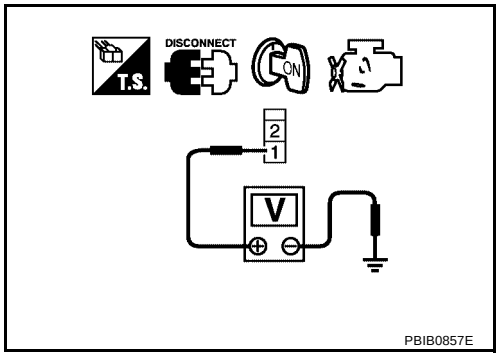

OK or NG

OK >> GO TO 5.
NG >> GO TO 4.

4. DETECT MALFUNCTIONING PART

Check the following.

- Harness connectors M31, E152
- Fuse block (J/B) connector M4
- 10A fuse
- Harness for open or short between ASCD brake switch and fuse

>> Repair open circuit or short to ground or short to power in harness or connectors.

5. CHECK ASCD BRAKE SWITCH INPUT SIGNAL CIRCUIT FOR OPEN AND SHORT

1. Turn ignition switch OFF.
2. Disconnect ECM harness connector.
3. Check harness continuity between ECM terminal 108 and ASCD brake switch terminal 2. Refer to Wiring Diagram.

Continuity should exist.

4. Also check harness for short to ground and short to power.

OK or NG

OK >> GO TO 6.
NG >> Repair open circuit or short to ground or short to power in harness or connectors.

6. CHECK ASCD BRAKE SWITCH

Refer to EC-518, "Component Inspection" .

OK or NG

OK >> GO TO 11.
NG >> Replace ASCD brake switch.

7. CHECK STOP LAMP SWITCH POWER SUPPLY CIRCUIT

1. Turn ignition switch OFF.
2. Disconnect stop lamp switch harness connector.

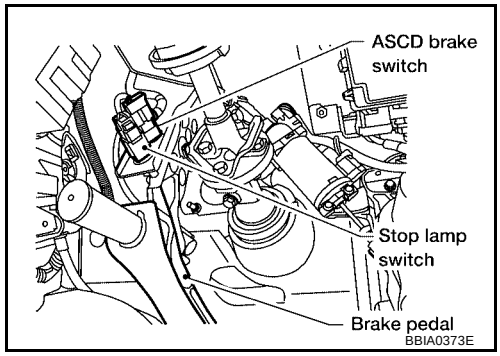

3. Check voltage between stop lamp switch terminal 3 and ground with CONSULT-II or tester.

Voltage: Battery voltage

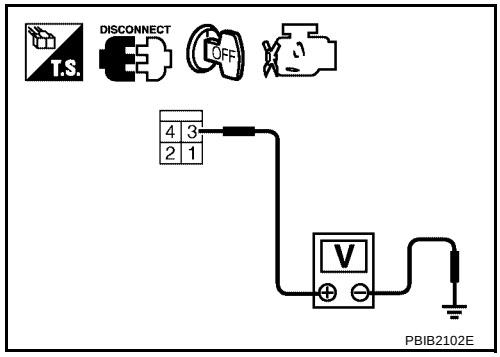

OK or NG

OK >> GO TO 9.
NG >> GO TO 8.

8. DETECT MALFUNCTIONING PART

Check the following.

- Harness connectors M31, E152
- Fuse block (J/B) connector M60
- 10A fuse
- Harness for open or short between stop lamp switch and battery

>> Repair open circuit or short to ground or short to power in harness or connectors.

9. CHECK STOP LAMP SWITCH INPUT SIGNAL CIRCUIT FOR OPEN AND SHORT

1. Disconnect ECM harness connector.
2. Check harness continuity between ECM terminal 101 and stop lamp switch terminal 4. Refer to Wiring Diagram.

Continuity should exist.

3. Also check harness for short to ground and short to power.

OK or NG

OK >> GO TO 10.
NG >> Repair open circuit or short to ground or short to power in harness or connectors.

10. CHECK STOP LAMP SWITCH

Refer to EC-518, "Component Inspection" .

OK or NG

OK >> GO TO 11.
NG >> Replace stop lamp switch.

11. CHECK INTERMITTENT INCIDENT

Refer to EC-144, "TROUBLE DIAGNOSIS FOR INTERMITTENT INCIDENT" .

>> **INSPECTION END**

Component Inspection

UBS00L19

ASCD BRAKE SWITCH

1. Turn ignition switch OFF.
2. Disconnect ASCD brake switch harness connector.
3. Check harness continuity between ASCD brake switch terminals 1 and 2 under the following conditions.

Condition	Continuity
Brake pedal: Fully released	Should exist.
Brake pedal: Slightly depressed	Should not exist.

If NG, adjust ASCD brake switch installation, refer to BR-6, "BRAKE PEDAL" , and perform step 3 again.

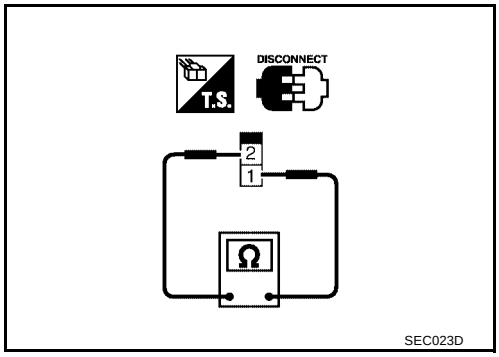

STOP LAMP SWITCH

1. Turn ignition switch OFF.
2. Disconnect stop lamp switch harness connector.
3. Check harness continuity between stop lamp switch terminals 1 and 2 under the following conditions.

Condition	Continuity
Brake pedal: Fully released	Should not exist.
Brake pedal: Slightly depressed	Should exist.

If NG, adjust stop lamp switch installation, refer to BR-6, "BRAKE PEDAL" , and perform step 3 again.

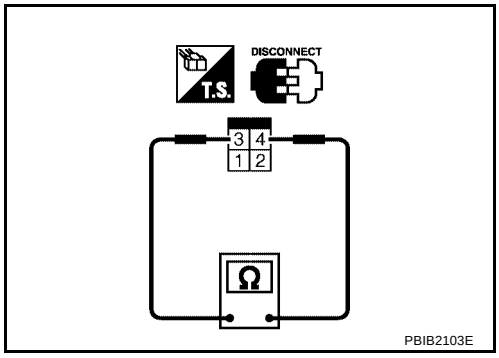

DTC P1574 ICC VEHICLE SPEED SENSOR

PFP:31036

Component Description

UBS00HZ6

The ECM receives two vehicle speed signals via CAN communication line. One is sent from “unified meter and A/C amp.”, and the other is from TCM (Transmission control module). The ECM uses these signals for ICC control. Refer to ACS-6, "DESCRIPTION" for ICC functions.

On Board Diagnosis Logic

UBS00HZ7

- **This self-diagnosis has the one trip detection logic.**
- **The MIL will not light up for this self-diagnosis.**

NOTE:

- **If DTC P1574 is displayed with DTC U1000, U1001, first perform the trouble diagnosis for DTC U1000, U1001. Refer to EC-151, "DTC U1000, U1001 CAN COMMUNICATION LINE" .**
- **If DTC P1574 is displayed with DTC U1010, first perform the trouble diagnosis for DTC U1010. Refer to EC-154, "DTC U1010 CAN COMMUNICATION" .**
- **If DTC P1574 is displayed with DTC P0500, first perform the trouble diagnosis for DTC P0500. Refer to EC-442, "DTC P0500 VSS" .**
- **If DTC P1574 is displayed with DTC P0605, first perform the trouble diagnosis for DTC P0605. Refer to EC-457, "DTC P0605 ECM" .**

DTC No.	Trouble Diagnosis Name	DTC Detecting Condition	Possible Cause
P1574 1574	ICC vehicle speed sensor	ECM detects a difference between two vehicle speed signals is out of the specified range.	● Harness or connectors (The CAN communication line is open or shorted.) ● Combination meter ● ABS actuator and electric unit (control unit) ● Wheel sensor ● TCM ● ECM

DTC Confirmation Procedure

UBS00HZ8

CAUTION:

Always drive vehicle at a safe speed.

NOTE:

If DTC Confirmation Procedure has been previously conducted, always turn ignition switch OFF and wait at least 10 seconds before conducting the next test.

TESTING CONDITION:

Step 3 may be conducted with the drive wheels lifted in the shop or by driving the vehicle. If a road test is expected to be easier, it is unnecessary to lift the vehicle.

WITH CONSULT-II

1. Start engine.
2. Select “DATA MONITOR” mode with CONSULT-II.
3. Drive the vehicle at more than 40 km/h (25MPH).
4. If DTC is detected, go to EC-520, "Diagnostic Procedure" .

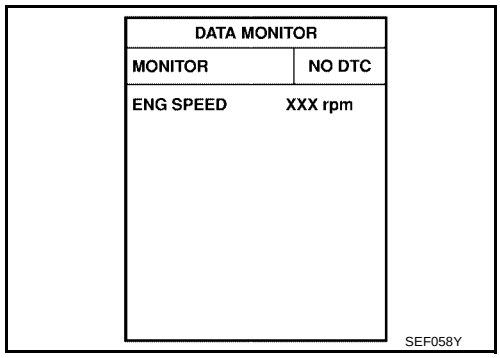

WITH GST

Follow the procedure “WITH CONSULT-II” above.

Diagnostic Procedure

UBS00HZ9

1. CHECK DTC WITH TCM

Check DTC with TCM. Refer to AT-38, "OBD-II Diagnostic Trouble Code (DTC)" .

OK or NG

OK >> GO TO 2.
NG >> Perform trouble shooting relevant to DTC indicated.

2. CHECK DTC WITH “ABS ACTUATOR AND ELECTRIC UNIT (CONTROL UNIT)”

Refer to BRC-11, "TROUBLE DIAGNOSIS" .

OK or NG

OK >> GO TO 3.
NG >> Repair or replace.

3. CHECK COMBINATION METER FUNCTION

Refer to DI-5, "COMBINATION METERS" .

>> **INSPECTION END**

DTC P1574 ASCD VEHICLE SPEED SENSOR

PFP:31036

Component Description

UBS00HBM

The ECM receives two vehicle speed sensor signals via CAN communication line. One is sent from combination meter and the other is from TCM (Transmission control module). The ECM uses these signals for ASCD control. Refer to EC-29, "AUTOMATIC SPEED CONTROL DEVICE (ASCD)" for ASCD functions.

On Board Diagnosis Logic

UBS00HBN

This self-diagnosis has the one trip detection logic.
The MIL will not light up for this diagnosis.

NOTE:

- **If DTC P1574 is displayed with DTC U1000, U1001, first perform the trouble diagnosis for DTC U1000, U1001. Refer to EC-151, "DTC U1000, U1001 CAN COMMUNICATION LINE" .**
- **If DTC P1574 is displayed with DTC U1010, first perform the trouble diagnosis for DTC U1010. Refer to EC-154, "DTC U1010 CAN COMMUNICATION" .**
- **If DTC P1574 is displayed with DTC P0500, first perform the trouble diagnosis for DTC P0500. Refer to EC-442, "DTC P0500 VSS".**
- **If DTC P1574 is displayed with DTC P0605, first perform the trouble diagnosis for DTC P0605. Refer to EC-457, "DTC P0605 ECM".**

DTC No.	Trouble Diagnosis Name	DTC Detecting Condition	Possible Cause
P1574 1574	ASCD vehicle speed sensor	ECM detects a difference between two vehicle speed signals is out of the specified range.	● Harness or connectors (The CAN communication line is open or shorted.) ● Combination meter ● ABS actuator and electric unit (control unit) ● Wheel sensor ● TCM ● ECM

DTC Confirmation Procedure

UBS00HBO

CAUTION:
Always drive vehicle at a safe speed.

NOTE:
If DTC Confirmation Procedure has been previously conducted, always turn ignition switch OFF and wait at least 10 seconds before conducting the next test.

TESTING CONDITION:
Step 3 may be conducted with the drive wheels lifted in the shop or by driving the vehicle. If a road test is expected to be easier, it is unnecessary to lift the vehicle.

WITH CONSULT-II

1. Start engine (VDC switch OFF).
2. Select “DATA MONITOR” mode with CONSULT-II.
3. Drive the vehicle at more than 40 km/h (25 MPH).
4. If DTC is detected, go to EC-522, "Diagnostic Procedure" .

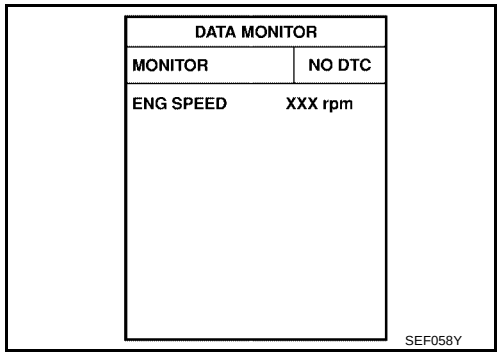

WITH GST

Follow the procedure “WITH CONSULT-II” above.

Diagnostic Procedure

UBS00HBP

1. CHECK DTC WITH TCM

Check DTC with TCM. Refer to AT-38, "OBD-II Diagnostic Trouble Code (DTC)" .

OK or NG

OK >> GO TO 2.
NG >> Perform trouble shooting relevant to DTC indicated.

2. CHECK DTC WITH ABS ACTUATOR AND ELECTRIC UNIT (CONTROL UNIT)

Refer to BRC-11, "TROUBLE DIAGNOSIS" .

OK or NG

OK >> GO TO 3.
NG >> Repair or replace.

3. CHECK COMBINATION METER FUNCTION

Check combination meter function.
Refer to DI-5, "COMBINATION METERS" .

>> **INSPECTION END**

DTC P1805 BRAKE SWITCH

PFP:25320

Description

UBS00HBX

Brake switch signal is applied to the ECM through the stop lamp switch when the brake pedal is depressed. This signal is used mainly to decrease the engine speed when the vehicle is driving.

CONSULT-II Reference Value in Data Monitor Mode

UBS00HBY

Specification data are reference values.

MONITOR ITEM	CONDITION		SPECIFICATION
BRAKE SW	● Ignition switch: ON	Brake pedal: Fully released	OFF
		Brake pedal: Slightly depressed	ON

On Board Diagnosis Logic

UBS00HBZ

The MIL will not light up for this diagnosis.

DTC No.	Trouble diagnosis name	DTC detecting condition	Possible cause
P1805 1805	Brake switch	A brake switch signal is not sent to ECM for extremely long time while the vehicle is driving.	● Harness or connectors (Stop lamp switch circuit is open or shorted.) ● Stop lamp switch

FAIL-SAFE MODE

When the malfunction is detected, the ECM enters fail-safe mode.

Engine operating condition in fail-safe mode	
ECM controls the electric throttle control actuator by regulating the throttle opening to a small range. Therefore, acceleration will be poor.	
Vehicle condition	Driving condition
When engine is idling	Normal
When accelerating	Poor acceleration

DTC Confirmation Procedure

UBS00HC0

WITH CONSULT-II

1. Turn ignition switch ON.
2. Fully depress the brake pedal for at least 5 seconds.
3. Erase the DTC with CONSULT-II.
4. Select “DATA MONITOR” mode with CONSULT-II.
5. If 1st trip DTC is detected, go to EC-525, "Diagnostic Procedure".

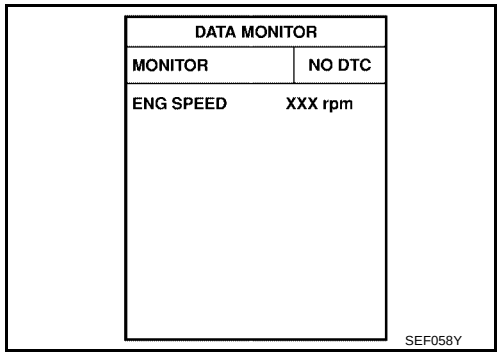

WITH GST

Follow the procedure “WITH CONSULT-II” above.

Wiring Diagram

UBS00HC1

EC-BRK/SW-01

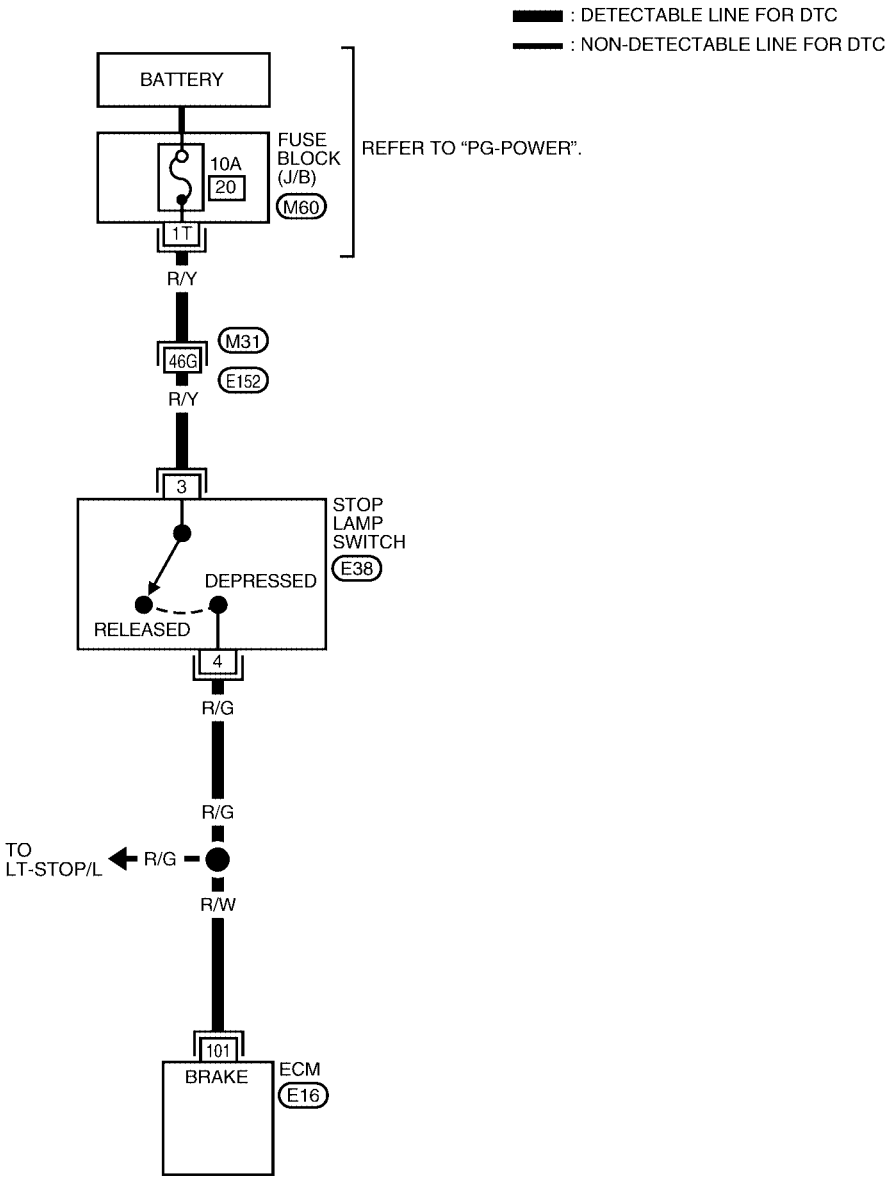

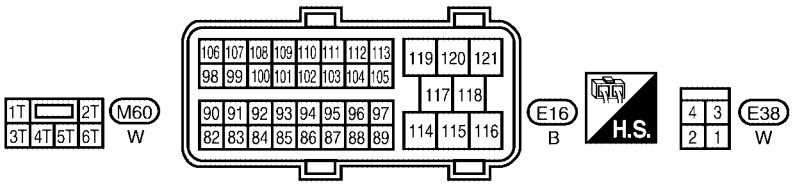

REFER TO THE FOLLOWING.
M31 - SUPER MULTIPLE JUNCTION (SMJ)

BBWA1705E

Specification data are reference values and are measured between each terminal and ground.

CAUTION:

Do not use ECM ground terminals when measuring input/output voltage. Doing so may result in damage to the ECM's transistor. Use a ground other than ECM terminals, such as the ground.

TERMINAL NO.	WIRE COLOR	ITEM	CONDITION	DATA (DC Voltage)
101	R/W	Stop lamp switch	**[Ignition switch: OFF]** ● Brake pedal: Fully released	Approximately 0V
			[Ignition switch: OFF] ● Brake pedal: Slightly depressed	BATTERY VOLTAGE (11 - 14V)

Diagnostic Procedure

UBS00HC2

1. CHECK STOP LAMP SWITCH CIRCUIT

1. Turn ignition switch OFF.
2. Check the stop lamp when depressing and releasing the brake pedal.

Brake pedal	Stop lamp
Fully released	Not illuminated
Slightly depressed	Illuminated

OK or NG

OK >> GO TO 4.
NG >> GO TO 2.

2. CHECK STOP LAMP SWITCH POWER SUPPLY CIRCUIT

1. Disconnect stop lamp switch harness connector.

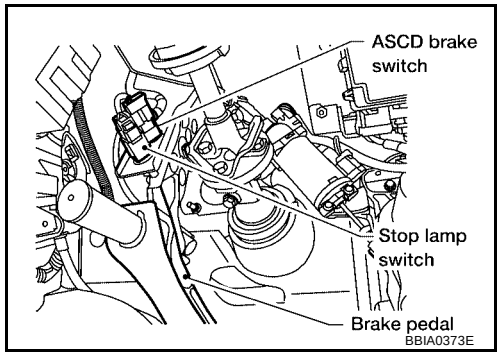

2. Check voltage between stop lamp switch terminal 3 and ground with CONSULT-II or tester.

Voltage: Battery voltage

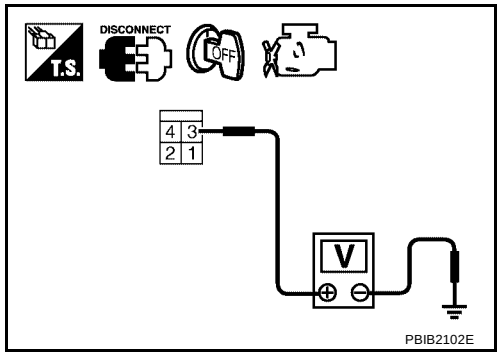

OK or NG

OK >> GO TO 4.
NG >> GO TO 3.

3. DETECT MALFUNCTIONING PART

Check the following.

- Harness connectors M31, E152
- Fuse block (J/B) connector M60
- 10A fuse
- Harness for open and short between stop lamp switch and battery

>> Repair open circuit or short to ground or short to power in harness or connectors.

4. CHECK STOP LAMP SWITCH INPUT SIGNAL CIRCUIT FOR OPEN AND SHORT

1. Turn ignition switch OFF.
2. Disconnect ECM harness connector.
3. Check harness continuity between ECM terminal 101 and stop lamp switch terminal 4.
   Refer to Wiring Diagram.

   Continuity should exist.

4. Also check harness for short to ground and short to power.

OK or NG

OK >> GO TO 5.
NG >> Repair open circuit or short to ground or short to power in harness or connectors.

5. CHECK STOP LAMP SWITCH

Refer to EC-527, "Component Inspection" .

OK or NG

OK >> GO TO 6.
NG >> Replace stop lamp switch.

6. CHECK INTERMITTENT INCIDENT

Refer to EC-144, "TROUBLE DIAGNOSIS FOR INTERMITTENT INCIDENT" .

>> **INSPECTION END**

Component Inspection

UBS00HC3

STOP LAMP SWITCH

1. Disconnect stop lamp switch harness connector.

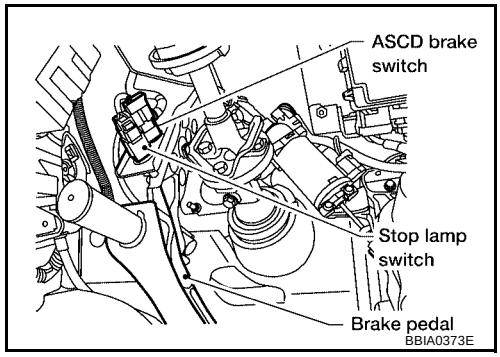

2. Check continuity between stop lamp switch terminals 3 and 4 under the following conditions.

Conditions	Continuity
Brake pedal: Fully released	Should not exist.
Brake pedal: Slightly depressed	Should exist.

3. If NG, adjust stop lamp switch installation, refer to BR-6, "BRAKE PEDAL" , and perform step 2 again.

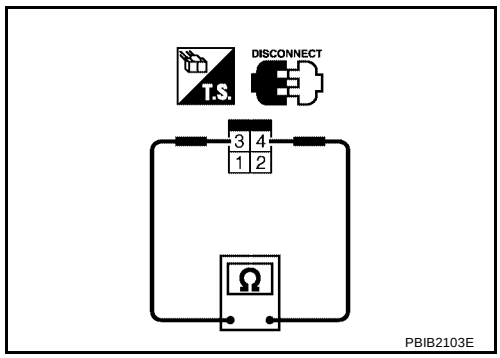

DTC P2100, P2103 THROTTLE CONTROL MOTOR RELAY

PFP:16119

Component Description

UBS00N77

Power supply for the throttle control motor is provided to the ECM via throttle control motor relay. The throttle control motor relay is ON/OFF controlled by the ECM. When the ignition switch is turned ON, the ECM sends an ON signal to throttle control motor relay and battery voltage is provided to the ECM. When the ignition switch is turned OFF, the ECM sends an OFF signal to throttle control motor relay and battery voltage is not provided to the ECM.

CONSULT-II Reference Value in Data Monitor Mode

UBS00N78

Specification data are reference values.

MONITOR ITEM	CONDITION	SPECIFICATION
THRTL RELAY	● Ignition switch: ON	ON

On Board Diagnosis Logic

UBS00N79

These self-diagnoses have the one trip detection logic.

DTC No.	Trouble diagnosis name	DTC detecting condition	Possible cause
P2100 2100	Throttle control motor relay circuit open	ECM detects a voltage of power source for throttle control motor is excessively low.	● Harness or connectors (Throttle control motor relay circuit is open) ● Throttle control motor relay
P2103 2103	Throttle control motor relay circuit short	ECM detect the throttle control motor relay is stuck ON.	● Harness or connectors (Throttle control motor relay circuit is shorted) ● Throttle control motor relay

FAIL-SAFE MODE

When the malfunction is detected, ECM enters fail-safe mode and the MIL lights up.

Engine operating condition in fail-safe mode
ECM stops the electric throttle control actuator control, throttle valve is maintained at a fixed opening (approx. 5 degrees) by the return spring.

DTC Confirmation Procedure

UBS00N7A

NOTE:
If DTC Confirmation Procedure has been previously conducted, always turn ignition switch OFF and wait at least 10 seconds before conducting the next test.

PROCEDURE FOR DTC P2100

With CONSULT-II

1. Turn ignition switch ON and wait at least 2 seconds.
2. Select “DATA MONITOR””mode with CONSULT-II.
3. Start engine and let it idle for 5 seconds.
4. If DTC is detected, go to EC-531, "Diagnostic Procedure" .

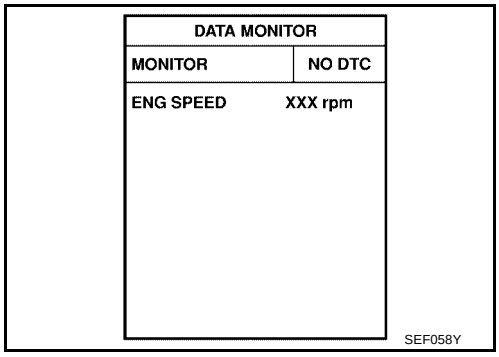

With GST

Follow the procedure “With CONSULT-II” above.

PROCEDURE FOR DTC P2103

TESTING CONDITION:

Before performing the following procedure, confirm that battery voltage is more than 8V.

With CONSULT-II

1. Turn ignition switch ON and wait at least 1 second.
2. Select “DATA MONITOR” mode with CONSULT-II.
3. If DTC is detected, go to EC-531, "Diagnostic Procedure" .

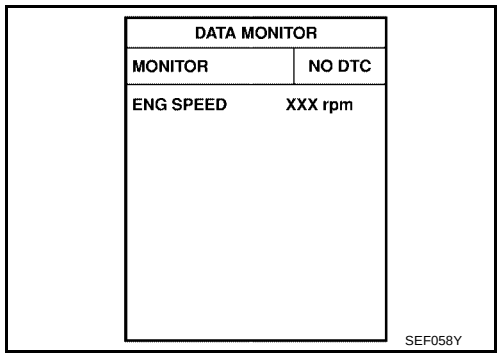

With GST

Follow the procedure “With CONSULT-II” above.

Wiring Diagram

UBS00N7B

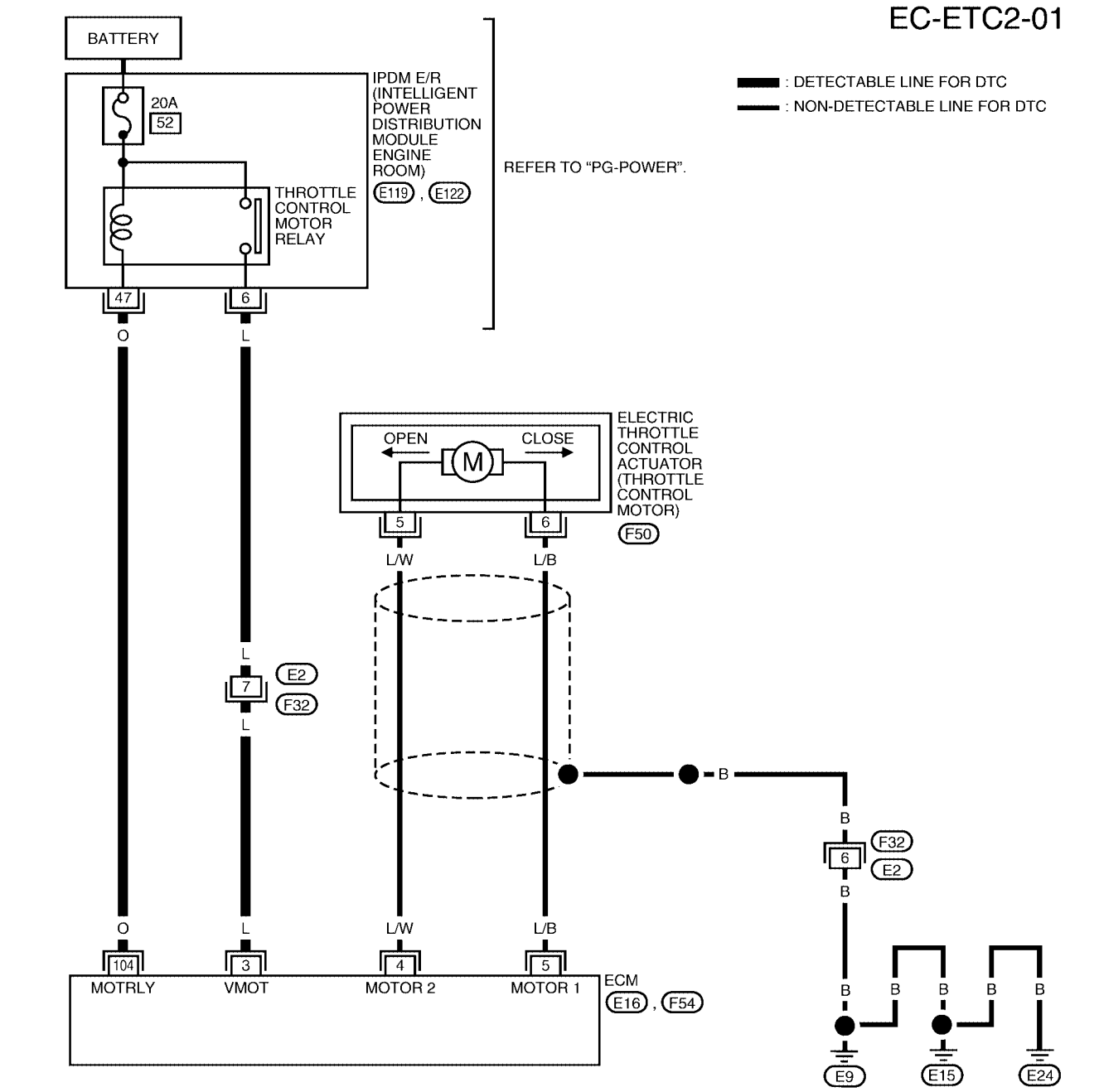

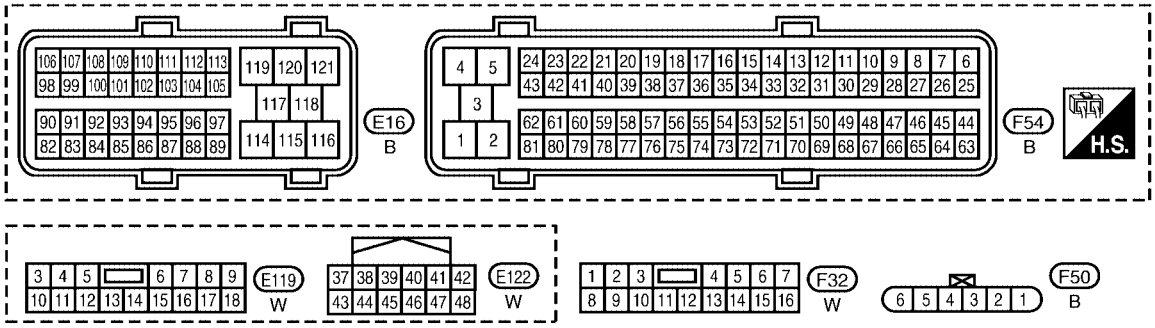

BBWA2100E

Specification data are reference values and are measured between each terminal and ground.
Pulse signal is measured by CONSULT-II.

CAUTION:
Do not use ECM ground terminals when measuring input/output voltage. Doing so may result in damage to the ECM's transistor. Use a ground other than ECM terminals, such as the ground.

TERMINAL NO.	WIRE COLOR	ITEM	CONDITION	DATA (DC Voltage)
3	L	Throttle control motor relay power supply	**[Ignition switch: ON]**	BATTERY VOLTAGE (11 - 14V)
4	L/W	Throttle control motor (Close)	**[Ignition switch: ON]** ● Engine: Stopped ● Selector lever: D ● Accelerator pedal: Released	0 - 14V★ 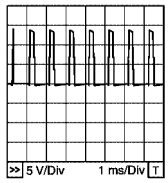 PBIB1104E
5	L/B	Throttle control motor (Open)	**[Ignition switch: ON]** ● Engine: Stopped ● Selector lever: D ● Accelerator pedal: Fully depressed	0 - 14V★ 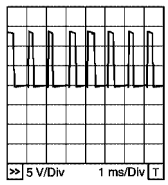 PBIB1105E
104	O	Throttle control motor relay	**[Ignition switch: OFF]**	BATTERY VOLTAGE (11 - 14V)
			[Ignition switch: ON]	0 - 1.0V

★: Average voltage for pulse signal (Actual pulse signal can be confirmed by oscilloscope.)

Diagnostic Procedure

UBS00N7C

1. CHECK THROTTLE CONTROL MOTOR RELAY POWER SUPPLY CIRCUIT-I

1. Turn ignition switch OFF.
2. Check voltage between ECM terminal 104 and ground with CONSULT-II or tester.

Voltage: Battery voltage

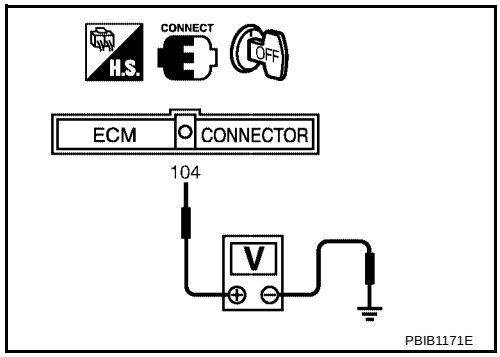

OK or NG

OK >> GO TO 4.
NG >> GO TO 2.

2. CHECK THROTTLE CONTROL MOTOR RELAY POWER SUPPLY CIRCUIT-II

1. Disconnect ECM harness connector.
2. Disconnect IPDM E/R harness connector E122.
3. Check continuity between ECM terminal 104 and IPDM E/R terminal 47.
   Refer to Wiring Diagram.

   Continuity should exist.

4. Also check harness for short to ground and short to power.

OK or NG

OK >> GO TO 3.
NG >> Repair open circuit or short to ground or short to power in harness or connectors.

3. CHECK FUSE

1. Disconnect 20A fuse.
2. Check 20A fuse for blown.

OK or NG

OK >> GO TO 7.
NG >> Replace 20A fuse.

4. CHECK THROTTLE CONTROL MOTOR RELAY INPUT SIGNAL CIRCUIT-I

Check voltage between ECM terminal 3 and ground under the following conditions with CONSULT-II or tester.

Ignition switch	Voltage
OFF	Approximately 0V
ON	Battery voltage (11 - 14V)

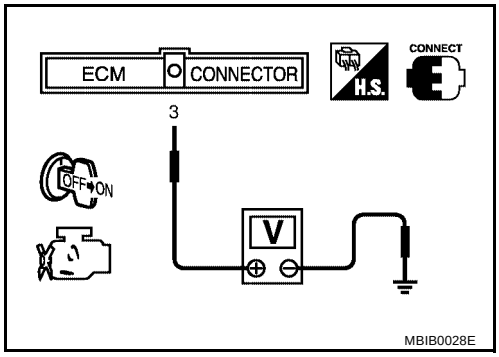

OK or NG

OK >> GO TO 7.
NG >> GO TO 5.

5. CHECK THROTTLE CONTROL MOTOR RELAY INPUT SIGNAL CIRCUIT-II

1. Turn ignition switch OFF.
2. Disconnect ECM harness connector.
3. Disconnect IPDM E/R harness connector E119.
4. Check continuity between ECM terminal 3 and IPDM E/R terminal 6.
   Refer to Wiring Diagram.

   Continuity should exist.

5. Also check harness for short to ground and short to power.

OK or NG

OK >> GO TO 7.
NG >> GO TO 6.

6. DETECT MALFUNCTIONING PART

Check the following.

- Harness connectors E2, F32
- Harness for open or short between ECM and IPDM E/R

>> Repair open circuit or short to ground or short to power in harness or connectors.

7. CHECK INTERMITTENT INCIDENT

Refer to EC-144, "TROUBLE DIAGNOSIS FOR INTERMITTENT INCIDENT" .

OK or NG

OK >> Replace IPDM E/R. Refer to PG-18, "IPDM E/R (INTELLIGENT POWER DISTRIBUTION MODULE ENGINE ROOM)" .

NG >> Repair or replace harness or connectors.

DTC P2101 ELECTRIC THROTTLE CONTROL FUNCTION

PFP:16119

Description

UBS00H7I

NOTE:
If DTC P2101 is displayed with DTC P2100 or 2119, first perform the trouble diagnosis for DTC P2100 or P2119. Refer to EC-528, "DTC P2100, P2103 THROTTLE CONTROL MOTOR RELAY" or EC-545, "DTC P2119 ELECTRIC THROTTLE CONTROL ACTUATOR" .

Electric throttle control actuator consists of throttle control motor, throttle position sensor, etc.
The throttle control motor is operated by the ECM and it opens and closes the throttle valve.
The current opening angle of the throttle valve is detected by the throttle position sensor and it provides feedback to the ECM to control the throttle control motor to make the throttle valve opening angle properly in response to driving condition.

On Board Diagnosis Logic

UBS00H7J

This self-diagnosis has the one trip detection logic.

DTC No.	Trouble diagnosis name	DTC detecting condition	Possible cause
P2101 2101	Electric throttle control performance	Electric throttle control function does not operate properly.	● Harness or connectors (Throttle control motor circuit is open or shorted) ● Electric throttle control actuator

FAIL-SAFE MODE

When the malfunction is detected, ECM enters fail-safe mode and the MIL lights up.

Engine operating condition in fail-safe mode
ECM stops the electric throttle control actuator control, throttle valve is maintained at a fixed opening (approx. 5 degrees) by the return spring.

DTC Confirmation Procedure

UBS00H7K

NOTE:
If DTC Confirmation Procedure has been previously conducted, always turn ignition switch OFF and wait at least 10 seconds before conducting the next test.

TESTING CONDITION:
Before performing the following procedure, confirm that battery voltage is more than 11V when engine is running.

WITH CONSULT-II

1. Turn ignition switch ON and wait at least 2 seconds.
2. Select “DATA MONITOR” mode with CONSULT-II.
3. Start engine and let it idle for 5 seconds.
4. If DTC is detected, go to EC-536, "Diagnostic Procedure" .

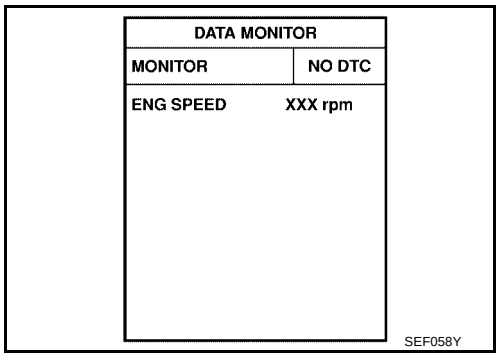

WITH GST

Follow the procedure “WITH CONSULT-II” above.

Wiring Diagram

UBS00H7L

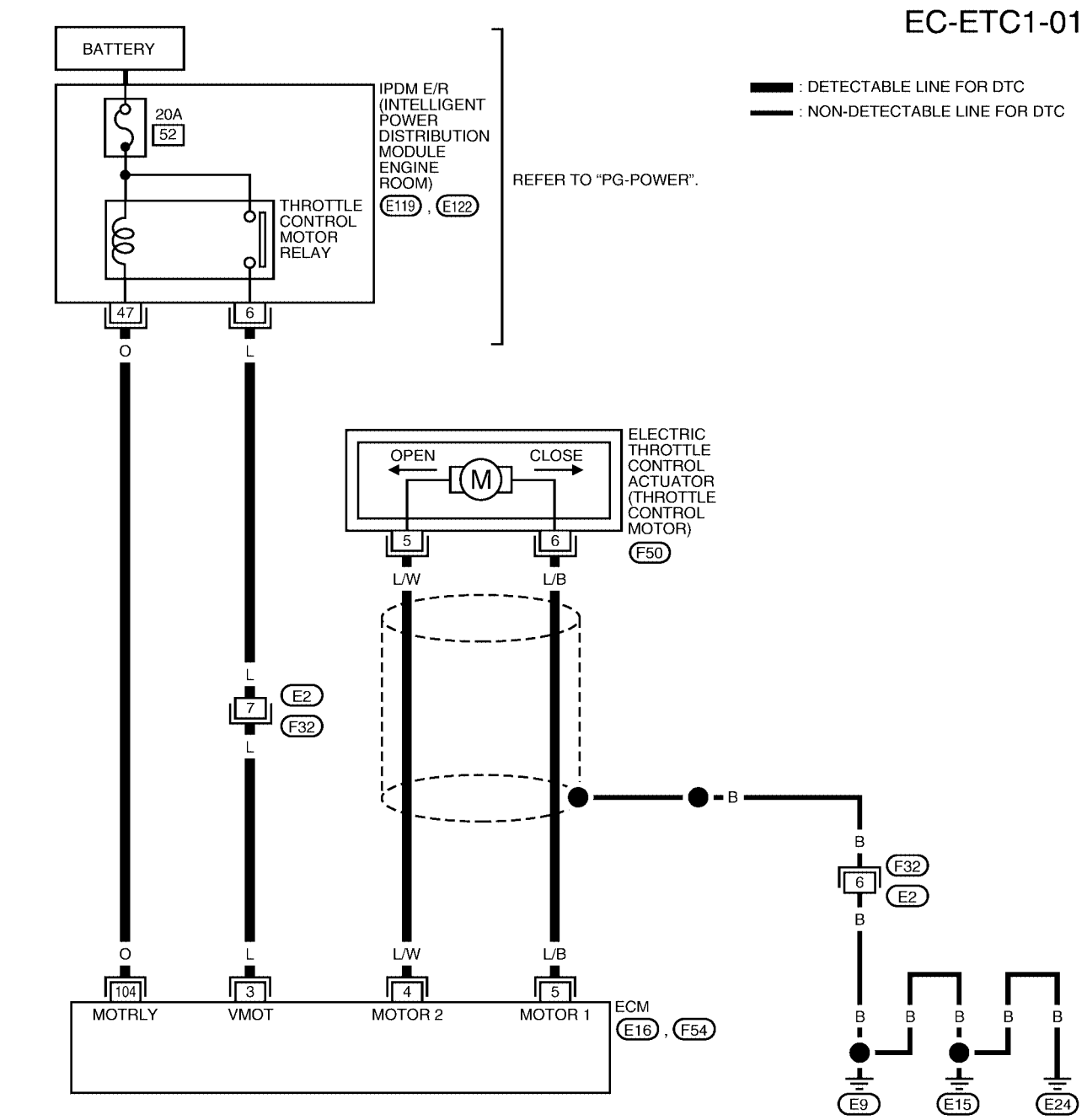

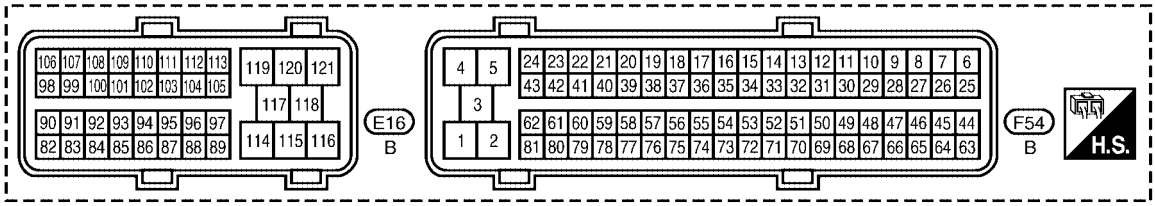

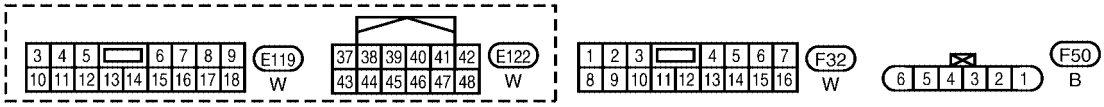

BBWA2099E

Specification data are reference values and are measured between each terminal and ground.
Pulse signal is measured by CONSULT-II.

CAUTION:

Do not use ECM ground terminals when measuring input/output voltage. Doing so may result in damage to the ECM's transistor. Use a ground other than ECM terminals, such as the ground.

TERMINAL NO.	WIRE COLOR	ITEM	CONDITION	DATA (DC Voltage)
3	L	Throttle control motor relay power supply	**[Ignition switch: ON]**	BATTERY VOLTAGE (11 - 14V)
4	L/W	Throttle control motor (Close)	**[Ignition switch: ON]** ● Engine: Stopped ● Selector lever: D ● Accelerator pedal: Released	0 - 14V★ 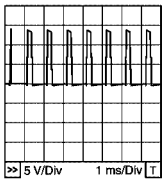 PBIB1104E
5	L/B	Throttle control motor (Open)	**[Ignition switch: ON]** ● Engine: Stopped ● Selector lever: D ● Accelerator pedal: Fully depressed	0 - 14V★ 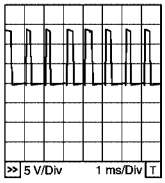 PBIB1105E
104	O	Throttle control motor relay	**[Ignition switch: OFF]**	BATTERY VOLTAGE (11 - 14V)
			[Ignition switch: ON]	0 - 1.0V

★: Average voltage for pulse signal (Actual pulse signal can be confirmed by oscilloscope.)

Diagnostic Procedure

UBS00H7M

1. CHECK GROUND CONNECTIONS

1. Turn ignition switch OFF.
2. Loosen and retighten three ground screws on the body.
   Refer to EC-150, "Ground Inspection" .

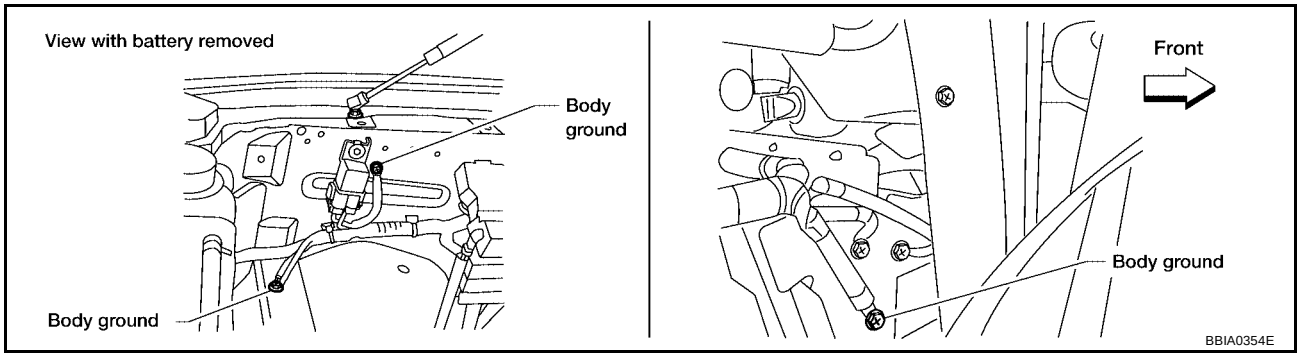

OK or NG

OK >> GO TO 2.
NG >> Repair or replace ground connections.

2. CHECK THROTTLE CONTROL MOTOR RELAY INPUT SIGNAL CIRCUIT-I

1. Check voltage between ECM terminal 3 and ground under the following conditions with CONSULT-II or tester.

Ignition switch	Voltage
OFF	Approximately 0V
ON	Battery voltage (11 - 14V)

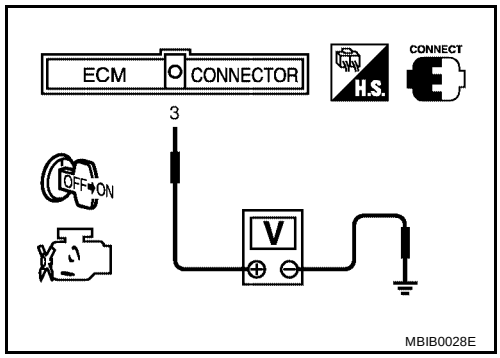

OK or NG

OK >> GO TO 9.
NG >> GO TO 3.

3. CHECK THROTTLE CONTROL MOTOR RELAY POWER SUPPLY CIRCUIT-I

1. Turn ignition switch OFF.
2. Check voltage between ECM terminal 104 and ground with CONSULT-II or tester.

Voltage: Battery voltage

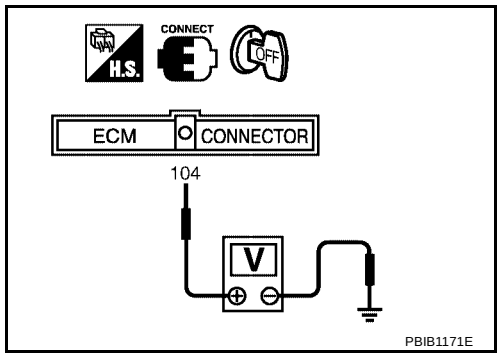

OK or NG

OK >> GO TO 6.
NG >> GO TO 4.

4. CHECK THROTTLE CONTROL MOTOR RELAY POWER SUPPLY CIRCUIT-II

1. Disconnect ECM harness connector.
2. Disconnect IPDM E/R harness connector E122.
3. Check harness continuity between ECM terminal 104 and IPDM E/R terminal 47. Refer to Wiring Diagram.

Continuity should exist.

4. Also check harness for short to ground and short to power.

OK or NG

OK >> GO TO 5.
NG >> Repair open circuit or short to ground or short to power in harness or connectors.

5. CHECK FUSE

1. Disconnect 20A fuse.
2. Check 20A fuse for blown.

OK or NG

OK >> GO TO 8.
NG >> Replace 20A fuse.

6. CHECK THROTTLE CONTROL MOTOR RELAY INPUT SIGNAL CIRCUIT-II

1. Disconnect ECM harness connector.
2. Disconnect IPDM E/R harness connector E119.
3. Check harness continuity between ECM terminal 3 and IPDM E/R terminal 6.
   Refer to Wiring Diagram.

   Continuity should exist.

4. Also check harness for short to ground and short to power.

OK or NG

OK >> GO TO 8.
NG >> GO TO 7.

7. DETECT MALFUNCTIONING PART

Check the following.

- Harness connectors E2, F32
- Harness for open or short between ECM and IPDM E/R

>> Repair open circuit or short to ground or short to power in harness or connectors.

8. CHECK INTERMITTENT INCIDENT

Refer to EC-144, "TROUBLE DIAGNOSIS FOR INTERMITTENT INCIDENT" .

OK or NG

OK >> Replace IPDM E/R. Refer to PG-18, "IPDM E/R (INTELLIGENT POWER DISTRIBUTION MODULE ENGINE ROOM)" .
NG >> Repair or replace harness or connectors.

9. CHECK THROTTLE CONTROL MOTOR OUTPUT SIGNAL CIRCUIT FOR OPEN OR SHORT

1. Turn ignition switch OFF.
2. Disconnect electric throttle control actuator harness connector.
3. Disconnect ECM harness connector.
4. Check harness continuity between the following terminals.
   Refer to Wiring Diagram.

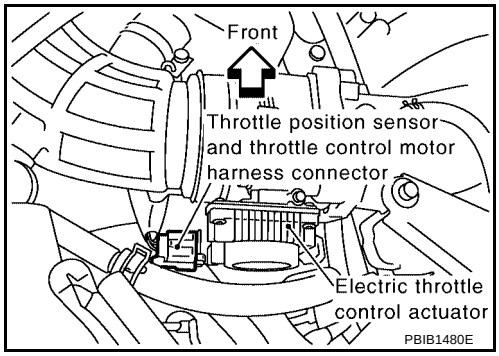

Electric throttle control actuator terminal	ECM terminal	Continuity
5	5	Should not exist
	4	Should exist
6	5	Should exist
	4	Should not exist

5. Also check harness for short to ground and short to power.

OK or NG

OK >> GO TO 10.
NG >> Repair or replace.

10. CHECK ELECTRIC THROTTLE CONTROL ACTUATOR VISUALLY

1. Remove the intake air duct.
2. Check if foreign matter is caught between the throttle valve and the housing.

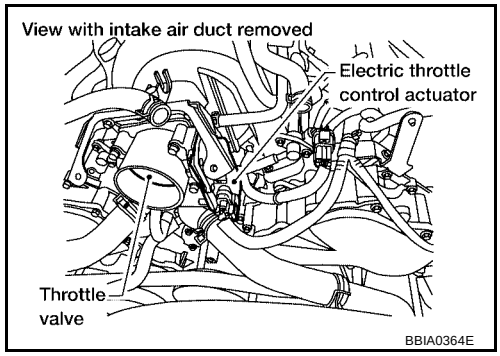

OK or NG

OK >> GO TO 11.
NG >> Remove the foreign matter and clean the electric throttle control actuator inside.

11. CHECK THROTTLE CONTROL MOTOR

Refer to EC-539, "Component Inspection" .

OK or NG

OK >> GO TO 12.
NG >> GO TO 13.

12. CHECK INTERMITTENT INCIDENT

Refer to EC-144, "TROUBLE DIAGNOSIS FOR INTERMITTENT INCIDENT" .

OK or NG

OK >> GO TO 13.
NG >> Repair or replace harness or connectors.

13. REPLACE ELECTRIC THROTTLE CONTROL ACTUATOR

1. Replace the electric throttle control actuator.
2. Perform EC-78, "Throttle Valve Closed Position Learning" .
3. Perform EC-78, "Idle Air Volume Learning" .

>> **INSPECTION END**

Component Inspection

UBS00H7N

THROTTLE CONTROL MOTOR

1. Disconnect electric throttle control actuator harness connector.
2. Check resistance between terminals 5 and 6.

Resistance: Approximately 1 - 15 Ω [at 25 °C (77°F)]

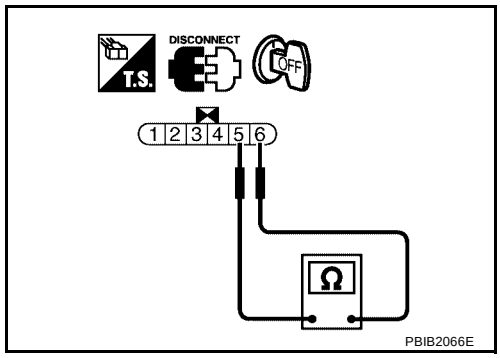

3. If NG, replace electric throttle control actuator and go to next step.
4. Perform EC-78, "Throttle Valve Closed Position Learning" .
5. Perform EC-78, "Idle Air Volume Learning" .

Removal and Installation

UBS00H7O

ELECTRIC THROTTLE CONTROL ACTUATOR

Refer to EM-17, "INTAKE MANIFOLD" .

DTC P2118 THROTTLE CONTROL MOTOR

PFP:16119

Component Description

UBS00H7V

The throttle control motor is operated by the ECM and it opens and closes the throttle valve.
The current opening angle of the throttle valve is detected by the throttle position sensor and it provides feedback to the ECM to control the throttle control motor to make the throttle valve opening angle properly in response to driving condition.

On Board Diagnosis Logic

UBS00H7W

This self-diagnosis has the one trip detection logic.

DTC No.	Trouble diagnosis name	DTC detecting condition	Possible cause
P2118 2118	Throttle control motor circuit short	ECM detects short in both circuits between ECM and throttle control motor.	● Harness or connectors (Throttle control motor circuit is shorted.) ● Electric throttle control actuator (Throttle control motor)

FAIL-SAFE MODE

When the malfunction is detected, the ECM enters fail-safe mode and the MIL lights up.

Engine operating condition in fail-safe mode
ECM stops the electric throttle control actuator control, throttle valve is maintained at a fixed opening (approx. 5 degrees) by the return spring.

DTC Confirmation Procedure

UBS00H7X

NOTE:
If DTC Confirmation Procedure has been previously conducted, always turn ignition switch OFF and wait at least 10 seconds before conducting the next test.

WITH CONSULT-II

1. Turn ignition switch ON and wait at least 2 seconds.
2. Select “DATA MONITOR” mode with CONSULT-II.
3. Start engine and let it idle for 5 seconds.
4. If DTC is detected, go to EC-542, "Diagnostic Procedure" .

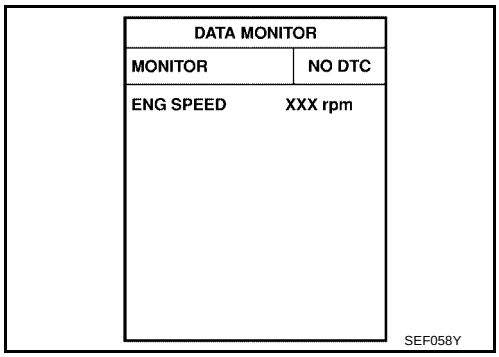

WITH GST

Follow the procedure “WITH CONSULT-II” above.

Wiring Diagram

UBS00H7Y

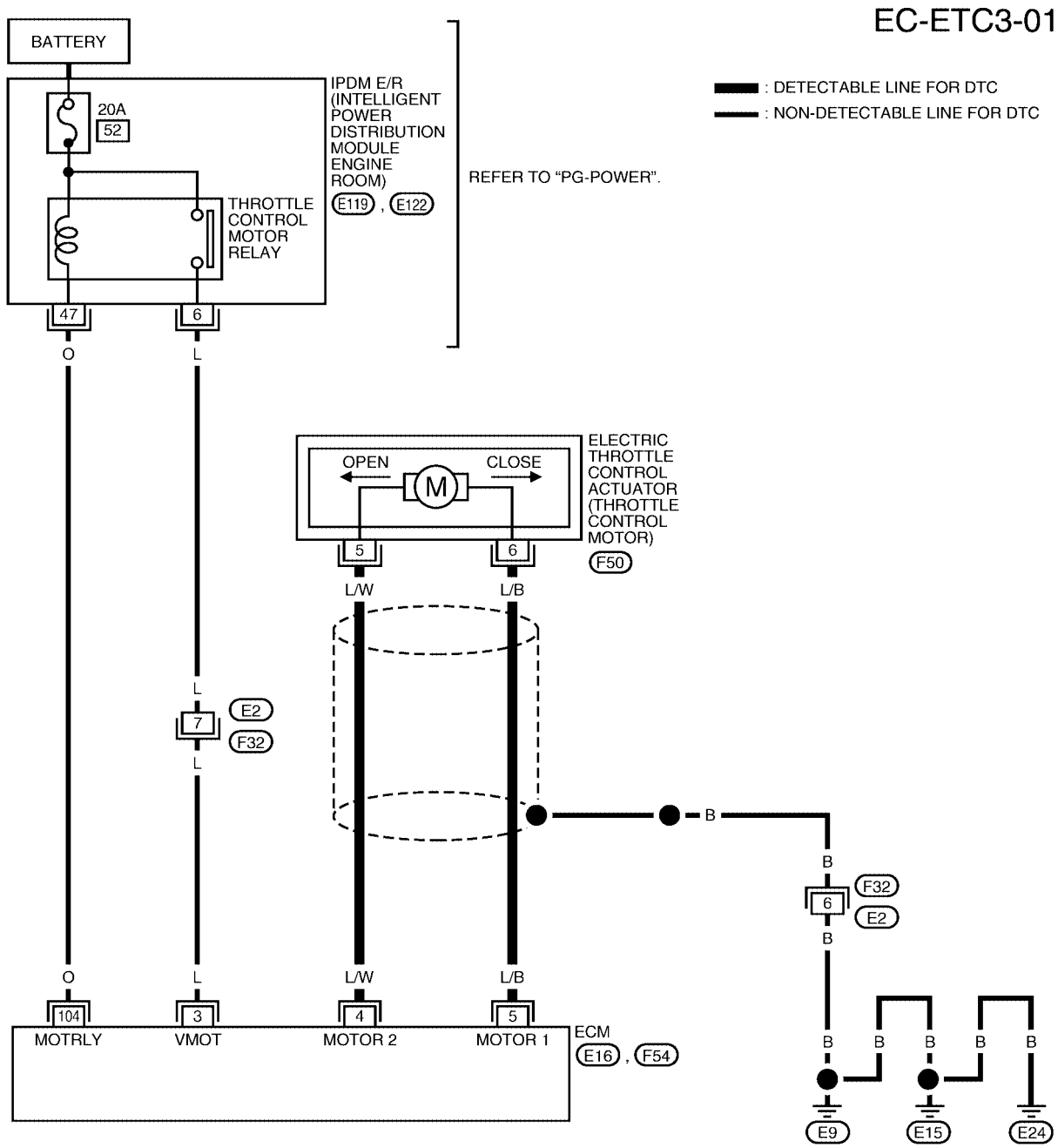

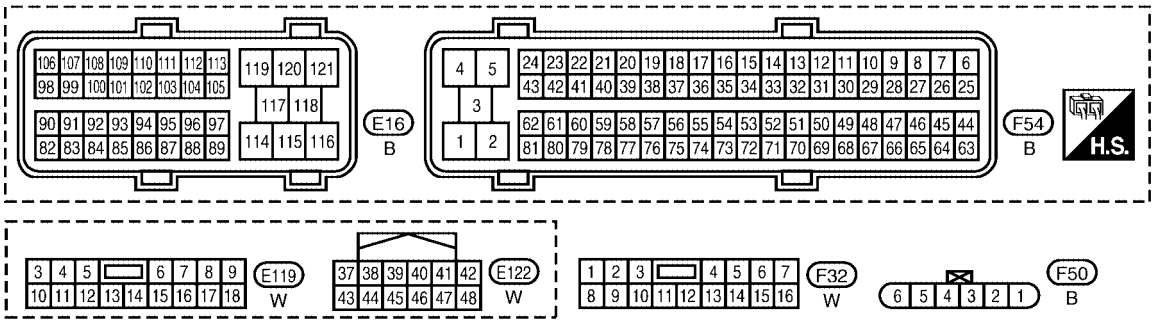

BBWA2101E

Specification data are reference values and are measured between each terminal and ground.
Pulse signal is measured by CONSULT-II.

CAUTION:

Do not use ECM ground terminals when measuring input/output voltage. Doing so may result in damage to the ECM's transistor. Use a ground other than ECM terminals, such as the ground.

TERMINAL NO.	WIRE COLOR	ITEM	CONDITION	DATA (DC Voltage)
3	L	Throttle control motor relay power supply	**[Ignition switch: ON]**	BATTERY VOLTAGE (11 - 14V)
4	L/W	Throttle control motor (Close)	**[Ignition switch: ON]** ● Engine: Stopped ● Selector lever: D ● Accelerator pedal: Fully released	0 - 14V★ 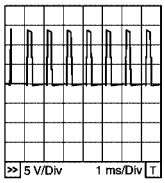 PBIB1104E
5	L/B	Throttle control motor (Open)	**[Ignition switch: ON]** ● Engine: Stopped ● Selector lever: D ● Accelerator pedal: Fully depressed	0 - 14V★ 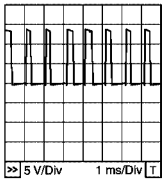 PBIB1105E
104	O	Throttle control motor relay	**[Ignition switch: OFF]**	BATTERY VOLTAGE (11 - 14V)
			[Ignition switch: ON]	0 - 1.0V

★: Average voltage for pulse signal (Actual pulse signal can be confirmed by oscilloscope.)

Diagnostic Procedure

UBS00H7Z

1. CHECK GROUND CONNECTIONS

1. Turn ignition switch OFF.
2. Loosen and retighten three ground screws on the body.
   Refer to EC-150, "Ground Inspection" .

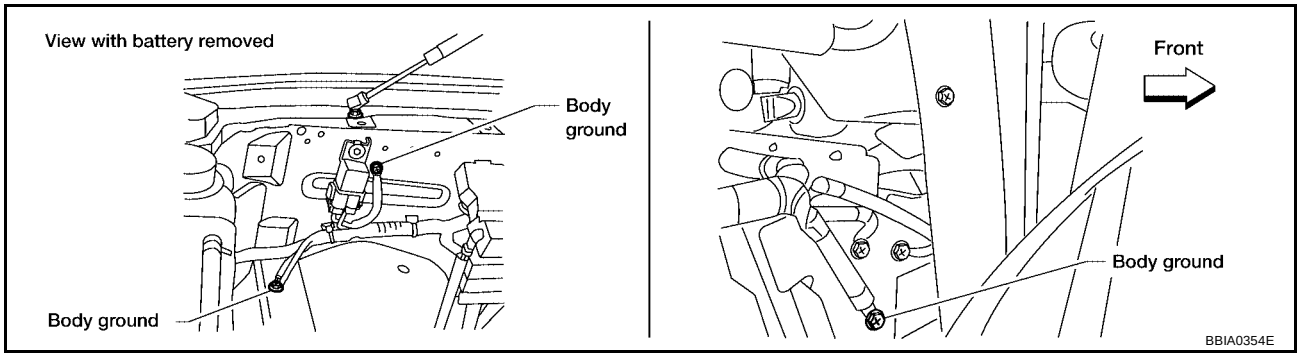

OK or NG

OK >> GO TO 2.
NG >> Repair or replace ground connections.

2. CHECK THROTTLE CONTROL MOTOR OUTPUT SIGNAL CIRCUIT FOR OPEN OR SHORT

1. Disconnect electric throttle control actuator harness connector.
2. Disconnect ECM harness connector.
3. Check harness continuity between the following terminals. Refer to Wiring Diagram.

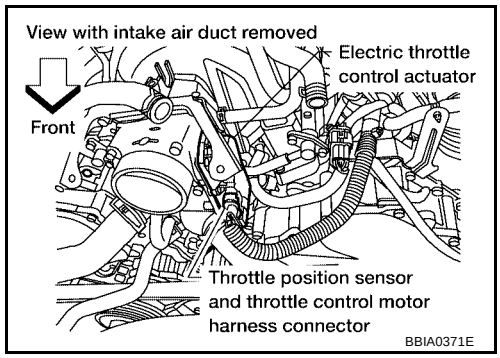

Electric throttle control actuator terminal	ECM terminal	Continuity
5	5	Should not exist
	4	Should exist
6	5	Should exist
	4	Should not exist

4. Also check harness for short to ground and short to power.

OK or NG

OK >> GO TO 3.
NG >> Repair or replace.

3. CHECK THROTTLE CONTROL MOTOR

Refer to EC-543, "Component Inspection" .

OK or NG

OK >> GO TO 4.
NG >> GO TO 5.

4. CHECK INTERMITTENT INCIDENT

Refer to EC-144, "TROUBLE DIAGNOSIS FOR INTERMITTENT INCIDENT" .

OK or NG

OK >> GO TO 5.
NG >> Repair or replace harness or connectors.

5. REPLACE ELECTRIC THROTTLE CONTROL ACTUATOR

1. Replace the electric throttle control actuator.
2. Perform EC-78, "Throttle Valve Closed Position Learning" .
3. Perform EC-78, "Idle Air Volume Learning" .

>> **INSPECTION END**

Component Inspection

UBS00H80

THROTTLE CONTROL MOTOR

1. Disconnect electric throttle control actuator harness connector.
2. Check resistance between terminals 5 and 6.

Resistance: Approximately 1 - 15 Ω [at 25 °C (77°F)]

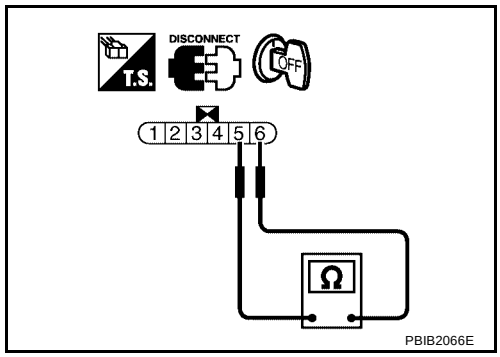

3. If NG, replace electric throttle control actuator and go to next step.
4. Perform EC-78, "Throttle Valve Closed Position Learning" .
5. Perform EC-78, "Idle Air Volume Learning" .

Removal and Installation

UBS00H81

ELECTRIC THROTTLE CONTROL ACTUATOR

Refer to EM-17, "INTAKE MANIFOLD" .

DTC P2119 ELECTRIC THROTTLE CONTROL ACTUATOR

PFP:16119

Component Description

UBS00H7E

Electric throttle control actuator consists of throttle control motor, throttle position sensor, etc.
The throttle control motor is operated by the ECM and it opens and closes the throttle valve.
The throttle position sensor detects the throttle valve position, and the opening and closing speed of the throttle valve and feeds the voltage signals to the ECM. The ECM judges the current opening angle of the throttle valve from these signals and the ECM controls the throttle control motor to make the throttle valve opening angle properly in response to driving condition.

On Board Diagnosis Logic

UBS00H7F

This self-diagnosis has one trip detection logic.

DTC No.	Trouble diagnosis name	DTC detecting condition		Possible cause
P2119 2119	Electric throttle control actuator	A)	Electric throttle control actuator does not function properly due to the return spring malfunction.	● Electric throttle control actuator
		B)	Throttle valve opening angle in fail-safe mode is not in specified range.	
		C)	ECM detect the throttle valve is stuck open.	

FAIL-SAFE MODE

When the malfunction is detected, ECM enters fail-safe mode and the MIL lights up.

Detected items	Engine operating condition in fail-safe mode
Malfunction A	The ECM controls the electric throttle actuator by regulating the throttle opening around the idle position. The engine speed will not rise more than 2,000 rpm.
Malfunction B	ECM controls the electric throttle control actuator by regulating the throttle opening to 20 degrees or less.
Malfunction C	While the vehicle is driving, it slows down gradually by fuel cut. After the vehicle stops, the engine stalls. The engine can restart in N or P position, and engine speed will not exceed 1,000 rpm or more.

DTC Confirmation Procedure

UBS00H7G

NOTE:

- **Perform PROCEDURE FOR MALFUNCTION A AND B first. If the DTC cannot be confirmed, perform PROCEDURE FOR MALFUNCTION C.**
- If DTC Confirmation Procedure has been previously conducted, always turn ignition switch OFF and wait at least 10 seconds before conducting the next test.

PROCEDURE FOR MALFUNCTION A AND B

With CONSULT-II

1. Turn ignition switch ON and wait at least 1 second.
2. Select “DATA MONITOR” mode with CONSULT-II.
3. Shift selector lever to D position and wait at least 3 seconds.
4. Shift selector lever to P position.
5. Turn ignition switch OFF and wait at least 10 seconds.
6. Turn ignition switch ON and wait at least 1 second.
7. Shift selector lever to D position and wait at least 3 seconds.
8. Shift selector lever to P position.
9. Turn ignition switch OFF, wait at least 10 seconds and then turn ON.
10. If DTC is detected, go to EC-546, "Diagnostic Procedure" .

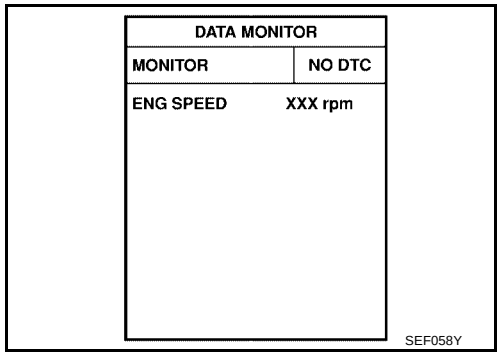

With GST

Follow the procedure “With CONSULT-II” above.

PROCEDURE FOR MALFUNCTION C

With CONSULT-II

1. Turn ignition switch ON and wait at least 1 second.
2. Select “DATA MONITOR” mode with CONSULT-II.
3. Shift selector lever to D position and wait at least 3 seconds.
4. Shift selector lever to P position.
5. Start engine and let it idle for 3 seconds.
6. If DTC is detected, go to EC-546, "Diagnostic Procedure" .

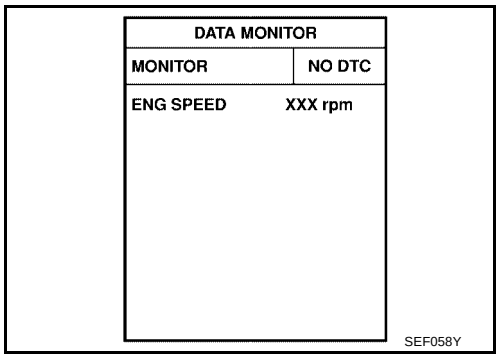

With GST

Follow the procedure “With CONSULT-II” above.

Diagnostic Procedure

UBS00H7H

1. CHECK ELECTRIC THROTTLE CONTROL ACTUATOR VISUALLY

1. Remove the intake air duct.
2. Check if a foreign matter is caught between the throttle valve and the housing.

OK or NG

OK >> GO TO 2.
NG >> Remove the foreign matter and clean the electric throttle control actuator inside.

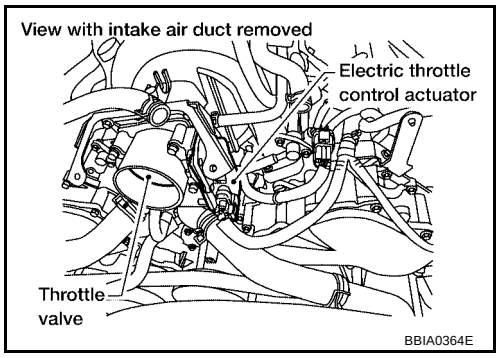

2. REPLACE ELECTRIC THROTTLE CONTROL ACTUATOR

1. Replace the electric throttle control actuator.
2. Perform EC-78, "Throttle Valve Closed Position Learning" .
3. Perform EC-78, "Idle Air Volume Learning" .

>> **INSPECTION END**

DTC P2122, P2123 APP SENSOR

PFP:18002

Component Description

UBS00HC4

The accelerator pedal position sensor is installed on the upper end of the accelerator pedal assembly. The sensor detects the accelerator position and sends a signal to the ECM.
Accelerator pedal position sensor has two sensors. These sensors are a kind of potentiometers which transform the accelerator pedal position into output voltage, and emit the voltage signal to the ECM. In addition, these sensors detect the opening and closing speed of the accelerator pedal and feed the voltage signals to the ECM. The ECM judges the current opening angle of the accelerator pedal from these signals and controls the throttle control motor based on these signals.

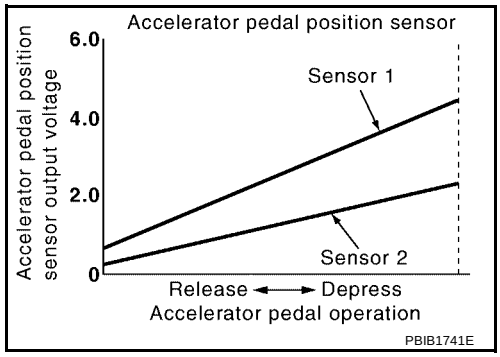

Idle position of the accelerator pedal is determined by the ECM receiving the signal from the accelerator pedal position sensor. The ECM uses this signal for the engine operation such as fuel cut.

CONSULT-II Reference Value in Data Monitor Mode

UBS00HC5

Specification data are reference values.

MONITOR ITEM	CONDITION		SPECIFICATION
ACCEL SEN 1	● Ignition switch: ON (Engine stopped)	Accelerator pedal: Fully released	0.5 - 1.0V
		Accelerator pedal: Fully depressed	4.2 - 4.8V
ACCEL SEN 2*	● Ignition switch: ON (Engine stopped)	Accelerator pedal: Fully released	0.5 - 1.0V
		Accelerator pedal: Fully depressed	4.2 - 4.8V
CLSD THL POS	● Ignition switch: ON (Engine stopped)	Accelerator pedal: Fully released	ON
		Accelerator pedal: Slightly depressed	OFF

*: Accelerator pedal position sensor 2 signal is converted by ECM internally. Thus, it differ from ECM terminal voltage.

On Board Diagnosis Logic

UBS00HC6

These self-diagnoses have the one trip detection logic.

NOTE:
If DTC P2122 or P2123 is displayed with DTC P0643, first perform the trouble diagnosis for DTC P0643. Refer to EC-460, "DTC P0643 SENSOR POWER SUPPLY" .

DTC No.	Trouble diagnosis name	DTC detecting condition	Possible cause
P2122 2122	Accelerator pedal position sensor 1 circuit low input	An excessively low voltage from the APP sensor 1 is sent to ECM.	● Harness or connectors (The APP sensor 1 circuit is open or shorted.) ● Accelerator pedal position sensor (Accelerator pedal position sensor 1)
P2123 2123	Accelerator pedal position sensor 1 circuit high input	An excessively high voltage from the APP sensor 1 is sent to ECM.	

FAIL-SAFE MODE

When the malfunction is detected, ECM enters fail-safe mode and the MIL lights up.

Engine operating condition in fail-safe mode
The ECM controls the electric throttle control actuator in regulating the throttle opening in order for the idle position to be within +10 degrees. The ECM regulates the opening speed of the throttle valve to be slower than the normal condition. So, the acceleration will be poor.

DTC Confirmation Procedure

UBS00HC7

NOTE:
If DTC Confirmation Procedure has been previously conducted, always turn ignition switch OFF and wait at least 10 seconds before conducting the next test.
TESTING CONDITION:
Before performing the following procedure, confirm that battery voltage is more than 8V at idle.

WITH CONSULT-II

1. Turn ignition switch ON.
2. Select “DATA MONITOR” mode with CONSULT-II.
3. Start engine and let it idle for 1 second.
4. If DTC is detected, go to EC-550, "Diagnostic Procedure" .

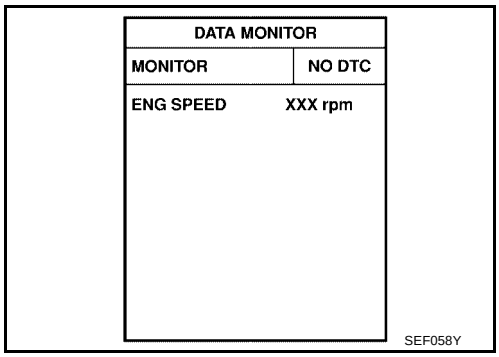

WITH GST

Follow the procedure “WITH CONSULT-II” above.

Wiring Diagram

UBS00HC8

EC-APPS1-01

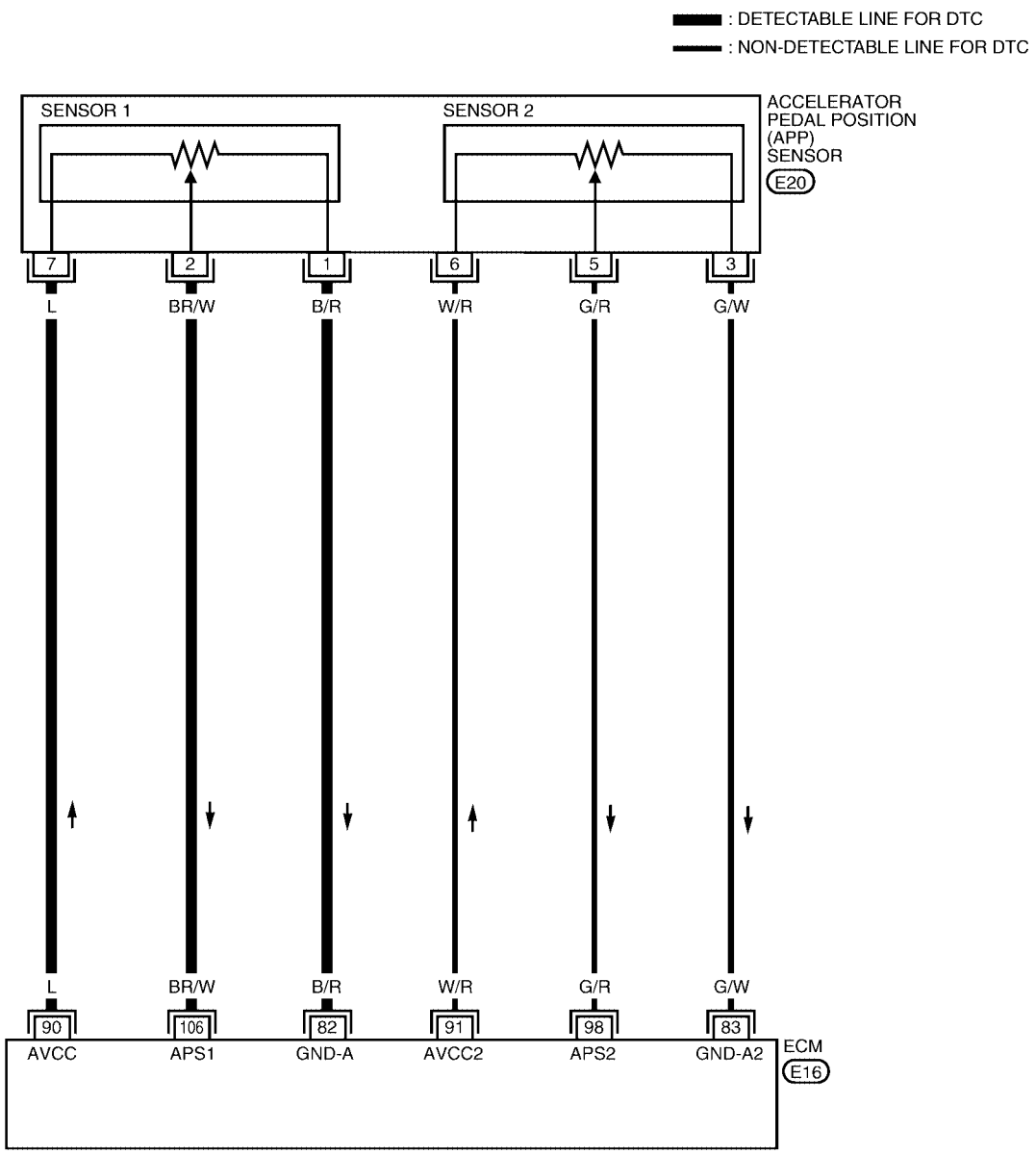

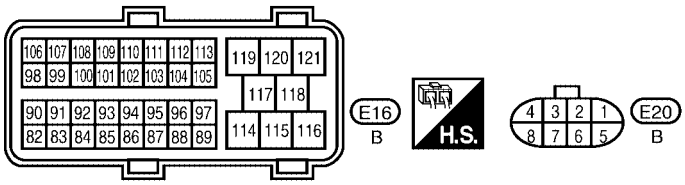

BBWA1706E

Specification data are reference values and are measured between each terminal and ground.

CAUTION:

Do not use ECM ground terminals when measuring input/output voltage. Doing so may result in damage to the ECM's transistor. Use a ground other than ECM terminals, such as the ground.

TERMINAL NO.	WIRE COLOR	ITEM	CONDITION	DATA (DC Voltage)
82	B/R	Sensor ground (APP sensor 1)	**[Engine is running]** ● **Warm-up condition** ● Idle speed	Approximately 0V
83	G/W	Sensor ground (APP sensor 2)	**[Engine is running]** ● **Warm-up condition** ● Idle speed	Approximately 0V
90	L	Sensor power supply (APP sensor 1)	**[Ignition switch: ON]**	Approximately 5V
91	W/R	Sensor power supply (APP sensor 2)	**[Ignition switch: ON]**	Approximately 5V
98	G/R	Accelerator pedal position sensor 2	**[Ignition switch: ON]** ● Engine: Stopped ● Accelerator pedal: Fully released	0.25 - 0.50V
			[Ignition switch: ON] ● Engine: Stopped ● Accelerator pedal: Fully depressed	2.0 - 2.5V
106	BR/W	Accelerator pedal position sensor 1	**[Ignition switch: ON]** ● Engine: Stopped ● Accelerator pedal: Fully released	0.5 - 1.0V
			[Ignition switch: ON] ● Engine: Stopped ● Accelerator pedal: Fully depressed	4.2 - 4.8V

Diagnostic Procedure

UBS00HC9

1. CHECK GROUND CONNECTIONS

1. Turn ignition switch OFF.
2. Loosen and retighten three ground screws on the body.
   Refer to EC-150, "Ground Inspection" .

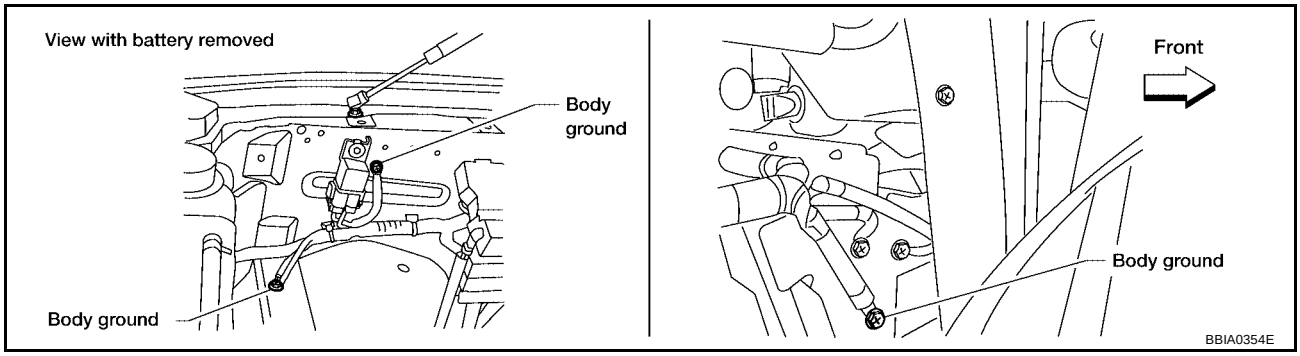

OK or NG

OK >> GO TO 2.
NG >> Repair or replace ground connections.

2. CHECK APP SENSOR 1 POWER SUPPLY CIRCUIT

1. Disconnect accelerator pedal position (APP) sensor harness connector.
2. Turn ignition switch ON.

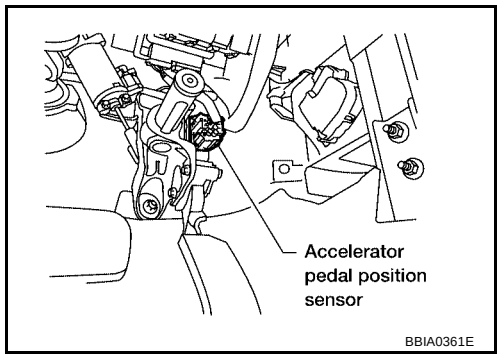

3. Check voltage between APP sensor terminal 7 and ground with CONSULT-II or tester.

Voltage: Approximately 5V

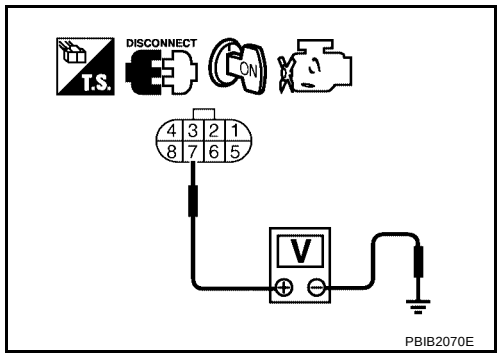

OK or NG

OK >> GO TO 3.
NG >> Repair open circuit or short to ground or short to power in harness or connectors.

3. CHECK APP SENSOR 1 GROUND CIRCUIT FOR OPEN AND SHORT

1. Turn ignition switch OFF.
2. Disconnect ECM harness connector.
3. Check harness continuity between ECM terminal 82 and APP sensor terminal 1. Refer to Wiring Diagram.

Continuity should exist.

4. Also check harness for short to ground and short to power.

OK or NG

OK >> GO TO 4.
NG >> Repair open circuit or short to ground or short to power in harness or connectors.

4. CHECK APP SENSOR INPUT SIGNAL CIRCUIT FOR OPEN AND SHORT

1. Check harness continuity between ECM terminal 106 and APP sensor terminal 2. Refer to Wiring Diagram.

Continuity should exist.

2. Also check harness for short to ground and short to power.

OK or NG

OK >> GO TO 5.
NG >> Repair open circuit or short to ground or short to power in harness or connectors.

5. CHECK APP SENSOR

Refer to EC-552, "Component Inspection" .

OK or NG

OK >> GO TO 7.
NG >> GO TO 6.

6. REPLACE ACCELERATOR PEDAL ASSEMBLY

1. Replace the accelerator pedal assembly.
2. Perform EC-78, "Accelerator Pedal Released Position Learning" .
3. Perform EC-78, "Throttle Valve Closed Position Learning" .
4. Perform EC-78, "Idle Air Volume Learning" .

>> **INSPECTION END**

7. CHECK INTERMITTENT INCIDENT

Refer to EC-144, "TROUBLE DIAGNOSIS FOR INTERMITTENT INCIDENT" .

>> **INSPECTION END**

Component Inspection

UBS00HCA

ACCELERATOR PEDAL POSITION SENSOR

1. Reconnect all harness connectors disconnected.
2. Turn ignition switch ON.
3. Check voltage between ECM terminals 106 (APP sensor 1 signal), 98 (APP sensor 2 signal) and ground under the following conditions.

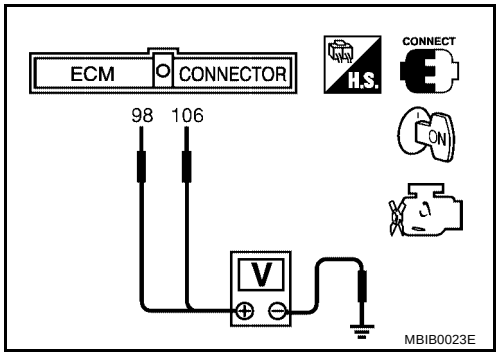

Terminal	Accelerator pedal	Voltage
106 (Accelerator pedal position sensor 1)	Fully released	0.5 - 1.0V
	Fully depressed	4.2 - 4.8V
98 (Accelerator pedal position sensor 2)	Fully released	0.25 - 0.5V
	Fully depressed	2.0 - 2.5V

4. If NG, replace accelerator pedal assembly and go to next step.
5. Perform EC-78, "Accelerator Pedal Released Position Learning" .
6. Perform EC-78, "Throttle Valve Closed Position Learning" .
7. Perform EC-78, "Idle Air Volume Learning" .

Removal and Installation

UBS00HCB

ACCELERATOR PEDAL

Refer to ACC-3, "ACCELERATOR CONTROL SYSTEM" .

DTC P2127, P2128 APP SENSOR

PFP:18002

Component Description

UBS00HCC

The accelerator pedal position sensor is installed on the upper end of the accelerator pedal assembly. The sensor detects the accelerator position and sends a signal to the ECM.
Accelerator pedal position sensor has two sensors. These sensors are a kind of potentiometers which transform the accelerator pedal position into output voltage, and emit the voltage signal to the ECM. In addition, these sensors detect the opening and closing speed of the accelerator pedal and feed the voltage signals to the ECM. The ECM judges the current opening angle of the accelerator pedal from these signals and controls the throttle control motor based on these signals.

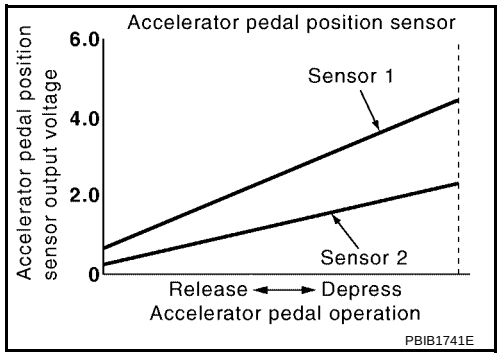

Idle position of the accelerator pedal is determined by the ECM receiving the signal from the accelerator pedal position sensor. The ECM uses this signal for the engine operation such as fuel cut.

CONSULT-II Reference Value in Data Monitor Mode

UBS00HCD

Specification data are reference values.

MONITOR ITEM	CONDITION		SPECIFICATION
ACCEL SEN 1	● Ignition switch: ON (Engine stopped)	Accelerator pedal: Fully released	0.5 - 1.0V
		Accelerator pedal: Fully depressed	4.2 - 4.8V
ACCEL SEN 2*	● Ignition switch: ON (Engine stopped)	Accelerator pedal: Fully released	0.5 - 1.0V
		Accelerator pedal: Fully depressed	4.2 - 4.8V
CLSD THL POS	● Ignition switch: ON (Engine stopped)	Accelerator pedal: Fully released	ON
		Accelerator pedal: Slightly depressed	OFF

*: Accelerator pedal position sensor 2 signal is converted by ECM internally. Thus, it differ from ECM terminal voltage.

On Board Diagnosis Logic

UBS00HCE

These self-diagnoses have the one trip detection logic.

DTC No.	Trouble diagnosis name	DTC detecting condition	Possible cause
P2127 2127	Accelerator pedal position sensor 2 circuit low input	An excessively low voltage from the APP sensor 2 is sent to ECM.	● Harness or connectors (APP sensor 2 circuit is open or shorted.) (TP sensor circuit is shorted.) ● Accelerator pedal position sensor (Accelerator pedal position sensor 2) ● Electric throttle control actuator (TP sensor)
P2128 2128	Accelerator pedal position sensor 2 circuit high input	An excessively high voltage from the APP sensor 2 is sent to ECM.	

FAIL-SAFE MODE

When the malfunction is detected, ECM enters fail-safe mode and the MIL lights up.

Engine operating condition in fail-safe mode
The ECM controls the electric throttle control actuator in regulating the throttle opening in order for the idle position to be within +10 degrees. The ECM regulates the opening speed of the throttle valve to be slower than the normal condition. So, the acceleration will be poor.

DTC Confirmation Procedure

UBS00HCF

NOTE:
If DTC Confirmation Procedure has been previously conducted, always turn ignition switch OFF and wait at least 10 seconds before conducting the next test.
TESTING CONDITION:
Before performing the following procedure, confirm that battery voltage is more than 8V at idle.

WITH CONSULT-II

1. Turn ignition switch ON.
2. Select “DATA MONITOR” mode with CONSULT-II.
3. Start engine and let it idle for 1 second.
4. If DTC is detected, go to EC-556, "Diagnostic Procedure" .

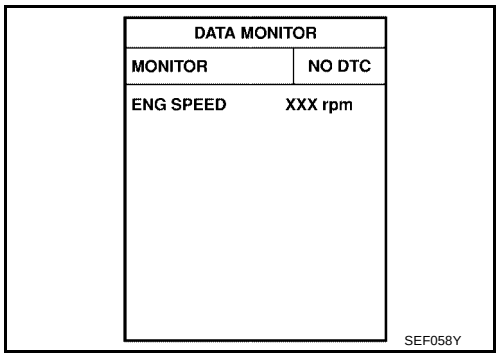

WITH GST

Follow the procedure “WITH CONSULT-II” above.

Wiring Diagram

UBS00HCG

EC-APPS2-01

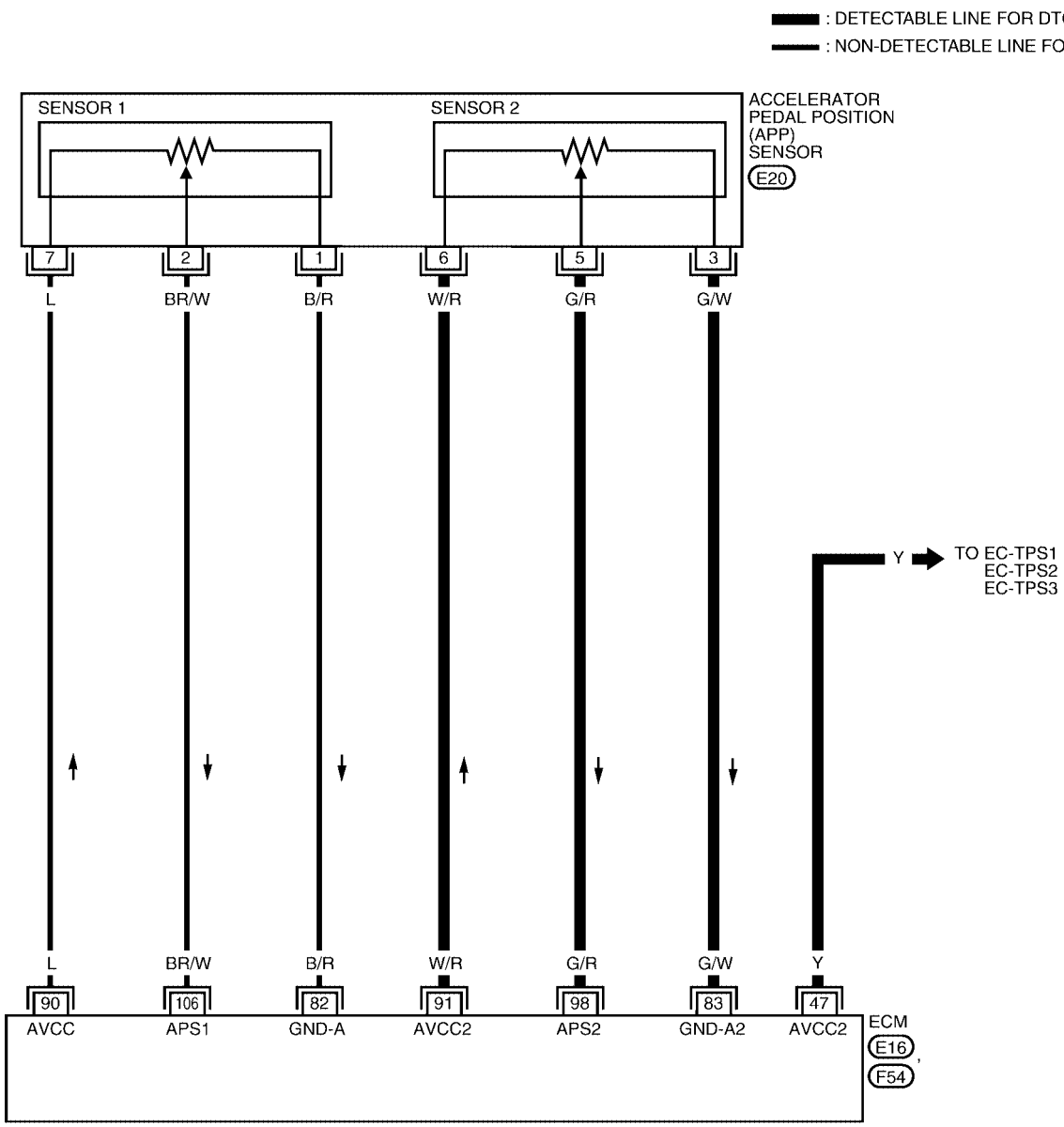

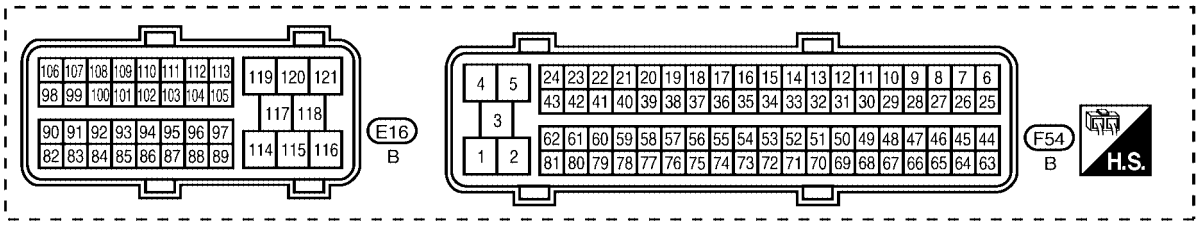

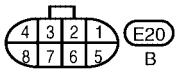

BBWA1707E

Specification data are reference values and are measured between each terminal and ground.

CAUTION:

Do not use ECM ground terminals when measuring input/output voltage. Doing so may result in damage to the ECM's transistor. Use a ground other than ECM terminals, such as the ground.

TERMINAL NO.	WIRE COLOR	ITEM	CONDITION	DATA (DC Voltage)
47	Y	Sensor power supply (TP sensor)	**[Ignition switch: ON]**	Approximately 5V
82	B/R	Sensor ground (APP sensor 1)	**[Engine is running]** ● **Warm-up condition** ● Idle speed	Approximately 0V
83	G/W	Sensor ground (APP sensor 2)	**[Engine is running]** ● **Warm-up condition** ● Idle speed	Approximately 0V
90	L	Sensor power supply (APP sensor 1)	**[Ignition switch: ON]**	Approximately 5V
91	W/R	Sensor power supply (APP sensor 2)	**[Ignition switch: ON]**	Approximately 5V
98	G/R	Accelerator pedal position sensor 2	**[Ignition switch: ON]** ● Engine: Stopped ● Accelerator pedal: Fully released	0.25 - 0.50V
			[Ignition switch: ON] ● Engine: Stopped ● Accelerator pedal: Fully depressed	2.0 - 2.5V
106	BR/W	Accelerator pedal position sensor 1	**[Ignition switch: ON]** ● Engine: Stopped ● Accelerator pedal: Fully released	0.5 - 1.0V
			[Ignition switch: ON] ● Engine: Stopped ● Accelerator pedal: Fully depressed	4.2 - 4.8V

Diagnostic Procedure

UBS00HCH

1. CHECK GROUND CONNECTIONS

1. Turn ignition switch OFF.
2. Loosen and retighten three ground screws on the body.
   Refer to EC-150, "Ground Inspection" .

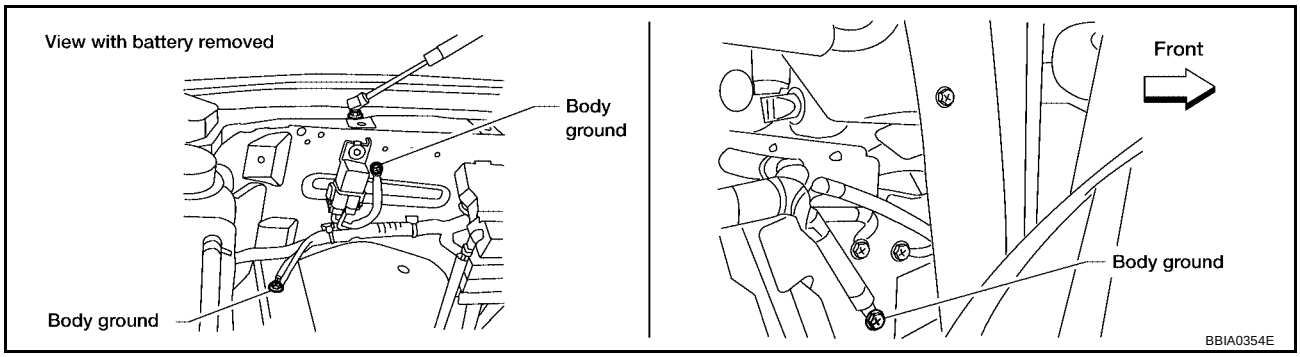

OK or NG

OK >> GO TO 2.
NG >> Repair or replace ground connections.

2. CHECK APP SENSOR 2 POWER SUPPLY CIRCUIT-I

1. Disconnect accelerator pedal position (APP) sensor harness connector.
2. Turn ignition switch ON.

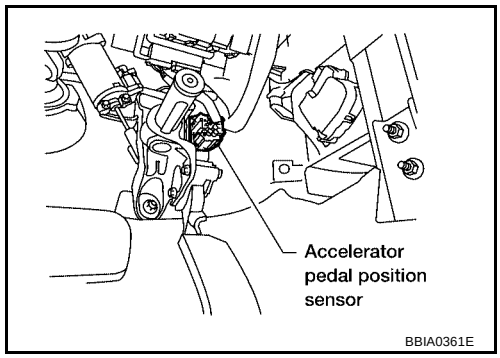

3. Check voltage between APP sensor terminal 6 and ground with CONSULT-II or tester.

Voltage: Approximately 5V

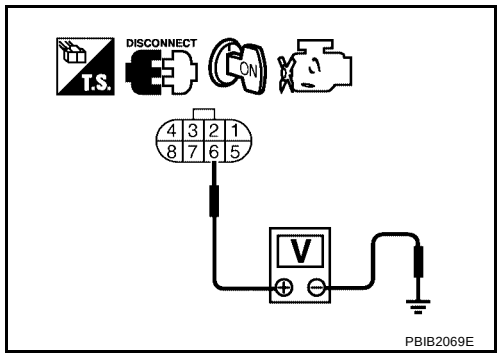

OK or NG

OK >> GO TO 7.
NG >> GO TO 3.

3. CHECK APP SENSOR 2 POWER SUPPLY CIRCUIT-II

1. Turn ignition switch OFF.
2. Disconnect ECM harness connector.
3. Check harness continuity between APP sensor terminal 6 and ECM terminal 91. Refer to Wiring Diagram.

Continuity should exist.

OK or NG

OK >> GO TO 4.
NG >> Repair open circuit.

4. CHECK APP SENSOR 2 POWER SUPPLY CIRCUIT-III

Check harness for short to power and short to ground, between the following terminals

ECM terminal	Sensor terminal	Reference Wiring Diagram
47	Electric throttle control actuator terminal 2	EC-562
91	APP sensor terminal 6	EC-555

OK or NG

OK >> GO TO 5.
NG >> Repair short to ground or short to power in harness or connectors.

5. CHECK THROTTLE POSITION SENSOR

Refer to EC-566, "Component Inspection" .

OK or NG

OK >> GO TO 11.
NG >> GO TO 6.

6. REPLACE ELECTRIC THROTTLE CONTROL ACTUATOR

1. Replace the electric throttle control actuator.
2. Perform EC-78, "Throttle Valve Closed Position Learning" .
3. Perform EC-78, "Idle Air Volume Learning" .

>> **INSPECTION END**

7. CHECK APP SENSOR 2 GROUND CIRCUIT FOR OPEN AND SHORT

1. Turn ignition switch OFF.
2. Disconnect ECM harness connector.
3. Check harness continuity between ECM terminal 83 and APP sensor terminal 3.
   Refer to Wiring Diagram.

   Continuity should exist.

4. Also check harness for short to ground and short to power.

OK or NG

OK >> GO TO 8.
NG >> Repair open circuit or short to ground or short to power in harness or connectors.

8. CHECK APP SENSOR 2 INPUT SIGNAL CIRCUIT FOR OPEN AND SHORT

1. Check harness continuity between ECM terminal 98 and APP sensor terminal 5.
   Refer to Wiring Diagram.

   Continuity should exist.

2. Also check harness for short to ground and short to power.

OK or NG

OK >> GO TO 9.
NG >> Repair open circuit or short to ground or short to power in harness or connectors.

9. CHECK APP SENSOR

Refer to EC-559, "Component Inspection" .

OK or NG

OK >> GO TO 11.
NG >> GO TO 10.

10. REPLACE ACCELERATOR PEDAL ASSEMBLY

1. Replace the accelerator pedal assembly.
2. Perform EC-78, "Accelerator Pedal Released Position Learning" .
3. Perform EC-78, "Throttle Valve Closed Position Learning" .
4. Perform EC-78, "Idle Air Volume Learning" .

>> **INSPECTION END**

11. CHECK INTERMITTENT INCIDENT

Refer to EC-144, "TROUBLE DIAGNOSIS FOR INTERMITTENT INCIDENT" .

>> **INSPECTION END**

Component Inspection

UBS00HCI

ACCELERATOR PEDAL POSITION SENSOR

1. Reconnect all harness connectors disconnected.
2. Turn ignition switch ON.
3. Check voltage between ECM terminals 106 (APP sensor 1 signal), 98 (APP sensor 2 signal) and ground under the following conditions.

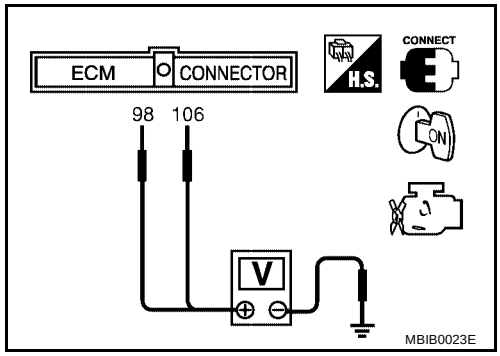

Terminal	Accelerator pedal	Voltage
106 (Accelerator pedal position sensor 1)	Fully released	0.5 - 1.0V
	Fully depressed	4.2 - 4.8V
98 (Accelerator pedal position sensor 2)	Fully released	0.25 - 0.5V
	Fully depressed	2.0 - 2.5V

4. If NG, replace accelerator pedal assembly and go to next step.
5. Perform EC-78, "Accelerator Pedal Released Position Learning" .
6. Perform EC-78, "Throttle Valve Closed Position Learning" .
7. Perform EC-78, "Idle Air Volume Learning" .

Removal and Installation

UBS00HCJ

ACCELERATOR PEDAL

Refer to ACC-3, "ACCELERATOR CONTROL SYSTEM" .

DTC P2135 TP SENSOR

PFP:16119

Component Description

UBS00HCK

Electric throttle control actuator consists of throttle control motor, throttle position sensor, etc. The throttle position sensor responds to the throttle valve movement.
The throttle position sensor has the two sensors. These sensors are a kind of potentiometers which transform the throttle valve position into output voltage, and emit the voltage signal to the ECM. In addition, these sensors detect the opening and closing speed of the throttle valve and feed the voltage signals to the ECM. The ECM judges the current opening angle of the throttle valve from these signals and the ECM controls the throttle control motor to make the throttle valve opening angle properly in response to driving condition.

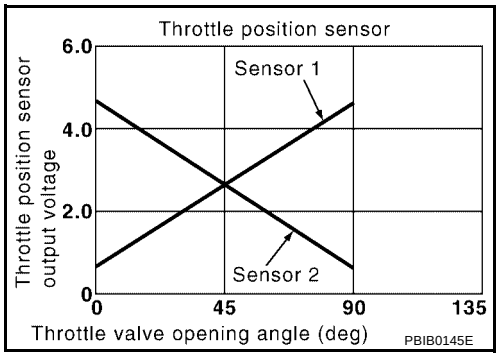

CONSULT-II Reference Value in Data Monitor Mode

UBS00HCL

Specification data are reference values.

MONITOR ITEM	CONDITION		SPECIFICATION
THRTL SEN 1 THRTL SEN 2*	● Ignition switch: ON (Engine stopped) ● Selector lever: D	Accelerator pedal: Fully released	More than 0.36V
		Accelerator pedal: Fully depressed	Less than 4.75V

*: Throttle position sensor 2 signal is converted by ECM internally. Thus, it differs from ECM terminal voltage signal.

On Board Diagnosis Logic

UBS00HCM

This self-diagnosis has the one trip detection logic.

DTC No.	Trouble diagnosis name	DTC detecting condition	Possible cause
P2135 2135	Throttle position sensor circuit range/performance	Rationally incorrect voltage is sent to ECM compared with the signals from TP sensor 1 and TP sensor 2.	● Harness or connector (TP sensor 1 and 2 circuit is open or shorted.) (APP sensor 2 circuit is shorted.) ● Electric throttle control actuator (TP sensor 1 and 2) ● Accelerator pedal position sensor (APP sensor 2)

FAIL-SAFE MODE

When the malfunction is detected, the ECM enters fail-safe mode and the MIL lights up.

Engine operation condition in fail-safe mode
The ECM controls the electric throttle control actuator in regulating the throttle opening in order for the idle position to be within +10 degrees. The ECM regulates the opening speed of the throttle valve to be slower than the normal condition. So, the acceleration will be poor.

DTC Confirmation Procedure

UBS00HCN

NOTE:
If DTC Confirmation Procedure has been previously conducted, always turn ignition switch OFF and wait at least 10 seconds before conducting the next test.
TESTING CONDITION:
Before performing the following procedure, confirm that battery voltage is more than 8V at idle.

WITH CONSULT-II

1. Turn ignition switch ON.
2. Select “DATA MONITOR” mode with CONSULT-II.
3. Start engine and let it idle for 1 second.
4. If DTC is detected, go to EC-563, "Diagnostic Procedure" .

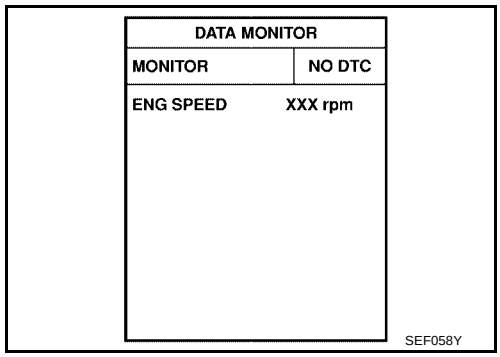

WITH GST

Follow the procedure “WITH CONSULT-II” above.

Wiring Diagram

UBS00HCO

EC-TPS3-01

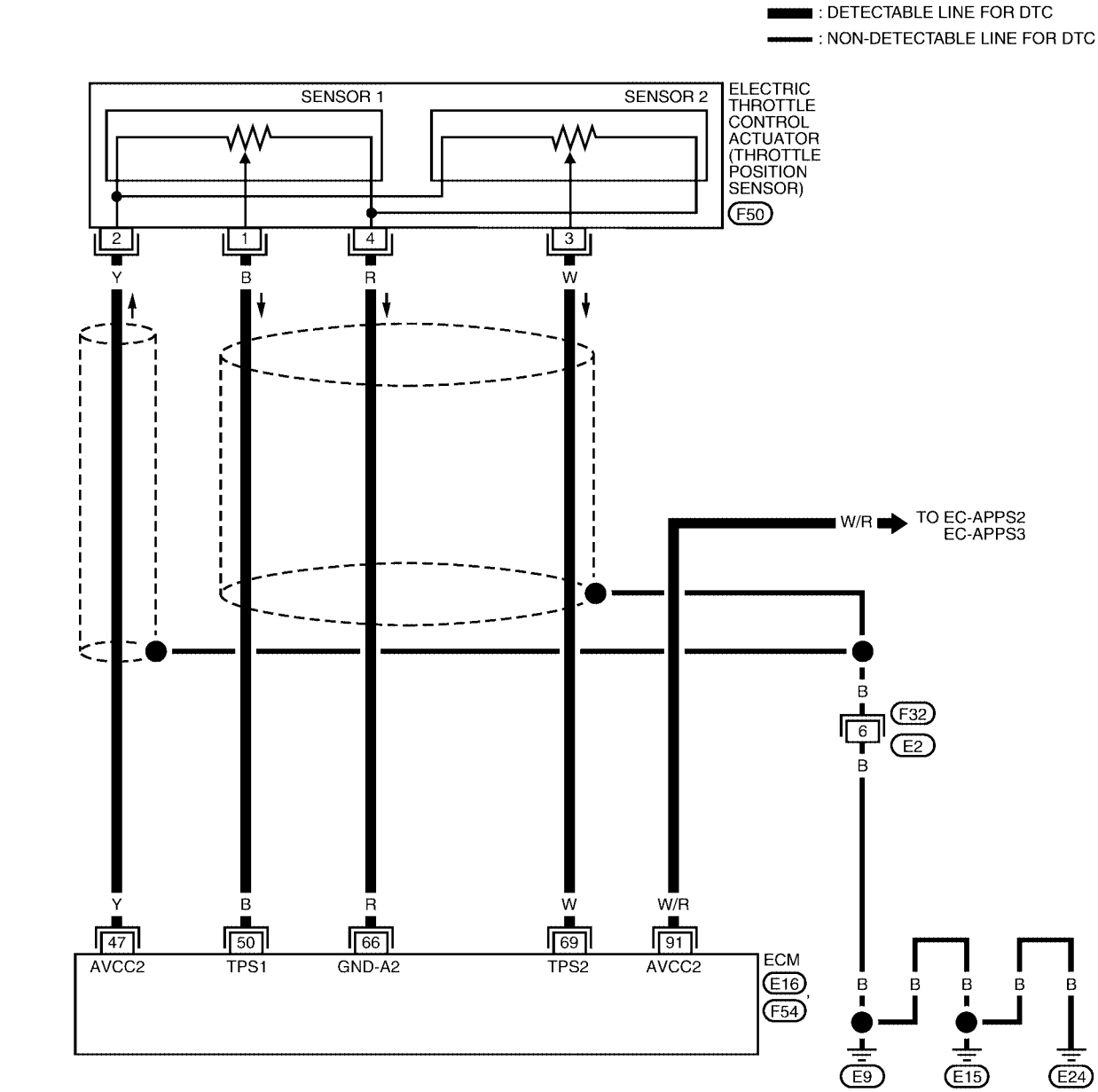

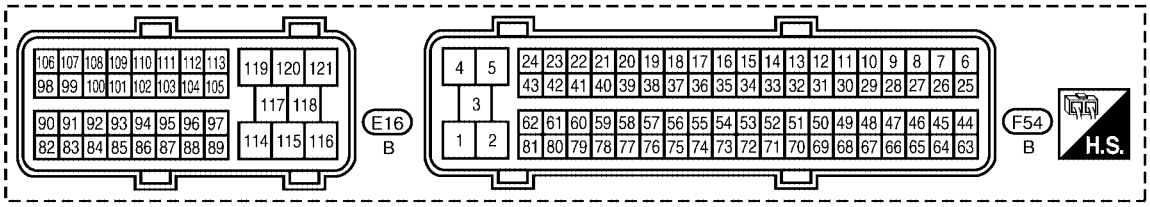

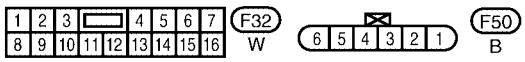

BBWA2093E

Specification data are reference values and are measured between each terminal and ground.

CAUTION:

Do not use ECM ground terminals when measuring input/output voltage. Doing so may result in damage to the ECM's transistor. Use a ground other than ECM terminals, such as the ground.

TERMINAL NO.	WIRE COLOR	ITEM	CONDITION	DATA (DC Voltage)
47	Y	Sensor power supply (Throttle position sensor)	**[Ignition switch: ON]**	Approximately 5V
50	B	Throttle position sensor 1	**[Ignition switch: ON]** ● Engine: Stopped ● Selector lever: D ● Accelerator pedal: Fully released	More than 0.36V
			[Ignition switch: ON] ● Engine: Stopped ● Selector lever: D ● Accelerator pedal: Fully depressed	Less than 4.75V
66	R	Sensor ground (Throttle position sensor)	**[Engine is running]** ● **Warm-up condition** ● Idle speed	Approximately 0V
69	W	Throttle position sensor 2	**[Ignition switch: ON]** ● Engine: Stopped ● Selector lever: D ● Accelerator pedal: Fully released	Less than 4.75V
			[Ignition switch: ON] ● Engine: Stopped ● Selector lever: D ● Accelerator pedal: Fully depressed	More than 0.36V
91	W/R	Sensor power supply (APP sensor 2)	**[Ignition switch: ON]**	Approximately 5V

Diagnostic Procedure

UBS00HCP

1. CHECK GROUND CONNECTIONS

1. Turn ignition switch OFF.
2. Loosen and retighten three ground screws on the body.
   Refer to EC-150, "Ground Inspection" .

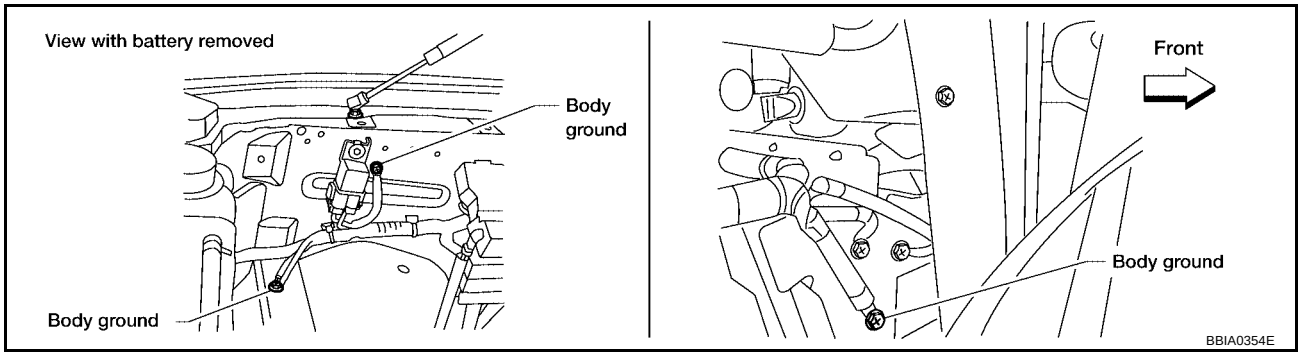

OK or NG

OK >> GO TO 2.
NG >> Repair or replace ground connections.

2. CHECK THROTTLE POSITION SENSOR POWER SUPPLY CIRCUIT-I

1. Disconnect electric throttle control actuator harness connector.
2. Turn ignition switch ON.

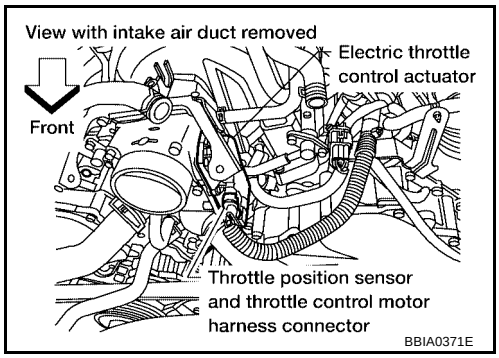

3. Check voltage between electric throttle control actuator terminal 2 and ground with CONSULT-II or tester.

Voltage: Approximately 5V

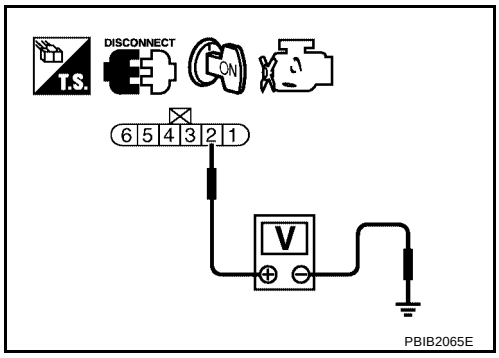

OK or NG

OK >> GO TO 7.
NG >> GO TO 3.

3. CHECK THROTTLE POSITION SENSOR POWER SUPPLY CIRCUIT-II

1. Turn ignition switch OFF.
2. Disconnect ECM harness connector.
3. Check harness continuity between electric throttle control actuator terminal 2 and ECM terminal 47. Refer to Wiring Diagram.

Continuity should exist.

OK or NG

OK >> GO TO 4.
NG >> Repair open circuit.

4. CHECK THROTTLE POSITION SENSOR POWER SUPPLY CIRCUIT-III

Check harness for short to power and short to ground, between the following terminals.

ECM terminal	Sensor terminal	Reference Wiring Diagram
47	Electric throttle control actuator terminal 2	EC-562
91	APP sensor terminal 6	EC-569

OK or NG

OK >> GO TO 5.
NG >> Repair short to ground or short to power in harness or connectors.

5. CHECK ACCELERATOR PEDAL POSITION SENSOR

Refer to EC-574, "Component Inspection" .

OK or NG

OK >> GO TO 11.
NG >> GO TO 6.

6. REPLACE ACCELERATOR PEDAL ASSEMBLY

1. Replace the accelerator pedal assembly.
2. Perform EC-78, "Accelerator Pedal Released Position Learning" .
3. Perform EC-78, "Throttle Valve Closed Position Learning" .
4. Perform EC-78, "Idle Air Volume Learning" .

>> **INSPECTION END**

7. CHECK THROTTLE POSITION SENSOR GROUND CIRCUIT FOR OPEN AND SHORT

1. Turn ignition switch OFF.
2. Disconnect ECM harness connector.
3. Check harness continuity between electric throttle control actuator terminal 4 and ECM terminal 66.
   Refer to Wiring Diagram.

   Continuity should exist.

4. Also check harness for short to ground and short to power.

OK or NG

OK >> GO TO 8.
NG >> Repair open circuit or short to ground or short to power in harness or connectors.

8. CHECK THROTTLE POSITION SENSOR INPUT SIGNAL CIRCUIT FOR OPEN AND SHORT

1. Check harness continuity between ECM terminal 50 and electric throttle control actuator terminal 1, ECM terminal 69 and electric throttle control actuator terminal 3.
   Refer to Wiring Diagram.

   Continuity should exist.

2. Also check harness for short to ground and short to power.

OK or NG

OK >> GO TO 9.
NG >> Repair open circuit or short to ground or short to power in harness or connectors.

9. CHECK THROTTLE POSITION SENSOR

Refer to EC-566, "Component Inspection" .

OK or NG

OK >> GO TO 11.
NG >> GO TO 10.

10. REPLACE ELECTRIC THROTTLE CONTROL ACTUATOR

1. Replace the electric throttle control actuator.
2. Perform EC-78, "Throttle Valve Closed Position Learning" .
3. Perform EC-78, "Idle Air Volume Learning" .

>> **INSPECTION END**

11. CHECK INTERMITTENT INCIDENT

Refer to EC-144, "TROUBLE DIAGNOSIS FOR INTERMITTENT INCIDENT" .

>> **INSPECTION END**

Component Inspection

UBS00HCQ

THROTTLE POSITION SENSOR

1. Reconnect all harness connectors disconnected.
2. Perform EC-78, "Throttle Valve Closed Position Learning" .
3. Turn ignition switch ON.
4. Set selector lever to D position.
5. Check voltage between ECM terminals 50 (TP sensor 1 signal), 69 (TP sensor 2 signal) and ground under the following conditions.

Terminal	Accelerator pedal	Voltage
50 (Throttle position sensor 1)	Fully released	More than 0.36V
	Fully depressed	Less than 4.75V
69 (Throttle position sensor 2)	Fully released	Less than 4.75V
	Fully depressed	More than 0.36V

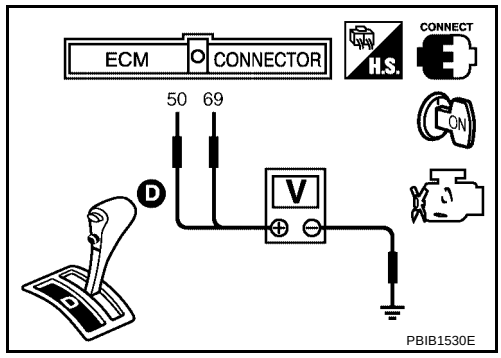

6. If NG, replace electric throttle control actuator and go to the next step.
7. Perform EC-78, "Throttle Valve Closed Position Learning" .
8. Perform EC-78, "Idle Air Volume Learning" .

Removal and Installation

UBS00HCR

ELECTRIC THROTTLE CONTROL ACTUATOR

Refer to EM-17, "INTAKE MANIFOLD" .

DTC P2138 APP SENSOR

PFP:18002

Component Description

UBS00HCS

The accelerator pedal position sensor is installed on the upper end of the accelerator pedal assembly. The sensor detects the accelerator position and sends a signal to the ECM.
Accelerator pedal position sensor has two sensors. These sensors are a kind of potentiometers which transform the accelerator pedal position into output voltage, and emit the voltage signal to the ECM. In addition, these sensors detect the opening and closing speed of the accelerator pedal and feed the voltage signals to the ECM. The ECM judges the current opening angle of the accelerator pedal from these signals and controls the throttle control motor based on these signals.

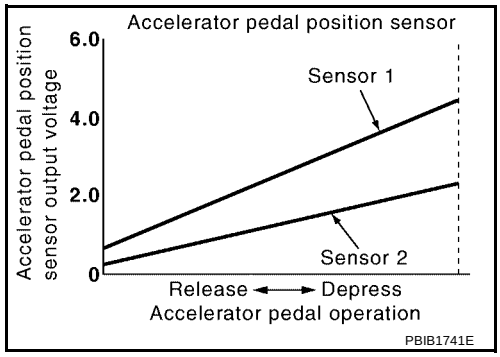

Idle position of the accelerator pedal is determined by the ECM receiving the signal from the accelerator pedal position sensor. The ECM uses this signal for the engine operation such as fuel cut.

CONSULT-II Reference Value in Data Monitor Mode

UBS00HCT

Specification data are reference values.

MONITOR ITEM	CONDITION		SPECIFICATION
ACCEL SEN 1	● Ignition switch: ON (Engine stopped)	Accelerator pedal: Fully released	0.5 - 1.0V
		Accelerator pedal: Fully depressed	4.2 - 4.8V
ACCEL SEN 2*	● Ignition switch: ON (Engine stopped)	Accelerator pedal: Fully released	0.5 - 1.0V
		Accelerator pedal: Fully depressed	4.2 - 4.8V
CLSD THL POS	● Ignition switch: ON (Engine stopped)	Accelerator pedal: Fully released	ON
		Accelerator pedal: Slightly depressed	OFF

*: Accelerator pedal position sensor 2 signal is converted by ECM internally. Thus, it differ from ECM terminal voltage.

On Board Diagnosis Logic

UBS00HCU

This self-diagnosis has the one trip detection logic.

NOTE:
If DTC P2138 is displayed with DTC P0643, first perform the trouble diagnosis for DTC P0643. Refer to **EC-460, "DTC P0643 SENSOR POWER SUPPLY"** **.**

DTC No.	Trouble diagnosis name	DTC detecting condition	Possible cause
P2138 2138	Accelerator pedal position sensor circuit range/performance	Rationally incorrect voltage is sent to ECM compared with the signals from APP sensor 1 and APP sensor 2.	● Harness or connector (APP sensor 1 and 2 circuit is open or shorted.) (TP sensor circuit is shorted.) ● Accelerator pedal position sensor 1 and 2 ● Electric throttle control actuator (TP sensor)

FAIL-SAFE MODE

When the malfunction is detected, ECM enters fail-safe mode and the MIL lights up.

Engine operating condition in fail-safe mode
The ECM controls the electric throttle control actuator in regulating the throttle opening in order for the idle position to be within +10 degrees. The ECM regulates the opening speed of the throttle valve to be slower than the normal condition. So, the acceleration will be poor.

DTC Confirmation Procedure

UBS00HCV

NOTE:
If DTC Confirmation Procedure has been previously conducted, always turn ignition switch OFF and wait at least 10 seconds before conducting the next test.
TESTING CONDITION:
Before performing the following procedure, confirm that battery voltage is more than 8V at idle.

WITH CONSULT-II

1. Turn ignition switch ON.
2. Select “DATA MONITOR” mode with CONSULT-II.
3. Start engine and let it idle for 1 second.
4. If DTC is detected, go to EC-570, "Diagnostic Procedure" .

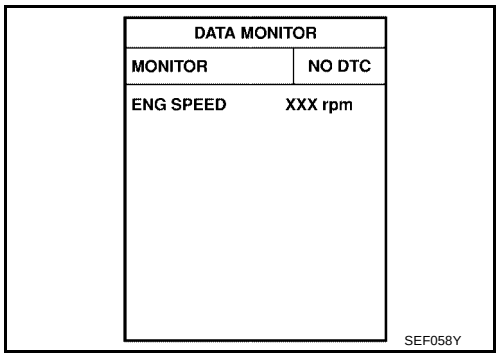

WITH GST

Follow the procedure “WITH CONSULT-II” above.

Wiring Diagram

UBS00HCW

EC-APPS3-01

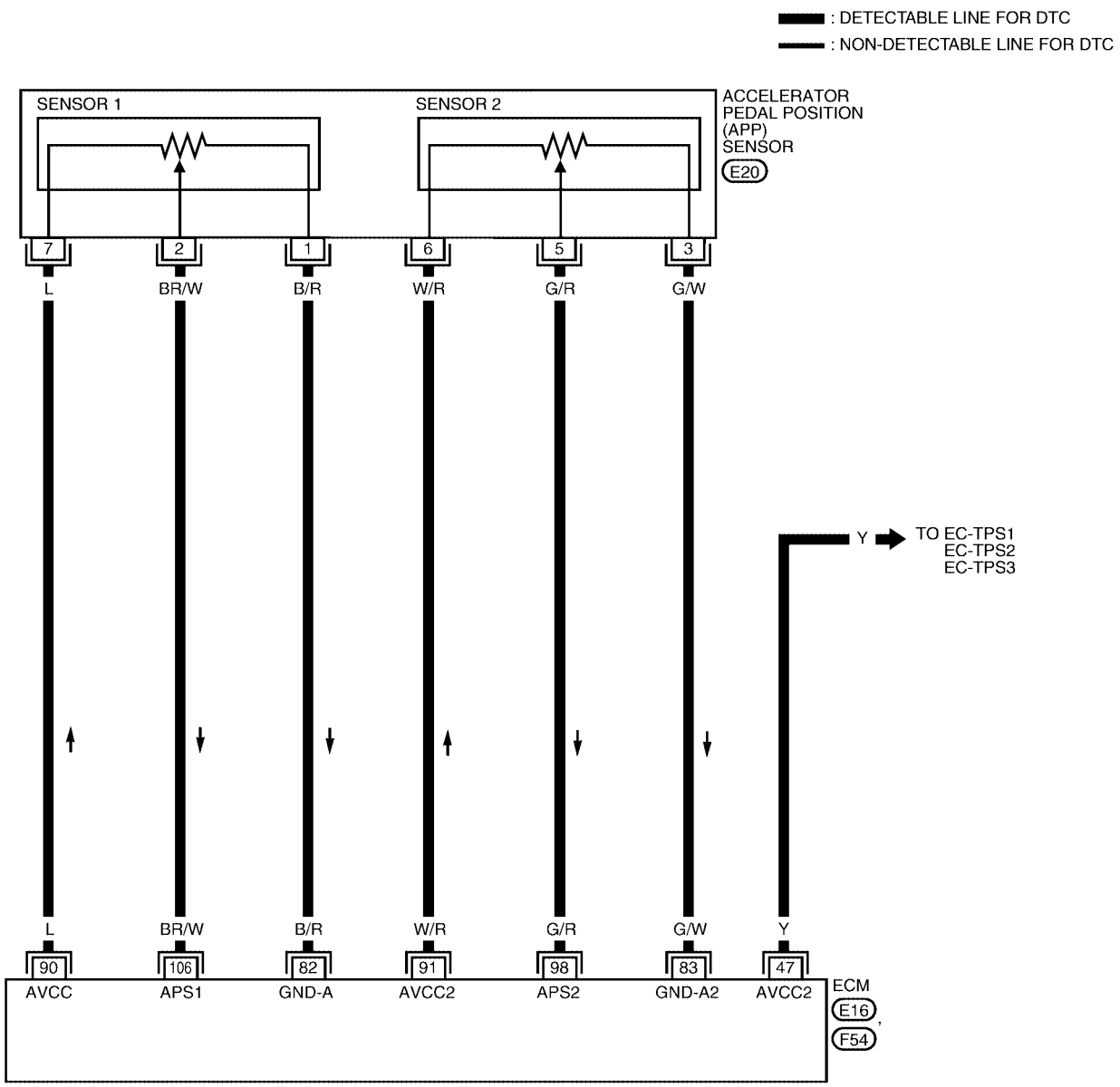

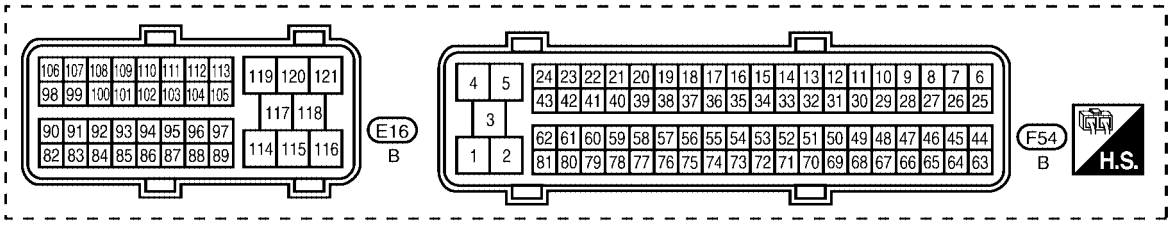

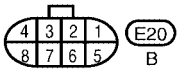

BBWA1709E

Specification data are reference values and are measured between each terminal and ground.

CAUTION:

Do not use ECM ground terminals when measuring input/output voltage. Doing so may result in damage to the ECM's transistor. Use a ground other than ECM terminals, such as the ground.

TERMINAL NO.	WIRE COLOR	ITEM	CONDITION	DATA (DC Voltage)
47	Y	Sensor power supply (TP sensor)	**[Ignition switch: ON]**	Approximately 5V
82	B/R	Sensor ground (APP sensor 1)	**[Engine is running]** ● **Warm-up condition** ● Idle speed	Approximately 0V
83	G/W	Sensor ground (APP sensor 2)	**[Engine is running]** ● **Warm-up condition** ● Idle speed	Approximately 0V
90	L	Sensor power supply (APP sensor 1)	**[Ignition switch: ON]**	Approximately 5V
91	W/R	Sensor power supply (APP sensor 2)	**[Ignition switch: ON]**	Approximately 5V
98	G/R	Accelerator pedal position sensor 2	**[Ignition switch: ON]** ● Engine: Stopped ● Accelerator pedal: Fully released	0.25 - 0.50V
			[Ignition switch: ON] ● Engine: Stopped ● Accelerator pedal: Fully depressed	2.0 - 2.5V
106	BR/W	Accelerator pedal position sensor 1	**[Ignition switch: ON]** ● Engine: Stopped ● Accelerator pedal: Fully released	0.5 - 1.0V
			[Ignition switch: ON] ● Engine: Stopped ● Accelerator pedal: Fully depressed	4.2 - 4.8V

Diagnostic Procedure

UBS00HCX

1. CHECK GROUND CONNECTIONS

1. Turn ignition switch OFF.
2. Loosen and retighten three ground screws on the body.
   Refer to EC-150, "Ground Inspection" .

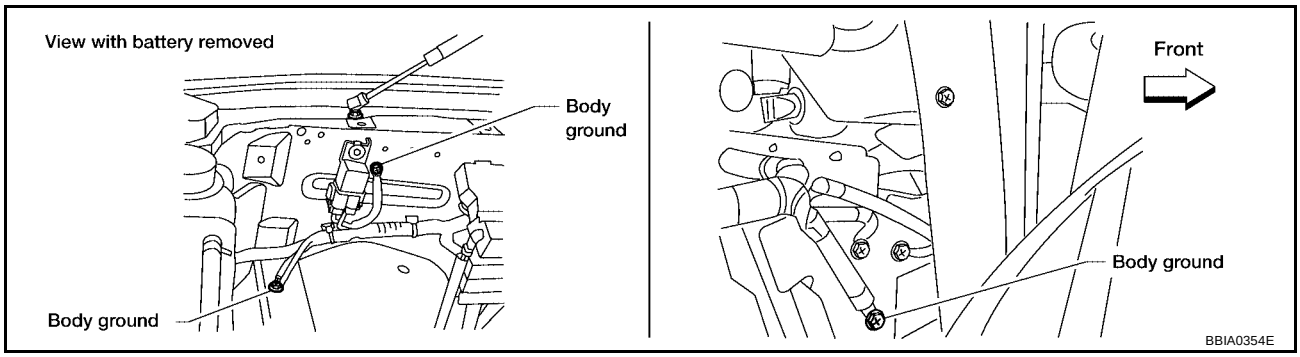

OK or NG

OK >> GO TO 2.
NG >> Repair or replace ground connections.

2. CHECK APP SENSOR 1 POWER SUPPLY CIRCUIT

1. Disconnect accelerator pedal position (APP) sensor harness connector.
2. Turn ignition switch ON.

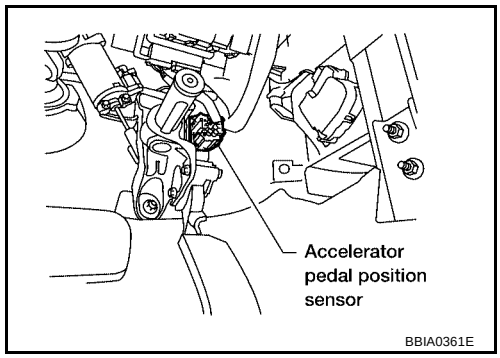

3. Check voltage between APP sensor terminal 7 and ground with CONSULT-II or tester.

Voltage: Approximately 5V

OK or NG

OK >> GO TO 3.
NG >> Repair open circuit or short to ground or short to power in harness or connectors.

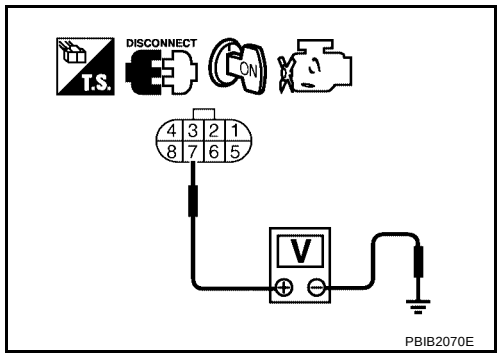

3. CHECK APP SENSOR 2 POWER SUPPLY CIRCUIT-I

1. Turn ignition switch ON.
2. Check voltage between APP sensor terminal 6 and ground with CONSULT-II or tester.

Voltage: Approximately 5V

OK or NG

OK >> GO TO 8.
NG >> GO TO 4.

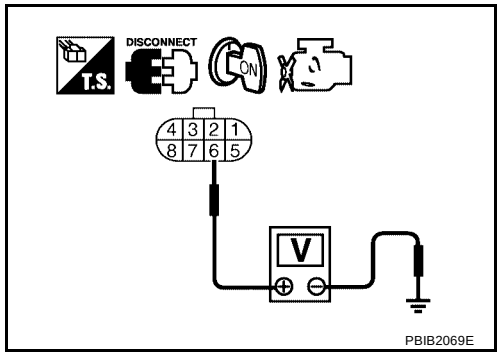

4. CHECK APP SENSOR 2 POWER SUPPLY CIRCUIT-II

1. Turn ignition switch OFF.
2. Disconnect ECM harness connector.
3. Check harness continuity between APP sensor terminal 6 and ECM terminal 91. Refer to Wiring Diagram.

Continuity should exist.

OK or NG

OK >> GO TO 5.
NG >> Repair open circuit in harness or connectors.

5. CHECK APP SENSOR 2 POWER SUPPLY CIRCUIT-III

Check harness for short to power and short to ground, between the following terminals

ECM terminal	Sensor terminal	Reference Wiring Diagram
47	Electric throttle control actuator terminal 2	EC-562
91	APP sensor terminal 6	EC-569

OK or NG

OK >> GO TO 6.
NG >> Repair short to ground or short to power in harness connectors.

6. CHECK THROTTLE POSITION SENSOR

Refer to EC-566, "Component Inspection" .

OK or NG

OK >> GO TO 12.
NG >> GO TO 7.

7. REPLACE ELECTRIC THROTTLE CONTROL ACTUATOR

1. Replace the electric throttle control actuator.
2. Perform EC-78, "Throttle Valve Closed Position Learning" .
3. Perform EC-78, "Idle Air Volume Learning" .

>> **INSPECTION END**

8. CHECK APP SENSOR GROUND CIRCUIT FOR OPEN AND SHORT

1. Turn ignition switch OFF.
2. Disconnect ECM harness connector.
3. Check harness continuity between ECM terminal 82 and APP sensor terminal 1, ECM terminal 83 and APP sensor terminal 3.
   Refer to Wiring Diagram.

   Continuity should exist.

4. Also check harness for short to ground and short to power.

OK or NG

OK >> GO TO 9.
NG >> Repair open circuit or short to ground or short to power in harness or connectors.

9. CHECK APP SENSOR INPUT SIGNAL CIRCUIT FOR OPEN AND SHORT

1. Check harness continuity between ECM terminal 106 and APP sensor terminal 2, ECM terminal 98 and APP sensor terminal 5.
   Refer to Wiring Diagram.

   Continuity should exist.

2. Also check harness for short to ground and short to power.

OK or NG

OK >> GO TO 10.
NG >> Repair open circuit or short to ground or short to power in harness or connectors.

10. CHECK ACCELERATOR PEDAL POSITION SENSOR

Refer to EC-574, "Component Inspection" .

OK or NG

OK >> GO TO 12.
NG >> GO TO 11.

11. REPLACE ACCELERATOR PEDAL ASSEMBLY

1. Replace the accelerator pedal assembly.
2. Perform EC-78, "Accelerator Pedal Released Position Learning" .
3. Perform EC-78, "Throttle Valve Closed Position Learning" .
4. Perform EC-78, "Idle Air Volume Learning" .

>> **INSPECTION END**

12. CHECK INTERMITTENT INCIDENT

Refer to EC-144, "TROUBLE DIAGNOSIS FOR INTERMITTENT INCIDENT" .

>> **INSPECTION END**

Component Inspection

UBS00HCY

ACCELERATOR PEDAL POSITION SENSOR

1. Reconnect all harness connectors disconnected.
2. Turn ignition switch ON.
3. Check voltage between ECM terminals 106 (APP sensor 1 signal), 98 (APP sensor 2 signal) and ground under the following conditions.

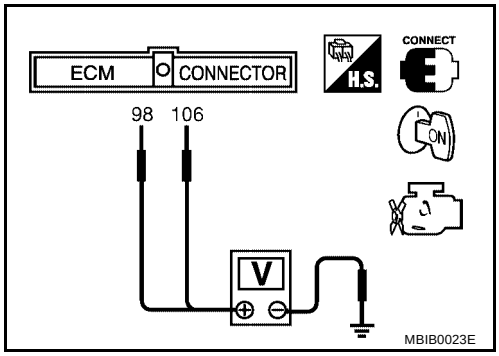

Terminal	Accelerator pedal	Voltage
106 (Accelerator pedal position sensor 1)	Fully released	0.5 - 1.0V
	Fully depressed	4.2 - 4.8V
98 (Accelerator pedal position sensor 2)	Fully released	0.25 - 0.5V
	Fully depressed	2.0 - 2.5V

4. If NG, replace accelerator pedal assembly and go to next step.
5. Perform EC-78, "Accelerator Pedal Released Position Learning" .
6. Perform EC-78, "Throttle Valve Closed Position Learning" .
7. Perform EC-78, "Idle Air Volume Learning" .

Removal and Installation

UBS00HCZ

ACCELERATOR PEDAL

Refer to ACC-3, "ACCELERATOR CONTROL SYSTEM" .

DTC P2A00, P2A03 A/F SENSOR 1

PFP:22693

Component Description

UBS00N7D

The air fuel ratio (A/F) sensor 1 is a planar dual-cell limit current sensor. The sensor element of the A/F sensor 1 is the combination of a Nernst concentration cell (sensor cell) with an oxygen-pump cell, which transports ions. It has a heater in the element.

The sensor is capable of precise measurement $\lambda = 1$, but also in the lean and rich range. Together with its control electronics, the sensor outputs a clear, continuous signal throughout a wide λ range ($0.7 < \lambda <$ air).

The exhaust gas components diffuse through the diffusion gap at the electrode of the oxygen pump and Nernst concentration cell, where they are brought to thermodynamic balance.

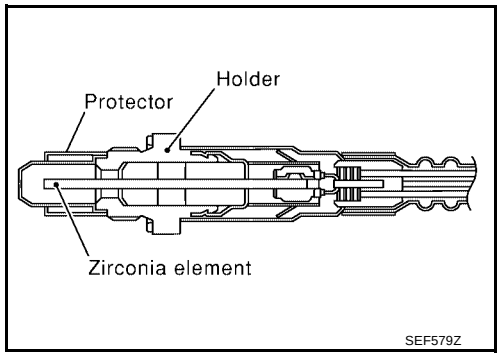

An electronic circuit controls the pump current through the oxygen-pump cell so that the composition of the exhaust gas in the diffusion gap remains constant at $\lambda = 1$. Therefore, the A/F sensor 1 is able to indicate air/fuel ratio by this pumping of current. In addition, a heater is integrated in the sensor to ensure the required operating temperature of 700 - 800°C (1,292 - 1,472°F).

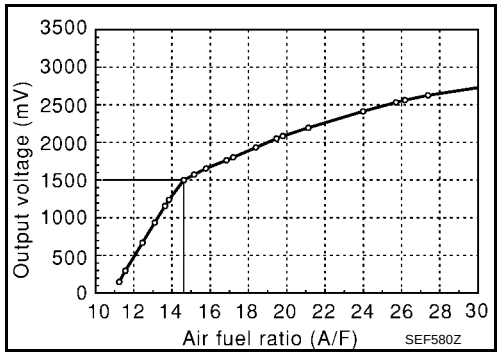

CONSULT-II Reference Value in Data Monitor Mode

UBS00N7E

Specification data are reference values.

MONITOR ITEM	CONDITION		SPECIFICATION
A/F SEN1 (B1) A/F SEN1 (B2)	● Engine: After warming up	Maintaining engine speed at 2,000 rpm	Fluctuates around 1.5 V

On Board Diagnosis Logic

UBS00N7F

To judge the malfunction, the A/F signal computed by ECM from the A/F sensor 1 signal is monitored not to be shifted to LEAN side or RICH side.

DTC No.	Trouble diagnosis name	DTC detecting condition	Possible Cause
P2A00 2A00 (Bank 1) P2A03 2A03 (Bank 2)	Air fuel ratio (A/F) sensor 1 circuit range/performance	● The output voltage computed by ECM from the A/F sensor 1 signal is shifted to the lean side for a specified period. ● The A/F signal computed by ECM from the A/F sensor 1 signal is shifted to the rich side for a specified period.	● A/F sensor 1 ● A/F sensor 1 heater ● Fuel pressure ● Fuel injector ● Intake air leaks

DTC Confirmation Procedure

UBS00N7G

NOTE:
If DTC Confirmation Procedure has been previously conducted, always turn ignition switch OFF and wait at least 10 seconds before conducting the next test.

TESTING CONDITION:
Before performing the following procedure, confirm that battery voltage is more than 11V at idle.

WITH CONSULT-II

1. Start engine and warm it up to normal operating temperature.
2. Turn ignition switch OFF and wait at least 10 seconds.
3. Turn ignition switch ON and select “SELF-LEARNING CONT” in “WORK SUPPORT” mode with CONSULT-II.

4. Clear the self-learning coefficient by touching “CLEAR”.
5. Turn ignition switch OFF and wait at least 10 seconds.
6. Start engine and keep the engine speed between 3,500 and 4,000 rpm for 1 minute under no load.
7. Let engine idle for 1 minute.
8. Keep engine speed between 2,500 and 3,000 rpm for 20 minutes.
9. If 1st trip DTC is detected, go to EC-580, "Diagnostic Procedure" .

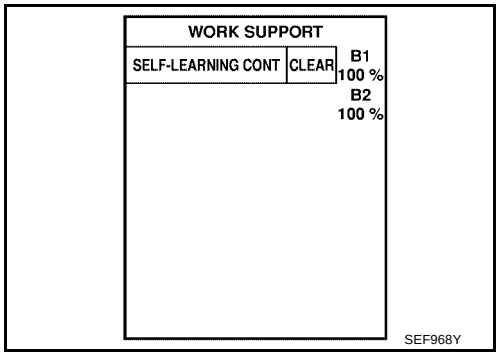

WITH GST

1. Start engine and warm it up to normal operating temperature.
2. Turn ignition switch OFF and wait at least 10 seconds.
3. Disconnect mass air flow sensor harness connector.
4. Start engine and let it idle for at least 5 seconds.
5. Stop engine and reconnect mass air flow sensor harness connector.
6. Select Service $03 with GST and make sure that DTC P0102 is detected.
7. Select Service $04 with GST and erase the DTC P0102.
8. Start engine and keep the engine speed between 3,500 and 4,000 rpm for 1 minute under no load.
9. Let engine idle for 1 minute.
10. Keep engine speed between 2,500 and 3,000 rpm for 20 minutes.
11. Select Service $07 with GST.
    If 1st trip DTC is detected, go to EC-580, "Diagnostic Procedure" .

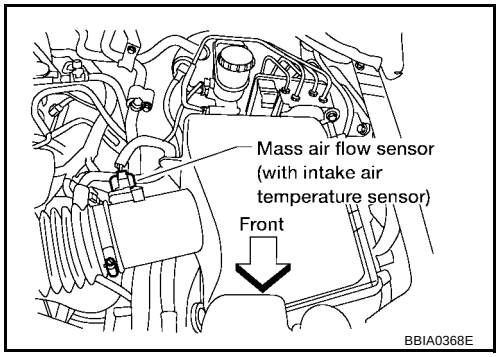

Wiring Diagram
BANK 1

UBS00N7H

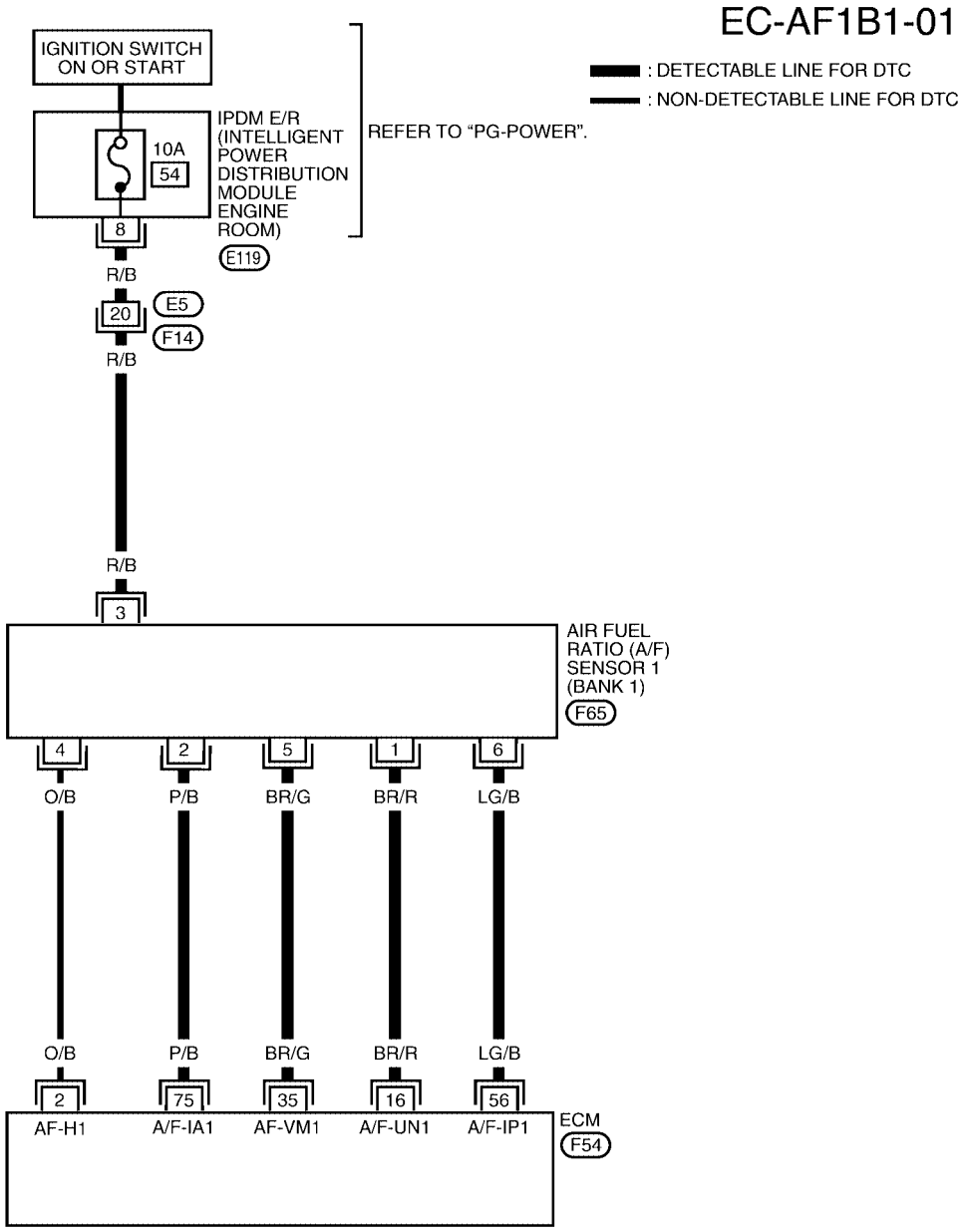

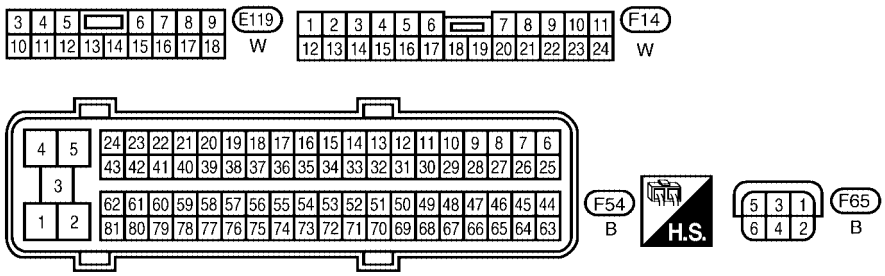

BBWA2111E

Specification data are reference values and are measured between each terminal and ground.
Pulse signal is measured by CONSULT-II.

CAUTION:

Do not use ECM ground terminals when measuring input/output voltage. Doing so may result in damage to the ECM's transistor. Use a ground other than ECM terminals, such as the ground.

TERMINAL NO.	WIRE COLOR	ITEM	CONDITION	DATA (DC Voltage)
2	O/B	A/F sensor 1 heater (bank 1)	**[Engine is running]** ● **Warm-up condition** ● Idle speed	Approximately 5V★ 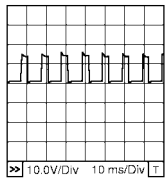 PBIB1584E
16	BR/R	A/F sensor 1 (bank 1)	**[Engine is running]** ● **Warm-up condition** ● Idle speed	Approximately 3.1V
35	BR/G			Approximately 2.6V
56	LG/B			Approximately 2.3V
75	P/B			Approximately 2.3V

★: Average voltage for pulse signal (Actual pulse signal can be confirmed by oscilloscope.)

BANK 2

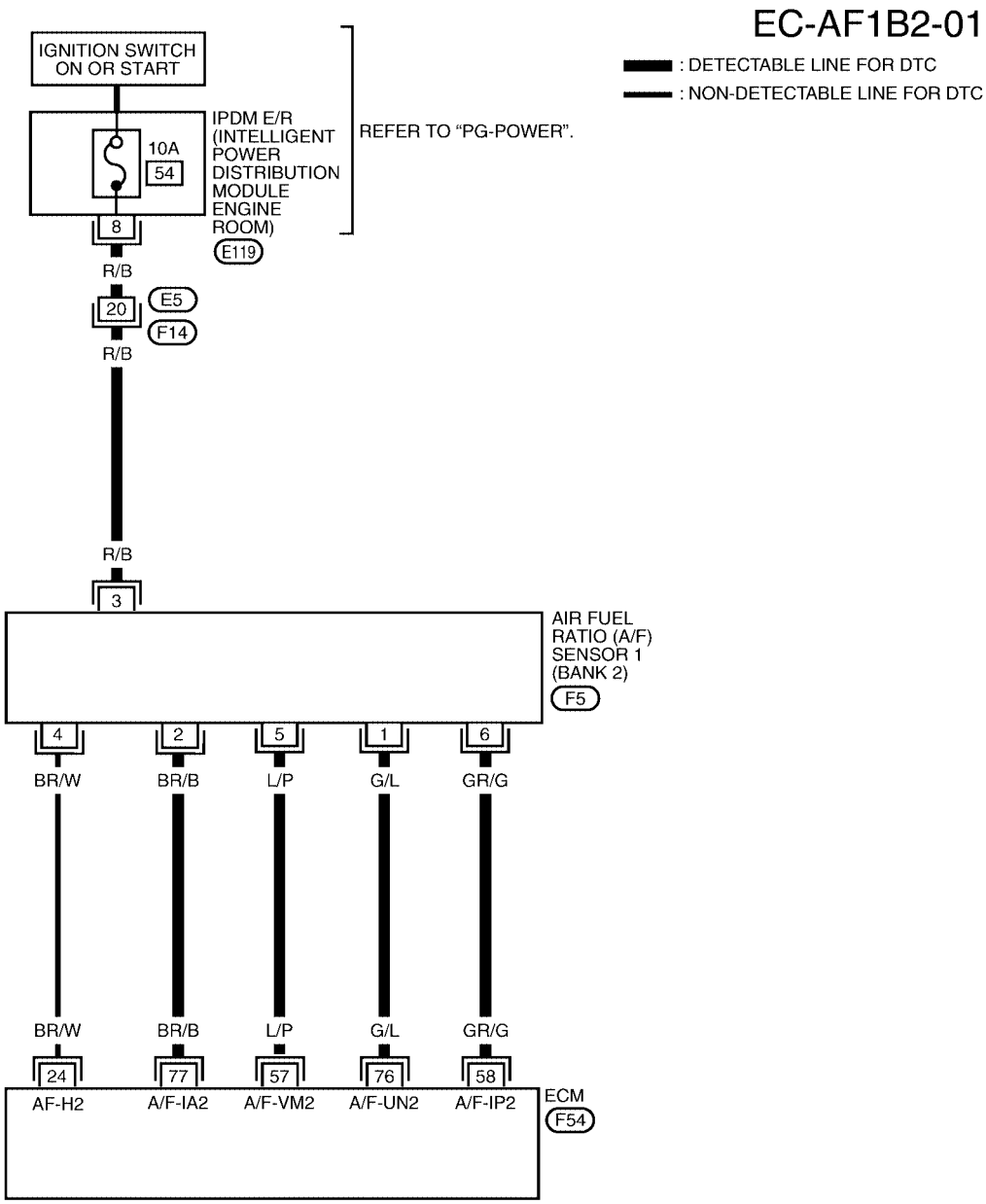

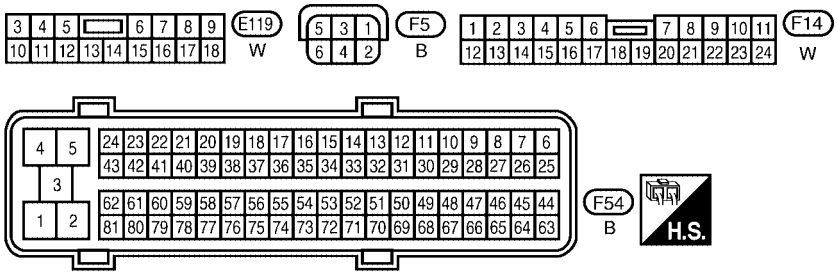

BBWA2112E

Specification data are reference values and are measured between each terminal and ground.
Pulse signal is measured by CONSULT-II.

CAUTION:

Do not use ECM ground terminals when measuring input/output voltage. Doing so may result in damage to the ECM's transistor. Use a ground other than ECM terminals, such as the ground.

TERMINAL NO.	WIRE COLOR	ITEM	CONDITION	DATA (DC Voltage)
24	BR/W	A/F sensor 1 heater (bank 2)	**[Engine is running]** ● **Warm-up condition** ● Idle speed	Approximately 5V★ 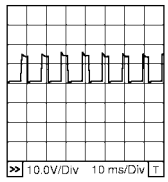 PBIB1584E
57	L/P	A/F sensor 1 (bank 2)	**[Engine is running]** ● **Warm-up condition** ● Idle speed	Approximately 2.6V
58	GR/G			Approximately 2.3V
76	G/L			Approximately 3.1V
77	BR/B			Approximately 2.3V

★: Average voltage for pulse signal (Actual pulse signal can be confirmed by oscilloscope.)

Diagnostic Procedure

UBS00N7I

1. CHECK GROUND CONNECTIONS

1. Turn ignition switch OFF.
2. Loosen and retighten two ground screws on the body.
   Refer to EC-150, "Ground Inspection" .

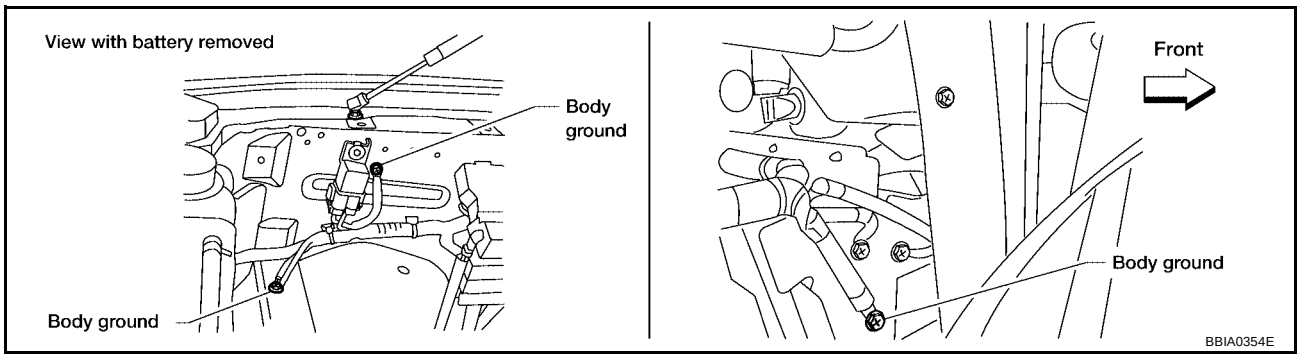

OK or NG

OK >> GO TO 2.
NG >> Repair or replace ground connections.

2. RETIGHTEN A/F SENSOR 1

1. Loosen and retighten the A/F sensor 1.

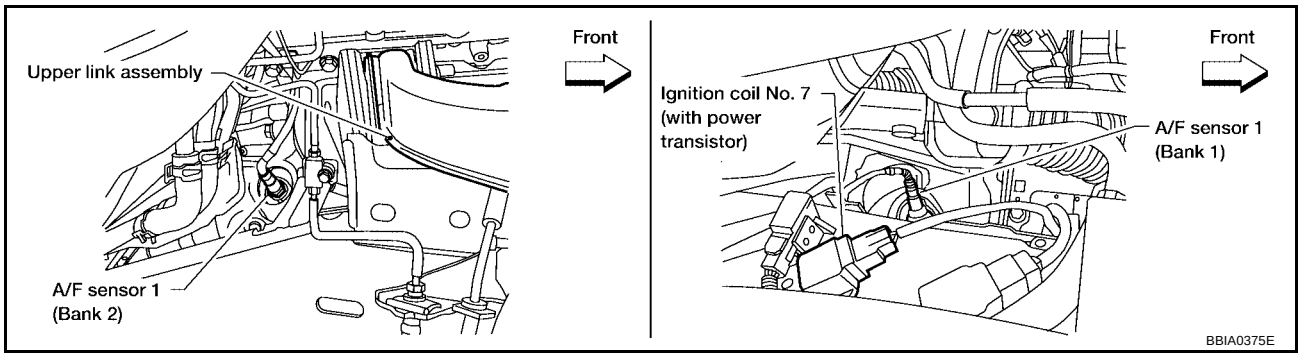

Tightening torque: 50 N-m (5.1 kg-m, 37 ft-lb)

>> GO TO 3.

3. CHECK FOR INTAKE AIR LEAK

1. Start engine and run it at idle.
2. Listen for an intake air leak after the mass air flow sensor.

OK or NG

OK >> GO TO 4.
NG >> Repair or replace.

4. CLEAR THE SELF-LEARNING DATA

With CONSULT-II

1. Start engine and warm it up to normal operating temperature.
2. Select “SELF-LEARNING CONT” in “WORK SUPPORT” mode with CONSULT-II.
3. Clear the self-learning control coefficient by touching “CLEAR”.
4. Run engine for at least 10 minutes at idle speed.
   Is the 1st trip DTC P0171, P0172, P0174 or P0175 detected?
   Is it difficult to start engine?

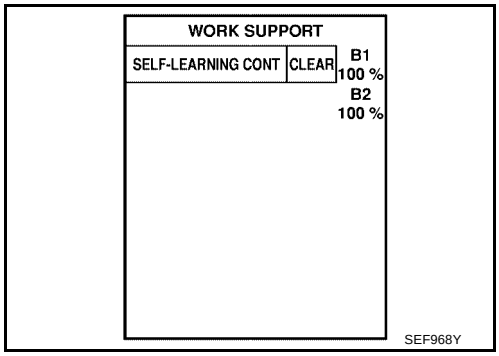

Without CONSULT-II

1. Start engine and warm it up to normal operating temperature.
2. Turn ignition switch OFF.
3. Disconnect mass air flow sensor harness connector.
4. Restart engine and let it idle for at least 5 seconds.
5. Stop engine and reconnect mass air flow sensor harness connector.
6. Make sure DTC P0102 is displayed.
7. Erase the DTC memory. Refer to EC-61, "HOW TO ERASE EMISSION-RELATED DIAGNOSTIC INFORMATION" .
8. Make sure DTC P0000 is displayed.
9. Run engine for at least 10 minutes at idle speed.
   Is the 1st trip DTC P0171, P0172, P0174 or P0175 detected?
   Is it difficult to start engine?

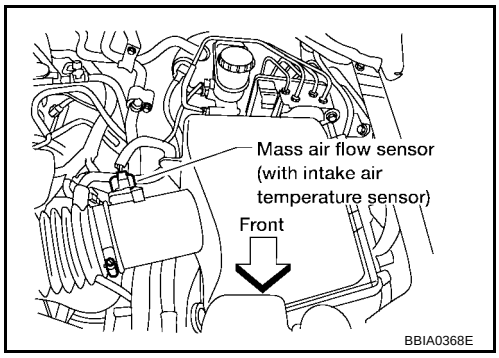

Yes or No

Yes >> Perform trouble diagnosis for DTC P0171, P0174 or P0172, P0175. Refer to EC-288, "DTC P0171, P0174 FUEL INJECTION SYSTEM FUNCTION" or EC-299, "DTC P0172, P0175 FUEL INJECTION SYSTEM FUNCTION" .

No >> GO TO 5.

5. CHECK HARNESS CONNECTOR

1. Turn ignition switch OFF.
2. Disconnect A/F sensor 1 harness connector.

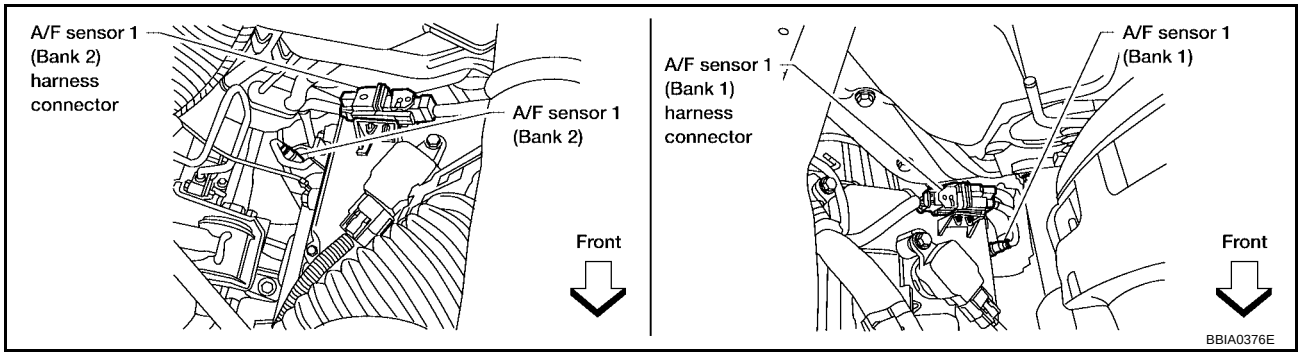

3. Check harness connector for water.

Water should not exit.

OK or NG

OK >> GO TO 6.
NG >> Repair or replace harness connector.

6. CHECK A/F SENSOR 1 POWER SUPPLY CIRCUIT

1. Turn ignition switch ON.
2. Check voltage between A/F sensor 1 terminal 3 and ground with CONSULT-II or tester.

Voltage: Battery voltage

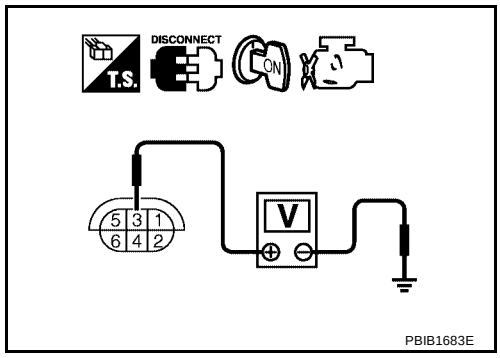

OK or NG

OK >> GO TO 8.
NG >> GO TO 7.

7. DETECT MALFUNCTIONING PART

Check the following.

- Harness connectors E5, F14
- IPDM E/R harness connector E119
- 10A fuse
- Harness for open or short between A/F sensor 1 and fuse

>> Repair or replace harness or connectors.

8. CHECK A/F SENSOR 1 INPUT SIGNAL CIRCUIT FOR OPEN AND SHORT

1. Turn ignition switch OFF.
2. Disconnect ECM harness connector.
3. Check harness continuity between A/F sensor 1 terminal and ECM terminal as follows. Refer to Wiring Diagram.

	A/F sensor 1 terminal	ECM terminal
Bank1	1	16
	2	75
	5	35
	6	56
Bank 2	1	76
	2	77
	5	57
	6	58

Continuity should exist.

4. Check harness continuity between the following terminals and ground. Refer to Wiring Diagram.

Bank 1		Bank 2	
A/F sensor 1 terminal	ECM terminal	A/F sensor 1 terminal	ECM terminal
1	16	1	76
2	75	2	77
5	35	5	57
6	56	6	58

Continuity should not exist.

5. Also check harness for short to power.

OK or NG

OK >> GO TO 9.
NG >> Repair open circuit or short to ground or short to power in harness or connectors.

9. CHECK A/F SENSOR 1 HEATER

Refer to EC-162, "Component Inspection" .

OK or NG

OK >> GO TO 10.
NG >> GO TO 11.

10. CHECK INTERMITTENT INCIDENT

Perform EC-144, "TROUBLE DIAGNOSIS FOR INTERMITTENT INCIDENT" .

OK or NG

OK >> GO TO 11.
NG >> Repair or replace.

11. REPLACE AIR FUEL RATIO (A/F) SENSOR 1

Replace air fuel ratio (A/F) sensor 1.

CAUTION:

- **Discard any A/F sensor which has been dropped from a height of more than 0.5 m (19.7 in) onto a hard surface such as a concrete floor; use a new one.**
- **Before installing new A/F sensor, clean exhaust system threads using Oxygen Sensor Thread Cleaner tool J-43897-18 or J-43897-12 and approved anti-seize lubricant.**

>> **INSPECTION END**

Removal and Installation

UBS00N7J

AIR FUEL RATIO (A/F) SENSOR 1

Refer to EM-21, "EXHAUST MANIFOLD AND THREE WAY CATALYST" .

ASCD BRAKE SWITCH

PFP:25320

Component Description

UBS00HDO

When the brake pedal is depressed, ASCD brake switch is turned OFF and stop lamp switch is turned ON. ECM detects the state of the brake pedal by this input of two kinds (ON/OFF signal).
Refer to EC-29, "AUTOMATIC SPEED CONTROL DEVICE (ASCD)" for the ASCD function.

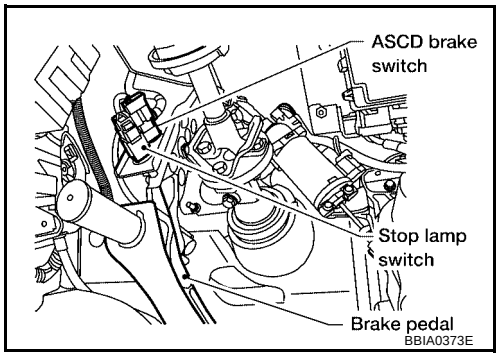

CONSULT-II Reference Value in Data Monitor Mode

UBS00HDP

Specification data are reference values.

MONITOR ITEM	CONDITION		SPECIFICATION
BRAKE SW 1 (ASCD brake switch)	● Ignition switch: ON	● Brake pedal: Fully released	ON
		● Brake pedal: Slightly depressed	OFF
BRAKE SW 2 (Stop lamp switch)	● Ignition switch: ON	● Brake pedal: Fully released	OFF
		● Brake pedal: Slightly depressed	ON

Wiring Diagram

UBS00HDQ

EC-ASCBOF-01

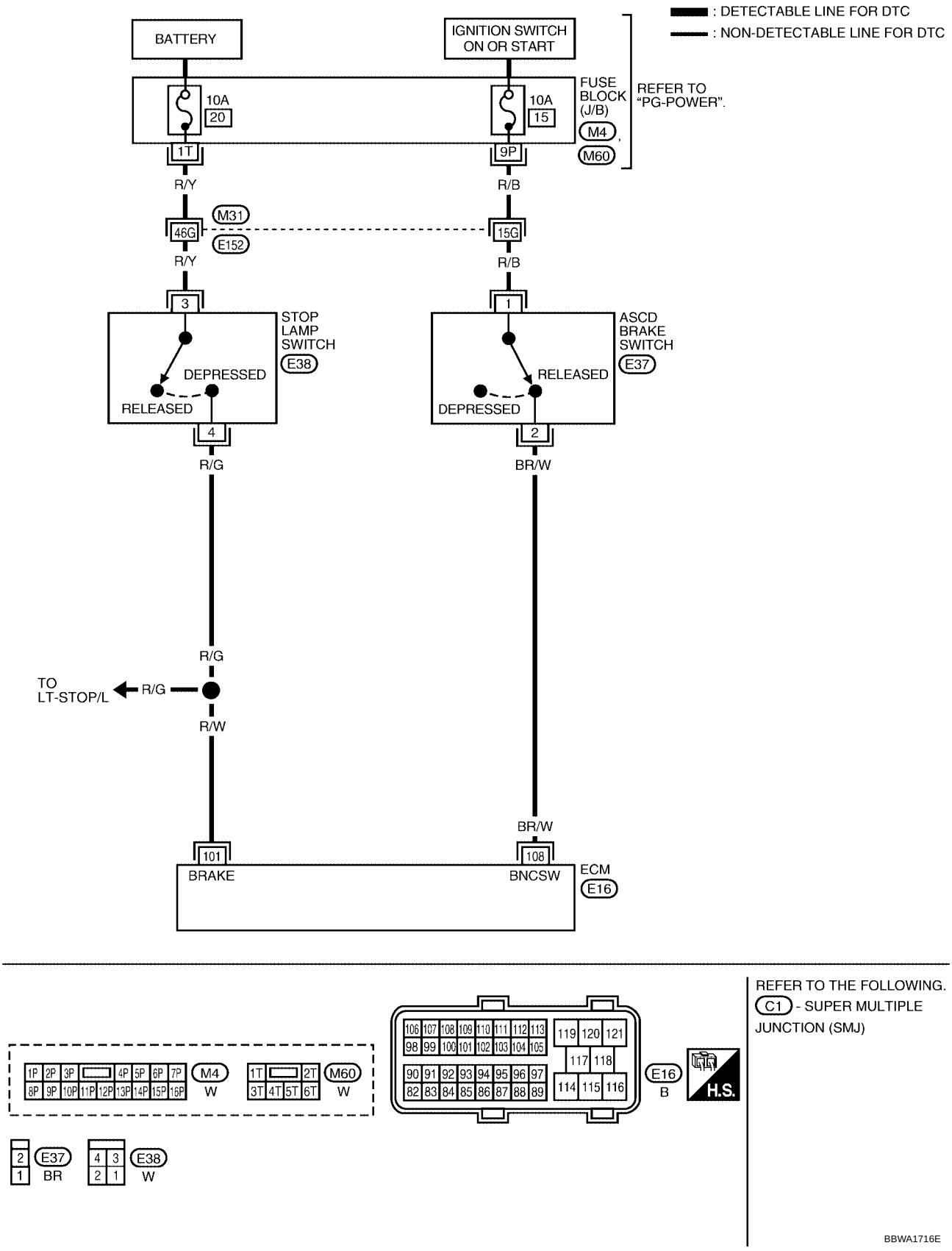

Specification data are reference values and are measured between each terminal and ground.

CAUTION:

Do not use ECM ground terminals when measuring input/output voltage. Doing so may result in damage to the ECM's transistor. Use a ground other than ECM terminals, such as the ground.

TERMINAL NO.	WIRE COLOR	ITEM	CONDITION	DATA (DC Voltage)
101	R/W	Stop lamp switch	**[Ignition switch: OFF]** ● Brake pedal: Fully released	Approximately 0V
			[Ignition switch: OFF] ● Brake pedal: Slightly depressed	BATTERY VOLTAGE (11 - 14V)
108	BR/W	ASCD brake switch	**[Ignition switch: ON]** ● Brake pedal: Slightly depressed	Approximately 0V
			[Ignition switch: ON] ● Brake pedal: Fully released	BATTERY VOLTAGE (11 - 14V)

Diagnostic Procedure

UBS00HDR

1. CHECK OVERALL FUNCTION-I

With CONSULT-II

1. Turn ignition switch ON.
2. Select “BRAKE SW1” in “DATA MONITOR” mode with CONSULT-II.
3. Check “BRAKE SW1” indication under the following conditions.

CONDITION	INDICATION
Brake pedal: Slightly depressed	OFF
Brake pedal: Fully released	ON

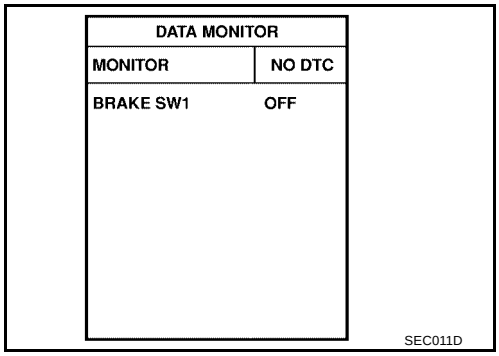

Without CONSULT-II

1. Turn ignition switch ON.
2. Check voltage between ECM terminal 108 and ground under the following conditions.

CONDITION	VOLTAGE
Brake pedal: Slightly depressed	Approximately 0V
Brake pedal: Fully released	Battery voltage

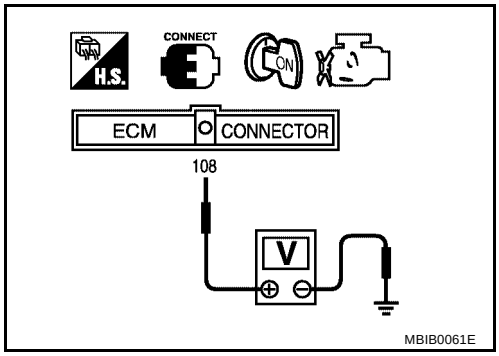

OK or NG

OK >> GO TO 2.
NG >> GO TO 3.

2. CHECK OVERALL FUNCTION-II

With CONSULT-II

Check “BRAKE SW2” indication in “DATA MONITOR” mode.

CONDITION	INDICATION
Brake pedal: Fully released	OFF
Brake pedal: Slightly depressed	ON

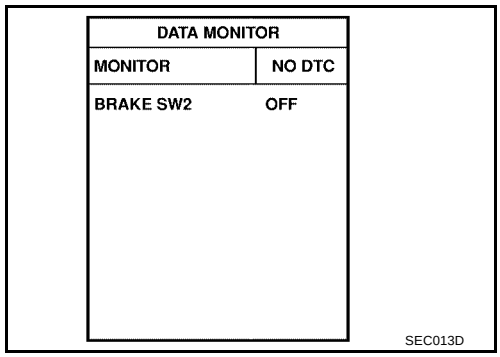

Without CONSULT-II

Check voltage between ECM terminal 101 and ground under the following conditions.

CONDITION	VOLTAGE
Brake pedal: Fully released	Approximately 0V
Brake pedal: Slightly depressed	Battery voltage

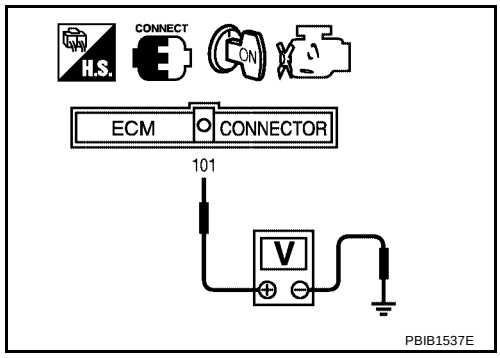

OK or NG

OK >> **INSPECTION END**

NG >> GO TO 7.

3. CHECK ASCD BRAKE SWITCH POWER SUPPLY CIRCUIT

1. Turn ignition switch OFF.
2. Disconnect ASCD brake switch harness connector.
3. Turn ignition switch ON.

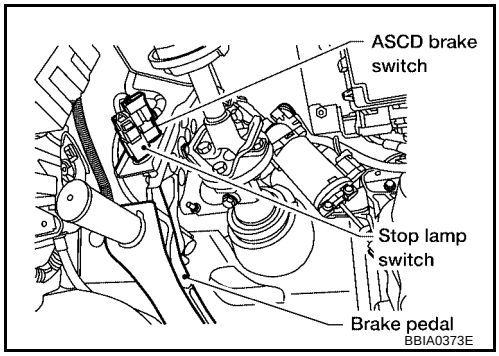

4. Check voltage between ASCD brake switch terminal 1 and ground with CONSULT-II or tester.

Voltage: Battery voltage

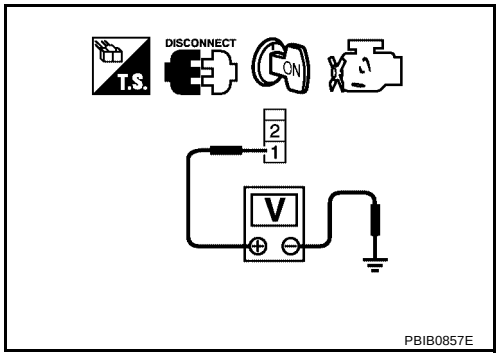

OK or NG

OK >> GO TO 5.
NG >> GO TO 4.

4. DETECT MALFUNCTIONING PART

Check the following.

- Harness connectors M31, E152
- Fuse block (J/B) connector M4
- 10A fuse
- Harness for open or short between ASCD brake switch and fuse

>> Repair open circuit or short to ground or short to power in harness or connectors.

5. CHECK ASCD BRAKE SWITCH INPUT SIGNAL CIRCUIT FOR OPEN AND SHORT

1. Turn ignition switch OFF.
2. Disconnect ECM harness connector.
3. Check harness continuity between ECM terminal 108 and ASCD brake switch terminal 2. Refer to Wiring Diagram.

Continuity should exist.

4. Also check harness for short to ground and short to power.

OK or NG

OK >> GO TO 6.
NG >> Repair open circuit or short to ground or short to power in harness or connectors.

6. CHECK ASCD BRAKE SWITCH

Refer to EC-592, "Component Inspection" .

OK or NG

OK >> GO TO 11.
NG >> Replace ASCD brake switch.

7. CHECK STOP LAMP SWITCH POWER SUPPLY CIRCUIT

1. Turn ignition switch OFF.
2. Disconnect stop lamp switch harness connector.

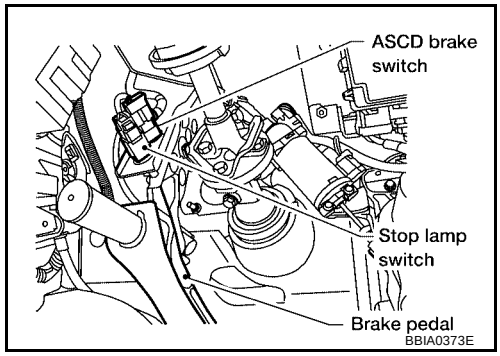

3. Check voltage between stop lamp switch terminal 3 and ground with CONSULT -II or tester.

Voltage: Battery voltage

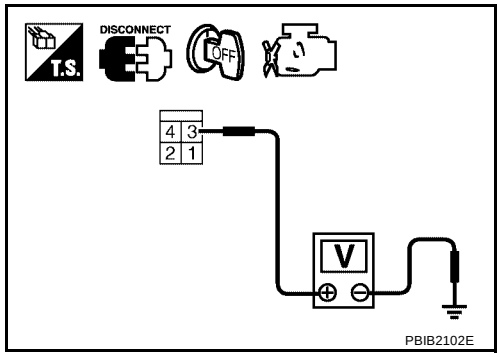

OK or NG

OK >> GO TO 9.
NG >> GO TO 8.

8. DETECT MALFUNCTIONING PART

Check the following.

- Harness connectors M31, E152
- Fuse block (J/B) connector M60
- 10A fuse
- Harness for open or short between stop lamp switch and battery

>> Repair open circuit or short to ground or short to power in harness or connectors.

9. CHECK STOP LAMP SWITCH INPUT SIGNAL CIRCUIT FOR OPEN AND SHORT

1. Disconnect ECM harness connector.
2. Check harness continuity between ECM terminal 101 and stop lamp switch terminal 4. Refer to Wiring Diagram.

Continuity should exist.

3. Also check harness for short to ground and short to power.

OK or NG

OK >> GO TO 10.
NG >> Repair open circuit or short to ground or short to power in harness or connectors.

10. CHECK STOP LAMP SWITCH

Refer to EC-592, "Component Inspection" .

OK or NG

OK >> GO TO 11.
NG >> Replace stop lamp switch.

11. CHECK INTERMITTENT INCIDENT

Refer to EC-144, "TROUBLE DIAGNOSIS FOR INTERMITTENT INCIDENT" .

>> **INSPECTION END**

Component Inspection

UBS00HDS

ASCD BRAKE SWITCH

1. Turn ignition switch OFF.
2. Disconnect ASCD brake switch harness connector.
3. Check harness continuity between ASCD brake switch terminals 1 and 2 under the following conditions.

Condition	Continuity
Brake pedal: Fully released	Should exist.
Brake pedal: Slightly depressed	Should not exist.

If NG, adjust ASCD brake switch installation, refer to BR-6, "BRAKE PEDAL" , and perform step 3 again.

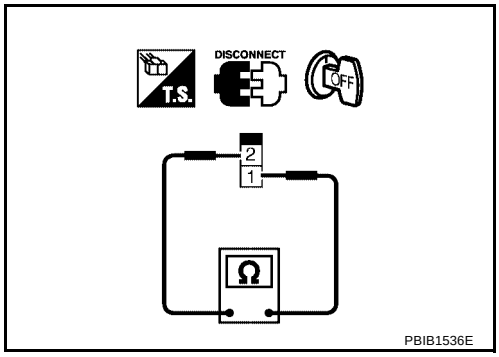

STOP LAMP SWITCH

1. Turn ignition switch OFF.
2. Disconnect stop lamp switch harness connector.
3. Check harness continuity between stop lamp switch terminals 3 and 4 under the following conditions.

Condition	Continuity
Brake pedal: Fully released	Should not exist.
Brake pedal: Slightly depressed	Should exist.

If NG, adjust stop lamp switch installation, refer to BR-6, "BRAKE PEDAL" , and perform step 3 again.

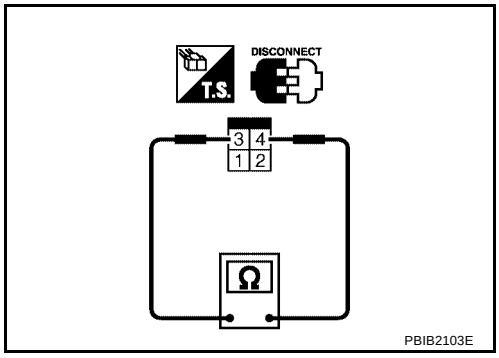

ASCD INDICATOR

PFP:24814

Component Description

UBS00HDT

ASCD indicator lamp illuminates to indicate ASCD operation status. Lamp has two indicators, CRUISE and SET, and is integrated in combination meter.
CRUISE indicator illuminates when MAIN switch on ASCD steering switch is turned ON to indicate that ASCD system is ready for operation.
SET indicator illuminates when following conditions are met.

- CRUISE indicator is illuminated.
- SET/COAST switch on ASCD steering switch is turned ON while vehicle speed is within the range of ASCD setting.

SET indicator remains lit during ASCD control.
Refer to EC-29, "AUTOMATIC SPEED CONTROL DEVICE (ASCD)" for the ASCD function.

CONSULT-II Reference Value in Data Monitor Mode

UBS00HDU

Specification data are reference value.

MONITOR ITEM	CONDITION		SPECIFICATION
CRUISE LAMP	● Ignition switch: ON	● MAIN switch: Pressed at the 1st time → at the 2nd time	ON → OFF
SET LAMP	● MAIN switch: ON ● When vehicle speed is between 40 km/h (25 MPH) and 144 km/h (89 MPH)	● ASCD: Operating	ON
		● ASCD: Not operating	OFF

Wiring Diagram

UBS00HDV

EC-ASCIND-01

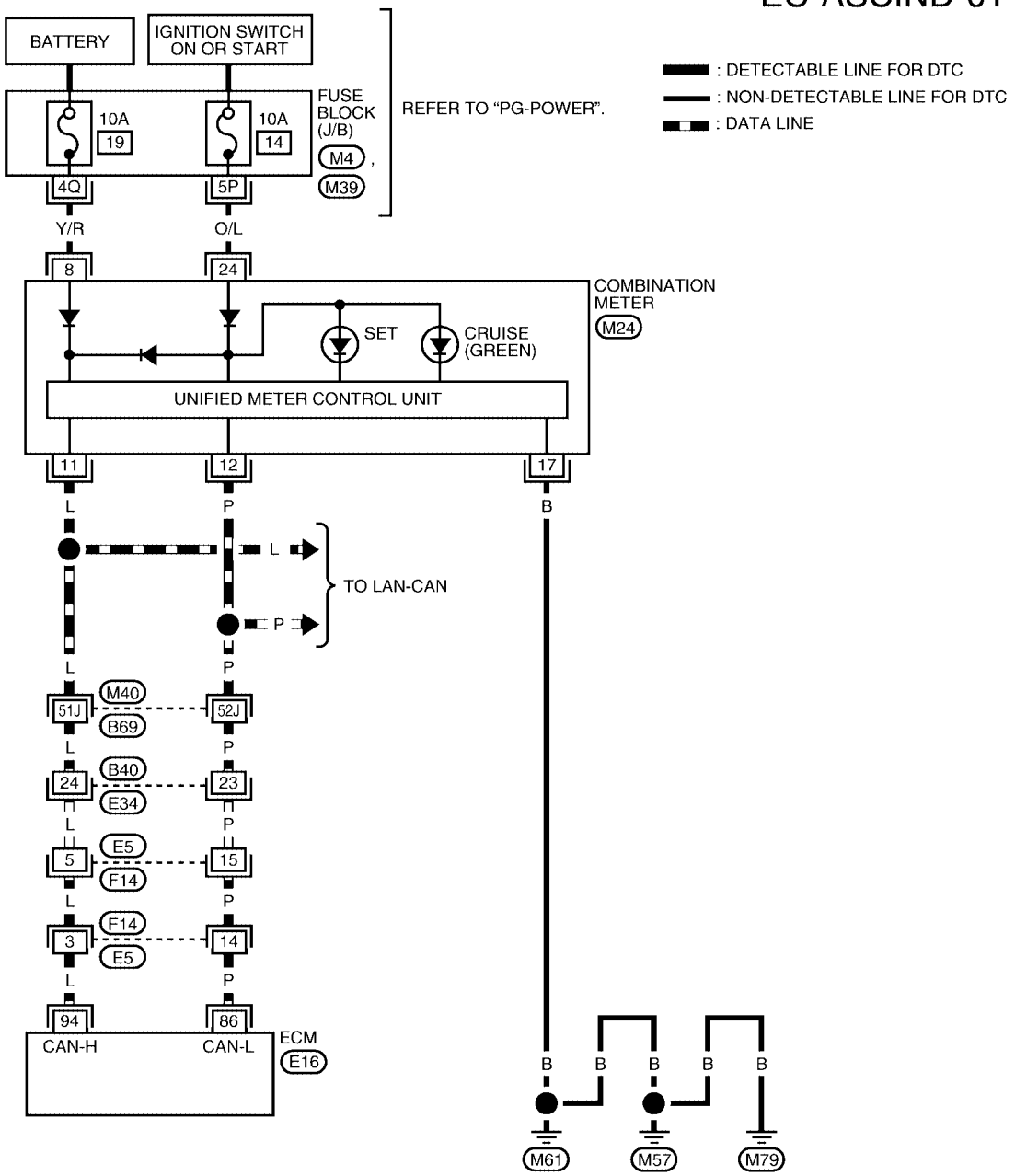

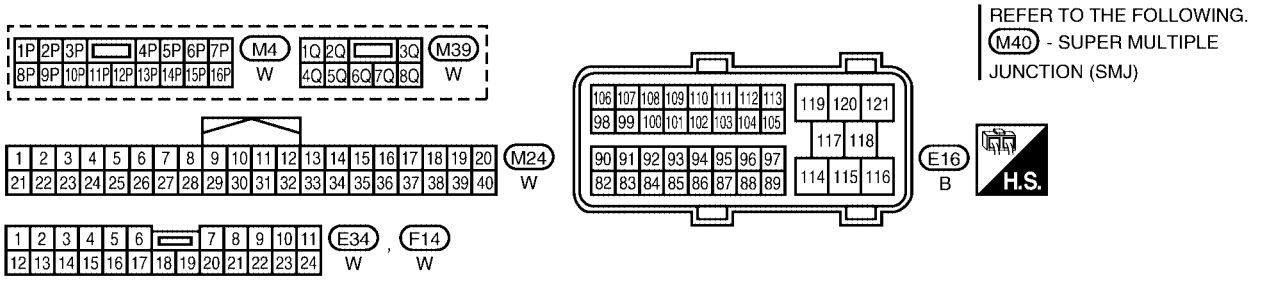

BBWA2109E

Diagnostic Procedure

UBS00HDW

1. CHECK OVERALL FUNCTION

Check ASCD indicator under the following conditions.

ASCD INDICATOR	CONDITION		SPECIFICATION
CRUISE LAMP	● Ignition switch: ON	● MAIN switch: Pressed at the 1st time → at the 2nd time	ON → OFF
SET LAMP	● MAIN switch: ON ● When vehicle speed is between 40 km/h (25 MPH) and 144 km/h (89 MPH)	● ASCD: Operating	ON
		● ASCD: Not operating	OFF

OK or NG

OK >> **INSPECTION END**
NG >> GO TO 2.

2. CHECK DTC

Check that DTC U1000 or U1001 is not displayed.

OK or NG

OK >> GO TO 3.
NG >> Perform trouble diagnosis for DTC U1000, U1001. Refer to EC-151, "DTC U1000, U1001 CAN COMMUNICATION LINE" .

3. CHECK COMBINATION METER FUNCTION

Refer to DI-5, "COMBINATION METERS" .

OK or NG

OK >> GO TO 4.
NG >> Go to DI-5, "COMBINATION METERS" .

4. CHECK INTERMITTENT INCIDENT

Refer to EC-144, "TROUBLE DIAGNOSIS FOR INTERMITTENT INCIDENT" .

>> **INSPECTION END**

ELECTRICAL LOAD SIGNAL

PFP:25350

Description

UBS00HDL

The electrical load signal (Headlamp switch signal, rear window defogger switch signal, etc.) is transferred through the CAN communication line from BCM to ECM via IPDM E/R.

CONSULT-II Reference Value in Data Monitor Mode

UBS00HDM

Specification data are reference values.

MONITOR ITEM	CONDITION		SPECIFICATION
LOAD SIGNAL	● Ignition switch: ON	Rear window defogger switch is ON and/or lighting switch is in 2nd.	ON
		Rear window defogger switch is OFF and lighting switch is OFF.	OFF
HEATER FAN SW	● Engine: After warming up, idle the engine	Heater fan control switch: ON	ON
		Heater fan control switch: OFF	OFF

Diagnostic Procedure

UBS00HDN

1. CHECK LOAD SIGNAL CIRCUIT OVERALL FUNCTION-I

1. Turn ignition switch ON.
2. Connect CONSULT-II and select “DATA MONITOR” mode.
3. Select “LOAD SIGNAL” and check indication under the following conditions.

Condition	Indication
Rear window defogger switch: ON	ON
Rear window defogger switch: OFF	OFF

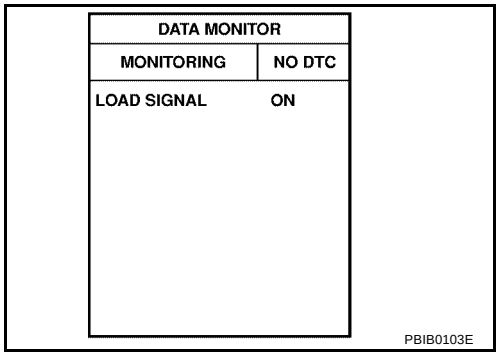

OK or NG

OK >> GO TO 2.
NG >> GO TO 4.

2. CHECK LOAD SIGNAL CIRCUIT OVERALL FUNCTION-II

Check “LOAD SIGNAL” indication under the following conditions.

Condition	Indication
Lighting switch: ON at 2nd position	ON
Lighting switch: OFF	OFF

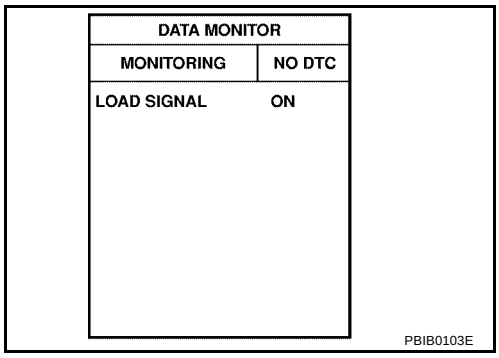

OK or NG

OK >> GO TO 3.
NG >> GO TO 5.

3. CHECK HEATER FAN SIGNAL CIRCUIT OVERALL FUNCTION

Select “HEATER FAN SW” and check indication under the following conditions.

Condition	Indication
Heater fan control switch: ON	ON
Heater fan control switch: OFF	OFF

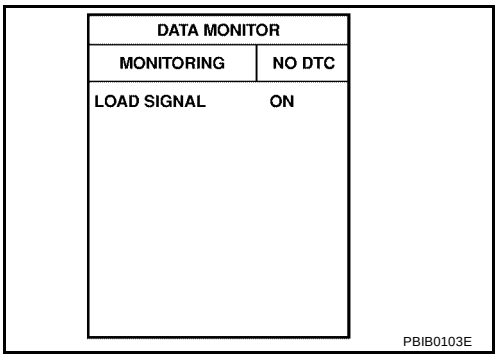

OK or NG

OK >> **INSPECTION END**
NG >> GO TO 6.

4. CHECK REAR WINDOW DEFOGGER SYSTEM

Refer to GW-74, "REAR WINDOW DEFOGGER" .

>> **INSPECTION END**

5. CHECK HEADLAMP SYSTEM

Refer to LT-5, "HEADLAMP (FOR USA)" , or LT-33, "HEADLAMP (FOR CANADA) - DAYTIME LIGHT SYSTEM -" .

>> **INSPECTION END**

6. CHECK HEATER FAN CONTROL SYSTEM

Refer to GW-74, "REAR WINDOW DEFOGGER" .

>> **INSPECTION END**

FUEL INJECTOR

PFP:16600

Component Description

UBS00L1F

The fuel injector is a small, precise solenoid valve. When the ECM supplies a ground to the fuel injector circuit, the coil in the fuel injector is energized. The energized coil pulls the ball valve back and allows fuel to flow through the fuel injector into the intake manifold. The amount of fuel injected depends upon the injection pulse duration. Pulse duration is the length of time the fuel injector remains open. The ECM controls the injection pulse duration based on engine fuel needs.

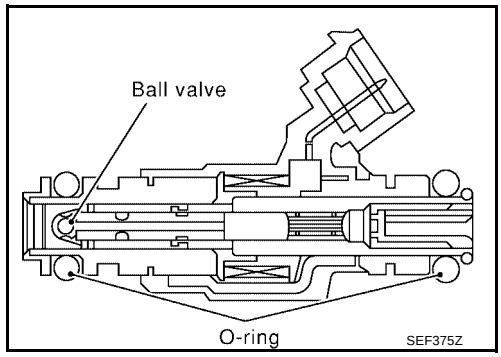

CONSULT-II Reference Value in Data Monitor Mode

UBS00L1G

Specification data are reference values.

MONITOR ITEM	CONDITION		SPECIFICATION
B/FUEL SCHDL	See EC-134, "TROUBLE DIAGNOSIS - SPECIFICATION VALUE" .		
INJ PULSE-B1 INJ PULSE-B2	● Engine: After warming up ● Air conditioner switch: OFF ● Selector lever: P or N ● No load	Idle	2.0 - 2.8 msec
		2,000 rpm	1.9 - 2.9 msec

Wiring Diagram

UBS00L1H

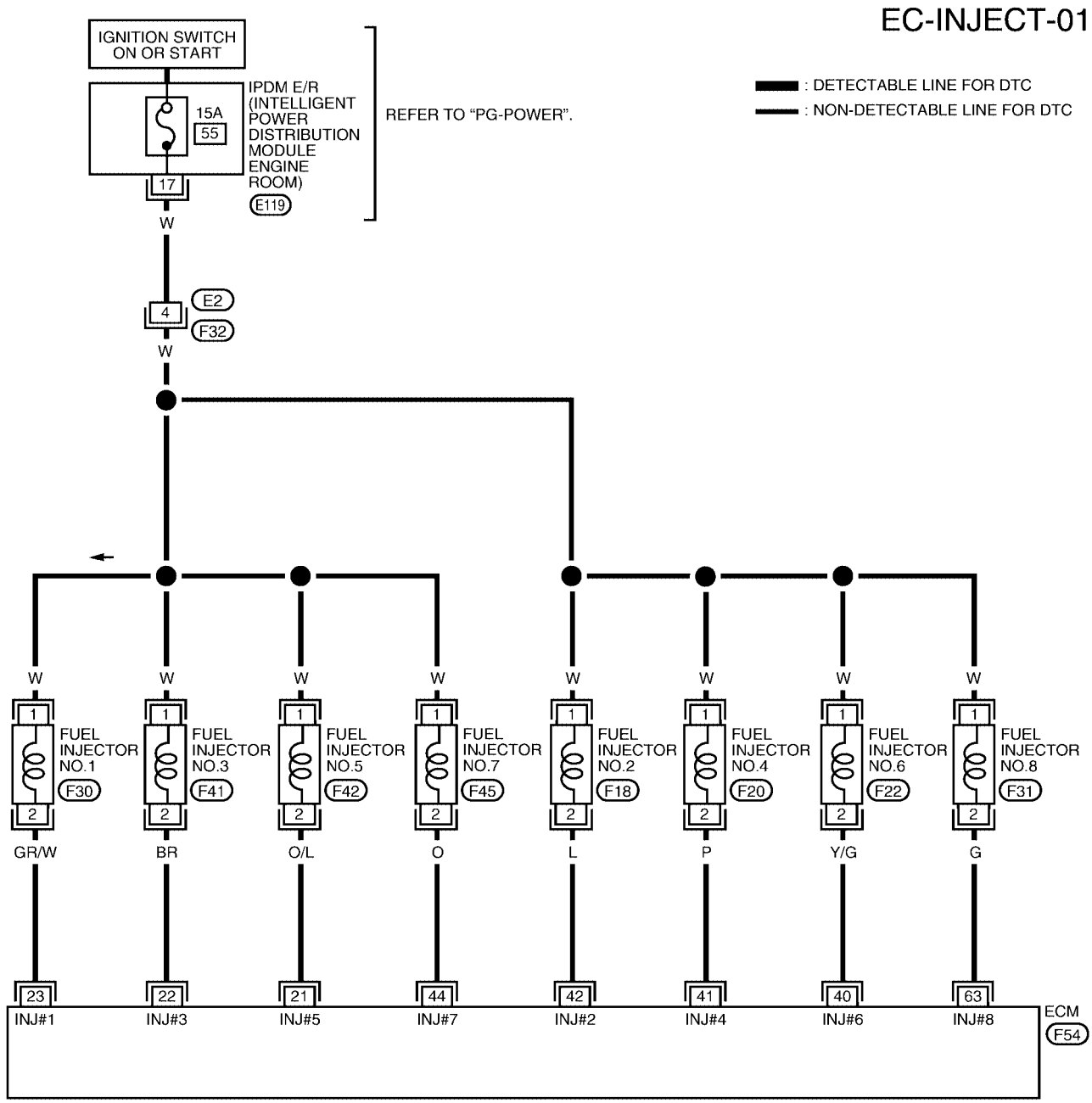

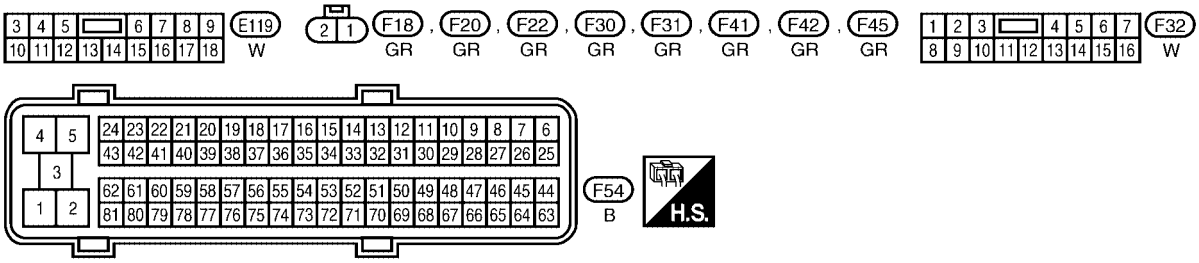

BBWA2124E

Specification data are reference values and are measured between each terminal and ground.
Pulse signal is measured by CONSULT-II.

CAUTION:

Do not use ECM ground terminals when measuring input/output voltage. Doing so may result in damage to the ECM's transistor. Use a ground other than ECM terminals, such as the ground.

TERMINAL NO.	WIRE COLOR	ITEM	CONDITION	DATA (DC Voltage)
21 22 23 40 41 42 44 63	O/L BR GR/W Y/G P L O G	Fuel injector No. 5 Fuel injector No. 3 Fuel injector No. 1 Fuel injector No. 6 Fuel injector No. 4 Fuel injector No. 2 Fuel injector No. 7 Fuel injector No. 8	**[Engine is running]** ● **Warm-up condition** ● Idle speed **NOTE:** The pulse cycle changes depending on rpm at idle.	BATTERY VOLTAGE (11 - 14V)★ 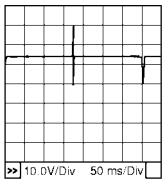 PBIB0042E
			[Engine is running] ● **Warm-up condition** ● Engine speed: 2,000 rpm	BATTERY VOLTAGE (11 - 14V)★ 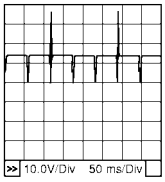 PBIB0043E

★: Average voltage for pulse signal (Actual pulse signal can be confirmed by oscilloscope.)

Diagnostic Procedure

UBS00L1I

1. INSPECTION START

Turn ignition switch to START.

Is any cylinder ignited?

Yes or No

Yes >> GO TO 2.
No >> GO TO 3.

2. CHECK OVERALL FUNCTION

With CONSULT-II

1. Start engine.
2. Perform “POWER BALANCE” in “ACTIVE TEST” mode with CONSULT-II.
3. Make sure that each circuit produces a momentary engine speed drop.

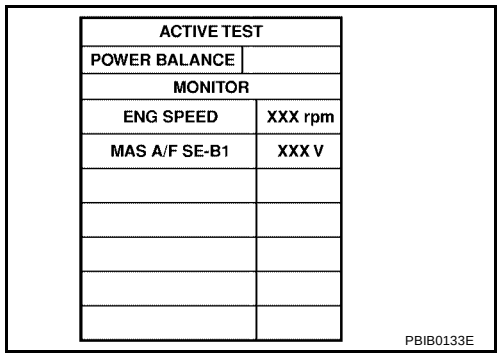

Without CONSULT-II

1. Start engine.
2. Listen to each fuel injector operating sound.
   Clicking noise should be heard.

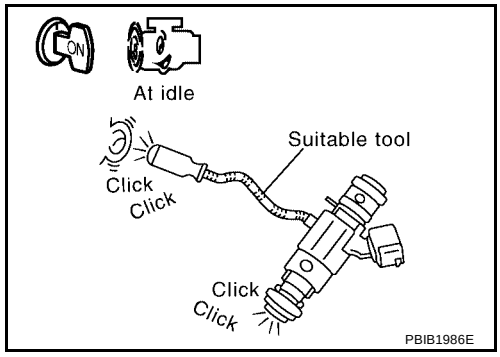

OK or NG

OK >> **INSPECTION END**
NG >> GO TO 3.

3. CHECK FUEL INJECTOR POWER SUPPLY CIRCUIT

1. Turn ignition switch OFF.
2. Disconnect fuel injector harness connector.

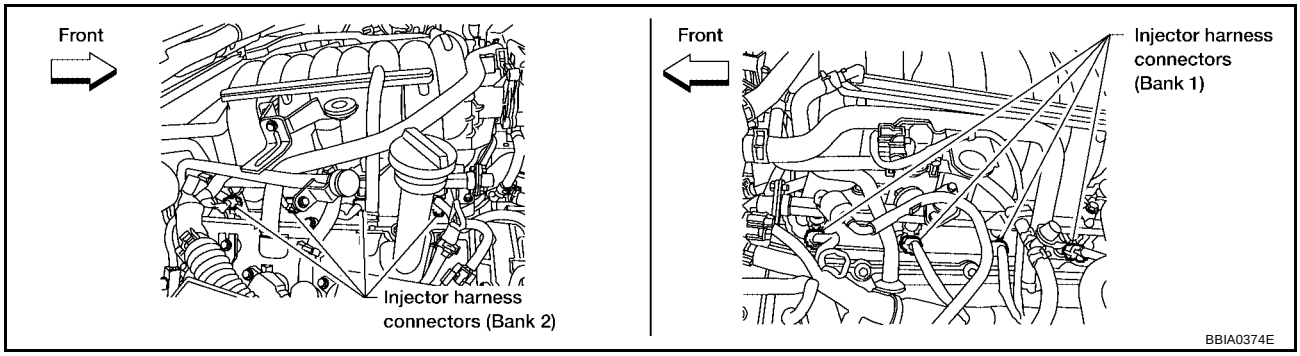

3. Turn ignition switch ON.
4. Check voltage between fuel injector terminal 1 and ground with CONSULT-II or tester.

Voltage: Battery voltage

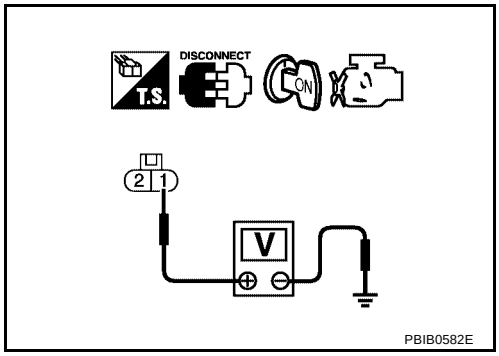

OK or NG

OK >> GO TO 5.
NG >> GO TO 4.

4. DETECT MALFUNCTIONING PART

Check the following.

- Harness connectors E2, F32
- IPDM E/R connector E119
- 15A fuse
- Harness for open or short between fuel injector and fuse

>> Repair harness or connectors.

5. CHECK FUEL INJECTOR OUTPUT SIGNAL CIRCUIT FOR OPEN AND SHORT

1. Turn ignition switch OFF.
2. Disconnect ECM harness connector.
3. Check harness continuity between fuel injector terminal 2 and ECM terminals 21, 22, 23, 40, 41, 42, 44, 63.
   Refer to Wiring Diagram.

Continuity should exist.

4. Also check harness for short to ground and short to power.

OK or NG

OK >> GO TO 6.
NG >> Repair open circuit or short to ground or short to power in harness or connectors.

6. CHECK FUEL INJECTOR

Refer to EC-603, "Component Inspection" .

OK or NG

OK >> GO TO 7.
NG >> Replace fuel injector.

7. CHECK INTERMITTENT INCIDENT

Refer to EC-144, "TROUBLE DIAGNOSIS FOR INTERMITTENT INCIDENT" .

>> **INSPECTION END**

Component Inspection

UBS00L1J

FUEL INJECTOR

1. Disconnect fuel injector harness connector.
2. Check resistance between terminals as shown in the figure.

Resistance: 11.1 - 14.5Ω [at 10 - 60°C (50 - 140°F)]

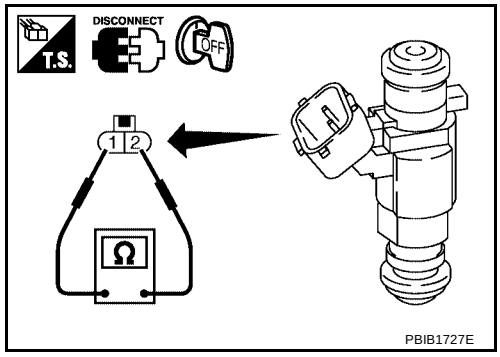

Removal and Installation

UBS00L1K

FUEL INJECTOR

Refer to EM-31, "FUEL INJECTOR AND FUEL TUBE" .

FUEL PUMP

PFP:17042

Description

UBS00HDB

SYSTEM DESCRIPTION

Sensor	Input signal to ECM	ECM Function	Actuator
Crankshaft position sensor (POS) Camshaft position sensor (PHASE)	Engine speed*	Fuel pump control	Fuel pump relay
Battery	Battery voltage*		

*: ECM determines the start signal status by the signals of engine speed and battery voltage.

The ECM activates the fuel pump for several seconds after the ignition switch is turned ON to improve engine startability. If the ECM receives a engine speed signal from the camshaft position sensor (PHASE), it knows that the engine is rotating, and causes the pump to operate. If the engine speed signal is not received when the ignition switch is ON, the engine stalls. The ECM stops pump operation and prevents battery discharging, thereby improving safety. The ECM does not directly drive the fuel pump. It controls the ON/OFF fuel pump relay, which in turn controls the fuel pump.

Condition	Fuel pump operation
Ignition switch is turned to ON.	Operates for 1 second.
Engine running and cranking	Operates.
When engine is stopped	Stops in 1.5 seconds.
Except as shown above	Stops.

COMPONENT DESCRIPTION

A turbine type design fuel pump is used in the fuel tank.

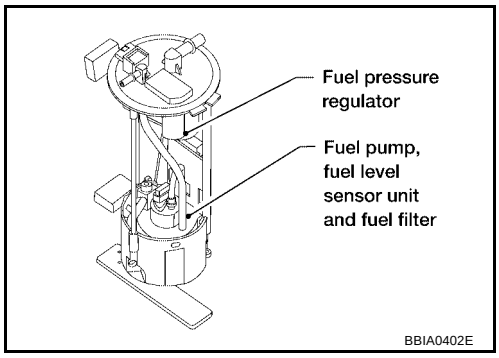

CONSULT-II Reference Value in Data Monitor Mode

UBS00HDC

Specification data are reference values.

MONITOR ITEM	CONDITION	SPECIFICATION
FUEL PUMP RLY	● For 1 second after turning ignition switch ON ● Engine running or cranking	ON
	● Except above conditions	OFF

Wiring Diagram

UBS00HDD

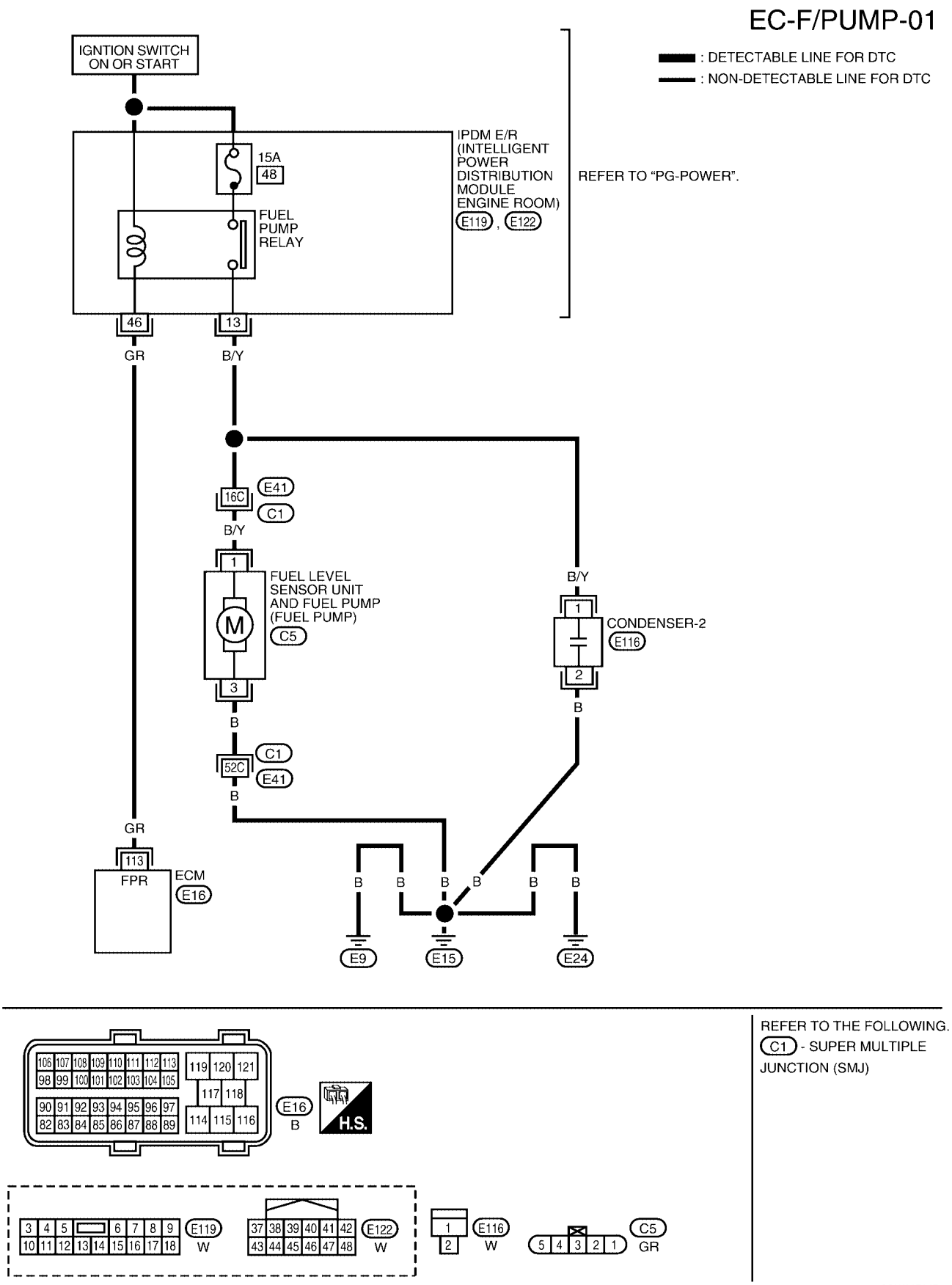

Specification data are reference values and are measured between each terminal and ground.

CAUTION:

Do not use ECM ground terminals when measuring input/output voltage. Doing so may result in damage to the ECM's transistor. Use a ground other than ECM terminals, such as the ground.

TERMINAL NO.	WIRE COLOR	ITEM	CONDITION	DATA (DC Voltage)
113	GR	Fuel pump relay	**[Ignition switch: ON]** ● For 1 second after turning ignition switch ON **[Engine is running]**	0 - 1.5V
			[Ignition switch: ON] ● More than 1 second after turning ignition switch ON.	BATTERY VOLTAGE (11 - 14V)

Diagnostic Procedure

UBS00HDE

1. CHECK OVERALL FUNCTION

1. Turn ignition switch ON.
2. Pinch fuel feed hose with two fingers.

Fuel pressure pulsation should be felt on the fuel feed hose for 1 second after ignition switch is turned ON.

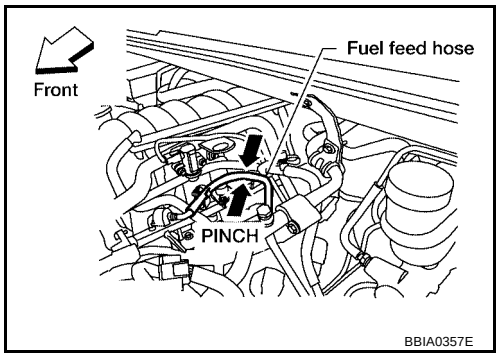

OK or NG

OK >> **INSPECTION END**
NG >> GO TO 2.

2. CHECK FUEL PUMP POWER SUPPLY CIRCUIT-I

1. Turn ignition switch OFF.
2. Disconnect ECM harness connector.
3. Turn ignition switch ON.
4. Check voltage between ECM terminal 113 and ground with CONSULT-II or tester.

Voltage: Battery voltage

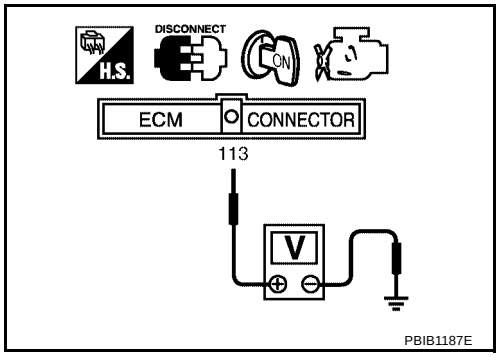

OK or NG

OK >> GO TO 5.
NG >> GO TO 3.

3. CHECK FUEL PUMP POWER SUPPLY CIRCUIT-II

Check voltage between IPDM E/R terminal 46 and ground with CONSULT-II or tester.

Voltage: Battery voltage

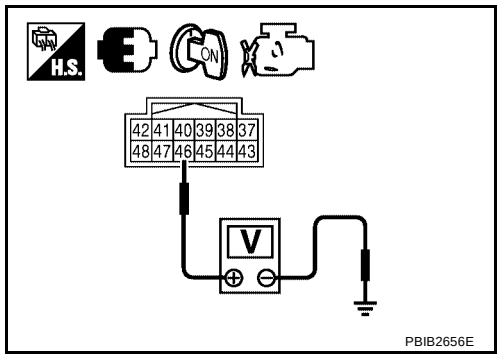

OK or NG

OK >> GO TO 4.
NG >> GO TO 13.

4. DETECT MALFUNCTIONING PART

Check harness for open or short between IPDM E/R and ECM.

>> Repair harness or connectors.

5. CHECK CONDENSER-2 POWER SUPPLY CIRCUIT

1. Turn ignition switch OFF.
2. Reconnect all harness connectors disconnected.
3. Disconnect condenser-2 harness connector.
4. Turn ignition switch ON.

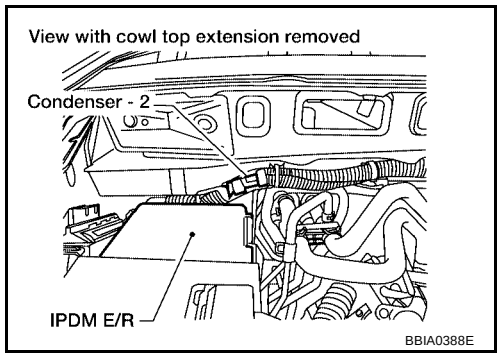

5. Check voltage between condenser-2 terminal 1 and ground with CONSULT-II or tester.

Voltage: Battery voltage should exist for 1 second after ignition switch is turned ON.

6. Also check harness for short to ground and short to power.

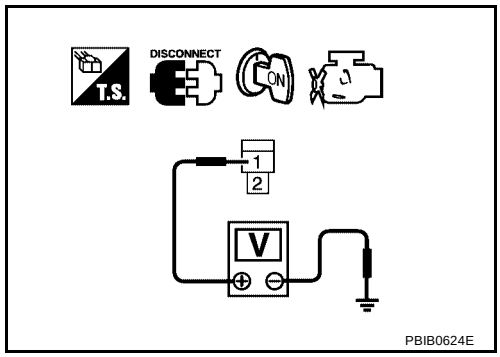

OK or NG

OK >> GO TO 8.
NG >> GO TO 6.

6. CHECK 15A FUSE

1. Turn ignition switch OFF.
2. Disconnect 15A fuse.
3. Check 15A fuse.

OK or NG

OK >> GO TO 7.
NG >> Replace fuse.

7. CHECK CONDENSER-2 POWER SUPPLY CIRCUIT-II FOR OPEN AND SHORT

1. Disconnect IPDM E/R harness connector E119.
2. Check harness continuity between IPDM E/R terminal 13 and condenser-2 terminal 1.
   Refer to Wiring Diagram.

   Continuity should exist.

3. Also check harness for short to ground and short to power.

OK or NG

OK >> GO TO 13.
NG >> Repair open circuit or short to ground or short to power in harness or connectors.

8. CHECK CONDENSER-2 GROUND CIRCUIT FOR OPEN AND SHORT

1. Check harness continuity between condenser-2

   + terminal 2 and ground.
   Refer to Wiring Diagram.

   Continuity should exist.

2. Also check harness for short to power.

OK or NG

OK >> GO TO 9.
NG >> Repair open circuit or short to power in harness or connectors.

9. CHECK CONDENSER-2

Refer to EC-609, "Component Inspection" .

OK or NG

OK >> GO TO 10.
NG >> Replace condenser-2.

10. CHECK FUEL PUMP POWER SUPPLY AND GROUND CIRCUIT FOR OPEN AND SHORT

1. Turn ignition switch OFF.
2. Disconnect “fuel level sensor unit and fuel pump” harness connector.
3. Disconnect IPDM E/R harness connector E119.
4. Check harness continuity between IPDM E/R terminal 13 and “fuel level sensor unit and fuel pump” terminal 1, “fuel level sensor unit and fuel pump” terminal 3 and ground.
   Refer to Wiring Diagram.

   Continuity should exist.

5. Also check harness for short to ground and short to power.

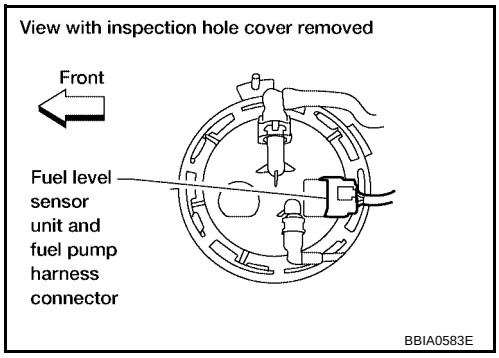

OK or NG

OK >> GO TO 12.
NG >> GO TO 11.

11. DETECT MALFUNCTIONING PART

Check the following.

- Harness connectors E41, C1
- Harness for open or short between fuel pump and IPDM E/R
- Harness for open or short between fuel pump and ground

>> Repair open circuit or short to ground or short to power in harness or connectors.

12. CHECK FUEL PUMP

Refer to EC-609, "Component Inspection" .

OK or NG

OK >> GO TO 13.
NG >> Replace “fuel level sensor unit and fuel pump”.

13. CHECK INTERMITTENT INCIDENT

Refer to EC-144, "TROUBLE DIAGNOSIS FOR INTERMITTENT INCIDENT" .

OK or NG

OK >> Replace IPDM E/R.
NG >> Repair or replace harness or connectors.

Component Inspection

UBS00HDF

FUEL PUMP

1. Disconnect “fuel level sensor unit and fuel pump” harness connector.
2. Check resistance between fuel level sensor unit and fuel pump terminals 1 and 3.

Resistance: 0.2 - 5.0Ω [at 25°C (77°F)]

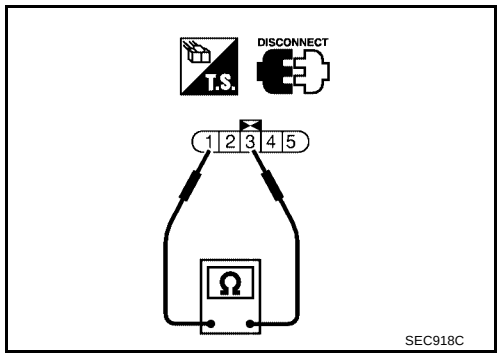

CONDENSER-2

1. Turn ignition switch OFF.
2. Disconnect condenser-2 harness connector.
3. Check resistance between condenser-2 terminals as 1 and 2.

Resistance	Above 1 MΩ at 25°C (77°F)

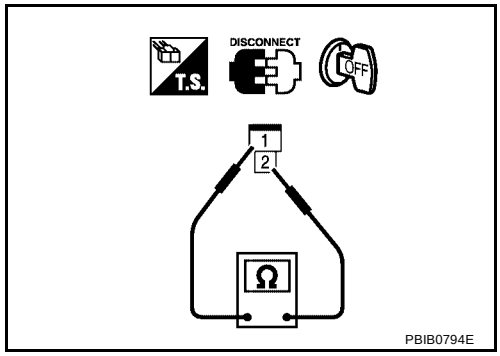

Removal and Installation

UBS00HDG

FUEL PUMP

Refer to FL-6, "FUEL LEVEL SENSOR UNIT, FUEL FILTER AND FUEL PUMP ASSEMBLY" .

ICC BRAKE SWITCH

PFP:25320

Component Description

UBS00L23

When depress on the brake pedal, ICC brake switch is turned OFF and stop lamp switch is turned ON. ECM detects the state of the brake pedal by this input of two kinds (ON/OFF signal)
Refer to ACS-6, "DESCRIPTION" for the ICC function.

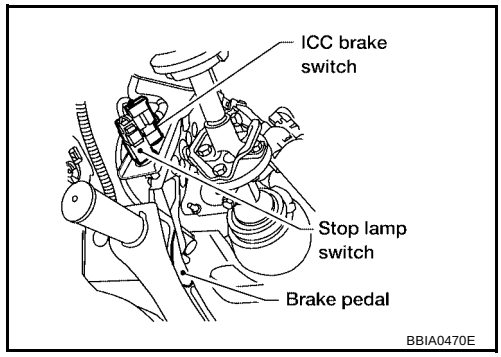

CONSULT-II Reference Value in Data Monitor Mode

UBS00L24

Specification data are reference values.

MONITOR ITEM	CONDITION		SPECIFICATION
BRAKE SW 1 (ICC brake switch)	● Ignition switch: ON	Brake pedal: Fully released	ON
		Brake pedal: Slightly depressed	OFF
BRAKE SW 2 (Stop lamp switch)	● Ignition switch: ON	Brake pedal: Fully released	OFF
		Brake pedal: Slightly depressed	ON

Wiring Diagram

UBS00L25

EC-ICCBOF-01

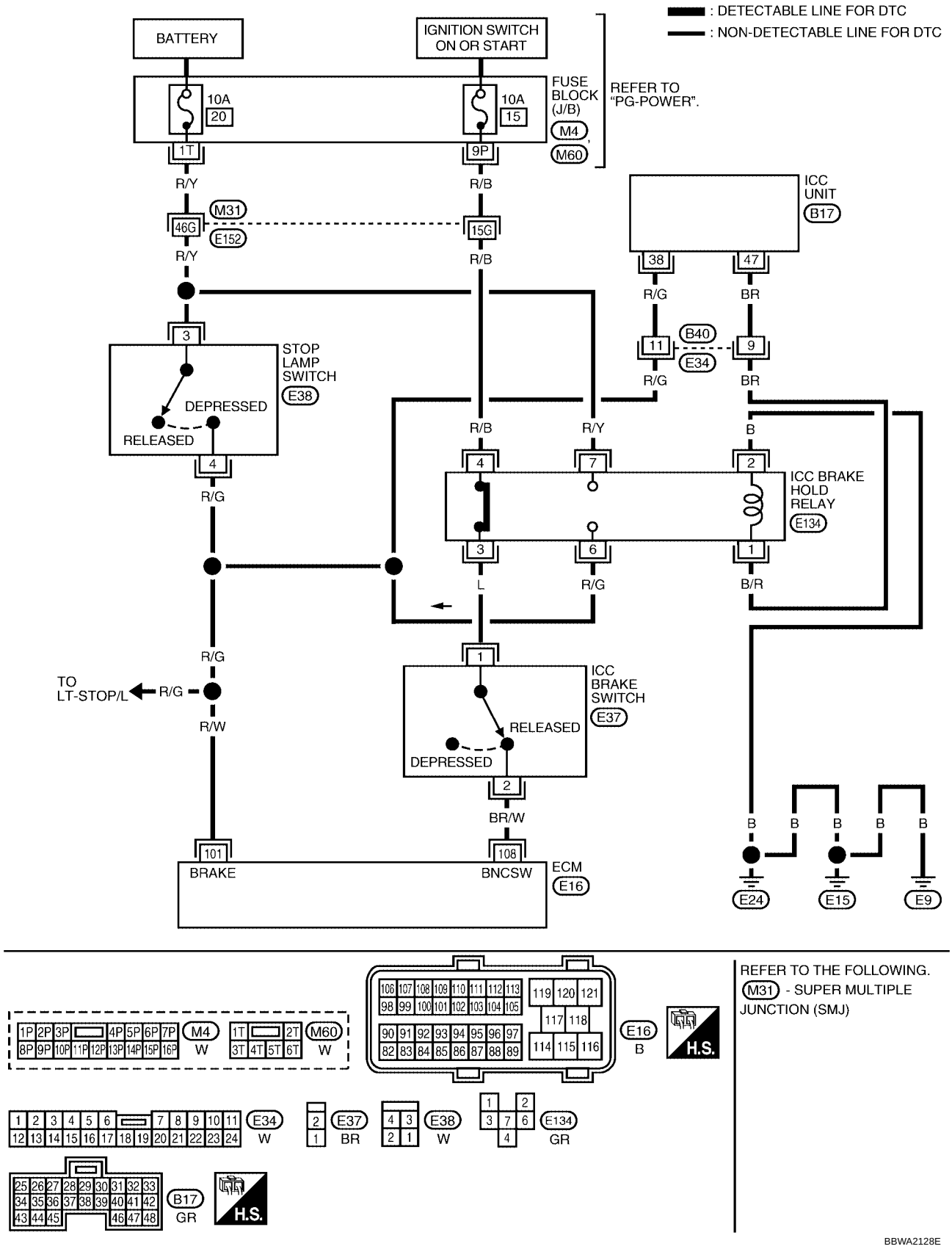

Specification data are reference values and are measured between each terminal and ground.

CAUTION:

Do not use ECM ground terminals when measuring input/output voltage. Doing so may result in damage to the ECM's transistor. Use a ground other than ECM terminals, such as the ground.

TERMINAL NO.	WIRE COLOR	ITEM	CONDITION	DATA (DC Voltage)
101	R/W	Stop lamp switch	**[Ignition switch: OFF]** ● Brake pedal: Fully released	Approximately 0V
			[Ignition switch: OFF] ● Brake pedal: Slightly depressed	BATTERY VOLTAGE (11 - 14V)
108	BR/W	ICC brake switch	**[Ignition switch: ON]** ● Brake pedal: Slightly depressed	Approximately 0V
			[Ignition switch: ON] ● Brake pedal: Fully released	BATTERY VOLTAGE (11 - 14V)

Diagnostic Procedure

UBS00L26

1. CHECK OVERALL FUNCTION-I

With CONSULT-II

1. Turn ignition switch ON.
2. Select “BRAKE SW1” in “DATA MONITOR” mode with CONSULT-II.
3. Check “BRAKE SW1” indication under the following conditions.

CONDITION	INDICATION
Brake pedal: Slightly depressed	OFF
Brake pedal: Fully released	ON

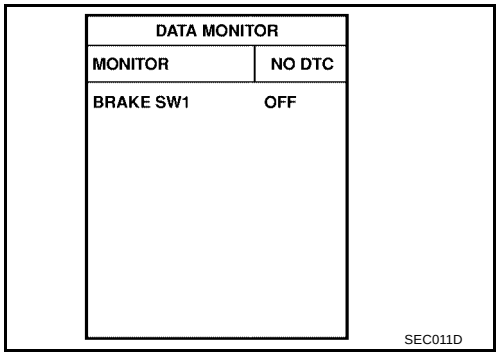

Without CONSULT-II

1. Turn ignition switch ON.
2. Check voltage between ECM terminal 108 and ground under the following conditions.

CONDITION	VOLTAGE
Brake pedal: Slightly depressed	Approximately 0V
Brake pedal: Fully released	Battery voltage

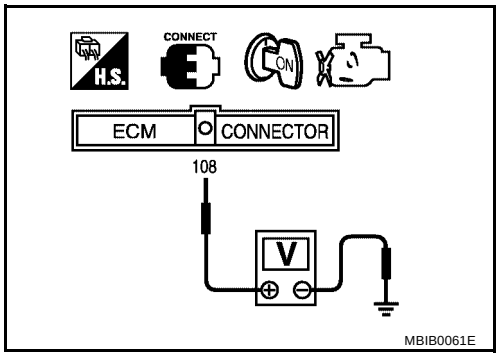

OK or NG

OK >> GO TO 2.
NG >> GO TO 3.

2. CHECK OVERALL FUNCTION-II

With CONSULT-II

Check “BRAKE SW2” indication in “DATA MONITOR” mode.

CONDITION	INDICATION
Brake pedal: Fully released	OFF
Brake pedal: Slightly depressed	ON

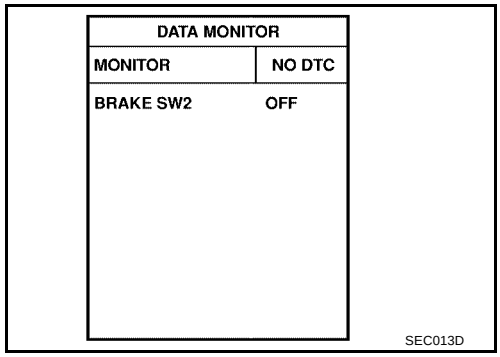

Without CONSULT-II

Check voltage between ECM terminal 101 and ground under the following conditions.

CONDITION	VOLTAGE
Brake pedal: Fully released	Approximately 0V
Brake pedal: Slightly depressed	Battery voltage

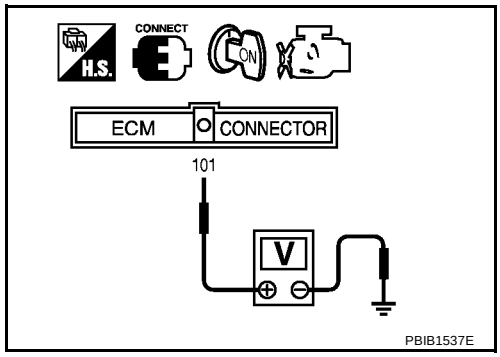

OK or NG

OK >> **INSPECTION END**
NG >> GO TO 10.

3. CHECK DTC WITH ICC UNIT

Refer to ACS-36, "TROUBLE DIAGNOSIS FOR SELF-DIAGNOSTIC ITEMS" .

OK or NG

OK >> GO TO 4.
NG >> Repair or replace.

4. CHECK ICC BRAKE HOLD RELAY POWER SUPPLY CIRCUIT

1. Turn ignition switch OFF.
2. Disconnect ICC brake hold relay.
3. Turn ignition switch ON.

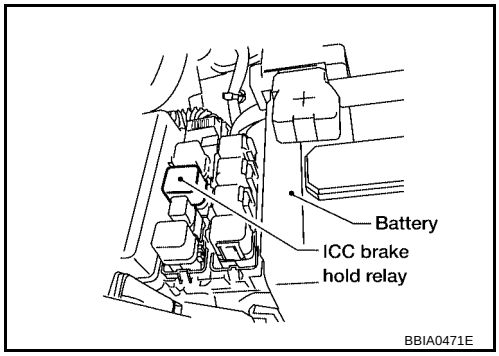

4. Check voltage between ICC brake hold relay terminal 4 and ground with CONSULT-II or tester.

Voltage: Battery voltage

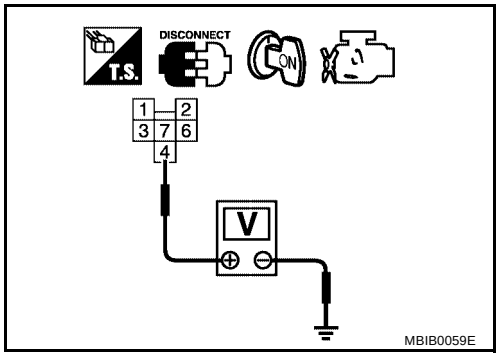

OK or NG

OK >> GO TO 6.
NG >> GO TO 5.

5. DETECT MALFUNCTIONING PART

Check the following.

- Harness connectors M31, E152
- Fuse block (J/B) connector M4
- 10A fuse
- Harness for open or short between ICC brake hold relay and fuse

>> Repair open circuit or short to ground or short to power in harness or connectors.

6. CHECK ICC BRAKE SWITCH POWER SUPPLY CIRCUIT

1. Turn ignition switch OFF.
2. Disconnect ICC brake switch harness connector.
3. Check harness continuity between ICC brake hold relay terminal 3 and ICC brake switch terminal 1.
   Refer to Wiring Diagram.

Continuity should exist.

4. Also check harness for short to ground and short to power.

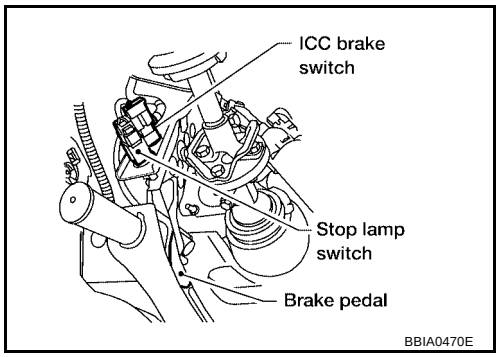

OK or NG

OK >> GO TO 7.
NG >> Repair open circuit or short to ground or short to power in harness or connectors.

7. CHECK ICC BRAKE SWITCH INPUT SIGNAL CIRCUIT FOR OPEN AND SHORT

1. Disconnect ECM harness connector.
2. Check harness continuity between ICC brake switch terminal 2 and ECM terminal 108. Refer Wiring Diagram.

Continuity should exist.

3. Also check harness for short to ground and short to power.

OK or NG

OK >> GO TO 8.
NG >> Repair open circuit or short to ground or short to power in harness or connectors.

8. CHECK ICC BRAKE HOLD RELAY

Refer to EC-617, "Component Inspection" .

OK >> GO TO 9.
NG >> Replace ICC brake hold relay.

9. CHECK ICC BRAKE SWITCH

Refer to EC-617, "Component Inspection" .

OK or NG

OK >> GO TO 14.
NG >> Replace ICC brake switch.

10. CHECK STOP LAMP SWITCH POWER SUPPLY CIRCUIT

1. Turn ignition switch OFF.
2. Disconnect stop lamp switch harness connector.

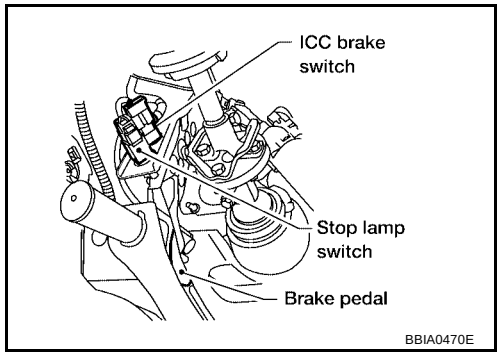

3. Check voltage between stop lamp switch terminal 3 and ground with CONSULT -II or tester.

Voltage: Battery voltage

OK or NG

OK >> GO TO 12.
NG >> GO TO 11.

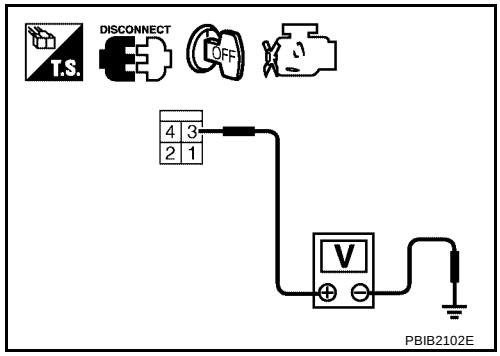

11. DETECT MALFUNCTIONING PART

Check the following.

- Harness connectors M31, E152
- Fuse block (J/B) No. 1 connector M60
- 10A fuse
- Harness for open or short between stop lamp switch and battery

>> Repair open circuit or short to ground or short to power in harness or connectors.

12. CHECK STOP LAMP SWITCH INPUT SIGNAL CIRCUIT FOR OPEN AND SHORT

1. Disconnect ECM harness connector.
2. Check harness continuity between ECM terminal 101 and stop lamp switch terminal 4.
   Refer to Wiring Diagram.

   Continuity should exist.

3. Also check harness for short to ground and short to power.

OK or NG

OK >> GO TO 13.
NG >> Repair open circuit or short to ground or short to power in harness or connectors.

13. CHECK STOP LAMP SWITCH

Refer to EC-617, "Component Inspection" .

OK or NG

OK >> GO TO 14.
NG >> Replace stop lamp switch.

14. CHECK INTERMITTENT INCIDENT

Refer to EC-144, "TROUBLE DIAGNOSIS FOR INTERMITTENT INCIDENT" .

>> **INSPECTION END**

Component Inspection

UBS00L27

ICC BRAKE SWITCH

1. Turn ignition switch OFF.
2. Disconnect ICC brake switch harness connector.
3. Check continuity between ICC brake switch terminals 1 and 2 under the following conditions.

Condition	Continuity
Brake pedal: Fully released.	Should exist.
Brake pedal: Slightly depressed.	Should not exist.

If NG, adjust ICC brake switch installation, refer to BR-6, "BRAKE PEDAL" , and perform step 3 again.

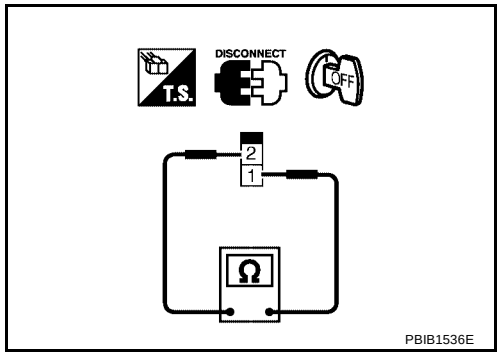

STOP LAMP SWITCH

1. Turn ignition switch OFF.
2. Disconnect stop lamp switch harness connector.
3. Check continuity between stop lamp switch terminals 3 and 4 under the following conditions.

Condition	Continuity
Brake pedal: Fully released.	Should not exist.
Brake pedal: Slightly depressed.	Should exist.

If NG, adjust stop lamp switch installation, refer to BR-6, "BRAKE PEDAL" , and perform step 3 again.

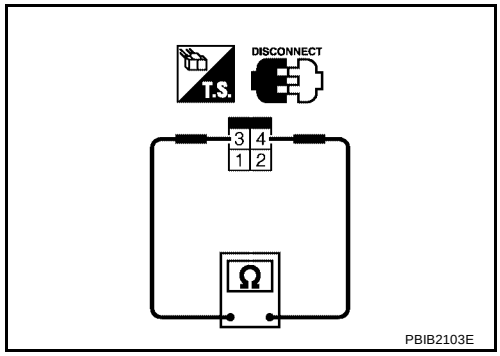

ICC BRAKE HOLD RELAY

1. Apply 12V direct current between ICC brake hold relay terminals 1 and 2.
2. Check continuity between relay terminals 3 and 4, 6 and 7 under the following conditions.

Condition	Between terminals	Continuity
12V direct current supply between terminals 1 and 2	3 and 4	Should not exist
	6 and 7	Should exist
No current supply	3 and 4	Should exist
	6 and 7	Should not exist

3. If NG, replace ICC brake hold relay.

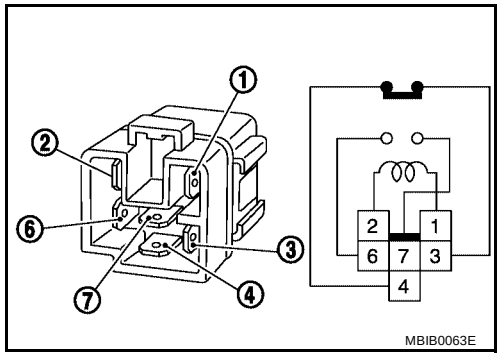

IGNITION SIGNAL

PFP:22448

Component Description

UBS00L1A

IGNITION COIL & POWER TRANSISTOR

The ignition signal from the ECM is sent to and amplified by the power transistor. The power transistor turns ON and OFF the ignition coil primary circuit. This ON/OFF operation induces the proper high voltage in the coil secondary circuit.

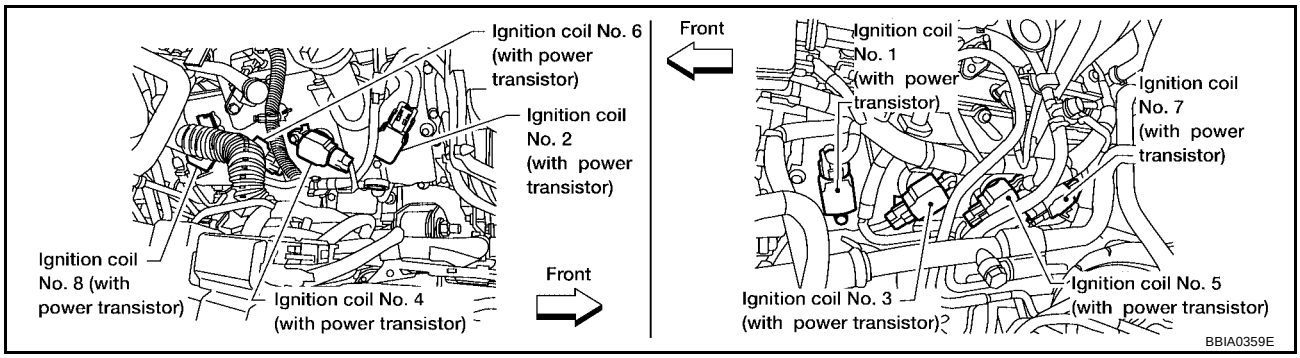

Wiring Diagram

UBS00L1B

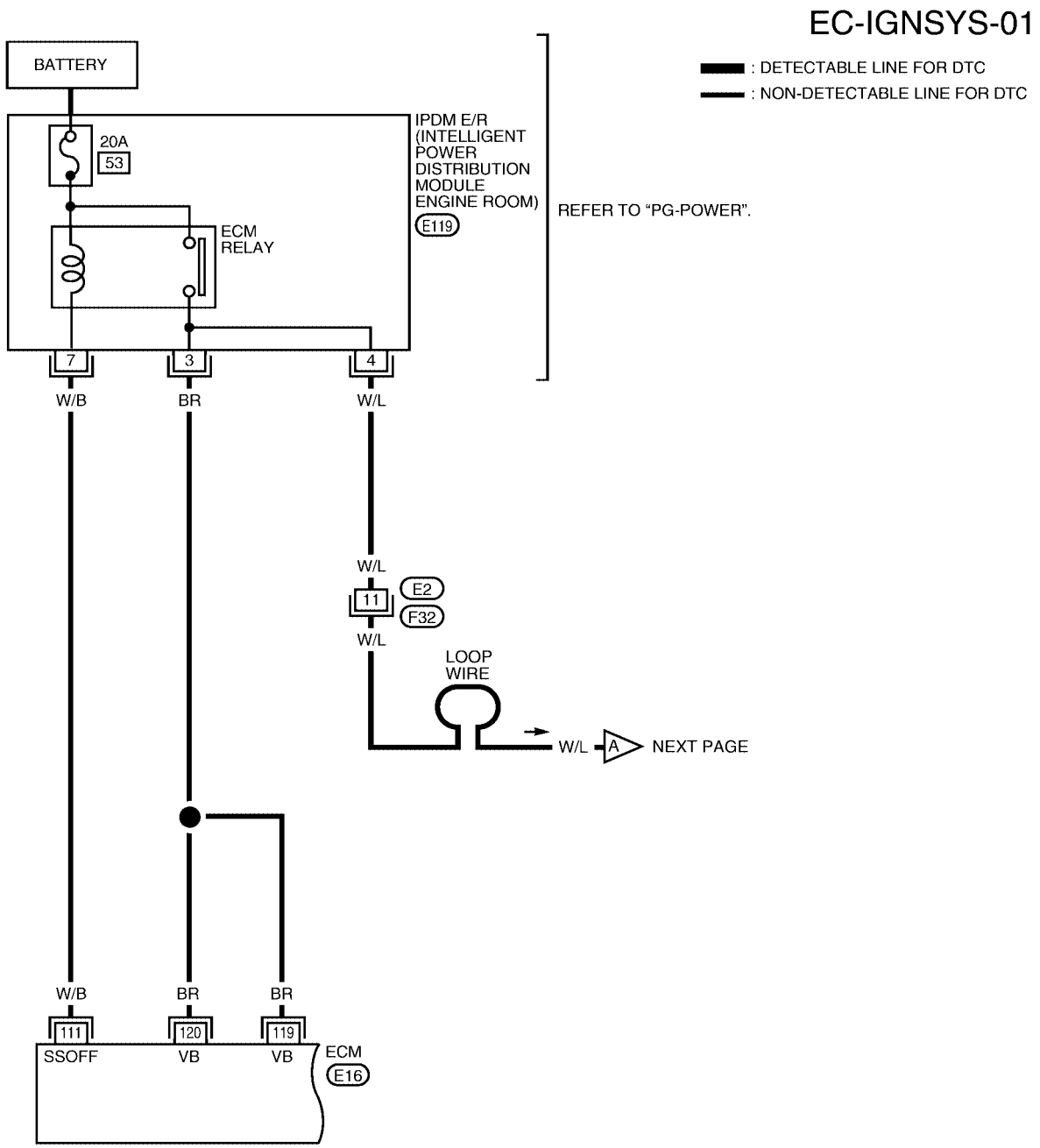

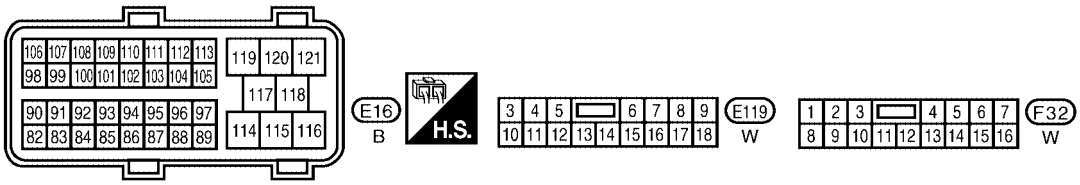

BBWA2107E

IGNITION SIGNAL

Specification data are reference values and are measured between each terminal and ground.

CAUTION:

Do not use ECM ground terminals when measuring input/output voltage. Doing so may result in damage to the ECM's transistor. Use a ground other than ECM terminals, such as the ground.

TERMINAL NO.	WIRE COLOR	ITEM	CONDITION	DATA (DC Voltage)
111	W/B	ECM relay (Self shut-off)	**[Engine is running]** **[Ignition switch: OFF]** ● For a few seconds after turning ignition switch OFF	0 - 1.5V
			[Ignition switch: OFF] ● More than a few seconds after turning ignition switch OFF	BATTERY VOLTAGE (11 - 14V)
119 120	BR BR	Power supply for ECM	**[Ignition switch: ON]**	BATTERY VOLTAGE (11 - 14V)

EC-IGNSYS-02

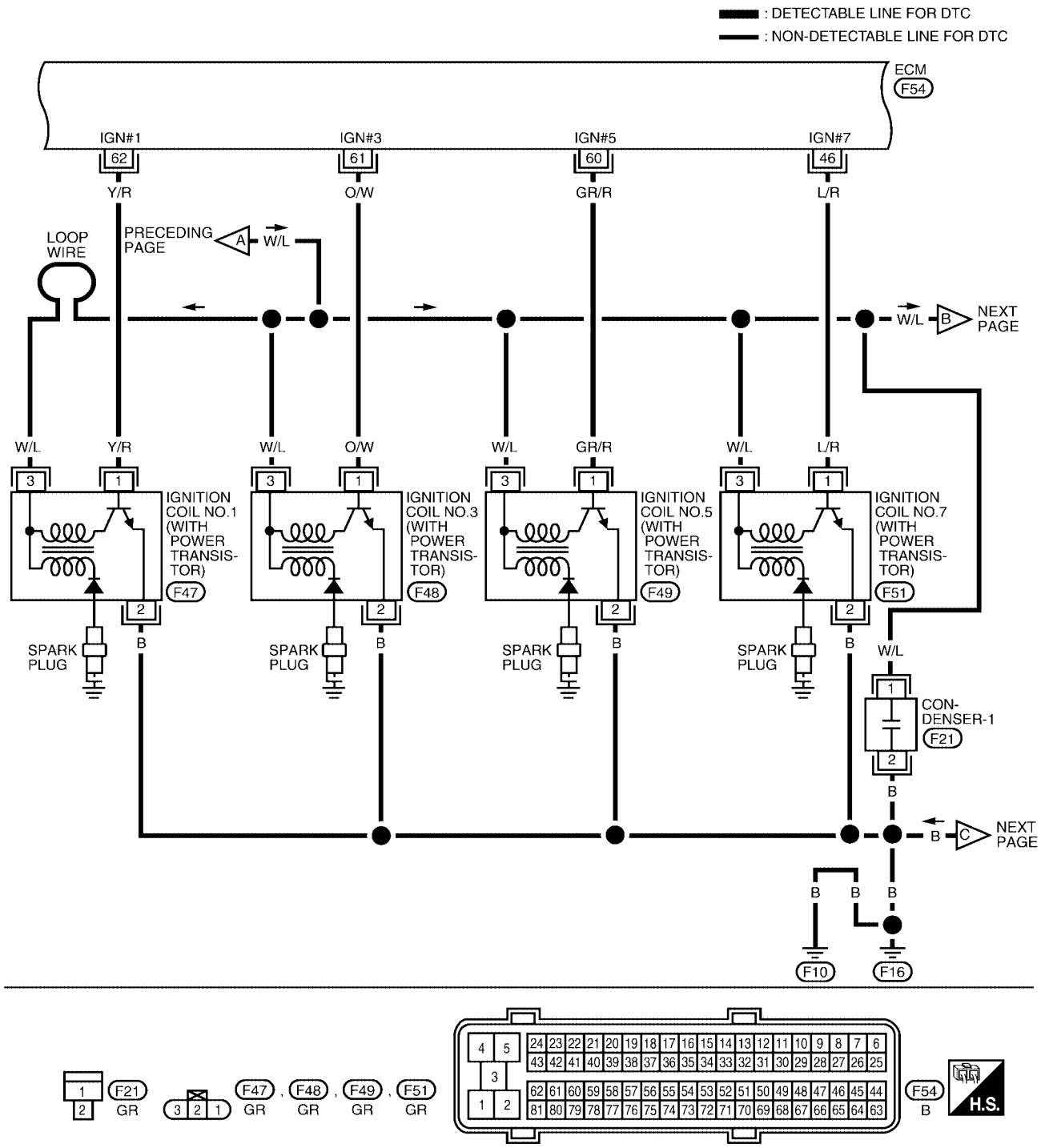

BBWA1871E

IGNITION SIGNAL

Specification data are reference values and are measured between each terminal and ground.
Pulse signal is measured by CONSULT-II.

CAUTION:

Do not use ECM ground terminals when measuring input/output voltage. Doing so may result in damage to the ECM's transistor. Use a ground other than ECM terminals, such as the ground.

TERMINAL NO.	WIRE COLOR	ITEM	CONDITION	DATA (DC Voltage)
46 60 61 62	L/R GR/R O/W Y/R	Ignition signal No. 7 Ignition signal No. 5 Ignition signal No. 3 Ignition signal No. 1	**[Engine is running]** ● **Warm-up condition** ● Idle speed **NOTE:** The pulse cycle changes depending on rpm at idle.	0 - 0.2V★ 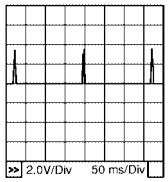 PBIB0044E
			[Engine is running] ● **Warm-up condition** ● Engine speed: 2,000 rpm.	0.1 - 0.4V★ 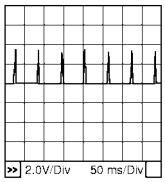 PBIB0045E

★: Average voltage for pulse signal (Actual pulse signal can be confirmed by oscilloscope.)

EC-IGNSYS-03

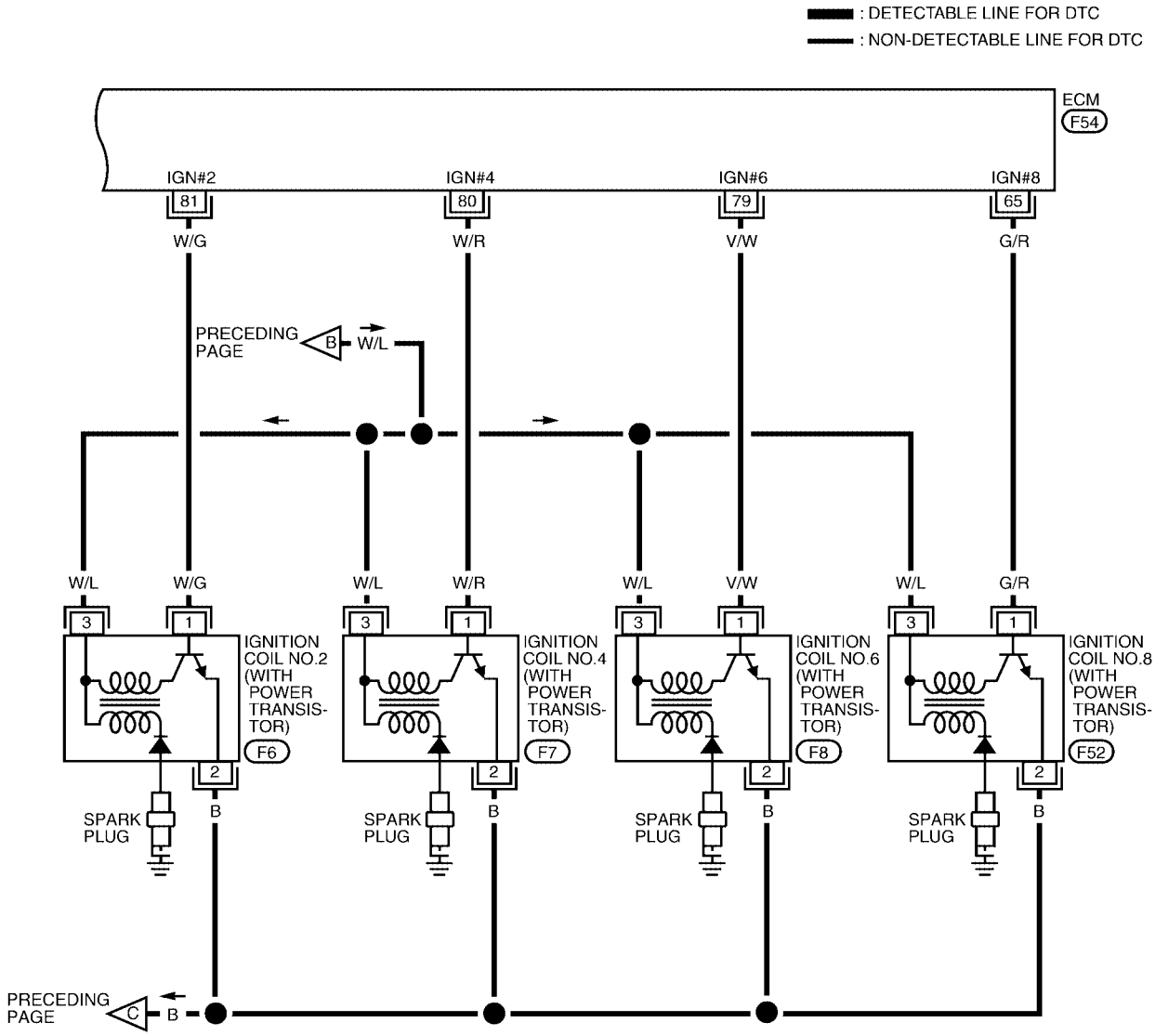

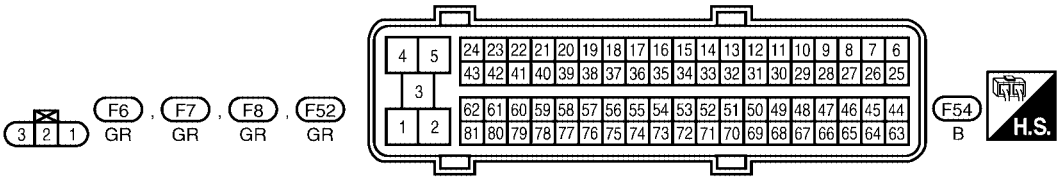

BBWA1712E

Specification data are reference values and are measured between each terminal and ground.
Pulse signal is measured by CONSULT-II.

CAUTION:
Do not use ECM ground terminals when measuring input/output voltage. Doing so may result in damage to the ECM's transistor. Use a ground other than ECM terminals, such as the ground.

TERMINAL NO.	WIRE COLOR	ITEM	CONDITION	DATA (DC Voltage)
65 79 80 81	G/R V/W W/R W/G	Ignition signal No. 8 Ignition signal No. 6 Ignition signal No. 4 Ignition signal No. 2	**[Engine is running]** ● **Warm-up condition** ● Idle speed **NOTE:** The pulse cycle changes depending on rpm at idle.	0 - 0.2V★ 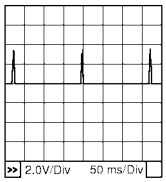 PBIB0044E
			[Engine is running] ● **Warm-up condition** ● Engine speed: 2,000 rpm.	0.1 - 0.4V★ 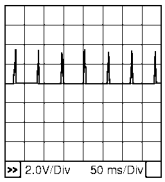 PBIB0045E

★: Average voltage for pulse signal (Actual pulse signal can be confirmed by oscilloscope.)

Diagnostic Procedure

UBS00L1C

1. CHECK ENGINE START

Turn ignition switch OFF, and restart engine.
Is engine running?

Yes or No

Yes (With CONSULT-II)>>GO TO 2.
Yes (Without CONSULT-II)>>GO TO 3.
No >> GO TO 4.

2. CHECK OVERALL FUNCTION

With CONSULT-II

1. Perform “POWER BALANCE” in “ACTIVE TEST” mode with CONSULT-II.
2. Make sure that each circuit produces a momentary engine speed drop.

OK or NG

OK >> **INSPECTION END**
NG >> GO TO 10.

ACTIVE TEST	
POWER BALANCE	
MONITOR	
ENG SPEED	XXX rpm
MAS A/F SE-B1	XXX V

PBIB0133E

3. CHECK OVERALL FUNCTION

Without CONSULT-II

1. Let engine idle.
2. Read the voltage signal between ECM terminals 46, 60, 61, 62, 65, 79, 80, 81 and ground with an oscilloscope.
3. Verify that the oscilloscope screen shows the signal wave as shown below.

   NOTE:
   The pulse cycle changes depending on rpm at idle.

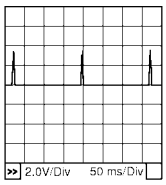

PBIB0044E

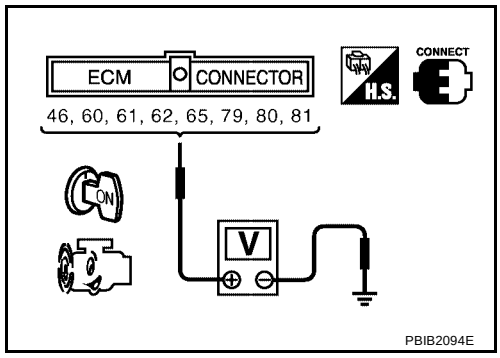

PBIB2094E

OK or NG

OK >> **INSPECTION END**
NG >> GO TO 10.

4. CHECK IGNITION COIL POWER SUPPLY CIRCUIT-I

1. Turn ignition switch OFF, wait at least 10 seconds and then turn ON.
2. Check voltage between ECM terminals 119, 120 and ground with CONSULT-II or tester.

   Voltage: Battery voltage

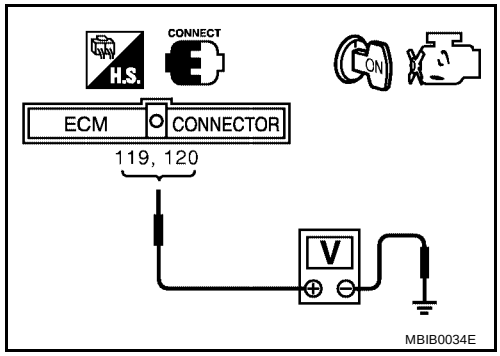

MBIB0034E

OK or NG

OK >> GO TO 5.
NG >> Go to EC-145, "POWER SUPPLY AND GROUND CIRCUIT" .

5. CHECK IGNITION COIL POWER SUPPLY CIRCUIT-II

1. Turn ignition switch OFF.
2. Disconnect condenser-1 harness connector.
3. Turn ignition switch ON.

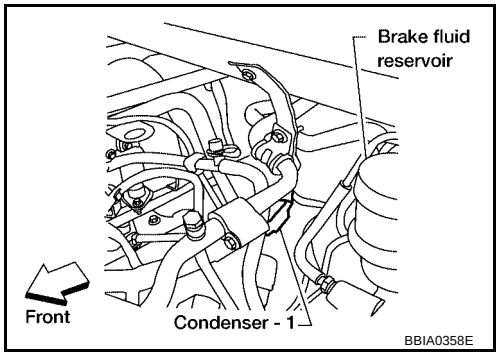

4. Check voltage between condenser-1 terminal 1 and ground with CONSULT-II or tester.

Voltage: Battery voltage

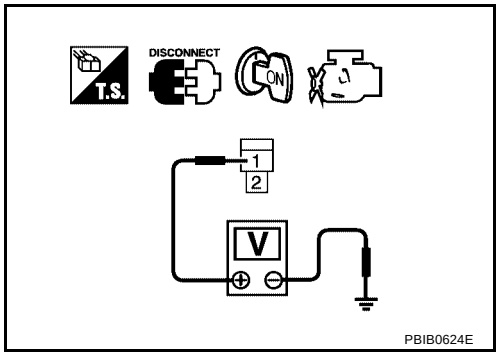

OK or NG

OK >> GO TO 8.
NG >> GO TO 6.

6. CHECK IGNITION COIL POWER SUPPLY CIRCUIT-III

1. Turn ignition switch OFF.
2. Disconnect IPDM E/R connector E119.
3. Check harness continuity between IPDM E/R terminal 4 and condenser-1 terminal 1. Refer to Wiring Diagram.

Continuity should exist.

4. Also check harness for short to ground and short to power.

OK or NG

OK >> Go to EC-145, "POWER SUPPLY AND GROUND CIRCUIT" .
NG >> GO TO 7.

7. DETECT MALFUNCTIONING PART

Check the following.

- Harness connectors E2, F32
- Harness for open or short between condenser-1 and IPDM E/R

>> Repair open circuit or short to ground or short to power in harness or connectors.

8. CHECK CONDENSER-1 GROUND CIRCUIT FOR OPEN AND SHORT

1. Turn ignition switch OFF.
2. Check harness continuity between condenser-1 terminal 2 and ground.
   Refer to Wiring Diagram.

   Continuity should exist.

3. Also check harness for short to power.

OK or NG

OK >> GO TO 9.
NG >> Repair open circuit or short to power in harness or connectors.

9. CHECK CONDENSER-1

Refer to EC-628, "Component Inspection" .

OK or NG

OK >> GO TO 10.
NG >> Replace condenser-1.

10. CHECK IGNITION COIL POWER SUPPLY CIRCUIT-IV

1. Turn ignition switch OFF.
2. Reconnect all harness connectors disconnected.
3. Disconnect ignition coil harness connector.

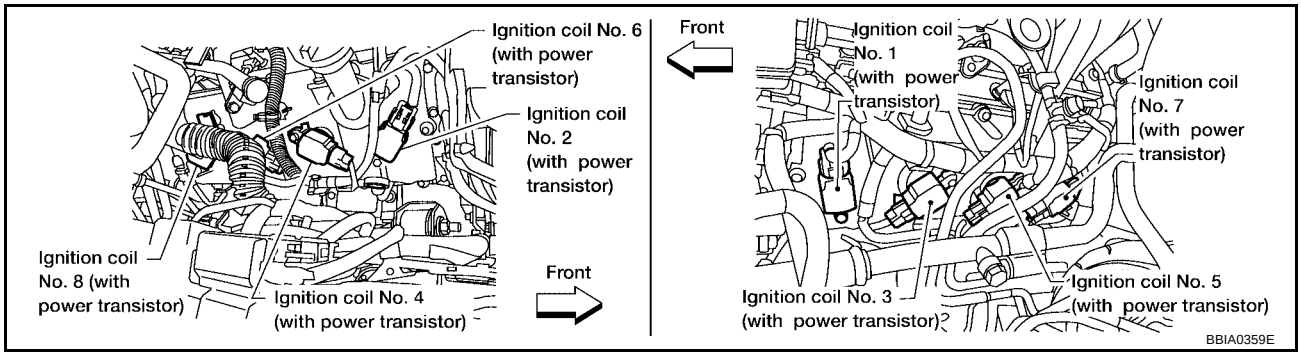

4. Turn ignition switch ON.
5. Check voltage between ignition coil terminal 3 and ground with CONSULT-II or tester.

   Voltage: Battery voltage

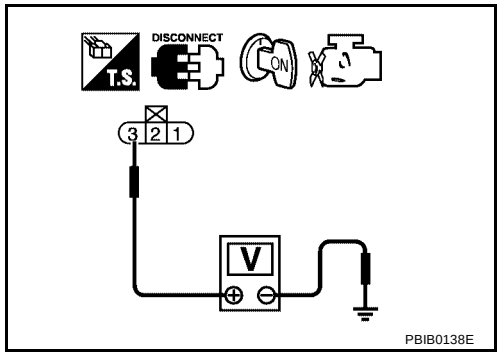

OK or NG

OK >> GO TO 12.
NG >> GO TO 11.

11. DETECT MALFUNCTIONING PART

Check the following.

- Harness connectors E2, F32
- Harness for open or short between ignition coil and harness connector F32

>> Repair or replace harness or connectors.

12. CHECK IGNITION COIL GROUND CIRCUIT FOR OPEN AND SHORT

1. Turn ignition switch OFF.
2. Check harness continuity between ignition coil terminal 2 and ground.
   Refer to Wiring Diagram.

   Continuity should exist.

3. Also check harness for short to power.

OK or NG

OK >> GO TO 13.
NG >> Repair open circuit or short to power in harness or connectors.

13. CHECK IGNITION COIL OUTPUT SIGNAL CIRCUIT FOR OPEN AND SHORT

1. Disconnect ECM harness connector.
2. Check harness continuity between ECM terminals 46, 60, 61, 62, 65, 79, 80, 81 and ignition coil terminal 1.
   Refer to Wiring Diagram.

   Continuity should exist.

3. Also check harness for short to ground and short to power.

OK or NG

OK >> GO TO 14.
NG >> Repair open circuit or short to ground or short to power in harness or connectors.

14. CHECK IGNITION COIL WITH POWER TRANSISTOR

Refer to EC-628, "Component Inspection" .

OK or NG

OK >> GO TO 15.
NG >> Replace ignition coil with power transistor.

15. CHECK INTERMITTENT INCIDENT

Refer to EC-144, "TROUBLE DIAGNOSIS FOR INTERMITTENT INCIDENT" .

>> **INSPECTION END**

Component Inspection

UBS00L1D

IGNITION COIL WITH POWER TRANSISTOR

CAUTION:

Do the following procedure in the place where ventilation is good without the combustible.

1. Turn ignition switch OFF.
2. Disconnect ignition coil harness connector.
3. Check resistance between ignition coil terminals as follows.

Terminal No. (Polarity)	Resistance Ω [at 25°C (77°F)]
1 and 2	Except 0 or ∞
1 and 3	Except 0
2 and 3	

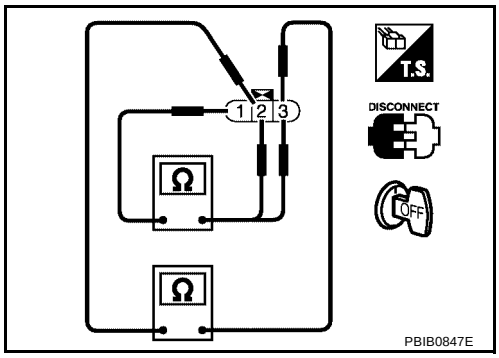

4. If NG, replace ignition coil with power transistor.
   If OK, go to next step.
5. Turn ignition switch OFF.
6. Reconnect all harness connectors disconnected.

7. Remove fuel pump fuse in fuse block No. 1 to release fuel pressure.

   NOTE:
   Do not use CONSULT-II to release fuel pressure, or fuel pressure applies again during the following procedure.

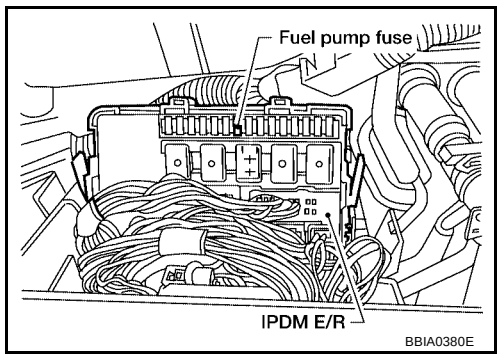

8. Start engine.
9. After engine stalls, crank it two or three times to release all fuel pressure.
10. Turn ignition switch OFF.
11. Remove all ignition coil harness connectors to avoid the electrical discharge from the ignition coils.
12. Remove ignition coil and spark plug of the cylinder to be checked.
13. Crank engine for 5 seconds or more to remove combustion gas in the cylinder.
14. Connect spark plug and harness connector to ignition coil.
15. Fix ignition coil using a rope etc. with gap of 13 - 17 mm between the edge of the spark plug and grounded metal portion as shown in the figure.

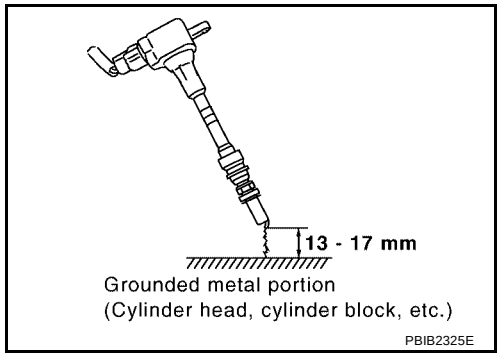

16. Crank engine for about 3 seconds, and check whether spark is generated between the spark plug and the grounded metal portion.

    Spark should be generated.

    CAUTION:
    - **Do not approach to the spark plug and the ignition coil within 50cm. Be careful not to get an electrical shock while checking, because the electrical discharge voltage becomes 20kV or more.**
    - **It might cause to damage the ignition coil if the gap of more than 17 mm is taken.**

    NOTE:
    When the gap is less than 13 mm, the spark might be generated even if the coil is malfunctioning.
17. If NG, replace ignition coil with power transistor.

CONDENSER-1

1. Turn ignition switch OFF.
2. Disconnect condenser-1 harness connector.
3. Check resistance between condenser-1 terminals 1 and 2.

Resistance	Above 1 MΩ at 25°C (77°F)

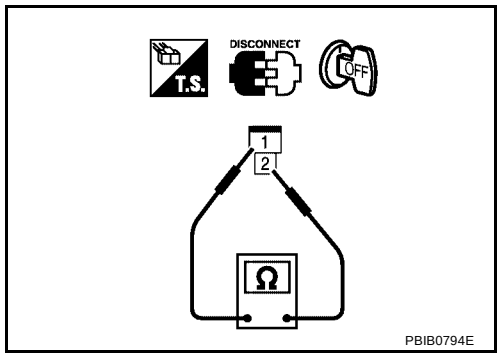

Removal and Installation

UBS00L1E

IGNITION COIL WITH POWER TRANSISTOR

Refer to EM-28, "IGNITION COIL" .

REFRIGERANT PRESSURE SENSOR

PFP:92136

Component Description

UBS00HDH

The refrigerant pressure sensor is installed at the condenser of the air conditioner system. The sensor uses an electrostatic volume pressure transducer to convert refrigerant pressure to voltage. The voltage signal is sent to ECM, and ECM controls cooling fan system.

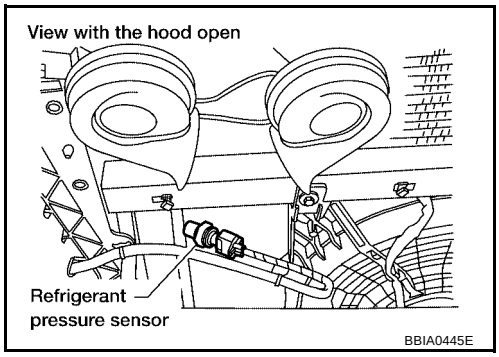

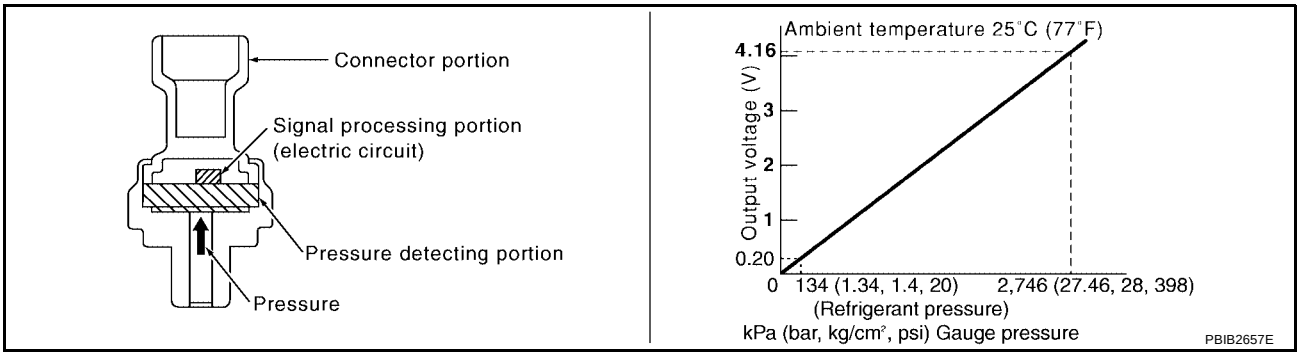

Wiring Diagram

UBS00HDI

EC-RP/SEN-01

: DETECTABLE LINE FOR DTC
: NON-DETECTABLE LINE FOR DTC

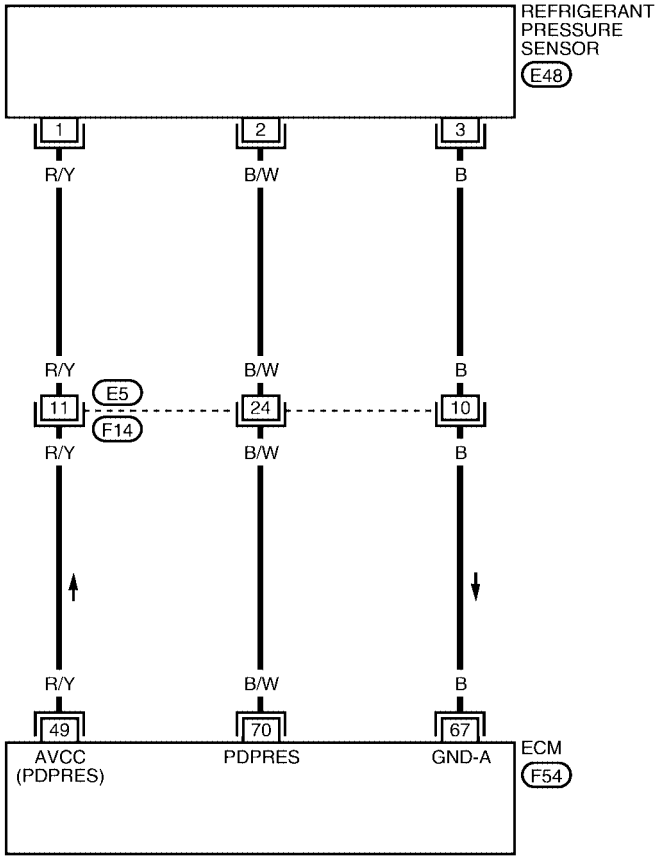

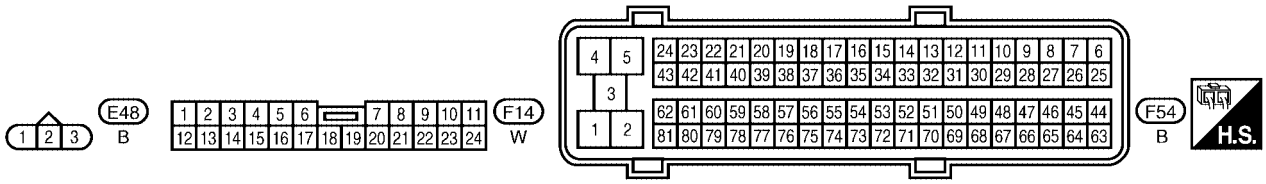

BBWA1715E

Specification data are reference values and are measured between each terminal and ground.

CAUTION:

Do not use ECM ground terminals when measuring input/output voltage. Doing so may result in damage to the ECM's transistor. Use a ground other than ECM terminals, such as the ground.

TERMINAL NO.	WIRE COLOR	ITEM	CONDITION	DATA (DC Voltage)
49	R/Y	Sensor power supply (Refrigerant pressure sensor)	**[Ignition switch: ON]**	Approximately 5V
67	B	Sensor ground	**[Engine is running]** ● **Warm-up condition** ● Idle speed	Approximately 0V
70	B/W	Refrigerant pressure sensor	**[Engine is running]** ● **Warm-up condition** ● Both A/C switch and blower switch: ON (Compressor: Operates)	1.0 - 4.0V

Diagnostic Procedure

UBS00HDJ

1. CHECK REFRIGERANT PRESSURE SENSOR OVERALL FUNCTION

1. Start engine and warm it up to normal operating temperature.
2. Turn A/C switch and blower switch ON.
3. Check voltage between ECM terminal 70 and ground with CONSULT-II or tester.

Voltage: 1.0 - 4.0V

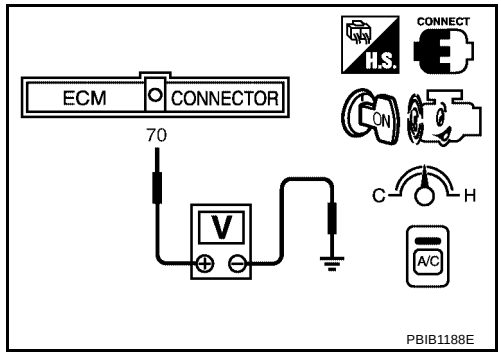

OK or NG

OK >> **INSPECTION END**
NG >> GO TO 2.

2. CHECK GROUND CONNECTIONS

1. Turn A/C switch and blower switch OFF.
2. Turn ignition switch OFF.
3. Loosen and retighten three ground screws on the body.
   Refer to EC-150, "Ground Inspection" .

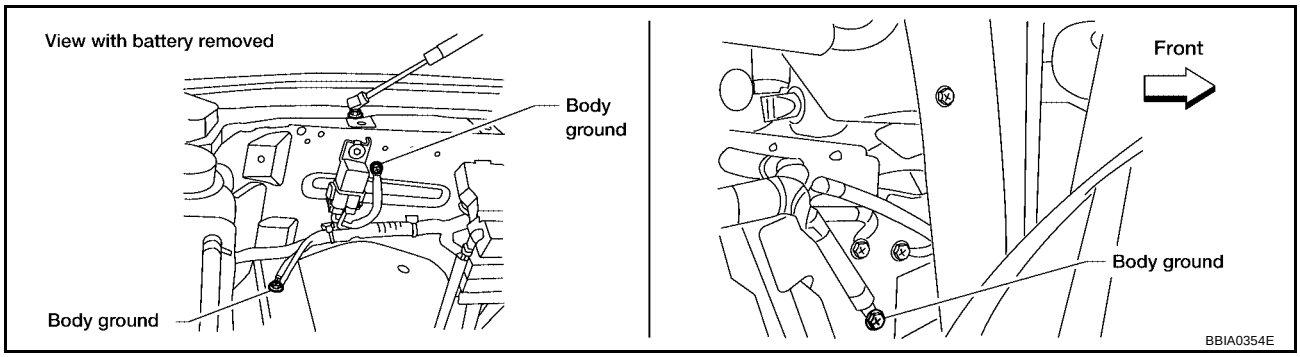

OK or NG

OK >> GO TO 3.
NG >> Repair or replace ground connections.

3. CHECK REFRIGERANT PRESSURE SENSOR POWER SUPPLY CIRCUIT

1. Disconnect refrigerant pressure sensor harness connector.
2. Turn ignition switch ON.

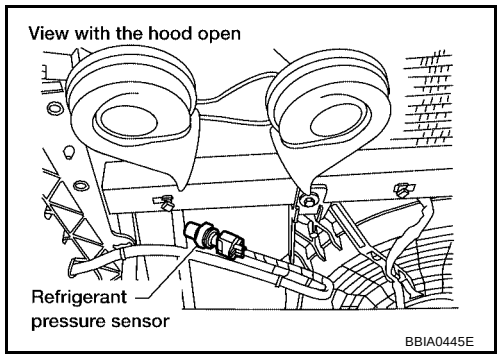

3. Check voltage between refrigerant pressure sensor terminal 1 and ground with CONSULT-II or tester.

Voltage: Approximately 5V

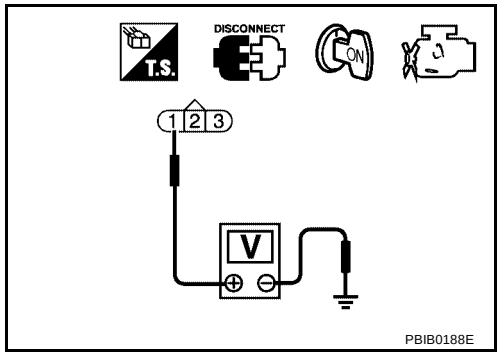

OK or NG

OK >> GO TO 5.
NG >> GO TO 4.

4. DETECT MALFUNCTIONING PART

Check the following.

- Harness connectors E5, F14
- Harness for open or short between ECM and refrigerant pressure sensor

>> Repair harness or connectors.

5. CHECK REFRIGERANT PRESSURE SENSOR GROUND CIRCUIT FOR OPEN AND SHORT

1. Turn ignition switch OFF.
2. Disconnect ECM harness connector.
3. Check harness continuity between refrigerant pressure sensor terminal 3 and ECM terminal 67. Refer to Wiring Diagram.

Continuity should exist.

4. Also check harness for short to ground and short to power.

OK or NG

OK >> GO TO 7.
NG >> GO TO 6.

6. DETECT MALFUNCTIONING PART

Check the following.

- Harness connectors E5, F14
- Harness for open or short between ECM and refrigerant pressure sensor

>> Repair open circuit or short to ground or short to power in harness or connectors.

7. CHECK REFRIGERANT PRESSURE SENSOR INPUT SIGNAL CIRCUIT FOR OPEN AND SHORT

1. Check harness continuity between ECM terminal 70 and refrigerant pressure sensor terminal 2. Refer to Wiring Diagram.

   Continuity should exist.

2. Also check harness for short to ground and short to power.

OK or NG

OK >> GO TO 9.
NG >> GO TO 8.

8. DETECT MALFUNCTIONING PART

Check the following.

- Harness connectors E5, F14
- Harness for open or short between ECM and refrigerant pressure sensor

>> Repair open circuit or short to ground or short to power in harness or connectors.

9. CHECK INTERMITTENT INCIDENT

Refer to EC-144, "TROUBLE DIAGNOSIS FOR INTERMITTENT INCIDENT" .

OK or NG

OK >> Replace refrigerant pressure sensor.
NG >> Repair or replace.

Removal and Installation

UBS00HDK

REFRIGERANT PRESSURE SENSOR

Refer to ATC-182, "Removal and Installation for Refrigerant Pressure Sensor" .

MIL AND DATA LINK CONNECTOR

PFP:24814

Wiring Diagram

UBS00HDX

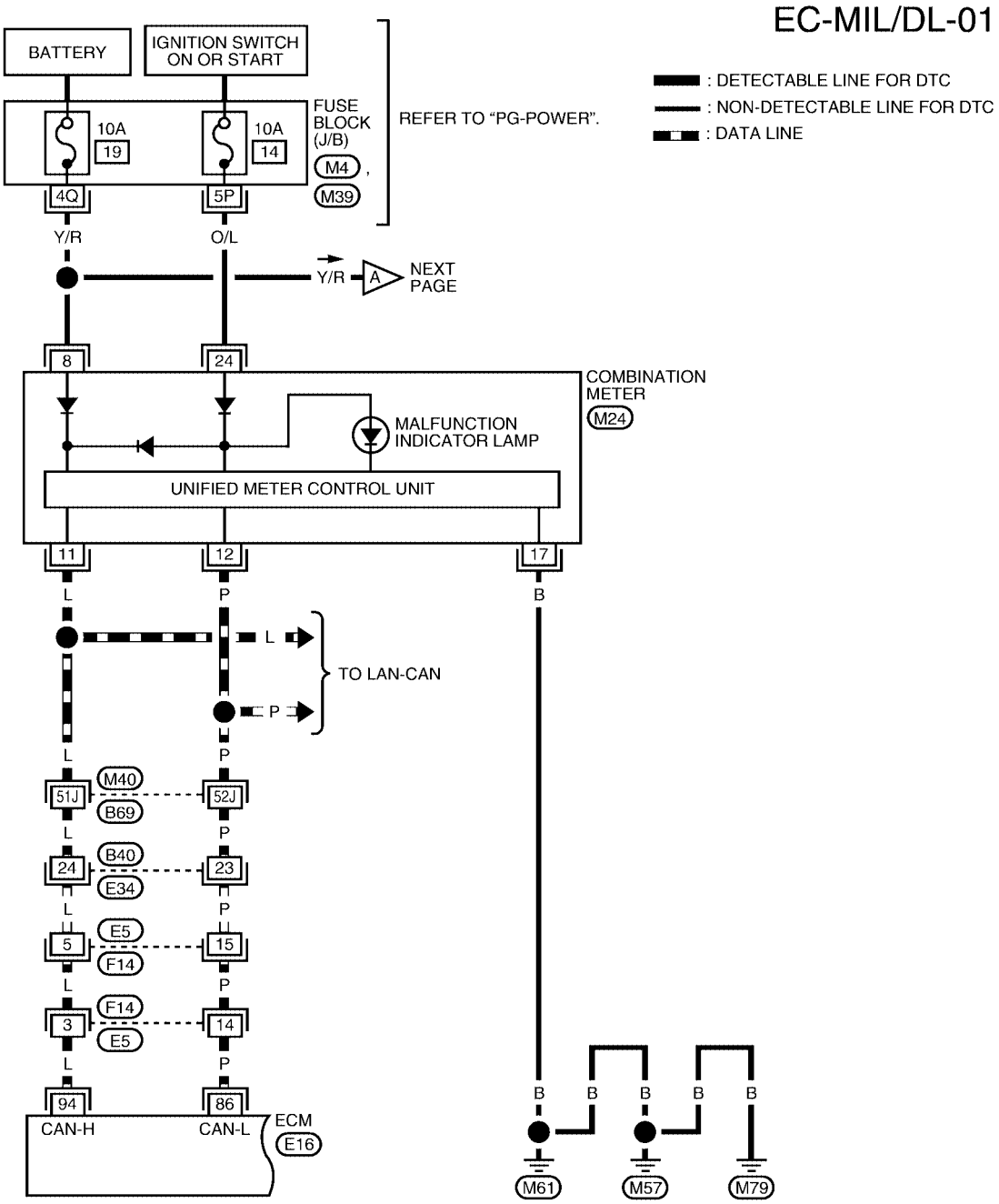

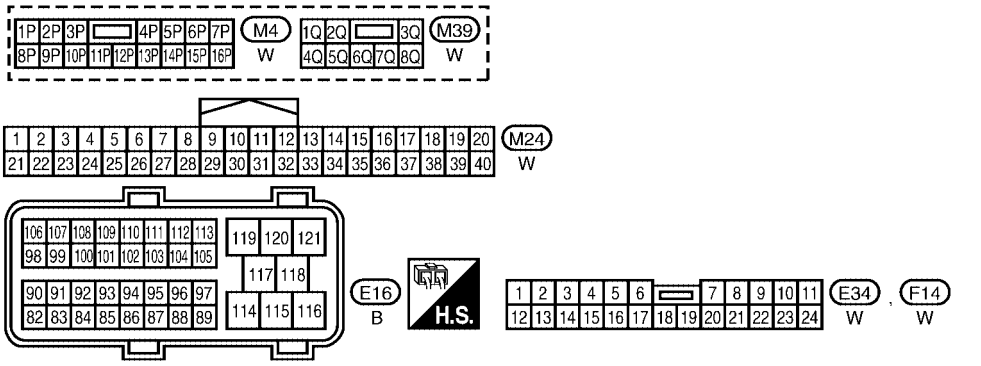

REFER TO THE FOLLOWING.
M40 - SUPER MULTIPLE JUNCTION (SMJ)

BBWA2110E

EC-MIL/DL-02

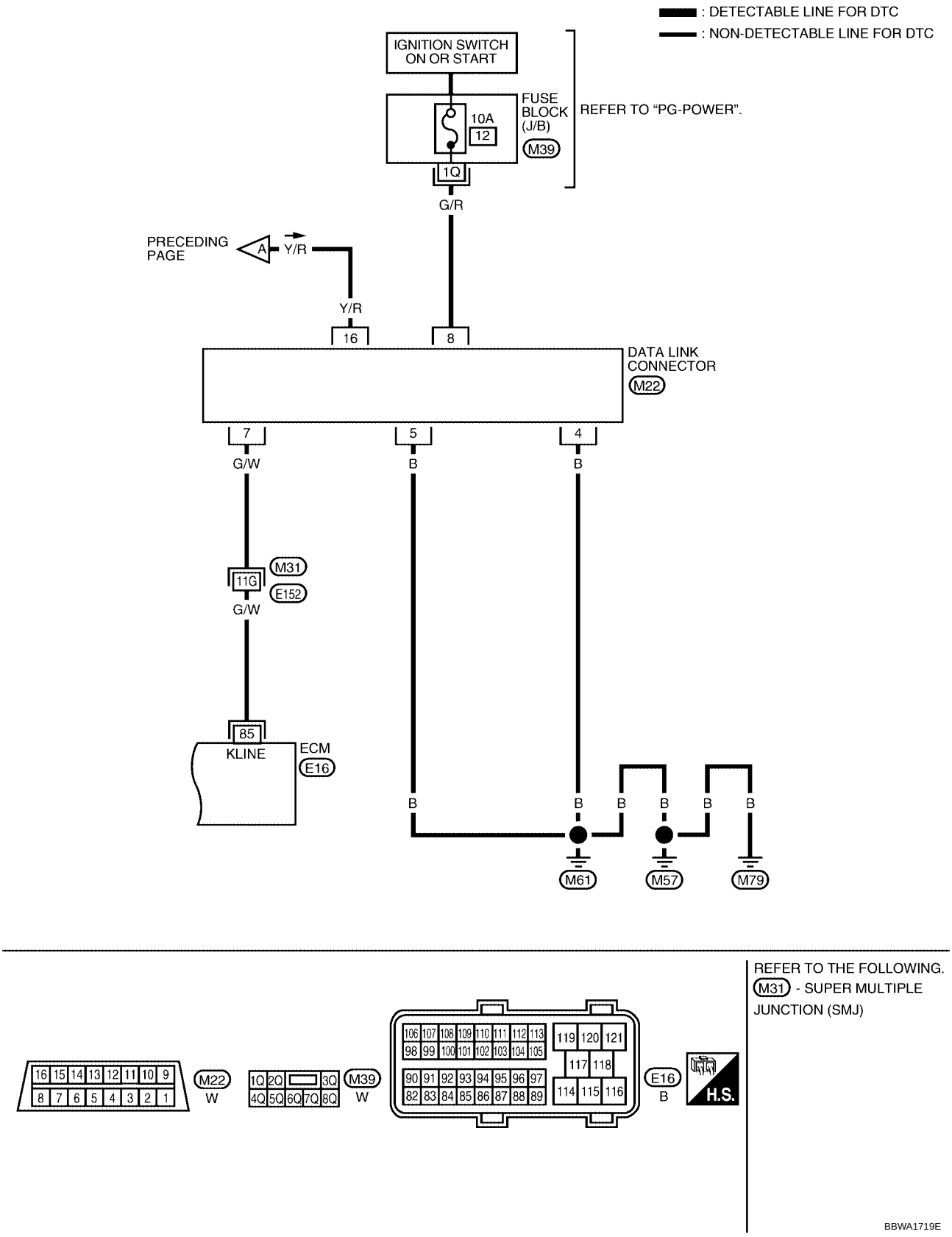
: DETECTABLE LINE FOR DTC
: NON-DETECTABLE LINE FOR DTC
IGNITION SWITCH ON OR START
FUSE BLOCK (J/B)
M39
10A
12
1Q
REFER TO "PG-POWER".
G/R
PRECEDING PAGE
A
Y/R
Y/R
16
8
DATA LINK CONNECTOR
M22
7
5
4
G/W
B
B
M31
11G
E152
G/W
85
KLINE
ECM
E16
B
B
B
B
B
B
M61
M57
M79
REFER TO THE FOLLOWING.
M31 - SUPER MULTIPLE JUNCTION (SMJ)
M22
W
M39
W
E16
B
H.S.
BBWA1719E

SERVICE DATA AND SPECIFICATIONS (SDS)

PFP:00030

Fuel Pressure

UBS00HE9

Fuel pressure at idling kPa (kg/cm^2 , psi)	Approximately 350 (3.57, 51)

Idle Speed and Ignition Timing

UBS00HEA

Target idle speed	No-load* (in P or N position)	650±50 rpm
Air conditioner: ON	In P or N position	700 rpm or more
Ignition timing	In P or N position	15° ± 5° BTDC

*: Under the following conditions:

- Air conditioner switch: OFF
- Electric load: OFF (Lights and heater fan)
- Steering wheel: Kept in straight-ahead position

Calculated Load Value

UBS00HEB

Condition	Calculated load value % (Using CONSULT-II or GST)
At idle	14.0 - 33.0
At 2,500 rpm	12.0 - 25.0

Mass Air Flow Sensor

UBS00HEC

Supply voltage	Battery voltage (11 - 14V)
Output voltage at idle	1.0 - 1.3V*
Mass air flow (Using CONSULT-II or GST)	3.0 - 9.0 g·m/sec at idle* 9.0 - 28.0 g·m/sec at 2,500 rpm*

*: Engine is warmed up to normal operating temperature and running under no load.

Intake Air Temperature Sensor

UBS00HED

Temperature °C (°F)	Resistance kΩ
25 (77)	1.800 - 2.200

Engine Coolant Temperature Sensor

UBS00HEE

Temperature °C (°F)	Resistance kΩ
20 (68)	2.1 - 2.9
50 (122)	0.68 - 1.00
90 (194)	0.236 - 0.260

A/F Sensor 1 Heater

UBS00HEF

Resistance [at 25°C (77°F)]	2.3 - 4.3Ω

Heated Oxygen sensor 2 Heater

UBS00HEG

Resistance [at 25°C (77°F)]	5.0 - 7.0Ω

Crankshaft Position Sensor (POS)

UBS00HEH

Refer to EC-346, "Component Inspection" .

Camshaft Position Sensor (PHASE)

UBS00HEI

Refer to EC-353, "Component Inspection" .

Throttle Control Motor

UBS00HEJ

Resistance [at 25°C (77°F)]	Approximately 1 - 15Ω

Fuel Injector

UBS00HEK

Resistance [at 10 - 60°C (50 - 140°F)]	11.1 - 14.5Ω

Fuel Pump

UBS00HEL

Resistance [at 25°C (77°F)]	0.2 - 5.0Ω